SPC-7 Storm Drain Curb Inlet Protection Drawing

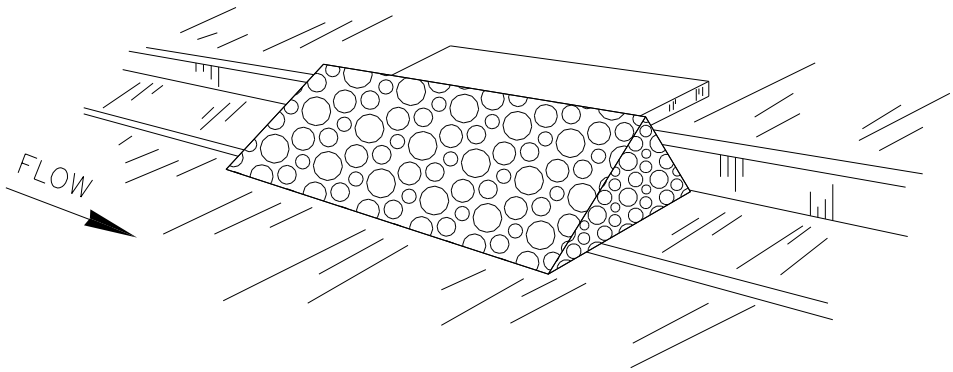

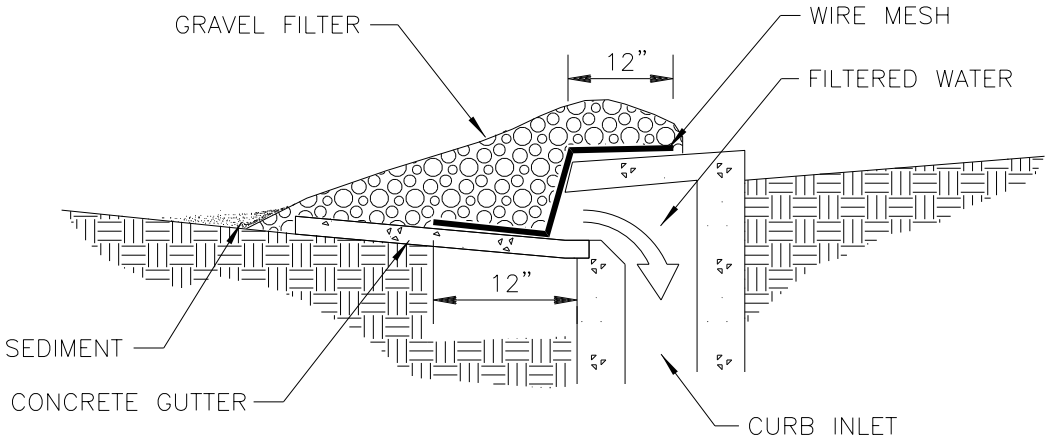

CURB INLET PROTECTION