HEC NO. 13

HYDRAULIC DESIGN OF
IMPROVED INLETS FOR CULVERTS

AUG. 1972

103.002

ENGINEERING DIVISION
LIBRARY

Hydraulic Design of Improved Inlets for Culverts

Hydraulic Engineering Circular No. 13

August 1972

Property of
Flood Control District of MC Library
Please Return to
2801 W. Durango
Phoenix, AZ 85009

U.S. Department of Transportation

Federal Highway Administration

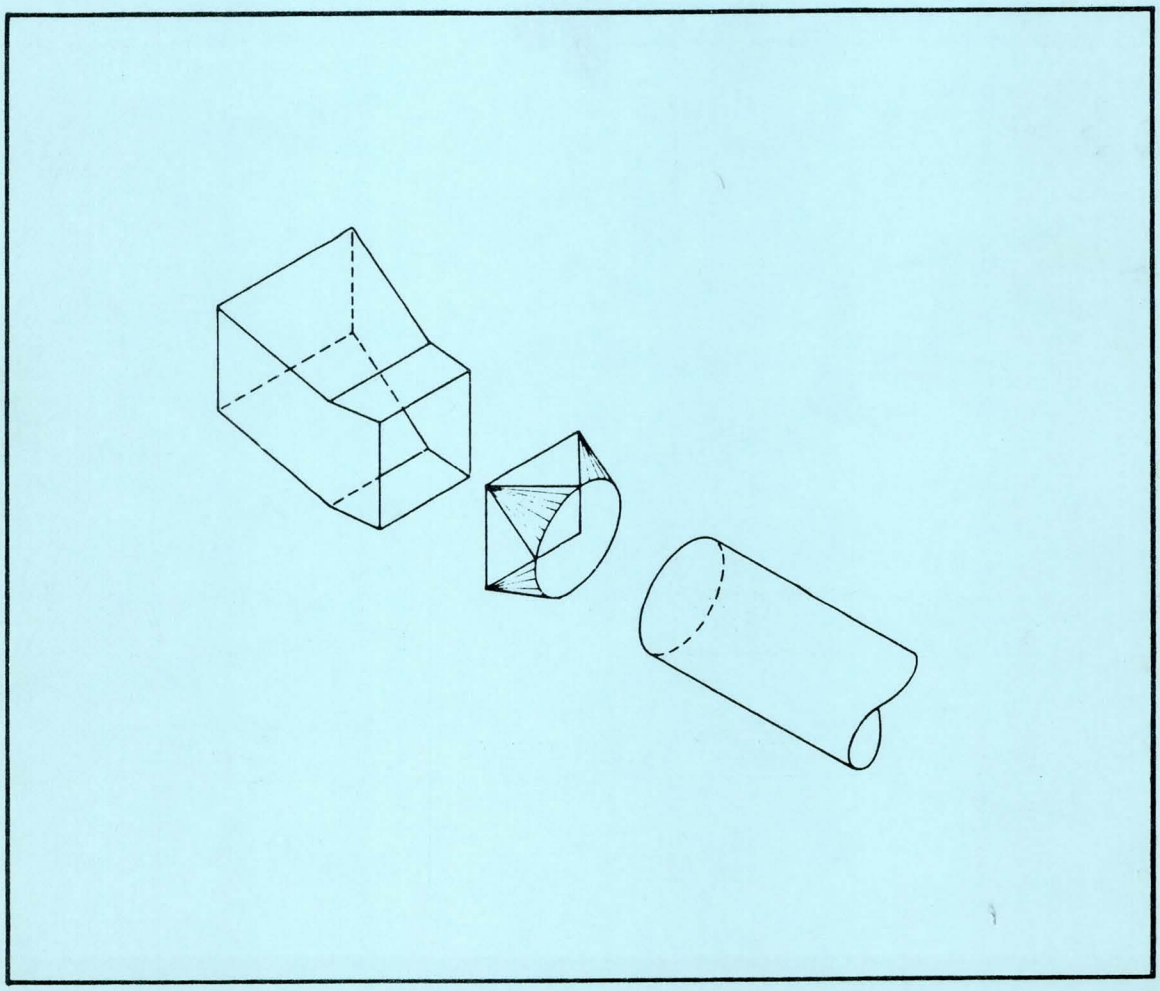

R-273

FEDERAL HIGHWAY ADMINISTRATION

Publications listed below with an (*) are available from the Government Printing Office, Washington, D.C. 20402. The other publications are available in limited numbers to State highway agencies and other public agencies from the Federal Highway Administration. Requests for these documents and suggestions on the contents of any publications should be addressed to the Federal Highway Administration, Office of Engineering, Bridge Division, HNG-31, Washington, D.C. 20590.

Hydraulic Design Series

HDS No. 1 HYDRAULICS OF BRIDGE WATERWAYS - Second Edition - Revised 1978
HDS No. 3 DESIGN CHARTS FOR OPEN-CHANNEL FLOW - 1961, Reprinted 1973
HDS No. 4 DESIGN OF ROADSIDE DRAINAGE CHANNELS - 1965

Hydraulic Engineering Circulars

HEC No. 1 SELECTED BIBLIOGRAPHY OF HYDRAULIC AND HYDROLOGIC SUBJECTS - 1983
HEC No. 5 HYDRAULIC CHARTS FOR THE SELECTION OF HIGHWAY CULVERTS - 1965
HEC No. 9 DEBRIS-CONTROL STRUCTURES - 1971
HEC No. 10 CAPACITY CHARTS FOR THE HYDRAULIC DESIGN OF HIGHWAY CULVERTS - 1972
HEC No. 11 USE OF RIPRAP FOR BANK PROTECTION - 1967
* HEC No. 12 DRAINAGE OF HIGHWAYS PAVEMENTS - 1984 (GPO 050-001-00280-9, $5.50)
HEC No. 13 HYDRAULIC DESIGN OF IMPROVED INLETS FOR CULVERTS - 1972
HEC No. 14 HYDRAULIC DESIGN OF ENERGY DISSIPATORS FOR CULVERTS AND CHANNELS - 1975
HEC No. 15 DESIGN OF STABLE CHANNELS WITH FLEXIBLE LININGS - 1975
HEC No. 16 ADDENDUM TO HIGHWAYS IN THE RIVER ENVIRONMENT - 1980
HEC No. 17 THE DESIGN OF ENCROACHMENTS ON FLOOD PLAINS USING RISK ANALYSIS - 1980
* HEC No. 19 HYDROLOGY - 1984 (GPO 050-001-00287-6, $9.50)

Electronic Computer Programs

HY-2 HYDRAULIC ANALYSIS OF PIPE-ARCH CULVERTS - 1969
HY-4 HYDRAULICS OF BRIDGE WATERWAYS - 1969
HY-6 HYDRAULIC ANALYSIS OF CULVERTS (Box and Circular) - 1979

Calculator Design Series

CDS No. 1 HYDRAULIC DESIGN OF IMPROVED INLETS FOR CULVERTS USING PROGRAMABLE CALCULATORS, (COMPUCORP 325) - October 1980
CDS No. 2 HYDRAULIC DESIGN OF IMPROVED INLETS FOR CULVERTS USING PROGRAMABLE CALCULATORS, (HP-65) - October 1980
CDS No. 3 HYDRAULIC DESIGN OF IMPROVED INLETS FOR CULVERTS USING PROGRAMABLE CALCULATORS, (TI-59) - January 1981
CDS No. 4 HYDRAULIC ANALYSIS OF PIPE-ARCH AND ELLIPTICAL SHAPE CULVERTS USING PROGRAMABLE CALCULATORS, (TI-59) - March 1982
CDS No. 5 HYDRAULIC DESIGN OF STORMWATER PUMPING STATIONS USING PROGRAMABLE CALCULATORS, (TI-59), May 1982

Technical Report Documentation Page

1. Report No.	2. Government Accession No.	3. Recipient's Catalog No.
FHWA/EO-72-13	-	

4. Title and Subtitle	5. Report Date
Hydraulic Design of Improved Inlets for Culverts (Hydraulic Engineering Circular No. 13)	August 1972
	6. Performing Organization Code
	8. Performing Organization Report No.
7. Author(s) L.J. Harrison, J.L. Morris, J.M. Normann, F.L. Johnson	
9. Performing Organization Name and Address Office of Engineering, HNG-31 Federal Highway Administration 400 Seventh Street, SW. Washington, D.C. 20590	10. Work Unit No. (TRAIS)
	11. Contract or Grant No.
12. Sponsoring Agency Name and Address	13. Type of Report and Period Covered
	14. Sponsoring Agency Code

15. Supplementary Notes

16. Abstract

This manual provides hydraulic design methods for circular and rectangular culverts with improved inlets. Improved inlets are levels, side-tapers, and slope-tapers which are modifications to the culvert entrance geometry. These improvements can greatly increase the performance of a culvert which is operating in inlet control. Design charts, tables and computation sheets are provided in the manual.

17. Key Words	18. Distribution Statement
Culverts, Improved Inlets	No restrictions. This document is available to the public through the National Technical Information Service, Springfield, Va. 22161

19. Security Classif. (of this report)	20. Security Classif. (of this page)	21. No. of Pages	22. Price
Unclassified	Unclassified	184	

Form DOT F 1700.7 (8-72) Reproduction of completed page authorized

Acknowledgments

Modifying inlet geometry to improve culvert performance has been the ambition of many engineers in the last fifty years. Some of the first culvert research by Yarnell (1)[1] and Mavis (2) and later investigations at the University of Minnesota (3) and Oregon State University (4) indicated that additional research on inlet geometry would be rewarding.

Although a limited number of rounded and enlarged inlets were built on highway culverts in several States, the Northwest Region of the Federal Highway Administration (formerly the Bureau of Public Roads) began building many improved inlets on box and circular culverts in the early 1950's, primarily on culverts placed on relatively steep grades. Mr. Carl F. Izzard developed a theoretical design for a drop-tapered inlet at that time, and the promotion and use of the improved inlet in the Northwest led to the research at Oregon State University and comprehensive investigation at the National Bureau of Standards under the direction of Mr. John L. French and sponsored by the Federal Highway Administration. Guidance of the research and preliminary development of the design procedures were performed by Mr. Herbert G. Bossy, assisted by others in the Hydraulics and Hydrology Group, Office of Research, in cooperation with personnel of the Hydraulics Branch, Bridge Division, Office of Engineering, both within the Federal Highway Administration.

This Circular was prepared as an integral part of Research and Development Demonstration Project Number 20, "Demonstration of Improved Inlets for Highway Culverts," sponsored by Region 15. Mr. Johnny L. Morris of Region 15, and Mr. Lawrence J. Harrison of the Hydraulics Branch, devoted full-time effort to the project. Mr. J. M. Normann of the Hydraulics Branch, contributed greatly to the final development of the Circular. The Project 20 Technical Advisory Committee members included L. A. Herr and F. L. Johnson, Office of Engineering; W. S. Mendenhall, Jr., and L. M. Darby, Region 15; C. F. Izzard, Office of Development; and J. M. Normann and R. E. Trent, Office of Research. Mr. Johnny L. Morris was Project Manager and Mr. Lawrence J. Harrison was Technical Supervisor for Demonstration Project 20.

---

[1]Numbers in parentheses refer to publications listed in the Selected Bibliography.

ENGINEERING DIVISION

CONTENTS

	Page
Acknowledgments	i
Table of Contents	ii
List of Symbols	vii
Foreword to Second Printing	xi
I. Introduction	13-1
II. Culvert Hydraulics	13-5
Conventional Culverts	13-5
Improved Inlets	13-5
Bevel-Edged Inlets	13-9
Side-Tapered Inlets	13-9
Slope-Tapered Inlets	13-13
Performance Curves	13-13
III. Box Culvert Improved Inlet Design	13-19
Bevel-Edged Inlets	13-19
Multibarrel Installations	13-19
Side-Tapered Inlets	13-20
Description	13-20
Throat Control	13-23
Face Control	13-23
Use of FALL Upstream of Side-Tapered Inlet	13-25
Performance Curves	13-25
Double Barrel Design	13-25

ENGINEERING DIVISION

CONTENTS (Continued)

Page

III. Box Culvert Improved Inlet Design (Continued)

Slope-Tapered Inlets 13-27

Throat Control 13-27

Face Control 13-29

Crest Control 13-29

Design Limitations 13-29

Performance Curves 13-30

Double Barrel Design 13-30

IV. Pipe Culvert Improved Inlet Design 13-33

Bevel-Edged Inlets 13-33

Side-Tapered Pipe Inlets (Flared Inlets) 13-33

Description 13-33

Throat Control 13-35

Face Control 13-35

Standard Designs 13-37

FALL Upstream of Inlet Face 13-37

Slope-Tapered Inlets for Pipe Culverts 13-38

Rectangular Side-Tapered Inlets for Pipe Culverts 13-38

Design Limitations 13-40

Multibarrel Designs 13-40

V. General Design Considerations 13-41

Highway Safety Aspects of Improved Inlets 13-41

CONTENTS (Continued)

Page

V. General Design Considerations (Continued)

Hydrologic Estimates 13-41

Allowable Headwater Elevation 13-42

Drift and Debris 13-42

Sedimentation 13-43

Outlet Velocity 13-43

Orientation with Stream 13-44

Culvert Cost 13-44

Culvert Length 13-44

VI. Design Procedure 13-47

VII. Design Charts 13-63

1 - Head for Concrete Box Culverts Flowing Full 13-65

2 - Head for Concrete Pipe Culverts Flowing Full 13-66

3 - Head for Standard C.M. Pipe Culverts Flowing Full 13-67

4 - Head for Structural Plate Corr. Metal Pipe Culverts Flowing Full 13-68

5 - Critical Depth - Rectangular Section 13-69

6 - Critical Depth - Circular Pipe 13-70

7 - Headwater Depth for Box Culverts with Inlet Control 13-71

CONTENTS (Continued)

Page

VII. Design Charts (Continued)

8 - Headwater Depth for Inlet Control
Rectangular Box Culverts
90° Headwall
Chamfered or Beveled Inlet Edges 13-72

9 - Headwater Depth for Inlet Control
Single Barrel Box Culverts
Skewed Headwalls
Chamfered or Beveled Inlet Edges 13-73

10 - Headwater Depth for Inlet Control
Rectangular Box Culverts
Flared Wingwalls 18° to 33.7° and 45°
with Beveled Edge at Top of Inlet 13-74

11 - Headwater Depth for Concrete Pipe
Culverts with Inlet Control 13-75

12 - Headwater Depth for C.M. Pipe
Culverts with Inlet Control 13-76

13 - Headwater Depth for Circular Pipe
Culverts with Beveled Ring Inlet Control 13-77

14 - Throat Control Curve for
Box Culverts
Tapered Inlets 13-78

15 - Face Control Curves for
Box Culverts
Side-Tapered Inlets 13-79

16 - Face Control Curves for
Box Culverts
Slope-Tapered Inlets 13-80

17 - Headwater Required for Crest Control 13-81

18 - Throat Control Curves for
Side-Tapered Inlets to Pipe Culvert
(Circular Sections Only) 13-82

19 - Face Control Curves for
Side-Tapered Inlets to Pipe Culverts
(Non-Rectangular Sections Only). 13-83

CONTENTS (Continued)

Page

VIII. Design Tables 13-85

1 - Entrance Loss Coefficients 13-86

2 - Manning's n for Natural Stream Channels (16) (Surface width of flood stage less than 100 ft.) 13-87

3 - Values of $BD^{3/2}$ 13-88

4 - Values of $D^{3/2}$ 13-88

5 - Values of $D^{5/2}$ 13-89

6 - Values of $E^{1/2}$ 13-89

7 - Area in Square Feet of Elliptical Sections 13-90

8 - Area of Flow Prism in Partly Full Circular Conduit. . 13-91

Selected Bibliography 13-93

Appendix A - Example Problems 13-95

Appendix B - Development of Design Charts for Improved Inlets 13-139

Appendix C - Summary of Field Survey of Improved Inlet Structures 13-151

Appendix D - Design Calculation Forms 13-167

LIST OF SYMBOLS

Symbol	Units	Description
A_b	sq.ft.	Area of bend section of slope-tapered inlets
A_f	sq.ft.	Area of inlet face section
A_t	sq.ft.	Area of inlet throat section
AHW El.	ft.	Allowable headwater elevation at culvert entrance
B	ft.	Width of culvert barrel or diameter of pipe culvert
b	in.	Dimension of side bevel
B_b	ft.	Width of bend section of slope-tapered inlets
B_f	ft.	Width of face section of improved inlets
C_b		Discharge coefficient based on bend section control
C_f		Discharge coefficient based on face section control
C_t		Discharge coefficient based on throat section control
cfs	cu.ft./sec.	Cubic feet per second
CMP		Corrugated metal pipe
D	ft.	Height of box culvert or diameter of pipe culvert
d	in.	Dimension of top bevel
d_c	ft.	Critical depth of flow
E	ft.	Height of side-tapered pipe culvert face section, excluding bevel dimension

Symbol	Units	Description
f		Darcy resistance factor
FALL	ft.	Aproximate depression of control section below the stream bed
g	ft./sec./sec.	Acceleration of gravity = 32.2
H	ft.	Head or energy required to pass a given quantity of water through a culvert flowing in outlet control
H_b	ft.	Depth of pool, or head, above the bend section invert
H_c	ft.	Depth of pool, or head, above the crest
H_f	ft.	Depth of pool, or head, above the face section invert
H_t	ft.	Depth of pool, or head, above the throat section invert
H^*	ft.	Specific head at minimum energy
HG Line	ft.	Hydraulic grade line
HW	ft.	Headwater elevation; subscript indicates control section (HW, as used in HEC # 5, is a depth and is equivalent to H_f in this Circular)
HW_c	ft.	Headwater elevation required for flow to pass crest in crest control
HW_f	ft.	Headwater elevation required for flow to pass face section in face control
HW_o	ft.	Headwater elevation required for culvert to pass flow in outlet control

Symbol	Units	Description
HW_t	ft.	Headwater elevation required for flow to pass throat section in throat control
h_o	ft.	Elevation of equivalent hydraulic grade line referenced to the outlet invert
K		A constant relating to free surface nonsubmerged entrance flow
k_e		Entrance energy loss coefficient
k_b		A dimensionless effective pressure term for bend section control
k_f		A dimensionless effective pressure term for inlet face section control
k_t		A dimensionless effective pressure term for inlet throat control
L_a	ft.	Approximate total length of culvert, including inlet
L_1, L_2, L_3, L_4	ft.	Dimensions relating to the improved inlet as shown in sketches of the different types of inlets
N		Number of barrels
n		Manning roughness coefficient
P	ft.	Length of depression
Q	cu.ft./sec.	Volume rate of flow
R	ft.	Hydraulic radius = $\frac{\text{Area}}{\text{Wetted Perimeter}}$
S	ft./ft.	Slope of culvert barrel
S_e	ft./ft.	Slope of embankment

Symbol	Units	Description
S_f	ft./ft.	Slope of FALL for slope-tapered inlets (a ratio of horizontal to vertical)
S_o	ft./ft.	Slope of natural channel
T	ft.	Depth of the depression
Taper	ft./ft.	Sidewall flare angle (also expressed as the cotangent of the flare angle)
TW	ft./ft.	Tailwater depth at outlet of culvert referenced to outlet invert elevation
V	ft./sec.	Mean velocity of flow
W	ft.	Width of weir crest for slope-tapered inlet with mitered face
W_p	ft.	Top width of depression
WW		Wingwall of culvert entrance
y	ft.	Difference in elevation between crest and face section of a slope-tapered inlet with mitered face
θ_s	degrees	Flare angles of side walls of tapered inlet with respect to extension of culvert side wall
θ_t	degrees	Angle of departure of the top slab from a plane parallel to the bottom slab

Foreword to Second Printing

More than 2,000 copies of the November, 1971, printing of this Circular have been distributed to highway agencies. As a result of comments received and further consideration of the design procedures and culvert design philosophy by personnel in the Hydraulics Branch, this second printing presents a more direct approach to improved inlet design for culverts. The design procedure in this printing is revised from that contained in the original printing and pertinent design charts and tables from Hydraulic Engineering Circular No. 5, "Hydraulic Charts for the Selection of Highway Culverts," have been incorporated in order to eliminate the necessity for referring to that publication for design aids. Design charts, limitations, and information as derived from the research reports remain unchanged and designs prepared according to procedures described in the first printing are valid.

The capacity of culverts on steep grades is controlled by the inlet configuration and limitations on headwater depth. Research (5, 6, 7, 8, 9, 10, 11) has provided the means for reducing constraints imposed by inlet configurations. Procedures described herein provide a technique for overcoming, at least partially, constraints imposed by headwater limitations. Therefore, culvert performance can be maximized or the design optimized to fit site characteristics, design and cost considerations. The resulting design can be termed a "balanced" design, or a design in which full use is made of the selected culvert barrel and inlet configuration, site potential and economics.

Many people have contributed to the development of this Circular in its present form. Messrs. Lawrence J. Harrison and Johnny L. Morris developed the original design procedures and design charts. Most of the design nomographs were prepared by Mr. Paul N. Zelensky of the Office of Research. Messrs. Jerome M. Normann and Frank L. Johnson developed the revised design procedures and culvert design philosophy. Mr. Mario Marques of the Office of Development provided insight into the design process through the use of an electronic computer. Others in Region 15 and the Hydraulics Branch who contributed materially to the Circular in its present form were Messrs. Charles L. O'Donnell, Murray L. Corry, Dennis L. Richards, and Philip L. Thompson.

U.S. DEPARTMENT OF TRANSPORTATION

Federal Highway Administration

HYDRAULIC DESIGN OF IMPROVED INLETS FOR CULVERTS

Prepared as a cooperative effort of the Hydraulics Branch, Bridge Division, Office of Engineering and the Demonstration Projects Division, Office of Development, Region 15

Principal Authors

L. J. Harrison, J. L. Morris
J. M. Normann and F. L. Johnson

I. Introduction

The passage of water through highway culverts involves complex hydraulic phenomena, some of which are not yet thoroughly understood. A variety of fluid dynamic and pneumatic situations may occur, making it extremely difficult to exactly define culvert flow characteristics at a given time under a specified set of conditions. Recognizing the potential for substantial savings which would result from improved knowledge and design techniques in the field of culvert hydraulics, the Federal Highway Administration (FHWA, then the Bureau of Public Roads) initiated research in 1954 to obtain hydraulic information from a series of model tests. The research was performed by the National Bureau of Standards (NBS) and resulted in seven progress reports (5, 6, 7, 8, 9, 10, 11) covering conventional culverts with a constant slope and cross section as well as inlet modifications to improve flow characteristics at the culvert entrance. Culvert flow capacity was found to be limited either by the culvert entrance conditions or by barrel resistance. The former was designated "inlet control" and the latter "outlet control." When a culvert operates in inlet control, the barrel will permit the passage of more flow than the inlet, and in outlet control the reverse is true.

Hydraulic Engineering Circular No. 5 (HEC No. 5), "Hydraulic Charts for the Selection of Highway Culverts," (12) and HEC No. 10, "Capacity Charts for the Hydraulic Design of Highway Culverts," (13) incorporate results of the conventional culvert research and present design methods for these culverts in both inlet and outlet control. These Circulars are in common use throughout the United States and HEC No. 5 has been translated into several foreign languages, including Spanish, French, and Norwegian. Design methods presented herein are an extension of methods and information presented in HEC No. 5. A thorough understanding of culvert design principles contained in that Circular is necessary to an understanding of methods presented in this Circular.

This Circular incorporates the results of the NBS research on improved inlets into a new culvert design procedure. The research demonstrated that improved inlets, with their more efficient flow characteristics and better utilization of available head, may greatly improve the performance of culverts operating in inlet control. Use of the design procedure of Section VI will result in the inlet design and barrel size most appropriate for a given combination of site characteristics.

While many improved inlet configurations were tested in the research, only those determined to best satisfy the criteria of hydraulic efficiency, economy of materials, simplicity of construction, and minimization of maintenance problems are presented. For example, while the use of curved surfaces rather than plane surfaces might result in slightly improved hydraulic efficiency at times, it was decided that the advantages were outweighed by the construction difficulties involved. Thus, only plane surfaces are discussed and recommended.

The improved inlet design charts of this publication apply only to rectangular or circular barrel shapes. No other barrel shapes were tested with improved inlets, and different coefficients and curves would be necessary. However, identical concepts are applicable to barrels of any shape.

As in previous FHWA publications, the design procedures contained herein are based on the philosophy of "minimum performance." At times, favorable hydraulic conditions will cause a culvert to operate at a greater capacity than the design would indicate. Some of these favorable conditions are transient and cannot be depended upon to operate continuously; thus, their precise analysis is not warranted. For instance, approach velocity is neglected, as are possible negative pressures within the culvert barrel, both of which would result in lower headwater requirements to pass a given discharge.

If inlet control governs, inlet improvements can result in the need for a barrel size smaller than would be required for a conventional culvert at the same site. The amount of barrel size reduction depends on the site and a subjective judgment regarding the dependability of the design flood estimate and the risk of damage inherent in exceeding the allowable headwater elevation. If the design discharge estimate is not well supported and considerable damage would result if the allowable headwater elevation were exceeded, it may be wise to select a culvert barrel somewhat larger than would be required to accommodate the design discharge. On the other hand, if the design discharge estimate is liberal or well supported by data and analysis or a headwater elevation higher than the allowable would result in little or no damage to the highway or the adjacent property, then the smallest possible barrel size might be selected. Design techniques presented in this Circular will enable the designer to evaluate the hydraulic variables and select the most rational design for the particular site.

The general benefits of good culvert design procedures include reduction of upstream flooding and highway damage due to underdesign and lower culvert construction costs by avoiding gross overdesign. If site conditions permit the use of an improved inlet, construction costs may be reduced still further. At times, improved inlets may also be installed on existing culverts with inadequate flow capacity, thus avoiding replacement of the entire structure or the addition of a new parallel structure.

A field survey (14) of highway culverts with improved inlets constructed in the United States before 1971 produced detailed information on 66 installations which were estimated to have saved a total of over two million dollars in capital outlay. Many variations of the improved inlet designs discussed in this Circular have been built but were not included in the survey. If a full accounting of all improved inlets had been possible, the savings would likely have been many times the amount reported.

Savings were reported ranging from $500 (12.5 percent), resulting from reducing the diameter of a 200 ft. long reinforced concrete pipe from 54 inches to 48 inches, to $482,000 (38.7 percent) by reducing a 2,700 ft. box culvert from a triple 13 ft. by 14 ft. to a double 12 ft. by 12 ft. The latter case illustrates that the greatest savings usually result from the use of improved inlets on culverts with long barrels. Short barrels should also be checked, however, especially when an improved inlet might increase the capacity sufficiently to avoid replacement of an existing structure. For instance, a $9,900 (72.2 percent) benefit was realized by installing a variation of an improved inlet on an existing 60 inch corrugated metal culvert 140 ft. long rather than replacing the entire culvert with an 84 inch diameter culvert.

In the following sections, a short review of conventional culvert hydraulics, a discussion of the types of improved inlets suggested with definitions of the terms used, and design procedures for box and pipe culverts with improved entrances will be presented.

II. Culvert Hydraulics

Conventional Culverts

A culvert operates in either inlet or outlet control. Under outlet control, headwater depth, tailwater depth, entrance configuration, and barrel characteristics all influence a culvert's capacity. The entrance configuration is defined by the barrel cross sectional area, shape, and edge condition, while the barrel characteristics are area, shape, slope, length, and roughness. As shown in Figure 1, the flow condition for outlet control may be full or partly full for all or part of the culvert length. The design discharge usually results in full flow. Inlet improvements in these culverts reduce the entrance losses, which are only a small portion of the total headwater requirements. Therefore, only minor modifications of the inlet geometry which result in little additional cost are justified.

In inlet control, only entrance configuration and headwater depth determine the culvert's hydraulic capacity. Barrel characteristics and tailwater depth are of no consequence. These culverts usually lie on relatively steep slopes and flow only partly full, as shown in Figure 2. Entrance improvements can result in full, or nearly full flow, thereby increasing culvert capacity significantly.

Figure 3 illustrates the performance of a 30-inch circular conduit in inlet control with three commonly used entrances: thin-edged projecting, square-edged, and groove-edged. It is clear that inlet type and headwater depth determine the capacities of these culverts. For a given headwater, a groove-edged inlet has a greater capacity than a square-edged inlet, which in turn outperforms a thin-edged projecting inlet. The performance of each inlet type is related to the degree of flow contraction. A high degree of contraction requires more energy, or headwater, to convey a given discharge than a low degree of contraction. Figure 4 shows schematically the flow contractions of the three inlet types noted in Figure 3.

Improved Inlets

The improvements presented in this Circular are inlet geometry refinements beyond those normally used in conventional culvert design practice, such as those discussed above. Several degrees of improvements are presented, including bevel-edged, side-tapered, and slope-tapered inlets.

Figure 1

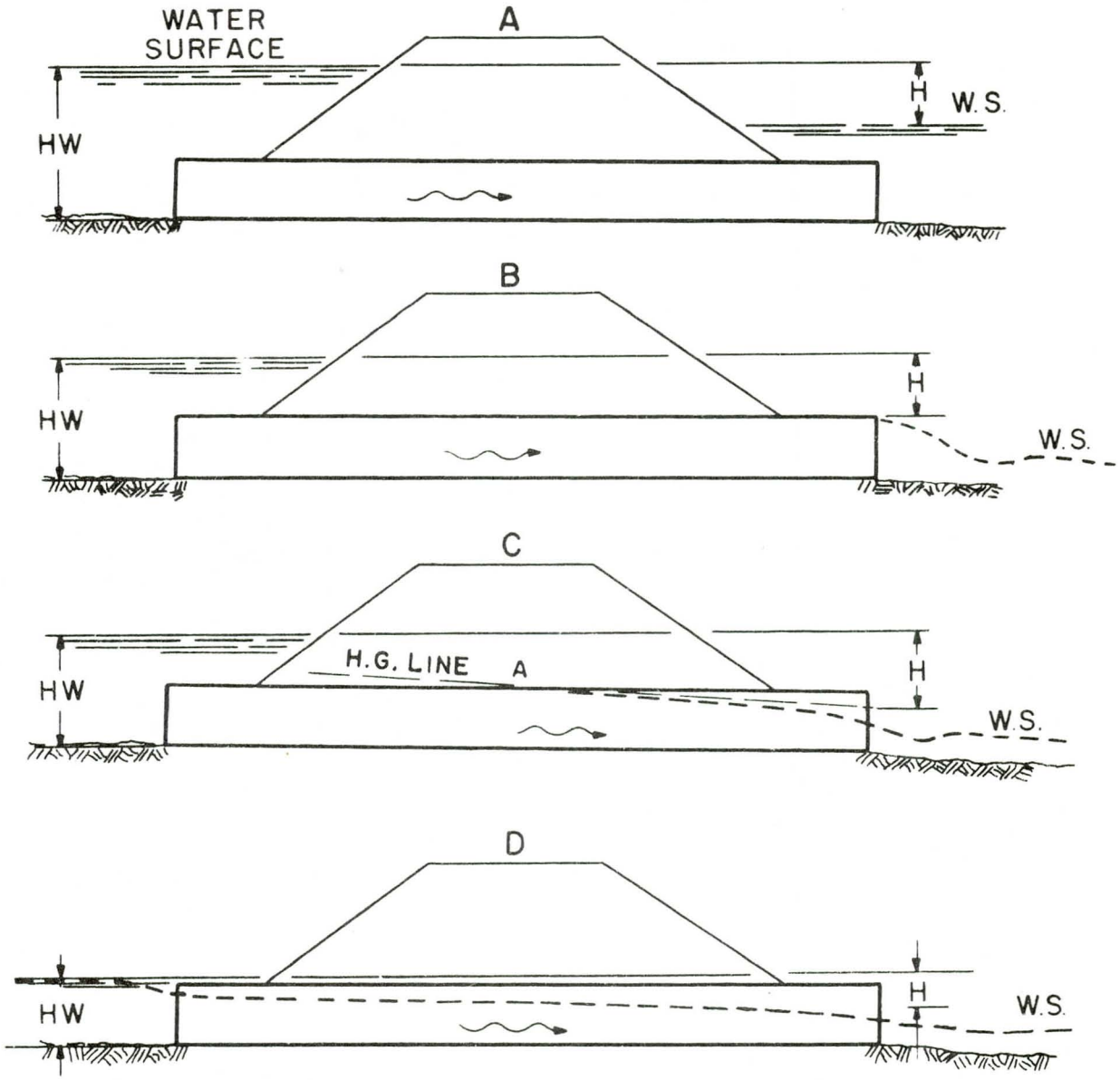

OUTLET CONTROL

Figure 2

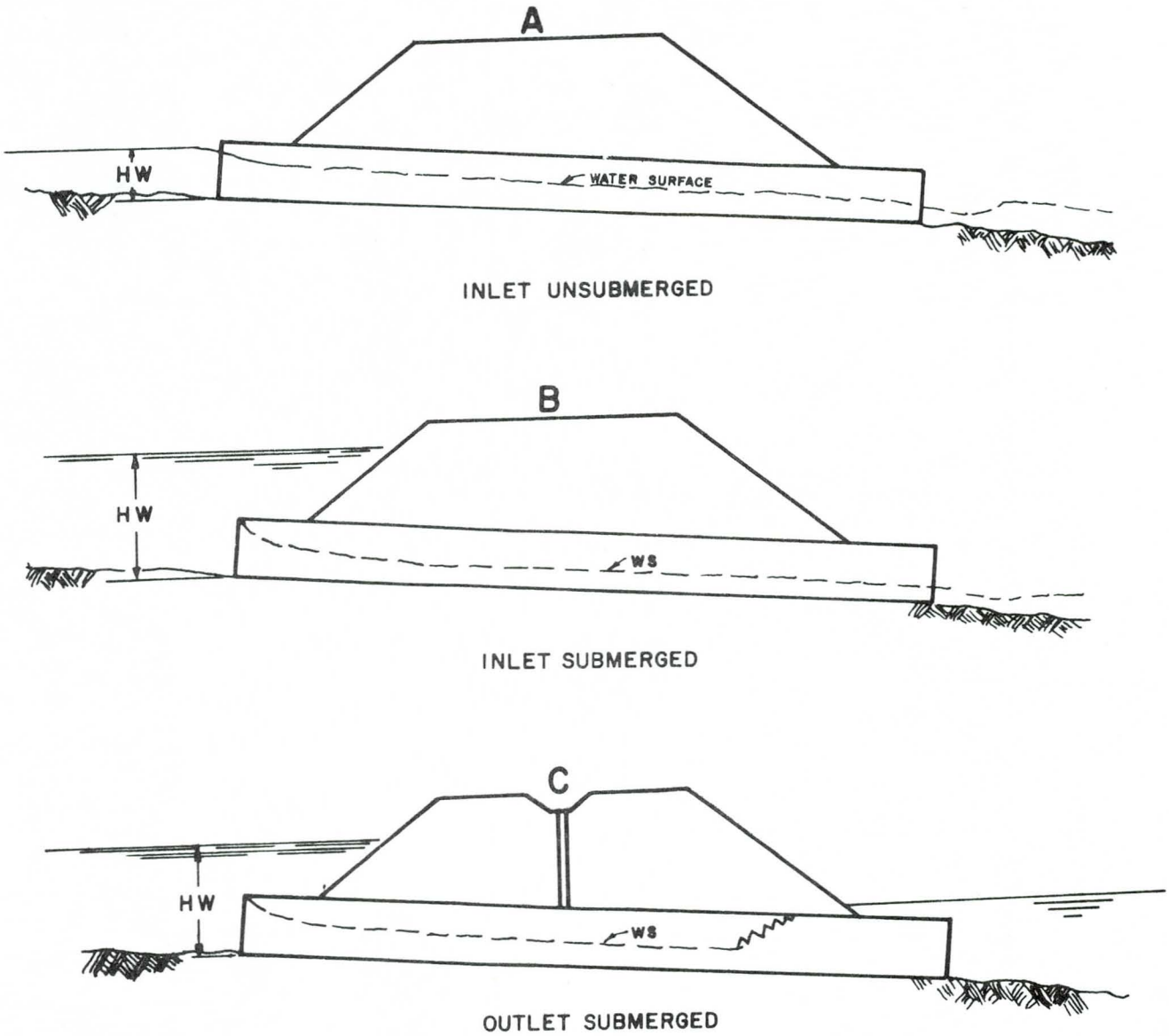

INLET CONTROL

Figure 3

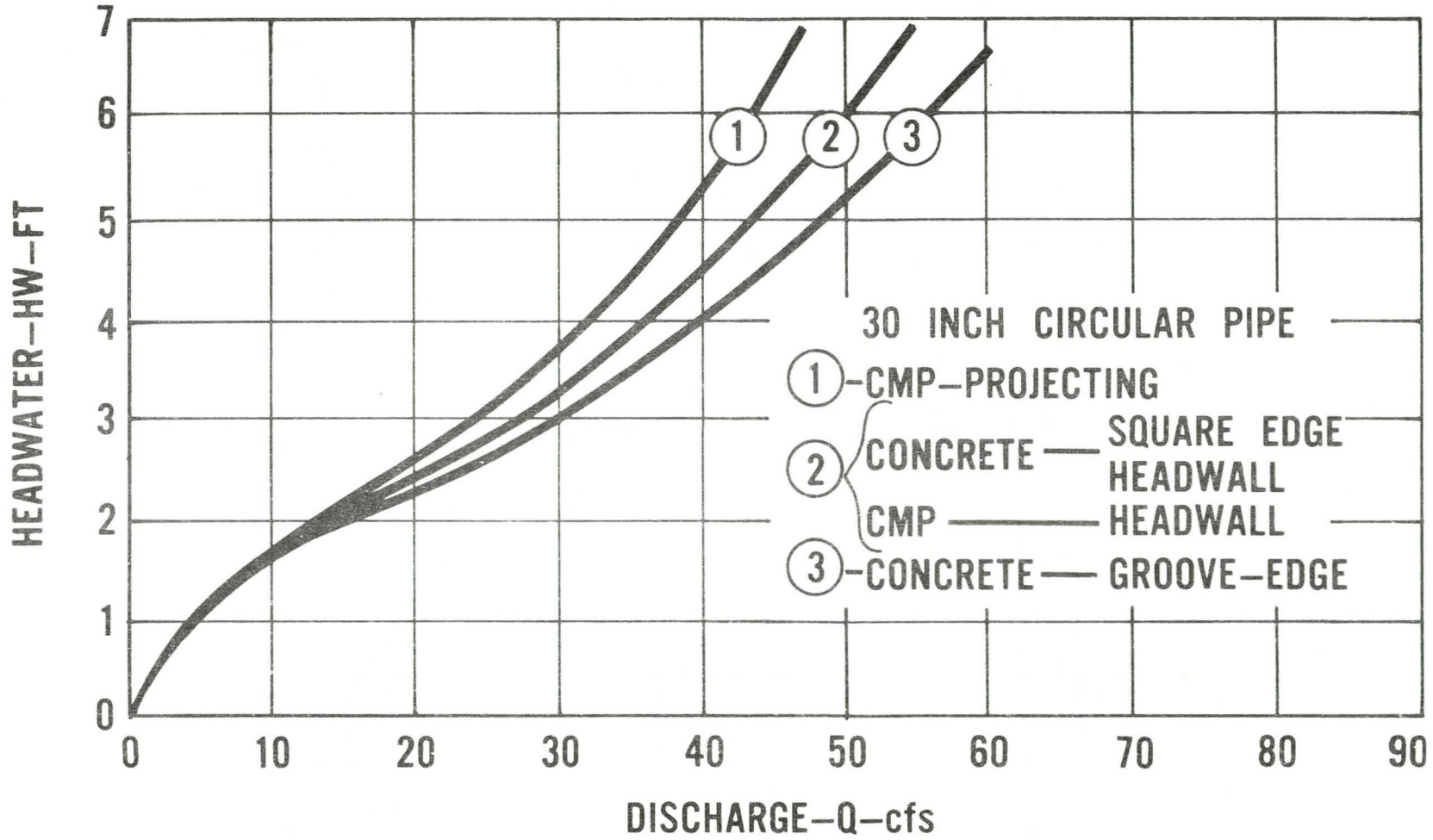

PERFORMANCE CURVES INLET CONTROL

Bevel-Edged Inlets

The first degree of inlet improvement is a beveled edge. The bevel is proportioned based on the culvert barrel or face dimension and operates by decreasing the flow contraction at the inlet. A bevel is similar to a chamfer except that a chamfer is smaller and is generally used to prevent damage to sharp concrete edges during construction.

Adding bevels to a conventional culvert design with a square-edged inlet increases culvert capacity by 5 to 20 percent. The higher increase results from comparing a bevel-edged inlet with a square-edged inlet at high headwaters. The lower increase is the result of comparing inlets with bevels with structures having wingwalls of 30 to 45 degrees.

Although the bevels used herein are plane surfaces, rounded edges which approximate the bevels are also acceptable.

As a minimum, bevels should be used on all culverts which operate in inlet control, both conventional and improved inlet types. The exception to this is circular concrete pipes where the socket end performs much the same as a beveled edge. Examples of bevels used in conjunction with other improved inlets are shown in Figures 5 and 6. Culverts flowing in outlet control cannot be improved as much as those in inlet control, but the entrance loss coefficient, k_e, is reduced from 0.5 for a square edge to 0.2 for beveled edges. Therefore, it is recommended that bevels be used on all culvert entrances if little additional cost is involved.

Side-Tapered Inlets

The second degree of improvement is a side-tapered inlet (Figure 5). It provides an increase in flow capacity of 25 to 40 percent over that of a conventional culvert with a square-edged inlet. This inlet has an enlarged face area with the transition to the culvert barrel accomplished by tapering the sidewalls. The inlet face has the same height as the barrel, and its top and bottom are extensions of the top and bottom of the barrel. The intersection of the sidewall tapers and barrel is defined as the throat section.

Side-tapered inlets of other configurations were tested, some with tops tapered upward but with sidewalls remaining an extension of the barrel walls, and others with various combinations of side and top tapers. Each showed some improvement over conventional culverts, but the geometry shown in Figure 5 produced superior performance.

Figure 4

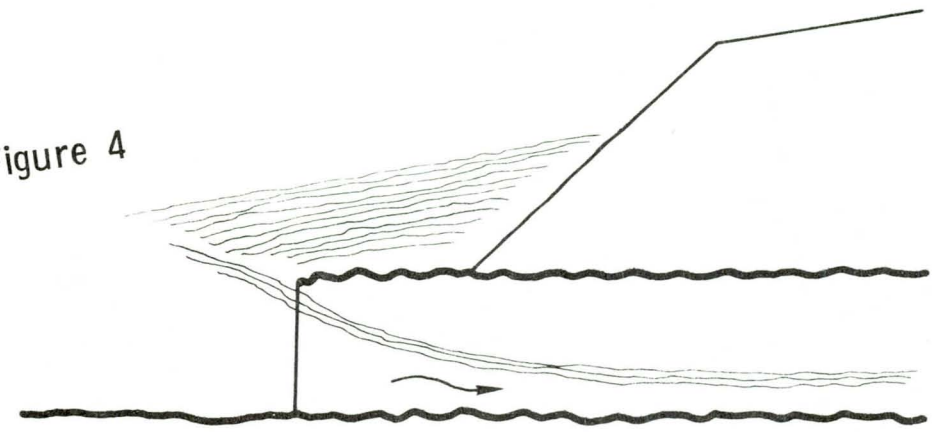

1

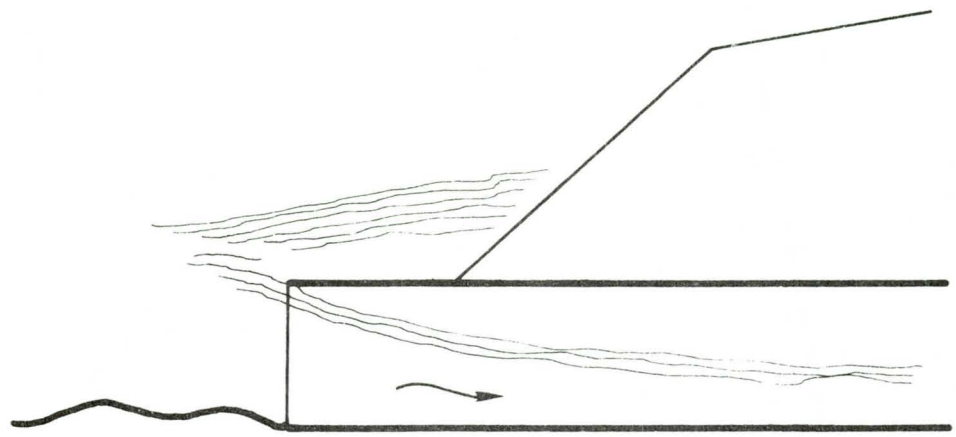

2

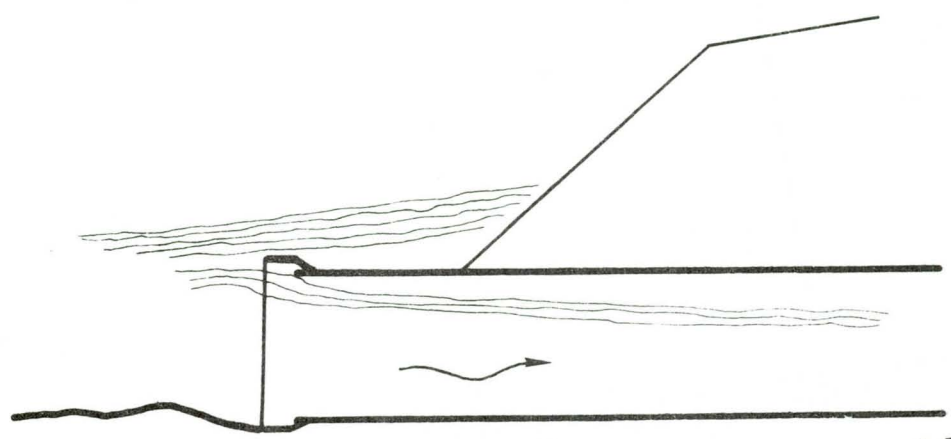

3

SCHEMATIC FLOW CONTRACTIONS
FOR CONVENTIONAL CULVERT INLETS

Figure 5

SIDE - TAPERED INLET

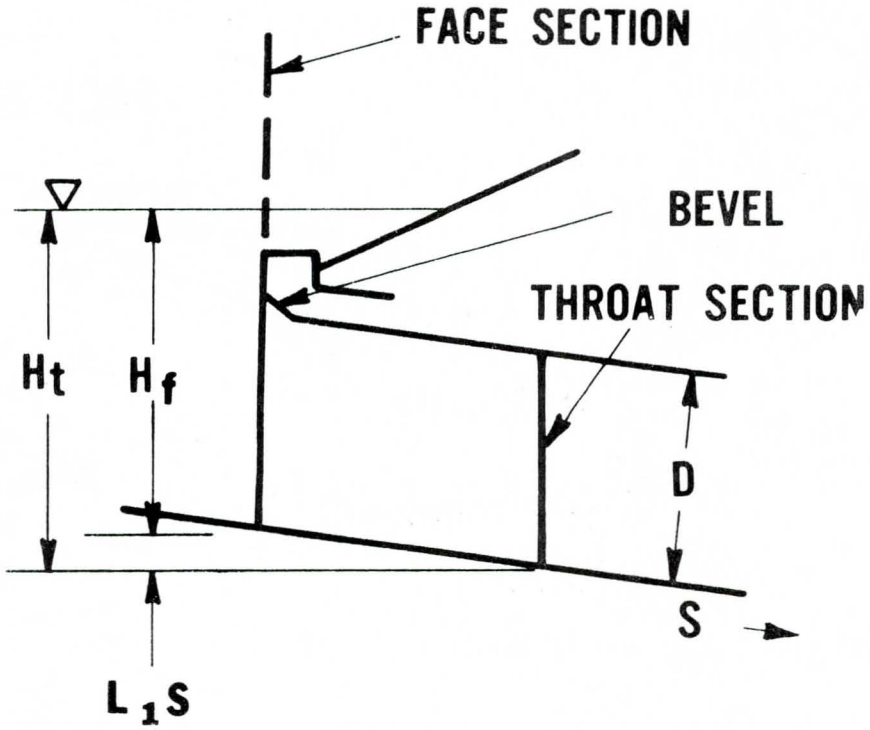

ELEVATION

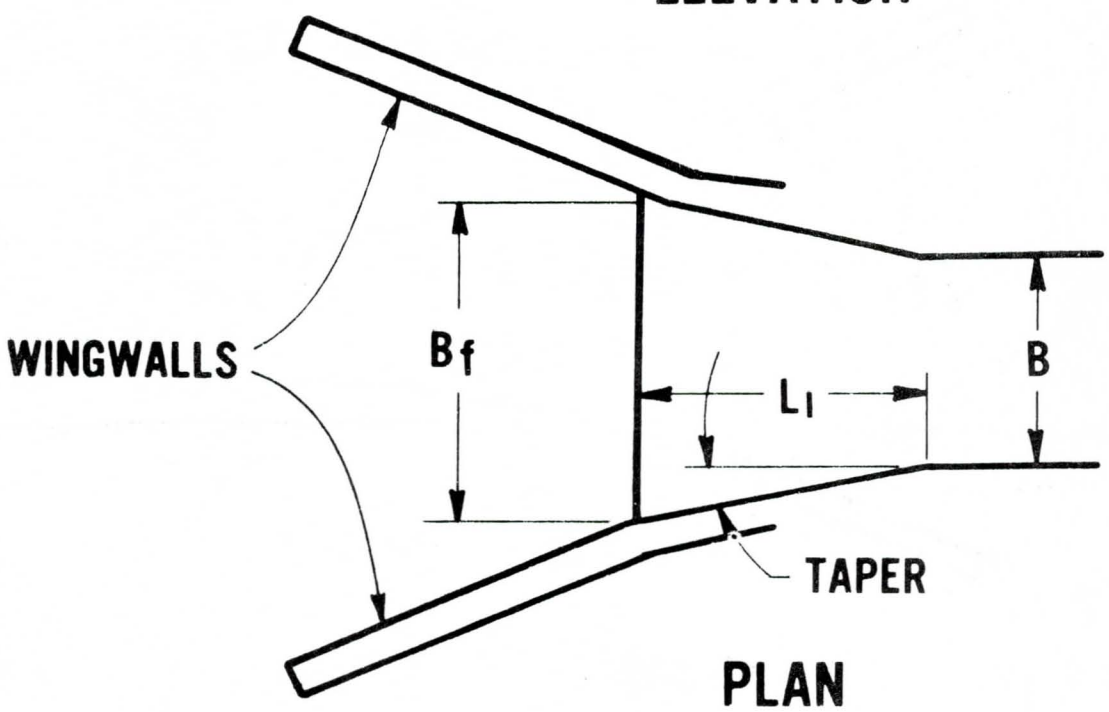

PLAN

Figure 6

SLOPE - TAPERED INLET

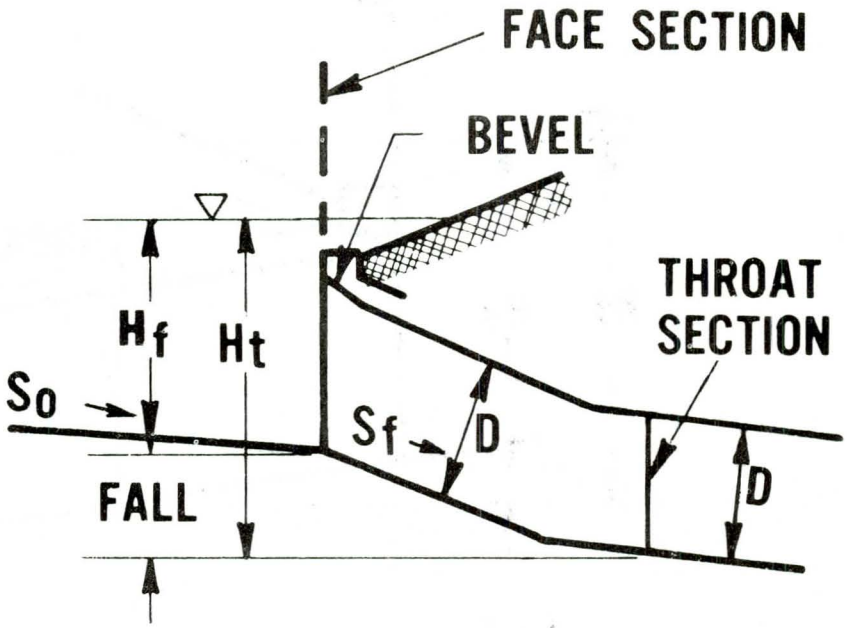

ELEVATION

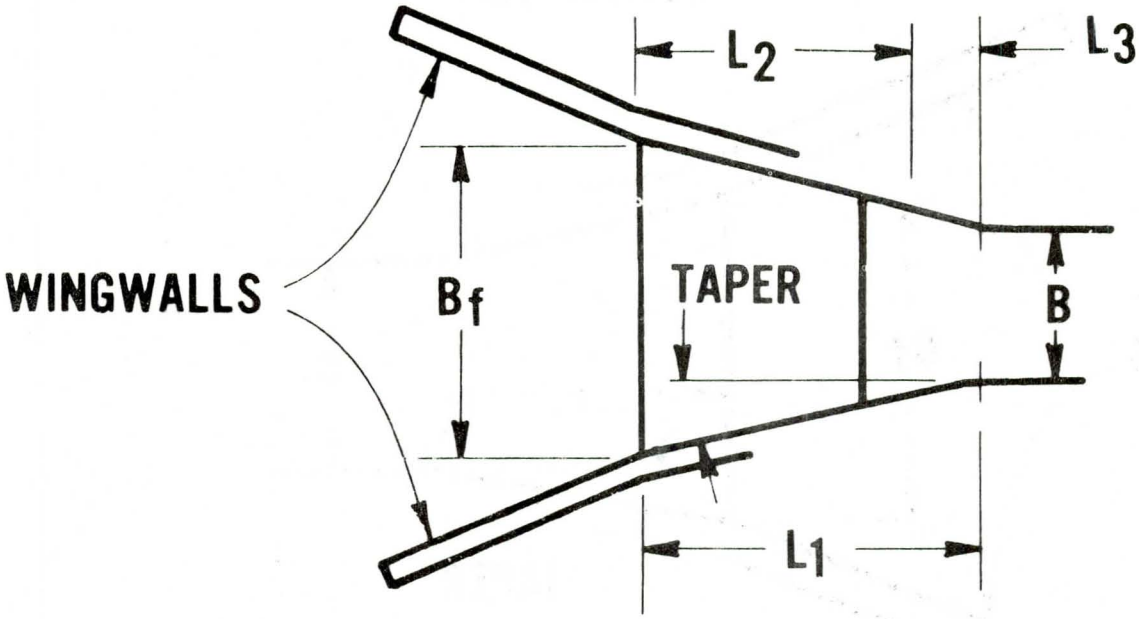

PLAN

For the side-tapered inlet, there are two possible control sections: the face and the throat. H_f, as shown in Figure 5, is the headwater depth based upon face control. H_t is the headwater depth based upon throat control.

The advantages of a side-tapered inlet operating in throat control are: The flow contraction at the throat is reduced; and, for a given pool elevation, more head is applied at the throat control section. The latter advantage is increased by utilizing a slope-tapered inlet or a depression in front of the side-tapered inlet.

Slope-Tapered Inlets

A slope-tapered inlet is the third degree of improvement. Its advantage over the side-tapered inlet without a depression is that more head is available at the control (throat) section. This is accomplished by incorporating a FALL in the enclosed entrance section (Figure 6).

This inlet can have over 100 percent greater capacity than a conventional culvert with square edges. The degree of increased capacity depends largely upon the amount of FALL available between the invert at the face and the invert at the throat section. Since this FALL may vary, a range of increased capacities is possible.

Slope-tapered inlets of alternate designs were considered and tested during the research. The inlet shown in Figure 6 is recommended on the basis of its hydraulic performance and ease of construction. As a result of the FALL concentrated between the face and the throat of this inlet, the barrel slope is flatter than the barrel slope of a conventional or side-tapered structure at the same site.

Both the face and throat are possible control sections in a slope-tapered inlet culvert. However, since the major cost of a culvert is in the barrel portion and not the inlet structure, the inlet face should be designed with a greater capacity at the allowable headwater elevation than the throat. This insures that flow control will be at the throat and more of the potential capacity of the barrel will be utilized.

Performance Curves

To understand how a culvert at a particular site will function over a range of discharges, a performance curve, which is a plot of discharge versus headwater depth or elevation, must be drawn. Figure 7 is a schematic performance curve for a culvert with either a side-tapered or slope-tapered inlet.

Figure 7

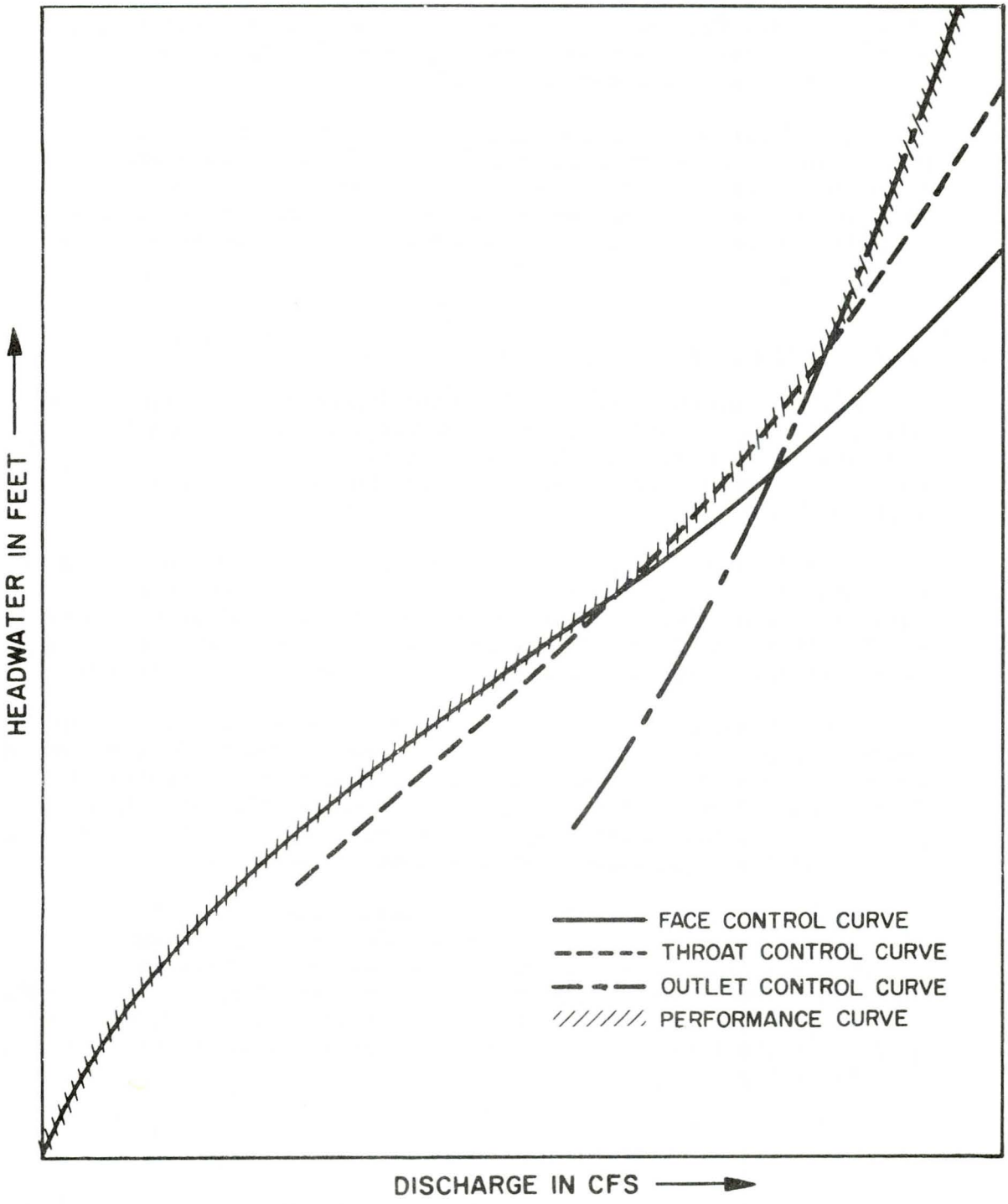

SCHEMATIC PERFORMANCE CURVE

For these inlets, it is necessary to compute the performance of the face section (face control curve), the throat section (throat control curve), and the barrel (outlet control curve), in order to develop the culvert performance curve for a range of discharges. The actual culvert performance curve, the hatched line of Figure 7, represents the performance of the face, throat and barrel sections in the ranges where their individual performance determines the required headwater. In the lower discharge range, face control governs; in the intermediate range, throat control governs; and in the higher discharge range, outlet control governs.

Performance curves should always be developed for culverts with side-tapered or slope-tapered inlets to insure that the designer is aware of how the culvert will function over a range of discharges, especially those exceeding the design discharge. It is important to emphasize that outlet control may govern for the larger discharges, and, as shown in Figure 7, the outlet control curve has a much steeper slope - a more rapidly rising headwater requirement for increasing discharges - than either the face or throat control curve. It should be recognized that there are uncertainties in the various methods of estimating flood peaks and that there is a chance that the design frequency flood will be exceeded during the life of the project. Culvert designs should be evaluated in terms of the potential for damage to the highway and adjacent property from floods greater than the design discharge.

As alternate culverts are possible using improved inlet design, a performance curve should be plotted for each alternate considered. The performance curve will provide a basis for selection of the most appropriate design.

The advantages of various improved inlet designs are demonstrated by the performance curves shown in Figure 8. These curves represent the performance of a single 6 ft. by 6 ft. reinforced concrete box culvert 200 ft. long, with a 4 ft. difference in elevation from the inlet to the outlet. For a given headwater, the culvert can convey a wide range of discharges, depending on the type of inlet used.

Curves 1 through 4 are inlet control curves for a 90° wingwall with a square-edged inlet, a 1.5:1 bevel-edged inlet, a side-tapered inlet, and a slope-tapered inlet with minimum FALL, respectively. Curves 5 and 6 are outlet control curves. Curve 5 is for the square-edged inlet and curve 6 is for the other three inlet types. As previously discussed, curves 5 and 6 show that improved entrances can increase the performance of a culvert operating in outlet control, but the improvement is not as great as for culverts operating in inlet control, as demonstrated by curves 1 through 4.

Tables A and B compare the inlet control performance of the different inlet types. Table A shows the increase in discharge that is possible for a headwater depth of 8 feet. The bevel-edged inlet, side-tapered inlet and slope-tapered inlet show increases in discharge over the square-edged inlet of 16.7, 30.4 and 55.6 percent, respectively. It should be noted that the slope-tapered inlet incorporates only the minimum FALL of D/4. Greater increases in capacity are often possible if a larger FALL is used.

TABLE A

COMPARISON OF INLET PERFORMANCE AT
CONSTANT HEADWATER FOR 6 FT. x 6 FT. RCB

Inlet Type	Headwater	Discharge	% Improvement
Square-edge	8.0'	336 cfs	0
Bevel-edge	8.0'	392 cfs	16.7
Side-tapered	8.0'	438 cfs	30.4
*Slope-tapered	8.0'	523 cfs	55.6

* Minimum FALL in inlet = D/4 = 1.5 ft.

Table B depicts the reduction in headwater that is possible for a discharge of 500 cfs. The headwater varies from 12.5 ft. for the square-edged inlet to 7.6 ft. for the slope-tapered inlet. This is a 39.2 percent reduction in required headwater.

TABLE B

COMPARISON OF INLET PERFORMANCE AT
CONSTANT DISCHARGE FOR 6 FT. x 6 FT. RCB

Inlet Type	Discharge	Headwater	% Reduction
Square-edge	500 cfs	12.5'	0
Bevel-edge	500 cfs	10.1'	19.2
Side-tapered	500 cfs	8.8'	29.6
*Slope-tapered	500 cfs	7.6'	39.2

*Minimum FALL in inlet = D/4 = 1.5 ft.

Figure 8

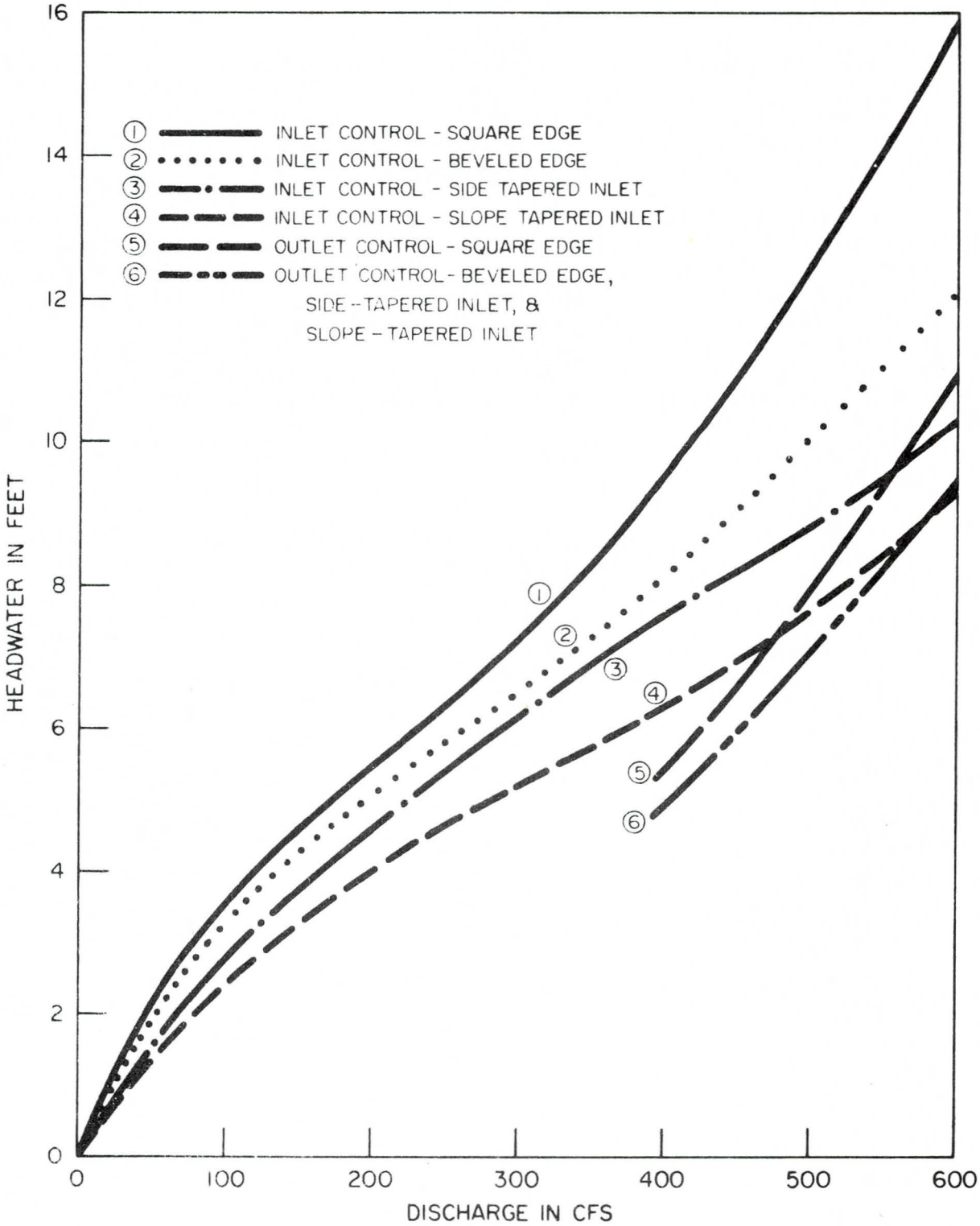

PERFORMANCE CURVES FOR
SINGLE 6' X 6' BOX CULVERT
90 DEGREE WINGWALL

The performance curves in Figure 8 illustrate how inlet geometry affects the capacity of a given culvert. The practical use of performance curves to compare the operation of culverts of various sizes and entrance configurations for a given discharge are discussed in detail in Sections III and IV.

In improved inlet design, the inverts of the face sections for the different types of improved inlets fall at various locations, depending on the design chosen. Therefore, it is difficult to define a datum point for use in comparing the performance of a series of improved inlet designs. The use of elevations is suggested, and this concept is used in the design procedure of this Circular. The example problem performance curves are plots of discharge versus required headwater elevations. Allowable headwater is also expressed as an elevation.

III. Box Culvert Improved Inlet Design

Bevel-Edged Inlets

Four inlet control charts for culverts with beveled edges are included in this Circular: Chart 8 for 90° headwalls (same as 90° wingwalls), Chart 9 for skewed headwalls, Chart 10 for wingwalls with flare angles of 18 to 45 degrees, and Chart 13 for circular pipe culverts with beveled rings. Instructions for the use of nomographs are given in HEC No. 5. Note that Charts 8 through 10 apply only to bevels having either a 33° angle (1.5:1) or a 45° angle (1:1). For example, the minimum bevel dimension for an 8 ft. x 6 ft. box culvert designed using Chart 8 for a 1:1 bevel, or 45° angle, would be d = 6 ft. x 1/2 in/ft = 3 in. and b = 8 ft. x 1/2 in/ft = 4 in. Therefore, the top bevel would have a minimum height of 3 in., and the side bevel would be 4 in. in width. Similar computations would show that for a 1.5:1 or 33.7° angle, d would be 6 in. and b would be 8 in.

The design charts in this Circular are based on research results from culvert models with barrel width, B, to depth, D, ratios of from 0.5:1 to 2:1.

Multibarrel Installations

For installations with more than one barrel, the nomographs are used in the same manner as for a single barrel, except that the bevels must be sized on the basis of the total clear opening rather than on individual barrel size. For example, in a double 8 ft. by 8 ft. box culvert, the top bevel is proportioned based on the height, 8 ft., and the side bevels proportioned based on the clear width, 16 feet. This results in a d dimension, for the top bevel of 4 in. for the 1:1 bevel, and 8 in. for the 1.5:1 bevel and a b dimension for the side bevels of 8 in. for the 1:1 bevel and 16 in. for the 1.5:1 bevel. The ratio of the inlet face area to the barrel area remains the same as for a single barrel culvert.

For multibarrel installations exceeding a 3:1 width to depth ratio, the side bevels become excessively large when proportioned on the basis of the total clear width. For these structures, it is recommended that the side bevel be sized in proportion to the total clear width, B, or three times the height, whichever is smaller. The top bevel dimension should always be based on the culvert height. Until further research information becomes available, the design charts in this Circular may be used to estimate the hydraulic performance of these installations.

The shape of the upstream edge of the intermediate walls of multibarrel installations is not as important to the hydraulic performance of a culvert as the edge condition of the top and sides. Therefore, the edges of these walls may be square, rounded with a radius of one-half their thickness, chamfered, or beveled. The intermediate walls may also project from the face and slope downward to the channel bottom to act as debris fins as suggested in HEC No. 9 (15).

It is recommended that Chart 9 for skewed inlets not be used for multiple barrel installations, as the intermediate wall could cause an extreme contraction in the downstream barrels. This would result in underdesign due to a greatly reduced capacity. As discussed in Section V, skewed inlets should be avoided whenever possible, and should not be used with side- or slope-tapered inlets.

Side-Tapered Inlets

Description

The selected configurations of the side-tapered inlet are shown in Figure 9. The barrel and face heights are the same except for the addition of a top bevel at the face. Therefore, the enlarged area is obtained by making the face wider than the barrel and providing a tapered sidewall transition from the face to the barrel. Side taper ratios may range from 6:1 to 4:1. The 4:1 taper is recommended as it results in a shorter inlet.

The throat and the face are possible flow control sections in the side-tapered inlet. The weir crest is a third possible control section when a FALL is used. Each of the possible control sections should be sized to pass the design discharge without exceeding the allowable headwater elevation. Plots of the performance of each of the possible inlet control sections along with the outlet control performance curve define the culvert performance.

Figure 9

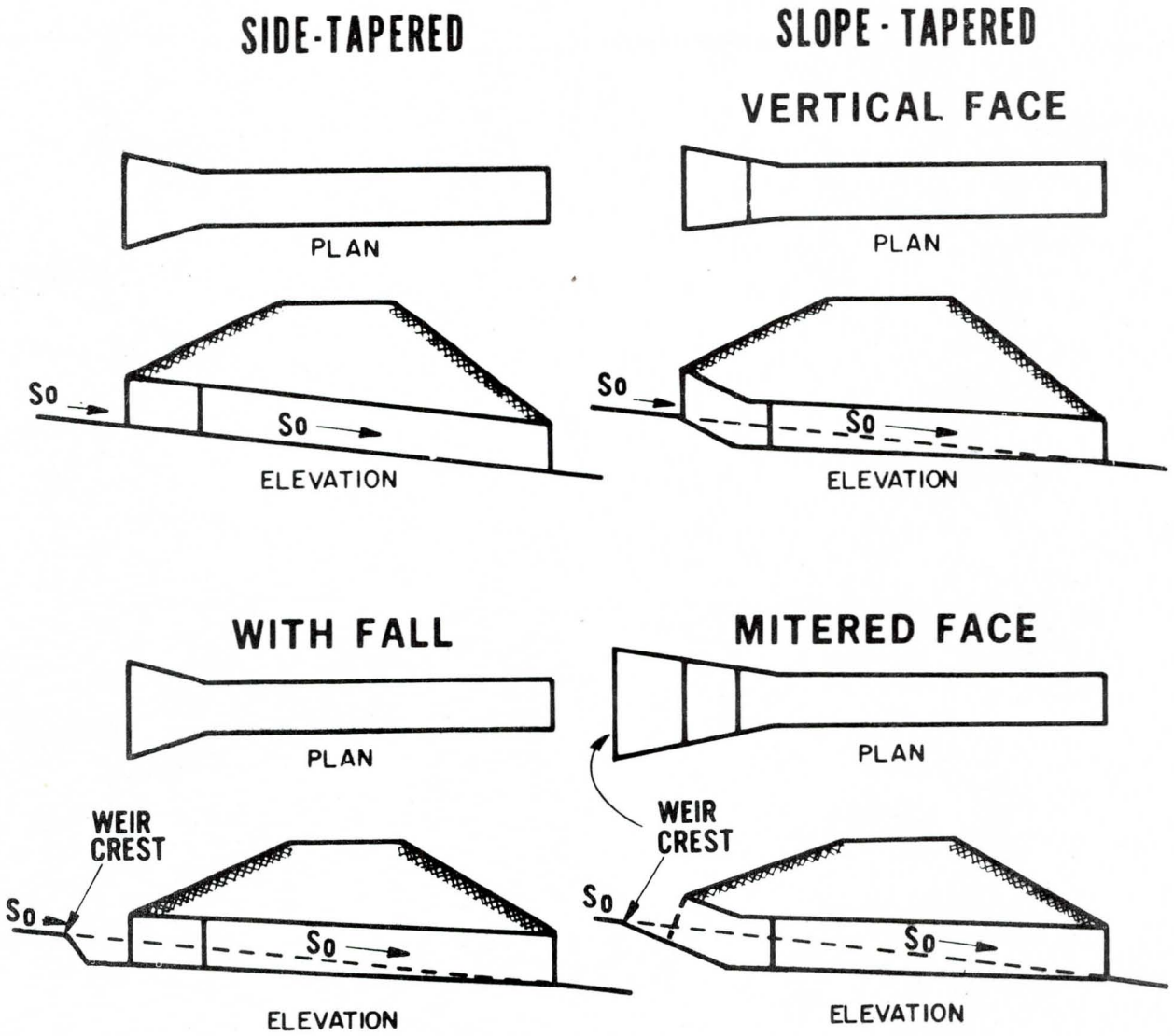

TYPES OF IMPROVED INLETS FOR BOX CULVERTS

Figure 10

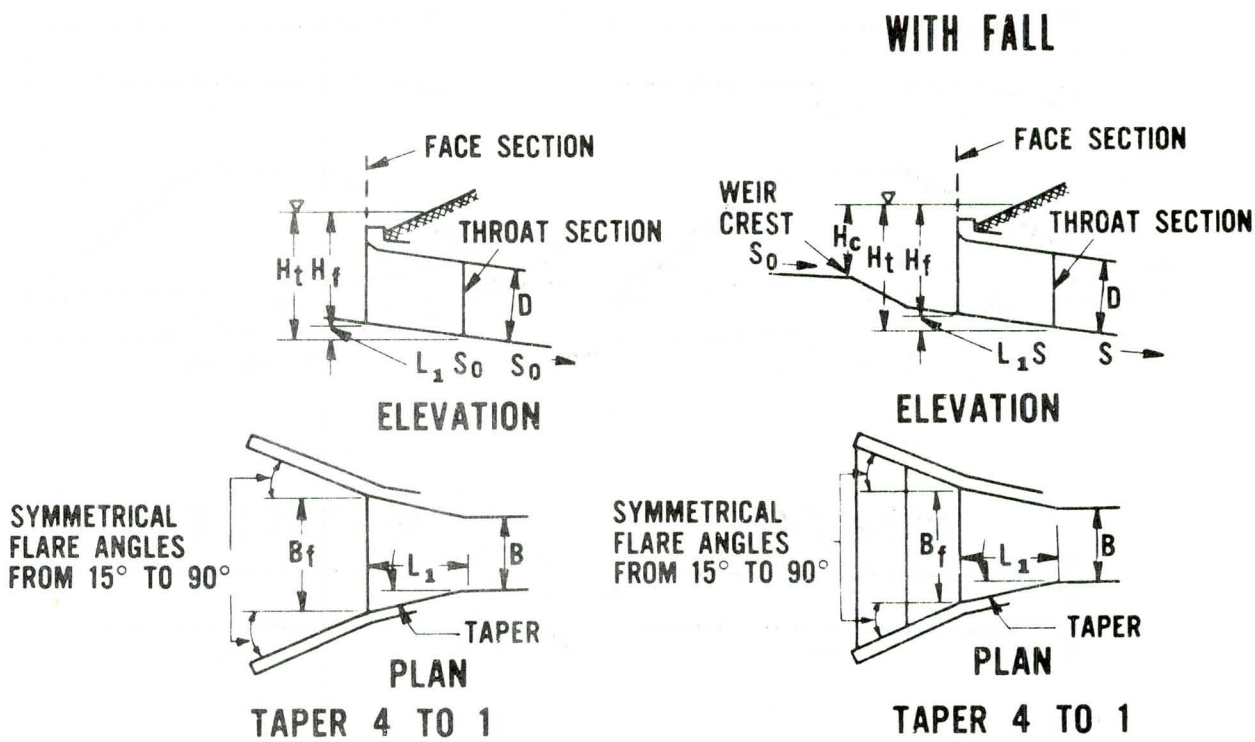

IMPROVED INLETS
SIDE-TAPERED

Throat Control

In order to utilize more of the available culvert barrel area, the control at design discharge generally should be at the throat rather than at the face or crest. Chart 14 presents the headwater depth, referenced to the throat invert, required to pass a given discharge for side- or slope-tapered inlets operating in throat control. This chart is in a semi-dimensionless form, H_t/D plotted against $Q/BD^{3/2}$. The term, $Q/BD^{3/2}$, is not truly dimensionless, but is a convenient parameter and can be made non-dimensional by dividing by the square root of gravitational acceleration, $g^{1/2}$. **A table of $BD^{3/2}$ values is contained in Section VIII.**

Face Control

Design curves for determining face width are provided in Chart 15. Both the inlet edge condition and sidewall flare angle affect the performance of the face section. The two curves in Chart 15 pertain to the options in Figure 11. The dashed curve, which is less favorable, applies to the following inlet edge conditions:

(1) wingwall flares of 15° to 26° and a 1:1 top edge bevel, and

(2) wingwall flares of 26° to 90° and square edges (no bevels). A 90° wingwall flare is commonly termed a headwall.

The more desirable solid curve applies to the following entrance conditions:

(1) wingwall flares of 26° to 45° with a 1:1 top edge bevel, or

(2) wingwall flares of 45° to 90° with a 1:1 bevel on the side and top edges.

Note that undesirable design features, such as wingwall flare angles less than 15°, or 26° without a top bevel, are not covered by the charts. Although the 1.5:1 bevels can be used, due to structural considerations, the smaller 1:1 bevels are preferred.

Figure 11

DASHED CURVE

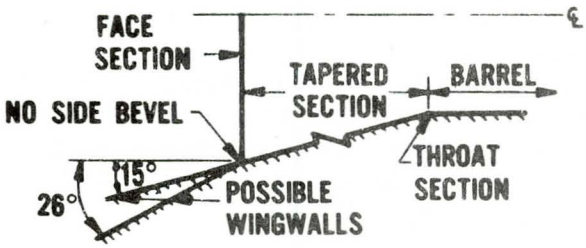

CASE 1

15° TO 26° WINGWALL FLARE ANGLES
TOP BEVEL REQUIRED
NO SIDE BEVEL REQUIRED

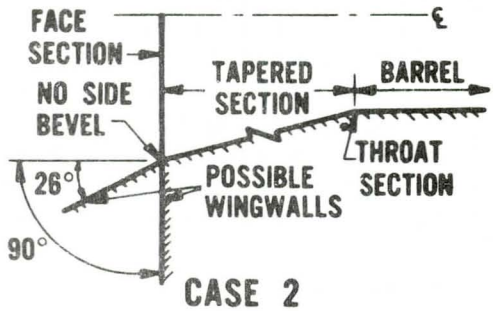

CASE 2

26° TO 90° WINGWALL FLARE ANGLES
NO TOP BEVEL REQUIRED
NO SIDE BEVEL REQUIRED

SOLID CURVE

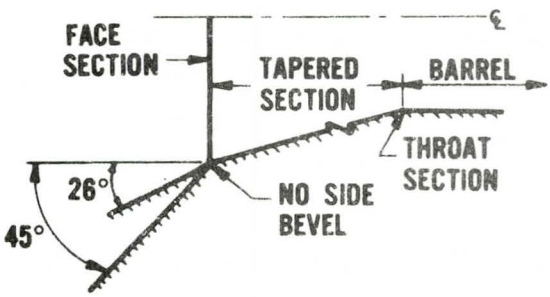

CASE 1

26° TO 45° WINGWALL FLARE ANGLES
TOP BEVEL REQUIRED
NO SIDE BEVEL REQUIRED

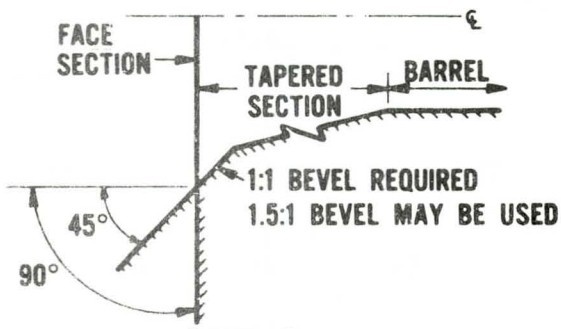

CASE 2

45° TO 90° WINGWALL FLARE ANGLES
TOP BEVEL REQUIRED
SIDE BEVEL REQUIRED

DEFINITION OF CURVES ON FACE CONTROL DESIGN CHARTS 15 AND 16

Use of FALL Upstream of Side-Tapered Inlet

A depression may be utilized upstream of the face of a side-tapered inlet. As illustrated in Figures 9 and 10, the depression may be constructed in various ways, as an extension of the wingwalls, or by a paved depression similar to that used with side-tapered pipe culvert inlets, shown in Figure 16. The only requirements are: the plane of the invert of the barrel be extended upstream from the inlet face a minimum distance of D/2, to provide a smooth flow transition into the inlet; and, the crest be long enough to avoid undesirably high headwater from crest control at design discharges. Chart 17 may be used for checking crest control if the fall slope is between 2:1 to 3:1. The length of the crest, W, may be approximated, neglecting flow over the sides of sloping wingwalls. This provides a conservative answer.

Performance Curves

Figure 12 illustrates the design use of performance curves and shows how the side-tapered inlet can reduce the barrel size required for a given discharge. (The detailed calculations for Figure 12 are given in Example Problem No. 1). Performance curve No. 1 is for a double 7 ft. x 6 ft. conventional culvert with 90 degree wingwalls (headwall) and 1:1 bevels on both the top and side. This conventional inlet will be the "standard" to which curves for the improved inlets may be compared.

The hatched performance curve is for a double 6 ft. x 5 ft. box culvert with a side-tapered inlet with no FALL upstream. It is a composite of the throat and face control curves. The outlet control curve was also computed, but falls outside of the limits of the figure. This indicates that further increases in capacity or reduction in headwater are possible. Face control governs to a discharge of 375 cfs, and throat control for larger discharges. Thus, the barrel dimensions (throat size) control the designs at high discharges, which should always be the case. In this example, the size of the culvert was reduced from a double 7 ft. x 6 ft. box to a double 6 ft. x 5 ft. for the same allowable headwater. Use of an upstream FALL would reduce the barrel size still further to a size comparable to that required with a slope-tapered inlet.

Double Barrel Design

As shown in the above example, double barrel structures may be designed with improved inlets. The face is proportioned on the basis of the total clear width as described for bevels.

Figure 12

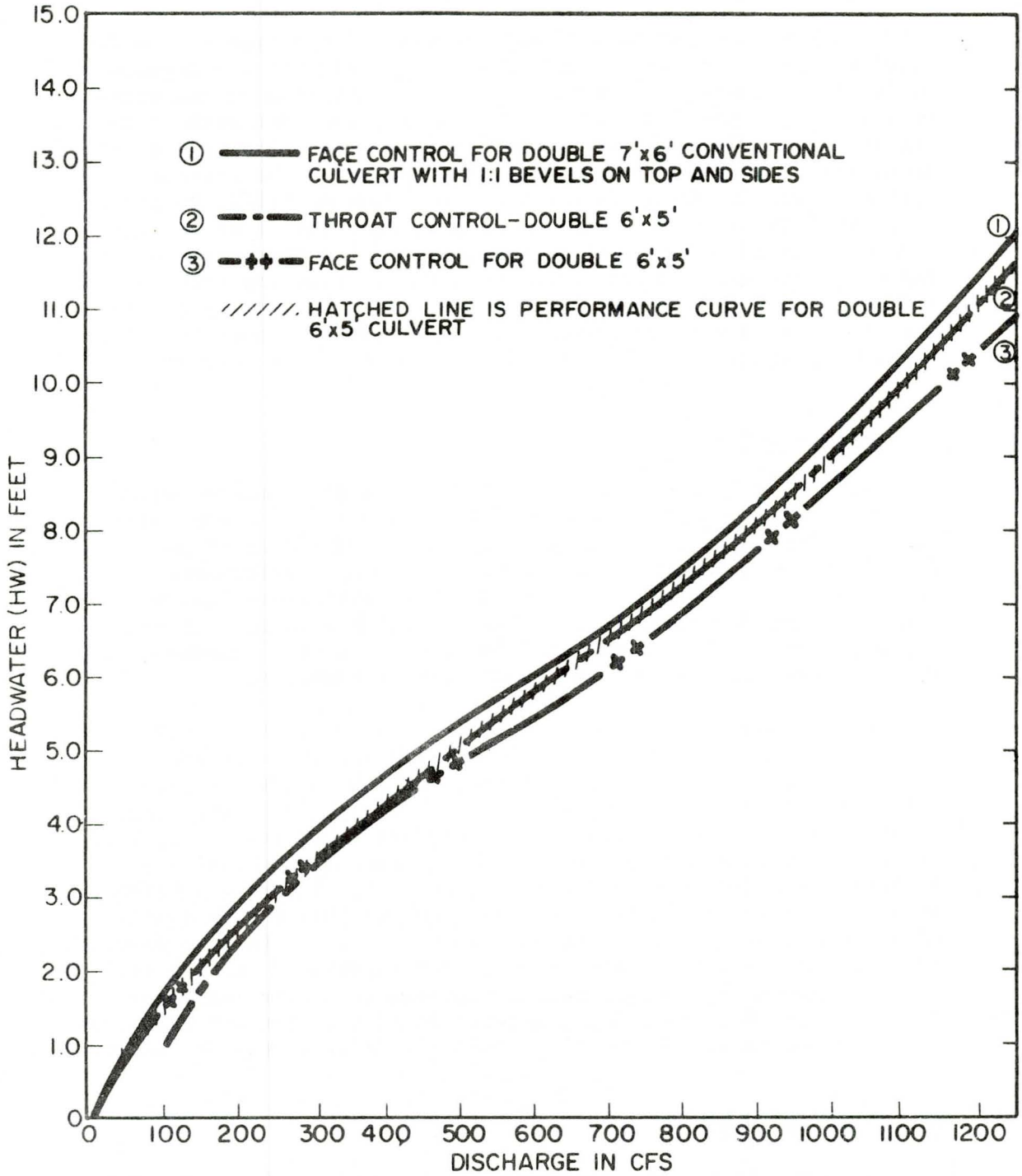

PERFORMANCE CURVES FOR DIFFERENT
BOX CULVERTS WITH VARYING INLET CONDITIONS
(SIDE-TAPERED INLET)

The center wall is extended to the face section with either a square, rounded, chamfered, or beveled edge treatment. A side-wall taper of from 4:1 to 6:1 may be used.

The face width, as determined from Chart 15, is the total clear face width needed. The width of the center wall must be added to this value in order to size the face correctly.

No design procedure is available for side-tapered inlet culverts with more than two barrels.

Slope-Tapered Inlets

The inlets shown in Figure 13 are variations of the slope-tapered inlet and provide additional improvements in hydraulic performance by increasing the head on the control section. The difference between the two types of slope-tapered inlets lies in the face section placement. One type has a vertical face configuration and the other a mitered face. The face capacity of the latter type is not based on its physical face section, but on a section perpendicular to the fall slope intersecting the upper edge of the opening. This is illustrated by the dashed line in Figure 13.

Excluding outlet control operation, the slope-tapered inlet with a vertical face has three potential control sections: the face, the throat, and the bend (Figure 13). The bend is located at the intersection of the fall slope and the barrel slope. The distance, L_3, between the bend and the throat must be at least 0.5B, measured at the soffit or top of the culvert, to assure that the bend section will not control. Therefore, the hydraulic performance needs only be evaluated at the face and throat sections. The slope-tapered inlet with a mitered face has a fourth possible control section, the weir crest.

Throat Control

As with side-tapered inlets, throat control performance should usually govern in design since the major cost is in the construction of the barrel. Chart 14 is the throat control design curve for both slope-tapered inlets. By entering Chart 14 with a computed value for $Q/BD^{3/2}$, H_t can be determined from the value $\frac{H_t}{D}$.

Figure 13

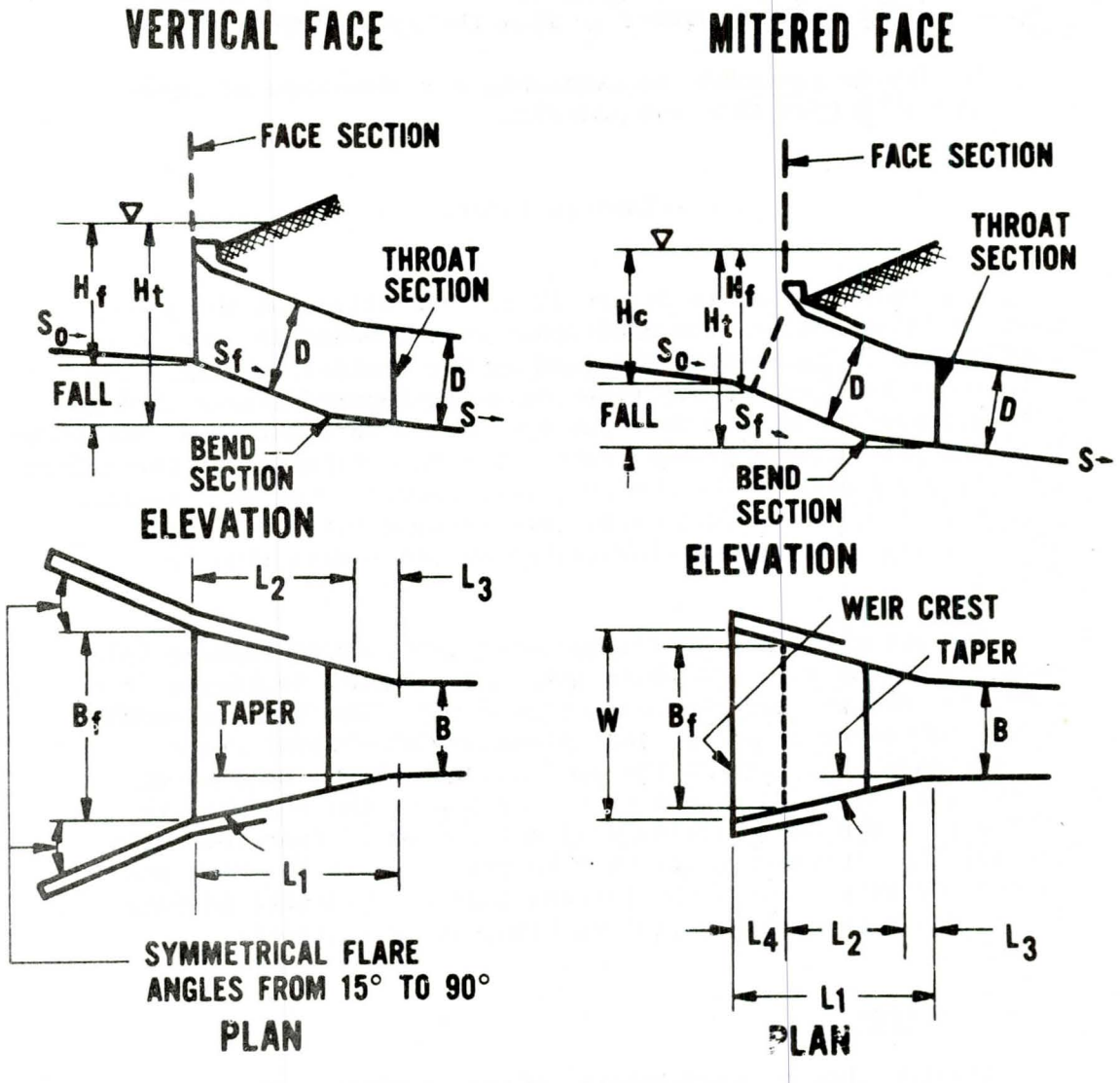

IMPROVED INLETS SLOPE-TAPERED

Face Control

Face control design curves for slope-tapered inlets are presented in Chart 16. The two design curves apply to the face edge and wingwall conditions shown in Figure 11.

Crest Control

The possibility of crest control should be examined for the slope-tapered inlet with a mitered face using Chart 17. The crest width, W, is shown in Figure 13. Again, there may be flow from the sides over the wingwalls, but generally this can be neglected. As the headwater rises above the wingwalls, there is little chance that the crest will remain the control section.

Design Limitations

In the design of slope-tapered inlets, the following limitations are necessary to insure that the design curves provided will always be applicable. If these limitations are not met, hydraulic performance will not be as predicted by design curves given in this Circular.

The fall slope must range from 2:1 to 3:1. Fall slopes steeper than 2:1 have adverse performance characteristics and the design curves do not apply. If a fall slope less than 3:1 is used, revert to design Chart 15 for side-tapered inlets and use the fall slope that is available. Do not interpolate between Charts 15 and 16.

The FALL should range from D/4 to 1.5D for direct use of the curves. For FALLS greater than 1.5D, frictional losses between the face and the throat must be calculated and added to the headwater. For FALLS less than D/4, use design Chart 15 for side-tapered inlets and the FALL that is available. Do not interpolate between Charts 15 and 16.

The sidewall taper should be from 4:1 to 6:1. Tapers less than 4:1 are unacceptable. Tapers greater than 6:1 will perform better than the design curves indicate, and the design will be conservative.

L_3 must be a minimum of 0.5B measured at the soffit or inside top of the culvert. Larger values may be used, but smaller ones will cause the area provided for the bend to be so reduced that the bend section will control rather than the throat section. Do not use an L_3 value less than 0.5B.

Performance Curves

In Figure 14, performance curves for the slope-tapered inlet are shown in addition to the performance curves shown in Figure 12. Detailed calculations may be found in Example 1.

As can be seen from Figure 14, the performance of a single 7 ft. by 6 ft. culvert with a slope-tapered inlet is comparable to a double conventional 7 ft. by 6 ft. culvert with beveled edges. Note that the performance curve for the single 7 ft. x 6 ft. culvert (hatched line) is developed from the face control curve (Curve 5) from 0 to 950 cfs, the throat control curve (Curve 4) from 950 to 1,200 cfs and the outlet control curve (Curve 6) for all discharges above 1,200 cfs. This illustrates the need for computing and plotting the performance of each control section and demonstrates the barrel size reduction possible through use of improved inlets. The performance curves clearly indicate the headwater elevation required to pass any discharge. This is an invaluable tool in assessing the consequences of a flood occurrence exceeding the design discharge estimate. The use of performance curves in maximizing performance and optimization of design will be discussed in Section VI of this Circular.

Double Barrel Design

Charts 14, 16, and 17 depict single barrel installations, but they are applicable to double barrel installations with the center wall extended to the face section.

In addition to the comments and limitations for single barrel slope-tapered inlets, the face must be proportioned on the basis of the total clear width. The center wall is extended to the face section and may have any desired edge treatment.

The face width, as determined from Chart 16, is the total clear face width. The center wall width must be added to the value found from Chart 16 in order to size the face correctly.

No design procedure is available for slope-tapered inlet culverts with more than two barrels.

Figure 14

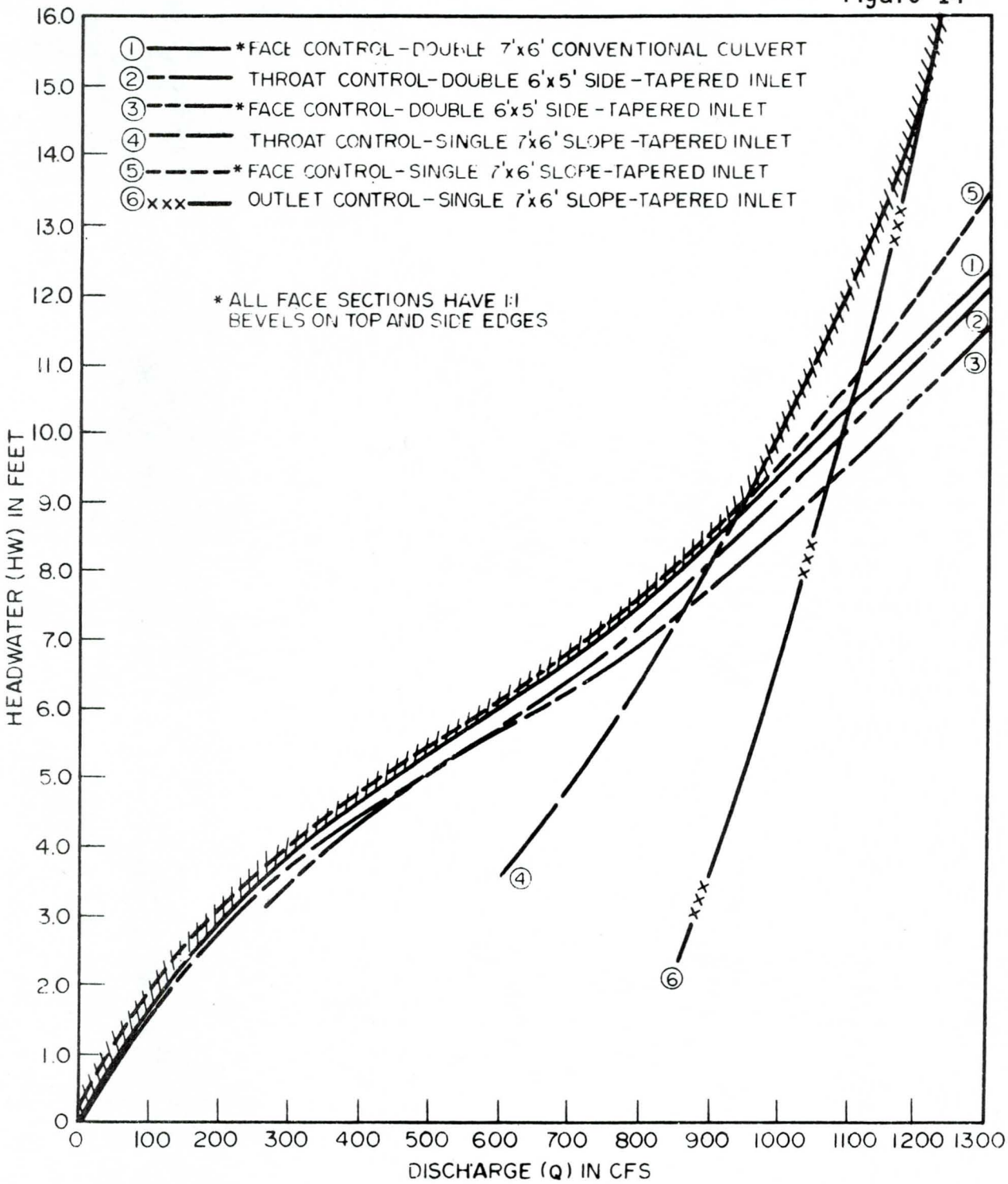

PERFORMANCE CURVES FOR DIFFERENT
BOX CULVERTS WITH VARYING INLET CONDITIONS

IV. Pipe Culvert Improved Inlet Design

As with box culverts, for each degree of pipe culvert inlet improvement there are many possible variations using bevels, tapers, drops, and combinations of the three. The tapered inlets are generally classified, as shown in Figure 15, as either side-tapered (flared) or slope-tapered. The side-tapered inlet for pipe culverts is designed in a manner similar to that used for a side-tapered box culvert inlet. The slope-tapered design for pipes utilizes a rectangular inlet with a transition section between the square and round throat sections.

Bevel-Edged Inlets

Design charts for conventional pipe culverts with different entrance edge conditions are contained in Section VII. Instructions for use of these charts are contained in HEC No. 5 and will not be repeated here. As previously mentioned, the socket end of a concrete pipe results in about the same degree of hydraulic improvement as a beveled edge. Therefore, it is suggested that the socket be retained at the upstream end of concrete pipes, even if some warping of the fill slope is required because of the longer pipe or skewed installation.

Multibarrel pipe culverts should be designed as a series of single barrel installations using the appropriate design charts in Section VII, since each pipe requires a separate bevel.

Side-Tapered Pipe Inlets

(Flared Inlets)

Description

The side-tapered or flared inlet shown in Figure 15 is comparable to the side-tapered box culvert inlet. The face area is larger than the barrel area and may be in the shape of an oval, as shown in Figure 15, a circle, a circular segment, or a pipe-arch. The only limitations on face shape are that the vertical face dimension, E, be equal to or greater than D and equal to or less than 1.1D and that only the above face shapes be used with inlets designed using Chart 19. Rectangular faces may be used in a manner similar to that described for the side- and slope-tapered inlet. The side taper should range from 4:1 to 6:1.

Figure 15

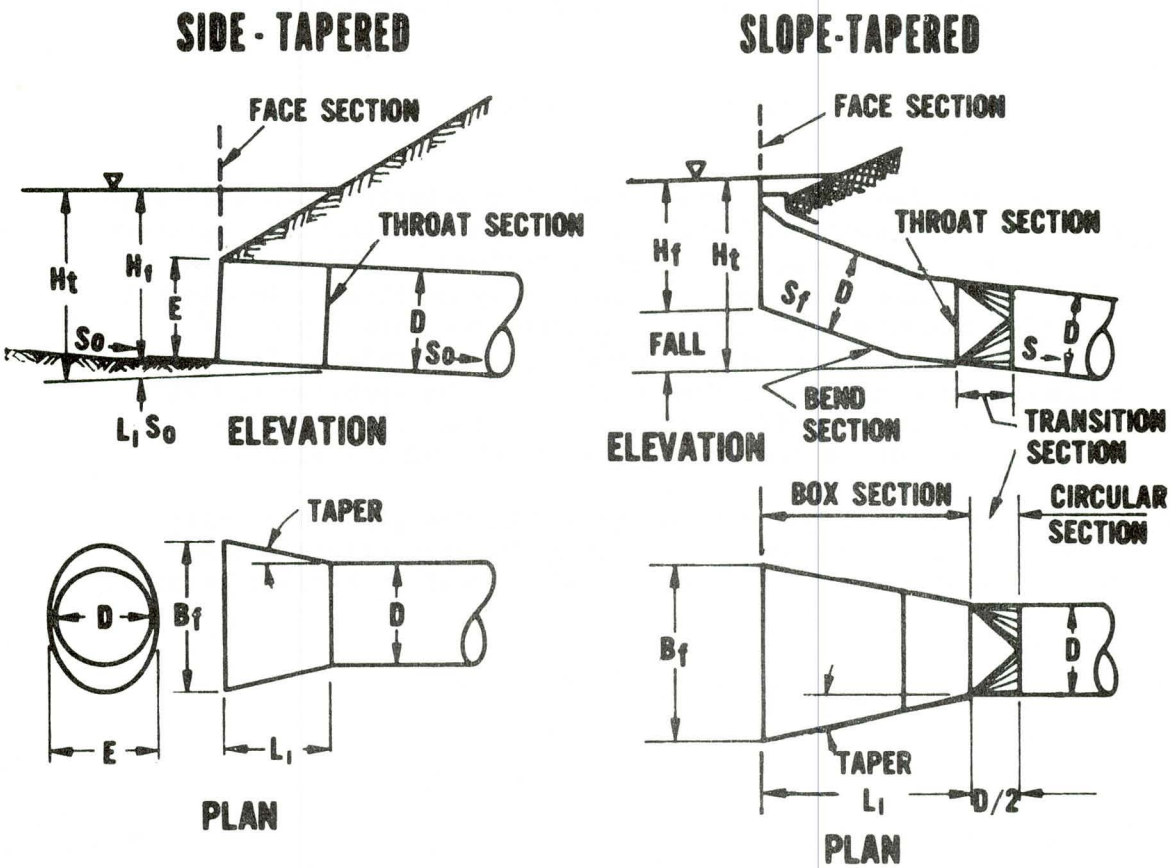

TYPES OF IMPROVED INLETS FOR PIPE CULVERTS

As with the box culvert side-tapered inlet, there are two possible control sections: the face and the throat (Figure 15). In addition, if a depression is placed in front of the face, the crest may control. This variation of the side-tapered inlet is depicted in Figure 16, and will be discussed in a following section.

Throat Control

As stated before, the barrel of a culvert is the item of greatest cost; therefore, throat control should govern in the design of all improved inlets. Throat control design curves for side-tapered inlets are presented in Chart 18. Note that this chart contains two throat control design curves while the box culvert charts have only one. One curve is for entrances termed "smooth," such as those built of concrete or smooth metal, and the other is for "rough" inlets, such as those built of corrugated metal. The need for two curves results from different roughness characteristics and the difference in energy losses due to friction between the face and throat of the inlets.

Chart 18 applies only to circular barrels. It should not be used for rectangular, pipe-arch, or oval sections. Chart 14 is used for rectangular sections, but no information is available for using improved inlets with pipe-arch or oval barrels.

Face Control

Face control curves for the side-tapered pipe culvert inlet are presented in Chart 19. The three curves on this chart are for: the thin-edged projecting inlet, the square-edged inlet, and the bevel-edged inlet. Note that the headwater is given as a ratio of E rather than D. This permits the use of the curves for face heights from D to 1.1D, as the equations used in developing the curves do not vary within this range of E.

In Chart 19, flexibility is allowed in choosing the face shape by presenting the flow rate, Q, in terms of $Q/A_f E^{1/2}$, rather than $D^{5/2}$. By using the area of the face, A_f, and its height, E, the designer may choose or evaluate any available shape, such as elliptical, circular, a circular segment, or a pipe-arch. However, this chart does not apply to rectangular face shapes.

Figure 16

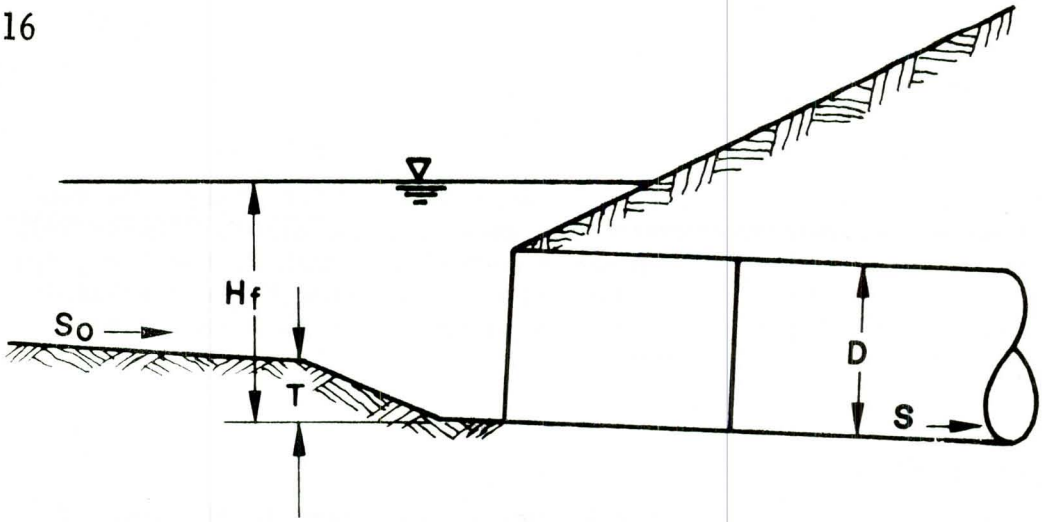

ELEVATION

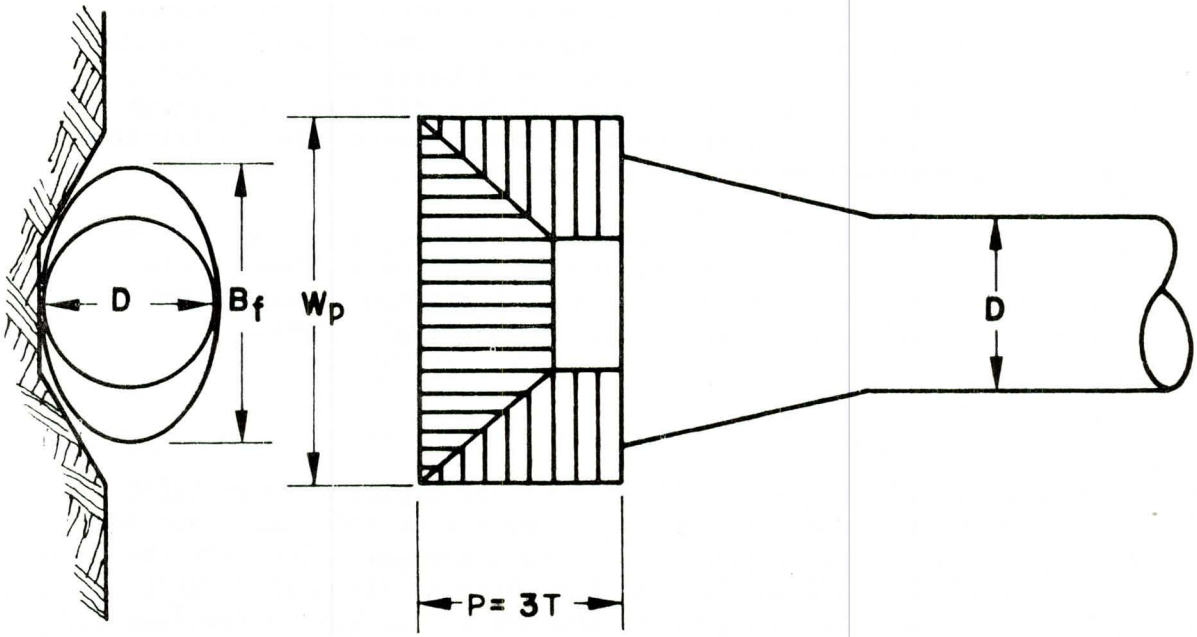

PLAN

$W_p = B_f + T$ or 4T WHICH EVER IS LARGER

SIDE-TAPERED INLET WITH CHANNEL DEPRESSION UPSTREAM OF ENTRANCE

Standard Designs

Some State highway departments have developed standard plans for the side-tapered (flared) inlet. Such standard designs are geometrically similar, with the face width and the inlet length expressed as fixed ratios of the pipe diameter. These standard inlets are precast or prefabricated, delivered to the construction site, and placed in the same manner as the other pipe sections.

When standard inlets are used, the control section may be at the face rather than the throat for steep slopes or high flow rates. Thus, Charts 18 and 19 should be used to develop a standard inlet plan which would operate in throat control for the majority of pipe installations, recognizing that, under certain conditions, face control may govern.

It may be advantageous for adjacent States with similar topographic conditions to develop common standard designs. Such a procedure could result in lower costs for all concerned, particularly if some suppliers serve more than one State.

FALL Upstream of Inlet Face

In order to provide additional head for the throat section of pipe culverts, the slope-tapered inlet may be used, or a depression can be placed upstream of the side-tapered inlet face. There are various methods of constructing such a depression, including a drop similar to that shown for the side-tapered box culvert inlet with flared wingwalls. This configuration consists of a constantly sloping bottom from the crest to a point a minimum distance of D/2 upstream of the face invert, and on line with the barrel invert. Chart 17 should be used to assure that the weir crest is long enough to avoid crest control.

Another means of providing a FALL upstream of the face is depicted in Figure 16. This configuration can be used with 90° wingwalls (headwall). The depression will probably require paving to control upstream erosion. Research results indicated that such a depression could cause a moderate decrease in the performance of the face. To insure that this reduction in performance is not extreme, the following dimensional considerations should be observed (Figure 16):

(1) The minimum length of the depression, P, should be 3T;
(2) the minimum width, W_p, of the depression should be $B_f + T$ or 4T, whichever is larger;
(3) the crest length should be taken as $W_p + 2(P)$ when using Chart 17 to determine the minimum required weir length.

Slope-Tapered Inlets for Pipe Culverts

In order to utilize more of the available total culvert fall in the inlet area, as is possible with the box culvert slope-tapered inlets, a method was devised to adapt rectangular inlets to pipe culverts as shown in Figure 17. As noted in the sketch, the slope-tapered inlet is connected to the pipe culvert by use of a square to circular transition over a minimum length of one-half the pipe diameter. The design of this inlet is the same as presented in the box culvert section. There are two throat sections, one square and one circular, and the circular throat section must be checked by use of Chart 18. In all cases, the circular throat will govern the design because its area is much smaller than the square throat section. Thus, the square throat section need not be checked. The culvert performance curve consists of a composite of performance curves for the inlet control sections and the outlet control performance curve.

Square to round transition sections have been widely used in water resource projects. They are commonly built in-place, but also have been preformed. It is recommended that plans permit prefabrication or precasting as an alternate to in-place construction.

Rectangular Side-Tapered Inlets for Pipe Culverts

The expedient suggested for adapting the slope-tapered inlet for use with pipe culverts can also be used on side-tapered inlets where unusually large pipes or sizes not commonly used are encountered. It may not be economical to prefabricate or precast a "one-of-a-kind" side-tapered or flared inlet, in which case, a cast-in-place rectangular side-tapered inlet would be a logical bid alternate. Also, flared inlets for large pipes may be too large to transport or to handle on the job. In this case, the flared or side-tapered pipe inlet could either be prefabricated or precast in two sections or the rectangular side-tapered inlet may be used as a bid or design alternate. Information for determining throat and face control performance is provided in Charts 18 and 15, respectively.

Figure 17

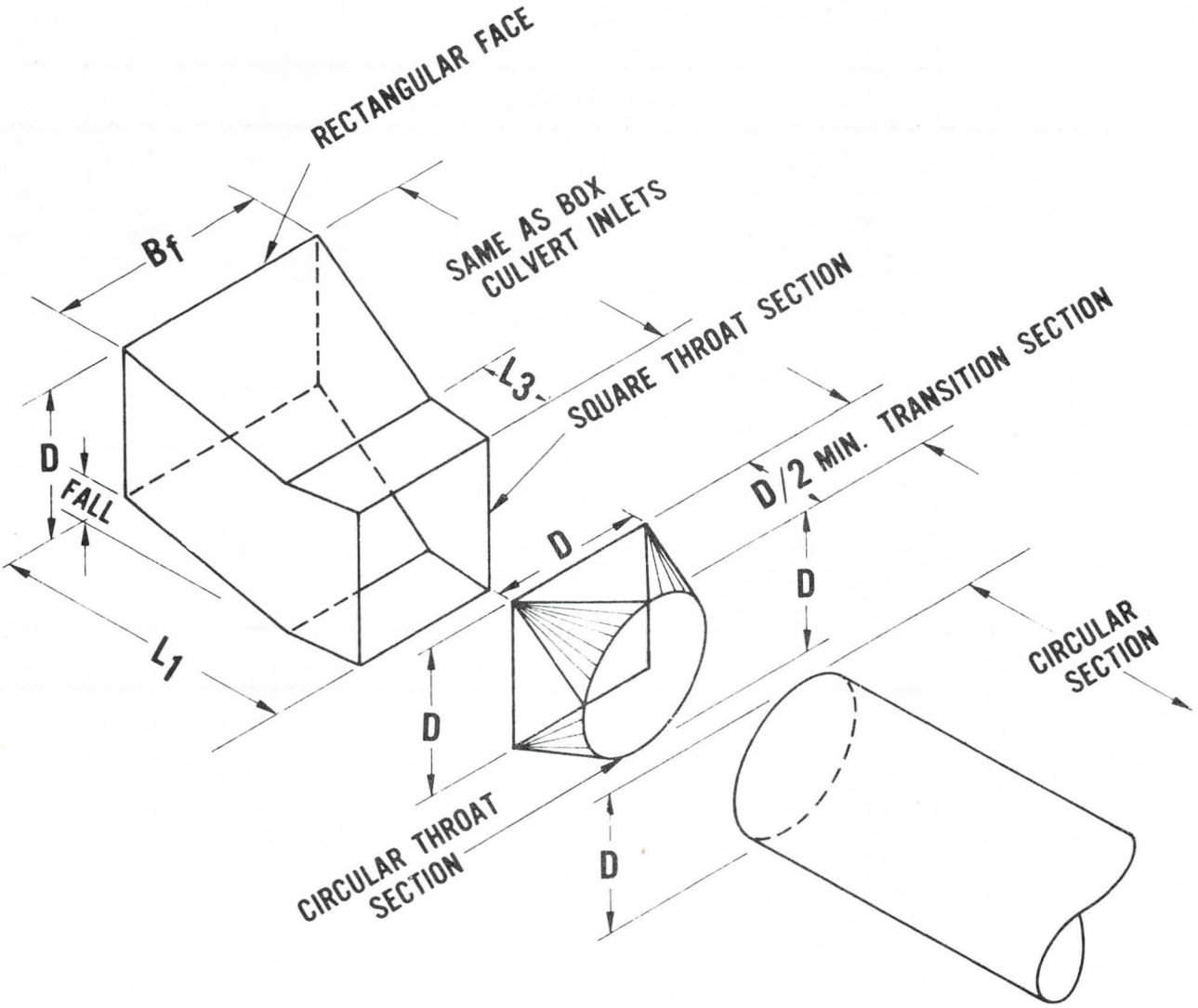

SLOPE-TAPERED INLET
APPLIED TO CIRCULAR PIPE

Design Limitations

In addition to the design limitations given previously for box culvert slope-tapered inlets, the following criteria apply to pipe culvert slope-tapered inlets and rectangular side-tapered inlets for pipe culverts:

1. The rectangular throat of the inlet must be a square section with sides equal to the diameter of the pipe culvert.

2. The transition from the square throat section to the circular throat section must be no shorter than one half the culvert diameter, D/2. If excessive lengths are used, the frictional loss within this section of the culvert should be considered in the design.

Multibarrel Designs

The design of multiple barrels for circular culverts using slope-tapered improved inlets can be performed the same as for box culverts, except that the center wall must be flared in order to provide adequate space between the pipes for proper compaction of the backfill. The amount of flare required will depend on the size of the pipes and the construction techniques used. No more than two barrels may feed from the inlet structure using the design methods of this Circular.

An alternative would be to design a series of individual circular culverts with slope-tapered inlets. This permits the use of an unlimited number of barrels, and the curves and charts of this publication are applicable.

V. General Design Considerations

The primary purpose of this Circular is to provide the design engineer with the tools necessary to design improved inlets for culverts. There are many factors to consider in culvert design in addition to hydraulic and structural adequacy, many of which are subjective. Following is a discussion of some of the aspects that should be considered in improved inlet design.

Highway Safety Aspects of Improved Inlets

Improved culvert inlets should not be a greater hazard to motorists than conventional culvert inlets. In both cases, the inlets should be located a sufficient distance from the pavement so as not to present an undue hazard to errant vehicles. Otherwise, suitable restraints should be provided to prevent vehicles from colliding with the inlet structures.

Hydrologic Estimates

The design discharge for a culvert is an estimate, usually made with some recognition of the risk involved or the chance that the discharge will be exceeded. For instance, there is a 2 percent chance that the 50-year flood will be exceeded in any one given year. Or, a structure with a 25-year life expectancy designed for the 50-year flood has a 40 percent chance of experiencing a higher flood during its life. If the frequency analysis is based on short period of flood or streamflow records, the chances of the estimated peak for the design flood being exceeded are much greater.

This further emphasizes the necessity of evaluating a culvert's performance through a range of discharges. The risk of damage to the highway or adjacent property due to floods greater than the design discharge may be greater with these culverts than with conventional culverts, as performance may shift to outlet control. The designer should examine the performance of the proposed culvert in outlet control to determine whether or not that performance is acceptable.

Allowable Headwater Elevation

The maximum permissible elevation of the headwater pool of the culvert at the design discharge is termed the Allowable Headwater Elevation. This elevation must be selected by the designer based on his evaluation of many factors, all of which should be well documented. These include highway elevations, upstream development and land use, feature elevations, historical high water marks, importance of the highway, and damage risks. Possible loss of life and property, and traffic delay and interruption should be considered in the damage risk analysis.

Throughout the design process, the designer should remain aware of the consequences of exceeding the Allowable Headwater Elevation. In some situations, such as in rural areas, the damages might be negligible, while in others, exceeding the Allowable Headwater Elevation should definitely be avoided.

Drift and Debris

A frequent objection to the use of improved inlets on highway culverts is that use of the side- and slope-tapered inlet configurations will increase problems with drift and debris.

As with conventional culvert design, if the drainage basin will contribute a large amount of drift and debris, the debris control design procedures presented in HEC No. 9 (15) should be utilized.

To prevent large drift material from lodging in the throat section of inlets with side tapers, a vertical column may be placed in the center of the inlet face. Any material passing the face section should then easily clear the culvert throat.

A survey of improved inlet usage in the United States was conducted for this publication (14), and comments on debris problems were specifically requested. Reports on 75 installations were received, and no problems with debris were reported.

Sedimentation

For beveled-edge and side-tapered improved inlet culverts with their barrels on nearly the same slope as the original stream bed, no unusual sedimentation problems are to be expected.

The inlets with FALLS have barrels on a flatter slope than the stream bed, which may tend to induce some sedimentation, especially at low flow rates. These deposits will, however, tend to be washed out of the culvert during periods of higher discharge. From the field survey, 8 of the 75 installations reported some sediment build-up, but in no case was it of a significant depth. No clogging problems due to sediment were cited in any improved inlet installation.

Outlet Velocity

Intuitively, it would seem that reducing the size of the culvert barrel would increase scour problems at the outlet due to increased outlet velocities. On the contrary, the outlet velocities for a conventional culvert and a culvert with an improved inlet for the same location and design conditions are essentially the same. When the barrel area is reduced, the flow depth is increased, and the flow area and velocity remain essentially the same. This fact can be confirmed by reviewing the example problems.

The method for computing outlet velocity given in HEC No. 5 also applies to culverts with improved inlets. Outlet velocity is simply the discharge divided by the flow area at the outlet. For culverts flowing in inlet control, the depth at the outlet is approximated by assuming the flow approaches normal depth. This depth may be determined by trial and error using a form of Manning's Equation:

$$Q = \frac{1.49}{n} \quad AR^{2/3}S^{1/2}$$

Direct solutions of this equation are provided by charts in Hydraulic Design Series (HDS) No. 3, "Design Charts for Open Channel Flow" (16).

For culverts flowing in outlet control, the depth is assumed to be: critical depth when the tailwater depth is less than critical depth; the tailwater depth when it is greater than critical depth but less than the culvert height; or the full

culvert height when the tailwater is equal to or greater than the height of the culvert or when critical depth is greater than the height of the culvert.

In the field survey, 8 of the 75 improved inlet installations were noted to have some scour at the outlet, and only two of these cases were severe enough to require corrective action by the use of riprap. From the above discussion, it is reasonable to assume that conventional culverts at these sites would also have required outlet protection against scour.

Orientation with Stream

Faces for both the side-tapered and slope-tapered inlets should be oriented normal to the direction of flow in the stream and not necessarily parallel with the roadway centerline. By constructing the entrance in this manner, hydraulic performance will be improved and structural design complications reduced. The embankment may be warped to fit the culvert and remain aesthetically pleasing.

Avoiding inlet skew is especially important in multiple barrel culverts. The interior walls, which are neglected in unskewed culverts, may produce unequal flow in the culvert barrels, reduced performance, and possible sedimentation in some barrels.

Culvert Cost

The total cost of various alternatives should be considered in the final culvert selection. For instance, a slope-tapered installation or a side-tapered inlet with a depression will probably require more excavation than a culvert with its invert near the original stream flowline. If this excavation must be made through rock or other difficult material, it may be more economical to use a side-tapered design, assuming that both designs are hydraulically feasible, even though the barrel size of the slope-tapered culvert may be smaller.

Culvert Length

As previously mentioned, the culvert barrel cost usually far outweighs the cost of the inlet structure. Therefore, if a very long culvert operates in inlet control, opportunities may exist for great savings by using an improved inlet and reducing the barrel size.

Short culverts should also be analyzed for possible cost reductions through the use of improved inlets. Many significant savings have been recorded for these structures, especially in cases where the capacity of an existing culvert was increased by addition of an improved inlet rather than by replacement of the entire culvert.

VI. Design Procedure

General

The objective of the design procedure is the hydraulic design of culverts, using improved inlets where appropriate. Such factors as hydrology, structural requirements, etc., are important to the design but are beyond the scope of this Circular. Economic considerations, although not specifically discussed, are implied in the design procedure.

The design procedure hinges on the selection of a culvert barrel based on its outlet control performance curve, which is unique when based on elevation. The culvert inlet is then manipulated using edge improvements and adjustment of its elevation in order to achieve inlet control performance compatible with the outlet control performance. The resultant culvert design will best satisfy the criteria set by the designer and make optimum use of the barrel selected for the site.

The flow chart shown in Figure 18 outlines the steps of the design procedure, and each step is discussed in detail below. Design calculation forms are contained in Appendix D and design charts and tables are included in Sections VII and VIII, respectively.

Step 1. Determine and Analyze Site Characteristics

Site characteristics include the generalized shape of the highway embankment, bottom elevations and cross sections along the stream bed, the approximate length of the culvert, and the allowable headwater elevation. In determining the allowable headwater elevation (AHW El.), roadway elevations and the elevation of upstream property should be considered. The consequences of exceeding the AHW El. should be evaluated and kept in mind throughout the design process. In some instances, such as in unpopulated rural areas, little or no damage would result, while at some sites great losses may ensue.

Culvert design is actually a trial-and-error procedure because the length of the barrel cannot be accurately determined until the size is known, and the size cannot be precisely determined until the length is known. In most cases, however, a reasonable estimate of length will be accurate enough to determine the culvert size.

Figure 18

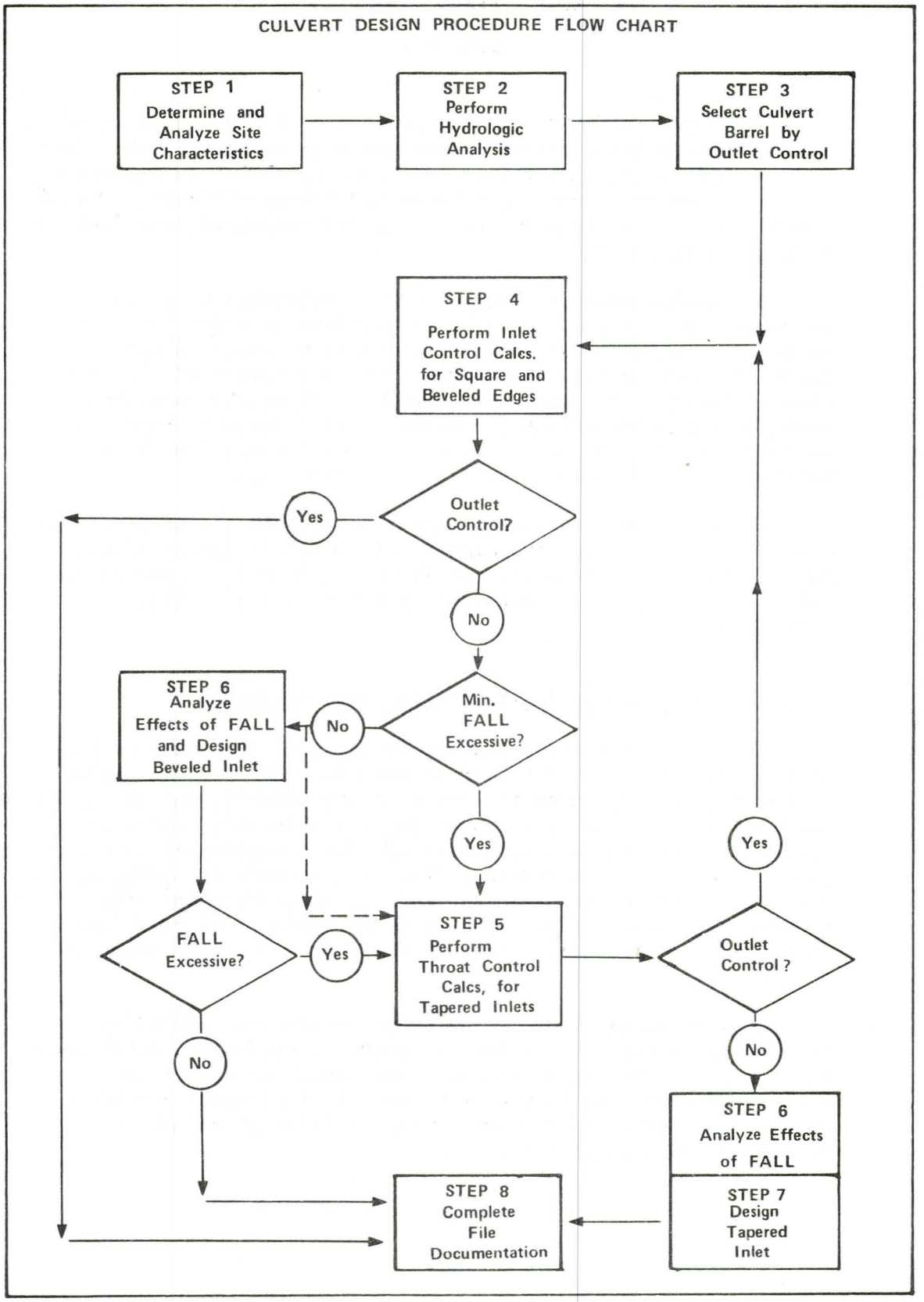
CULVERT DESIGN PROCEDURE FLOW CHART
STEP 1
Determine and Analyze Site Characteristics
STEP 2
Perform Hydrologic Analysis
STEP 3
Select Culvert Barrel by Outlet Control
STEP 4
Perform Inlet Control Calcs. for Square and Beveled Edges
Outlet Control?
Yes
No
Min. FALL Excessive?
No
STEP 6
Analyze Effects of FALL and Design Beveled Inlet
Yes
FALL Excessive?
Yes
No
STEP 5
Perform Throat Control Calcs, for Tapered Inlets
Yes
Outlet Control ?
No
STEP 6
Analyze Effects of FALL
STEP 7
Design Tapered Inlet
STEP 8
Complete File Documentation

N O T I C E

If this shipment does not contain your complete order, the remaining reports will be shipped at a later date. Please do not re-order. Retain all blue coupons enclosed with this shipment. Should you have any questions please return the coupon representing the report in question.

Thank You,

NTIS

U.S. DEPARTMENT OF COMMERCE
National Technical Information Service
Springfield, VA. 22161

☐ NTIS-65 (9-79)

OFFICIAL BUSINESS

Penalty for Private Use, $300

POSTAGE AND FEES PAID
U.S. DEPARTMENT OF COMMERCE
COM-211

U.S.MAIL

[redacted]

727400031 Q

NTIS CONTROL NUMBER

$ 9.95

VALUE OF SHIPMENT

DDC USER CODE | CONTRACT NO.

Y07705

PURCHASE ORDER NO.

1386848

CARD SERIAL NO.

DEPOSIT ACCT. NO.

FLOOD CONTROL DISTRICT
CRETHA RECTOR
3335 WEST DURANGO ST
PHOENIX AZ 85009

NO CHARGE: REPLACEMENT COPY

NO. OF COPIES

PAPER COPY 001

MICRO FORM

ORDERED AS

ADA 172 495 XXX

FILLED AS (DOCUMENT NO.)

THIS IS NOT A BILL. IT IS YOUR RECORD OF SHIPMENT. INVOICE WILL FOLLOW FOR SHIP AND BILL.
FOR ANY ADJUSTMENT ON THIS ORDER, PLEASE RETURN THIS CARD WITH YOUR CORRESPONDENCE.

The culvert length is approximately $2S_eD$ shorter than the distance between the points defined by the intersections of the embankment slopes and the stream bed, where S_e is the embankment slope, and D is the culvert height. The inlet invert elevation will be approximately S_oS_eD lower than the upstream point of intersection and the outlet invert elevation is approximately S_oS_eD higher than the downstream point of intersection, where S_o is the stream bed slope.

All points referenced to the stream bed should be considered approximate since stream beds are irregular and not straight lines as shown in the schematic site representation.

Step 2. Perform Hydrologic Analysis

By hydrologic methods, define the design flow rate. The probable accuracy of the estimate should be kept in mind as the design proceeds. The accuracy is dependent on the method used to define the flow rate, the available data on which it is based, etc.

Step 3. Perform Outlet Control Calculations and Select Culvert (Charts 1 through 6)

These calculations are performed before inlet control calculations in order to select the smallest feasible barrel which can be used without the required headwater elevation in outlet control (HW_o) exceeding the allowable headwater elevation (AHW El.). For use in this procedure, the equation for headwater is in terms of elevation.

The full flow outlet control performance curve for a given culvert (size, inlet edge, shape, material) defines its maximum performance. Therefore, inlet improvements beyond the beveled edge or changes in inlet invert elevation will not reduce the required outlet control headwater elevation. This makes the outlet control performance curve an ideal limit for improved inlet design.

When the barrel size is increased, the outlet control curve is shifted to the right, indicating a higher capacity for a given head. Also, it may be generally stated that increased barrel size will flatten the slope of the outlet control curve, although this must be checked.

The outlet control curve passing closest to and below the design Q and AHW El. on the performance curve graph defines the smallest possible barrel which will meet the hydraulic design criteria. However, that curve may be very steep (rapidly increasing headwater requirements for discharges higher than design) or use of such a small barrel may not be practical.

a) Calculate HW_o at design discharge for trial culvert sizes, entrance condition, shapes, and materials.

b) Calculate headwater elevations at two additional discharge values in the vicinity of design Q in order to define outlet control performance.

c) Plot outlet control performance curves for trial culvert sizes.

d) Select culvert barrel size, shape and material.

This selection should not be based solely on calculations which indicate that the required headwater at the design discharge is near the AHW El., but should also be based on outlet velocity as affected by material selection, the designer's evaluation of site characteristics, and the possible consequences of a flood occurrence in excess of the estimated design flood. A sharply rising outlet control performance curve may be sufficient reason to select a culvert of different size, shape or material.

Figure 19

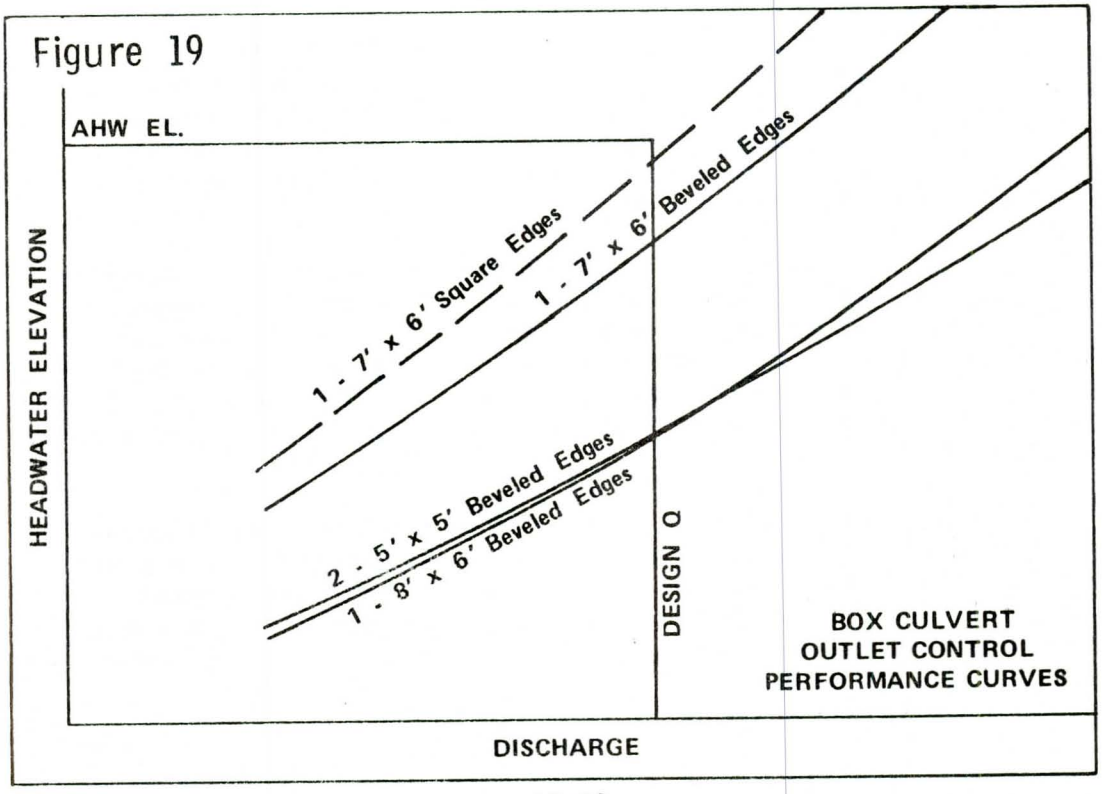

In order to zero in on the barrel size required in outlet control, the applicable outlet control nomograph may be used as follows.

(1) Intersect the "Turning Line" with a line drawn between Discharge and Head, H. To estimate H, use the following equation:

$$H = \text{AHW El.} - \text{El. Outlet Invert} - h_o$$

where h_o may be selected as a culvert height. Accuracy is not critical at this point.

(2) Using the point on the "Turning Line," k_e, and the barrel length, draw a line defining the barrel size.

This size gives the designer a good first estimate of the barrel size and more precise sizing will follow rapidly.

Step 4. Perform Inlet Control Calculations for Conventional and Beveled Edge Culvert Inlets (Charts 7 through 13)

The calculation procedure is similar to that used in HEC No. 5, except that headwater is defined as an elevation rather than a depth, a FALL may be incorporated upstream of the culvert face, and performance curves are an essential part of the procedure. The depression or FALL should have dimensions as described for side-tapered inlets.

a) Calculate the required headwater depth (H_f) at the culvert face at design discharge for the culvert selected in Step 3.

b) Determine required face invert elevation to pass design discharge by subtracting H_f from the AHW El.

c) If this invert elevation is above the stream bed elevation at the face, the invert would generally be placed on the stream bed and the culvert will then have a capacity greater than design Q with headwater at the AHW El.

d) If this invert elevation is below the stream bed elevation at the face, the invert must be depressed, and the amount of depression is termed the FALL.

e) Add H_f to the invert elevation to determine HW_f. If HW_f is lower than HW_o, the barrel operates in outlet control at design Q. Proceed to Step 8.

f) If the FALL is excessive in the designer's judgment from the standpoint of aesthetics, economy and other engineering reasons, a need for inlet geometry refinements is indicated. If square edges were used in Steps 3 and 4 above, repeat with beveled edges. If beveled edges were used, proceed to Step 5.

g) If the FALL is within acceptable limits, determine the inlet control performance by calculating required headwater elevation using the flow rates from Step 3 and the FALL determined above. $HW_f = H_f$ + El. face invert.

h) Plot the inlet control performance curve with the outlet control performance curve plotted in Step 3.

i) Proceed to Step 6.

Figure 20

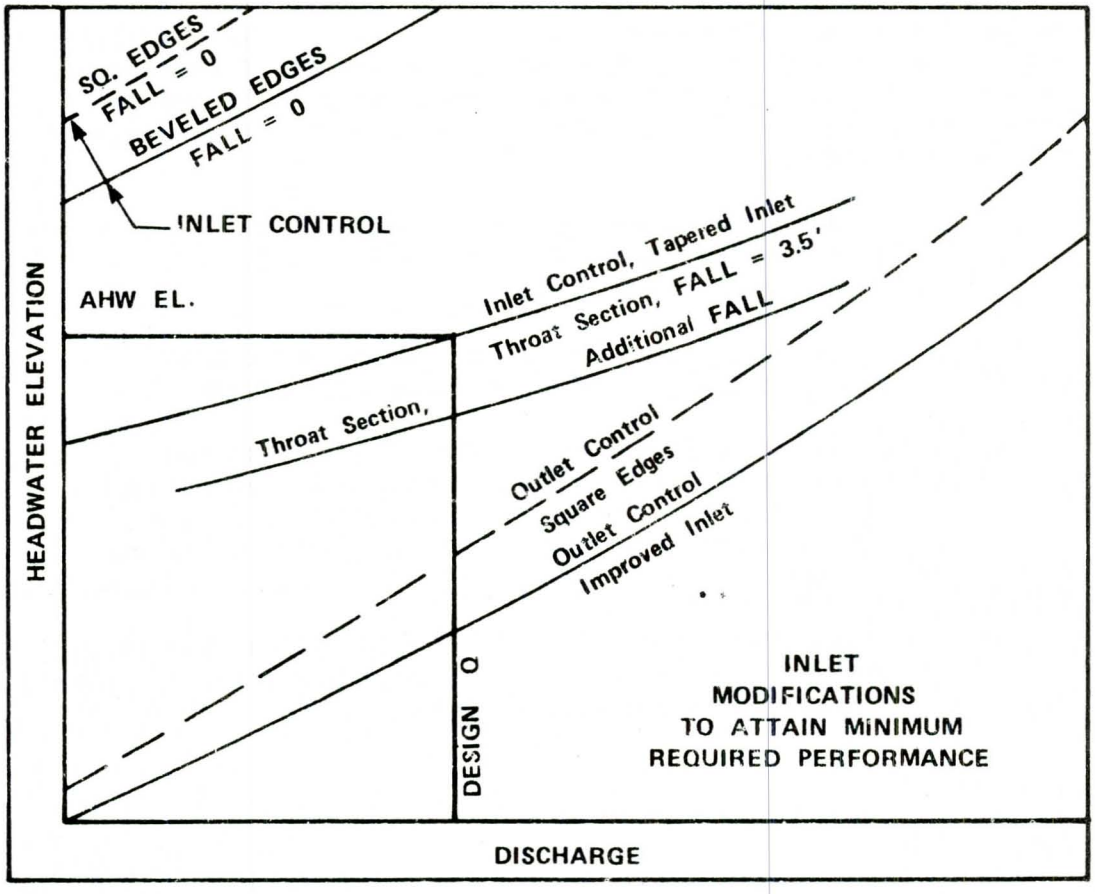

Step 5. Perform Throat Control Calculations for Side- and Slope-Tapered Inlets (Charts 14 or 18)

The same concept is involved here as with conventional or beveled edge culvert design.

a) Calculate required headwater depth on the throat (H_t) at design Q for the culvert selected in Step 3.

b) Determine required throat elevation to pass design discharge by subtracting H_t from the AHW El.

c) If this throat invert elevation is above the stream bed elevation, the invert would probably be placed on the stream bed and the culvert throat will have a capacity greater than the design Q with headwater at the AHW El.

d) If this throat invert elevation is below the stream bed elevation, the invert must be depressed, and the elevation difference between the stream bed at the face and the throat invert is termed the FALL. If the FALL is determined to be excessive, a larger barrel must be selected. Return to Step 5(a).

e) Add H_t to the invert elevation to determine HW_t. If HW_t is lower than HW_o, the culvert operates in outlet control at design Q. In this case, adequate performance can probably be achieved by the use of beveled edges with a FALL. Return to Step 4.

f) Define and plot the throat control performance curve.

Step 6. Analyze the Effect of FALLS on Inlet Control Section Performance

It is apparent from Figure 20 that either additional FALL or inlet improvements would increase the culvert capacity in inlet control by moving the inlet control performance curve to the right toward the outlet control performance curve. If the outlet control performance curve of the selected culvert passes below the point defined by the AHW El. and the design Q, there is an opportunity to optimize the culvert design by selecting the inlet so as to either increase its capacity to the maximum at the AHW El. or to pass the design discharge at the lowest possible headwater elevation.

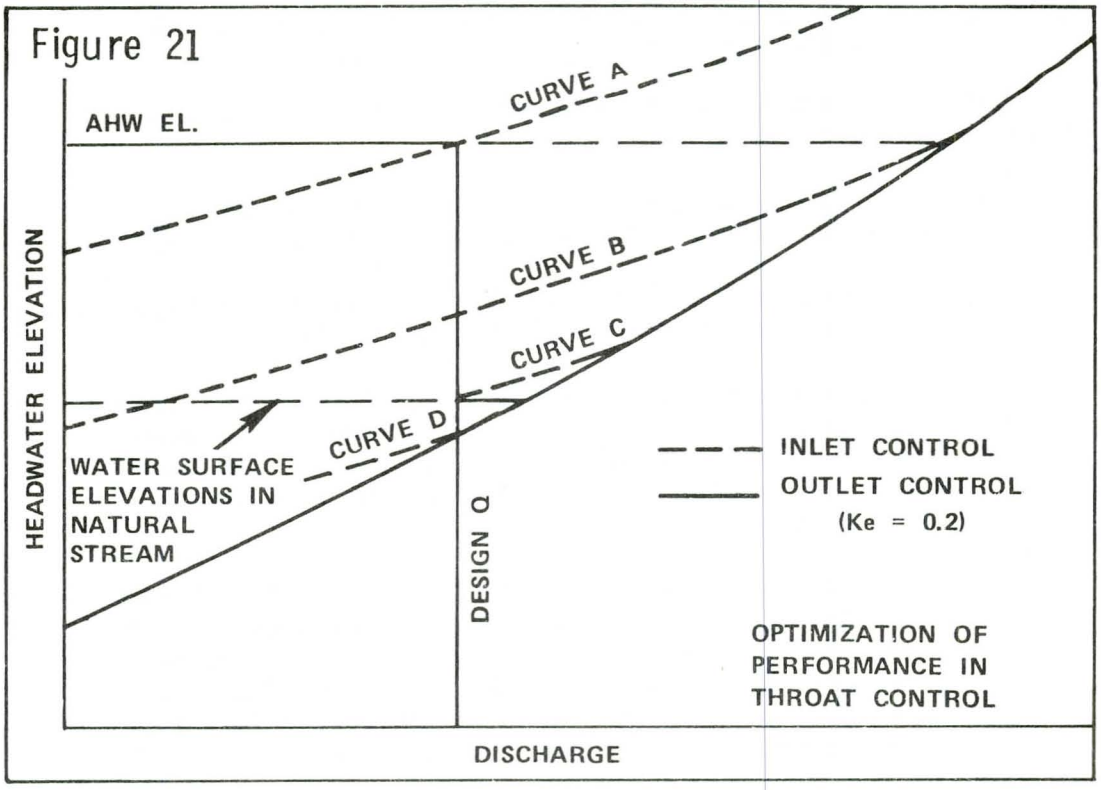

Some possibilities are illustrated in Figure 21. The minimum inlet control performance which will meet the selected design criteria is illustrated by Curve A. This design has merit in that minimum expense for inlet improvements and/or FALL is incurred and the inlet will pass a flood in excess of design Q before performance is governed by outlet control. This performance is adequate in many locations, including those locations where headwaters in excess of the AHW El. would be tolerable on the rare occasion of floods in excess of design Q.

Curve B illustrates the performance of a design which takes full advantage of the potential capacity of the selected culvert and the site to pass the maximum possible flow at the AHW El. A safety factor in capacity is thereby incorporated in the design. This can be accomplished by the use of a FALL, by geometry improvements at the inlet or by a combination of the two. Additional inlet improvement and/or FALL will not increase the capacity at or above the AHW El.

There may be reason to pass the design flow at the lowest possible headwater elevation even though the reasons are insufficient to cause the AHW El. to be set at a lower

elevation. The maximum possible reduction in headwater at design Q is illustrated by Curve C. Additional inlet improvement and/or FALL will not reduce the required headwater elevation at design Q.

The water surface elevation in the natural stream may be a limiting factor in design, i.e., it is not productive to design for headwater at a lower elevation than natural stream flow elevations. The reduction in headwater elevation illustrated by Curve C is limited by natural water surface elevations in the stream. If the water surface elevations in the natural stream had fallen below Curve D, this curve would illustrate the maximum reduction in headwater elevation at design Q. Tailwater depths calculated by assuming normal depth in the stream channel may be used to estimate natural water surface elevations in the stream at the culvert inlet. These may have been computed as a part of Step 3.

Curve A has been established in either Step 4 for conventional culverts or Step 5 for improved inlets. To define any other inlet control performance curve such as B, C, or D for the same control section:

a) Select a point on the outlet control performance curve.

b) Measure the vertical distance from this point to Curve A. This is the difference in FALL between Curve A and the curve to be established, e.g., the FALL on the control section for Curve A plus the distance between Curves A and B is the FALL on the control section for Curve B.

For conventional culverts only:

d) Estimate and compare the costs incurred for FALLS (structural excavation and additional culvert length) to achieve various levels of inlet performance.

e) Select design with increment in cost warranted by increased capacity and improved performance.

f) If FALL required to achieve desired performance is excessive, proceed to Step 5.

g) If FALL is acceptable and performance achieves the design objective, proceed to Step 8.

Step 7. Design Side- and/or Slope-Tapered Inlet (Charts 15, 16, 17, and 19)

Either a side- or slope-tapered inlet design may be used if a FALL is required on the throat by use of a depression (FALL) upstream of the face of a side-tapered inlet or a FALL in the inlet of a slope-tapered inlet.

The face of the side- or the slope-tapered inlet should be designed to be compatible with the throat performance defined in Step 6. The basic principles of selecting the face design are illustrated in Figure 22.

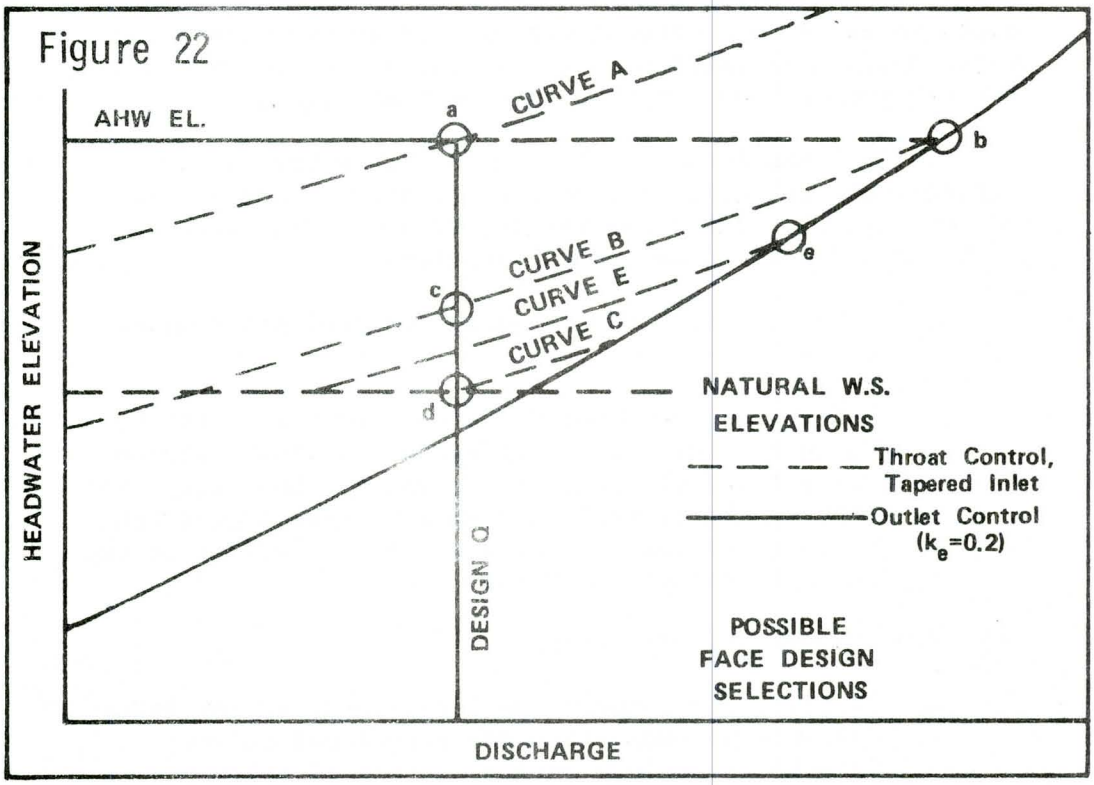

The minimum face design is one whose performance curve does not exceed the AHW El. at design Q. However, a "balanced" design requires that full advantage be taken of the increased capacity and/or lower headwater requirement gained through use of various FALLS. This suggests a face performance curve which intersects the throat control curve: (1) at the AHW El., (2) at design Q, (3) at its intersection with

the outlet control curve, or (4) other. These options are illustrated in Figure 22 by points a through e representing the intersections of face control performance curves with the throat control performance curves. The options are explained as follows: (1) Intersection of face and throat control performance curves at the AHW El. (Point a or b): For the minimum acceptable throat control performance (Curve A), this is the minimum face size that can be used without the required headwater elevation (HW_f) exceeding the AHW El. at design Q (Point a). For throat control performance greater than minimum but equal to or less than Curve B, this is the minimum face design which makes full use of the FALL placed on the throat to increase culvert capacity at the AHW El. (Point b). (2) Intersection of face and throat control performance curves at design Q (Points a, c or d): This face design option results in throat control performance at discharges equal to or greater than design Q. It makes full use of the FALL to increase capacity and reduce headwater requirements at flows equal to or greater than the design Q. (3) Intersection of the face control performance curve with throat control performance curve at its intersection with the outlet control performance curve (Points b or e): This option is the minimum face design which can be used to make full use of the increased capacity available from the FALL placed on the throat. It cannot be used where HW_f would exceed AHW El. at design Q; e.g., with the minimum acceptable throat control performance curve. (4) Other: Variations in the above options are available to the designer. The culvert face can be designed so that culvert performance will change from face control to throat control at any discharge at which inlet control governs. Options (1) through (3), however, appear to fulfill design objectives of minimum face size to achieve the maximum increase in capacity possible for a given FALL, or the maximum possible decrease in the required headwater for a given FALL for any discharge equal to or greater than design Q.

Figure 23 illustrates the optional tapered inlet designs possible. Note that the inlet dimensions for the side-tapered inlet are the same for all options. This is because performance of the side-tapered inlet nearly parallels the performance of the throat and an increase in headwater on the throat by virtue of an increased FALL results in an almost equal increase in headwater on the face. Each foot of FALL on the throat of a culvert with a side-tapered inlet requires additional barrel length equal to the fill slope; e.g., if the fill slope is 3:1, use of 4 ft. of FALL rather than 3 ft. results in a culvert barrel 3 ft. longer as well as increased culvert capacity and/or reduced headwater requirements.

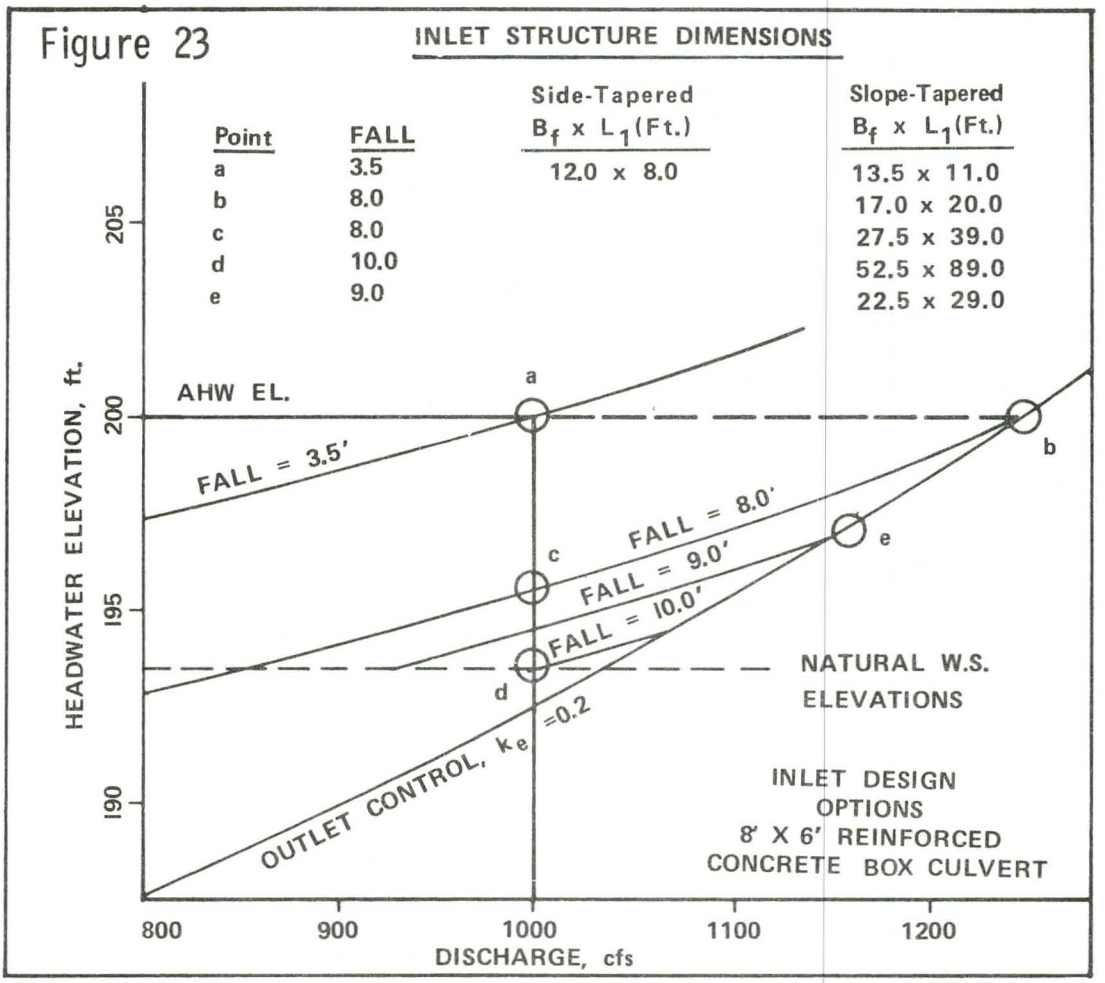

Face dimensions and inlet length increase for the slope-tapered inlet as the capacity of the culvert is increased by additional FALL on the throat. No additional head is created for the face by placing additional FALL on the throat. On the other hand, use of a greater FALL at the throat of a culvert with a slope-tapered inlet does not increase culvert length.

The steps followed in the tapered inlet designs are:

a) Compute H_f for side- and slope-tapered inlets for various FALLS at design Q and other discharges.
Side-Tapered Inlet: $H_f = H_t - 1.0'$ (Approximate)
Slope-Tapered Inlet: H_f = HW El. - Stream bed El. at Face.

b) Determine dimensions of side- and slope-tapered inlets for trial options.

c) For slope-tapered inlets with mitered face, check for crest control.

d) Compare construction costs for various options, including the cost of FALL on the throat.

e) Select design with incremental cost warranted by increased capacity and improved performance.

From the above, it is apparent that in order to optimize culvert design, performance curves are an integral part of the design procedure. At many culvert sites, designers have valid reasons for providing a safety factor in designs. These reasons include uncertainty in the design discharge estimate, potentially disastrous results in property damage or damage to the highway from headwater elevations which exceed the allowable, the potential for development upstream of the culvert, and the chance that the design frequency flood will be exceeded during the life of the installation. Quantitative analysis of these variables would amount to a risk analysis, but at present, many of these factors must be evaluated intuitively. Procedures described here enables the designer to maximize the performance of the selected culvert or to optimize the design in accordance with his evaluation of site constraints, design parameters, and costs for construction and maintenance.

Step 8. Complete File Documentation

Documentation of the culvert hydraulic design consists of the compilation and preservation of all hydrologic and hydraulic information and the design decisions made on the basis of this information. This should include site information such as highway profile, upstream development and land use, estimates of the costs that would be incurred if the allowable headwater were exceeded, and other data used in determining the allowable headwater elevation. Several decisions in this procedure are based on the designer's knowledge and evaluation of site conditions. These decisions should be well founded on field information and documented for future reference.

Each decision regarding culvert performance should be made with knowledge of the accuracy of the flood estimate and an understanding that, even though the accuracy of the estimate may be relatively good, there is a chance that the

design frequency event will be exceeded during the life of the project. Department files should reflect the basis of the design flood estimate, the designer's evaluation of the goodness of the estimate, the consideration given to consequences of a flood occurrence in excess of the design flood estimate, and other information such as historical high water and past flooding. This documentation can be of inestimable value in evaluating the performance of highway culverts after large floods, or, in the event of failure, in identifying contributing factors. It also will provide valuable information for use in the event that flood damage claims are made of the department following construction of the highway.

Adequate documentation of the design decisions which were made and the above basic information on which those decisions were based should be placed in the files to support all hydraulic structure designs. The completeness of documentation needed to support designs will vary with the importance of the structure, but structure costs should not be the sole basis for this determination. The potential for loss of property and life, traffic interruption, the importance of the highway and the availability of alternate routes are among the factors that should be considered in making this determination.

Documentation should be kept in the department's permanent records so that the performance of the designs they represent can be used as a foundation for better designs in the future.

DIMENSIONAL LIMITATIONS

Side Tapered Inlets

1. $6:1 \geq \text{Taper} \geq 4:1$

   Tapers greater than 6:1 may be used but performance will be underestimated.

2. Wingwall flare angle from 15° to 26° with top edge beveled or from 26° to 90° with or without bevels.

3. If FALL is used upstream of face, extend barrel invert slope upstream from face a distance of D/2 before sloping upward more steeply.

4. For pipe culverts, these additional requirements apply:

   a. $D \leq E \leq 1.1D$

   b. Length of square to round transition $\geq 0.5D$

   c. FALL (Figure 16)

      $P \geq 3T$

      $W_p = B_f + T$ or $4T$, whichever is larger.

Slope-Tapered Inlets

1. $6:1 \geq \text{Taper} \geq 4:1$

   Tapers > 6:1 may be used, but performance will be underestimated.

2. $3:1 \geq S_f \geq 2.1$

   If $S_f > 3:1$, use side-tapered design

3. Minimum $L_3 = 0.5B$

4. $1.5D \geq \text{FALL} \geq D/4$

   For FALL < D/4, use side-tapered design

   For FALL > 1.5D, estimate friction losses between face and throat.

5. Wingwall flare angle from 15° to 26° with top edge beveled or from 26° to 90° with or without bevels.

6. For pipe culvert, these additional requirements apply:

   a. Square to circular transition length > 0.5D.

   b. Square throat dimension equal to barrel diameter. Not necessary to check square throat performance.

SECTION VII

Design Charts

Chart 1

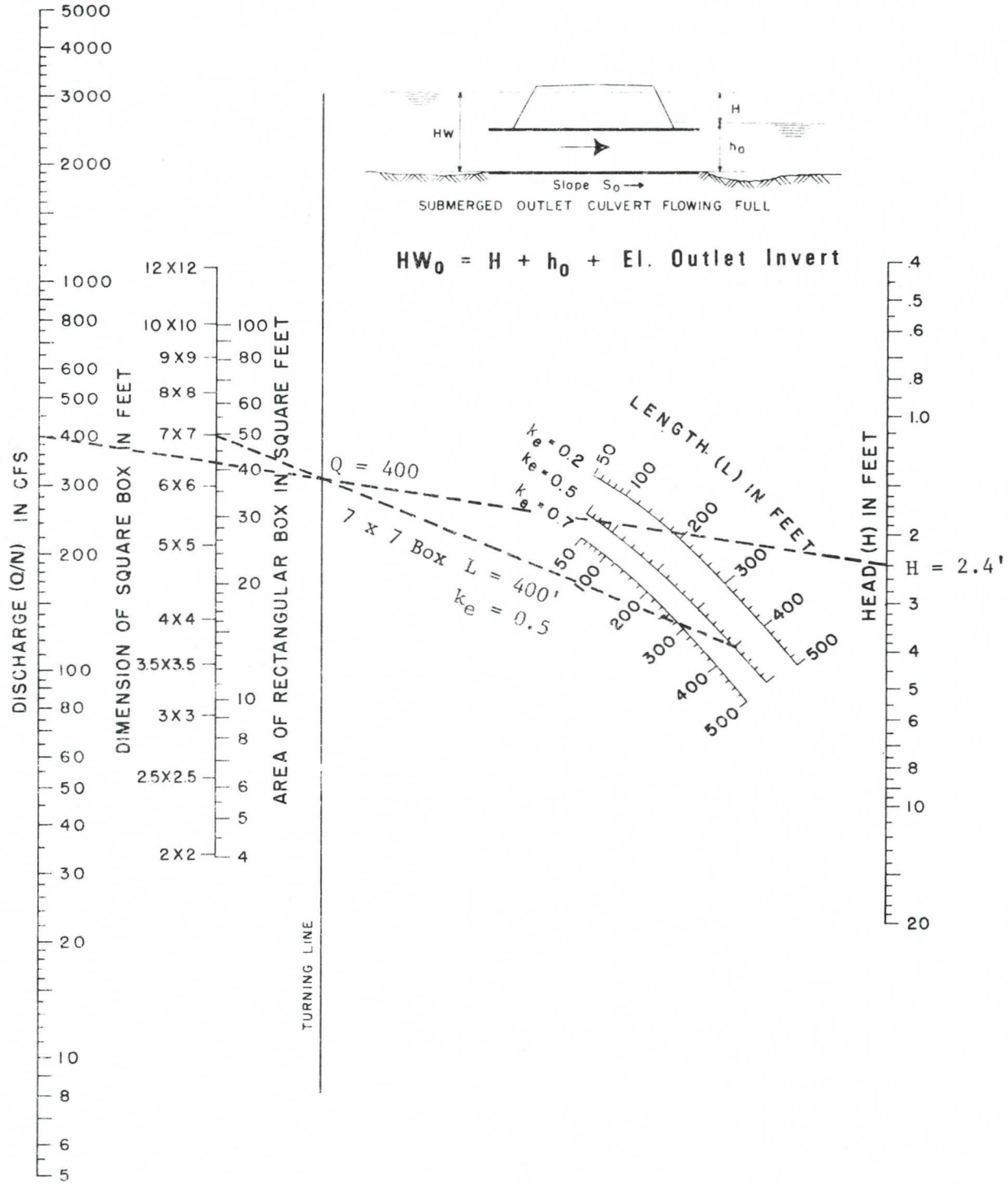

HEAD FOR
CONCRETE BOX CULVERTS
FLOWING FULL
n = 0.012

BUREAU OF PUBLIC ROADS JAN. 1963

Chart 2

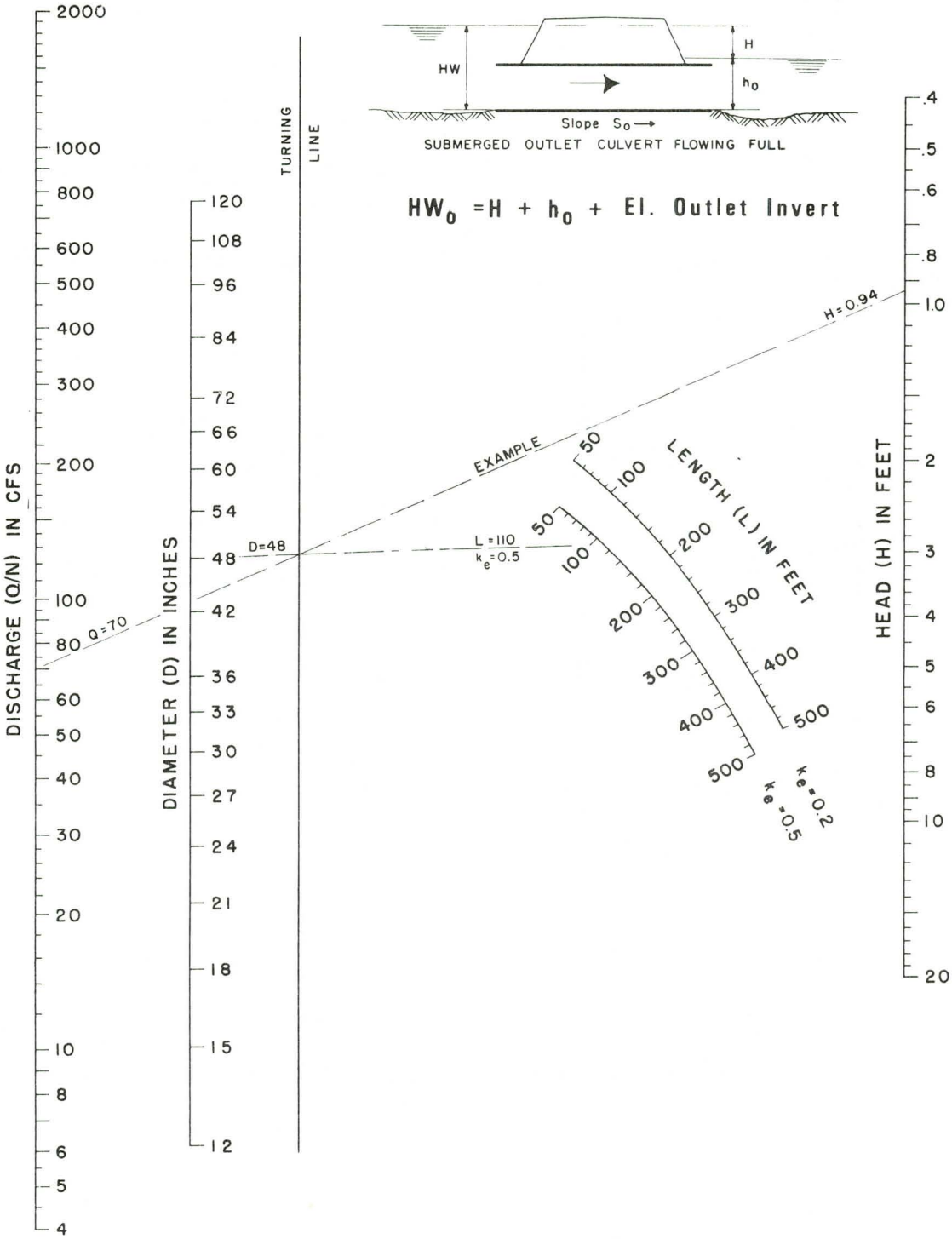

HEAD FOR
CONCRETE PIPE CULVERTS
FLOWING FULL
n = 0.012

BUREAU OF PUBLIC ROADS JAN. 1963

Chart 3

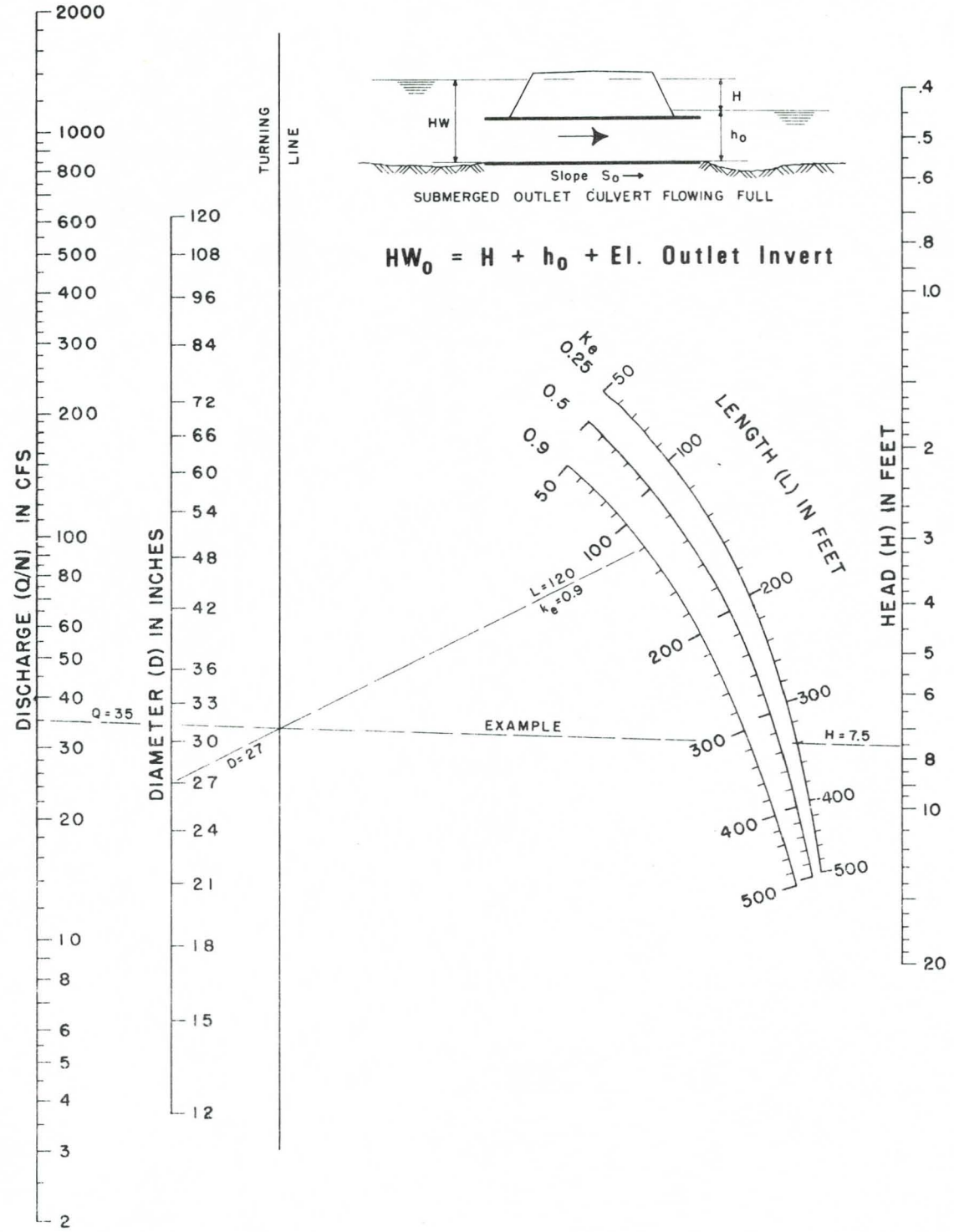

HEAD FOR
STANDARD
C. M. PIPE CULVERTS
FLOWING FULL
n = 0.024

BUREAU OF PUBLIC ROADS JAN. 1963

Chart 4

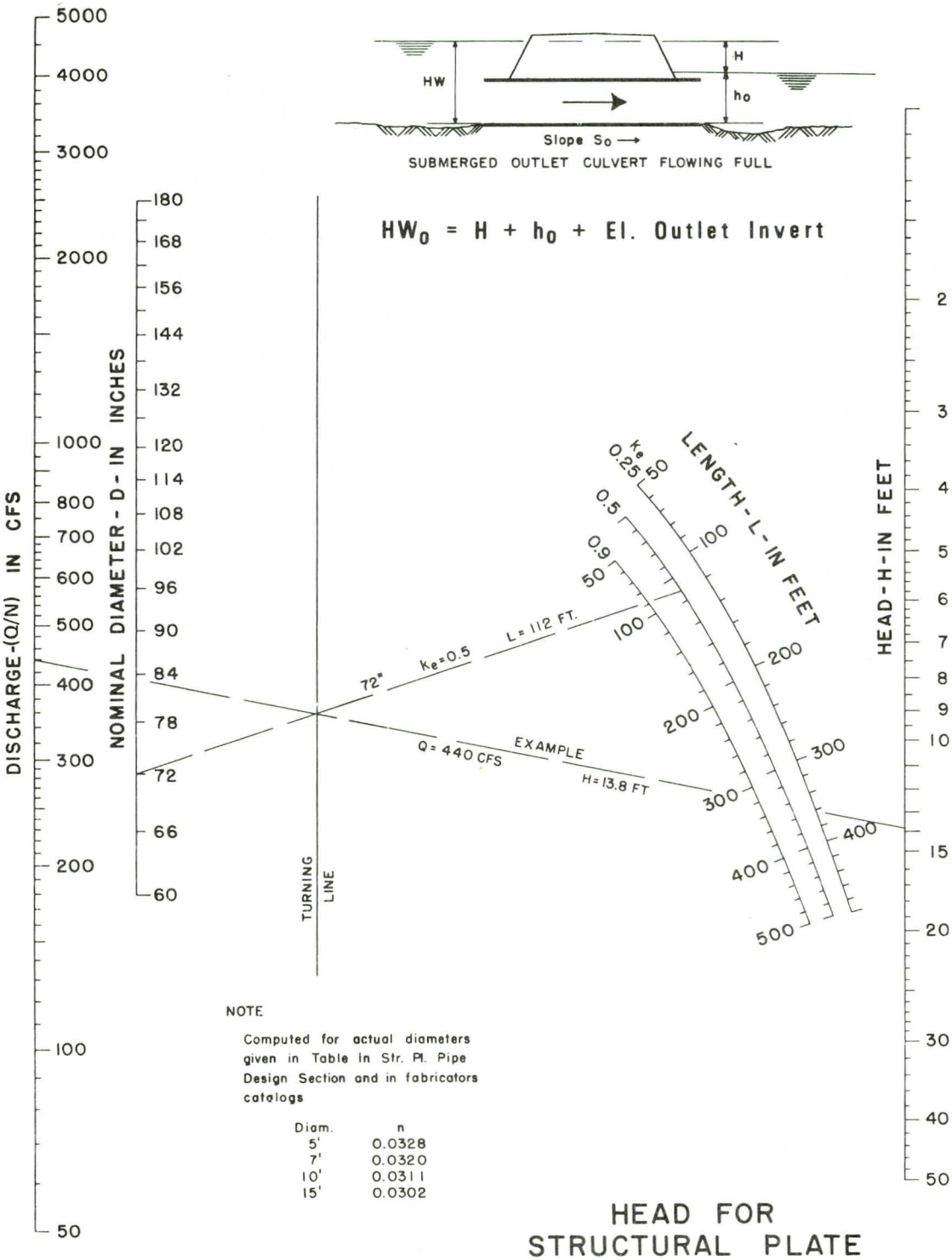

NOTE

Computed for actual diameters given in Table In Str. Pl. Pipe Design Section and in fabricators catalogs

Diam.	n
5'	0.0328
7'	0.0320
10'	0.0311
15'	0.0302

HEAD FOR
STRUCTURAL PLATE
CORR. METAL PIPE CULVERTS
FLOWING FULL
n = 0.0328 TO 0.0302

BUREAU OF PUBLIC ROADS JAN. 1963

Chart 5

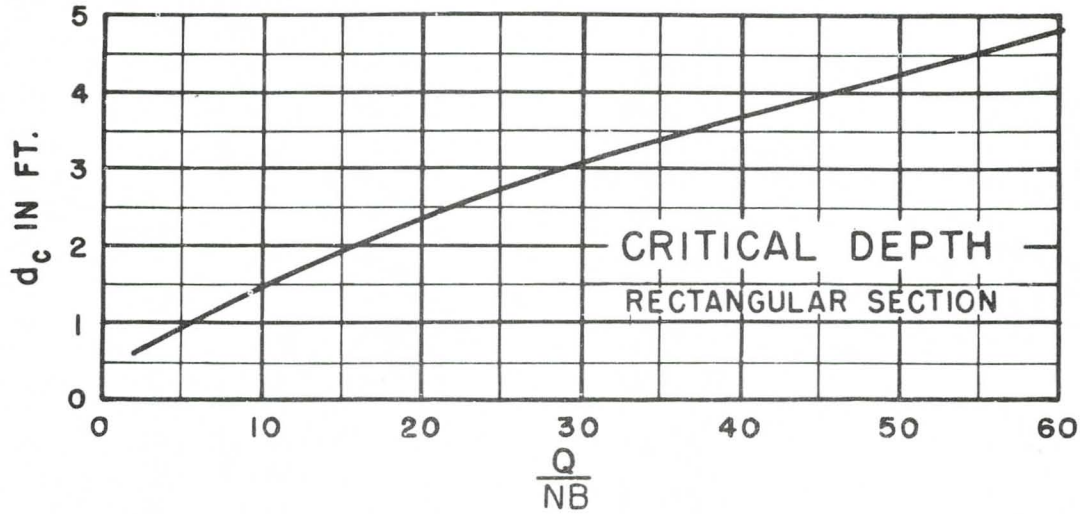

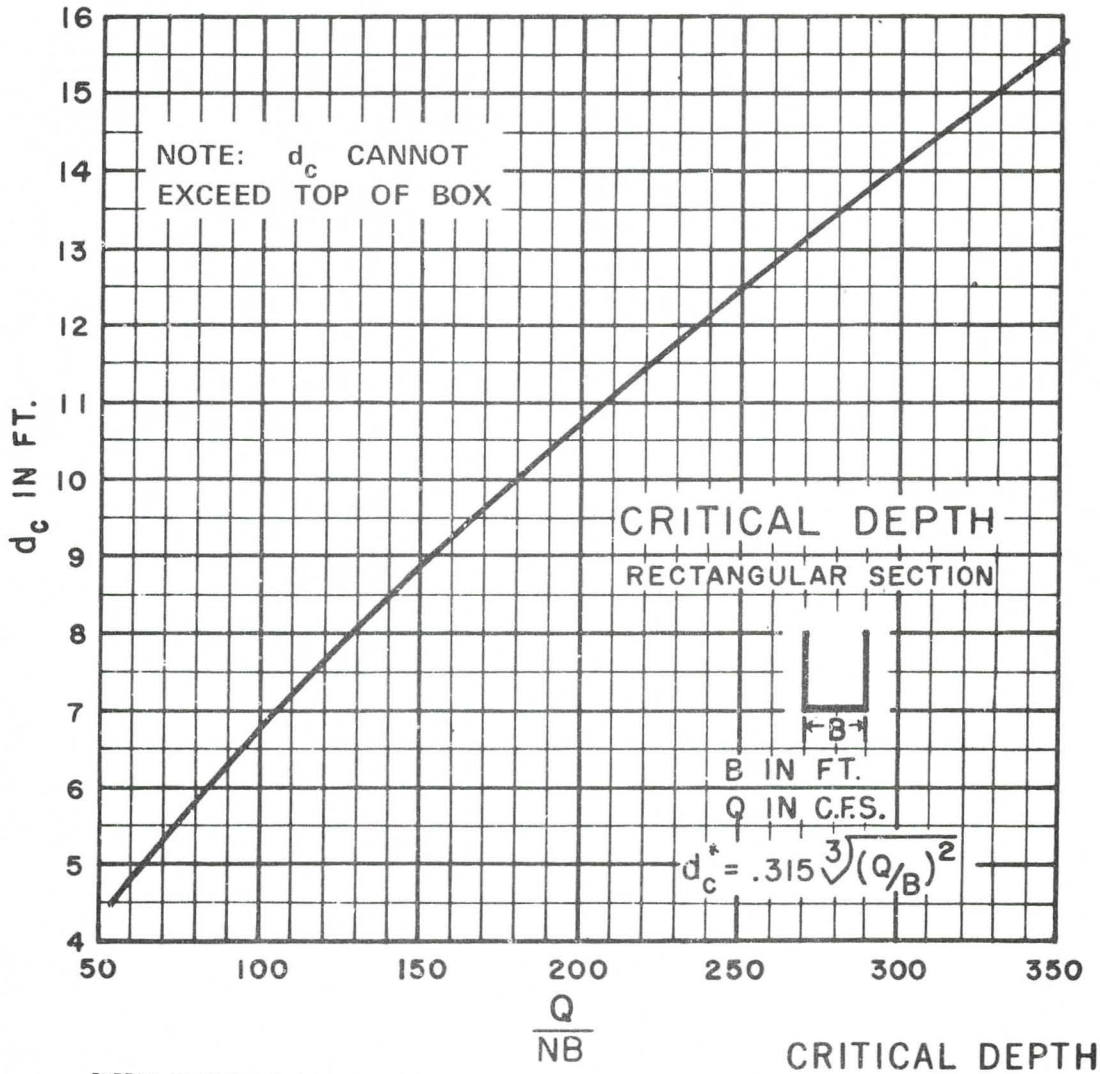

BUREAU OF PUBLIC ROADS JAN 1963

CRITICAL DEPTH
RECTANGULAR SECTION

Chart 6

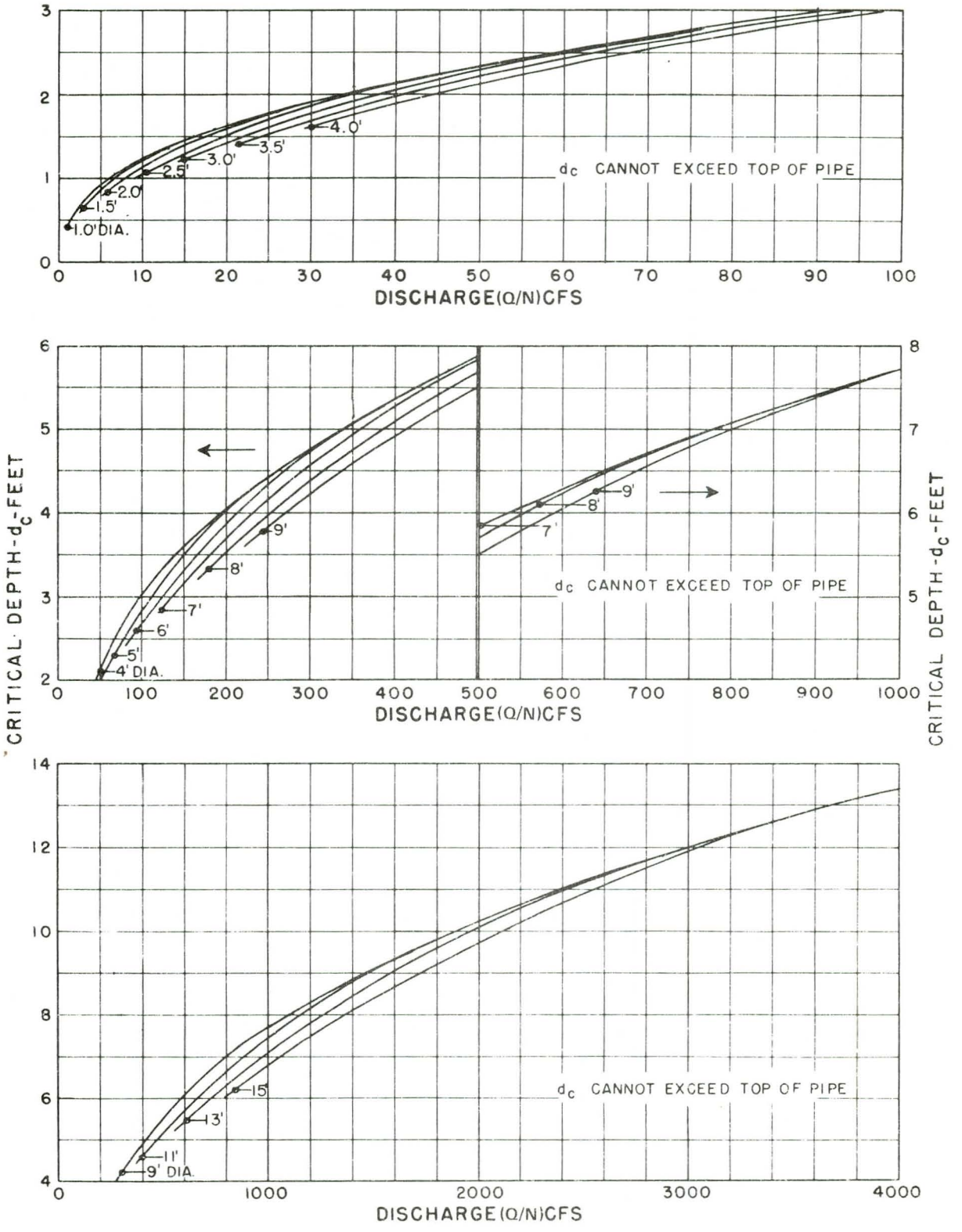

BUREAU OF PUBLIC ROADS

JAN. 1964

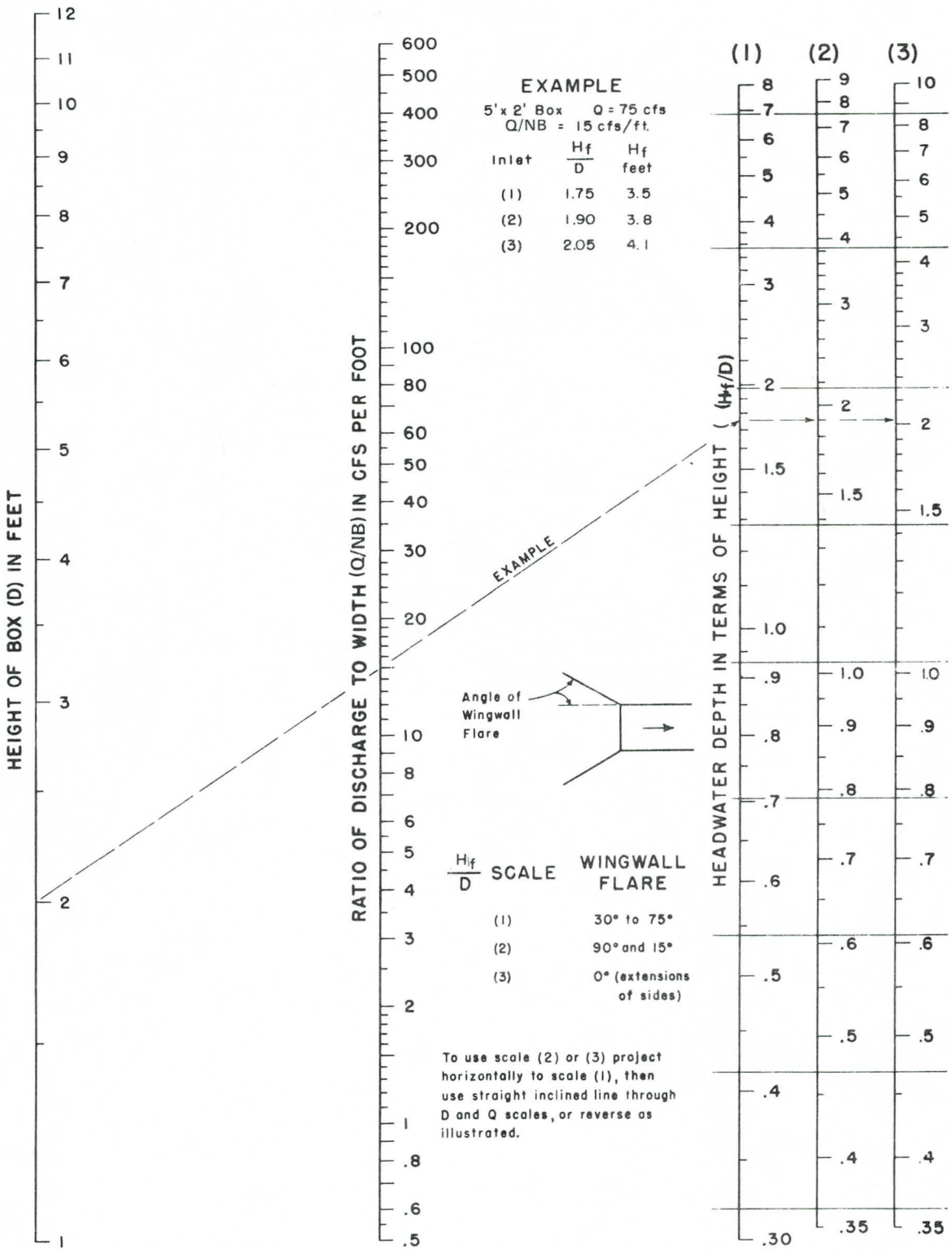

HEADWATER DEPTH FOR BOX CULVERTS WITH INLET CONTROL

Chart 8

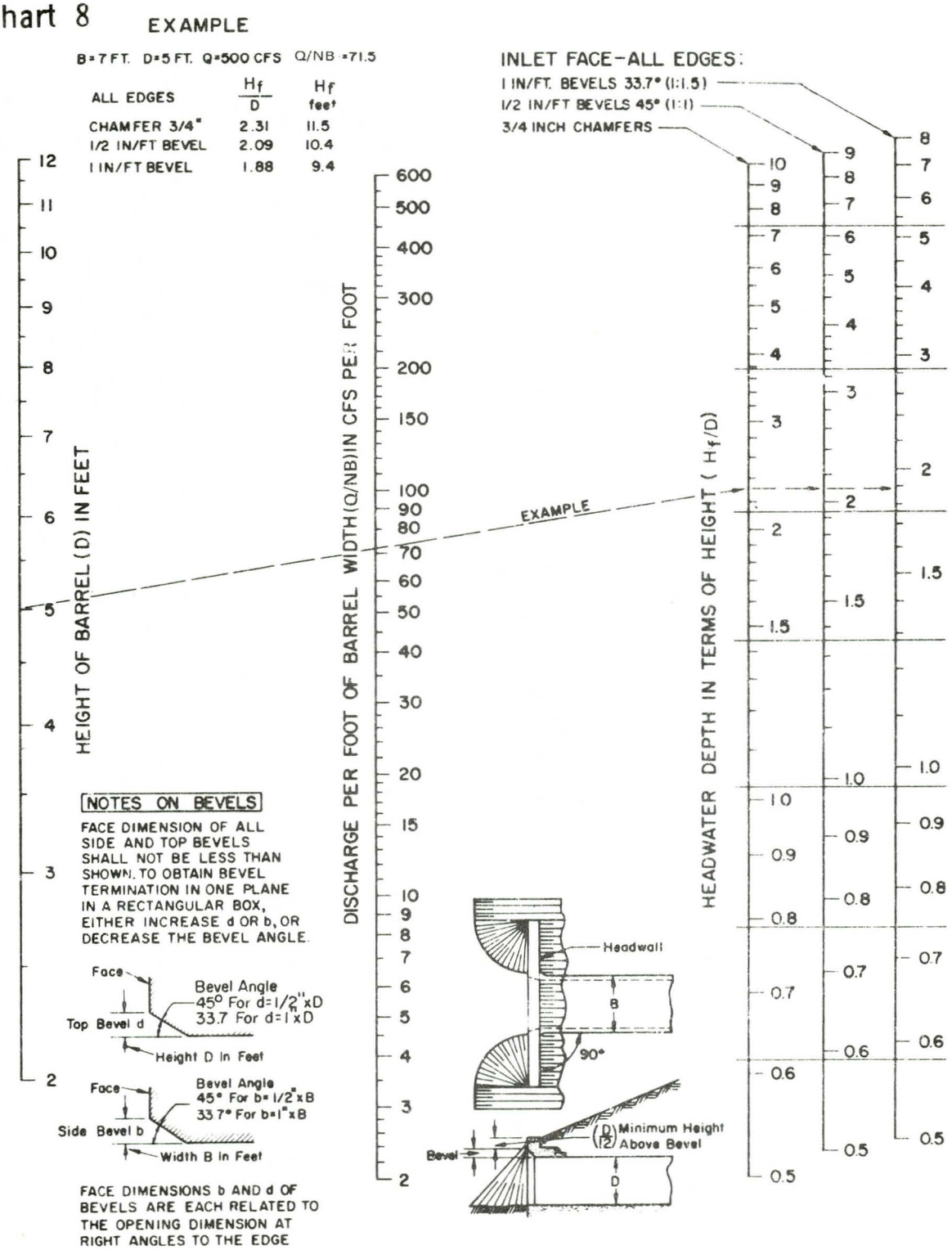

HEADWATER DEPTH FOR INLET CONTROL
RECTANGULAR BOX CULVERTS
90° HEADWALL
CHAMFERED OR BEVELED INLET EDGES

FEDERAL HIGHWAY ADMINISTRATION
MAY 1973

EXAMPLE

B=7 FT. D=5 FT. Q=500 CFS

EDGE & SKEW 3/4" CHAMFER	$\frac{H_f}{D}$	H_f, feet
45°	2.51	12.5
30°	2.43	12.1
15°	2.36	11.8
VARIED BEVEL 10° TO 45°	2.07	10.3

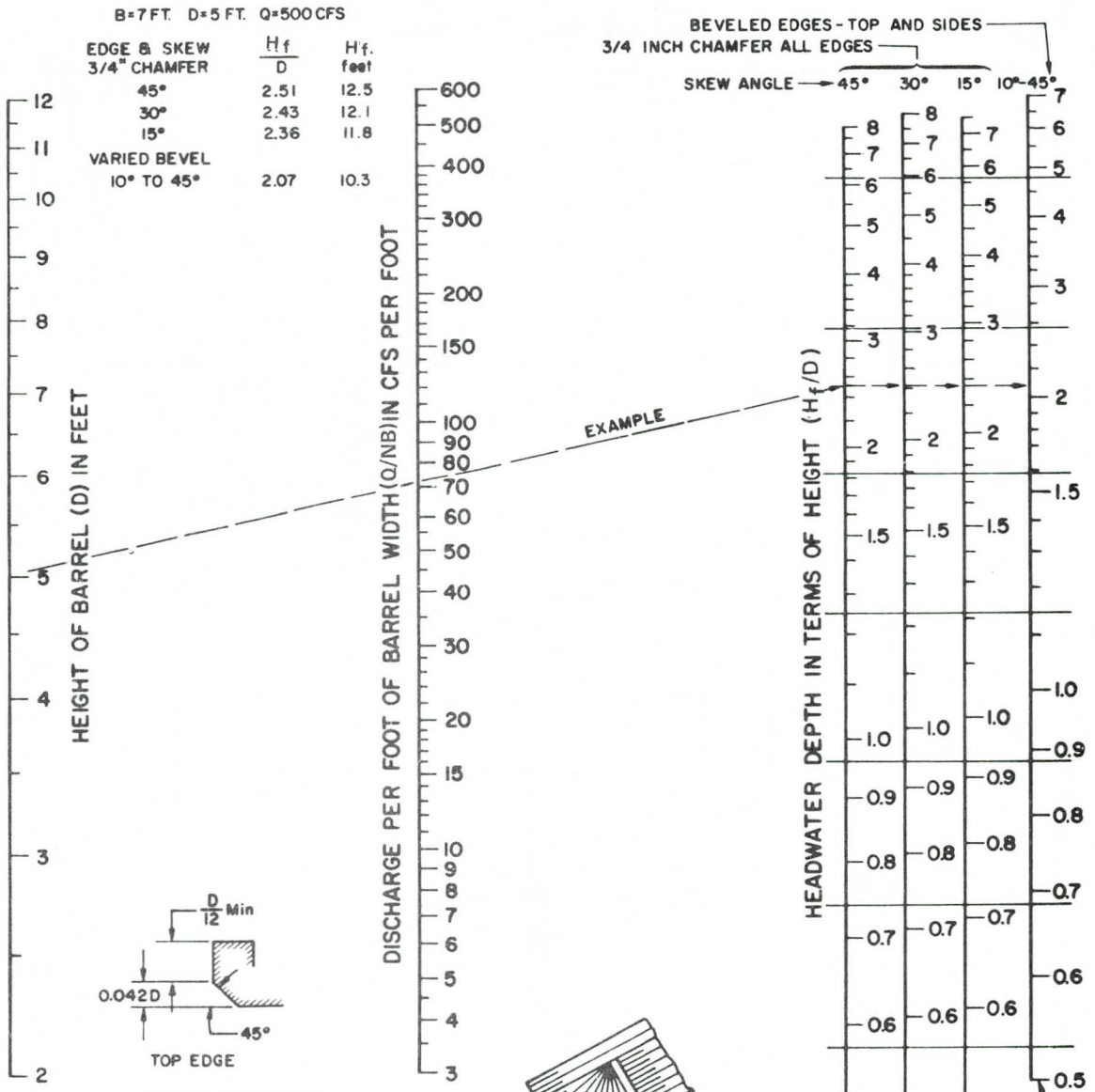

TOP EDGE

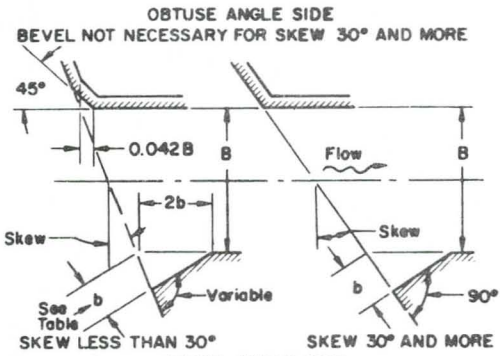

BEVELED INLET EDGES
DESIGNED FOR SAME CAPACITY AT ANY SKEW

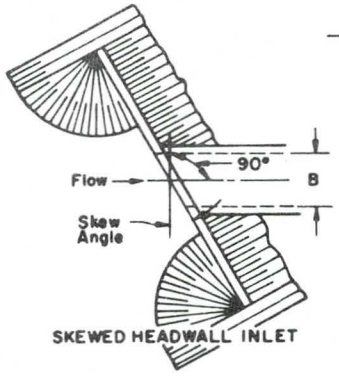

SKEW ANGLE	SIDE BEVEL b
10°	3/4"x B (ft)
15°	1"x B
22-1/2°	1-1/4"x B
30°	1-1/2"x B
37-1/2°	2"x B
45°	2-1/2"x B

FEDERAL HIGHWAY ADMINISTRATION
MAY 1973

HEADWATER DEPTH FOR INLET CONTROL
SINGLE BARREL BOX CULVERTS
SKEWED HEADWALLS
CHAMFERED OR BEVELED INLET EDGES

Chart 10

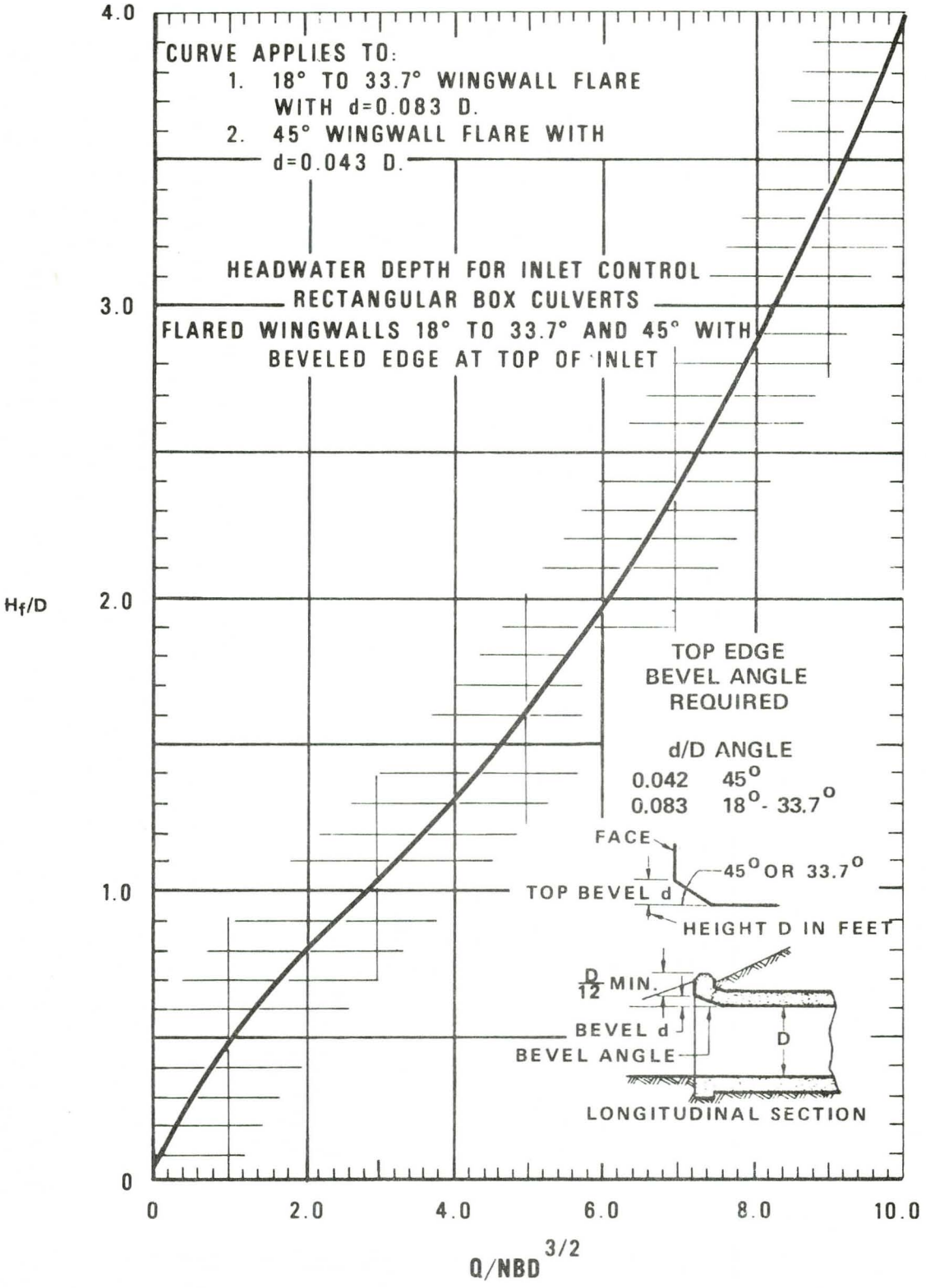

HEADWATER DEPTH FOR INLET CONTROL
RECTANGULAR BOX CULVERTS
FLARED WINGWALLS 18° TO 33.7° AND 45°
WITH BEVELED EDGE AT TOP OF INLET

Chart 11

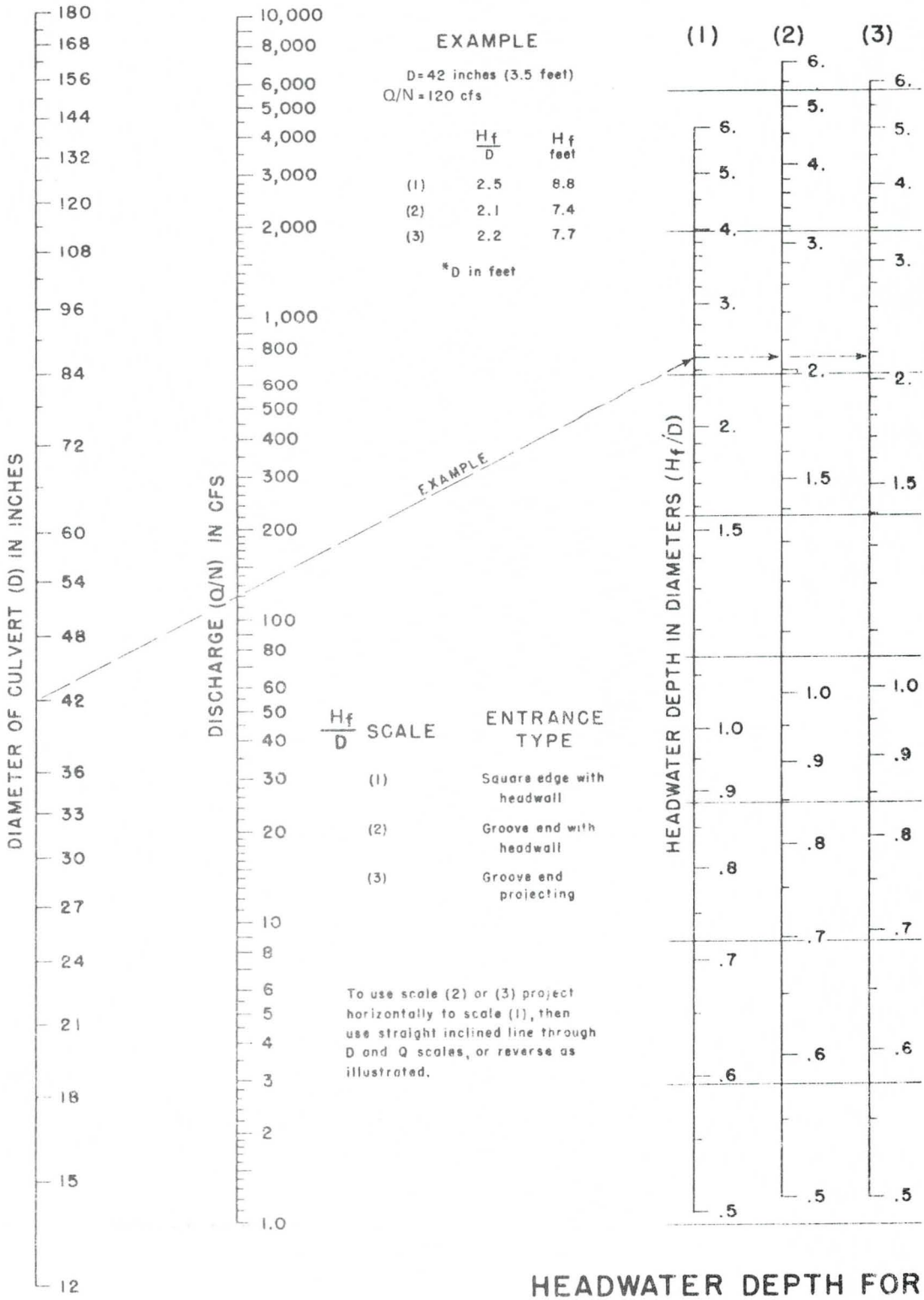

HEADWATER DEPTH FOR CONCRETE PIPE CULVERTS WITH INLET CONTROL

Chart 12

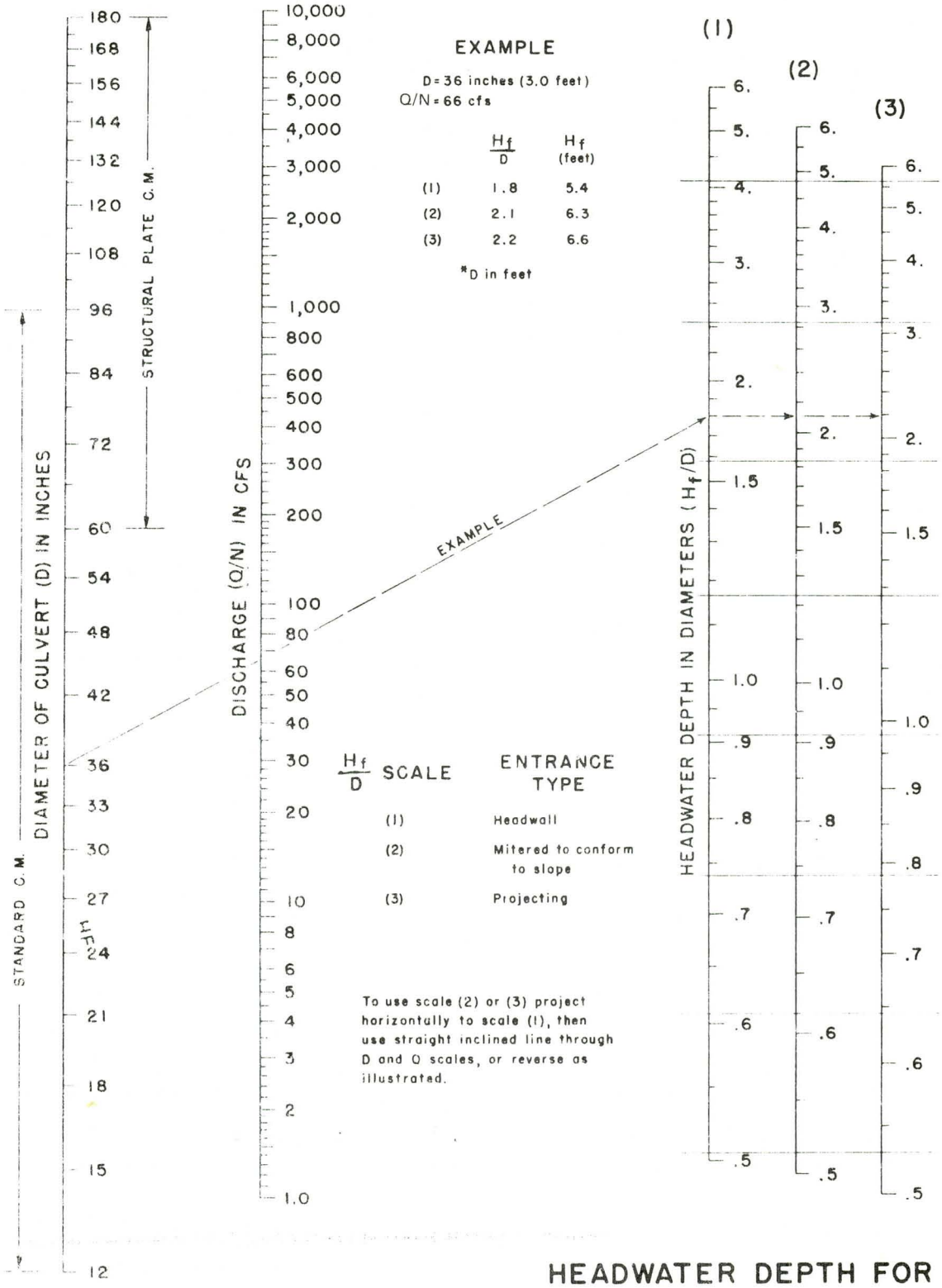

HEADWATER DEPTH FOR C. M. PIPE CULVERTS WITH INLET CONTROL

b/D	a/D	c/D	d/D	ENTRANCE TYPE
0.042	0.042	0.042	0.083	A
0.083	0.125	0.042	0.125	B

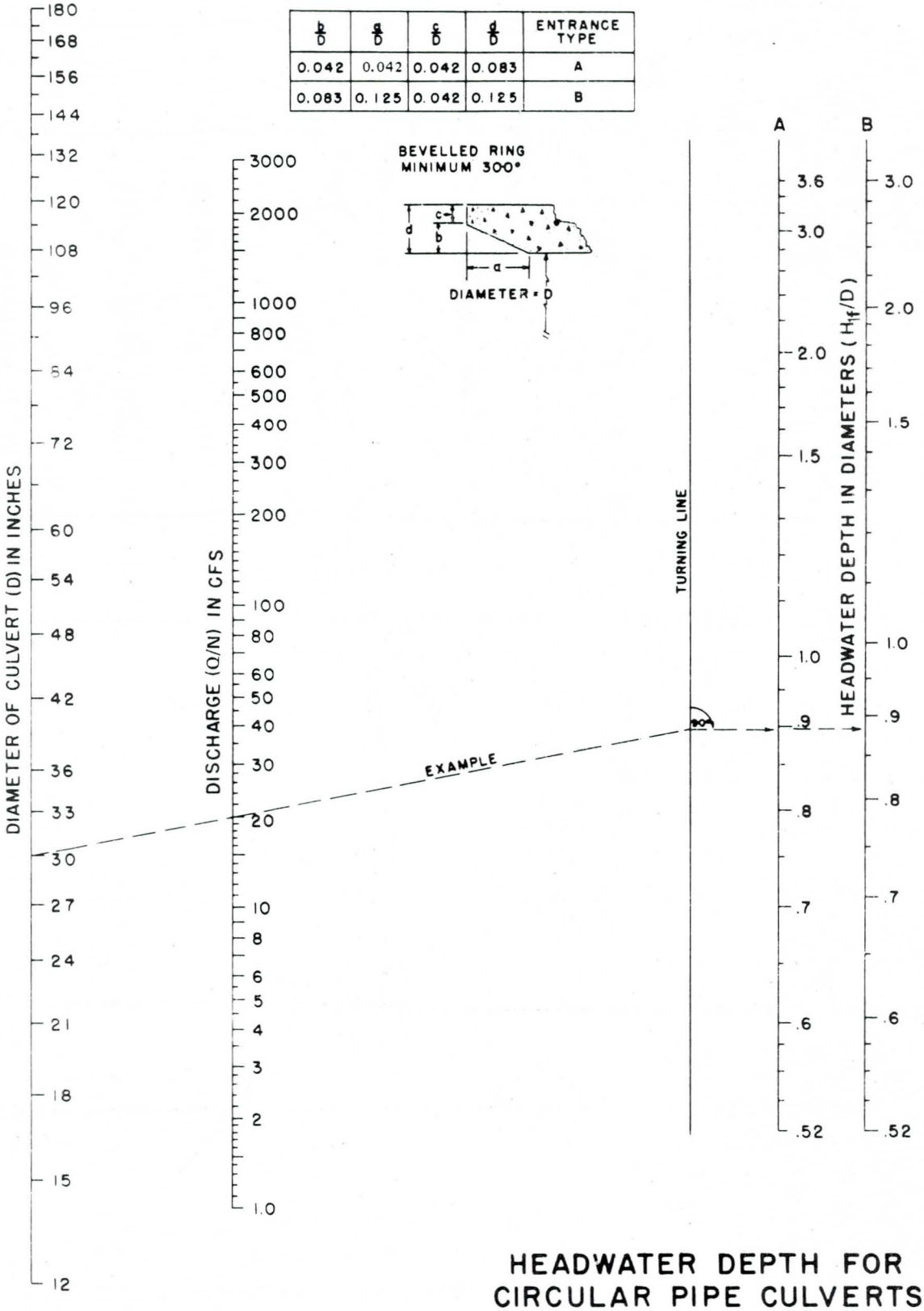

FEDERAL HIGHWAY ADMINISTRATION
MAY 1973

HEADWATER DEPTH FOR CIRCULAR PIPE CULVERTS WITH BEVELED RING INLET CONTROL

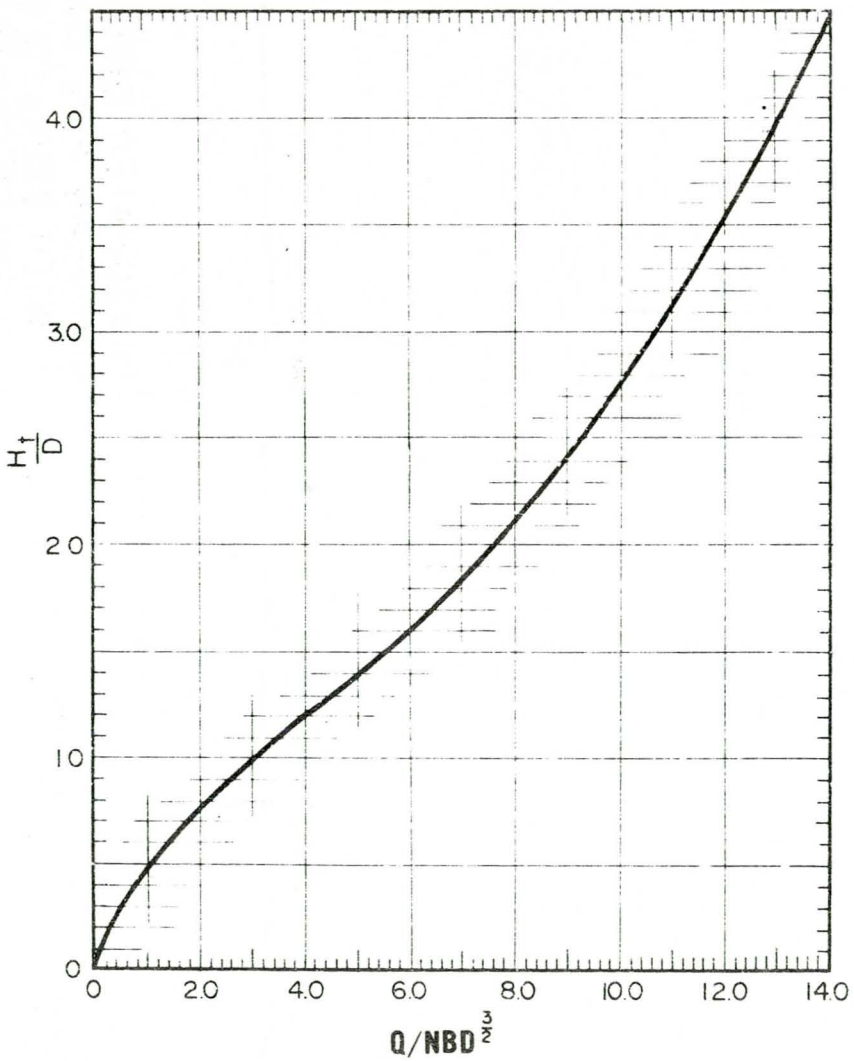

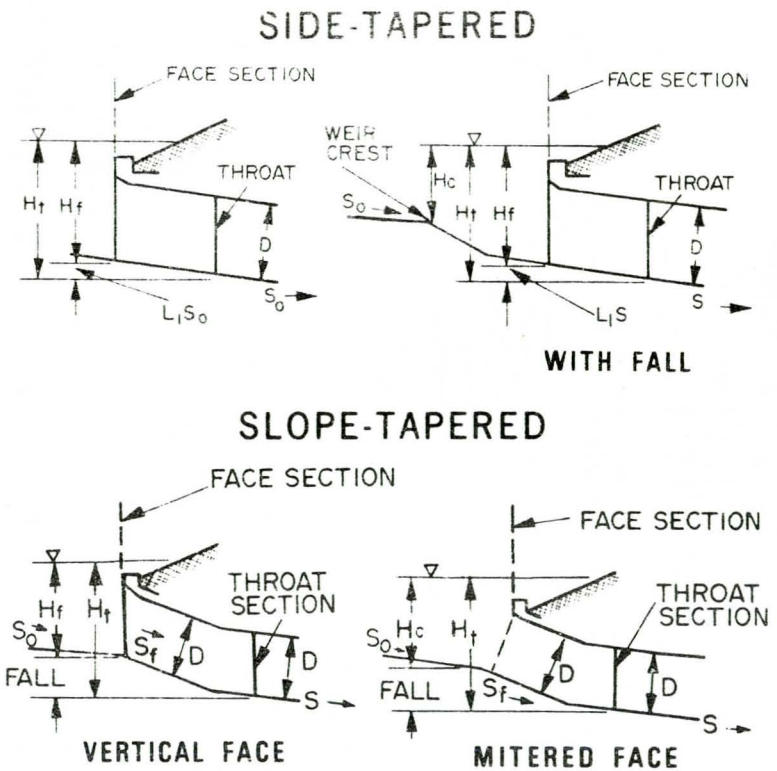

THROAT CONTROL CURVE FOR BOX CULVERTS TAPERED INLETS

FEDERAL HIGHWAY ADMINISTRATION
OCTOBER 1971

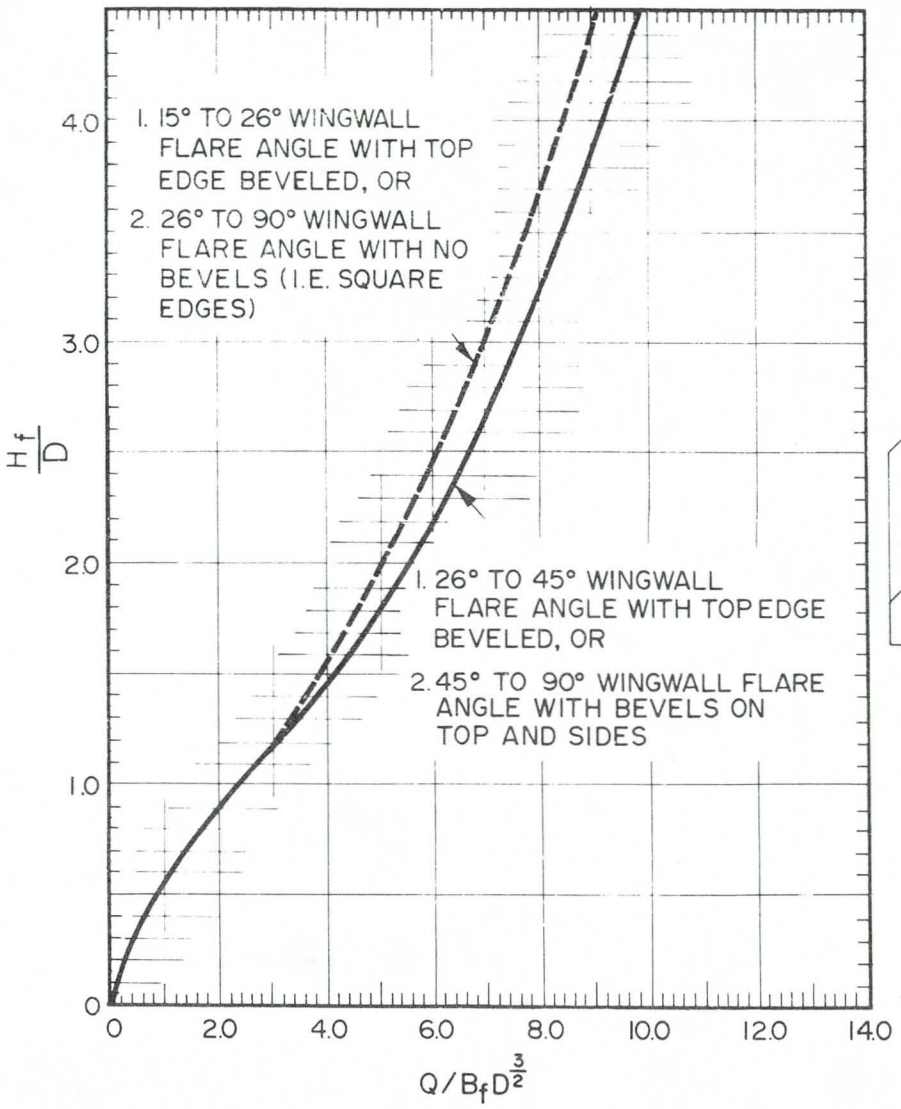

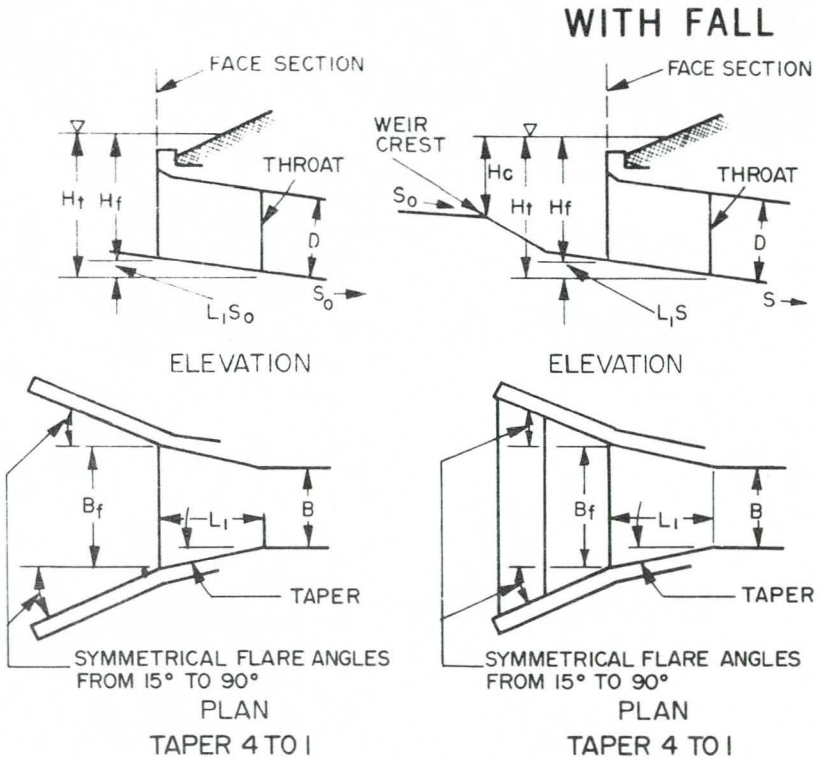

FACE CONTROL CURVES FOR BOX CULVERTS SIDE-TAPERED INLETS

FEDERAL HIGHWAY ADMINISTRATION
OCTOBER 1971

Chart 15

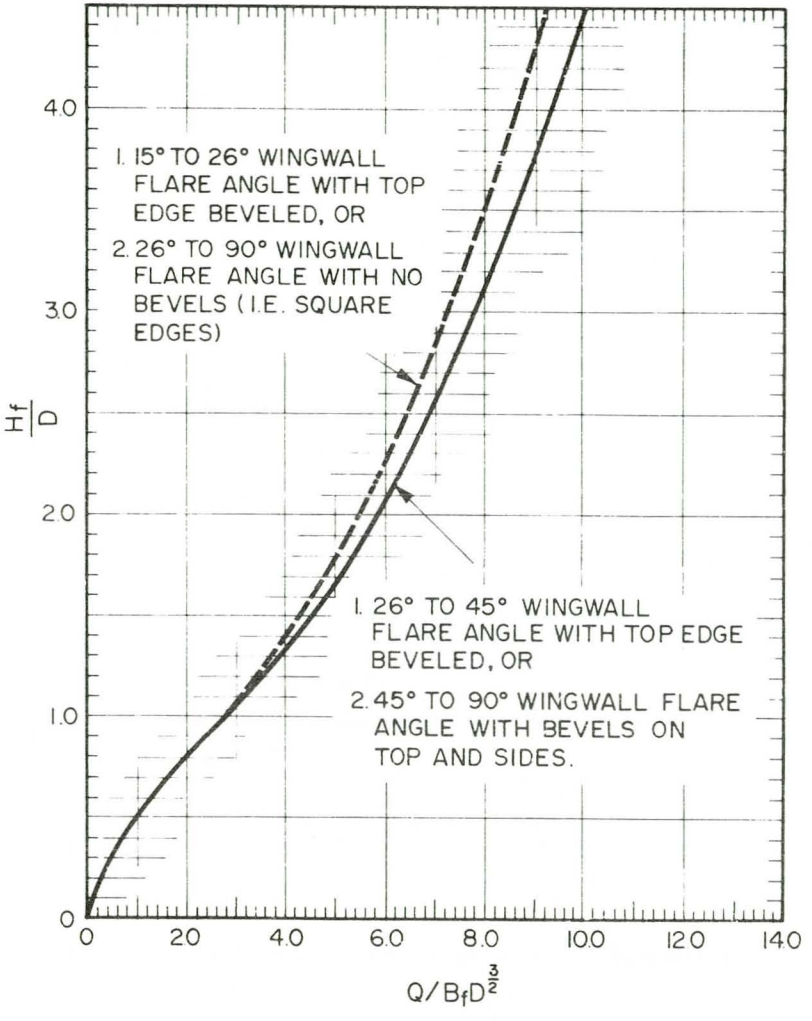

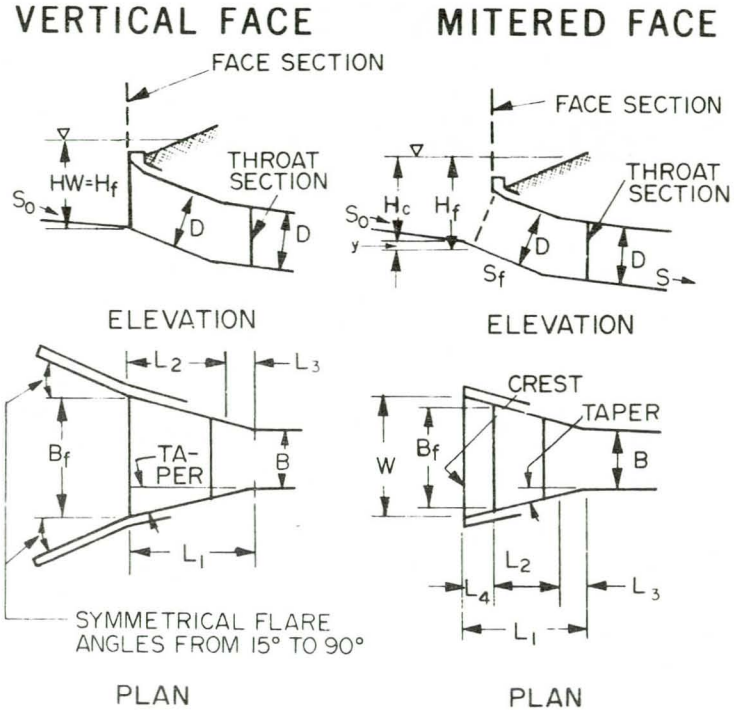

FACE CONTROL CURVES FOR BOX CULVERTS SLOPE-TAPERED INLETS

FEDERAL HIGHWAY ADMINISTRATION
OCTOBER 1971

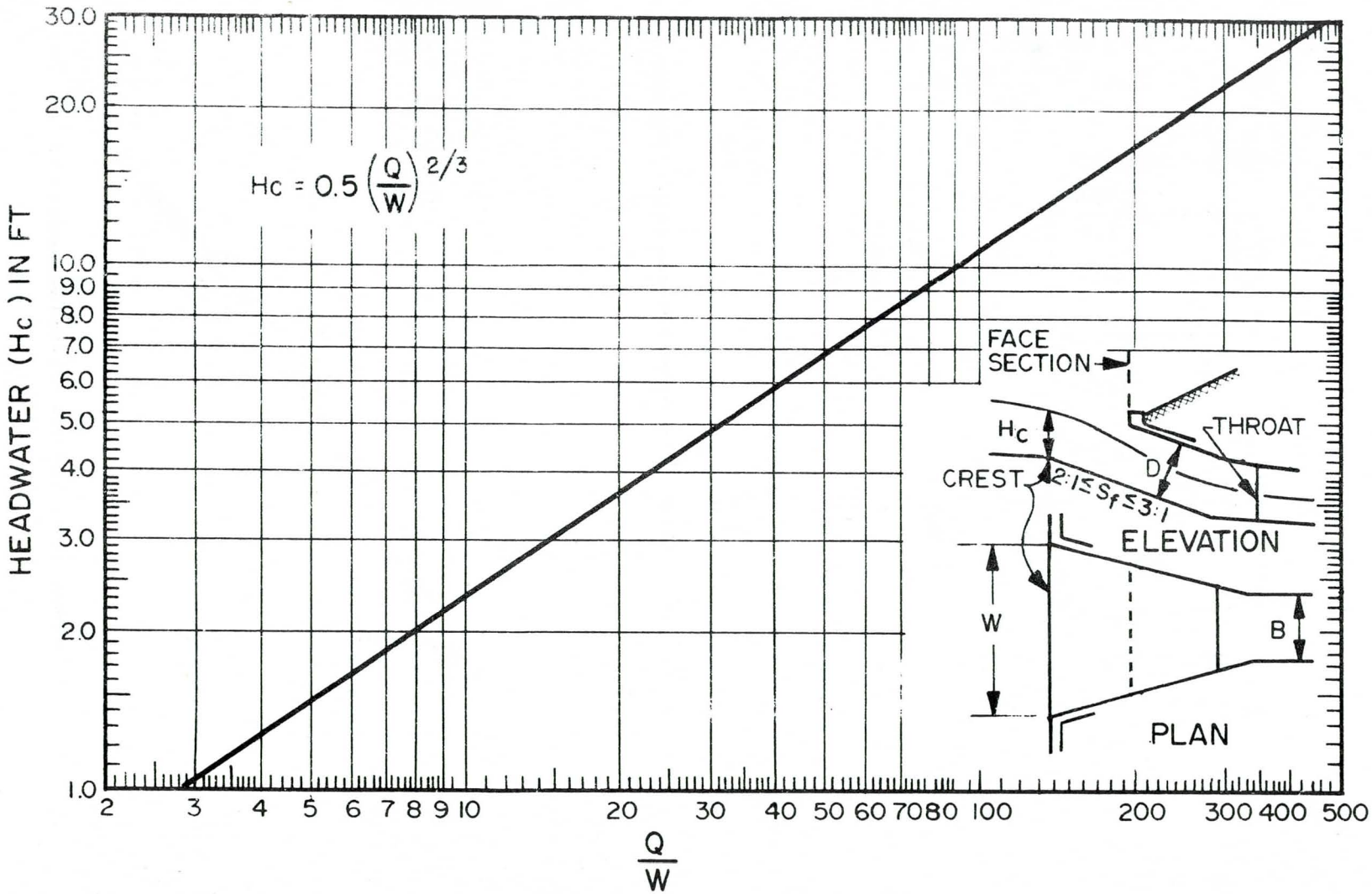

HEADWATER REQUIRED FOR CREST CONTROL

FEDERAL HIGHWAY ADMINISTRATION
OCTOBER 1971

Chart 17

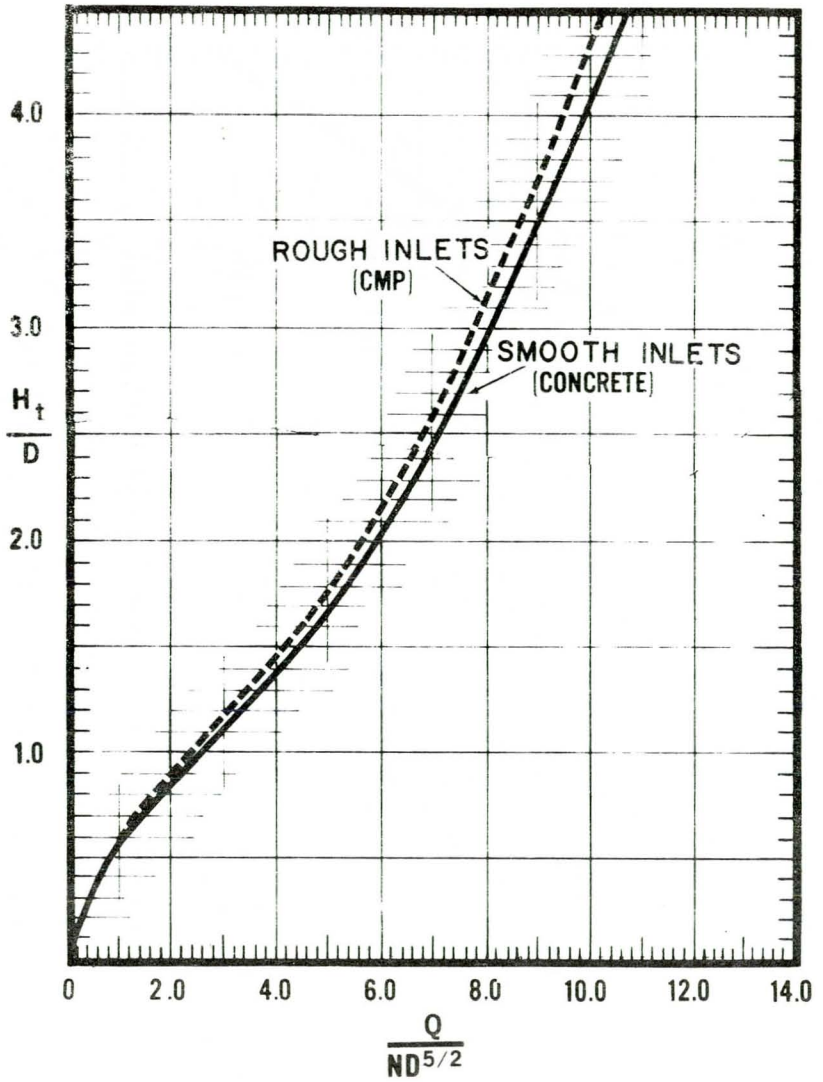

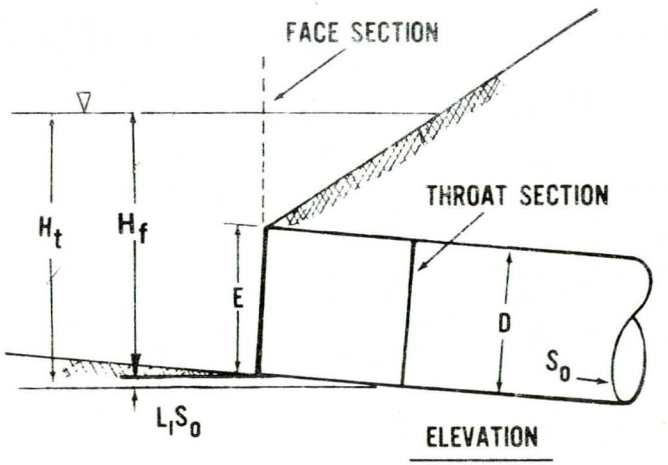

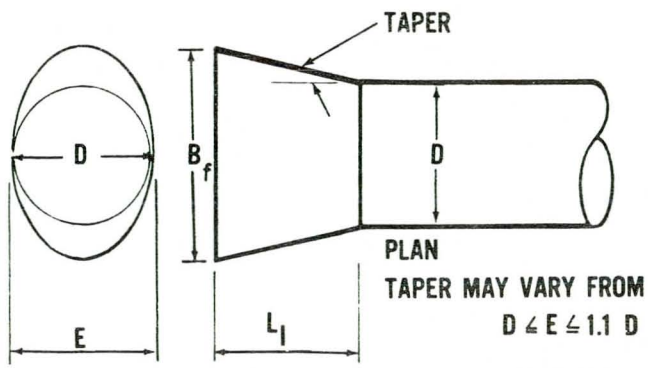

TAPER MAY VARY FROM 4:1 TO 6:1

$D \leq E \leq 1.1\ D$

THROAT CONTROL CURVES
FOR SIDE-TAPERED INLETS TO PIPE CULVERT
(CIRCULAR SECTIONS ONLY)

FEDERAL HIGHWAY ADMINISTRATION
OCTOBER 1971

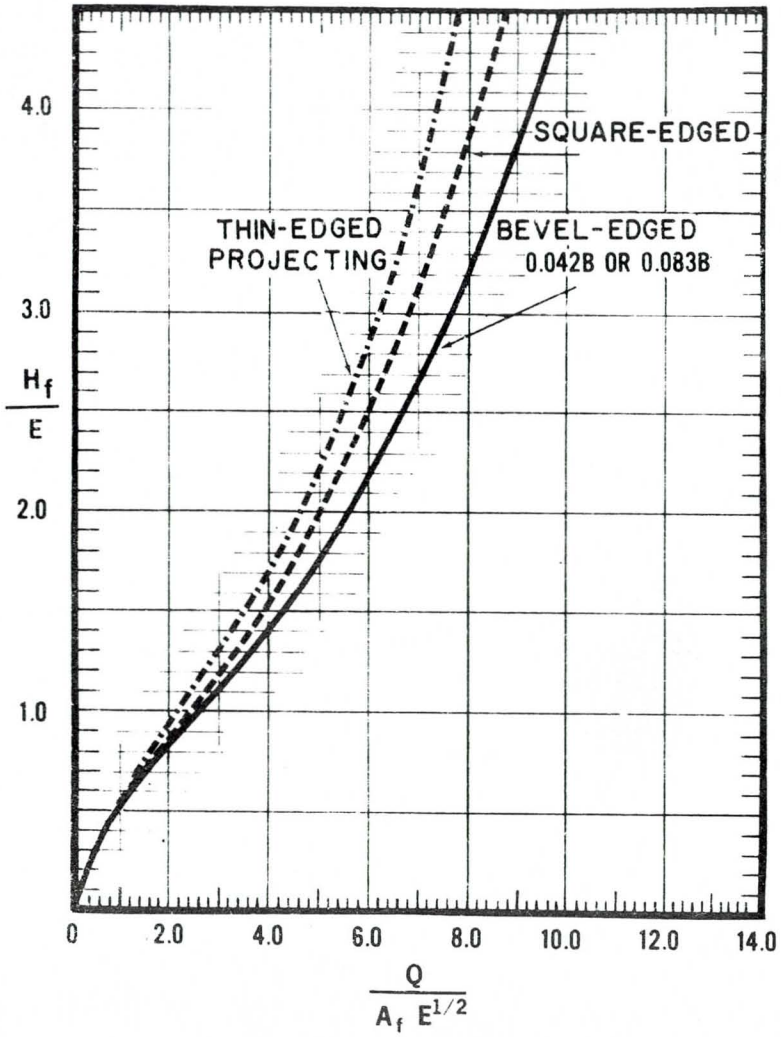

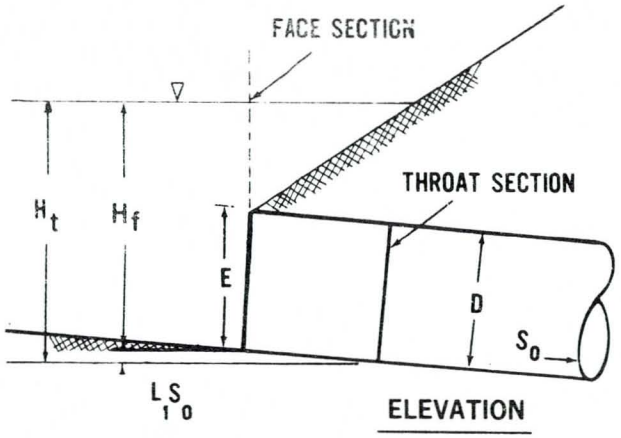

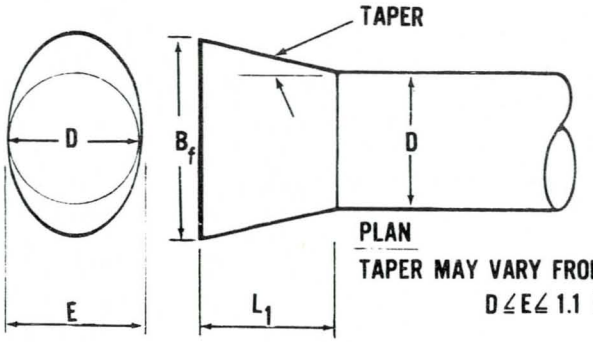

TAPER MAY VARY FROM 4:1 TO 6:1

$D \leq E \leq 1.1\ D$

FACE CONTROL CURVES FOR SIDE- TAPERED INLETS TO PIPE CULVERTS (NON-RECTANGULAR SECTIONS ONLY)

NOTE: FOR MULTIPLE BARRELS, DESIGN SIDE-TAPERED INLETS AS INDIVIDUAL STRUCTURES

FEDERAL HIGHWAY ADMINISTRATION
OCTOBER 1971

SECTION VIII

Design Tables

TABLE 1 - ENTRANCE LOSS COEFFICIENTS

Outlet Control, Full or Partly Full

Entrance head loss $H_e = k_e \frac{V^2}{2g}$

Type of Structure and Design of Entrance	Coefficient k_e
Pipe, Concrete	
Projecting from fill, socket end (groove-end) . . .	0.2
Projecting from fill, sq. cut end	0.5
Headwall or headwall and wingwalls	
Socket end of pipe (groove-end)	0.2
Square-edge	0.5
Rounded (radius = 1/12D)	0.2
Mitered to conform to fill slope	0.7
*End-Section conforming to fill slope	0.5
Beveled edges, 33.7° or 45° bevels	0.2
Side-or slope-tapered inlet	0.2
Pipe, or Pipe-Arch, Corrugated Metal	
Projecting from fill (no headwall)	0.9
Headwall or headwall and wingwalls square-edge . .	0.5
Mitered to conform to fill slope, paved or unpaved slope	0.7
*End-Section conforming to fill slope	0.5
Beveled edges, 33.7° or 45° bevels	0.2
Side-or slope-tapered inlet	0.2
Box, Reinforced Concrete	
Headwall parallel to embankment (no wingwalls)	
Square-edged on 3 edges	0.5
Rounded on 3 edges to radius of 1/12 barrel dimension, or beveled edges on 3 sides . . .	0.2
Wingwalls at 30° to 75° to barrel	
Square-edged at crown	0.4
Crown edge rounded to radius of 1/12 barrel dimension, or beveled top edge	0.2
Wingwall at 10° to 25° to barrel	
Square-edged at crown	0.5
Wingwalls parallel (extension of sides)	
Square-edged at crown	0.7
Side-or slope-tapered inlet	0.2

*Note: "End Section conforming to fill slope," made of either metal or concrete, are the sections commonly available from manufacturers. From limited hydraulic tests they are equivalent in operation to a headwall in both inlet and outlet control. Some end sections, incorporating a closed taper in their design have a superior hydraulic performance. These latter sections can be designed using the information given for the beveled inlet.

TABLE 2 - MANNING'S n FOR NATURAL STREAM CHANNELS (16)
(Surface width of flood stage less than 100 ft.)

1. Fairly regular section:

   a. Some grass and weeds, little or no brush 0.030--0.035

   b. Dense growth of weeds, depth of flow materially greater than weed height 0.035--0.05

   c. Some weeds, light brush on banks 0.035--0.05

   d. Some weeds, heavy brush on banks . . . . . 0.05 --0.07

   e. Some weeds, dense willows on banks . . . . . 0.06 --0.08

   f. For trees within channel, with branches submerged at high stage, increase all above values by . . . . . 0.01 --0.02

2. Irregular sections, with pools, slight channel meander; increase values given above about . . . . . 0.01 --0.02

3. Mountain streams, no vegetation in channel, banks usually steep, trees and brush along banks submerged at high stage:

   a. Bottom of gravel, cobbles, and few boulders . . . 0.04 --0.05

   b. Bottom of cobbles, with large boulders . . . . . 0.05 --0.07

TABLE 3

VALUES OF $BD^{3/2}$

B x D	$BD^{3/2}$	B x D	$BD^{3/2}$	B x D	$BD^{3/2}$
4 x 4	32.0	7 x 7	129.6	10 x 10	316.2
5 x 4	40.0	8 x 7	148.2	12 x 10	379.4
6 x 4	48.0	9 x 7	166.7	14 x 10	442.7
7 x 4	56.0	10 x 7	185.2	16 x 10	505.9
8 x 4	64.0	12 x 7	222.2		
		14 x 7	259.3	12 x 12	498.8
5 x 5	55.9			14 x 12	582.0
6 x 5	67.1	8 x 8	181.0	16 x 12	665.1
7 x 5	78.3	9 x 8	203.7	18 x 12	748.3
8 x 5	89.4	10 x 8	226.3		
9 x 5	100.6	12 x 8	271.6	14 x 14	733.3
10 x 5	111.8	14 x 8	316.8	16 x 14	838.1
				18 x 14	942.8
6 x 6	88.2	9 x 9	243.0		
7 x 6	102.9	10 x 9	270.0		
8 x 6	117.6	12 x 9	324.0		
9 x 6	132.3	14 x 9	378.0		
10 x 6	147.0				
12 x 6	176.4				

TABLE 4

VALUES OF $D^{3/2}$

D	$D^{3/2}$	D	$D^{3/2}$	D	$D^{3/2}$
4	8.0	8	22.6	12	41.6
5	11.2	9	27.0	13	46.9
6	14.7	10	31.6	14	52.4
7	18.5	11	36.5	15	58.1

TABLE 5

VALUES OF $D^{5/2}$

D	$D^{5/2}$	D	$D^{5/2}$	D	$D^{5/2}$
1.0	1.0	5.0	55.9	9.0	243.0
1.5	2.8	5.5	70.9	9.5	278.2
2.0	5.7	6.0	88.2	10.0	316.2
2.5	9.9	6.5	107.7	10.5	357.3
3.0	15.6	7.0	129.6	11.0	401.3
3.5	22.9	7.5	154.0	11.5	448.5
4.0	32.0	8.0	181.0	12.0	498.8
4.5	43.0	8.5	210.6	12.5	552.4

TABLE 6

VALUES OF $E^{1/2}$

E	$E^{1/2}$	E	$E^{1/2}$	E	$E^{1/2}$
1.0	1.00	5.0	2.24	9.0	3.00
1.5	1.22	5.5	2.35	9.5	3.08
2.0	1.41	6.0	2.45	10.0	3.16
2.5	1.58	6.5	2.55	10.5	3.24
3.0	1.73	7.0	2.65	11.0	3.32
3.5	1.87	7.5	2.74	11.5	3.39
4.0	2.00	8.0	2.83	12.0	3.46
4.5	2.12	8.5	2.92	12.5	3.54

TABLE NO. 7

Area in Square Feet of Elliptical Sections

$$(A_f = \pi/4\ B_f E \text{ or } A_f = \pi/4\ E^2 \frac{B_f}{E})$$

B_f \ E	24"	30"	36"	42"	48"	54"	60"	66"	72"	78"	84"	90"	96"	102"	108"
24"	3.14	----	----	-----	-----	-----	-----	-----	-----	-----	-----	-----	------	------	------
30"	3.93	4.91	----	-----	-----	-----	-----	-----	-----	-----	-----	-----	------	------	------
36"	4.71	5.89	7.07	-----	-----	-----	-----	-----	-----	-----	-----	-----	------	------	------
42"	5.50	6.87	8.25	9.62	-----	-----	-----	-----	-----	-----	-----	-----	------	------	------
48"	6.28	7.85	9.42	11.00	12.56	-----	-----	-----	-----	-----	-----	-----	------	------	------
54"	7.07	8.84	10.60	12.37	14.14	15.90	-----	-----	-----	-----	-----	-----	------	------	------
60"	7.85	9.82	11.78	13.74	15.71	17.67	19.63	-----	-----	-----	-----	-----	------	------	------
66"	8.64	10.8	12.96	15.12	17.28	19.44	21.60	23.76	-----	-----	-----	-----	------	------	------
72"	9.42	11.78	14.13	16.49	18.85	21.21	23.56	25.92	28.27	-----	-----	-----	------	------	------
78"		12.76	15.32	17.87	20.42	22.97	25.52	28.08	30.63	33.18	-----	-----	------	------	------
84"		13.74	16.49	19.24	21.99	24.74	27.48	30.24	32.98	35.74	38.48	-----	------	------	------
90"			17.67	20.62	23.56	26.51	29.45	32.40	35.34	38.29	41.23	44.18	------	------	------
96"			18.85	21.99	25.13	28.27	31.41	34.56	37.69	40.84	43.97	47.12	50.26	------	------
102"			20.03	23.37	26.70	30.04	33.38	36.72	40.05	43.39	46.73	50.07	53.41	56.75	------
108"			21.2	24.74	28.27	31.81	35.34	38.88	43.40	45.95	49.47	53.01	56.54	60.08	63.61
120"				27.49	31.41	35.34	39.26	43.20	47.12	51.05	54.97	58.91	62.82	66.76	70.67
132"					34.55	38.88	43.19	47.52	51.83	56.16	60.46	64.80	69.10	73.43	77.74
144"					37.69	42.41	47.12	51.84	56.54	61.26	65.96	70.69	75.38	80.11	84.81
156"						45.95	51.04	56.16	61.25	66.37	71.46	76.58	81.67	86.79	91.87
168"							54.97	60.48	65.96	71.47	76.95	82.47	87.95	93.46	98.94
180"							58.89	64.80	70.67	76.58	82.45	88.36	94.23	100.14	106.00
192"								69.12	75.38	81.68	87.95	94.25	100.51	106.81	113.08

TABLE NO. 8

Area of Flow Prism in
Partly Full Circular Conduit

Let $\frac{\text{Depth of Water}}{\text{Diameter of Conduit}} = \frac{y'}{D}$ and Tabulated Value = C_a. Then Area = $C_a D^2$

$\frac{y'}{D}$	.00	.01	.02	.03	.04	.05	.06	.07	.08	.09
.0	.0000	.0013	.0037	.0069	.0105	.0147	.0192	.0242	.0294	.0350
.1	.0409	.0470	.0534	.0600	.0668	.0739	.0811	.0885	.0961	.1039
.2	.1118	.1199	.1281	.1365	.1449	.1535	.1623	.1711	.1800	.1890
.3	.1982	.2074	.2167	.2260	.2355	.2450	.2546	.2642	.2739	.2836
.4	.2934	.3032	.3130	.3229	.3328	.3428	.3527	.3627	.3727	.3827
.5	.393	.403	.413	.423	.433	.443	.453	.462	.472	.482
.6	.492	.502	.512	.521	.531	.540	.550	.559	.569	.578
.7	.587	.596	.605	.614	.623	.632	.640	.649	.657	.666
.8	.674	.681	.689	.697	.704	.712	.719	.725	.732	.738
.9	.745	.750	.756	.761	.766	.771	.775	.779	.782	.784

Ref: Table 7-4, "Handbook of Hydraulics," King and Brater, 5th Edition.

Selected Bibliography

1. Yarnell, David L., Nagler, Floyd A., and Woodward, Sherman M., "The Flow of Water Through Culverts," Bulletin 1, University of Iowa Studies in Engineering, Iowa City, Iowa, 1926.

2. Mavis, F. T., "The Hydraulics of Culverts," Bulletin 56, Engineering Experiment Station, Pennsylvania State College, University Park, Pennsylvania, 1942.

3. Straub, Lorenz G., Anderson, Alvin G., and Bowers, Charles E., "Importance of Inlet Design on Culvert Capacity," Highway Research Board Research Report 15-B, Washington, D.C., 1953.

4. Shoemaker, Roy H., Jr., and Clayton, Leslie, A., "Model Studies of Tapered Inlets for Box Culverts," Highway Research Board Research Report 15-B, Washington, D.C., 1953.

5. French, John L., "First Progress Report on Hydraulics of Short Pipes, Hydraulic Characteristics of Commonly used Pipe Entrances," National Bureau of Standards Report 4444, Washington, D.C., December, 1955.

6. French, John L., "Second Progress Report on Hydraulics of Culverts, Pressure and Resistance Characteristics of a Model Pipe Culvert," National Bureau of Standards Report 4911, Washington, D.C., October, 1956.

7. French, John L., "Third Progress Report on Hydraulics of Culverts, Effect of Approach Channel Characteristics on Model Pipe Culvert Operation," National Bureau of Standards Report 5306, Washington, D.C., June, 1957.

8. French, John L., "Fourth Progress Report on Hydraulics of Culverts, Hydraulics of Improved Inlet Structures for Pipe Culverts," National Bureau of Standards Report 7178, Washington, D.C., August, 1961.

9. French, John L., "Fifth Progress Report on Hydraulics of Culverts, Nonenlarged Box Culvert Inlets," National Bureau of Standards Report 9327, Washington, D.C., June, 1966.

10. French, John L., "Sixth Progress Report on Hydraulics of Culverts, Tapered Box Culvert Inlets," National Bureau of Standards Report 9355, Washington, D.C., June, 1966.

11. French, John L., and Bossy, Herbert G., "Seventh Progress Report on Hydraulics of Culverts, Tapered Box Culvert Inlets with Fall Concentration in the Inlet Structure," National Bureau of Standards Report 9528, Washington, D.C., July, 1967.

12. Herr, Lester A., and Bossy, Herbert G., "Hydraulic Charts for the Selection of Highway Culverts," Hydraulic Engineering Circular No. 5, U.S. Department of Commerce, Bureau of Public Roads (now Department of Transportation, Federal Highway Administration), Washington, D.C., December, 1965.

13. Herr, Lester A., and Bossy, Herbert G., "Capacity Charts for the Hydraulic Design of Highway Culverts," Hydraulic Engineering Circular No. 10, U.S. Department of Commerce, Bureau of Public Roads (now Department of Transportation, Federal Highway Administration), Washington, D.C., March, 1965.

14. "Synopsis of Field Survey of Improved Inlet Structures," Hydraulics Branch, Bridge Division, Office of Engineering, Federal Highway Administration, U.S. Department of Transportation, Washington, D.C., October, 1971. (Prepared in conjunction with this Circular).

15. Reihsen, G., and Harrison, L. J., "Debris Control Structures," Hydraulic Engineering Circular No. 9, Department of Transportation, Federal Highway Administration, Washington, D.C., March, 1971.

16. "Design Charts for Open-Channel Flow," Hydraulic Design Series No. 3, U.S. Department of Commerce, Bureau of Public Roads (now Department of Transportation, Federal Highway Administration), Washington, D.C., August, 1961.

APPENDIX A

Example Problems

BOX CULVERT EXAMPLE NO. 1

Given: Design Discharge (Q) = 1,000 cfs, for a 50-year recurrence interval

Slope of stream bed (S_o) = 0.05 ft./ft.

Allowable Headwater Elevation = 200

Elevation Outlet Invert = 172.5

Culvert Length (L_a) = 350 ft.

Downstream channel approximates an 8' wide trapezoidal channel with 2:1 side slopes and a Manning's "n" of 0.03.

Requirements: This box culvert will be located in a rural area where the Allowable Headwater Elevation is not too critical; that is, the damages are low due to exceeding that elevation at infrequent times. Thus, the culvert should have the smallest possible barrel to pass design Q without exceeding AHW El. Use a reinforced concrete box with n = 0.012.

PROJECT: *Example No. 1*

STATION: _____

OUTLET CONTROL DESIGN CALCULATIONS

DESIGNER: JMN

DATE: 12-10-73

INITIAL DATA:

Q 50 = 1000 cfs

AHW El. = 200 ft.

So = 0.05

La = 350 ft.

El. Outlet Invert 172.5 ft

Stream Data:

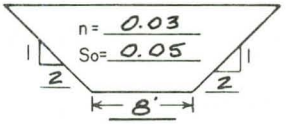

Barrel Shape and Material *Rect. Conc. Box* Barrel n = 0.012

SKETCH

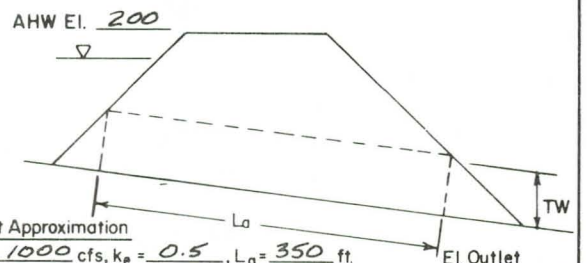

First Approximation

Q = 1000 cfs, k_e = 0.5, L_a = 350 ft.

H = AHW El. − El. Outlet Invert − h_o

= 200 − 172.5 − 5 = 22.5

∴ A = 40 ft.^{2} or D = _____ ft.; Try 7'x6'

Q	$\frac{Q}{N}$	* H	$\frac{Q}{NB}$	(1) d_c	$\frac{d_c+D}{2}$	Qn	(2) TW	(3) h_o	(4) HW_o	(5) V_o	COMMENTS
Trial No 1, N = 1, B = 7, D = 6, k_e = 0.5											Square edges
		chart 1		chart 5			HDS 3				
1000	1000	21	143	76	6.0		3.5	6.0	199.5	23.8	Ok - Close to AHW El.
800	800	13.2	114	76	6.0		3.25	6.0	191.7		
1200	1200	30	172	76	6.0		3.8	6.0	208.5		
Trial No. 2, N = 1, B = 7, D = 6, k_e = 0.2											Beveled edges
1000	1000	19	143	76	6.0		3.5	6.0	197.5	23.8	Ok - Lowered HW_o 2'
800	800	12		Same as				6.0	190.5		Try 1-6'x6'
1200	1200	27		sq. edge				6.0	205.5		
Trial No 3, N = 1, B = 6, D = 6, k_e = 0.2											Beveled edges
1000	1000	26	167	76	6.0		3.5	6.0	204.5	27.8	No good - Does not meet
											design Criteria
											exceeds AHW El.

Notes and Equations:

(1) d_c cannot exceed D

(2) TW based on d_n in natural channel, or other downstream control.

(3) $h_o = \frac{d_c+D}{2}$ or TW, whichever is larger.

(4) $HW_o = H + h_o$ + El. Outlet Invert.

(5) Outlet Velocity (V_o) = Q/Area defined by d_c or TW, not greater than D. Do not compute until control section is known.

SELECTED DESIGN

N = 1

B = 7 ft.

D = 6 ft.

k_e = 0.2

At Design Q:

HW_o = 197.5 ft.

V_o = 23.8 f/s

$$* \quad H = \left[1 + k_e + \frac{29n^2 \cdot L}{R^{1.33}}\right] \frac{V^2}{2g}$$

PROJECT: Example No. 1 | DESIGNER: JMN

CULVERT INLET CONTROL SECTION
DESIGN CALCULATIONS

STATION: | DATE: 12-10-73

INITIAL DATA:

Q 50 = 1000 cfs

AHW El. = 200 ft.

S_o = 0.05

L_a = 350 ft.

El. Stream Bed at Face 190 ft.

Barrel Shape and Material RCB Barrel n = 0.012

N = 1, B = 7

D = 6, $NBD^{3/2}$ = 102.9 (TABLE 3)

(Pipe) $ND^{5/2}$ = _____

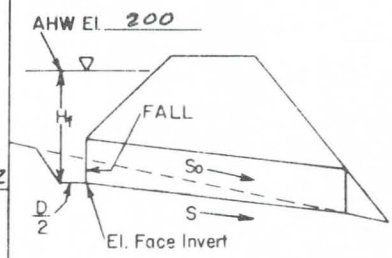

CONVENTIONAL or BEVELED INLET: FACE CONTROL SECTION (Upper Headings)

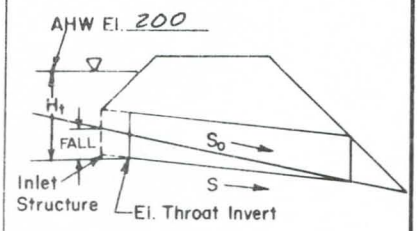

TAPERED INLET THROAT CONTROL SECTION (Lower Headings)

DEFINITIONS OF INLET CONTROL SECTION

	$\frac{Q}{NB}$	$\frac{H_f}{D}$	H_f	(1) El. Face Invert	El. Stream Bed At Face	(2)	(3) HW_f	(4)	(5)	Note: Use Upper Headings for Coventional or Beveled Face; Lower Headings for Tapered Inlet Throat.
Q	$\frac{Q}{NBD^{3/2}}$	$\frac{H_t}{D}$	H_t	El. Throat Invert		FALL	HW_t	S	V_o	COMMENTS
Trial No. 1 Inlet and Edge Description Beveled-edged Inlet										
1000	143	chart 8 3.9	23.4	176.6	192*	15.4	200			FALL too large, try tapered
* Adjusted upstream due to FALL										inlet - Do not use bevel-edged inlet
Trial No. 2 Inlet and Edge Description Tapered inlet throat										
1000	9.72	chart 14 2.65	15.9	184.1	190	5.9	200	0.033	HDS 3 34.2	Ok - Calc. Perf. Curves
800	7.79	2.05	12.3				196.4			From plot, Opportunity to gain (FALL = 1.3 + 5.9 = 7.2')
1200	11.68	3.4	20.4				204.5			Max. Capacity at AHW = 200
Trial No. 3 Inlet and Edge Description Tapered inlet throat, FALL = 7.2'										
1000			15.9	182.8	190	7.2	198.7	0.029	33.3	Ok. Capacity at AHW = 200
800			12.3				195.1			1062 c.f.s.
1200			20.4				203.2			

Notes and Equations:

(1) El. Face (or throat) invert = AHW El. - H_f (or H_t)

(2) FALL = El. Stream Bed at Face - El. face (or throat) invert

(3) HW_f (or HW_t) = H_f (or H_t) + El. face (or throat) invert, where El. face (or throat) invert should not exceed El. stream bed.

(4) $S \approx S_o$ - FALL/L_a

(5) Outlet Velocity = Q/Area defined by d_n at S

SELECTED DESIGN

Inlet Description:

FALL = 7.2 ft

Invert El. = 182.8 ft.

Bevels:

Angle = _____

b = _____ in., d = _____ in.

PROJECT: *Example No. 1* DESIGNER: *JMN*

SIDE-TAPERED INLET
DESIGN CALCULATIONS

STATION: _____ DATE: *12-10-73*

INITIAL DATA

Q *50* = *1000* cfs S_o = *0.05*

AHW El. = *200* ft. L_a = *350* ft.

TAPER = *4* : 1

Barrel Shape and Material *RCB; n = 0.012*

Face Edge Description *45° Bevels*

N = *1*, B = *7* ft., D = *6* ft.

SKETCH

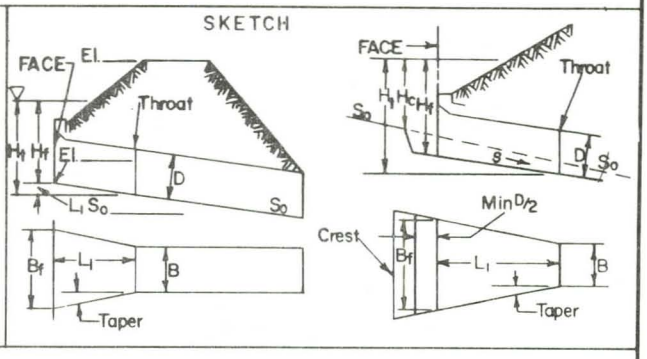

Q	El. Throat Invert	(1) $\frac{H_f}{D}$ ~~$\frac{H_f}{E}$~~	$\frac{Q}{B_f D^{3/2}}$ ~~$\frac{Q}{A_f E^{1/2}}$~~	$D^{3/2}$ ~~$E^{1/2}$~~	(2) Min. B_f ~~Min A_f~~	B_f	(3) L_1	(4) S	$L_1 S$	(5) El. Face Invert	Upper Headings for Box Culverts, Lower Headings for Pipes COMMENTS
Trial No. *1*, Q = *1000*, HW_f = *200* (*Min. required*) *FALL = 5.9'*											
1000	*184.1*	*2.48*	chart 15 *6.6*	TABLE 4 *14.7*	*10.3*	*10.5*	*7.0*	*0.033*	*0.2*	*184.3*	$B_f D^{3/2}$ [or $A_f E^{1/2}$] = *154*
900		*2.14*	*5.84*								H_f *12.8* HW_f *197.1*
1000		*2.42*	*6.50*								*14.5* *198.8*
1100		*2.77*	*7.14*								*16.6* *200.9*
Trial No *2*, Q = *1000*, HW_f = *198.7* (*FALL = 7.2'*)											
1000	*182.8*	*2.48*	*6.6*	*14.7*	*10.3*	*10.5*	*7.0*	*0.029*	*0.2*	*183.0*	$B_f D^{3/2}$ [or $A_f E^{1/2}$] = _____
Trial No *3*, Q = *1062*, HW_f = *200* (*FALL = 7.2'*)											
1062	*182.8*	*2.70*	*7.05*	*14.7*	*10.3*	*10.5*	*7.0*	*0.029*	*0.2*	*183.0*	$B_f D^{3/2}$ [or $A_f E^{1/2}$] = _____

Notes and Equations:

(1) H_f / D [or H_f/E] = (HW$_f$ − El. Throat Invert − 1) / D [or E]

$D \le E \le 1.1D$

(2) Min. $B_f = Q / \left[(D^{3/2}) \frac{Q}{B_f D^{3/2}} \right]$

Min. $A_f = Q / \left[(E^{1/2}) \frac{Q}{A_f E^{1/2}} \right]$

(3) $L_1 = \left[\frac{B_f - NB}{2} \right]$ TAPER

(4) From throat design

(5) El. Face Invert − El. Throat Invert > 1 ft., recompute.
Face and Throat may be lowered to better fit site, but do not raise.

SELECTED DESIGN

B_f = *10.5* ft.

L_1 = *7.0* ft.

Bevels: Angle *45* °

d = *3* in., b = *5.3* in.

Crest Check:

HW_c = *198.7* ft.

H_c = *7.7* ft.

Q/W = *59* (Chart 17)

Min. W = *17* ft.

PROJECT: Example No. 1 — SLOPE-TAPERED INLET DESIGN CALCULATIONS — DESIGNER: JMN

STATION: _____ — DATE: 12-10-73

INITIAL DATA:

Q 50 = 1000 cfs So = 0.05

AHW EL. 200 ft. L_a = 350 ft.

El. Stream bed at crest 191 ft.

El. stream bed at face 190 ft.

TAPER = 4 :1 (4:1 to 6:1)

S_f = 2 :1 (2:1 to 3:1)

Barrel Shape and Material RCB; n=0.012

Inlet Edge Description 45° Bevels

N= 1, B= 7 ft, D= 6 ft.

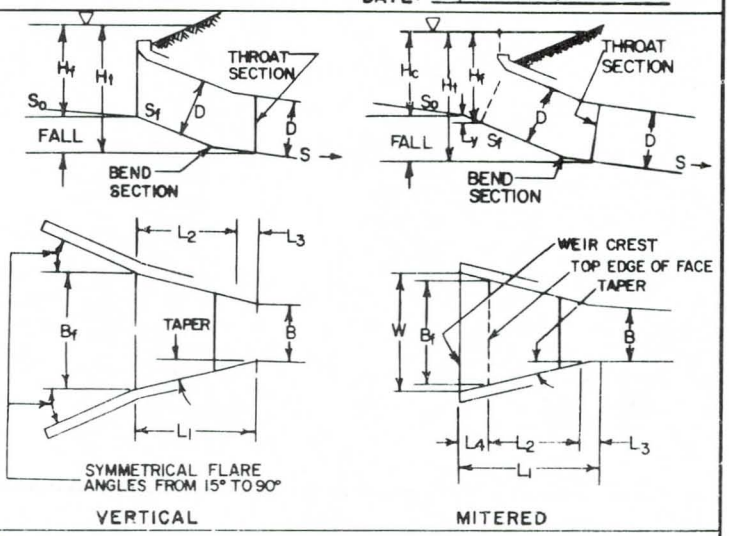

	Q	HWf	El. Throat Invert	(1.) El. Face Invert	(2.) Hf	Hf/D	Q/(Bf D^3/2) (chart 16)	D^3/2 (Table 4)	(3.) Min. Bf	Bf	S	Comments
Trial 1	1000	200	184.1	190	10	1.67	5.1	14.7	13.3	14	0.035	Bf D^3/2 = _____
												Vertical face point no. 1
Trial 2	1000	198.7	182.8	190	8.7	1.43	4.45	14.7	15.3	16	0.029	Bf D^3/2 = _____
												Vertical face point no. 2

Note: Use only throat designs with FALL > 0.25D

(1.) El. face invert: Vertical = Approx. stream bed elevation

Mitered = El. Crest − y, where y = 0.4D (Approx.), but higher than throat invert elevation

(2.) Hf = HWf − El. face invert

(3.) Min. Bf = Q/((D^3/2) Q/Bf D^3/2)

(4.) Min. L3	(5.) L4	(6.) L2	(7.) Check L2	(8.) Adj L3	(9.) Adj TAPER	(10.) L1	(11.) W	Q/W	Hc	(12.) Max. Crest El.
3.5	—	11.8	10.5	—	4.4:1	15.3				
3.5	—	14.4	14.4	3.6	—	18.0				

GEOMETRY

Bf = ____ ft. L3 = ____ ft.

L1 = ____ ft. L4 = ____ ft.

L2 = ____ ft. d = ____ in.

δ = ____ in.

TAPER = ____ :1

(4.) Min. L_3 = 0.5 NB

(5.) $L_4 = S_{fy} + D/S_f$

(6.) L_2 = (El. Face (Crest) Invert − El. Throat Invert) $S_f - L_4$

(7.) Check $L_2 = \left[\frac{B_f - NB}{2}\right]$ TAPER − L_3

(8.) If (7) > (6), Adj. $L_3 = \left[\frac{B_f - NB}{2}\right]$ TAPER − L_2

(9.) If (6) > (7) Adj. TAPER = $(L_2 + L_3) / \left[\frac{B_f - NB}{2}\right]$

(10.) $L_1 = L_2 + L_3 + L_4$

(11.) Mitered $W = NB + 2\left[\frac{L_1}{TAPER}\right]$

(12.) Max. Crest El. = $HW_f - H_c$

PROJECT: Example No. 1 | SLOPE-TAPERED INLET DESIGN CALCULATIONS | DESIGNER: JMN

STATION: _____ | DATE: 12-10-73

INITIAL DATA:

Q 50 = 1000 cfs S_o = 0.05

AHW EL. 200 ft. L_a = 350 ft.

El. Stream bed at crest 191 ft.

El. stream bed at face 190 ft.

TAPER = 4 : 1 (4:1 to 6:1)

S_f = 2 : 1 (2:1 to 3:1)

Barrel Shape and Material RCB ; n = 0.012

Inlet Edge Description 45° Bevels

N = 1 , B = 7 ft., D = 6 ft.

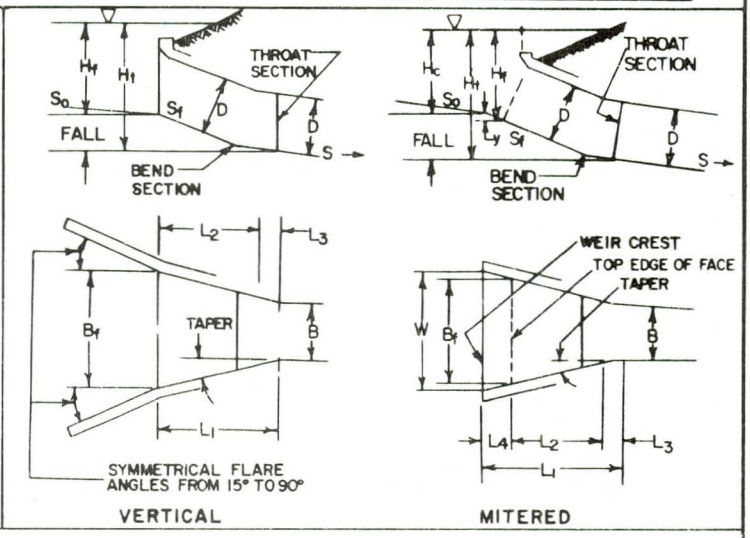

	Q	HWf	El. Throat Invert	(1.) El. Face Invert	(2.) Hf	Hf/D	Q/(Bf D^3/2) (chart 16)	D^3/2 (Table 4)	(3.) Min. Bf	Bf	S	Comments
Trial 1	1062	200	182.8	190	10	1.67	5.1	14.7	14.2	15.0	0.029	Bf D^3/2 = _____
												Vertical face point no. 3
Trial 2	1000	200	184.1	188.6	11.4	1.90	5.65	14.7	12.0	12.0	0.033	Bf D^3/2 = _____
												Mitered face point no. 1

Note: Use only throat designs with FALL > 0.25D

(1.) El. face invert: **Vertical = Approx. stream bed elevation**
Mitered = El. Crest − y, where y = 0.4D (Approx.), but higher than throat invert elevation.

(2.) Hf = HW_f − El face invert

(3.) Min. Bf = Q/((D^3/2) Q/BfD^3/2)

(4.) Min. L3	(5.) L4	(6.) L2	(7.) Check L2	(8.) Adj L3	(9.) Adj TAPER	(10.) L1	(11.) W	Q/W	Hc (chart 17)	(12.) Max. Crest El.
3.5	—	14.4	12.5	—	4.5 : 1	17.9				
3.5	7.8	6.0	6.5	4.0	—	17.8	15.9	63.0	8.0	192.0

GEOMETRY
Bf = ___ ft. L3 = ___ ft.
L1 = ___ ft. L4 = ___ ft.
L2 = ___ ft. d = ___ in.
b = ___ in.
TAPER = ___ : 1

(4.) Min. L_3 = 0.5 NB

(5.) $L_4 = S_{fy} + D/S_f$

(6.) L_2 = (El. Face (Crest) Invert − El. Throat Invert) $S_f - L_4$

(7.) Check $L_2 = \left[\frac{B_f - NB}{2}\right]$ TAPER − L_3

(8.) If (7)>(6), Adj. $L_3 = \left[\frac{B_f - NB}{2}\right]$ TAPER − L_2

(9.) If (6)>(7) Adj. TAPER = $(L_2 + L_3) / \left[\frac{B_f - NB}{2}\right]$

(10.) $L_1 = L_2 + L_3 + L_4$

(11.) **Mitered**: $W = NB + 2\left[\frac{L_1}{TAPER}\right]$

(12.) Max. Crest El. = $HW_f - H_c$

PROJECT: *Example No. 1* | SLOPE-TAPERED INLET DESIGN CALCULATIONS | DESIGNER: *JMN*

STATION: _____ | DATE: *12-10-73*

INITIAL DATA:

Q *50* = *1000* cfs So = *0.05*

AHW EL. *200* ft. L_a = *350* ft.

El. Stream bed at crest *191* ft.

El. stream bed at face *190* ft.

TAPER = *4* :1 (4:1 to 6:1)

S_f = *2* :1 (2:1 to 3:1)

Barrel Shape and Material *RCB ; n = 0.012*

Inlet Edge Description *45° Bevels*

N= *1* , B= *7* ft, D= *6* ft.

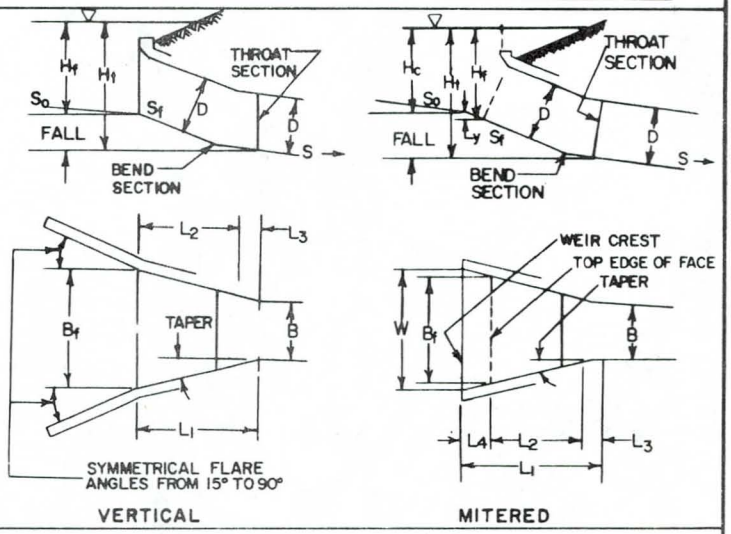

	Q	HW_f	El. Throat Invert	(1.) El. Face Invert	(2.) H_f	$\frac{H_f}{D}$	$\frac{Q}{B_f D^{3/2}}$	$D^{3/2}$	(3.) Min. B_f	B_f	S	Comments
							chart 16	Table 4				
Trial 1	1000	198.7	182.8	188.6	10.1	1.68	5.15	14.7	13.5	14.0	0.029	$B_f D^{3/2}$ = _____
												Mitered face point no. 2
Trial 2	1062	200	182.8	188.6	11.4	1.90	5.65	14.7	12.8	13.0	0.029	$B_f D^{3/2}$ = _____
												Mitered face point no. 3

Note: Use only throat designs with FALL > 0.25D

(1.) El. face invert: **Vertical = Approx. stream bed elevation**
Mitered = El. Crest − y, where y = 0.4D (Approx.), but higher than throat invert elevation.

(2.) $H_f = HW_f$ − El. face invert

(3.) Min. $B_f = Q/((D^{3/2})\ Q/B_f D^{3/2})$

(4.) Min. L_3	(5.) L_4	(6) L_2	(7.) Check L_2	(8.) Adj L_3	(9.) Adj TAPER	(10.) L_1	(11.) W	$\frac{Q}{W}$	H_c	(12.) Max. Crest El.
									chart 17	
3.5	7.8	8.6	10.5	5.4	—	21.8	17.9	55.9	7.4	191.3
3.5	7.8	8.6	8.5	—	4.03 : 1	19.9	16.8	63.3	7.9	192.1

GEOMETRY
B_f = ___ ft. L_3 = ___ ft.
L_1 = ___ ft. L_4 = ___ ft.
L_2 = ___ ft. d = ___ in.
b = ___ in.
TAPER = ___ :1

(4.) Min. $L_3 = 0.5NB$

(5.) $L_4 = S_{fy} + D/S_f$

(6.) L_2 = (El. Face (Crest) Invert − El. Throat Invert) $S_f - L_4$

(7.) Check $L_2 = \left[\frac{B_f - NB}{2}\right]$ TAPER − L_3

(8.) If (7) > (6), Adj. $L_3 = \left[\frac{B_f - NB}{2}\right]$ TAPER − L_2

(9.) If (6) > (7) Adj. TAPER = $(L_2 + L_3) / \left[\frac{B_f - NB}{2}\right]$

(10.) $L_1 = L_2 + L_3 + L_4$

(11.) Mitered: $W = NB + 2\left[\frac{L_1}{TAPER}\right]$

(12.) Max. Crest El. = $HW_f - H_c$

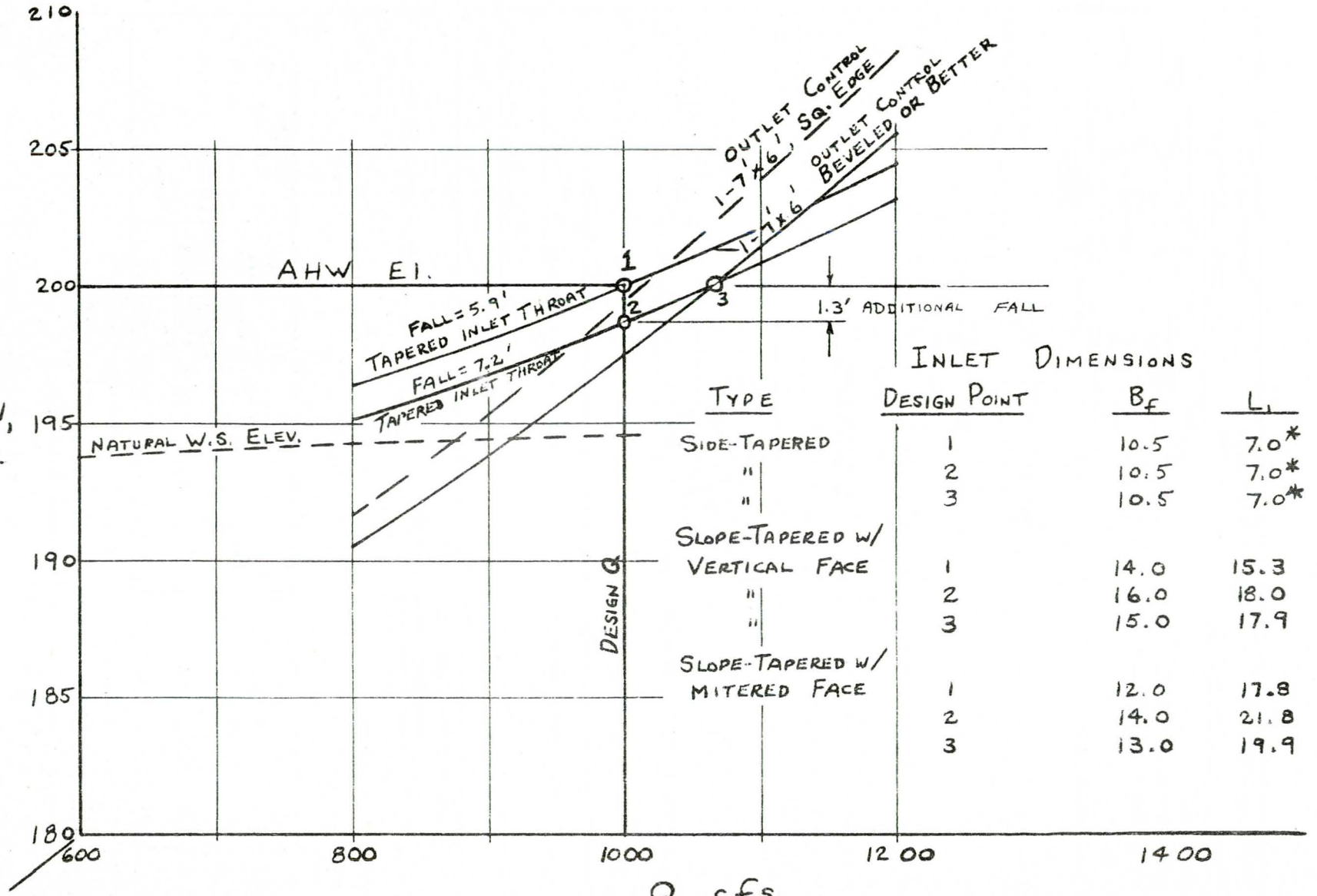

INLET DIMENSIONS

TYPE	DESIGN POINT	B_f	L_1
SIDE-TAPERED	1	10.5	7.0*
"	2	10.5	7.0*
"	3	10.5	7.0*
SLOPE-TAPERED W/ VERTICAL FACE	1	14.0	15.3
"	2	16.0	18.0
"	3	15.0	17.9
SLOPE-TAPERED W/ MITERED FACE	1	12.0	17.8
	2	14.0	21.8
	3	13.0	19.9

DESIGN PERFORMANCE CURVES - 1-7'x6' RCB

Conclusion - Example Problem No. 1

Since the requirements called for the smallest possible reinforced concrete box culvert, the barrel should be a single 7' x 6'.

Selection of the inlet would be based on cost. The additional 1.3 ft. of FALL gains 62 cfs at AHW El. = 200.0, but this is not significant at this site. It appears that a side- or slope-tapered design meeting the Q and HW requirements of point 1 would be adequate and the least expensive.

Examination of the outlet control curve shows that a discharge of 1,200 cfs (20% above design) results in an AHW El. 5.5 ft. above design. At this site, no serious flooding of upstream property or the roadway will be caused by such a headwater, and no larger barrel is required.

The dimensions of several alternate inlet structure designs are presented, based on points 1, 2, and 3 on the culvert performance curves. Note that the side-tapered inlets remain about the same size for all FALL values, while the slope-tapered inlets increase in size as FALL increases. However, the side-tapered inlets require an increasingly larger upstream sump as FALL increases. Which design will be more favorable will be a matter of economics and site considerations.

PIPE CULVERT EXAMPLE NO. 2a

Given: Design Discharge (Q) = 1,000 cfs, for a 50-year recurrence interval

Slope of stream bed (S_o) = 0.05 ft./ft.

Allowable Headwater Elevation = 200

Elevation Outlet Invert = 172.5

Culvert Length (L_a) = 350 ft.

Downstream channel approximates an 8' wide trapezoidal channel with 2:1 side slopes and a Manning's "n" of 0.03.

Requirements: This pipe culvert will be located in a rural area where the Allowable Headwater Elevation is not too critical; that is, the damages are low due to exceeding that elevation at infrequent times. Thus, the culvert should have the smallest possible barrel to pass design Q without exceeding AHW El. Use a reinforced concrete pipe with n = 0.012.

PROJECT: Example No. 2a

STATION: _____

OUTLET CONTROL DESIGN CALCULATIONS

DESIGNER: AHL

DATE: 1-11-74

INITIAL DATA:

Q 50 = 1000 cfs

AHW El. = 200 ft.

So = .05

La = 350 ft.

El. Outlet Invert 172.5 ft.

Stream Data:

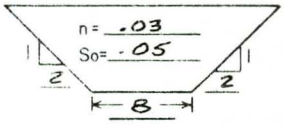

Barrel Shape and Material R.C. Pipe Barrel n = .012

SKETCH

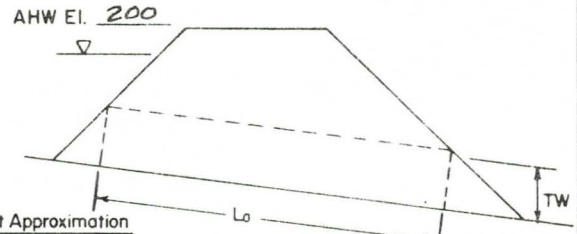

First Approximation

Q = 1000 cfs, k_e = .5, L_o = 350 ft.

H = AHW El. − El. Outlet Invert − h_o

= 200 − 172.5 − 5 = 22.5

∴ A = _____ ft.^{2} or D = 7' ft.; Try _____

Q	Q/N	* H	Q/NB	(1) d_c	$\frac{d_c+D}{2}$	Qn	(2) TW	(3) h_o	(4) HW_o	(5) V_o	COMMENTS
Trial No 1, N = 1, B = —, D = 7, k_e = .5 Square edges											
1000	1000	Chart 2 23	1000	Chart 6 > 7	7.0		HDS 3 3.5	7.0	202.5		Exceeds AHW El.
Trial No 2, N = 1, B = —, D = 7, k_e = .2 Beveled edges											
1000	1000	19.7	1000	> 7	7.0		3.5	7.0	199.2		
800	800	12.6	800	> 7	7.0		3.3	7.0	192.1		
1200	1200	28.5	1200	> 7	7.0		3.8	7.0	208.0		
Trial No ____, N = ____, B = ____, D = ____, k_e = ____											

Notes and Equations

(1) d_c cannot exceed D

(2) TW based on d_n in natural channel, or other downstream control

(3) $h_o = \frac{d_c+D}{2}$ or TW, whichever is larger.

(4) HW_o = H + h_o + El. Outlet Invert

(5) Outlet Velocity (V_o) = Q/Area defined by d_c or TW, not greater than D. Do not compute until control section is known.

SELECTED DESIGN

N = 1 At Design Q:

B = — ft.

D = 7 ft. HW_o = 199.2 ft.

k_e = .2 V_o = — f/s

$$* \quad H = \left[1 + k_e + \frac{29n^2 \cdot L}{R^{1.33}}\right] \frac{V^2}{2g}$$

PROJECT: Example No. 2a

DESIGNER: AHL

CULVERT INLET CONTROL SECTION
DESIGN CALCULATIONS

STATION:

DATE: 1-11-74

INITIAL DATA:

Q 50 = 1000 cfs

AHW El. = 200 ft.

S_o = .05

L_a = 350 ft.

El Stream Bed at Face 190 ft.

Barrel Shape and Material RC Pipe Barrel n = .012

N = 1, B = —

D = 7, $NBD^{3/2}$ = —

(Pipe) $ND^{5/2}$ = 129.6 (table 5)

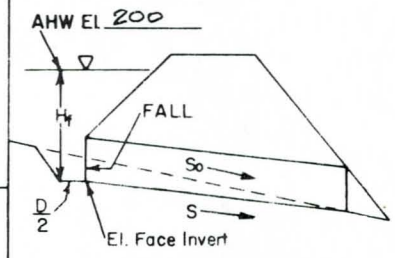

CONVENTIONAL or BEVELED INLET FACE CONTROL SECTION
(Upper Headings)

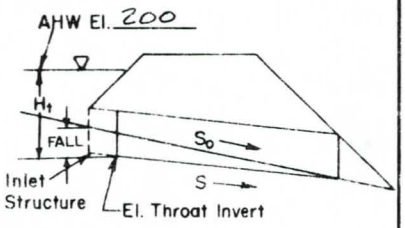

TAPERED INLET THROAT CONTROL SECTION
(Lower Headings)

DEFINITIONS OF INLET CONTROL SECTION

Q	$\frac{Q}{NB}$	$\frac{H_f}{D}$	H_f	(1) El. Face Invert	El. Stream Bed At Face	(2) FALL	(3) HW_f	(4) S	(5) V_o	Note: Use Upper Headings for Coventional or Beveled Face; Lower Headings for Tapered inlet Throat.
	$\frac{Q}{NBD^{3/2}}$	$\frac{H_t}{D}$	H_t	El Throat Invert			HW_t			COMMENTS

Trial No. 1 Inlet and Edge Description Beveled Inlet

1000	1000	Chart 13 4.2	29.4	170.6	190	19.4	200			FALL is too large, try
										tapered inlet

Trial No. 2 Inlet and Edge Description Tapered Throat - Smooth

1000	7.72	Chart 18 2.84	19.9	180.1	190	9.9	200	.022	HDS 3 30	Ok - calc. perf. curves
800	6.17	2.15	15.1				195.2			Try groove end inlet
1200	9.27	3.8	26.6				206.7			

Trial No. ____ Inlet and Edge Description ____

1000	1000	3.55	24.9	175.1	190	14.9	200			FALL too Large

Notes and Equations:

(1) El Face (or throat) invert = AHW El. − H_f (or H_t)

(2) FALL = El. Stream Bed at Face − El. face (or throat) invert

(3) HW_f (or HW_t) = H_f (or H_t) + El. face (or throat) invert, where El face (or throat) invert should not exceed El. stream bed.

(4) $S \approx S_o$ − FALL/L_a

(5) Outlet Velocity = Q/Area defined by d_n at S

SELECTED DESIGN

Inlet Description:

FALL = 9.9 ft

Invert El. = 180.1 ft.

Bevels

Angle = N/A

b = — in., d = — in.

PROJECT: Example No. 2a

DESIGNER: AHL

SIDE-TAPERED INLET
DESIGN CALCULATIONS

STATION: _____

DATE: 1-11-74

INITIAL DATA

Q 50 = 1000 cfs S_o = .05

AHW El = 200 ft. L_a = 350 ft.

TAPER = 4 : 1

Barrel Shape and Material: RC Pipe

Face Edge Description: 45° Bevels

N = 1, B = — ft., D = 7 ft.

SKETCH

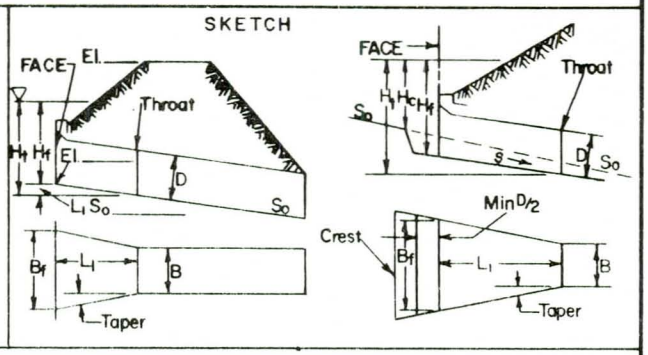

Q	El. Throat Invert	(1) ~~H_f/D~~ H_f/E	~~$Q/B_f D^{3/2}$~~ $Q/A_f E^{1/2}$	~~$D^{3/2}$~~ $E^{1/2}$	(2) ~~Min B_f~~ Min A_f	B_f	(3) L_1	(4) S	$L_1 S$	(5) El. Face Invert	Upper Headings for Box Culverts, Lower Headings for Pipes COMMENTS
Trial No. 1, Q = 1000, HW_f = 200											
1000	180.1	2.7	chart 19 7	table 6 2.65	53.8	10.0	6	.022	.132	180.2	$B_f D^{3/2}$ [or $A_f E^{1/2}$] = 54.97
800		1.95	5.5								H_f 13.65 / HW_f 193.85
1000		2.6	6.88								18.2 / 198.4
1200		3.33	8.25								23.3 / 203.5
Trial No. ____, Q = ____, HW_f = ____											
											$B_f D^{3/2}$ [or $A_f E^{1/2}$] = ____
Trial No. ____, Q = ____, HW_f = ____											
											$B_f D^{3/2}$ [or $A_f E^{1/2}$] = ____

Notes and Equations:

(1) H_f/D [or H_f/E] = (HW_f − El. Throat Invert − 1)/D [or E]

$D \le E \le 1.1D$

(2) Min. $B_f = Q/\left[(D^{3/2})\frac{Q}{B_f D^{3/2}}\right]$

Min $A_f = Q/\left[(E^{1/2})\frac{Q}{A_f E^{1/2}}\right]$

(3) $L_1 = \left[\frac{B_f - NB}{2}\right]$ TAPER

(4) From throat design

(5) El. Face Invert − El. Throat Invert > 1 ft., recompute.
Face and Throat may be lowered to better fit site, but do not raise.

SELECTED DESIGN

B_f = 10 ft.

L_1 = 6 ft.

Bevels: Angle 45 °

d = — in., b = 5 in.

Crest Check:

HW_c = 200 ft.

H_c = 10 ft.

Q/W = 80 (Chart 17)

Min. W = 12.5 ft.

PROJECT: Example No. 2a

STATION:

SLOPE-TAPERED INLET DESIGN CALCULATIONS

DESIGNER: AHL

DATE: 1-11-74

INITIAL DATA:

Q 50 = 1000 cfs S_o = .05

AHW EL. 200 ft. L_a = 350 ft.

El. Stream bed at crest 190 ft.

El. stream bed at face 190 ft.

TAPER = 4 :1 (4:1 to 6:1)

S_f = 2 :1 (2:1 to 3:1)

Barrel Shape and Material RC pipe

Inlet Edge Description 45° Bevels

N= 1 , B= – ft, D= 7 ft.

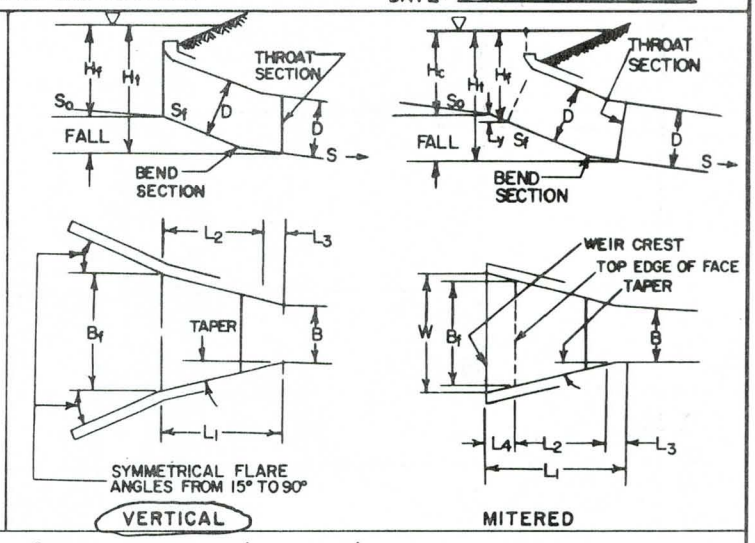

Smooth Concrete Inlet

	Q	HW_f	El. Throat Invert	(1.) El. Face Invert	(2.) H_f	$\frac{H_f}{D}$	$\frac{Q}{B_f D^{3/2}}$ chart 16	$D^{3/2}$ table 4	(3.) Min. B_f	B_f	S	Comments
Trial 1	1000	200	180.1	190	10	1.43	4.4	18.5	12.3	13	.022	$B_f D^{3/2}$ =
Trial 2												$B_f D^{3/2}$ =

Note: Use only throat designs with FALL > 0.25D

(1.) El. face invert: **Vertical = Approx. stream bed elevation**

Mitered = El. Crest − y, where y = 0.4D (Approx.), but higher than throat invert elevation.

(2.) $H_f = HW_f$ − El. face invert

(3.) Min. $B_f = Q/((D^{3/2})\ Q/B_f D^{3/2})$

(4.) Min. L_3	(5.) L_4	(6) L_2	(7) Check L_2	(8.) Adj L_3	(9.) Adj TAPER	(10) L_1	(11.) W	$\frac{Q}{W}$	H_c	(12.) Max. Crest El.
3.5	–	19.8	8.5	–	7.8	23.3				

GEOMETRY

B_f = 13.0 ft. L_3 = 3.5 ft.

L_1 = 23.3 ft. L_4 = – ft.

L_2 = 19.8 ft. d = 3.5 in.

b = 6.5 in.

TAPER = 7.8 :1

(4.) Min. $L_3 = 0.5NB$

(5.) $L_4 = S_{fy} + D/S_f$

(6.) L_2 = (El. Face (Crest) Invert − El. Throat Invert) $S_f - L_4$

(7.) Check $L = \left[\frac{B_f - NB}{2}\right]$ TAPER $- L_3$

(8.) If (7)>(6), Adj. $L_3 = \left[\frac{B_f - NB}{2}\right]$ TAPER $- L_2$

(9.) If (6)>(7) Adj. TAPER $= (L_2 + L_3) / \left[\frac{B_f - NB}{2}\right]$

(10.) $L_1 = L_2 + L_3 + L_4$

(11.) Mitered: $W = NB + 2\left[\frac{L_1}{TAPER}\right]$

(12.) Max. Crest El. = $HW_f - H_c$

EXAMPLE No. 2A

DESIGN PERFORMANCE CURVES 1-7' R.C. PIPE

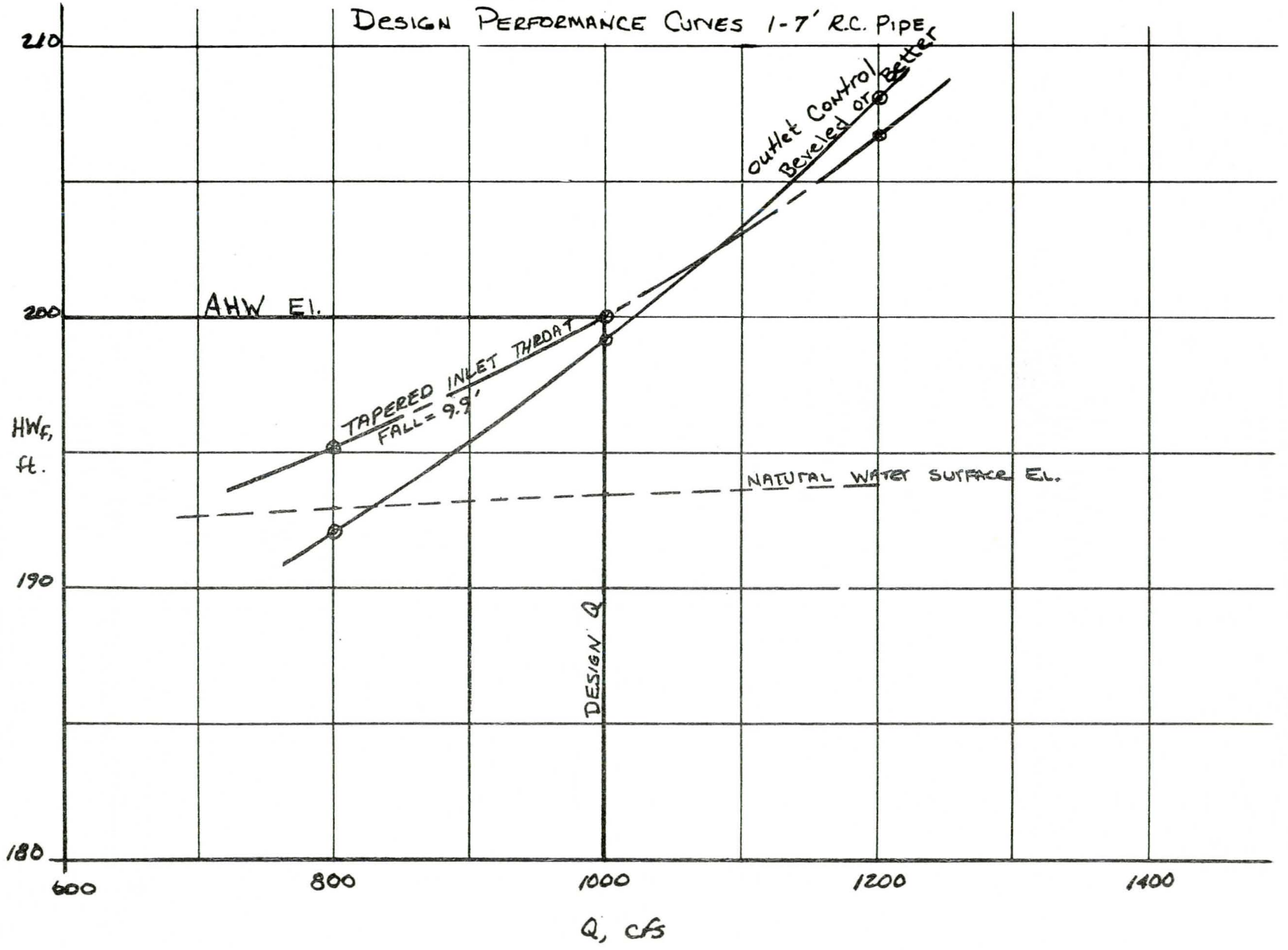

Conclusion - Example Problem No. 2a

As in Problem No. 1, requirements were for the smallest possible barrel, this time using a reinforced concrete pipe. On that basis, a 7 ft. diameter barrel was chosen.

With bevels or a groove end, the FALL was excessive, and therefore it was decided to use a tapered inlet at this site. The required FALL for the tapered inlet is about 1.5D.

Selection of a side-or slope-tapered inlet would depend on economics and site requirements. To sump a side-tapered inlet for a FALL of 9.9 ft. would require a rather large structure upstream of the culvert entrance.

Examination of the culvert performance curves shows additional FALL would achieve very little for this barrel; therefore, no optimization was performed and the FALL was set at 9.9 ft.

PIPE CULVERT EXAMPLE NO. 2b

Given: Design Discharge (Q) = 1,000 cfs, for a 50-year recurrence interval

Slope of stream bed (S_o) = 0.05 ft./ft.

Allowable Headwater Elevation = 200

Elevation Outlet Invert = 172.5

Culvert Length (L_a) = 350 ft.

Downstream channel approximates an 8' wide trapezoidal channel with 2:1 side slopes and a Manning's "n" of 0.03.

Requirements: This pipe culvert will be located in a rural area where the Allowable Headwater Elevation is not too critical; that is, the damages are low due to exceeding that elevation at infrequent times. Thus, the culvert should have the smallest possible barrel to pass design Q without exceeding AHW El. Use a corrugated metal pipe with n = 0.024.

PROJECT: Example 26

OUTLET CONTROL
DESIGN CALCULATIONS

DESIGNER: AHL

STATION:

DATE: 1-15-74

INITIAL DATA:

Q 50 = 1000 cfs

AHW El. = 200 ft.

So = .05

La = 350 ft.

El. Outlet Invert 172.5 ft

Stream Data:

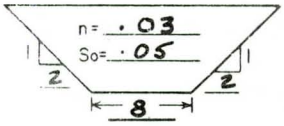

Barrel Shape and Material Corr. Metal Pipe Barrel n = .024

SKETCH

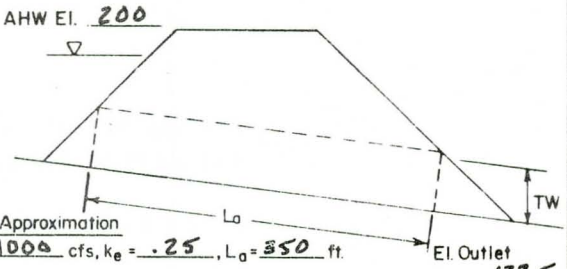

First Approximation

Q = 1000 cfs, k_e = .25, L_a = 350 ft.

H = AHW El. − El. Outlet Invert − h_o

= 200 − 172.5 − 7 = 20.5

∴ A = ____ ft.^{2} or D = 100" ft.; Try 8'

Q	Q/N	* H	Q/NB	(1) d_c	$\frac{d_c+D}{2}$	Qn	(2) TW	(3) h_o	(4) HW_o	(5) V_o	COMMENTS
Trial No 1, N = 1, B = –, D = 8, k_e = .25											
1000	1000	Chart 3 23		Chart 6 7.73	7.87		HDS 3 3.5	7.87	203.4		Exceeds AHW El.
Trial No. 2, N = 2, B = –, D = 6, k_e = .25											
1000	500	22.5		>6	6.0		3.5	6.0	201		Exceeds AHW El.
Trial No 3, N = 2, B = –, D = 6.5, k_e = .25											
1000	500	15.5		>6.5	6.5		3.5	6.5	194.5		Ok - Use
800	400	10		>6.5	6.5		3.25	6.5	189		
1200	600	22		>6.5	6.5		3.8	6.5	201		

Notes and Equations:

(1) d_c cannot exceed D

(2) TW based on d_n in natural channel, or other downstream control.

(3) $h_o = \frac{d_c+D}{2}$ or TW, whichever is larger.

(4) HW_o = H + h_o + El. Outlet Invert.

(5) Outlet Velocity (V_o) = Q/Area defined by d_c or TW, not greater than D. Do not compute until control section is known.

SELECTED DESIGN

N = 2 At Design Q:

B = – ft.

D = 6.5 ft. HW_o = 194.5 ft.

k_e = .25 V_o = ____ f/s

$$* \quad H = \left[1 + k_e + \frac{29n^2 \cdot L}{R^{1.33}}\right] \frac{V^2}{2g}$$

PROJECT: Example No. 26 | CULVERT INLET CONTROL SECTION DESIGN CALCULATIONS | DESIGNER: AHL

STATION: _____ | DATE: 1-15-74

INITIAL DATA:

Q 50 = 1000 cfs

AHW El. = 200 ft.

S_o = .05

L_a = 350 ft.

El. Stream Bed at Face 190 ft.

Barrel Shape and Material CMP Barrel n = .024

N = 2, B = –

D = 6.5, $NBD^{3/2}$ = _____ (table 5)

(Pipe) $ND^{5/2}$ = 215.4

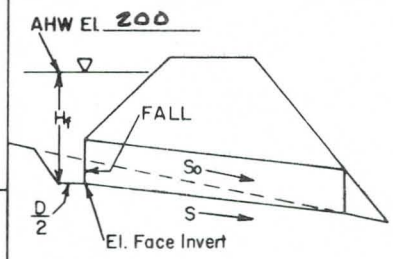

CONVENTIONAL or BEVELED INLET: FACE CONTROL SECTION (Upper Headings)

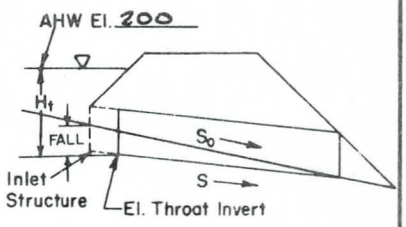

TAPERED INLET THROAT CONTROL SECTION (Lower Headings)

DEFINITIONS OF INLET CONTROL SECTION

	Q/NB	H_f/D	H_f	(1) El. Face Invert	El. Stream Bed At Face	(2)	(3) HW_f	(4)	(5)	Note: Use Upper Headings for Coventional or Beveled Face; Lower Headings for Tapered Inlet Throat.
Q	Q/$NBD^{3/2}$	H_t/D	H_t	El. Throat Invert		FALL	HW_t	S	V_o	COMMENTS
Trial No. 1 Inlet and Edge Description Beveled Inlet - 45°										
1000	500	Chart 13 1.9	12.4	187.6	190	2.4	200			try a tapered inlet throat
Trial No. 2 Inlet and Edge Description Tapered inlet throat - rough - FALL = 0.7'										
1000	4.63	Chart 18 1.65	10.7	189.3	190	0.7	200	.048		Design side-tapered inlet.
800	3.7	1.36	8.9				198.2			Curves show opportunity to
1200	5.6	1.97	12.8				202.1			increase Q at AHW = 200
Trial No. 3 Inlet and Edge Description Tapered inlet throat - rough - FALL = 2.5'										
1000	4.63	Chart 18 1.65	10.7	187.5	190	2.5	198.2	.043		Ok - Capacity at AHW = 200
800	3.7	1.36	8.9				196.4			is 1170 cfs.
1200	5.6	1.97	12.8				200.3			

Notes and Equations:

(1) El. Face (or throat) invert = AHW El. – H_f (or H_t)

(2) FALL = El. Stream Bed at Face – El. face (or throat) invert

(3) HW_f (or HW_t) = H_f (or H_t) + El. face (or throat) invert, where El. face (or throat) invert should not exceed El. stream bed.

(4) $S \approx S_o$ – FALL/L_a

(5) Outlet Velocity = Q/Area defined by d_n at S

SELECTED DESIGN

Inlet Description:

FALL = 2.5 ft.

Invert El. = 187.5 ft.

Bevels: N/A

Angle = _____

b = _____ in., d = _____ in

PROJECT: Example No. 26

SIDE-TAPERED INLET
DESIGN CALCULATIONS

DESIGNER: AHL

STATION: _____

DATE: 1-15-74

INITIAL DATA

Q 50 = 1000 cfs S_o = .05

AHW El. = 200 ft. L_a = 350 ft.

TAPER = 4 : 1

Barrel Shape and Material: Circ. CMP

Face Edge Description: 45° Bevels

N = 2, B = – ft., D = 6.5 ft.

SKETCH

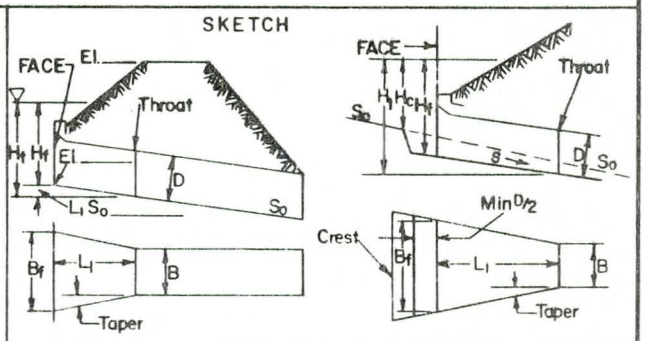

Q	El. Throat Invert	(1) ~~H_f/D~~ H_f/E	~~$Q/B_f D^{3/2}$~~ $Q/A_f E^{1/2}$	~~$D^{3/2}$~~ $E^{1/2}$	(2) ~~Min B_f~~ Min. A_f	B_f	(3) L_1	(4) S	$L_1 S$	(5) El. Face Invert	Upper Headings for Box Culverts, Lower Headings for Pipes COMMENTS
Trial No. 1, Q = 1000, HW_f = 200 (min. required) FALL = .7"											
500*	189.3	1.49	chart 19 4.3	table 6 2.55	45.5	9	5	.048	.24	189.5	$B_f D^{3/2}$ [or $A_f E^{1/2}$] = _____
											Point No. 1
* Double barrel pipe with side-tapered inlet requires dual inlet structures. Use Q/N											
Trial No 2, Q = 1170, HW_f = 200											
585*	187.5	1.77	5.0	2.55	45.95	9	5	.043	.22	187.7	$B_f D^{3/2}$ [or $A_f E^{1/2}$] = _____
											Point No. 2
Trial No _____, Q = _____, HW_f = _____											
											$B_f D^{3/2}$ [or $A_f E^{1/2}$] = _____

Notes and Equations:

(1) H_f/D [or H_f/E] = (HW$_f$ – El Throat Invert – 1)/D [or E]

$D \le E \le 1.1D$

(2) Min. $B_f = Q/\left[(D^{3/2})\frac{Q}{B_f D^{3/2}}\right]$

Min. $A_f = Q/\left[(E^{1/2})\frac{Q}{A_f E^{1/2}}\right]$

(3) $L_1 = \left[\frac{B_f - NB}{2}\right]$ TAPER

(4) From throat design

(5) El. Face Invert – El. Throat Invert > 1 ft., recompute.
Face and Throat may be lowered to better fit site, but do not raise

SELECTED DESIGN

B_f = 9 ft. (2 inlets)

L_1 = 9 ft.

Bevels: Angle 45°

d = 4.5 in., b = 4.5 in.

Crest Check:

HW_c = 200 ft.

H_c = 9 ft.

Q/W = 76 (Chart 17)

Min. W = 15.4 ft. = 1170/76

Might also consider slope-tapered inlet

EXAMPLE NO. 26

DESIGN PERFORMANCE CURVES 2 - 6.5' CMP'S

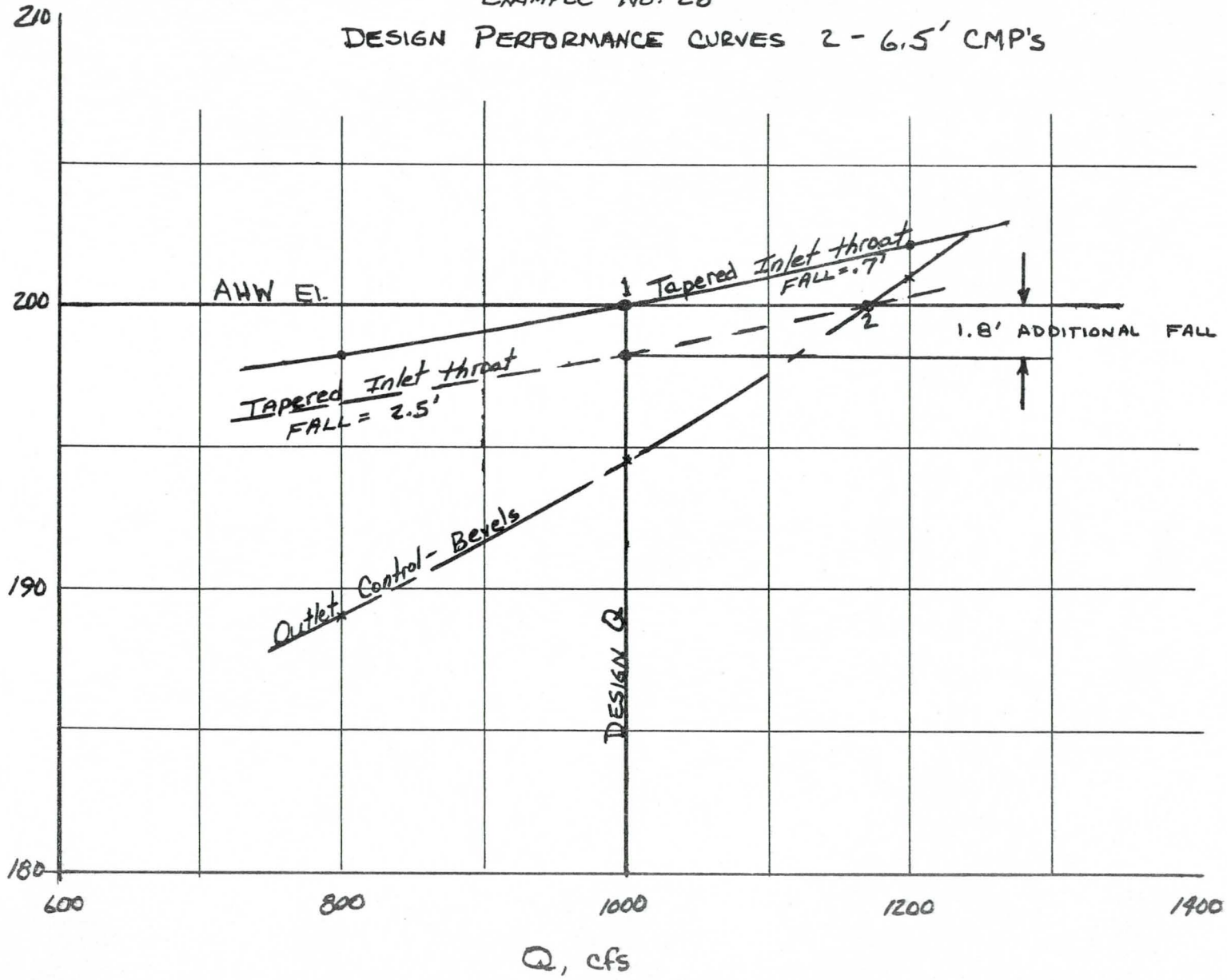

Conclusion - Example Problem No. 2b

This represents a solution to the conditions cited in Example Problem No. 1 using corrugated metal pipe for the culvert barrel. The smallest barrel which meets the AHW El. and design Q requirements is a double 6.5 ft. c.m.p., assuming that such a size is available from local suppliers.

Beveled edges on the culvert inlet would be acceptable with a FALL of 2.4 ft., or a tapered inlet could be used with a FALL of 0.7 ft., or essentially no FALL.

Examination of the culvert performance curves shows that with an additional FALL of 1.8 ft., the culvert capacity can be increased by almost 20 percent at the AHW El. Thus, a tapered inlet was chosen so that the total inlet FALL, including optimization would be kept at a minimum. With a FALL of 2.5 ft., culvert capacity is 1170 cfs at AHW El. = 200 ft.

For a FALL of 2.5 ft., a sumped side-tapered inlet was chosen. Such a small FALL would require a minor structure upstream of the culvert entrance.

Notice that for the double barrel side-tapered pipe culvert, the culverts must be treated as two separate structures, each with its own prefabricated side-tapered inlet. An alternate design would be the use of two circular to square throat transitions and a cast-in-place concrete side- or slope-tapered inlet structure. In that case, the inlet structure could be a dual structure so long as adequate barrel separation is provided for backfilling around the pipes.

BOX CULVERT EXAMPLE NO. 3

Given: Design Discharge (Q) = 1,000 cfs, for a 50-year recurrence interval

Slope of stream bed (S_o) = 0.005 ft./ft.

Allowable Headwater Elevation = 200

Elevation Outlet Invert = 188.25

Culvert Length (L_a) = 350 ft.

Downstream channel approximates an 8' wide trapezoidal channel with 2:1 side slopes and a Manning's "n" of 0.03.

Requirements: This box culvert will be located in a rural area where the Allowable Headwater Elevation is not too critical; that is, the damages are low due to exceeding that elevation at infrequent times. Thus, the culvert should have the smallest possible barrel to pass design Q without exceeding AHW El. Use a reinforced concrete box with n = 0.012.

PROJECT: Example No. 3

OUTLET CONTROL
DESIGN CALCULATIONS

DESIGNER: AHL

STATION:

DATE: 1-11-74

INITIAL DATA:

Q 50 = 1000 cfs

AHW El. = 200 ft.

S_o = .005

L_a = 350 ft.

El. Outlet Invert 188.25 ft.

Stream Data:

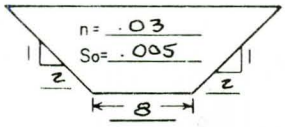

Barrel Shape and Material RC Box Barrel n = .012

SKETCH

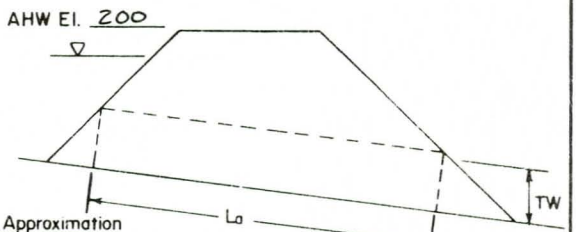

First Approximation

Q = 1000 cfs, k_e = .2, L_a = 350 ft.

H = AHW El. − El. Outlet Invert − h_o

= 200 − 188.25 − 7 = 4.75

∴ A = 77 ft.^{2} or D = ____ ft.; Try 9x9

Q	Q/N	* H	Q/NB	(1) d_c	$\frac{d_c+D}{2}$	Qn	(2) TW	(3) h_o	(4) HW_o	(5) V_o	COMMENTS
Trial No 1, N = 1, B = 9, D = 9, k_e = .2											
		Chart 1		Chart 5			HDS 3				
1000	1000	4.2	111	7.25	8.13		6.2	7.9	200.6		Exceeds AHW El.
											try larger size
Trial No 2, N = 1, B = 10, D = 9, k_e = .2											
1000	1000	3.2	100	6.8	7.9		6.2	7.9	199.4		Ok - close to AHW El.
800	800	2.1	80	5.8	7.4		5.6	7.4	197.8		
1200	1200	4.75	120	7.6	8.3		6.8	8.3	201.3		
Trial No ____, N = ____, B = ____, D = ____, k_e = ____											

Notes and Equations:

(1) d_c cannot exceed D

(2) TW based on d_n in natural channel, or other downstream control.

(3) $h_o = \frac{d_c+D}{2}$ or TW, whichever is larger.

(4) HW_o = H + h_o + El. Outlet Invert.

(5) Outlet Velocity (V_o=Q/Area defined by d_c or TW, not greater than D. Do not compute until control section is known.

SELECTED DESIGN

N = 1 At Design Q:

B = 10 ft.

D = 9 ft. HW_o = 199.4 ft.

k_e = .2 V_o = — f/s

* $H = \left[1 + k_e + \frac{29n^2 \cdot L}{R^{1.33}}\right] \frac{V^2}{2g}$

PROJECT: Example No. 3 | CULVERT INLET CONTROL SECTION DESIGN CALCULATIONS | DESIGNER: AHL

STATION: _____ | DATE: 1-11-74

INITIAL DATA:

Q 50 = 1000 cfs

AHW El. = 200 ft.

S_o = .005

L_a = 350 ft.

El. Stream Bed at Face 190 ft.

Barrel Shape and Material RC Box Barrel n = .012

N = 1, B = 10

D = 9, $NBD^{3/2}$ = 270 (table 3)

(Pipe) $ND^{5/2}$ = —

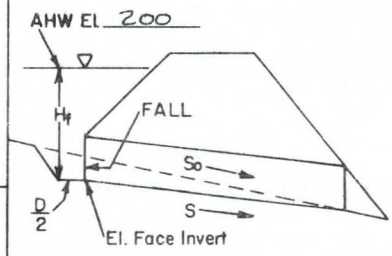

CONVENTIONAL or BEVELED INLET: FACE CONTROL SECTION (Upper Headings)

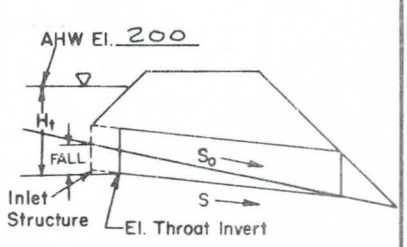

TAPERED INLET THROAT CONTROL SECTION (Lower Headings)

DEFINITIONS OF INLET CONTROL SECTION

Q	Q/NB	H_f/D	H_f	(1) El. Face Invert	El. Stream Bed At Face	(2) FALL	(3) HW_f / HW_t	(4) S	(5) V_o	Note: Use Upper Headings for Coventional or Beveled Face; Lower Headings for Tapered Inlet Throat. / COMMENTS
	Q/$NBD^{3/2}$	H_t/D	H_t	El. Throat Invert						

Trial No. 1 Inlet and Edge Description Square edges with headwalls

Q	Q/NB	H_f/D (chart 7)	H_f	(1)	El. Stream Bed At Face	(2)	(3)	(4)	(5)	Comments
1000	100	1.3	11.7	188.3	190	1.7	200			Although FALL is small
										try bevels to reduce
										FALL

Trial No. 2 Inlet and Edge Description 45° Bevels

Q	Q/NB	H_f/D (chart 8)	H_f	(1)	El. Stream Bed At Face	(2)	(3)	(4)	(5) HDS 3	Comments
1000	100	1.2	10.8	189.2	190	.8	200	.0027	13.3	FALL is minor - not necessary
800	80	1.02	9.2				198.4			to increase size just to
1200	120	1.44	12.9				202.1			eliminate FALL - Use beveled inlet

Trial No. _____ Inlet and Edge Description _____

Q	Q/NB	H_f/D	H_f	(1)	El. Stream Bed At Face	(2)	(3)	(4)	(5)	Comments

Notes and Equations:

(1) El. Face (or throat) invert = AHW El. − H_f (or H_t)

(2) FALL = El. Stream Bed at Face − El. face (or throat) invert

(3) HW_f (or HW_t) = H_f (or H_t) + El. face (or throat) invert, where El. face (or throat) invert should not exceed El. stream bed.

(4) $S \approx S_o$ − FALL/L_a

(5) Outlet Velocity = Q/Area defined by d_n at S

SELECTED DESIGN

Inlet Description:

FALL = .8 ft.

Invert El = 189.2 ft.

Bevels:

Angle = 45°

b = 5 in., d = 4.5 in.

EXAMPLE NO. 3

DESIGN PERFORMANCE CURVES 1- 10'x9' RCB

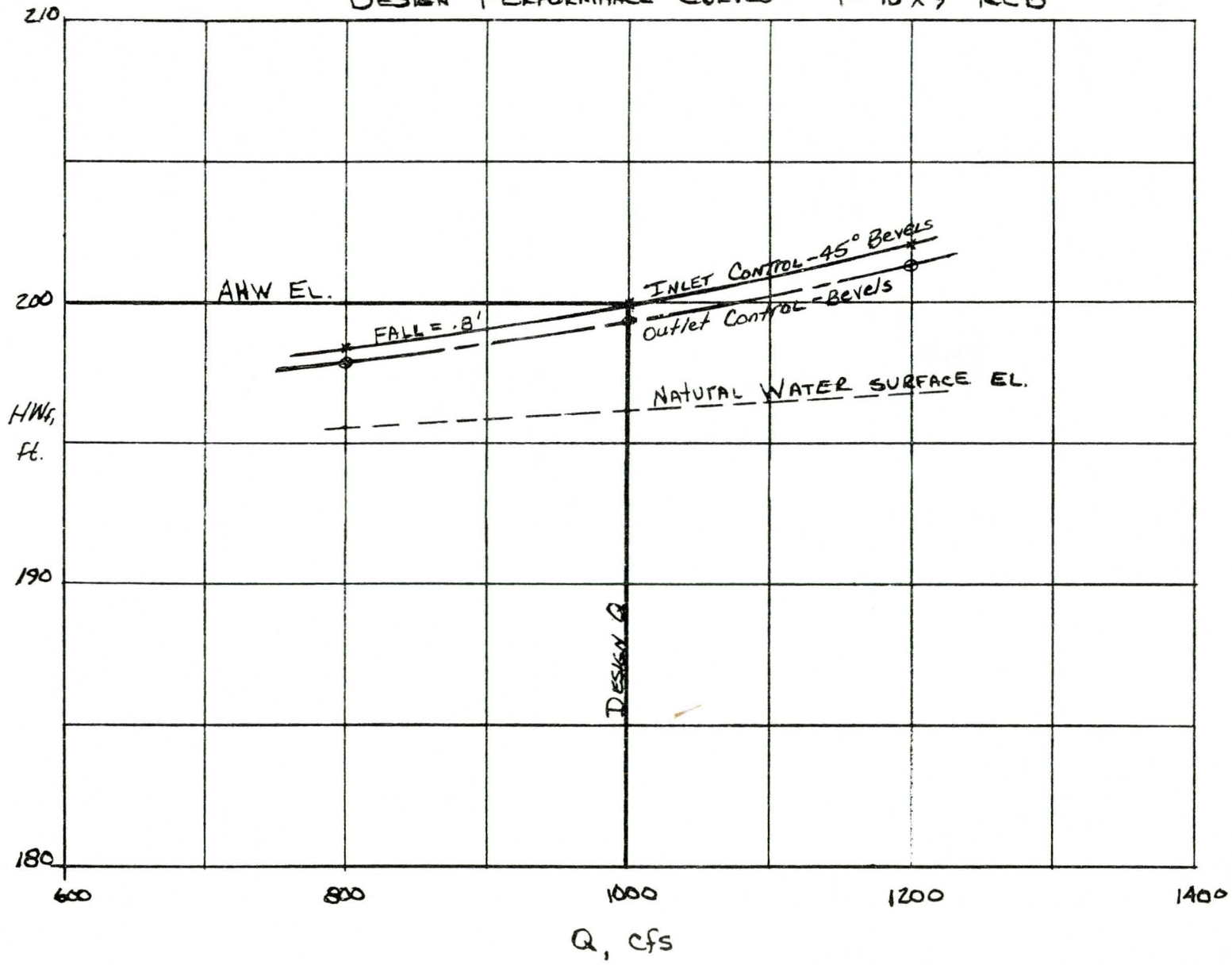

Conclusion - Example Problem No. 3

This problem was formulated to illustrate the use of the culvert design method of this manual as applied to a site where side- or slope-tapered designs are unnecessary. The conditions are the same as in Example Problem No. 1, except that the stream slope is only 0.005 ft./ft. This greatly reduces the difference in elevation between the inlet and outlet ends of the culvert, and reduces the chance of inlet control governing at the design Q.

The selected design is a single 10 ft. x 9 ft. concrete box culvert with beveled edges and a FALL of 0.8 ft., or essentially no FALL. The culvert still performs in inlet control near the design Q, but little can be gained through optimization. Also, the headwater increases at a slow rate as the design Q is exceeded, and in this rural site, the consequences will be negligible.

PIPE CULVERT EXAMPLE NO. 4

Given: Design Discharge (Q_{50}) = 150 cfs

Allowable Headwater Elevation = 100.0 ft.

Elevation Outlet Invert = 75.0 ft.

Culvert Length (L_a) = 350 ft.

Downstream channel approximates a 5 ft. wide trapezoidal channel with 2:1 side slopes and a Manning n of 0.03. S_o = 0.05

Requirements: This pipe culvert is located in a suburban area where the AHW El. may be exceeded by 2 to 3 ft. without extreme damage. However, headwater elevations greater than 103.0 ft. should be avoided for flows significantly higher than the design Q of 150 cfs.

PROJECT: Example No. 4

STATION: _____

OUTLET CONTROL
DESIGN CALCULATIONS

DESIGNER: JMN

DATE: 12-10-73

INITIAL DATA:

Q 50 = 150 cfs

AHW El. = 100 ft.

So = 0.05

La = 350 ft.

El. Outlet Invert 75 ft.

Stream Data:

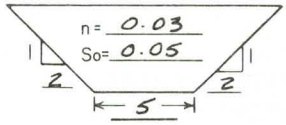

Barrel Shape and Material Circular CMP Barrel n = 0.024

SKETCH

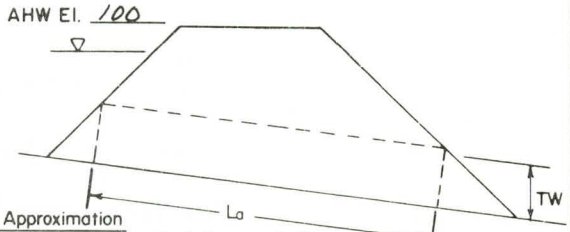

First Approximation

Q = 150 cfs, k_e = 0.25, L_a = 350 ft.

El. Outlet Invert 75

H = AHW El. − El. Outlet Invert − h_o

= 100′ − 75′ − 5′ = 20′

∴ A = _____ ft.^{2} or D = 46″ ft.; Try 42″

Q	Q/N	* H	Q/NB	(1) d_c	$\frac{d_c+D}{2}$	Qn	(2) TW	(3) h_o	(4) HW_o	(5) V_o	COMMENTS
Trial No 1, N = 1, B = —, D = 3.5′, k_e = 0.25											
150	150	chart 3 31	150	chart 6 > 3.5	3.5	—	NOS 3 1.6	3.5	109.5	Table 8	75 + 31 + 3.5 = 109.5
											HW_o > AHW El. Try 48″
Trial No. 2, N = 1, B = —, D = 4′, k_e = 0.25											
150	150	15.6	150	3.6	3.8	—	1.6	3.8	94.4		Ok – Check square edge
100	100	7.0	100	3.1	3.5	—	1.4	3.5	85.5		
200	200	27.8	200	> 4	4.0	—	1.9	4.0	106.8		
Trial No 3, N = 1, B = —, D = 4′, k_e = 0.5											
150	150	16.2					1.6	3.8	95.0		From inlet Control section
100	100	7.2	Same as trial # 2				1.4	3.5	85.7		Calculations, FALL req'd
200	200	28.8					1.9	4.0	107.8		∴ Use improved inlet

Notes and Equations:

(1) d_c cannot exceed D

(2) TW based on d_n in natural channel, or other downstream control.

(3) $h_o = \frac{d_c+D}{2}$ or TW, whichever is larger.

(4) HW_o = H + h_o + El. Outlet Invert.

(5) Outlet Velocity (V_o) = Q/Area defined by d_c or TW, not greater than D. Do not compute until control section is known.

SELECTED DESIGN

N = 1 At Design Q:

B = — ft.

D = 4 ft. HW_o = 94.4 ft.

k_e = 0.25 or 0.5 V_o = _____ f/s

* $H = \left[1 + k_e + \frac{29n^2 \cdot L}{R^{1.33}}\right] \frac{V^2}{2g}$

PROJECT: Example No. 4

STATION: _____

CULVERT INLET CONTROL SECTION
DESIGN CALCULATIONS

DESIGNER: JMN

DATE: 12-10-73

INITIAL DATA:

Q 50 = 150 cfs

AHW El. = 100 ft.

S_o = 0.05

La = 350 ft.

El. Stream Bed at Face 92.5 ft.

Barrel Shape and Material Circ. CMP Barrel n = 0.024

N = 1, B = —

D = 4', $NBD^{3/2}$ = _____

(Pipe) $ND^{5/2}$ = 32 (Table 5)

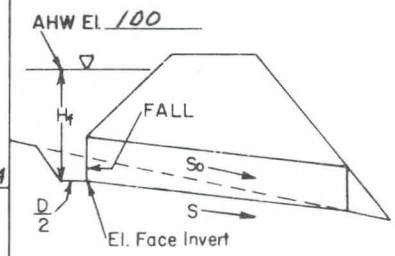

CONVENTIONAL or BEVELED INLET: FACE CONTROL SECTION (Upper Headings)

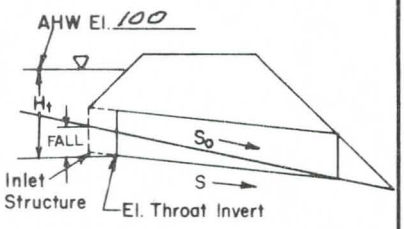

TAPERED INLET THROAT CONTROL SECTION (Lower Headings)

DEFINITIONS OF INLET CONTROL SECTION

Q	$\frac{Q}{NB}$ / $\frac{Q}{NBD^{3/2}}$	$\frac{H_f}{D}$ / $\frac{H_t}{D}$	H_f / H_t	(1) El. Face Invert / El. Throat Invert	El. Stream Bed At Face	(2) FALL	(3) HW_f / HW_t	(4) S	(5) V_o	Note: Use Upper Headings for Coventional or Beveled Face; Lower Headings for Tapered Inlet Throat. / COMMENTS
Trial No. 1 Inlet and Edge Description Square edges										
150	150	chart 12 2.07	8.3	91.7	92.5	0.8	100.0	0.048		FALL required, use bevels
Trial No. 2 Inlet and Edge Description Beveled edges										
150	150	chart 13 1.92	7.7	92.3	92.5	~0	100	0.05	HDS 3 16	Check tapered inlet throat
100	100	1.25	5.0				97.3			
200	200	2.90	11.6				103.9			
Trial No. 3 Inlet and Edge Description Tapered inlet throat, rough										
150	4.7	chart 18 1.65	6.6	92.5	92.5	0	99.1	0.05	16	Increases Q at AHW El. from 120 to 170 c.f.s.
100	3.1	1.21	4.8				97.3			
200	6.2	2.22	8.9				101.4			

Notes and Equations:

(1) El Face (or throat) invert = AHW El. − H_f (or H_t)

(2) FALL = El. Stream Bed at Face − El. face (or throat) invert

(3) HW_f (or HW_t) = H_f (or H_t) + El. face (or throat) invert, where El face (or throat) invert should not exceed El. stream bed.

(4) $S \approx S_o - FALL/L_a$

(5) Outlet Velocity = Q/Area defined by d_n at S

SELECTED DESIGN

Inlet Description: Beveled edges

FALL = 0 ft.

Invert El. = 92.5 ft.

Bevels:

Angle = 45°

b = _____ in., d = 2 in.

PROJECT: Example No. 4 DESIGNER: JMN

SIDE-TAPERED INLET
DESIGN CALCULATIONS

STATION: DATE: 12-10-73

INITIAL DATA

Q 50 = 150 cfs S_o = 0.05

AHW El. = 100 ft. L_a = 350 ft.

TAPER = 4 : 1

Barrel Shape and Material: Circular CMP

Face Edge Description: 45° Bevels

N = 1, B = - ft., D = 4' ft.

SKETCH

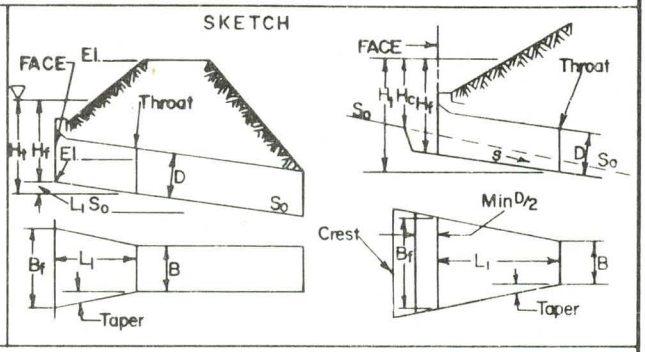

Q	El. Throat Invert	(1) ~~H_f/D~~ H_f/E	~~$Q/B_f D^{3/2}$~~ $Q/A_f E^{1/2}$	~~$D^{3/2}$~~ $E^{1/2}$	(2) ~~Min. B_f~~ Min. A_f	B_f	(3) L_1	(4) S	$L_1 S$	(5) El. Face Invert	Upper Headings for Box Culverts, Lower Headings for Pipes COMMENTS
Trial No. 1, Q = 150, HW_f = 99.1 (Use lower column headings)											
150	92.5	1.4	chart 19 4.0	Table 6 2.0	18.8	Table 7 6.0	4.0	0.05	0.2	92.7	~~$B_f Q^{3/2}$~~ [or $A_f E^{1/2}$] = 18.85
											Std. design: B_f = 1.5D
											= 6' ∴ Std. design O.K.
Trial No ____, Q = ____, HW_f = ____											
											$B_f D^{3/2}$ [or $A_f E^{1/2}$] = ____
Trial No ____, Q = ____, HW_f = ____											
											$B_f D^{3/2}$ [or $A_f E^{1/2}$] = ____

Notes and Equations: (99.1 − 92.5 − 1)/4 = 1.4

(1) H_f/D [or H_f/E] = (HW_f − El. Throat Invert − 1)/D [or E]

$D \le E \le 1.1D$

(2) Min. $B_f = Q/\left[(D^{3/2})\frac{Q}{B_f D^{3/2}}\right]$

Min. $A_f = Q/\left[(E^{1/2})\frac{Q}{A_f E^{1/2}}\right]$

(3) $L_1 = \left[\frac{B_f - NB}{2}\right]$ TAPER $\left[\frac{6.0 - 4.0}{2}\right] 4 = 4.0'$

(4) From throat design

(5) El. Face Invert − El. Throat Invert > 1 ft., recompute.
Face and Throat may be lowered to better fit site, but do not raise.

SELECTED DESIGN

B_f = 6.0 ft.

L_1 = 4.0 ft.

Bevels: Angle 45 °

d = - in., b = 3 in.

Crest Check:

HW_c = 99.1 ft. 99.1 − 93.0 = 6.1

H_c = 6.1 ft.

Q/W = 44.0 (Chart 17)

Min. W = 3.4 ft.

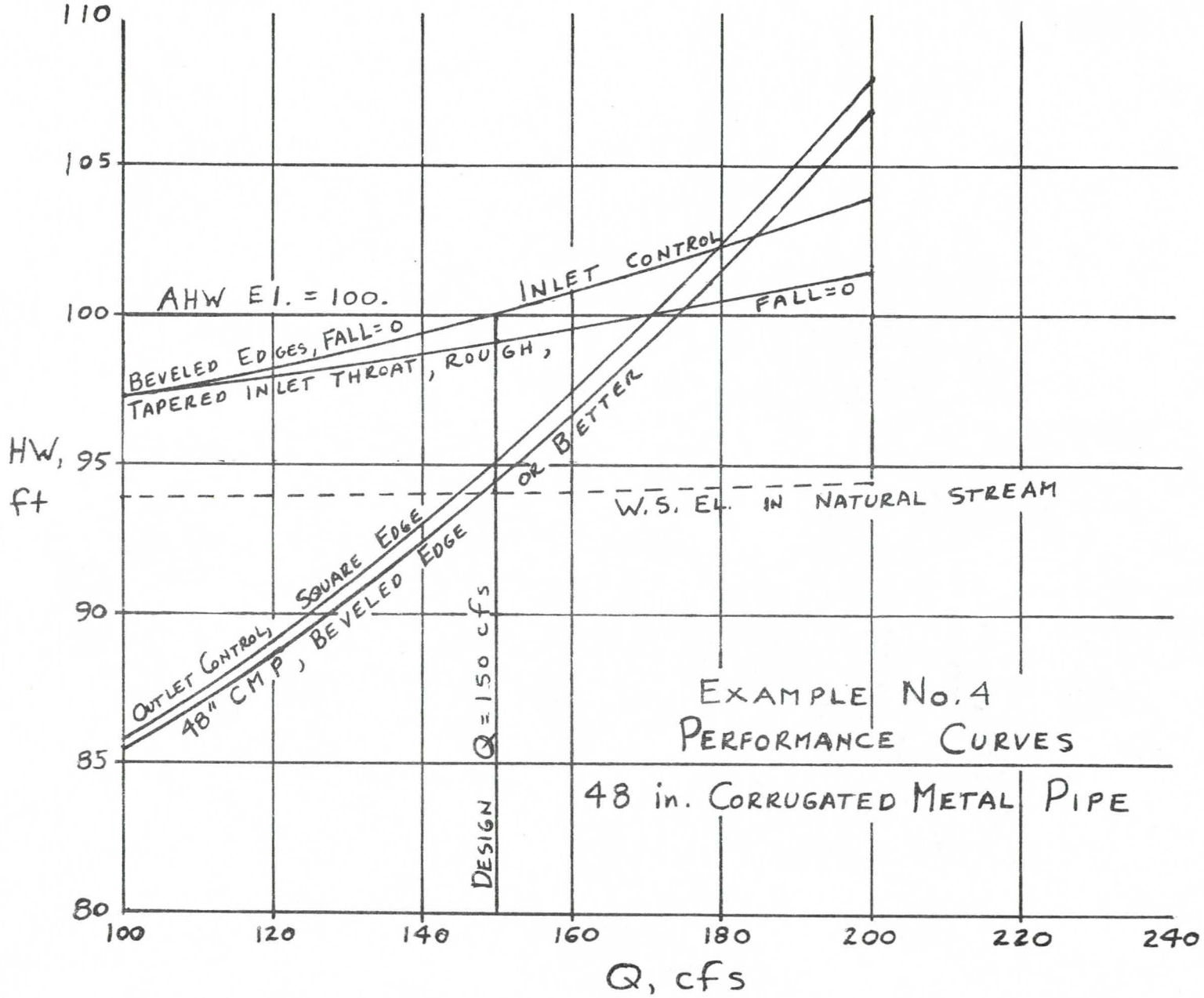
110
105
100
95
90
85
80
HW, ft
100
120
140
160
180
200
220
240
Q, cfs
AHW El. = 100.
INLET CONTROL
FALL=0
BEVELED EDGES, FALL=0
TAPERED INLET THROAT, ROUGH,
OR BETTER
W.S. EL. IN NATURAL STREAM
OUTLET CONTROL
SQUARE EDGE
48" CMP, BEVELED EDGE
DESIGN Q = 150 cfs
EXAMPLE No. 4
PERFORMANCE CURVES
48 in. CORRUGATED METAL PIPE

Conclusion - Example Problem No. 4

From the performance curves, beveled edges meet the AHW El. of 100 ft. and Q = 150 cfs, while the use of a side-tapered inlet would increase Q to 170 cfs at AHW El. = 100 ft. In both cases, the FALL = 0. It appears that the beveled edge inlet would be sufficient and the least costly in this case, since the culvert performance curve does not exceed 103.0 ft. until Q is 186 cfs.

PIPE CULVERT EXAMPLE NO. 5

Given: Same data as in Example No. 4, except AHW Elevation = 96.0 ft.

Requirements: Hydrological estimates are accurate and exceeding the AHW El. at higher discharges is not important at this site. Therefore, use the smallest barrel possible.

The outlet control curves of Problem 4 are applicable in this situation. The 48" C.M.P. is the smallest barrel which will meet AHW El. = 96.0 and Q = 150 cfs.

From the inlet control curves, it is clear that a FALL must be used on the tapered inlet to meet the AHW El. Try a side-tapered inlet, with FALL, and a slope-tapered inlet.

PROJECT: Example No. 5

DESIGNER: JMN

CULVERT INLET CONTROL SECTION
DESIGN CALCULATIONS

STATION:

DATE: 12-10-73

INITIAL DATA:

Q 50 = 150 cfs

AHW El. = 96.0 ft

S_o = 0.05

L_a = 350 ft

El. Stream Bed at Face 92.5 ft.

Barrel Shape and Material Circ. C.M.P. Barrel n = 0.024

N = 1, B = –

D = 4, $NBD^{3/2}$ =

(Pipe) $ND^{5/2}$ = 32.0 (Table 5)

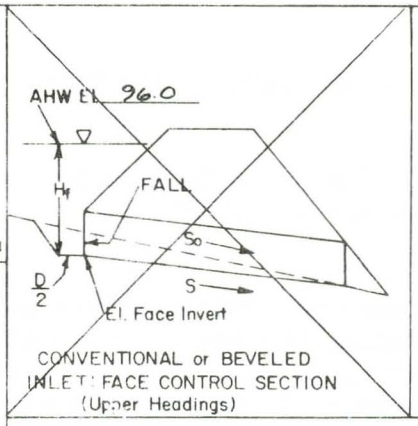

CONVENTIONAL or BEVELED INLET: FACE CONTROL SECTION (Upper Headings)

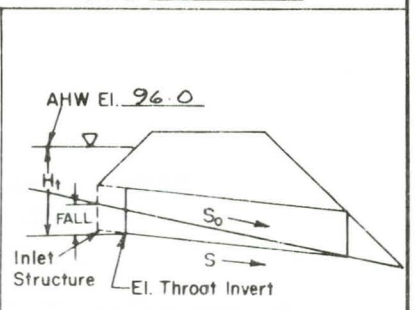

TAPERED INLET THROAT CONTROL SECTION (Lower Headings)

DEFINITIONS OF INLET CONTROL SECTION

Q	~~Q/NB~~ / $Q/NBD^{3/2}$	~~H_t/D~~ / H_t/D	~~H_f~~ / H_f	~~(1) El. Face Invert~~ / El. Throat Invert	El. Stream Bed At Face	(2) FALL	~~(3) HW_f~~ / HW_t	(4) S	(5) V_o	Note: Use Upper Headings for Coventional or Beveled Face; Lower Headings for Tapered Inlet Throat. / COMMENTS
Trial No. 1 Inlet and Edge Description Tapered inlet throat, smooth, FALL = 2.8'										
150	4.7	chart 18 1.57	6.3	89.7	92.5	2.8	96.0	0.042	HDS 3 14	Decided that at this site
100	3.1	1.13	4.5				94.2			no additional FALL is justi-
200	6.2	2.12	8.5				98.2			fied. Design inlet for HW_f = 96.0, Q = 150 cfs
Trial No. 2 Inlet and Edge Description Tapered inlet throat, rough, FALL = 3.1'										
150	4.7	1.65	6.6	89.4	92.5	3.1	96.0	0.041	14	Use smooth inlet for slope-
100	3.1	1.21	4.8				94.2			tapered, rough for side-
200	6.2	2.22	8.9				98.3			tapered.
Trial No. ____ Inlet and Edge Description ____										

Notes and Equations:

(1) El Face (or throat) invert = AHW El − H_f (or H_t)

(2) FALL = El. Stream Bed at Face − El. face (or throat) invert

(3) HW_f (or HW_t) = H_f (or H_t) + El. face (or throat) invert, where El. face (or throat) invert should not exceed El. stream bed.

(4) $S \approx S_o$ − FALL/L_a

(5) Outlet Velocity = Q/Area defined by d_n at S

SELECTED DESIGN

Inlet Description:

FALL = 2.8 ft or 3.1 ft.

Invert El. = 89.7 / 89.4 ft.

Bevels:

Angle = N/A

b = ____ in., d = ____ in.

PROJECT: *Example No. 5* DESIGNER: JMN

SIDE-TAPERED INLET
DESIGN CALCULATIONS

STATION: _____ DATE: 12-10-73

INITIAL DATA

Q 50 = 150 cfs S_o = 0.05

AHW El = 96.0 ft. L_a = 350 ft.

TAPER = 4 : 1

Barrel Shape and Material: Circular C.M.P.

Face Edge Description: 45° Bevels

N = 1, B = — ft., D = 4 ft.

SKETCH

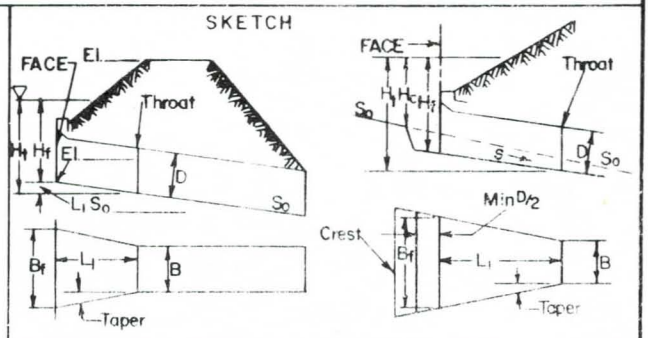

Q	El. Throat Invert	(1) H_f/D H_f/E	$Q/B_f D^{3/2}$ $Q/A_f E^{1/2}$	$D^{3/2}$ $E^{1/2}$	(2) Min B_f Min A_f	B_f	(3) L_1	(4) S	$L_1 S$	(5) El. Face Invert	Upper Headings for Box Culverts, Lower Headings for Pipes COMMENTS
Trial No. 1, Q = 150, HW_f = 96.0 (Use lower column headings)											
150	89.4	1.4	4.0	Table 6 2.0	18.8	Table 7 6.0	4.0	0.041	0.2	89.6	$B_f D^{3/2}$ [or $A_f E^{1/2}$] = 18.85
											CMP (rough) side-tapered inlet
Trial No. ___, Q = ___, HW_f = ___											
											$B_f D^{3/2}$ [or $A_f E^{1/2}$] = ___
Trial No. ___, Q = ___, HW_f = ___											
											$B_f D^{3/2}$ [or $A_f E^{1/2}$] = ___

Notes and Equations: (96.0 − 89.4 − 1)/4 = 1.4

(1) H_f/D [or H_f/E] = (HW_f − El. Throat Invert − 1)/D [or E]

$D \le E \le 1.1D$

(2) Min $B_f = Q/\left[(D^{3/2})\ \frac{Q}{B_f D^{3/2}}\right]$

Min $A_f = Q/\left[(E^{1/2})\ \frac{Q}{A_f E^{1/2}}\right]$

(3) $L_1 = \left[\frac{B_f - NB}{2}\right]$ TAPER $\left[\frac{6.0 - 4.0}{2}\right] 4 = 4.0$

(4) From throat design

(5) El. Face Invert − El. Throat Invert > 1 ft., recompute

Face and Throat may be lowered to better fit site, but do not raise.

SELECTED DESIGN

B_f = 6.0 ft.

L_1 = 4.0 ft.

Bevels: Angle 45 °

d = — in., b = 3 in.

Crest Check:

HW_c = 96.0 ft (96.0 − 93.0 = 3.0)

H_c = 3.0 ft.

Q/W = 15 (Chart 17)

Min W = 10.0 ft.

PROJECT: Example No. 5 | SLOPE-TAPERED INLET DESIGN CALCULATIONS | DESIGNER: JMN

STATION: | DATE: 12-10-73

INITIAL DATA:

Q 50 = 150 cfs S_o = 0.05

AHW EL. 96 ft. L_a = 350 ft.

El. Stream bed at crest — ft.

El. stream bed at face 92.5 ft.

TAPER = 4 :1 (4:1 to 6:1)

S_f = 2 :1 (2:1 to 3:1)

Barrel Shape and Material Circular C.M.P.

Inlet Edge Description Beveled

N= 1, B= — ft, D= 4 ft.

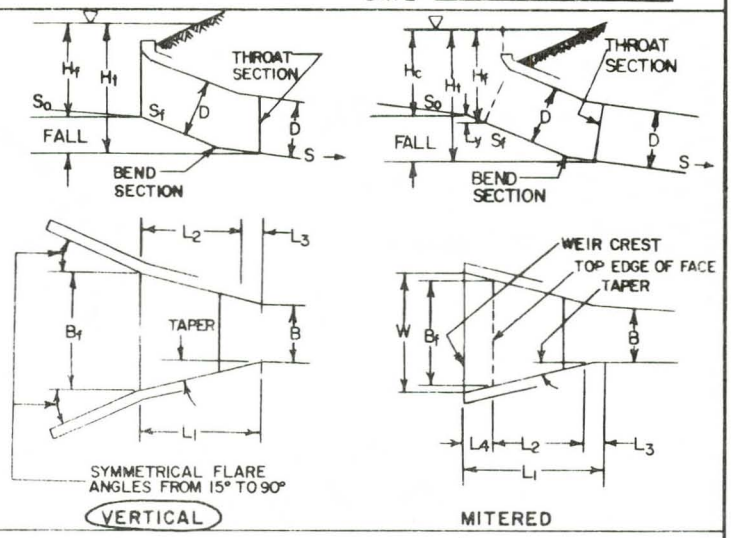

Note: Use square to circular transition section, D = B = 4' (smooth conc. inlet)

	Q	HW_f	El Throat Invert	(1) El. Face Invert	(2) H_f	$\frac{H_f}{D}$	$\frac{Q}{B_f D^{3/2}}$ (chart 16)	$D^{3/2}$ (Table 4)	(3) Min. B_f	B_f	S	Comments
Trial 1	150	96.0	89.7	92.5	3.5	0.88	2.4	8.0	7.8	8.0	0.042	$B_f D^{3/2}$ =
												Vertical face,
												Min. FALL required
Trial 2												$B_f D^{3/2}$ =

Note: Use only throat designs with FALL > 0.25D

(1.) El. face invert: Vertical = Approx. stream bed elevation
Mitered = El. Crest − y, where y = 0.4D (Approx.), but higher than throat invert elevation.

(2.) $H_f = HW_f$ − El. face invert

(3.) Min. $B_f = Q/((D^{3/2})\ Q/B_f D^{3/2})$

(4) Min. L_3	(5) L_4	(6) L_2	(7) Check L_2	(8) Adj L_3	(9) Adj TAPER	(10) L_1	(11) W	$\frac{Q}{W}$ (chart 17)	H_c	(12.) Max. Crest El.
2.0	—	5.6	< 6.0	2.4	—	8.0	—	—	—	—

GEOMETRY
B_f = 8.0 ft. L_3 = 2.4 ft.
L_1 = 8.0 ft. L_4 = — ft.
L_2 = 5.6 ft. d = 2 in.
b = 4 in
TAPER = 4 :1

(4) Min $L_3 = 0.5NB = 0.5(4) = 2.0$

(5) $L_4 = S_{fy} + D/S_f$ N/A

(6) L_2 = (El Face (Crest) Invert − El. Throat Invert) $S_f - L_4 = (92.5 - 89.7)2 = 5.6$

(7) Check $L_2 = \left[\frac{B_f - NB}{2}\right]$ TAPER − L_3.

(8.) If (7) > (6), Adj. $L_3 = \left[\frac{B_f - NB}{2}\right]$ TAPER − L_2

(9) If (6) > (7) Adj. TAPER = $(L_2 + L_3) / \left[\frac{B_f - NB}{2}\right]$

(10.) $L_1 = L_2 + L_3 + L_4$

(11.) Mitered: $W = NB + 2\left[\frac{L_1}{TAPER}\right]$

(12.) Max Crest El = $HW_f - H_c$

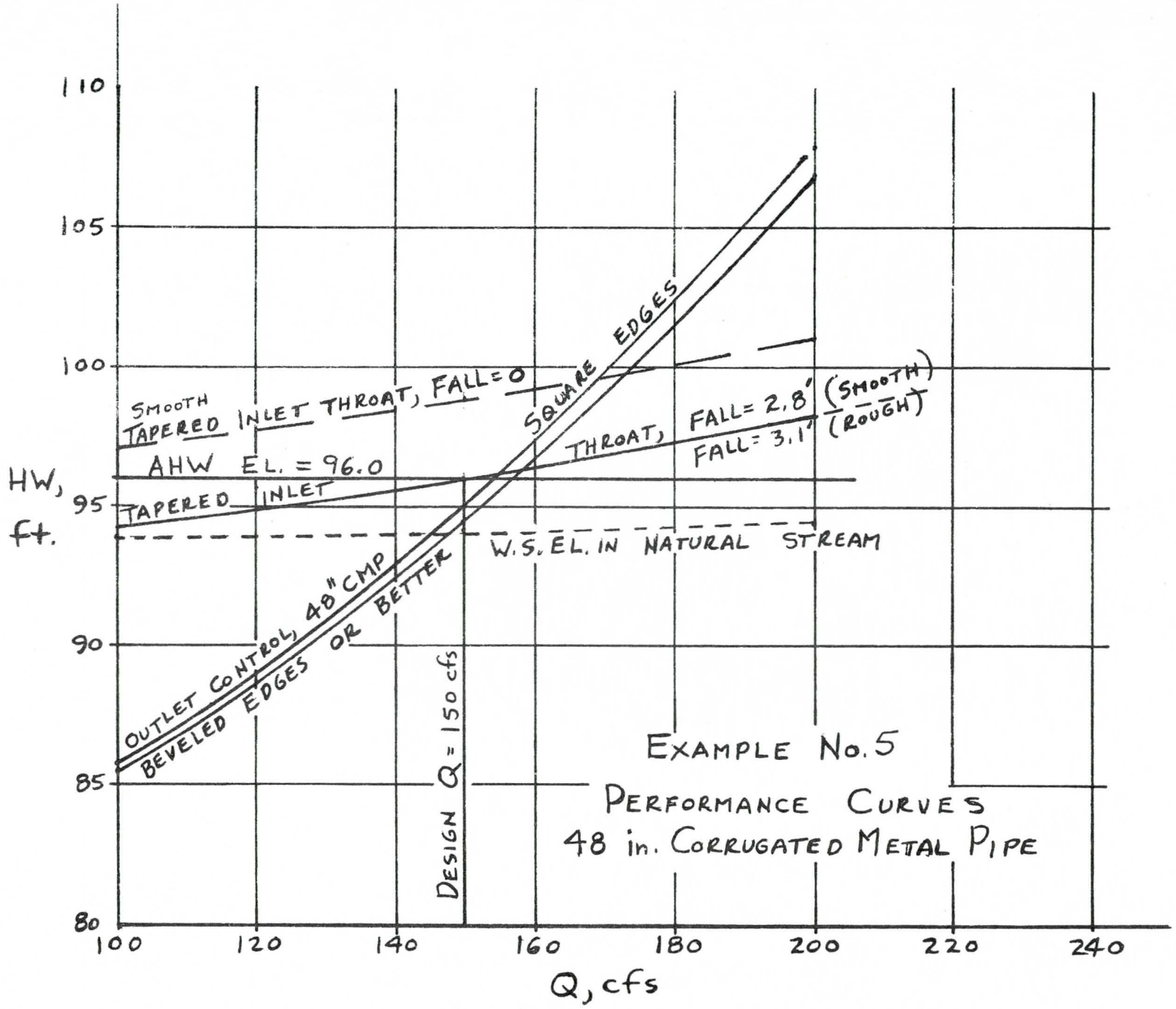
110
105
100
95
90
85
80
HW, ft.
100
120
140
160
180
200
220
240
Q, cfs
SMOOTH TAPERED INLET THROAT, FALL = 0
AHW EL. = 96.0
TAPERED INLET
SQUARE EDGES
THROAT, FALL = 2.8' (SMOOTH)
FALL = 3.1' (ROUGH)
W.S. EL. IN NATURAL STREAM
OUTLET CONTROL, 48" CMP
BEVELED EDGES OR BETTER
DESIGN Q = 150 cfs
EXAMPLE No. 5
PERFORMANCE CURVES
48 in. CORRUGATED METAL PIPE

Conclusion - Example Problem No. 5

Selection of side-tapered or slope-tapered inlet must be based on economics, as either will perform the required function. Additional FALL is not warranted at this site. Face design was selected to pass 150 cfs at AHW El. = 96.0.

The culvert performance curves for the example illustrate that when a prefabricated side-tapered inlet (rough) or a cast-in-place slope-tapered inlet (smooth) may be chosen for an installation, both the smooth and rough inlet throat control curves should be plotted. The difference between the throat control curves represents the difference in friction losses between the face and throat sections of the inlet.

APPENDIX B

Development of Design Charts for Improved Inlets

Development of Design Charts for Improved Inlets

General Philosophy

The concept of minimum performance was applied in developing design curves for each improved inlet discussed. At times, favorable hydraulic conditions will cause a culvert to operate at a greater capacity than the design curves indicate. However, some of these conditions are transient and cannot be depended on to operate continuously. Therefore, their effects are not considered in the design methods of this Circular and culverts will be conservatively sized by these procedures.

Basic Research

The design procedures are based upon the research work reported by French in the National Bureau of Standards Report Numbers 7178 (8) and 9355 (10), and by French and Bossy in the National Bureau of Standards Report Number 9528 (11). These reports are Progress Report Numbers 4, 6, and 7, respectively, on the culvert hydraulic research performed by the National Bureau of Standards Hydraulic Laboratory for the Federal Highway Administration. Other Progress Reports were used in developing HEC's No. 5 and 10.

General

In the following discussion, reasons will be given for the decisions made in selecting the equations and coefficients used in developing the design methods. The limitations and requirements placed on their use will also be explained. The topics to be covered include:

1) Types of inlets
2) General equations for each control section
3) General limitations relating to determination of coefficients for the equations
4) Equations with chosen coefficients
5) Other specific limitations

Types of Inlets

There were numerous inlets tested during the research, both with and without a FALL concentration near the inlet. In reviewing the data, six types of tapered inlets were chosen which had the best performance and were feasible to construct. Theses six types included side- and slope-tapered designs for box and pipe culverts.

General Equations

I. Nonsubmerged conditions (free surface flow)

A. Throat control

$$\frac{Q}{BH_t^{3/2}} = K \tag{1}$$

B. Face Control

$$\frac{Q}{B_f H_f^{3/2}} = K \tag{2}$$

C. Crest control for slope-tapered inlet with mitered face, same as Equation (1)

II. Submerged conditions

A. Throat control

$$\frac{H_t}{D} = \frac{1}{2gC_t^2}\left(\frac{Q^2}{A_t^2 D}\right) + k_t - 0.01 \tag{3}$$

B. Face control

$$\frac{H_f}{E} = \frac{1}{2gC_f^2}\left(\frac{Q^2}{A_f^2 E}\right) + k_f - 0.01 \tag{4}$$

C. Bend control

$$\frac{H_b}{D} = \frac{1}{2gC_b^2}\left(\frac{Q^2}{A_b^2 D}\right) + k_b - 0.01 \tag{5}$$

Limitations

Before determining values for the coefficients in the above equations, the variables upon which the coefficients depend had to be considered. Among these variables are the leading edge conditions, the wingwall flare angle, the sidewall flare angle, θ_s, the top flare angle, θ_t, and the slope of the fall, S_f.

Edge Condition and Wingwall Flare Angle

Because the leading edge condition and the wingwall flare angle are interrelated to some extent, their limitations are combined. As some designers prefer to use square edges, a decision was made to show design curves for both square edges and beveled edges for box culverts. In addition, for pipe culverts, the thin-edged projecting condition is included. Thus, the face control design charts (Charts 15 and 16) for box culverts contain two curves. The dashed curves cover the following conditions:

(1) 15° to 26° wingwall flare angles with the top edge beveled, or

(2) 26° to 90° wingwall flare angles with no bevels (square top edge).

The solid curves apply to:

(1) 26° to 45° wingwall flare angles with the top edge beveled, or

(2) 45° to 90° wingwall flare angles with top and side bevels.

The pipe culvert face control design chart (Chart 19) contains curves for three inlet types: thin-edged projecting, square-edged, and bevel-edged. Wingwalls have no significant hydraulic effect on pipe culverts with non-rectangular entrances.

Sidewall Flare Angle

Sidewall flare angles from 0° to 20° were tested. As the angle is reduced from 20° to 0°, the C_t value becomes more favorable, but the k_t value becomes less favorable in terms of

headwater requirement. Therefore, to strike a balance between the two coefficients, to keep the inlet as short as possible, and to allow some latitude to the designer, the taper was chosen to range between 4:1 and 6:1.

For non-rectangular inlets, the sidewall taper is defined as the maximum taper of the section. As the inlet face height is limited to 1.1D and the required face area is obtained by increasing B_f, the maximum taper is defined by a plan view of the inlet structure.

Top Flare Angle

Research tests on the top flare angle, θ_t, showed that the "increase in face area required for throat control operation could be obtained slightly more advantageously by inlets of sufficient length with side taper only, rather than with inlet geometries which included top slab flare angles, θ_t, of appreciable magnitude." (NBS Report No. 9355, p. 5). Consequently, the recommended design configurations use a θ_t of 0 degrees. That is, the height of the face, excluding bevels, is equal to the height of the barrel. For the flared entrances to circular pipe culverts, it was found that the height of the face, E, could vary from D to 1.1D without appreciably altering the coefficients of the equations.

While the coefficients of the top-tapered and side-tapered inlet equations are similar, the low, wide face area of the side-tapered inlet results in greater discharge at the same headwater, or less headwater being required for the same discharge, than the high narrow top-tapered face area. For an equal headwater pool elevation, a higher average head is applied to the side-tapered inlet.

Fall Slope

Tests on the fall slope for the slope-tapered inlets varied from a vertical fall to a 6:1 slope. The coefficients used in developing the design curves are applicable for slopes from 2:1 to 3:1. These slopes were chosen due to inlet performance and for ease of construction. As the slopes become flatter, in the 4:1 to 6:1 range, the face control coefficients become less favorable and the inlets become prohibitively long. Fall slopes steeper than 2:1 require a larger bend section area than provided by an L_3 value of 0.5B with 6:1 sidewall tapers. If L_3 is increased, the total inlet length must also be increased, thus negating any advantages of using such a steep fall slope.

Summary of Factors Influencing Equations

The face control equation coefficients, C_f and k_f, were found to be influenced by many variables, including the edge condition, the sidewall flare angle, the top flare angle, and the fall slope. However, the throat section coefficients were only affected significantly by the sidewall flare angles.

Equations with Coefficients

The above limitations allow the following coefficients to be determined:

I. Box Culverts

A. Nonsubmerged conditions

1. Throat control

a. Side-tapered inlets

$$K = 3.07$$

$$\frac{H_t}{D} = 0.475 \left(\frac{Q}{BD^{3/2}}\right)^{2/3} \qquad (6)$$

b. Slope-tapered inlets

$$K = 3.07$$

$$\frac{H_t}{D} = 0.475 \left(\frac{Q}{BD^{3/2}}\right)^{2/3} \qquad (7)$$

2. Face control

a. Side-tapered inlets

$$K = 2.38$$

$$\frac{H_f}{D} = 0.56 \left(\frac{Q}{B_f D^{3/2}}\right)^{2/3} \qquad (8)$$

b. Slope-tapered inlets

$$K = 2.83$$

$$\frac{H_f}{D} = .50 \left(\frac{Q}{B_f D^{3/2}}\right)^{2/3} \qquad (9)$$

3. Crest control

$$\frac{H_c}{D} = 0.50\left(\frac{Q}{WD^{3/2}}\right)^{2/3} \qquad (10)$$

B. Submerged conditions

1. Throat control

a. Side-tapered inlets

$C_t = 0.94 \qquad k_t = 0.96$

$$\frac{H_t}{D} = 0.0176\left(\frac{Q}{BD^{3/2}}\right)^{2} + 0.95 \qquad (11)$$

b. Slope-tapered inlets

$C_t = 0.93 \qquad k_t = 0.97$

$$\frac{H_t}{D} = 0.0179\left(\frac{Q}{BD^{3/2}}\right)^{2} + 0.96 \qquad (12)$$

2. Face control

a. Side-tapered inlets

i. For 15° to 26° wingwalls with top edge beveled or 26° to 90° wingwalls with no bevels

$C_f = 0.59 \qquad k_f = 0.85$

$$\frac{H_f}{D} = 0.0446\left(\frac{Q}{B_f D^{3/2}}\right)^{2} + 0.84 \qquad (13)$$

ii. For 26° to 45° wingwalls with top edge beveled or 45° to 90° with bevels on top and sides

$C_f = 0.64 \qquad k_f = 0.87$

$$\frac{H_f}{D} = 0.0378\left(\frac{Q}{B_f D^{3/2}}\right)^{2} + 0.86 \qquad (14)$$

b. Slope-tapered inlets

i. For 15° to 26° wingwalls with top edge beveled or 26° to 90° wingwalls with no bevels

$C_f = 0.59 \qquad k_f = 0.65$

$$\frac{H_f}{D} = 0.0446\left(\frac{Q}{B_f D^{3/2}}\right)^{2} + 0.64 \qquad (15)$$

ii. For 26° to 45° wingwalls with top edge beveled or 45° to 90° with bevels on top and sides

$C_f = 0.64 \qquad k_f = 0.71$

$$\frac{H_f}{D} = 0.0378 \left(\frac{Q}{B_f D^{3/2}}\right)^2 + 0.70 \tag{16}$$

3. Bend control for slope-tapered inlets

$C_b = 0.80 \qquad k_b = 0.88$

$$\frac{H_b}{D} = 0.0232 \left(\frac{Q}{B_b D^{3/2}}\right)^2 + 0.87 \tag{17}$$

II. Pipe Culverts

A. Nonsubmerged conditions

1. Throat control

a. Side- and slope-tapered inlets

i. Smooth pipes

$$\frac{H_t}{D} = \frac{H^*}{D} + 0.0016 \left(\frac{Q}{D^{5/2}}\right)^2 - 0.011 \frac{d_c}{D} \tag{18}$$

ii. Rough pipe

$$\frac{H_t}{D} = \frac{H^*}{D} + 0.0045 \left(\frac{Q}{D^{5/2}}\right)^2 - 0.011 \frac{d_c}{D} \tag{19}$$

2. Face control for side-tapered inlets

No equations are available for non-submerged conditions. Curves were developed using an empirical curve in Research Report No. 7178.

B. Submerged conditions

1. Throat control

a. Side- and slope-tapered inlets

i. Smooth pipe

$C_t = 0.89 \qquad k_t = 0.90$

$$\frac{H_t}{D} = 0.0318 \left(\frac{Q}{D^{5/2}}\right)^2 + 0.89 \tag{20}$$

ii. Rough pipe

$C_t = 0.89 \qquad k_t = 0.90 \qquad \text{Darcy } f = 0.07$

$$\frac{H_t}{D} = 0.0341\left(\frac{Q}{D^{5/2}}\right)^2 + 0.89 \tag{21}$$

2. Face control
   a. Side-tapered inlets
      i. Thin-edged projecting

$C_f = 0.51 \qquad k_f = 0.75$

$$\frac{H_f}{E} = 0.0598\left(\frac{Q}{A_f E^{1/2}}\right)^2 + 0.74 \tag{22}$$

      ii. Square-edged condition

$C_f = 0.57 \qquad k_f = 0.80$

$$\frac{H_f}{E} = 0.0478\left(\frac{Q}{A_f E^{1/2}}\right)^2 + 0.79 \tag{23}$$

      iii. Bevel-edged condition

$C_f = 0.65 \qquad k_f = 0.83$

$$\frac{H_f}{E} = 0.0368\left(\frac{Q}{A_f E^{1/2}}\right)^2 + 0.82 \tag{24}$$

   b. Slope-tapered inlets
      See box culvert slope-tapered inlet equations

Specific Limitations for Slope-Tapered Inlets

Bend Control

Although an equation was given for bend control in a slope-tapered inlet and a design curve could have been developed for it as was done for face and throat control, it was handled differently

in order to simplify the design procedure. The bend control and throat control equations for headwater were set equal to each other and the minimum bend width, B_b, required to insure throat control operation was found in terms of the barrel width, B, at the throat. This value was found to be B_b = 1.14B. Using this ratio of bend width to throat width and the flattest flare angle of 6:1, the minimum distance, L_3, between the bend section and throat section was determined to be L_3 = 0.5B. To stress a point, this is the minimum distance measured at the soffit, and it can be greater as conditions warrant.

FALL

The FALL at the inlet should range from D/4 to 1.5D. Inlets with FALLS less than D/4 must be designed as side-tapered inlets. Inlets with FALLS greater than 1.5D will require extremely large face sections, and thus very large inlet structures. For these large inlets, frictional losses between the face and throat sections become significant and should be determined.

APPENDIX C

Summary of Field Survey of Improved Inlet Structures

SUMMARY OF FIELD SURVEY OF IMPROVED INLET STRUCTURES

Hydraulics Branch
Bridge Division
Office of Engineering

and

Research and Development
Demonstration Projects Division
Region 15

Federal Highway Administration

U.S. Department of Transportation

Washington, D.C.

November, 1971

PRELIMINARY

SUBJECT TO REVISION

SUMMARY OF FIELD SURVEY OF IMPROVED INLET STRUCTURES

During the period February 8 through June 1, 1971, the Federal Highway Administration, in cooperation with the State Highway Departments, conducted a field survey of the improved inlet structures that had been constructed in the United States. The purposes of the survey were to obtain information that would assist in developing a design manual for improved culvert entrances, to document the hydraulic performance and required maintenance of these structures, and to record the savings that were realized.

The survey was an integral part of Research and Development Demonstration Projects Program Project Number 20, Demonstration of Improved Inlets for Highway Culverts. It was a cooperative effort between the Hydraulics Branch, Bridge Division, Office of Engineering; the Research and Development Demonstration Projects Division of Region 15; and the ten Regional Offices of the Federal Highway Administration. The participation of the Division and State offices was necessary to the success of the survey. The request was well received and the response provided an excellent file on the use of improved inlets. The cooperation of all survey participants is greatly appreciated. It should be noted that not all States or all installations are represented due to time and financial constraints, and that the savings indicated would have been much greater if a full accounting had been possible.

A summary of the 75 installations reported is attached. Some additional information is included on various States' improved inlet design practices. The estimated total savings on the 66 installations having detailed cost information was $2,049,000. Individual benefits ranged from $500 to $482,000, with savings greater than $50,000 quite common.

The results of the questions related to maintenance problems were quite interesting. Of the 75 specific installations reported, none had debris problems, eight were noted to have minor sediment build-up with no clogging, and 8 had some scour at the outlet. Of the 8 having some scour problems, only 2 required corrective action. Of course, the use of conventional culverts at these sites would probably have also required some type of scour protection.

Both side-tapered and slope-tapered inlet structures were reported, and these were used on both box and pipe culvert barrels.

Nearly all of the States use bevels or rounded edges on culvert entrances at selected sites where field conditions warrant. Several States indicated that they have added this feature to their standard plans and others are considering doing so.

Although no extensive hydraulic performance data is presently available on improved inlet installations, several have experienced substantial floods and reported satisfactory performance.

Attachment

Summary of Improved Entrance Field Survey

Note: Inlets do not necessarily conform to HEC No. 13 standards. Type designation indicates most similar standard inlet.

Type I - side-tapered box culvert, face section at crest
Type II - side-tapered box culvert, depression upstream of face
Type III - slope-tapered box culvert, face section at crest
Type IV - slope-tapered box culvert, face section on fall slope
Type V - side-tapered pipe culvert
Type VI - slope-tapered pipe culvert

State	Location	Date Constructed	Design: Conventional	Design: Improved Entrance	Cost: Conventional	Cost: Improved Entrance	Savings: Amount	Savings: Percentage	Performance	Comments
Alabama	----------	----------	----------	Standard plans are available for Type I entrances; Type III entrances have been designed.	----------	----------	----------	----------	----------	Rounded edges on culvert entrances are shown on some standard plans.
Alaska	None constructed	----------	----------	----------	----------	----------	----------	----------	----------	State does not use box culverts; bevels or rounded edges for pipe culverts were not mentioned.
Arkansas	Pointsett County, State Highway 163, 1.75 miles north of Bay Village.	Under Construction (1971)	5' x 5' x 67' RCB	Type III, 4' x 4' x 67' RCB - Bevel dimensions 1:1	$ 3,402	$ 2,827	$ 575	17	----------	Structure on loess, outlet scour is controlled.
Colorado (14 other sites mentioned, no detail)	Highway 285 at Soda Lakes Interchange. Conveys Turkey Creek.	1968	Double 10' x 8' RCB	Type III. Colorado design. 8' x 8' x 1955' RCB - Bevel dimension: None	$ 420,000	$200,000	$220,000	52.4	Design flood - 1500 cfs. Carried 2700 cfs - boulders damaged culvert floor. Replaced with railroad rails embedded in concrete.	Large boulders deposited in culvert.
Delaware	----------	No improved entrances have been designed or constructed.		----------	----------	----------	----------	----------	----------	Beveled or rounded entrances are never used.
District of Columbia	----------	No improved entrances have been designed or constructed.		----------	----------	----------	----------	----------	----------	Beveled or rounded entrances are never used.
Florida	----------	Has not designed or constructed any side-tapered (Type I or II or slope-tapered (Type III or IV) inlets.			----------	----------	----------	----------	----------	Uses 45° bevel at inlet and outlet of all concrete pipes; for concrete boxes, a 2-foot radius rounded edge is used on the sides of the barrel at junction with headwall.
Georgia	Dade County, I-59, 1.49 miles north of Georgia-Alabama line.	1968	Double 5' x 4' x 189' RCB	Type III single 6' x 4' x 189' RCB, Bevel dimensions: not used (see comments).	$ 10,436	$ 6,604	$ 3,832	36.7	Satisfactory	In the past, beveled edges on culverts have been used on a selected basis only; however, it is planned to prepare a construction detail that will provide a beveled edge on all box culverts. Ten inches of deposition over 73 percent of barrel. It is reported that "...outlet ditch needs cleaning..."
	Dade County, I-59, 1.98 miles north of Georgia-Alabama line.	1968	Triple barrel 9' x 6' x 294' RCB	Type III, double 7' x 6' x 294' RCB, Bevel dimensions: see previous comment.	$ 61,970	$ 38,226	$ 23,744	38.4	----------	No debris, deposition or scour problems.
	Dade County, I-59, 2.54 miles north of Georgia-Alabama line. Junction of "Y" structure.	1968	9 x 5' x 397' RCB	Type III, 5' x 5' x 397' RCB, Bevel dimensions: see comment for first site listed.	$ 40,188	$ 24,100	$ 16,088	40.0	----------	No debris or scour problems reported. Six inches of deposition has occurred in barrel over last 50 feet.
	Dade County, I-59, 2.54 miles north of Georgia-Alabama line. Right fork of "Y" structure.	1968	5' x 5' x 121' RCB	Type III, 4' x 4' x 121' RCB, Bevel dimensions: see comment for first Georgia site listed.	$ 7,283	$ 5,775	$ 1,508	20.7	Satisfactory	No debris, deposition or scour problems reported.
	Dade County, I-59, 2.54 miles north of Georgia-Alabama line. Left fork of "Y" structure.	1968	6' x 5' x 160' RCB	Type III, 4' x 4' x 160' RCB, Bevel dimensions: see comment for first Georgia site listed.	$ 8,794	$ 5,182	$ 3,612	41.2	Satisfactory	Ditto
	Dade County, I-59, 5.25 miles north of Georgia-Alabama line.	1968	Double 6' x 6' x 351' RCB	Type III, 7' x 6' x 351' RCB, Bevel dimensions: see comment for first Georgia site listed.	$ 32,741	$ 26,851	$ 5,890	18.0	----------	No debris or scour at outlet reported. Six inches of deposition over 85 percent of barrel due to embankment erosion near inlet.
	Dade County, I-59, 5.43 miles north of Georgia-Alabama line.	1968	8' x 6' x 393' RCB	Type III, 5' x 5' x 393' RCB.	$ 34,649	$ 25,354	$ 9,295	26.8	----------	No debris or scour problems reported. 3" to 12" of deposition has occurred over lower 39 percent of barrel and outlet ditch needs cleaning.
	Dade County, I-59, 6.42 miles north of Georgia-Alabama line.	1968	7' x 6' x 312' RCB	Type III, 5' x 5' x 312' RCB, Bevel dimensions: see comment for first Georgia site listed.	$ 21,678	$ 14,861	$ 6,817	31.5	----------	No debris or scour problems reported. Six inches of deposition has occurred in barrel from end of taper to outlet.

Summary of Improved Entrance Field Survey (cont.)

State	Location	Date Constructed	Design: Conventional	Design: Improved Entrance	Cost: Conventional	Cost: Improved Entrance	Savings: Amount	Savings: Percentage	Performance	Comments
Georgia	Dade County, I-59, 8.41 miles north of Georgia-Alabama line.	1968	Triple barrel 5' x 5' x 218' RCB	Type III, double 4' x 4' x 218' RCB - Bevel dimensions: see comment for first Georgia site listed.	$ 15,272	$ 11,169	$ 4,103	26.9	----------	Debris, deposition and scour have not been problems.
Idaho	Shoshone County, I-90, 7 miles west of Wallace.	Design completed, contract not let as of June 1, 1971.	9' - 4" x 6' - 2" pipe arch, 545' long.	Type III, 6' x 5' x 545' RCB - Bevel dimensions: 6" x 6" filler bottom corners.	$ 57,500	$ 47,500	$ 10,000	17.5	----------	State's standard practice is to use beveled or rounded edges on all pipe culvert entrances that are 72 inches in diameter or larger. Use of beveled or rounded edges on culverts less than 72 inches in diameter is determined selectively as justified by conditions.
Illinois	----------	No installations yet.	----------	Several currently under design.	----------	----------	----------	----------	----------	State uses 3/4" chamfer on all concrete edges as a standard practice.
Indiana	----------	None	----------	None	----------	----------	----------	----------	----------	Beveled or rounded edges are never used.
Iowa (has built approximately 350 improved inlet structures).	Story County, U.S. 30, 1.8 mile south of Iowa State University Memorial Union.	1963	Double 10' x 10' x 728' RCB	Single barrel, Type I, 12' x 10' x 728' RCB Bevel dimensions not explicitly stated "... on selected basis..."	$ 223,120	$154,205	$ 68,915	30.9	Satisfactory Passed a discharge of 1000 cfs with only 4' of headwater.	No problems reported with debris or deposition in barrel. Bank erosion has occured downstream from outlet, but damage has been repaired and riprap has been provided. Situation is no longer considered to be a problem.
Kansas	Ottawa County, US-81, 1.75 miles north of State Highway 18.	1970	5' x 3' x 314' RCB	Type III, 3' x 3' x 314' RCB - Bevel dimensions: none - see comments.	$ 8,400	$ 6,200	$ 2,200	26.2	----------	Recently approved standard incorporates 8" radius bevel on top slab only. No problems reported with debris or deposition in the barrel. An impact energy dissipator has been provided.
	Gray County, US-50, 3.9 miles east of Cimarron.	1970	9' x 6' x 87' RCB	Type III, 6' x 6' x 87' RCB, Bevel dimensions: none - see comments.	$ 4,700	$ 3,500	$ 1,200	25.5	----------	Recently approved standard incorporates 8" radius bevel on top slab only. Railroad structure located downstream is expected to provide sufficient tailwater at culvert exit to prevent scour.
	Leavenworth County, US-73, 350' north of City of Lansing	1961	9' x 8' x 155' RCB	Type IV 8' x 6' x 155' RCB wit. 10" radius on top edge.	----------	----------	--------	--------	----------	No debris, deposition, or scour problems.
Kentucky	Gallatin County, I-71, 1 1/2 miles west of Glencoe	1966	5' x 5' x 469' RCB	Type 1, 4' x 4' x 469' RCB - Bevel dimensions: 8-inch radius.	$ 43,392	$ 30,448	$ 12,944	30	Apparently satisfactory	Debris and deposition within the barrel have not been problems. Some scour has occurred at the outlet, but has not caused a maintenance problem yet.
	Gallatin County, I-71, 2 miles northwest of Glencoe	1966	7' x 7' x 423' RCB	Type I, 6' x 5' x 423' RCB - Bevel dimensions: 8-inch radius.	$ 64,928	$ 40,230	$ 24,698	38	ditto	ditto
	Gallatin County, I-71, 2 1/2 miles northeast of Glencoe	1966	10' x 10' x 427' RCB	Type I, 8' x 8' x 427' RCB - Bevel dimensions: 8-inch radius.	$ 126,000	$ 82,000	$ 44,000	35	ditto	ditto
	Gallatin County, I-71, 1 3/4 miles north of Glencoe	1966	8' x 8' x 564' RCB	Type I, 7' x 6' x 564' RCB - Bevel dimensions: 8-inch radius.	$ 101,650	$ 80,390	$ 21,260	21	ditto	ditto
Louisiana	----------	No improved culvert inlets have been constructed as yet.	----------	----------	----------	----------	----------	----------	----------	State is developing new culvert standards that will include beveled or rounded edges. Side-tapered and slope-tapered entrances will be considered in future designs.
Maine	Aroostook County, I-95, 1.9 miles west of Line Road Bridge	1965	9' x 7' x 238' RCB	Similar to Type III, 7' x 6' x 238' RCB Bevels not used.	$ 41,390	$ 32,993	$ 8,397	20.3	----------	----------
	Aroostook County, I-95, 1.0 mile west of Line Road Bridge	1965	9' x 7' x 567' RCB	Similar to Type III, 7' x 6' x 567' RCB Bevels not used.	$ 87,139	$ 67,809	$ 19,330	22.1	----------	----------

Summary of Improved Entrance Field Survey (cont.)

State	Location	Date Constructed	Design: Conventional	Design: Improved Entrance	Cost: Conventional	Cost: Improved Entrance	Savings: Amount	Savings: Percentage	Performance	Comments
Maine	Aroostook County, I-95, 0.7 mile west of Line Road Bridge	1965	10' x 8' x 506' RCB	Similar to Type III, 9' x 8' x 506' RCB Bevels not used.	$ 102,552	$ 96,475	$ 6,077	5.9	----------	----------
Maryland	Prince Georges County, I-95, 4 miles west of Beltsville	1969	Triple barrel, 11' x 6' x 479' RCB	Type I, single barrel, 14' x 9' x 479' RCB Bevel dimensions: 6-inch radius.	$ 202.000	$151.000	$ 51,000	25	----------	No debris or scour problems reported. One foot of deposition throughout entire length of culvert (entrance and barrel).
	Prince Georges County, State Highway 212, I-95-3(26)6, 4 miles west of Beltsville.	1969	Triple barrel, 11' x 6' x 264' RCB	Type I, double barrel, 11' x 7' x 264' RCB Bevel dimensions not given.	$ 114,200	$ 85,200	$ 29,000	25	----------	No debris or scour problems reported.
Michigan	----------	None	----------	None	----------	----------	---------	---------	----------	No side-tapered or slope-tapered structures have been built; the only improved inlet structures are those with prefabricated flared end sections.
Minnesota	St. Louis County, Highway TH-61, 2 1/2 miles northeast of Duluth	1960	Double barrel, 96-inch RCP with hooded inlet, 283' long.	Type VI, single barrel, 10' x 10' x 283' RCP Bevel dimensions not given.	$ 60,000	$ 47,500	$ 12,500	21	No record available, but apparently satisfactory.	No problems with debris or deposition within the barrel. Scour has been somewhat more extensive at the outlet in comparison to conventional culverts, but is not considered to be serious.
	St. Louis County, Highway TH-61, 1 mile northeast of Duluth	1960	10' x 10' x 207' RCB	Type III, 8' x 8' x 207' RCB - Bevel dimensions not given.	$ 31,400	$ 20,280	$ 11,120	35	Apparently satisfactory	No problems with debris or deposition within barrel. A small scour hole is formed at outlet which is not considered serious.
	Cook County, Highway TH-61 at Grand Portage	1957	12' x 12' x 191' RCB	Type III, 8' x 8' x 191' RCB - Bevel dimensions not given.	$ 45,000	$ 28,000	$ 17,000	38	ditto	No problems with debris or deposition within barrel. Scour hole has formed at end of apron at culvert outlet
Mississippi	----------	----------	----------	----------	----------	----------	---------	---------	----------	State has constructed one side-tapered and one slope-tapered inlet. Standard being prepared for box culvert bevels.
Missouri	----------	No side-tapered or slope-tapered structures were reported.		----------	----------	----------	---------	---------	----------	Bevels or rounded edges are not used.
Montana	Lewis and Clark County, I-15, 6 miles south of Wolf Creek	1964	334-ft. bridge	18.5-ft. diameter pipe with headwall and rounded entrance.	$ 304,486	$214,243	$ 90,243	29.6	Satisfactory	
Nebraska	Douglas County, US-73, 1.5 miles north of 48th and McKinley in Omaha	1968	16' x 14' x 219' RCB	Type I, 12' x 12' x 219' RCB - Bevel dimensions: 12-inch radius at bottom 6-inch radius at top 24-inch radius on sides	$ 96,324	$ 60,854	$ 35,470	36.8	----------	Use of beveled or rounded edges on culvert entrances is standard design procedure.
	Douglas County, I-680, 1.83 miles west of Mormon Bridge	1970	10' x 10' x 640' RCB	Type III, double barrel, 6' x 8' x 640' RCB Bevel dimensions: 12-inch bottom radius 6-inch top radius 24-inch side radius	$ 122,609	$ 92,856	$ 29,753	24.3	----------	----------
	Douglas County, I-680, 0.66 miles west of Mormon Bridge	1970	6' x 6' x 642' RCB	Type III, 4' x 5' x 642' RCB - Bevel dimensions: 12-inch bottom radius 6-inch top radius 24-inch side radius	$ 50,762	$ 28,702	$ 22,060	43.5	----------	----------
	Harlan County, Ragan West Highway, 7.7 miles west of Ragan	1971	10' x 10' x 150' RCB	Type I, 8' x 8' x 150' RCB - Bevel dimensions: 6-inch radius at top and bottom edges.	$ 15,544	$ 11,822	$ 3,722	23.9	----------	----------
	Harlan County, Ragan West Highway, 10.1 miles west of Ragan	1971	8' x 8' x 173' RCB	Type I, 6' x 7' x 173' RCB - Bevel dimensions: 6-inch radius at top and bottom edges.	$ 15,513	$ 10,510	$ 5,003	32.3	----------	----------

Summary of Improved Entrance Field Survey (cont.)

State	Location	Date Constructed	Design: Conventional	Design: Improved Entrance	Cost: Conventional	Cost: Improved Entrance	Savings: Amount	Savings: Percentage	Performance	Comments
Nebraska	Harlan County, Pagan West Highway, 13.0 miles west of Ragan	1971	Double 10' x 10' x 145' RCB	Type 1, double 8' x 8' x 145' RCB - Bevel dimensions: 12-inch bottom radius 6-inch top radius 24-inch side radius	$ 24,274	$ 18,356	$ 5,918	24.4	----------	----------
	Kimball County, I-80, 1.4 miles east of Wyoming-Nebraska state boundary	1966	Double 8' x 8' x 156' RCB	Type I, single barrel, 12' x 9' x 156' RCB Bevel dimensions: 6-inch top radius	$ 18,474	$ 17,038	$ 1,436	7.8	----------	No unusual problems reported.
	Kimball County, I-80, 0.9 miles east of Wyoming-Nebraska state boundary	1966	Double 8' x 7' x 173' RCB	Type I, single barrel, 10' x 9' x 173' RCB Bevel dimensions: 6-inch top radius	$ 18,821	$ 15,609	$ 3,212	17.1	----------	ditto
	Dundy County, US-34, 3 miles northeast of CB & Q Railroad at northwest corner of Benkelman	1968	7' x 7' x 186' RCB	Type I, 6' x 7' x 186' RCB, Bevel dimensions: 12-inch bottom radius 6-inch top radius 24-inch side radius	$ 12,501	$ 10,534	$ 1,967	15.7	----------	ditto
	Dundy County, US-34, 4.3 miles northeast of CB & Q Railroad at northwest corner of Benkelman	1968	8' x 7' x 146' RCB	Type I, 6' x 7' x 146' RCB, Bevel dimensions: 12-inch bottom radius 6-inch top radius 24-inch side radius	$ 10,977	$ 8,118	$ 2,859	26	----------	----------
New York	----------	None reported	----------	None reported	----------	----------	----------	----------	----------	Reported to be considering use of beveled or rounded edges for box culvert entrances as a standard practice.
North Carolina	Surry County, I-77 (proposed), 8 miles west of Mt. Airy	Not under construction	8' x 6' x 390' RCB	Type III, 5' x 5' RCB Bevel dimensions: 1:1	$ 40,800	$ 22,000	$ 18,800	46	----------	----------
	Rutherford County, US-74, 0.1 mile east of State Highway 2201	1967	8' x 5' x 165' RCB	Type III, 5' x 4' x 165' RCB - Bevel dimensions: no bevels	$ 6,920	$ 4,290	$ 2,630	38	----------	----------
	Buncombe County, I-40, at US-40 interchange	1970	Double 12' x 8' x 1,146' RCB	Type III, double 8.5' x 9' x 1,146' RCB Bevel dimensions: None	$ 304,000	$ 226,000	$ 78,000	25.7	----------	----------
North Dakota	----------	----------	----------	----------	----------	----------	----------	----------	----------	Use of rounded edges on all new box culvert designs is standard practice.
Ohio	Summit County, I-271-6 (29) SUM-271-298, 1.16 miles south of SR 303-Interchange	Under construction (1971)	Double 11' x 11' x 595' RCB	Double 10' x 10' x 595' RCB - Type III Bevel dimensions: 1' - 0" radius	$ 356,000	$308,000	$ 48,000	13.4	----------	----------
	Ross County, APD 460(10) ROS-23-13.12, 2.1 miles north of US-35 & US 23, Chillicothe Interchange	Under Construction (1971)	14' x 12' x 364' RCB	12' x 12' x 364' RCB Ohio Design, Bevel dimensions: 1' - 0" radius	$ 163,000	$143,000	$ 20,000	12.2	----------	----------
	Clermont County I-275-2(17) CLE-275-6,68 0.82 miles north of SR-32 Interchange - Cincinnati Outer Belt	Under Construction (1971)	15' x 12' x 835' RCB	12' x 11' x 835' RCB Ohio Design, Bevel dimensions: 1:1, (1' - 0", $\measuredangle$ = 45°)	$ 576,000	$476,000	$100,000	17.3	----------	----------
	Clermont County I-275-2(14) CLE-275-0.00, 1.6 miles north of SR-28 on Cincinnati Outer Belt	Under Construction	15' x 11' x 600' RCB	12' x 11' x 600' RCB Ohio Design - Bevel dimensions: None given ------	$ 344,000	$291,000	$ 53,000	15.4	----------	----------
Oklahoma	----------	----------	----------	----------	Cost data	unavailable	----------	----------	----------	Rounded top edges are provided on culvert entrances as standard practice. Beveled edges are sometimes used but not as a standard practice.

Summary of Improved Entrance Field Survey (cont.)

State	Location	Date Constructed	Design: Conventional	Design: Improved Entrance	Cost: Conventional	Cost: Improved Entrance	Savings: Amount	Savings: Percentage	Performance	Comments
Oregon	----------	Approximately 40 box culverts with beveled inlets have been constructed - many were extensions of existing installations (technical data is not available). Culverts were designed using FHWA bulletins.			----------	----------	---------	---------	----------	Do not use side-tapered or slope-tapered entrances because of unfavorable experience with debris; however, the hooded inlet is used to increase capacity of existing culverts. Concrete collars for pipe culverts have proved useful in improving the capacity of an existing culvert.
Pennsylvania	----------	1968	10' x 8' x 2,500' RCB	Type III, 7' x 7' x 2,500' RCB	----------	----------	$100,000	---------	----------	----------
Rhode Island	Kent County, I-95, 0.25 mile south of village of Nooseneck	1969	Double barrel, 11' - 6" x 8' x 350' RCB	Type III, single barrel, 16' x 8' x 350' RCB	$ 152,770	$112,860	$ 39,910	26	----------	----------
South Carolina	----------	None have been designed or built		----------	----------	----------	---------	---------	----------	Has used beveled edges on culvert entrances at selected sites.
South Dakota	Lawrence County, I-90, 4 miles east of Spearfish	1971	8' x 8' x 380' RCB	Type I, 6' x 6' x 380' RCB	$ 40,000	$ 32,500	$ 7,500	19	----------	Standard design practice is to use square edges on all vertical interior walls and 1 1/2:1 bevel edge on top slab.
	Lawrence County, U.S. Highway 14A in Deadwood	1971	84" CMP 140' long	Type I, 48" CMP, 140' long. Bevel dimensions: 1 1/2:1	$ 14,680	$ 3,800	$ 9,880	72.2	----------	Original 60" CMP washed out in 1969.
	Pennington County US 16, 5 miles west of Rockerville	1967	78" RCP 1,316' long	Type I, 54" RCP, 1,316' long	$ 75,140	$ 40,660	$ 34,480	45.9	----------	No problems reported with debris or deposition in the barrel; rock baskets have been provided at inlet and outlet to prevent scour.
Tennessee	Coffee County, State Highway 55, seven miles northeast of intersection of state highways 2 and 55 in Manchester, Tennessee	1968	Double 12' x 6' x 80' RCB	Type I, double 10' x 5' x 80' RCB - Bevel dimensions: 6"-1 1/2:1 top bevel	$ 15,055	$ 10,961	$ 4,094	27.2	----------	Improved inlet was selected to increase discharge capacity of existing culvert installation.
	Knox County, East Leg, Knoxville CBD Loop, 0.09 mile southeast of intersection of Vine Avenue and Central Street	1971	Triple barrel 13' x 14' x 2,727' RCB	Type I, double 12' x 12' x 2,727' RCB Bevel dimensions: square-edged entrance	$1,243,556	$761,617	$ 481,939	38.7	Structure just completed - no record available.	----------
Texas	Tarrant County, I-820, in I-820 - US 81-287 interchange	Contract let October 1970	54" RCP 200' long	48" RCP, 200' long Type V Bevel dimensions: bevels or rounded edges not used.	$ 4,000	$ 3,500	$ 500	12.5	----------	----------
	Tarrant County, I-20, connection B of I-20- US287 interchange	Field change no. 5 approved April 16, 1971	66" RCP, 1543' long	54" RCP, 1543' long Type V Bevel dimensions: bevels or rounded edges not used.	$ 38,000	$ 30,000	$ 8,000	21	----------	----------
Utah	I-70, 4 1/2 miles west of junction to Hanksville	----------	----------	Type V, Utah design. 8' x 404' CMP No bevel dimension given.	----------	$ 58,000	---------	---------	----------	
	I-70, 3 1/2 miles west of junction to Hanksville	----------	----------	Type V, Utah design. No bevel dimension given. 6' x 284' CMP	----------	$ 34,000	---------	---------	----------	

Summary of Improved Entrance Field Survey (cont.)

State	Location	Date Constructed	Design: Conventional	Design: Improved Entrance	Cost: Conventional	Cost: Improved Entrance	Savings: Amount	Savings: Percentage	Performance	Comments
Utah	US-91, 2 miles north of Cedar City	1969	----------	Type IV, 9' x 6' x 156' RCB - No bevel dimension given.	----------	----------	---------	---------	----------	No debris or deposition problems. Also no scour problems.
	12 miles north of Green River, Emery County	1968	Double 14' x 9' RCB	Type I Double RCB, 10' x 9' x 88' No bevel dimension given.	----------	$ 37,000	---------	---------	----------	No debris, sediment, or scour problems.
	I-70, approximately 16 miles east of Salina	1968-1969	----------	Type V, 12' x 276' SPP No bevel dimension given.	----------	$ 40,686	---------	---------	----------	No debris or scour problems.
	I-70, approximately 20 miles east of Salina	1968-1969	----------	Type V, 9' x 270' SPP No bevel information given.	----------	$ 28,656	---------	---------	----------	No debris or scour problems.
	SR-15, 7 miles west of Mt. Carmel Junction	1963	13' CMP	Type V, 11' x 311' SPP No bevel information given.	$ 42,900	$ 38,740	$ 6,160	14.4	----------	Slope & taper less than minimum recommended for Type V.
	SR-15, 6.5 miles west of Mt. Carmel Junction	1963	15' CMP	Type V, 12' x 441' SPP No bevel information given.	$ 78,208	$ 62,463	$ 15,745	20.1	----------	Slope & taper less than minimum recommended for Type V.
	I-70, approximately 17 miles east of Salina	1968-1969	----------	Type V, 12' x 335' SPP No bevel information given.	----------	$ 53,109	---------	---------	----------	Slope & taper less than minimum recommended for Type V.
	I-70, 1/3 mile west of Whitehouse Interchange	1969-1970	----------	Type I, Single 5' x 4' x 526' RCB No bevel information given.	----------	----------	---------	---------	----------	Slope & taper less than recommended. No debris or scour problems.
	I-70, approximately 15 miles east of Salina	1968-1969	----------	Type V, Box to pipe 9' x 135' CMP	Replacement = $ 14,297	New inlet = $ 7,981	$ 6,316	44.2	----------	Modification of existing structure. Square to circular section used.
Virginia	Rockbridge County, Route 716 and I-81, 1 mile north of interchange #53 (Route 11 and 81) north of Lexington, Va.	Contract let 1-13-71	Double 8' x 8' x 409' RCB	Type III, double 6' x 6' x 409' RCB Fall = 3 feet Bevel dimensions: none	$ 87,900	$ 55,600	$ 32,300	36.0	----------	----------
	Albemarle County, I-64, 2.23 miles east of Albemarle-Nelson County Line	Contract let 5-21-69	10' x 10' x 662' RCB modified for 125-ft. fills	Type III, 8' x 8' x 662' RCB - Bevel dimensions: information not submitted. Fall = 2 feet	$ 187,150	$ 137,210	$ 47,940	25.6	----------	Debris at entrance, deposition in barrel, and scour at outlet have not been problems.
	Albemarle County, I-64, 3.32 miles east of Albemarle-Nelson County Line	Contract let 5-21-69	84" concrete pipe, 307' long	Type III, 5' x 5' x 307' RCB - Bevel dimensions: information not submitted. Fall = 2 feet	$ 22,584	$ 21,208	$ 1,376	6.0	Design discharge has not been exceeded; operation satisfactory.	Debris rack at culvert entrance; energy dissipator at outlet.
	Rockbridge County, I-81, five miles north of Lexington at Route 11 interchange	1964-1965	Double 6' x 6' x 1,130' RCB	Single 7' x 7' x 1,130' RCB - Type I Bevel dimensions: information not submitted	$ 182,000	$ 140,000	$ 42,000	23	Satisfactory	No debris problem at entrance; no deposition in the barrel; no evidence of scour at the outlet.
	City of Lexington, Route 11, 0.1 mile north of Maury River	1954	Double 6' x 6' x 282' RCB	Single 7' x 6' x 282' RCB Type I Bevel dimensions: information not submitted	$ 20,941	$ 17,530	$ 3,411	16	Satisfactory, flow has not exceeded design discharge.	ditto
Washington	----------	No improved inlets were reported.	----------	----------	----------	----------	---------	---------	----------	Improved inlets for box culverts have never been used.
West Virginia	----------	No improved entrances have been constructed.	----------	A box culvert with an improved entrance is presently being designed.	----------	----------	---------	---------	----------	Reported that State has revised standard culvert details to include a bevel on all culvert entrances.
Wisconsin	----------	No culverts with improved entrances have ever been built.			----------	----------	---------	---------	----------	Top slab at culvert entrances have 1 1/2:1 bevel - this is standard practice.

Summary of Improved Entrance Field Survey (cont.)

State	Location	Date Constructed	Design: Conventional	Design: Improved Entrance	Cost: Conventional	Cost: Improved Entrance	Savings: Amount	Savings: Percentage	Performance	Comments
Wyoming	I-80, Walcott Junction, Laramie Road	1968	Double 9' x 6' RCB	Single 6' x 5' RCB L = 440' Type I, No detail on side bevels, 2" chamfer on top edge.	----------	----------	$ 20,000	-------	----------	Barrels clear, stilling basin filled with sediment. No debris or scour problems.
	FAP-27, US-26, Dwyer Junction - Lingle Road	1968	7' x 7' RCB	Type I, 7' x 7' RCB L = 86' No bevels shown	----------	----------	--------	--------	Has passed flood greater than design, 1971. 1' below top at road grade. HW = 12'to 14'	Improved inlet used to provide a factor of safety. No significant scour or sedimentation problems. Side tapers less than minimum. Has top taper.
	SR-120, Meeteetse - Cody Road	1969	Triple 8' x 4' RCB	Type IV, Single 8' x 6' RCB L = 101' 6" top bevel	$ 22,400	$ 14,800	$ 7,600	34.0	----------	----------
Region 15 FHWA	----------	----------	----------	----------	----------	----------	----------	----------	----------	D/12 radius is used on edges of all pipe culverts, and a 6" radius is used on all box culvert edges.
	Tishomingo County, Miss. Natchez Trace Parkway at Tishomingo State Park near interchange with state park road, west end of bridge over Bear Creek	1968-1970	6' x 6' x 850' RCB	Type III, 4' x 4' x 850' RCB - Bevel dimensions: 1 1/2:1, 4" top bevel	$ 38,305	$ 28,086	$ 10,219	26.7	----------	Debris and scour at entrance and exit have not been problems. Structure designed as Type III but built as Type I.
	Swain County, N. C., Park Service, Route 9, 3 miles west of Bryson City, N.C.	1968-1970	10' x 8' x 162' RCB	Type III, 6' x 6' x 162' RCB - Bevel dimensions: 1 1/2:1, 4" top bevel	$ 23,879	$ 11,031	$ 12,848	53.8	Design discharge has not been experienced. Operation has been satisfactory.	No debris problems at inlet; deposition within barrel has not occurred. Scour at outlet has not been a problem.

Field Performance of Improved Inlets

In order to remain informed on the locations of culverts with improved inlets and the benefits derived from this Circular, the following information is solicited from the user:

Location: State_____, County_____, Highway_____.

_____miles (N,S,E,W) of _____.
(landmark)

Date constructed_____. Designed by_____.

New Structure___, or modification of existing structure___.

Area of drainage basin_____ acres. / sq.mi. Stream name_____.

Design discharge_____cfs. Frequency_____years.

Inlet Type: _____. Face shape: Circular___, Box___, Oval___, Arch___.

Barrel: Shape _____, CMP___, Concrete___, No. Barrels_____.

(Please indicate inlet and barrel dimensions on sketch on reverse).

Savings: Estimated cost of_____conventional culvert $_____.
(size)

Estimated cost of culvert with improved inlet $_____.

Estimated savings $_____.

Percent savings _____%

Basis of estimate, i.e., designer's estimate, engineer's estimate, prevailing costs, or actual bid price_____ _____.

Additional Comments_____

_____.

Please forward to: Improved Inlets
Hydraulics Branch, Bridge Division
Office of Engineering
Federal Highway Administration
Washington, D.C. 20590

Please complete dimensions on sketch

a. Circle inlet edges that are beveled in sketch

b. Bevel dimensions _____

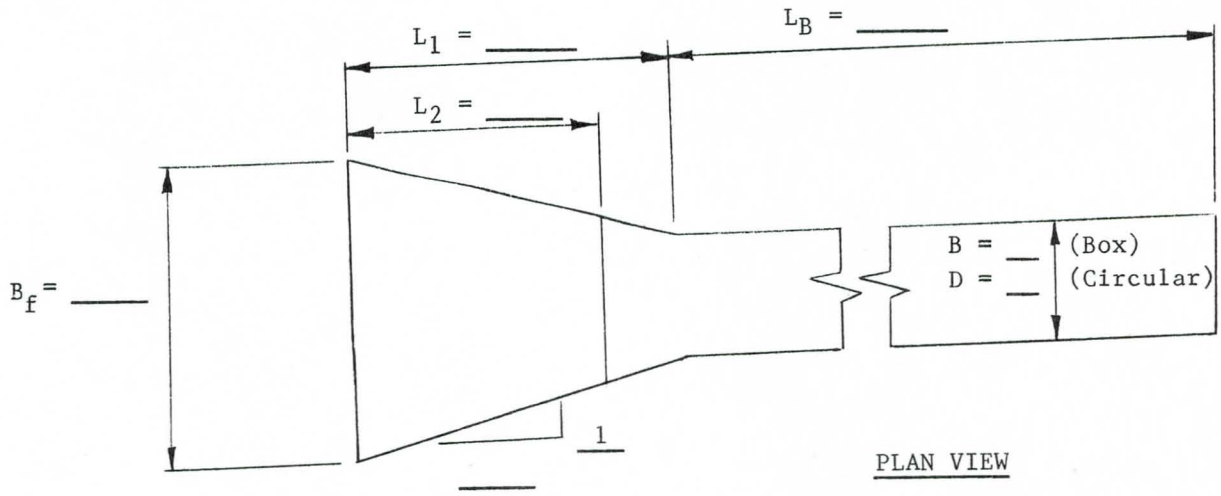

PLAN VIEW

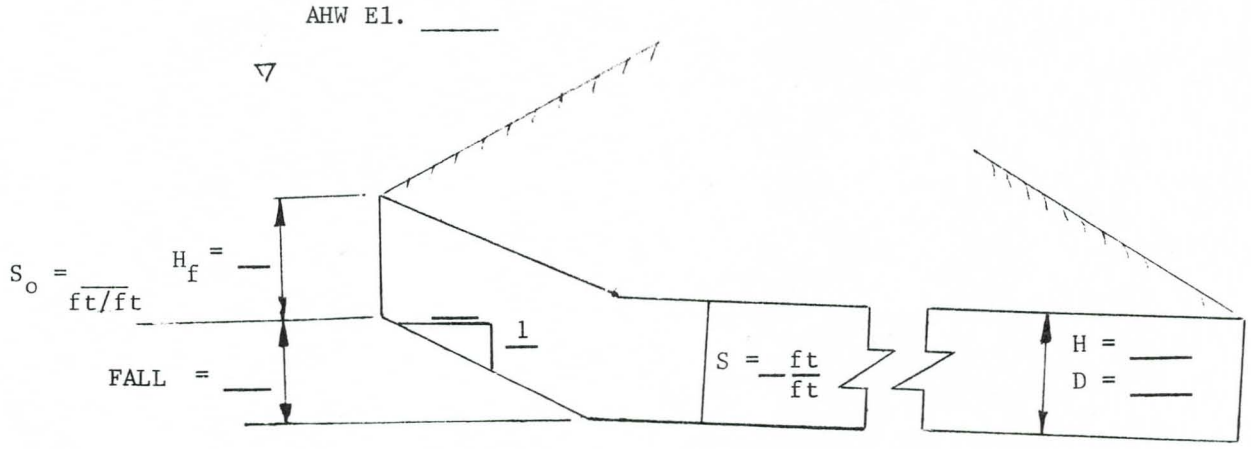

ELEVATION VIEW

Note: For side-tapered inlets where no FALL is incorporated into inlet, write L_2 = N.A. and FALL = 0 .

APPENDIX D

Design Calculation Forms

PROJECT: _____ DESIGNER: _____

OUTLET CONTROL DESIGN CALCULATIONS

STATION: _____ DATE: _____

INITIAL DATA:

Q _____ = _____ cfs

AHW El. = _____ ft.

So = _____

La = _____ ft.

El. Outlet Invert _____ ft.

Stream Data:

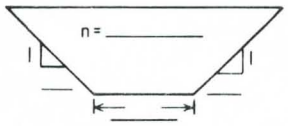

Barrel Shape and Material _____ Barrel n = _____

SKETCH

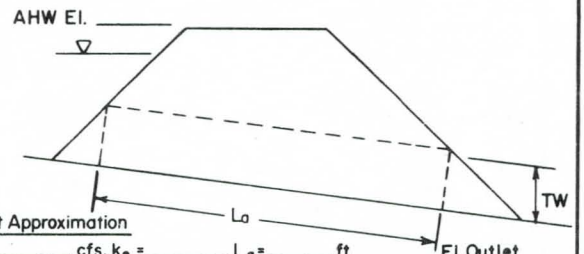

First Approximation

Q = _____ cfs, k_e = _____, L_a = _____ ft.

H = AHW El. − El. Outlet Invert − h_o

= _____ − _____ − _____ = _____

∴ A = _____ ft.^{2} or D = _____ ft.; Try _____

Q	$\frac{Q}{N}$	* H	$\frac{Q}{NB}$	(1) d_c	$\frac{d_c+D}{2}$	Qn	(2) TW	(3) h_o	(4) HW_o	(5) V_o	COMMENTS
Trial No _____, N = _____, B = _____, D = _____, k_e = _____											
Trial No. _____, N = _____, B = _____, D = _____, k_e = _____											
Trial No _____, N = _____, B = _____, D = _____, k_e = _____											

Notes and Equations:

(1) d_c cannot exceed D

(2) TW based on d_n in natural channel, or other downstream control.

(3) $h_o = \frac{d_c+D}{2}$ or TW, whichever is larger.

(4) HW_o = H + h_o + El. Outlet Invert.

(5) Outlet Velocity (V_o) = Q/Area defined by d_c or TW, not greater than D. Do not compute until control section is known.

SELECTED DESIGN

N = _____ At Design Q:

B = _____ ft.

D = _____ ft. HW_o = _____ ft.

k_e = _____ V_o = _____ f/s

$$* \quad H = \left[1 + k_e + \frac{29n^2 \cdot L}{R^{1.33}}\right] \frac{V^2}{2g}$$

PROJECT: _____ DESIGNER: _____

STATION: _____

CULVERT INLET CONTROL SECTION
DESIGN CALCULATIONS

DATE: _____

INITIAL DATA:

Q _____ = _____ cfs

AHW El. = _____ ft.

S_o = _____

L_a = _____ ft.

El. Stream Bed at Face _____ ft.

Barrel Shape and Material _____ Barrel n = _____

N = _____ , B = _____

D = _____ , $NBD^{3/2}$ = _____

(Pipe) $ND^{5/2}$ = _____

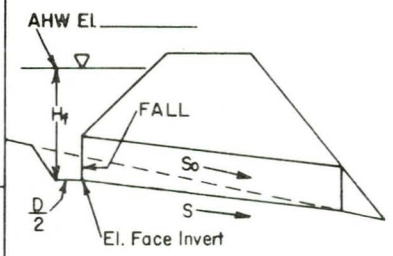

CONVENTIONAL or BEVELED INLET: FACE CONTROL SECTION (Upper Headings)

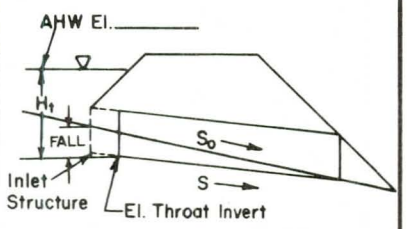

TAPERED INLET THROAT CONTROL SECTION (Lower Headings)

DEFINITIONS OF INLET CONTROL SECTION

	$\frac{Q}{NB}$	$\frac{H_f}{D}$	H_f	(1) El. Face Invert	El. Stream Bed At Face	(2)	(3) HW_f	(4)	(5)	Note: Use Upper Headings for Coventional or Beveled Face; Lower Headings for Tapered Inlet Throat.
Q	$\frac{Q}{NBD^{3/2}}$	$\frac{H_t}{D}$	H_t	El. Throat Invert		FALL	HW_t	S	V_o	COMMENTS

Trial No. _____ Inlet and Edge Description _____

Trial No. _____ Inlet and Edge Description _____

Trial No. _____ Inlet and Edge Description _____

Notes and Equations:

(1) El. Face (or throat) invert = AHW El. − H_f (or H_t)

(2) FALL = El. Stream Bed at Face − El. face (or throat) invert

(3) HW_f (or HW_t) = H_f (or H_t) + El. face (or throat) invert, where El face (or throat) invert should not exceed El. stream bed.

(4) $S \approx S_o - FALL/L_a$

(5) Outlet Velocity = Q/Area defined by d_n at S

SELECTED DESIGN

Inlet Description:

FALL = _____ ft.

Invert El. = _____ ft.

Bevels:

Angle = _____

b = _____ in., d = _____ in.

PROJECT: _____ DESIGNER: _____

SIDE-TAPERED INLET
DESIGN CALCULATIONS

STATION: _____ DATE: _____

INITIAL DATA

Q _____ = _____ cfs S_o = _____

AHW El. = _____ ft. L_a = _____ ft.

TAPER = _____ : 1

Barrel Shape and Material _____

Face Edge Description _____

N = _____, B = _____ ft., D = _____ ft.

SKETCH

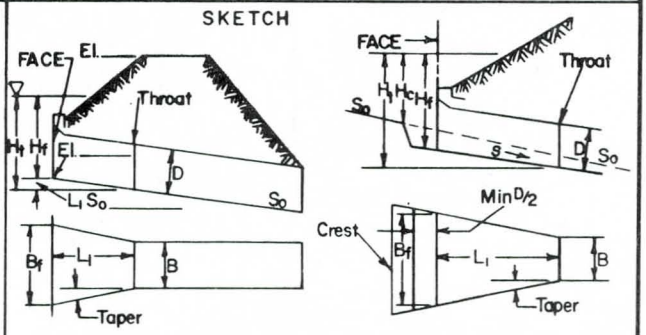

Q	El. Throat Invert	(1) $\frac{H_f}{D}$ / $\frac{H_f}{E}$	$\frac{Q}{B_f D^{3/2}}$ / $\frac{Q}{A_f E^{1/2}}$	$D^{3/2}$ / $E^{1/2}$	(2) Min. B_f / Min. A_f	B_f	(3) L_1	(4) S	$L_1 S$	(5) El. Face Invert	Upper Headings for Box Culverts, Lower Headings for Pipes COMMENTS
Trial No. _____, Q = _____, HW_f = _____											
											$B_f D^{3/2}$ [or $A_f E^{1/2}$] = _____
Trial No. _____, Q = _____, HW_f = _____											
											$B_f D^{3/2}$ [or $A_f E^{1/2}$] = _____
Trial No. _____, Q = _____, HW_f = _____											
											$B_f D^{3/2}$ [or $A_f E^{1/2}$] = _____

Notes and Equations:

(1) H_f/D [or H_f/E] = (HW$_f$ − El. Throat Invert − 1)/D [or E]

$D \le E \le 1.1D$

(2) Min. $B_f = \dfrac{Q}{(D^{3/2})(Q\ /\ B_f D^{3/2})}$

Min. $A_f = \dfrac{Q}{(E^{1/2})(Q\ /\ A_f E^{1/2})}$

(3) $L_1 = \left[\dfrac{B_f - NB}{2}\right]$ TAPER

(4) From throat design

(5) El. Face Invert − El. Throat Invert > 1 ft., recompute.
Face and Throat may be lowered to better fit site, but do not raise.

SELECTED DESIGN

B_f = _____ ft.

L_1 = _____ ft.

Bevels: Angle _____ °

d = _____ in., b = _____ in.

Crest Check:

HW_c = _____ ft.

H_c = _____ ft.

Q/W = _____ (Chart 17)

Min. W = _____ ft.

PROJECT: _____ SLOPE-TAPERED INLET DESIGN CALCULATIONS DESIGNER: _____

STATION: _____ DATE: _____

INITIAL DATA:

Q____ = ____cfs So = _____

AHW EL. ____ ft. L_a = _____ ft.

El. Stream bed at crest _____ ft.

El. stream bed at face _____ ft.

TAPER = ___:1 (4:1 to 6:1)

S_f = ___:1 (2:1 to 3:1)

Barrel Shape and Material _____

Inlet Edge Description _____

N=_____, B=_____ft., D=_____ ft.

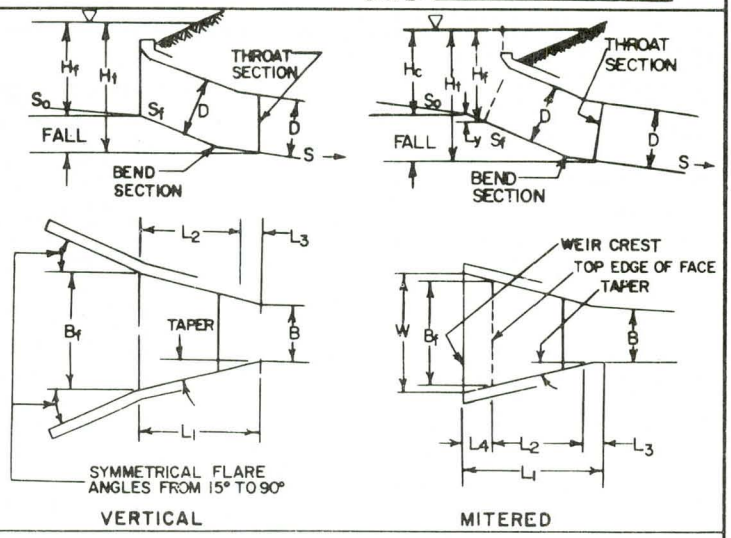

	Q	HW_f	El. Throat Invert	(1.) El. Face Invert	(2.) H_f	$\frac{H_f}{D}$	$\frac{Q}{B_f D^{3/2}}$	$D^{3/2}$	(3.) Min. B_f	B_f	S	Comments
Trial 1												$B_f D^{3/2}$ = _____
Trial 2												$B_f D^{3/2}$ = _____

Note: Use only throat designs with FALL > 0.25D

(1.) El. face invert: Vertical = Approx. stream bed elevation at face
Mitered = El. Crest − y, where y = 0.4D (Approx.), but higher than throat invert elevation.

(2.) $H_f = HW_f$ − El. face invert

(3.) Min. $B_f = \dfrac{Q}{(D^{3/2})(Q / B_f D^{3/2})}$

(4.) Min. L_3	(5.) L_4	(6.) L_2	(7.) Check L_2	(8.) Adj L_3	(9.) Adj TAPER	(10.) L_1	(11.) W	$\frac{Q}{W}$	H_c	(12.) Max. Crest El.

GEOMETRY
B_f = ___ft. L_3= ___ft.
L_1 = ___ft. L_4=___ft.
L_2= ___ft. d = ___in.
b= ___in.
TAPER= ___:1

(4.) Min. L_3=0.5NB

(5.) $L_4 = S_{fy} + D/S_f$ (Mitered only)

(6.) L_2 = (El. Face (Crest) Invert − El. Throat Invert) $S_f - L_4$

(7.) Check L = $\left[\frac{B_f - NB}{2}\right]$ TAPER − L_3

(8.) If (7)>(6), Adj. $L_3 = \left[\frac{B_f - NB}{2}\right]$ TAPER − L_2

(9.) If (6)>(7) Adj. TAPER = $(L_2 + L_3) / \left[\frac{B_f - NB}{2}\right]$

(10.) $L_1 = L_2 + L_3 + L_4$

(11.) Mitered: W = NB + 2 $\left[\frac{L_1}{TAPER}\right]$

(12.) Max. Crest El. = $HW_f - H_c$

*U.S. GOVERNMENT PRINTING OFFICE: 1983-0-400-267/797