BUSH HIGHWAY
BOX CULVERT
SURVEY INFO

Property of
Flood Control District of MC Library
Return to
[illegible]
Phoenix, AZ 85009

ACK ENGINEERS, INC.

LIETZ
SINCE 1882

BUSH HWY BOX CULVERT

BUSH HIGHWAY
BOX CULVERT

Property of
Flood Control District of
Please Return
2801 W. Durang
Phoenix, AZ 850
Library

LIETZ
SINCE 1882

TRANSIT FIELD BOOK

No. 8152-00

Property of _____

_____

Address _____

_____

Telephone _____

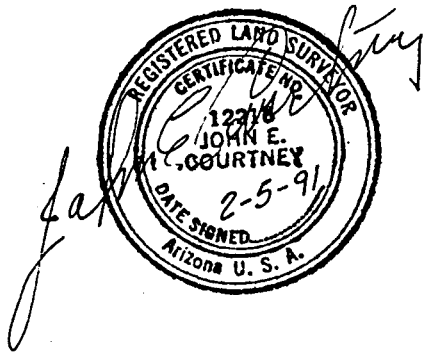

This Book is manufactured of a High Grade 50% Rag Paper having a Water Resisting Surface, and is sewed with Nylon Waterproof Thread.

INDEX

B. No	Description
1	Title
2	Blank
3	Level Loop No 1
4	Level Loop No 2
5-17	Boundary Control
18	Channel - Base Line Control Sketch
19	Boundary Control Coords.
20-25	Channel X-Secs.
26	Topo Culvert Off Line "C"
27-29	Topo Bush Hwy.
30-39	X-Sec Bush. Hwy.
40	Plan View Sketch - Culvert
41	~~Abtrgoe~~ Sketch @ Inlet & Outlet
42	Contour Sketch @ Inlet

1-17-91

Bush Hwy.
Spook Hill Culvert
Field Survey Notes
For
A. G. K. Engineering

Crew: J. Courtney
J. Loftis

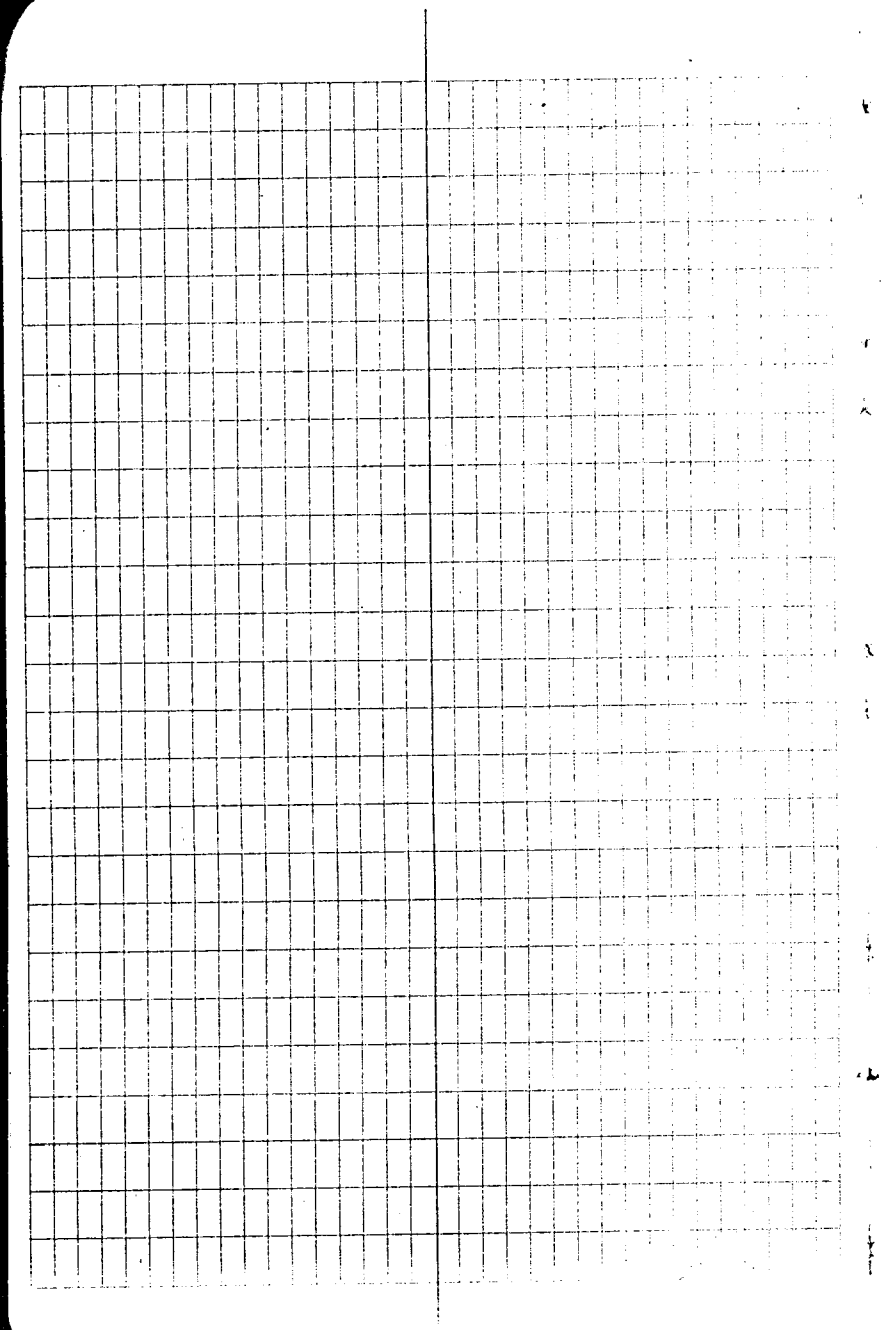

2

2

3

Level Loop No 1

Calm 70° 1-17-91

B.S.+	H.I.	F.S.-	Elev.	Description
			1346.37 (S.C.S. Datum)	(Benchmark) (23) A.H.D. B.C. in Hdwl. at Inlet of Culvert Stamped - Sta 218+53 Elev = 1346.05 1962 (Used Soil Conservation Service Datum per field Notes By D. Clough Dated July 2, 1990)
24.30	1370.67			
		2.82	1367.85	1½" B.C. in Conc. U.S. Dept of Agri. Bush Hwy Sta.
3.10	1370.95			
		24.58	1346.37	A.H.D. B.C. Sta 218+53

4

Level Loop N° 2

1-17-91

B.S.+	H.I.	F.S.-	Elev.	Description
			1346.37 (S.C.S. Datum)	A.H.D. B.C.G Sta 218+53 (Benchmark)
5.24	1351.61			
		6.66	1344.95	A.H.D. B.C. in Hdwl. for Cattle guard E.S. Hwy Stamped- Sta 219+65 CL=1344.62 1962
0.96	1345.91			
		14.85	1331.06	A.H.D. B.C. in Hdwl at Invert of Culvert Stamped- 224+16 CL=1330.70 1962
14.53	1345.59			
		0.65	1344.94	A.H.D. B.C.G Sta 224+16
		Adj	1344.95	
6.62	1351.56			
		5.20	1346.36	A.H.D. B.C.G Sta 218+53
		Adj	1346.37	(Benchark

5

Boundary Control

~~T.S.~~	Tri Sta 1
(11)	Set Rebar 0.2 up
	H.I. 4.92
	EL = 1362.30
B.S.	Hwy R.O.W. Marker
(10)	Sta 195+00 100' Lt
	4" ∡ Iron
	H.D. = 2424.50
F.S. 1	Tri Sta 2
(12)	5/8" Rebar 0.3' up
	w/1½" Alum. Cap Stamped
	SG-1 1970

1∡ 222-43-20 2∡ ~~445~~-26-30

m∡ 222-43-15 H.D. 947.86

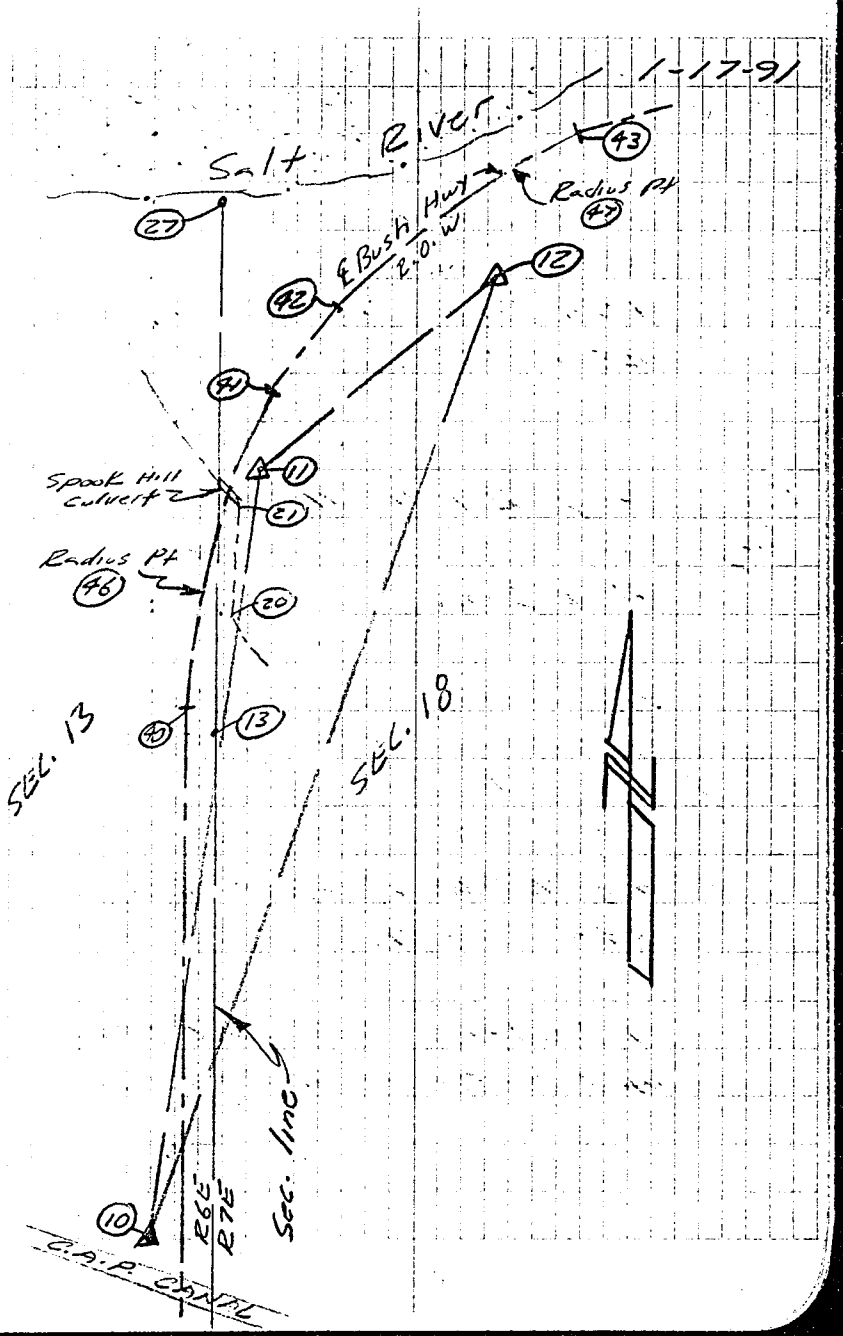

6

F.S.2 Sec. Cor for Secs. 18-19-13-24
(13) G.L.O. B.C. 0.7 up
on N-S Enc. line

I# S-11-30 2# 10-23-05
O# S-11-32 H.D. 818.48'

F.S.3 Hwy R.O.W. Marker
(14) Sta 100' Rt
4" # Iron

I# S-27-10 2# 10-54-20
M# S-27-10 H.D. 819.48'

F.S.4 Hwy R.O.W. Marker P.C.
(15) Sta 211+77.02 100' Rt

I# 7-02-10 2# 14-03-40
M# 7-01-50 H.D. 745.18'

7

F.S. 5 Poss. ℄ Hwy ⑤ Sec. line
(16) P.K. Flush

1∡11-42-35 H.D. 856.40

F.S. 6 Hwy R.O.W. Marker
(17) Sta 211+77.01 100' Lt.
4" ∡ Iron

1∡20-24-10 2∡40-48-10
M∡20-24-05 H.D. 825.43

F.S. 7 Hwy R.O.W. Marker
(18) Sta 210+99.58 100' Lt
4" ∡ Iron

1∡17-52-55 2∡35-45-55
M∡17-52-57 H.D. 893.14

8

F.S.8 U.S. Dept Agriculture
(19) B.C. in Conc

1914-58-35 H.D. 478.05'

F.S.9 Set 1/2" Rebar Flush @
(20) P.I. Channel (Base line)

1368-24-35 H.D. 451.55'
H.T. 4.66 V.D. -19.34

F.S.10 Set 1/2" Rebar (Base line)
(21) East of Culvert 1337.23

1434-44-25 H.D. 146.56'
H.T. 4.66 V.D. -25.31

F.S.11 5/8" Rebar w/1 1/2" Alum cap
(22) Stamped WP80017 SRWW 1987

1444-55-50 H.D. 89.00'

9

F.S. 12 A.H.D. B.C. in Hdwl of Inlet
(23) of Culvert Stamped - 218+53
EL = 1346.05 1962

1345-45-55 H.D. 136.44'
H.I. 4.66 V.D. -16.19

F.S. 13 Set P.K. Nail in Conc Gap
(24) @ E N-S Hdwl @ Outlet

1390-00-55 H.D. 140.61

F.S. 14 Set ½" Rebar @ West
(25) end Project

1432-27-45 H.D. 194.77

F.S. 15 Hwy R.O.W. Marker P.T.
(26) Sta 222+22.35 100' Lt
4" ⌀ Iron

19 164-56-30 29 329-52-55
M⌀ 164-56-28 H.D. 308.02

F.S. 16 G.L.O. Witness Cor Flush
(27) on South Bank Of River
For Secs. 13⌀18

19 163-19-20 29 326-38-50
M⌀ 163-19-25 H.D. 861.70

10

11

TG Tri Sta 2
(12)

B.S. Hwy R.O.W. Marker
(10) Sta 195+00 100' Lt

F.S.1 Tri Sta 1
(11)
1931-04-25 29 62-09-00
M931-04-30

Note: Change B.S. to Tri (11) Sta 1

F.S.2 Hwy R.O.W Marker
(28) Sta 222+22.35 100' Rt
4" ⌀ Iron

194-56-55 29 9-53-50
M94-56-55 H.D. 748.86

F.S. 3 Hwy R.O.W. Marker
(29) Sta 100' Lt
4" ϕ Iron

1 ϕ 35-20-25 2 ϕ 70-40-50
M ϕ 35-20-25 H.D. 559.16

F.S. 4 Nail S E Bush @ Entrance
(30) to Campground

1 ϕ 24-37-30 H.D. 569.41

F.S. 5 Hwy R.O.W. Marker P.T.
(31) Sta 234+71.96 100' Rt.

1 ϕ 169-21-10 2 ϕ 338-41-50
M ϕ 169-20-55 H.D 449.60'

12

13

F.S.6 Hwy R.O.W. Marker P.C.
(32) Sta 239+09.00 100' Rt
4" ∅ Iron

19/182-50-20 29365-40-30
MA/182-50-15 H.D. 860-87

F.S.7 P.K. in Punch West bound
(33) lane in Round Acrial
Panel

19/62-35-25 H.D. 560.45'

14

TG (10) Hwy R.O.W. Marker
Sta 195+00 100' Lt

B.S. (11) Tri Sta 1

F.S.1 (12) Tri Sta 2

1 @ 11-38-30 2 @ 23-17-00
N @ 11-38-30

F.S.2 (34) Tri Sta 3 Set Nail

1 @ 159-52-00 2 @ 319-44-05
N @ 159-52-02 H.D. 1027.46

F.S.3 (35) Hwy R.O.W. Marker
Sta 195+00 100' Rt
4" ⌀ Iron

1 @ 80-32-45 H.D. 99.29'

1/17/91

TG Tri Sta 3
(34)

B.S. Hwy R.O.W. Marker
(10) Sta PST00 100' Lt

F.S.1 P.K. Na.1 S E Bush Hwy
(36) West of 1/4 Cor.

1963-18-40 H.D. 92.76

F.S.2 Sec. 1/4 Cor for Secs.
(37) 19 & 24
1 1/2" B.C. in H.H.

1943-59-40 H.D 46.24'

15

16

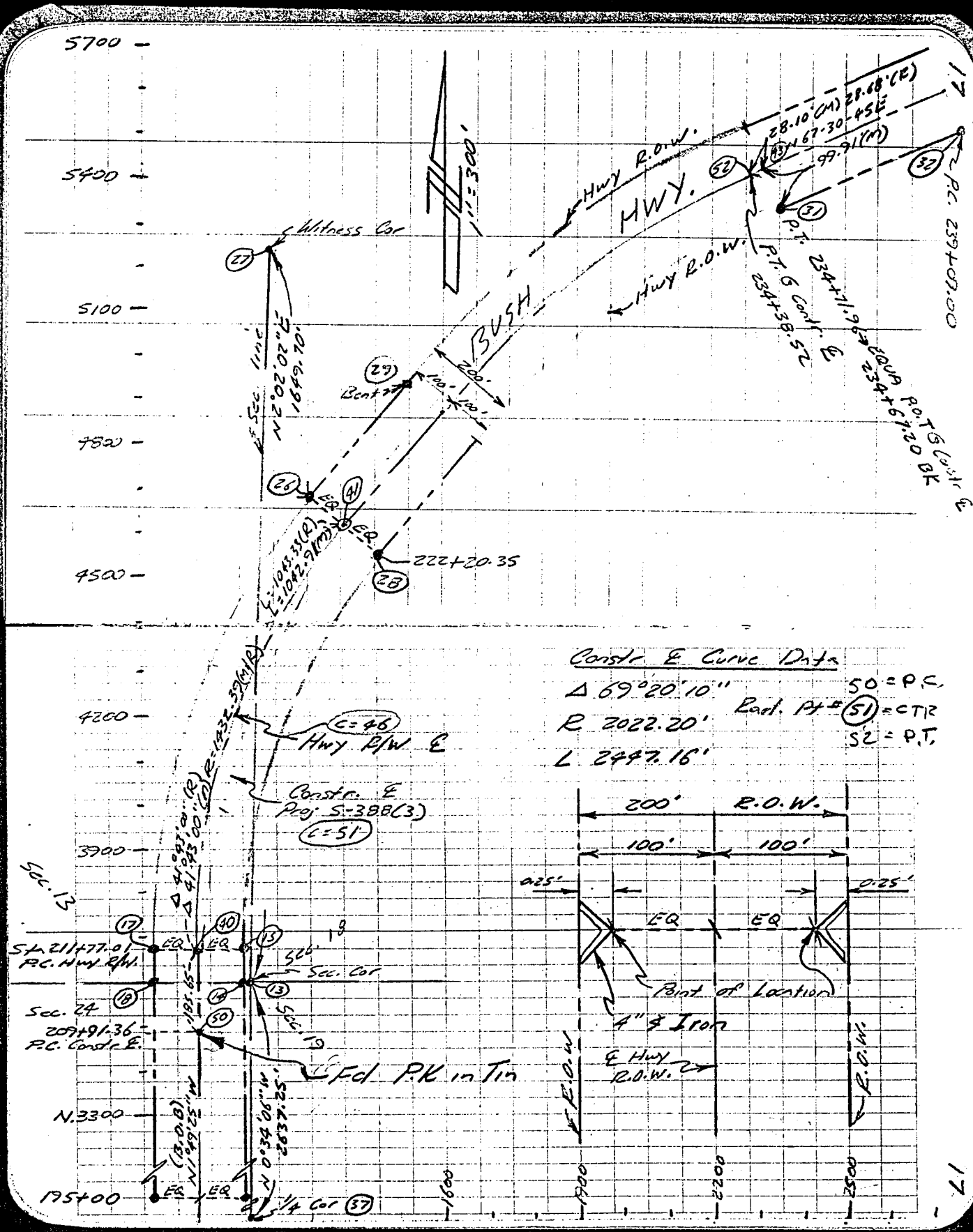

5700
5400
5100
4800
4500
4200
3900
N.3300
195+00
1600
1900
2200
2500
1" = 300'
Hwy R.O.W.
HWY.
BUSH
Witness Cor
Sec. line N 2°02'02" E 1649.70'
Bent
200'
100'
100'
222+20.35
28.10'(M) 28.68'(R)
N 67-30-45E
99.91'(M)
P.T. 234+71.96 EQUA P.O.T. G Constr ℄
234+67.20 BK
P.T. G Contr. ℄
234+38.52
P.C. 239+07.00
Constr ℄ Curve Data
Δ 69°20'10"
R 2022.20'
L 2447.16'
50 = P.C.
Rad. Pt # 51 = CTR
52 = P.T.
C=46
Hwy R/W ℄
Constr. ℄
Proj. S-388(3)
C=51
Sec. 13
Sta. 211+77.01
P.C. Hwy R/W.
Sec. 24
209+91.36
P.C. Constr ℄
Sec. 18
Sec. Cor
Sec. 19
Fd P.K in Tin
1/4 Cor
200'
R.O.W.
100'
100'
0.25'
0.25'
EQ
EQ
Point of Location
4" ∢ Iron
℄ Hwy R.O.W.
R.O.W.
R.O.W.

18

Channel Base Line Detail

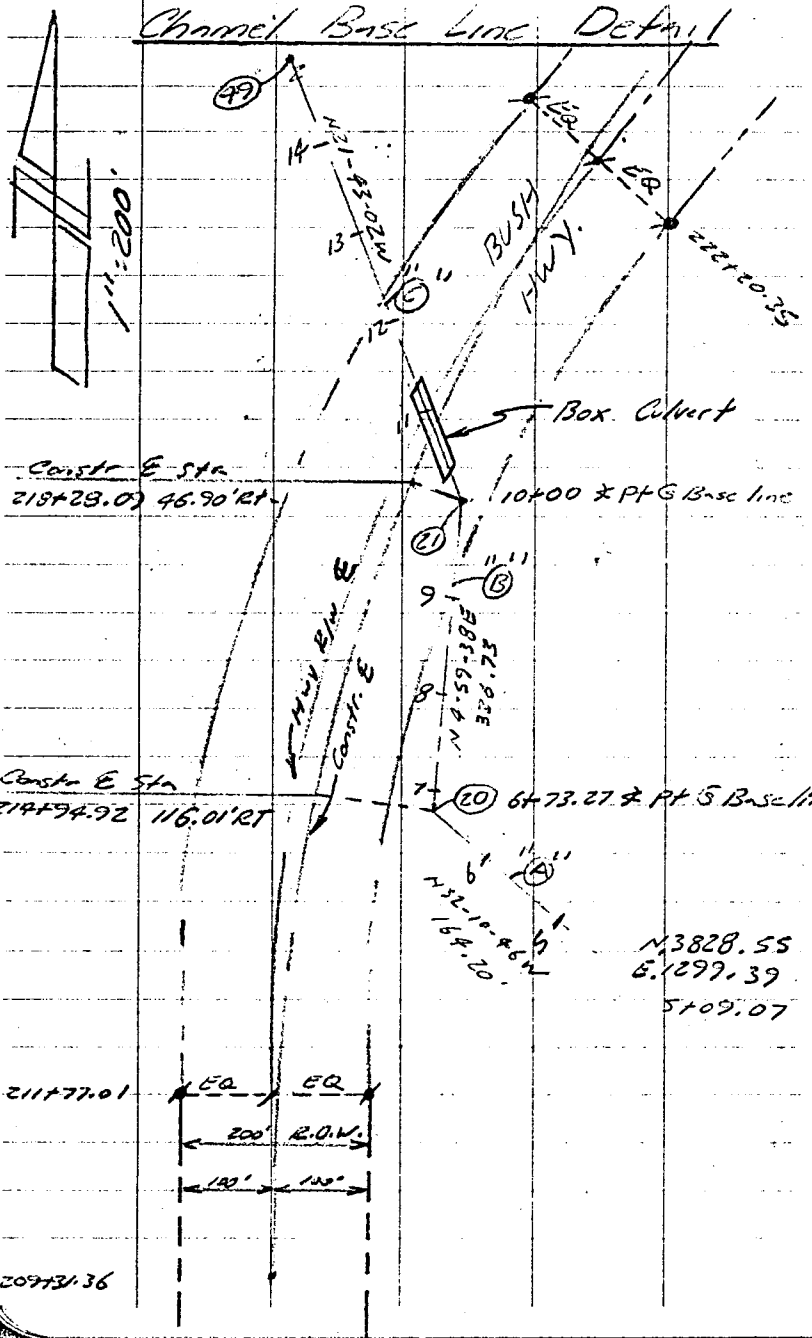

C.L.S. USE ONLY

Base line Sta & Off. G Tri. Sta

FIELD USE ONLY!!!!

Pt # 10

	Sta	Offset
Line "A"	8-79.14'	-1227.23 Lt
Line "B"	13-05.23	-39.86 Lt
Line "C"	10-41.31	-1071.80 Lt

Pt # 11

Line "A"	9+71.59	338.97 Rt
Line "B"	11+15.79	89.84' Rt
Line "C"	10+63.05	132.30' Rt

Pt # 12

Line "A"		
Line "B"	17+76.78'	769.22' Rt
Line "C"	13+48.12	1036.29' Rt

298.32 RT 338.97 | 10 1588.21 -1227.23 Lt | 20 1552.40

BOUNDARY CONTROL COORDS. SPOOK HILL CULVERT

POINT	NORTH	EAST
10	2000.000	1000.000
11	4400.544	1339.967
12	4999.875	2074.307
13	3603.862	1152.331
14	3603.751	1148.476
15	3681.063	1145.954
16	3594.624	1050.288
17	3674.881	946.586
18	3597.407	949.237
19	3960.618	1152.893
20	3967.523	1211.944
21	4293.010	1240.386
22	4346.972	1268.897
23	4320.012	1229.829
24	4395.823	1199.436
25	4782.448	1025.409
26	4706.269	1302.438
27	5252.520	1210.879
28	4578.186	1455.461
29	4962.045	1516.428
30	4856.396	1523.270
31	5343.637	2364.079
32	5510.515	2767.376
33	5467.923	2382.585
34	995.262	1214.886
35	2004.846	1199.231
36	965.429	1127.054
37	966.745	1178.487
40	3677.972	1046.270
41	4642.228	1378.950
42	4898.021	1592.954
43	5435.952	2325.865
44	5602.889	2729.137
45	3600.575	1048.734
46	3723.548	2477.935
47	3671.576	3056.989
48	2002.423	1099.616
49	4789.336	1042.702
50	3492.416	1052.178
51	3556.765	3073.354
52	5425.204	2299.902

END-OF-CALCULATIONS

LINE

Sta	Lt	Rt	El	Rem
5+09	85.1		1376.9	4.5.
	69.6		76.7	Top
	45.4.		67.0	Top
	25.0		52.2	Toe
	18.3.		52.5	Top
	15.1		48.0	Toe
	0		46.5	R
		24.9	49.5	Toe
		64.0	63.6	Top
		76.6	65.2	Top
		104.2	62.4	Toe

"A"

Sta	Lt	Rt	EL	Rem.
6+00		109.3	1354.8	Toe of E wash
		94.1	59.1	Top
		73.2	60.9	Top
		57.9	58.8	Toe
		43.7	59.1	Top
		33.3	56.8	Top
		20.4	52.2	Toe
		16.1	51.6	Top
		9.3	47.9	Toe
		3.8	47.4	Top
		2.0	45.7	Toe
	10.7		43.9	E
	17.3		45.4	Toe
	23.6		49.9	Top
	38.5		65.1	Top
	66.4		76.2	Top
	88.9		75.4	Toe
	104.5		77.5	Fnc. Line

20

LINE

Sta	Lt	Rt	El	Rem.
6+73.27				5 Pt Set Ahd. Base Ln.
	103.4		1364.43	E.P.
	89.4		63.4	Toe
	76.5		69.7	Top
	60.7		68.3	Top
	93.7		63.9	Fnc. Line
	22.0		55.5	Top
	7.3		44.2	Toe
	0		43.2	Base Line
		7.0	42.7	Toe
		10.8	44.1	Top
		15.0	43.9	Toe
		19.3	47.8	Top
		28.1	49.3	Top
		43.6	48.6	Top
		53.4	53.8	Top
		81.9	57.7	Top
		113.9	58.2	Top
		128.2	55.0	Toe
		136.2	55.1	Toe
		173.5	62.1	Top

"B"

Sta	Lt.	Rt.	El.	Rem.
7+70		158.4	1359.0	Toe
		130.5	61.0	Top
		110.3	59.3	G.S.
		95.2	57.1	Top
		79.7	50.6	Toe & wash
		60.4	53.8	Top
		50.7	53.5	Top
		34.9	46.6	Toe
		15.5	47.1	Top
		8.5	41.8	Toe
		1.3	41.8	Top
	5.8		39.9	Toe of FE
	15.6		41.8	Toe
	17.0		43.3	Top
	24.0		45.5	Top
	35.6		46.3	Toe
	49.0		49.5	Fnc Ln
	62.2		63.0	Top
	67.7		54.7	Toe
	69.7		54.7	Toe
	69.7		56.2	Top
	80.2		59.4	Top
	81.5		58.5	Toe of FE
	89.6		58.88	E.P.

LINE

Sta	Lt	Rt	El	Rem.
	Note! Gabion beg. @ Sta 7+50			
8+70	70.1		1353.99	E.P.
	61.5		53.2	Toe & FE
	59.9		53.8	Top
	41.7		45.7	Top @ Gabion
	37.3		43.8	Toe @ Gabion
	28.4		44.2	Top
	24.2		43.4	Top
	21.5		41.7	Toe
	13.2		41.6	Top
	5.5		40.4	Toe
	3.1		40.7	Top
		2.0	39.7	Toe
		8.7	39.7	Top
		12.1	38.4	Top
		19.2	39.5	Toe
		19.2	41.0	Top
		40.3	50.1	Top
		55.1	52.4	Top
		87.9	50.1	Toe
		108.4	50.0	Top
		123.0	47.1	E wash NW

"B"

Sta	Lt	Rt	El	Rem
9+50	49.0		1350.41	E.P.
	43.1		49.5	Toe & FE
	37.1		50.4	Top
	23.9		42.1	Top @ Gabion
	21.9		41.3	Toe @ Gabion
	18.4		41.1	Top
	9.0		39.0	Toe
	3.1		38.8	Top
		3.9	37.9	Top
		6.1	37.0	FE
		10.3	38.1	Top
		15.8	38.7	Toe
		23.9	43.5	Top
		36.5	45.0	Top
		68.0	42.0	Toe @ Ledge Wash
		79.3	42.2	Toe
		121.1	55.4	G.S.

LINE "B"

Sta	Lt	Rt	EL	Rem
10+00				℄ pt. ⑤ Basic Line BK.
	36.9		1348.66	E.P.
	28.7		48.0	Toe
	26.2		48.4	Top
	16.2		43.3	Top ⑤ Wing WL.
	16.2		38.8	Toe ⑤ Wing WL
	14.2		38.7	Top
	10.9		37.4	Toe
	2.7		36.7	Toe ⑤ PE
	0			℄ pt Basic Ln
		7.7	37.6	Toe
		13.7	39.1	Top
		21.7	40.5	Top
		32.7	40.4	Fnc. Line
		39.9	41.5	Top
		59.7	44.0	Toe
		96.6	55.1	Top

LINE "C"

Sta	Lt	Rt	EL	Rem
10+00				℄ pt ⑤ Basic Line BKD.
		6.9	1337.4	Toe
		14.2	38.6	Top
		19.6	39.5	Top
		20.6	39.0	Toe
		30.1	39.5	Toe
		44.3	42.6	Fnc. Line
		59.1	45.5	Top
		96.9	51.4	E.S.

LINE

Sta	Lt	Rt	EL	Rem
11+50	41.2		1338.8	Top
	26.6		30.9	Toe
	22.6		30.3	E & Toe
	16.2		30.8	Top
	6.4		30.5	Top
	0		29.8	Toe
		5.3	29.6	Toe
		9.4	30.6	Top
		15.3	30.7	Toe
		30.3	42.0	Toe
		31.6	44.9	Top of N. End Gabion

"C"

Sta	Lt	Rt	EL	Rem.
12+165	42.3		1336.7	Top
	35.4		29.3	Toe
		7.5	29.4	Top
		10.8	28.7	Top
		13.1	27.6	E
		19.7	28.5	Toe
		23.0	29.7	Top
		25.4	30.1	Toe
		45.7	40.3	Top

24

LINE

Sta.	Lt	Rt	EL	Rem.
13+00	39.8		1335.6	Top
	28.1		26.9	Toe
	21.4		26.6	Toe
	19.0		27.3	Top
	13.1		27.5	Toe
	10.4		28.1	Top
		0	27.8	Base Line
		14.7	27.4	Toe
		18.5	27.8	Toe
		34.2	38.5	Top

"C"

1/30/91

Sta.	Lt	Rt	EL	Rem.
13+60	48.1		1333.1	Top
	40.1		26.9	Toe
	34.9		25.3	Toe
	30.3		25.5	Toe
	28.3		26.5	Top
	19.0		26.9	G.S.
		0	26.8	Base Line
		14.3	26.7	Toe
		28.0	36.6	Top
15+34.2	58.0		1330.2	Top
	51.7		24.3	Toe
	48.8		23.6	Toe
	38.0		23.7	Toe
	36.3		24.1	Top
	19.0		23.9	Toe
	13.5		23.6	Toe
	8.8		24.0	Top
		14.4	23.9	Toe
		32.0	31.8	Top

TOPO LINE

"C"

Sta	Lt	Et	EL	Rem
+36 7		17 0		End Wing WL. (M)
+21 1		10 4		℄ Pt Wing WL (L)
+20 5		10 5		End Hdwl. (K)
11+05 0	16 9			End Wing WL (J)
+98 6	11 5			Beg Hdwl (I)
+98 6	10 5			℄ Pt wing WL S ℄ Culvert (H)
+39 7		11 4		End Hdwl. (G)
+39 6		10 6		℄ Pt Wing WL (F) N ℄ Culvert
+33 6		16 3		Beg wing WL ℄ (E) End Gabion
+17 7	10 3			Beg. Hdwl. (D)
+17 1	10 3			℄ Pt wing WL S ℄ culvert (C)
+15 6		35 7	N3 TO 41 S3 GR. 39.8	Beg. Gabion (B)
10+00 3	18 1			Beg. Wing WL ℄ End Gabion (A)

TOPO Sta	Lt	BUSH Rt	Lt	HWY Rem.
* Indicates out of sequence.				
+65.2		27.5	45.61	End Hdwl. (G)
+65.1		61.7		End Gabion (B) 6'N-S
+64.3		35.2		End wing wl Beg. Gabion (E)
+64.5		26.9	44.50	℄Pt wing wl N.E. Culvert (F)
* +47.0		69.0		Cluster 3" Mesq. w/ 30' Span. Spook Hill Fldwy
* +52.3	22.6			Sign 3'E-W E. End 4'Ht Barbwire
+55.1	83.0			Fnc S.S. W. to E.S. Gate
+53.2	103.0			S. End 4'Ht Barb. wire Fnc S.W. Cor. 15' Gate
+46.7		21.0		Spook Hill Fldwy Sign. 3'E-W National Forest
+40.5	25.3			Boundary Sign SE COR T2N R13E
+33.9		27.2	47.14	Beg. Hdwl. (D)
+33.5		27.6	46.03	℄Pt wing wl S.E. Culvert (C)
* +15.2		33.9		Beg. wing wl S End Gabion (A)
+20.5		15.0	43.3	Soil test hole No. 1
218+07.0		76.5		Beg 4'Ht Barb-wire fence
+82.5		21.0	48.6	4'N-S Open Beg in Shoulder Bank
217+64.5	57.0			Beg. 12" dia. ± Rock bedding National Forest
* +87.5		25.0		Boundary Sign
+96.0	35.0		51.79	℄Pt ⑤ E.P.
+86.5	15.0		54.78	Rct ⑤ E.P.
+76.0	25.0		54.91	℄Pt. E.P.
+75.0	48.0		52.79	℄Pt E.P.
+70.2		41.0		Beg. 4'E-W Gabion
216+11	14.5		53.50	Rct ⑤ E.P.

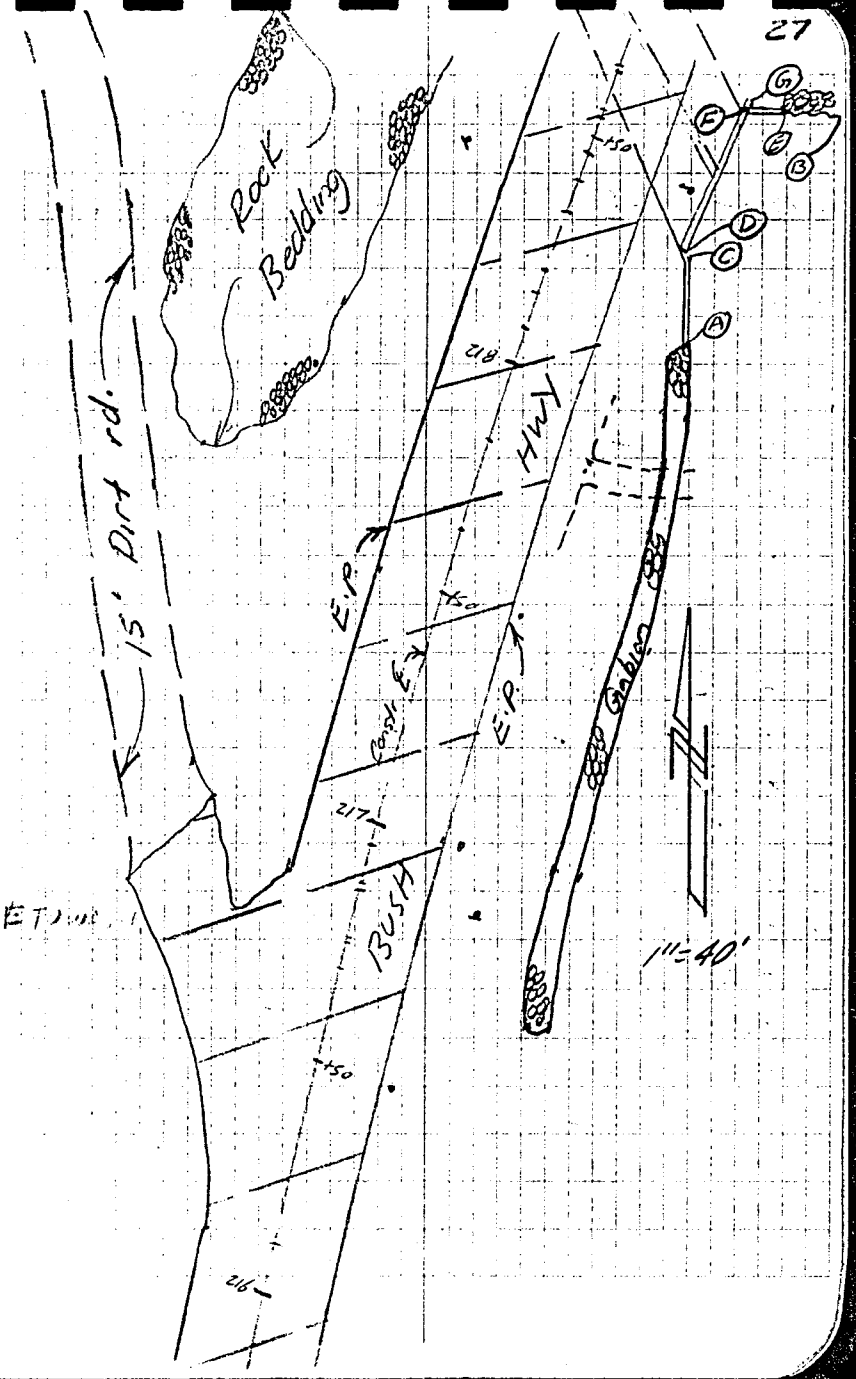

27

TOPO

Sta	Lt	Rt	El	Rem.
*219+34.0	16.5		46.3	Soil Test Hole No 2
+65.0		85.5		℄Pt 4' Hi Barbwire Fnc
+65.0		23.5		W. End 4' Hi Barbwire Fnc.
+65.0		22.8	TOP 4.93 GRT 4.07	℄ 12' N-S Hdwl for a 9' N-S Cattle Guard
+65.0	22.8		TOP 6.84 GRT 5.97	℄ 12' N-S Hdwl for a 9' N-S Cattle Guard
+53.3	34.9		44.7	℄Pt Rip-Rap & End Gabion
+49.2	20.8		46.1	℄Pt Rip-Rap
+44.7		61.0		Cluster 5" Ironwood w/20' Span
+44.4		21.0		5'L-W National Forest Sign
+36.5		56.0		15' Hi Sag.
+36.2	38.1			End Wing WL. (M)
+21.5	31.3		42.10	℄Pt Wing WL. N S Culvert (L)
+21.2	30.8		43.10	End Hdwl. (K)
+18.7	28.6		45.0	℄Pt Rip-Rap & Beg Gabion
+14.6	20.0		46.5	℄Pt Rip Rap
219+09.0	25.0		46.9	℄Pt Conc. Rip-Rap
92.0	28.5			10" Poh. Verde w/25' Span
+91.5	29.2			℄Pt Wing WL S S Culvert (H)
+90.7	30.4		44.83	Beg Hdwl. (I)
+91.3	38.8			End Wing WL. (J)
+75.0	67.0			NW Cor Rock Bedding
218+75.0	28.0			NE Cor Rock Bedding

BUSH HWY

See Sketch

Page 29

TOPO

BUSH HWY

Sta.	Lt	Rt	El	Rem
221+03	32°			6" Palo Verde w/12' Span Beg 2.5' Hi Guard Rail
+35	38°			
+26	72°			# Pt # Hi Barbwire
220+26	54°			8" Palo Verde w/15' Span Cluster 10" Iron Wood w/30' Span Beg 4' Hi Barb wire Encl.
+89	71°			
+84	56°			
219+80		20°		3'E-W No Litter Sign

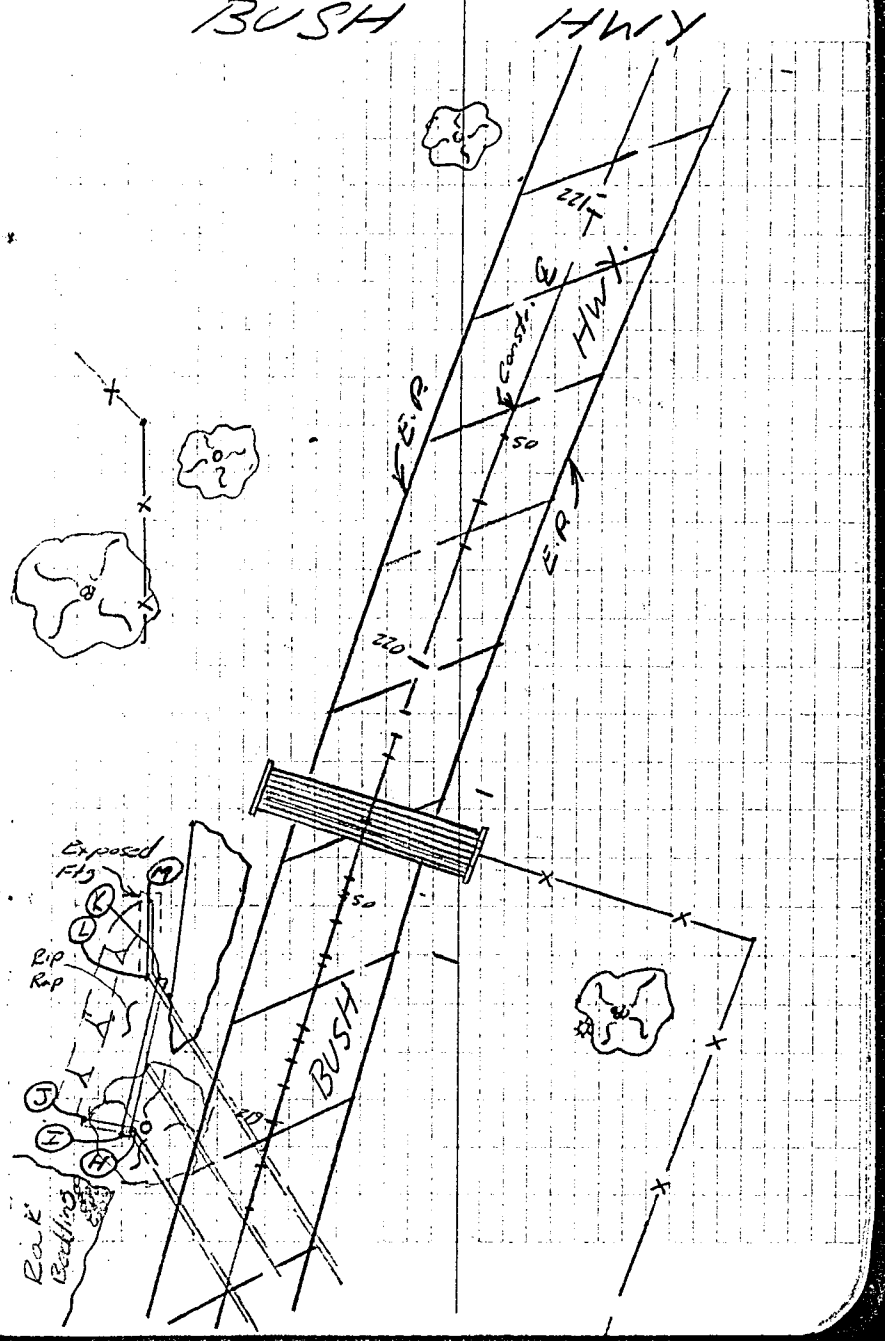

BUSH HWY

X-SEC

Sta	Lt	Rt	EL	Rem
215+00	88.0		72.2	Top
	80.5		68.0	Toe
	66.0		67.5	E 10 dirt rd.
	49.0		65.9	Top
	39.2		63.5	Toe of E
	34.9		64.4	Top
	14.6		64.90	E.P. T.P. 4.92
	0		64.43	E
		12.2	63.64	E.P.
		21.4	63.0	Toe
		22.0	63.5	Top
		28.0	63.0	Toe
		39.0	68.1	Top
		53.0	67.8	Top
		74.0	63.1	Top of Fnc. Ln
		94.0	56.3	Top
		111.2	42.9	Toe (main channel)

X-SEC.

Sta	Lt	Rt	El	Rem.
215+50	86.6		68.9	Top
	78.3		64.8	Toe
	61.8		64.1	E 10' dirt rd.
	47.1		63.5	Top
	40.2		60.2	Toe & FE
	33.7		61.6	Top
	14.7		61.87	E.P.
	0		61.40	E
		13.2	60.58	E.P.
		20.4	60.1	Toe
		21.2	60.7	Top
		27.2	58.6	Toe
		31.7	60.0	Top
		38.6	60.6	Top
		44.8	60.6	Top
		62.5	57.0	Top
		71.3	57.2	Fnc.
		78.0	54.0	Top
		93.0	42.8	Toe

BUSH

Sta	Lt	Rt
216+00	78.3	
	70.0	
	53.8	
	45.0	
	39.2	
	30.2	
	14.3	
	0	
		13.0
		19.7
		21.9
		33.8
		39.6
		67.0
		77.5
		85.8

HWY.

LL	Rem
62.4	Top
59.6	Toe
59.2	E 10' dirt rd
58.1	Top
56.5	Toe & FE
58.6	Top
59.14	E.P.
58.70	E
58.04	E.P.
57.7	Toe
58.6	Top
56.1	Top
49.5	Toe
46.1	Toe
45.4	Top
41.7	Toe

31

X-SEC

Sta	Lt	Rt	El	Rem
216+50	101.6		56.4	Top
	86.8		52.7	Toe
	67.2		53.0	Toe
	58.0		54.5	Top
	27.0		56.06	E.P.
	14.2		56.64	G.B. Pymt. TW 6.69 PK
	0		56.13	E
		13.0	55.45	E.P.
		21.2	54.9	~~Top~~ Toe
		22.6	55.4	Top
		27.5	53.3	Top
		44.4	45.3	Toe
		68.5	44.3	Top
		84.0	40.7	Toe

BUSH HWY

Sta	Lt	Rt	El	Rem
217+00	75.1		50.9	Top
	71.2		50.0	Toe
	54.5		50.3	E 15' dist. rd.
	34.3		51.4	Toe
	24.0		54.4	Top
	22.6		53.8	Toe
	14.4		54.17	E.P.
		0	53.82	E
		14.0	53.07	E.P.
		21.5	52.6	Toe
		22.1	53.1	Top
		31.6	50.3	Top
		41.5	45.3	W. Gabion
		44.8	43.6	E. Gabion Toe
		58.0	43.3	Top
		59.4	41.3	Toe
		102.3	38.4	Toe

X - SEC

Sta	Lt	Rt	El	Rem
217+50	87.0		47.6	Top
	82.3		45.1	Toe
	70.8		45.5	℄ 15' Dirt rd.
	52.2		46.5	Toe
	41.0		46.5	Toe
	24.0		52.2	Top
	22.4		51.9	Toe
	14.4		52.05	E.P.
	0		51.83	℄
		13.8	51.03	E.P.
		20.8	50.4	Toe
		22.0	51.4	Top
		25.6	50.7	Top
		32.6	48.2	Top
		40.5	43.8	W^s Gabion @ Toe
		45.0	42.0	E^s Gabion
		48.0	42.7	Top
		51.0	40.9	Toe
		77.0	38.5	FE
		85.4	38.9	Toe

T.P. [illegible] 52.[illegible]

BUSH HWY.

Sta	Lt	Rt	El	Rem
218+00	93.0		41.1	℄ 15' dirt rd.
	77.0		41.7	Top & W^s Rock Bedding
	63.4		40.5	Toe
	44.0		41.9	Toe
	39.4		44.5	E^s Rock bedding
	24.0		50.4	Top
	23.0		49.9	~~Top~~ TOE
	15.0		50.26	E.P.
	0		49.89	℄
		13.6	49.19	E.P.
		20.1	48.5	Toe
		21.2	49.2	Top
		24.4	48.1	Top
		34.3	41.8	Toe @ Top Gabion
		37.9	40.7	Toe @ E^s Gabion
		42.3	38.6	Toe
		59.7	36.9	FE
		68.0	38.3	Toe
		84.0	44.2	Top

X-SEC.

Sta	Lt	Lt	EL	Rem.
218+25	107.5		401	E is dist rd.
	81.5		405	Top
	74.0		386	Toe of W.S. Rock bedding
	46.6		398	Toe
	36.6		435	Top of E.S. Rock bedding
	24.0		499	Top
	22.6		490	Toe
	14.3		493.6	E.P.
	0		495	E
		13.5	483.1	E.P.
		19.9	490	Toe
		21.3	484	Top
		25.3	467	Top
		30.6	440	Top E.S. Wing Wl
		30.6	389	Toe of G ↗
		36.3	370	Toe
		47.1	369	E
		59.4	381	Toe
		73.5	416	Top
		77.6	412	Fnc Line

BUSH HWY

Sta	Lt	Rt	EL	Rem.
218+50	85.4		390	Top
	76.4		386	Top
	72.0		370	Toe of W.S. Rock bedding
	42.7		378	Toe ↗
	34.7		440	E.S. Rock bedding
	27.0		476	Top
	23.0		484	Top
	21.8		480	Toe
	14.8		495.0	E.P.
	0		4817	E
		13.3	4746	E.P.
		19.0	472	Toe
		20.4	477	Top
		24.8	466	Toe
		27.5	4634	E.S. of G Top Hdwl. For Culvert
		27.5	3646	Bott of G Culvert
		33.0	363	E
		45.7	376	Toe
		49.8	385	Top
		64.5	390	Toe
		80.0	414	Fnc Ln.

SS

X-SEC.

Sta	CL	Rt	El	Rem
218+75	91 0		38 7	Top
	73 5		38 1	Top
	67 0		37 8	NW Cor Rock Bedding
	65 3		36 2	Toe
	47 0		37 2	Toe
	28 0		44 2	NE Cor Rock Bedding
	25 7		47 2	Top
	23 7		47 5	Top
	22 7		47 2	Toe
	15 2		47 72	E. P.
	0		47 38	E
		13 2	46 75	E.P.
		21 6	46 7	Top
		31 0	41 0	Toe
		63 0	41 3	Toe
		79 7	44 6	Fnc Ln & Top

BUSH

Sta	CL	Rt	El	Rem
219+00	82 1		37 9	Top
	70 2		34 7	Toe
	53 0		33 7	Top
	49 0		31 6	Toe & Ldsc Rip-Rap
	30 6		34 39	Bott & Culvert
	30 6		44 31	NE & Top Culvert
	23 2		47 6	Top
	22 5		46 7	Toe
	15 0		47 03	E.P.
	0		46 67	E T.P.
		13 8	46 06	E.P.
		22 8	46 1	Top
		34 0	43 7	Toe
		48 1	43 7	Toe
		56 5	46 4	Top
		71 4	45 3	Toe
		81 4	50 0	Fnc. Ln
	* 40 0		34 0	Top & Rip-Rap

HWY

El	Rem
37 9	Top
34 7	Toe
33 7	Top
31 6	Toe & Ldsc Rip-Rap
34 39	Bott & Culvert
44 31	NE & Top Culvert
47 6	Top
46 7	Toe
47 03	E.P.
46 67	E T.P.
46 06	E.P.
46 1	Top
43 7	Toe
43 7	Toe
46 4	Top
45 3	Toe
50 0	Fnc. Ln
34 0	Top & Rip-Rap

X-SEC

Sta	Lt	Rt	EL	Rem
219+25	108.2		38.9	Top
	91.6		30.8	Toe
	47.3		31.3	Toe S Rip-Rap
	42.4		33.6	Top S Rip-Rap
	32.9		33.8	Toe S Wing wL
	32.9			Top S Wing wL
	29.7		42.7	Toe S Gabion
	28.0		44.8	Top S Gabion
	19.0		46.4	Top S E.S. Rip-Rap
	14.1		46.51	E.P.
	0		46.09	E
		14.3	45.51	E.P.
		21.7	45.2	Toe
		32.1	45.8	Toe
		44.0	49.0	Top
		60.0	52.5	Top
		71.0	52.3	Toe
		83.1	54.7	Fnc Line

BUSH HWY.

Sta	Lt	Rt	El	Rem
219+50	130.0		29.2	Toe (Main Channel)
	75.0		30.2	Top
	66.0		29.4	E S Toe
	51.0		31.5	Toe
	34.7		41.2	Toe S Gabion
	33.2		44.2	Top S Gabion
	26.3		46.4	Top S W.S. Rip-Rap
	20.7		45.9	Toe
	14.5		45.88	E.P.
	0		45.42	E
		14.3	44.82	E.P.
		24.0	44.1	Toe
		29.6	44.4	Toe
		46.0	53.4	Top
		67.4	59.0	Top
		77.4	57.9	Toe
		85.5	60.1	Fnc Ln.

X-SEC.

Sta	Lt	Rt	El	Rem
219+75	96.8		29.0	Top
	85.2		28.0	Toe
	77.8		28.3	Toe
	75.2		30.8	Top
	51.0		44.9	Top
	15.0		45.30	E.P.
	0		44.79	E
		14.0	44.10	E.P.
		23.2	43.2	Toe
		28.7	43.9	Toe
		47.0	56.1	Top
		65.0	61.2	Top
		75.0	61.7	G.S.

BUSH HWY

Sta	Lt	Rt	El	Rem
220+00	106.0		29.8	Toe (N. Channel)
	82.7		38.1	Top
	66.3		39.6	Toe
	63.0		40.5	Fnc. Ln.
	53.2		45.0	Top
	38.0		44.7	G.B.
	14.5		44.64	E.P.
		0	44.12	E
		13.5	43.38	E.P. & Top
		22.0	41.8	Toe
		28.5	42.5	Toe
		51.0	59.1	Top
		62.0	60.9	Top
		91.0	59.1	Toe

X-SEC.

Sta	Lt	Rt	El	Rem
220+50	100 0		33 1	Toe
	71 0		33 5	Toe
	43 0		44 1	Top
	39 0		42 9	Toe
	31 3		42 9	Guard Rail
	14 9		43 33	E.P.
	0		42 74	E
		13 6	42 13	E.P. & Top
		23 0	41 0	Toe
		27 0	41 2	Toe
		48 4	56 0	Top
		54 4	56 4	Top
		67 5	56 3	Toe
		75 0	57 9	G.S.

BUSH

Sta	Lt	Rt
221+00	75 0	
	69 0	
	59 3	
	38 5	
	29 0	
	16 5	
		0
		15 5
		26 0
		44 4
		50 0
		55 0
		70 0
		76 0
*	22 8	

HWY

El	Rem
28 9	G.S.
28 9	Toe
35 9	Top
43 3	Top
41 5	Toe
41 99	E.P.
41 43	E
40 59	E.P. & Top
39 8	Toe
52 3	Top
54 5	Top
53 9	Toe
58 1	Top
58 2	Toe
41 9	Guard Rail

X-SEC

Sta	Lt	Rt	CL	Rem
22+50	75 0		27 7	G.S.
	56 5		27 2	Toe
	38 4		38 8	Top
	34 3		38 5	Toe
	26 0		41 0	Top
	17 6		40 79	E.P.
	0		40 19	℄
		17 0	39 28	E.P. & Top
		27 6	38 50	Toe
		43 0	46 8	Top
		48 0	46 3	Toe
		86 0	56 5	Top
*	20 7			Guard Rail

BUSH

Sta	Lt	Rt	CL	Rem
22+00	75 0		26 3	G.S.
	45 0		26 5	Toe
	24 8		39 3	Top
	17 2		39 43	E.P.
	0		38 87	℄
		18 0	37 89	E.P. & Top
		28 0	37 2	Toe
		35 4	41 2	Top
	* 20 1		39 4	Guard Rail
		49 2	41 7	Toe
		72 0	47 5	Top

HWY

CL	Rem
26 3	G.S.
26 5	Toe
39 3	Top
39 43	E.P.
38 87	℄
37 89	E.P. & Top
37 2	Toe
41 2	Top
39 4	Guard Rail
41 7	Toe
47 5	Top

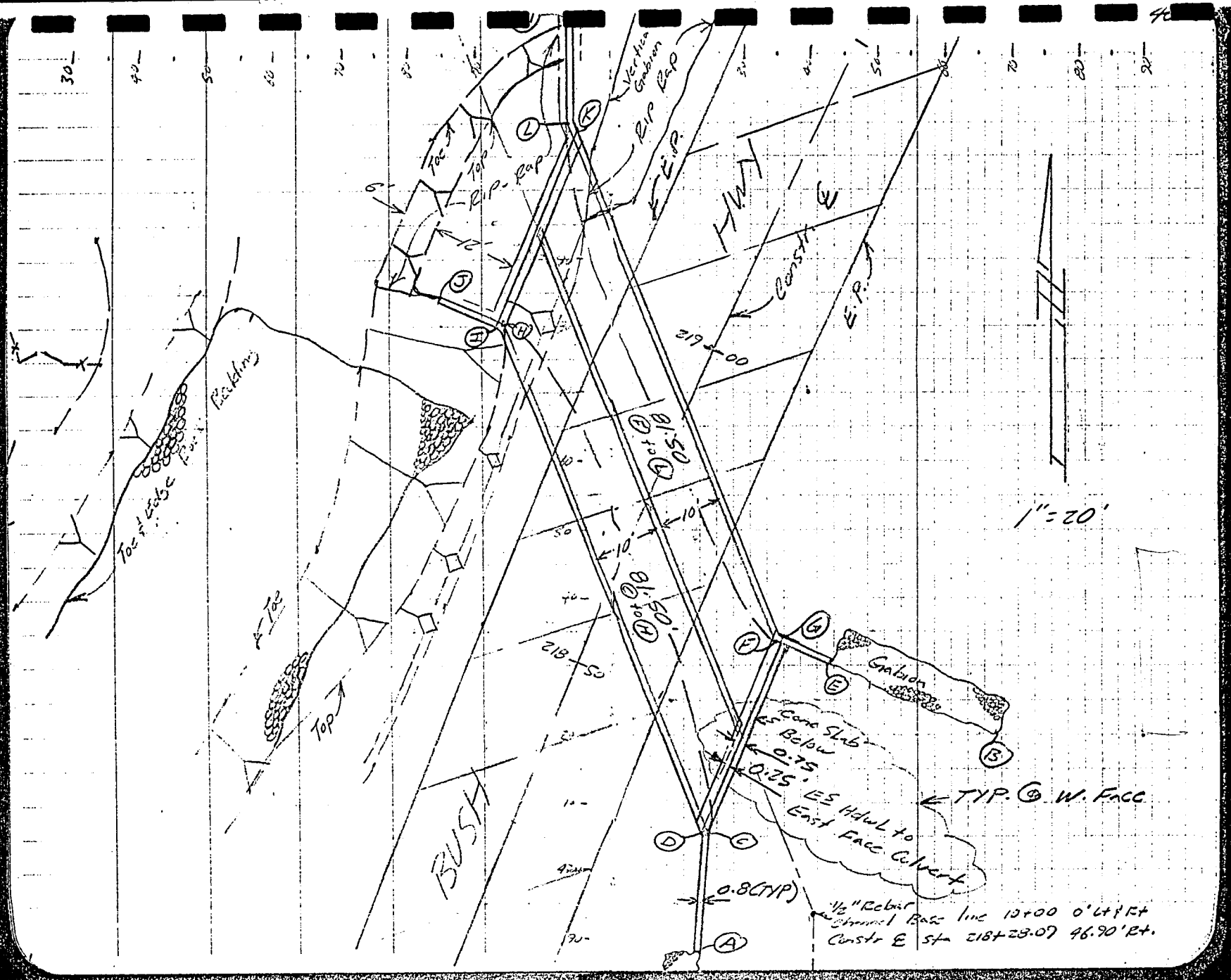

Vertical Gabion
Rip Rap
E.P.
HWY
Constr. ℄
E.P.
Toe
Top
Rip-Rap
6'
12'
219+00
81.50 ⓐ to ⓗ
10'
10'
81.50 ⓗ to ⓐ
218+50
Toe & Edge Road Bedding
Toe
Top
BUSH
Gabion
Cone Slab Below
0.75
0.25
ES Hdwl to East Face Culvert
TYP. ⓖ W. Face
0.8(TYP)
1/2" Rebar
Channel Base line 10+00 0' Lt & Rt
Constr ℄ sta 218+28.07 46.90' Rt.
1" = 20'

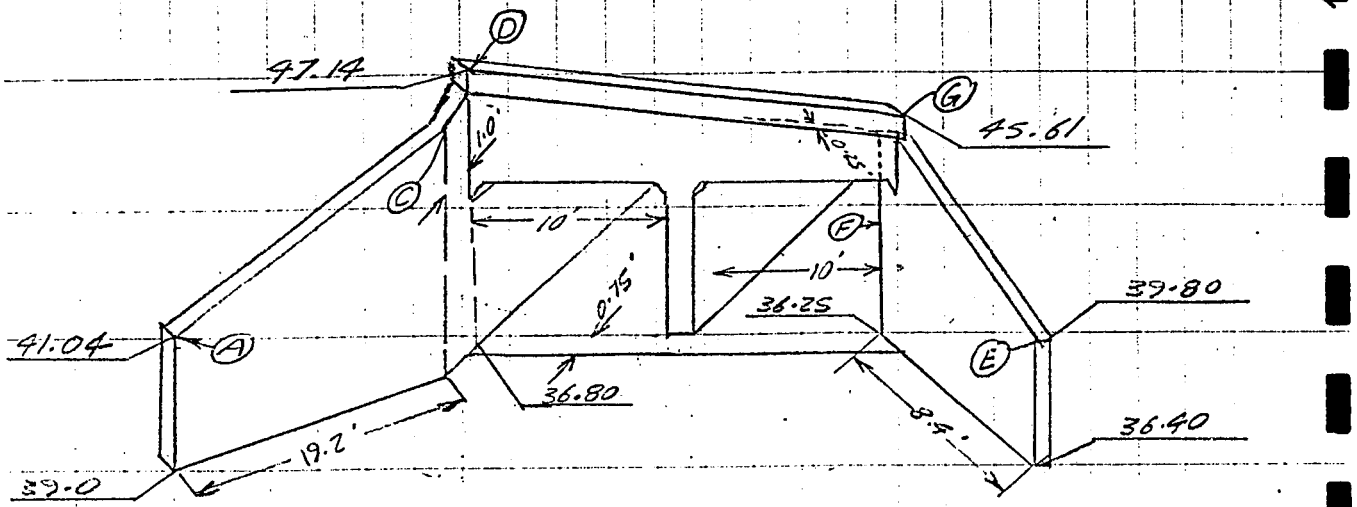

"Inlet Detail"
(Looking West)

"Outlet Detail"
(Looking East)

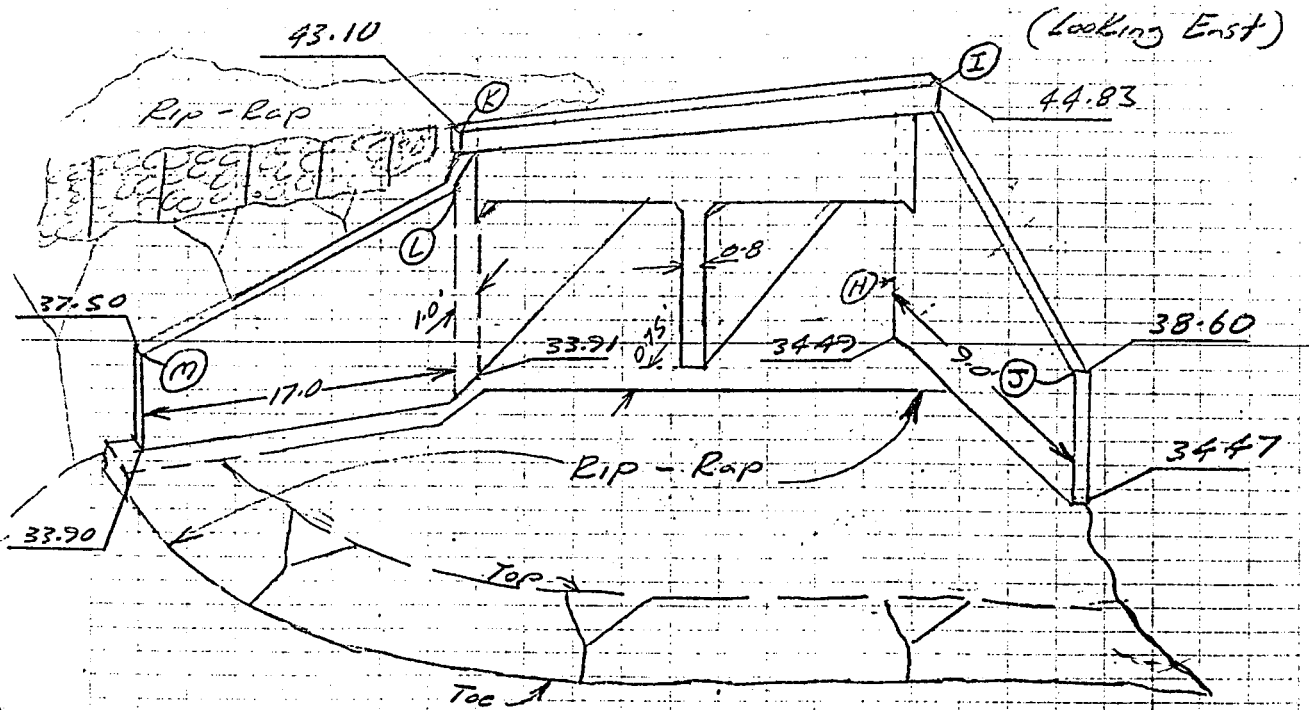

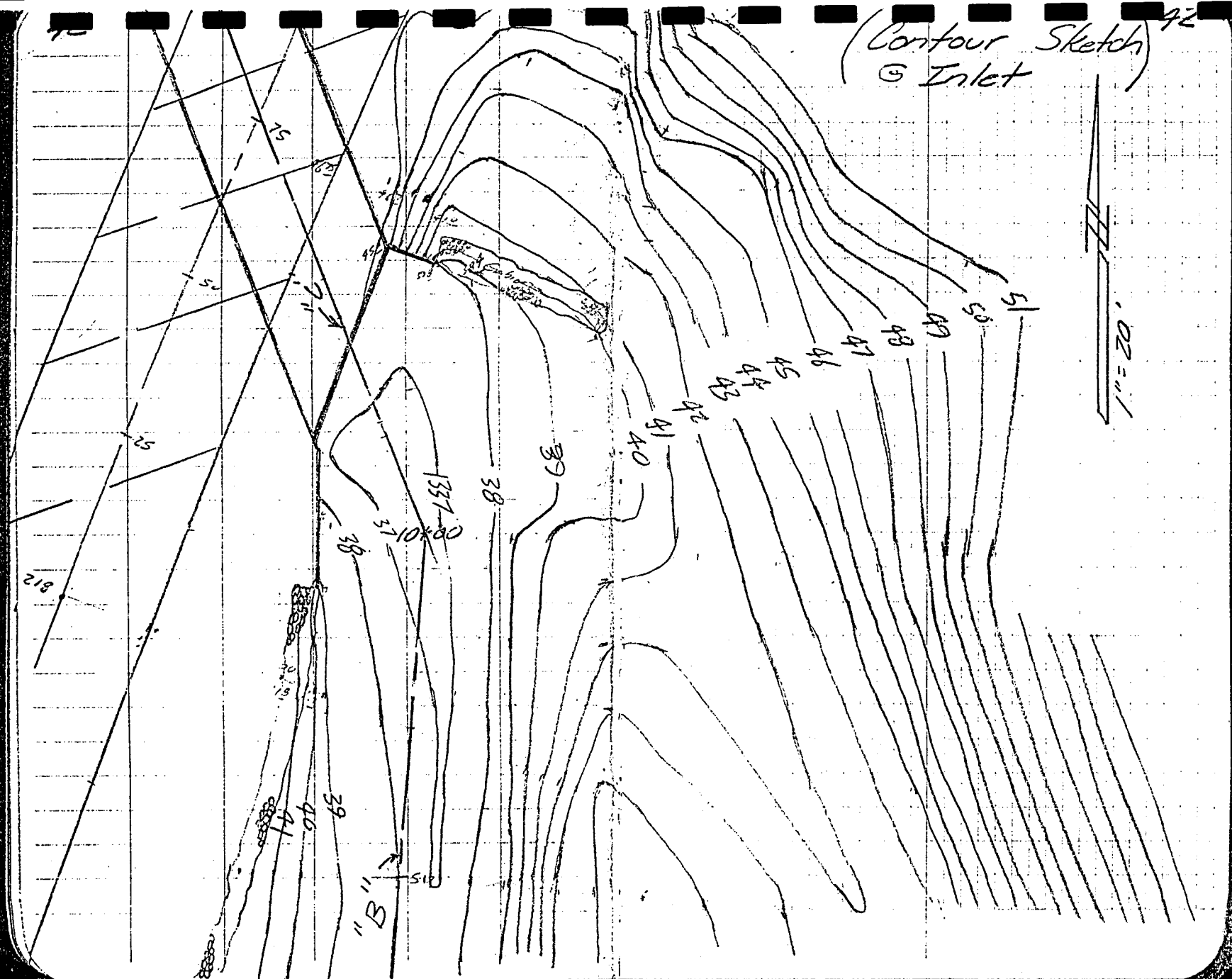
(Contour Sketch)
@ Inlet
42
1" = 20'
51
50
49
48
47
46
45
44
43
42
41
40
39
38
37
10+00
1337
"B"
75
50
25
212

3 5'92

3 5'92

3 5'92

3 5'92

3 5'92

3 5'92