DESIGN DEVELOPMENT REPORT

FOR THE

RANCHO SANTA FE RESERVOIR AND BOOSTER PUMP STATION

PREPARED FOR THE

CITY OF AVONDALE

Registered Professional Engineer (Civil)
CERTIFICATE NO.
27807
RONALD L.
ABLIN
Date Signed 5/28/96
ARIZONA, U.S.A.

MAY, 1996

WILSON
& COMPANY

DESIGN DEVELOPMENT REPORT

FOR THE

RANCHO SANTA FE RESERVOIR AND BOOSTER PUMP STATION

PREPARED FOR THE

CITY OF AVONDALE

Registered Professional Engineer (Civil)
CERTIFICATE NO.
27807
RONALD L.
ABLIN
Date Signed 5/28/96
ARIZONA U.S.A.

WILSON & COMPANY

9831 S. 51st Street
Suite C-119
Phoenix, AZ 85044
(602) 893-8860

MAY, 1996

WCEA #95-110-41601

TABLE OF CONTENTS

SECTION		PAGE
SECTION 1.0 - PROJECT DESCRIPTION		1
SECTION 2.0 - DESIGN CRITERIA		2
SECTION 3.0 - POTABLE WATER SUPPLY		3
	Figure 3-1 - Supply Wells and Delivery Pipeline	follows 3
3.1	Well Site No. 10	3
	Figure 3-2 - Existing Well No. 10	follows 3
	Figure 3-3 - Pump Curve Well No. 10	follows 3
3.2	Well Sites 11 and 12	4
3.3	Supply Pipeline	4
	Table 3-1	5
3.4	Water Supply Operation	5
3.5	Future Supply Modifications and Operation	6
SECTION 4.0 - WATER STORAGE TANK		8
	Figure 4-1 - Overall Production Facility	follows 8
4.1	Storage Tank Construction	8
	Figure 4-2 - Reservoir Detail	follows 8
4.2	Tank Operation	8
	Table 4-1	8
4.3	Future Tank Modifications and Provisions	9
SECTION 5.0 - BOOSTER PUMP STATION		
	Figure 5-1 - Booster Station Plan	follows 10
5.1	Pumps	10
5.2	Chlorine Disinfection	10
	Figure 5-2 - Disinfection System	follows 10
5.3	Miscellaneous Features	11
5.4	System Operation	12
SECTION 6.0 - SITE DRAINAGE		13
SECTION 7.0 - ELECTRICAL		14
7.1	Electrical Equipment	14
7.2	Controls	14
7.3	Alarms	14
7.4	Lighting and Receptacles	15

SECTION 8.0 - PRELIMINARY CONSTRUCTION COST ESTIMATE 16

Table 8-1 - Construction Cost Estimate 16

APPENDIX A - REFERENCED DOCUMENTS

APPENDIX B - CATALOG CUTS

SECTION 1.0

PROJECT DESCRIPTION

The City of Avondale is experiencing growth which requires that the existing potable water distribution system be evaluated and expanded to meet the future needs of the City's residents. To anticipate and meet the future system demands, the City has initiated the development of a City-wide water masterplan and concurrently is developing an additional potable water supply. The services of Wilson & Company have been contracted to evaluate and renovate three existing wells and design a reservoir and booster station to provide the additional potable water supply.

On October 27, 1995 a letter report was submitted to the City detailing the preliminary construction alternatives for the water production facility. This report included alternatives and recommendations for the storage tank material, booster station configuration, and the well pump to waste location. One additional report, as requested by the City, was submitted on November 13, 1995 to expand the storage tank evaluation to include alternate tank sizes and the associated cost for operation and maintenance. Both reports are included in Appendix A.

This report details the proposed system design and operation for the new water production facility. The facility will include the following primary construction items:

1. Rehabilitate City of Avondale Well Sites 10, 11, and 12 to provide potable water supply.

2. Extend the existing water supply line from the City wells to the new reservoir and booster station site.

3. Construct a new potable water storage tank with provisions to double capacity in the future.

4. Construct a new booster station to meet current demand with provisions to double capacity in the future.

5. Construct a distribution main from the booster station to the City's distribution system at the intersection of Rancho Santa Fe Boulevard and McDowell Road.

The demand for potable water is steadily increasing within the City of Avondale. Under current conditions, the existing potable water system can meet the demand. However, under peak summer conditions, the amount of available supply is limited. This is especially true if one of the main production wells is removed from service. Under these conditions, as was the case last summer, the City is forced to activate lower quality wells to meet the peak system demand. To eliminate potential problems this summer, the Rancho Santa Fe Water Production Facility is scheduled to be on-line by November 1996.

SECTION 2.0

DESIGN CRITERIA

The water supply facility will need to meet both current and future distribution system requirements. Accordingly, the design and construction will provide for the current demand with provisions for expanding the facility to double capacity. All design will be in accordance with Maricopa Association of Governments Standards and the Arizona Department of Environmental Quality Engineering Bulletin 10.

The current system operating conditions which will be required are:

Firm Pumping Capacity	2000 gpm
Peak Pumping Capacity	4000 gpm
Distribution System Operating Pressure	77 psi
Storage Volume	1 Million Gallons

The future system operating conditions which will be required are:

Firm Pumping Capacity	6000 gpm
Peak Pumping Capacity	8000 gpm
Distribution System Operating Pressure	77 psi
Storage Volume	2 Million Gallons

SECTION 3.0

POTABLE WATER SUPPLY

Potable water will be supplied by the existing City of Avondale Well Sites 10, 11, and 12. These wells are located along the west bank of the Agua Fria River between Thomas Road and McDowell Road. The three wells were originally drilled to provide irrigation water for the local agricultural fields. These fields have since been purchased and residential construction is now in the final phases of development.

When the land was purchased by the developer, the irrigation wells and water rights were included. These wells, and the associated water rights, were subsequently given by the developer to the City of Avondale. The City has converted Well Site 10 to provide potable water directly to distribution system and is currently awaiting county approval. Well Site 12 is currently not in service and Well Site 11 is being used to irrigate the remaining agricultural land. The use of Well 11 for irrigation will be required through February 1996.

The water quality at each well was tested on January 7, 1994. All three wells produced water with contaminant levels below the maximum levels mandated by the Safe Drinking Water Act with the exception of Well 11 which had a nitrate level of 11 mg/L (The maximum allowable is 10 mg/L).

The proposed supply wells and delivery pipeline are shown in Figure 3-1.

3.1 Well Site 10

Well Site 10 is located just south of Thomas Road west of the Agua Fria River. This site was recently converted by the City from an irrigation to potable water supply well. The site is currently providing water to the distribution system at the 12-inch main located directly north of the well site at Thomas Road. The primary well features include the associated piping and valves, chlorination, and a sand separator as illustrated in Figure 3-2. The pump curve for the existing Well Site 10 is shown in Figure 3-3.

The renovation at Well Site 10 includes:

- Connection of well site to the supply pipeline located directly south of the site.
- Removal and relocation of the chlorination facility.
- Adjustment of the pressure sustaining valve to correlate with the supply pipeline operating conditions.
- Final site grading and preparation for perimeter wall construction by others.
- Installation of a backup generator

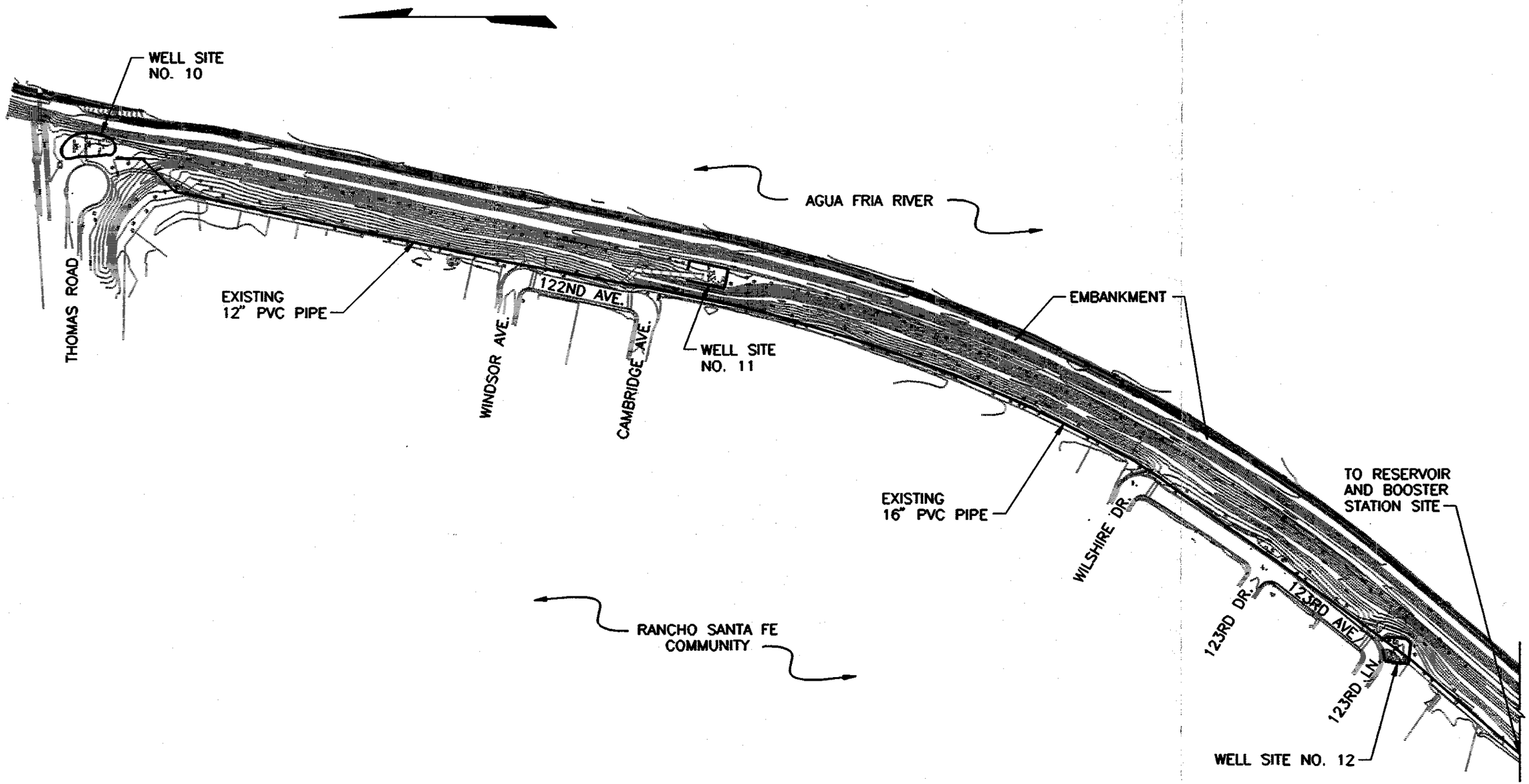

WILSON & COMPANY

FIGURE 3-1
SUPPLY WELLS
AND DELIVERY PIPELINE

DSGN TAH	DR. AJS	CK. RLA
FILE 95-416	DATE 01-96	SHEET

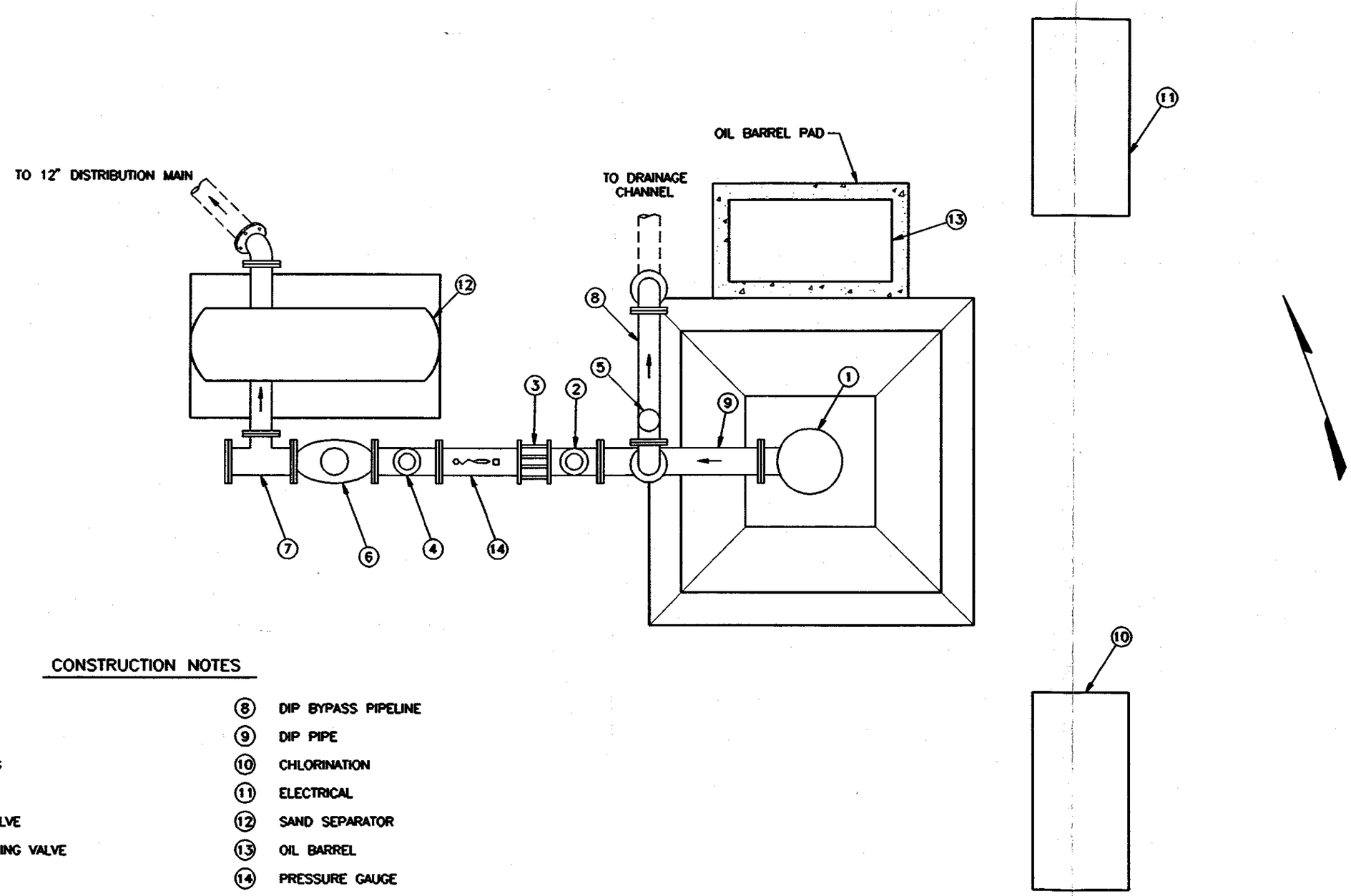

CONSTRUCTION NOTES

1. WELL
2. AIR/VACUUM VALVE
3. FLEXIBLE COUPLING
4. FLOW METER
5. PUMP CONTROL VALVE
6. PRESSURE SUSTAINING VALVE
7. TEE
8. DIP BYPASS PIPELINE
9. DIP PIPE
10. CHLORINATION
11. ELECTRICAL
12. SAND SEPARATOR
13. OIL BARREL
14. PRESSURE GAUGE

WILSON & COMPANY

FIGURE 3-2
EXISTING WELL NO. 10

DSGN	DR.	CK.
TAH	CTL	RLA
FILE 95-416	DATE 01/96	SHEET

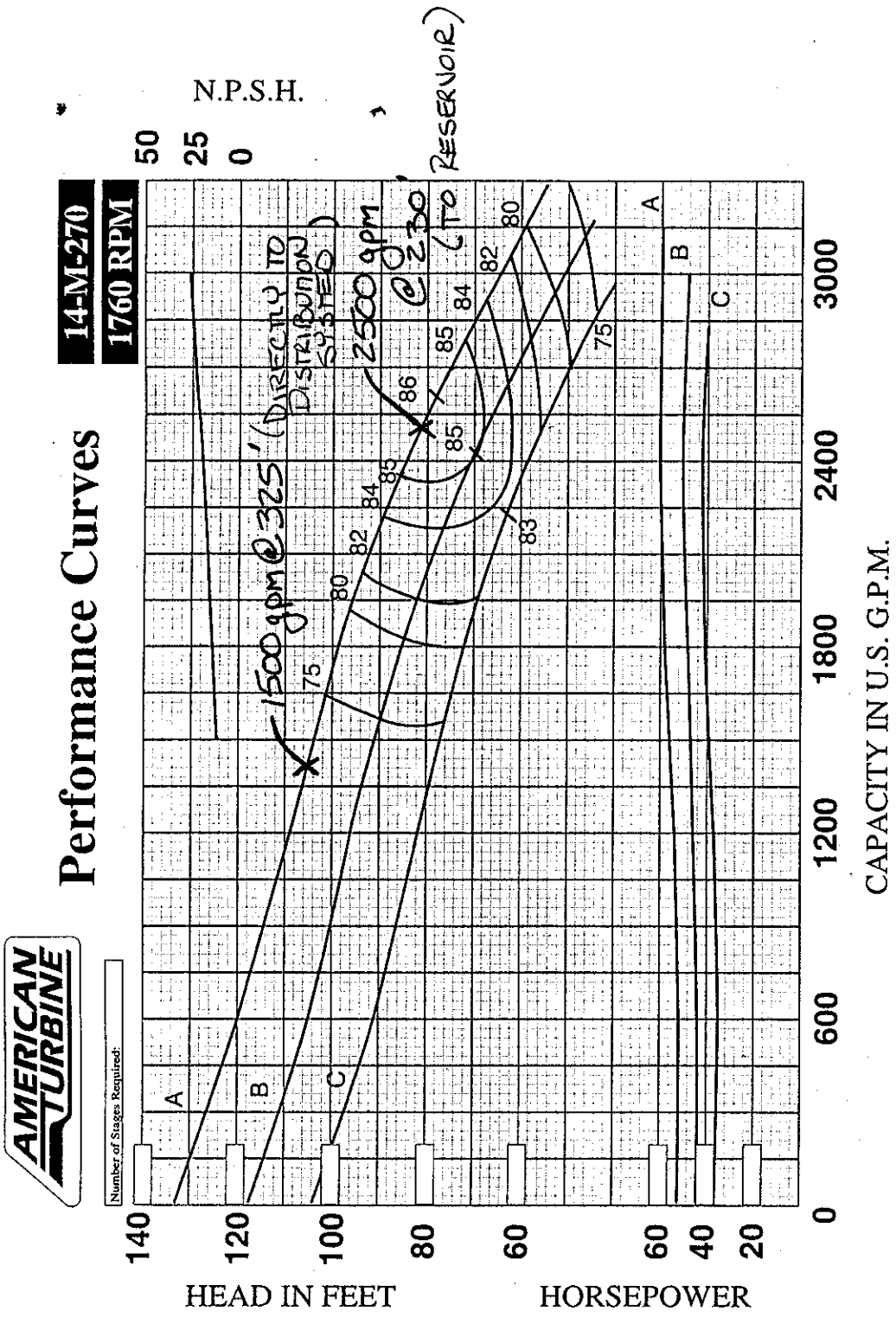

WILSON & COMPANY

FIGURE 3-3
PUMP CURVE WELL 10

DSGN TAH	DR. CTL	CK. RLA
FILE 95-416	DATE 01\96	SHEET

The chlorine facility will be removed from the site for use at another production facility in the City. No modifications to the well pump or motor are required since the well was designed to efficiently operate under the proposed head and flow conditions. Accordingly, in order to operate all supply wells concurrently, the renovation of Well Sites 11 and 12 will need to correspond with the operational parameters of Well Site 10.

3.2 Well Sites 11 and 12

A field investigation of Well Sites 11 and 12 is currently in progress. The investigation will determine the condition of the existing wells and the modifications and renovations which will be required to convert the wells from irrigation to potable water supply. Since the information on the existing wells is not yet available, the final site modifications will be presented in a future document. The expected capacity of Well Site 11 is 1500 gpm and Well Site 12 is 2500 gpm.

It appears at this time that the renovation of Well Sites 11 and 12 will not be completed by the time the reservoir and booster station will be put on-line. There has been multiple complications during the investigation of the two sites including problems with vehicle access to the site, requirements for continued service for the agricultural fields, and extreme sedimentation in the well casings. Additionally, further investigation may be required prior to renovating the wells.

To insure that the water production facility is on-line by November 1996, it is recommended that only Well Site 10 be converted during the initial phase of construction. The water production facility would operate using the booster pumps and storage reservoir in conjunction with the one 2500 gpm supply well. The renovation of Well Sites 11 and 12 will be performed as a separate construction contract once sufficient information and direction is established.

3.3 Supply Pipeline

The existing supply pipeline extends from 30 feet south of Well 10 to approximately 1700 feet south of Well Site 12. The pipe is a 12-inch from south of Well Site 10 to Well Site 11 and a 16-inch from Well Site 11 to end. The completed supply pipe will connect all three wells and slope downhill to the storage tank. The primary construction includes:

- Extension of the 12-inch PVC pipe north to Well 10.
- Installation of a new 20-inch PVC pipe from the south end of the existing pipe to the reservoir site.
- Installation of a pressure sustaining valve prior to the storage tank to maintain water in the supply pipe.

The operating conditions experienced by the individual pipe sections are detailed in Table 3-1.

Table - 3-1						
Pipe Section	Flow (gpm)		Velocity (fps)		Headloss (ft/100 ft)	
	Min	Max	Min	Max	Min	Max
Well 10 to Well 11	2500	2500	7.09	7.09	1.61	1.61
Well 11 to Well 12	1500	4000	2.39	6.38	0.15	0.95
Well 12 to End of Existing 16-inch Pipe	1500	6500	2.39	10.37	0.15	2.33
20-inch Pipe	1500	6500	1.39	6.02	0.04	0.62

Although the existing pipe south of Well 12 is a 16-inch, the pipe to be added under this contract should be a 20-inch. The larger pipe will prevent the excessive velocities and headloss experienced by the 16-inch pipe during the concurrent operation of all three wells. During the operation of Well Sites 10 and 12 only, the 16-inch diameter pipe will operate sufficiently with an approximate velocity of 7.98 fps and headloss of 1.43 ft/100 ft. Depending on the outcome of the well investigation, the City may elect to deepen and increase the capacity of Well Site 11 from 1500 gpm. If City is intending on operating all three wells, the 16-inch line should be replaced with a 20-inch pipe or supplemented with an additional 16-inch parallel line.

3.4 Water Supply Operation

The three existing City wells will operate concurrently to produce a combined peak supply flow to meet current and future system demand. Due to the existing site conditions discussed in the previous section, specific procedures for the activation and control of the supply system are required.

System Operational Control. The water supply pipeline slopes downhill from Well 10 to the storage tank. If the pipe is unrestricted, the water in the supply pipe would drain to the storage tank after well shut down and excessive amounts of air would need to be expelled during reactivation of the well. In order to prevent the pipe from draining, a pressure sustaining valve is located prior to the storage tank. This valve is closed when the wells are off and is opened once the wells are activated and the pressure in the line exceeds 10 psi.

Pump to Waste Operation. Pump to waste is provided for each well to waste the initial water produced from the well. The initial water produced from the well typically contains oil from the pump shaft and sand which has infiltrated the casing during pump shut down. The actual pump to waste operation and discharge locations are different for each well site.

- *Well Site 10.* The water produced during the pump to waste operation at Well Site 10

is currently discharged to a storm water channel located north of the well site. The flow is directed using a pump control valve at the well site. This pump to waste procedure is maintained and utilized in the new system operation.

- *Well Site 11.* The Well Site 11 pump to waste operation is controlled using a pump control valve and pressure sustaining valve configuration much like the one previously installed at Well Site 10. The discharge is adjacent to the well site in a drainage channel which flows to the community retention facility. This location is near residential homes and is landscaped with decomposed granite. Well Site 11 is not intended to be used frequently due to high nitrate concentrations and potential impact to the residencies and the landscaping will be minimized. However, as detailed in the following Well Site 12 discussion, the City may elect to discharge directly to the Agua Fria River. The operation of Well 11 should only be used in conjunction with one of the other wells due to the high nitrate concentrations.

- *Well Site 12.* The original concept for Well Site 12 was to convey the pump to waste water through the 16 and 20-inch supply pipeline and discharge in the existing drainage channel at the reservoir and booster station site. Under this scenario, when Well 12 is activated a valve at the reservoir site would open and the water from the supply line would be discharged in the drainage channel. The initial water discharged would not contain water from the pump to waste operation, but would consist of the supply water which remained in the supply line after shutdown of the wells. Wasting of water would need to occur until both the water in the pipe line and the pump to waste water had been purged from the supply line. Accordingly, the wasted water would include not only the pump to waste water but also the large volume of good water in the supply line between Well Site 12 and the reservoir site.

  Given the current situation, a better alternative for pump to waste discharge is to provide separate pump to waste lines from both Well Sites 11 and 12 to the Agua Fria River. Originally, this alternative was not selected due to the amount of time that it could take to obtain an Army Corps of Engineers 404 Permit. However, as detailed earlier, it is recommended that Well Site 10 be the only well to initially supply water to the reservoir and booster station. This will allow the necessary time to obtain a 404 Permit for construction within the floodplain of the Aqua Fria River. This operation will better suit the current and future requirements and will allow alternating the lead and lag wells.

Well Activation Control. The activation of the wells is controlled by the water surface level in the storage tank. The wells are activated based on the need for additional water supply due to an increased demand in the water system. Level controls are installed in the storage tank at the set-points detailed in Section 4.0. The wells are activated and controlled by radio signals from the reservoir and booster station site to each well.

3.5 Future Supply Modifications and Operation

Under future operating conditions the City has requested the ability to alternate the three City wells to supply the reservoir and booster station. If only Well Site 10 is connected to the

system under the current contract, the renovations to Well Sites 11 and 12 will need to performed in the near future. Specific modifications and recommendations will be detailed in a future design document for the well renovations. Additionally, with all three wells operating, the 16-inch supply pipe should probably be replaced or supplemented with a parallel pipe to limit the headlosses experienced.

SECTION 4.0

WATER STORAGE TANK

Storage at the water production facility will ultimately provide 2 million gallons of reserve capacity. The storage will be provided by two 1 million gallon steel tanks located west of the Agua Fria River and north of McDowell Road. The overall water production facility is illustrated in Figure 4-1. Under the current contract only the western tank will be constructed, however, provisions for the installation of the second tank will be provided.

4.1 Storage Tank Construction

The water storage tank is an above ground 1 million gallon steel tank with a concrete ringwall foundation as illustrated in Figure 4-2. The tank is 16 feet high and 104 feet in diameter. All tank construction is to be in conformance with AWWA Standard D100 for potable water storage tanks. Both the interior and exterior surfaces of the tank are painted and cathodic protection is provided in accordance with AWWA Standard D102. All tank connections are at flanged joints installed during the manufacturing of the tank.

4.2 Tank Operation

The storage tank operation is set to make full use of the tank volume, insure adequate reserve capacity at all times for the distribution system, and limit the operation of the supply wells. The supply pipeline connects on the east side of the tank through an above grade inlet and water is delivered from the west side of the tank to the booster pumps. The tank is continuously disinfected to insure adequate chlorine residual using the chlorine recirculation system detailed in Section 5.0. The full tank water depth is fifteen feet with one foot of freeboard. Tank overflow to the adjacent drainage channel is provided above this elevation to prevent overfilling the tank. The operating levels in the tank are listed in Table 4-1.

Table 4-1

Level (Ft)	Operation
15	Tank Overflow Elevation
14.5	Well Site 12 Off
14.0	Well Site 10 Off
13.5	Well Site 11 Off
12.5	Well Site 12 On
11.5	Well Site 10 On
10.5	Well Site 11 On
1.0	Low Water Level Shutoff

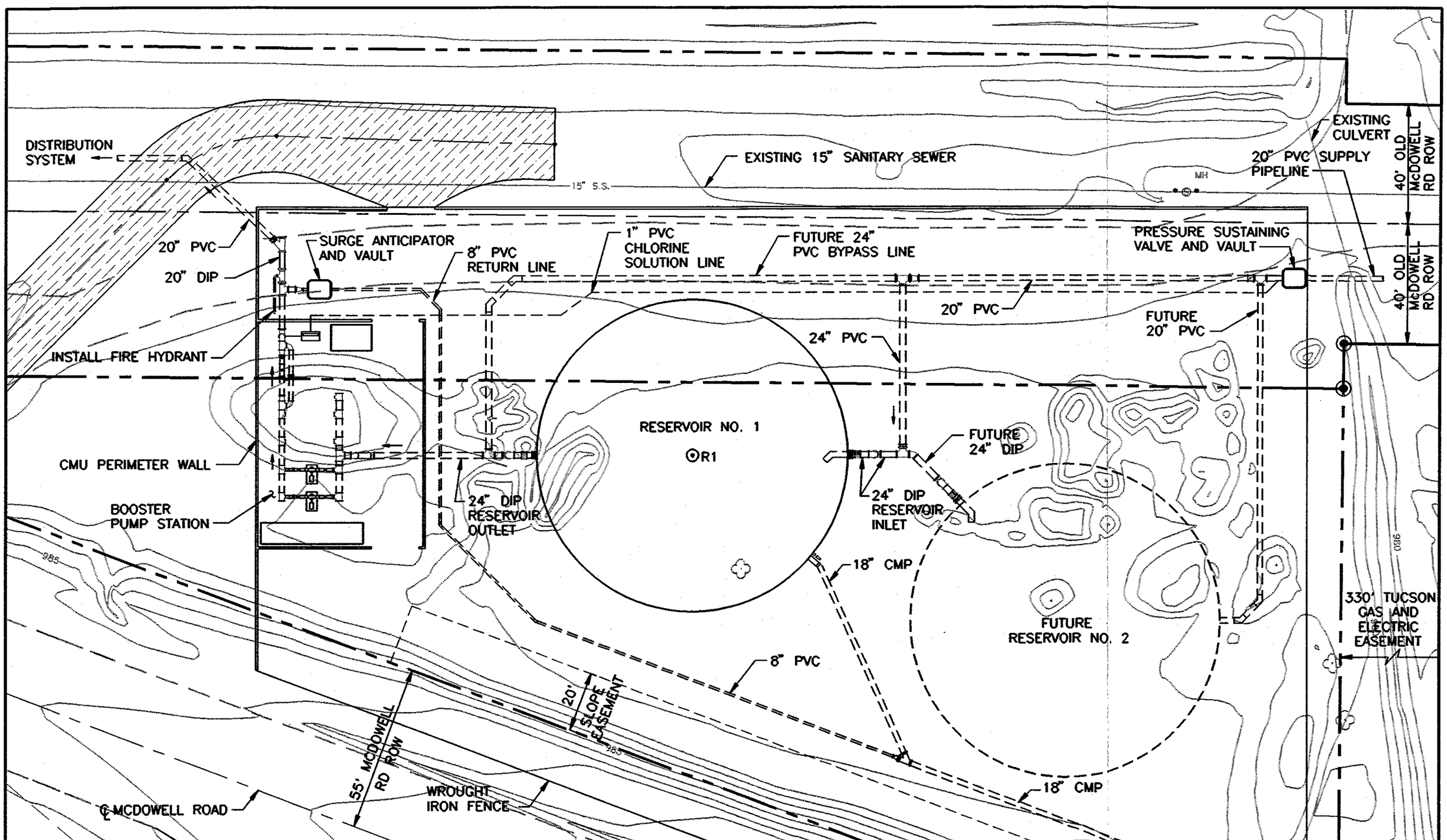

WILSON & COMPANY

CITY OF AVONDALE
OVERALL PRODUCTION FACILITY

FIGURE 4-1

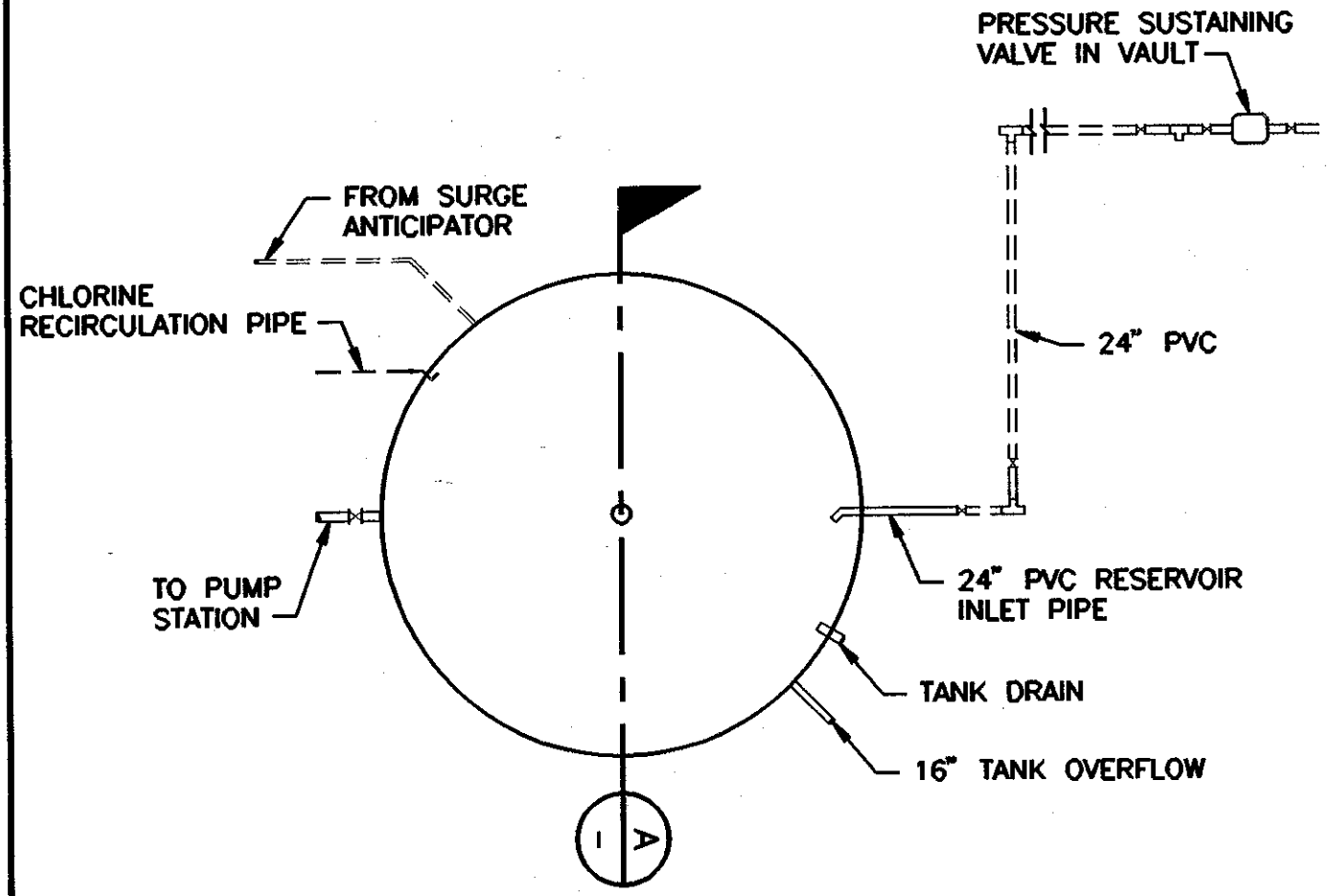

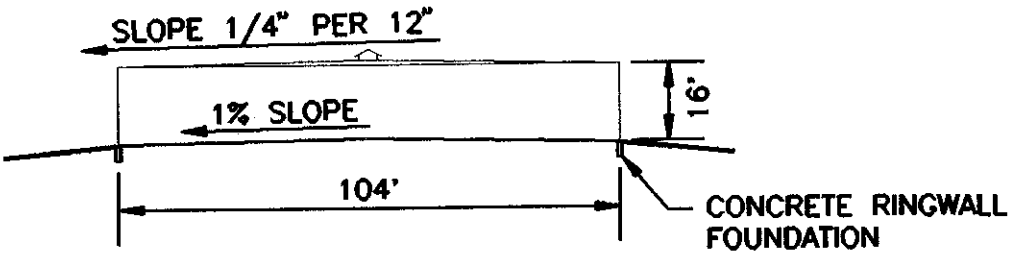

SECTION A

NOT TO SCALE

WILSON & COMPANY

FIGURE 4-2
RESERVOIR DETAIL

DSGN TAH	DR. CTL	CK. RLA
FILE 95-416	DATE 01\96	SHEET

NAME: G:\PROJECTS\95416\DWG\REPORT\95416F12.DWG DATE: APR 23, 1996 TIME: 3:32 PM

4.3 Future Tank Modifications and Provisions

Provisions for the future include the installation of a second 1 million gallon steel tank and a second chlorination and recirculation system. The two reservoirs will be piped to operate in series with the ability to take one reservoir out of service while continuing to serve using the remaining reservoir. Provisions for the installation of the second tank include tee connections and larger pipe sizes to facilitate and limit construction during the future expansion.

4.4 *Land Acquisition*

Currently the site for the proposed booster pump station and reservoir is Maricopa County Right-Of-Way (ROW). For the City of Avondale to acquire this property, an inter-governmental agreement (IGA) will be established between the County and the City.

SECTION 5.0

BOOSTER PUMP STATION

The booster pump station is located directly west of the storage tanks. The station is designed to provide pumping capabilities with provisions for expansion in the future as illustrated in Figure 5-1. Under the current contract, the booster station will consist of two variable speed booster pumps, one recirculation pump, chlorine disinfection, flow meter, a diesel generator for backup power, and the associated electrical controls.

5.1 Pumps

The current system contains two variable speed horizontal splitcase pumps. Each pump has a variable frequency drive which allows the pumps to alternate as lead and lag to limit the amount of service time for each pump. Additionally, if one pump is out of service, the second pump will be available to operate and meet system demands up to the peak flow of the pump. If only one pump was capable of operating at variable speeds, it would provide substantially more service, would require more frequent maintenance and repairs, and the entire facility would need to be removed from service each time the lead pump was out of service.

The two pumps each operate between approximately 200 to 2000 gpm. The speed at which the pumps operate is determined based on the demand and the associated pressure in the distribution system. The design operating condition for delivery to the distribution system is 77 psi in accordance with preliminary indications from the water system masterplan consultant. However, this operating condition will be fine-tuned and altered based on actual operating conditions and the final results of the masterplan.

5.2 Chlorine Disinfection

The system demand, storage time, and temperature experienced at different times of year produce varying chlorine decay rates. To insure that adequate chlorine residual is provided, the disinfection system must be flexible enough to analyze and adjust dosing levels to meet the varying decay rates. A system to continuously monitor the residual level in the tank and adjust the dosing level has been included to successfully, and automatically, maintain residual chlorine.

Disinfection using chlorine gas will be provided to the water in the storage tank. The overall disinfection system is illustrated in Figure 5-2. The system consists of the following primary components:

- *Recirculation Pump and Pipeline*. The implementation of a recirculation system allows for continuous monitoring of the chlorine residual in the storage tank. Water is continuously pumped and returned to the tank by a 250 gpm pump. The 250 gpm pump draws water from the 24-inch header and returns water to the tank through a 6-inch pipe. Sample water is removed from the 6-inch pipe at a rate of 200 to 300

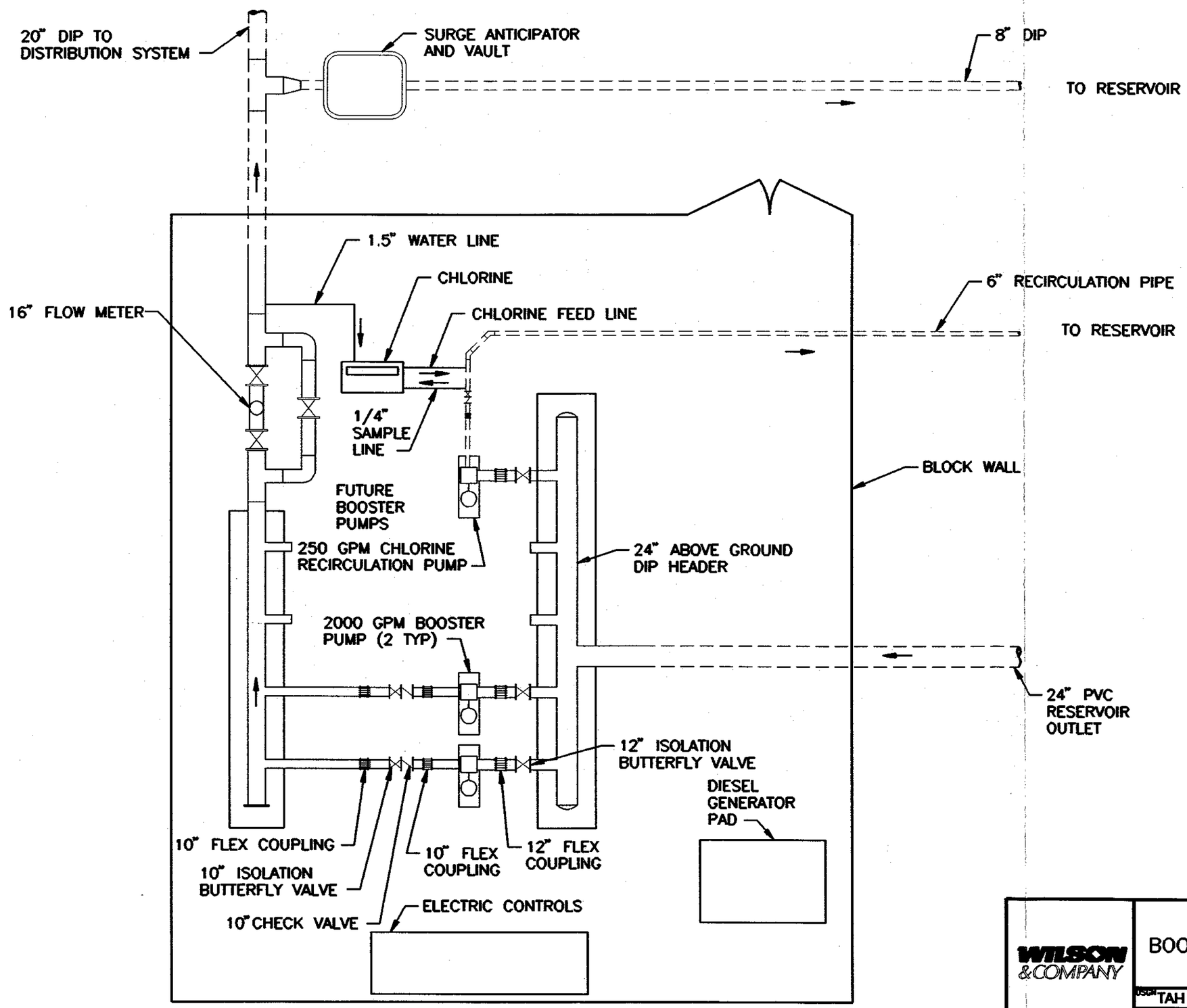

WILSON & COMPANY

FIGURE 5-1
BOOSTER STATION PLAN

DSGN TAH	DR. AJS	CK. RLA
FILE 95-416	DATE 01-96	SHEET

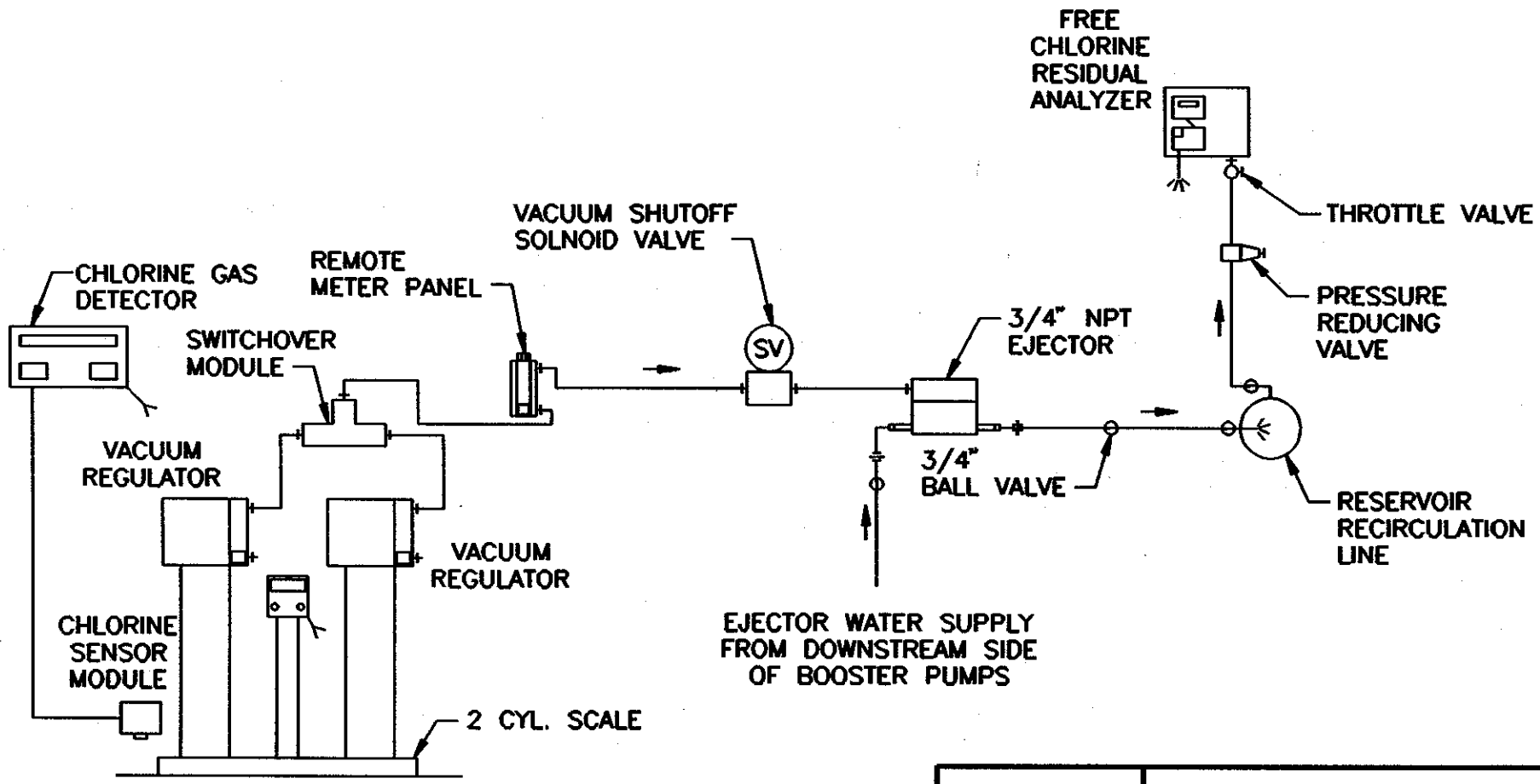

WILSON & COMPANY

FIGURE 5-2
DISINFECTION SYSTEM

DSGN TAH	DR. CTL	CK. RLA
FILE 95-416	DATE 01\96	SHEET

ml/minute and is analyzed using a chlorine analyzer. The chlorine analyzer measures the amount of free chlorine and the results are used to automatically adjust the amount of chlorine being added to the tank by the chlorination unit.

- *Chlorination Unit*. Chlorine will be added at the storage tank. The amount of chlorine added is determined using the continuous data collected by the chlorine analyzer to produce a chlorine residual of 1.2 ± 0.2 ppm in the storage tank. The 1.5-inch PVC water supply line for the chlorination system originates downstream of the booster station in the flow meter vault. This allows the 77 psi pressure in the distribution system to be used to meet the head requirements of the chlorination system.

  The 1.5-inch water supply line is connected to the chlorination system at the ejector. A vacuum is produced in the ejector as the supply water passes through the venturi type nozzle and throat combination. This vacuum pulls and dissolves the chlorine in the supply line water. The chlorine supply line is then injected in to the 6-inch recirculation line using a diffusor prior to discharging into the storage tank.

The chlorination system is in a self-contained weather-tight chlorination house. This unit contains all the chlorination equipment including the chlorine cylinders, electrical controls, chlorine analyzer, ejectors, and all other required equipment.

5.3 Miscellaneous Features

Flow Measurement. A flow meter is provided on the discharge line of the booster station. A turbo meter is provided to measure the wide range of flows, approximately 200 to 8000 gpm, which will ultimately be produced by the booster station. The meter records instantaneous flow and the total volume produced at the booster station. Under current conditions, only the total volume information is recorded at the meter. If desired in the future, the meter can be modified to record historical flow and transmit the recorded information to a remote location.

Maintenance and Control Building. Ultimately, the City would like to provide a maintenance and control building at the reservoir and booster station site. This building will contain an area for electrical controls, a systems control room, one to two offices, lavatory and shower facilities, and a maintenance and repair shop. The building will be located adjacent to the booster pump site. However, the current funding for this phase of the project is not sufficient to cover the associated costs for design and construction. Provisions to construct the building in the future are included in the overall reservoir and booster station site plan.

Noise Abatement. The location of the booster pumps should not have a noise impact on the existing residents. However, future development northwest of the site will be substantially closer to the pump station and noise from the booster pumps may be an issue. To limit any impact, a perimeter wall is included around the booster pump station site. This wall is designed to match the other block walls in the community for aesthetic purposes.

Standby Power. Backup power for the booster station is provided by a diesel generator. The generator is located within the perimeter block wall for noise abatement purposes. The

generator will provide backup power for the two initial pumps only. When the additional booster pumps are installed in the future, the generator will need to be upgraded or separate backup power will need to be provided.

5.4 System Operation

The Rancho Santa Fe Water Production Facility will most likely be operating in the most northern zone in Avondale, pending results of the water masterplan. The other primary production facility in that zone, reservoir and booster site 6, is equipped with a hydropneumatic tank to supply the zone during periods of low demand. Accordingly, the Rancho Santa Fe Facility is not required to meet the very low demand periods and during these periods the production facility will go off line.

The facility will initially produce at variable rates between approximately 200 to 4,000 gpm to meet the system demand. The amount of flow produced will be determined using the pressure sensor and transmitter which is located on the discharge line immediately downstream of the flow meter. System pressure is read at this location and transmitted to the pump controls. As demand increases in the system, the pressure drops, and pump speed is increased to increase the flow supplied.

SECTION 6.0

SITE DRAINAGE

The reservoir and booster station site has multiple drainage considerations which need to be addressed. The existing site contains a major drainage channel which is used to convey the stormwater runoff from the areas north of McDowell Road to the four 48-inch culverts and ultimately to the Agua Fria River. The drainage area is bound by Thomas Road (North), Dysart Road (West), the Agua Fria River (East), and McDowell Road (South). The majority of the land in this area is, or was, farmland. The predominant flows to the drainage channel are the runoff from Dysart and McDowell Road and overflows from the Rancho Santa Fe detention facility.

The reservoir and booster station site is located in an area which is classified by the Federal Emergency Management Agency (FEMA) as a special flood hazard area inundated by 100-year flood. The specific classification is Zone AH which means that the area experiences flood depths of 1 to 3 feet (usually areas of ponding) and that a base flood elevation has been determined. The flooding occurs due to backwater conditions caused by the 100-year flood elevation and the lower elevations of both the four 48-inch culverts and the site. The base flood elevation is listed as 983 on the FEMA maps and as 983.34 in the 1990 Flood Insurance Study. In a letter from the City of Avondale, dated September 14, 1995, a discrepancy between the City and County datum was revealed and the flood elevation was revised, based on the City's datum, to 983.48.

The booster station is designed to limit any impact to the existing site drainage. The only modification to the main channel and the 48-inch culverts is the installation of a rip rap lining, near the culverts, to prevent erosion of the channel at the site due to water from the tank overflow, tank drainage, and the surge anticipator. The overall site elevation remains the same with the exception of the booster station. This facility will be raised 4 to 5 feet in elevation to a minimum elevation of 984.70 to prevent impact during a 100-year storm event. Fill material for these sites may be available from site excavation at the storage tank or will need to be imported.

SECTION 7.0

ELECTRICAL

7.1 Electrical Equipment

A service entrance section (SES) and distribution panel (DP) will be require for incoming utility power and power distribution at the booster pump station. The electrical equipment will consist of a 1000 amp, 480 volt SES, and a 1000 amp, 480 volt DP with multiple circuit breakers, and a power monitoring unit, a 400 KW Deisel generator, a 1000 amp, 480 Volt automatic transfer switch, two future 150 HP booster pumps with VFDs.

At well 10 there will be a 400 amp, 480 volt amin disconnect switch and a fused disconnect switch at the transformer primary feeder.

7.2 Controls

A programmable logic controller (PLC), connected to a pressure transmitter mounted on the discharge piping of the booster pumps, will be programmed to maintain a constant pressure ste point for the system. The PLC will start and stop the VFDs, automatically alternate the pumps, and adjust the VFD speeds in order to provide smooth and stable pressure control of the pump station. An alternate method of control will used a pressure switch to start and stop each booster pump. The pressure set points will manually adjustable. Each booster pump will be protected by a high discharge pressure switch. The Booster pumps will also be protected against lack of water through the reservoir's low level shut off signal from the ultrasonic level transmitter. The VFDs and the control cabinet, housing the PLC and radio, will require an air conditioner to protect their solid state circuitry, and will be installed in an air conditioned NEMA 3R electrical house.

The water storage reservoir will receive water from Well No. 10, 11, and 12. The water in the reservoir will be monitored by and ultrasonic level treasmitter. The reservoir level sensors will start and stop the well pump at Well No. 10 via radio communication from the booster station Master PLC to the wel PLC. The start and stop signals for the well pump No. 10 will open and close the associated chlorine feed valves at the booster pump station.

7.3 Alarms

The following alarms will be communicated to the "on call" personnel by the PLC and autodialer via phone lines:

- Booster and well pumps malfunction alarms
- Generator and chlorine feed valves malfunction alarms
- Reservoir high and low level alarms
- Discharge high and low pressure alarms
- Chlorine leak alarm

7.4 Lighting and Receptacles

The booster pump station's exterior lights (pole and wall mounted), will be controlled by a photocell, and will illuminate the exterior of the booster pump station. The lights (wall mounted and flood type) inside the pump station will be controlled by a motion sensor at each gate. Manual override swithces will be provided for both the booster pump station's exterior and interior lights. Several 120 volt, and 20 amp receptacles and a 240 volt, 20 amp receptacles will be located at different locations for convenience.

SECTION 8.0

PRELIMINARY CONSTRUCTION COST ESTIMATE

The estimated construction cost is summarized in Table 8-1.

Table 8-1 Construction Cost Estimate			
	Item	Sub Total	Total Cost
1.0	Well Site 10 Rehabilitation	$	$ 5,000
2.0	Well Site 11 Rehabilitation		150,000
3.0	Well Site 12 Rehabilitation		150,000
4.0	Supply Pipe Line		137,800
	12-inch PVC Pipe	1,500	
	20-inch PVC Pipe	100,000	
	24-inch PVC Pipe	5,500	
	Butterfly Valves	10,800	
	Pressure Sustaining Valve and Vault	20,000	
5.0	1 Million Gallon Storage Tank		310,000
6.0	Booster Station		395,000
	2500 gpm Pumps	52,000	
	Chlorination System	38,000	
	Valves, Piping, and Appurtenances	60,000	
	Electrical and Instrumentation	120,000	
	Standby Power	75,000	
	Site Work	50,000	
7.0	Distribution Pipe Line		47,500
	20-inch DIP	16,500	
	16-inch Flowmeter	15,000	
	Surge Anticipator Valve and Vault	9,000	
	Butterfly Valves	7,000	
8.0	Perimeter Wall		43,500
	8-foot CMU Wall	30,000	
	8-foot Wrought Iron Fencing	13,500	
Subtotal			1,238,800
Contingency (15%)			185,820
Total			$ 1,424,620

APPENDIX A

REFERENCED DOCUMENTS

CITY OF AVONDALE
INCORPORATED 1946
PUBLIC WORKS DEPARTMENT • 1211 SOUTH 4TH STREET • AVONDALE, ARIZONA 85323

September 14, 1995

RECEIVED
SEP 21 1995

Wilson and Co.
9831 S. 51st Street
Suite C-119
Phoenix, Az. 85044

ATTN: RON ABLIN, P.E.
PROJ: Rancho Santa Fe Reservoir/Booster Station
SUBJ: Flood Map

Dear Ron:

Enclosed please find a copy of the Flood Insurance Study, work map (sheets 6 and 7) covering the proposed project site. The map shows the site to be located in Zone AE.

It appears there is an 0.14′ discrepancy between City and County elevation datums. Both agencies refer to a brass cap in a hand hole at the intersection of Dysart Rd., and McDowell Road. The City's bench mark (point 101) is 994.12′. The County's bench mark (point RM 9) is 993.98′.

Therefore, the corresponding flood elevation using City datum would be 983.48′ (983.34′ + 0.14′). It appears the indicated site ground elevation using City datum would be 977.82′ (977.68′ + 0.14").

Obviously, potential flooding problems warrant further investigation in providing flood protection at this site.

Sincerely yours,

Jim Mitchell

Jim Mitchell, P.E.
Assistant Public Works Director

cc: Bill Bates
Jim Badowich

enclosure

fldmprsf

WILSON
&COMPANY

9831 S. 51st Street, Suite C-119
Phoenix, Arizona 85044
602-893-8860

Albuquerque
Colorado Springs
Denver
Kansas City
Lenexa
Phoenix
Salina
San Diego
Wichita

October 27, 1995

Mr. Jim Mitchell
CITY OF AVONDALE
1121 S. 4th Street
Avondale, AZ 85323

RE: Rancho Santa Fe Reservoir and Booster Station
WCEA File No. 95-110-416-01

Mr. Mitchell:

The following letter report details the findings of our initial investigation of alternatives for the Rancho Santa Fe Reservoir and Booster Pump Station. This analysis precedes the design memorandum and is intended to determine the most feasible option for some of the major issues which will be further developed in the design memorandum and contract documents. The items investigated are:

- Storage Tank Construction Material
- Pump to Waste Disposal
- Booster Station Configuration and Operation

Where possible, one alternate for each investigated item should be agreed upon to facilitate and expedite the development of subsequent design phases.

STORAGE TANK CONSTRUCTION MATERIALS

Four types of tanks were analyzed for the ground surface storage tank: steel; cast-in-place concrete; precast concrete; and prestressed concrete. Although each type of tank is capable of providing adequate service, the City has requested that the construction cost for each be evaluated to determine the most economic alternative. A summary of the estimated construction cost is listed in Table 1.

Table 1 - Storage Tank Costs		
	Estimated Construction Cost	
Storage Tank Material	0.5 MG Tank	0.75 MG Tank
Steel	$ 215,000	$ 260,000
Cast-in-Place Concrete	$ 310,000	$ 360,000
Precast Concrete	$ 350,000	$ 400,000
Prestressed Concrete	$ 350,000	$ 415,000

Based on these values alone, it appears that a steel tank is the most economical option for this project and tank size.

PUMP TO WASTE DISPOSAL

In converting the wells from irrigation to potable water production, a pump to waste cycle will need to be included to remove any sand, oil, and other materials which have settled in the well during shut down. Pump to waste water needs to be diverted from the potable water system and disposed of at a location adequate to manage the flow and volume of water produced. The production rate during the pump to waste operation will be at the operating rate of the wells, which currently is between 1500 and 3000 gpm, for approximately five to ten minutes. The disposal location for the water will need to be capable of handling these rates.

At the previously converted Well 10, pump to waste water is discharged to a drainage channel tributary to the Agua Fria River. Accordingly, no changes to the existing operation at this well should be performed. Three alternative methods are available for disposal of the pump to waste water from Well Sites 11 and 12

- **Individual pump to waste lines from the well sites to the Agua Fria River.** In this scenario, individual pump to waste lines would be constructed from Well Sites 11 and 12, through the earthen berm to the east, and discharged into the Agua Fria River. In order to get approval for construction of these lines, an Army Corps of Engineers 404 Permit and approval from Maricopa County Flood Control District will need to be obtained for construction in the floodplain.

- **Pump to waste at each well sites to the on-site stormwater retention system.** The two wells are located adjacent to a major drainage channel used to convey stormwater from the Rancho Santa Fe development to the retention pond located just north of McDowell Road and the proposed reservoir and booster pump station site. Pump to waste water could be diverted at the pump site, into the drainage channel, and conveyed to the retention basin. Actual disposal of the water would be provided by percolation into the soil in the channel and at the retention basin. This alternative will require that the developer allow use of the on-site stormwater facilities for this purpose and that periodically water be discharged to the channel which is adjacent to residential areas. Potential impact to the development caused by discharging water to the channel include the potential for erosion of the decomposed granite, damage to the landscaping, and the nuisance of standing water and the possibility of mosquitoes. Preliminary discussions with the Army Corps of Engineers, Maricopa County, and the Arizona Department of Administration indicate that no permitting will be required under this scenario.

- **Combined pump to waste discharge at the reservoir and booster station site.** The site selected for the reservoir and booster station has a major drainage channel which collects and conveys stormwater runoff from the north side of McDowell Road. The stormwater is channeled through the site, under McDowell Road through four 48-inch diameter culverts, and into the Agua Fria River.

  Disposal of water produced during pump to waste operations at Wells 11 and 12 could be provided by a valve at the reservoir site to divert water from the main supply line to the channel and the 48-inch culverts. The valve would be located prior to the storage tank and the impact to the community would be minimal since the reservoir site is not located near the residences. Preliminary discussions with the Army Corps of Engineers, Maricopa County, and the Arizona Department of Administration indicate that no permitting will be required.

  Under this scenario, well operation would be designed to produce water from one well at a time. If a second well was turned on, the flow from both wells would have to be diverted to waste after initiation of the second well. During this pump to waste time period, no water would be supplied to the storage tank. Given the current booster station design of 4000 gpm maximum, one well filling the tank should be adequate. However, under ultimate design two wells may be required to meet the potable water demand. In order to do this, Well 10 could be operated only when two

supply wells are required. Wells 11 and 12 would provide single well demands and Well 10, which has a separate pump to waste line, would activate only when two supply wells are needed.

Based on the permit requirements, the impact to the residents and the community, the possibility of problems, and the ease of operation, the third alternative using a combined pump to waste line is recommended.

BOOSTER PUMP STATION CONFIGURATION AND OPERATION

Booster pump station operation will need to be designed to provided potable water at volumes and pressures needed to meet the demands of the City. The preliminary criteria for developing the station are to provide a maximum flow of 4,000 gpm at a pressure of 60 to 70 psi. Three alternatives for providing flow have been developed and are as follows:

- **Two booster pumps, one jockey pump, and a hydropnuematic tank.** This alternative would provide a 100 gpm jockey pump in series with a 10,000 gallon hydropnuematic tank to provide flow during low demand periods. Low demand would be met by the 100 gpm jockey pump and the hydropnuematic tank, high demand would be met by two 2,000 gpm pumps, and surge protection would be provided by the hydropnuematic tank. This configuration would provide a maximum flow of 4000 gpm and a firm pumping capacity of 2000 gpm. Using this configuration, system demand would produce very short cycle times which would require that the pumps be turned on and off frequently under certain operating conditions. This causes excessive wear on the pumps and is not recommended. The approximate cost for this alternative is $ 270,000.

- **Three booster pumps, one jockey pump, and a hydropnuematic tank.** In order to prevent the short cycle times which would occur under the first alternate, three 1500 gpm booster pumps, a 200 gpm jockey pump and a 20,000 gallon hydropnuematic tank could be installed. This configuration provides for 4500 gpm maximum and 3000 gpm firm pumping capacity. The larger tank volume combined with the lower booster pump rate significantly increases the cycle time and limits the amount of time that the pumps will need to be turned on and off. The approximate cost for this alternative is $ 350,000.

- **Two variable speed pumps and a surge anticipator valve.** The use of two 2,000 gpm variable speed pumps will allow the pump supply to meet the

variable demands and pressure requirements of the system. This configuration provides for a maximum pumping rate of 4000 gpm and a firm pumping capacity of 2000 gpm. However, using variable speed pumps will only permit approximately a 10 to 1 reduction ratio. This means that the minimum pumping rate will be approximately 200 gpm and the system will not sufficiently meet demands lower than 200 gpm. If lower demands exist in the system, other means of meeting the demands will need to be developed.

In order to provide surge relief a surge anticipator valve discharging to the storage tank will need to be incorporated. Due to the hard water conditions, periodic maintenance and testing of the valve will need to be performed to insure that the valve, which normally does not operate, is operational. The approximate cost for this alternative is $ 245,000.

At this time it appears that using two variable speed pumps will be the best option. However, the final selection should not be made until we meet with the master plan consultant to insure that the system we select is compatible with the existing and proposed system operation.

WILSON & COMPANY

Ronald L. Ablin, P.E.
Project Manager

WILSON
&COMPANY

9831 S. 51st Street, Suite C-119
Phoenix, Arizona 85044
602-893-8860

Albuquerque
Colorado Springs
Denver
Kansas City
Lenexa
Phoenix
Salina
San Diego
Wichita

November 13, 1995

Mr. Jim Mitchell
CITY OF AVONDALE
1121 S. 4th Street
Avondale, AZ 85323

RE: Rancho Santa Fe Reservoir and Booster Station
WCEA File No. 95-110-416-01

Mr. Mitchell:

In response to your request, this letter expands the previously submitted tank material analysis and addresses the cost for constructing a 1 MG reservoir and the associated operation and maintenance costs for the different storage tank materials.

As in the initial investigation report four types of tanks were analyzed for the ground surface storage tank: steel; cast-in-place concrete; precast concrete; and prestressed concrete. A summary of the estimated construction cost is listed in Table 1.

Table 1 - Storage Tank Costs			
	Estimated Construction Cost		
Storage Tank Material	0.5 MG Tank	0.75 MG Tank	1MG Tank
Steel	$ 215,000	$ 260,000	$ 310,000
Cast-in-Place Concrete	$ 310,000	$ 360,000	$ 400,000
Precast Concrete	$ 350,000	$ 400,000	$ 450,000
Prestressed Concrete	$ 350,000	$ 415,000	$ 550,000

Based on the construction cost alone, a steel tank is still the most economical option for this project regardless of tank size.

With all four tank materials there are associated maintenance costs. The three

types of concrete tanks have similar maintenance requirements. These include, in addition to routine maintenance, some minor structural maintenance that can be expected to be required during the service life of the concrete reservoirs. The associated costs for the maintenance is estimated at $15,000 per 10 years of service. In comparison, the maintenance requirements of a steel reservoir are projected to be greater than the concrete material options. Complete sandblasting and repainting of the tank interior and exterior will probably be necessary every 10 to 12 years. The cost associated with the repainting and sandblasting is estimated at $40,000 to $50,000 per 10 years of service.

The increased cost associated with the steel tank maintenance could make the cast-in-place concrete tank a more viable alternative over the life of the tank. However, the need to prefabricate and prebid the tank due to construction time constraints, essentially eliminates the possibility of constructing a cast-in-place concrete tank.

If you have any questions or need additional information please feel free to contact me.

WILSON & COMPANY

Ronald L. Ablin, P.E.
Project Manager

APPENDIX B

CATALOG CUTS

FLOW METER

Rockwell Series "W" Turbo-Meters

PARTS/PRICES

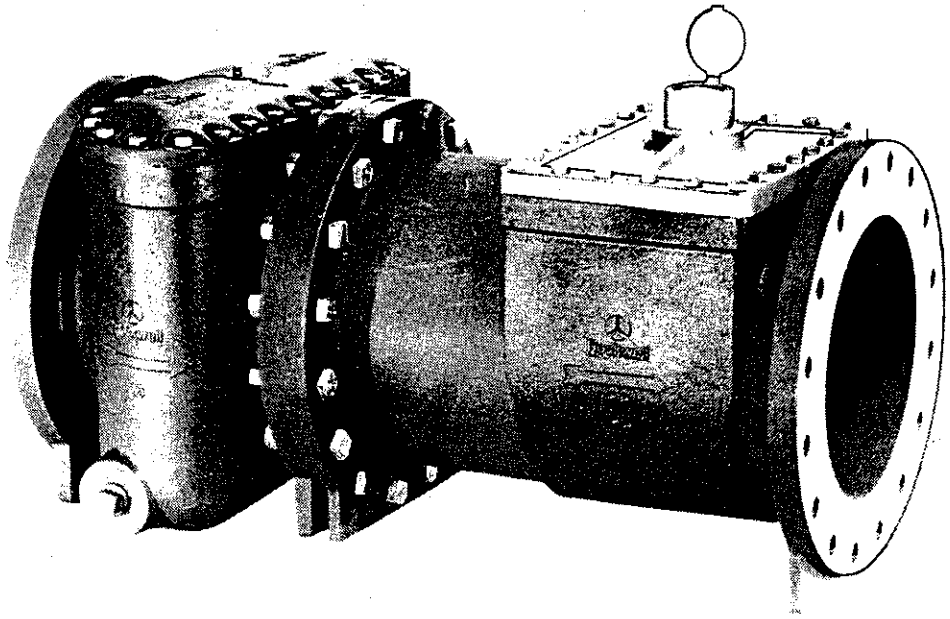

MODEL W 10,000 DR
RADIAL MAGNETIC DRIVE
SIZE 16"

Rockwell

SERIES "W"
Turbo-Meters

MODEL W-10,000 DR
FLANGED TURBO-METER
RADIAL MAGNETIC DRIVE
SIZE 16" (DN 400mm)

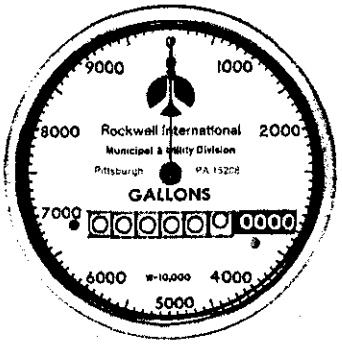

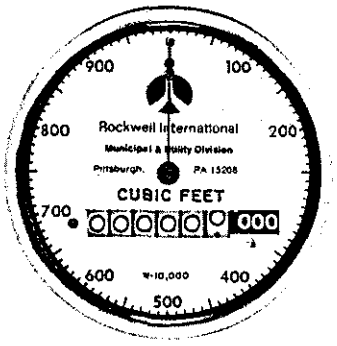

DIRECT READING REGISTERS

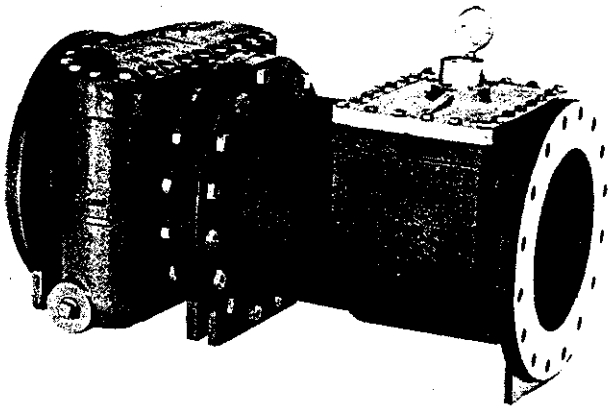

W-10,000 DR TURBO-METER AND 16" STRAINER (DN 400mm)

DESCRIPTION

MODEL: W-10,000 DR Turbo-Meter is based on the turbine principle of measurement; its operating range is from 250 to 10,000 GPM (57 to 2270 m³/h) with accuracy registration of 100% ± 1.5% of actual thruput.

PERFORMANCE: The meter's unique design permits continuous operation up to its rated maximum flow capacity without affecting long-term meter accuracy or causing undue wear.

CONSTRUCTION: The meter consists of two basic assemblies, the maincase assembly and the measuring chamber assembly.

The maincase and flow straightening vane assembly make up the maincase assembly. The straightening vanes minimize swirl and jetting from piping arrangements upstream, and direct the flow evenly to the rotor. The measuring chamber assembly includes the bronze measuring chamber, rotor, change gears (for calibration) and the permanently hermetically sealed direct reading register.

MAGNETIC DRIVE: The rotor is magnetically coupled, thus eliminating open gear trains and stuffing boxes. A sleeve type, ceramic magnet in the rotor drives the follower magnet which is located inside the rotor shaft (separator). Brass bevel gears are sealed in an oil-filled gear housing. The gears are attached to shafts connecting the follower magnet to the register. The gear housing is factory lubricated for the life of the meter.

ROTOR:* The thermoplastic rotor contains a cylindrical ceramic bearing that rotates on a stationary, ceramic-coated, stainless steel shaft. The rotor assembly, i.e. the rotor and rotor nut, is essentially weightless in water, thus minimizing the load and wear on the rotor bearings.

STRAINER: The meter is to be installed with a 16" (DN 400mm) Rockwell Strainer.* The strainer both conditions the flow of water to enhance measurement accuracy, and protects the internal working parts of the meter. (*Patent 4,301,011)

MAINTENANCE: The measuring chamber can be removed and repaired without disturbing the maincase in the line. A spare chamber can be utilized in the event maintenance is required. Cover plates are also available for use to keep the customer's line in service while the measuring chamber is repaired and recalibrated. Measuring chamber factory testing, repair and exchange programs are also available. See data sheet W-874 for details.

INSTRUMENTATION: For applications requiring instrumentation, the meter can be equipped with a High Speed Pick-up (HSP) or Impulse Contactor (IC) register, both of which incorporate a mechanical odometer and test circle for direct reading. See data sheet E-1116 (HSP register) and E-1112 (IC register) for details. Instrumentation for remote reading and Rockwell TouchRead™ System communication registers is also available.

*Patents Pending

SPECIFICATIONS

SERVICE	Where fluid flow is in one direction only
OPERATING RANGE	Continuous Flows: 250 to 10,000 gpm (57 to 2270 m³/hr) Intermittent Flows: 12,500 gpm max. (2840 m³/hr)
ACCURACY	100 ± 1.5% of actual thruput
LOW FLOW	95% at 200 gpm (45 m³/hr)
PRESSURE LOSS	Meter and Strainer—4.5 psi at 10,000 gpm (.3 bar at 2270 m³/hr)
OPERATING PRESSURE	150 psi maximum (10 bar)
FLANGES	16" U.S. ANSI B16.1 Class 125 Optional drilling: British Standard B.S. 10 or metric standard ISO R2084
PIPE LENGTH OPENING REQUIRED	48¼" (1225 mm) (meter and strainer)
REGISTER	Hermetically Sealed Direct Reading Register is standard.
METER REGISTRATION	10,000,000,000 gallons 10,000 gallons/sweep hand revolution 1,000,000,000 cubic feet 1,000 cubic feet/sweep hand revolution 100,000,000 m³ 100 m³/sweep hand revolution
MATERIALS	Maincase—cast iron. Internally protected with corrosion resistant coating. Measuring Chamber—Bronze Rotor—Thermoplastic Radial Bearings—Ceramic Trim—Stainless Steel Register—Rockwell hermetically sealed Thrust Bearing—Tungsten Carbide Magnet—Ceramic
STRAINER	Body and Cover—Cast Iron Screen—Bronze

Dimensions and Weights

Part	Length	Width	Height	Weight*
Meter Only	29⅞″ 759mm	24″ 610mm	27″ 686mm	975 lbs. 443kg
Strainer	18″ 457mm	29″ 737mm	25″ 635mm	775 lbs. 352kg
Meter and Strainer	48″ 1219mm	29″ 737mm	27″ 686mm	1750 lbs. 795kg

*Less Companion Flanges

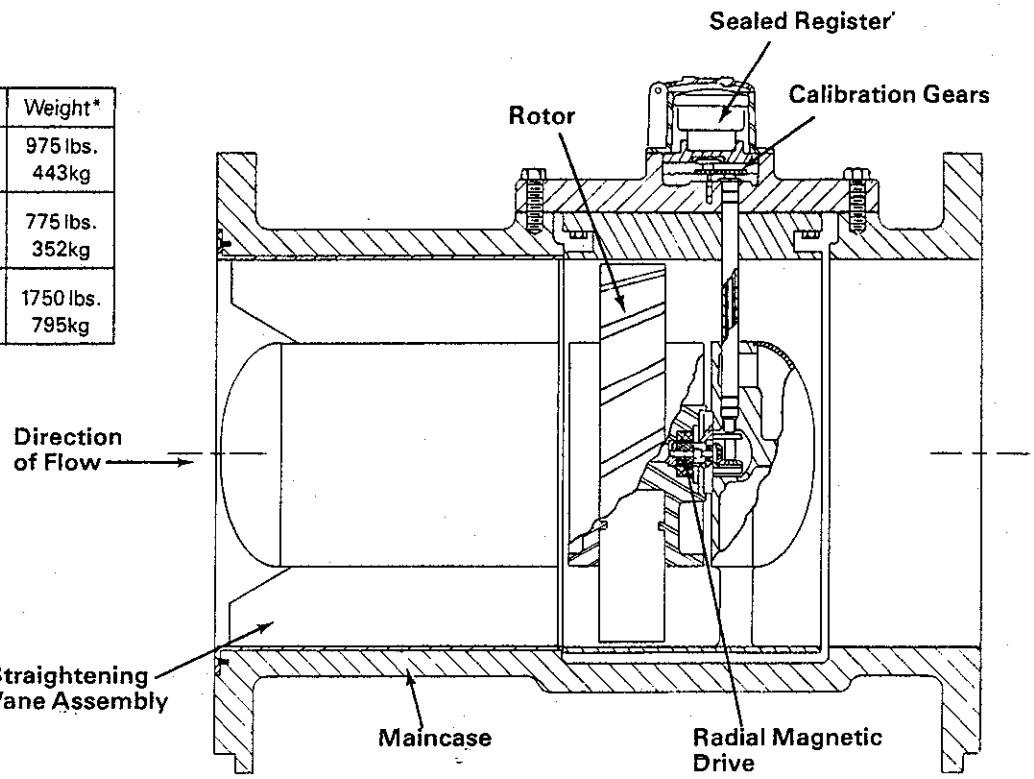

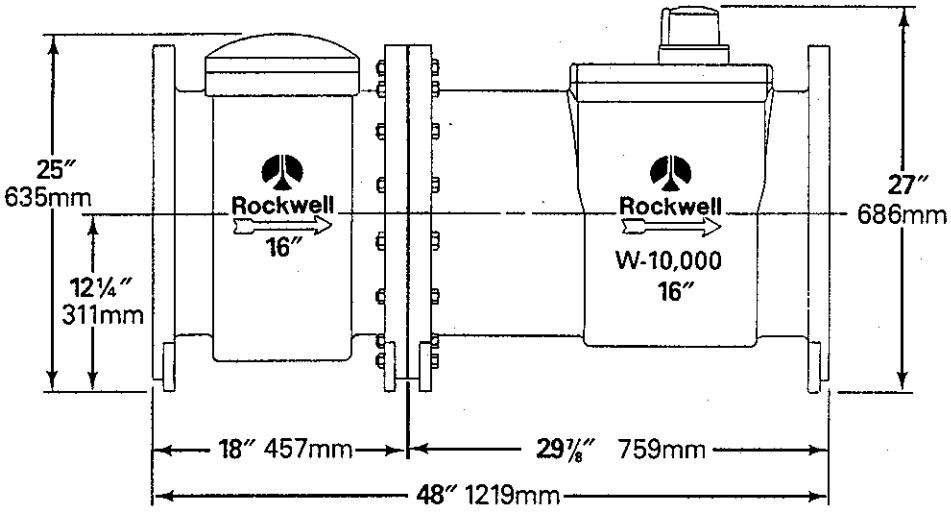

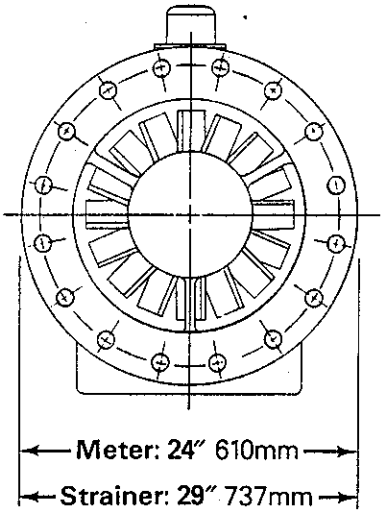

INSTALLATION: The meter is accuracy and pressure tested prior to shipment. No field adjustments are required. To insure valid registration and proper performance, the following factors should be considered when installing Rockwell Turbo-Meters.

1. Avoid installing check valves, throttling valves or pressure reducing devices upstream of the meter.
2. Check valves and pressure reducing devices should not be located closer than five (5) pipe diameters downstream of the meter.
3. To aid in testing, a test tee should be installed no less than three (3) pipe diameters downstream of the meter.
4. Valves immediately upstream of the meter should only be full-open gate valves. Butterfly valves are acceptable if they are five (5) pipe diameters or more upstream from the meter. Downstream, either gate or butterfly valves can be used.

It is recommended that a bypass pipe and gate valves be provided so service to the customer will not be interrupted during maintenance. A test tee should be installed downstream of the meter for field testing.

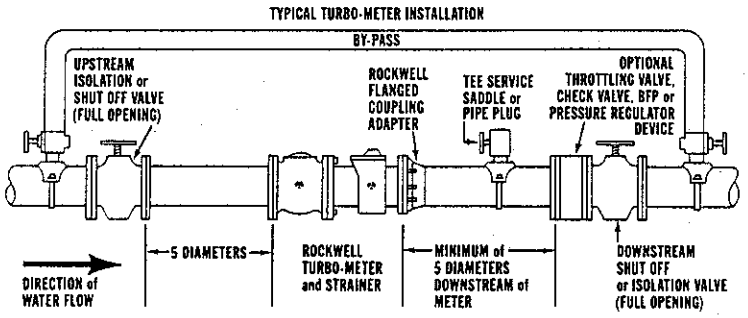

Rockwell International, Municipal & Utility Division
400 North Lexington Avenue, Pittsburgh, Pennsylvania 15208

Rockwell International

...where science gets down to business

PRINTED IN U.S.A. JBK 10M 3/85

ROCKWELL SERIES "W" TURBO-METERS

Rockwell W-10,000 DR TurboMeters

Notes:

1. Prices F.O.B. Factory - subject to change without notice and such discounts as market conditions allow.
2. Complete factory repaired measuring chamber exchange programs are also available; see TurboMeter MMP data sheets W-874 or consult local Rockwell sales representative for details.

WARRANTY -- Rockwell warrants its products only against defects in materials and workmanship. Rockwell's liability and customer's exclusive remedy under this warranty or any warranty extends for a period of one (1) year from the date of Rockwell's shipment and is expressly limited to repayment of the purchase price, repair, or replacement, at Rockwell's option, during said period, upon proof satisfactory to Rockwell and upon customer's returning and prepaying all charges on such products to factory or warehouse designated by Rockwell. THIS WARRANTY IS MADE EXPRESSLY IN LIEU OF ALL OTHER WARRANTIES, EXPRESS, IMPLIED, OR STATUTORY, WITH RESPECT TO QUALITY, MERCHANTABILITY, OR FITNESS FOR A PARTICULAR PURPOSE.

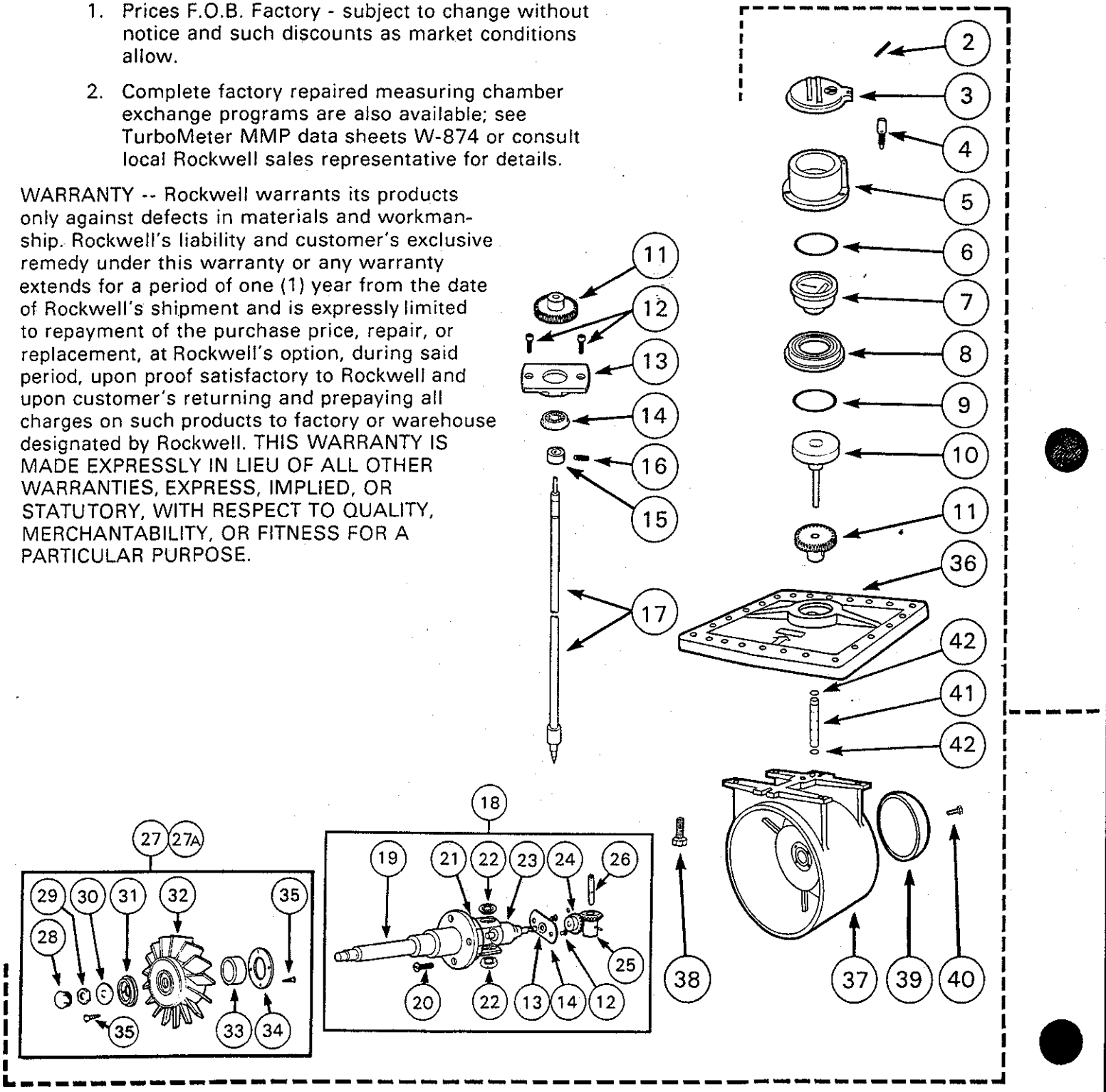

ILL. NO.	Name of Part	List Price
1	* Measuring Chamber, Complete	$5,955.00
2	Register Cover Hinge Pin	.20
3	Register Cover	4.00
4	Register Cup Seal Screw	.75
5	Register Cup	45.00
6	Register Gasket	3.00
7	Register (Specify Registration)	40.00
8	Register Retaining Plate	50.00
9	Retaining Plate O-Ring	1.40
10	Register Drive Magnet and Shaft Assembly	14.00
11	Change Gear (Specify Meter Serial No.)	9.50
12	Support Plate Screw	.25
13	Support Plate	16.30
14	Radial Ball Bearing	12.00
15	Collar Assembly	21.00
16	Collar Set Screw (Included with Ill. #15)	1.00
17	Vertical Shaft	44.00
18	Rotor Shaft Assembly	675.00
19	☐ Rotor Shaft and Thrust Pin	410.00
20	☐ Rotor Shaft Screw	.40
21	☐ O-Ring	.75
22	☐ Flanged Radial Ball Bearing	9.80
23	☐ Driven Magnet and Spindle	20.00
24	☐ Driver Miter Gear with Screw	23.00
25	☐ Driven Miter Gear with Screw	38.70
26	☐ Miter Gear Shaft	4.70
27	Rotor Assembly Complete	2,246.00

ILL. NO.	Name of Part	List Price
27A	Exchange Rotor Assembly Complete (Net Price)	$1,350.00
28	# Rotor Cap	100.00
29	# Rotor Shaft Nut	2.50
30	# Rotor Shaft Washer	2.10
31	# Bearing Retainer	16.00
32	# Rotor with Ceramic Bearing	1,800.00
33	# Rotor Magnet	13.50
34	# Rotor Magnet Retainer	12.00
35	# Retainer Tapping Screw	.40
36	Measuring Chamber Cover	800.00
37	Measuring Chamber Body	1,065.00
38	Measuring Chamber Screw	6.50
39	Measuring Chamber Tail Cone	198.25
40	Tail Cone Screw	.70
41	Shaft Slip Sleeve	40.00
42	Shaft Sleeve O-Ring	.40
43	Chamber Cover Cap Screws	1.60
44	Chamber Cover Gasket	3.75
45	Maincase and Straightening Vane Assembly	6,570.00
46	Maincase Only	4,160.00
47	Straightening Vane Assembly Only	2,375.00
48	Straightening Vane Screw	.80
49	Companion Flange Gasket	21.05
50	† Companion Flange - Cast Iron	325.00
51	Companion Flange Bolt - Long (14 Required)	9.00
51A	**Companion Flange Bolt - Short (2 Required)	9.00
52	Companion Flange Nut	4.00

* Measuring chamber complete includes Ill. No. 2 through Ill. No. 42
☐ These items included in Ill. No. 18
\# These items included in Ill. No. 27 or Ill. No. 27A

Companion Flange threaded for 16" steel pipe. Consult your Rockwell representative for installation information when connecting to other than steel pipe.
** Short Bolts are used on top flange holes to connect strainer to meter

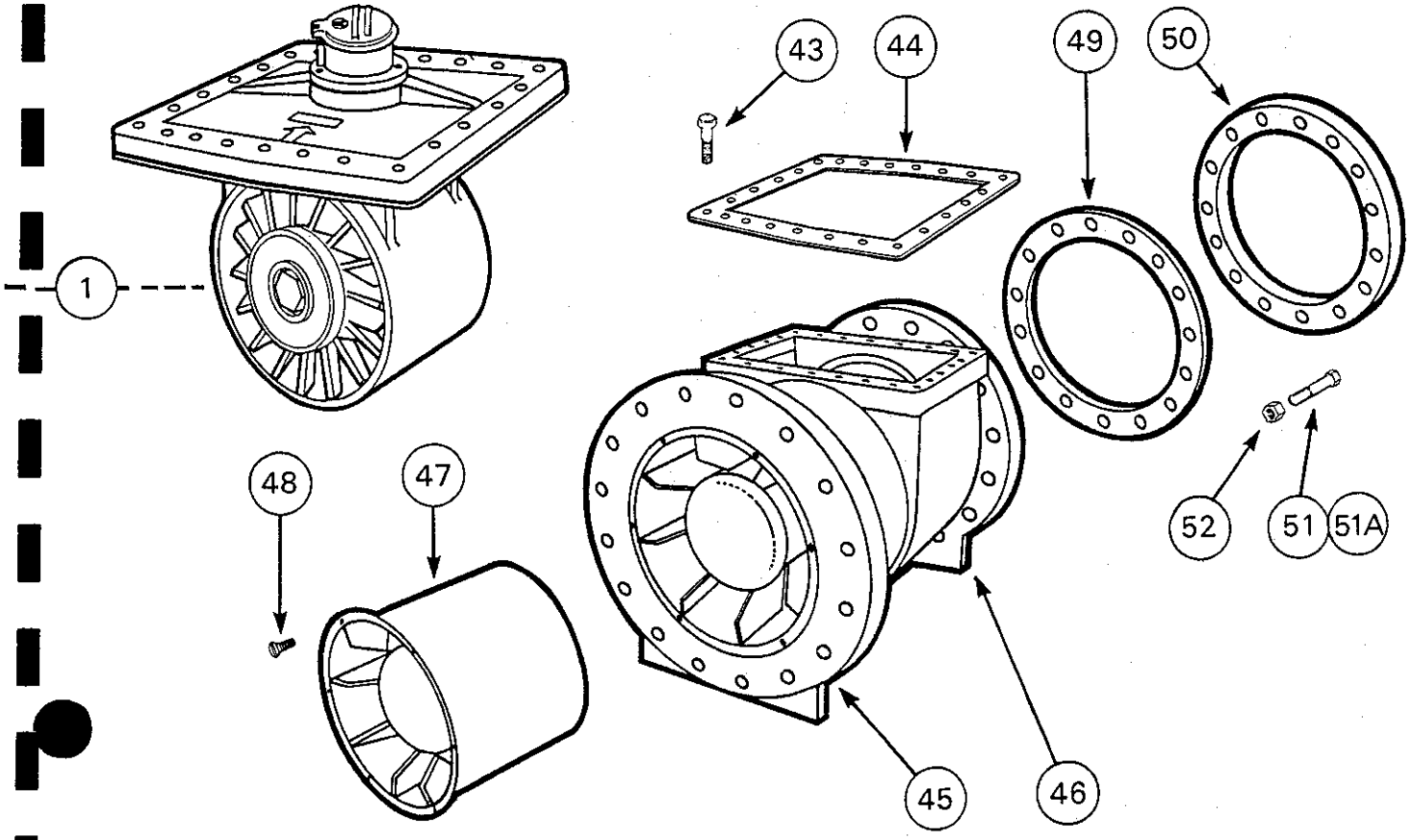

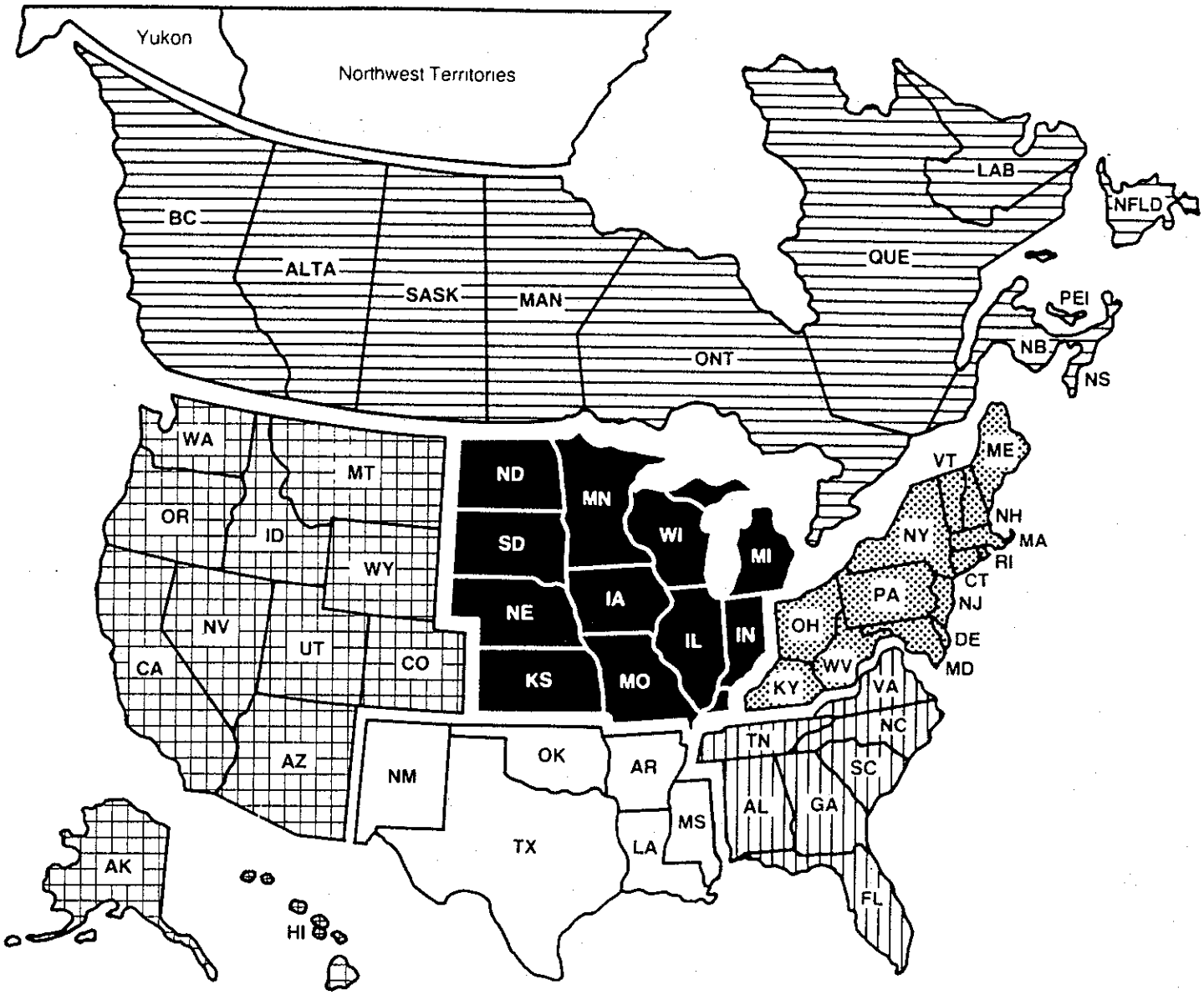

Rockwell International, Measurement & Control Division
400 North Lexington Avenue/Pittsburgh, PA 15208

U.S. Area Sales Offices

representatives in all principal cities

1 NORTHEASTERN AREA
390 North Lexington Avenue
Pittsburgh, Pennsylvania 15208
Phone: (412) 247-3431

2 MID-CONTINENT AREA
1996 University Lane
Drawer 1050
Lisle, Illinois 60532
Phone: (312) 852-0026

3 SOUTHEASTERN AREA
3923 Oakcliff Industrial Court
Atlanta, Georgia 30340
Phone: (404) 447-4750

4 SOUTHWESTERN AREA
5155 Blalock Drive
Houston, Texas 77041
P.O. Box 40126 (Zip Code) 77240
Phone: (713) 462-2801

5 WESTERN AREA
1632 Sierra Madre Circle
Placentia, CA 92670
Phone: (714) 666-0200

For customers in the United States:

DIRECT TO FACTORY TOLL-FREE PHONE ORDERS:
From Areas 1 and 2, except Pennsylvania: Phone 800/245-4095
From Pennsylvania: Phone 800/342-2651
From Areas 3, 4 and 5: Phone 800/245-4058

DIRECT TO FACTORY MAIL ORDERS
Send to: Order Department, Rockwell International, Box 487, Uniontown, PA 15401

Canadian Sales Offices

Rockwell International of Canada Ltd

MAIN OFFICE
41 Massey Road
Guelph, Ontario N1H 6L3
Phone: (519) 821-4880

CALGARY
Suite 101 7710 5th Street, S.E.
Calgary, Alberta T2H 2L9
(403) 255-2670

MONTREAL
970 Montee de Liesse, Suite 211
St. Laurent, Quebec H4T 1W7
Phone: (514) 337-9110

VANCOUVER
Phone (604) 430-4276
(Send mail to Guelph Office.)

International Sales Offices

Measurement & Control Division
Rockwell International
400 North Lexington Avenue
Pittsburgh, PA 15208
Phone: (412) 247-3214
Cable: ROCKWL INT. PGH.
Telex: 199148 RIMU

Rockwell International

Measurement & Control Division
400 North Lexington Avenue
Pittsburgh, Pennsylvania 15208

SP 10M 5/86

CHLORINATION SYSTEM

Chlorine Residual Analyzer — Series 1770

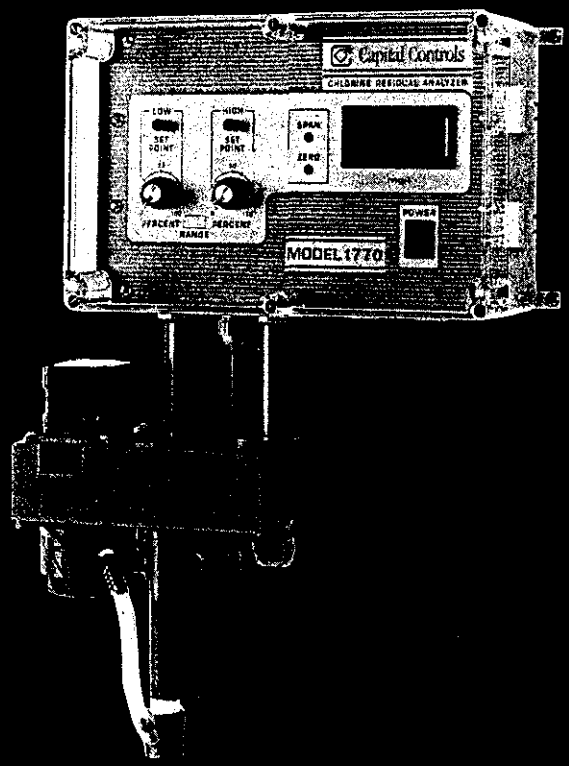

- Continuous On-line Operation
- Low Cost
- No Reagents For Cost Effective Monitoring
- Direct Measurement Of Free Chlorine Residual
- High And Low Alarm Points
- 4 - 20 mAdc Output
- NEMA 4 Enclosure
- 5% Accuracy
- Field Selectable Monitoring Ranges up to 20 mg/l

Capital Controls

ISO 9001 Certified

Capital Controls is the recognized world leader in amperometric chlorine analyzer technology. The Series 1770 is the latest addition to this family of residual analyzers, providing a reagentless amperometric analyzer designed for the continuous measurement of free chlorine in drinking water, swimming pools and recirculating process waters.

The Series 1770 is factory tested and shipped as a 0 - 2 mg/l free chlorine analyzer. Ranges are field selectable from 0 - 1 mg/l to 0 - 20 mg/l. These analyzers also incorporate a constant electrode cleaning system to eliminate signal drift.

High and low alarm set points with LED light alarm status indicators are standard. The extra large gold and copper electrodes provides greater signal strength. Additionally, temperature variations are compensated with a thermistor.

The entire electronics are protected with a NEMA 4 enclosure. All components and controls are easily accessible from the front of the unit.

Applications

For drinking water, swimming pools and recirculating waters with a relatively stable pH and low particulate concentrations.

- **Drinking water disinfection:** Drinking waters require continuous monitoring of chlorine residuals as specified by the U.S. Safe Drinking Water Act.
- **Swimming pool disinfection:** Require low cost accurate monitoring of free chlorine.
- **Cooling water biofouling:** Cost effective control of slime and algae in piping, heat exchangers, and cooling towers by monitoring free chlorine.
- **Industrial process water:** Accurate monitoring of residual chlorine in industrial process waters.

The Series 1770 reagentless analyzer is ideal for the conditions and applications listed above. The 1870E and 1871 residual analyzers provide a more stable and sensitive signal. This is accomplished in acidic solutions through buffer addition. This is often needed in wastewater and other waters where conditions are harsh or otherwise changing. Buffered analyzers are also necessary when a high degree of accuracy is required. Consult Capital Controls for the analyzer needed for your application.

Design Features

- **No reagents:** Because the applications have a relatively stable pH, the accuracy and reliability can be maintained at 5% of full scale without the need of costly reagents.
- **High and low alarm set points:** Monitor and control free chlorine within a concentration band with high and low alarm set points that are easily adjusted on the front panel. LED lights indicate an alarm has occurred. Latching alarm is field selectable.
- **Large cells:** The extra large gold and copper electrodes provide maximum signal strength.
- **NEMA 4 enclosure:** Protects the electronics and the faceplate. Provides easy 1/4 turn accessibility to the set points and the zero and span calibration trim. Also accessible through the front are all controls and switches for range selection and the 4 to 20 mAdc output features.
- **Easy Mounting:** The Series 1770 Chlorine Residual Analyzer is supplied with four mounting brackets for simple wall mounting
- **Accurate**: The 5% accuracy of the unit is ideal for the monitoring and control of most clean water samples.

Operation

The sample liquid is delivered to the sample chamber at a rate of 200-300 ml/minute. The incoming sample overflows the weir into the sample cell, the remainder goes to drain. The sample then passes through the annular space between the two fixed electrodes in the sensing cell. As it passes, a small direct current is generated in direct linear proportion to the amount of residual present in the sample. The residual value is displayed on the digital indicator in milligrams per liter free chlorine.

The surface of both electrodes are kept clean by the continuous action of PVC spheres agitated by a motor. This constant cleaning reduces signal drift and the need for recalibration, and provides an accurate residual measurement. A thermistor compensates for sample temperature variation. (See Figure 1).

High and low set points are independently adjusted from 0 to 100% of the selected range. When a set point is exceeded, a corresponding light on the face of the unit will illuminate. Each set point can be connected to an external alarm, controller, etc.

Technical Data

Instrument Range: Shipped as 0-2 mg/l, field selectable as 0-1.0, 0-2.0, 0-5.0, 0-10.0 and 0-20.0

Resolution:
0.01 mg/l from 0-5 and below
0.1 mg/l from 0-10 and above

Accuracy: 5% of range

Power: 120/240 Vac, 50/60 Hz

Output Signal: 4-20 mAdc

Sample Flow: 200-300 ml/minute

Temperature: 32° to 120°F (0° to 50°C)

Electrodes: Gold and copper

Display: LED

Sample Supply: Continuous

Sample Limitations: High concentrations of metal ions of certain corrosion inhibitors may effect analyzer. At low residual levels (less than 0.1 mg/l) variations in sample dissolved oxygen may affect residual reading.

Shipping Weight: 12 lbs (5.5 kgs)

Warranty and Capability

Capital Controls offers a 1 year warranty for all residual analyzers.

Capital Controls is ISO 9001 certified to provide quality and precision materials, and specializes in disinfection technologies, water quality monitors and instrumentation for water, wastewater and industrial process control. Over 30 years of industrial and municipal application experience in the water and wastewater industries is incorporated into the equipment design to provide the highest quality comprehensive solutions for the global market.

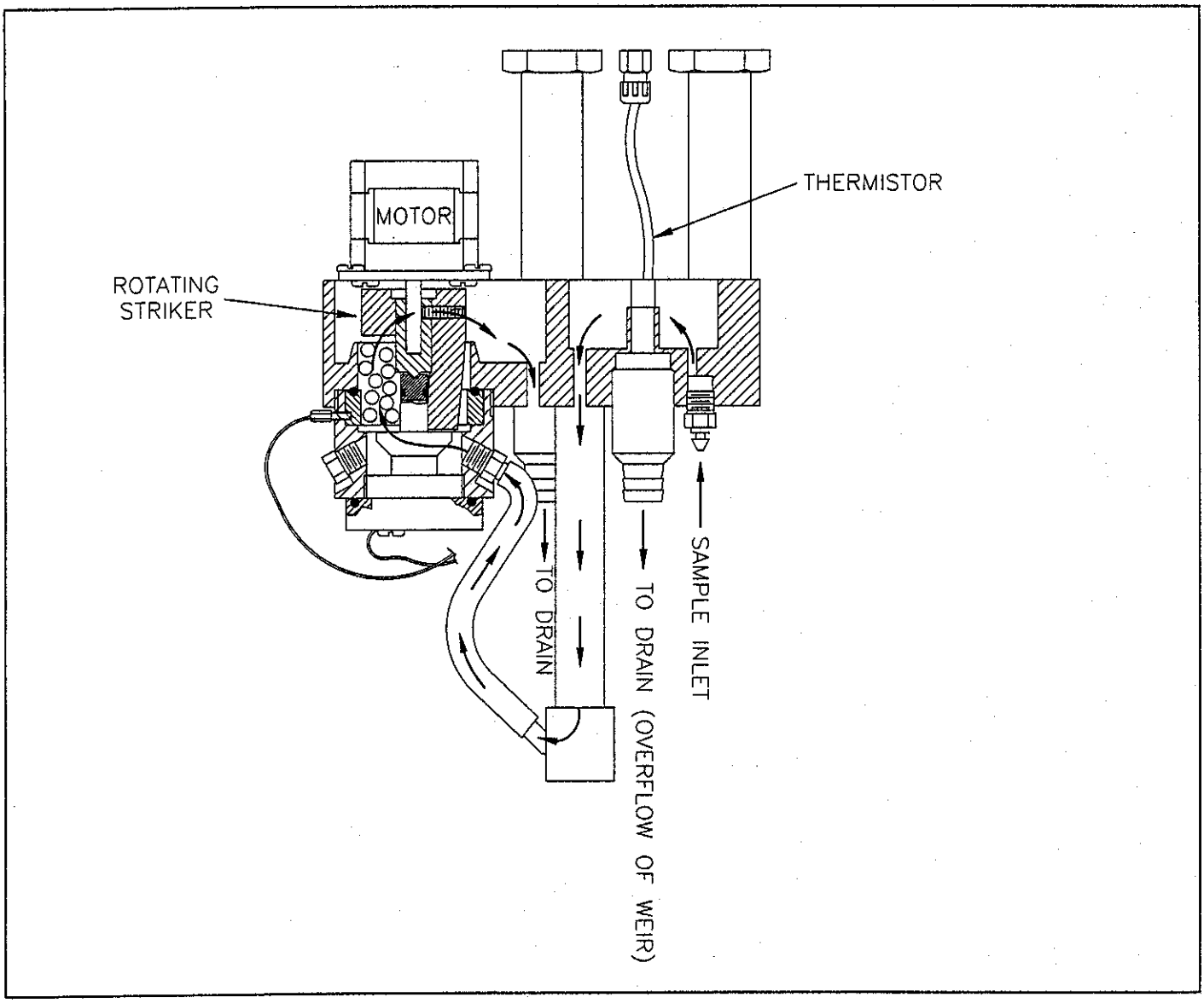

Figure 1 - Analyzer Flow Diagram

ENGINEERING DATA

GAS VACUUM LINE SHUT-OFF VALVE AUTOMATIC ON/OFF

CAPITAL CONTROLS COMPANY, INC
P.O. Box 211
Colmar, PA 18915

Chlorine ~~or Sulfur Dioxide~~ Vacuum Shut-off Valve (Electric Operated)

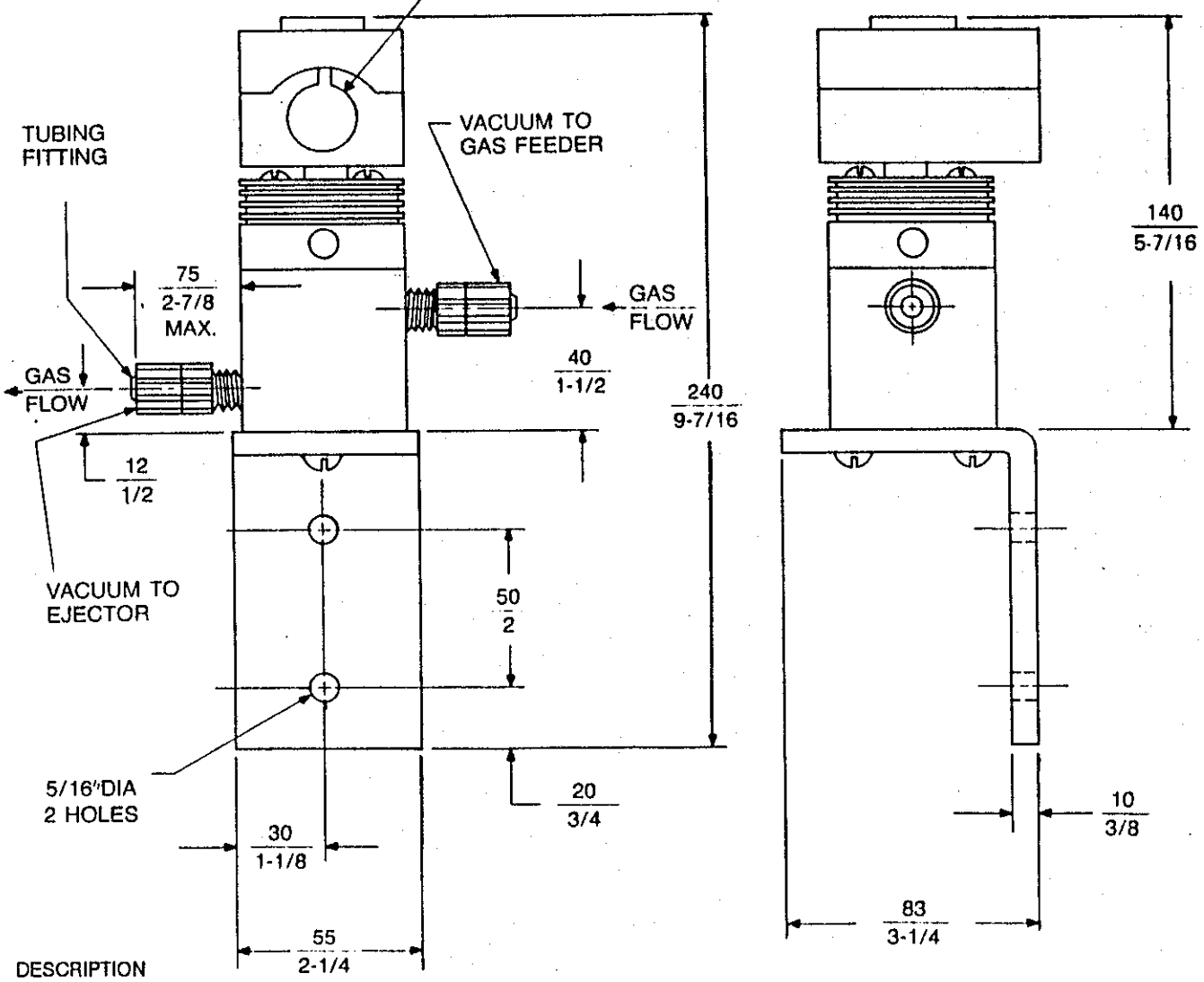

DESCRIPTION

DIMENSIONS: MILLIMETERS / INCHES

PART NUMBER		MAXIMUM CAPACITY	VACUUM TUBING SIZE	SINGLE PHASE POWER
CHLORINE	~~SULFUR DIOXIDE~~			
BM-682-1	~~BM-1281-1~~	100 PPD/2 kg/h	3/8"	120 Vac, 60 Hz
~~BM-682-2~~	~~BM-1281-2~~	~~100 PPD/2 kg/h~~	~~3/8"~~	~~240 Vac, 50 Hz~~
~~BM-682-3~~	~~BM-1281-3~~	~~200 PPD/4 kg/h~~	~~1/2"~~	~~120 Vac, 60 Hz~~
~~BM-682-4~~	~~BM-1281-4~~	~~200 PPD/4 kg/h~~	~~1/2"~~	~~240 Vac, 50 Hz~~
~~BM-682-5~~	~~BM-1281-5~~	~~500 PPD/10 kg/h~~	~~5/8"~~	~~120 Vac, 60 Hz~~
~~BM-682-6~~	~~BM-1281-6~~	~~500 PPD/10 kg/h~~	~~5/8"~~	~~240 Vac, 50 Hz~~

NOTES:

1. Valve normally closed unless power is supplied.
2. Power consumption: 20 watts
3. Valve us NOT suitable for gas pressure service. Valve design is for VACUUM service only.
4. Weight: 2 lbs. (1 kg).

Copyright 1989 Capital Controls Company, Inc.

~~EJECTOR IS CLOSE-~~
~~COUPLED TO CORPORATION~~
~~COCK ASSEMBLY RIGID~~
~~PIPED WATER SUPPLY~~

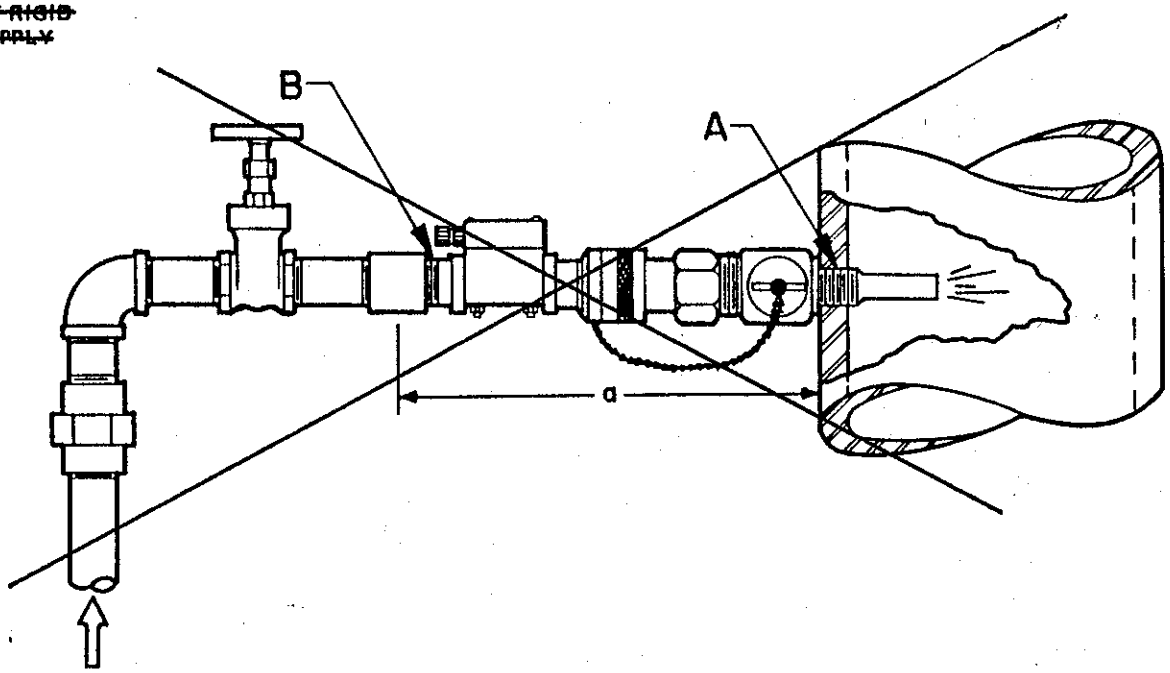

RIGID PIPED SOLUTION FROM REMOTE EJECTOR TO CORPORATION COCK ASSEMBLY

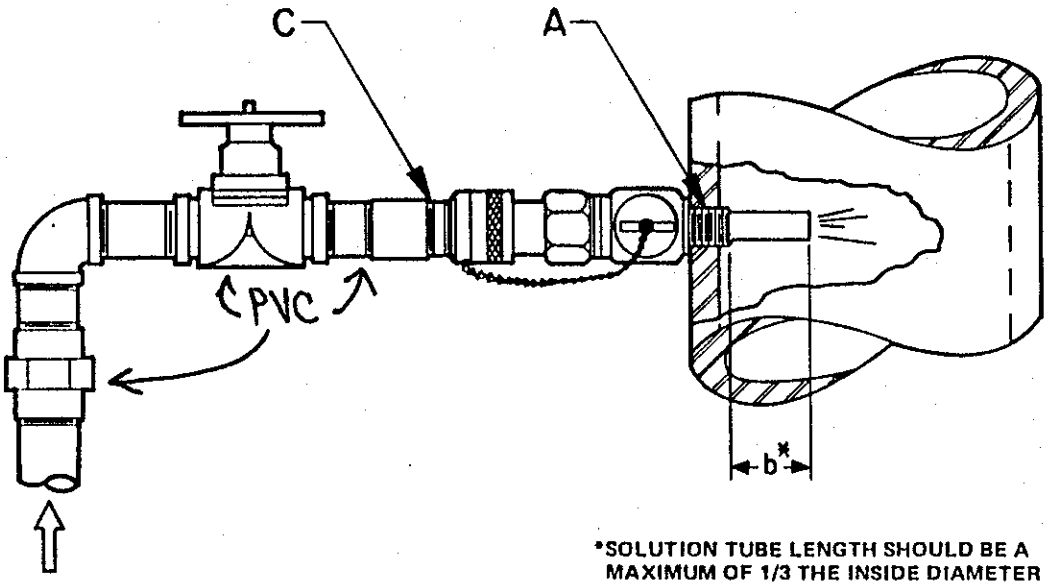

*SOLUTION TUBE LENGTH SHOULD BE A MAXIMUM OF 1/3 THE INSIDE DIAMETER OF THE PIPE. IF THE SOLUTION TUBE MUST BE SHORTENED, THE CHAIN MUST ALSO BE SHORTENED.

LEGEND: MILLIMETERS / INCHES

CONNECTION		MAXIMUM CAPACITY			
		100 PPD/2 kg/h		~~500 PPD/10 kg/h~~	
		SIZE	PART NO.	~~SIZE~~	~~PART NO.~~
A	THD.	1"	IPS ~~OR MUELLER~~	~~1-1/2"~~	~~IPS OR MUELLER~~
~~B~~	~~THD.~~	~~3/4" NPT~~ ~~1" NPT~~	~~E-189~~ ~~T-148~~	~~1-1/4" NPT~~	~~E-187~~
C	THD.	1" NPT	U-289	~~1-1/4" NPT~~	~~U-272~~

DIMENSIONS (PIPE TO END)			
	100 PPD/2 kg/h		~~200 PPD/4 kg/h~~ ~~500 PPD/10 kg/h~~
~~a~~	~~WITH 1" NPT INLET~~	~~180~~ ~~7-1/8~~	~~WITH 1-1/4" NPT INLET~~ ~~220~~ ~~8-3/4~~
b	1" CORPORATION COCK		~~1-1/2" CORPORATION COCK~~
	115 4-1/2		~~140~~ ~~5-1/2~~

BEVCO

PACKAGED-WEATHER-TIGHT CHLORINATION HOUSES

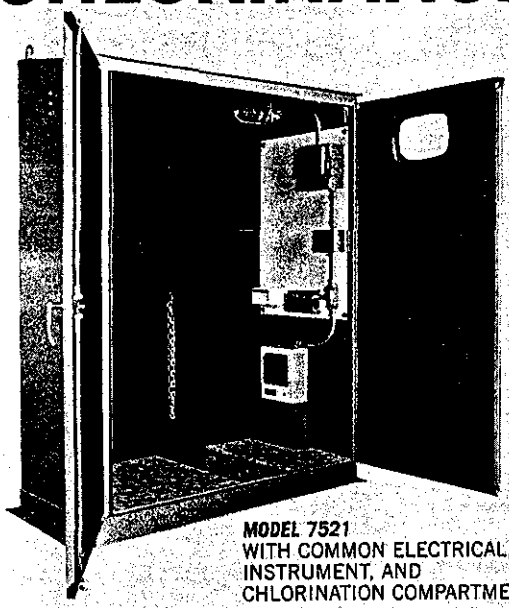

MODEL 7521
WITH COMMON ELECTRICAL, INSTRUMENT, AND CHLORINATION COMPARTMENT

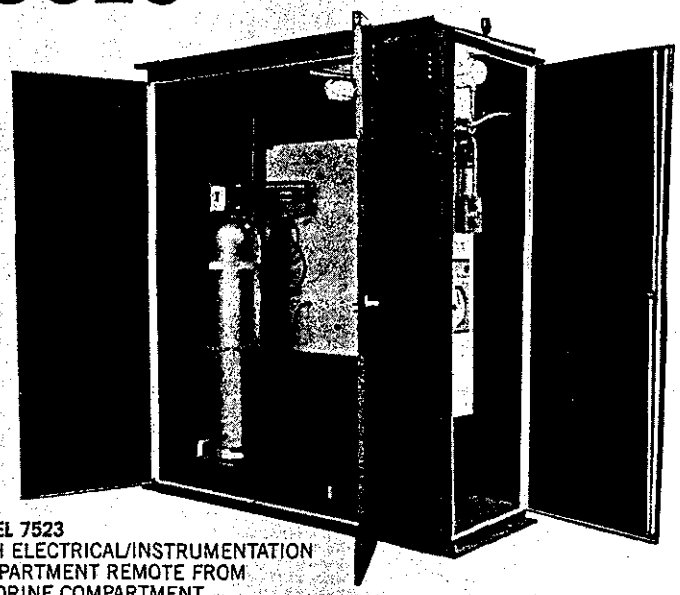

MODEL 7523
WITH ELECTRICAL/INSTRUMENTATION COMPARTMENT REMOTE FROM CHLORINE COMPARTMENT

The Bevco chlorination houses are self-contained pre-wired units suitable for outdoor mounting and designed to contain complete chlorination systems or other instruments. The houses are supplied with all the standard equipment listed on the reverse side completely mounted and wired. However, any degree of additional wiring or piping may be specified so that a truly complete finished package is furnished.

Each house is finished on the outside with a baked weather resistant green hammertone finish. The interior is shop primed and covered with Bevco-Lite, 1" thick UL approved insulation. The interior of the electrical compartment on the Model 7523 is painted with a baked white enamel finish and is not insulated.

FEATURES

RUGGED
Heavy gauge metal design provides superior resistance to wind and snow loading.

EASY TO INSTALL
Four bolts hold the unit on a prepoured concrete pad or on "I" beams over a contact chamber. Electrical connection at a single point and piping as required are all that are necessary to make the system operational.

COMPACT
Everything in the Bevco houses is within easy reach. The unit can be installed next to an existing building, mounted over contact chambers, or located by itself in a remote area.

WEATHERPROOF
Baked enamel, automotive type, exterior finish make the unit suitable for outdoor installation. Insulation and a heater with thermostat provide for control of internal temperature.

EXHAUST FAN
In accordance with code requirements the fan and light are interlocked with the chlorine storage door to automatically run when the door is opened.

VANDAL PROOF
A three point latch with a key lock and heavy metal exterior construction provide protection from access by unauthorized personnel.

EASE OF INSPECTION
A gas tight window provides an interior view of the chlorine equipment without opening the door.

FLOOR DESIGN (MODEL 7521 ONLY)
The floor is recessed so that the top of an installed scale will be at floor level providing for ease of movement of chlorine cylinders. Recesses are available to accommodate one or two scales or double scales where desired. A flat floor can also be provided when scales are not used.

FLOOR DESIGN (MODEL 7523 ONLY)
The floor is non-recessed and is designed so that a dual scale or single scale can be installed. Scale enclosures and a convenience ramp are provided as optional features as necessary. Eleven square feet of floor space provide ample room for scales, pump and cylinders.

CYLINDER STORAGE CAPACITY

	7521	7523
No Scale	10	10
Single Cylinder Scale	7 plus 1 on scale	8 plus 1 on scale
2 Single Cylinder Scales	4 plus 2 on scales	5 plus 2 on scales
Two Cylinder Scale	2 plus 2 on scale	4 plus 2 on scale

Note: These capacities are reduced if other than our standard accessories are installed in the building.

OPTIONS AVAILABLE

Only Bevco can offer just about any conceivable option desired. Below are listed some typical, more commonly selected options. We suggest you consult the factory for selection and/or specifications of these other desired options:

1. Power supply other than 120/1/60.
2. Mounting, wiring, and piping of chlorination equipment such as pumps, ejectors, flow meters, recorders, flow pacing equipment, residual control systems, analyzers, leak detectors, etc.
3. Motor starters, magnetic or manual.
4. Timer for exhaust fan.
5. High temperature safety override.
6. Special color.
7. Special holes and plumbing connections.
8. Alarm lites, horns, and silencing systems.
9. Cylinder loading ramp.

BEVCO ENGINEERING, INC. MILWAUKEE, WISCONSIN

BEVCO ENGINEERING, INC.

10605 W. Glenbrook Ct. · Milwaukee, WI 53224
Phone (414) 354-3100 · FAX #(414) 354-0441

STANDARD FEATURES, EQUIPMENT AND SPECIFICATIONS

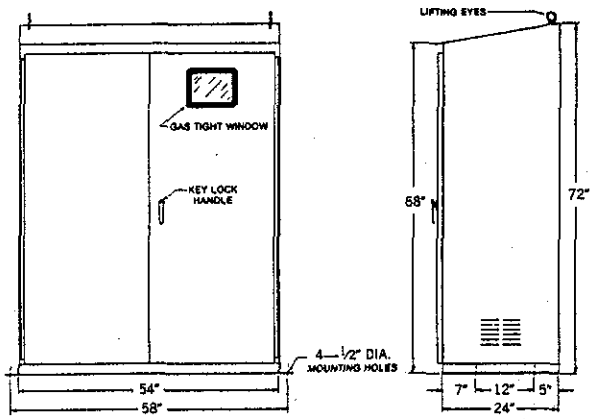

MODEL 7521
WHT 450 LBS.

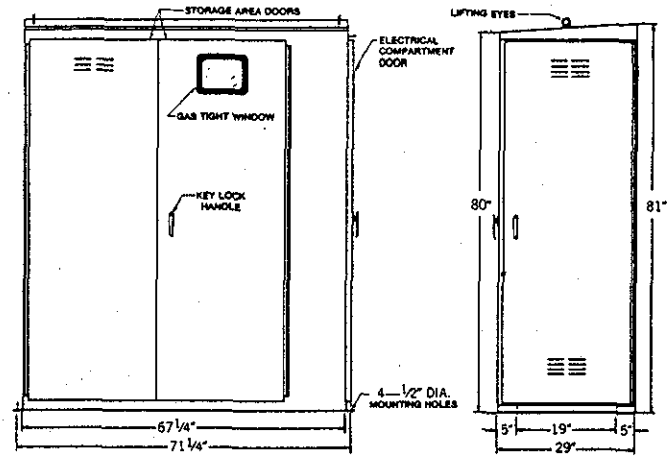

MODEL 7523
WHT 1100 LBS.

STANDARD FEATURES ON BOTH HOUSES

1. Double door with continuous stainless steel hinges.
2. Gas tight observation window on right front door.
3. Two separate louvers for ventilation with bug screens.
4. Three point latch with key lock.
5. Fire retardant insulation on all sides, doors and ceiling. (Meets U.L. Specifications for SE-1 foam.)
6. Two lifting eyes for ease of field maneuverability.
7. Electrical power inlet connector (LB Fitting).
8. Pitched roof with drip lip.
9. Vinyl covered floor to prevent marring.
10. Large subpanel with extra space for field mounting of accessories by others.

STANDARD EQUIPMENT ON BOTH HOUSES

1. One exhaust fan providing complete air change within one minute.
2. An automatic-manual selector switch, externally mounted and interlocked for automatic operation of the exhaust fan and light when the chlorine storage doors are opened.
3. Door actuated micro switch for fan and light.
4. Plastic bulkhead fittings for chlorinator vent and vacuum lines.
5. A chlorine residual test kit holder for test kit.
6. Chlorine cylinder support chain(s).
7. A stainless steel hook(s) for holding the chlorinator during cylinder change.
8. A recess in the floor (Model 7521 only) for flush installation of scale(s).
9. Main electrical panel provided on the wall with the following equipment wired and mounted on the panel.
   a) Safety switch, 2 pole fused for 30 amp, for 120 volts, 60 cycle, single phase power supply.
   b) Heater, 1250 watt with thermostat.
   c) Light fixture with covered bulb.
   d) Duplex electrical receptacle.

SUGGESTED SPECIFICATIONS

1.0 SCOPE BOTH MODELS This specification describes a Bevco Chlorination House as manufactured by Bevco Engineering, Inc., 10605 West Glenbrook Court, Milwaukee, Wisconsin 53224.

2.0 DESCRIPTION BOTH MODELS The Chlorination House shall be completely assembled, ready to install, compact type capable of housing a complete chlorination system. The Chlorination House shall be Bevco Model 752__ and shall be supplied with all components factory mounted.

3.0 DESIGN — MODEL 7521

3.0 DESIGN — The house shall be constructed of 14 gauge steel, finished with three coats of baked enamel, automotive type, hammertone green, exterior finish. The floor shall be 11 gauge steel provided as an integral part of the house and reinforced to support chlorine gas cylinders. The floor shall be vinyl covered. A recess for a scale(s) shall be built into the floor such that the scale(s) will be flush with the floor. The interior of the house shall be insulated with a 1 inch minimum layer of plastic insulation. The plastic insulation shall meet U.L. specifications for fire resistant SE-1 foam with an R-Value of 7.2.

The house shall have the dimensions of 54 inches long, 24 inches deep, by 72 inches high, pre-drilled for fastening to ½ inch bolts pre-set in concrete.

The roof shall be pitched, provided with a drip lip and equipped with two removable lifting eyes to facilitate field erection. The side walls shall contain two screened vents, one for an air inlet and one for exhaust.

The house shall have two independent, continuously hinged, three point latched doors. One door shall have a key lock handle. A gas tight window, 9 inches by 7 inches, shall be provided for inspection of the interior without opening the door.

4.0 COMPONENTS — The house shall have the following components factory mounted and wired in non-conductive non-corrosive electrical conduit, boxes and fittings.

4.1 ELECTRICAL FIXTURES — The following electrical fixtures shall be provided:

a. Light with protective cover.
b. Automatic-manual selector switch externally mounted, and interlocked for automatic operation of exhaust fan and light.
c. Safety switch, 2 pole, fused for 30 amps, for 120 volts, 60 cycle, single phase power.
d. Duplex receptacle, wall panel mounted.

4.2 EXHAUST FAN — The exhaust fan shall have a rating of 100 cubic feet per minute and a capability of providing a complete air change within one minute.

4.3 HEATER — The heater shall be a 1250 watt, adjustable thermostatically controlled, forced air type. The thermostat shall have sealed contacts.

4.4 AUTOMATIC DOOR SWITCH — A door actuated micro switch shall be provided to automatically turn on light and fan whenever door is opened.

4.5 MISCELLANEOUS — Cylinder support chains, residual test kit holder, vent and vacuum bulkhead fittings, stainless steel hook for holding the chlorinator during changing of cylinders shall be provided.

3.0 DESIGN — MODEL 7523

3.0 DESIGN — The house shall be compartmentalized with two separate sections, one section shall be for chlorine and chlorination equipment and the other for electrical equipment. The house shall be constructed of 12 gauge steel finished with green exterior finish. The floor shall be ⅛ inch plate provided as an integral part of the house and reinforced to support chlorine gas cylinders. The floor shall be vinyl coated. The interior of the chlorination compartment shall be insulated with a 1 inch minimum layer of plastic insulation with an R factor of 7.2.

The house shall have dimensions of 67¼ inches long, 29 inches deep, by 81 inches high, pre-drilled for fastening to ½ inch bolts pre-set in concrete.

The roof shall be pitched, provided with drip lip and equipped with two removable lifting eyes to facilitate field erection. Each compartment shall contain two screened vents, one for air inlet and one for exhaust.

The chlorination compartment shall have two independent, continuously hinged, three point latched doors. One door shall have a key lock handle. A gas tight window shall be provided for inspection of the interior without opening the door. The electrical compartment shall have a continuously hinged, three point latched door with key lock handle.

4.0 COMPONENTS — The house shall have the following components factory mounted and wired in non-conductive, non-corrosive electrical conduit, boxes and fittings.

4.1 ELECTRICAL COMPARTMENT — The electrical compartment shall be equipped with:

a. Light with protective cover.
b. Duplex receptacle, panel mounted.
c. Safety switch, 2 pole, fused for 30 amps, for 120 volts, 60 hertz, single phase power.
d. Door actuated micro switch for the light.
e. Automatic-manual selector switch.

4.2 CHLORINATION COMPARTMENT — The chlorination compartment shall be equipped with:

a. Door actuated micro switch for automatic operation of exhaust fan and light when the doors are opened.
b. 4'x4' panel, 12 gauge, white enamel finish, for mounting equipment.
c. An exhaust fan with a capability of providing a complete air change within one minute.
d. A heater, 1250 watt with built in thermostat with sealed contacts.
e. PVC Bulkhead connections for vent and vacuum tubing.
f. Miscellaneous — adjustable cylinder support chain(s) and stainless steel hook(s) for holding the chlorinator(s) during change of cylinders.

BEVCO ENGINEERING, INC.
10605 W. Glenbrook Ct. · Milwaukee, WI 53224
Phone (414) 354-3100 · FAX #(414) 354-0441

MODEL 1361B

ELECTRONIC DUAL-PLATFORM CYLINDER SCALE

CAPITAL CONTROLS COMPANY, INC.

- Dual-weighing, independent readouts
- Modular design for easy service
- Selectable readouts in pounds or kilograms
- Low profile platform for easy-on/easy-off cylinder movement
- Built-in stops to prevent overload damage
- NEMA 4X electronics enclosures
- Optional low weight alarm

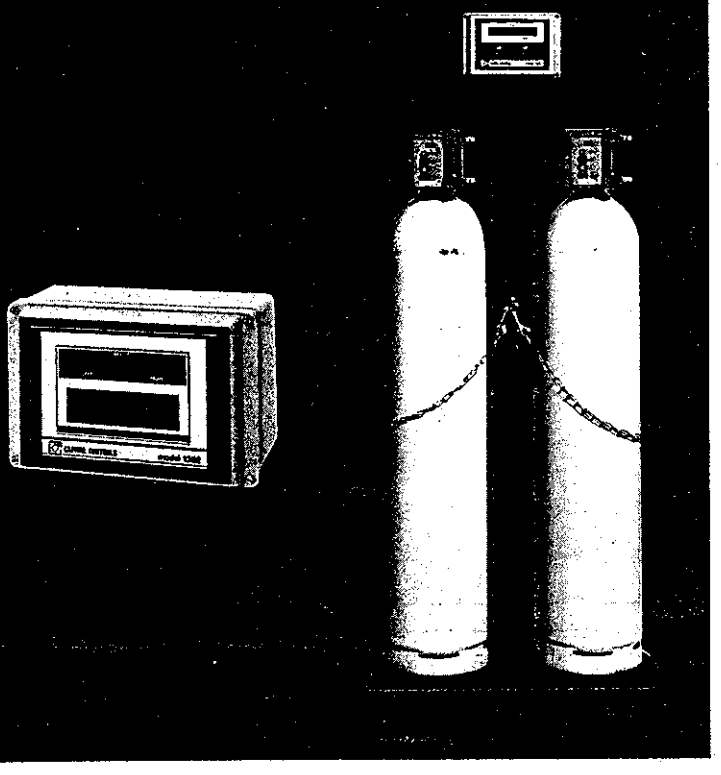

The Model 1361B dual-platform cylinder scale has been designed to provide a highly accurate means of measuring the consumption of chlorine or sulfur dioxide gas.

The scale provides a dual-indicating display with independent tare adjustments on the electronic support column and an optional dual-indicator for remote mounting. Large 1/2" high, LCD characters on each display allow values to be read from up to 10 feet (3 meters) away.

The low profile and rounded bases allow easy-on/easy-off movement of the gas cylinders. Each platform has an independent tare weight adjustment and continuous read-out. Each read-out is independently jumper selectable in pounds or kilograms. The gross capacity of each platform is 0-350 pounds or 0-158 kilograms, and the independent tare capacity is -180 pounds or -80 kilograms.

Scale design, materials selection and high-grade sealing compounds provide complete protection from moisture and corrosion. Metal parts are constructed from stainless steel or coated with polyurethane. Printed circuit boards are either encapsulated or mounted inside the NEMA 4X (IP65) weight indicator.

Bumper pads are provided on the enclosure support column to protect the electronics during cylinder changes. A safety chain is supplied to support two cylinders while in operation.

An automatic switchover module can be mounted directly to the scale.

Low weight alarms for each platform are optional. Alarms are field-adjustable for each platform between 0 and 20 pounds and come with relay contacts for connection to remote indicators.

General Specifications

Model Information Code

Model 1 3 6 1 B 1 1

Table I - Power Requirements
CODE
1 - 120 Vac, 50/60 Hz, single phase, power cord included
~~2 - 240 Vac, 50/60 Hz, single phase~~

Table II - Display Value
CODE
1 - pounds
~~2 - kilograms~~

Gross Capacity: 0-350 pounds ~~or 0-158 kilograms,~~ each platform

Tare Capacity: -180 pounds ~~or -80 kilograms~~ (independently adjustable)

Power Requirements: 120 Vac, 50/60 Hz, single phase or ~~240 Vac, 50/60 Hz, single phase~~, 12 watts

Display: Large 1/2" high characters LCD displays in pounds and/or kilograms, independently selectable

Accuracy: ±0.5% of gross capacity

Resolution: 1 pound or .1 kilogram

Ambient Temperature: 35°F to 110°F (2°C to 43°C)

Electronics Enclosure: NEMA 4X

Shipping Weight: 80 lbs. (36 kgs.)

~~**Options:** Low level alarm with contacts rated 12 amps @ 120 Vac, 12 amps @ 24 Vdc, or 5 amps @ 240 Vac, resistive SPDT (N.O./N.C.)~~

ISO9001 Certified: Lloyd's Register Assurance Ltd. has certified Capital Controls Company as meeting the following qualifying standards:
BS 5750:Part 1:1987 ISO9001-1987 EN 29001-1987 ANSI/ASQC Q91-1987

Dimensions

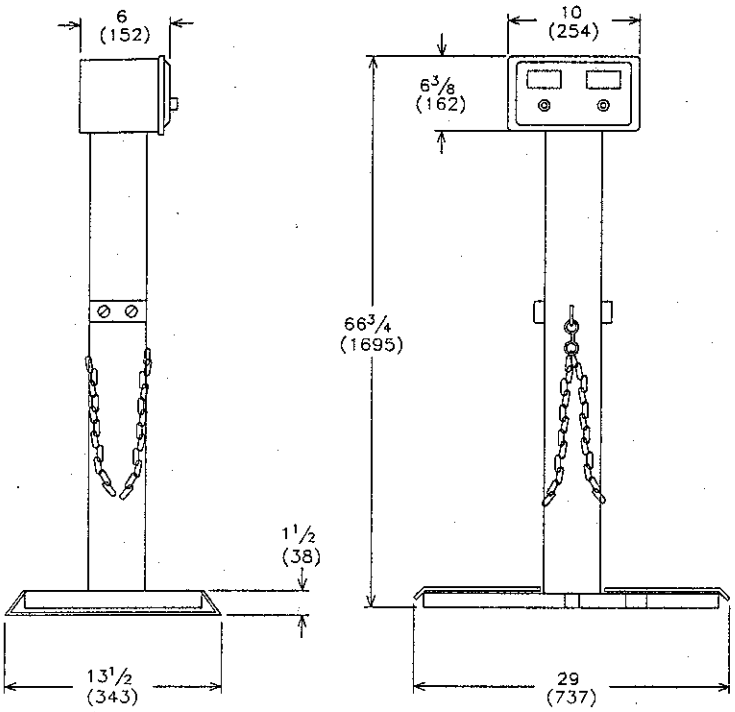

Dimensions = Inches / Millimeters

Design improvements may be made without notice.

Ordering

When ordering, please specify: Model number, display value, power requirements and options.

Represented by:

EUROPEAN HEADQUARTERS
Crown Quay Lane,
Sittingbourne, Kent
ME 10 3JG U.K.
Tel: 0795-476241
Telex: 96536 CAPCO G
FAX: 0795-479052

IN BELGIUM
Rue de Mont 31 B-6330
Sombreffe, Belgium
Tel: 071-889122
FAX: 071-888-924

CAPITAL CONTROLS COMPANY, INC.
P.O. Box 211, Colmar, PA 18915 U.S.A.
Tel: 800-523-2553,
Outside U.S.A. 215-822-2901
Fax: 215-822-8640

Pub. No. 987-4 12/93 4M

Copyright 1992 Capital Controls Company, Inc.

ADVANCE® Gas Feeder — Series 200

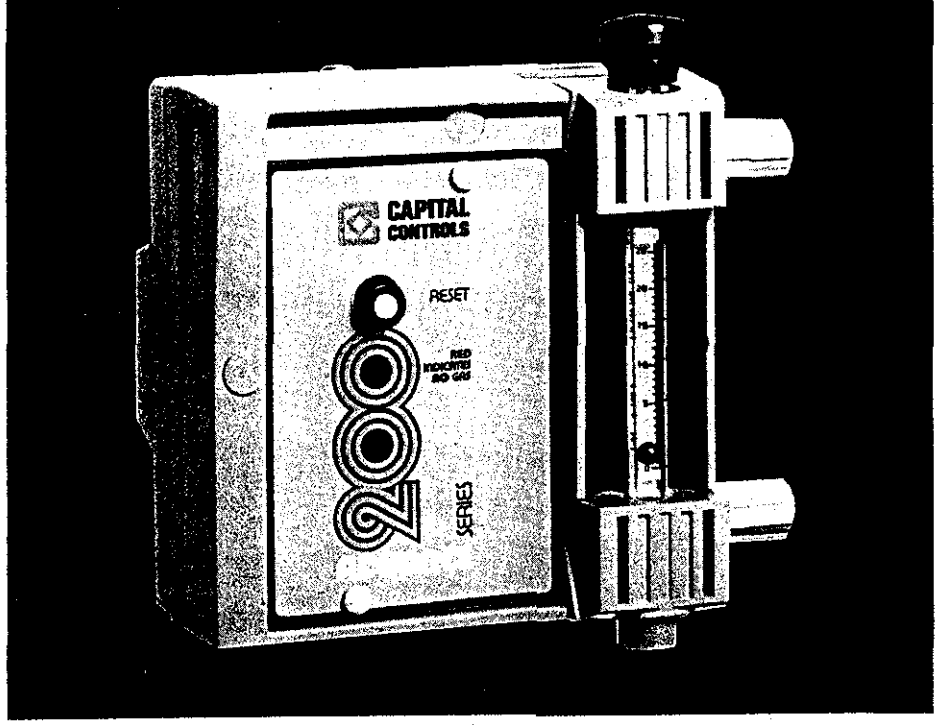

Capital Controls

ISO 9001 Certified

- **Safe and Reliable All-Vacuum Operation**
- **Lifetime Warranty on Diaphragm and Springs**
- **Worldwide Standard for Gas Feeder Technology**
- ***Superior Materials of Construction for Wet or Dry Gas Service***
- **Safe Integral Venting System**
- **Capacities up to 500 PPD (10 kg/h)**
- **Solid Silver Rate and Inlet Valves**
- **Accurate Gas Metering of:**
  - **Chlorine**
  - ~~**Sulfur Dioxide**~~
  - ~~**Ammonia**~~
  - ~~**Carbon Dioxide**~~
- **Versatile Mountings: Direct Cylinder,** ~~**Manifold or Ton Container**~~
- **Switchover Capability with Automatic Reset for Uninterrupted Service**

Capital Controls developed the all-vacuum gas feeders which has become the worldwide standard. ADVANCE® Series 200 gas feeders are designed for manual or semi-automatic gas regulation. Automatic is a simple addition.

Easy to install, for indoor or outdoor installation, each 200 Series feeder is factory tested and needs no field adjustment prior to start-up. Ten *different flowmeter capacities provide* versatility in meeting gas flow requirements. Feeders mount directly on the gas valve of a cylinder, ton container or manifold utilizing a lead gasketed positive yoke clamp. Diaphragm ejectors are standard with a choice of diffuser outlets. As an option, a variety of different ejectors are available to meet your application needs.

A 200 Series gas feeder consists of a vacuum regulator, ejector and vacuum and vent tubing to make a complete system. If multiple feed points are required, remote meter panels and additional ejectors are provided. A switchover module is offered to provide for uninterrupted service.

100.0002.0
(Formerly A1.1200)

Applications

For process water, waste treatment and water treatment in the municipal or industrial marketplace

- **Disinfection: potable water, municipal wastewater**
- **Chloramination: potable water**
- **Dechlorination: textiles, wastewater effluent**
- **Cooling water: control of slime and algae in piping, heat exchangers, and cooling towers**
- **Irrigation systems: slime and algae control**
- **Bleaching: textiles, pulp and paper, food**
- **Chemical/Pharmaceutical Manufacture: process and cooling water**
- **Food Processing: Washdown, canning, bleaching, taste and odor control**
- **pH neutralization**
- **Metal finishing wastes: cyanide, chromium**
- **Zebra mussel control**

Design Features

- **Sonic Flow**: Gas flows at sonic velocity maintaining constant gas flow; additional pressure regulation is not required.
- **Automatic Switchover**: A separate, independent device that does not require manual reset. Flow indication is available at both gas sources. Each gas source has a separate independent vent and an integral pressure relief device.
- **Versatility**: Cylinder, ~~manifold or ton container~~ mounting. Unit can be modified for semi-automatic or automatic control. Variety of ejectors available for all applications.
- **Reliable**: All vacuum operation, loss of chlorine supply indicator, integral venting system, double-thickness main regulating diaphragm, lifetime warranty on diaphragm and springs, integral gas flow indicator.
- **Ease of maintenance**: Simplicity of design and modularized components; such as the replaceable inlet capsule for minimized maintenance.
- **Superior materials of construction**: Solid silver rate valve, monel drip leg for ton mounting, corrosion resistant yoke assembly, tantalum springs

Operation

Water flowing through the ejector venturi, creates a vacuum which opens the check valve in the ejector. The vacuum is carried through the vacuum line to the vacuum regulator where the differential causes the inlet valve at the gas container to open, initiating gas flow. A spring opposed diaphragm in the vacuum regulator, regulates the vacuum. The gas passes under vacuum through the flowmeter, the rate control valve, the vacuum line and to the ejector. Here the gas is thoroughly mixed with water and applied as a solution. (Figure 1)

The system is completely under vacuum from each ejector to the gas inlet container valve. If the water supply to any ejector stops or vacuum is lost for any other reason, the spring loaded inlet valve immediately closes and isolates the gas supply. If the gas source depletes the unit seals to prevent excessive vacuum build-up and moisture from being drawn back into the gas source. When more than one feed point is desired multiple flowmeters and ejectors can be supplied.

For uninterrupted gas feeding on a round-the-clock basis, an automatic switchover system is required. Each system consists of two vacuum regulators, one vacuum type automatic switchover module, one ejector and one remote meter panel. An automatic switchover module allows gas to flow under vacuum from the regulator in service through the switchover module to the remote meter panel and the ejector, until that source is depleted. The vacuum sealing valve on the regulator then closes and the vacuum level in the system increases, initiating the spring-loaded toggle assembly switch in the switchover module. (Figure 2) The open valve on the depleted source closes while the valve on the standby source opens to permit gas flow. When a fresh gas supply replaces the depleted source it will automatically be placed in standby. The fresh supply will not be accessed until the supply in service is exhausted.

Technical Data

Capacities: Standard dual-rate indicating flowmeters are available with the following capacities 0.6, 1.5, 4, 10, 25, 50, 100, 200, 250, 500 PPD ~~(11, 28, 75, 200 g/h, 0.5, 1, 2, 4, 5, 10 kg/h)~~ of chlorine gas. ~~To determine feed rates for other gases, multiply each chlorine value by~~:

~~0.95 for sulfur dioxide~~
~~0.50 for ammonia~~
~~0.70 for carbon dioxide~~

Flowmeter: The minimum feed capacity for every gas flowmeter is 1/20th of the maximum capacity. Accuracy is within ±4% of maximum flowmeter capacity.

~~**Electrical Requirements:** On ton mounted units the drip leg is provided with a 120/240 Vac, 50/60 Hz, single phase heater. Explosion proof heaters are available upon request.~~

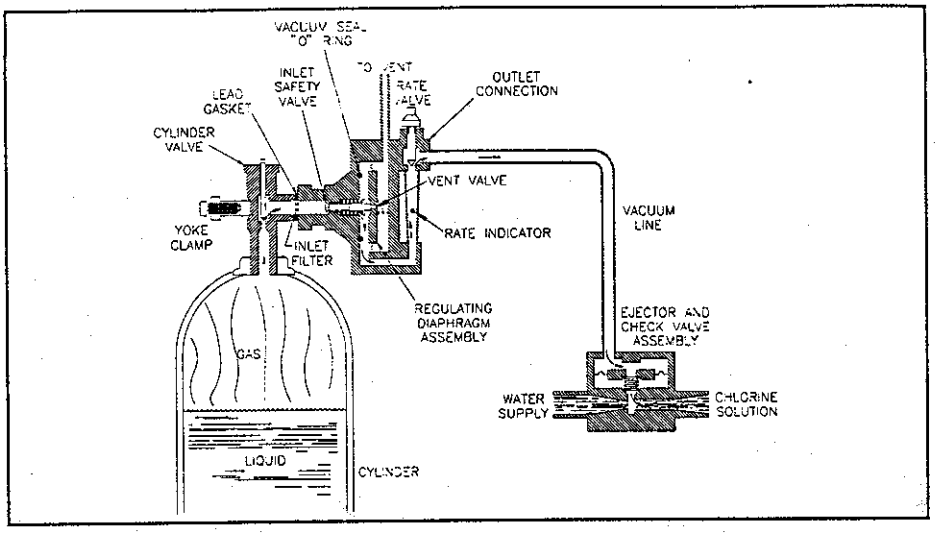

Figure 1 - Cylinder Mounted Chlorinator Flow Diagram

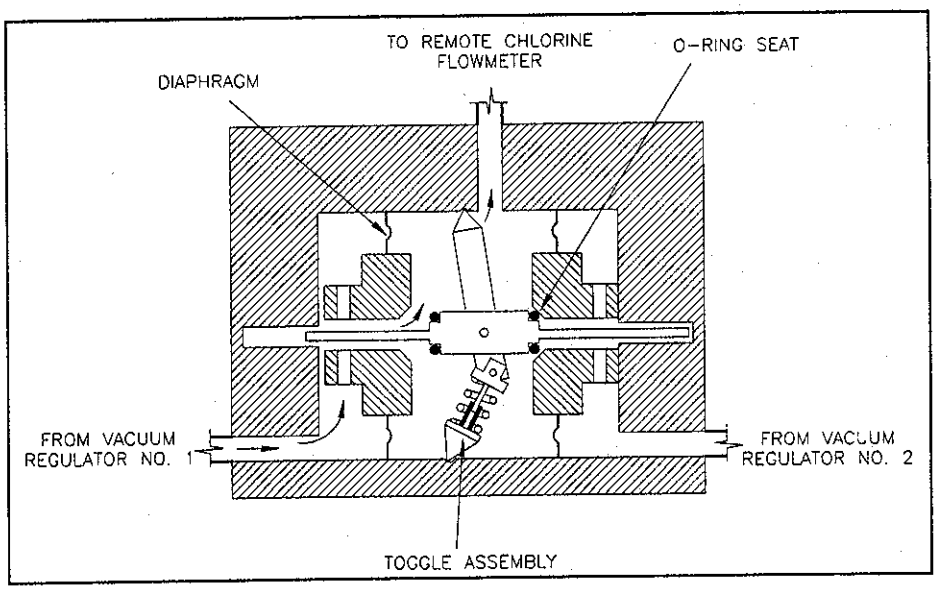

Figure 2 - Automatic Switchover Flow Diagram

Warranty and Capability

Capital Controls offers a lifetime warranty on the diaphragm and springs. There is a three (3) year limited warranty on 200 Series equipment.

Capital Controls is ISO 9001 certified to provide quality and precision materials, and specializes in disinfection technologies, water quality monitors and instrumentation for water and wastewater. Over 30 years of industrial and municipal application experience in the water and wastewater industries is incorporated into the equipment design to provide the highest quality comprehensive solutions for the global market.

SERIES 1610B

SINGLE POINT GAS DETECTOR

CAPITAL CONTROLS COMPANY, INC

- **Rapid response to chlorine or sulfur dioxide gas leaks**
- **Maintenance-free, long-life Micro-Redox sensor**
- **Audible and visual alarms for local warning**
- **Dual alarm output for remote warning and device control**
- **NEMA 4X enclosure for indoor and outdoor use**
- **Optional power back-up for continuous operation**
- **Optional indicator for remote monitoring**

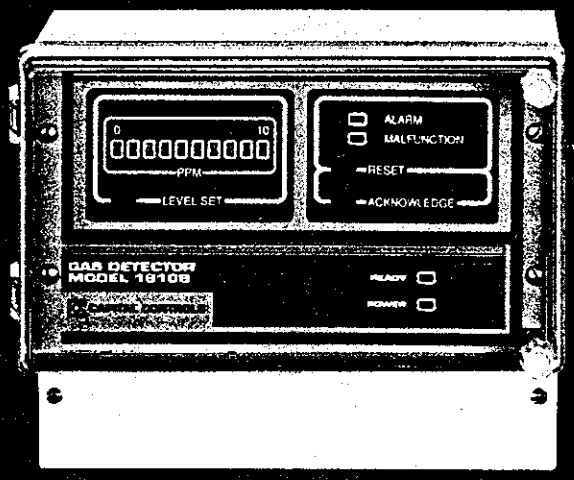

Capital Controls Series 1610B Single Point Gas Detector provides features for continuous detection of chlorine and sulfur dioxide gases, in a normally clean air environment, wherever these chemicals are unloaded, stored or used. Highly sensitive, the Series 1610B detects gas levels as low as 0.5 ppm and is designed to show gas concentrations in the 0-10 ppm range.

Modular in design, the basic Series 1610B consists of the receiver, and sensor module with a Micro-Redox type sensor element. Optional equipment includes the Model 1640 Power Back-up and the Model 1630 Remote Indicator.

The state-of-the-art Micro-Redox type sensor element responds in 30 seconds or less to the presence of gas, recovers in three minutes or less after the gas has cleared, and is designed to eliminate false alarms caused by interference gases and environmental conditions. Typical sensor element life is 18 to 24 months. The sensor module may be installed up to 1000 feet (305 meters) from the receiver.

Series 1610B LED indicators include POWER; READY, verifying sensor stabilization; bar graph indicator for gas concentrations and alarm level setting; ALARM; and MALFUNCTION that indicates loss of sensor input signal. The Series 1610B provides visual and audible alarms at the receiver and Remote Indicator, and an audible alarm at the Power Back-up.

Series 1610B provides an operator selectable, relay switched single or dual alarm output to remote devices such as horns and ventilating fans, and has provision for relay switched output of sensor malfunctions to remote devices. The Series 1610B also provides a 4-20 mAdc output to remote devices such as indicators and event recorders.

For ease of use, operator controls have been limited to power on/off, alarm level set, manual reset, and acknowledge (silencing) of alarm annunciator. Manual or automatic reset of alarm and malfunction indicators and outputs is operator selectable.

In the event of a gas leak, the Series 1610B processes sensor inputs and displays the presence and concentration of gas through illumination of cummulative bar segments on the bar graph indicator. A flashing bar segment displays the alarm level selected by the operator. When the alarm level is exceeded, the alarm indicator illuminates, the annunciator sounds, and the alarm relay energizes actuating any remote devices such as horns and fans.

High-impact, corrosion-resistant NEMA-4X enclosures make the Series 1610B suitable for indoor and outdoor use. All enclosures are designed for easy wall mounting. For installations in Canada, CSA approved units are available. Clear covers on the Gas Detector, Power Back-up and Remote Indicator give operating personnel an unobstructed view of controls and indicators.

Optional Model 1630 Remote Indicator features comprise the gas detector bar graph, alarm indicator, malfunction indicator and alarm annunciator. In the event of a gas leak, the operator can silence the remote alarm annunciator, however, the remote alarm indicator will remain illuminated until the gas condition is cleared and the receiver is reset.

The optional Model 1640 Power Back-up supports both the Gas Detector and Remote Indicator, and will activate automatically in the event of a power failure. Should a loss of line power occur the Model 1640 will provide up to six (6) hours of back up operation. The internal Power Back-up batteries automatically and continuously recharge under normal operation.

General Specifications

RECEIVER

Power Requirements: 117 VAC ± 10%, 50/60 Hz. or 235 Vac ± 10%, 50/60 Hz. single phase

Power Consumption: 12 watts

Input (from sensor): 4-20 mAdc

Output (to sensor): 18-24 Vdc

Sensor Stabilizing *Jumper selectable*

Timer: 1/2, 1, 2, 4, 8, 16 minutes

Alarm and Malfunction Contacts: 10 amps @ 240 Vac maximum or 10 amps @ 28 Vdc maximum resistive or inductive load, SPDT (N.O./N.C.); DPDT (N.O./N.C.) by jumper selection for dual alarm output

Alarm and Malfunction Contacts: Jumper selectable latching *(manual reset) or unlatching* (automatic reset)

LED Indicators: POWER, READY, MALFUNCTION, ALARM, BAR GRAPH INDICATOR

Bar Graph Indicator Range: 0-10 ppm

Indicator Output Signal: 4-20 mAdc into 900 ohms maximum impedance

Ambient Temperature: −20°F to 150°F (−29°C to 65°C)

Enclosure: NEMA 4X (CSA approval available)

Weight: 4 lbs. (2 kg)

SENSOR

Type: Electrochemical of the Micro Redox type

Gases Sensed: Chlorine (Cl_2)
Sulfur Dioxide (SO_2)

Minimum Detectable Concentration: 0.5 ppm by volume

Response Time: 30 seconds maximum for 80% of range to 10 ppm gas at 20°C, after stabilization

Recovery Time: 3 minutes for 90% of range at 10 ppm gas concentration

Operating Temperature: −2°F to 131°F (−20°C to 55°C)

Operating Humidity: 2% to 98% R.H.

Cable Requirements: 3-wire, unshielded, 22 gauge *minimum*

Maximum Separation Between Receiver and Sensor: 1000 feet (305 meters)

Enclosure: NEMA 4X (CSA approval available)

Weight: 9 oz. (.25 kg)

~~**REMOTE INDICATOR (Model 1630 Optional) for remote monitoring**~~

~~**Input:** 4-20 mAdc (from Gas Detector)~~

~~**Alarm Input:** 0-12 Vdc~~

~~**LED Indicators:** POWER, BAR GRAPH INDICATOR, MALFUNCTION, ALARM~~

~~**Bar Graph Indicator Range:** 0-10 ppm~~

~~**Power Requirements:** 117 Vac ± 10% 50/60 Hz., or 235 Vac ± 10% 50/60 Hz., single phase~~

~~**Power Consumption:** 3.5 watts~~

~~**Enclosure:** NEMA 4X (CSA approval available)~~

~~**Weight:** 3 lbs. (2 kg)~~

~~**POWER BACK-UP (Model 1640 Optional) for use with Gas Detector and/or Remote Indicator**~~

~~**Response:** Automatic upon power failure~~

~~**Alarm Input:** 0-12 Vdc or open-ground~~

~~**Output:** 18 Vdc~~

~~**Power Requirements:** 117 Vac ± 10% 50/60 Hz, or (for recharging) 235 Vac ± 10% 50/60 Hz, single phase~~

~~**Power Consumption:** 12 watts~~

~~**LED Indicators:** BATTERY LOW, READY, LOW (Charge rate), HIGH (Charge rate), POWER, ANNUNCIATOR~~

~~**Enclosure:** NEMA 4X (CSA approval available)~~

~~**Weight:** 10 lbs. (5 kg)~~

Dimensions

Design improvements may be made without notice.

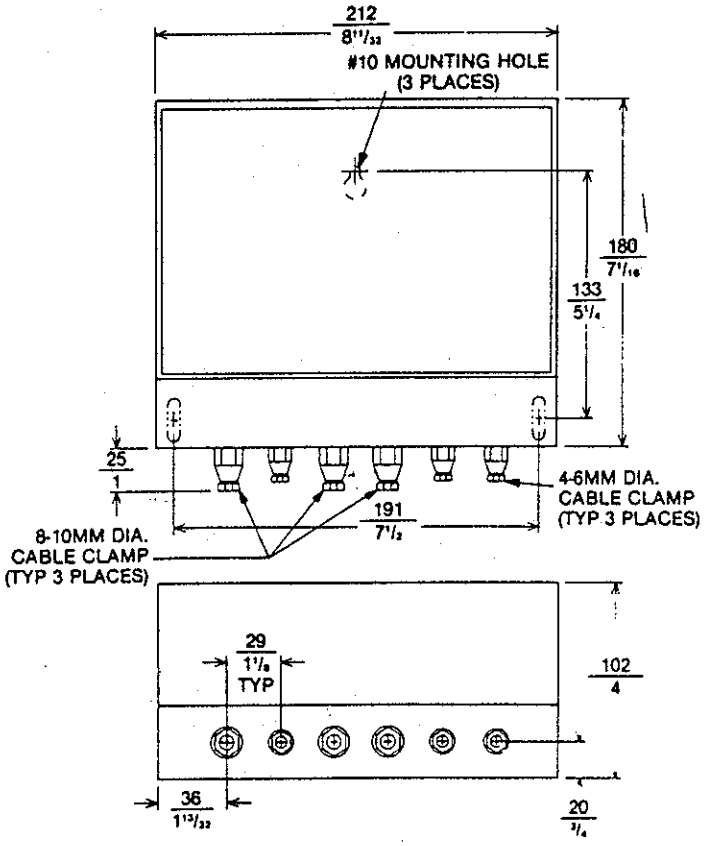

Model 1610B
Receiver

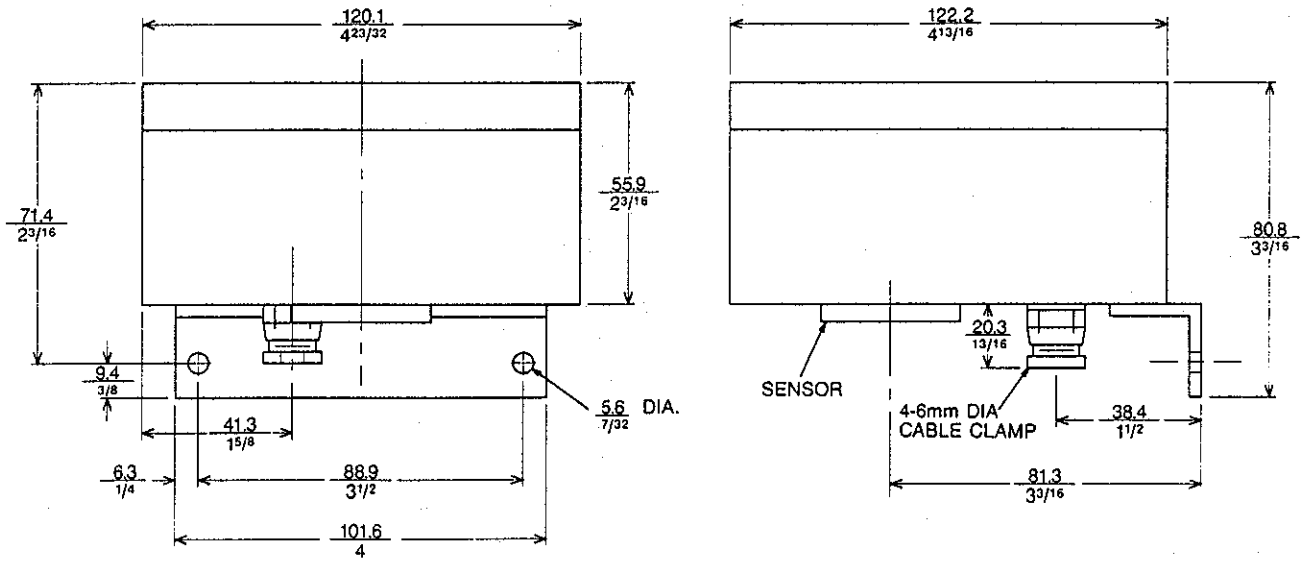

Sensor

C-5092

DIMENSIONS = MILLIMETERS / INCHES

BOOSTER PUMPS

A UNIT OF GENERAL SIGNAL GS

AURORA PUMP

BULLETIN 410M

410 SERIES SINGLE STAGE SPLIT CASE PUMPS

CAPACITIES TO 15000 G.P.M.
HEADS TO 500 FEET
TEMPERATURES TO 275°F

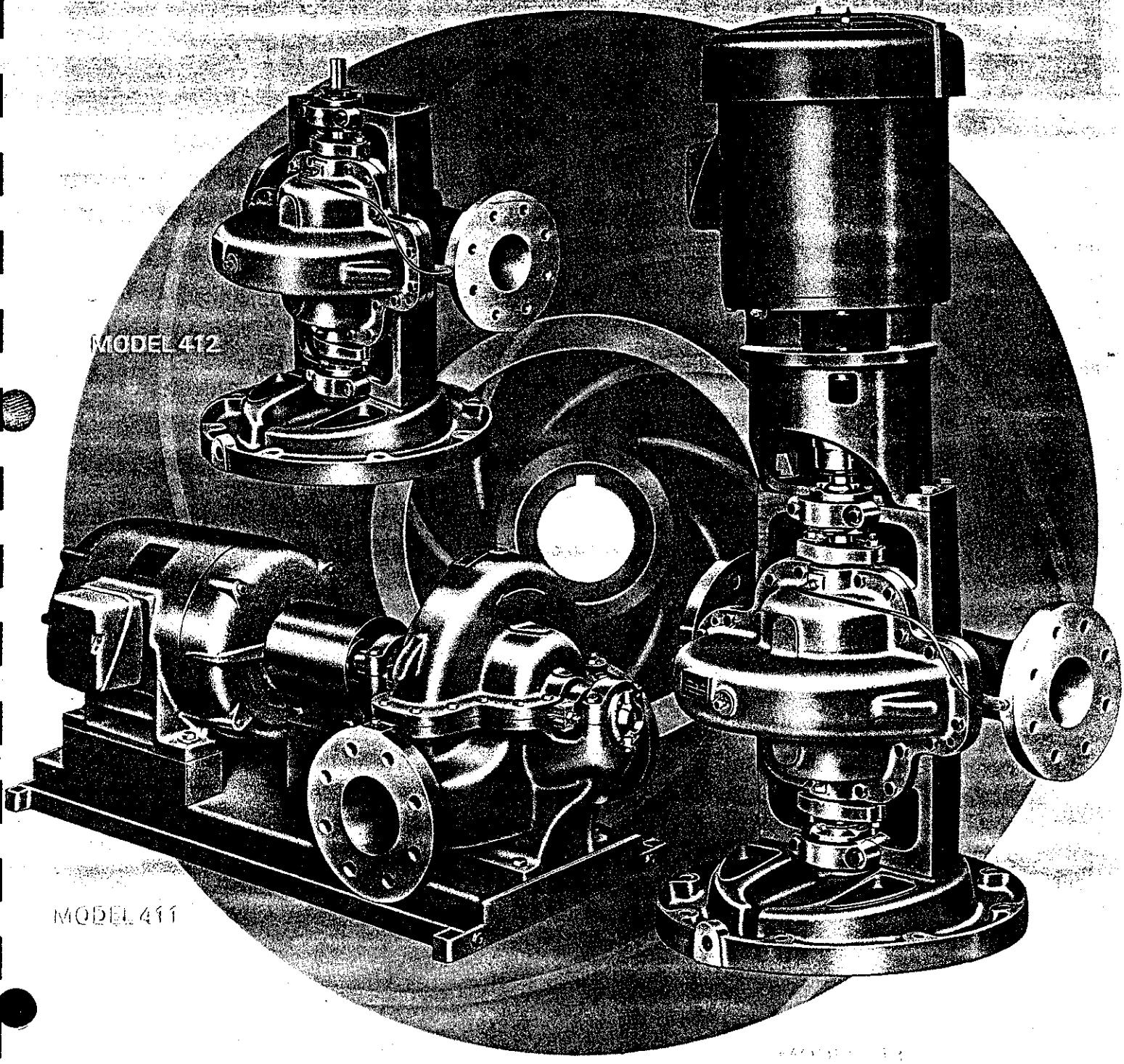

© 1973 AURORA PUMP, NORTH AURORA, ILLINOIS

A.I.A. FILE NO. 30-C-5

The horizontal split case pump has long and properly been used for the handling of liquids where the utmost in reliability and accessibility are paramount. Billions of gallons of liquid have been pumped by split case double suction pumps and billions more will be pumped considering the rapid industrial, agricultural and commercial expansion. The Aurora 410 Series pumps make a significant contribution to the customer requirements for pumps on this type of service. The 410 Series is a modern design based on Aurora Pump's 50 years experience with the design, sales and manufacture of horizontal split case pumps. Look through this bulletin and see what real accomplishments can be made when an imaginative approach is taken to the customer's problem of moving liquids within a piping system. See Aurora now!

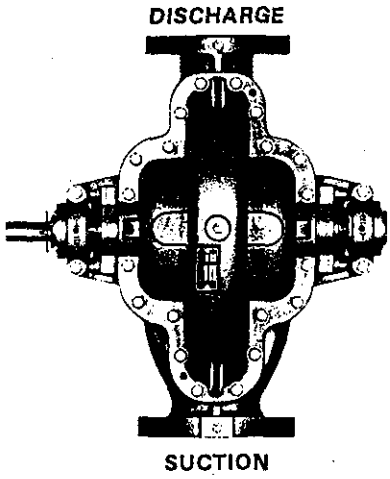

STANDARD
RIGHT HAND ROTATION

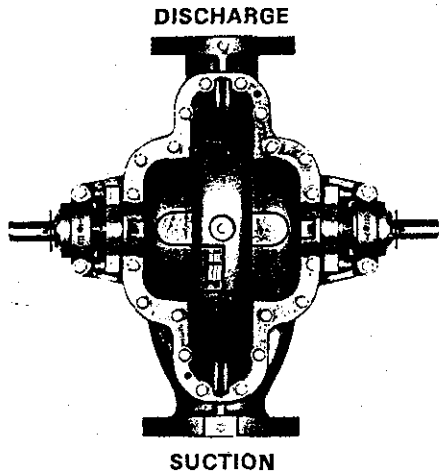

OPTIONAL DUAL DRIVE
RIGHT HAND ROTATION

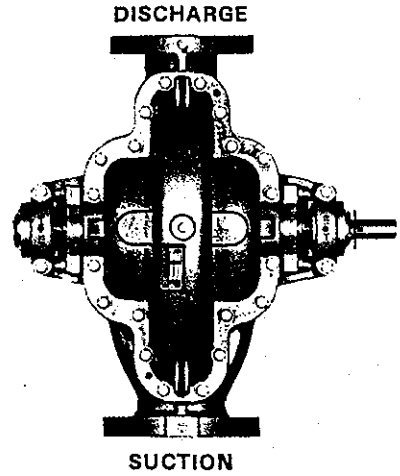

OPTIONAL
LEFT HAND ROTATION

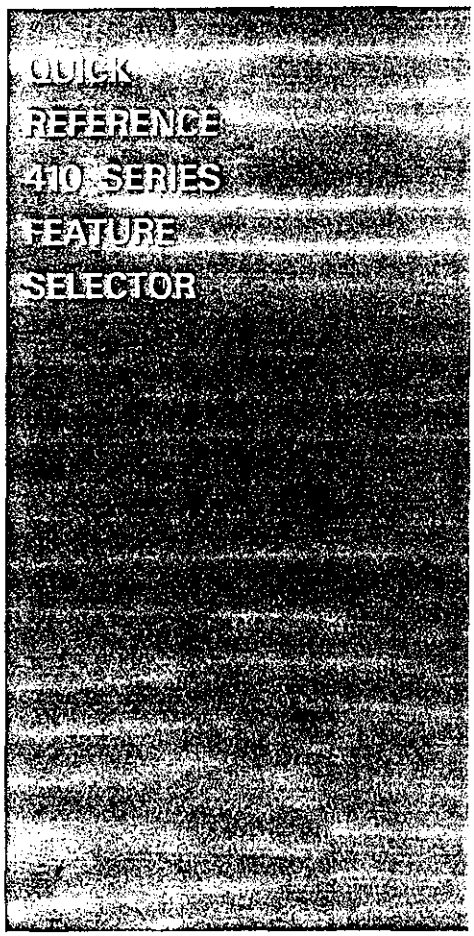

STANDARD

- Bronze fitted pump construction
- Bronze shaft sleeves
- Dynamically balanced impellers
- Bronze case wearing rings
- Twin volute on 10" and larger pumps
- Stainless steel impeller key
- Regreasable ball bearings
- Single row ball bearing (inboard)
- Double row ball bearing (outboard)
- Mechanical seals . . . single unbalanced (Model 412 and 413)
- Graphite and TFE lubricated acrylic packing
- Internal bypass between casing and stuffing box
- 125# ASA flanges
- 250 psi case working pressure
- Carbon steel shaft
- Stuffing box bushings
- Lifting lugs
- Hydrostatic test
- Cast integral bearing arms
- Water slingers and grease seals
- External bypass between casing and stuffing box (Model 412 and 413)
- Coupling guard (Model 411)

OPTIONAL

- All iron, all bronze or special alloy pump construction
- Hardened 440C stainless steel shaft sleeves (packing only)
- 316 stainless steel shaft sleeves (mechanical seal)
- Impeller wearing rings
- Oil lubricated ball bearings (Model 411 horizontal pump)
- Mechanical seals . . . single unbalanced (Model 411)
  . . . single balanced (All Models)
- Stainless steel or monel shaft
- External bypass between casing and stuffing box (Model 411)
- Steel drip rim, formed steel or fabricated steel bases
- Double extended shaft (Model 411)
- Right or left hand rotation
- Certified performance test
- Packing with latern ring (Model 411)
- 250# ASA suction and discharge flanges
- Bottom suction or chair mounted pumps
- Water cooled cartridge caps

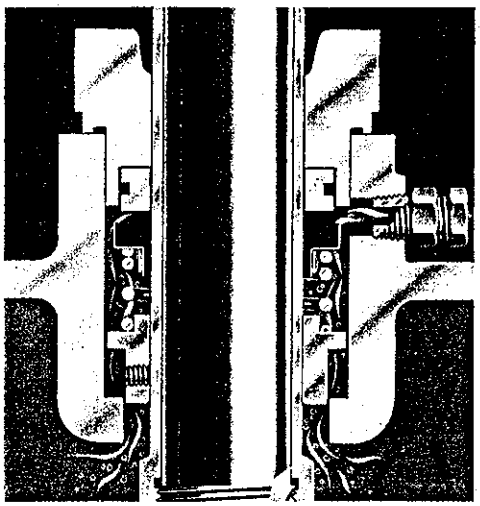

EXTERNAL UPPER SEAL FLUSH

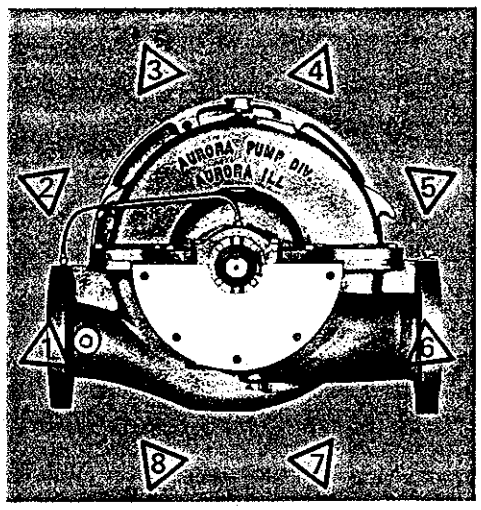

INLINE PIPING IN ANY DIRECTION

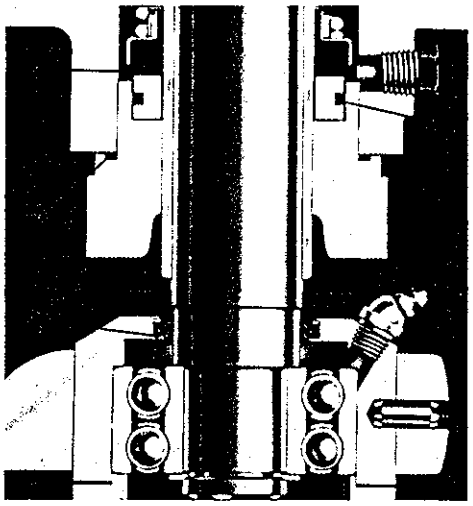

FIVE WAY BEARING PROTECTION

GO VERTICAL AND PUT 2 PUMPS WHERE ONLY ONE HORIZONTAL WOULD FIT.

Aurora's space saving vertical split case pumps have long been recognized for their reliability. This reputation in the field of vertical installations has been re-emphasized since the introduction of the Model 413 as pumps of unmatched quality.

VERTICAL PUMPS PROVIDE DISTINCT ADVANTAGES OVER HORIZONTAL PUMP CONSTRUCTION.

A. Less floor space required.
B. Inline piping arrangement allows piping in any direction.
C. Elevated motor protects against potential flooding if the pump station is in a low area.

Additional features described for the horizontal pumps are also found in the vertical pumps. In addition, there are several features unique only to Model 413.

1 COUPLING ALIGNMENT True alignment is vital to long life and proper performance. To maintain proper coupling alignment the mounting bracket is rabbet fitted to the motor.

2 MECHANICAL SEALS Standard construction includes carbon against Ni-Resist face for optimum hot water performance. Long life is also assured with 303 stainless steel metal parts and "Buna-N" elastomers.

3 BEARING PROTECTION Grease seals and water slingers are provided to protect the bearings from contamination. This important feature is also standard on horizontal pumps.

4 CAST IRON DRIP RIM BASE Accurate positioning of the pump is assured by the mounting base. A drip rim is incorporated in the base design to control condensation and leakage.

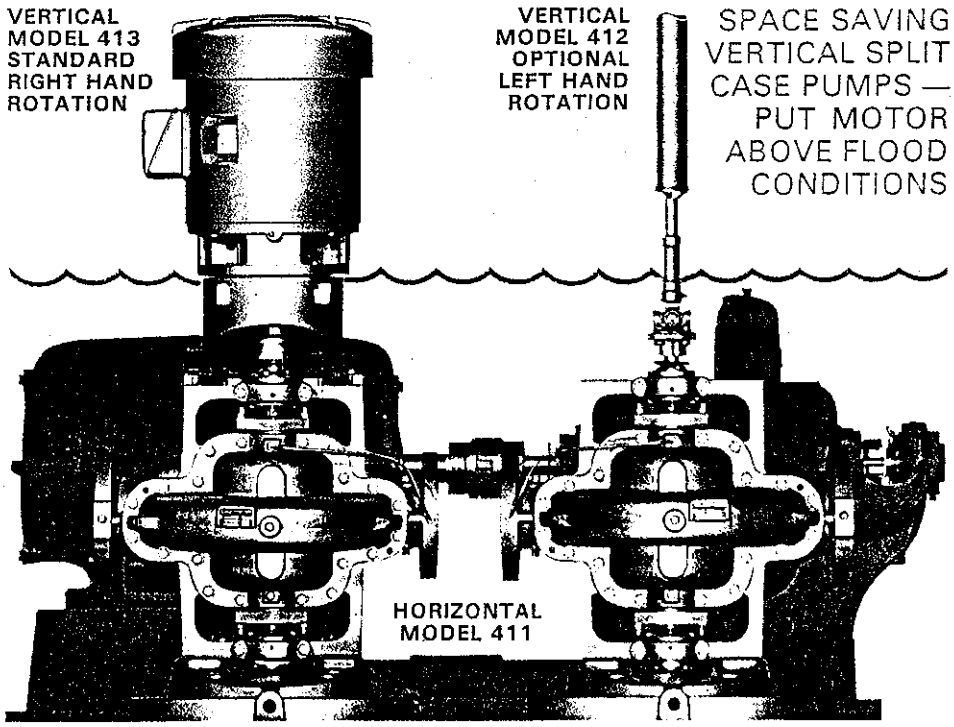

SPACE SAVING VERTICAL SPLIT CASE PUMPS — PUT MOTOR ABOVE FLOOD CONDITIONS

MODELS 411 are horizontally baseplate mounted with a driver flexibly coupled to the pump. This design is recommended where floor space is readily available and where flooding of the installation is not possible.

MODELS 412 are vertically mounted and utilize flexible shafting between the driver and the pump. This model is frequently used on difficult applications where flooding of the installation is a possibility.

MODELS 413 are vertically mounted with an elevated driver coupled directly to the pump thru a flexible coupling. Model 413 is very popular for installations where available floor space is limited and where possible flooding is marginal.

HORIZONTAL PUMPS

Some of the important features of the Aurora 410 Series Split Case Pumps are outlined below:

1 SPLIT CASE DESIGN simplifies disassembly. The suction and discharge piping or alignment is not disturbed. Simply remove the upper casing for service or inspection. Cast lifting lugs are provided. Computer-machined major components with 360 degree registered fits assure concentricity of all parts. Twin volute design balances out radial hydraulic thrust loads on larger split case pumps (see Range Charts).

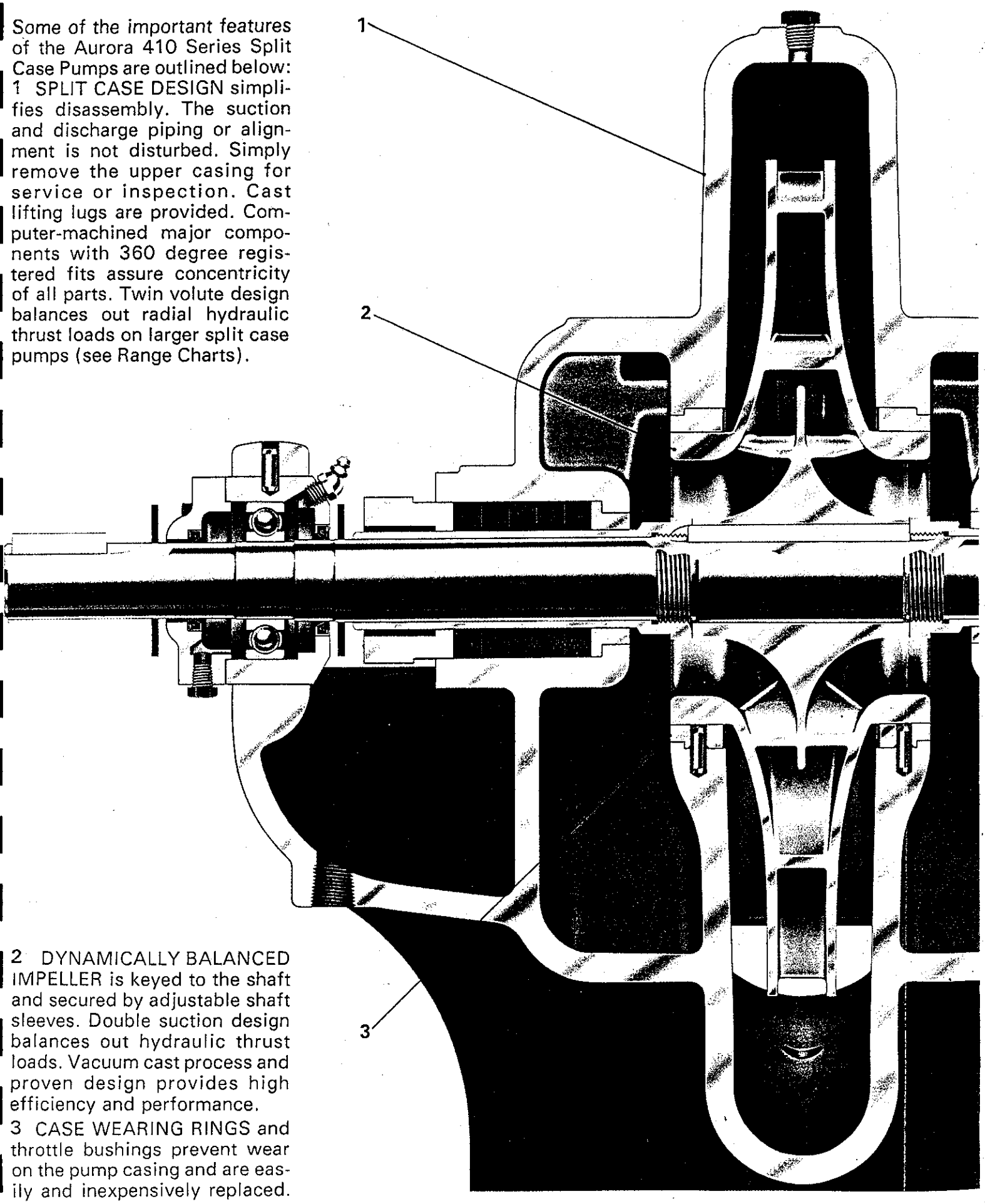

2 DYNAMICALLY BALANCED IMPELLER is keyed to the shaft and secured by adjustable shaft sleeves. Double suction design balances out hydraulic thrust loads. Vacuum cast process and proven design provides high efficiency and performance.

3 CASE WEARING RINGS and throttle bushings prevent wear on the pump casing and are easily and inexpensively replaced.

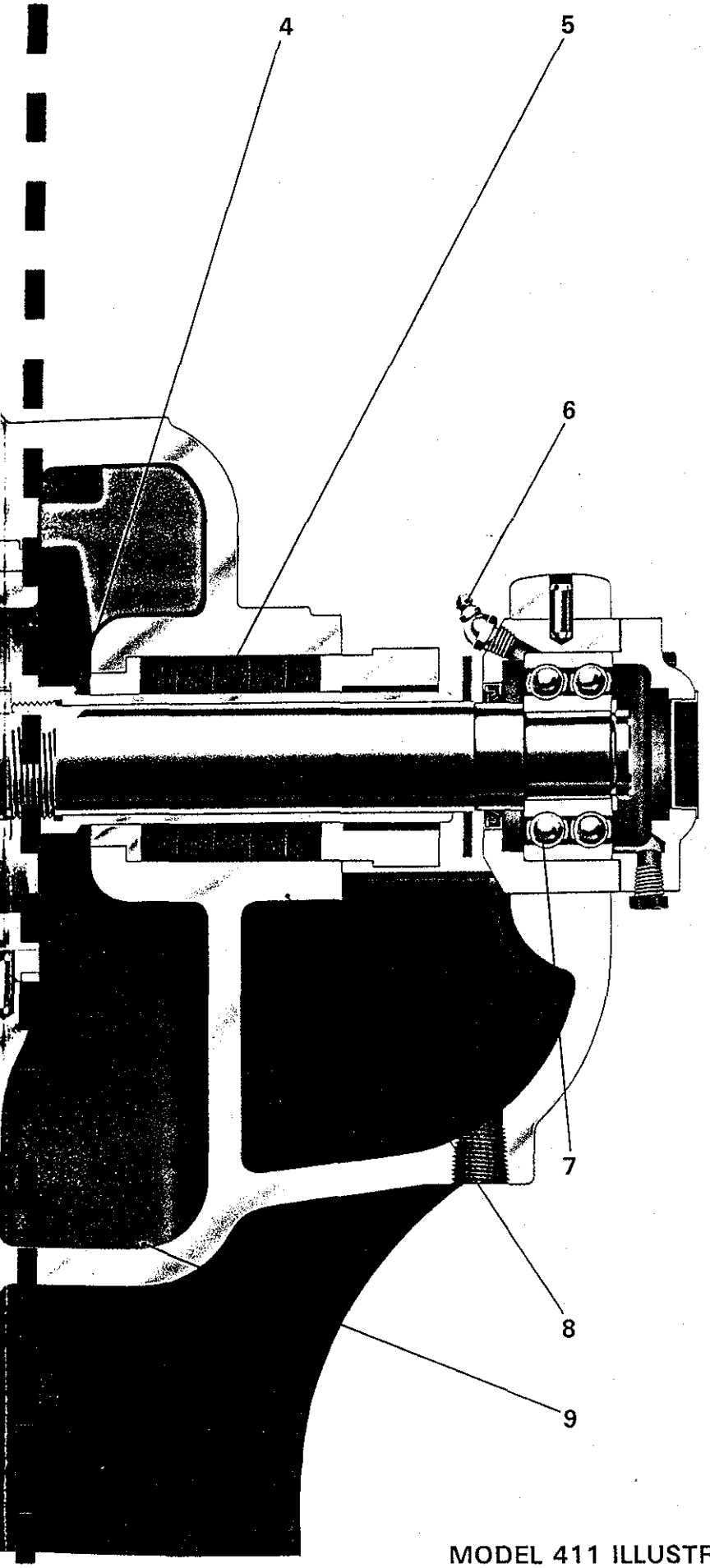

MODEL 411 ILLUSTRATED

4 BRONZE SHAFT SLEEVE prevents shaft wear, is slip fit over the shaft, keylocked, and extends the entire length of each stuffing box. Shaft sleeves and impeller are sealed by Teflon coated steel gaskets to eliminate corrosion of the shaft by the pumped liquid. This eliminates the need for high cost, special stainless steel or monel shafts.

5 INTERCHANGEABLE STUFFING BOX for mechanical seals or packing. Packing is standard on horizontal pumps. Optional lantern rings have internal water seal passages between the casing and stuffing box and cannot be damaged. Mechanical seals have carbon against Ni-Resist face. Long life is assured with 303 stainless steel metal parts and "Buna-N" elastomers. Several optional mechanical seals are available.

6 GREASE LUBRICATION purges old grease from bearings. Oil lubrication is optional on horizontal pumps. Lube fittings are conveniently located for quick accessibility and provide positive bearing lubrication. Oil seals and non-sparking Neoprene rotating slingers protect both bearings during pump operation and washdowns.

7 BEARINGS selected for 50,000 hour minimum life at maximum load. Average bearing life 5 x minimum. Double row thrust ball bearing is standard on all models. Short bearing span holds shaft deflection to .002" at face of stuffing box at maximum load. Integral bearing arms eliminate bearing misalignment and simplify service.

8 LEFT HAND ROTATION can be readily provided with standard parts. Tandem drive pumps require only a different shaft.

9 CERTIFIED PERFORMANCE with POSITIVE SUCTION PRESSURE or with a SUCTION LIFT are available on each pump for customer approval. Pumps are all hydrostatically tested.

HORIZONTAL PUMP DIMENSIONS

MOTOR FRAME	MODEL 413	143 HP	145 HP	182 HP	184 HP	213 HP	215 HP	254 HP	256 HP	284 HPH		286 HPH		324 HP		326 HP		364 HP		365 HP		404 HP		405 HP		444 HP		445 HP	
	MODEL 411	143 T	145 T	182 T	184 T	213 T	215 T	254 T	256 T	284 TS	284 T	286 TS	286 T	324 TS	324 T	326 TS	326 T	364 TS	364 T	365 TS	365 T	404 TS	404 T	405 TS	405 T	444 TS	444 T	445 TS	445 T
HORSE POWER	3500 RPM	1½	2-3	5	7½	10	15	20	25	30	—	40	—	50	—	60	—	75	—	100	—	125	—	150	—	200†	—	—	—
	1750 RPM	1	1½ -2	3	5	7½	10	15	20	—	25	—	30	—	40	—	50	60	—	75	—	100	—	125	—	150	—	200†	—
	1150 RPM	—	1	1½	2	3	5	7½	10	—	15	—	20	—	25	—	30	—	40	—	50	—	60	—	75	—	100	—	125
MOTOR WEIGHT	MODEL 411	40	45	72	80	130	145	220	240	330	330	370	370	475	475	525	525	630	630	690	690	830	830	915	915	1095	1095	1270	1270
	MODEL 413	43	48	84	102	132	156	300	300	420	420	420	420	570	570	570	570	950	950	950	950	1230	1230	1230	1230	1680	1680	1680	1680
C		12	13	13	14	16	18	21	23	22	24	24	25	25	26	26	28	27	29	28	30	30	33	31	34	34	38	36	40
D (SEE NOTE **)		3½	3½	4½	4½	5¼	5¼	6¼	6¼	7	7	7	7	8	8	8	8	9	9	9	9	10	10	10	10	11	11	11	11
P APPROX.		8	8	10	10	11	11	13	13	16	16	16	16	18	18	18	18	20	20	20	20	22	22	22	22	26	26	26	26
AG APPROX.		11	12	14	15	16	17	20	21	22	22	23	23	25	25	26	26	25	25	25	25	28	28	28	28	32	32	32	32

MODEL 411 BASE NUMBER

POWER SERIES MODEL 411																												
1	3	3	3	3	3	3	8	8	8•	—	8•	—	11•															
2	3	3•	3•	3•	5	5	8	8	9	9	9	9	11•	12	11•	12	12	—	12									
3				5•	8	8	8	9	9	11	11	11	12	12	12	12	12	—	12	—	15•	—	15•					
4					6•	6•	9	9•	—	11	—	11	11	11	12	12	12•	12•	12•	12•	16•	—	16•	—	16•	—	16•	
5							11	11	—	12	—	12	—	12•	—	12	12	12	13	13	16	16•	16•	16•	16•	16•	16•	—
6B												13	—	13•	—	13•	—	13•	13•	13•	17	17•	17	17	17	17	17	18
7																						17•	—	17•	17•	18	18	18•

BASE	3	5	6	8	9	11	12	13	15	16	17	18	FLANGES — ASA STD.	FURNISHED AS:
BASE WEIGHT	49	59	68	96	109	164	192	235	291	344	399	441	250# WITH 125# DRILLING	STANDARD
HA	15	17¼	17¼	20½	20½	26¾	26¾	26¾	30¾	30¾	30¾	30¾		
HB	33½	36½	42½	42½	48½	46½	54½	64½	54½	64½	74½	82½	250# WITH 250# DRILLING	OPTIONAL
HN	3	3	3	3	3	4	4	4	4½	4½	4½	4½		

NOTES Apply to all Models.

*Add 1" for true discharge centerline.

**Always use largest of 2 "D" dimensions.

•May not be used for all pump sizes in this power series. Consult individual dimension pages for final selection.

†For motor and baseplate dimensions over 200 HP refer to the factory.

††These pump sizes are available in a vertical chair mount configuration in Models 412C and 413C. See individual dimension pages for complete dimensions and weights.

1. Dimensions and weights are approximate.
2. Complete dimensions are available.
3. Not for construction purposes unless certified for approval.
4. Frame sizes shown are for open drip proof motors only.
5. Add pump, base and motor weight for unit total weight.
6. Conduit box is shown in approximate position. Dimensions are not specified as they vary with each motor manufacturer.
7. Aurora Pump reserves the right to make revisions to its products and their specifications, and to this bulletin and related information without notice.
8. 10 x 12 x 18 and 12 x 14 x 15 pump sizes are also available as bottom suction horizontal Model 411B pumps. See individual dimension pages for complete dimensions.

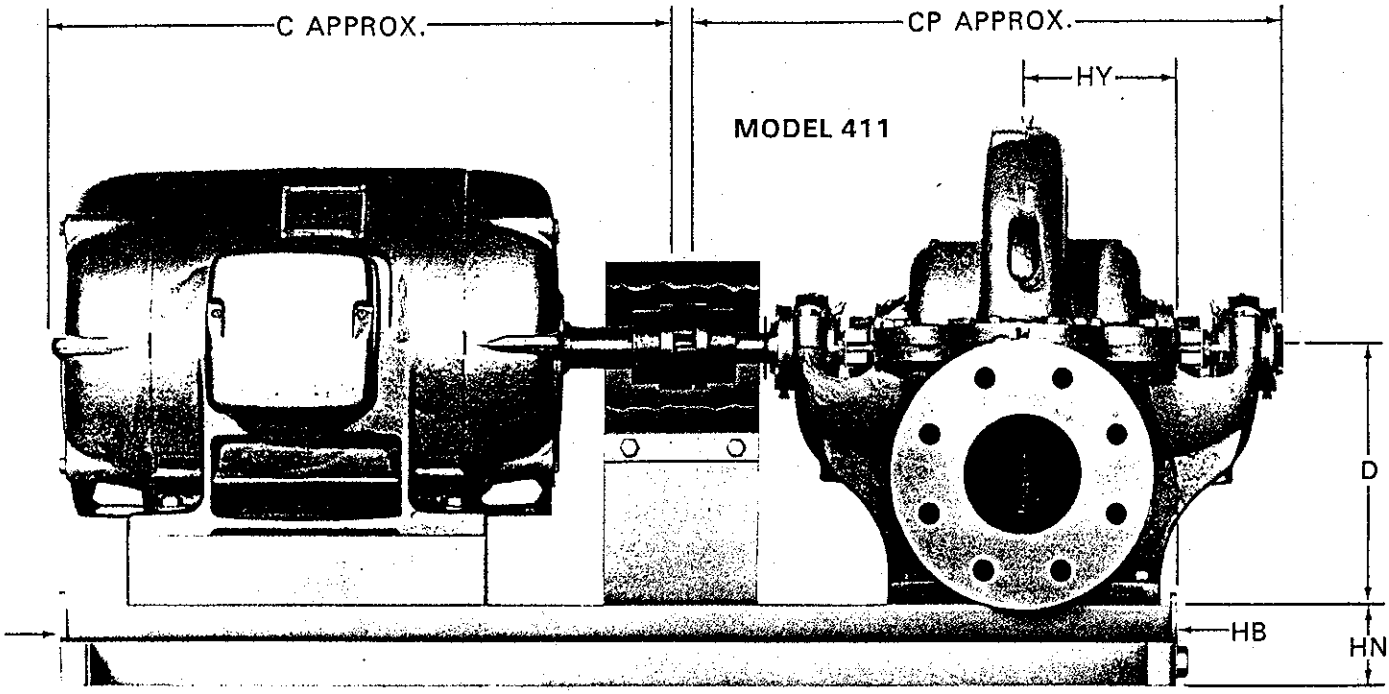

PUMP SIZE DISCH	SUCT	BORE	P. SERIES	PUMP WGT. (LBS.) 411	413	A	D**	S	X	CP	HY	VE	YY
2	2½	9		145	215	18	7	3½	8½	21	4½	11⅛	9
2	2½	10	1	145	215	18	7	3½	8½	21	4½	11⅛	9
2	2½	12		175	260	18	8	4	10	21	4½	11⅛	10¾
2½	3	10		215	300	18	8	4	9¾	24	5½	13	10
2½	3	12		255	360	18	9	4½	11	24	5½	13	11½
3	4	10	2	260	365	18	9	4½	10	24	5½	13	11
3	4	14		310	435	18	10	5	12	24	5½	13	13
4	5	10		330	465	18	9	4⅜	10	24	5½	13	11¼
4	5	11	3	390	435	22	10	5	11¼	26	6½	14	12¾
4	5	15		415	490	22	11	5½	13	26	6½	14	14
4	6	18		560	780	22	12½	6¼	14	29	6½	15	16
5	6	11		455	580	22	11	5½	11¼	29	6½	15	13¼
5	6	15	4	530	735	22	12½	6¼	13¼	29	6½	15	15
5	6	17		635	855	22	12½	6¼	14	29	6½	15	15
6	8	11		520	650	22	12½	6¼	11¾	29	6½	15	14½
8	8	11		605	835	22	12½	6¼	12	29	6½	15	14½
6	8	15		585	735	30	13½	6¾	14¼	32	7½	17	16¾
6	8	18		800	1020	30	14¾	8	16	32	7½	17	18
6	8	20	5	875	1095	30	14¾	8	15¾	32	7½	17	18
8	10	12		740	925	30	14¾	8*	17	32	7½	17	17¾
8	10	15		835	1040	30	14¾	8*	17	32	7½	17	17¾
8	10	17		865	1085	30	14¾	8	17	32	7½	17	17¾
8	10	21		955	††		18½	9½	18	38	11½	—	21
10	12	12	6	1325	1575	40	23	12	16	38	11½	—	19
10	12	15	B	1390	††		25	13½	17	38	11½	—	20
10	12	18		1725	††		25	13½	18	38	11½	—	22
12	14	15		2000	††		24	15	17	44	11½	—	22
12	14	18	7	2100	††		24	15	18	44	—	—	23
14	16	18		2850	††		29¼	16	22	44	—	—	27

MODEL 412 AND 413

POWER SERIES		1	2	3	4	5
CP_1	UP TO 256 HP	26	30	33	35	—
	284 HPH & UP	28	32	35	37	41
CP_2		23	27	29	31	35

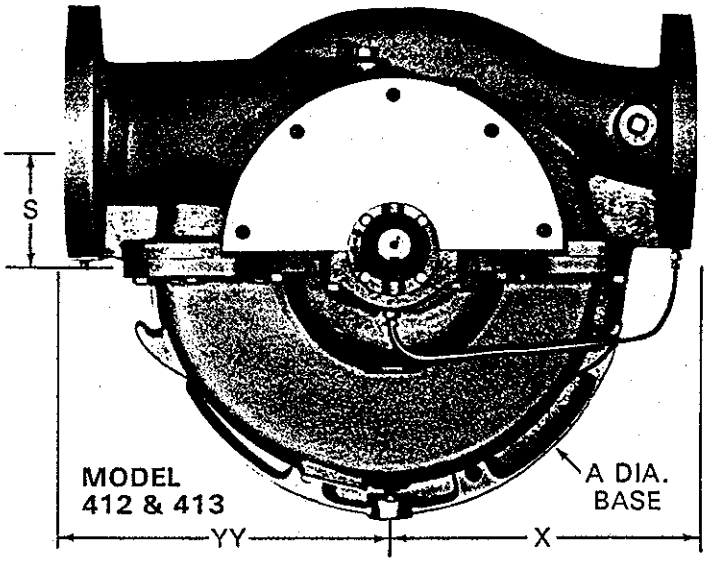

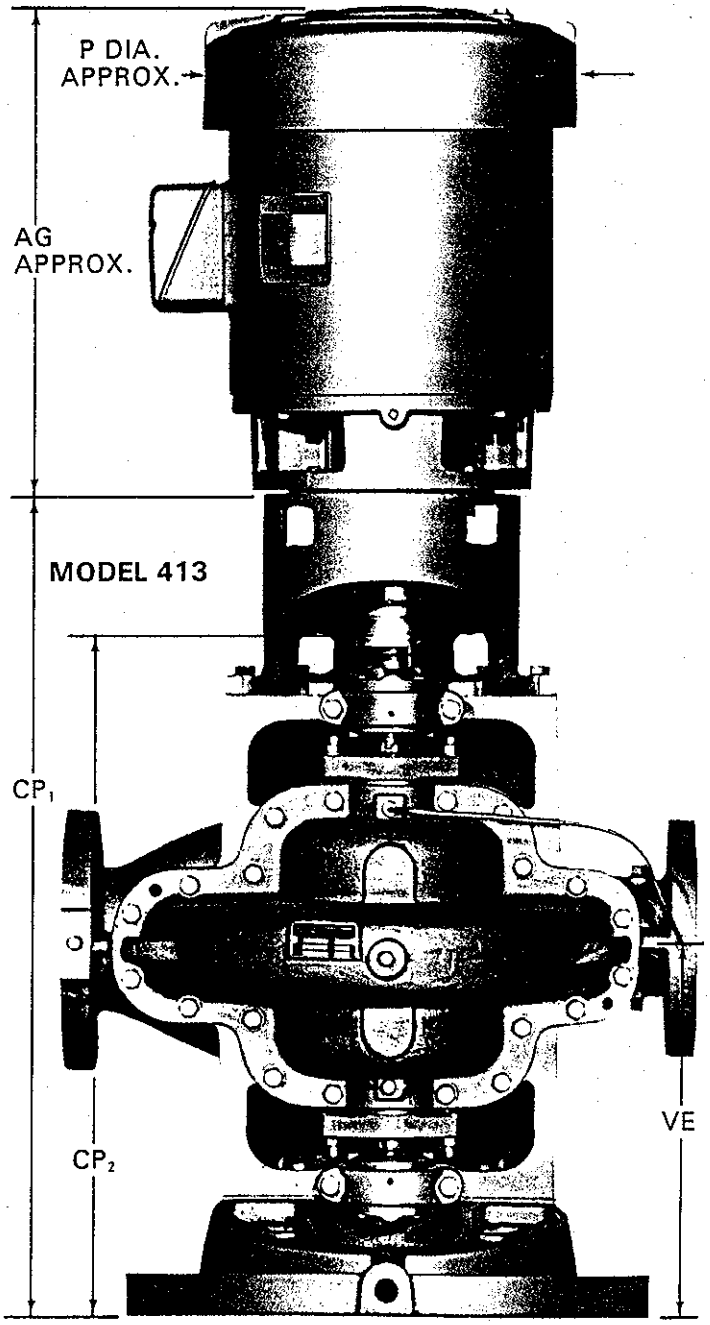

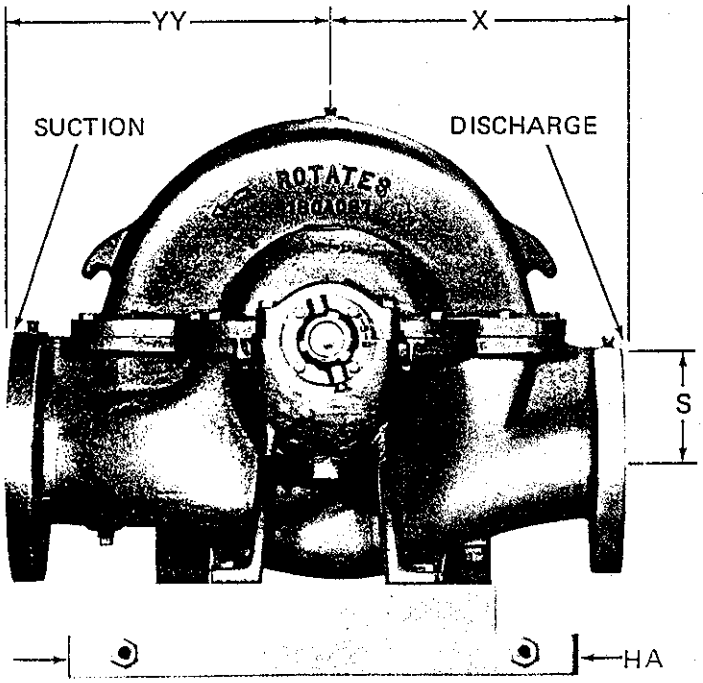

ENGINEERING SPECIFICATIONS

MODEL 411-412 AND 413 SPLIT CASE BASE MOUNTED — Furnish and install as shown on the plans ..... Right hand (Left hand) Aurora Model (Horizontal-411) (Vertical-412 Open Shaft) (Vertical-413 Flexible Coupled) type Split-Case, Double Suction, Single Stage centrifugal pump, Size ..... x ..... x ..... of bronze fitted (all bronze) (all iron) (stainless steel) construction. The pump shall be capable of delivering at design conditions a capacity of ..... G.P.M. when operating against a Total Dynamic Head of ..... feet, with a temperature of ..... °F, specific gravity ..... Pump shall have minimum guaranteed efficiency at design capacity of ..... %. Pump must also be capable of delivering a maximum of .... G.P.M. when operating against a head of ..... feet, and at this condition shall have a minimum efficiency of ..... %. Minimum shut off head acceptable will be ..... feet. Pump shall operate at a maximum synchronous speed of ..... R.P.M. A unit operating at a lesser rotative speed will be considered, but in no event will a pump operating at more than the maximum speed specified be acceptable. The pump casing halves shall be of the inline piping design and will be constructed of "APCO-LOY 33," C.I. having a minimum tensile strength of 30,000 psi. and shall be of sufficient thickness to withstand stresses and strains at full operating pressures. Casings shall be subject to a hydrostatic pressure test at 150% of the specified duty point. Bearing housing supports, suction and discharge flanges shall be integrally cast with the lower half of the casing. Removal of the upper half of the casing must allow the rotating element to be removed without disconnecting the suction and discharge flanges. The upper casing is to be dowel aligned to the lower casing. Pump sizes 10" and larger are to be of the twin volute design. Drain openings must be provided in the bearing arms for removal of lubricating liquid. Impeller shall be of the enclosed double suction type and shall be of vacuum cast bronze (.....). Impeller shall be dynamically balanced and securely fastened to the shaft by key and screw locked shaft sleeves. The vanes shall be designed to reduce noise. The pump shaft shall be made of high grade SAE 1045 Steel or equal, accurately machined to give a true running rotating element. The minimum dia. acceptable will be ..... ". The shaft shall be protected from wear by bronze (.....) sleeves which are key locked and threaded so that the sleeves tighten with the rotation of the shaft. Buna o-rings must be provided between the impeller hub and the shaft sleeves to prevent pumped liquid from corroding the shaft. Pump shall be equipped with easily renewable bronze (.....) casing rings (impeller wearing rings) so designed that hydraulic pressure will seat them against a shoulder in the pump case around the full periphery of the wearing ring. The wear rings will be locked in place by dowelling to prevent rotation. The rotating element shall be mounted in heavy duty grease lubricated ball bearings and shall be equipped with water slingers on side next to pump glands. Bearing housings shall be so designed to flush lubricant through and provide continuous cleaning of bearing surfaces and maximum protection against overheating. The bearing housings are to be of C.I. and shall be furnished with a set of regreaseable (Optional oil lubricated on Model 411) bearings for both radial and thrust loads. The bearings shall have an average life of 250,000 hours and shall be mounted in machined, moisture and dust proof housings. The housings are to have register fits and then be bolted to the pump casing to insure permanent alignment. **MODEL 411** — Stuffing boxes shall be placed on both sides of the pump centerline to seal the pump shaft. All packed pumps having a suction lift shall be provided with lantern rings connected to the pressure side of the pump by cored passages in the parting flange of the pump. The stuffing boxes shall be equipped with heavy, cast, split glands with extra length, for easy removal for packing inspection and maintenance. Pump and motor shall be mounted on a common heavy base plate of (steel with drip rim) (formed steel) (structural steel). Pump and motor must be checked for alignment after the pump base has been installed and grouted in place, in accordance with the standards of the Hydraulic Institute. There shall be no strain transmitted to the pumps. **MODEL 412 AND 413** — Mechanical seal boxes shall be placed on both sides of the pump centerline to seal the pump shaft. Each pump is to be furnished with mech. seals with all metal parts to be 303 stainless steel with "Buna-N" elastomers, Ni-Resist seat, and carbon washer. A bypass line must be provided for the upper seal between the seal faces and the discharge flange to assure adequate venting of the seal chamber and to provide lubrication. All pumps shall be provided with cored passages in the parting flange of the pump to provide additional circulation to both seals. The mech. seal boxes shall be equipped with heavy, cast, one piece "O" ring sealed glands. The pump shall be supported by a cast iron drip rim base. **MODEL 412** — Vertical open shaft pumps are to be driven through flexible shafting with ..... dia. tubing, and intermediate bearings. Shafting must be of sufficient size to transmit required H.P. and must be provided with a slip spline which will permit removal of the pump rotating assembly without removing any section of intermediate shafting, bearings, suction or discharge piping. **MODEL 413** — Vertical flexible coupled pumps shall be furnished with a cast iron motor bracket which is to be bolted to the vertical casing. The motor bracket must be machined with a register fit to insure proper alignment of motor and pump shaft. **MODEL 411 AND 413** — The pumps shall be flexible coupled to a standard (horizontal) (vertical) NEMA ..... HP ..... phase ..... Hertz ..... volts ..... RPM (drip-proof) (tot. encl.) (explosion-proof) motor.

AURORA PUMP
A UNIT OF GENERAL SIGNAL
800 AIRPORT ROAD • NORTH AURORA, ILLINOIS • 60542

SALES OFFICES IN ALL MAJOR CITIES AND COUNTRIES
Refer to "Pumps" in the yellow pages of your phone directory

MAIN OFFICE AND MANUFACTURING FACILITY IS LOCATED IN NORTH AURORA, ILLINOIS (GREATER CHICAGO)

Export Dept. Telex 720411 Cable Address "NYABINT"

The Trade-mark AURORA is registered in U.S. Patent Office

ENGINEERING DATA
SHAFT DEFLECTION AND BEARING LIFE

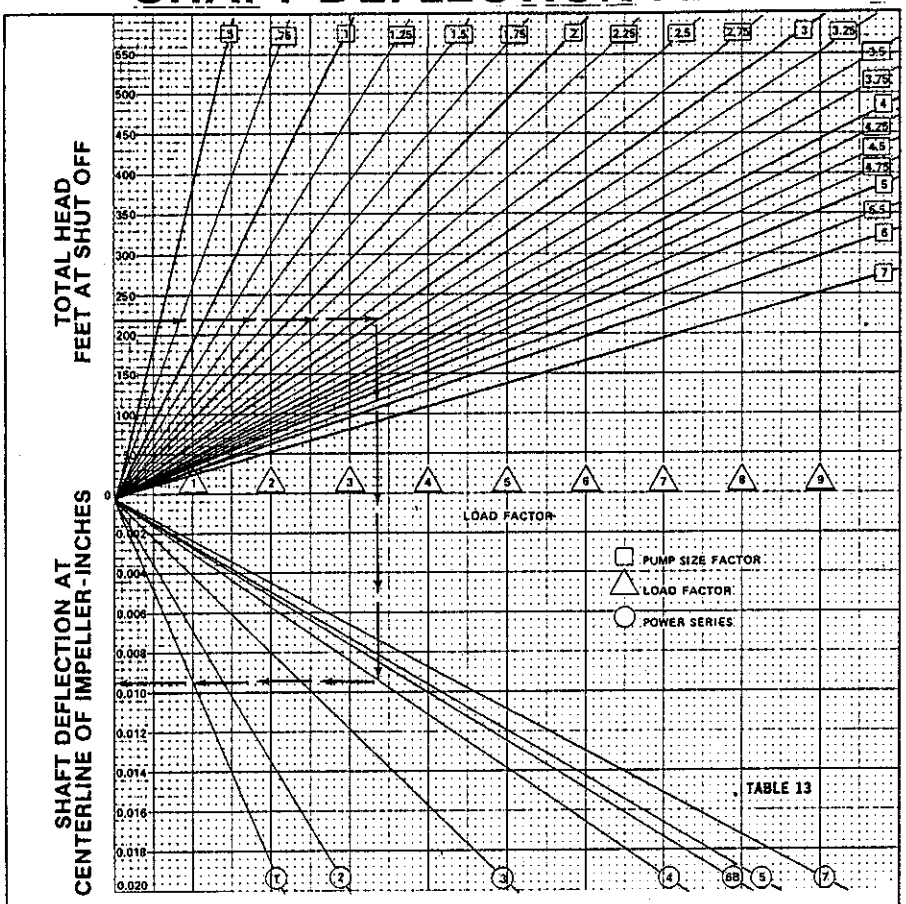

The charts reflect the *worst possible* conditions at pump shut-off. The effect from the impeller, shaft sleeves, wearing rings and packing will *reduce* the amount of *deflection.*

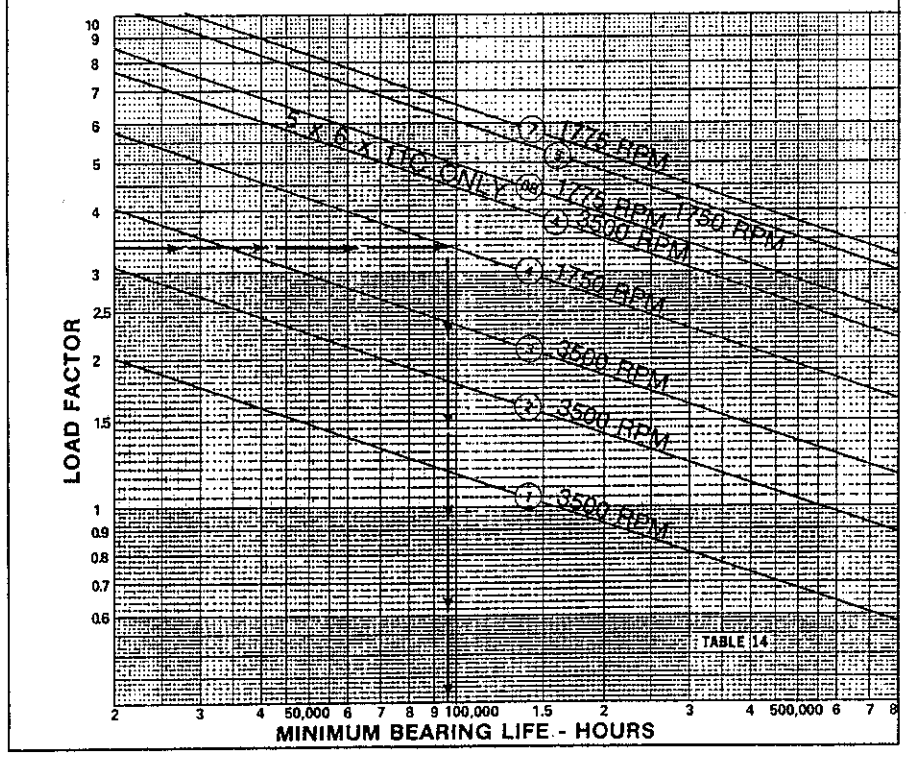

TABLE 11 PUMP SIZE	POWER SERIES	PUMP SIZE FACTOR 3500 RPM	1750 RPM	1150 RPM
2x2½x9	1	0.40	0.50	
2x2½x10	1	0.55	0.65	
2x2½x12	1		0.65	0.80
2½x3x10B	2	1.00	1.00	
2½x3x12	2		1.00	1.20
3x4x10B	2	1.25	1.50	
3x4x14	2		1.40	1.60
4x5x10B	2	1.30	1.40	
4x5x11A	3		2.00	2.25
4x5x11C	3	1.50	1.70	
4x5x15	3		2.00	2.25
4x6x18B	4		1.70	1.80
5x6x11	4		4.00	4.50
5x6x11C	4	2.00	2.13	
5x6x15	4		3.00	3.25
5x6x17	4		3.00	3.25
6x8x11	4		4.00	4.50
8x8x11B	4		5.25	5.50
6x8x15	5		3.75	4.00
6x8x18A	5		3.00	3.25
6x8x18B	5		2.75	3.50
6x8x18C	5		3.75	4.75
6x8x20	5		3.20	3.40
8x10x12	5		3.50	4.00
8x10x15A	5		4.00	4.50
8x10x15B	5		4.50	5.00
8x10x17B	5		4.00	5.00

PUMP SIZE	POWER SERIES	PUMP SIZE FACTOR 1775 RPM	1175 RPM	885 RPM
10x12x12B	6B	4.50	5.00	
10x12x15B	6B	3.25	3.75	
10x12x15C	6B	3.50	4.75	
10x12x18	6B	3.25	3.75	
12x14x15B	7	4.75	5.50	
12x14x18	7	4.00	4.50	
14x16x18	7		7.00	7.50

EXAMPLE: A 5x6x15 pump operating at 1750 R.P.M. on a No. 4 power series with a shut-off head of 225 ft. T.D.H. has a Size Factor of 3.00, a Load Factor of 3.35, a maximum Shaft Deflection at the centerline of the impeller of .0092, and a minimum Bearing Life of 97,000 hours @ 1750 R.P.M.

TABLE 12	CHART SPEED R.P.M.	DESIRED SPEED R.P.M.	MULTIPLY CHART LIFE BY
SPEED (R.P.M.) FACTORS	3500	1750	2
	3500	1150	3
	1750	1150	1.5
	1775	1175	1.5
	1775	875	2
	1175	875	1.3

AURORA PUMP
A UNIT OF GENERAL SIGNAL
800 AIRPORT ROAD • NORTH AURORA, ILLINOIS 60542

410 SERIES
ENGINEERING DATA
QUIET PUMP SELECTION

TABLE 9 PUMP SIZE	MAX. IMP. DIA.	CUT-WATER DIA.	QUIET IMP. DIA.	SPHERE SIZE DIA.
2x2½x9	9.0	10.4	8 13/16	⅛
2x2½x10	9.5	10.3	8 11/16	¼
2x2½x12	12.0	13.3	11¼	¼
2½x3x10B	9.5	10.3	8 11/16	⅜
2½x3x12	12.0	13.3	11⅜	⅜
3x4x10B	10.0	10.5	8 13/16	½
3x4x14	14.0	15.4	13 1/16	⅝
4x5x10B	9.5	10.6	9 1/16	⅝
4x5x11A	11.3	12.8	10⅞	⅝
4x5x11C	11.3	12.8	10⅞	½
4x5x15	15.0	16.4	13 15/16	⅝
4x6x18B	18.3	22.6	18¼	9/16
5x6x11	11.0	12.6	10¾	1
5x6x11C	11.0	12.6	10¾	⅝
5x6x15	15.0	16.4	13⅞	13/16
5x6x17	16.5	17.4	14¾	11/16
6x8x11	11.0	12.8	10⅞	1
8x8x11B	12.0	13.3	11¼	1¼
6x8x15	15.0	16.6	14⅛	15/16
6x8x18A	18.0	20.5	17⅞	1
6x8x18B	18.0	20.5	17⅞	1
6x8x18C	18.0	20.5	17⅞	1
6x8x20	19.5	20.6	17 9/16	13/16
8x10x12	12.0	14.4	12¼	15/16
8x10x15A	15.0	16.8	14¼	15/16
8x10x15B	15.0	16.8	14¼	15/16
8x10x17B	17.5	18.5	15¾	15/16
PUMP SIZE	**MAX. IMP. DIA.**	**CUT-WATER DIA.**	**QUIET IMP. DIA.**	**SPHERE SIZE DIA.**
10x12x12B	12.0	14.0	11 15/16	15/16
10x12x15B	15.0	17.1	14 9/16	1 7/16
10x12x15C	15.0	17.1	14 9/16	1⅛
10x12x18	18.0	20.5	17 7/16	1 9/16
12x14x15B	15.0	17.8	15	1 1/16
12x14x18	18.0	21.1	18	1 5/16
14x16x18	18.0	22.0	18	1½

TABLE 10 TYPICAL PERFORMANCE

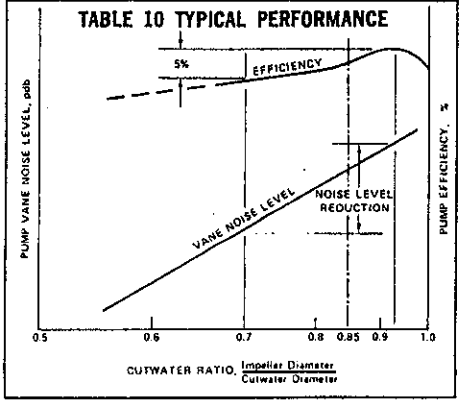

QUIET PUMP operation is always desirable and sometimes essential. One of the most important factors for noise control in a pumping installation is the correct selection of a pumping unit for the system. To insure that the pump will run quietly, it should be selected so that it will operate as close as possible to the best efficiency point. At this point the hydraulic shock within the pump is at a minimum since the flow angle of the fluid from the tip of the impeller is correct for the casing design. Every pump is designed for the best efficiency point and operation at any other point on the characteristic curves is a compromise. The amount of turbulence on either side of the best efficiency point increases as the point of operation is moved along the curve from the maximum efficiency. Therefore, the greater the turbulence, the greater the noise generated.

Hydraulic shock is also a factor if the periphery of the impeller passes too close to the cutwater. If the ratio of the impeller diameter to the cutwater diameter in centrifugal pumps is greater than 0.92, the pump is likely to be hydraulically noisy.

In such instances the hydraulic pulses are actually differential pressures that occur when the impeller vanes pass the cutwater. Cutwater ratios of 0.9 to 0.95 are typical; however, significantly lower noise levels are achieved in pumps designed with a ratio of 0.7 to 0.75. Although there is an optimum gap for pump efficiency, increases of only 3%-5% may be realized by using the optimum. A cutwater ratio of 0.85 is commonly specified by practicing engineers, thereby realizing a minimum reduction in pump efficiency with a mean reduction in noise level. Table 9 offers recommended quiet impeller diameter at 85% cutwater ratio.

BEARING LIFE is based on the radial and thrust loads imposed on the bearings at the specific operating head and suction pressure. The Split case pump is designed for a six year minimum B_{10} life at the maximum recommended loads. Bearing life at any other point of greater capacity on the curves will greatly exceed the minimum life shown. Average bearing life is equal to five (5) times the minimum bearing life. Tables 11, 12, 13 and 14 will enable you to determine the minimum radial and thrust bearing life for any type 410 Series pump size.

SHAFT DEFLECTION is the consequence of the unbalanced hydraulic force acting inside the pump on the impeller and shaft in a radial direction. This unbalance occurs when the pump is operating away from its best efficiency point. At shut-off condition (zero flow) the unbalance is greatest and therefore the resultant radial load is maximum. *Radial load and shaft deflection approach zero at the best efficiency point of the pump.* 410 Series pumps are designed for a maximum deflection of .002" at the mechanical seal faces when operating at the maximum recommended differential pressure. Deflection in a twin volute pump is minimized by a splitter blade that is cast within the casing thereby nearly balancing the resultant forces acting on the shaft. See Table 13 on page 77.

PROCEDURE FOR DETERMINING MAXIMUM SHAFT DEFLECTION AND MINIMUM BEARING LIFE.

1. Determine the proper Pump Size, approximate Shut-Off Head in feet, Power Series number, and Speed from the range charts illustrated in the 410 Bulletin.
2. From table 11 on page 77 determine the Pump Size Factor based on Pump Size and R.P.M.
3. On table 13 on page 77 locate the correct Shut-Off Head in feet and read across to the proper Pump Size Factor and down to the applicable Power Series. Note the Load Factor in the process. Read to the scale on the left for the maximum Shaft Deflection value.
4. From table 14 on page 77 using the Load Factor from step 3 above read across to the correct Power Series number and down for the minimum Bearing Life in hours.

NOTE: 1. One (1) year life is based on 8740 HOURS (continuous operation). 2. Additional bearing information can be found on page 74. 3. Specific information on Bearing Life and Shaft Deflection can be obtained from the factory.

MAXIMUM CASE WORKING PRESSURE is the sum of the differential pressure and the suction pressure. Table 2 indicates the maximum case working pressure for the 410 Series Split Case Pumps in various materials and at various operating temperatures. These maximum allowable pressures are based on wall thickness for the particular series of pumps, ratings for American Standard Flange Specifications, see Table 1, and take into account the material at various allowable temperatures. Table 1 offers the available casing materials and flange ratings for the 410 Series Split Case Pumps.

TABLE 1 PUMP CASING MATERIAL	MINIMUM REQUIREMENT FOR STANDARD SUCTION AND DISCHARGE FLANGES: A.S.A. SPEC.	CLASSIFICATION	PIPE SIZE	CODE
Cast Iron ASTM A48	B16.1	125 PSI Flat Face	1-12	A
			14-24	B
		250 PSI Flat Face	1-12 14-24	C
Bronze ASTM B62	B16.24	150 PSI Flat Face	All	D
		300 PSI Flat Face		C
Stainless Steel ASTM 296 Grade CF8M	B16.5	150 PSI Flat Face	All	E
		300 PSI Flat Face		C

Maximum Hydrostatic Pressure 1½ times maximum case working pressure at 100°F.

EXAMPLE: A model 410 Pump with a bronze casing has been selected for operating at a case working pressure of 240 P.S.I.G. at 150°F. Enter Table 2 at 150°F. and read upward to 240 P.S.I.G. It is determined that the selection is within the recommended maximum case working pressure area for 300 PSI flanges and is therefore acceptable. Note that the example exceeds the maximum case working pressure unit if the material selected would have been 125 PSI flanged cast iron or 150 PSI flanged bronze.

TABLE 2

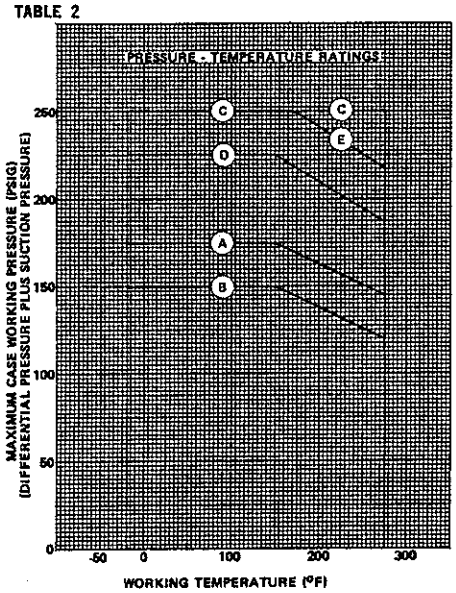

EXTERNAL INERTIA OR FLYWHEEL EFFECT is the Kinetic energy stored in the rotating assembly that must be overcome when the pump impeller is caused to rotate within the casing. This energy frequently must be calculated to determine the torque required to start, accelerate or decelerate the pump. If the acceleration is rapid, the torque may be several times greater than the torque required to run the pump at normal or constant speed. WR^2 values in $LBS\text{-}FT^2$ are provided for these calculations. See tables 3 thru 8.

WR^2 values given in tables are for bronze impeller... $LB\text{-}FT^2$

EXAMPLE 1: Find WR^2 value for a 15" diameter 8x10x15B bronze fitted pump handling cold water.

From chart the "WET" value for a 15" diameter impeller ..... **10.38 $LB\text{-}FT^2$**

Add power series 5 rotating element less impeller ..... **0.15 $LB\text{-}FT^2$**

Total **10.53 $LB\text{-}FT^2$**

EXAMPLE 2: Find WR^2 value for a 15" diameter 8 x 10 x 15B all iron pump handling 0.67 specific gravity gasoline.

From chart select "DRY" value and correct for difference in materials.

$\frac{\text{Sp. Gr. cast iron}}{\text{Sp. Gr. bronze}}$ x 9.29 $LB\text{-}FT^2$.... **7.54 $LB\text{-}FT^2$**

Take difference ("WET"-"DRY") values and correct for difference in specific gravities.

1.09 x 0.67 ..... **0.73 $LB\text{-}FT^2$**

Add power series 5 rotating element less impeller ..... **0.15 $LB\text{-}FT^2$**

Total **8.42 $LB\text{-}FT^2$**

TABLE 3

SPECIFIC GRAVITY OF COMMON METALS

METALS	S.G.
Bronze	8.86
Cast Iron	7.20
Carbon Steel	7.84
Stainless Steel	7.90

TABLE 4

WR^2 VALUE OF ROTATING ELEMENT LESS IMPELLER

POWER SERIES	WR^2
1	0.006
2	0.020
3	0.038
4	0.075
5	0.154
6B	0.294
7	0.536

TABLE 5	2x2½x9		2x2½x10		2½x3x10B		3x4x10B		4x5x10B			
DIA.	DRY	WET	DRY	WET	DRY	WET	DRY	WET	DRY	WET	DRY	WET
10"	—	—	—	—	—	—	1.17	1.30	—	—		
9.5"	—	—	0.72	0.88	0.84	0.95	0.98	1.10	0.90	1.03		
9.0"	0.56	0.63	0.60	0.70	0.70	0.85	0.80	0.90	0.80	0.90		
8.5"	0.37	0.43	0.46	0.54	0.62	0.73	0.70	0.75	0.68	0.75		
8.0"	0.28	0.32	0.40	0.47	0.56	0.65	0.56	0.60	0.56	0.63		
7.5"	0.23	0.26	0.36	0.41	0.47	0.56	0.46	0.50	0.48	0.54		
7.0"	0.19	0.22	0.29	0.33	0.42	0.49	0.36	0.40	0.43	0.46		
6.5"	0.18	0.19	0.27	0.31	0.39	0.44	0.32	0.36	0.38	0.41		
6.0"	0.16	0.18	—	—	0.35	0.41	0.28	0.31	0.33	0.36		
IMP. WGT.	10#		12#		14#		18#		15#			

TABLE 6	2x2½x12		2½x3x12		4x5x11A		4x5x11C		5x6x11 6x8x11		5x6x11C		8x8x11B		8x10x12		10x12x12B			
DIA.	DRY	WET	DRY	WET	DRY	WET	DRY	WET	DRY	WET	DRY	WET	DRY	WET	DRY	WET	DRY	WET	DRY	WET
12"	1.55	1.82	1.70	1.95	—	—	—	—	—	—	—	—	2.91	3.43	4.10	4.60	5.80	6.75		
11.5"	1.25	1.45	1.40	1.55	—	—	—	—	—	—	—	—	2.55	3.00	3.80	4.00	5.32	6.10		
11.0"	1.05	1.20	1.10	1.25	1.90	2.10	1.65	1.80	2.04	2.47	3.00	3.60	2.15	2.45	3.40	3.80	5.00	5.60		
10.5"	0.93	1.04	0.98	1.10	1.60	1.75	1.45	1.55	1.80	2.10	2.90	3.20	1.95	2.20	3.10	3.30	4.90	5.50		
10.0"	0.81	0.90	0.83	0.90	1.35	1.52	1.22	1.35	1.60	1.85	2.65	3.10	1.73	1.95	2.85	3.10	4.80	5.40		
9.5"	0.75	0.83	0.68	0.75	1.20	1.33	1.08	1.19	1.45	1.65	2.50	2.90	1.50	1.66	2.70	2.90	—	—		
9.0"	0.70	0.78	0.60	0.67	1.05	1.22	1.00	1.10	1.30	1.45	2.40	2.80	1.40	1.50	2.60	2.70	—	—		
8.5"	—	—	—	—	0.95	1.05	0.88	0.99	1.20	1.35	2.35	2.60	1.30	1.40	2.50	2.60	—	—		
8.0"	—	—	—	—	0.83	0.95	0.75	0.84	1.06	1.15	2.00	2.40	1.15	1.20	—	—	—	—		
7.5"	—	—	—	—	—	—	0.73	0.80	0.93	1.05	1.90	2.20	1.09	1.12	—	—	—	—		
7.0"	—	—	—	—	—	—	0.65	0.74	—	—	—	—	—	—	—	—	—	—		
IMP. WGT.	15#		17#		26#		22#		27#		32#		29#		43#		59#			

TABLE 7	3x4x14		4x5x15		5x6x15		8x10x15 6x8x15		8x10x15B		10x12x15B		10x12x15C		12x14x15B	
DIA.	DRY	WET	DRY	WET	DRY	WET	DRY	WET	DRY	WET	DRY	WET	DRY	WET	DRY	WET
15	—	—	4.51	5.18	6.18	6.76	7.39	8.51	9.29	10.4	9.23	10.0	14.5	17.5	14.3	17.7
14.5	—	—	3.80	4.50	5.40	6.00	6.75	7.50	7.75	8.80	8.50	9.25	13.5	16.2	14.0	16.5
14.0	3.62	4.38	3.50	3.90	4.60	5.20	6.00	6.75	6.75	7.75	8.00	9.00	12.2	14.4	13.0	15.0
13.5	3.10	3.60	3.00	3.40	4.20	4.50	5.40	6.00	6.10	7.00	7.50	8.50	11.3	12.2	12.5	14.5
13.0	2.70	3.10	2.55	2.95	3.50	3.90	5.00	5.50	5.70	6.25	6.75	7.60	10.5	11.4	11.8	13.9
12.5	2.25	2.65	2.20	2.60	3.20	3.50	4.50	5.00	5.10	5.80	6.50	7.25	10.0	11.0	11.0	13.0
12.0	1.98	2.30	1.95	2.25	3.05	3.20	4.10	4.40	4.80	5.30	6.25	7.00	—	—	10.5	12.5
11.5	1.60	1.90	1.70	2.00	2.70	2.98	3.70	4.00	4.50	5.00	—	—	—	—	—	—
11.0	1.40	1.65	1.50	1.75	2.50	2.70	3.30	3.55	4.10	4.40	—	—	—	—	—	—
10.5	1.25	1.50	—	—	2.30	2.45	3.00	3.20	3.70	4.10	—	—	—	—	—	—
10.0	1.10	1.35	—	—	2.05	2.25	2.85	3.10	3.50	3.80	—	—	—	—	—	—
IMP. WGT.	28#		30#		45#		56#		59#		70#		85#		87#	

TABLE 8	4x6x18B		5x6x17		6x8x18A 6x8x18B 6x8x18C		6x8x20		8x10x17B		10x12x18		12x14x18		14x16x18	
DIA.	DRY	WET	DRY	WET	DRY	WET	DRY	WET	DRY	WET	DRY	WET	DRY	WET	DRY	WET
19.5	—	—	—	—	—	—	18.0	20.3	—	—	—	—	—	—	—	—
19.0	—	—	—	—	—	—	16.5	19.0	—	—	—	—	—	—	—	—
18.5	—	—	—	—	—	—	15.0	17.2	—	—	—	—	—	—	—	—
18.0	11.5	13.5	—	—	15.0	18.0	14.0	15.4	—	—	19.5	22.6	30.0	32.0	46.0	48.0
17.5	10.8	12.0	—	—	13.0	16.0	12.6	14.3	16.5	18.5	18.5	21.0	25.0	29.0	40.0	42.0
17.0	10.1	11.1	—	—	11.5	13.5	11.4	13.4	15.2	16.5	17.0	19.5	22.0	26.5	36.0	39.0
16.5	9.50	10.3	8.64	9.69	10.0	11.6	10.5	12.0	12.6	14.5	15.5	18.5	20.0	24.0	31.0	34.0
16.0	9.00	9.50	8.00	9.00	8.80	9.70	9.93	11.2	11.5	13.0	14.0	17.1	17.5	21.5	28.0	31.5
15.5	8.81	8.90	7.30	8.30	7.50	8.80	9.00	10.0	10.0	11.5	13.1	16.0	15.5	19.5	25.0	29.0
15.0	—	—	6.80	7.80	6.70	7.00	8.10	9.25	9.10	9.90	12.0	14.5	14.0	18.0	22.5	27.5
14.5	—	—	6.00	7.00	6.00	6.50	7.36	8.28	7.50	8.60	—	—	—	—	—	—
14.0	—	—	5.30	6.20	—	—	—	—	—	—	—	—	—	—	—	—
13.5	—	—	4.90	5.80	—	—	—	—	—	—	—	—	—	—	—	—
13.0	—	—	4.40	5.20	—	—	—	—	—	—	—	—	—	—	—	—
IMP. WGT.	60#		49#		65#		77#		68#		98#		115#		135#	

410 SERIES
ENGINEERING DATA
DESIGN DETAILS

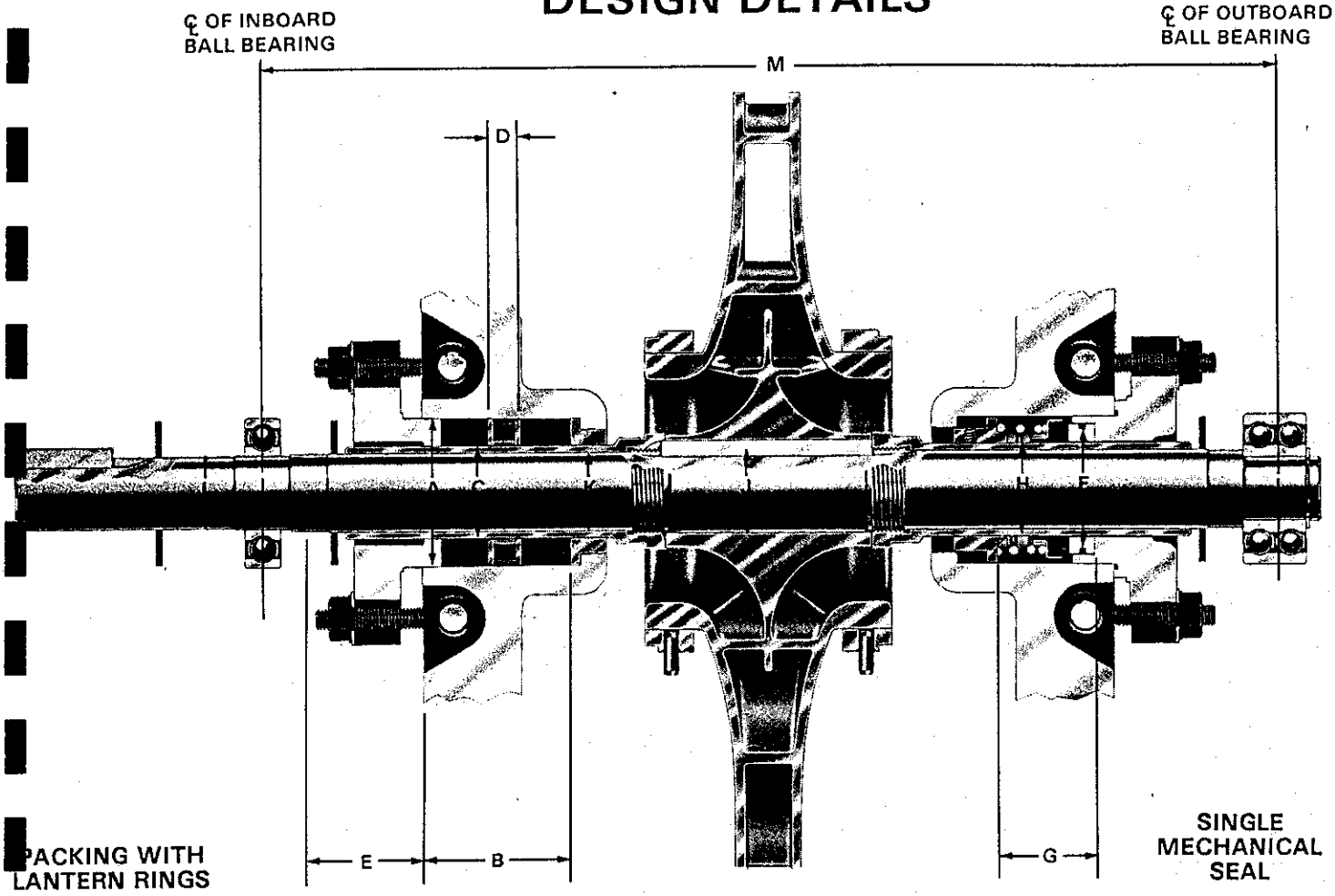

PUMP PART		DIMENSION	POWER SERIES 1	POWER SERIES 2	POWER SERIES 3	POWER SERIES 4	POWER SERIES 5	POWER SERIES 6B	POWER SERIES 7
STUFFING BOX	PACKING	A Stuffing Box Bore Diameter	2-1/16	2-7/16	2-13/16	3-1/16	3-7/16	3-11/16	3-15/16
		B Stuffing Box Depth	2-3/8	3-1/8	3	3-1/2	3-3/4	3-3/4	3-7/8
		C Outside Dia., Sleeve for Packing	1-1/8	1-1/2	1-3/4	2	2-3/8	2-1/2	2-7/8
		— No. of Packing Rings without Lantern Ring	10	12	10	12	12	12	14
		— Total number of Packing Rings with Lantern Ring	8	10	8	10	10	10	12
		— No. of rings in front of Lantern Ring	1	2	2	2	2	2	3
		— Packing Size	7/16 Sq.	7/16 Sq.	1/2 Sq.	1/2 Sq.	1/2 Sq.	9/16x1/2	1/2 Sq.
		D Width of Lantern Ring	1/2	5/8	5/8	5/8	3/4	3/4	3/4
		E Distance from Box to Nearest Obstruction	1-1/4	1-5/8	1-11/16	1-11/16	2	2-3/8	2-1/2
	M. SEAL	F Dia. of Mechanical Seal Seat	1-3/4	2-1/8	2-1/2	2-3/4	3-1/4	3-3/8	3-3/4
		G Length of Mechanical Seal	1-1/2	1-9/16	1-7/8	2	2-3/8	2-3/8	2-7/8
		H Outside Dia., sleeve for Mech. Seal	1-1/8	1-1/2	1-3/4	2	2-3/8	2-1/2	2-7/8
SHAFT		J Dia. at Impeller (Max. Shaft Dia.)	1-1/8	1-3/8	1-5/8	1-7/8	2-1/8	2-3/8	2-3/4
		K Diameter at Shaft Sleeve	7/8	1-1/4	1-1/2	1-3/4	2	2-1/4	2-5/8
		L Diameter at Coupling End	3/4	1-1/8	1-3/8	1-1/2	1-3/4	2-1/8	2-1/2
		— Max. deflection at Sealing Face	.002	.002	.002	.002	.002	.002	.002
BALL BEARINGS		— Ball Bearing No. (Inboard Radial)	204	206	207	208 †	309	211	213
		— Ball Bearing No. (Outboard Thrust)	5303	5305	5306	5307	5309	5211	5213
		M Bearing Centers	14-3/4	18-3/8	19-3/8	21-1/4	24	28-3/8	33-1/8
		— Minimum Life of Bearing under worst conditions of load (*)	6 YEARS	6 YEARS	6 YEARS	6 YEARS	6 YEARS	6 YEARS	6 YEARS

*Average life of bearing is 5 times minimum life.

†5208 is provided as standard on 5 x 6 x 11B when operating at 3500 R.P.M. only.

GS AURORA PUMP
A UNIT OF GENERAL SIGNAL
800 AIRPORT ROAD • NORTH AURORA, ILLINOIS 60542

ENGINEERING DATA
MATERIALS OF CONSTRUCTION

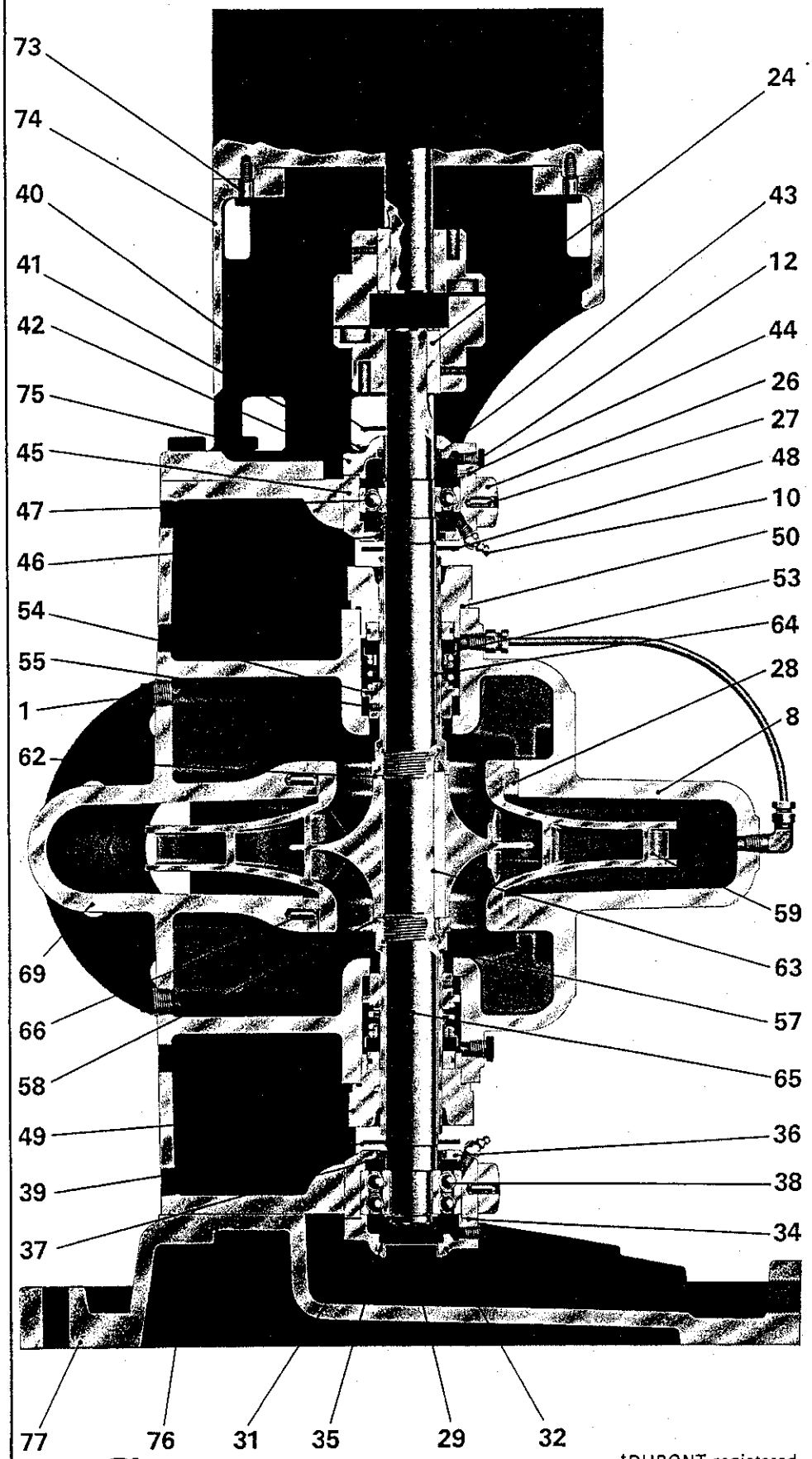

Pc No	Descrip. (*Not Shown)	PUMP CONSTRUCTION			
		Bronze Fitted	All Bronze	All Iron	Stain. Steel
1	Plug	Mall. Iron	Bronze	Mall. Iron	Stain. Stl.
2	*Plug	A197	Wrought	A197	AISI 316
6	*Capscrew	Steel	Steel	Steel	Stain. Stl.
7	*Capscrew	SAE 2	SAE 2	SAE 2	AISI 316
8	Casing Half	Cast Iron A48	Bronze B62	Cast Iron A48	Stain. Stl. ACI CF8M
9	*Gasket	Buna-N Treated Cellulose			
10	Gr. Ftg.	Steel Zerk			
12	Plug	Malleable Iron ASTM A197			
18	*Nut	Bronze Wrought		Steel SAE 2	Stain. Stl. AISI 316
19	*Washer	Cad. Plated Steel	Bronze Wrought	Cad. Plated Steel	Stain. Stl. AISI 316
20	*Gland Clamp				
21	*Gland	Cast Iron A48	Bronze B62	Cast Iron A48	Stain. Stl. ACI CF8M
22	*Swing Bolt	Cad. Plated Steel	Silicon Bronze Wrought	Cad. Plated Steel	Stain. Stl. AISI 316
23	*Packing	Graphited Asbestos			
24	Key	Steel Wrought			
25	*Capscrew	Steel SAE 2	Bronze Wrought	Steel SAE 2	Stain. Stl. AISI 316
26	Bearing Cap	Cast Iron A48	Bronze B62	Cast Iron A48	Stain. Stl. ACI CF8M
27	Pin	Cad. Plated Steel	Stain. Steel AISI 416	Cad. Plated Steel	Stain. Stl. AISI 316
28	Case Ring	Bronze ASTM B62		Cast Iron A48	Stain. Stl ACI CF8M
29	Protector	Steel Wrought			
31	Capscrew	Steel SAE 2			
32	Cart. Cap	Cast Iron ASTM A48			
34	Gasket	Buna-N Treated Cellulose			
35	Ret. Ring	Spring Steel			
36	Cartridge	Cast Iron ASTM A48			
37	Gr. Seal	Buna-N and Steel			
38	Bearing	Steel Commercial			
39	Slinger	Neoprene			
40	Slinger	Neoprene			
41	Capscrew	Steel SAE 2			
42	Cart. Cap	Cast Iron ASTM A48			
43	Gr. Seal	Buna-N and Steel			
44	Gasket	Buna-N Treated Cellulose			
45	Cartridge	Cast Iron ASTM A48			
46	Gr. Seal	Buna-N and Steel			
47	Bearing	Steel Commercial			
48	Slinger	Neoprene			
49	Gland	Cast Iron A48	Bronze B62	Cast Iron A48	Stain. Stl. ACI CF8M
50	O-Ring	Buna-N			
52	*Lantern Ring	Bronze ASTM B62		Cast Iron A48	Stain. Stl ACI CF8M
53	Seal	Stain. Stl (1)	Stain. Stl (2)	Stain. Stl (1)	Stain. Stl (2)
54	Collar	Bronze ASTM B62		Cast Iron A48	Stain. Stl. AISI 316
55	Setscrew	Stainless Steel AISI 316			
56	*Bushing	Bronze ASTM B62		Cast Iron A48	Stain. Stl. AISI 316
57	Sleeve	Bronze High Lead Tin		Stain. Stl. AISI 316	
58	Gasket	DuPont TFE Coated Steel			
59	Impeller	Bronze ASTM B584		Cast Iron A48	Stain. Stl. ACI CF8M
61	*Imp. Ring	Bronze ASTM B62			
62	Gasket	DuPont TFE Coated Steel			
63	Key	Stain. Stl AISI 416	Stain. Stl. AISI 316	Stain. Stl. AISI 416	Stain. Stl. AISI 316
64	Sleeve	Bronze High Lead Tin		Stain. Stl. AISI 316	
65	Shaft P.S. 1-5	Stl. AISI C1045	Stain. Stl. AISI 316	Stl. AISI C1045	Stain. Stl. AISI 316
	Shaft 6B-7	Alloy Stl.	(3)	Alloy Stl.	(3)
66 67 68	Pin *Pin *Pin	Cad. Plated Steel	Stain. Steel AISI 416	Cad. Plated Steel	Stain. Steel AISI 316
69	Casing Half	Cast Iron A48	Bronze B62	Cast Iron A48	Stain. Stl. ACI CF8M
70	*Drive Screw	Steel Bronze Plated			
71	*Name-plate	Stainless Steel AISI 303			
73	Capscrew	Steel SAE 2			
74	Bracket	Cast Iron ASTM A48			
75	Capscrew	Steel SAE 2			
76	Capscrew	Steel SAE 2			
77	Base	Cast Iron ASTM A48			

All material specifications are in accordance with ASTM unless otherwise noted. (1) $B_{30}P_{66}$ 171 (JC) (2) XP_{66} 1C1 (JC) (3) AISI 416 chrome steel heat treated power series 6B-7.

†DUPONT registered trademark.

GS AURORA PUMP
A UNIT OF GENERAL SIGNAL
800 AIRPORT ROAD • NORTH AURORA, ILLINOIS 60542

410 SERIES
ENGINEERING DATA INTERCHANGEABILITY AND POWER SERIES

Aurora Models 411, 412 and 413 were designed for maximum interchangeability. Each model is available in 34 different sizes, offering a model and size precisely fitted to the installation requirements. The 34 sizes are divided into 7 "power series." Within each power series, all parts are completely interchangeable except for the impeller, casing, and case wearing rings for either right hand or left hand rotation. See the illustration below for all details.

MODEL 413
MOTOR BRACKETS

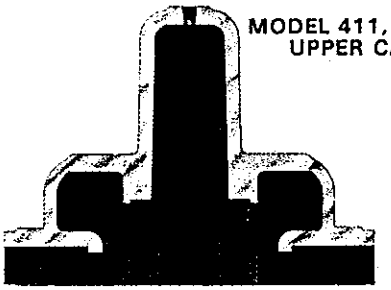

MODEL 411, 412 & 413
UPPER CASINGS

MODEL 412 & 413
LOWER CASINGS

MODEL 411, 412 & 413
SHAFT ASSEMBLIES (POWER SERIES)
COMPLETE ROTATING ASSEMBLY
CONSISTING OF A SHAFT, SHAFT
SLEEVES, GASKETS, KEYS,
INBOARD BEARING
ASSEMBLY,
OUTBOARD
BEARING
ASSEMBLY
AND PACKING
OR MECHANICAL SEAL
ASSEMBLIES ARE INTERCHANGEABLE FOR
ALL PUMPS WITHIN EACH POWER SERIES.

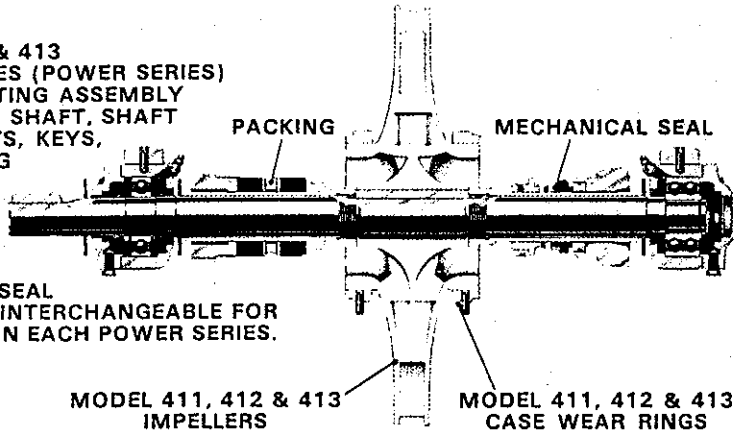

MODEL 411
LOWER CASINGS

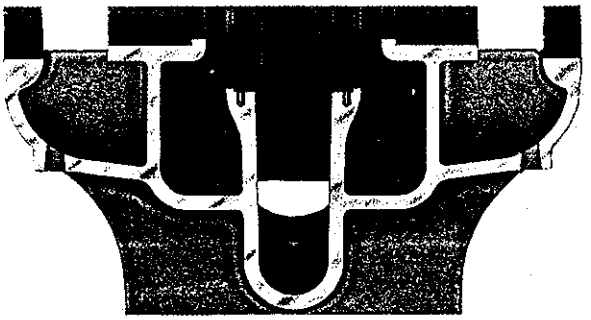

MODEL 412 & 413
DRIP RIM BASES

POWER SERIES

Pump Size Example: 3 x 4 x 14 (3-Discharge Dia.) (4-Suction Dia.) (14-Approx. Max. Impeller Dia.).

1	2	3	4		5		6B	7*
2 x 2½ x 9	2½ x 3 x 10B	4 x 5 x 11A	—	5 x 6 x 17	6 x 8 x 15	8 x 10 x 12	10 x 12 x 12B	12 x 14 x 15B
2 x 2½ x 10	2½ x 3 x 12	4 x 5 x 11C	4 x 6 x 18B	6 x 8 x 11	6 x 8 x 18A	—	10 x 12 x 15B*	12 x 14 x 18
2 x 2½ x 12	3 x 4 x 10B	4 x 5 x 15	5 x 6 x 11	8 x 8 x 11B	6 x 8 x 18B	8 x 10 x 15A	10 x 12 x 15C*	14 x 16 x 18
	3 x 4 x 14		5 x 6 x 11C		6 x 8 x 18C	8 x 10 x 15B	10 x 12 x 18*	
	4 x 5 x 10B		5 x 6 x 15		6 x 8 x 20	8 x 10 x 17B	*Model 411 Pumps Only	

GS AURORA PUMP
A UNIT OF GENERAL SIGNAL
800 AIRPORT ROAD • NORTH AURORA, ILLINOIS 60542

ENGINEERING DATA
MECHANICAL SEALS AND PACKING

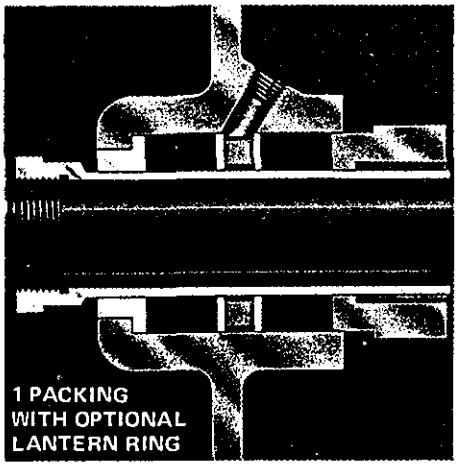

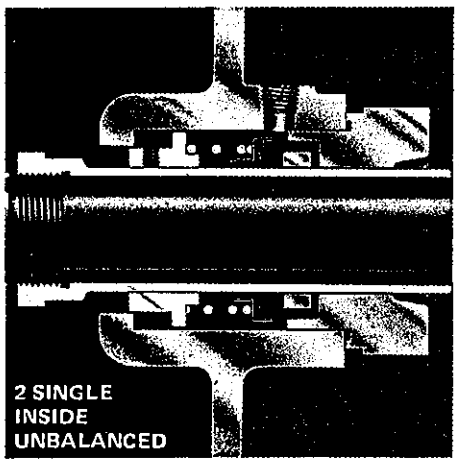

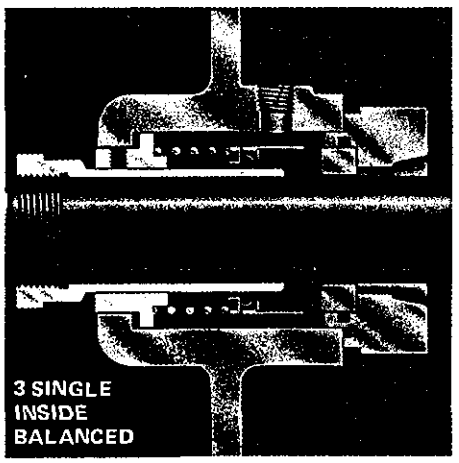

Standard packing on horizontal pumps and the standard mechanical seals on vertical pumps are suitable for most applications. Special sealing arrangements may however, be required due to higher pressure or temperature requirements and the nature of the liquid to be pumped. Factory option seals are of high quality and supplied by leading mechanical seal manufacturers. Various seal arrangements and types that better suit your specific needs are available. Seal faces are carbon vs. Ni-Resist on standard seals and carbon vs. Tungsten carbide on high temperature seals. Corrosion resistant alloy metal parts and Buna-N secondary sealing elements are provided. Various other metals are also available. Gland plates are cast iron and can be supplied in alternate materials. Recommendations and limitations are general. Specific selections can be offered only after rotating speeds, pressures, temperatures, type of equipment and liquid nature are known. The following illustrations describe the basic seal and packing options available. For options not shown refer to the factory. For quick reference for the type of seal best suited to your application, refer to the condensed information that heads each option. The following comments govern these recommendations:

1 PACKING Standard on Model 411. Not avail. on 412 & 413.
PRESSURES (suction): Below atmospheric up to 250* P.S.I.G. (Maximum pump limitation) Lantern rings are required on suction lift applications.
TEMPERATURES: From minus 100°F. up to 275°F.* with high temperature packing, or 225°F. with standard packing.
LIQUIDS: All liquids that are compatible with braided fiber packing. Other packings available for special applications.

2 SINGLE — UNBALANCED Standard on Model 412 and 413. Optional Model 411.
PRESSURES (suction): Below atmospheric up to 100 P.S.I.G.
TEMPERATURES: From minus 100°F. up to 275°F. with high temperature seals, or 225°F. with standard seals.
LIQUIDS: All liquids that are compatible with the seal materials of construction and with a specific gravity higher than .6.

3 SINGLE — BALANCED Optional on all Models.
PRESSURES (suction): Up to 250 P.S.I.G. (Max. pump limit)
TEMPERATURES: Minus 100°F. up to 275°F. with high temperature seals, or 225°F. with standard seals.
LIQUIDS: All liquids that are compatible with the seal materials of construction. Required on liquids with a specific gravity of .6 or lower.

PRESSURES

TEMPERATURES

LIQUIDS

PRESSURES — The pressures referred to are those found at the pump suction. Most seal manufacturers recommend a flushing arrangement from the discharge to the stuffing box where "below atmospheric pressure" is encountered. The 410 Series stuffing boxes incorporate internal bypass arrangements which permit flushing to the mechanical seals. External bypasses are available to both seal faces. An external bypass is standard on vertical pumps to the upper seal face.

TEMPERATURES — The temperature limitation of a mechanical seal is frequently determined by the shaft sealing material. The various elastomer "O" ring materials have varying temperature limits, depending upon the chemical and/or physical properties of the process fluid. Filled TEFLON†, shaft seal rings are available.

LIQUIDS — Due to varying degrees of resistance of various sealing compounds in different pumped liquids, the following mechanical seal sealing rings are available: BUNA-N, NEOPRENE, VITON, TEFLON† and other synthetic elastomers.

†DUPONT registered trademark.

***NOTE:** Hardened stainless steel (450 minimum brinnel) shaft sleeves are available with this option and are required when the suction pressure is over 100 P.S.I.G. or when the temperature exceeds 225°F.

GS AURORA PUMP
A UNIT OF GENERAL SIGNAL
800 AIRPORT ROAD • NORTH AURORA, ILLINOIS 60542

AURORA MODEL 411 PUMPS

ON STEEL BASE
4" THRU 14" PUMPS
POWER SERIES NO. 4-5-6B-7

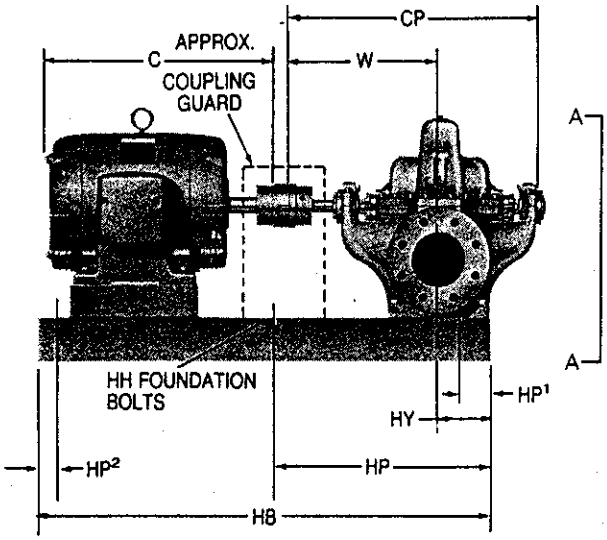

NOTES:
1. All dimensions in inches.
2. Dimensions may vary ± 3/8.
3. Not for construction purposes unless certified.
4. Coupling gap may vary 1/8" to 2-1/16".
5. Conduit box is shown in approximate location. Capacitor, when furnished, normally appears on top of motor. Dimensions are not specified as they vary with each motor manufacturer.
6. Discharge and suction flanges - American Standard flat face.

* Dimension "D" is 12 when using frames 404TS-445TS.
† Dimension "D" is 14-1/2 when using frames 404TS-445TS.

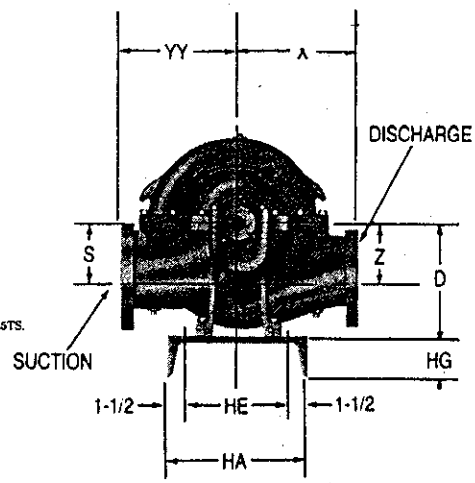

VIEW A-A

RIGHT HAND ROTATION

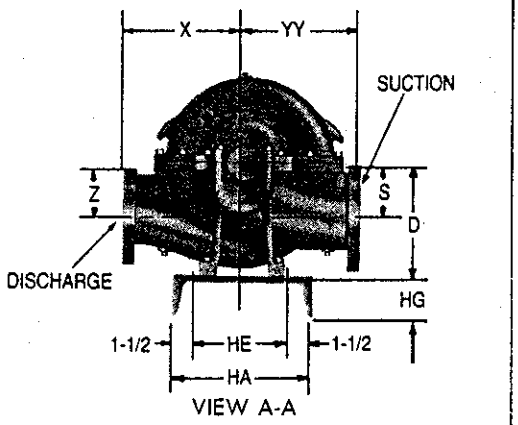

VIEW A-A

LEFT HAND ROTATION

BASE	SIZE	HA	HB	HE	HG	HH QTY	HH SIZE	HP	HP¹	HP²
5	12 × 38	12	38	9	3	4	1/2		20	1
7	13 × 42	13	42	10	4	4	5/8		24	1
9	15 × 44	15	44	12	3-3/8	4	5/8		24	1
10	18 × 44	18	44	15	4	4	5/8		1	1
11	18 × 48	18	48	15	4	4	5/8		1	1
12	18 × 54	18	54	15	4	4	5/8		1	1
13	18 × 60	18	60	15	4	4	5/8		24	1
14	18 × 65	18	65	15	4	4	5/8		24	1
15	22 × 60	22	60	19	4	4	5/8		1	1
16	22 × 72	22	72	19	4	4	5/8		1	1
17	22 × 84	22	84	19	4	4	5/8		1	1

STD. 125 # FLANGE
OPT. 250# FLANGE

NOTE: WHEN 2 D DIMENSIONS ARE INDICATED ALWAYS USE THE LARGER FIGURE.

PUMP SIZE DISCH	SUCT	CASE BORE	POWER SERIES	D	S	W	X	Z	CP	HY	YY	FRAME	213T	215T	254T	256T	284TS	284T	286TS	286T	324TS	324T	326TS	326T	364TS	364T	365TS	365T	404TS	404T	405TS	405T	444TS	444T	445TS	445T
												C	16	18	21	23	22	24	24	25	25	26	26	28	27	29	28	30	30	33	31	35	34	38	36	40
												D									8	8	8	8	9	9	9	9	10	10	10	10	11	11	11	11
4	6	18		12-1/2	6-1/4	16	14	6-1/4	28-1/2	6	16	BASE	5	7	9	10	-	11	-	11	11	11	11	12	12	12	12	12	15	-	15	-	15	-	15	-
5	6	11		11*	5-1/2	16	11-1/4	5-1/2	28-1/2	6	13-1/4	BASE	5	7	9	10	-	11	-	11	11	11	11	12	12		12		15	-	15	-	15	-	15	-
5	6	15		12-1/2	6-1/4	16	13-1/4	6-1/4	28-1/2	6	15	BASE	5	7	9	10	-	11	-	11	11	11	11	12	12	12	12	12	15	-	15	-	15	-	15	-
5	6	17	4	12-1/2	6-1/4	16	14	6-1/4	28-1/2	6	15	BASE	5	7	9	10	-	11	-	11	11	11	11	12	12	12	12	12	15	-	15	-	15	-	15	-
6	8	11		12-1/2	6-1/4	16	11-3/4	6-1/4	28-1/2	6	14-1/2	BASE	5	7	9	10	-	11	-	11	11	11	11	12	12	12	12	12	15	-	15	-	15	-	15	-
8	8	11		12-1/2†	6-1/4	16	12	6-1/4	28-1/2	6	14-1/2	BASE	5	7	9	10	-	11	-	11	11	11	11	12	12	12	12	12	15	-	15	-	15	-	15	-
6	8	15		13-1/2	6-3/4	18	14-1/4	6-3/4	32	7	16-3/4	BASE	-	-	-	11	-	12	-	12	-	12	-	12	12	12	12	-	15	-	15	-	16	-	16	-
6	8	18		14-3/4	8	18	16	8	32	7	18	BASE	-	-	10	11	-	12	-	12	-	12	-	12	12	12	13	13	15	15	15	15	16	16	16	-
6	8	20		14-3/4	8	18	15-3/4	8	32	7	18	BASE	-	-	10	11	-	12	-	12	-	12	-	12	12	12	13	13	15	15	15	15	16	16	16	-
8	10	12	5	14-3/4	8	18	17	9	32	7	17-3/4	BASE	-	-	10	11	-	12	-	12	-	12	-	12	12	12	13	13	15	15	15	15	16	16	16	-
8	10	15		14-3/4	8	18	17	9	32	7	17-3/4	BASE	-	-	10	11	-	12	-	12	-	12	-	12	12	12	13	13	15	15	15	15	16	16	16	-
8	10	17		14-3/4	8	18	17	8	32	7	17-3/4	BASE	-	-	10	11	-	12	-	12	-	12	-	12	12	12	13	13	15	15	15	15	16	16	16	-
8	10	21		18-1/2	9-1/2	21-7/8	18	9-1/2	38	11	21	BASE	-	-	-	-	-	-	-	-	-	-	-	-	13	-	13	11	16	16	16	16	16	16	16	16
10	12	12B		23	12	21-7/8	16	12	38	11	19	BASE	-	-	-	-	-	-	-	13	-	13	-	14	-	14	14	14	16	16	16	-	16	-	16	-
10	12	15B&C	6B	25	13-1/2	21-7/8	17	13-1/2	38	11	20	BASE	-	-	-	-	-	-	-	-	-	-	-	-	-	14	-	14	-	16	16	16	16	16	16	17
10	12	18		25	13-1/2	21-7/8	18	13-1/2	38	11	22	BASE	-	-	-	-	-	-	-	-	-	-	-	-	-	-	-	11	-	16	-	16	16	16	16	17
12	14	15B		24	15	25-1/4	17	15	43-7/8	11	22	BASE	-	-	-	-	REFER TO FACTORY								-	-	-	-	-	16	-	16	16	17	17	17
12	14	18	7	24	15	25-1/4	18	15	43-7/8	11	23	BASE	-	-	-	-	REFER TO FACTORY								-	-	-	-	-	-	-	-	-	-	-	-
14	16	18		29-1/4	16	25-1/4	22	16	43-7/8	11	27	BASE	-	-	-	-	REFER TO FACTORY								-	-	-	-	-	-	-	-	-	-	-	-

AURORA PUMP
A UNIT OF GENERAL SIGNAL
800 AIRPORT ROAD • NORTH AURORA, ILLINOIS 60542

6 x 8 x 15 SERIES 410
ENCLOSED IMPELLER

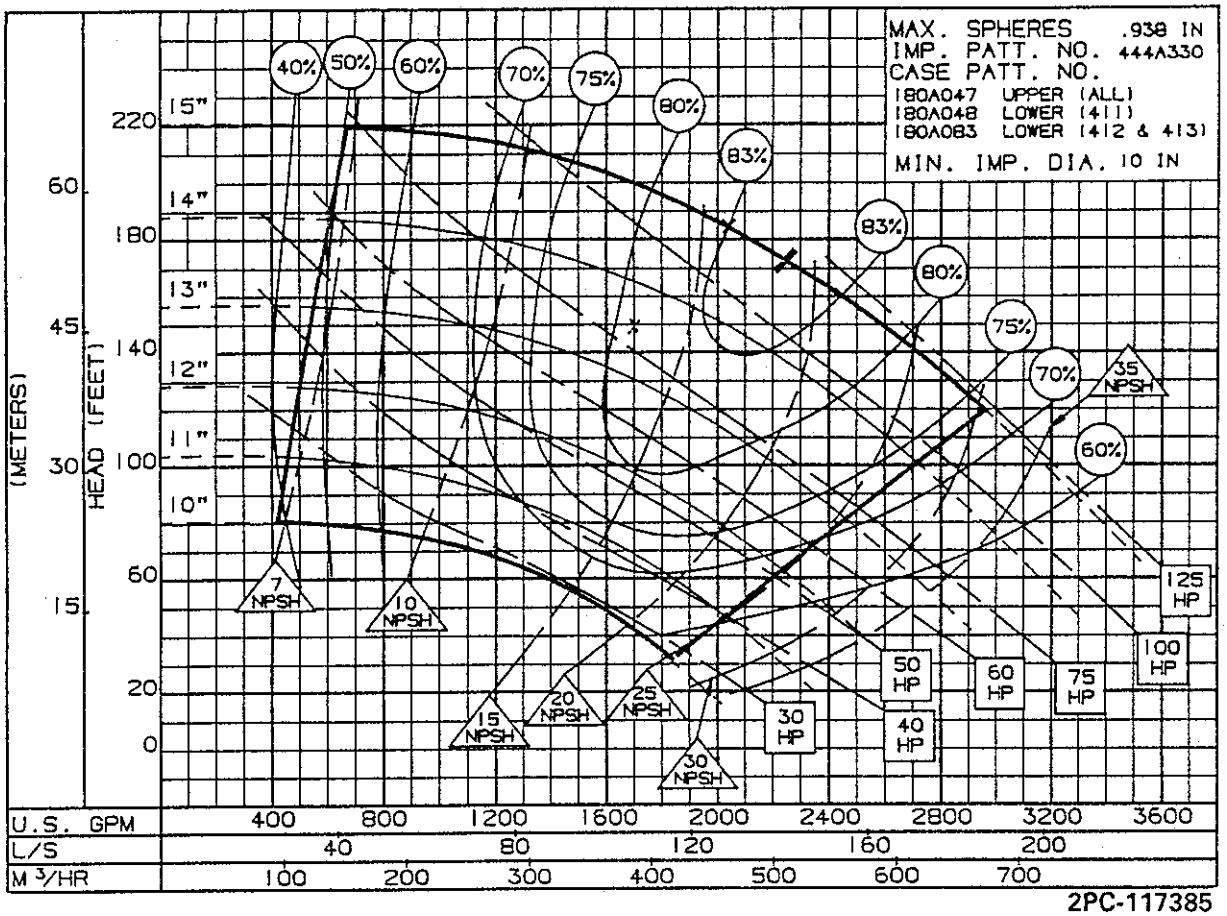

2PC-117385

1750 R.P.M.

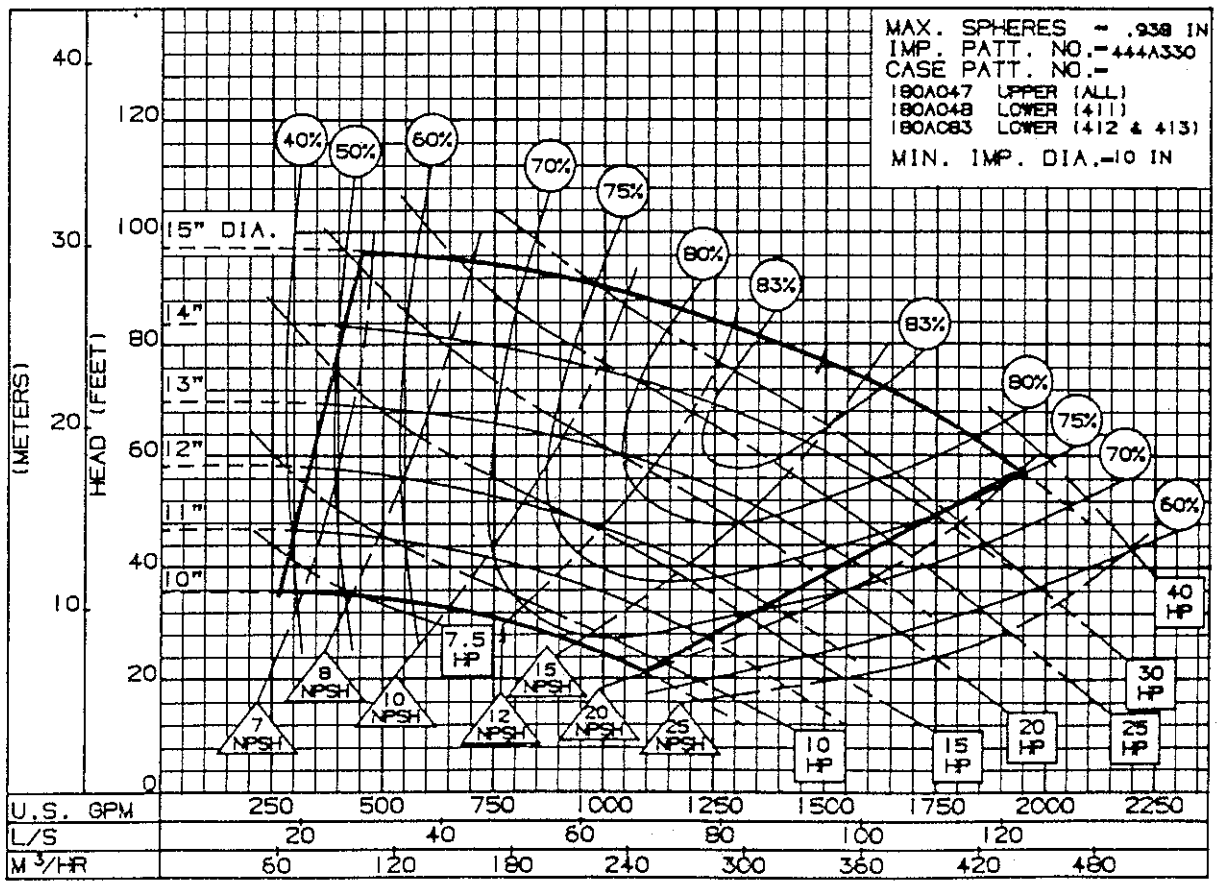

2PC-117386

1150 R.P.M.

GS AURORA PUMP
A UNIT OF GENERAL SIGNAL
800 AIRPORT ROAD • NORTH AURORA, ILLINOIS 60542

DUCTILE IRON PIPE

U.S. PIPE

TYTON JOINT® Pipe

4″–64″ Ductile Iron

For Water and Wastewater,
Fire Protection And Industrial Applications

1995 Edition

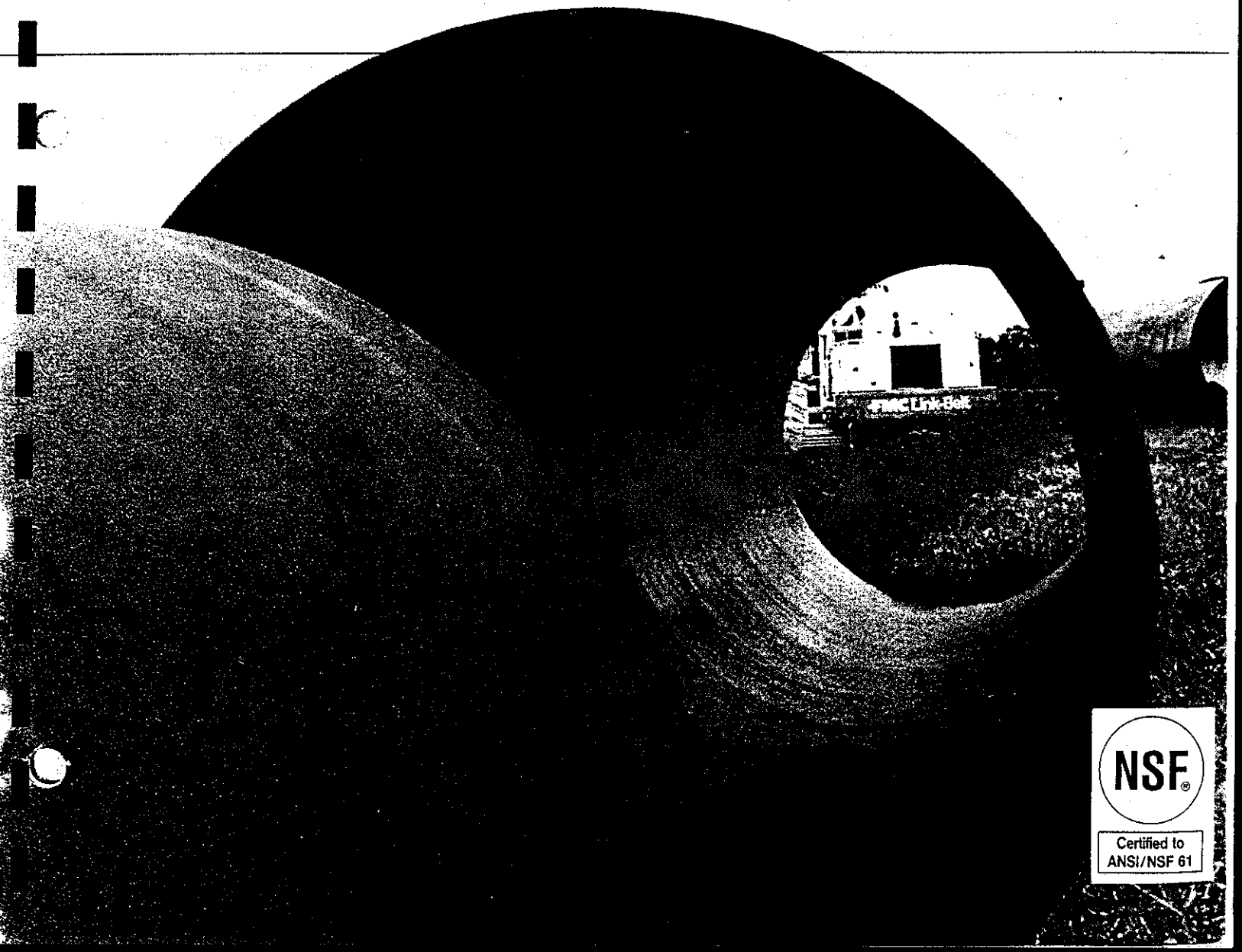

NSF®
Certified to ANSI/NSF 61

TYTON JOINT® Pipe

TYTON JOINT® is U.S. Pipe's trademark for pipe with a push-on type connection. Simplicity, sturdiness and water-tightness of the system were brought about, not by chance but by design. Taking advantage of a background of more than 90 years experience with pipe and pipe connecting systems, U.S. Pipe made a thorough study of existing joining systems and requirements of pipe users. The results of this study showed the need for a simple, economical and reliable method of assembling pipe. With the objective of developing such a system, a number of new designs were devised. Several of the most promising were tested and the assembly which possessed the most outstandingly desirable characteristics became TYTON JOINT pipe.

After selection of the system, TYTON JOINT pipe were subjected to further rigid tests designed to simulate extreme installation and service conditions which might be encountered in the field. It was only after these tests proved completely satisfactory and were confirmed by field installations that the decision was made to market TYTON JOINT pipe in 1955. Convincing proof of its wide acceptance is shown by the fact that more than 95% of the pipe now sold by this company is TYTON JOINT pipe.

The TYTON® gasket—a circular rubber gasket which has a modified bulb shape in cross section—is the only accessory. Composition and dimensions of the gasket have been carefully engineered to ensure a water-tight and lasting seal. Gaskets of special elastomers may be ordered for special applications.

The gasket contour and bell socket contour ensure that the gasket will remain seated during proper assembly of the pipe.

The plain end of the pipe is furnished beveled to ease assembly. Because TYTON JOINT pipe assembles so easily, those not experienced with it may get the impression that the system is not water-tight. But years of successful experience prove it to be water-tight regardless of ease of assembly. Hydrostatic tests have shown that the system will withstand pressures far in excess of rated pressures.

Ductile Iron TYTON JOINT pipe are centrifugally cast in metal molds in accordance with ANSI/AWWA C151/A21.51.

TYTON® gaskets are furnished in accordance with ANSI/AWWA C111/A21.11 Standard.

Asphaltic outside coating and inside lining and coating are in accordance with ANSI/AWWA C151/A21.10 *"Ductile-Iron Pipe, Centrifugally Cast in Metal Molds or Sand-Lined Molds, for Water or Other Liquids"* for pipe and ANSI/AWWA C110/A21.10 *"Ductile-Iron and Gray-Iron Fittings, 3 In. Through 48 In., For Water and Other Liquids"*. Cement lining, in accordance with ANSI/AWWA C104/A21.4 *"Cement-Mortar Lining for Ductile-Iron and Gray-Iron Pipe and Fittings for Water"* or special linings and/or coatings can be furnished for specific conditions.

Sizes 4" through through 36" are furnished in nominal 18-foot laying lengths. 42" is furnished in nominal 18-foot and 20-foot laying lengths. 48" through 64" are furnished in 20-foot laying lengths.

As specified in ANSI/AWWA C151/A21.51, pipe weights have been calculated using standard barrel weights and weights of bells being produced.

When joint restraint is required for push-on joint pipe, two options are available from U.S. Pipe. For restraint of 4" through 12" sizes with maximum working pressures of 250 psi the FIELD LOK® Gasket may be used. In addition, for joint restraint of 4" through 64" sizes, TR FLEX® Pipe and Fittings may be used. TR FLEX® Pipe and Fittings are rated for working pressures of 350 psi in 4" through 24" sizes and for 250 psi in larger sizes. For higher pressure applications see your U.S. Pipe representative. Product brochures on both FIELD LOK® Gaskets and TR FLEX® Pipe and Fittings are available from your U.S. Pipe representative.

U.S. Pipe qualifies for Federal Procurement under Public Law No. 94-580, Section 6002, known as the Resource Recovery Act of 1976, since, due to modern technology, recycled iron and steel scrap is used to a large degree in our Ductile Iron Pipe production.

Note:
If specifiers and users believe that corrosive soils will be encountered where our products are to be installed, please refer to ANSI/AWWA C105/A21.5 "Polyethylene Encasement for Ductile Iron Piping for Water and Other Liquids", for proper external protection procedures.

TYTON®, TYTON JOINT®, TR FLEX®, AND FIELD LOK® are registered trademarks of U.S. Pipe and Foundry Company.

Assembly of TYTON JOINT® Pipe

CAUTION: The inside of the socket, the gasket, and the plain end to be inserted must be kept clean throughout the assembly. Joints are only as water-tight as they are clean. If the joint is somewhat difficult to assemble, inspect for proper gasket positioning, adequate lubrication, and foreign matter in the joint.

Figure 1. Insertion of Gasket

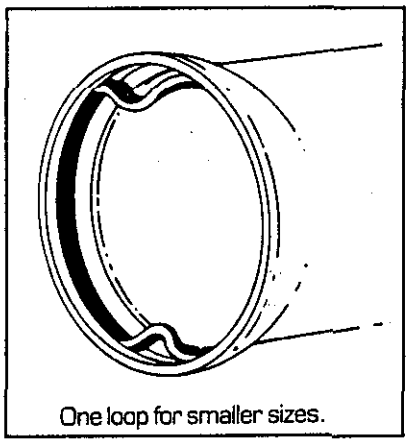
One loop for smaller sizes.

All foreign matter in the socket must be removed, i.e., mud, sand, cinders, gravel, pebbles, trash, frozen material, etc. The gasket seat should be thoroughly inspected to be certain it is clean. Foreign matter in the gasket seat may cause a leak. The gasket must be wiped clean with a clean cloth, flexed, and then placed into the socket with the rounded bulb end entering first. Looping the gasket in the initial insertion will facilitate seating the gasket heel evenly around the retainer seat. Smaller sizes require only one loop. With larger sizes it will be helpful to loop the gasket at the 12 o'clock and 6 o'clock positions. When installing TYTON JOINT pipe in sub-freezing weather, the gaskets, prior to their use, must be kept at a temperature of at least 40°F by suitable means, such as storing in a heated area or keeping immersed in a tank of warm water. If the gaskets are kept in warm water, they should be dried before placing in the pipe socket.

Figure 2. Application of Lubricant

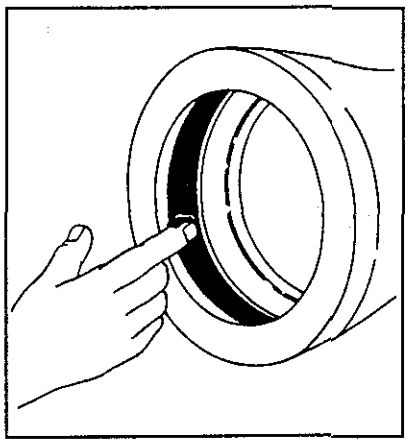

A thin film of TYTON JOINT® lubricant should be applied to inside surface of gasket which will come in contact with plain end of the pipe. The plain end of the pipe must be cleaned of all foreign matter on the outside from the end to the stripes. Frozen materials may cling to the pipe in cold weather and it must be removed. In some cases, it is desirable to apply a thin film of lubricant to the outside of the plain end for about 3″ back from the end. Do not allow the plain end to touch the ground or trench side after lubricating since foreign matter may adhere to the plain end and cause a leak. Lubricant other than that furnished with the pipe should not be used.

Figure 3. Initial Entry of Plain End in Socket

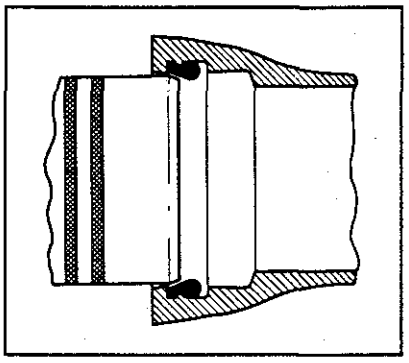

The plain end of the pipe should be aligned and carefully entered into the socket until it just makes contact with the gasket. This is the starting position for the final assembly of the joint. Note the two painted stripes near plain end.

Figure 4. Completely Assembled Joint

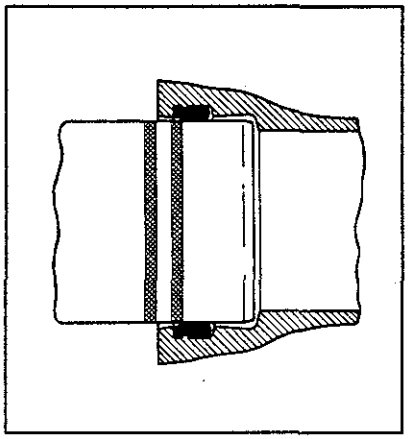

Joint assembly should then be completed by forcing the plain end of the entering pipe past the gasket (which is thereby compressed) until the plain end makes contact with the bottom of the socket. Note that the first painted stripe will have disappeared into the socket and the front edge of the second stripe will be approximately flush with the bell face. If assembly is not accomplished with the application of reasonable force by the methods indicated, the plain end of the pipe should be removed to check for the proper positioning of the gasket, adequate lubrication, and removal of foreign matter in the joint.

Figure 5. Crowbar Method of Assembly

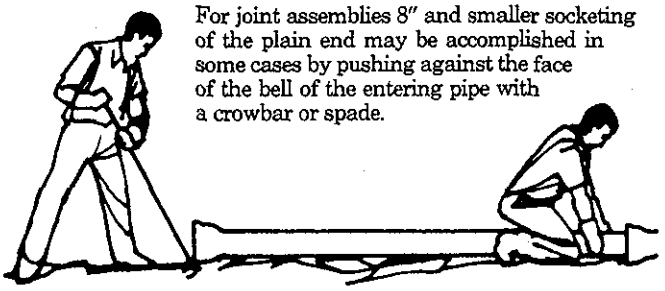

For joint assemblies 8″ and smaller socketing of the plain end may be accomplished in some cases by pushing against the face of the bell of the entering pipe with a crowbar or spade.

Procedures outlined in figures 1-3 on page TP 2, showing the assembly of TYTON JOINT® pipe should be followed before proceeding with the step shown in figure 6 below.

Figure 6.

Tools Needed for Final Assembly:

Two ¾ ton chain hoists, with 25 ft. of chain and two (2) bell choker slings for 4" - 24" sizes or two (2) 1½ ton chain hoists for 30" - 64" sizes.

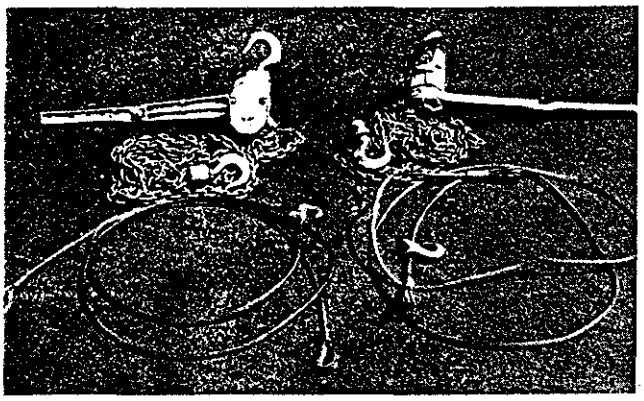

Figure 7.

Wrap the bell choker slings around the pipe just behind the bell so that the free ends will be located on the horizontal centerline on opposite sides of the bell with the loose ends projecting in front of the bell face.

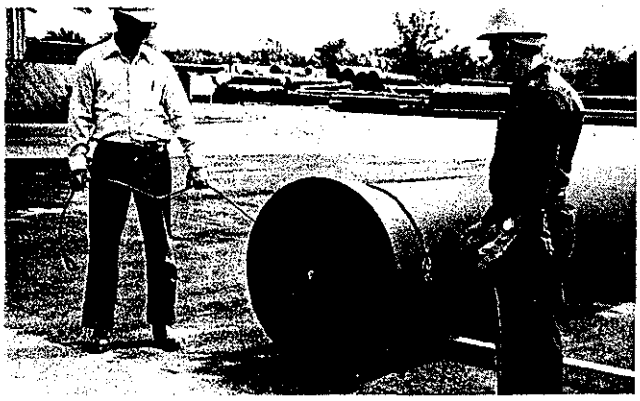

Figure 8.

Double-wrap the chains of the two chain hoists around the pipe barrel at the spigot end approximately six feet from the spigot end. Position the hooks of the chain hoists on the horizontal centerline on opposite sides of the spigot.

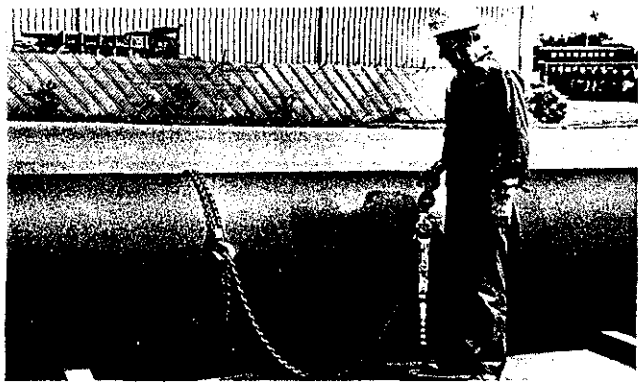

Figure 9.

Attach the hook of each chain hoist into the eye of each bell choker sling.

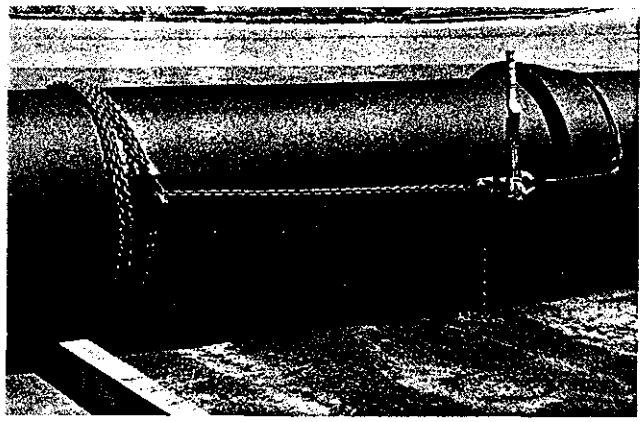

Figure 10.

Assemble the joint by pulling evenly with both chain hoists, keeping the pipe in alignment.

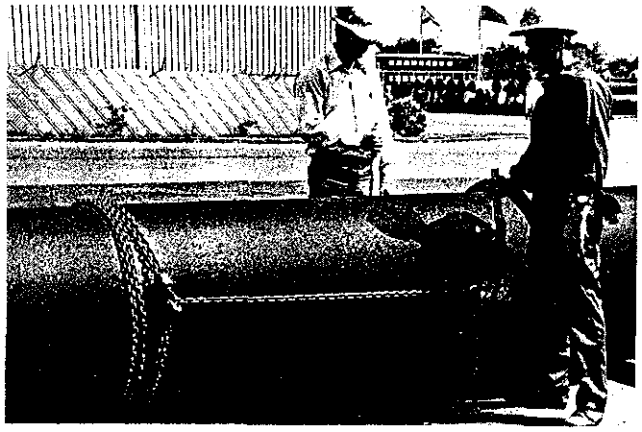

Size	Bell Choker Sling
4" thru 20"	⅜" dia. by 84" long
24" and 30"	⅜" dia. by 120" long
36"	⅜" dia. by 144" long
42"	⅜" dia. by 164" long
48"	⅜" dia. by 184" long
54"	⅜" dia. by 206" long
60" *	⅝" dia. by 225" long
64" *	⅝" dia. by 237" long

*Note: These sizes may require the use of 3 chain hoist and choker sling units.

Field Cut Pipe

Figure 11

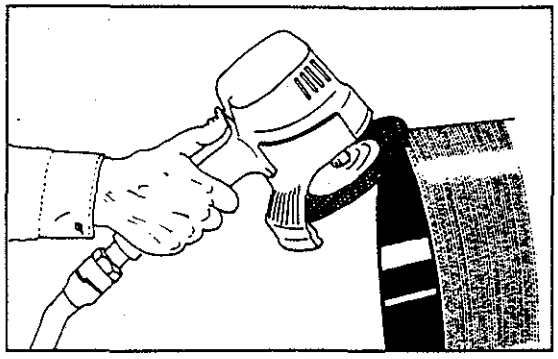

When pipe are cut in the field, the cut end may be readily conditioned so that it can be used to make up the next joint. The outside of the cut end should be beveled about ¼-inch at an angle of about 30 degrees (Figure 11). This can be quite easily done with a coarse file or a portable grinder. The operation removes any sharp, rough edges which otherwise might injure the gasket.

When ductile iron pipe 14" and larger is to be cut in the field, the material should be ordered as ***"GAUGED FULL LENGTH"***. Pipe that is "gauged full length" is specially marked to avoid confusion. The ANSI/AWWA standard for ductile iron pipe requires factory gauging of the spigot end. Accordingly, pipe selected for field cutting should also be field gauged in the location of the cut and found to be within the tolerances shown in Table 1. In the field a mechanical joint gland can be used as a gauging device.

Table 1. Suitable Pipe Diameters for Field Cuts and Restrained Joint Field Fabrication

Nominal Pipe Size In.	Min. Pipe Diameter In.	Max. Pipe Diameter In.	Min. Pipe Circumference In.	Max. Pipe Circumference In.
4	4.74	4.86	14 29/32	15 9/32
6	6.84	6.96	21 1/2	21 7/8
8	8.99	9.11	28 1/4	28 5/8
10	11.04	11.16	34 11/16	35 1/16
12	13.14	13.26	41 9/32	41 21/32
14	15.22	15.35	47 13/16	48 7/32
16	17.32	17.45	54 13/32	54 13/16
18	19.42	19.55	61	61 13/32
20	21.52	21.65	67 19/32	68
24	25.72	25.85	80 13/16	81 7/32
30	31.94	32.08	100 11/32	100 25/32
36	38.24	38.38	120 1/8	120 9/16
42	44.44	44.58	139 5/8	140 1/16
48	50.74	50.88	159 13/32	159 27/32
54	57.46	57.60	180 17/32	180 31/32
60	61.51	61.65	193 1/4	193 11/16
64	65.57	65.71	206	206 7/16

Above table based on ANSI/AWWA C151/A21.51 guidelines for push-on joints

The Backhoe Method of Assembly

A backhoe may be used to assemble pipe of intermediate and larger sizes. The plain end of the pipe should be carefully guided by hand into the bell of the previously assembled pipe. The bucket of the backhoe may then be used to push the pipe until fully seated. A timber header should be used between the pipe and backhoe bucket to avoid damage to the pipe.

Bell Dimensions of Ductile Iron TYTON JOINT® Pipe

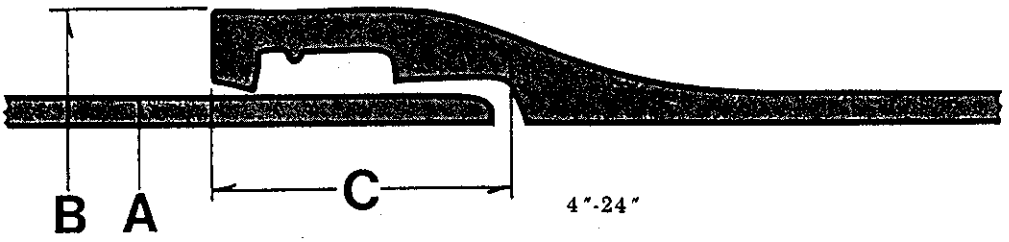

Note: Actual bell configuration may vary from illustration shown

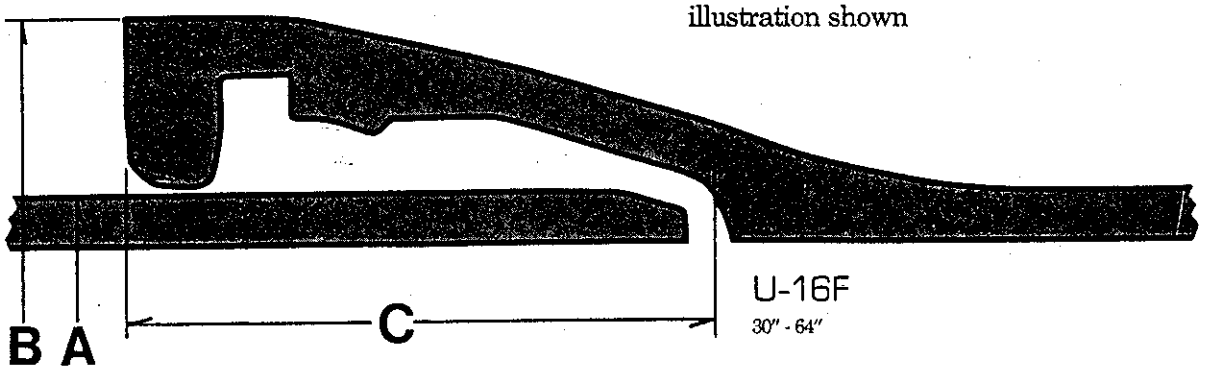

Size	A Pipe O.D.	Dimensions of Bells*	
		B Bell O.D.	C Socket Depth
4	4.80	6.52	3.15
6	6.90	8.66	3.38
8	9.05	10.82	3.69
10	11.10	12.91	3.75
12	13.20	15.05	3.75
14	15.30	17.62	5.00
16	17.40	19.74	5.00
18	19.50	21.86	5.00
20	21.60	23.98	5.50
24	25.80	28.16	5.95
30	32.00	35.40	6.55
36	38.30	41.84	7.00
42	44.50	49.36	7.90
48	50.80	55.94	8.60
54	57.56	62.63	9.40
60	61.61	66.63	10.10
64	65.67	70.80	10.65

*Subject to manufacturing tolerances.

Dimensions in inches

Standard Pressure Classes of Ductile Iron Pipe

Nominal Thickness for Standard Pressure Classes of Ductile-Iron Pipe

Size in.	Outside Diameter in.	Pressure Class*				
		150	200	250	300	350
		Nominal Thickness — in.				
3	3.96	—	—	—	—	0.25**
4	4.80	—	—	—	—	0.25**
6	6.90	—	—	—	—	0.25**
8	9.05	—	—	—	—	0.25**
10	11.10	—	—	—	—	0.26
12	13.20	—	—	—	—	0.28
14	15.30	—	—	0.28	0.30	0.31
16	17.40	—	—	0.30	0.32	0.34
18	19.50	—	—	0.31	0.34	0.36
20	21.60	—	—	0.33	0.36	0.38
24	25.80	—	0.33	0.37	0.40	0.43
30	32.00	0.34	0.38	0.42	0.45	0.49
36	38.30	0.38	0.42	0.47	0.51	0.56
42	44.50	0.41	0.47	0.52	0.57	0.63
48	50.80	0.46	0.52	0.58	0.64	0.70
54	57.56	0.51	0.58	0.65	0.72	0.79
60	61.61	0.54	0.61	0.68	0.76	0.83
64	65.67	0.56	0.64	0.72	0.80	0.87

* Pressure Classes are defined as the rated water pressure of the pipe in psi. The thicknesses shown are adequate for the rated water working pressure plus a surge allowance of 100 psi. Calculations are based on a minimum yield strength of 42,000 and a 2.0 safety factor times the sum of the working pressure and 100 psi surge allowance.

** Calculated thicknesses for these sizes and pressure ratings are less than those shown above. Presently these are the lowest nominal thicknesses available in these sizes.

*** Dimensions and weights of Special Classes (Thickness Classes) are found on pages TP9, TP10, & TP11.

NOTE: Per ANSI/AWWA C150/A21.50 the thicknesses above include the 0.08" service allowance and the casting tolerance listed below by size ranges:

SIZE (Inches)	CASTING TOLERANCES (Inches)
3 - 8	0.05
10 - 12	0.06
14 - 42	0.07
48	0.08
54 - 64	0.09

Thicknesses, Dimensions and Weights of Ductile Iron TYTON JOINT® Pipe

Thicknesses, dimensions and weights of 4″ through 64″ Ductile Iron pipe conform to ANSI/AWWA C151/A21.51.

Size Inches	Pressure Class	Thickness	Outside Diameter*	18-Foot Laying Length	
				Weight Per Length†	Avg. Weight Per Foot††
		Inches		Pounds	
4	350	0.25	4.80	205	11.4
6	350	0.25	6.90	300	16.6
8	350	0.25	9.05	395	22.0
10	350	0.26	11.10	510	28.4
12	350	0.28	13.20	655	36.4
14	250	0.28	15.30	770	42.9
	300	0.30	15.30	825	45.8
	350	0.31	15.30	850	47.2
16	250	0.30	17.40	940	52.3
	300	0.32	17.40	1000	55.5
	350	0.34	17.40	1060	58.8
18	250	0.31	19.50	1090	60.5
	300	0.34	19.50	1185	65.9
	350	0.36	19.50	1250	69.5
20	250	0.33	21.60	1290	71.6
	300	0.36	21.60	1395	77.6
	350	0.38	21.60	1470	81.6
24	200	0.33	25.80	1550	86.1
	250	0.37	25.80	1725	95.8
	300	0.40	25.80	1855	103.0
	350	0.43	25.80	1985	110.2
30	150	0.34	32.00	2000	111.2
	200	0.38	32.00	2220	123.2
	250	0.42	32.00	2435	135.2
	300	0.45	32.00	2595	144.2
	350	0.49	32.00	2810	156.1
36	150	0.38	38.30	2675	148.7
	200	0.42	38.30	2935	163.1
	250	0.47	38.30	3260	181.1
	300	0.51	38.30	3520	195.5
	350	0.56	38.30	3840	213.4

*Tolerance of O.D. of spigot end: 4-12 in., ±0.06 in.; 14-24 in., +0.05 in., -0.08 in.,: 30-48 in., +0.08 in., -0.06 in., 54-64 in., +0.04 in., —0.10 in.

†Including bell; calculated weight of pipe rounded off to nearest 5 lbs.

††Including bell; average weight, per foot, based on calculated weight of pipe before rounding.

Thicknesses, Dimensions and Weights of Ductile Iron TYTON JOINT® Pipe

Thicknesses, dimensions and weights of 4″ through 64″ Ductile Iron pipe conform to ANSI/AWWA C151/A21.51.

Size Inches	Pressure Class	Thickness	Outside Diameter*	18-Foot Laying Length: Weight Per Length†	18-Foot Laying Length: Avg. Weight Per Foot††
		Inches		Pounds	
42	150	0.41	44.50	3475	193.1
	200	0.47	44.50	3930	218.3
	250	0.52	44.50	4305	239.2
	300	0.57	44.50	4680	260.0
	350	0.63	44.50	5130	285.0
				20-Foot Laying Length	
42	150	0.41	44.50	3765	188.3
	200	0.47	44.50	4265	213.3
	250	0.52	44.50	4685	234.3
	300	0.57	44.50	5105	255.2
	350	0.63	44.50	5605	280.2
48	150	0.46	50.80	4805	240.3
	200	0.52	50.80	5380	269.0
	250	0.58	50.80	5955	297.7
	300	0.64	50.80	6525	326.3
	350	0.70	50.80	7095	354.8
54	150	0.51	57.56	6035	301.7
	200	0.58	57.56	6795	339.7
	250	0.65	57.56	7550	377.5
	300	0.72	57.56	8305	415.3
	350	0.79	57.56	9060	453.1
60	150	0.54	61.61	6930	346.4
	200	0.61	61.61	7740	387.1
	250	0.68	61.61	8555	427.7
	300	0.76	61.61	9480	474.0
	350	0.83	61.61	10290	514.0
64	150	0.56	65.67	7680	384.0
	200	0.64	65.67	8670	433.6
	250	0.72	65.67	9660	483.1
	300	0.80	65.67	10650	532.4
	350	0.87	65.67	11510	575.5

*Tolerance of O.D. of spigot end: 4-12 in., ±0.06 in.; 14-24 in., +0.05 in., -0.08 in.; 30-48 in., +0.08 in., -0.06 in., 54-64 in., +0.04 in., -0.10 in.

†Including bell; calculated weight of pipe rounded off to nearest 5 lbs.

††Including bell; average weight, per foot, based on calculated weight of pipe before rounding.

Dimensions and Weights for Special Classes (Thickness Classes) of Ductile Iron TYTON JOINT® Pipe

Thicknesses, dimensions and weights of 4" through 54" Ductile Iron pipe conforming to ANSI/AWWA C151/A21.51.

Size Inches	Thickness Class	Thickness	Outside Diameter*	18-Foot Laying Length	
				Weight Per Length†	Avg. Weight Per Foot††
		Inches		Pounds	
4	51	0.26	4.80	210	11.8
	52	0.29	4.80	235	13.1
	53	0.32	4.80	255	14.3
	54	0.35	4.80	280	15.5
	55	0.38	4.80	300	16.6
	56	0.41	4.80	320	17.8
6	50	0.25	6.90	300	16.6
	51	0.28	6.90	330	18.4
	52	0.31	6.90	365	20.2
	53	0.34	6.90	395	22.0
	54	0.37	6.90	430	23.8
	55	0.40	6.90	460	25.6
	56	0.43	6.90	490	27.3
8	50	0.27	9.05	425	23.7
	51	0.30	9.05	470	26.1
	52	0.33	9.05	515	28.6
	53	0.36	9.05	560	31.0
	54	0.39	9.05	600	33.4
	55	0.42	9.05	645	35.7
	56	0.45	9.05	685	38.1
10	50	0.29	11.10	565	31.4
	51	0.32	11.10	620	34.5
	52	0.35	11.10	675	37.5
	53	0.38	11.10	730	40.5
	54	0.41	11.10	780	43.4
	55	0.44	11.10	835	46.4
	56	0.47	11.10	890	49.3
12	50	0.31	13.20	720	40.0
	51	0.34	13.20	785	43.6
	52	0.37	13.20	850	47.2
	53	0.40	13.20	915	50.8
	54	0.43	13.20	980	54.4
	55	0.46	13.20	1040	57.9
	56	0.49	13.20	1105	61.5

* Tolerance of O.D. of spigot end: 4-12 in., ±0.06 in.:14-24 in., +0.05 in., −0.08 in.: 30-48 in., +0.08 in., -0.06 in.: 54 in., +0.04 in., -0.10 in.

† Including bell; calculated weight of pipe rounded off to nearest 5 lb.

†† Including bell; average weight, per foot, based on calculated weight of pipe before rounding.

Dimensions and Weights for Special Classes (Thickness Classes) of Ductile Iron TYTON JOINT® Pipe

Thicknesses, dimensions and weights of 4" through 54" Ductile Iron pipe conforming to ANSI/AWWA C151/A21.51

Size Inches	Thickness Class	Thickness	Outside Diameter*	18-Foot Laying Length	
				Weight Per Length†	Avg. Weight Per Foot††
		Inches		Pounds	
14	50	0.33	15.30	900	50.0
	51	0.36	15.30	975	54.2
	52	0.39	15.30	1050	58.4
	53	0.42	15.30	1125	62.6
	54	0.45	15.30	1200	66.7
	55	0.48	15.30	1275	70.9
	56	0.51	15.30	1350	75.0
16	50	0.34	17.40	1060	58.8
	51	0.37	17.40	1145	63.6
	52	0.40	17.40	1230	68.4
	53	0.43	17.40	1315	73.1
	54	0.46	17.40	1400	77.9
	55	0.49	17.40	1490	82.7
	56	0.52	17.40	1575	87.4
18	50	0.35	19.50	1220	67.7
	51	0.38	19.50	1315	73.1
	52	0.41	19.50	1415	78.5
	53	0.44	19.50	1510	83.9
	54	0.47	19.50	1605	89.3
	55	0.50	19.50	1700	94.5
	56	0.53	19.50	1800	100.0
20	50	0.36	21.60	1395	77.6
	51	0.39	21.60	1505	83.6
	52	0.42	21.60	1615	89.6
	53	0.45	21.60	1720	95.6
	54	0.48	21.60	1830	101.6
	55	0.51	21.60	1935	107.5
	56	0.54	21.60	2040	113.4
24	50	0.38	25.80	1765	98.1
	51	0.41	25.80	1895	105.4
	52	0.44	25.80	2025	112.6
	53	0.47	25.80	2155	119.7
	54	0.50	25.80	2285	126.9
	55	0.53	25.80	2415	134.1
	56	0.56	25.80	2540	141.2

* Tolerance of O.D. of spigot end: 4-12 in., ±0.06 in.:14-24 in., +0.05 in., −0.08 in.: 30-48 in., +0.08 in., -0.06 in.: 54 in., +0.04 in., -0.10 in.

† Including bell; calculated weight of pipe rounded off to nearest 5 lb.

†† Including bell; average weight, per foot, based on calculated weight of pipe before rounding.

Dimensions and Weights for Special Classes (Thickness Classes) of Ductile Iron TYTON JOINT® Pipe

Thicknesses, dimensions and weights of 4" through 54" Ductile Iron pipe conforming to ANSI/AWWA C151/A21.51

Size Inches	Thickness Class	Thickness	Outside Diameter*	18-Foot Laying Length: Weight Per Length†	18-Foot Laying Length: Avg. Weight Per Foot††
		Inches		Pounds	
30	50	0.39	32.00	2270	126.2
	51	0.43	32.00	2490	138.2
	52	0.47	32.00	2705	150.2
	53	0.51	32.00	2920	162.1
	54	0.55	32.00	3130	174.0
	55	0.59	32.00	3345	185.9
	56	0.63	32.00	3560	197.7
36	50	0.43	38.30	3000	166.7
	51	0.48	38.30	3325	184.7
	52	0.53	38.30	3645	202.6
	53	0.58	38.30	3970	220.5
	54	0.63	38.30	4290	238.3
	55	0.68	38.30	4610	256.1
	56	0.73	38.30	4930	273.9
42	50	0.47	44.50	3870	215.0
	51	0.53	44.50	4320	240.1
	52	0.59	44.50	4775	265.2
	53	0.65	44.50	5220	290.1
	54	0.71	44.50	5670	315.0
	55	0.77	44.50	6115	339.8
	56	0.83	44.50	6560	364.5
				20-Foot Laying Length	
42	50	0.47	44.50	4265	213.3
	51	0.53	44.50	4770	238.5
	52	0.59	44.50	5270	263.5
	53	0.65	44.50	5770	288.5
	54	0.71	44.50	6265	313.3
	55	0.77	44.50	6765	338.2
	56	0.83	44.50	7255	362.8
48	50	0.51	50.80	5285	264.3
	51	0.58	50.80	5955	297.7
	52	0.65	50.80	6620	331.1
	53	0.72	50.80	7285	364.3
	54	0.79	50.80	7950	397.5
	55	0.86	50.80	8610	430.6
	56	0.93	50.80	9270	463.6
54	50	0.57	57.56	6685	334.3
	51	0.65	57.56	7550	377.5
	52	0.73	57.56	8415	420.8
	53	0.81	57.56	9275	463.8
	54	0.89	57.56	10,135	506.8
	55	0.97	57.56	10,995	549.7
	56	1.05	57.56	11,845	592.3

* Tolerance of O.D. of spigot end: 4-12 in., ±0.06 in.:14-24 in., +0.05 in., −0.08 in.: 30-48 in., +0.08 in., -0.06 in.: 54 in., +0.04 in., -0.10 in.

† Including bell; calculated weight of pipe rounded off to nearest 5 lb.

†† Including bell; average weight, per foot, based on calculated weight of pipe before rounding.

Maximum Deflection Full Length Pipe

Size of Pipe	Maximum Joint Deflection in Degrees	Deflection in Inches		Approximate Radius in Feet of Curve Produced by Succession of Joints	
		18 foot length	20 foot length	18 ft. length	20 ft. length
4	5°	19		206	
6	5°	19		206	
8	5°	19		206	
10	5°	19		206	
12	5°	19		206	
14	5°	19		206	
16	5°	19		206	
18	5°	19		206	
20	5°	19		206	
24	5°	19		206	
30	5°	19		206	
36	5°	19		206	
42	4°	15	17	258	287
48	4°		17		287
54	4°		17		287
60	4°		17		287
64	4°		17		287

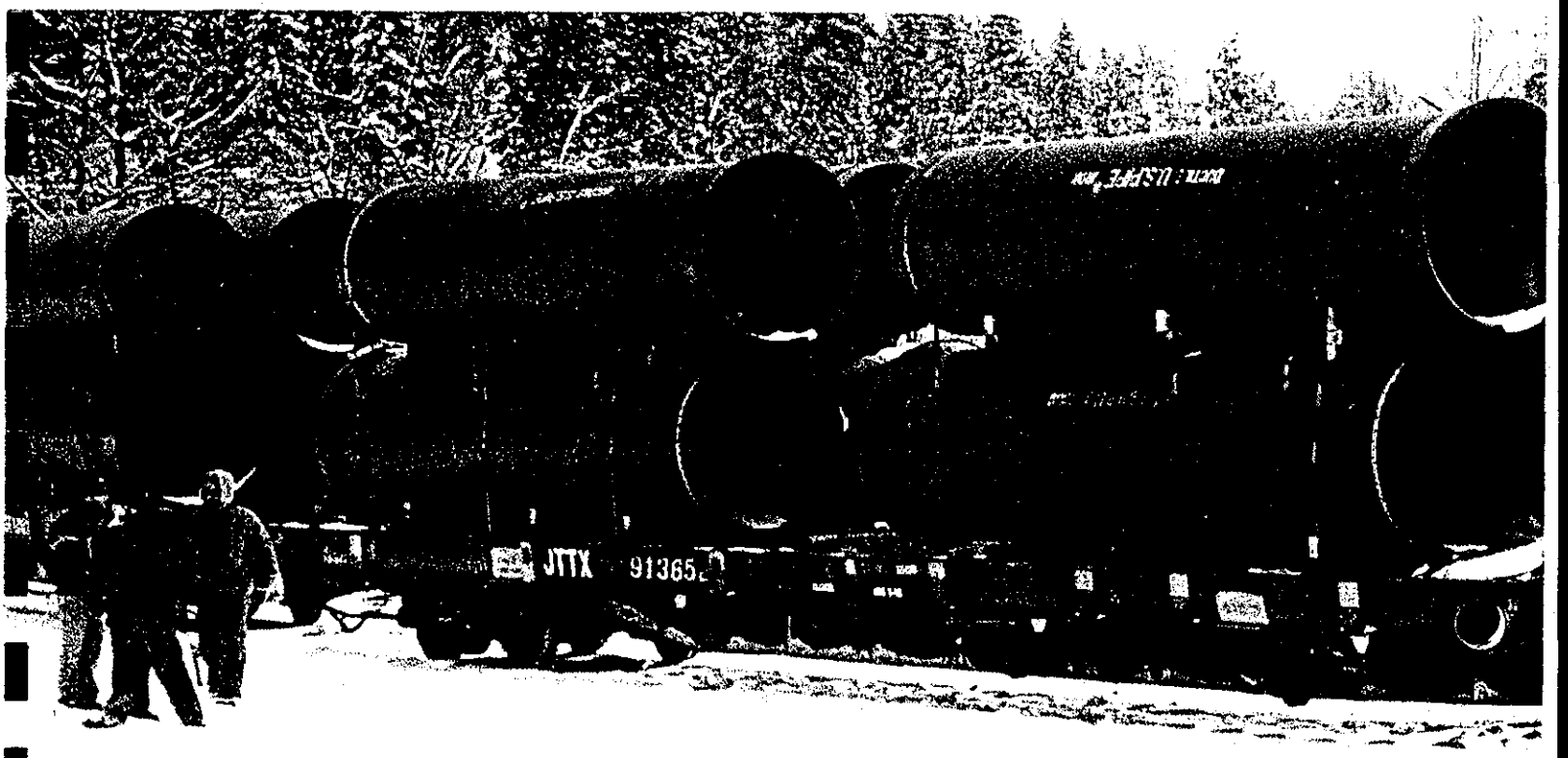

KOBELCO

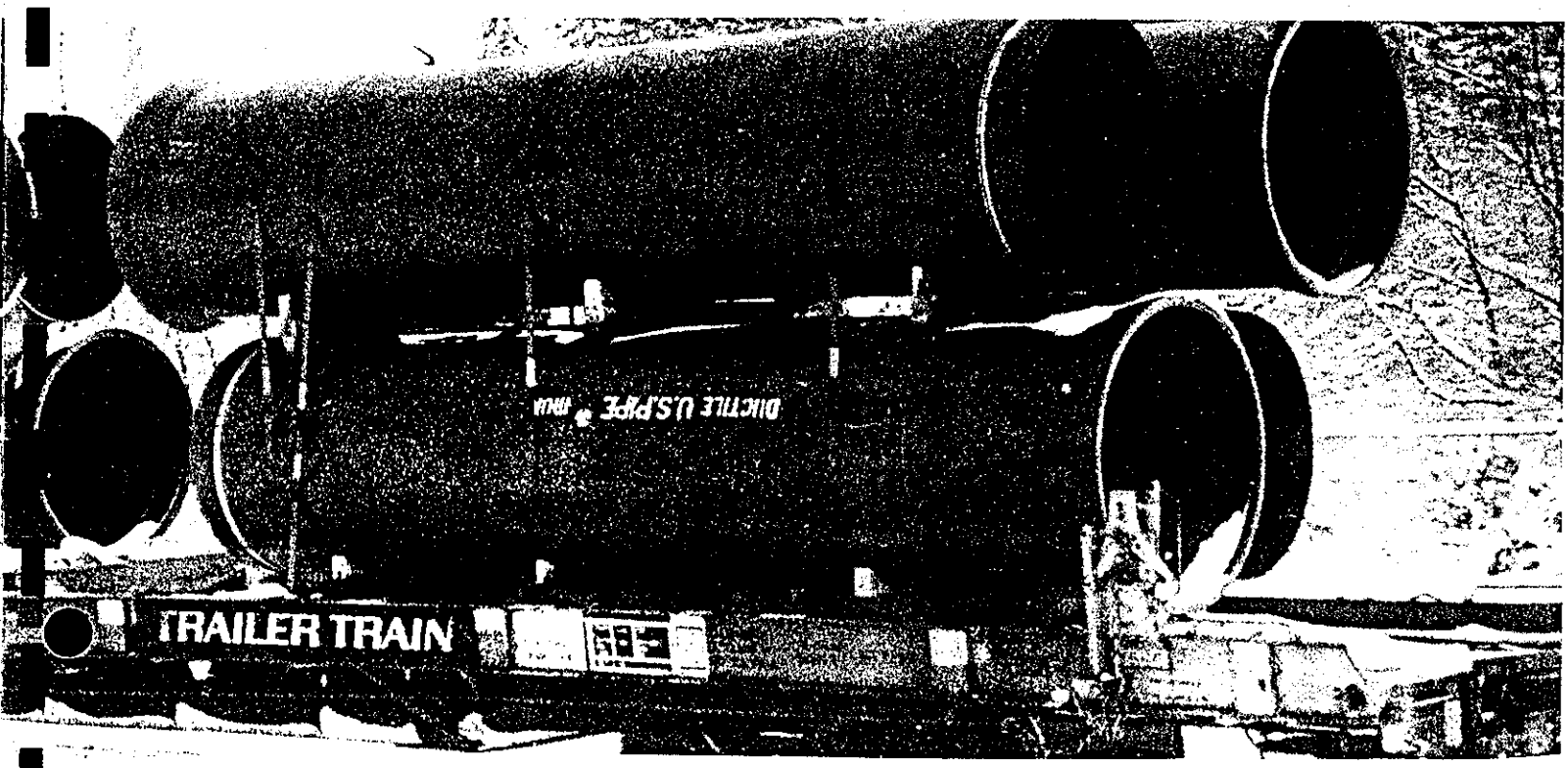
TRAILER TRAIN
DUCTILE U.S.PIPE

PVC PIPE

Fluid-Tite™ IB PVC Pressure Pipe

Integral Bell

CertainTeed

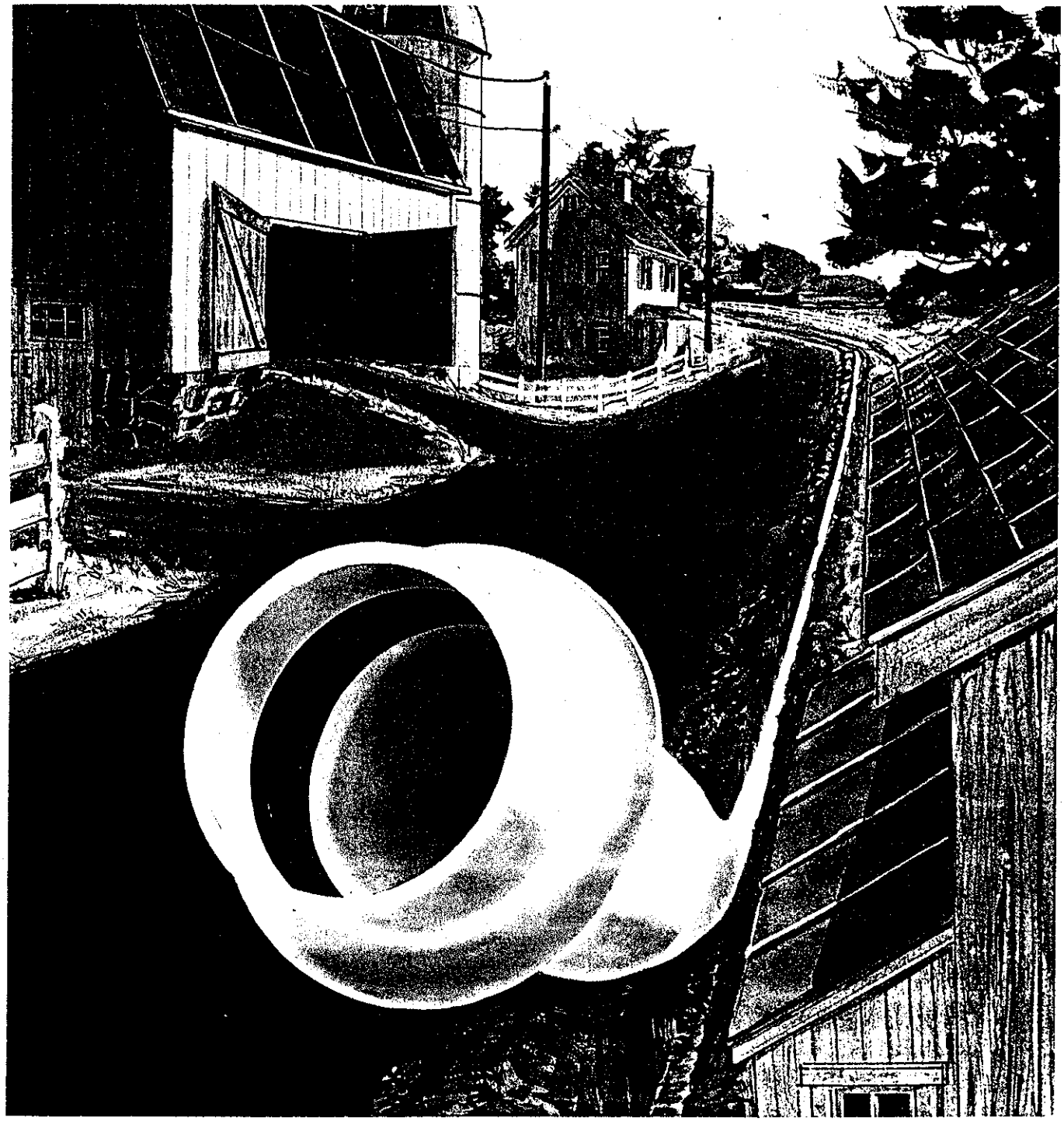

Modern Piping for Reliable Low Maintenance Water Systems.

A Company With Experience

CertainTeed Corporation is one of the nation's leading manufacturers of Polyvinyl Chloride (PVC) piping products. Applications include products for industrial, commercial, residential, municipal and utility markets. CertainTeed operates its own resin plant to assure constant high quality raw material for its specially equipped extrusion facilities that produce high quality uniform pipe and fittings to exacting standards.

Description

Fluid-Tite™ Integral Bell (IB) solid PVC piping for reliable fluid transportation is available in sizes 1½" through 12" in pressure class 160 (SDR 26) and class 200 (SDR 21). Each length of pipe is supplied with a rubber sealing gasket and sufficient lubricant. The bell end (socket) of the pipe is thicker than the pipe and an integral part of the pipe.

The patented Fluid-Tite joint provides an instant seal and can be assembled and installed by personnel with a minimum of experience. No special tools or skills are required. No heavy lifting equipment is necessary to handle the pipe. Fluid-Tite PVC pipe can be installed in adverse weather conditions and undulating terrain. Joints, when assembled, can be pressure tested immediately.

Uses

The uses of CertainTeed PVC pipe are growing as engineers recognize the benefits of the highly versatile pipe for reliable fluid transportation. Contractors find the lightweight sections install rapidly, even in difficult soil conditions and terrains, because of CertainTeed's simple all weather Fluid-Tite IB joint.

Typical uses are: Potable Water
Sewer Forced Mains
Irrigation Supply Lines

Fittings

There is a comprehensive line of compatible precision-made fittings available for Fluid-Tite (IB) piping systems including adaptors for joining to other piping materials.

Dimensions

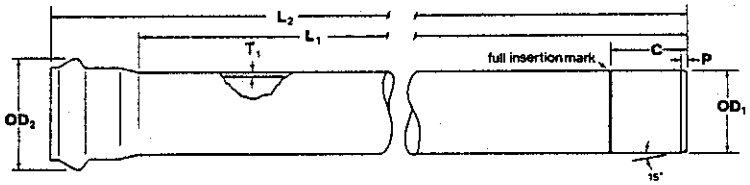

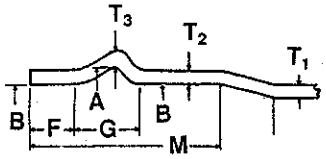

Class 160 (SDR 26)
Class 200 (SDR21)

Size Inches	O.D.$_1$ Inches	A Inches	B Inches	F Inches	G Inches	M Inches	P Inches	C Inches	L_1 Laying Length Feet	L_2 Overall Length L_1 Length Plus
1½	1.900	2.359	1.919	.380	.838	3.018	⅛	3.216	20/40	3¼"
2	2.375	2.998	2.398	.565	1.227	4.042	5/32	4.282	20/40	4⅜"
2½	2.875	3.603	2.913	.600	1.270	4.179	3/16	4.481	20/40	4½"
3	3.500	4.321	3.538	.634	1.443	4.477	¼	4.844	20/40	4⅞"
4	4.500	5.392	4.538	.700	1.578	4.778	5/16	5.210	20/40	5¼"
6	6.625	7.683	6.691	1.031	2.076	5.609	½	6.250	20/40	6⅜"
8	8.625	9.661	8.690	1.406	2.073	5.993	9/16	6.370	20/40	7"
10	10.750	11.936	10.817	1.625	2.417	7.105	1	7.641	20/40	8¼"
12	12.750	14.000	12.820	1.875	2.619	8.306	1 1/16	8.201	20/40	9⅜"

	Class 160 (SDR 26)			Class 200 (SDR 21)		
Size Inches	O.D.$_2$ Inches	T_1 T_3 Inches	T_2 Inches	O.D.$_2$ Inches	T_1 T_3 Inches	T_2 Inches
1½	2.505	.073	.080	2.539	.090	.101
2	3.180	.091	.100	3.224	.113	.126
2½	3.823	.110	.121	3.877	.137	.153
3	4.591	.135	.147	4.655	.167	.186
4	5.738	.173	.189	5.820	.214	.239
6	8.193	.255	.279	8.315	.316	.352
8	10.325	.332	.362	10.481	.410	.457
10	12.762	.413	.451	12.958	.511	.569
12	14.980	.490	.534	15.212	.606	.675

1½"-4" Ring Groove

6"-12" Ring Groove

Note:
All dimensions subject to manufacturing tolerances.

CertainTeed

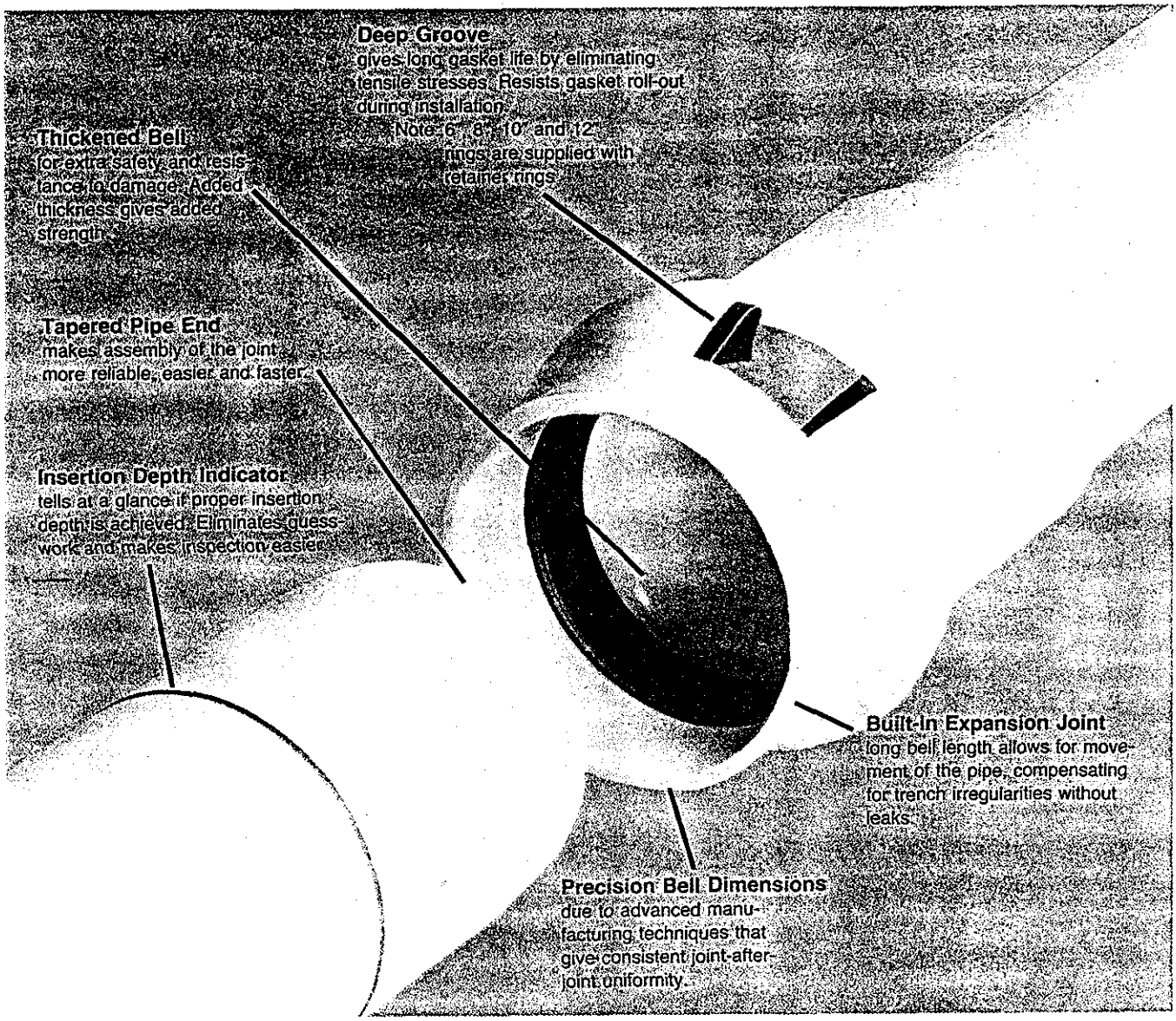

Quality Standards

CertainTeed Fluid-Tite IB Piping Systems meet or exceed requirements of the following standards:

PIPE: ASTM D 2241, "Standard Specification for Polyvinyl Chloride (PVC) Plastic Pipe (SDR-PR)."

POTABLE WATER SERVICE CERTIFICATION: NSF No. 14, "National Sanitation Foundation Standard No. 14 for Thermoplastic Materials, Pipe, Fittings, Valves, Traps and Joining Materials."

GASKET: ASTM F 477, "Standard Specification for Elastomeric Seals (Gaskets) for Joining Plastic Pipe."

PUSH-ON JOINT: ASTM D 3139, "Standard Specification for Joints for Plastic Pressure Pipe Using Flexible Elastomeric Seals."

PVC MATERIAL 12454-B (PVC 1120): ASTM D 1784, "Standard Specification for Rigid Polyvinyl Chloride (PVC) Compounds and Chlorinated Polyvinyl Chloride (CPVC) Compounds."

CertainTeed manufactures PVC Piping to its own quality standards in modern clean plants. Pipe is compounded and extruded in an electronically controlled closed system to exacting tolerances.

Regional Sales Offices

Eastern
Regional Sales Office
750 Swedesford Rd
P.O. Box 860
Valley Forge, PA 19482
(215) 341-7000
TWX: 510-668-1912

Mountain
Regional Sales Office
5500 S. Syracuse Circle
Suite 114
Englewood, CO 80111
(303) 773-2760
TWX: 910-935-0880

Pacific
Regional Sales Office
2100 Avalon Street
P.O. Box 1389
Riverside, CA 92502-1389
(714) 369-0520
TWX: 910-595-2672

Southwest
Regional Sales Office
4151 Southwest Freeway
Suite 670
Houston, TX 77027
(713) 960-1470
TWX: 910-881-1652

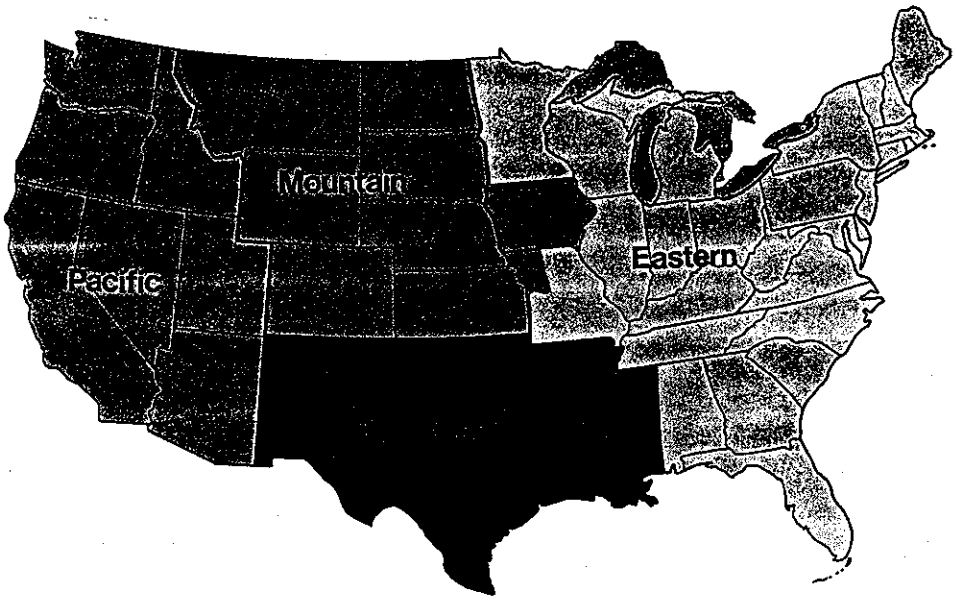

CertainTeed

CertainTeed Corporation
Pipe & Plastics Group
P O Box 860
Valley Forge, PA 19482

Code No. 40-22-18

© Copyright CertainTeed Corporation Revised 1986

Printed in U.S.A.
6870

CertainTeed

WEIGHTS AND DIMENSIONS

PVC Pressure Pipe (SDR-PR)
IB (Integral Bell)
SDR 51 (Class 80)
SDR 41 (Class 100)
SDR 32.5 (Class 125)

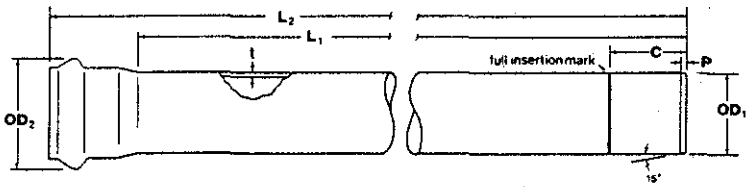

Dimensions

Nom. Size	OD_1	t (min.)	P	C	OD_2	L_1 Laying Length	L_2 Overall Length (L_1 Length Plus)	Approx. Weight Lbs./ Ft.
SDR 51 (Class 80)								
15	15.300	0.300	⅞	9.13	17.673	20′	9⅛	9.30
18	18.701	0.366	1	10.88	21.465	20′	10¾	13.99
21	22.047	0.432	1 3/16	12.75	25.283	19½′	12⅝	19.61
24	N/A	N/A	N/A	N/A	N/A	N/A	N/A	N/A
27	27.953	0.548	1 9/16	15.50	31.708	19½′	15⅜	31.87
SDR 41 (Class 100)								
6	6.625	0.162	½	6.25	8.007	20′	6⅜	2.13
8	8.625	0.210	9/16	6.37	10.081	20′	7	3.63
10	10.750	0.262	1	7.64	12.460	20′	8¼	5.66
12	12.750	0.311	1 1/16	8.20	14.622	20′	9⅜	8.00
15	15.300	0.373	⅞	9.13	17.819	20′	9⅛	11.51
SDR 32.5 (Class 125)								
6	6.625	0.204	½	6.25	8.091	20′	6⅜	2.76
8	8.625	0.265	9/16	6.37	10.191	20′	7	4.69
10	10.750	0.331	1	7.64	12.598	20′	8¼	7.31
12	12.750	0.392	1 1/16	8.20	14.784	20′	9⅜	10.34
15	15.300	0.471	⅞	9.13	18.015	20′	9⅛	14.87
18	18.701	0.575	1	10.88	21.883	20′	10¾	22.36
21	22.047	0.678	1 3/16	12.75	25.775	19½′	12⅝	31.36
24	24.803	0.763	1⅜	13.88	28.739	19½′	13¾	39.87
27	27.953	0.860	1 9/16	15.50	32.332	19½′	15⅜	50.97

Note: All dimensions are subject to manufacturing tolerances.
All dimensions are given in inches unless indicated otherwise.

IPS PRESSURE PIPE
SHORT FORM ENGINEERING SPECIFICATION
ASTM D 2241

1.0 SCOPE
This specification covers the requirements for Polyvinyl Chloride (PVC) Pressure Rated Pipe for water supply and distribution systems.

2.0 CONFORMANCE
PVC Pipe shall meet the requirements of ASTM D 2241 Standard Specification for "Poly (Vinyl Chloride) (PVC) Pressure-Rated Pipe (SDR Series)", and shall be furnished with integral bell gasketed joints.

3.0 GENERAL REQUIREMENTS
3.1 **Sizes**
Nominal pipe sizes of 1-1/2" through 27" shall be furnished.

3.2 **(SDR)/Pressure Classes**
(SDR17) Class 250, (SDR21) Class 200, (SDR26) Class 160, (SDR32.5) Class 125, (SDR41) Class 100, (SDR51) Class 80.

3.3 **Lengths**
Pipe shall be furnished in 20' and/or 40' laying lengths in sizes 1½" through 12", 20' laying lengths in sizes 15" and 18" and 19½' laying lengths in sizes 21"-27". Pipe shall be furnished in 19½' laying lengths in sizes 21" and larger.

3.4 **Packaging**
Pipe shall be furnished in factory package units (fast-paks) for economical handling.

3.5 **Repair Couplings**
PVC repair couplings shall be available, which will slide completely over the pipe end. (Sizes 12" and smaller).

4.0 TESTING
Product shall be tested in accordance with ASTM D 2241 and ASTM D 3139.

5.0 MATERIAL
The pipe shall be made of PVC having a cell classification of 12454B (PVC 1120) per ASTM D 1784.

6.0 INSTALLATION
While only the engineer may specify and approve installation and testing procedures CertainTeed recommends adherance to ASTM D 2774, "Standard Recommended Practice for Underground Installation of Thermoplastic Pressure Piping".

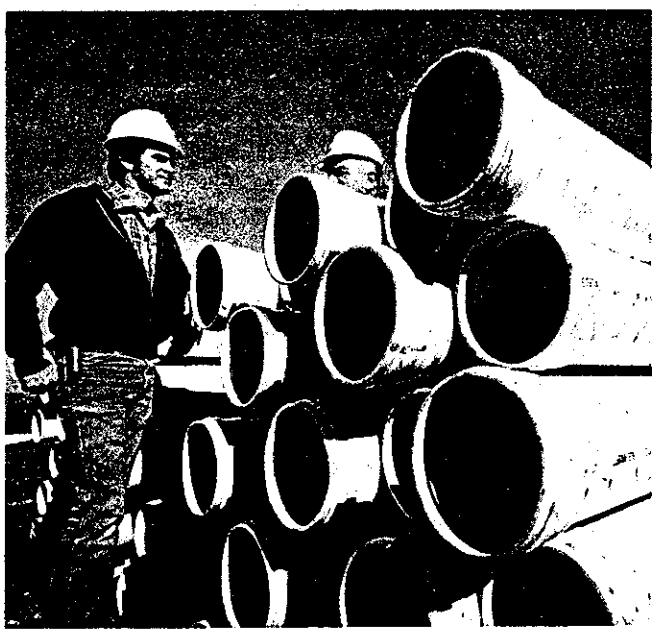

SURGE ANTICIPATOR VALVE

Surge Control

TYPICAL APPLICATION

A Surge Control Valve is a device used to protect pumps, pumping equipment and pipelines from dangerous pressure surges or waves caused by rapid changes of flow velocity within a pipeline.

When pumping systems are started and stopped gradually, harmful surges do not occur. However, should a power failure take place, the abrupt stopping of the pump can cause dangerous surges in the system which could result in severe equipment damage. Consequently, control of surges in pumping systems is extremely important.

Cla-Val Company manufactures a complete line of valves specifically designed for a wide variety of surge control applications.

For basic surge control problems, a Cla-Val 50 Series Pressure Relief Valve can be used to relieve the high wave to atmosphere.

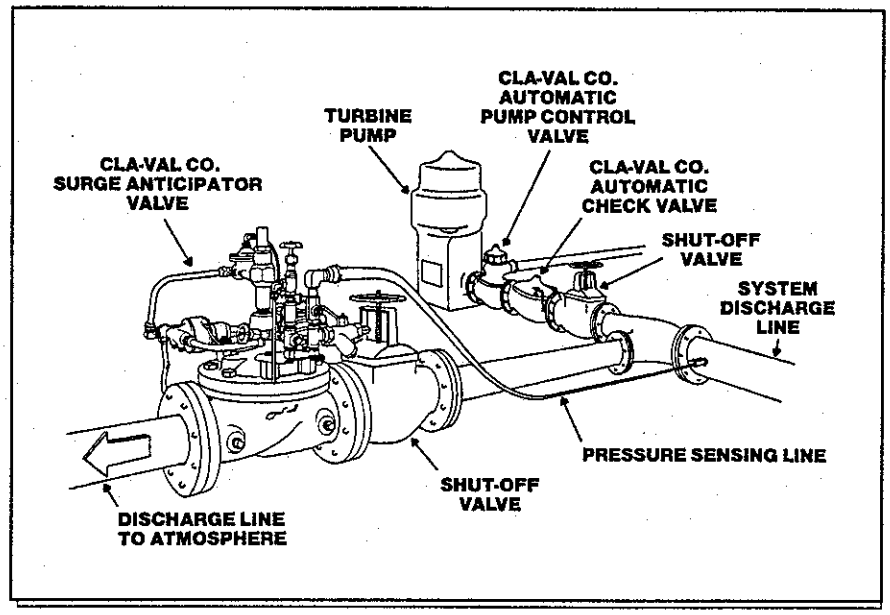

In certain installations where extreme surges can occur, it is necessary to have the Surge Control Valve start to open on the low pressure wave. This wave is created by the pump stopping and the fluid column continuing to move away from the pump. With the Surge Valve opening on the initial low wave the returning high wave is diverted from the system. In effect the valve has anticipated the returning high wave and is open and the high wave never occurs. The Cla-Val 52 Series Surge Anticipator Valves are designed specifically for this purpose.

Additional features such as time delays, solenoid operators, opening and closing speed controls, assembly for independent operating pressure and remote pressure sensing, add to the versatility of the Cla-Val Automatic Surge Control Valves.

The following illustrations show how the Cla-Val Surge Anticipator Valve works.

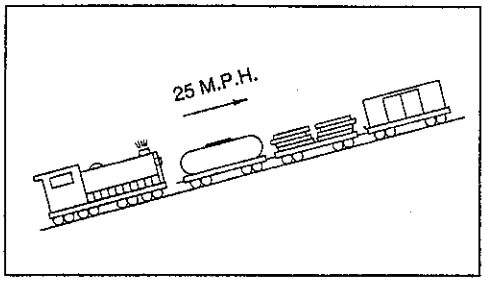

1

In Illustration 1, a locomotive is pushing a train up a grade. This compares with a pump delivering water to a higher elevation through a pipeline.

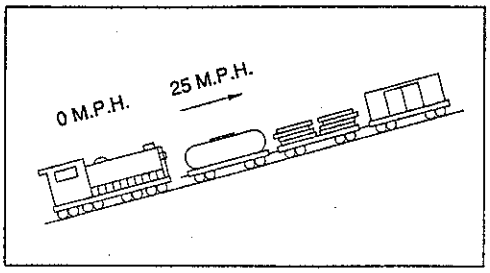

The locomotive has stopped abruptly in Illustration 2 but momentum continues to carry the train forward up the grade. The same condition exists at the pump discharge upon power failure to the pump; the momentum of the water column continues to carry it forward, creating a low pressure condition at the pump discharge.

2

Illustration 3 shows the train stopped after expending its energy in moving up the grade. The water column in the pipeline has likewise come to rest.

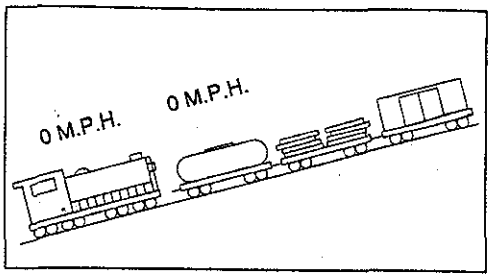

3

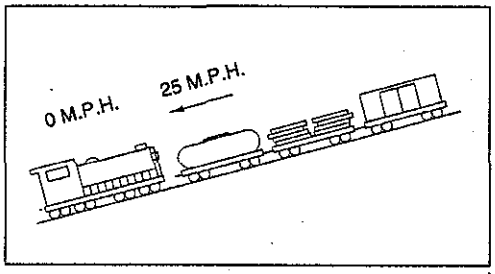

4

The train, in Illustration 4, has now started coasting backward down the track and is about to collide with the locomotive. The same is true in the pipeline, the water column also reverses and flows back down the pipeline toward the pump with approximately the same velocity as before the pump failed.

In Illustration 5 the moving train collides with the stationary locomotive with disastrous results. Correspondingly, when the water returning back down the pipeline is stopped by the closed check valve, a high pressure surge develops. The result of this sudden stop can be damaging to the pipeline and pumping equipment, similar to the wrecked train.

The magnitude of this high pressure surge is directly proportional to the rate of change of velocity of the fluid. A 50 PSI surge can be anticipated for every foot/second change in the velocity of the fluid. Thus it is apparent that high pressure can develop rapidly at the check valve and, if it is too rapid, necessitates a Surge Control Valve to eliminate the high pressure.

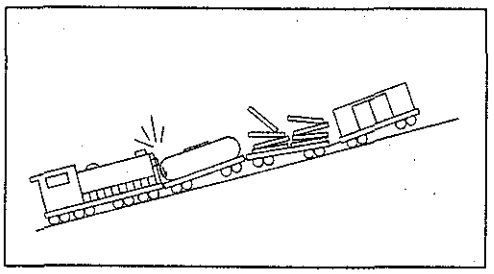

5

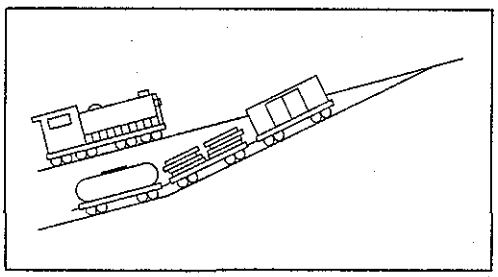

6

Illustration 6 shows the returning train being switched to a sidetrack, thus averting collision with the locomotive. A Cla-Val Surge Control Valve, when installed in the system, acts in the same manner as the sidetrack and the train, directing the high surge to atmosphere, and protecting the pump and system.

In Illustration 2 the creation of a low pressure condition at the pump discharge was mentioned. This is a result of the abrupt stopping of the pump and the column of water rushing away from it. The Cla-Val Surge Control Valve senses this low pressure and opens in anticipation of the high wave which will be returning. Thus the returning high wave does not build up against a closed check valve but is sidetracked out of the system, eliminating any possibility of damage.

CLA-VAL®

CLA-VAL CO.
P O Box 1325 Newport Beach CA 92659-0325

CLA-VAL CANADA LTD.
4687 Christie Drive
Beamsville, Ontario
Canada L0R 1B4
Phone: 905-563-4963
Fax: 905-563-4040

CLA-VAL SA
Chemin des Mesanges 1
CH-1032 Romanel/
Lausanne, Switzerland
Phone: 21/646.49.41
Fax: 21/646.49.59

Represented By:

©COPYRIGHT CLA-VAL CO. 1992 Printed in USA
Specifications subject to change without notice

CLA-VAL™

MODEL 52-03 / 652-03

Pressure Relief & Surge Anticipator Valve

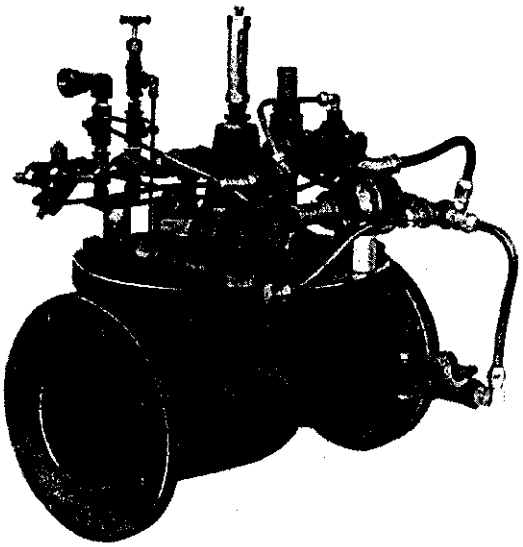

- System Saver
- Protects Against Water Hammer Surges
- Opens On Initial Low Pressure Wave
- Closes Slowly To Prevent Subsequent Surges
- Adjustable Over A Wide Range of Settings

The Cla-Val 52-03/652-03 Surge Anticipator Valve is indispensible for protecting pumps, pumping equipment and all applicable pipelines from dangerous pressure surges caused by rapid changes of flow velocity within a pipeline.

When pumping systems are started and stopped gradually, harmful surges do not occur. However, should a power failure take place, the abrupt stopping of the pump can cause dangerous surges in the system which could result in severe equipment damage.

Power failure to a pump will usually result in a down surge in pressure, followed by an up surge in pressure. The surge control valve opens on the initial low pressure wave, diverting the returning high pressure wave from the system.*In effect, the valve has anticipated the returning high pressure wave and is open to dissipate the damage causing surge. The valve will then close slowly without generating any further pressure surges.

* An adjustable hydraulic flow control limits the valve opening for a controlled initial surge relief.

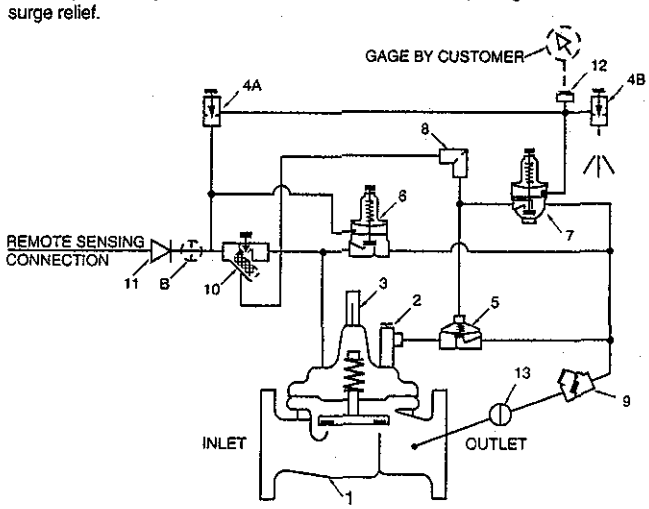

Schematic Diagram

Item	Description
1	Hytrol (Main Valve)
2	X102F Flow Limiter
3	X101 Valve Position Indicator
4	CNA Needle Valve
5	100-01 Hytrol (Reverse Flow)
6	CRL Pressure Relief Control
7	CRA Pressure Reducing Control
8	X58B Restriction Assembly
9	CSC Swing Check Valve
10	X42N-3 Strainer Needle Valve
11	Bell Reducer
12	Pipe Plug
13	CK2 Cock (Isolation Valve)

Optional Features

Item	Description
B	CK2 Cock (Isolation Valve)

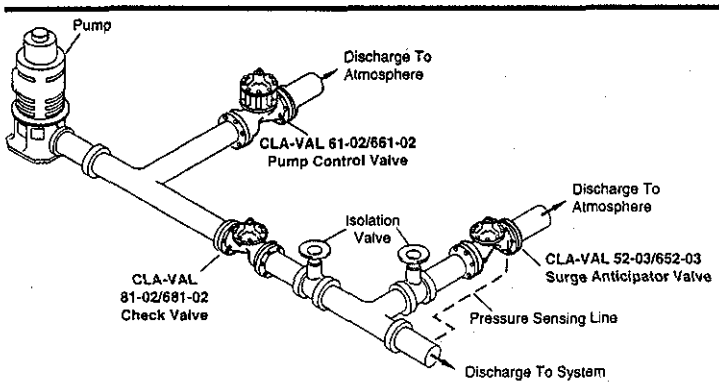

Typical Application

The 52-03/652-03 discharges to atmosphere from a tee in the pump discharge header. The valve anticipates surges caused by power failure as well as acting as a standard over pressure relief valve.

CLA-VAL™

Model 52-03 (Uses Basic Valve Model 100-01)

Pressure Ratings (Recommended Maximum Pressure - psi)

Valve Body & Cover		Pressure Class			
		Flanged			Screwed
Grade	Material	ANSI Standards*	150 lb.	300 lb.	End ** Details
ASTM A-536	Ductile Iron	B16.42	250	400	400
ASTM A216-WCB	Cast Steel	B16.5	285	400	400
ASTM B62	Bronze	B16.24	225	400	400
Type 304	Stainless Steel	B16.5	285	400	400
356-T6	Aluminum	B16.1	275	—	—

Note: *ANSI standards are for flange dimensions only.
Flanged valves are available faced but not drilled.
** End Details drilled to ANSI B2.1 specifications.

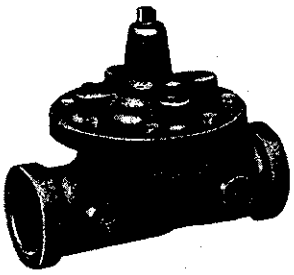

2" Globe, Screwed

Materials

Component	Material Options				
Body & Cover	Ductile Iron	Cast Steel	Bronze	Stainless Steel	Aluminum
Available Sizes	2½" - 16"	2½" - 16"	2½" - 16"	2½" - 16"	2½" - 16"
Disc Retainer & Diaphragm Washer	Cast Iron	Cast Steel	Bronze	Stainless Steel	Aluminum
Trim: Disc Guide, Seat & Cover Bearing	Bronze is standard. Stainless Steel is optional.			Stainless Steel is standard.	
Disc	Buna N Rubber				
Diaphragm	Nylon Reinforced Buna N Rubber				
Stem, Nut & Spring	Stainless Steel				

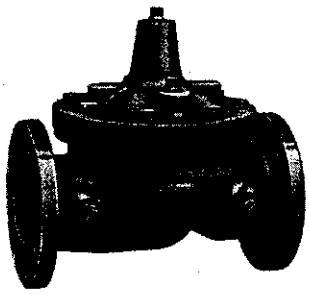

4" Globe, Flanged

Dimensions
(In inches)

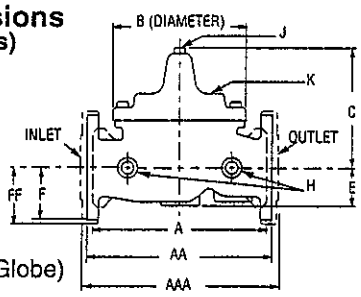

100-01 (Globe)

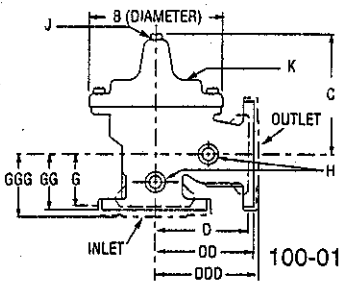

100-01 (Angle)

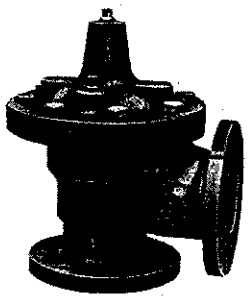

4" Angle,

VALVE SIZE (Inches)	2½	3	4	6	8	10	12	14	16
A Screwed	11.00	12.50	—	—	—	—	—	—	—
AA 150 ANSI	11.00	12.00	15.00	20.00	25.38	29.75	34.00	39.00	41.38
AAA 300 ANSI	11.62	13.25	15.62	21.00	26.38	31.12	35.50	40.50	43.50
B DIA.	8.00	9.12	11.50	15.75	20.00	23.62	28.00	32.75	35.50
C MAX.	7.56	8.19	10.62	13.38	16.00	17.12	20.88	24.19	25.00
D Screwed	5.50	6.25	—	—	—	—	—	—	—
DD 150 ANSI	5.50	6.00	7.50	10.00	12.69	14.88	17.00	19.50	20.69
DDD 300 ANSI	5.81	6.63	7.81	10.50	13.19	15.56	17.75	20.25	21.75
E	1.69	2.06	3.19	4.31	5.31	9.25	10.75	12.62	15.50
F 150 ANSI	3.50	3.75	4.50	5.50	6.75	8.00	9.50	10.50	11.75
FF 300 ANSI	3.75	4.13	5.00	6.25	7.50	8.75	10.25	11.50	12.75
G Screwed	4.00	4.50	—	—	—	—	—	—	—
GG 150 ANSI	4.00	4.00	5.00	6.00	8.00	8.62	13.75	14.88	15.69
GGG 300 ANSI	4.31	4.38	5.31	6.50	8.50	9.31	14.50	15.62	16.50
H NPT Body Tapping	½	½	¾	¾	1	1	1	1	1
J NPT Cover Center Plug	½	½	¾	¾	1	1	1¼	1½	2
K NPT Cover Tapping	½	½	¾	¾	1	1	1	1	1
Valve Stem Internal Thread UNF	10-32	¼-28	¼-28	⅜-24	⅜-24	⅜-24	⅜-24	⅜-24	½-20
Stem Travel	0.7	0.8	1.1	1.7	2.3	2.8	3.4	4.0	4.5
Approx.Ship Wt. Lbs.	50	70	140	285	500	780	1165	1500	2265

Model 652-03 (Uses Basic Valve Model 100-20)

Pressure Ratings (Recommended Maximum Pressure - psi)

Valve Body & Cover		Pressure Class		
		Flanged		
Grade	Material	ANSI Standards*	150 lb.	300 lb.
ASTM A-536	Ductile Iron	B16.42	250	400
ASTM A216-WCB	Cast Steel	B16.5	285	400
ASTM B62	Bronze	B16.24	225	400
Type 304	Stainless Steel	B16.5	285	400
356-T6	Aluminum	B16.1	275	—

Note: *ANSI standards are for flange dimensions only.
Flanged valves are available faced but not drilled.

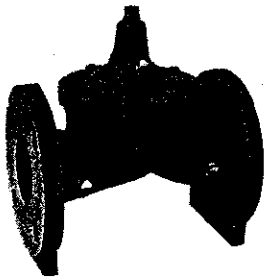

3" Globe, Flanged

Materials

Component	Material Options				
Body & Cover	Ductile Iron	Cast Steel	Bronze	Stainless Steel	Aluminum
Available Sizes	3"-24"	3"-24"	3"-24"	3"-24"	3"-24"
Disc Retainer & Diaphragm Washer	Cast Iron	Cast Steel	Bronze	Stainless Steel	Aluminum
Trim: Disc Guide, Seat & Cover Bearing	Bronze is standard. Stainless Steel is optional.			Stainless Steel is standard.	
Disc	Buna N Rubber				
Diaphragm	Nylon Reinforced Buna N Rubber				
Stem, Nut & Spring	Stainless Steel				

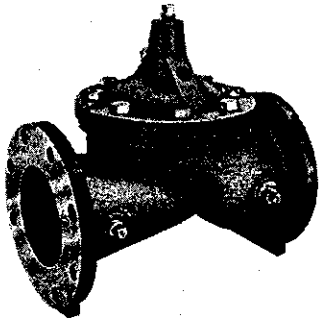

6" Globe, Flanged

Dimensions
(In inches)

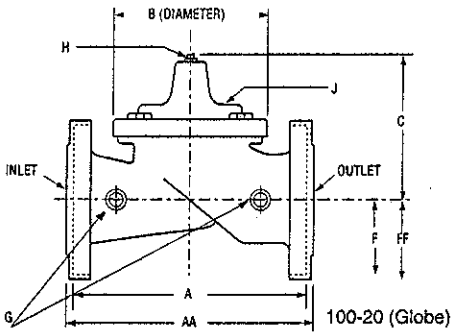

100-20 (Globe)

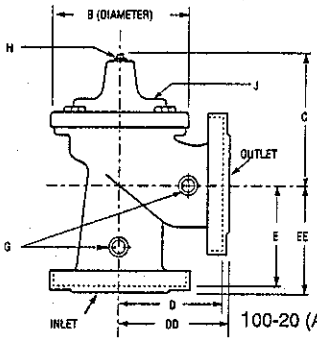

100-20 (Angle)

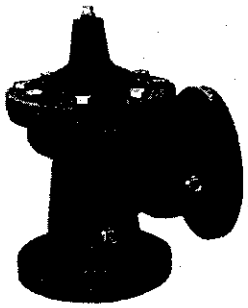

6" Angle, Flanged

VALVE SIZE (Inches)	3	4	6	8	10	12	16	20	24
A 150 ANSI	10.25	13.88	17.75	21.38	26.00	30.00	35.00	48.00	48.00
AA 300 ANSI	11.00	14.50	18.62	22.38	27.38	31.50	36.62	49.62	49.75
B DIA.	6.62	9.12	11.50	15.75	20.00	23.62	28.00	35.44	35.44
C MAX.	7.00	8.62	11.62	15.00	17.88	21.00	25.75	31.00	31.00
D 150 ANSI	—	6.94	8.88	10.69	—	—	—	—	—
DD 300 ANSI	—	7.25	9.38	11.19	—	—	—	—	—
E 150 ANSI	—	5.50	6.75	7.25	—	—	—	—	—
EE 300 ANSI	—	5.81	7.25	7.75	—	—	—	—	—
F 150 ANSI	3.75	4.50	5.50	6.75	8.00	9.50	11.75	14.56	17.00
FF 300 ANSI	4.12	5.00	6.25	7.50	8.75	10.25	12.75	16.06	19.00
G NPT Body Tapping	⅜	½	¾	¾	1	1	1	1	1
H NPT Cover Center Plug	½	½	¾	¾	1	1	1¼	2	2
J NPT Cover Tapping	⅜	½	¾	¾	1	1	1	1	1
Valve Stem Internal Thread UNF	10-32	¼-28	¼-28	⅜-24	⅜-24	⅜-24	⅜-24	½-20	½-20
Stem Travel	0.6	0.8	1.1	1.7	2.3	2.8	3.4	4.5	4.5
Approximate Shipping Weight Lbs.	45	85	195	330	625	900	1380	2551	2733

Valve Selection

These Symbols ▲ and ▲ Indicate Available Sizes

			Size	1¼"	1½"	2"	2½"	3"	4"	6"	8"	10"	12"	14"	16"	20"	24"
			End Details	Screwed	Screwed or Flanged				Flanged								
Model 52-03	Basic Valve 100-01		Globe				▲	▲	▲	▲	▲	▲	▲	▲	▲		
			Angle				▲	▲	▲	▲	▲	▲	▲	▲	▲		
	Suggested Flow-GPM	Max. Continuous					300	460	800	1800	3100	4900	7000	8500	11000		
		Max. Surge					670	1030	1800	4050	7000	11060	16000	19000	25000		
Model 652-03	Basic Valve 100-20		Globe						▲	▲	▲	▲	▲		▲	▲	▲
			Angle						▲	▲	▲						
	Suggested Flow-GPM	Max. Continuous							580	1025	2300	4100	6400		9230	16500	16500
		Max. Surge							990	1760	3970	7050	11000		15900	28200	28200

Refer to the 100-01 or the 100-20 Technical Data Sheet for complete basic valve specifications and dimensions.
Max Continuous Flow based on 20fps (100-01), 25fps (100-20
Max. Surge Flow based on 45fps (100-01), 45fps (100-20)

Sizing Information: Because of the many variable conditions that generally exist in any given system, proper sizing is important. Incorrect valve sizing will nullify the ability of the Surge Anticipator Valve. For valve sizing assistance, contact Cla-Val Co. with the following specific pump and system information: number and type of pumps; shutoff head; flow rate; discharge static head and pumping head; pipe size; length; thickness and material.

Pilot System Dimensions (In Inches)

We recommend providing adequate space around valve for maintenance work

VALVE SIZE		1¼" & 1½"	2	2½"	3"	4"	6"	8"	10"	12"	14"	16"	20"	24"
X	Max.	–	–	15.75	16.75	17.25	18.00	19.50	24.50	28.50	32.00	34.75	35.00	35.50
Y	Max.	–	–	7.00	7.75	9.00	11.00	13.25	15.00	17.00	19.25	20.00	20.50	20.75
Z	Max.	–	–	11.50	12.00	12.75	14.00	15.50	17.25	18.25	19.75	21.75	22.00	23.00

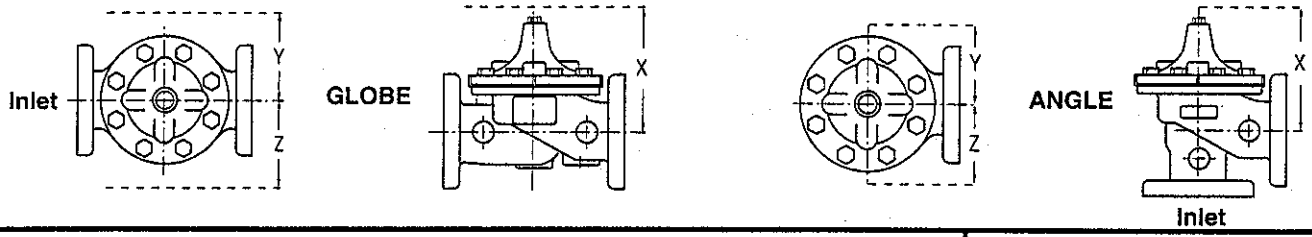

Pilot System Specifications

Adjustment Ranges

High Pressure Pilot (CRL)
- 0 to 75 psi
- 20 to 200 psi*
- 100 to 300 psi

Low Pressure Pilot (CRA)
- 2 to 30 psi
- 15 to 75psi*
- 30 to 300 psi

*Supplied unless otherwise specified
Other ranges available, please consult factory

Materials

Standard Pilot System Materials

Pilot Control: Bronze ASTM B62
Trim: Stainless Steel Type 303
Rubber: Buna N Synthetic Rubber
Tubing & Fittings: Copper and Bronze

Optional Pilot System Materials

Pilot Systems are available with optional Aluminum, Stainless Steel or Monel materials at extra cost.

Temperature Range

Water: to 180°F

Please Specify

1. Catalog No. 52-03 or No. 652-03
2. Valve Size
3. Pattern - Globe or Angle
4. Pressure Class
5. Screwed or Flanged
6. Trim Material
7. Adjustment Range
8. Desired Options
9. When Vertically Installed

CLA-VAL®

CLA-VAL CO.
P O Box 1325 Newport Beach CA 92659-0325
Phone: 714-722-4800 • Fax: 714-548-5441

CLA-VAL CANADA LTD.
4687 Christie Drive
Beamsville, Ontario
Canada L0R 1B4
Phone: 905-563-4963
Fax: 905-563-4040

CLA-VAL SA
Chemin des Mesanges 1
CH-1032 Romanel/
Lausanne, Switzerland
Phone: 21/646.49.41
Fax: 21/646.49.59

Represented By:

E-52-03/652-03 (R3/94)

©COPYRIGHT CLA-VAL CO. 1992 Printed in USA
Specifications subject to change without notice

PRESSURE SUSTAINING VALVE

CLA-VAL™

MODEL 50-01 / 650-01

Pressure Relief, Pressure Sustaining Valve

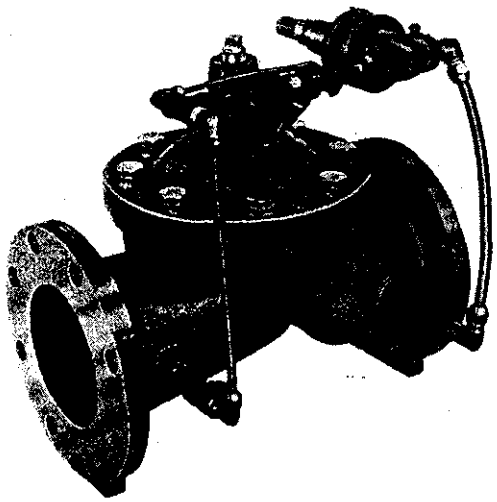

- **Accurate Pressure Control**
- **Optional Check Feature**
- **Fast Opening – maintains line pressure**
- **Slow Closing – prevents surges**
- **Completely Automatic Operation**

The Model 50-01/650-01 Pressure Relief Valve is a hydraulically operated, pilot-controlled, modulating valve designed to maintain constant upstream pressure within close limits. This valve can be used for pressure relief, pressure sustaining, back pressure, or unloading functions in a by-pass system.

In operation, the valve is actuated by line pressure through a pilot control system, opening fast to maintain steady line pressure but closing gradually to prevent surges. Operation is completely automatic and pressure settings may be easily changed.

If the optional check feature "D" is added, and a pressure reversal occurs, the valve closes to prevent return flow.

Schematic Diagram

Item	Description
1	Hytrol (Main Valve)
2	X42N-2 Strainer & Needle Valve
3	CRL Pressure Relief Control

Optional Features

Item	Description
B	CK2 Cock (Isolation Valve)
D	Check Valves with Cock
F	Remote Pilot Sensing
H	Drain to Atmosphere
S	CV Speed Control (Opening)

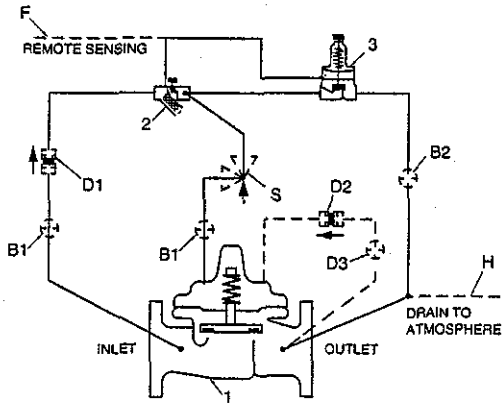

The "D" feature on a vertically installed 6" and larger valve must be horizontally oriented.

Typical Applications

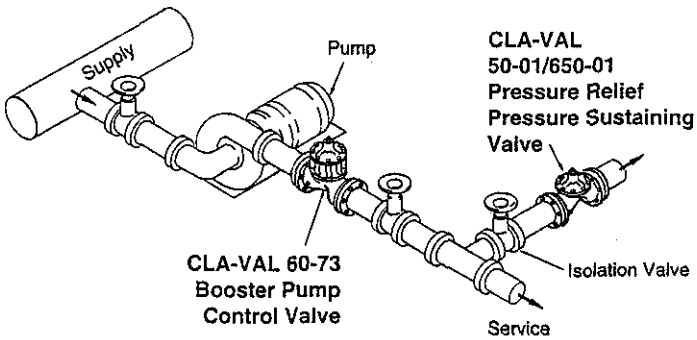

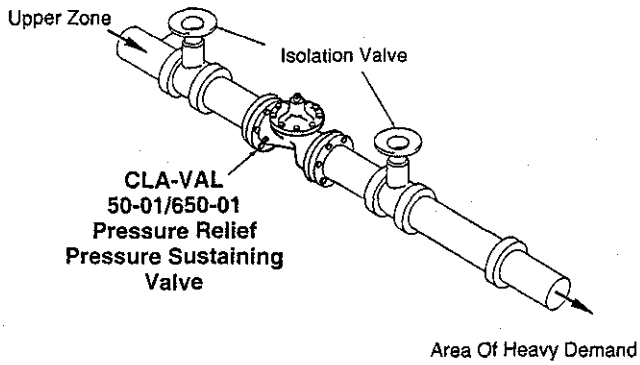

Pressure Relief Service

To provide protection for the system against high pressure surges when pumps are shut down, this fast opening – slow closing relief valve dissipates the excess pressure.

Pressure Sustaining Service

When installed in a line between an upper zone and a lower area of heavy demand, the valve acts to maintain desired upstream pressure to prevent "robbing" of the upper zone. Water in excess of pressure setting flows to area of heavy demand; control is smooth, and pressure regulation is positive.

CLA-VAL™

Model 50-01 (Uses Basic Valve Model 100-01)

Pressure Ratings (Recommended Maximum Pressure - psi)

Valve Body & Cover		Pressure Class			
		Flanged			Screwed
Grade	Material	ANSI Standards*	150 lb.	300 lb.	End ** Details
ASTM A-536	Ductile Iron	B16.42	250	400	400
ASTM A216-WCB	Cast Steel	B16.5	285	400	400
ASTM B62	Bronze	B16.24	225	400	400
Type 304	Stainless Steel	B16.5	285	400	400
356-T6	Aluminum	B16.1	275	—	—

Note: *ANSI standards are for flange dimensions only.
Flanged valves are available faced but not drilled.
** End Details drilled to ANSI B2.1 specifications.

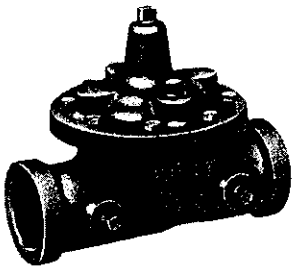

2" Globe, Screwed

Materials

Component	Material Options				
Body & Cover	Ductile Iron	Cast Steel	Bronze	Stainless Steel	Aluminum
Available Sizes	1¼" - 16"	1¼" - 16"	1¼" - 16"	1¼" - 16"	1¼" - 16"
Disc Retainer & Diaphragm Washer	Cast Iron	Cast Steel	Bronze	Stainless Steel	Aluminum
Trim: Disc Guide, Seat & Cover Bearing	Bronze is standard. Stainless Steel is optional.			Stainless Steel is standard.	
Disc	Buna N Rubber				
Diaphragm	Nylon Reinforced Buna N Rubber				
Stem, Nut & Spring	Stainless Steel				

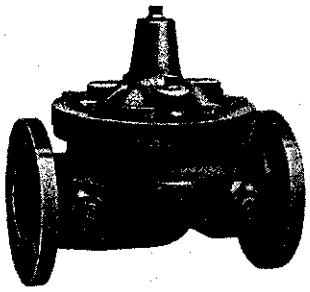

4" Globe, Flanged

Dimensions
(In inches)

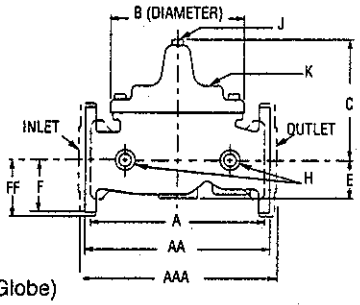

100-01 (Globe)

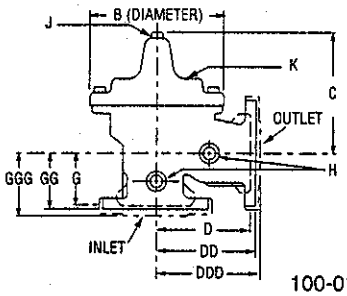

100-01 (Angle)

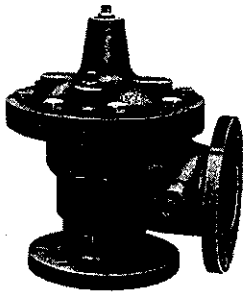

4" Angle, Flanged

VALVE SIZE (Inches)	1¼-1½	2	2½	3	4	6	8	10	12	14	16
A Screwed	7.25	9.38	11.00	12.50	—	—	—	—	—	—	—
AA 150 ANSI	8.50*	9.38	11.00	12.00	15.00	20.00	25.38	29.75	34.00	39.00	41.38
AAA 300 ANSI	9.00	10.00	11.62	13.25	15.62	21.00	26.38	31.12	35.50	40.50	43.50
B DIA.	5.62	6.62	8.00	9.12	11.50	15.75	20.00	23.62	28.00	32.75	35.50
C MAX.	5.50	6.50	7.56	8.19	10.62	13.38	16.00	17.12	20.88	24.19	25.00
D Screwed	3.25	4.69	5.50	6.25	—	—	—	—	—	—	—
DD 150 ANSI	—	4.69	5.50	6.00	7.50	10.00	12.69	14.88	17.00	19.50	20.69
DDD 300 ANSI	—	5.00	5.81	6.63	7.81	10.50	13.19	15.56	17.75	20.25	21.75
E	1.12	1.50	1.69	2.06	3.19	4.31	5.31	9.25	10.75	12.62	15.50
F 150 ANSI	2.50	3.00	3.50	3.75	4.50	5.50	6.75	8.00	9.50	10.50	11.75
FF 300 ANSI	3.06	3.25	3.75	4.13	5.00	6.25	7.50	8.75	10.25	11.50	12.75
G Screwed	1.88	3.25	4.00	4.50	—	—	—	—	—	—	—
GG 150 ANSI	—	3.25	4.00	4.00	5.00	6.00	8.00	8.62	13.75	14.88	15.69
GGG 300 ANSI	—	3.50	4.31	4.38	5.31	6.50	8.50	9.31	14.50	15.62	16.50
H NPT Body Tapping	⅜	⅜	½	½	¾	¾	1	1	1	1	1
J NPT Cover Center Plug	¼	½	½	½	¾	¾	1	1	1¼	1½	2
K NPT Cover Tapping	⅜	⅜	½	½	¾	¾	1	1	1	1	1
Valve Stem Internal Thread UNF	10-32	10-32	10-32	¼-28	¼-28	⅜-24	⅜-24	⅜-24	⅜-24	⅜-24	½-20
Stem Travel	0.4	0.6	0.7	0.8	1.1	1.7	2.3	2.8	3.4	4.0	4.5
Approx.Ship Wt. Lbs.	15	35	50	70	140	285	500	780	1165	1500	2265

Model 650-01 (Uses Basic Valve Model 100-20)

Pressure Ratings (Recommended Maximum Pressure - psi)

Valve Body & Cover		Pressure Class		
		Flanged		
Grade	Material	ANSI Standards*	150 lb.	300 lb.
ASTM A-536	Ductile Iron	B16.42	250	400
ASTM A216-WCB	Cast Steel	B16.5	285	400
ASTM B62	Bronze	B16.24	225	400
Type 304	Stainless Steel	B16.5	285	400
356-T6	Aluminum	B16.1	275	—

Note: *ANSI standards are for flange dimensions only.
Flanged valves are available faced but not drilled.

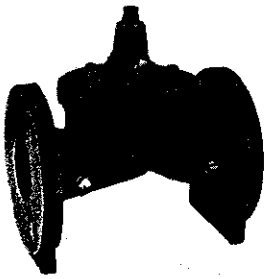

3" Globe, Flanged

Materials

Component	Material Options				
Body & Cover	Ductile Iron	Cast Steel	Bronze	Stainless Steel	Aluminum
Available Sizes	3"-24"	3"-24"	3"-24"	3"-24"	3"-24"
Disc Retainer & Diaphragm Washer	Cast Iron	Cast Steel	Bronze	Stainless Steel	Aluminum
Trim: Disc Guide, Seat & Cover Bearing	Bronze is standard. Stainless Steel is optional.			Stainless Steel is standard.	
Disc	Buna N Rubber				
Diaphragm	Nylon Reinforced Buna N Rubber				
Stem, Nut & Spring	Stainless Steel				

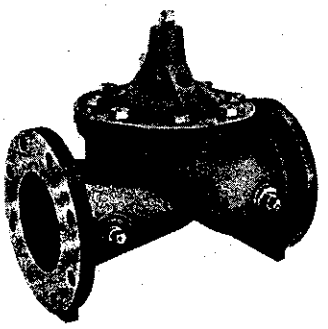

6" Globe, Flanged

Dimensions
(In inches)

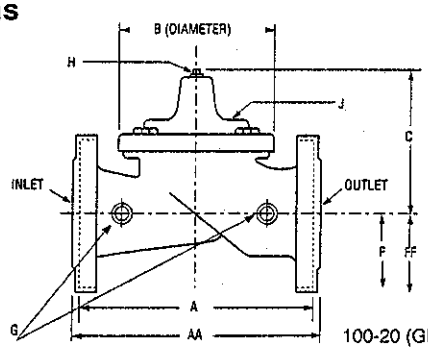

100-20 (Globe)

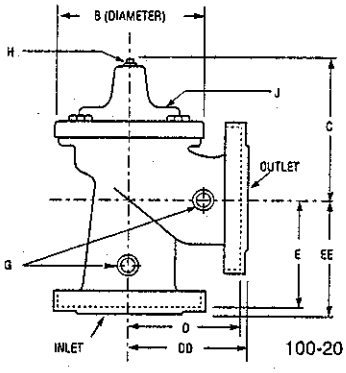

100-20 (Angle)

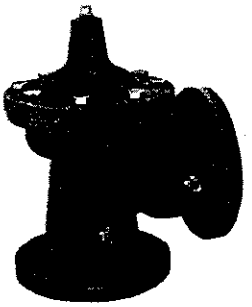

6" Angle, Flanged

VALVE SIZE (Inches)	3	4	6	8	10	12	16	20	24
A 150 ANSI	10.25	13.88	17.75	21.38	26.00	30.00	35.00	48.00	48.00
AA 300 ANSI	11.00	14.50	18.62	22.38	27.38	31.50	36.62	49.62	49.75
B DIA.	6.62	9.12	11.50	15.75	20.00	23.62	28.00	35.44	35.44
C MAX.	7.00	8.62	11.62	15.00	17.88	21.00	25.75	31.00	31.00
D 150 ANSI	—	6.94	8.88	10.69	—	—	—	—	—
DD 300 ANSI	—	7.25	9.38	11.19	—	—	—	—	—
E 150 ANSI	—	5.50	6.75	7.25	—	—	—	—	—
EE 300 ANSI	—	5.81	7.25	7.75	—	—	—	—	—
F 150 Lb ANSI	3.75	4.50	5.50	6.75	8.00	9.50	11.75	14.56	17.00
FF 300 ANSI	4.12	5.00	6.25	7.50	8.75	10.25	12.75	16.06	19.00
G NPT Body Tapping	⅜	½	¾	¾	1	1	1	1	1
H NPT Cover Center Plug	½	½	¾	¾	1	1	1¼	2	2
J NPT Cover Tapping	⅜	½	¾	¾	1	1	1	1	1
Valve Stem Internal Thread UNF	10-32	¼-28	¼-28	⅜-24	⅜-24	⅜-24	⅜-24	½-20	½-20
Stem Travel	0.6	0.8	1.1	1.7	2.3	2.8	3.4	4.5	4.5
Approximate Shipping Weight Lbs.	45	85	195	330	625	900	1380	2551	2733

Valve Selection

These Symbols ▲ and ▲ Indicate Available Sizes

		Size	1¼"	1½"	2"	2½"	3"	4"	6"	8"	10"	12"	14"	16"	20"	24"
		End Details	Screwed	Screwed or Flanged				Flanged								
Model 50-01	Basic Valve 100-01	Globe	▲	▲	▲	▲	▲	▲	▲	▲	▲	▲	▲	▲		
		Angle		▲*	▲	▲	▲	▲	▲	▲	▲	▲	▲	▲		
	Suggested Flow-GPM	Max. Continuous	93	125	208	300	460	800	1800	3100	4900	7000	8500	11000		
		Max. Surge	210	280	470	670	1000	1800	4000	7000	11000	16000	19000	25000		
Model 650-01	Basic Valve 100-20	Globe					▲**	▲	▲	▲	▲	▲		▲	▲	▲
		Angle						▲	▲	▲						
	Suggested Flow-GPM	Max. Continuous					260	580	1025	2300	4100	6400		9230	16500	16500
		Max. Surge					440	990	1760	3970	7050	11000		15900	28200	28200

Refer to the 100-01 or the 100-20 Technical Data Sheet for complete basic valve specifications and dimensions.
Max. Continuous Flow based on 20fps (100-01), 25fps (100-20)
Max. Surge Flow based on 45fps (100-01), 45fps (100-20)
*Screwed End Detail Only **Flanged End Detail Only

Pilot System Dimensions (In Inches)

We recommend providing adequate space around valve for maintenance work

VALVE SIZE		1¼" & 1½"	2	2½"	3"	4"	6"	8"	10"	12"	14"	16"	20"	24"
X	Max.	11.50	12.50	12.75	13.25	13.25	15.75	17.25	20.25	21.75	25.00	27.25	31.00	31.00
Y	Max.	4.00	4.00	4.50	5.00	6.00	8.00	10.25	12.00	14.25	16.75	18.00	18.00	18.00
Z	Max.	6.00	6.00	6.50	8.00	8.50	9.00	11.25	13.00	14.50	16.75	18.00	18.00	18.00

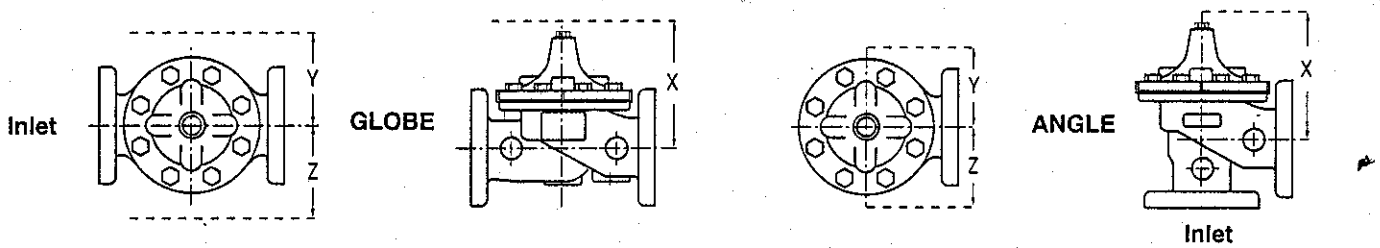

Pilot System Specifications

Adjustment Ranges

0 to 75 psi Max.
20 to 200 psi*
100 to 300 psi
*Supplied unless otherwise specified
Other ranges available, please consult factory

Temperature Range

Water: to 180°F

Materials

Standard Pilot System Materials

Pilot Control: Bronze ASTM B62
Trim: Stainless Steel Type 303
Rubber: Buna N Synthetic Rubber
Tubing & Fitting: Copper and Bronze

Optional Pilot System Materials

Pilot Systems are available with optional Aluminum, Stainless Steel or Monel materials at extra cost.

Please Specify

1. Catalog No. 50-01 or No. 650-01
2. Valve Size
3. Pattern - Globe or Angle
4. Pressure Class
5. Screwed or Flanged
6. Trim Material
7. Adjustment Range
8. Desired Options
9. When Vertically Installed

CLA-VAL®

CLA-VAL CO.
P O Box 1325 Newport Beach CA 92659-0325
Phone: 714-722-4800 • Fax: 714-548-5441

CLA-VAL CANADA LTD.
4687 Christie Drive
Beamsville, Ontario
Canada L0R 1B4
Phone: 905-563-4963
Fax: 905-563-4040

CLA-VAL SA
Chemin des Mesanges 1
CH-1032 Romanel/
Lausanne, Switzerland
Phone: 21/646.49.41
Fax: 21/646.49.59

Represented By:

E-50-01/650-01 (R6/94)

©COPYRIGHT CLA-VAL CO. 1992
Specifications subject to change without notice
Printed in USA

BUTTERFLY VALVES

Mueller® Super-Seal™ Resilient Valves—Iron body with modified wedge disc, NRS and OS&Y types

Working and test pressures
4"-12" sizes— 200 psi (1379 kPa) working pressure
400 psi (2758 kPa) Test pressure

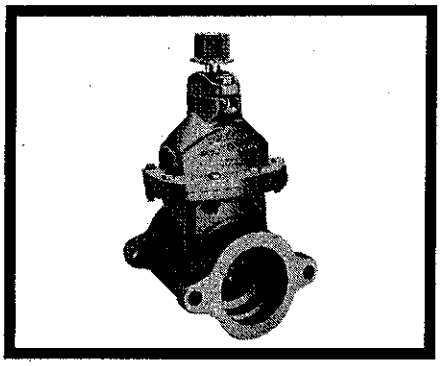

Mueller Slip-On Joint Ends†
Fits plain end of all cast iron pipe classes 150, 200 and 250—ANSI A21.6 and A21.8; ductile iron pipe ANSI A21.51; including the plain end of cast iron or ductile iron of the slip connection type. Also fits classes 150 and 200 cast iron O.D. PVC plastic pipe††.

†Design and dimensions of the joint are manufactured under license of U.S. Pipe and Foundry Company.
††When using CI O.D. PVC pipe, the gaskets supplied by Mueller Co. must be used with the valve. Gaskets supplied with the pipe by the pipe manufacturer cannot be used with this valve connection.

End Connections Available

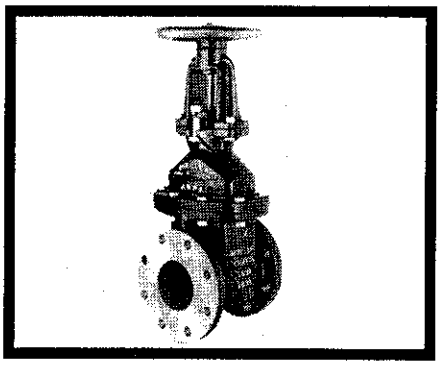

OS&Y flanged ends
With flanged dimensions and drilling complying to ANSI B16.1

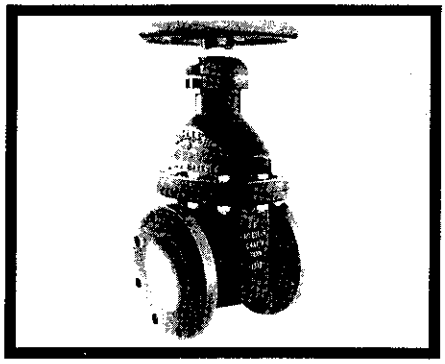

NRS flanged ends
With flange dimensions and drilling complying to ANSI B16.1

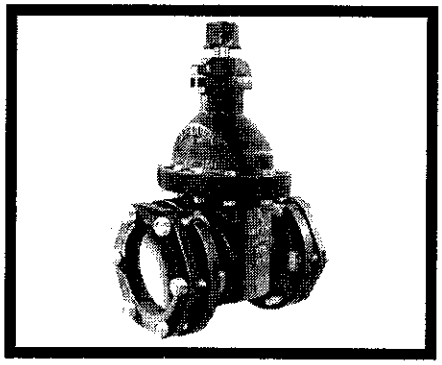

NRS standard mechanical joint ends (Also available MJ x Flange)
Dimensions complying to AWWA C111 and ANSI A21.11. Use with cast iron, ductile iron and class 200 cast iron O.D. PVC plastic pipe.

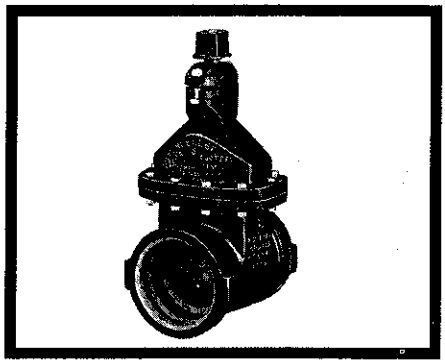

NRS A-C ends (Also available A-C x Flange)
Furnished less gaskets. For classes 150 and 200 machined end A-C pipe (use gaskets provided by pipe manufacturer). Also for classes 100, 150 and 200 cast iron O.D. PVC plastic pipe—4" and 6" only (use A-C gaskets only).

Mueller Super-Seal Resilient Seat Valve

End connections		Catalog number	Valve sizes available*				
Type of inlet & outlet	Connection features		4"	6"	8"	10"	12"
[illegible]							
Mechanical joint—both ends	With bolts, glands and rubber gaskets	A-2370-20	√	√	√	√	√
	Without bolts, gland and gaskets	A-2370-23	√	√	√	√	√
Mechanical joint by flanged ends	With bolts, gland and rubber gasket	A-2370-16	√	√	√	√	√
	Without bolts, gland and gasket	A-2370-19	√	√	√	√	√
Asbestos-cement end—both ends	Both ends have lugs	A-2370-24	√	√	√	√	√
Asbestos-cement by flanged ends	A-C end has lugs	A-2370-26	√	√	√	√	√
Slip-on end—both ends	With gaskets	A-2370-38	√	√	√	√	√
	Without gaskets	A-2370-40	√	√	√	√	√
Flanged end—both ends		A-2370-6	√	√	√	√	√
[illegible]							
Flanged end—both ends		A-2473-6	√	√	√	√	

*Nominal sizes.

See page E1-15 for ordering instructions

Dimensions - For Mueller Super-Seal Resilient Seat Valves

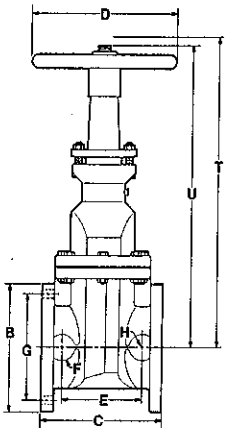

Flanged Ends —OS&Y

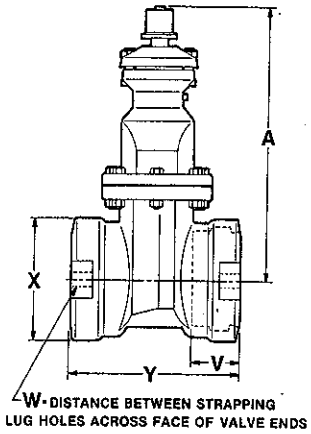

Slip-On Ends

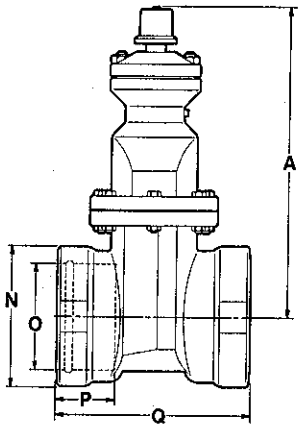

A-C Ends

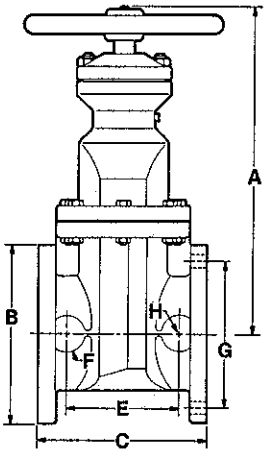

Flanged Ends

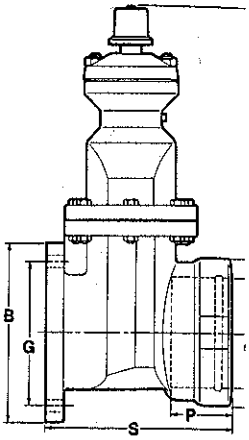

Flange x A.C.

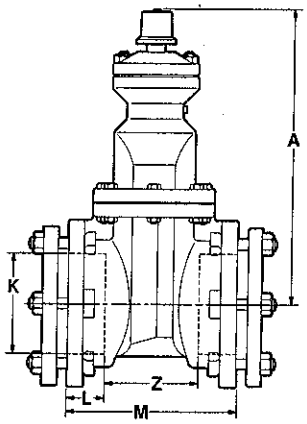

Mechanical Joint Ends

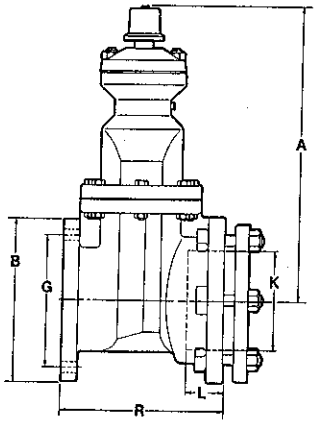

Flange x Mechanical Joint

Dimensions for Mueller Resilient Seat Valve — Inches

Dimensions		Valve size*				
		4″	6″	8″	10″	12
A	Centerline to top of stem	16.31	20.12	23.25	28.38	31.5
B	Outside diameter	9.00	11.00	13.50	16.00	19.0
C	Flanged — face-to-face	9.00	10.50	11.50	13.00	14.0
D	Diameter of handwheel	11.00	13.00	14.00	16.00	16.0
E	Center-to-center of tapping bosses	5.25	6.19	7.50	8.25	9.2
F	Tapping boss diameter	1.50	2.25	2.50	2.50	2.5
G	Bolt circle diameter	7.50	9.50	11.75	14.25	17.0
H	Maximum tap size	¾	1¼	1¼	1¼	1¼
K	Inside diameter	4.90	7.00	9.15	11.20	13.3
L	Depth of socket	2.50	2.50	2.50	2.50	2.5
M	Mech. joint — end-to-end	10.00	11.50	11.50	13.00	14.0
N	Outside diameter	7.12	9.25	11.62	14.38	16.7
O	Inside diameter	4.91	7.01	9.21	11.76	14.0
P	Depth of socket	3.50	3.50	3.50	3.50	4.0
Q	A.C. — end-to-end	11.75	12.00	13.50	14.38	16.5
R	Flg. × M.J. — end-to-end	9.50	11.00	11.50	13.00	14.0
S	Flg. × A.C. — end-to-end	10.38	11.25	12.50	13.69	15.2
T	Top of stem to centerline open	26.34	33.16	41.94	49.88	NA
U	Top of handwheel nut to centerline — closed	21.72	26.50	33.19	39.12	NA
V	Depth of socket	3.22	3.44	3.75	3.81	3.8
W	See note — Slip-On	8.62	10.62	13.12	16.38	18.1
X	Outside diameter	6.88	9.12	11.38	13.50	15.7
Y	Slip-On — end-to-end	11.06	12.50	14.00	14.75	15.5
Z	M.J. Cut Out	5.00	6.50	6.50	8.00	9.0
Number of turns to open (9.5 turns for 4″ OS&Y)		14.5	20.5	27	33.5	39.5

*Nominal Sizes

Ordering Instructions

When ordering Mueller® Super-Seal™ Resilient Seat Valves, specify the following:

1. Quantity
If more than one size, quantity of each.

2. Size
Shown on page E1-13.

3. Catalog number
Shown on page E1-13.

4. Direction of opening
Usually left (counter-clockwise). Where previous valves open right (clockwise), new valves should open in same direction. (Wrench nuts on valves that open to the right are painted red for identification.)

5. Method of operation
2" square wrench nut or handwheel is available. Handwheel is standard on valves with flanged ends; on all other valves, the 2" square wrench nut is standard. Specify which method of operation is required.

Parts List - Mueller® Super-Seal™ Resilient Seat Valves

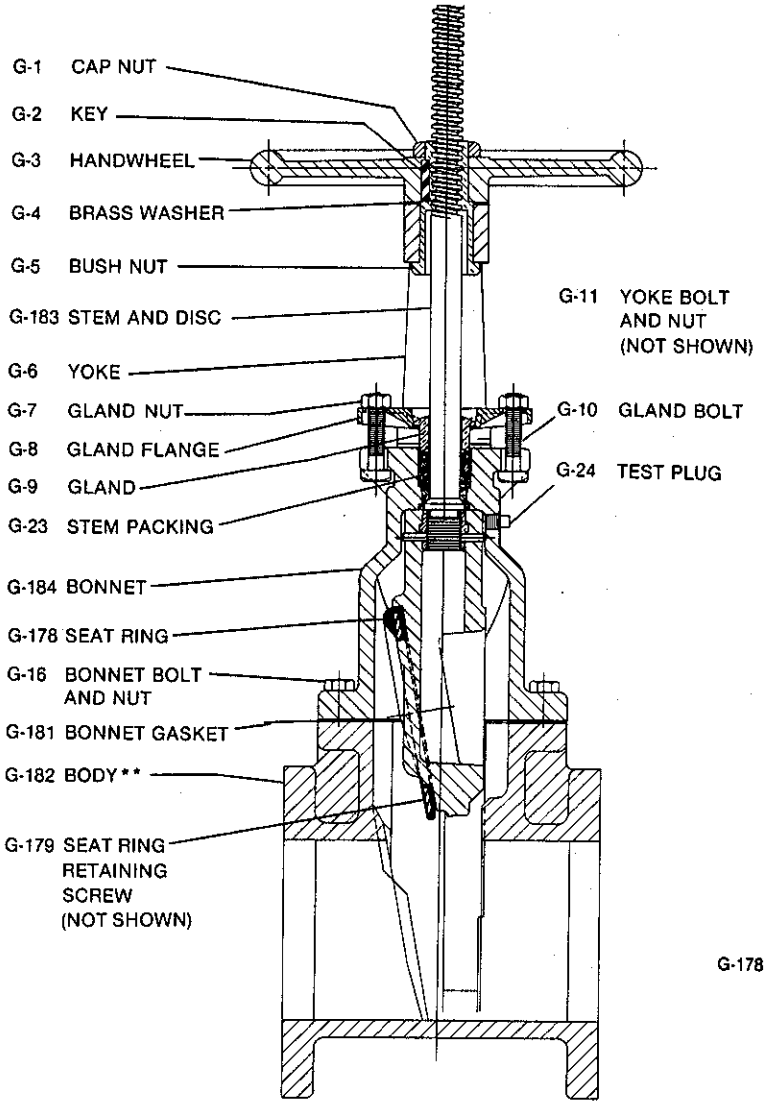

OS & Y Resilient Seat Valve
4" and Larger

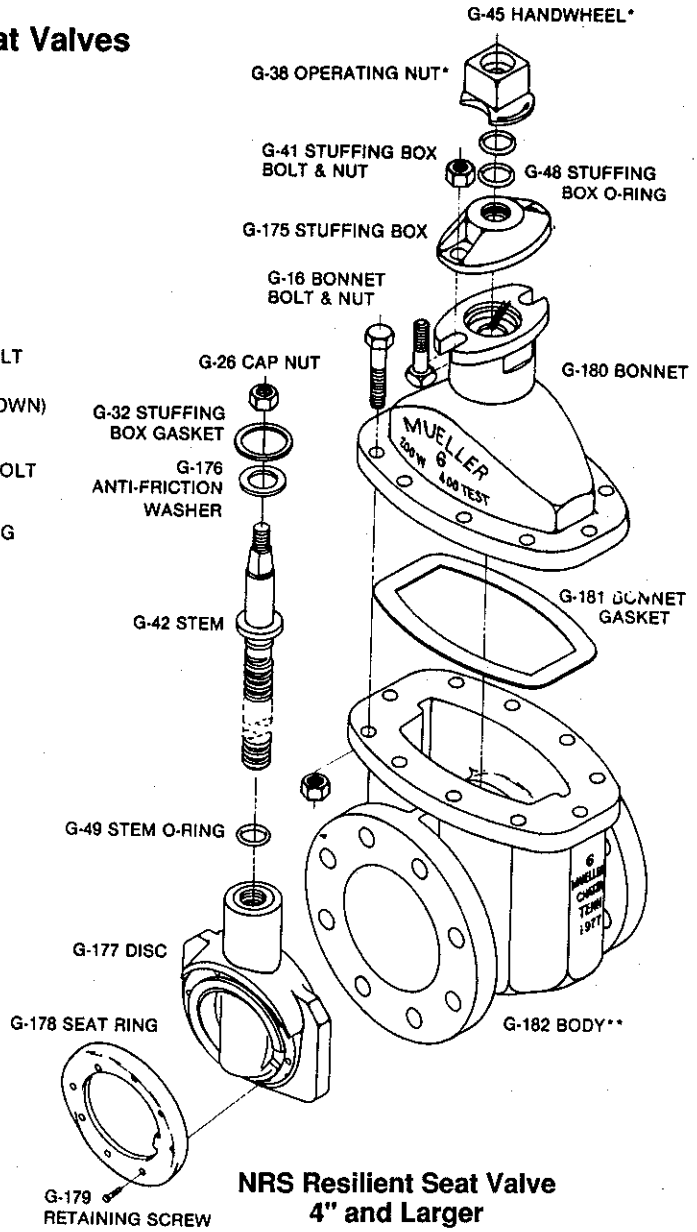

NRS Resilient Seat Valve
4" and Larger

When orderingparts for Mueller Super-Seal Resilient Seat Valves, specify the following:

1. Quantity
2. Size of valve
3. Part number**
4. Valve catalog number
5. Direction of opening
6. Year date of valve

* Handwheel is standard on NRS valves with flanged ends; on all other NRS valves the 2" square wrench nut is standard. Either the wrench nut or handwheel will fit any NRS valve.

** When ordering valve body, specify type of ends desired.

See ordering instruction above

Mueller Lineseal III Butterfly Valves
Meet or Exceed AWWA C-504 Standard Iron Body with Rubber-Seated, Self Adjusted Disc Seal

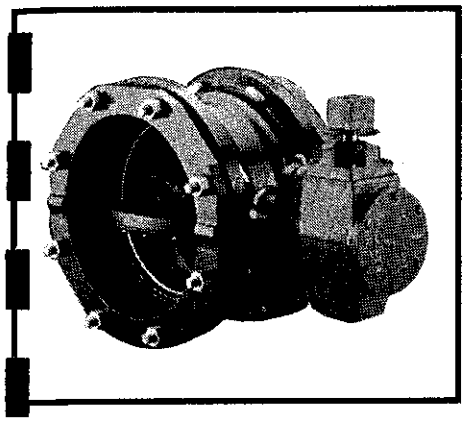

MECHANICAL JOINT ENDS
Dimensions comply with AWWA C111/ANSI A21.11. Use with Cast Iron, Ductile Iron, and Class 200 Cast Iron O.D. PVC Plastic Pipe.
(Also available MJ x FL)

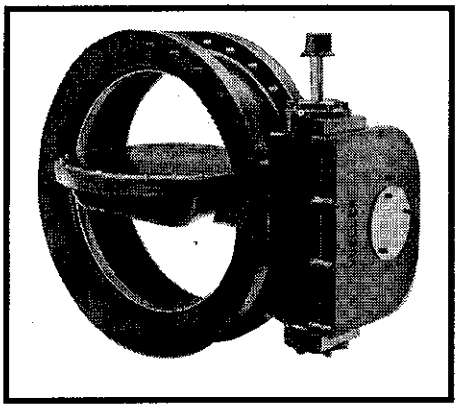

FLANGED ENDS
Drilling complies with ANSI B16.1

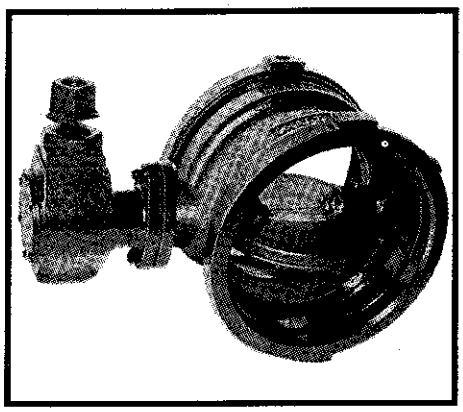

A-C ENDS
Furnished less gaskets. For Classes 150 and 200 machined end A-C pipe. Use gaskets provided by pipe manufacturer.
(Also available A-C x FL)

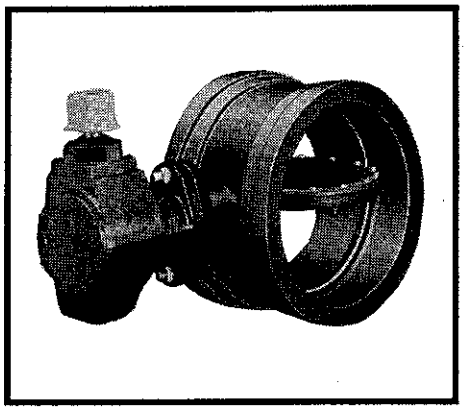

GROOVED ENDS
Grooved end connections.

VALVE CLASSES/SIZES AVAILABLE

Pressure Class	Maximum Working Pressure p.s.i.g.	Maximum Flow Velocity f.p.s.	Shell Test Pressure p.s.i.g.	Base Catalog Number**	Size Range*
250B	250	16	500	B-5227-	12"—72"
200B	200	16	400	B-5228-	12"—72"
150B	150	16	300	B-3211-	12"—72"
150A	150	8	300	B-3212-	12"—72"
75B	75	16	150	B-3212-	12"—72"
75A	75	8	150	B-3214-	12"—72"
25B	25	16	50	B-3215-	12"—72"
25A	25	8	50	B-3216-	12"—72"

*Nominal sizes.
**To order valve, base catalog number in combination with other modifying numbers indicating type end connections and other features are required.

See Pages E1-31 Through 33 for Ordering Instructions

Butterfly Valve Catalog Numbers

Type of Inlet and Outlet	Connection Features	Catalog Number	Valve Sizes Available 12"	14"	16"	18"	20"	24"	30"	36"	42"	48"
Mechanical Joint both ends	With bolts, glands & gaskets	B-5227-20	X	X	X	X	X	X	X	X	X	X
		B-5228-20	X	X	X	X	X	X	X	X	X	X
		B-3211-20	X	X	X	X	X	X	X	X	X	X
		B-3212-20	X	X	X	X	X	X	X	X	X	X
		B-3213-20	X	X	X	X	X	X	X	X	X	X
		B-3214-20	X	X	X	X	X	X	X	X	X	X
		B-3215-20	X	X	X	X	X	X	X	X	X	X
		B-3216-20	X	X	X	X	X	X	X	X	X	X
Mechanical Joint both ends	Without bolts, glands and gaskets	B-5227-23	X	X	X	X	X	X	X	X	X	X
		B-5228-23	X	X	X	X	X	X	X	X	X	X
		B-3211-23	X	X	X	X	X	X	X	X	X	X
		B-3212-23	X	X	X	X	X	X	X	X	X	X
		B-3213-23	X	X	X	X	X	X	X	X	X	X
		B-3214-23	X	X	X	X	X	X	X	X	X	X
		B-3215-23	X	X	X	X	X	X	X	X	X	X
		B-3216-23	X	X	X	X	X	X	X	X	X	X
Flange both ends	ANSI B16.1 Class 125 Flat Faced with phonographic finish	B-5227-D6	X	X	X	X	X	X	X	X	X	X
		B-5228-6	X	X	X	X	X	X	X	X	X	X
		B-3211-6	X	X	X	X	X	X	X	X	X	X
		B-3212-6	X	X	X	X	X	X	X	X	X	X
		B-3213-6	X	X	X	X	X	X	X	X	X	X
		B-3214-6	X	X	X	X	X	X	X	X	X	X
		B-3215-6	X	X	X	X	X	X	X	X	X	X
		B-3216-6	X	X	X	X	X	X	X	X	X	X
Flange by Mechanical Joint	Mechanical joint end with bolts, glands and gaskets	B-5228-16	X		X							
		B-3211-16	X		X							
		B-3212-16	X		X							
		B-3213-16	X		X							
		B-3214-16	X		X							
		B-3215-16	X		X							
		B-3216-16	X		X							
Flange by Mechanical Joint	Mechanical joint end [redacted] less Accessories	B-5228-19	X		X							
		B-3211-19	X		X							
		B-3212-19	X		X							
		B-3213-19	X		X							
		B-3214-19	X		X							
		B-3215-19	X		X							
		B-3216-19	X		X							
A-C both ends	(A-C) Furnished less gaskets**	B-3211-24	X	X	X							
		B-3212-24	X	X	X							
		B-3213-24	X	X	X							
		B-3214-24	X	X	X							
		B-3215-24	X	X	X							
		B-3216-24	X	X	X							
Flange by A-C	A-C end furnished less gasket	B-3211-26	X	X	X							
		B-3212-26	X	X	X							
		B-3213-26	X	X	X							
		B-3214-26	X	X	X							
		B-3215-26	X	X	X							
		B-3216-26	X	X	X							
Grooved ends		B-3211-52			X	X	X	X	X	X		
		B-3212-52			X	X	X	X	X	X		
		B-3213-52			X	X	X	X	X	X		
		B-3214-52			X	X	X	X	X	X		
		B-3215-52			X	X	X	X	X	X		
		B-3216-52			X	X	X	X	X	X		
Flange both ends	ANSI 250# with flat face	B-5227-6	X	X	X	X	X	X	X	X	X	X
Flange both ends	ANSI 250# with raised face	B-5227-F6	X	X	X	X	X	X	X	X	X	X

*Nominal sizes.
**Use gasket(s) provided by pipe manufacturer.

See Pages E1-31 Through 33 for Ordering Instructions

MUELLER® LINESEAL III® BUTTERFLY VALVES 54"-72" SIZES

Mueller Lineseal III Butterfly Valves
Meet or exceed AWWA C-504 Standard
Iron Body with Rubber-Seated, Self-adjusting Disc Seal

VALVE CLASSES/SIZES AVAILABLE

Pressure Class	Maximum Working Pressure p.s.i.g	Maximum Flow Velocity f.p.s.	Shell Test Pressure p.s.i.g.	Catalog Number	Size Range
150B	150	16	300	B3211-6	54"–72"
150A	150	8	300	B3212-6	54"–72"
75B	75	16	150	B3213-6	54"–72"
75A	75	8	150	B3214-6	54"–72"
25B	25	16	50	B3215-6	54"–72"
25A	25	8	50	B3216-6	54"–72"

Flanged end Drilling Complies with ANSIB 16.1 Class 125
Flat faced with phonographic finish.

See Pages E1-31 through E1-33 for Ordering Instructions

MAIN VALVES
MUELLER® LINESEAL III® BUTTERFLY VALVES
CLASS 25A–150B

Dimensions - for Mueller Lineseal III Butterfly Valves with HT® Actuator: 12" - 24" Sizes.

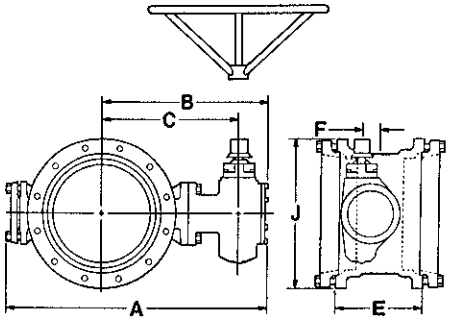

MJ X MJ

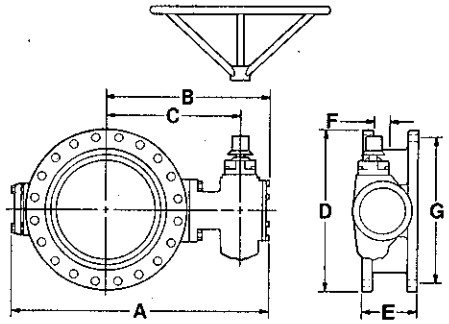

FL X FL

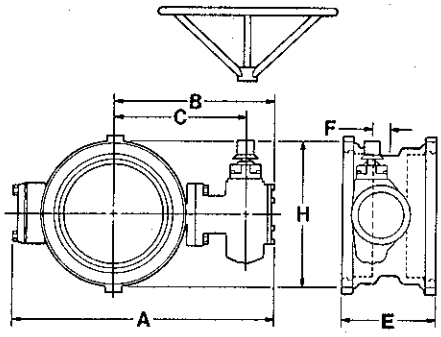

A-C X A-C

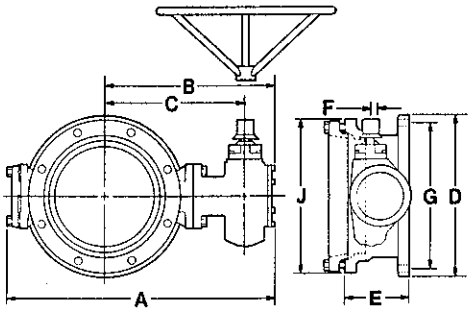

FL X MJ

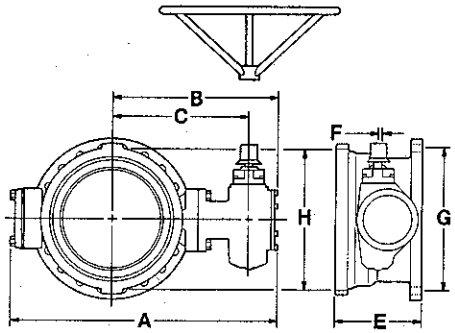

FL X A-C

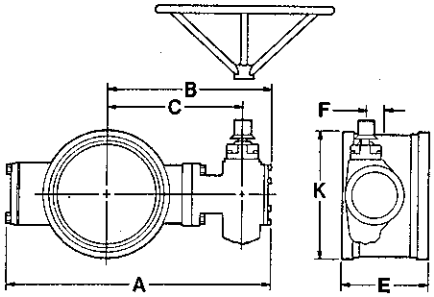

GROOVED ENDS

	Dimensions	12"	14"	16"	18"	20"	24"
150B	A	30.20	33.09	34.72	37.01	39.01	44.73
	B	18.66	20.45	21.26	22.30	23.30	26.20
	C	15.58	17.12	17.94	19.08	20.08	23.00
	D	19.00	23.50	23.50	25.00	27.50	32.00
	E	8.00	8.00	8.00	8.00	8.00	8.00
	F	1.70	2.19	2.19	3.00	3.00	5.00
	G	17.00	18.75	21.25	22.75	25.00	29.50
150A	A	30.20	33.09	34.72	37.01	39.01	44.73
	B	18.66	20.45	21.26	22.30	23.30	26.20
	C	15.58	17.12	17.94	19.08	20.08	23.00
	D	19.00	23.50	23.50	25.00	27.50	32.00
	E	8.00	8.00	8.00	8.00	8.00	8.00
	F	1.70	2.19	2.19	3.00	3.00	5.00
	G	17.00	18.75	21.25	22.75	25.00	29.50
75B	A	30.20	33.09	34.72	37.01	39.01	44.73
	B	18.66	20.45	21.26	22.30	23.30	26.20
	C	15.58	17.12	17.94	19.08	20.08	23.00
	D	19.00	23.50	23.50	25.00	27.50	32.00
	E	8.00	8.00	8.00	8.00	8.00	8.00
	F	1.70	2.19	2.19	3.00	3.00	5.00
	G	17.00	18.75	21.25	22.75	25.00	29.50

	Dimensions	12"	14"	16"	18"	20"	24"
75A	A	30.20	33.09	34.72	37.24	38.37	44.96
	B	18.66	20.45	21.26	22.53	22.66	26.43
	C	15.58	17.12	17.94	18.24	18.74	20.97
	D	19.00	23.50	23.50	25.00	27.50	32.00
	E	8.00	8.00	8.00	8.00	8.00	8.00
	F	1.70	2.19	2.19	2.20	1.71	3.00
	G	17.00	18.75	21.25	22.75	25.00	29.50
25B	A	30.20	33.09	34.72	36.37	38.37	44.96
	B	18.66	20.45	21.26	21.66	22.66	26.43
	C	15.58	17.12	17.94	17.74	18.74	20.97
	D	19.00	23.50	23.50	25.00	27.50	32.00
	E	8.00	8.00	8.00	8.00	8.00	8.00
	F	1.70	2.19	2.19	1.71	1.71	3.00
	G	17.00	18.75	21.25	22.75	25.00	29.50
25A	A	30.20	33.09	34.72	36.37	38.37	44.96
	B	18.66	20.45	21.26	21.66	22.66	26.43
	C	15.58	17.12	17.94	17.74	18.74	20.97
	D	19.00	23.50	23.50	25.00	27.50	32.00
	E	8.00	8.00	8.00	8.00	8.00	8.00
	F	1.70	2.19	2.19	1.71	1.71	3.00
	G	17.00	18.75	21.25	22.75	25.00	29.50

See Pages E1-31 Through 33 for Ordering Instructions

Dimensions - for Mueller Lineseal III Butterfly Valves with HT® Actuater: 12" - 24" Sizes.

	Dimensions	12"	14"	16"	18"	20"	24"
150B	A	30.20	33.09	34.72	36.37	38.37	44.96
	B	18.66	20.45	21.26	21.66	22.66	26.43
	C	15.58	17.12	17.94	17.74	18.74	20.97
	D	19.00	23.50	23.50	25.00	27.50	32.00
	E	10.50	11.50	12.00	12.25	12.50	13.00
	F	1.70	2.19	2.19	3.00	3.00	5.00
	J	17.88	20.25	22.56	24.75	27.13	31.50
150A	A	30.20	33.09	34.72	36.37	38.37	44.96
	B	18.66	20.45	21.26	21.66	22.66	26.43
	C	15.58	17.12	17.94	17.74	18.74	20.97
	D	19.00	23.50	23.50	25.00	27.50	32.00
	E	10.50	11.50	12.00	12.25	12.50	13.00
	F	1.70	2.19	2.19	3.00	3.00	5.00
	J	17.88	20.25	22.56	24.75	27.13	31.50
75B	A	30.20	33.09	34.72	36.37	38.37	44.96
	B	18.66	20.45	21.26	21.66	22.66	26.43
	C	15.58	17.12	17.94	17.74	18.74	20.97
	D	19.00	23.50	23.50	25.00	27.50	32.00
	E	10.50	11.50	12.00	12.25	12.50	13.00
	F	1.70	2.19	2.19	3.00	3.00	5.00
	J	17.88	20.25	22.56	24.75	27.13	31.50
75A	A	30.20	33.09	34.72	36.37	38.37	44.96
	B	18.66	20.45	21.26	21.66	22.66	26.43
	C	15.58	17.12	17.94	17.74	18.74	20.97
	D	19.00	23.50	23.50	25.00	27.50	32.00
	E	10.50	11.50	12.00	12.25	12.50	13.00
	F	1.70	2.19	2.19	2.20	3.00	5.00
	J	17.88	20.25	22.56	24.75	27.13	31.50
25B	A	30.20	33.09	34.72	36.37	38.37	44.96
	B	18.66	20.45	21.26	21.66	22.66	26.43
	C	15.58	17.12	17.94	17.74	18.74	20.97
	D	19.00	23.50	23.50	25.00	27.50	32.00
	E	10.50	11.50	12.00	12.25	12.50	13.00
	F	1.70	2.19	2.19	1.71	1.71	3.00
	J	17.88	20.25	22.56	24.75	27.13	31.50
25A	A	30.20	33.09	34.72	36.37	38.37	44.96
	B	18.66	20.45	21.26	21.66	22.66	26.43
	C	15.58	17.12	17.94	17.74	18.74	20.97
	D	19.00	23.50	23.50	25.00	27.50	32.00
	E	10.50	11.50	12.00	12.25	12.50	13.00
	F	1.70	2.19	2.19	1.71	1.71	3.00
	J	17.88	20.25	22.56	24.75	27.13	31.50
ALL CLASSES	A	30.20	33.09	34.72	n/a	n/a	n/a
	B	18.66	20.45	21.26			
	C	15.58	17.12	17.94			
	H	16.75	19.38	22.00			
	E	12.50	13.75	14.28			
	F	1.70	2.19	2.19			

	Dimensions	12"	14"	16"	18"	20"	24"
ALL CLASSES	A	30.20	n/a	34.72	n/a	n/a	n/a
	B	18.66		21.26			
	C	15.58		17.94			
	D	19.00		21.25			
	E	8.00		9.00			
	F	1.70		2.19			
	G	17.00		21.25			
	J	17.88		22.56			
ALL CLASSES	A	30.20	33.09	34.72	n/a	n/a	n/a
	B	18.66	20.45	21.26			
	C	15.58	17.12	17.94			
	D	19.00	23.50	23.50			
	E	10.25	11.09	11.38			
	F	1.70	2.19	2.19			
	H	16.75	19.38	22.00			
	G	17.00	18.75	21.25			
150B	A	n/a	n/a	34.72	37.01	39.01	44.73
	B			21.26	22.30	23.30	26.20
	C			17.94	19.08	26.08	23.00
	E			12.50	13.50	13.50	13.50
	K			18.50	20.94	22.88	27.12
	F			2.19	3.00	3.00	5.00
150A	A	n/a	n/a	34.72	37.01	39.01	44.73
	B			21.26	22.30	23.30	26.20
	C			17.94	19.08	26.08	23.00
	E			12.50	13.50	13.50	13.50
	K			18.50	20.94	22.88	27.12
	F			2.19	3.00	3.00	5.00
75B	A	n/a	n/a	34.72	37.01	39.01	44.73
	B			21.26	22.30	23.30	26.20
	C			17.94	19.08	20.08	23.00
	E			12.50	13.50	13.50	13.50
	K			18.50	20.94	22.88	27.12
	F			2.19	3.00	3.00	5.00
75A	A	n/a	n/a	34.72	37.24	39.01	44.73
	B			21.26	22.53	23.30	26.20
	C			17.94	18.24	20.08	23.00
	E			12.50	13.50	13.50	13.50
	K			18.50	20.94	22.88	27.12
	F			2.19	2.20	3.00	5.00
25B	A	n/a	n/a	34.72	36.37	38.37	44.96
	B			21.26	21.66	22.66	26.43
	C			17.94	17.74	18.74	20.97
	E			12.50	13.50	13.50	13.50
	K			18.50	20.94	22.88	27.12
	F			2.19	1.71	1.71	3.00
25A	A	n/a	n/a	34.72	36.37	38.37	44.96
	B			21.26	21.66	22.66	26.43
	C			17.94	17.74	18.74	20.97
	E			12.50	13.50	13.50	13.50
	K			18.50	20.94	22.88	27.12
	F			2.19	1.71	1.71	3.00

n/a indicates not available in these sizes.

New 3/89

See Pages E1-31 Through 33 for Ordering Instructions

BUTTERFLY VALVES
MUELLER LINESEAL III BUTTERFLY VALVES
CLASS 25A-150B

Dimensions - for Mueller Lineseal III Butterfly Valves: 30" - 48" Sizes.

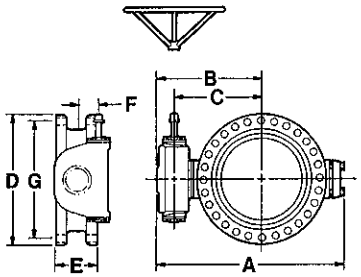

FL X FL - 30" - With Small Link Lever

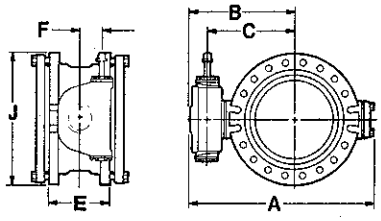

MJ X MJ - 30" & 36"- Wrench Nut, Small Link Lever

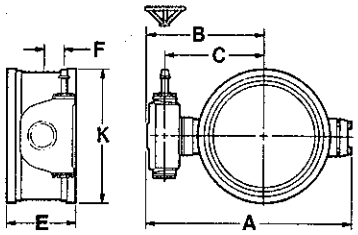

Grooved ends - 36"- Wrench Nut, Small Link Lever

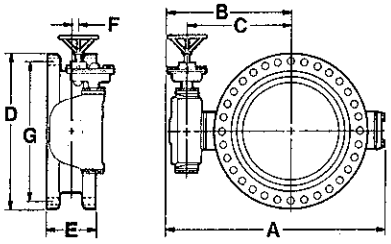

FL X FL - 36" - Small Link Lever with Spur Gearing

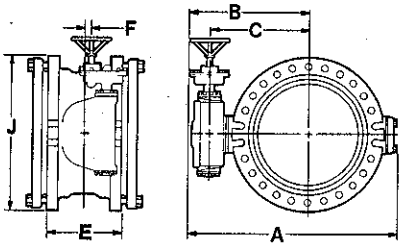

MJ X MJ - 36"- Small Link Lever With Spur Gearing

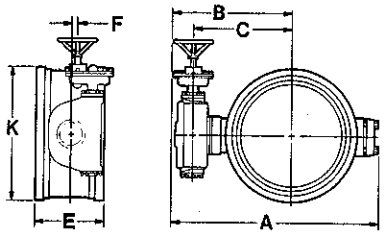

Grooved ends - 36"- Small Link Lever With Spur Gearing

	Dimensions	30"	36" w/o*	36" w*	42"	48"
150B	A	54.13	61.88	62.57	70.76	79.87
	B	32.04	35.99	36.68	41.17	46.41
	C	27.04	30.98	30.98	35.42	40.23
	D	38.75	46.00	46.00	53.00	59.50
	E	12.00	12.00	12.00	12.00	15.00
	F	6.50	6.50	2.00	2.00	5.25
	G	36.00	42.75	42.75	49.50	56.00
150A	A	54.13	61.88	61.50	70.07	79.87
	B	32.04	35.99	35.61	40.48	46.41
	C	27.04	30.98	32.42	35.42	40.23
	D	38.75	46.00	46.00	53.00	59.50
	E	12.00	12.00	12.00	12.00	15.00
	F	6.50	6.50	2.00	6.50	5.25
	G	36.00	42.75	42.75	49.50	56.00
75B	A	53.75	61.50	61.50	70.76	79.25
	B	31.66	35.61	35.61	41.17	45.79
	C	28.48	32.42	32.42	35.42	39.61
	D	38.75	46.00	46.00	53.00	59.50
	E	12.00	12.00	12.00	12.00	15.00
	F	5.00	5.00	5.00	2.00	2.00
	G	36.00	42.75	42.75	49.50	56.00

	Dimensions	30"	36" w/o*	36" w*	42"	48"
75A	A	53.75	61.50	61.50	70.07	78.56
	B	31.66	35.61	35.61	40.48	45.10
	C	28.48	32.42	32.42	35.42	39.61
	D	38.75	46.00	46.00	53.00	59.50
	E	12.00	12.00	12.00	12.00	15.00
	F	5.00	5.00	5.00	6.50	6.50
	G	36.00	42.75	42.75	49.50	56.00
25B	A	53.75	61.50	61.50	70.07	79.25
	B	31.66	35.61	35.61	40.48	45.79
	C	28.48	32.42	32.42	35.42	39.61
	D	38.75	46.00	46.00	53.00	59.50
	E	12.00	12.00	12.00	12.00	15.00
	F	5.00	5.00	5.00	6.50	2.00
	G	36.00	42.75	42.75	49.50	56.00
25A	A	53.75	61.50	61.50	69.70	78.18
	B	31.66	35.61	35.61	40.11	44.72
	C	28.48	32.42	32.42	36.86	41.04
	D	38.75	46.00	46.00	53.00	59.50
	E	12.00	12.00	12.00	12.00	15.00
	F	5.00	5.00	5.00	5.00	8.25
	G	36.00	42.75	42.75	49.50	56.00

*"w" designates valves with spur gearing; w/o designates valves without spur gearing.

See Pages E1-31 Through 33 for Ordering Instructions

Dimensions - for Mueller Lineseal III Butterfly Valves with HT Actuator: 30"-48" Sizes

	Dimensions*	30"	36" w/o*	36" w*	42"	48"
150B	A	54.13	61.88	62.57	70.76	79.87
	B	32.04	35.99	36.68	41.17	46.41
	C	27.04	30.98	30.98	35.42	40.23
	E	18.00	22.00	22.00	22.00	24.00
	F	6.50	6.50	2.00	2.00	5.25
	J	39.03	45.91	45.91	53.03	59.91
150A	A	54.13	61.88	61.50	70.07	79.87
	B	32.04	35.99	35.61	40.48	46.41
	C	27.04	30.98	32.42	35.42	40.23
	E	18.00	22.00	22.00	22.00	24.00
	F	6.50	6.50	5.00	6.50	5.25
	J	39.03	45.91	45.91	53.03	59.91
75B	A	53.75	61.50	61.50	70.76	79.25
	B	31.66	35.61	35.61	41.17	45.79
	C	28.48	32.42	32.42	35.42	39.61
	E	18.00	22.00	22.00	22.00	24.00
	F	5.00	5.00	5.00	2.00	2.00
	J	39.03	45.91	45.91	53.03	59.91
75A	A	53.75	61.50	61.50	70.07	78.56
	B	31.66	35.61	35.61	40.48	45.10
	C	28.48	32.42	32.42	35.42	39.61
	E	18.00	22.00	22.00	22.00	24.00
	F	5.00	5.00	5.00	6.50	6.50
	J	39.03	45.91	45.91	53.03	59.91
25B	A	53.75	61.50	61.50	70.07	79.25
	B	31.66	35.61	35.61	40.48	45.79
	C	28.48	32.42	32.42	35.42	39.61
	E	18.00	22.00	22.00	22.00	24.00
	F	5.00	5.00	5.00	6.50	2.00
	J	39.03	45.91	45.91	53.03	59.91
25A	A	53.75	61.50	61.50	69.70	78.18
	B	31.66	35.61	35.61	40.11	44.72
	C	28.48	32.42	32.42	36.86	41.04
	E	18.00	22.00	22.00	22.00	24.00
	F	5.00	5.00	5.00	5.00	8.25
	J	39.03	45.91	45.91	53.03	59.91

	Dimensions*	30"	36" w/o*	36" w*
150B	A	54.13	62.63	63.32
	B	32.04	36.11	36.80
	C	27.04	30.36	30.36
	E	20.50	20.50	20.50
	K	33.75	40.19	40.19
	F	6.50	6.50	2.00
150A	A	54.13	62.63	63.32
	B	32.04	36.11	36.80
	C	27.04	30.36	30.36
	E	20.50	20.50	20.50
	K	33.75	40.19	40.19
	F	6.50	6.50	2.00
75B	A	53.75	61.50	61.50
	B	31.66	35.61	35.61
	C	28.48	32.42	32.42
	E	20.50	20.50	20.50
	K	33.75	40.19	40.19
	F	5.00	5.00	5.00
75A	A	53.75	61.50	61.50
	B	31.66	35.61	35.61
	C	28.48	32.42	32.42
	E	20.50	20.50	20.50
	K	33.75	40.19	40.19
	F	5.00	5.00	5.00
25B	A	53.75	61.50	61.50
	B	31.66	35.61	35.61
	C	28.48	32.42	32.42
	E	20.50	20.50	20.50
	K	33.75	40.19	40.19
	F	5.00	5.00	5.00
25A	A	53.75	61.50	61.50
	B	31.66	35.61	35.61
	C	28.48	32.42	32.42
	E	20.50	20.50	20.50
	K	33.75	40.19	40.19
	F	5.00	5.00	5.00

*"w" designates valves with spur gearing; w/o designates valves without spur gearing.

See Pages E1-31 Through 33 for Ordering Instructions

MAIN VALVES
MUELLER® LINESEAL III® BUTTERFLY VALVES
54"-72" SIZES

Dimensions for Mueller Lineseal III Butterfly Valves 54"-72" Sizes

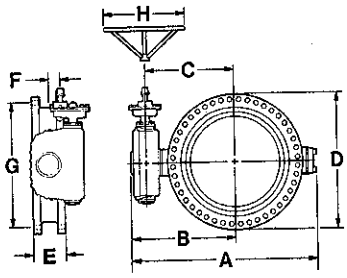

FLXFL Large Link Lever With Spur Gearing

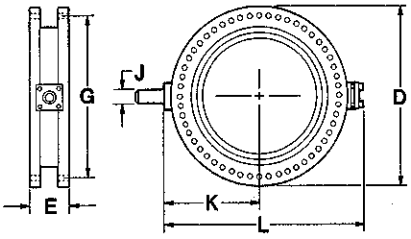

FLXFL Bare Shaft

Ends	Press Class	Dim.	54"	60"	66"	72"
	150B	A*/**	86.62/86.62	–/94.41	–/–	–/–
		B*/**	48.22/48.22	–/51.72	–/–	–/–
		C	42.03	–	–	–
		D	66.25	73.00	80.00	86.50
		E	15.00	15.00	18.00	18.00
		F	5.25	–	–	–
		G	62.75	69.25	76.00	82.50
		H	30.00	36.00	–	–
		J	6.75	6.75	7.75	8.50
		K	35.97	39.47	42.97	46.72
		L	74.38	82.16	89.16	96.66
	150A	A*/**	86.62/86.62	94.41/94.41	–/–	–/–
		B*/**	48.22/48.22	51.72/51.72	–/–	–/–
		C	42.03	45.53	–	–
		D	66.25	73.00	80.00	86.50
		E	15.00	15.00	18.00	18.00
		F	5.25	5.25	–	–
		G	62.75	69.25	76.00	82.50
		H	24.00	30.00	–	–
		J	6.75	6.75	7.25	7.75
		K	35.97	39.47	42.97	46.72
		L	74.38	82.16	89.16	96.66
	75B	A*/**	86.62/85.56	94.41/94.41	–/101.12	–/–
		B*/**	48.22/47.16	51.72/51.72	–/54.93	–/–
		C	42.03	45.53	–	–
		D	66.25	73.00	80.00	86.50
		E	15.00	15.00	18.00	18.00
		F	5.25	5.25	–	–
		G	62.75	69.25	76.00	82.50
		H	30.00	30.00	42.00	–
		J	5.00	6.75	6.75	7.75
		K	35.97	39.47	42.97	46.72
		L	74.38	82.16	89.16	96.66

Ends	Press Class	Dim.	54"	60"	66"	72"
	75A	A*/**	85.56/85.56	94.41/94.41	101.41/101.12	108.91/108.12
		B*/**	47.16/47.16	51.72/51.72	55.22/54.93	58.97/58.68
		C	41.41	45.53	49.03	52.78
		D	66.25	73.00	80.00	86.50
		E	15.00	15.00	18.00	18.00
		F	2.00	5.25	5.25	5.25
		G	62.75	69.25	76.00	82.50
		H	12.00	18.00	18.00	24.00
		J	4.38	5.00	5.00	6.75
		K	35.97	39.47	42.97	46.72
		L	74.38	82.16	89.16	96.66
	25B	A*/**	85.56/85.56	94.41/93.35	101.41/101.12	–/108.62
		B*/**	47.16/47.16	51.72/50.66	55.22/54.93	–/58.62
		C	41.41	45.53	49.03	–
		D	66.25	73.00	80.00	86.50
		E	15.00	15.00	18.00	18.00
		F	2.00	5.25	5.25	–
		G	62.75	69.25	76.00	82.50
		H	18.00	24.00	30.00	36.00
		J	5.00	5.62	6.75	6.75
		K	35.97	39.47	42.97	46.72
		L	74.38	82.16	89.16	96.66
	25A	A*/**	84.81/84.81	92.60/93.35	100.35/100.35	107.85/107.85
		B*/**	46.41/46.41	49.91/50.66	54.16/54.16	57.91/57.91
		C	41.41	44.91	48.41	52.16
		D	66.25	73.00	80.00	86.50
		E	15.00	15.00	18.00	18.00
		F	2.00	2.00	2.00	2.00
		G	62.75	69.25	76.00	82.50
		H	30.00	12.00	18.00	18.00
		J	3.62	4.38	5.00	5.00
		K	35.97	39.47	42.97	46.72
		L	74.38	82.16	89.16	96.66

*Non-Indicating Valves with Wrench Nut.
**Indicating Valves with Handwheel.

See Pages E1-31 through E1-33 for Ordering Instructions

Dimensions—for Mueller XP Butterfly Valves: 12" - 24" Sizes.

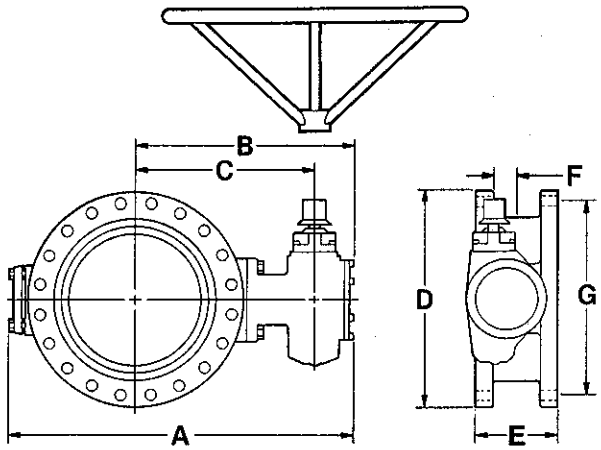

FL X FL—12" to 24"

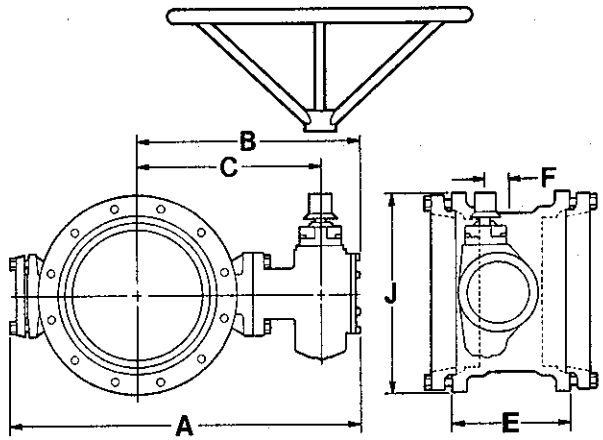

MJ X MJ—12" to 24"

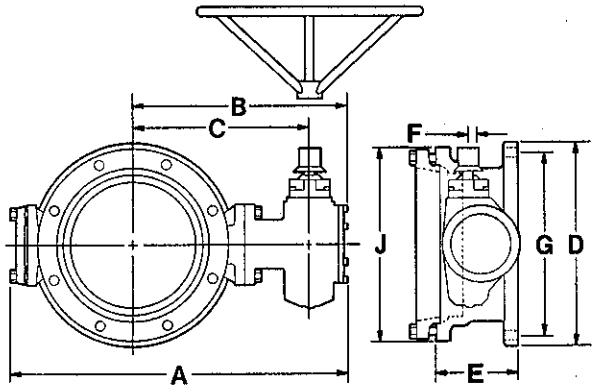

FL X MJ—12" to 24"

	Dimensions	12	14	16	18	20	24
250B	A	30.20	33.72	36.22	38.51	41.01	46.86
	B	18.66	20.76	22.01	23.05	24.30	27.27
	C	15.58	17.44	18.69	19.83	21.08	24.06
	D	20.50	23.00	25.50	28.00	30.50	36.00
	E	8.00	9.50	9.62	9.62	9.62	12.00
	F	1.70	2.19	2.19	3.00	3.00	5.00
	G	17.75	20.25	22.50	24.75	27.00	32.00
200B	A	30.20	33.09	34.72	37.01	39.01	44.73
	B	18.66	20.45	21.26	22.30	23.30	26.20
	C	15.58	17.12	17.94	19.08	20.08	23.00
	D	19.00	23.50	23.50	25.00	27.50	32.00
	E	8.00	8.00	8.00	8.00	8.00	8.00
	F	1.70	2.19	2.19	3.00	3.00	5.00
	G	17.00	18.75	21.25	22.75	25.00	29.50
250B	A	30.20	33.09	34.72	37.01	39.01	44.73
	B	18.66	20.45	21.26	22.30	23.30	26.20
	C	15.58	17.12	17.94	19.08	20.08	23.00
	E	10.50	11.50	12.00	12.25	12.50	13.00
	F	1.70	2.19	2.19	3.00	3.00	5.00
	J	17.88	20.25	22.56	24.75	27.13	31.50
200B	A	30.20	33.09	34.72	37.01	39.01	44.73
	B	18.66	20.45	21.26	22.30	23.30	26.20
	C	15.58	17.12	17.94	19.08	20.08	23.00
	E	10.50	11.50	12.00	12.25	12.50	13.00
	F	1.70	2.19	2.19	3.00	3.00	5.00
	J	17.88	20.25	22.56	24.75	27.13	31.50
200B	A	30.20	n/a	34.72	n/a	n/a	n/a
	B	18.66		21.26			
	C	15.58		17.94			
	D	19.00		21.25			
	E	8.00		9.00			
	F	1.70		2.19			
	G	17.00		21.25			
	J	17.88		22.56			

n/a indicates not available in these sizes.

New 3/89

See Pages E1-31 Through 33 for Ordering Instructions

Dimensions—Mueller Lineseal XP Butterfly Valves: 30"-48" Sizes.

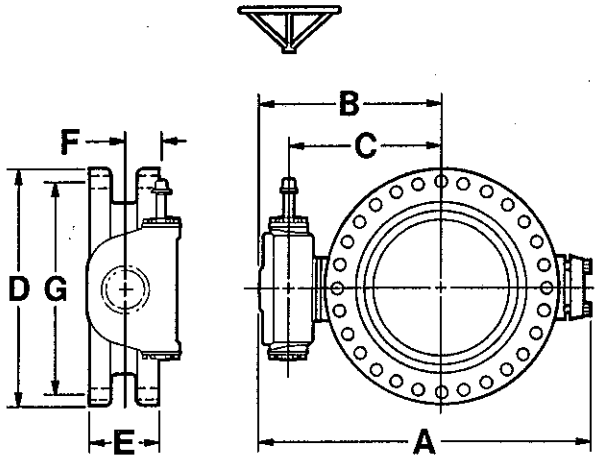

FL X FL—30" & 36"—Small Link Lever

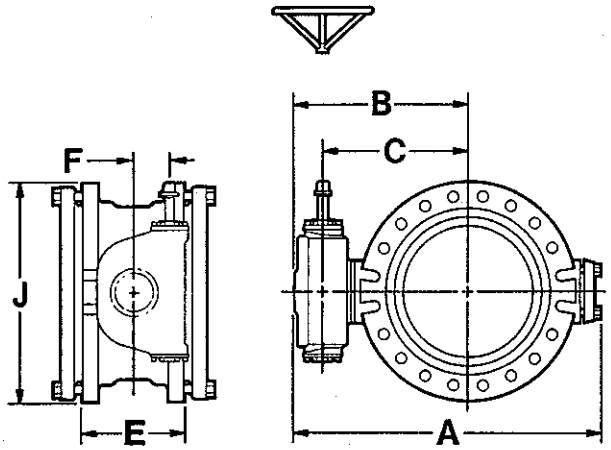

FL X FL—30" to 48"—Small Link Lever with Spur Gearing

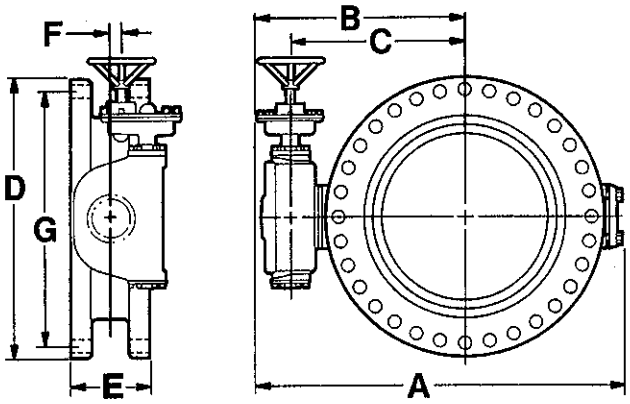

MJ X MJ—30" & 36"—Small Link Lever

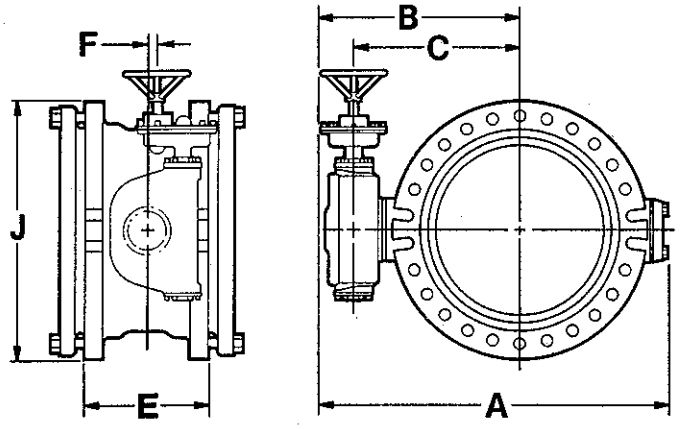

MJ X MJ—30" to 48"—Small Link Lever with Spur Gearing

	Dimensions	30" (1)	30" (2)	36"	42"	48"
250B	A	56.28	56.97	63.28	71.34	79.34
	B	32.93	33.62	36.44	41.00	45.00
	C	27.19	31.13	30.69	34.81	38.81
	D	43.00	43.00	50.00	57.00	65.00
	E	14.00	14.00	14.00	15.00	15.00
	F	6.50	2.00	2.00	5.25	5.25
	G	46.00	46.00	46.00	52.75	60.75
200B	A	54.13	—	62.57	70.76	79.87
	B	32.04	—	36.68	41.17	46.41
	C	27.04	—	30.98	35.42	40.23
	D	38.75	—	46.00	53.00	59.50
	E	12.00	—	12.00	12.00	15.00
	F	6.50	—	2.00	2.00	5.25
	G	36.00	—	42.75	49.50	56.00

(1) With wrench nut, no spur gearing
(2) With handwheel and spur gear

	Dimensions	30" (1)	30" (2)	36"	42"	48"
250B	A	54.13	54.82	61.88	70.76	79.87
	B	32.04	32.73	35.99	41.17	46.41
	C	27.04	30.98	30.98	35.42	40.23
	E	18.00	18.00	22.00	22.00	24.00
	F	6.50	2.00	2.00	5.25	5.25
	J	39.03	39.03	45.91	53.03	59.91
200B	A	54.13	—	62.57	70.76	79.87
	B	32.04	—	36.68	41.17	46.41
	C	27.04	—	30.98	35.42	40.23
	E	18.00	—	12.00	22.00	24.00
	F	6.50	—	6.50	2.00	5.25
	J	39.03	—	39.03	53.03	59.91

See Pages E1-31 Through 33 for Ordering Instructions

Dimensions - Handwheels

Handwheel Diameter (inches)

	Valve Diameters									
	12"	14"	16"	18"	20"	24"	30"	36"	42"	48"
Class 250B	18	24	30	30	36	36	18	24	18	30
Class 200B	18	18	24	24	30	36	36	18	24	24
Class 150B	12	18	24	18	24	30	30	12	18	24
Class 150A	12	18	24	18	24	24	24	42	18	18
Class 75B	12	18	18	18	18	18	24	36	18	18
Class 75A	12	18	18	18	18	18	24	36	30	12
Class 25B	12	12	12	12	18	12	18	24	36	18
Class 25A	12	12	12	12	18	12	12	18	24	30

See Pages E1-31 Through 33 for Ordering Instructions

Butterfly Valve Options

2" Wrench Nut or Handwheel

Available in all sizes and classes.

Actuators

A wide selection of cylinder, manual worm gear, electric motor and floorstand mounted actuators.

A wide selection of manual, wormgear, cylinder, electric motor, and floorstand mounted actuators are available. Valves 12" through 54" are supplied with Mueller Traveling Nut Actuators as standard (smaller valves use "scotch yoke" design; larger use link lever design). On valves 12" through 24". Mueller HT actuators rated at 450 ft. lb. (against the stops) are standard and are available as an option on valves up to 48".

Integral Disc Position Indicator

All Mueller manual actuators are available with an integral disc position indicator.

Extended Bonnet and Torque Tube

Extended bonnets and torque tubes are available for all Mueller Butterfly Valves. The torque tube can also be used with floor stands.

Resilient Seat

Buna-N (Nitrile) rubber seats and EPDM rubber seats are available instead of the standard natural rubber seat on disc.

Stainless Steel Body Seat Ring and Shaft

The body seat ring and shafts are available in type 316 stainless steel instead of the standard type 304 stainless steel.

Stainless Steel External Fasteners

Stainless Steel (type 304) external fasteners are available to replace our regular steel fasteners.

Paint and Coating

Asphalt varnish is standard. The following options are available:

Epoxy Coating

MUELLER HP® Epoxy Coating is a two part thermosetting epoxy protective coating that functions as a physical, chemical and electrical barrier between the base metal to which it is applied and the surroundings.

The coating is non-toxic and imparts no taste to water. MUELLER HP Coating is formulated from materials deemed acceptable per the FOOD AND DRUG ADMINISTRATION DOCUMENT TITLE 21 OF THE FEDERAL REGULATIONS ON FOOD ADDITIVES, SECTION 121.2514 entitled, "RESINS AND POLYMERIC COATINGS."

This coating is also listed as acceptable for use with potable water by the Federal EPA. EPA File No. 2-4AEB82.

MUELLER HP Epoxy Coating also meets AWWA C550 and ASTM D1763 Standards.

The MUELLER HP Epoxy Coating has a finish which requires no (surface preparation) for field touch-up overcoating. This coating will also accept any commercial paint with no special surface preparation required and serves as an excellent primer. MUELLER valves ordered with the HP Epoxy Coating option will be provided with a 10 mil nominal thickness unless otherwise specified.

MUELLER Butterfly Valves may be ordered with optional HP Epoxy Coating as follows:

on disc only
on interior waterway including disc
on interior waterway including disc with "holiday" testing
on interior and exterior
on interior only
on interior and exterior with "holiday" testing coating thickness greater than 10 mil

A touch-up kit, part number 680356 is also available.

Special Paint Requirements

Mueller can help you with most of your special paint needs with price and delivery information available on request.

See Pages E1-31 Through 33 for Ordering Instructions

Butterfly Valve Accessories-

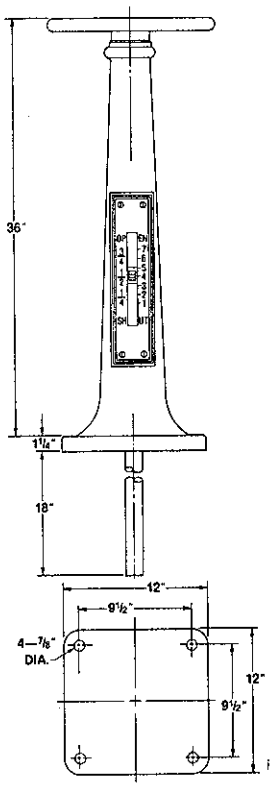

FLOOR STANDS

Non-Indicating Floor Stand for 12"—72" Butterfly Valves *having manual actuators.* Non-rising stem type, with handwheel stem and coupling provided.

Indicating Type Floor Stand for 12"—72" Butterfly Valves *having manual actuators.* Non-rising stem type with handwheel. Stem and coupling provided.

ORDERING INSTRUCTIONS : Note type of Floor Stand required on page E1-31.

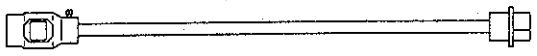

EXTENSION STEMS

A-26446: Extension Stem. 2" square wrench nut on top end and socket to fit 2" square nut on bottom end. For use with 12"—48" Butterfly Valves.

A-26450: Same as A-26446 except top of stem is plain. (Not illustrated.)

***ORDERING INSTRUCTIONS* for Extension Stems: Specify quantity, catalog number, size of valve, direction of opening (A-26446 only) and length.**

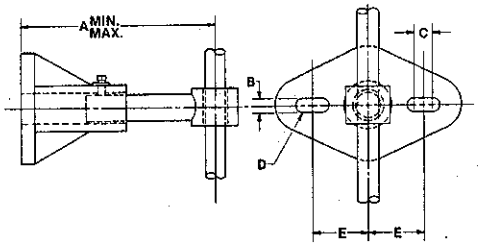

STEM GUIDES

A-26448: Stem Guide, adjustagble type A-25448-00: Same as above but with bronze bushing in shaft guide.
A-26449: Stem guide, adjustable type A-26449-00: Same as above but with bronze bushing in shaft guide.

***ORDERING INSTRUCTIONS:* Specify quantity, catalog number, size number, stem diameter, and distance from face of wall to center of stem.**

Dimensions In Inches

Catalog Number	Valve Size	Maximum Stem Size	A	B	C	D	E	F	G	H	I	K
A-26448/ A-26448-00	#1	1-1/2	3—4	3	1	3/4	3/4	5/8—2				
	#2	1-1/2	4—5	3	1	3/4	3/4	5/8—2				
	#3	1-1/2	5—7	3	1	3/4	3/4	5/8—2				
	#4	1-1/2	7—10	3	1	3/4	3/4	5/8—2				
	#5	2	10—13	3-3/4	—	3/4	3/4	5/8—2	10			6
	#6	2	13—16	3-3/4	—	3/4	3/4	5/8—2	10			6
	#7	2	16—19	3-3/4	—	3/4	3/4	5/8—2	10			6
	#8	2	19—22	3-3/4	—	3/4	3/4	5/8—2	10			6
	#9	2	22—25	3-3/4	—	3/4	3/4	5/8—2	10			6
A-26449/ A-26449-00	#1	2	2-1/2—7	4	1	3/4	3/4	5/8—2	11	2-1/8	—	4-3/8
	#2	2	6—12	4	1	3/4	3/4	5/8—4	11	2-1/8	3	6-3/8
	#3	2	11—18	4	1	3/4	3/4	5/8—4	11	2-1/8	3	6-3/8
	#4	2	17—24	4	1	3/4	3/4	5/8—4	11	2-1/8	6	9-3/8
	#5	2	23—30	4	1	3/4	3/4	5/8—4	11	2-1/8	6	9-3/8

See Pages E1-31 Through 33 for Ordering Instructions

Butterfly Valve Accessories—Continued

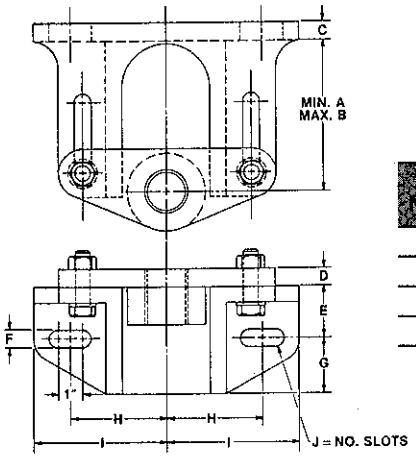

FLOOR STAND BRACKET

A-27020: Floor Stand Bracket—For use with A-26410, A-26412 and A-26425 Floor Stands.

Adjustments in Inches and Dimensions For Size Numbers #1—#2B

Size Number	Adjustment		Dimensions							
	Min (A)	Max (B)	C	D	E	F	G	H	I	J
#1	3	7	7/8	5-1/2	4-1/2	1-1/8	2-1/2	4-1/2	6-1/4	4
#2	7	11	7/8	5-1/2	4-1/2	1-1/8	2-1/2	4-1/2	6-1/4	4
#2A	11	15	7/8	5-1/2	4-1/2	1-1/8	2-1/2	4-1/2	6-1/4	4
#2B	15	19	7/8	8-1/2	4-1/2	1-1/8	2-1/2	4-1/2	6-1/4	4

***ORDERING INSTRUCTIONS*: Specify quantity, catalog number and size.**

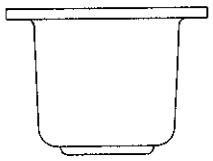

FLOOR BOX

A-27020: Floor Box for 2" square wrench nut and non-locking lid.

***ORDERING INSTRUCTIONS* : Specify quantity, catalog number and stem diameter.**

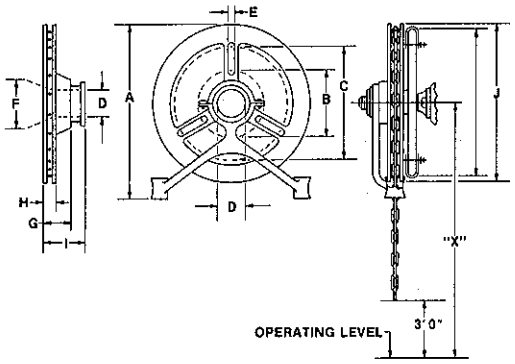

CHAIN WHEEL

The chain wheel consists of a sprocket rim which attaches directly to the valve handwheel and a guide arm which attaches to the sprocket rim and guides the chain. The chain is ordered separately.

Dimensions In Inches

Chain Size No.	Valve Hand Wheel O.D. Range	Chain Wheel Part Number	Chain Part Number (Hot Dipped Galvanized)**	A	B	C	D	E	F	G	H	I	J
2	7-3/4	193810	193811	10-1/2	4-1/2	6-5/8	2-1/8	3/8	3-1/8	1-3/8	1-1/8	2-3/8	9
2-1/2	9-1/4—12-1/2	193429	193811	12-1/2	5-1/2	9-1/4	2-1/2	7/16	3-1/2	1-7/8	1-1/4	2-5/8	12-1/2
3	12-3/4—15-1/2	193085	193811	15-1/2	8-1/2	12-3/4	2-1/8	7/16	3-1/2	1-7/8	1-1/4	2-5/8	15-1/2
3-1/2	15-3/4—19	193799	193086	18-1/2	12	15-1/2	3	7/16	4-7/8	1-7/8	1-1/4	3-1/8	19
4	19-1/4—22	194494	193086	21-1/2	12	18	3	5/8	4-7/8	1-7/8	1-1/2	3-1/8	22
4-1/2	22-1/4	194494	194495	25-3/4	16	22	3	5/8	4-5/8	1-7/8	1-1/2	3-1/8	26
	26-1/4—30*	194519	194495	30	19	25-1/2	3	5/8	4-3/4	2	1-5/8	3-1/8	30

* Special attachment clamps available will accommodate up to 36" O.D. Valve Hand Wheel (this is considered a Special Order)

** Brass or stainless steel chain available. To figure chain length, measure from centerline of valve handwheel down to desired height above floor and multiply this distance by 2 and add this length to *Chain Length Adder.*

***ORDERING INSTRUCTIONS:* Specify quantity, chain wheel part number, chain length, chain part number and diameter of valve handwheel.**

GROUND LEVEL VALVE BOX POSITION INDICATOR: Ground level valve box position indicators are available on request.

See Pages E1-31 Through 33 for Ordering Instructions

AIR\VACUUM VALVE

AIR AND VACUUM VALVES

Only APCO® Gives Guaranteed Protection

1. Gives absolute protection to pipe lines
2. Eliminates risk of collapsing line due to vacuum
3. Exhausts air when line is filled
4. Allows air to re-enter immediately when line drains

Plus these exclusive features at no extra cost!

5. Stainless steel floats—Guaranteed individually tested
6. ASTM quality materials guaranteed throughout
7. Every valve hydrostatically, factory tested

Why and Where To Use Air and Vacuum Valves

An Air and Vacuum Valve has a large venting orifice and is used to exhaust large quantities of air from a pipeline when being filled or a deep well pump column when the pump is started, etc. Once the line is filled the Air and Vacuum Valve closes and remains closed until the liquid is drained and pressure returns to atmospheric. The Air and Vacuum Valve will then immediately open to allow air to re-enter the line and prevent a vacuum from developing.

Air and Vacuum Valves do NOT open to exhaust the small pockets of air which collect in the line while it is operating under pressure. We highly recommend for **maximum** pipeline flow and pump efficiency Automatic Air Release Valves be used in conjunction with these Air and Vacuum Valves. The Automatic Air Release Valve will eliminate constricting air pockets from forming at the high points of the pipeline.

The minimal cost for the Automatic Air Release Valve will quickly pay for itself in minimizing head loss thru the pipeline realizing energy savings.

pipeline realizing energy savings.

*SEE BULLETIN 586-AIR VALVES FOR VERTICAL TURBINE PUMPS

AVAILABLE FOR SERVICE UP TO 1000 P.S.I.

SPECIFY OPERATING PRESSURE IF BELOW 150 P.S.I.

PHYSICAL DIMENSIONS

MODEL	SIZE	HEIGHT	MAXIMUM DIAMETER	INLET	OUTLET	WEIGHT LBS.
141	½"	7 1/16	5⅛	½" NPT	½" NPT	10
142	1"	9	7	1" NPT	1" NPT	22
144	2"	12	9½	2" NPT	2" NPT	55
146	3"	13⅝	9 7/16	3" NPT OR FLANGED	3" NPT	160
152	4"	18⅞	12	4" NPT OR FLANGED	4" PLAIN	100
153	6"	21¾	16	6" FLANGED	6" PLAIN	150
154	8"	25	18	8" FLANGED	8" PLAIN	200
155	10"	27⅜	20	10" FLANGED	10" PLAIN	350
156	12"	30⅜	25	12" FLANGED	12" PLAIN	500
157	14"	30¾	29	14" FLANGED	14" PLAIN	625
158	16"	31¾	32	16" FLANGED	16" PLAIN	830
159	18"	43½	34	18" FLANGED	18" PLAIN	1100
160	20"	48	40	20" FLANGED	20" PLAIN	1650
162	24"	58	48	24" FLANGED	24" PLAIN	2600

ON SIZES 4" AND LARGER THE PLAIN OUTLET COMES WITH PROTECTOR HOOD, AS ILLUSTRATED. HOWEVER THREADED OR FLANGED OUTLETS ARE AVAILABLE AND RECOMMENDED, WHEN VALVES ARE USED INSIDE THE PUMP HOUSE.

SERIES 140

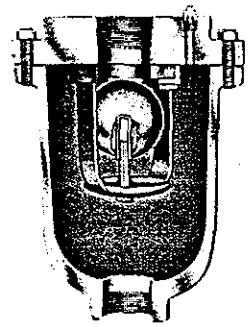

½ INCH THRU 3 INCH

OUTLETS ARE NPT THREADED. IT IS GOOD PRACTICE TO INSTALL A STREET ELBOW INTO THE THREADED OUTLET FOR DISCHARGE PROTECTION.

SERIES 150

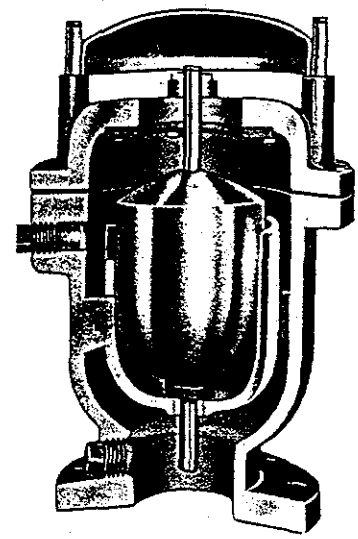

4 INCH THRU 30 INCH

OUTLETS ARE PLAIN WITH A STEEL PROTECTOR HOOD.

Replace Shut-Off Valves with APCO Butterfly Valves

Costs to excavate pipeline trenches can be greatly reduced by using APCO Butterfly Valves for isolation instead of gate valves.

APCO Butterfly Valves are economical, reliable and much shorter, permitting a reduction in depth of trench. See Below.

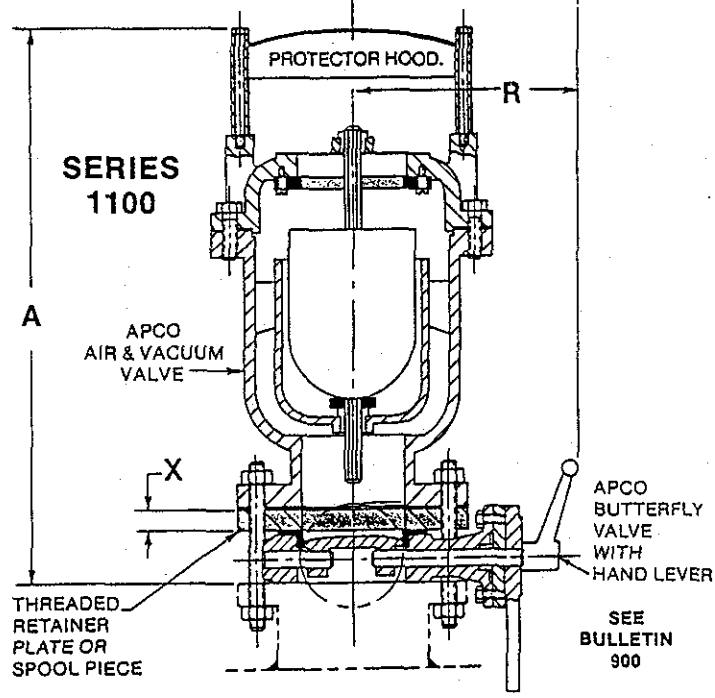

VALVE SIZE	MODEL NO.	COMBINATION	A	R	X	NO. REQUIRED & SIZE STUDS	NO. REQUIRED & SIZE NUTS
4"	1104	152 / 904	21½	9½	15/16	(8) 5/8-11x6-1/2 LG.	(16) 5/8-11
6"	1106	153 / 906	25¼	10¾	1	(8) 3/4-10x8 LG.	(16) 3/4-10
8"	1108	154 / 908	29	14¼	1½	(8) 3/4-10x9 LG.	(16) 3/4-10
10"	1110	155 / 910	32	14½	2	(12) 7/8-9x10 LG.	(24) 7/8-9
*12"	1112	156 / 912	39¾	15	5	(12) 7/8-9x8-1/2 LG.	(24) 7/8-9
*14"	1114	157 / 914	40	16¾	5	(12) 1-8x9 LG.	(24) 1-8
16"	1116	158L / 916	42¾	17¾	1-7/16	(16) 1-8x11 LG.	(32) 1-8

*USES SPOOL PIECE

—ADDITIONAL AIR VALVE INFORMATION— BULLETIN

WHICH AIR VALVE SHOULD I USE? 610
COMBINATION AIR VALVES 623
AIR VALVES FOR VERTICAL TURBINE PUMPS 586
SLOW CLOSING AIR AND VACUUM VALVES 613
HYDRAULICALLY CONTROLLED AIR AND VACUUM VALVES 7000

TYPICAL PIPELINE SHOWING ITS HYDRAULIC GRADIENT & THE POSITION OF NECESSARY APCO AIR VALVES

WHERE TO INSTALL

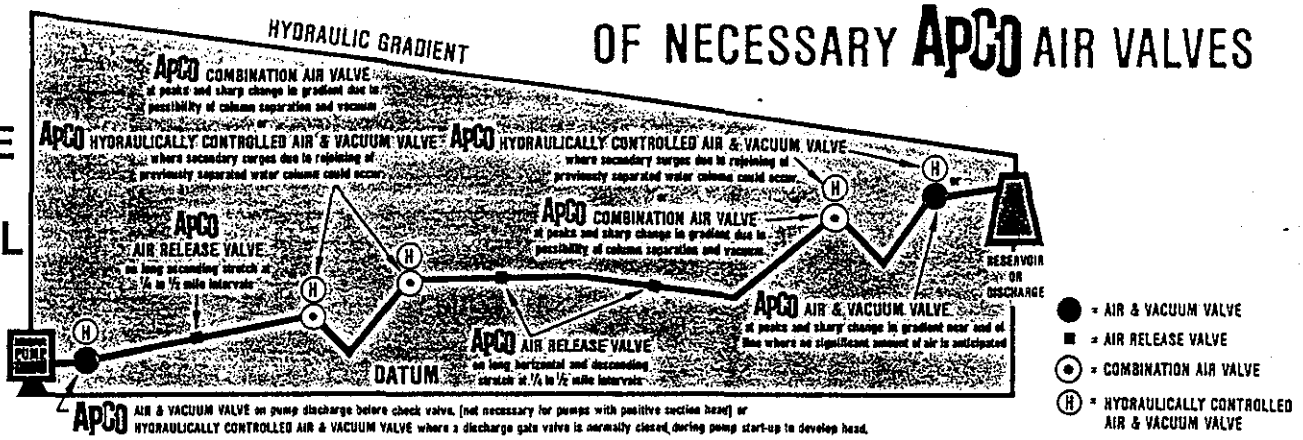

SIZING AIR AND VACUUM VALVES FOR PIPELINES

GENERAL EXPLANATION OF CRITERIA USED

1. Calculate necessary valves independently for each high point in line.
2. Consider more severe of the two gradients adjacent to each high point.
3. Determine maximum rate of flow in cubic feet per second which can occur in this gradient both filling and draining of line. Always be sure to take highest possible rate of flow under either circumstance, gravity or pump flow.

To calculate rate of flow:

If line is being filled by pump

$$\text{Rate of flow C.F.S.} = \frac{\text{GPM of pump}}{449}$$

If line is being filled or drained by gravity

$$\text{Rate of flow in C.F.S.} = 0.08666\ (SD^5)^{1/2}$$

Where S = Slope (in feet per foot of length)
D = Diameter of pipe (inches)

4. Valve to be installed at this high point must release or re-enter amount of air in C.F.S. equal to maximum possible flow of water in C.F.S. immediately adjacent to this high point just calculated.
5. To economize in size of valves selected, final step is determine maximum pressure differential which can be tolerated across valve orifice consistent with required flow of air in C.F.S. already determined.
6. To determine this maximum tolerable differential pressure, it is necessary to calculate *if there is risk of line collapse from vacuum, a condition usually* only present in thin-walled steel lines above 24". To calculate collapsing pressure for thin-walled-cylindrical pipe.

$$P = 12500000 \left(\frac{T}{D}\right)^3$$

Where P = Collapsing pressure (PSI)
T = Thickness of pipe (inches)
D = Diameter of pipe (inches)
Includes Safety Factor of 4

7. Use the maximum pressure differential thus calculated or, 5 psi whichever is lower. Enter the graph with this differential (Never greater than 5 psi) and the flow found during draining to select the appropriate valve to protect your line from collapse and water column separation due to vacuum.
8. Next enter the graph with the maximum rate at which the line can be filled, and use a 2 psi differential pressure. This valve size is sufficient to vent all air from the line before valve closure. This ensures maximum performance from the line.
9. Compare the sizes calculated in steps 7 & 8 - whichever is larger is correct for the total protection of your system.
10. These valves should be installed on the high point with a shut-off valve below them.
11. The same procedure should be followed for each individual high point.
12. If the line lacks clearly defined high points, or they are separated by long stretches of uniform gradient, it is recommended that the proper valves be selected as explained above and duplicate installations be made at regular intervals of ¼ to ½ mile at the engineer's discretion.

To Ensure Maximum Capacity from the Pipe Line

When a line is in operation, Air Pockets collect both at the high point and for a distance down stream from the high point. To release this Air, install the APCO Air and Vacuum Valve along with a 2"—APCO No. 200 Air Release Valve at the high point and a second Air Release Valve a short distance down stream.

SIZING
USE APCO SLIDE RULE AIR VALVE COMPUTER

FOR ACCURATE SIZE SELECTION

PERFORMANCE GRAPH FOR AIR AND VACUUM VALVE

AIR INFLOW/OUTFLOW THRU VALVE IN STANDARD CUBIC FEET OF FREE AIR PER SECOND, (SCFS)

CURVES SHOWN ARE ACTUAL FLOW CAPACITIES AT 14.7 PSI BAROMETRIC PRESSURE AND AT 70° F TEMPERATURE BASE ON ACTUAL TEST.

THESE FIGURES ARE NOT MERELY FLOW CAPACITIES ACROSS THE ORIFICE, BUT FLOW CAPACITIES ACROSS THE ENTIRE VALVE.

IN THE TEST SET-UP, AIR APPROACH VELOCITY IS NEGLIGIBLE THEREFORE, ACTUAL FLOW CAPACITY EXCEEDS THE VALUES SHOWN ON CHART.

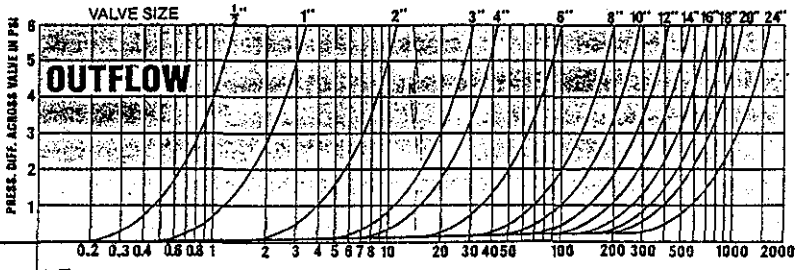

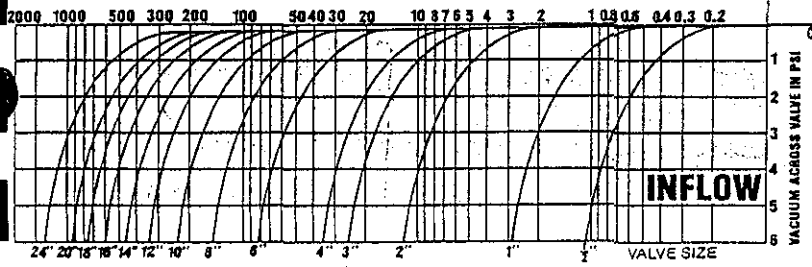

TEST CONDUCTED BY:

PHILLIP PETROLEUM COMPANY
ENGINEERING DEPARTMENT — TEST DIVISION
EDMOND PLANT FEB. 2, 1961

SOUTHERN RESEARCH INSTITUTE
BIRMINGHAM, ALABAMA MAY 8, 1959

TYPICAL AIR VALVE MANHOLE INSTALLATION

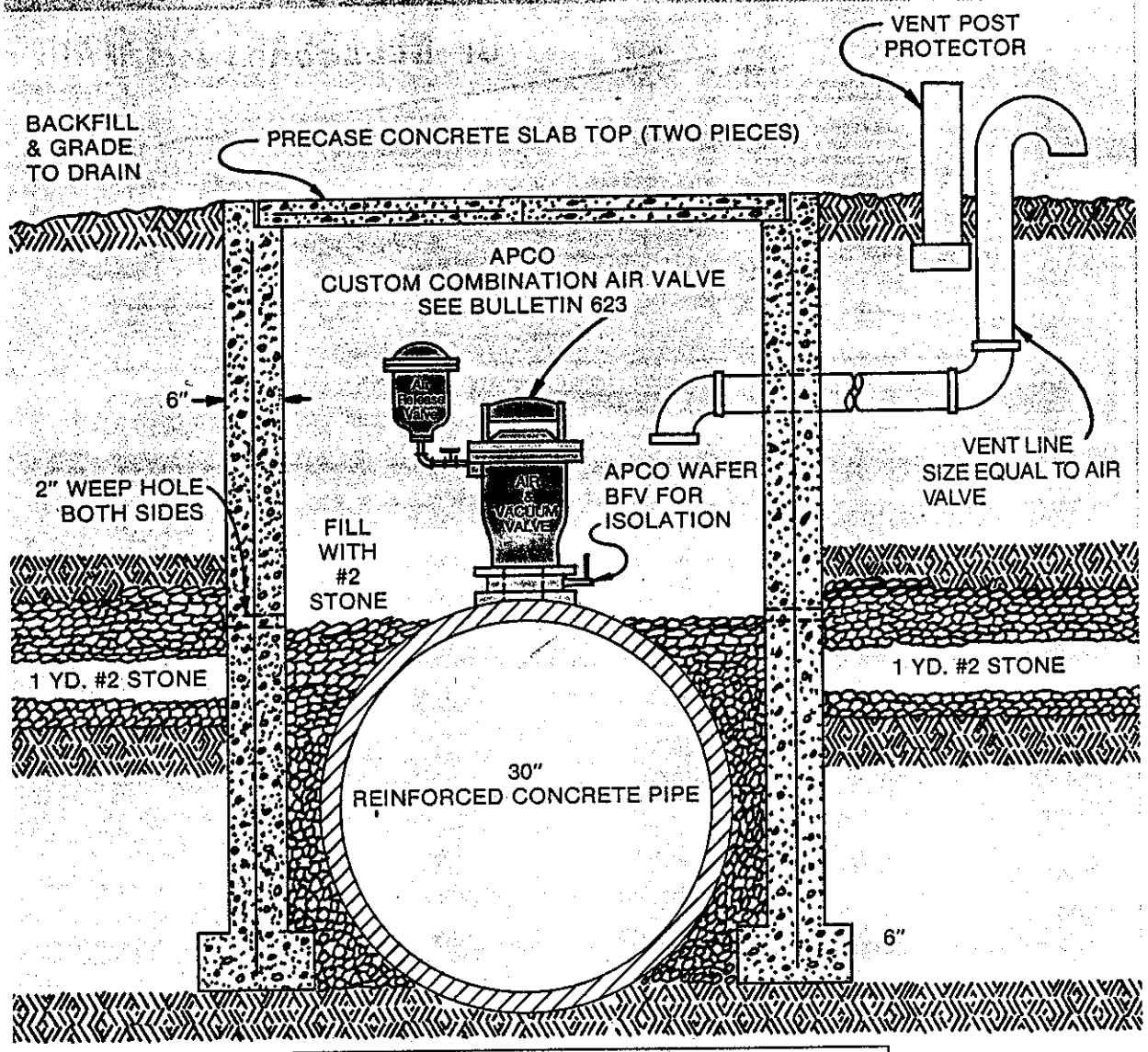

"VALVE & PRIMER CORPORATION HEREBY RESERVES THE RIGHT TO CHANGE ANY COMPONENT PARTS WHICH, IN THE OPINION OF ITS' ENGINEERING DEPARTMENT, WILL IMPROVE THE PRODUCT OR INCREASE ITS' SERVICEABILITY."

SPECIFICATIONS

Air & Vacuum Valve shall be designed to allow large quantities of air to escape out the orifice when filling a pipeline and to close water tight when the liquid enters the valve. The Air & Vacuum Valve shall also permit large quantities of air to enter thru the orifice when the pipeline is being drained to break the vacuum. The discharge orifice area shall be equal or greater than the inlet of the valve.

The valve shall consist of a body, cover, baffle, float and seat. The baffle will be designed to protect the float from direct contact of the rushing air and water to prevent the float from closing prematurely in the valve. The seat shall be fastened into the valve cover, without distortion, and shall be easily removed, if necessary. The float shall be stainless steel designed to withstand a maximum of 1000 psi. The float shall be center guided for positive shutoff into the seat.

Air & Vacuum Valves shall be sizes ½" thru 3" and shall have NPT threaded outlets for installation of street elbow. Sizes 4" thru 30" shall have plain outlet with steel protector hood.

All materials of construction shall be certified in writing to conform to A.S.T.M. specifications as follows:

Body, cover	Cast iron	ASTM A126 Gr. B
Float	Stainless steel	ASTM A240
Seat	Buna-N	
Exterior paint	Phenolic primer Red Oxide	FDA Approved for Potable Water Contact
Protector Hood	Steel	

Valve to be APCO Series 140/150 Air & Vacuum Valve, as manufactured by Valve & Primer Corp., Schaumburg, Illinois, U.S.A.