arthur beard engineers, Inc.
4628 N. 17TH ST., STE. H-105, PHOENIX, AZ 85016-4653 - (602) 266-8469

CALCULATIONS FOR

43RD AVENUE STORM SEWER

UNION HILLS DRIVE TO YORKSHIRE DRIVE

ST-883017, WORK ORDER NO. 59340

Property of
Flood Control District of MC Library
Please Return to:
2801 W. Durango
Phoenix, AZ 85009

Registered Professional Engineer (Civil)
CERTIFICATE NO.
1453
ARTHUR H.
BEARD, JR.
Date Signed 1-15-90
ARIZONA, U.S.A.

CATCH BASIN DEPTHS

&

CONNECTOR PIPE SIZING

arthur beard engineers, inc. Revised 10/30/89 JM

PROJECT YORKSHIRE DR. PROJ. NO. 1249
SUBJECT CB Depths & Connector Pipe Sizing* CLIENT COP
COMP BY JM DATE 8/3/89 CKD BY _____ DATE _____ SHEET 1 OF 9

CB #8 Type 'N' Double Grate (Sta 54+38)

CB Capacity, $Q_{10\text{-}yr} = 19.8$ cfs (*Summary on pg 9)

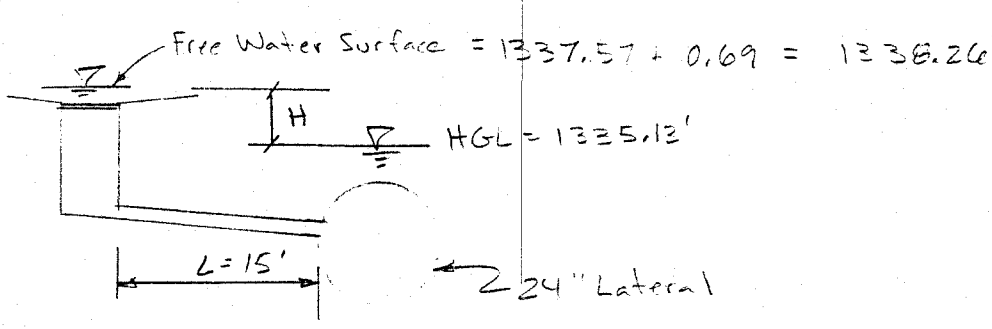

$H = 1338.26 - 1335.13 = 3.13'$

From Fig. pg 31 COP, SD Design Manual; using, $H = 3.1'$, $Q = 19.8$, $L = 15'$

$\therefore$ Pipe Dia. = 18" $V = \frac{Q}{A} = \frac{19.8}{1.767} = 11.2$ fps

Entrance Loss: $\frac{.3V^2}{2g} = \frac{0.3(11.2)^2}{64.4} = 0.59'$ $\therefore H = 4 - .59 = 3.41'$

$\therefore$ **D = 18"**

Depth, V $D.CB = 1.17' + 1.15\frac{V^2}{2g} + d$; where; V = vel. in connector pipe, d = dia. of connector pipe

$D.CB = 1.17 + \frac{1.15(11.2)^2}{64.4} + \frac{18}{12} = 4.91 \rightarrow$ **use 5.0'**

arthur beard engineers, Inc.

PROJECT _____ PROJ. NO. _____
SUBJECT _____ CLIENT _____

COMP BY _____ DATE _____ CKD BY _____ DATE _____ SHEET 2 OF 9

CB #7 Type 'N' Single Grate (Sta 44+20)

CB Capacity, $Q_{10-yr} = 34.4$ cfs

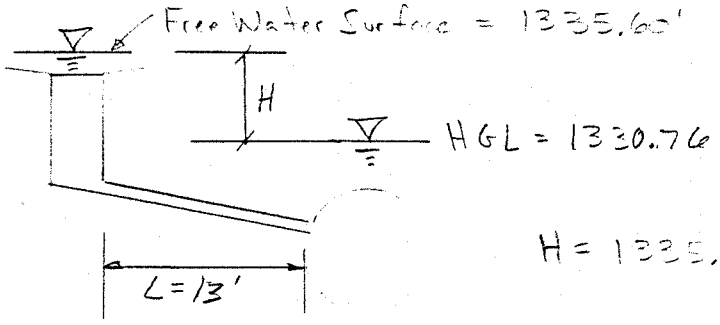

$H = 1335.60 - 1330.76 = 4.84'$

From Fig. pg 31 COP, SD Design Manual w/ $H = 4.84'$, $Q = 34.4$ cfs & $L = 13'$

$\therefore D = 21''$ $V = \frac{Q}{A} = \frac{34.4}{2.405} = 14.3$ fps

Entrance Loss: $\frac{.3V^2}{2g} = \frac{0.3(14.3)^2}{64.4} = 0.95'$

$H = 4.84 - 0.95 = 3.98'$

$\therefore$ revised $\boxed{D = 21''}$

Depth, V $D.CB = 1.17 + \frac{1.15V^2}{2g} + d$

$= 1.17 + \frac{1.15(34.4/2.405)^2}{64.4} + 1.5 = 6.24'$ use $\boxed{6.25'}$

arthur beard engineers, Inc.

PROJECT _____ PROJ. NO. _____
SUBJECT _____ CLIENT _____

COMP BY _____ DATE _____ CKD BY _____ DATE _____ SHEET 3 OF 9

CB #6 Type 'N' Double Grate (Sta 41+20)

CB Capacity = 8.8 cfs (10-yr)

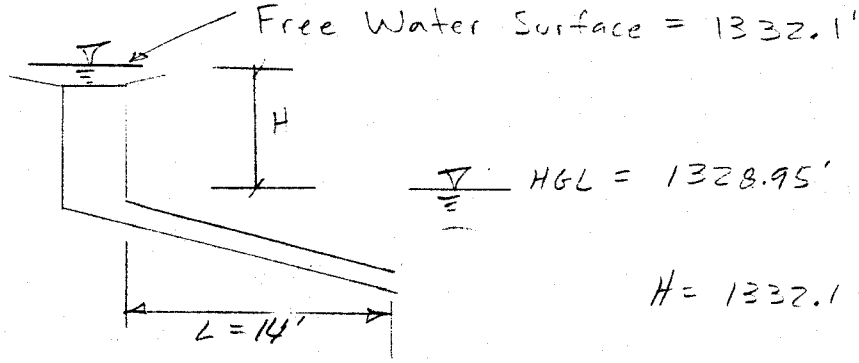

$H = 1332.1 - 1328.9 = 3.2'$

From Fig. pg 31 COP, SD Design Manual w/ $H = 3.2'$, $Q = 8.8$ cfs & $L = 14'$

$\therefore D = 15''$

Entrance Loss: $\frac{0.3V^2}{2g} = \frac{0.3\left(8.8/1.227\right)^2}{64.4} = 0.24'$

$H = 3.3 - 0.24 = 3.06'$

$\therefore$ **D = 15"**

Depth, V $D.CB = 1.17 + \frac{1.15V^2}{2g} + d$

$= 1.17 + \frac{1.15\left(8.8/1.227\right)^2}{64.4} + \frac{15}{12} = 3.4$ **use 4'-0"**

arthur beard engineers, inc.

PROJECT _____ PROJ. NO. _____
SUBJECT _____ CLIENT _____

COMP BY _____ DATE _____ CKD BY _____ DATE _____ SHEET 4 OF 9

CB #5 Type 'N' Double Grate (Sta 37+10)

CB Capacity = 21.5 cfs (10-yr storm)

Free Water Surface = 1328.96'

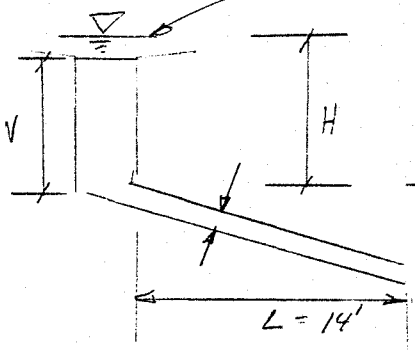

HGL = 1325.90'

H = 1328.96 - 1325.98 = 2.9'

From Fig. pg 31 CIP, SD Design Manual w/ H = 2.9, Q = 21.5 cfs, & L = 14'

∴ D = 15"

Entrance Loss: $\frac{0.3V^2}{2g} = \frac{0.3(21.5/1.227)^2}{64.4} = 1.43'$

H = 2.98 - 1.43 = 1.55

∴ revised $\boxed{D = 21''}$

Depth, V $D.CB = 1.17 + \frac{1.15V^2}{2g} + d$

$= 1.17 + \frac{1.15(21.5/1.405)^2}{64.4} + 1.5 = 4.09'$

$\boxed{\text{USE } 4'-0''}$

arthur beard engineers, inc.

PROJECT _____ PROJ. NO. _____
SUBJECT _____ CLIENT _____

COMP BY _____ DATE _____ CKD BY _____ DATE _____ SHEET 5 OF 9

CB #4 Type 'N' Double Grate (Sta 29+70)

CB Capacity = 30.1 cfs (10-yr storm)

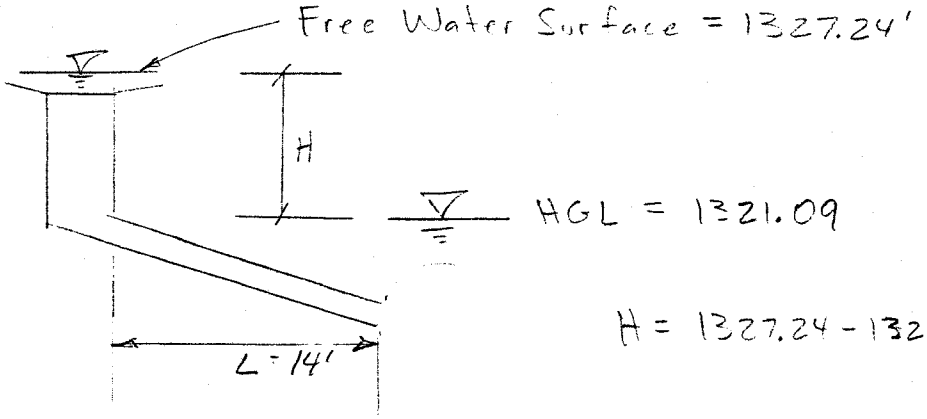

$H = 1327.24 - 1321.09 = 6.15'$

From COP SD Design Manual, pg 31 w/ $H = 6.2$, $Q = 30.1$ cfs, & $L = 14'$

$\therefore D = 18''$

Entrance Loss: $\frac{0.3V^2}{2g} = \frac{0.3(30.1/1.767)^2}{64.4} = 1.35'$

$H = 6.2 - 1.35 = 4.87'$

$\therefore$ $\boxed{D = 21''}$

Depth V $D.CB = 1.17 + \frac{1.15V^2}{2g} + d$

$= 1.17 + \frac{1.15(30.1/2.405)^2}{64.4} + 1.5 = 5.46'$

$\boxed{\text{USE } 5'-6''}$

arthur beard engineers, inc.

PROJECT _____ PROJ. NO. _____
SUBJECT _____ CLIENT _____

COMP BY _____ DATE _____ CKD BY _____ DATE _____ SHEET 6 OF 9

CB #3 Type 'N' Double Grate (Sta 23+10)

CB Capacity = 12.5 cfs

Free Water Surface = 1323.22'

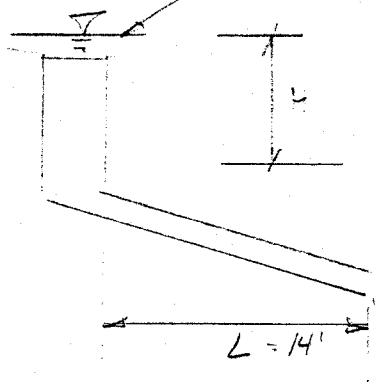

HGL = 1317.27

H = 1323.22 - 1317.27 = 5.95'

From COP SD Design Manual, pg 31 w/ H = 6.0', Q = 12.5 cfs, & L = 14'

∴ D = 15"

Entrance Loss: $\frac{0.3V^2}{2g} = \frac{0.3(12.5/1.227)^2}{64.4} = 0.48'$

H = 6.23 - 0.48 = 5.75'

∴ revised $\boxed{D = 15''}$

Depth V $D_1 CB = 1.17 + \frac{1.15V^2}{2g} + d$

$= 1.17 + \frac{1.15(12.5/1.227)^2}{64.4} + \frac{15}{12} = 4.27'$

$\boxed{\text{USE } 4'-4''}$

arthur beard engineers, inc.

PROJECT _____ PROJ. NO. _____
SUBJECT _____ CLIENT _____

COMP BY _____ DATE _____ CKD BY _____ DATE _____ SHEET 7 OF 9

CB #2 Type 'N' Double Grate (Sta 15+90)

CB Capacity = 20.6

Free Water Surface = 1321.17'

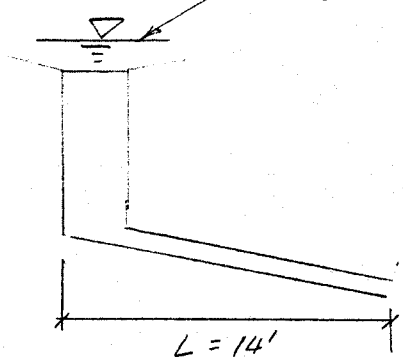

HGL = 1311.47'

$H = 1321.17 - 1311.47 = 9.7'$

From COP SD Design Manual, pg 31 w/ H = 9.7, Q = 20.6 cfs, & L = 14'

∴ D = 15"

Entrance Loss: $\frac{0.3V^2}{2g} = \frac{0.3(20.6/1.227)^2}{64.4} = 0.39'$

$H = 9.70 - 0.39 = 9.31$

∴ revised $\boxed{D = 15''}$

Depth, V $\quad D.CB = 1.17 + \frac{1.15V^2}{2g} + d$

$= 1.17 + \frac{1.15(20.6/1.227)^2}{64.4} + \frac{15}{12} = 7.45'$

$\boxed{\text{Use } 7'\text{-}6''}$

arthur beard engineers, inc.

PROJECT _____ PROJ. NO. _____
SUBJECT _____ CLIENT _____

COMP BY _____ DATE _____ CKD BY _____ DATE _____ SHEET 8 OF 9

CB #1 Type 'N' Triple Grate (Sta 114.20)

CB Capacity = 14.9 cfs

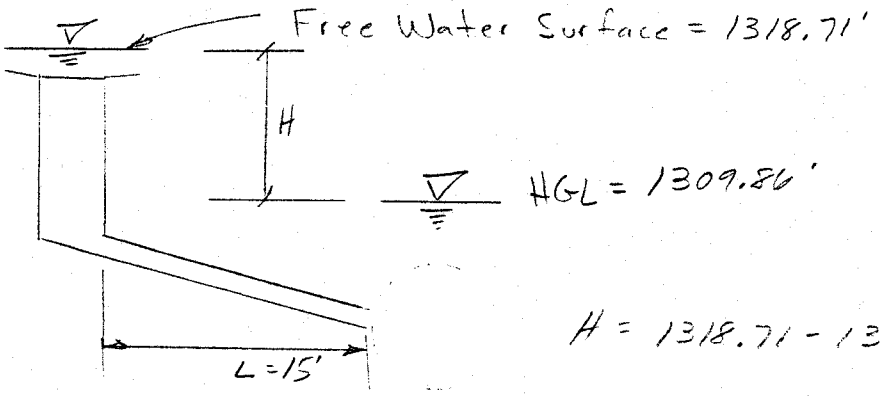

$H = 1318.71 - 1309.86 = 8.85'$

From COP SD Design Manual, pg 31 w/ $H = 8.85'$ $Q = 14.9$ cfs, & $L = 15'$

$\therefore D = 15''$

Entrance Loss: $\frac{0.3V^2}{2g} = \frac{0.3(14.9/1.227)^2}{64.4} = 0.69'$

$H = 8.85 - 0.69 = 8.16'$

$\therefore$ revised $\boxed{D = 15''}$

Depth, V $\quad D.\ CB = 1.17 + \frac{1.15V^2}{2g} + d$

$= 1.17 + \frac{1.15(14.9/1.227)^2}{64.4} + \frac{15}{12} = 5.05'$

$\boxed{\text{USE } 5'\text{-}0''}$

arthur beard engineers, Inc.

PROJECT
SUBJECT
PROJ. NO.
CLIENT

COMP BY DATE CKD BY DATE SHEET 9 OF 9

SUMMARY

CB	Size Pipe	Depth
8	18"	5'-0"
7	21	6'-3"
6	15"	4'-0"
5	21"	4'-0"
4	21"	5'-6"
3	15"	4'-4"
2	15"	7'-6"
1	15"	5'-0"

HYDRAULIC & ENERGY

GRADE LINE CALCULATIONS

arthur beard engineers, inc. Revised ~~10/10/89~~ 10/30/89 JM

PROJECT 43rd AVE / YORKSHIRE S.D. Lateral
SUBJECT HGL/EGL computations
PROJ. NO.
CLIENT

COMP. BY JM DATE 8/30/89 CKD BY DATE SHEET 1 OF 12

HGL @ Sta 307+37.69 = 1297.94' {From "Project Engineering"; the downstream Engineer

HGL @ Sta 308+90 = 1298.51 {From Union Hills DR. Hydraulic Calculations

HGL @ Sta 308+33.69 = ? location of 66" lateral

$$HGL = \left(\frac{1298.51 - 1297.94}{308+90 - 307+37.69}\right) 96.3 + 1297.94 = \underline{\underline{1298.30'}}$$

H_L at connection: $\Delta Y \bar{A} = \frac{Q_2 V_2 - Q_1 V_1}{g}$

$Q_1 = 1095$ cfs $\qquad Q_2 = 1260$ cfs

$V_1 = \frac{1095}{78.54} = 13.8$ fps $\qquad V_2 = \frac{1260}{86.59} = 14.6$ fps

$$\Delta Y = \frac{1260(14.6) - 1095(13.8)}{32.2\left(\frac{86.59 + 95.03}{2}\right)} = 1.14'$$

HGL in 43rd AVE pipe = 1298.30 + 1.14 = $\boxed{\underline{\underline{1299.44'}}}$

starting point for HGL/EGL calculations

$$V = \frac{1.486}{0.013}(1.375)^{2/3}(0.0223)^{1/2} = 21.1 \text{ fps (in 66" Lateral)}$$

$$EGL = 1299.44 + \frac{(21.1)^2}{64.4} = \boxed{\underline{\underline{1306.35'}}}$$

arthur beard engineers, inc.

PROJECT _____ PROJ. NO. _____
SUBJECT _____ CLIENT _____

COMP BY _____ DATE _____ CKD BY _____ DATE _____ SHEET 2 OF 12

Sta 11+00 (Flow Straight Through MH)

$$S_F = \frac{Q}{C_1} = \left(\frac{190}{3357}\right)^2 = 0.003$$

$$H_f = S_F \cdot L = 0.003(110) = \underline{0.33'}$$

HGL (downstream of MH) = 1299.44 + 0.33 = **1299.77**

EGL (downstream of MH) = $1299.77 + \frac{7.5^2}{64.4}$ = **1300.64**

MH Losses: $H_L = K\frac{V^2}{2g} = \frac{0.1(2.6.1)^2}{64.4} = 0.69$

HGL (upstream of MH) = 1299.77 + 0.69 = **1300.46**

EGL (upstream of MH) = $1300.46 + \frac{7.5^2}{64.4}$ = **1301.33**

Sta 17+65 (MANHOLE LOSSES, FLOW STRAIGHT THROUGH)

$S_F = 0.003$ $H_{L_f} = 765(0.003) = \underline{2.30'}$

$V = \frac{1.486}{0.013}(1.375)^{2/3}(0.0028)^{1/2} = 7.5$ fps

MH $H_L = \frac{0.10(7.5)^2}{64.4} = 0.1'$

HGL (downstream of MH) = 1300.46 + 2.3 = **1302.76**

EGL (downstream of MH) = $1302.76 + \frac{7.5^2}{64.4}$ = **1303.63**

HGL (upstream of MH) = 1303.76 + 0.1 = **1302.86**

EGL (upstream of MH) = $1302.86 + \frac{7.5^2}{64.4}$ = **1303.73**

arthur beard engineers, inc.

PROJECT _____ PROJ. NO. _____
SUBJECT _____ CLIENT _____

COMP BY _____ DATE _____ CKD BY _____ DATE _____ SHEET 3 OF 12

Sta 23+50 (Manhole Losses, Transition)

$$\Delta Y(\bar{A}) = \frac{Q_2 V_2 - Q_1 V_1}{g}$$

$V_2 = 7.5$ fps $\qquad V_1 = \frac{1.486}{0.013}(1.25)^{2/3}(0.0028)^{1/2} = 7.02$ fps

$Q_2 = 191$ cfs $\qquad Q_1 = 155$ cfs

$$\Delta Y(\bar{A}) = \frac{191(7.5) - 155(7.02)}{32.2} = 10.69$$

$$\Delta Y = \frac{10.69}{(23.758 + 19.635)/2} = \underline{0.49'}$$

$H_f = 0.003(585) = \underline{1.76'}$

HGL (downstream of MH) = 1302.86 + 1.76 = **1304.62**

EGL (downstream of MH) = $1304.62 + \frac{(7.02)^2}{64.4}$ = **1305.38**

HGL (upstream of MH) = 1304.62 + 0.49 = **1305.11**

EGL (upstream of MH) = $1305.11 + \frac{(7.02)^2}{64.4}$ = **1305.87**

arthur beard engineers, inc.

PROJECT _____ PROJ. NO. _____
SUBJECT _____ CLIENT _____

COMP BY _____ DATE _____ CKD BY _____ DATE _____ SHEET 4 OF 12

Sta 30+50 (Flow Straight Through MH)

MH Losses: $H_L = \frac{0.1(7.02)^2}{64.4} = 0.1'$

$S_f = \left(\frac{155}{2604}\right)^2 = 0.00354$; $V = \frac{1.486}{0.013}(1.25)^{2/3}(0.00354)^{1/2}$

$V = 7.9$ fps

$H_{L_f} = 0.00354(700) = 2.48'$

HGL (downstream of MH) = 1305.11 + 2.48 = **1307.59**

EGL (downstream of MH) = $1307.59 + \frac{(7.9)^2}{64.4}$ = **1308.56**

HGL (upstream of MH) = 1307.59 + 0.1 = **1307.69**

EGL (upstream of MH) = $1307.69 + \frac{(7.9)^2}{64.4}$ = **1308.66**

Sta 11+40 (Flow Through MH) {Sta 36+95.30 = Sta 10+71.00 43rd AVE / YORKSHIRE}

$H_{L_f} = 0.00354(614.30) = 2.17'$

H_L due to curved section is neglected: "For radii greater than 10D the bend loss may be neglected." Handbook of Applied Hydraulics, 3rd Ed., Davis, Sorensen, 1969, pp 40-49

MH Loss: $H_L = \frac{0.1(7.9)^2}{64.4} = 0.10'$

arthur beard engineers, Inc.

PROJECT _____ PROJ. NO. _____
SUBJECT _____ CLIENT _____

COMP BY _____ DATE _____ CKD BY _____ DATE _____ SHEET 5 OF 12

Sta 11+40 (cont.)

HGL (downstream of MH) = 1307.69 + 2.17 = **1309.86**

EGL (downstream of MH) = $1309.86 + \frac{(7.9)^2}{64.4}$ = **1310.83**

HGL (upstream of MH) = 1309.86 + 0.10 = **1309.96**

EGL (upstream of MH) = $1309.96 + \frac{(11.1)^2}{64.4}$ = **1311.87**

Sta 15+90 (CB #2)

$S_F = \left(\frac{145}{2821}\right)^2 = 0.00264$ / $S_F = \left(\frac{125}{2604}\right)^2 = 0.00230$

$H_{L_I} = 0.00264(450) = 1.19'$

$Q_2 = 145$ cfs $\quad Q_1 = 125$ cfs

$V_2 = \frac{1.486}{0.012}(1.25)^{2/3}(0.00264)^{1/2} = 7.38$ fps ; $V_1 = \frac{1.486}{0.012}(1.25)^{2/3}(0.00230)^{1/2} = 6.89$ fps

$$\Delta Y = \frac{145(7.38) - 125(6.89)}{32.2\,(19.635)} = 0.33$$

HGL (before connector pipe) = 1309.96 + 1.19 = **1311.15**

EGL (before connector pipe) = $1311.15 + \frac{(7.38)^2}{64.4}$ = **1312.00**

HGL (after connector pipe) = 1311.15 + 0.33 = **1311.48**

EGL (after connector pipe) = $1311.48 + \frac{(6.89)^2}{64.4}$ = **1312.21**

arthur beard engineers, Inc.

PROJECT _____ PROJ. NO. _____
SUBJECT _____ CLIENT _____

COMP BY _____ DATE _____ CKD BY _____ DATE _____ SHEET 6 OF 12

Sta ~~17+50~~ 16+00 (MH, Transition (60" to 43")) $S_F = \left(\frac{125}{1556}\right)^2 = 0.0070$

$H_{L_f} = 10(0.00212) = \underline{0.02'}$

$Q_2 = 120$ cfs $Q_1 = 120$ cfs

$V_2 = 6.89$ fps $V_1 = \frac{1.486}{0.012}(1.0)^{2/3}(0.007)^{1/2} = 9.56$ fps

$$\Delta Y = \frac{120(9.56) - 120(6.89)}{32.2\left(\frac{19.635 + 12.56}{2}\right)} = \underline{0.80'}$$

HGL (downstream of MH) = 1311.48 + 0.02 = $\boxed{1311.50}$

EGL (downstream of MH) = $1311.50 + \frac{(6.11)^2}{64.4}$ $\boxed{1312.08}$

HGL (upstream of MH) = 1311.50 + 0.80 = $\boxed{1312.30}$

EGL (upstream of MH) = $1312.30 + \frac{(9.6)^2}{64.4} = \boxed{1313.73}$

Sta 23+10 (CB #3)

$S_F = \left(\frac{115}{1556}\right)^2 = 0.0056$ $V = \frac{1.486}{0.012}(1)^{2/3}(0.0056)^{1/2} = 8.5$ fps

$H_{L_f} = 0.0070(710) = \underline{4.97'}$

$Q_2 = 125$ cfs $Q_1 = 115$ cfs

$V_2 = 9.6$ fps $V_1 = 8.5$ fps

$$\Delta Y = \frac{125(9.6) - 115(8.5)}{32.2(12.566)} = \underline{0.55'}$$

arthur beard engineers, inc.

PROJECT _____ PROJ. NO. _____
SUBJECT _____ CLIENT _____

COMP BY _____ DATE _____ CKD BY _____ DATE _____ SHEET 7 OF 12

Sta 23+10 (cont)

HGL (before connector pipe) = 1312.30 + 4.97 = 1317.27

EGL (before connector pipe) = $1317.27 + \frac{(7.6)^2}{64.4}$ = 1318.70

HGL (after connector pipe) = 1317.27 + 0.55 = 1317.82

EGL (after connector pipe) = $1317.82 + \frac{(8.5)^2}{64.4}$ = 1318.94

Sta 23+80 (MH Flow Straight Through)

$S_F = \left(\frac{115}{1556}\right)^2 = 0.0056$

$H_{L_f} = 0.0056(70) = 0.39'$

$H_{L_{MH}} = \frac{0.1\,(8.5)^2}{64.4} = 0.11'$

HGL (downstream of MH) = 1317.82 + 0.39 = 1318.21

EGL (downstream of MH) = $1318.21 + \frac{(8.5)^2}{64.4}$ = 1319.33

HGL (upstream of MH) = 1318.21 + 0.11 = 1318.32

EGL (upstream of MH) = $1318.32 + \frac{(8.5)^2}{64.4}$ = 1319.44

arthur beard engineers, Inc.

PROJECT _____ PROJ. NO. _____
SUBJECT _____ CLIENT _____

COMP BY _____ DATE _____ CKD BY _____ DATE _____ SHEET 8 OF 12

Sta 29+70 (CB #4)

$S_F = \left(\frac{115}{1698}\right)^2 = 0.0047$; $S_F = \left(\frac{85}{1189}\right)^2 = 0.00499$

$V = \frac{1.486}{0.013}(.875)^{2/3}(0.00499)^{1/2} = 7.3$ fps

$H_{L_f} = 0.0047(30) = 2.77'$

$Q_2 = 115$ cfs $\qquad Q_1 = 85$ cfs

$V_2 = 8.5$ fps $\qquad V_1 = 7.3$ fps

$$\Delta Y = \frac{115(8.5) - 85(7.3)}{32.2\left(\frac{9.621 + 12.566}{2}\right)} = 0.97'$$

HGL (downstream connector pipe) = 1318.32 + 2.77 = **1321.09**

EGL (downstream connector pipe) = 1321.09 + $(8.5)^2/64.4$ = **1322.21**

HGL (upstream connector pipe) = 1321.09 + 0.97 = **1322.06**

EGL (upstream connector pipe) = 1322.06 + $(7.3)^2/64.4$ = **1322.88**

Sta 30+00 (MH, Flow Straight Through)

$H_{L_f} = 0.0047(30) = 0.14'$ $\qquad H_{L_{MH}} = \frac{0.10(7.3)^2}{64.4} = 0.08'$

HGL (downstream of MH) = 1322.06 + 0.14 = **1322.20**

EGL (downstream of MH) = 1322.20 + $\frac{(7.3)^2}{64.4}$ = **1323.03**

HGL (upstream of MH) = 1322.20 + 0.08 = **1322.28**

EGL (upstream of MH) = 1322.28 + $\frac{(7.3)^2}{64.4}$ = **1323.11**

arthur beard engineers, inc.

PROJECT _____ PROJ. NO. _____
SUBJECT _____ CLIENT _____

COMP BY _____ DATE _____ CKD BY _____ DATE _____ SHEET 9 OF 12

Sta 33+60 (MH, Flow Straight Through)

$H_{L_f} = 0.00499(360) = 1.80$ $\quad H_{L_{MH}} = 0.1\frac{(7.3)^2}{64} = 0.08'$

HGL (downstream of MH) = 1322.28 + 1.80 = **1324.08**

EGL (downstream of MH) = $1324.08 + \frac{(7.3)^2}{64.4}$ = **1324.91**

HGL (upstream of MH) = 1324.08 + 0.08 = **1324.16**

EGL (upstream of MH) = $1324.16 + \frac{(7.3)^2}{64.4}$ = **1325.00**

Sta 36+30 (CB #5)

$H_{L_f} = 0.00499(350) = 1.74'$ $\quad S_F = \left(\frac{64}{788}\right)^2 = 0.0058$

$V = \frac{1.486}{0.013}(.75)^{2/3}(0.0058)^{1/2} = 7.2$ fps

$Q_2 = 85$ cfs $\quad Q_1 = 64$ cfs

$V_2 = 7.3$ fps $\quad V_1 = 7.2$ fps

$$\Delta Y = \frac{85(7.3) - 64(7.2)}{32.2\left(\frac{7.069 + 9.621}{2}\right)} = 0.59'$$

HGL (downstream connector pipe) = 1324.16 + 1.74 = **1325.90**

EGL (downstream connector pipe) = $1325.90 + \frac{(7.3)^2}{64.4}$ = **1326.73**

HGL (upstream connector pipe) = 1325.90 + 0.59 = **1326.49**

EGL (upstream connector pipe) = $1326.49 + \frac{7.2^2}{64.4}$ = **1327.30**

arthur beard engineers, inc.

PROJECT _____ PROJ. NO. _____
SUBJECT _____ CLIENT _____

COMP BY _____ DATE _____ CKD BY _____ DATE _____ SHEET 10 OF 12

Sta 37+20

$H_{L_f} = 0.00580(10) = 0.06'$

$H_{L_{MH}} = 0.1\frac{(7.2)^2}{64.4} = 0.08'$

HGL (downstream of MH) = 1326.49 + 0.06 = **1326.55**

EGL (downstream of MH) = $1326.55 + \frac{(7.2)^2}{64.4}$ = **1327.35**

HGL (upstream of MH) = 1326.55 + 0.08 = **1326.63**

EGL (upstream of MH) = $1326.63 + \frac{7.2^2}{64.4}$ = **1327.43**

Sta 41+20 (CB #6)

$H_{L_f} = 0.00580(400) = 2.32'$ $\qquad S_F = \left(\frac{55}{788}\right)^2 = 0.0048$

$V = \frac{1.486}{0.013}(.75)^{2/3}(0.0048)^{1/2} = 7.1$ fps

$Q_2 = 64$ cfs $\qquad Q_1 = 55$ cfs

$V_2 = 7.2$ fps $\qquad V_1 = 7.1$ fps

$$\Delta Y = \frac{64(7.2) - 55(7.1)}{32.2\ (7.069)} = 0.30'$$

HGL (downstream connector pipe) = 1326.63 + 2.32 = **1328.95**

EGL (downstream connector pipe) = $1328.95 + \frac{(7.2)^2}{64.4}$ = **1329.75**

HGL (upstream connector pipe) = 1328.95 + 0.30 = **1329.25**

EGL (upstream connector pipe) = $1329.25 + \frac{7.1^2}{64.4}$ = **1330.32**

arthur beard engineers, inc.

PROJECT _____ PROJ. NO. _____
SUBJECT _____ CLIENT _____

COMP. BY _____ DATE _____ CKD BY _____ DATE _____ SHEET 11 OF 12

Sta 41+60 (MH, Flow Straight Through)

$H_{Lf} = 0.0048\,(40) = 0.19'$

$H_{L\,MH} = \frac{0.1\,(7.1)^2}{64.4} = 0.08'$

Sta 44+20 (CB #7)

$S_F = \left(\frac{20}{722}\right)^2 = 0.0008$ $\quad V = \frac{1.486}{0.012}(.75)^{2/3}(0.0048)^{1/2} = 8.3\ fps$

$H_{Lf} = 0.0048\,(260) = 1.24'$ $\quad Q_2 = 55\ cfs$ $\quad Q_1 = 20\ cfs$

$V_2 = 7.1\ fps$ $\quad V_1 = 8.3\ fps$

$\Delta Y = \frac{55(7.1) - 20(8.3)}{32.2\,(7.069)} = 0.98'$

HGL (downstream connector pipe) = 1329.25 + 0.27 + 1.24 = **1330.76**

EGL (downstream connector pipe) = $1330.76 + \frac{(7.1)^2}{64.4}$ = **1331.90**

HGL (upstream connector pipe) = 1330.76 + 0.98 = **1331.74**

EGL (upstream connector pipe) = $1331.74 + \frac{(8.3)^2}{64.4}$ = **1332.81**

Sta 46+00 (MH, Flow Straight Through)

$H_{Lf} = 0.0008\,(180) = 0.14'$

$H_{L\,MH} = 0.1(7.1)^2/64.4 = 0.09'$

HGL (upstream of MH) = 1331.74 + 0.14 + 0.09 = **1331.97**

EGL (upstream of MH) = $1331.97 + \frac{7.1^2}{64.4}$ = **1332.76**

arthur beard engineers, inc.

PROJECT _____ PROJ. NO. _____
SUBJECT _____ CLIENT _____

COMP BY _____ DATE _____ CKD BY _____ DATE _____ SHEET 12 OF 12

Sta 50+40 (Transition MH)

$H_{L_f} = 0.0008\ (440) = 0.35'$

$Q_2 = 20\ cfs$ $\qquad$ $Q_1 = 20\ cfs$

$V_2 = \frac{1.486}{0.013}(.75)^{2/3}(.0048)^{1/2} = 7.1\ fps$ $\qquad$ $V_1 = \frac{1.486}{0.013}(.5)^{2/3}(0.00666)^{1/2} = 5.87$

$$\frac{7.1(-0) - 5.87(30)}{32.2\left(\frac{3.142 + 7.069}{2}\right)} = 0.15$$

HGL (downstream of MH) = 1331.97 + .35 = **1332.32**

EGL (downstream of MH) = $1332.32 + \frac{(7.1)^2}{64.4}$ = **1333.10**

HGL (upstream of MH) = 1332.32 + 0.15 = **1332.47**

EGL (upstream of MH) = $1332.47 + \frac{(5.87)^2}{64.4}$ = **1333.00**

Sta 54+38 CL = E

$H_{L_f} = 398(.00666) = 2.66'$

HGL = 1332.47 + 2.66 = **1335.13**

EGL = $1335.13 + \frac{(5.87)^2}{64.4}$ = **1335.67**

CATCH BASIN

CONNECTOR PIPE LOCATIONS

&

ELEVATIONS

arthur beard engineers, inc. Phoenix - Tucson, Arizona

Revised 10/31/89

PROJECT 43rd AVE / YORKSHIRE DR.
SUBJECT Connector Pipe Locations/elevations

PROJ. NO. 1249
CLIENT COP

COMP BY JM DATE 8/6/89 CKD BY _____ DATE _____

SHEET 1 OF 16

CB #8 (Sta 54+40)

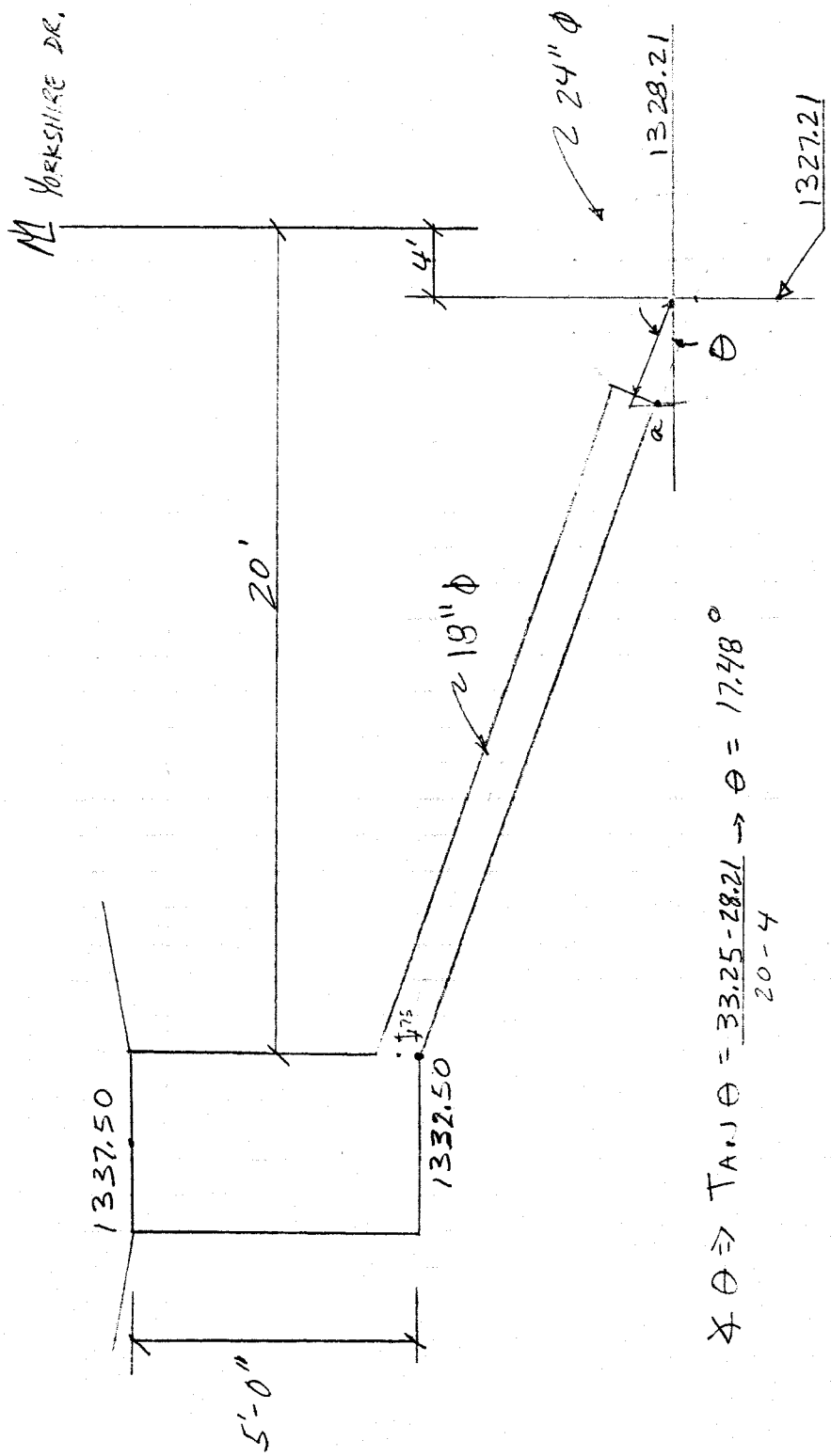

NOTE: NTS

$\measuredangle\ \theta \Rightarrow \tan\theta = \frac{33.25 - 28.21}{20 - 4} \rightarrow \theta = 17.48°$

$\text{Slope} = \frac{33.25 - 28.21}{20 - 4} = 0.315'/ft$

arthur beard engineers, inc. Phoenix - Tucson, Arizona

PROJECT
SUBJECT
PROJ. NO.
CLIENT

COMP BY ____ DATE ____ CKD BY ____ DATE ____ SHEET 2 OF 16

CB #8 (cont.)

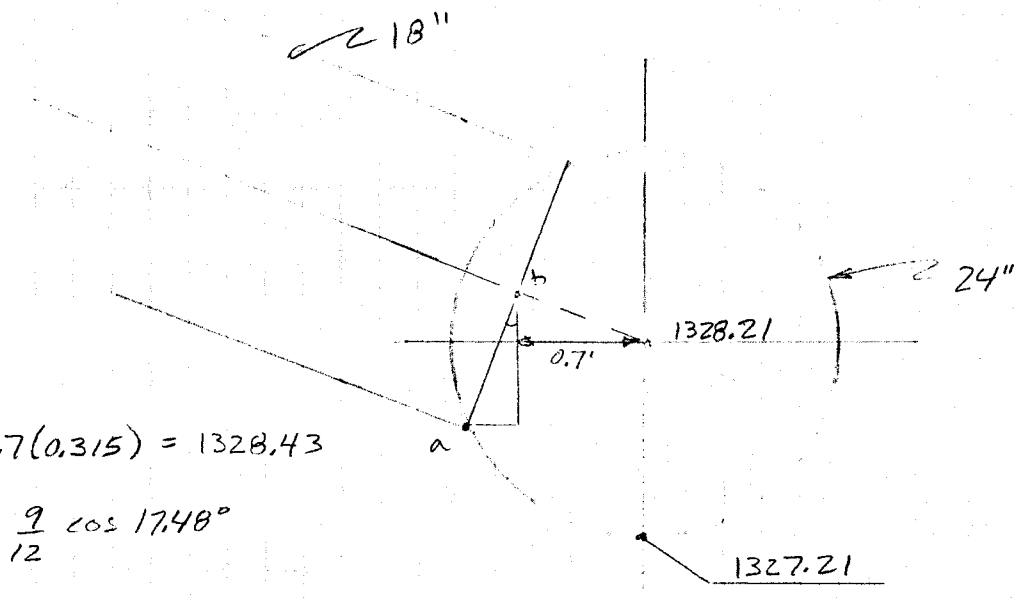

elev. at b = 1328.21 + 0.7(0.315) = 1328.43

elev. at a = 1328.43 − $\frac{9}{12}$ cos 17.48°

= 1328.43 − 0.72 = **1327.71**

SCALE: 1" = 1'

arthur beard engineers, Inc.

PROJECT
SUBJECT

PROJ. NO.
CLIENT

COMP BY ____ DATE ____ CKD BY ____ DATE ____ SHEET 3 OF 16

CB #7 (Sta 44+20)

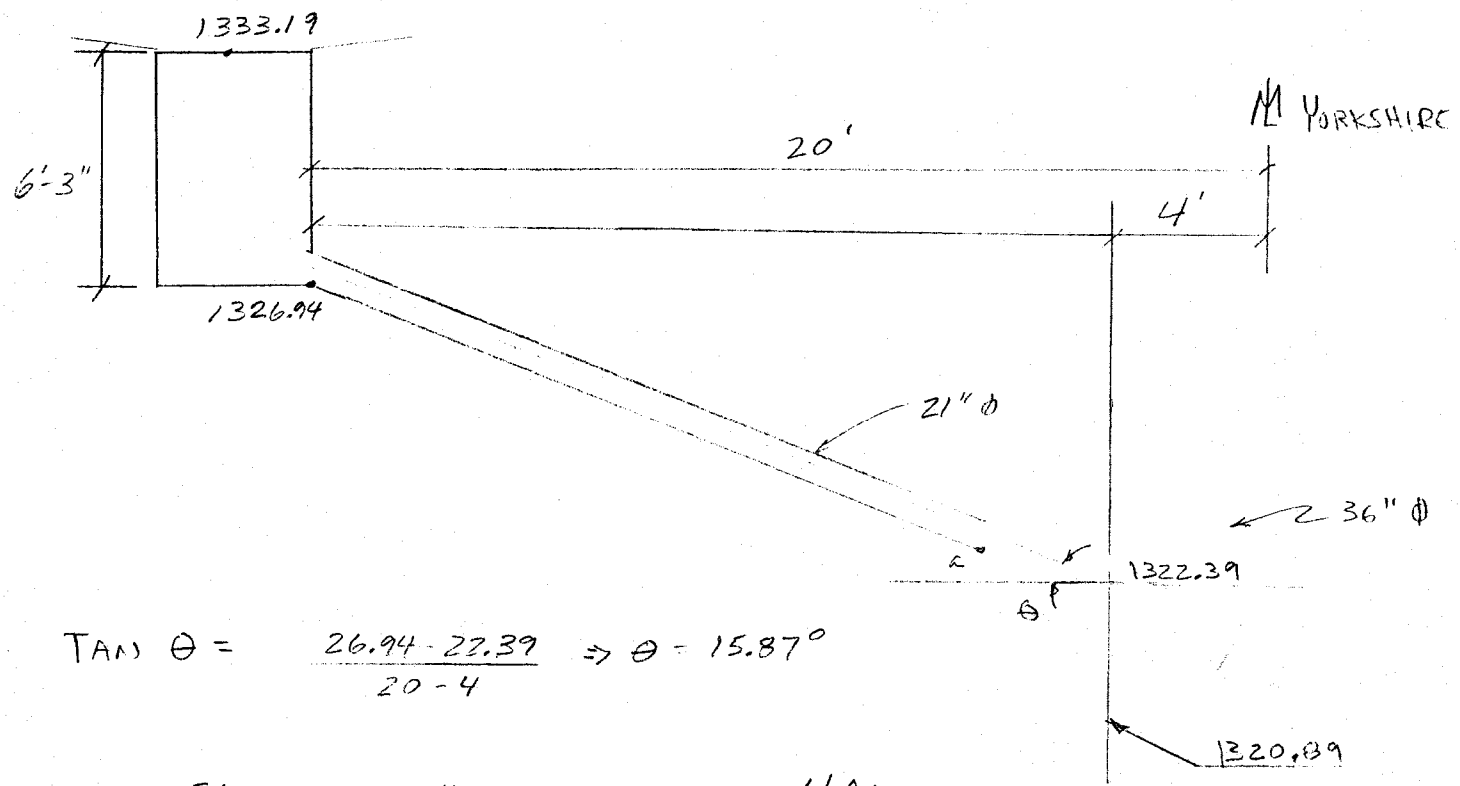

$$\tan\theta = \frac{26.94 - 22.39}{20 - 4} \Rightarrow \theta = 15.87^\circ$$

$$\text{Slope} = \frac{26.94 - 22.39}{20 - 4} = 0.2844\ '/ft$$

NOTE : NTS

arthur beard engineers, inc.

PROJECT _____ PROJ. NO. _____
SUBJECT _____ CLIENT _____

COMP BY _____ DATE _____ CKD BY _____ DATE _____ SHEET 4 OF 16

CB #7 (Cont.)

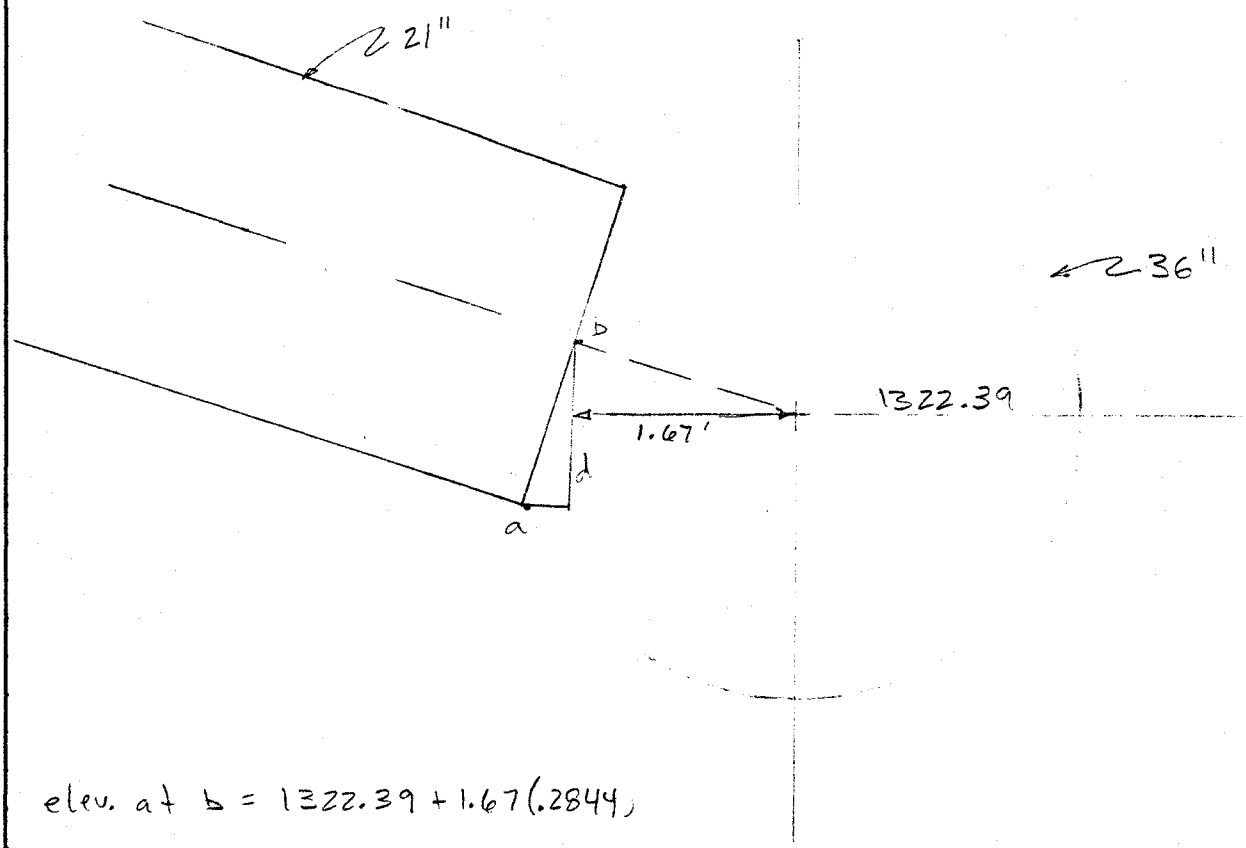

elev. at b = 1322.39 + 1.67(.2844)

= 1322.86

SCALE: 1" = 1'

elev. at a = 1322.86 - $\frac{10.5}{12}$ cos 15.87

a = 1322.02

arthur beard engineers, inc.

PROJECT
SUBJECT

PROJ. NO.
CLIENT

COMP BY ____ DATE ____ CKD BY ____ DATE ____

SHEET 5 OF 16

CB # 6

(Sta 41+20)

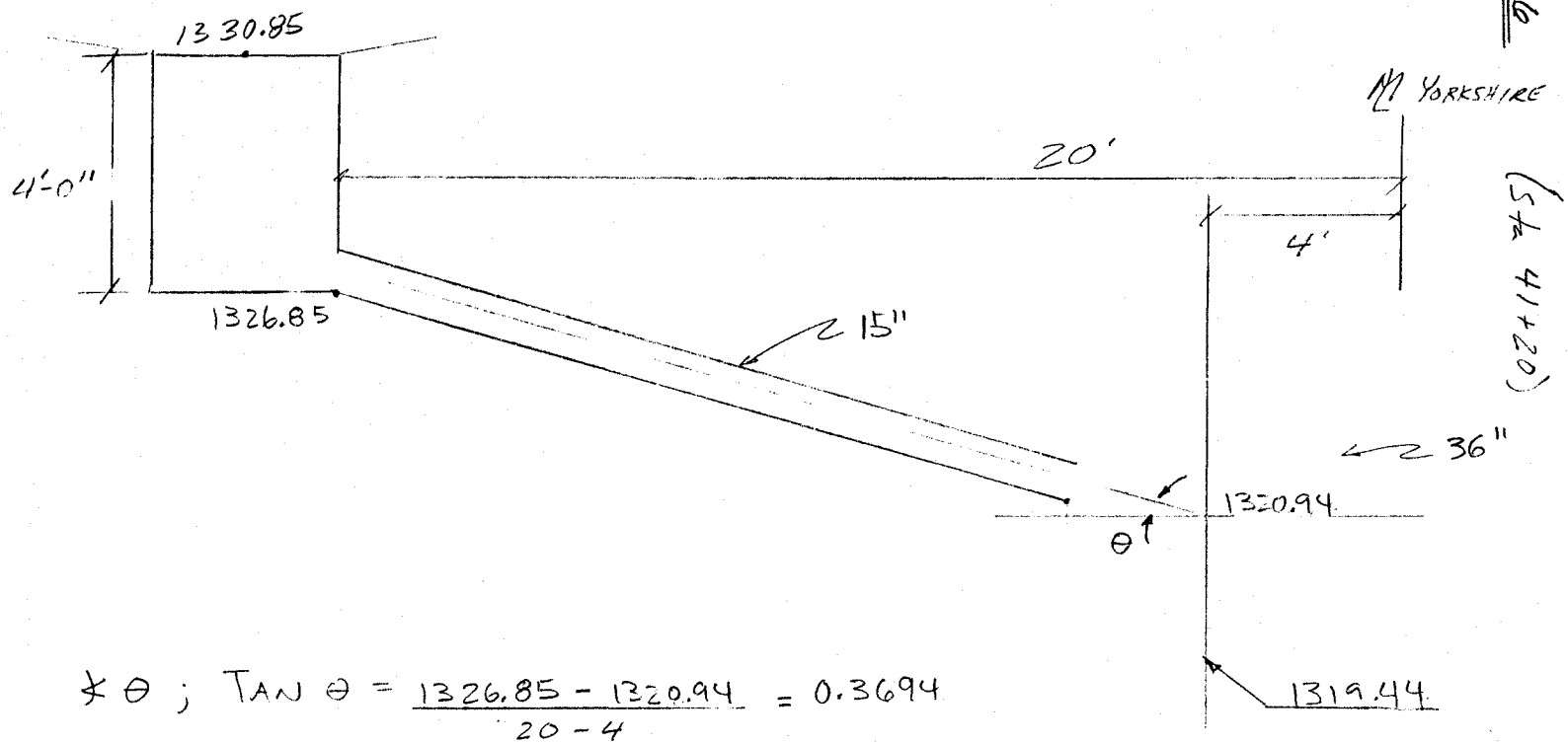

$\measuredangle\theta$; $\tan\theta = \dfrac{1326.85 - 1320.94}{20 - 4} = 0.3694$

$\Rightarrow \theta = 20.3°$

Slope = 0.3694 '/ft

NOTE: NTS

arthur beard engineers, inc.

PROJECT _____ PROJ. NO. _____
SUBJECT _____ CLIENT _____

COMP BY _____ DATE _____ CKD BY _____ DATE _____ SHEET 6 OF 16

CB #6 (cont.)

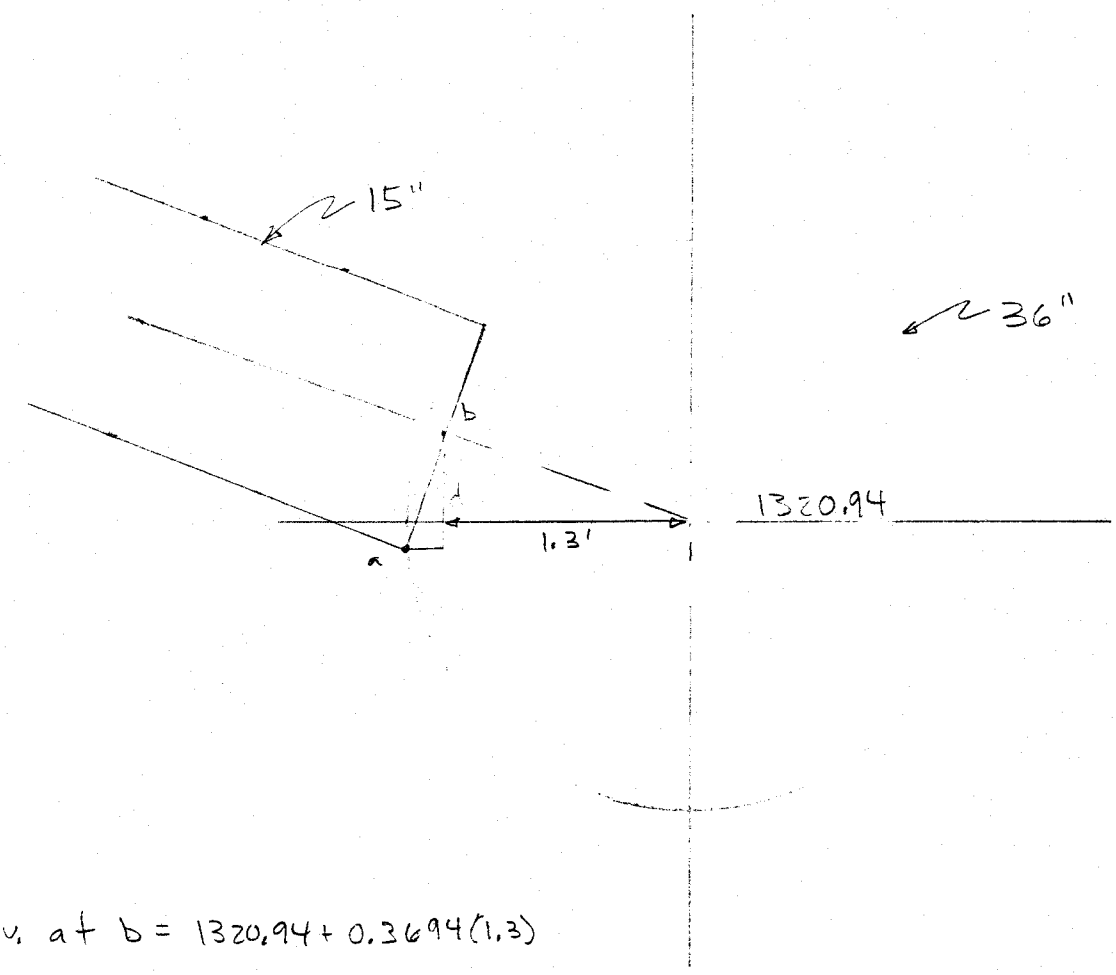

elev. at b = 1320.94 + 0.3694(1.3)

= 1321.42'

elev. at a = $1321.42 - \frac{7.5}{12} \cos 20.3°$

= $\boxed{1320.83'}$

SCALE: 1" = 1'

arthur beard engineers, inc.

PROJECT _____ PROJ. NO. _____
SUBJECT _____ CLIENT _____

COMP BY _____ DATE _____ CKD BY _____ DATE _____ SHEET 7 OF 16

CB #5 (Sta 37+10)

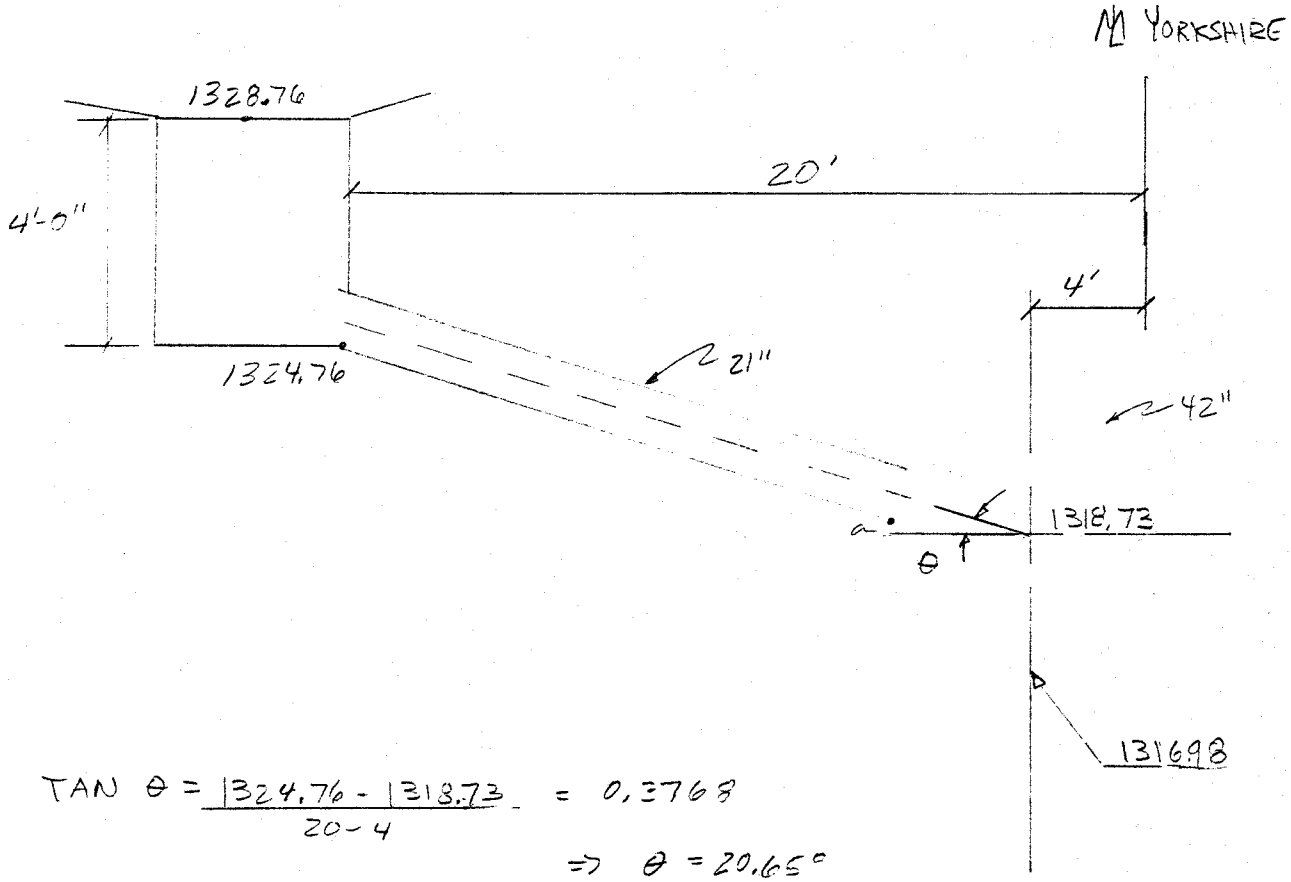

$$\tan\theta = \frac{1324.76 - 1318.73}{20 - 4} = 0.3768$$

$$\Rightarrow \theta = 20.65^\circ$$

slope = 0.3768 '/ft

NOTE: NTS

arthur beard engineers, inc.

PROJECT _____ PROJ. NO. _____
SUBJECT _____ CLIENT _____

COMP BY _____ DATE _____ CKD BY _____ DATE _____ SHEET 8 OF 16

CB #5 (cont.)

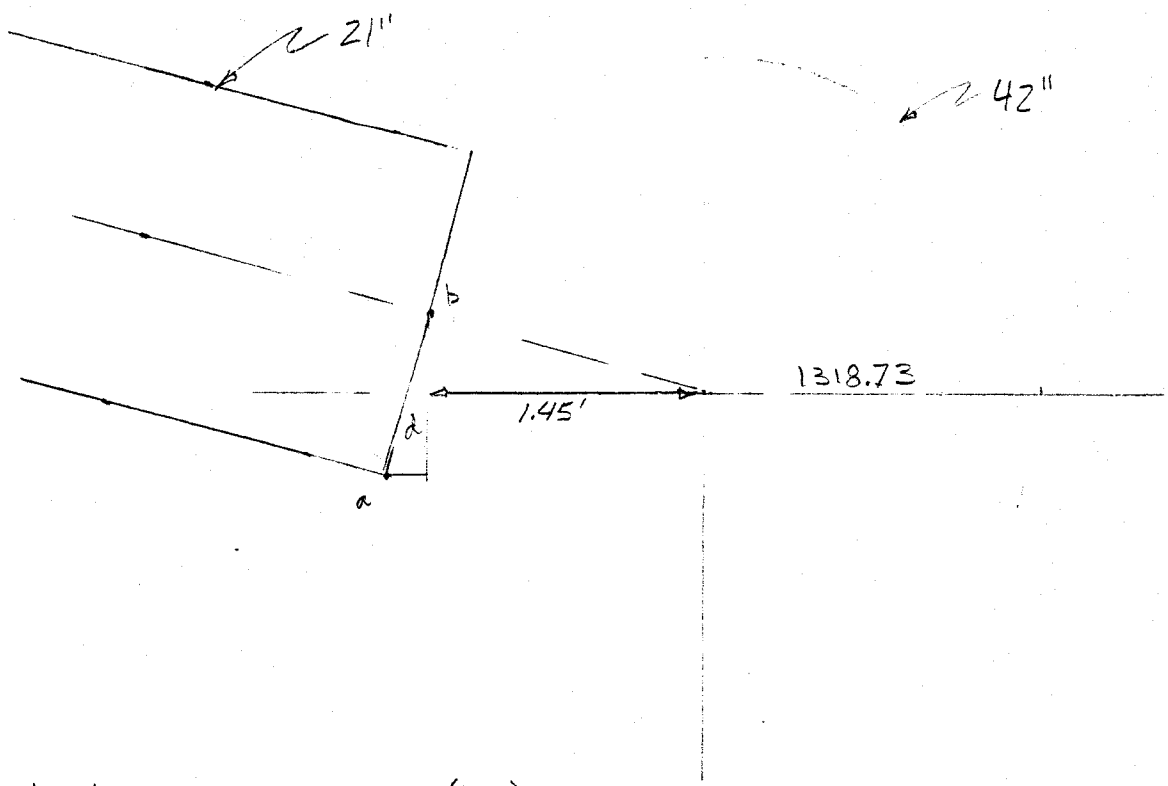

elev. at b = 1318.73 + 0.3768(1.45)

= 1319.27

elev. at a = $1319.27 - \frac{10.5}{12} \cos 20.65^\circ$ = **1318.46'**

SCALE: 1" = 1'

arthur beard engineers, Inc.

PROJECT _____ PROJ. NO. _____
SUBJECT _____ CLIENT _____

COMP BY _____ DATE _____ CKD BY _____ DATE _____ SHEET 9 OF 16

CR #4 (Sta 29+70)

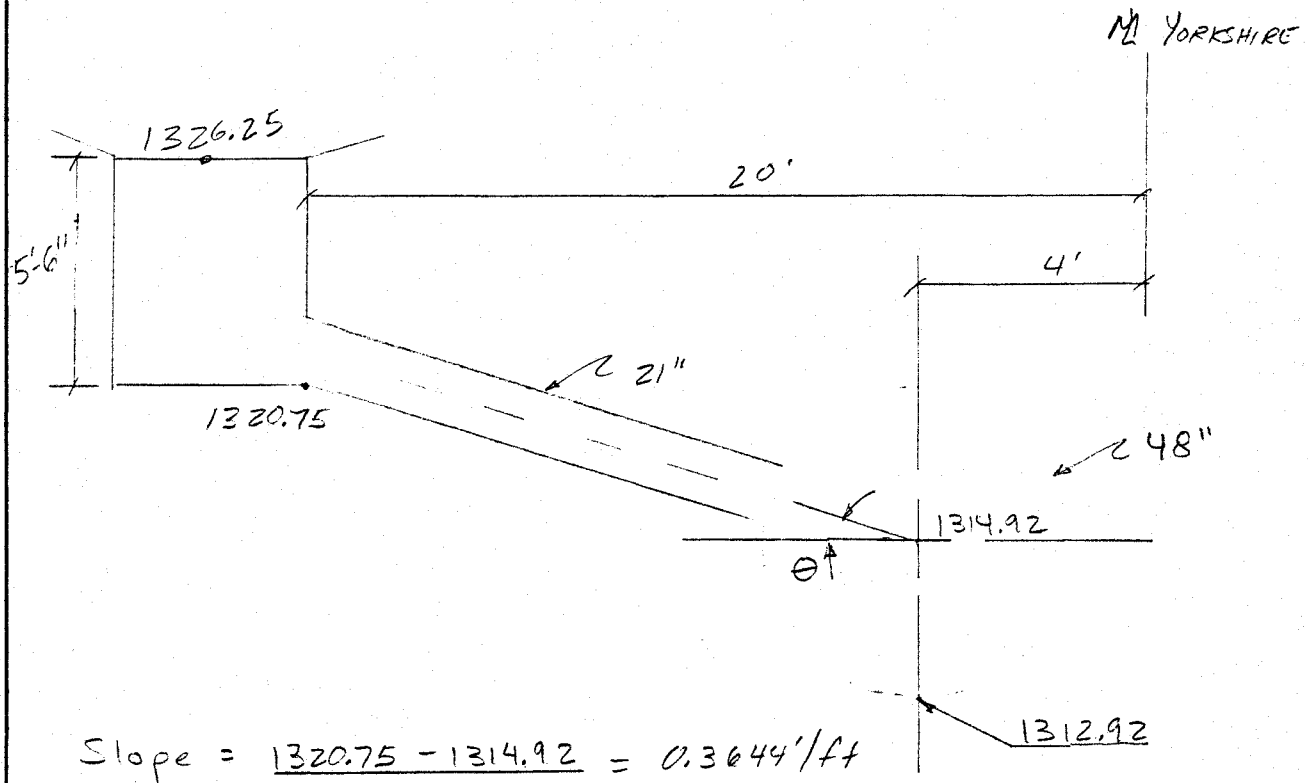

$$\text{Slope} = \frac{1320.75 - 1314.92}{20 - 4} = 0.3644'/ft$$

$$\theta = \tan^{-1}(0.3644) = 20.0°$$

NOTE: NTS

arthur beard engineers, inc.

PROJECT _____ PROJ. NO. _____
SUBJECT _____ CLIENT _____

COMP BY _____ DATE _____ CKD BY _____ DATE _____ SHEET 10 OF 16

CB #4 (Cont.)

elev. at b = 1314.92 + 1.75(0.3644) = 1315.56

elev. at a = 1315.56 − $\frac{10.5}{12}$ cos 20.0° = **1314.73'**

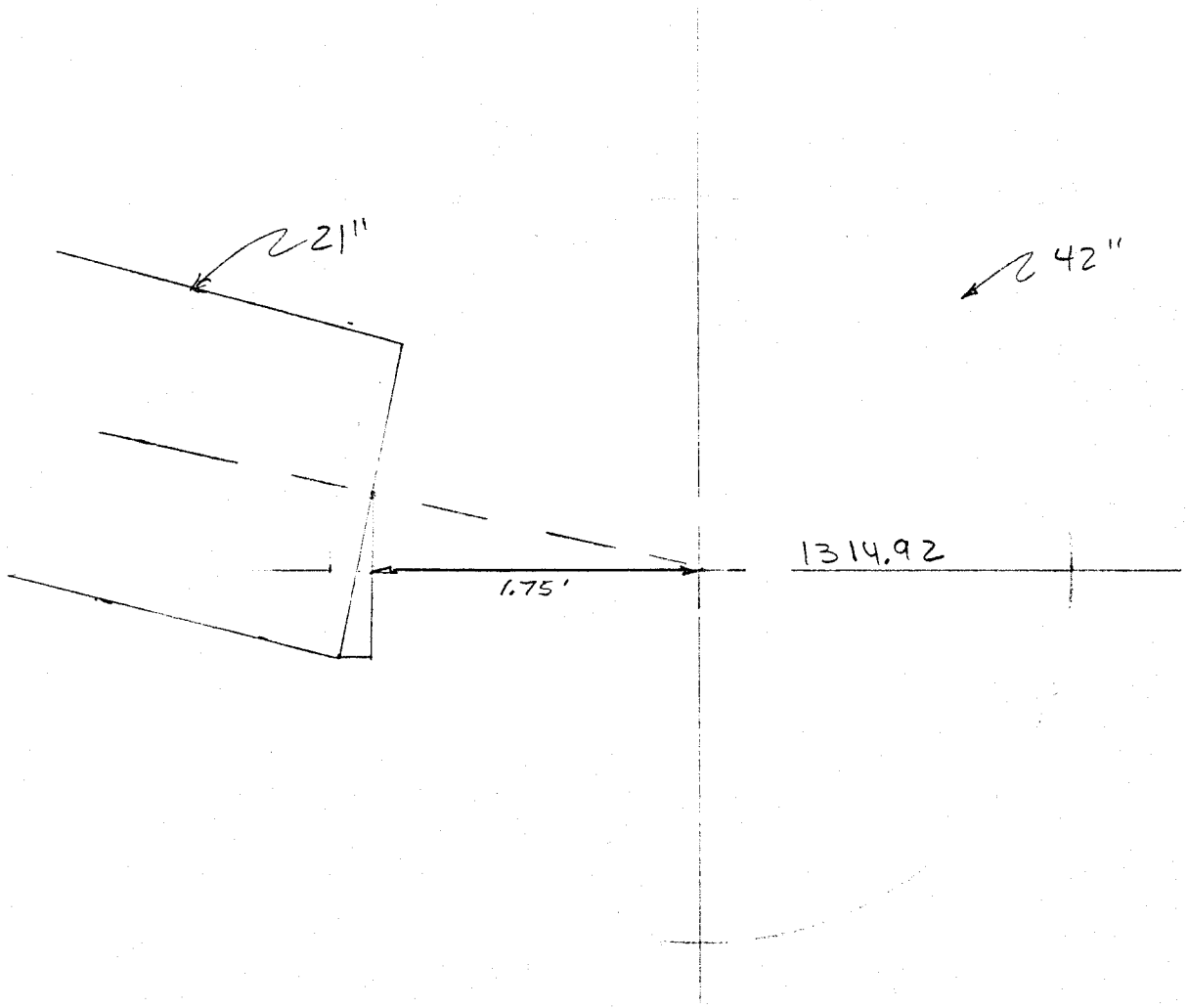

SCALE 1" = 1'

arthur beard engineers, inc.

PROJECT _____ PROJ. NO. _____
SUBJECT _____ CLIENT _____

COMP BY _____ DATE _____ CKD BY _____ DATE _____ SHEET 11 OF 16

CB #3 (Sta 23+10)

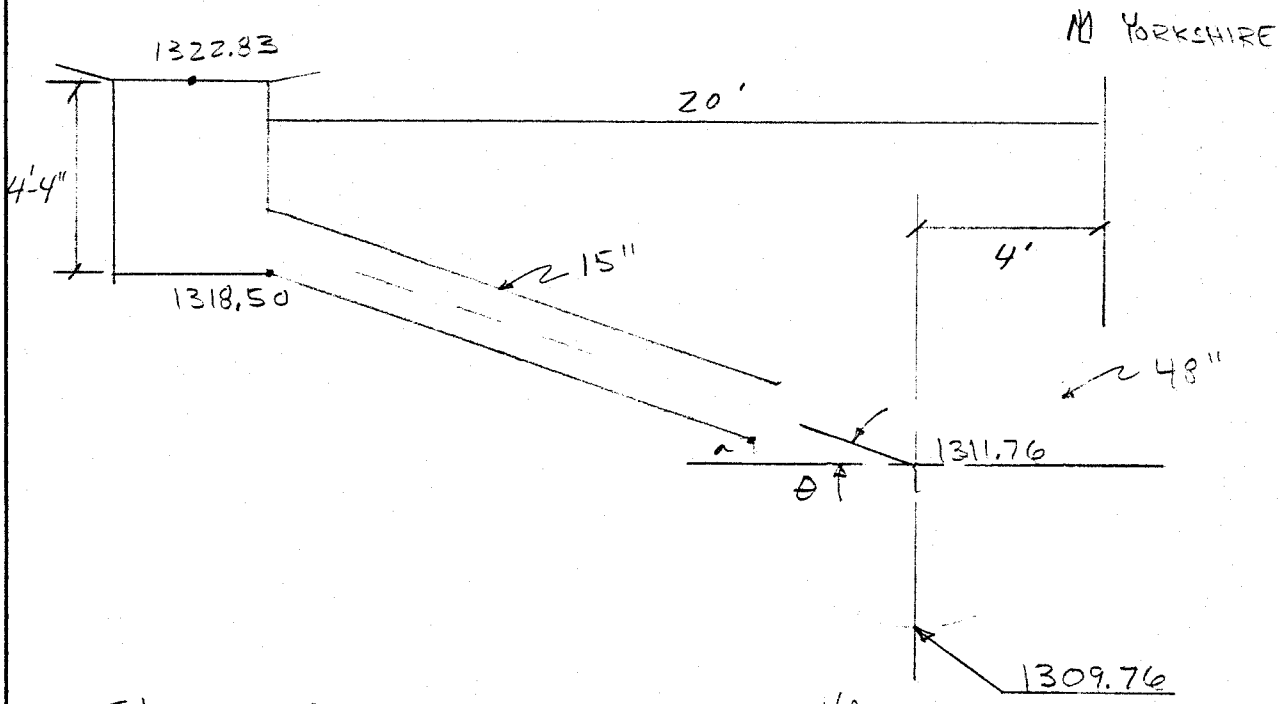

$$\text{Slope} = \frac{1319.125 - 1311.76}{20 - 4} = 0.4603'/ft$$

$$\theta = \tan^{-1}(0.4603) = 24.7^\circ$$

arthur beard engineers, inc.

PROJECT _____ PROJ. NO. _____
SUBJECT _____ CLIENT _____

COMP BY _____ DATE _____ CKD BY _____ DATE _____ SHEET 12 OF 16

CB #3 (cont.)

elev. at b = 1311.76 + 1.7(0.4663) = 1312.54

elev. at a = $1312.54 - \frac{7.5}{12} \cos 34.7^\circ$ = **1311.93'**

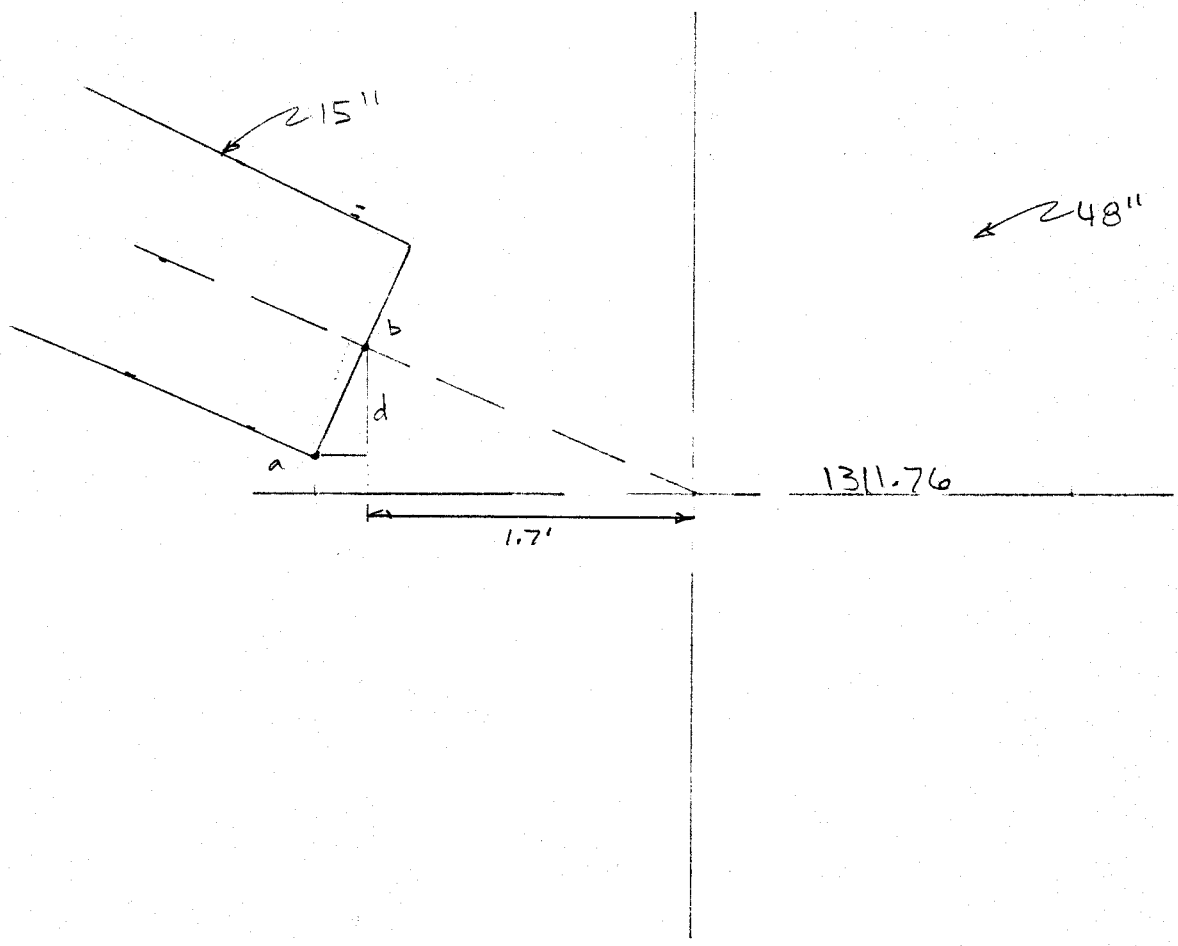

SCALE: 1" = 1'

arthur beard engineers, inc.

PROJECT _____ PROJ. NO. _____
SUBJECT _____ CLIENT _____

COMP BY _____ DATE _____ CKD BY _____ DATE _____ SHEET 12 OF 16

CB #2 (Sta 15+90)

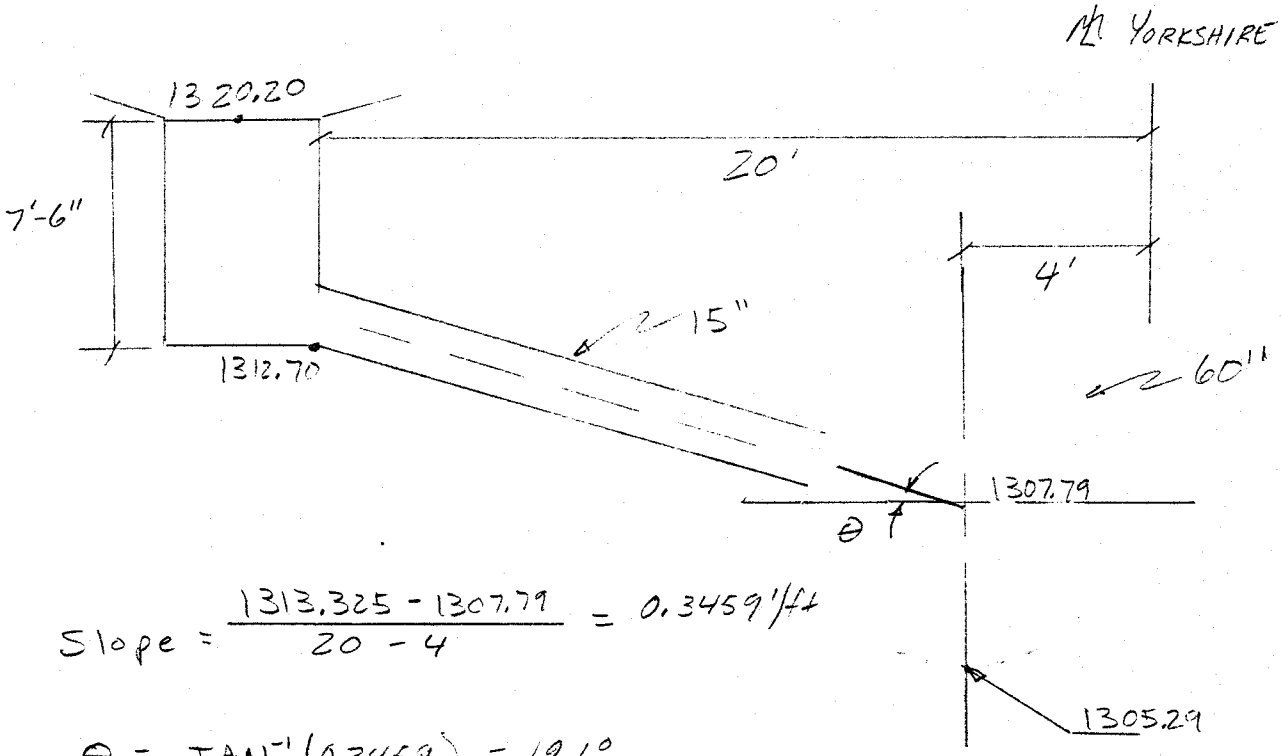

$$\text{Slope} = \frac{1313.325 - 1307.79}{20 - 4} = 0.3459'/ft$$

$$\theta = \tan^{-1}(0.3459) = 19.1^\circ$$

NOTE: NTS

arthur beard engineers, inc.

PROJECT _____ PROJ. NO. _____
SUBJECT _____ CLIENT _____

COMP BY _____ DATE _____ CKD BY _____ DATE _____ SHEET 14 OF 16

CB #2 (cont.)

elev. at b = 1307.79 + 2.3 (0.3459) = 1308.59

elev. at a = 1308.59 − $\frac{7.5}{12}$ cos 19.1 = **1308.00'**

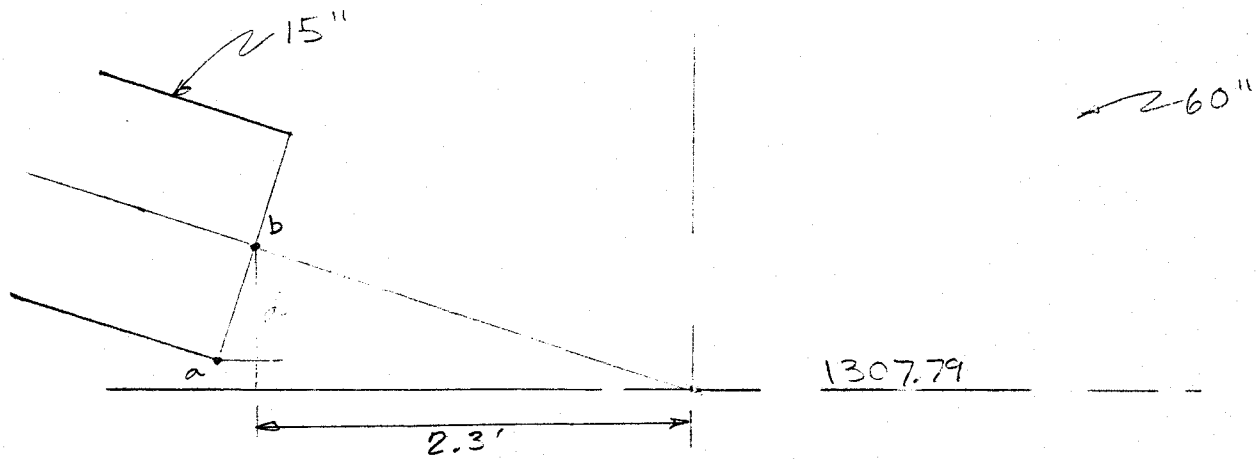

SCALE: 1" = 1'

arthur beard engineers, inc.

PROJECT _____ PROJ. NO. _____
SUBJECT _____ CLIENT _____

COMP BY _____ DATE _____ CKD BY _____ DATE _____ SHEET 15 OF 16

CB #1 (Sta 11+40)

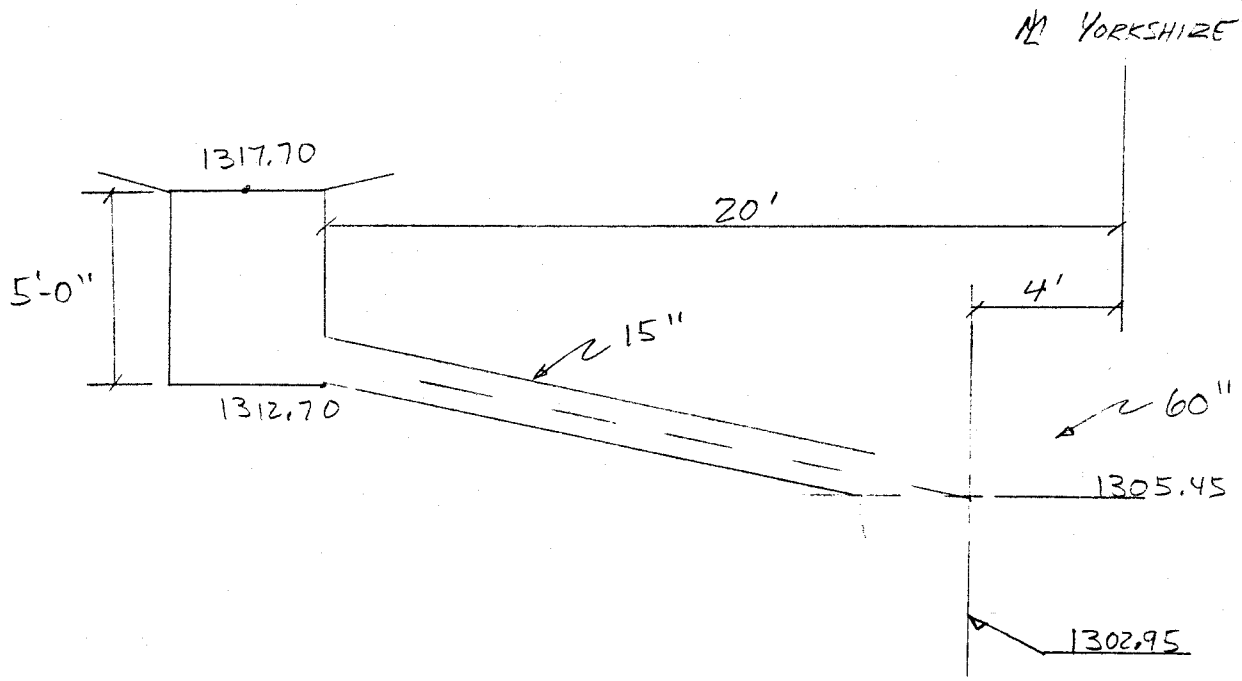

$$\text{Slope} = \frac{1313.325 - 1305.45}{20 - 4} = 0.4922'/ft$$

$$\theta = \tan^{-1}(0.4922) = 26.2^\circ$$

NOTE: NTS

arthur beard engineers, inc.

PROJECT _____ PROJ. NO. _____
SUBJECT _____ CLIENT _____

COMP BY _____ DATE _____ CKD BY _____ DATE _____ SHEET 16 OF 16

CB # 1 (cont.)

elev. at b = 1305.45 + 2.2 (.4922) = 1306.53

elev. at a = 1306.53 - $\frac{7.5}{12}$ cos 26.2° = **1305.97'**

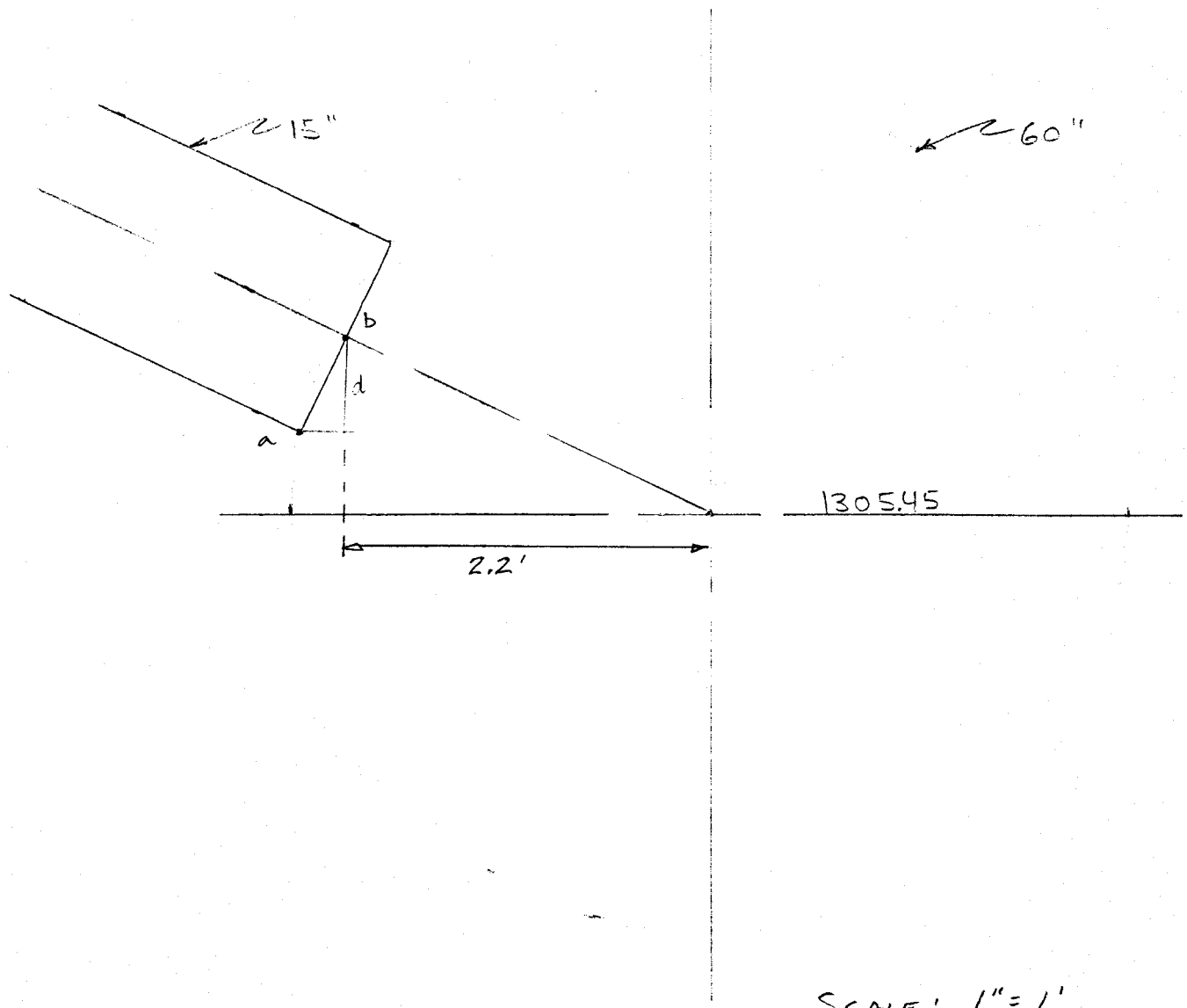

SCALE: 1" = 1'

CATCH BASIN DESIGN

arthur beard engineers, inc.

Revised 10/30/89 J.M.

PROJECT 43rd AVE / YORKSHIRE DR.
SUBJECT Catch Basin Design & Flowby's *

PROJ. NO. 1249
CLIENT COP

COMP BY JM DATE 7/28/89 CKD BY _____ DATE _____

SHEET 1 OF 22

Inlet #8 (Sta 54+40)

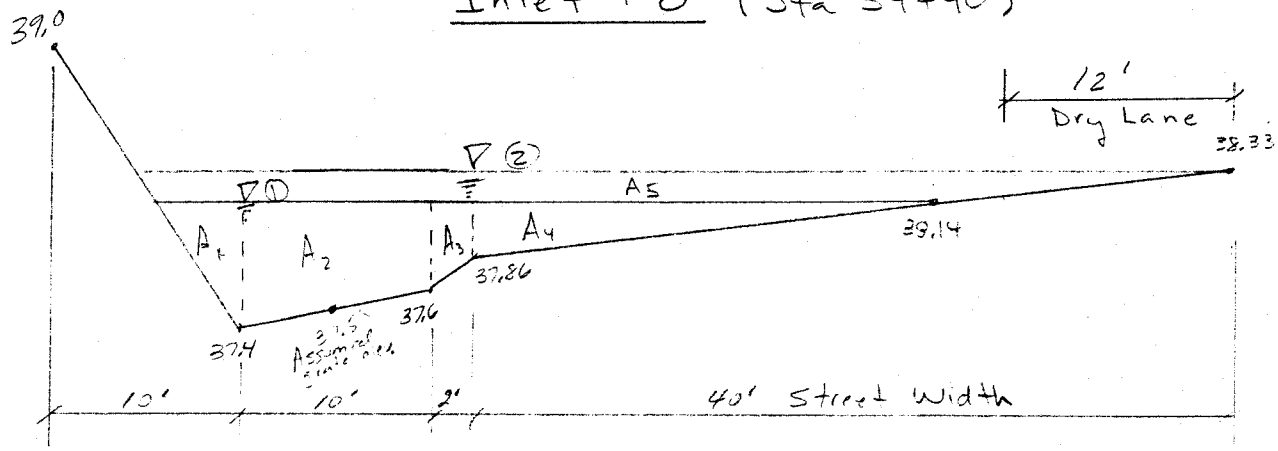

$A_1 = \frac{1}{2}(1.04)6.5 = 3.38\ ft^2$

$A_2 = \frac{10(1.04+.54)}{2} = 7.9\ ft^2$

$A_3 = \frac{2(.54+.29)}{2} = 0.82\ ft^2$

$A_4 = \frac{1}{2}(24).28 = 3.36\ ft^2$

$A_5 = \frac{0.19(42.5+59)}{2} = 9.64\ ft^2$

{* Summary on pg 21}

Level 1, $A = 15.46\ ft^2$, depth over grate = 0.64'

Level 2, $A = 25.10\ ft^2$, depth over grate = 0.83'

$Q_{(1)} = \frac{1.49}{0.03}\left(\frac{15.46}{42.5}\right)^{2/3}(.0038)^{1/2}\,15.46 = 24.1\ cfs$

$Q_{(2)} = \frac{1.49}{0.03}\left(\frac{25.10}{59.0}\right)^{2/3}(0.0038)^{1/2}\,25.1 = 43.5\ cfs$

$Q_{2yr} = 18.4\ cfs$

$Q_{10yr} = 29.5\ cfs$

arthur beard engineers, Inc.

PROJECT _____ PROJ. NO. _____
SUBJECT _____ CLIENT _____

COMP BY _____ DATE _____ CKD BY _____ DATE _____ SHEET 2 OF 22

Inlet #8, (cont.)

Level 1 area too large for Q_{2yr}, $A = 15.46\ ft^2$, $Q = 24.1\ cfs$

Try $A = 13.0\ ft^2$

$\therefore\ 15.46 - 13.0 = 2.46\ ft^2$

$.06\left(\frac{42.5 + 42.0}{2}\right) = 2.5\ ft^2 \Rightarrow$ reduce level by $\simeq 0.07'$

$Q_I = \frac{1.49}{0.03}\left(\frac{13}{42}\right)^{2/3}(0.0038)^{1/2}(13) = 18.2\ cfs$ close to 18.4 $\Rightarrow$ OK

depth over grate 2-yr event = $\boxed{0.58'}$

Level 2 area too large for $Q_{10\text{-}yr}$, $A = 25.10\ ft^2$, $Q = 42.5\ cfs$

Try $A = 20.0\ ft^2$

$25.1 - 20 = 5.1\ ft^2$

$0.14(45) = 6.3\ ft^2$

Try reduce level by $0.14'$

$Q_{II} = \frac{1.49}{0.03}\left(\frac{20}{52}\right)^{2/3}(.0038)^{1/2}\,20 = 32.4\ cfs$, close to $\rightarrow Q_{10} = 29.5\ cfs$

depth over grate, 10-yr event = $\boxed{0.69'}$

arthur beard engineers, inc.

PROJECT
SUBJECT
PROJ. NO.
CLIENT

COMP BY DATE CKD BY DATE SHEET 3 OF 22

Inlet #8 (cont)

For depth of 0.58'; Flow into inlet = 1.5 cfs/ft * (2-yr event)

For depth of 0.69'; Flow into inlet = 2.3 cfs/ft (10-yr event)

Using type 'N' (single) CB, Perimeter = 2(3.3+2) = 10.6'

2-yr: CB capacity = 10.6(1.5)(.5 clogging) = 8.0 cfs

Flowby = 18.4 - 8.0 = 10.4 cfs

10-yr: CB capacity = 10.6(2.3)(.5 clogging) = 12.2 cfs

Flowby = 29.5 - 12.2 = 17.3 cfs

Using type 'N' CB, double grate, Perimeter = 17.2 ft

2-yr: CB capacity = 17.2(1.5)(.5 clogging) = 12.9 cfs

Flowby = 18.4 - 12.9 = 5.5 cfs

10-yr: CB capacity = 17.2(2.3)(.5 clogging) = 19.8 cfs

Flowby = 29.5 - 19.8 = 9.7 cfs

USE Double Grate, Type 'N' CB

* (See pg 30, COP, Storm Drain Design Manual, Storm Drains with [illegible])

arthur beard engineers, inc.

PROJECT _____ PROJ. NO. _____
SUBJECT _____ CLIENT _____

COMP BY _____ DATE _____ CKD BY _____ DATE _____ SHEET 4 OF 22

Inlet #7 (Sta 44+20)

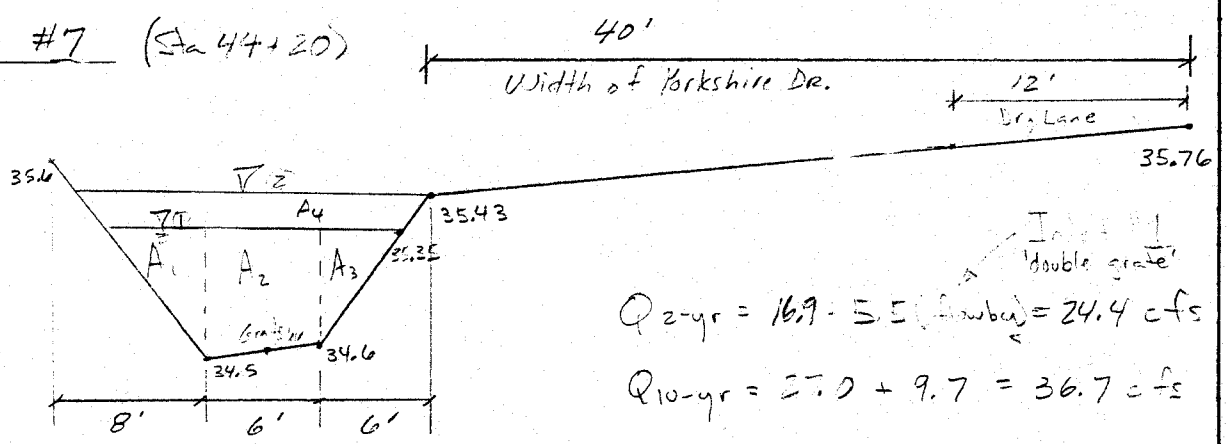

Inlet #1 'double grate'

$Q_{2\text{-yr}} = 16.9 - 5.5 \text{ (flowby)} = 24.4 \text{ cfs}$

$Q_{10\text{-yr}} = 27.0 + 9.7 = 36.7 \text{ cfs}$

$A_1 = \frac{1}{2}(.85)(6.2) = 2.64 \text{ ft}^2$

$A_2 = \frac{6(.85+.75)}{2} = 4.80 \text{ ft}^2$

$A_3 = \frac{1}{2}(.75)5.4 = 2.03 \text{ ft}^2$

$A_4 = \frac{0.08(18.2+17.6)}{2} = 1.43 \text{ ft}^2$

Level 1, $A = 9.47 \text{ ft}^2$, depth over grate = 0.80'

Level 2, $A = 10.90 \text{ ft}^2$, depth over grate = 0.88'

$$Q_{1} = \frac{1.49}{0.03}\left(\frac{9.47}{17.6}\right)^{2/3}(.0045)^{1/2}\,9.47 = 20.9 \text{ cfs}$$

$$Q_{2} = \frac{1.49}{0.03}\left(\frac{10.90}{18.2}\right)^{2/3}(0.0045)^{1/2}\,10.90 = 25.8 \text{ cfs}$$

Level 2 flow close to 2-yr event ⇒ depth over grate = $\boxed{0.88'}$ 1-yr

Level 2 flow too low for 10-yr event

(See next pg.)

arthur beard engineers, Inc.

PROJECT _____ PROJ. NO. _____
SUBJECT _____ CLIENT _____

COMP. BY _____ DATE _____ CKD BY _____ DATE _____ SHEET 5 OF 22

Inlet 7 (cont.)

Try level at 35.60

$$A = 10.9 + \tfrac{1}{2}(20)(0.17) + \frac{0.17(20 + 37.6)}{2} = 17.5\ ft^2$$

$$Q_{②} = \frac{1.49}{0.03}\left(\frac{17.5}{37.6}\right)^{2/3}(0.0045)^{1/2}(17.5) = 35\ cfs$$

depth over grate = $\boxed{1.0'}$ 10-yr

For depth of 0.88', Flow into inlet = 2.7 cfs/ft (2-yr storm)

For depth of 1.00', Flow into inlet = 4.0 cfs/ft (10-yr storm)

Using Double Grate Type 'N' CB, Perimeter = 17.2'

2-yr: CB Capacity = 17.2(2.7)(.5 clogging) = 23.5 cfs

Flowby = 24.4 - 23.5 = 0.9 cfs

10-yr: CB Capacity = 17.2(4.0)(.5) = 34.4 cfs

Flowby = 36.7 - 34.4 = 2.3 cfs

USE Double Grate Type 'N' CB

arthur beard engineers, inc.

PROJECT _____ PROJ. NO. _____
SUBJECT _____ CLIENT _____

COMP BY _____ DATE _____ CKD BY _____ DATE _____ SHEET 6 OF 22

Inlet #6 (Sta. 41+20)

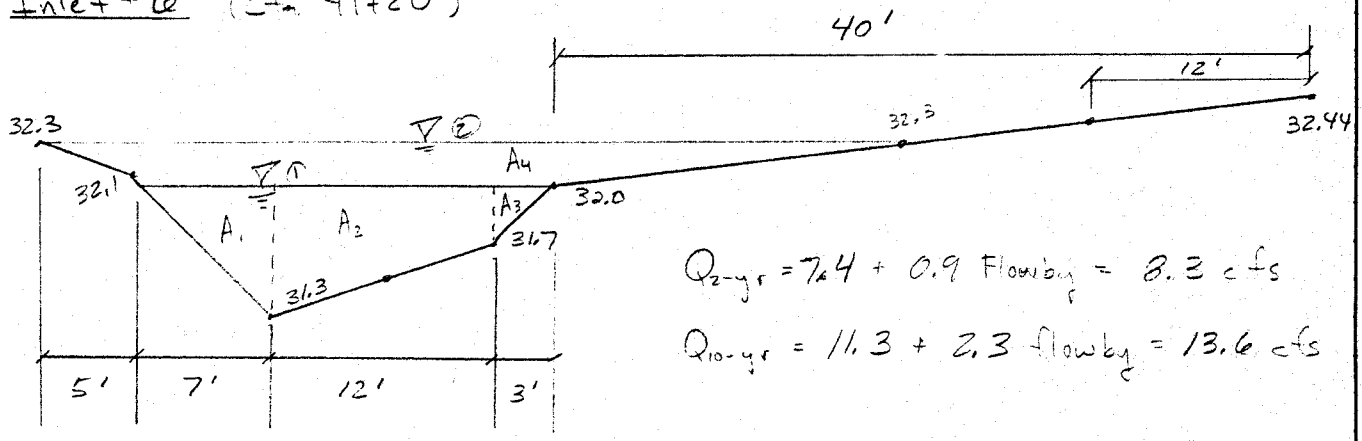

$Q_{2\text{-yr}} = 7.4 + 0.9$ Flowby $= 8.3$ cfs

$Q_{10\text{-yr}} = 11.3 + 2.3$ flowby $= 13.6$ cfs

$A_1 = \frac{1}{2}(0.7)(6.1) = 2.14\ ft^2$

$A_2 = \frac{12(0.7+0.3)}{2} = 6.0\ ft^2$

$A_3 = \frac{1}{2}(.3)\,3 = 0.45\ ft^2$

$A_4 = \frac{0.3(45+21)}{2} = 9.92\ ft^2$

Level 1, $A = 8.59\ ft^2$, depth over grate $= 0.50'$

Level 2, $A = 18.51\ ft^2$, depth over grate $= 0.80'$

$$Q_{①} = \frac{1.49}{0.03}\left(\frac{3.59}{21.1}\right)^{2/3}(.009)^{1/2}(8.59) = 18.2\ cfs$$

$$Q_{②} = \frac{1.49}{0.03}\left(\frac{18.51}{45}\right)^{2/3}(0.009)^{1/2}(18.51) = 43.2\ cfs$$

Level's too high

Try: level at 31.7

$A_1 = \frac{1}{2}(.4)\,3.5 = 0.7\ ft^2$

$A_2 = \frac{1}{2}(.4)\,12 = 2.4\ ft^2$

arthur beard engineers, Inc.

PROJECT _____ PROJ. NO. _____
SUBJECT _____ CLIENT _____

COMP. BY _____ DATE _____ CKD BY _____ DATE _____ SHEET 7 OF 22

Inlet # 6 (cont)

$$Q = \frac{1.49}{0.03}\left(\frac{3.1}{15.5}\right)^{2/3}(0.009)^{1/2}(3.1) = 5.0 \text{ cfs}$$

Try 31.8

$$A_1 = \tfrac{1}{2}(4.4)(.5) = 1.1 \text{ ft}^2$$

$$A_2 = 12\frac{(.5+.1)}{2} = 3.6 \text{ ft}^2$$

$$A_3 = \tfrac{1}{2}(.1)(1) = 0.05 \text{ ft}^2$$

$$Q = \frac{1.49}{0.03}\left(\frac{4.8}{17.4}\right)^{2/3}(0.009)^{1/2}(4.8) = 9.6 \text{ cfs}$$ close to 2-yr

depth over grate = $\boxed{0.5'}$ 2-yr

Try 31.9

$$A_1 = \tfrac{1}{2}(.6)(5.25) = 1.6 \text{ ft}^2$$

$$A_2 = 12\frac{(.6+.2)}{2} = 4.8 \text{ ft}^2$$

$$A_3 = \tfrac{1}{2}(.2)2 = 0.2 \text{ ft}^2$$

$$Q = \frac{1.49}{0.03}\left(\frac{6.6}{19.25}\right)^{2/3}(0.009)^{1/2}(6.6) = 15.2 \text{ cfs}$$ close to 10-yr

depth over grate = $\boxed{0.6'}$ 10-yr

For depth of 0.5, Flow into inlet = 1.2 cfs/ft (2-yr event)

For depth of 0.6, Flow into inlet = 1.65 cfs/ft (10-yr event)

arthur beard engineers, Inc.

PROJECT
SUBJECT
PROJ. NO.
CLIENT
COMP. BY DATE CKD BY DATE

Inlet #6 (cont.)

Using Single Grate Type 'N' CB, Perimeter = 10.6'

2-yr: CB Capacity = 10.6 (1.2)(.5 clogging) = 6.4 cfs

Flowby = 8.3 - 6.4 = 1.9 cfs

10-yr CB Capacity = 10.6 (1.65)(.5 clogging) = 8.8 cfs

Flowby = 13.6 - 8.8 = 4.8 cfs

USE Single Grate Type 'N' CB

arthur beard engineers, Inc.

PROJECT _____ PROJ. NO. _____
SUBJECT _____ CLIENT _____

COMP BY _____ DATE _____ CKD BY _____ DATE _____ SHEET 9 OF 22

Inlet # 5 (Sta 37+10)

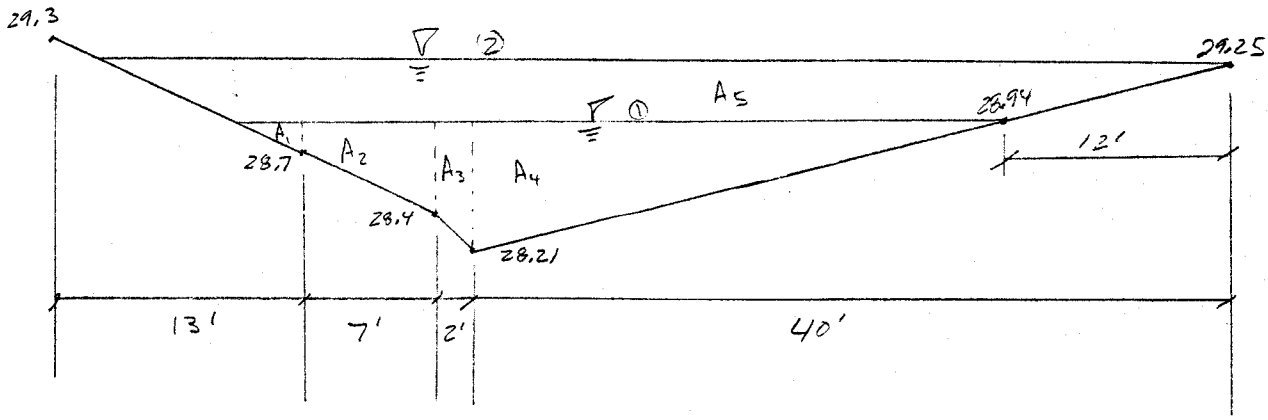

$Q_{2\text{-}yr} = 18.2 + 1.9\,(\text{flow by}) = 20.1 \text{ cfs}$

$Q_{10\text{-}yr} = 26.8 + 4.8\,(\text{flow by}) = 31.6 \text{ cfs}$

$A_1 = \frac{1}{2}(.24)\,5.2 = 0.62 \text{ ft}^2$

$A_2 = \frac{7(.24 + .54)}{2} = 2.73 \text{ ft}^2$

$A_3 = \frac{2(.54 + .73)}{2} = 1.27 \text{ ft}^2$

$A_4 = \frac{1}{2}(.73)\,28 = 10.22 \text{ ft}^2$

$A_5 = \frac{1}{2}(.31)\,12 + \frac{1}{2}(6.7).31 + 43.3(.31) = 16.33 \text{ ft}^2$

Level 1, $A = 13.84 \text{ ft}^2$

Level 2, $A = 30.16 \text{ ft}^2$

$Q_{①} = \frac{1.49}{0.03}\left(\frac{13.84}{42.2}\right)^{2/3}(.007)^{1/2}(13.84) = 27.4 \text{ cfs}$

$Q_{②} = \frac{1.49}{0.03}\left(\frac{30.16}{55.7}\right)^{2/3}(.007)^{1/2}(30.16) = 23.3 \text{ cfs}$

arthur beard engineers, Inc.

PROJECT _____ PROJ. NO. _____
SUBJECT _____ CLIENT _____

COMP. BY _____ DATE _____ CKD BY _____ DATE _____ SHEET 10 OF 22

Inlet #5 (cont.)

Try level at 29.0

$A_1 = \frac{1}{2}(.3)(6.5) = 1.3\ ft^2$

$A_2 = 7(.3+.6)/2 = 3.1\ ft^2$

$A_3 = \frac{2(.6+.8)}{2} = 1.4\ ft^2$

$A_4 = \frac{1}{2}(.8)(30.7) = 12.2\ ft^2$

$Q = \frac{1.49}{0.03}\left(\frac{18.0}{46.2}\right)^{2/3}(0.007)^{1/2}(18.0) = 40.0\ cfs$

Level 1, close to 10-yr flow

depth over grate = $\boxed{0.73'}$ 10-yr

Try level at 28.8

$A_1 = \frac{1}{2}(.1)(2.2) = 0.1\ ft^2$

$A_2 = 7(.1+.4)/2 = 1.8\ ft^2$

$A_3 = 2(.4+.6)/2 = 1.0\ ft^2$

$A_4 = \frac{1}{2}(.6)(23) = 6.9\ ft^2$

$Q = \frac{1.49}{0.03}\left(\frac{9.8}{34.2}\right)^{2/3}(0.007)^{1/2}(9.8) = 17.7\ cfs$

depth over grate = $\boxed{0.6'}$ 2-yr

arthur beard engineers, inc.

PROJECT _____ PROJ. NO. _____
SUBJECT _____ CLIENT _____

COMP. BY _____ DATE _____ CKD BY _____ DATE _____ SHEET 11 OF 22

Inlet 5 (cont.)

For depth of 0.73', Flow into inlet = 2.5 cfs/ft (10-yr)
For depth of 0.60', Flow into inlet = 1.75 cfs/ft (2-yr)

Using Double Grate, Type 'N' CB, Perimeter = 17.2'

2-yr: CB Capacity = 17.2 (1.75)(0.5 clogging) = 15.0 cfs
Flow by = 30.1 - 15.0 = 5.1 cfs

10-yr CB Capacity = 17.2 (2.5)(.5) = 21.5 cfs
Flow by = 31.6 - 21.5 = 10.1 cfs

USE Double Grate, Type 'N' CB

arthur beard engineers, inc.

PROJECT _____ PROJ. NO. _____
SUBJECT _____ CLIENT _____

COMP BY _____ DATE _____ CKD BY _____ DATE _____ SHEET 12 OF 22

Inlet #4 (Sta 29+70)

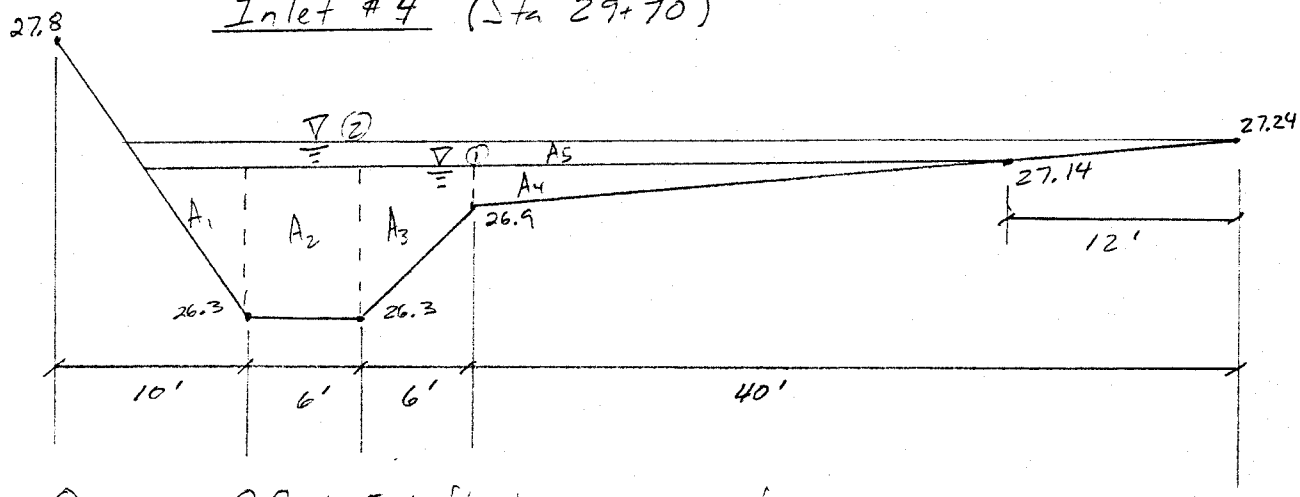

$Q_{2\text{-yr}} = 8.8 + 5.1$ flowby $= 13.9$ cfs

$Q_{10\text{-yr}} = 12.5 + 10.1$ flowby $= 22.6$ cfs

$A_1 = \frac{1}{2}(.84)(5.6) = 2.35\ ft^2$

$A_2 = 6(.84) = 5.04\ ft^2$

$A_3 = \frac{6(.84+.24)}{2} = 3.24\ ft^2$

$A_4 = \frac{1}{2}(28)(.24) = 3.36\ ft^2$

$A_5 = \frac{1}{2}(0.1)12 + .1(45.6) = 5.16\ ft^2$

Level 1, $A = 13.99\ ft^2$

Level 2, $A = 19.15\ ft^2$

$$Q_{①} = \frac{1.49}{0.03}\left(\frac{13.99}{45.60}\right)^{2/3}(.005)^{1/2}(13.99) = 22.3\ cfs$$

$$Q_{②} = \frac{1.49}{0.03}\left(\frac{19.15}{57.6}\right)^{2/3}(.005)^{1/2}(19.15) = 32.2\ cfs$$

arthur beard engineers, Inc.

PROJECT _____ PROJ. NO. _____
SUBJECT _____ CLIENT _____

COMP. BY _____ DATE _____ CKD BY _____ DATE _____ SHEET 13 OF 22

Inlet #4 (cont.)

Level 1, close to 10-yr storm flow

Depth over grate = $\boxed{0.9'}$ 10-yr

Try level at 27.1

$A = 13.99 - 0.04(45) = 12.19 \text{ ft}^2$

$Q = \frac{1.49}{0.03}\left(\frac{12.19}{45}\right)^{2/3}(0.005)^{1/2}\,12.19 = 17.9 \text{ cfs}$ - TOO HIGH

Try level at 26.9

$A = \frac{1}{2}(.6)4 + 6(.6) + \frac{1}{2}(.6)6 = 6.6 \text{ ft}^2$

$Q = \frac{1.49}{0.03}\left(\frac{6.6}{16}\right)^{2/3}(0.005)^{1/2}\,6.6 = 12.8 \text{ cfs}$

Depth over grate = $\boxed{0.6'}$ 2-yr

For depth of 0.6', Flow into inlet = 1.65 cfs/ft

For depth of 0.9', Flow into inlet = 3.5 cfs/ft

Using Single Grate, Type 'N' CB, Perimeter = 10.6'

2-yr: CB Capacity = 10.6(1.65)(0.5 clogging) = 8.7 cfs

Flowby = 13.9 - 8.7 = 5.2 cfs

10-yr: CB Capacity = 10.6(3.5)(0.5) = 18.6 cfs

Flowby = 22.6 - 18.6 = 4.0 cfs

arthur beard engineers, Inc.

PROJECT
SUBJECT
PROJ. NO.
CLIENT

COMP. BY ____ DATE ____ CKD BY ____ DATE ____ SHEET 14 OF 22

Inlet #4 (cont.)

USE Single Grate, Type 'N' CB (see CB #3 calculations)

Using Double Grate, Type 'N' CB, P = 17.2, to eliminate Flowby to CB #3

2-yr CB Capacity = 17.2 (1.65)(0.5 clogging) = 14.2 cfs

Flowby = 13.9 - 14.2 = 0

10-yr CB Capacity = 17.2 (3.5)(0.5) = 30.1 cfs

Flowby = 30.1 - 27.6 = 0

USE Double Grate, Type 'N' CB to eliminate flowby to CB #3 which would cause excessive spread into street

arthur beard engineers, inc.

PROJECT _____ PROJ. NO. _____
SUBJECT _____ CLIENT _____

COMP BY _____ DATE _____ CKD BY _____ DATE _____ SHEET 15 OF 22

Inlet #3 (Sta 23+10)

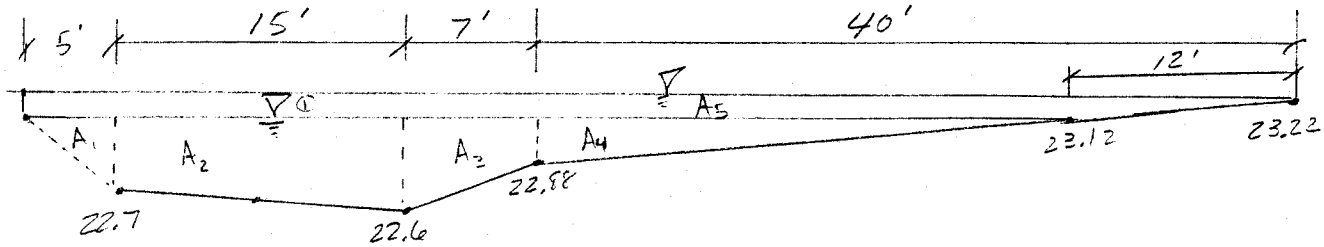

$Q_{2\text{-}yr} = 15.2 + 5.2 \text{ flowby} = 20.2 \text{ cfs}$

$Q_{10\text{-}yr} = 24.0 + 4.0 \text{ flowby} = 28.0 \text{ cfs}$

$A_1 = \frac{1}{2}(0.42)(5) = 1.05 \text{ ft}^2$

$A_2 = \frac{15(.42 + .32)}{2} = 5.55 \text{ ft}^2$

$A_3 = \frac{7(.32 + .24)}{2} = 1.96 \text{ ft}^2$

$A_4 = \frac{1}{2}(.24)23 = 3.36 \text{ ft}^2$

$A_5 = 52(.1) + \frac{1}{2}(.1)12 = 5.8 \text{ ft}^2$

Level 1, $A = 11.92 \text{ ft}^2$

Level 2, $A = 17.72 \text{ ft}^2$

$Q_{①} = \frac{1.49}{0.03}\left(\frac{11.92}{56}\right)^{2/3}(.005)^{1/2}\,11.92 = 14.92 \text{ cfs}$ TOO LOW, Spread will extend into 12' dry lane, go back and increase Inlet #5 to a Double Grate

New Q's after increasing CB #5 to double grate

$Q_{2\text{-}yr} = 15.2 + 0 \text{ flowby} = 15.2 \text{ cfs}$ ✓

$Q_{10\text{-}yr} = 24 + 0 = 24.0 \text{ cfs}$

arthur beard engineers, Inc.

PROJECT _____ PROJ. NO. _____
SUBJECT _____ CLIENT _____

COMP BY _____ DATE _____ CKD BY _____ DATE _____ SHEET 16 OF 22

Inlet #3, (cont.)

Level 1 flow capacity is close to 2-yr

∴ depth over grate = **0.47'**

$$Q_{(2)} = \frac{1.49}{0.03}\left(\frac{17.72}{68}\right)^{2/3}(0.005)^{1/2}(17.72) = 25.39 \text{ cfs}$$

Level 2 flow capacity is close to 10-yr

∴ depth over grate = **0.57'**

For depth of 0.47', Flow into inlet = 1.1 cfs/ft

For depth of 0.57', Flow into inlet = 1.45 cfs/ft

Using Double Grate CB, Type 'N', P = 17.2'

2-yr CB Capacity = 17.2 (1.1)(0.5 clogging) = 9.5 cfs

Flowby = 15.2 − 9.5 = 5.7 cfs

10-yr CB Capacity = 17.2 (1.45)(0.5 clogging) = 12.5 cfs

Flowby = 24.0 − 12.5 = 11.8 cfs

USE Double Grate CB, Type 'N'

arthur beard engineers, Inc.

PROJECT _____ PROJ. NO. _____
SUBJECT _____ CLIENT _____

COMP BY _____ DATE _____ CKD BY _____ DATE _____ SHEET 17 OF 22

Inlet #2 (sta 15+90)

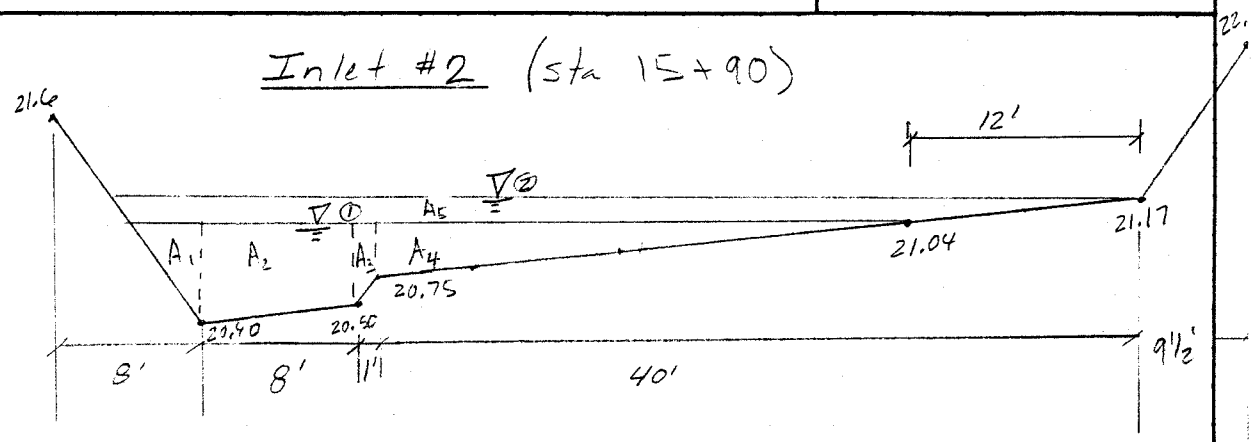

$Q_{2\text{-yr}} = 9.9 + 5.7 = 15.6$ cfs

$Q_{10\text{-yr}} = 15.2 + 11.8 = 27.0$ cfs

$A_1 = \frac{1}{2}(0.64)4.3 = 1.38\ ft^2$

$A_2 = \frac{8(0.64+.54)}{2} = 4.72\ ft^2$

$A_3 = 1(.54+.29)/2 = 0.42\ ft^2$

$A_4 = \frac{1}{2}(28)(.29) = 4.06\ ft^2$

$A_4 = \frac{1}{2}(2.75)(.13) + 37(.13) + \frac{1}{2}(12).13 = 5.77\ ft^2$

Level 1, $A = 10.58\ ft^2$

Level 2, $A = 16.30\ ft^2$

$Q_{①} = \frac{1.49}{0.03}\left(\frac{10.58}{41.3}\right)^{2/3}(0.005)^{1/2}(10.58) = 15.0$ cfs

$Q_{②} = \frac{1.49}{0.03}\left(\frac{16.30}{54.5}\right)^{2/3}(0.005)^{1/2}15.40 = 24.2$ cfs

arthur beard engineers, inc.

PROJECT _____ PROJ. NO. _____
SUBJECT _____ CLIENT _____

COMP BY _____ DATE _____ CKD BY _____ DATE _____ SHEET 18 OF 22

Inlet #2 (cont)

Level 1 flow capacity close to 2-yr

Depth over grate = $\boxed{0.59'}$

Level 2 flow capacity too low for 10-yr

Try level at 21.25

$A = 16.30 + 53.5(0.08) = 20.58\ ft^2$

$Q_{10} = \frac{1.49}{0.03}\left(\frac{20.58}{53.5}\right)^{2/3}(0.005)^{1/2}\,20.58 = 38\ cfs$ too high

Depth over grate = $\boxed{0.73'}$

For depth of 0.59', Flow into inlet = 1.65 cfs/ft

For depth of 0.73', Flow into inlet = 2.40 cfs/ft

Using Single Grate, Type 'N' CB, P = 10.6'

2-yr CB Capacity = 10.6(1.65)(0.5 clogging) = 8.8 cfs

Flowby = 15.6 − 8.8 = 6.8 cfs

10-yr CB Capacity = 10.6(2.4)(0.5 clogging) = 12.7 cfs

Flowby = 24.2 − 12.7 = 11.5 cfs

arthur beard engineers, inc.

PROJECT
SUBJECT
PROJ. NO.
CLIENT

COMP BY DATE CKD BY DATE

Inlet #2 (cont)

Using Double Grate, Type 'N' CB, P = 17.2'

2-yr CB Capacity = 17.2 (1.65)(0.5 clogging) = 14.2 cfs

Flowby = 15.6 - 14.2 = 1.4 cfs

10-yr CB Capacity = 17.2 (2.4)(0.5 clogging) = 20.6 cfs

Flowby = 24.2 - 20.6 = 3.6 cfs

Use Double Grate, Type 'N'

arthur beard engineers, inc.

PROJECT _____ PROJ. NO. _____
SUBJECT _____ CLIENT _____

COMP BY _____ DATE _____ CKD BY _____ DATE _____ SHEET 20 OF 22

Inlet #1 (Sta 11+20)

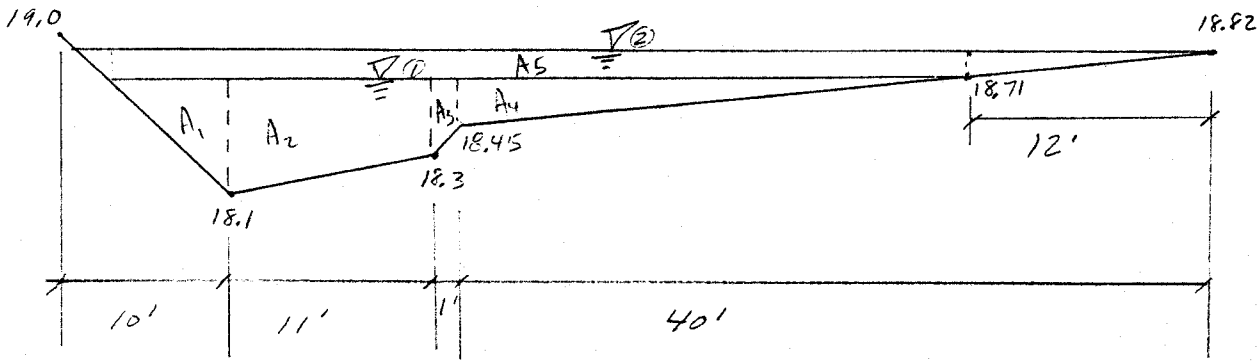

$Q_{2\text{-yr}} = 7.5 + 1.4 = 8.9$ cfs

$Q_{10\text{-yr}} = 11.3 + 3.6 = 14.9$ cfs

$A_1 = \frac{1}{2}(0.61)(6.8) = 2.07\ ft^2$

$A_2 = 11(.61 + .41)/2 = 5.61\ ft^2$

$A_3 = 1(.41 + .26)/2 = 0.34\ ft^2$

$A_4 = \frac{1}{2}(27)(.26) = 3.51\ ft^2$

$A_5 = 43.2(.11) + \frac{1}{2}(12).11 + \frac{1}{2}(.11)1.2 = 5.48\ ft^2$

Level 1, $A = 11.53\ ft^2$

Level 2, $A = 17.01\ ft^2$

$$Q_{①} = \frac{1.49}{0.03}\left(\frac{11.53}{45.8}\right)^{2/3}(0.004)^{1/2}\,11.53 = 14.5 \text{ cfs}$$

$$Q_{②} = \frac{1.49}{0.03}\left(\frac{17.01}{60.0}\right)^{2/3}(0.004)^{1/2}\,17.01 = 23.1 \text{ cfs}$$

arthur beard engineers, inc.

PROJECT
SUBJECT
PROJ. NO.
CLIENT
COMP BY DATE CKD BY DATE

Inlet #1 (cont)

Level 1 flow capacity too high for 2-yr

Try level at 18.6

$A = \frac{1}{2}(1.5)(5.6) + 11(.5+.3)/2 + 1(.3+.15)/2 + \frac{1}{2}(17).15 = 7.3\ ft^2$

$Q_c = \frac{1.49}{0.03}\left(\frac{7.3}{24.6}\right)^{2/3}(0.004)^{1/2}(7.3) = 8.1\ cfs \rightarrow$ close to 2-yr

depth over grate = $\boxed{0.40'}$

Level 1 flow capacity is close to 10-yr

depth over grate = $\boxed{0.51'}$

For depth of 0.4', Flow into inlet = 0.75 cfs/ft

For depth of 0.5', Flow into inlet = 1.25 cfs/ft

Using Double Grate, Type 'N' CB, P = 17.2'

2-yr CB Capacity = 17.2(.75)(0.5 clogging) = 6.5 cfs

Flow by = 8.9 - 6.5 = 2.4 cfs

10-yr CB Capacity = 17.2(1.25)(0.5 clogging) = 10.8 cfs

Flow by = 14.9 - 10.8 = 4.1 cfs

Using Triple Type 'N' CB, P = 23.8'

2-yr CB Capacity = 23.8(.75)(.5 clogging) = 8.9 cfs ; Flow by = 0

10-yr CB Capacity = 23.8(1.25)(.5 clogging) = 14.9 cfs ; Flow by = 0

USE Triple Grate, Type 'N' CB

arthur beard engineers, inc.

PROJECT _____ PROJ. NO. _____
SUBJECT _____ CLIENT _____

COMP BY _____ DATE _____ CKD BY _____ DATE _____ SHEET 22 OF 22

Summary

Inlet # & Station	Inlet Type	2-yr Capacity (cfs)	2-yr Flowby (cfs)	10-yr Capacity (cfs)	10-yr Flowby (cfs)
8 - 54+40	Double 'N'	12.9	5.5	19.8	7.7
7 - 44+20	Double 'N'	23.5	0.9	34.4	2.3
6 - 41+20	Single 'N'	6.4	1.9	8.8	4.8
5 - 37+10	Double 'N'	15.0	5.1	21.5	10.1
4 - 29+70	Double 'N'	14.2	0	30.1	0
3 - 23+10	Double 'N'	9.5	5.7	12.5	11.8
2 - 15+90	Double 'N'	14.2	1.4	20.6	3.6
1 - 11+10	Triple 'N'	8.9	0	14.9	0

LATERAL PIPE SIZING

arthur beard engineers, inc.

PROJECT Yorkshire/43rd Ave
SUBJECT Lateral Pipe Sizing
PROJ. NO. 1249
CLIENT COP

COMP BY JM DATE 8/2/89 CKD BY _____ DATE _____
SHEET 1 OF 2

Inlet No. 8 Sta 54+40

Q = 19.8 cfs

Using pipe slope of 0.0064 ft/ft

From pg 25, COP SD Design Manual;

For pipe size of 24", V = 6.25 fps ✓
Q = 20 cfs ✓

Inlet No. 7 Sta 47+60

Q = 41.0 cfs

Using pipe slope of 0.0048 ft/ft

For pipe size of 36" Q = 50 cfs
V = 7.0 fps

Inlet No. 6 Sta 41+20

Q = 55.2 cfs

Using pipe slope of 0.0048 ft/ft

For pipe size of 42" Q = 78 cfs
V = 7.8 fps

For pipe size of 36" Req'd slope = 0.0056 ft/ft
Q = 55 cfs
V = 7.5 fps

arthur beard engineers, inc.

PROJECT
SUBJECT
PROJ. NO.
CLIENT

COMP BY DATE CKD BY DATE SHEET 2 OF 2

Inlet No. 5 Sta 36+30

Q = 77.1 cfs

Using pipe slope of 0.0048 ft/ft

For pipe size of 42" Q = 78 cfs

V = 7.8 fps

Inlet No. 4 Sta 29+70

Q = 107.2 cfs

Using pipe slope of 0.0048 ft/ft

For pipe size of 48" Q = 110 cfs

V = 8.3 fps

Inlet No. 3 Sta 23+10

Q = 119.7 cfs

Using pipe slope of 0.0048 ft/ft

For pipe size of 54" Q = 155 cfs

V = 9.2 fps

For Pipe Size of 48" need slope = 0.0056'/ft

Q = 120 cfs

V = 9.5 fps

CROSS-SECTIONS

ON NORTH SIDE OF YORKSHIRE DRIVE

&

ESTIMATED SUMP CAPACITIES

arthur beard engineers, inc. Phoenix - Tucson, Arizona

PROJECT: 43rd Ave / Yorkshire Dr
SUBJECT: Cross-sections on N. side Yorkshire every 200' and capacities at sumps
PROJ. NO. 1249
CLIENT: COP
COMP BY: JM DATE: 7/26/89 CKD BY: _____ DATE: _____
SHEET 1 OF 10

Sta 11+00

$A_1 = \frac{1}{2}(5.3)(.48) = 1.28$

$A_2 = 11(.48 + .18)/2 = 3.63$

$A_3 = \frac{1}{2}(1)(.18) = 0.09$

$A_T = 5.00\ ft^2$

$R = \frac{5}{17.3} = 0.29$

$Q = \frac{1.49}{0.03}(.25)^{2/3}(.004)^{1/2}(5.98) = \boxed{7.4\ cfs}$

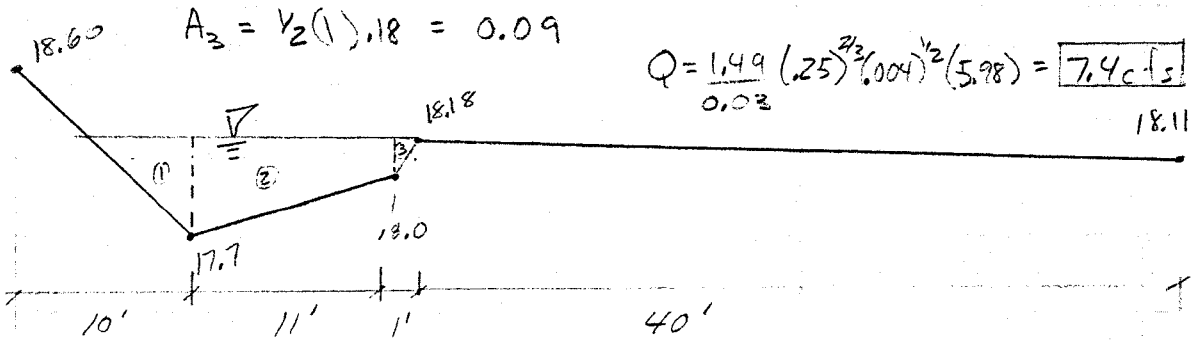

Sta 12+00

$A_1 = \frac{1}{2}(.49)(5.44) = 1.33\ ft^2$

$A_2 = \frac{11(.49 + .29)}{2} = 4.29\ ft^2$

$A_3 = 1\frac{(.29 + .14)}{2} = 0.22\ ft^2$

$A_4 = \frac{1}{2}(16)(.14) = 1.12\ ft^2$

$A_T = 6.96\ ft^2$

$R = \frac{6.96}{33.5} = 0.21$

$Q = \frac{1.49}{0.03}(.21)^{2/3}(.0055)^{1/2}6.7 = \boxed{8.7\ cfs}$

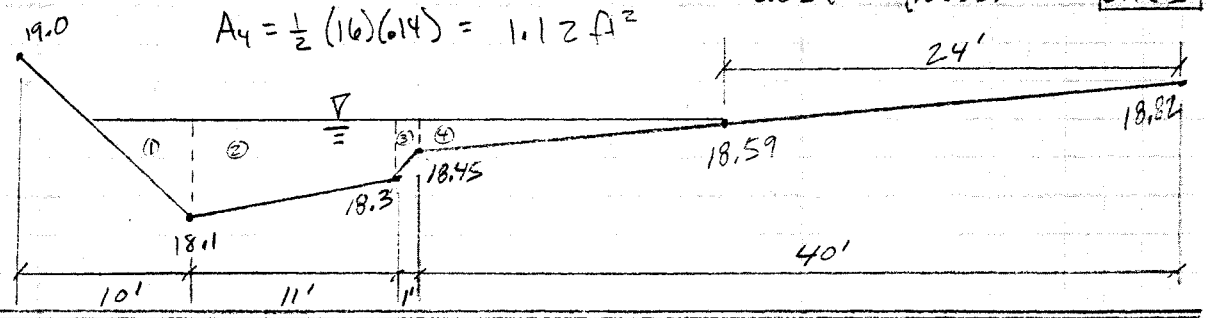

Sta 14+00

$A_1 = \frac{1}{2}(3.91)(.43) = 0.84\ ft^2$

$A_2 = \frac{11(.43 + .33)}{2} = 4.18\ ft^2$

$A_3 = 1\frac{(.33 + .16)}{2} = 0.25\ ft^2$

$A_4 = \frac{1}{2}(16)(.16) = 1.28\ ft^2$

$A_T = 6.55\ ft^2$

$R = \frac{6.55}{32} = 0.2$

$Q = \frac{1.49}{0.02}(.29)^{2/3}(.0067)^{1/2}8.3 = \boxed{14.7\ cfs}$

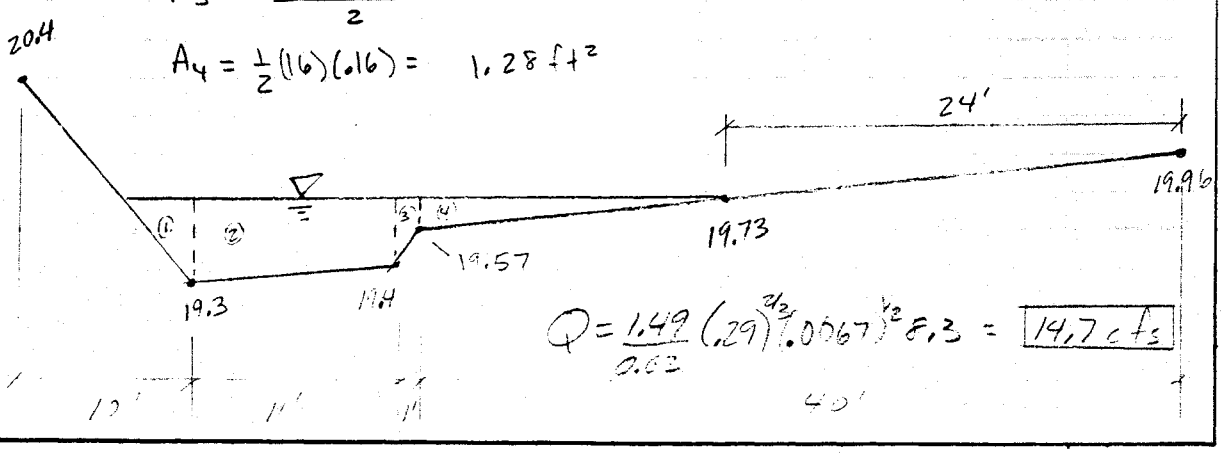

arthur beard engineers, inc. Phoenix - Tucson, Arizona

PROJECT _____ PROJ. NO. _____
SUBJECT _____ CLIENT _____

COMP BY _____ DATE _____ CKD BY _____ DATE _____ SHEET 2 OF 10

Sta 16+00

$A_1 = \frac{1}{2}(1.96)(.22) = 0.22\ ft^2$

$A_2 = \frac{9(.22+.17)}{2} = 1.76\ ft^2$

$A_3 = \frac{1}{2}(16)(.17) = 8.09\ ft^2$

$A_T = 10.07\ ft^2$

$R = \frac{10.07}{27} = 0.37$

$Q = \frac{1.49}{0.03}(.37)^{2/3}(.003)^{1/2}\,7.5 = \boxed{10.6\ cfs}$

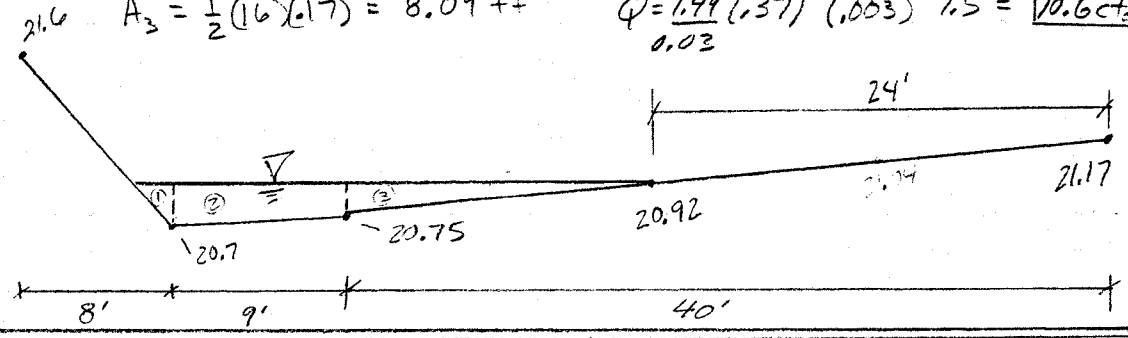

Sta 18+00

$A_1 = \frac{1}{2}(.28)(.26) = 0.04\ ft^2$

$A_2 = \frac{11(.26+.36)}{2} = 3.41\ ft^2$

$A_3 = 1(.36+.16)/2 = 0.26\ ft^2$

$A_4 = 1/2\,(.16)\,16 = 1.28\ ft^2$

$A_T = 4.99\ ft^2$

$R = \frac{4.99}{28.3} = 0.18$

$Q = \frac{1.49}{0.03}(.15)^{2/3}(.004)^{1/2}(4.5) = \boxed{4.0\ cfs}$

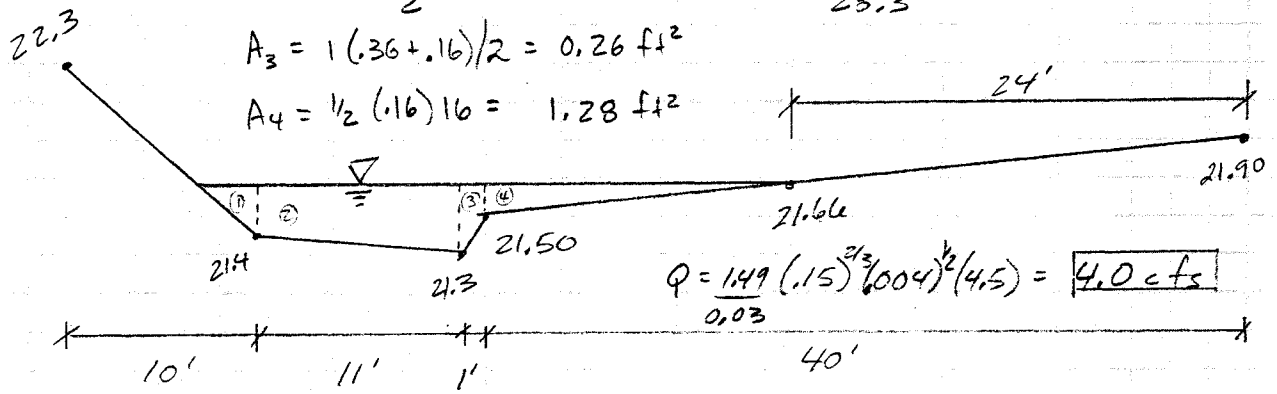

Sta 20+00

$A_1 = 1/2(5)(.15) = 0.38\ ft^2$

$A_2 = 11(.15+.25)/2 = 2.20\ ft^2$

$A_3 = 1(.25+.14)/2 = 0.20\ ft^2$

$A_4 = 1/2\,(.14)\,16 = 1.12\ ft^2$

$A_T = 3.90\ ft^2$

$R = \frac{3.9}{33} = 0.12$

$Q = \frac{1.49}{0.03}(.2)^{2/3}(.0034)^{1/2}(7.4) = \boxed{7.4\ cfs}$

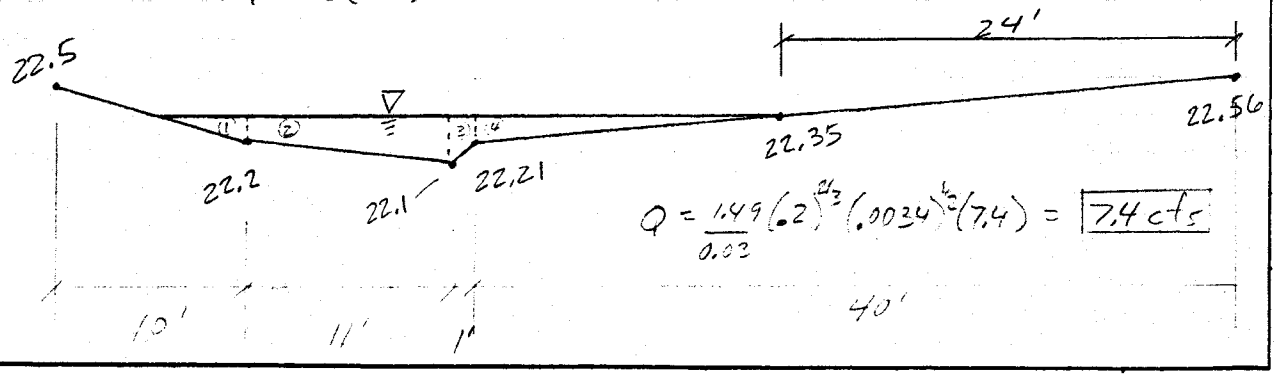

arthur beard engineers, inc. Phoenix - Tucson, Arizona

PROJECT _____ PROJ. NO. _____
SUBJECT _____ CLIENT _____

COMP BY _____ DATE _____ CKD BY _____ DATE _____ SHEET 3 OF 10

Sta 22+00

$A_1 = 15(.32+.42)/2 = 5.55\ ft^2$

$A_2 = 7(.42+.34)/2 = 2.66\ ft^2$

$A_3 = 1/2(.34)16 = 2.72\ ft^2$

$A_T = 10.93\ ft^2$

$R = \frac{10.93}{38} = 0.29$

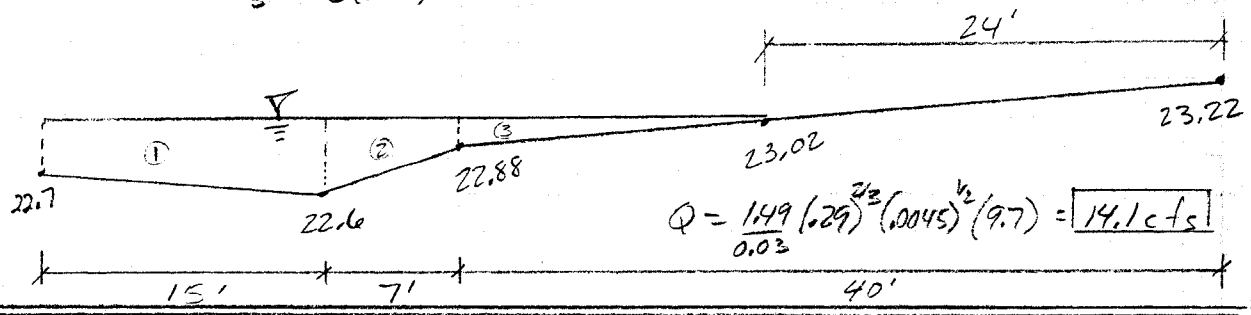

$Q = \frac{1.49}{0.03}(.29)^{2/3}(.0045)^{1/2}(9.7) = \boxed{14.1\ cfs}$

Sta 24+00

$A_1 = 1/2(2.92)(.35) = 0.51\ ft^2$

$A_2 = 11(.35+.85)/2 = 6.60\ ft^2$

$A_3 = 1(.85+.12)/2 = 0.49\ ft^2$

$A_4 = 1/2(.12)16 = 0.96\ ft^2$

$A_T = 8.56\ ft^2$

$R = \frac{8.56}{30.9} = 0.28$

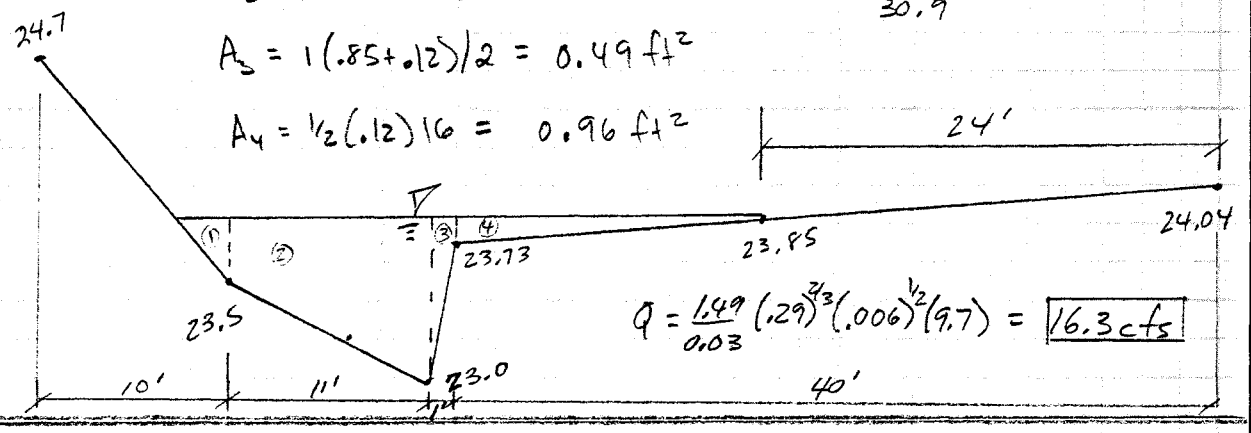

$Q = \frac{1.49}{0.03}(.29)^{2/3}(.006)^{1/2}(9.7) = \boxed{16.3\ cfs}$

Sta 26+00

$A_1 = 1/2(5.5)(.77) = 2.12\ ft^2$

$A_2 = 11(.77+.67)/2 = 7.92\ ft^2$

$A_3 = 1(.67+.10)/2 = 0.03\ ft^2$

$A_4 = 1/2(.10)16 = 0.80\ ft^2$

$A_T = 10.87\ ft^2$

$R = \frac{10.87}{33.5} = 0.3$

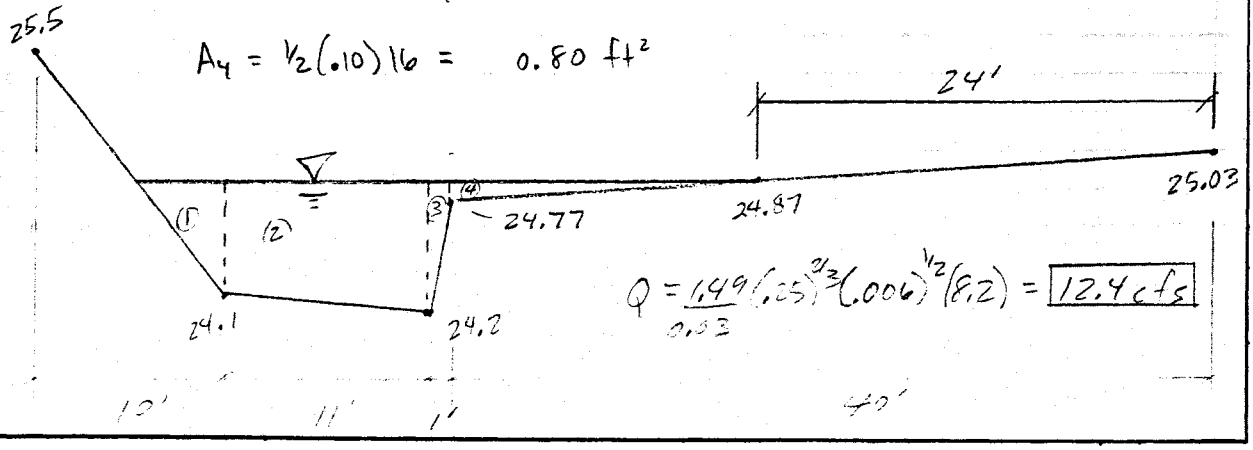

$Q = \frac{1.49}{0.03}(.25)^{2/3}(.006)^{1/2}(8.2) = \boxed{12.4\ cfs}$

arthur beard engineers, inc. Phoenix - Tucson, Arizona

PROJECT _____ PROJ. NO. _____
SUBJECT _____ CLIENT _____

COMP BY _____ DATE _____ CKD BY _____ DATE _____ SHEET 4 OF 10

Sta 28+00

$A_1 = \frac{1}{2}(.55)(.57) = 0.16\ ft^2$

$A_2 = 12(.57+.14)/2 = 4.26\ ft^2$

$A_3 = \frac{1}{2}(.14)(16) = 1.12\ ft^2$

$A_T = 5.54\ ft^2$

$R = \frac{5.54}{28.5} = 0.19$

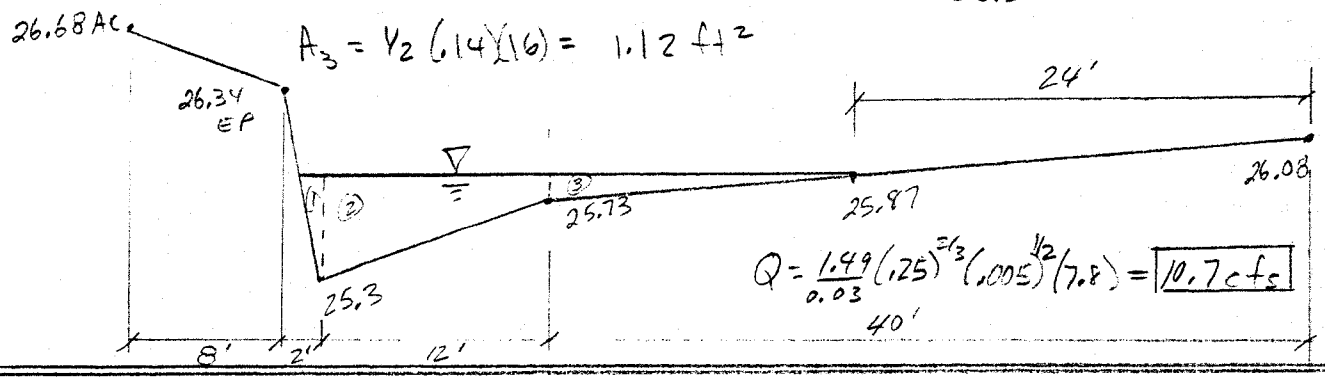

$Q = \frac{1.49}{0.03}(.25)^{2/3}(.005)^{1/2}(7.8) = \boxed{10.7\ cfs}$

Sta 30+00

$A_1 = \frac{1}{2}(4.93)(.74) = 1.82\ ft^2$

$A_2 = (.74)(6) = 4.44\ ft^2$

$A_3 = 6(.74+.14)/2 = 2.64\ ft^2$

$A_4 = \frac{1}{2}(.14)16 = 1.12\ ft^2$

$A_T = 10.02\ ft^2$

$R = \frac{10.02}{33} = 0.3$

$Q = \frac{1.49}{0.03}(.24)^{2/3}(.005)^{1/2}(7.8) = \boxed{10.4\ cfs}$

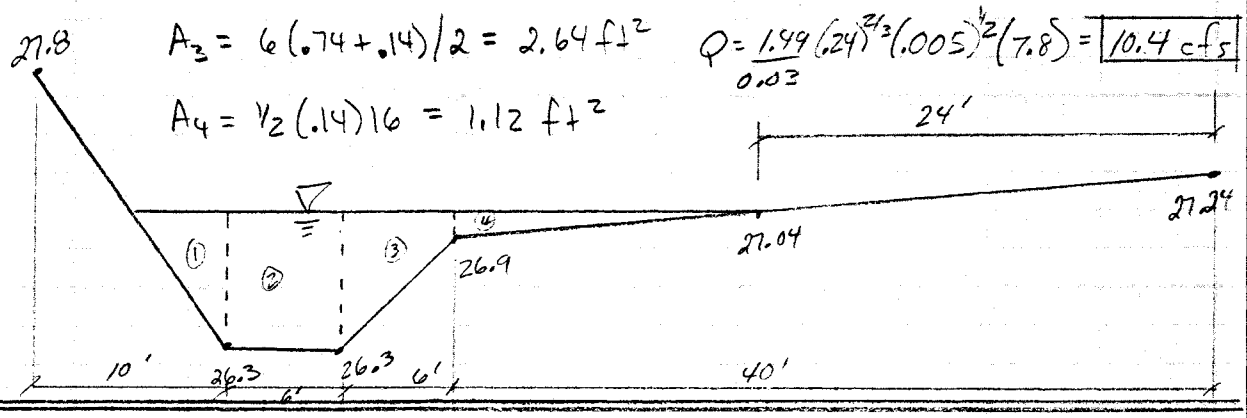

Sta 32+00

$A_1 = \frac{1}{2}(13.57)(.5) = 3.39\ ft^2$

$A_2 = 3(.5+.16)/2 = 0.99\ ft^2$

$A_3 = \frac{1}{2}(.16)(16) = 1.28\ ft^2$

$A_T = 5.66\ ft^2$

$R = \frac{5.66}{32.6} = 0.17$

$Q = \frac{1.49}{0.03}(.13)^{2/3}(.0017)^{1/2}3.6 = \boxed{1.8\ cfs}$

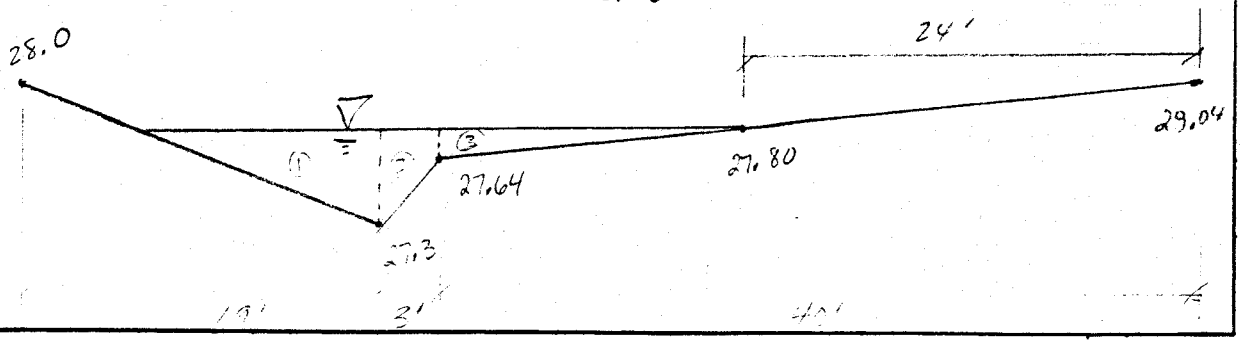

arthur beard engineers, inc. Phoenix - Tucson, Arizona

PROJECT _____ PROJ. NO. _____
SUBJECT _____ CLIENT _____

COMP BY _____ DATE _____ CKD BY _____ DATE _____ SHEET 5 OF 10

Sta 34+00

$A_1 = \frac{1}{2}(2.18)(.16) = 0.17\ ft^2$ $\quad A_T = 1.45\ ft^2$

$A_2 = \frac{1}{2}(.16)16 = 1.28\ ft^2$ $\quad R = \frac{1.45}{18.2} = 0.08$

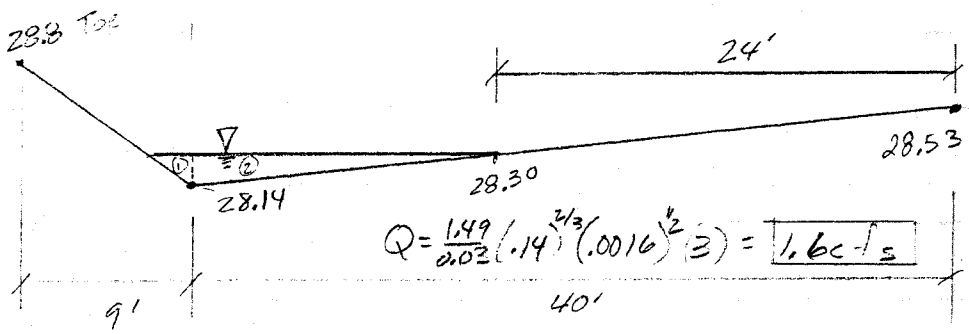

$Q = \frac{1.49}{0.03}(.14)^{2/3}(.0016)^{1/2}(3) = \boxed{1.6\ cfs}$

Sta 36+00

$A_1 = \frac{1}{2}(5.37)(.23) = 0.62\ ft^2$ $\quad A_T = 4.63\ ft^2$

$A_2 = 2(.23 + .42)/2 = 0.65\ ft^2$ $\quad R = \frac{4.63}{23.4} = 0.2$

$A_3 = \frac{1}{2}(.42)16 = 3.36\ ft^2$

$Q = \frac{1.49}{0.03}(.135)^{2/3}(.007)^{1/2}(3) = \boxed{3.3\ cfs}$

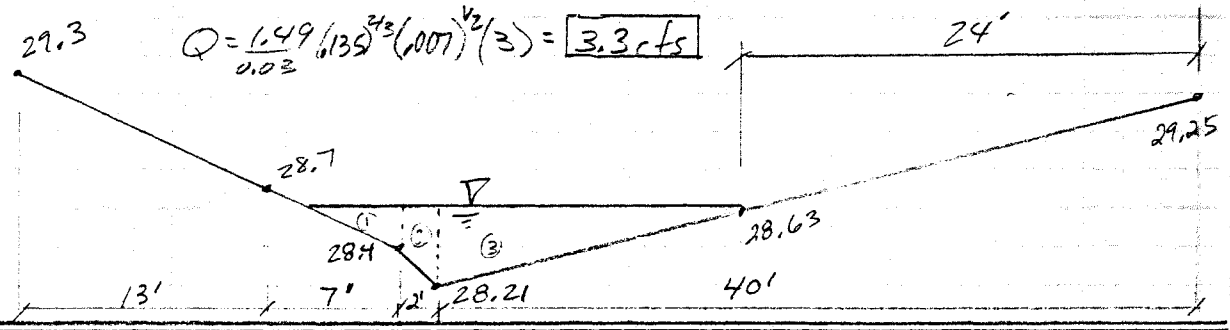

Sta 38+00

$A_1 = \frac{1}{2}(3.04)(.08) = 0.12\ ft^2$ $\quad A_T = 1.48\ ft^2$

$A_2 = 3(.08 + .13)/2 = 0.32\ ft^2$ $\quad R = \frac{1.48}{22} = 0.07$

$A_3 = \frac{1}{2}(.13)16 = 1.04\ ft^2$

$Q = \frac{1.49}{0.03}(.18)^{2/3}(.006)^{1/2}(6) = \boxed{7.5\ cfs}$

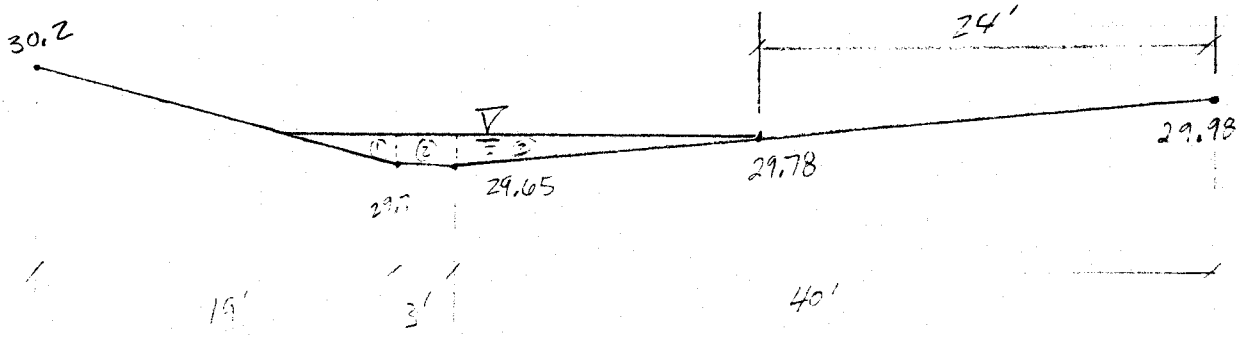

arthur beard engineers, inc. Phoenix - Tucson, Arizona

PROJECT _____ PROJ. NO. _____
SUBJECT _____ CLIENT _____

COMP BY _____ DATE _____ CKD BY _____ DATE _____ SHEET 6 OF 10

Sta 40+00

$A_1 = \frac{1}{2}(7.5)(.75) = 2.81\ ft^2$

$A_2 = 11(.75+.35)/2 = 6.05\ ft^2$

$A_3 = 1(.35+.17)/2 = 0.26\ ft^2$

$A_4 = \frac{1}{2}(.17)(16) = 1.36\ ft^2$

$A_T = 10.48\ ft^2$

$R = \frac{10.48}{35.5} = 0.30$

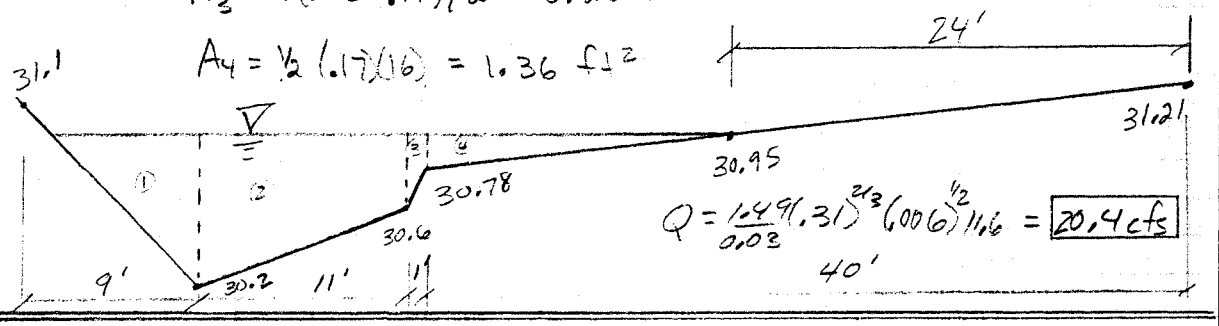

$Q = \frac{1.49}{0.03}(.31)^{2/3}(.006)^{1/2}11.6 = \boxed{20.4\ cfs}$

Sta 42+00

$A_1 = \frac{1}{2}(.4)(.08) = 0.02\ ft^2$

$A_2 = 7(.08+.88)/2 = 3.36\ ft^2$

$A_3 = 12(.88+.48)/2 = 8.16\ ft^2$

$A_4 = 3(.48+.18)/2 = 0.99\ ft^2$

$A_5 = \frac{1}{2}(.18)(16) = 0.17\ ft^2$

$A_T = 12.70\ ft^2$

$R = \frac{12.7}{38.4} = 0.33$

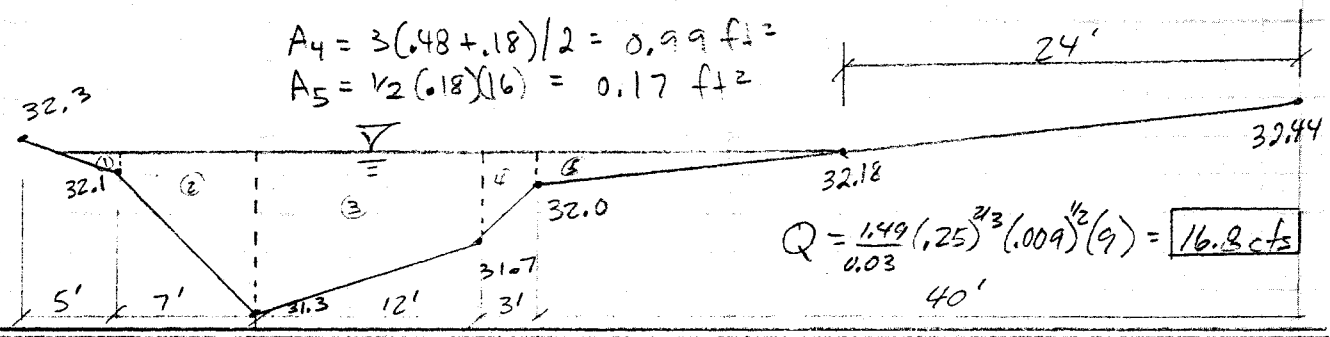

$Q = \frac{1.49}{0.03}(.25)^{2/3}(.009)^{1/2}(9) = \boxed{16.8\ cfs}$

Sta 44+00

$A_1 = 5(.38) = 1.90\ ft^2$

$A_2 = 12(.38+.08)/2 = 2.76\ ft^2$

$A_3 = \frac{1}{2}(.08)\,16 = 0.64\ ft^2$

$A_T = 5.30\ ft^2$

$R = \frac{5.3}{33} = 0.16$

$Q = \frac{1.49}{0.03}(.16)^{2/3}(.005)^{1/2}5.41 = \boxed{5.6\ cfs}$

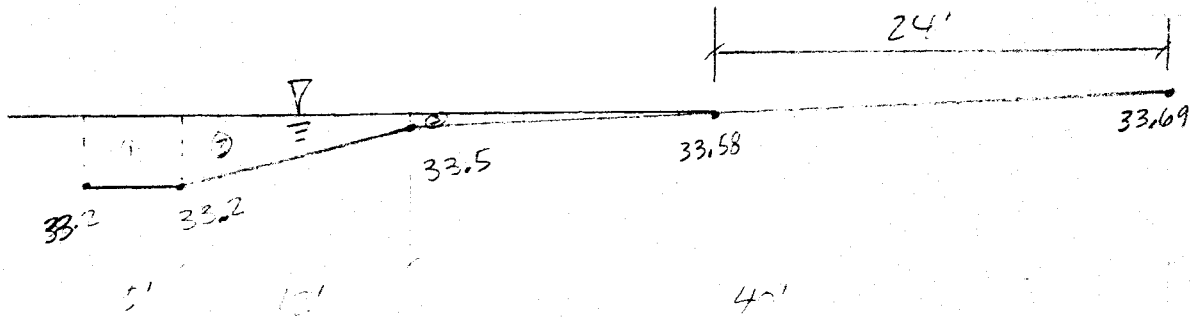

arthur beard engineers, inc. Phoenix - Tucson, Arizona

PROJECT _____ PROJ. NO. _____
SUBJECT _____ CLIENT _____

COMP BY _____ DATE _____ CKD BY _____ DATE _____ SHEET 7 OF 10

Sta 46+00

$A_1 = \frac{1}{2}(4.27)(.48) = 1.02\ ft^2$

$A_2 = 6(.48+.18)/2 = 1.98\ ft^2$

$A_3 = 6(.18) = 1.08\ ft^2$

$A_4 = \frac{1}{2}(.18)(16) = 1.44\ ft^2$

$A_T = 5.52\ ft^2$

$R = \frac{5.52}{32.3} = 0.17$

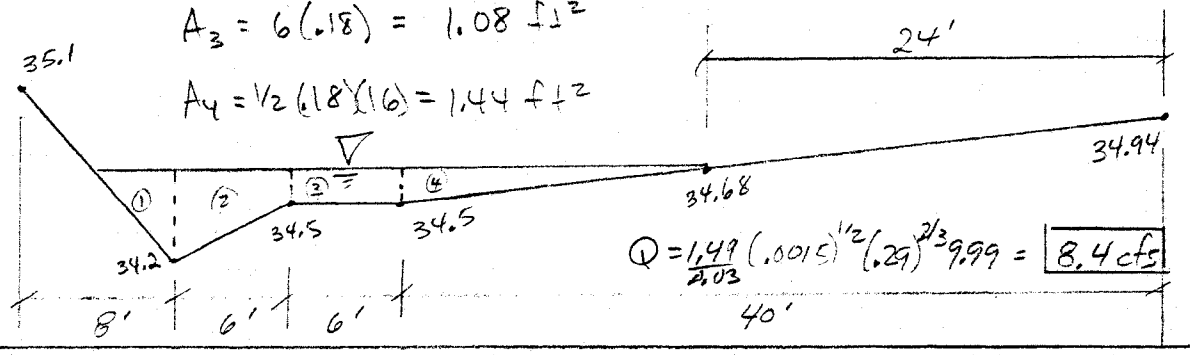

$Q = \frac{1.49}{0.03}(.0015)^{1/2}(.29)^{2/3}9.99 = \boxed{8.4\ cfs}$

Sta 48+00

$A_1 = \frac{1}{2}(7.71)(1.06) = 4.09\ ft^2$

$A_2 = 6(1.06+0.96)/2 = 6.06\ ft^2$

$A_3 = 6(.96+.13)/2 = 3.27\ ft^2$

$A_4 = \frac{1}{2}(.13)16 = 1.04\ ft^2$

$A_T = 14.46\ ft^2$

$WP = 7.7+6+6+16 = 35.7'$

$R = A/WP = 0.41$

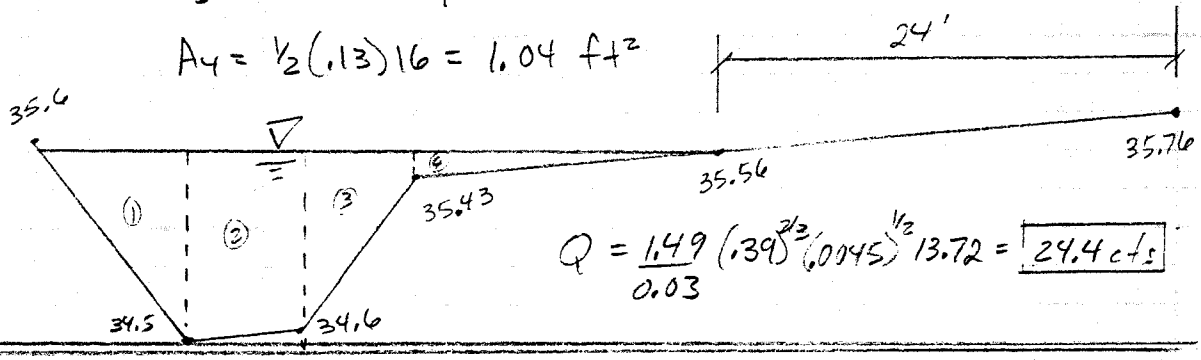

$Q = \frac{1.49}{0.03}(.39)^{2/3}(.0045)^{1/2}13.72 = \boxed{24.4\ cfs}$

Sta 52+00

$A_1 = \frac{1}{2}(4.69)(.67) = 1.57\ ft^2$

$A_2 = 9(.67+.37)/2 = 6.93\ ft^2$

$A_3 = 6(.37+.17)/2 = 3.12\ ft^2$

$A_4 = \frac{1}{2}(.17)16 = 1.36\ ft^2$

$A_T = 12.98\ ft^2$

$WP = 35.7'$

$R = \frac{A}{WP} = 0.36$

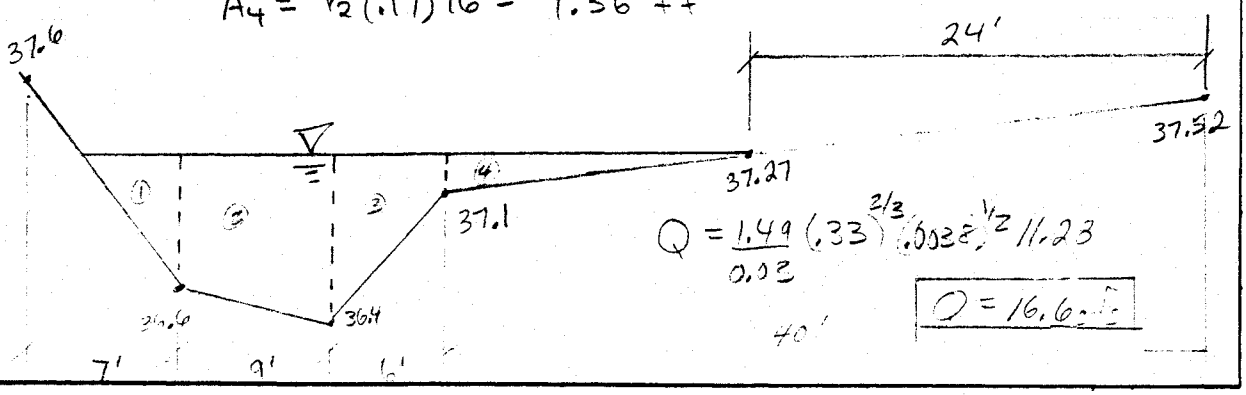

$Q = \frac{1.49}{0.03}(.33)^{2/3}(.0038)^{1/2}11.23$

$\boxed{Q = 16.6\ cfs}$

arthur beard engineers, inc. Phoenix - Tucson, Arizona

PROJECT _____ PROJ. NO. _____
SUBJECT _____ CLIENT _____

COMP BY _____ DATE _____ CKD BY _____ DATE _____ SHEET 8 OF 10

Sta 54+00

$A_T = 9.58\ ft^2$

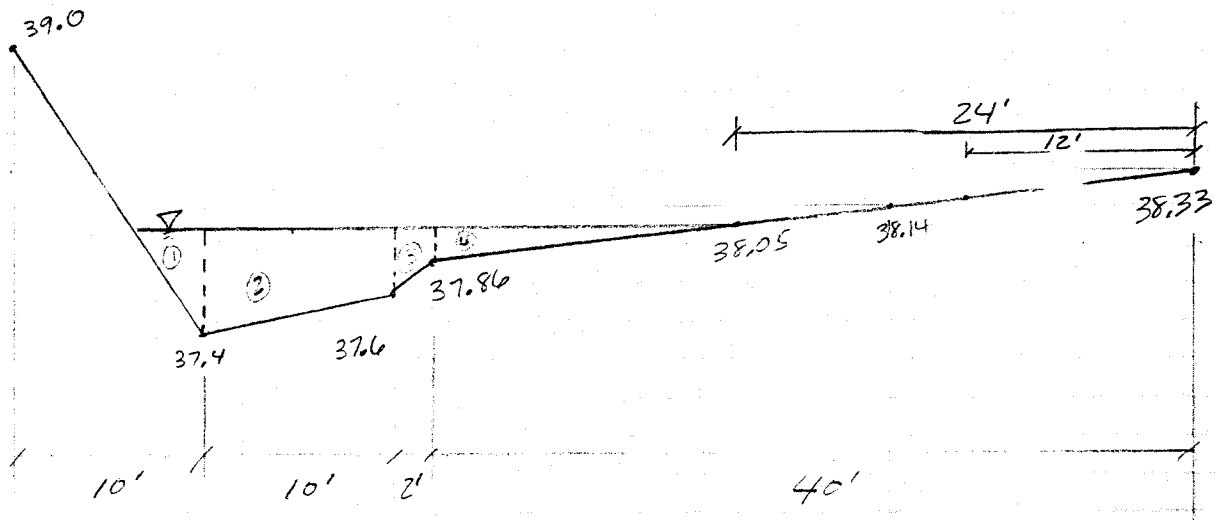

$A_1 = \frac{1}{2}(4.06)(.65) = 1.32\ ft^2$

$A_2 = 10(.65 + .55)/2 = 6.00\ ft^2$

$A_3 = 2(.55 + .19)/2 = 0.74\ ft^2$

$A_4 = \frac{1}{2}(.19)16 = 1.52\ ft^2$

$WP = 10 + 2 + 16 + 4 = 32'$

$R = \frac{A}{WP} = \frac{9.58}{32} = 0.3'$

10 yr Storm
$Q = 29.5\ cfs$

$A = 9.58 + .28\left(\frac{53 + 33}{2}\right) = 21.62\ ft^2$

$Q = \frac{1.49}{0.03}(.3)^{2/3}(.0038)^{1/2}(21.62) = 29.7\ cfs$

close to 29.5 cfs
$\Rightarrow$ OK

$\therefore\ Y_{o\,(10\text{-}yr)} = 38.33 - 37.5 \approx \underline{0.8'}$

arthur beard engineers, inc. Phoenix - Tucson, Arizona

PROJECT
SUBJECT
PROJ. NO.
CLIENT

COMP BY DATE CKD BY DATE SHEET 9 OF 10

Summary

Station	Area (ft^2)
12+00	6.96
14+00	6.55
16+00	10.07
18+00	4.99
20+00	3.90
22+00	10.93
24+00	8.56
26+00	10.87
28+00	5.54
30+00	10.02
32+00	5.66
34+00	1.45
36+00	4.63
38+00	1.48
40+00	10.48
42+00	12.70
44+00	5.30
46+00	5.52
48+00	14.46
52+00	12.98
54+00	9.58

arthur beard engineers, inc. Phoenix - Tucson, Arizona

PROJECT _____ PROJ. NO. _____
SUBJECT _____ CLIENT _____

COMP BY _____ DATE _____ CKD BY _____ DATE _____ SHEET 10 OF 10

Estimation of the swell flow capacity w/ 16' spread
(using averaged areas & hydraulic radius between stations)

From Sta. to Sta.	Flow, cfs	From Sta to Sta	Flow, cfs
54+00 – 52+00	16.6	14+00 – 12+00	8.7
52+00 – 48+00	24.4	12+00 – 11+00	7.4
48+00 – 46+00	8.4		
46+00 – 44+00	5.6		
44+00 – 42+00	16.8		
42+00 – 40+00	20.4		
40+00 – 38+00	7.5		
38+00 – 36+00	3.3		
36+00 – 34+00	1.6		
34+00 – 32+00	1.8		
32+00 – 30+00	10.4		
30+00 – 28+00	10.7		
28+00 – 26+00	12.4		
26+00 – 24+00	16.3		
24+00 – 22+00	14.1		
22+00 – 20+00	7.4		
20+00 – 18+00	4.0		
18+00 – 16+00	10.6		
16+00 – 14+00	14.7		

DRAINAGE AREA SUMMARY

DRAINAGE AREA SUMMARY

NO.	AREA (ACRES)	ZONING	RUNOFF CO-EFFICIENTS	LENGTH (ft.)	SLOPE (%)
1	27.3	RE-43	0.45	2,550	0.47
2	25.0	RE-43	0.45	1,950	0.27
3	9.7	RE-43	0.45	2,000	0.40
4	21.3	RE-43	0.45	1,600	0.53
5	7.5	RE-43	0.45	900	1.30
6	17.8	RE-43	0.45	1,900	0.80
7	13.0	RE-43	0.45	2,100	0.44
8	9.3	RE-43	0.45	1,300	0.33

No.	TIME OF CONCENTRATION (Min.)	2-YR RAINFALL INTENSITY (in./hr.)	10-YR RAINFALL INTENSITY (in./hr.)	2-YR RUNOFF (CFS)	10-YR RUNOFF (CFS)
1	26.0	1.5	2.4	18.4	29.5
2	26.0	1.5	2.4	16.9	27.0
3	23.0	1.7	2.6	7.4	11.3
4	19.0	1.9	2.8	18.2	26.8
5	11.0	2.6	3.7	8.8	12.5
6	17.0	1.9	3.0	15.2	24.0
7	23.0	1.7	2.6	9.9	15.2
8	21.0	1.8	2.7	7.5	11.3

Revised: 10/30/89
Changed Area 2 & 3

arthur beard engineers, Inc.
4628 N. 17th ST. PHOENIX, ARIZONA 85016

DRAINAGE AREA SUMMARY

NO.	AREA (ACRES)	ZONING	RUNOFF CO-EFFICIENTS	LENGTH (ft.)	SLOPE (%)
1	27.3	RE-43	0.45	2,550	0.47
2	25.0	RE-43	0.45	1,950	0.27
3	9.7	RE-43	0.45	2,000	0.40
4	21.3	RE-43	0.45	1,600	0.53
5	7.5	RE-43	0.45	900	1.30
6	17.8	RE-43	0.45	1,900	0.80
7	13.0	RE-43	0.45	2,100	0.44
8	9.3	RE-43	0.45	1,300	0.33

No.	TIME OF CONCENTRATION (Min.)	2-YR RAINFALL INTENSITY (in./hr.)	10-YR RAINFALL INTENSITY (in./hr.)	2-YR RUNOFF (CFS)	10-YR RUNOFF (CFS)
1	26.0	1.5	2.4	18.4	29.5
2	26.0	1.5	2.4	16.9	27.0
3	23.0	1.7	2.6	7.4	11.3
4	19.0	1.9	2.8	18.2	26.8
5	11.0	2.6	3.7	8.8	12.5
6	17.0	1.9	3.0	15.2	24.0
7	23.0	1.7	2.6	9.9	15.2
8	21.0	1.8	2.7	7.5	11.3

Revised: 10/30/89
Changed Area 2 & 3

LEGEND

- Drainage Area
- Catch Basin
- Drainage Flow Direction

SCALE
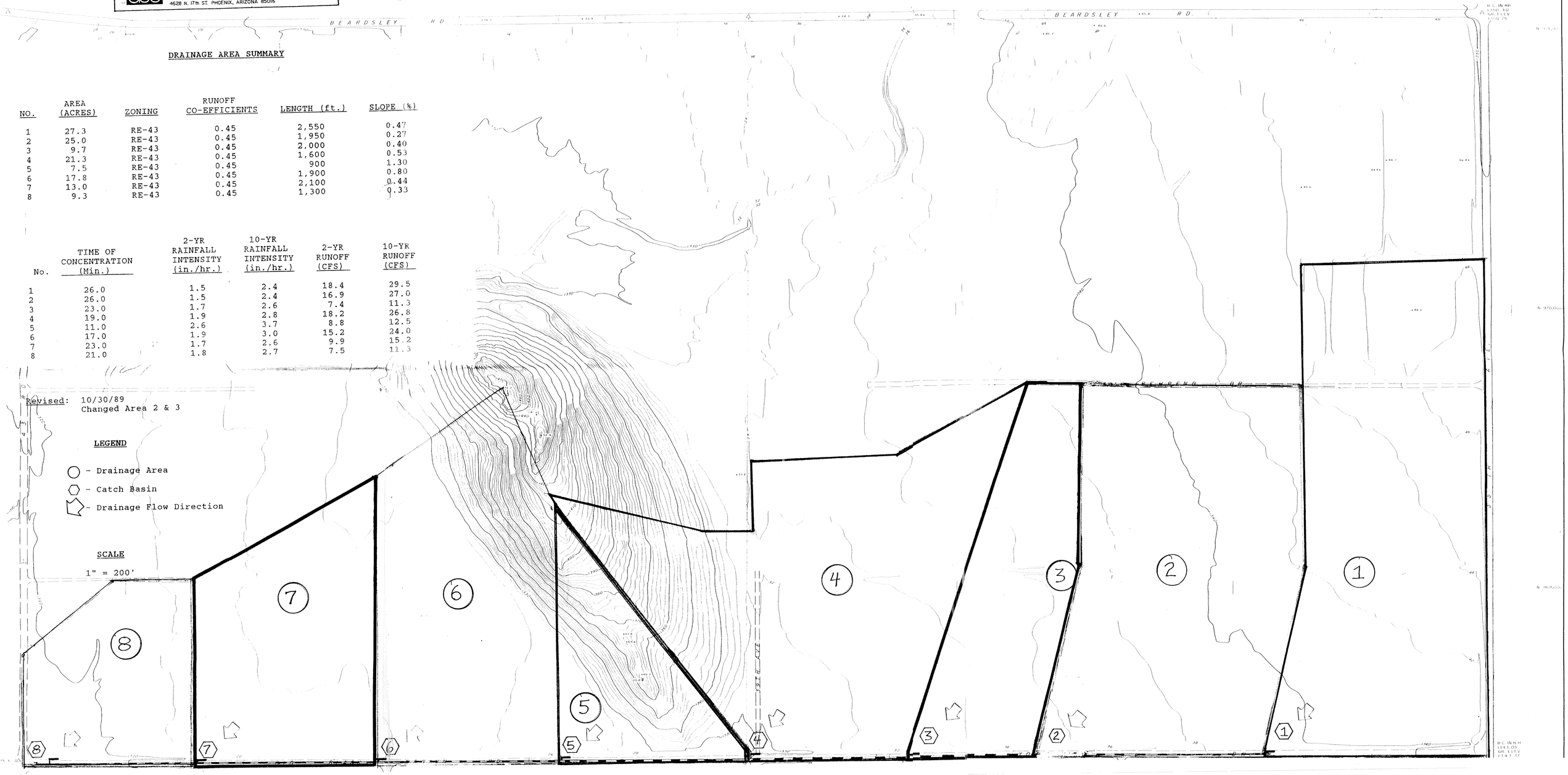
1" = 200'