Property of
Flood Control District of MC Library
Please Return to
2801 W. Durango
Phoenix, AZ 85009

PIMA OUTFALL CHANNEL

PROJECT NO. 93E130

DRAINAGE REPORT

DETAILED CALCULATIONS

Volume II

PIMA OUTFALL CHANNEL

PROJECT NO. 93E130

DRAINAGE REPORT

DETAILED CALCULATIONS

Volume II

Salt River Pima-Maricopa Indian Community

ENGINEERING & CONSTRUCTION SERVICES

DESIGN DIVISION

Bryan D. Meyers, P.E.

Project Engineer

Harold B. Jones Jr., E.I.T.

Asst. Project Engineer

January 7, 1998

TABLE OF CONTENTS

OLIJ.12I HEC-1 Model (Basis of Design)	**3**
OL2J.12I HEC-1 Model (Basis of Design)	**41**
FINCH4BM.OUT HEC-2 Model (Basis of Design)	**95**
ADOT_N_S.OUT HEC-2 Model (Basis of Design)	**103**
HEC-1 ROUTING SCHEMATIC MAP	**106**
HAND CALCULATIONS	**107**

OLIJ.12I HEC-1 Model (Basis of Design)

(100-year, 12-hour hyopothetical storm with all proposed Pima Freeway and SRPMIC channel constructed (1993))

```
1                                                  ****
                 FLOOD HYDROGRAPH PACKAGE HEC-1 (IBM XT 512K VERSION) -FEB 1,1985
U.S. ARMY CORPS OF ENGINEERS, THE HYDROLOGIC ENGINEERING CENTER, 609 SECOND STREET, DAVIS, CA. 95616
                                                  ****


THIS HEC-1 VERSION CONTAINS ALL OPTIONS EXCEPT ECONOMICS, AND THE NUMBER OF PLANS ARE REDUCED TO 3


1                                   HEC-1 INPUT                                                PAGE  1

LINE          ID.......1.......2.......3.......4.......5.......6.......7.......8.......9......10

  1           ID        ****************************************************************
  2           ID        *                                                              *
  3           ID        *                    ROBERT L. WARD, P.E.                      *
  4           ID        *                    CONSULTING ENGINEER                       *
  5           ID        *                                                              *
  6           ID        *                    OUTER LOOP FREEWAY                        *
  7           ID        *                (NORTH OF THE ARIZONA CANAL)                  *
  8           ID        *                                                              *
  9           ID        *   SCOTTSDALE PAVILIONS & OUTER LOOP HIGHWAY ARE IN-PLACE     *
 10           ID        *                                                              *
 11           ID        *           HYDROLOGY ANALYSIS FOR OFFSITE DRAINAGE            *
 12           ID        *                      100 YEAR EVENT                          *
 13           ID        *           12 HOUR HYPOTHETICAL STORM DISTRIBUTION            *
 14           ID        *                                                              *
 15           ID        *       USES % IMPERVIOUS COVER TO SIMULATE DEVELOPMENT        *
 16           ID        *           INCLUDES RETENTION/DETENTION BASINS FOR            *
 17           ID        *                RESIDENTIAL & COMMERCIAL AREAS                *
 18           ID        *                                                              *
 19           ID        *                                                              *
 20           ID        *           THIS MODEL INCLUDES THE ADDITIONAL AREA            *
 21           ID        *         PREVIOUSLY MODELED BY THE CORP OF ENGINEERS          *
 22           ID        *                                                              *
 23           ID        *      ALL CURVE NUMBERS ARE FOR 24-HOUR STORM DURATION        *
 24           ID        *      NORMAL DEPTH STORAGE ROUTING ALONG ARIZONA CANAL        *
 25           ID        *        INCLUDES CAP CROSS-DRAINAGE AT EAST BOUNDARY          *
 26           ID        *  BASE MODEL USES APRIL 1989 HYDROLOGIC REVISIONS BY R. WARD *
 27           ID        *  MARCH 1989 HIGHWAY ALIGNMENT HAS BEEN REVISED TO MID 1989  *
 28           ID        *                    HIGHWAY ALIGNMENT.                        *
 29           ID        *                                                              *
 30           ID        *                       MODEL OL1J.12I                         *
 31           ID        *                  (Base Model Was OL1I.12I)                   *
 32           ID        *                                                              *
 33           ID        *       THIS MODEL SIMULATES THE IMPACT TO THE OUTER LOOP      *
 34           ID        *       OF A NORTH/SOUTH CHANNEL ALONG AN EXTENSION OF         *
 35           ID        *       96th STREET FROM THE NORTH BOUNDARY OF THE SRPMIC      *
 36           ID        *       TO THE ARIZONA CANAL                                   *
 37           ID        *       THIS MODEL ALSO SIMULATES THE IMPACT OF THE PROPOSED   *
 38           ID        *       EVANS-KUHN CHANNEL ALONG THE NORTH BANK OF THE ARIZONA*
 39           ID        *       CANAL BETWEEN 96th ST & THE PIMA FREEWAY               *
 40           ID        * Dam 1 routing sequence has been corrected on 7/29/96 to only detain runoff from sub-basins 185 &
                                                                                         195.
 41           ID        *   ADOT BERM HAS BEEN REMOVED & THE EVANS-KUHN CHANNEL HAS    *
 42           ID        *   BEEN CONNECTED DIRECTLY TO THE ADOT CHANNEL                *
 43           ID        * Diversion has been added @ CP 1987 to reflect COG canal spills from plate 5 of O.M. No. 4.
 44           ID        *   SEPARATE CHANNEL & CANAL ROUTING OPERATIONS BEGIN AT       *
 45           ID        *   CP 546T TO REFLECT SPLIT-FLOW CALCULATIONS.                *
```

```
 46        ID        *   CANAL "n"=.021                                          *
 47        ID        *   DIVERT AT 545E HAS BEEN CHANGED TO PUT 50% TO NORTH-SOUTH *
 48        ID        *   ADOT CHANNEL & 50% TO CP 546T.                          *
 49        ID        *                                                           *
 50        ID        *   13 DETENTION BASINS HAVE BEEN REMOVED THAT WERE ADJACENT *
 51        ID        *   TO THE OUTER LOOP.  MODIFIED PULS CHANNEL ROUTING       *
 52        ID        *   OPERATIONS ARE USED IN-PLACE OF THE BASINS.             *
 53        ID        *   CHANNEL GEOMETRY IS BASED ON AVERAGED, APPROXIMATE XSEC *
 54        ID        *   GEOMETRY USED BY MKE FOR FINAL DESIGN                   *
 55        ID        *                                                           *
1                                        HEC-1 INPUT                                          PAGE  2

LINE       ID.......1.......2.......3.......4.......5.......6.......7.......8.......9......10

 56        ID        *                CP 103 IS ROUTED TO SUB 360.               *
 57        ID        *  ALL SUB-BASIN DATA & ROUTING OPERATIONS HAVE BEEN REVISED *
 58        ID        *  TO REFLECT THE HIGHWAY ALIGNMENT CHANGE MADE BY DCCO IN   *
 59        ID        *  MID-1989.  ADDITIONAL OFFSITE DRAINAGE HAS BEEN ROUTED    *
 60        ID        *THROUGH 7000 LF OF PIPE AND INSERTED IN THE MODEL AT CP 503B *
 61        ID        *     WHICH IS AT THE NORTH SIDE OF VIA DE VENTURA           *
 62        ID        *                                                            *
 63        ID        * NORTH-SOUTH CHANNEL ROUTING OPERATIONS ARE REFERENCED TO   *
 64        ID        * OUTER LOOP HIGHWAY STATIONING FROM THE HIGHWAY GENERAL PLAN *
 65        ID        *                                                            *
 66        ID        * NORTH-SOUTH DRAINAGE CHANNEL GEOMETRY HAS BEEN REVISED TO  *
 67        ID        * REFLECT MKE FINAL DESIGN (SOIL-CEMENT)                     *
 68        ID        ***************************************************************
 69        IT       5 20APR89       0     289
 70        IO       5
           *       ***********************************************************************
           *       BEGIN DRAINAGE AREA CONTRIBUTING DIRECTLY TO HIGHWAY DRAINAGE CHANNEL
           *       ***********************************************************************

 71        KK     165     SUB
 72        KM        RUNOFF FROM SUB 165
 73        BA   .0133
 74        PH            .1      .72     1.42     2.50     2.77     2.95     3.29     3.68
 75        LS            77       85
 76        UK     230    .005     .09      100
 77        RK     320    .004    .024              TRAP       10       25
*** NOLIST ***
*** LIST ***

2191       KK    540B     SUB
2192       KM        RUNOFF FROM SUB 540B
2193       BA   .1494
2194       LS             85
2195       UK    1000   .0057     .10      100
2196       RK    2500   .0045    .045              TRAP        5       15

2197       KK     542      CP
2198       KM        COMBINE CP 541 & SUB 540B
2199       HC       2
1                                        HEC-1 INPUT                                          PAGE  3

LINE       ID.......1.......2.......3.......4.......5.......6.......7.......8.......9......10

2200       KK     546      CP
2201       KM       ROUTE CP 542 TO CP 546 - USE SRPMIC/AZ CANAL CHANNEL GEOMETRY
2202       RS       1    FLOW      -1
2203       RC    .021    .018    .025      850  .00037
2204       RX       0      10      80       90      112      142      160      290
2205       RY      11       1       1       11        0        0        9        9

2206       KK  545EDV     RET
2207       KM        RETRIEVE DIVERTED FLOW FROM SUB 545E
2208       DR  545EDV

2209       KK    546T      CP
2210       KM        COMBINE CP 546 & RET 545EDV
```

Additional (on-site) drainage has been routed through (12) 363' of pipe & inserted in the model @CP503B which is at North side of via de ventura.

City of Scottsdale HEC-1 models have been inserted for Stonegate & for the area captured by Scottsdale Road lake. HEC-1 models for CAP Cactus Rd Detention basin & the two CAP pipe overall South of Shea Blvd are included in the form of hydrographs which are input on QI records

```
2211    KM        THIS WILL BE THE TOTAL FLOW TO USE FOR THE MANUAL SPLIT-FLOW CALCS
2212    KM        AT XSEC 3388 (DOWNSTREAM END OF SRPMIC CHANNEL)
2213    HC       2

2214    KK    546T     DIV
2215    KM        DIVERT FLOW FROM NORTH OVERBANK INTO ARIZONA CANAL
2216    KM        SPLIT-FLOW CALCS BASED ON CANAL "n"=.021
2217    KM        DIVERT RATIO BASED ON MANUAL SPLIT-FLOW CALCULATIONS USING HEC-2 MODELS
2218    KM        CANAL12.IN & FINCHN4/4A.IN (includes proposed Evans-Kuhn Channel).
2219    KM        BASED ON BANKFULL CAPACITY OF SRPMIC CHANNEL FROM XSEC 4760 THROUGH
2220    KM        XSEC 3388.
2221    KM        3,895 cfs IS THE MINIMUM BREAKOUT Q, WHICH OCCURS AT
2222    KM        XSEC 4419, i.e., ANY Q LESS THAN 3,895 WILL STAY IN THE CHANNEL.
2223    DT  546DIV
2224    DI       0    3895    7492   10000
2225    DQ       0       0    2907    3880

2226    KK     547      CP
2227    KM        COMBINE DIV 546T AND SUB 545E2
2228    KM        THIS WILL BE THE DESIGN DISCHARGE FOR THE UPSTREAM END OF THE NEW ADOT
2229    KM        CHANNEL
2230    KM        THIS OPERATION BRINGS IN THE WATER FLOWING ALONG THE NORTH BANK OF
2231    KM        THE ARIZONA CANAL FROM AS FAR EAST AS THE EVERGREEN WASTEWAY AND THOSE
2232    KM        FLOWS FROM THE NORTH-SOUTH PIMA FREEWAY CHANNEL
2233    HC       2

2234    KK     531      CP
2235    KM        ROUTE CP 547 THROUGH NEW ADOT CHANNEL TO CP 531
2236    KM        "n" VALUE IS ADJUSTED UPWARD TO SIMULATE INTERCEPTOR CHANNEL BACKWATER.
2237    KM        SLOPE ON RC RECORD HAS BEEN REDUCED TO .00036 ft/ft TO REFLECT THE
2238    KM        EXTENSION OF THE SRPMIC CHANNEL SLOPE INTO THE ADOT CHANNEL
2239    RS       1    FLOW      -1
2240    RC    .080    .080    .080    1050  .00036
2241    RX       0       1       2      30     130     158     159     160
2242    RY      15      14      14       0       0      14      14      15
```



```
LINE    ID.......1.......2.......3.......4.......5.......6.......7.......8.......9......10

2243    KK    560W     SUB
2244    KM        RUNOFF FROM SUB 560W
2245    BA   .0852
2246    LS             84
2247    UK    1200   .0057     .10     100
2248    RK    3000   .0049    .045            TRAP       5       5

2249    KK    531A      CP
2250    KM        ROUTE SUB 560W TO CP 531A
2251    RK    3700   .0055    .045            TRAP       5       5

2252    KK   530AW     SUB
2253    KM        RUNOFF FROM SUB 530AW
2254    BA   .1453
2255    LS             85
2256    UK    1200   .0057     .10     100
2257    RK    1000   .0055    .045            TRAP       5       5

2258    KK     532      CP
2259    KM        COMBINE SUB 530AW, CP 531A, & CP 531
2260    HC       3

2261    KK     537      CP
2262    KM        ROUTE CP 532 THROUGH NEW ADOT CHANNEL TO CP 537
2263    KM        "n" VALUE IS ADJUSTED UPWARD TO SIMULATE INTERCEPTOR CHANNEL BACKWATER
2264    RS       1    FLOW      -1
2265    RC    .100    .100    .100    1150.0014866
2266    RX       0       1       2      30     130     158     159     160
2267    RY      15      14      14       0       0      14      14      15
        *
        *  ***********************************************************************
```

```
                 *
                 *  ****** BRING IN FLOW WEST OF OUTER LOOP HIGHWAY **********************
                 *
                 *  ***********************************************************************
                 *

2268             KK    360W     SUB
2269             KM        RUNOFF FROM SUB 360W
2270             BA   .0864
2271             LS              77
2272             UK    1000   .0057     .10     100
2273             RK    4500   .0050    .045            TRAP       5      10

2274             KK    420W     SUB
2275             KM        RUNOFF FROM SUB 420W
2276             BA   .0194
2277             LS              77
2278             UK     500   .0057     .10     100
2279             RK     530   .0057    .045            TRAP       5       5
1                                              HEC-1 INPUT                                                    PAGE  5

LINE             ID.......1.......2.......3.......4.......5.......6.......7.......8.......9......10


2280             KK    410W     SUB
2281             KM        RUNOFF FROM SUB 410W
2282             BA   .0248
2283             LS              77
2284             UK     500   .0057     .10     100
2285             RK    1080   .0057    .045            TRAP       5       5

2286             KK     381      CP
2287             KM        COMBINE SUB 420W & SUB 410W
2288             HC       2

2289             KK     380     SUB
2290             KM        RUNOFF FROM SUB 380 & ROUTE CP 381
2291             BA   .0161
2292             LS              77
2293             UK     400   .0057     .10     100
2294             RK     600   .0057    .045            TRAP       5       5     YES

2295             KK    400W     SUB
2296             KM        RUNOFF FROM SUB 400W
2297             BA   .0506
2298             LS              81
2299             UK     500   .0057     .10     100
2300             RK    1070   .0043    .045            TRAP       5      10

2301             KK     371      CP
2302             KM        COMBINE SUB 380 & SUB 400W
2303             HC       2

2304             KK     370     SUB
2305             KM        RUNOFF FROM SUB 370 & ROUTE CP 371
2306             BA   .0502
2307             LS              77
2308             UK     600   .0057     .10     100
2309             RK    1900   .0043    .045            TRAP       5      15     YES

2310             KK     372      CP
2311             KM        COMBINE SUB 370 & SUB 360W
2312             HC       2

2313             KK     373      CP
2314             KM        ROUTE CP 372 TO CP 373 (VIA de VENTURA)
2315             RS       1    FLOW       0
2316             RC    .085    .030    .045     950   .0050      14
2317             RX       0       2       4      14      64      77      81      96
2318             RY      10       7       7      10      10     6.5     6.5      10
```

```
2319        KK     501       CP
2320        KM        ROUTE CP 373 TO CP 501
2321        RS       1     FLOW       0
2322        RC    .085     .030     .030    1450    .0050      14
2323        RX       0      2.5        5      18       68      88      90     101
2324        RY      10     8.25     8.25   10.25    10.25    6.75    6.75   10.25
1                                          HEC-1 INPUT                                                    PAGE  6

LINE        ID.......1.......2.......3.......4.......5.......6.......7.......8.......9......10


2325        KK    510       SUB
2326        KM        RUNOFF FROM SUB 510
2327        BA   .1374
2328        LS              78
2329        UK    1200    .0057      .10     100
2330        RK    3500    .0043     .045             TRAP       5       5

2331        KK    500W      SUB
2332        KM        RUNOFF FROM SUB 500W
2333        BA   .2814
2334        LS              85
2335        UK    1200    .0057      .10     100
2336        RK    3750    .0041     .045             TRAP       5      15

2337        KK     502       CP
2338        KM        COMBINE SUB 500W, SUB 510, & CP 501
2339        HC       3

2340        KK     516       CP
2341        KM        ROUTE CP 502 TO CP 516
2342        RS       1     FLOW       0
2343        RC    .085     .030     .030    1240    .0050      14
2344        RX       0      2.5        5      18       68      88      90     101
2345        RY      10     8.25     8.25   10.25    10.25    6.75    6.75   10.25

2346        KK     515      SUB
2347        KM        RUNOFF FROM SUB 515
2348        BA   .0323
2349        LS              81
2350        UK     800    .0057      .10     100
2351        RK    1240    .0050     .085             TRAP     2.5       4

2352        KK     517       CP
2353        KM        COMBINE SUB 515 & CP 516
2354        HC       2

2355        KK     518       CP
2356        KM        ROUTE CP 517 TO CP 518
2357        RS       1     FLOW       0
2358        RC    .035     .025     .035     600    .0035      14
2359        RX       0     6.25    10.75      17       67    70.5    71.5      75
2360        RY      10      7.5      7.5      10       10    8.25    8.25      10

2361        KK     519       CP
2362        KM        ROUTE CP 518 TO CP 519
2363        RS       1     FLOW       0
2364        RC    .045     .035     .030     700    .0035      14
2365        RX       0      2.5      8.5      11       61      68      69      76
2366        RY      10      7.5      7.5      10       10       8       8      10
1                                          HEC-1 INPUT                                                    PAGE  7

LINE        ID.......1.......2.......3.......4.......5.......6.......7.......8.......9......10


2367        KK    520A      SUB
2368        KM        RUNOFF FROM SUB 520A - RAMADA GOLF COURSE
2369        BA   .2508
2370        LS              84
2371        UK    1200    .0057      .10     100
2372        RK    3000    .0043     .045             TRAP       5       5
```

```
2373          KK    519A      CP
2374          KM        COMBINE SUB 520A & CP 519
2375          HC       2

2376          KK     521      CP
2377          KM        ROUTE CP 519A TO CP 521
2378          RS       1    FLOW       0
2379          RC    .045    .035    .035    1300   .0035      14
2380          RX       0      16      24      40      90      98     100     107
2381          RY      10       6       6      10      10    7.75    7.75   10.25

2382          KK    520B     SUB
2383          KM        RUNOFF FROM SUB 520B - SCOTTSDALE PAVILIONS, PHASE I
2384          BA   .1327
2385          LS              83      85
2386          UK     100   .0100     .03     100
2387          RK    2800   .0040    .018            TRAP      30       1

2388          KK   DAMP1     DAM
2389          KM        ROUTE RUNOFF FROM SUB 520B THROUGH RETENTION BASINS FOR
2390          KM        SCOTTSDALE PAVILIONS, PHASE I
2391          RS       1    STOR
2392          SV       0   2.011   4.022   6.033   8.044  10.055
2393          SE     100     102     104     106     108     110
2394          SS  109.99      40     2.9     1.5
2395          ST     110      40     2.9     1.5

2396          KK     522      CP
2397          KM        COMBINE CP 521 & OVERFLOW FROM DAM P1 RETENTION BASINS
2398          HC       2

2399          KK   535A1      CP
2400          KM        ROUTE CP 522 TO CP 535A1
2401          RS       1    FLOW       0
2402          RC    .045    .035    .030     890   .0050      14
2403          RX       0      16      24      40      90    95.5    98.5   102.5
2404          RY      10       6       6      10      10    8.25    8.25     9.5

2405          KK    535A     SUB
2406          KM        RUNOFF FROM SUB 535A - SCOTTSDALE PAVILIONS, PHASE II
2407          BA   .0938
2408          LS              84      85
2409          UK     100   .0100     .03     100
2410          RK    2500   .0040    .018            TRAP      30       1
```



```
LINE          ID.......1.......2.......3.......4.......5.......6.......7.......8.......9......10

2411          KK   DAMP2     DAM
2412          KM        ROUTE RUNOFF FROM SUB 535A THROUGH RETENTION BASINS FOR
2413          KM        SCOTTSDALE PAVILIONS, PHASE II
2414          RS       1    STOR
2415          SV       0   2.081   4.162   6.242   8.323  10.404
2416          SE     100     102     104     106     108     110
2417          SS  109.99      40     2.9     1.5
2418          ST     110      40     2.9     1.5

2419          KK   535A2      CP
2420          KM        COMBINE CP 535A1 & OVERFLOW FROM DAM P2 RETENTION BASINS
2421          HC       2

2422          KK   535D1      CP
2423          KM        ROUTE CP 535A2 TO CP 535D1
2424          RS       1    FLOW       0
2425          RC    .045    .035    .030     180   .0050      14
2426          RX       0      16      24      40      90    95.5    98.5   102.5
2427          RY      10       6       6      10      10    8.25    8.25     9.5

2428          KK    535D     SUB
```

```
2429          KM        RUNOFF FROM SUB 535D
2430          BA   .0038
2431          LS              85
2432          UK      90   .0057     .08     100
2433          RK     590   .0040    .035            TRAP      30      10

2434          KK   535D2      CP
2435          KM        COMBINE SUB 535D & CP 535D1
2436          HC       2

2437          KK    CWRS     DIV
2438          KM        DIVERT FLOW WEST ON CACTUS WREN ROAD FROM INTXN WITH PIMA ROAD
2439          DT    CWRW
2440          DI       0     200     400     600     800    1000    1500    2000
2441          DQ       0       0       0       0       0       0       0       0

2442          KK   535B1      CP
2443          KM        ROUTE NON-DIVERTED FLOW FROM CP 535D2 TO CP 535B1
2444          RS       1    FLOW       0
2445          RC    .045    .035    .050     270   .0050      14
2446          RX       0     2.5    10.5      13      63      69      90     100
2447          RY      10     7.5     7.5      10      10       8       8      10

2448          KK    535E     SUB
2449          KM        RUNOFF FROM SUB 535E
2450          BA   .0012
2451          LS              85
2452          UK      40   .0057     .08     100
2453          RK     400   .0040    .035            TRAP       5       5
1                                          HEC-1 INPUT                                                    PAGE  9

LINE          ID.......1.......2.......3.......4.......5.......6.......7.......8.......9......10


2454          KK   535B2      CP
2455          KM        ROUTE SUB 535E TO CP 535B2
2456          RK     850   .0040    .018            TRAP       5      10

2457          KK    535B     SUB
2458          KM        RUNOFF FROM SUB 535B
2459          BA   .0108
2460          LS              98
2461          UK      90     .01     .01     100
2462          RK    1230   .0040    .018            TRAP       5      10

2463          KK   535B3      CP
2464          KM        COMBINE SUB 535B, CP 535B1, & CP 535B2
2465          HC       3

2466          KK   535C1      CP
2467          KM        ROUTE CP 535B3 TO CP 535C1
2468          RS       1    FLOW       0
2469          RC    .045    .035    .050    1000   .0050      14
2470          RX       0     2.5    10.5      13      63      69      90     100
2471          RY      10     7.5     7.5      10      10       8       8      10

2472          KK    535C     SUB
2473          KM        RUNOFF FROM SUB 535C
2474          BA   .0190
2475          LS              85
2476          UK     700   .0057     .10     100
2477          RK    1000   .0050    .045            TRAP       8       1

2478          KK     548      CP
2479          KM        COMBINE SUB 535C, CP 535C1, & CP 537
2480          KM        THIS WILL BE THE TOTAL FLOW TO THE CULVERT AT PIMA ROAD
2481          KM        THIS OPERATION BRINGS IN THE WATER FLOWING ALONG THE NORTH BANK OF
2482          KM        THE ARIZONA CANAL FROM AS FAR EAST AS THE EVERGREEN WASTEWAY
2483          HC       3

2484          KK  546DIV     RET
```

```
2485          KM        RETRIEVE DIVERTED  CANAL FLOW FROM CP 546
2486          DR  546DIV

2487          KK     549      CP
2488          KM        ROUTE DIVERTED CANAL FLOW TO COE SPILLWAY WEST OF PIMA ROAD
2489          RS       1    FLOW       0
2490          RC    .021    .021    .021    3175  .00038
2491          RX       0       1       2      11      81      90      91      92
2492          RY      10       9       9       0       0       9       9      10

2493          KK     550     DIV
2494          KM        DIVERT FLOW OVER COE INTERCEPTOR CHANNEL SPILLWAY
2495          KM        DIVERT RATIO BASED ON SPLIT-FLOW HEC-2 MODEL WITH CANAL "n"=.021
2496          KM        DIVERT RATIOS FROM COE7.IN
2497          DT     551
2498          DI       0    1997    3000    4000    5000    6000    7100
2499          DQ       0    1997    2279    2428    2613    2705    2860
1                                           HEC-1 INPUT                                          PAGE 10

LINE          ID.......1.......2.......3.......4.......5.......6.......7.......8.......9......10


2500          KK     552      CP
2501          KM        COMBINE DIV 550 (SPILLWAY FLOW) WITH CP 548 (CULVERT FLOW)
2502          KM        THIS IS THE TOTAL FLOW THAT WILL CONTINUE DOWN THE INTERCEPTOR CHANNEL
2503          HC       2
2504          ZZ
1                                                  ****
                 FLOOD HYDROGRAPH PACKAGE HEC-1 (IBM XT 512K VERSION) -FEB 1,1985
       U.S. ARMY CORPS OF ENGINEERS, THE HYDROLOGIC ENGINEERING CENTER, 609 SECOND STREET, DAVIS, CA. 95616
                                                   ****


                 ***************************************************************
                 *                                                             *
                 *                    ROBERT L. WARD, P.E.                     *
                 *                    CONSULTING ENGINEER                      *
                 *                                                             *
                 *                    OUTER LOOP FREEWAY                       *
                 *                (NORTH OF THE ARIZONA CANAL)                 *
                 *                                                             *
                 *   SCOTTSDALE PAVILIONS & OUTER LOOP HIGHWAY ARE IN-PLACE    *
                 *                                                             *
                 *           HYDROLOGY ANALYSIS FOR OFFSITE DRAINAGE           *
                 *                      100 YEAR EVENT                         *
                 *           12 HOUR HYPOTHETICAL STORM DISTRIBUTION           *
                 *                                                             *
                 *       USES % IMPERVIOUS COVER TO SIMULATE DEVELOPMENT       *
                 *           INCLUDES RETENTION/DETENTION BASINS FOR           *
                 *                RESIDENTIAL & COMMERCIAL AREAS               *
                 *                                                             *
                 *                                                             *
                 *           THIS MODEL INCLUDES THE ADDITIONAL AREA           *
                 *         PREVIOUSLY MODELED BY THE CORP OF ENGINEERS         *
                 *                                                             *
                 *      ALL CURVE NUMBERS ARE FOR 24-HOUR STORM DURATION       *
                 *      NORMAL DEPTH STORAGE ROUTING ALONG ARIZONA CANAL       *
                 *        INCLUDES CAP CROSS-DRAINAGE AT EAST BOUNDARY         *
                 *  BASE MODEL USES APRIL 1989 HYDROLOGIC REVISIONS BY R. WARD *
                 *  MARCH 1989 HIGHWAY ALIGNMENT HAS BEEN REVISED TO MID 1989  *
                 *                    HIGHWAY ALIGNMENT.                       *
                 *                                                             *
                 *                      MODEL OL1J.12I                         *
                 *                  (Base Model Was OL1I.12I)                  *
                 *                                                             *
                 *       THIS MODEL SIMULATES THE IMPACT TO THE OUTER LOOP     *
                 *       OF A NORTH/SOUTH CHANNEL ALONG AN EXTENSION OF        *
                 *       96th STREET FROM THE NORTH BOUNDARY OF THE SRPMIC     *
                 *       TO THE ARIZONA CANAL                                  *
```

```
*       THIS MODEL ALSO SIMULATES THE IMPACT OF THE PROPOSED  *
*       EVANS-KUHN CHANNEL ALONG THE NORTH BANK OF THE ARIZONA*
*       CANAL BETWEEN 96th ST & THE PIMA FREEWAY              *
*                                                             *
*   ADOT BERM HAS BEEN REMOVED & THE EVANS-KUHN CHANNEL HAS   *
*   BEEN CONNECTED DIRECTLY TO THE ADOT CHANNEL               *
*                                                             *
*   SEPARATE CHANNEL & CANAL ROUTING OPERATIONS BEGIN AT      *
*   CP 546T TO REFLECT SPLIT-FLOW CALCULATIONS.               *
*   CANAL "n"=.021                                            *
*   DIVERT AT 545E HAS BEEN CHANGED TO PUT 50% TO NORTH-SOUTH *
*   ADOT CHANNEL & 50% TO CP 546T.                            *
*                                                             *
*   13 DETENTION BASINS HAVE BEEN REMOVED THAT WERE ADJACENT  *
*   TO THE OUTER LOOP.  MODIFIED PULS CHANNEL ROUTING         *
*   OPERATIONS ARE USED IN-PLACE OF THE BASINS.               *
*   CHANNEL GEOMETRY IS BASED ON AVERAGED, APPROXIMATE XSEC   *
*   GEOMETRY USED BY MKE FOR FINAL DESIGN                     *
*                                                             *
*                  CP 103 IS ROUTED TO SUB 360.               *
*  ALL SUB-BASIN DATA & ROUTING OPERATIONS HAVE BEEN REVISED  *
*  TO REFLECT THE HIGHWAY ALIGNMENT CHANGE MADE BY DCCO IN    *
*  MID-1989.   ADDITIONAL OFFSITE DRAINAGE HAS BEEN ROUTED    *
*THROUGH 7000 LF OF PIPE AND INSERTED IN THE MODEL AT CP 503B *
*     WHICH IS AT THE NORTH SIDE OF VIA DE VENTURA            *
*                                                             *
* NORTH-SOUTH CHANNEL ROUTING OPERATIONS ARE REFERENCED TO    *
* OUTER LOOP HIGHWAY STATIONING FROM THE HIGHWAY GENERAL PLAN *
*                                                             *
* NORTH-SOUTH DRAINAGE CHANNEL GEOMETRY HAS BEEN REVISED TO   *
* REFLECT MKE FINAL DESIGN (SOIL-CEMENT)                      *
***************************************************************

 70 IO          OUTPUT CONTROL VARIABLES
                      IPRNT          5  PRINT CONTROL
                      IPLOT          0  PLOT CONTROL
                      QSCAL         0.  HYDROGRAPH PLOT SCALE

    IT          HYDROGRAPH TIME DATA
                       NMIN          5  MINUTES IN COMPUTATION INTERVAL
                      IDATE     20APR89  STARTING DATE
                      ITIME       0000  STARTING TIME
                         NQ        289  NUMBER OF HYDROGRAPH ORDINATES
                     NDDATE     21APR89  ENDING DATE
                     NDTIME       0000  ENDING TIME

                 COMPUTATION INTERVAL     .08 HOURS
                      TOTAL TIME BASE   24.00 HOURS

          ENGLISH UNITS

*** WARNING *** MODIFIED PULS ROUTING MAY BE NUMERICALLY UNSTABLE FOR OUTFLOWS BETWEEN      419. TO     8659.
                THE ROUTED HYDROGRAPH SHOULD BE EXAMINED FOR OSCILLATIONS OR OUTFLOWS GREATER THAN PEAK INFLOWS.
                THIS CAN BE CORRECTED BY DECREASING THE TIME INTERVAL OR INCREASING STORAGE (USE A LONGER REACH.)

*** WARNING *** MODIFIED PULS ROUTING MAY BE NUMERICALLY UNSTABLE FOR OUTFLOWS BETWEEN        0. TO     8659.
                THE ROUTED HYDROGRAPH SHOULD BE EXAMINED FOR OSCILLATIONS OR OUTFLOWS GREATER THAN PEAK INFLOWS.
                THIS CAN BE CORRECTED BY DECREASING THE TIME INTERVAL OR INCREASING STORAGE (USE A LONGER REACH.)

*** WARNING *** MODIFIED PULS ROUTING MAY BE NUMERICALLY UNSTABLE FOR OUTFLOWS BETWEEN        0. TO     8659.
                THE ROUTED HYDROGRAPH SHOULD BE EXAMINED FOR OSCILLATIONS OR OUTFLOWS GREATER THAN PEAK INFLOWS.
                THIS CAN BE CORRECTED BY DECREASING THE TIME INTERVAL OR INCREASING STORAGE (USE A LONGER REACH.)

*** WARNING *** MODIFIED PULS ROUTING MAY BE NUMERICALLY UNSTABLE FOR OUTFLOWS BETWEEN        0. TO     8659.
                THE ROUTED HYDROGRAPH SHOULD BE EXAMINED FOR OSCILLATIONS OR OUTFLOWS GREATER THAN PEAK INFLOWS.
                THIS CAN BE CORRECTED BY DECREASING THE TIME INTERVAL OR INCREASING STORAGE (USE A LONGER REACH.)

*** WARNING *** MODIFIED PULS ROUTING MAY BE NUMERICALLY UNSTABLE FOR OUTFLOWS BETWEEN      120. TO    65315.
                THE ROUTED HYDROGRAPH SHOULD BE EXAMINED FOR OSCILLATIONS OR OUTFLOWS GREATER THAN PEAK INFLOWS.
                THIS CAN BE CORRECTED BY DECREASING THE TIME INTERVAL OR INCREASING STORAGE (USE A LONGER REACH.)
```

```
*** WARNING *** MODIFIED PULS ROUTING MAY BE NUMERICALLY UNSTABLE FOR OUTFLOWS BETWEEN        0. TO    65315.
                THE ROUTED HYDROGRAPH SHOULD BE EXAMINED FOR OSCILLATIONS OR OUTFLOWS GREATER THAN PEAK INFLOWS.
                THIS CAN BE CORRECTED BY DECREASING THE TIME INTERVAL OR INCREASING STORAGE (USE A LONGER REACH.)

*** WARNING *** MODIFIED PULS ROUTING MAY BE NUMERICALLY UNSTABLE FOR OUTFLOWS BETWEEN      434. TO    65315.
                THE ROUTED HYDROGRAPH SHOULD BE EXAMINED FOR OSCILLATIONS OR OUTFLOWS GREATER THAN PEAK INFLOWS.
                THIS CAN BE CORRECTED BY DECREASING THE TIME INTERVAL OR INCREASING STORAGE (USE A LONGER REACH.)

*** WARNING *** MODIFIED PULS ROUTING MAY BE NUMERICALLY UNSTABLE FOR OUTFLOWS BETWEEN        0. TO    65970.
                THE ROUTED HYDROGRAPH SHOULD BE EXAMINED FOR OSCILLATIONS OR OUTFLOWS GREATER THAN PEAK INFLOWS.
                THIS CAN BE CORRECTED BY DECREASING THE TIME INTERVAL OR INCREASING STORAGE (USE A LONGER REACH.)

*** WARNING *** MODIFIED PULS ROUTING MAY BE NUMERICALLY UNSTABLE FOR OUTFLOWS BETWEEN      973. TO    65970.
                THE ROUTED HYDROGRAPH SHOULD BE EXAMINED FOR OSCILLATIONS OR OUTFLOWS GREATER THAN PEAK INFLOWS.
                THIS CAN BE CORRECTED BY DECREASING THE TIME INTERVAL OR INCREASING STORAGE (USE A LONGER REACH.)

*** WARNING *** MODIFIED PULS ROUTING MAY BE NUMERICALLY UNSTABLE FOR OUTFLOWS BETWEEN      149. TO    50775.
                THE ROUTED HYDROGRAPH SHOULD BE EXAMINED FOR OSCILLATIONS OR OUTFLOWS GREATER THAN PEAK INFLOWS.
                THIS CAN BE CORRECTED BY DECREASING THE TIME INTERVAL OR INCREASING STORAGE (USE A LONGER REACH.)

*** WARNING *** MODIFIED PULS ROUTING MAY BE NUMERICALLY UNSTABLE FOR OUTFLOWS BETWEEN        0. TO    50775.
                THE ROUTED HYDROGRAPH SHOULD BE EXAMINED FOR OSCILLATIONS OR OUTFLOWS GREATER THAN PEAK INFLOWS.
                THIS CAN BE CORRECTED BY DECREASING THE TIME INTERVAL OR INCREASING STORAGE (USE A LONGER REACH.)

*** WARNING *** MODIFIED PULS ROUTING MAY BE NUMERICALLY UNSTABLE FOR OUTFLOWS BETWEEN        0. TO    46938.
                THE ROUTED HYDROGRAPH SHOULD BE EXAMINED FOR OSCILLATIONS OR OUTFLOWS GREATER THAN PEAK INFLOWS.
                THIS CAN BE CORRECTED BY DECREASING THE TIME INTERVAL OR INCREASING STORAGE (USE A LONGER REACH.)

*** WARNING *** MODIFIED PULS ROUTING MAY BE NUMERICALLY UNSTABLE FOR OUTFLOWS BETWEEN        0. TO   133668.
                THE ROUTED HYDROGRAPH SHOULD BE EXAMINED FOR OSCILLATIONS OR OUTFLOWS GREATER THAN PEAK INFLOWS.
                THIS CAN BE CORRECTED BY DECREASING THE TIME INTERVAL OR INCREASING STORAGE (USE A LONGER REACH.)

*** WARNING *** MODIFIED PULS ROUTING MAY BE NUMERICALLY UNSTABLE FOR OUTFLOWS BETWEEN        0. TO    91433.
                THE ROUTED HYDROGRAPH SHOULD BE EXAMINED FOR OSCILLATIONS OR OUTFLOWS GREATER THAN PEAK INFLOWS.
                THIS CAN BE CORRECTED BY DECREASING THE TIME INTERVAL OR INCREASING STORAGE (USE A LONGER REACH.)

*** WARNING *** MODIFIED PULS ROUTING MAY BE NUMERICALLY UNSTABLE FOR OUTFLOWS BETWEEN      709. TO    91433.
                THE ROUTED HYDROGRAPH SHOULD BE EXAMINED FOR OSCILLATIONS OR OUTFLOWS GREATER THAN PEAK INFLOWS.
                THIS CAN BE CORRECTED BY DECREASING THE TIME INTERVAL OR INCREASING STORAGE (USE A LONGER REACH.)

*** WARNING *** MODIFIED PULS ROUTING MAY BE NUMERICALLY UNSTABLE FOR OUTFLOWS BETWEEN     2732. TO    91433.
                THE ROUTED HYDROGRAPH SHOULD BE EXAMINED FOR OSCILLATIONS OR OUTFLOWS GREATER THAN PEAK INFLOWS.
                THIS CAN BE CORRECTED BY DECREASING THE TIME INTERVAL OR INCREASING STORAGE (USE A LONGER REACH.)

*** WARNING *** MODIFIED PULS ROUTING MAY BE NUMERICALLY UNSTABLE FOR OUTFLOWS BETWEEN        0. TO    47063.
                THE ROUTED HYDROGRAPH SHOULD BE EXAMINED FOR OSCILLATIONS OR OUTFLOWS GREATER THAN PEAK INFLOWS.
                THIS CAN BE CORRECTED BY DECREASING THE TIME INTERVAL OR INCREASING STORAGE (USE A LONGER REACH.)

*** WARNING *** MODIFIED PULS ROUTING MAY BE NUMERICALLY UNSTABLE FOR OUTFLOWS BETWEEN        0. TO    63214.
                THE ROUTED HYDROGRAPH SHOULD BE EXAMINED FOR OSCILLATIONS OR OUTFLOWS GREATER THAN PEAK INFLOWS.
                THIS CAN BE CORRECTED BY DECREASING THE TIME INTERVAL OR INCREASING STORAGE (USE A LONGER REACH.)

*** WARNING *** MODIFIED PULS ROUTING MAY BE NUMERICALLY UNSTABLE FOR OUTFLOWS BETWEEN        0. TO    63214.
                THE ROUTED HYDROGRAPH SHOULD BE EXAMINED FOR OSCILLATIONS OR OUTFLOWS GREATER THAN PEAK INFLOWS.
                THIS CAN BE CORRECTED BY DECREASING THE TIME INTERVAL OR INCREASING STORAGE (USE A LONGER REACH.)

*** WARNING *** MODIFIED PULS ROUTING MAY BE NUMERICALLY UNSTABLE FOR OUTFLOWS BETWEEN      193. TO    87306.
                THE ROUTED HYDROGRAPH SHOULD BE EXAMINED FOR OSCILLATIONS OR OUTFLOWS GREATER THAN PEAK INFLOWS.
                THIS CAN BE CORRECTED BY DECREASING THE TIME INTERVAL OR INCREASING STORAGE (USE A LONGER REACH.)

*** WARNING *** MODIFIED PULS ROUTING MAY BE NUMERICALLY UNSTABLE FOR OUTFLOWS BETWEEN      193. TO    87306.
                THE ROUTED HYDROGRAPH SHOULD BE EXAMINED FOR OSCILLATIONS OR OUTFLOWS GREATER THAN PEAK INFLOWS.
                THIS CAN BE CORRECTED BY DECREASING THE TIME INTERVAL OR INCREASING STORAGE (USE A LONGER REACH.)
1  NO UPSTREAM INFLOW TO ROUTE - ERROR EXIT FROM ***   FDKSRM  ****

*** WARNING *** MODIFIED PULS ROUTING MAY BE NUMERICALLY UNSTABLE FOR OUTFLOWS BETWEEN     2300. TO     8198.
                THE ROUTED HYDROGRAPH SHOULD BE EXAMINED FOR OSCILLATIONS OR OUTFLOWS GREATER THAN PEAK INFLOWS.
                THIS CAN BE CORRECTED BY DECREASING THE TIME INTERVAL OR INCREASING STORAGE (USE A LONGER REACH.)

*** WARNING *** MODIFIED PULS ROUTING MAY BE NUMERICALLY UNSTABLE FOR OUTFLOWS BETWEEN      471. TO     4121.
                THE ROUTED HYDROGRAPH SHOULD BE EXAMINED FOR OSCILLATIONS OR OUTFLOWS GREATER THAN PEAK INFLOWS.
```

```
                THIS CAN BE CORRECTED BY DECREASING THE TIME INTERVAL OR INCREASING STORAGE (USE A LONGER REACH.)

*** WARNING *** MODIFIED PULS ROUTING MAY BE NUMERICALLY UNSTABLE FOR OUTFLOWS BETWEEN     1344. TO     4257.
                THE ROUTED HYDROGRAPH SHOULD BE EXAMINED FOR OSCILLATIONS OR OUTFLOWS GREATER THAN PEAK INFLOWS.
                THIS CAN BE CORRECTED BY DECREASING THE TIME INTERVAL OR INCREASING STORAGE (USE A LONGER REACH.)

*** WARNING *** MODIFIED PULS ROUTING MAY BE NUMERICALLY UNSTABLE FOR OUTFLOWS BETWEEN      996. TO     4257.
                THE ROUTED HYDROGRAPH SHOULD BE EXAMINED FOR OSCILLATIONS OR OUTFLOWS GREATER THAN PEAK INFLOWS.
                THIS CAN BE CORRECTED BY DECREASING THE TIME INTERVAL OR INCREASING STORAGE (USE A LONGER REACH.)

*** WARNING *** MODIFIED PULS ROUTING MAY BE NUMERICALLY UNSTABLE FOR OUTFLOWS BETWEEN       75. TO     2913.
                THE ROUTED HYDROGRAPH SHOULD BE EXAMINED FOR OSCILLATIONS OR OUTFLOWS GREATER THAN PEAK INFLOWS.
                THIS CAN BE CORRECTED BY DECREASING THE TIME INTERVAL OR INCREASING STORAGE (USE A LONGER REACH.)

*** WARNING *** MODIFIED PULS ROUTING MAY BE NUMERICALLY UNSTABLE FOR OUTFLOWS BETWEEN      346. TO     2262.
                THE ROUTED HYDROGRAPH SHOULD BE EXAMINED FOR OSCILLATIONS OR OUTFLOWS GREATER THAN PEAK INFLOWS.
                THIS CAN BE CORRECTED BY DECREASING THE TIME INTERVAL OR INCREASING STORAGE (USE A LONGER REACH.)

*** WARNING *** MODIFIED PULS ROUTING MAY BE NUMERICALLY UNSTABLE FOR OUTFLOWS BETWEEN     1932. TO     3762.
                THE ROUTED HYDROGRAPH SHOULD BE EXAMINED FOR OSCILLATIONS OR OUTFLOWS GREATER THAN PEAK INFLOWS.
                THIS CAN BE CORRECTED BY DECREASING THE TIME INTERVAL OR INCREASING STORAGE (USE A LONGER REACH.)

*** WARNING *** MODIFIED PULS ROUTING MAY BE NUMERICALLY UNSTABLE FOR OUTFLOWS BETWEEN      752. TO     4345.
                THE ROUTED HYDROGRAPH SHOULD BE EXAMINED FOR OSCILLATIONS OR OUTFLOWS GREATER THAN PEAK INFLOWS.
                THIS CAN BE CORRECTED BY DECREASING THE TIME INTERVAL OR INCREASING STORAGE (USE A LONGER REACH.)

*** WARNING *** MODIFIED PULS ROUTING MAY BE NUMERICALLY UNSTABLE FOR OUTFLOWS BETWEEN        0. TO     4345.
                THE ROUTED HYDROGRAPH SHOULD BE EXAMINED FOR OSCILLATIONS OR OUTFLOWS GREATER THAN PEAK INFLOWS.
                THIS CAN BE CORRECTED BY DECREASING THE TIME INTERVAL OR INCREASING STORAGE (USE A LONGER REACH.)

*** WARNING *** MODIFIED PULS ROUTING MAY BE NUMERICALLY UNSTABLE FOR OUTFLOWS BETWEEN       13. TO     3522.
                THE ROUTED HYDROGRAPH SHOULD BE EXAMINED FOR OSCILLATIONS OR OUTFLOWS GREATER THAN PEAK INFLOWS.
                THIS CAN BE CORRECTED BY DECREASING THE TIME INTERVAL OR INCREASING STORAGE (USE A LONGER REACH.)

*** WARNING *** MODIFIED PULS ROUTING MAY BE NUMERICALLY UNSTABLE FOR OUTFLOWS BETWEEN      887. TO     3522.
                THE ROUTED HYDROGRAPH SHOULD BE EXAMINED FOR OSCILLATIONS OR OUTFLOWS GREATER THAN PEAK INFLOWS.
                THIS CAN BE CORRECTED BY DECREASING THE TIME INTERVAL OR INCREASING STORAGE (USE A LONGER REACH.)
1
                                                RUNOFF SUMMARY
                                          FLOW IN CUBIC FEET PER SECOND
                                        TIME IN HOURS,  AREA IN SQUARE MILES

                                          PEAK   TIME OF   AVERAGE FLOW FOR MAXIMUM PERIOD      BASIN   MAXIMUM   TIME OF
      OPERATION          STATION          FLOW   PEAK                                          AREA    STAGE     MAX STAGE
+                                                          6-HOUR     24-HOUR     72-HOUR
      HYDROGRAPH AT
+                          165            51.    6.25        4.          1.          1.        .01
      ROUTED TO
+                        DAM165           50.    6.17        4.          1.          1.        .01
+                                                                                                        102.12     6.17
      ROUTED TO
+                          156            71.    6.25        4.          1.          1.        .01
      HYDROGRAPH AT
+                          160            88.    6.25        7.          2.          2.        .02
      ROUTED TO
+                        DAM160           92.    6.25        6.          2.          2.        .02
+                                                                                                        102.18     6.25
      ROUTED TO
+                          161           106.    6.25        7.          2.          2.        .02
      HYDROGRAPH AT
+                          155            96.    6.25        8.          2.          2.        .03
      ROUTED TO
+                        DAM155          106.    6.25        7.          2.          2.        .03
```

```
+                                                                                    102.20      6.25
  3 COMBINED AT
+                157      284.   6.25      18.      5.      5.      .06
  ROUTED TO
+                151      264.   6.25      18.      5.      5.      .06
  HYDROGRAPH AT
+                150      160.   6.25      13.      4.      4.      .04
  ROUTED TO
+              DAM150     174.   6.25      11.      3.      3.      .04
+                                                                                    102.28      6.25
  2 COMBINED AT
+                152      438.   6.25      29.      8.      8.      .10
  ROUTED TO
+                121      359.   6.33      29.      8.      8.      .10
  HYDROGRAPH AT
+                 70       15.   6.33       2.      0.      0.      .01
  ROUTED TO
+                122       14.   6.42       2.      0.      0.      .01
  HYDROGRAPH AT
+                120       49.   6.25       5.      1.      1.      .01
  ROUTED TO
+              DAM120      57.   6.25       4.      1.      1.      .01
+                                                                                    102.13      6.25
  3 COMBINED AT
+                123      401.   6.33      35.      9.      9.      .13
  HYDROGRAPH AT
+                 75      395.   6.33      36.      9.      9.      .13
  ROUTED TO
+               DAM75     394.   6.33      36.      9.      9.      .13
+                                                                                    102.48      6.33
  HYDROGRAPH AT
+                 85      380.   6.33      36.     10.     10.      .14
  ROUTED TO
+               DAM85     379.   6.33      37.     10.     10.      .14
+                                                                                    102.47      6.33
  HYDROGRAPH AT
+                 80       28.   6.17       2.      1.      1.      .01
  ROUTED TO
+               DAM80      25.   6.17       2.      0.      0.      .01
+                                                                                    102.07      6.17
  ROUTED TO
+                 87       25.   6.25       2.      0.      0.      .01
  2 COMBINED AT
+                 88      396.   6.33      39.     10.     10.      .14
  ROUTED TO
+                 96      360.   6.42      39.     10.     10.      .14
  HYDROGRAPH AT
+                 95       41.   6.25       4.      1.      1.      .01
  ROUTED TO
```

+	DAM95	55.	6.25	3.	1.	1.	.01		
+								102.13	6.25
2 COMBINED AT									
+	97	389.	6.42	42.	11.	11.	.15		
ROUTED TO									
+	91	385.	6.42	42.	11.	11.	.15		
HYDROGRAPH AT									
+	90	48.	6.25	4.	1.	1.	.02		
ROUTED TO									
+	DAM90	70.	6.25	3.	1.	1.	.02		
+								102.15	6.25
2 COMBINED AT									
+	92	415.	6.42	46.	12.	12.	.17		
HYDROGRAPH AT									
+	110	58.	6.25	5.	1.	1.	.02		
ROUTED TO									
+	DAM110	64.	6.17	4.	1.	1.	.02		
+								102.14	6.17
ROUTED TO									
+	101	60.	6.25	5.	1.	1.	.02		
HYDROGRAPH AT									
+	100	119.	6.25	10.	3.	3.	.00		
ROUTED TO									
+	DAM100	119.	6.25	10.	3.	3.	.00		
+								102.21	6.25
3 COMBINED AT									
+	102	496.	6.42	60.	16.	16.	.19		
ROUTED TO									
+	103	494.	6.42	60.	16.	16.	.19		
DIVERSION TO									
+	103B	0.	6.42	0.	0.	0.	.19		
HYDROGRAPH AT									
+	103A	494.	6.42	60.	16.	16.	.19		
ROUTED TO									
+	361	478.	6.42	60.	16.	16.	.19		
+								3.43	6.42
HYDROGRAPH AT									
+	360	17.	6.67	4.	1.	1.	.03		
2 COMBINED AT									
+	362	491.	6.42	64.	17.	17.	.22		
ROUTED TO									
+	411	488.	6.42	64.	17.	17.	.22		
+								3.47	6.42
ROUTED TO									
+	410B	484.	6.42	64.	17.	17.	.22		
+								3.45	6.42
HYDROGRAPH AT									
+	410	34.	6.42	5.	1.	1.	.03		
ROUTED TO									
+	410A	34.	6.42	5.	1.	1.	.03		

+								.38	6.42
	2 COMBINED AT								
+		410C	518.	6.42	69.	18.	18.	.25	
	ROUTED TO								
+		421	517.	6.50	69.	18.	18.	.25	
+								3.40	6.50
	HYDROGRAPH AT								
+		140	80.	6.25	8.	2.	2.	.03	
	ROUTED TO								
+		DAM140	79.	6.25	7.	2.	2.	.03	
+								102.16	6.25
	HYDROGRAPH AT								
+		130	152.	6.25	17.	5.	5.	.06	
	ROUTED TO								
+		DAM130	155.	6.33	16.	4.	4.	.06	
+								102.26	6.33
	HYDROGRAPH AT								
+		420	176.	6.42	28.	8.	8.	.14	
	ROUTED TO								
+		420A	168.	6.42	28.	8.	8.	.14	
+								1.82	6.42
	2 COMBINED AT								
+		423	686.	6.50	97.	26.	26.	.39	
	ROUTED TO								
+		401	674.	6.50	97.	26.	26.	.39	
+								3.87	6.50
	HYDROGRAPH AT								
+		240	197.	6.25	16.	4.	4.	.07	
	ROUTED TO								
+		246	170.	6.25	16.	4.	4.	.07	
	HYDROGRAPH AT								
+		245	64.	6.25	5.	1.	1.	.02	
	2 COMBINED AT								
+		247	235.	6.25	21.	6.	6.	.10	
	ROUTED TO								
+		248	219.	6.33	21.	6.	6.	.10	
	HYDROGRAPH AT								
+		180	77.	6.33	10.	3.	3.	.07	
	HYDROGRAPH AT								
+		255	75.	6.25	6.	2.	2.	.03	
	ROUTED TO								
+		236	69.	6.33	6.	2.	2.	.03	
	HYDROGRAPH AT								
+		235	37.	6.25	3.	1.	1.	.01	
	2 COMBINED AT								
+		237	92.	6.33	9.	3.	3.	.04	
	ROUTED TO								
+		181	87.	6.42	10.	3.	3.	.04	
	3 COMBINED AT								

```
+                    182      373.   6.33      41.      11.      11.      .21
  ROUTED TO
+                    191      348.   6.42      41.      11.      11.      .21
  HYDROGRAPH AT
+                    195      160.   6.17      13.       3.       3.      .04
  ROUTED TO
+                    186      145.   6.25      13.       4.       4.      .04
  HYDROGRAPH AT
+                    185       96.   6.17       8.       2.       2.      .02
  2 COMBINED AT
+                    187      227.   6.25      20.       6.       6.      .06
  ROUTED TO
+                    188      205.   6.33      20.       6.       6.      .06
  2 COMBINED AT
+                    189      544.   6.33      61.      17.      17.      .27
  ROUTED TO
+                   DAM1      383.   6.50      43.      11.      11.      .27
+                                                                        102.47      6.50
  HYDROGRAPH AT
+                    190       17.   6.75       5.       1.       1.      .03
  2 COMBINED AT
+                    192      397.   6.50      47.      13.      13.      .30
  ROUTED TO
+                    211      382.   6.58      47.      13.      13.      .30
  HYDROGRAPH AT
+                    210       65.   6.25       5.       1.       1.      .02
  2 COMBINED AT
+                    212      398.   6.58      52.      14.      14.      .32
  DIVERSION TO
+                    429      398.    .08      52.      14.      14.      .32
  HYDROGRAPH AT
+                    213        0.    .08       0.       0.       0.      .32
  HYDROGRAPH AT
+                    405       17.   6.33       2.       1.       1.      .34
  HYDROGRAPH AT
+                    200       65.   6.33       7.       2.       2.      .04
  ROUTED TO
+                  DAM200      60.   6.42       7.       2.       2.      .04
+                                                                        102.13      6.42
  HYDROGRAPH AT
+                    415       66.   6.42       8.       2.       2.      .05
  HYDROGRAPH AT
+                    135       77.   6.33       8.       2.       2.      .03
  ROUTED TO
+                  DAM135      84.   6.25       7.       2.       2.      .03
+                                                                        102.17      6.25
  HYDROGRAPH AT
+                    425       83.   6.33       8.       2.       2.      .04
```

+	3 COMBINED AT	426	164.	6.33	19.	5.	5.	.42		
+	HYDROGRAPH AT	400	229.	6.50	36.	10.	10.	.52		
+	ROUTED TO	400A	233.	6.50	36.	10.	10.	.52	2.15	6.50
+	2 COMBINED AT	402	908.	6.50	134.	36.	36.	.91		
+	ROUTED TO	431	869.	6.58	133.	36.	36.	.91	4.43	6.58
+	HYDROGRAPH AT	430C	101.	6.58	18.	5.	5.	.10		
+	2 COMBINED AT	432	970.	6.58	152.	41.	41.	1.00		
+	ROUTED TO	433	960.	6.58	152.	41.	41.	1.00	4.48	6.58
+	HYDROGRAPH AT	430A	90.	6.50	15.	4.	4.	.08		
+	HYDROGRAPH AT	440A	57.	6.67	13.	4.	4.	.07		
+	3 COMBINED AT	441	1100.	6.58	180.	48.	48.	1.15		
+	ROUTED TO	501	1093.	6.58	180.	48.	48.	1.15	4.83	6.58
+	HYDROGRAPH AT	500A	32.	6.50	6.	2.	2.	.03		
+	HYDROGRAPH AT	503A	121.	12.33	15.	5.	5.	.00		
+	ROUTED TO	503B	121.	12.50	15.	5.	5.	.00		
+	3 COMBINED AT	503C	1125.	6.58	188.	55.	55.	1.18		
+	ROUTED TO	500B1	1113.	6.67	187.	55.	55.	1.18	2.94	6.67
+	HYDROGRAPH AT	500B	22.	6.42	3.	1.	1.	.02		
+	2 COMBINED AT	500B2	1128.	6.67	191.	56.	56.	1.20		
+	ROUTED TO	560A1	1125.	6.67	191.	56.	56.	1.20	2.45	6.67
+	HYDROGRAPH AT	560A	33.	6.33	4.	1.	1.	.02		
+	2 COMBINED AT	560A2	1138.	6.67	194.	57.	57.	1.22		

ROUTED TO	560B1	1141.	6.67	194.	57.	57.	1.22	3.98	6.67
HYDROGRAPH AT	560B	27.	6.42	4.	1.	1.	.02		
2 COMBINED AT	560B2	1157.	6.67	198.	58.	58.	1.24		
ROUTED TO	560C1	1164.	6.67	198.	58.	58.	1.24	4.02	6.67
HYDROGRAPH AT	560C	37.	6.50	6.	2.	2.	.04		
2 COMBINED AT	560C2	1194.	6.67	204.	59.	59.	1.28		
ROUTED TO	551	1143.	6.75	203.	59.	59.	1.28	3.98	6.75
HYDROGRAPH AT	495A	31.	6.42	5.	1.	1.	.03		
HYDROGRAPH AT	550A	143.	6.75	35.	10.	10.	.18		
2 COMBINED AT	552	1286.	6.75	239.	69.	69.	1.47		
HYDROGRAPH AT	540A	73.	6.58	14.	4.	4.	.07		
2 COMBINED AT	540A1	1347.	6.75	253.	73.	73.	1.54		
ROUTED TO	545A1	1345.	6.75	253.	73.	73.	1.54	4.33	6.75
HYDROGRAPH AT	545A	22.	6.25	2.	0.	0.	.01		
2 COMBINED AT	545A2	1349.	6.75	254.	73.	73.	1.54		
ROUTED TO	545B1	1352.	6.75	254.	73.	73.	1.54	4.81	6.75
HYDROGRAPH AT	545B	18.	6.33	2.	1.	1.	.01		
2 COMBINED AT	545B2	1358.	6.75	256.	74.	74.	1.55		
ROUTED TO	545C1	1347.	6.75	256.	74.	74.	1.55	4.80	6.75
HYDROGRAPH AT	545C	18.	6.42	2.	1.	1.	.01		
2 COMBINED AT	545C2	1355.	6.75	258.	74.	74.	1.57		
ROUTED TO									

+	545D1	1348.	6.83	258.	74.	74.	1.57		
+								4.49	6.83
HYDROGRAPH AT +	545D	39.	6.42	6.	2.	2.	.03		
2 COMBINED AT +	545D2	1366.	6.83	264.	76.	76.	1.59		
ROUTED TO +	545E1	1372.	6.83	264.	76.	76.	1.59		
+								4.54	6.83
HYDROGRAPH AT +	545E	36.	6.50	7.	2.	2.	.03		
DIVERSION TO +	545EDV	18.	6.50	3.	1.	1.	.03		
HYDROGRAPH AT +	545E	18.	6.50	3.	1.	1.	.03		
2 COMBINED AT +	545E2	1384.	6.83	267.	77.	77.	1.63		
HYDROGRAPH AT +	1270	10.	7.42	5.	1.	1.	.03		
HYDROGRAPH AT +	1280	20.	7.50	10.	3.	3.	.06		
HYDROGRAPH AT +	1350	30.	7.50	15.	4.	4.	.09		
HYDROGRAPH AT +	1360	40.	7.58	19.	6.	6.	.12		
HYDROGRAPH AT +	1440	50.	7.67	24.	7.	7.	.15		
HYDROGRAPH AT +	1450	59.	7.75	29.	9.	9.	.18		
HYDROGRAPH AT +	1520	69.	7.75	34.	10.	10.	.22		
HYDROGRAPH AT +	1530	77.	7.83	39.	11.	11.	.25		
HYDROGRAPH AT +	1600	95.	7.92	48.	14.	14.	.31		
ROUTED TO +	1591	95.	8.08	48.	14.	14.	.31		
HYDROGRAPH AT +	1260	10.	7.50	5.	1.	1.	.03		
HYDROGRAPH AT +	1290	20.	7.50	10.	3.	3.	.06		
HYDROGRAPH AT +	1340	31.	7.58	15.	4.	4.	.10		
HYDROGRAPH AT +	1370	41.	7.67	20.	6.	6.	.13		
HYDROGRAPH AT +	1430	50.	7.67	25.	7.	7.	.16		
HYDROGRAPH AT									

+	1460	60.	7.75	30.	9.	9.	.19
HYDROGRAPH AT +	1510	69.	7.83	35.	10.	10.	.22
HYDROGRAPH AT +	1540	78.	7.83	40.	12.	12.	.26
HYDROGRAPH AT +	1590	96.	7.92	49.	15.	15.	.32
2 COMBINED AT +	1592	190.	8.00	97.	29.	29.	.63
ROUTED TO +	1581	190.	8.17	96.	29.	29.	.63
HYDROGRAPH AT +	1250	10.	7.42	5.	1.	1.	.03
HYDROGRAPH AT +	1300	20.	7.50	10.	3.	3.	.06
HYDROGRAPH AT +	1330	30.	7.50	14.	4.	4.	.09
HYDROGRAPH AT +	1380	40.	7.58	19.	6.	6.	.12
HYDROGRAPH AT +	1420	50.	7.67	24.	7.	7.	.15
HYDROGRAPH AT +	1470	59.	7.67	29.	8.	8.	.18
HYDROGRAPH AT +	1500	68.	7.75	33.	10.	10.	.21
HYDROGRAPH AT +	1550	77.	7.83	38.	11.	11.	.24
HYDROGRAPH AT +	1580	95.	7.75	47.	14.	14.	.30
2 COMBINED AT +	1582	282.	8.08	142.	43.	43.	.93
ROUTED TO +	1571	281.	8.17	142.	43.	43.	.93
HYDROGRAPH AT +	1240	10.	7.42	5.	1.	1.	.03
HYDROGRAPH AT +	1310	20.	7.42	10.	3.	3.	.06
HYDROGRAPH AT +	1320	31.	7.42	15.	4.	4.	.09
HYDROGRAPH AT +	1400	33.	7.42	17.	5.	5.	.10
HYDROGRAPH AT +	1390	10.	7.17	4.	1.	1.	.02
ROUTED TO +	1391	10.	7.25	4.	1.	1.	.02
2 COMBINED AT +	1392	42.	7.33	21.	6.	6.	.13

+	HYDROGRAPH AT	1410	52.	7.42	26.	7.	7.	.16	
+	HYDROGRAPH AT	1480	62.	7.42	31.	9.	9.	.19	
+	HYDROGRAPH AT	1490	73.	7.50	36.	10.	10.	.22	
+	HYDROGRAPH AT	1560	83.	7.50	41.	12.	12.	.25	
+	HYDROGRAPH AT	1570	103.	7.50	51.	15.	15.	.31	
+	2 COMBINED AT	1572	371.	8.00	190.	58.	58.	1.25	
+	ROUTED TO	1611	371.	8.08	190.	58.	58.	1.25	
+	HYDROGRAPH AT	1610	75.	8.00	38.	12.	12.	.25	
+	2 COMBINED AT	1612	445.	8.08	228.	69.	69.	1.50	
+	ROUTED TO	1621	445.	8.17	228.	69.	69.	1.50	
+	HYDROGRAPH AT	1620	86.	7.92	42.	13.	13.	.25	
+	HYDROGRAPH AT	1630	56.	7.25	21.	6.	6.	.11	
+	HYDROGRAPH AT	1640	59.	7.58	26.	8.	8.	.14	
+	3 COMBINED AT	1622	578.	8.08	296.	89.	89.	1.89	
+	ROUTED TO	1887	459.	8.92	273.	88.	88.	1.89	387.40 8.92
+	HYDROGRAPH AT	1950	17.	7.33	7.	2.	2.	.04	
+	HYDROGRAPH AT	1945	30.	7.50	14.	4.	4.	.08	
+	ROUTED TO	1951	30.	7.58	14.	4.	4.	.08	
+	2 COMBINED AT	1952	46.	7.42	21.	6.	6.	.12	
+	HYDROGRAPH AT	1940	93.	7.58	44.	13.	13.	.24	
+	HYDROGRAPH AT	1920	90.	7.58	39.	11.	11.	.20	
+	ROUTED TO	1941	90.	7.67	39.	11.	11.	.20	
+	2 COMBINED AT	1942	184.	7.67	84.	24.	24.	.43	
	HYDROGRAPH AT								

+		1925	210.	7.75	96.	28.	28.	.50	
+	HYDROGRAPH AT	1930	226.	8.00	109.	33.	33.	.57	
+	HYDROGRAPH AT	1910	62.	7.50	28.	8.	8.	.14	
+	HYDROGRAPH AT	1900	112.	7.67	53.	16.	16.	.27	
+	HYDROGRAPH AT	1890	148.	7.83	72.	21.	21.	.36	
+	ROUTED TO	1931	147.	7.83	72.	21.	21.	.36	
+	2 COMBINED AT	1932	373.	7.92	181.	54.	54.	.93	
+	HYDROGRAPH AT	1885	382.	8.17	191.	58.	58.	1.00	
+	HYDROGRAPH AT	1850	66.	7.42	28.	8.	8.	.14	
+	HYDROGRAPH AT	1860	115.	7.67	52.	15.	15.	.26	
+	HYDROGRAPH AT	1870	169.	8.00	88.	26.	26.	.44	
+	ROUTED TO	1886	169.	8.08	88.	26.	26.	.44	
+	HYDROGRAPH AT	1880	31.	7.17	12.	3.	3.	.05	
+	4 COMBINED AT	1888	964.	8.50	555.	176.	176.	3.38	
+	ROUTED TO	1984	961.	8.58	554.	176.	176.	3.38	388.74 8.58
+	HYDROGRAPH AT	1840	13.	7.42	6.	2.	2.	.03	
+	HYDROGRAPH AT	1670	33.	7.25	12.	4.	4.	.08	
+	ROUTED TO	1681	33.	7.50	12.	4.	4.	.08	
+	HYDROGRAPH AT	1680	33.	7.25	12.	4.	4.	.08	
+	2 COMBINED AT	1682	66.	7.42	25.	7.	7.	.15	
+	ROUTED TO	1751	65.	7.50	25.	7.	7.	.15	
+	HYDROGRAPH AT	1226	437.	12.00	357.	129.	129.	.00	
+	DIVERSION TO	1228	371.	12.00	304.	110.	110.	.00	
+	HYDROGRAPH AT	1227	66.	12.00	54.	19.	19.	.00	

HYDROGRAPH AT	1225	136.	6.25	54.	23.	23.	.08
HYDROGRAPH AT	1230	523.	6.58	125.	49.	49.	.72
ROUTED TO	1221	521.	6.75	125.	49.	49.	.72
HYDROGRAPH AT	1214	47.	6.17	4.	1.	1.	.01
HYDROGRAPH AT	1217	1138.	6.25	118.	31.	31.	.74
HYDROGRAPH AT	1220	1303.	6.50	219.	58.	58.	1.41
ROUTED TO	1222	1292.	6.58	221.	59.	59.	1.41
2 COMBINED AT	1223	1786.	6.58	345.	108.	108.	2.13
HYDROGRAPH AT	1750	1619.	6.83	352.	111.	111.	2.21
2 COMBINED AT	1752	1642.	6.83	377.	118.	118.	2.36
ROUTED TO	1761	1616.	6.92	377.	118.	118.	2.36
HYDROGRAPH AT	1760	27.	7.08	8.	2.	2.	.05
2 COMBINED AT	1762	1640.	6.92	385.	121.	121.	2.41
ROUTED TO	1771	1634.	6.92	384.	121.	121.	2.41
HYDROGRAPH AT	1770	21.	7.00	6.	2.	2.	.04
2 COMBINED AT	1772	1654.	6.92	390.	122.	122.	2.44
ROUTED TO	1841	1647.	7.08	396.	124.	124.	2.44
2 COMBINED AT	1842	1659.	7.08	401.	126.	126.	2.47
HYDROGRAPH AT	1830	1692.	7.17	421.	133.	133.	2.59
HYDROGRAPH AT	1660	36.	7.33	15.	4.	4.	.09
ROUTED TO	1691	36.	7.58	15.	4.	4.	.09
HYDROGRAPH AT	1690	37.	7.33	15.	4.	4.	.09
2 COMBINED AT	1692	71.	7.50	29.	8.	8.	.18
ROUTED TO							

+	1741	71.	7.58	29.	8.	8.	.18
HYDROGRAPH AT +	1740	36.	7.33	15.	4.	4.	.09
2 COMBINED AT +	1742	106.	7.50	43.	13.	13.	.27
ROUTED TO +	1781	106.	7.58	43.	13.	13.	.27
HYDROGRAPH AT +	1780	44.	7.25	17.	5.	5.	.09
2 COMBINED AT +	1782	146.	7.50	59.	17.	17.	.36
ROUTED TO +	1831	145.	7.67	59.	17.	17.	.36
2 COMBINED AT +	1832	1770.	7.17	480.	150.	150.	2.95
HYDROGRAPH AT +	1820	1801.	7.17	498.	156.	156.	3.06
HYDROGRAPH AT +	1650	36.	7.33	15.	4.	4.	.09
ROUTED TO +	1701	36.	7.58	15.	4.	4.	.09
HYDROGRAPH AT +	1700	37.	7.33	15.	4.	4.	.09
2 COMBINED AT +	1702	71.	7.50	29.	8.	8.	.18
ROUTED TO +	1731	71.	7.58	29.	8.	8.	.18
HYDROGRAPH AT +	1730	36.	7.33	15.	4.	4.	.09
2 COMBINED AT +	1732	106.	7.50	43.	13.	13.	.27
ROUTED TO +	1791	106.	7.67	43.	13.	13.	.27
HYDROGRAPH AT +	1790	41.	7.33	16.	5.	5.	.09
2 COMBINED AT +	1792	144.	7.50	59.	17.	17.	.36
ROUTED TO +	1822	143.	7.67	59.	17.	17.	.36
2 COMBINED AT +	1823	1890.	7.25	557.	173.	173.	3.43
HYDROGRAPH AT +	1810	1935.	7.25	577.	180.	180.	3.54
HYDROGRAPH AT +	1210	622.	6.67	140.	38.	38.	.93
ROUTED TO +	1201	621.	6.83	141.	38.	38.	.93

+	HYDROGRAPH AT	1207	370.	6.17	29.	8.	8.	.12
+	HYDROGRAPH AT	1204	1212.	6.33	148.	38.	38.	.75
+	HYDROGRAPH AT	1200	1088.	6.67	230.	62.	62.	1.31
+	2 COMBINED AT	1202	1688.	6.67	371.	100.	100.	2.24
+	ROUTED TO	1191	1679.	6.75	370.	100.	100.	2.24
+	HYDROGRAPH AT	1186	338.	6.25	26.	7.	7.	.12
+	HYDROGRAPH AT	1187	505.	6.33	57.	15.	15.	.31
+	HYDROGRAPH AT	1190	583.	6.83	164.	45.	45.	1.03
+	2 COMBINED AT	1192	2251.	6.75	532.	145.	145.	3.27
+	ROUTED TO	1181	2247.	6.83	533.	145.	145.	3.27
+	HYDROGRAPH AT	1173	37.	11.00	25.	7.	7.	.00
+	HYDROGRAPH AT	1174	542.	6.25	52.	18.	18.	.21
+	HYDROGRAPH AT	1177	881.	6.33	89.	28.	28.	.45
+	HYDROGRAPH AT	1180	673.	6.83	188.	57.	57.	1.15
+	HYDROGRAPH AT	1000	29.	6.33	4.	1.	1.	.02
+	ROUTED TO	1042	29.	6.42	4.	1.	1.	.02
+	HYDROGRAPH AT	1060	39.	6.83	11.	3.	3.	.04
+	ROUTED TO	1051	39.	6.92	11.	3.	3.	.04
+	HYDROGRAPH AT	1050	3.	6.25	0.	0.	0.	.00
+	2 COMBINED AT	1052	39.	6.92	11.	3.	3.	.04
+	ROUTED TO	1041	39.	7.08	11.	3.	3.	.04
+	HYDROGRAPH AT	1040	101.	6.25	10.	3.	3.	.04
+	3 COMBINED AT	1043	127.	6.25	25.	7.	7.	.10
+	ROUTED TO	DAM8	98.	6.50	19.	5.	5.	.10

+								102.19	6.50
+	ROUTED TO	1011	113.	6.58	20.	5.	5.	.10	
+	HYDROGRAPH AT	1010	107.	6.25	9.	3.	3.	.04	
+	2 COMBINED AT	1012	141.	6.58	29.	8.	8.	.13	
+	HYDROGRAPH AT	1110	125.	6.67	31.	8.	8.	.15	
+	HYDROGRAPH AT	1020	104.	6.17	8.	2.	2.	.03	
+	HYDROGRAPH AT	1120	130.	6.33	14.	4.	4.	.07	
+	2 COMBINED AT	1121	236.	6.33	44.	12.	12.	.21	
+	DIVERSION TO	2223	94.	6.33	18.	5.	5.	.21	
+	HYDROGRAPH AT	2222	141.	6.33	27.	7.	7.	.21	
+	ROUTED TO	1131	139.	6.33	27.	7.	7.	.21	
+	HYDROGRAPH AT	1070	100.	6.25	9.	3.	3.	.04	
+	ROUTED TO	1031	94.	6.33	9.	3.	3.	.04	
+	HYDROGRAPH AT	1030	75.	6.33	7.	2.	2.	.03	
+	2 COMBINED AT	1032	170.	6.33	16.	4.	4.	.07	
+	HYDROGRAPH AT	1130	230.	6.33	27.	7.	7.	.13	
+	2 COMBINED AT	1132	369.	6.33	54.	15.	15.	.35	
+	DIVERSION TO	3334	184.	6.33	27.	7.	7.	.35	
+	HYDROGRAPH AT	3333	184.	6.33	27.	7.	7.	.35	
+	ROUTED TO	1151	173.	6.50	28.	8.	8.	.35	
+	HYDROGRAPH AT	1080	229.	6.25	19.	5.	5.	.08	
+	HYDROGRAPH AT	1090	294.	6.33	31.	8.	8.	.14	
+	HYDROGRAPH AT	1150	370.	6.58	67.	18.	18.	.37	
+	2 COMBINED AT	1152	534.	6.50	94.	26.	26.	.72	

+ DIVERSION TO	4445	267.	6.50	47.	13.	13.	.72
+ HYDROGRAPH AT	4444	267.	6.50	47.	13.	13.	.72
+ ROUTED TO	1161	270.	6.58	49.	13.	13.	.72
+ HYDROGRAPH AT	1159	834.	13.00	817.	538.	538.	.00
+ HYDROGRAPH AT	1154	835.	13.17	818.	545.	545.	.16
+ HYDROGRAPH AT	1155	1411.	6.33	822.	559.	559.	.62
+ HYDROGRAPH AT	1153	184.	6.17	15.	4.	4.	.08
+ ROUTED TO	1101	202.	6.25	17.	4.	4.	.08
+ HYDROGRAPH AT	1100	12.	6.25	1.	0.	0.	.00
+ 2 COMBINED AT	1102	214.	6.25	18.	5.	5.	.08
+ ROUTED TO	1156	214.	6.33	20.	5.	5.	.08
+ 2 COMBINED AT	1157	1624.	6.33	823.	564.	564.	.70
+ HYDROGRAPH AT	1160	1280.	6.58	826.	565.	565.	1.00
+ HYDROGRAPH AT	1166	323.	6.25	27.	7.	7.	.11
+ HYDROGRAPH AT	1165	1030.	6.25	96.	25.	25.	.50
+ HYDROGRAPH AT	1170	747.	6.58	134.	36.	36.	.76
+ ROUTED TO	1162	724.	6.67	136.	36.	36.	.76
+ 3 COMBINED AT	1163	2265.	6.67	906.	615.	615.	2.48
+ DIVERSION TO	5556	1133.	6.67	453.	307.	307.	2.48
+ HYDROGRAPH AT	5555	1133.	6.67	453.	307.	307.	2.48
+ ROUTED TO	1182	1113.	6.67	453.	306.	306.	2.48
+ 2 COMBINED AT	1183	1780.	6.75	638.	363.	363.	3.63
+ ROUTED TO	1184	1758.	6.83	639.	363.	363.	3.63
+ 2 COMBINED AT	1185	4005.	6.83	1172.	508.	508.	6.90

+	ROUTED TO	1646	3975.	6.83	1171.	507.	507.	6.90	
+	HYDROGRAPH AT	1645	60.	7.00	18.	5.	5.	.09	
+	2 COMBINED AT	1647	4029.	6.83	1189.	512.	512.	6.99	
+	ROUTED TO	1711	3998.	6.92	1188.	512.	512.	6.99	
+	HYDROGRAPH AT	1710	46.	7.25	17.	5.	5.	.09	
+	2 COMBINED AT	1712	4035.	6.92	1205.	516.	516.	7.09	
+	ROUTED TO	1721	4016.	6.92	1205.	516.	516.	7.09	
+	HYDROGRAPH AT	1720	52.	7.17	19.	5.	5.	.09	
+	2 COMBINED AT	1722	4061.	6.92	1223.	521.	521.	7.18	
+	ROUTED TO	1801	4019.	7.00	1221.	520.	520.	7.18	
+	HYDROGRAPH AT	1800	58.	7.17	20.	6.	6.	.09	
+	2 COMBINED AT	1802	4076.	7.00	1240.	526.	526.	7.27	
+	ROUTED TO	1811	4064.	7.00	1240.	525.	525.	7.27	
+	2 COMBINED AT	1812	5657.	7.17	1816.	705.	705.	10.82	
+	ROUTED TO	1813	5648.	7.17	1814.	704.	704.	10.82	
+	2 COMBINED AT	1985	5856.	7.17	2357.	880.	880.	14.20	
+	ROUTED TO	1986	5200.	7.42	2346.	876.	876.	14.20	394.95 7.42
+	HYDROGRAPH AT	3334	184.	6.33	27.	7.	7.	.00	
+	HYDROGRAPH AT	1135	243.	6.58	46.	12.	12.	.11	
+	ROUTED TO	1136	242.	6.67	46.	12.	12.	.11	
+	HYDROGRAPH AT	4445	267.	6.50	47.	13.	13.	.00	
+	HYDROGRAPH AT	1140	351.	6.67	71.	19.	19.	.14	
+	2 COMBINED AT	1141	592.	6.67	117.	32.	32.	.25	

+	ROUTED TO	1971	586.	6.83	119.	32.	32.	.25		
+	HYDROGRAPH AT	5556	1133.	6.67	453.	307.	307.	.00		
+	ROUTED TO	1972	1042.	6.83	448.	303.	303.	.00		
+	HYDROGRAPH AT	1970	320.	6.83	89.	25.	25.	.51		
+	3 COMBINED AT	1973	1948.	6.83	651.	360.	360.	.76		
+	HYDROGRAPH AT	1980	2114.	7.00	730.	381.	381.	1.23		
+	2 COMBINED AT	1987	6795.	7.33	3066.	1257.	1257.	15.43		
+	ROUTED TO	1991	6343.	7.58	3057.	1251.	1251.	15.43	395.87	7.58
+	HYDROGRAPH AT	1960	294.	6.83	78.	21.	21.	.38		
+	HYDROGRAPH AT	1990	529.	6.92	156.	43.	43.	.76		
+	HYDROGRAPH AT	429	398.	6.58	52.	14.	14.	.00		
+	HYDROGRAPH AT	430B	370.	6.67	55.	15.	15.	.01		
+	HYDROGRAPH AT	440B	371.	6.75	61.	16.	16.	.05		
+	ROUTED TO	495B1	359.	6.83	60.	16.	16.	.05		
+	HYDROGRAPH AT	304	336.	12.67	309.	206.	206.	.00		
+	HYDROGRAPH AT	300	337.	12.83	309.	208.	208.	.03		
+	ROUTED TO	DAM7	337.	12.83	309.	208.	208.	.03	102.43	12.83
+	ROUTED TO	291	336.	12.83	309.	208.	208.	.03		
+	HYDROGRAPH AT	290	64.	6.17	5.	1.	1.	.02		
+	ROUTED TO	DAM6	36.	6.33	3.	1.	1.	.02	102.09	6.33
+	2 COMBINED AT	292	337.	12.83	310.	209.	209.	.05		
+	ROUTED TO	331	337.	12.92	310.	209.	209.	.05		
+	HYDROGRAPH AT	330	71.	6.17	6.	2.	2.	.02		

+	ROUTED TO	DAM2	69.	6.33	3.	1.	1.	.02	102.15	6.33
+	2 COMBINED AT	332	347.	6.33	310.	210.	210.	.07		
+	ROUTED TO	231	337.	12.92	310.	210.	210.	.07		
+	HYDROGRAPH AT	230	135.	6.25	11.	3.	3.	.04		
+	2 COMBINED AT	232	415.	6.33	310.	213.	213.	.11		
+	ROUTED TO	233	409.	6.33	310.	213.	213.	.11		
+	HYDROGRAPH AT	220	561.	6.25	311.	219.	219.	.19		
+	HYDROGRAPH AT	445	568.	6.33	311.	220.	220.	.21		
+	HYDROGRAPH AT	310	38.	6.42	7.	2.	2.	.03		
+	ROUTED TO	DAM4	0.	.08	0.	0.	0.	.03	101.92	24.00
+	ROUTED TO	312	0.	.08	0.	0.	0.	.03		
+	HYDROGRAPH AT	320	66.	6.17	6.	2.	2.	.02		
+	2 COMBINED AT	322	66.	6.17	6.	2.	2.	.05		
+	ROUTED TO	DAM3	62.	6.33	3.	1.	1.	.05	102.14	6.33
+	HYDROGRAPH AT	260	119.	6.25	13.	3.	3.	.09		
+	ROUTED TO	451	116.	6.33	13.	3.	3.	.09		
+	HYDROGRAPH AT	450	136.	6.42	17.	5.	5.	.12		
+	2 COMBINED AT	452	693.	6.33	312.	224.	224.	.33		
+	HYDROGRAPH AT	455	754.	6.50	312.	227.	227.	.39		
+	HYDROGRAPH AT	280	222.	6.25	19.	5.	5.	.06		
+	ROUTED TO	DAM5	67.	6.50	9.	2.	2.	.06	102.15	6.50
+	HYDROGRAPH AT	250	118.	6.25	19.	5.	5.	.11		

HYDROGRAPH AT	460	191.	6.67	41.	11.	11.	.24		
2 COMBINED AT	461	919.	6.50	320.	238.	238.	.63		
HYDROGRAPH AT	495B	995.	6.67	344.	245.	245.	.75		
2 COMBINED AT	495B2	1283.	6.75	405.	261.	261.	.80		
HYDROGRAPH AT	270	168.	6.25	14.	4.	4.	.06		
HYDROGRAPH AT	470	202.	6.42	26.	7.	7.	.13		
HYDROGRAPH AT	2223	94.	6.33	18.	5.	5.	.00		
HYDROGRAPH AT	480	142.	6.42	29.	8.	8.	.08		
2 COMBINED AT	481	344.	6.42	55.	15.	15.	.21		
HYDROGRAPH AT	490	421.	6.75	97.	27.	27.	.41		
2 COMBINED AT	491	1704.	6.75	502.	288.	288.	1.21		
HYDROGRAPH AT	550B	1708.	6.83	513.	291.	291.	1.27		
ROUTED TO	1992	1695.	6.92	515.	290.	290.	1.27		
2 COMBINED AT	1993	2224.	6.92	670.	334.	334.	2.03		
2 COMBINED AT	1994	7466.	7.50	3689.	1584.	1584.	17.46		
ROUTED TO	2001	7434.	7.58	3686.	1579.	1579.	17.46	10.55	7.58
HYDROGRAPH AT	2000	100.	6.75	24.	6.	6.	.12		
2 COMBINED AT	2002	7469.	7.58	3704.	1586.	1586.	17.57		
ROUTED TO	541	7460.	7.58	3702.	1582.	1582.	17.57	10.57	7.58
HYDROGRAPH AT	540B	146.	6.67	31.	8.	8.	.15		
2 COMBINED AT	@ Dawson Rd 542	7501. 7136	7.58	3723.	1591.	1591.	17.72		
ROUTED TO	546	7489.	7.67	3723.	1588.	1588.	17.72	10.58	7.67
HYDROGRAPH AT	545EDV	18.	6.50	3.	1.	1.	.00		

Total Consolid Area at by Pine Freeway

2 COMBINED AT	546T	7138 7492.	7.67	3725.	1589.	1589.	17.72		
DIVERSION TO	546DIV	2907.	7.67	616.	154.	154.	17.72		
HYDROGRAPH AT	546T	4585.	7.67	3109.	1435.	1435.	17.72		
2 COMBINED AT	547	5207.	7.00	3353.	1512.	1512.	19.35		
ROUTED TO	531	5129.	7.42	3342.	1504.	1504.	19.35	18.23	7.42
HYDROGRAPH AT	560W	69.	6.75	17.	5.	5.	.09		
ROUTED TO	531A	67.	7.00	17.	5.	5.	.09		
HYDROGRAPH AT	530AW	137.	6.67	31.	8.	8.	.15		
3 COMBINED AT	532	5228.	7.33	3377.	1517.	1517.	19.58		
ROUTED TO	537	5218.	7.42	3370.	1510.	1510.	19.58	14.16	7.42
HYDROGRAPH AT	360W	43.	6.92	13.	4.	4.	.09		
HYDROGRAPH AT	420W	18.	6.42	3.	1.	1.	.02		
HYDROGRAPH AT	410W	23.	6.42	4.	1.	1.	.02		
2 COMBINED AT	381	41.	6.42	7.	2.	2.	.04		
HYDROGRAPH AT	380	55.	6.50	9.	2.	2.	.06		
HYDROGRAPH AT	400W	64.	6.42	9.	2.	2.	.05		
2 COMBINED AT	371	118.	6.42	19.	5.	5.	.11		
HYDROGRAPH AT	370	156.	6.58	26.	7.	7.	.16		
2 COMBINED AT	372	183.	6.58	39.	11.	11.	.25		
ROUTED TO	373	177.	6.67	39.	11.	11.	.25	9.16	6.67
ROUTED TO	501	166.	6.75	39.	11.	11.	.25	9.38	6.75
HYDROGRAPH AT	510	70.	6.83	21.	6.	6.	.14		

+	HYDROGRAPH AT	500W	244.	6.75	58.	16.	16.	.28		
+	3 COMBINED AT	502	478.	6.75	118.	32.	32.	.67		
+	ROUTED TO	516	455.	6.92	117.	32.	32.	.67	10.59	6.92
+	HYDROGRAPH AT	515	29.	6.58	6.	2.	2.	.03		
+	2 COMBINED AT	517	473.	6.92	123.	34.	34.	.70		
+	ROUTED TO	518	474.	6.92	123.	34.	34.	.70	11.03	6.92
+	ROUTED TO	519	471.	6.92	123.	34.	34.	.70	11.23	6.92
+	HYDROGRAPH AT	520A	211.	6.67	50.	13.	13.	.25		
+	2 COMBINED AT	519A	646.	6.92	172.	47.	47.	.95		
+	ROUTED TO	521	633.	7.00	171.	47.	47.	.95	10.60	7.00
+	HYDROGRAPH AT	520B	584.	6.17	43.	12.	12.	.13		
+	ROUTED TO	DAMP1	512.	6.25	27.	7.	7.	.13	111.69	6.25
+	2 COMBINED AT	522	661.	6.92	199.	54.	54.	1.08		
+	ROUTED TO	535A1	659.	7.00	198.	54.	54.	1.08	10.48	7.00
+	HYDROGRAPH AT	535A	414.	6.17	31.	9.	9.	.09		
+	ROUTED TO	DAMP2	137.	6.42	13.	3.	3.	.09	110.70	6.42
+	2 COMBINED AT	535A2	677.	7.00	211.	58.	58.	1.18		
+	ROUTED TO	535D1	676.	7.00	211.	58.	58.	1.18	10.50	7.00
+	HYDROGRAPH AT	535D	11.	6.25	1.	0.	0.	.00		
+	2 COMBINED AT	535D2	677.	7.00	211.	58.	58.	1.18		
+	DIVERSION TO	CWRW	0.	7.00	0.	0.	0.	1.18		

HYDROGRAPH AT	CWRS	677.	7.00	211.	58.	58.	1.18	
ROUTED TO	535B1	679.	7.00	211.	58.	58.	1.18	10.94 7.00
HYDROGRAPH AT	535E	4.	6.17	0.	0.	0.	.00	
ROUTED TO	535B2	3.	6.33	0.	0.	0.	.00	
HYDROGRAPH AT	535B	58.	6.17	4.	1.	1.	.01	
3 COMBINED AT	535B3	681.	7.00	213.	59.	59.	1.19	
ROUTED TO	535C1	674.	7.08	213.	59.	59.	1.19	10.93 7.08
HYDROGRAPH AT	535C	25.	6.50	4.	1.	1.	.02	
3 COMBINED AT	548	5792.	7.33	3553.	1570.	1570.	20.79	
HYDROGRAPH AT	546DIV	2907.	7.67	616.	154.	154.	.00	
ROUTED TO	549	2824.	7.75	616.	154.	154.	.00	7.59 7.75
DIVERSION TO	551	2229.	7.75	557.	139.	139.	.00	
HYDROGRAPH AT	550	594.	7.75	59.	15.	15.	.00	
2 COMBINED AT	552	6153.	7.67	3611.	1584.	1584.	20.79	

Total at Pine Rd 5468

Into Interceptor 5656

* PF2.120 Bob Ward's 96 12 hour model.

SUMMARY OF DAM OVERTOPPING/BREACH ANALYSIS FOR STATION DAM165

PLAN 1 .....

	INITIAL VALUE	SPILLWAY CREST	TOP OF DAM
ELEVATION	100.00	101.99	102.00
STORAGE	0.	1.	1.
OUTFLOW	0.	0.	1.

RATIO OF PMF	MAXIMUM RESERVOIR W.S.ELEV	MAXIMUM DEPTH OVER DAM	MAXIMUM STORAGE AC-FT	MAXIMUM OUTFLOW CFS	DURATION OVER TOP HOURS	TIME OF MAX OUTFLOW HOURS	TIME OF FAILURE HOURS
1.00	102.12	.12	1.	50.	4.83	6.17	.00

SUMMARY OF DAM OVERTOPPING/BREACH ANALYSIS FOR STATION DAM160

PLAN 1 .....

	INITIAL VALUE	SPILLWAY CREST	TOP OF DAM
ELEVATION	100.00	101.99	102.00
STORAGE	0.	1.	1.
OUTFLOW	0.	0.	1.

RATIO OF PMF	MAXIMUM RESERVOIR W.S.ELEV	MAXIMUM DEPTH OVER DAM	MAXIMUM STORAGE AC-FT	MAXIMUM OUTFLOW CFS	DURATION OVER TOP HOURS	TIME OF MAX OUTFLOW HOURS	TIME OF FAILURE HOURS

```
                1.00      102.18        .18         1.        92.      6.58        6.25        .00
1                           SUMMARY OF DAM OVERTOPPING/BREACH ANALYSIS FOR STATION   DAM155

PLAN  1 ...............                    INITIAL VALUE     SPILLWAY CREST     TOP OF DAM
                         ELEVATION            100.00            101.99           102.00
                         STORAGE                0.                1.               1.
                         OUTFLOW                0.                0.               1.

                RATIO    MAXIMUM      MAXIMUM    MAXIMUM    MAXIMUM    DURATION    TIME OF     TIME OF
                  OF    RESERVOIR     DEPTH     STORAGE    OUTFLOW    OVER TOP   MAX OUTFLOW  FAILURE
                 PMF    W.S.ELEV    OVER DAM     AC-FT       CFS       HOURS        HOURS       HOURS

                1.00      102.20        .20         1.       106.      6.75        6.25        .00
1                           SUMMARY OF DAM OVERTOPPING/BREACH ANALYSIS FOR STATION   DAM150

PLAN  1 ...............                    INITIAL VALUE     SPILLWAY CREST     TOP OF DAM
                         ELEVATION            100.00            101.99           102.00
                         STORAGE                0.                2.               2.
                         OUTFLOW                0.                0.               1.

                RATIO    MAXIMUM      MAXIMUM    MAXIMUM    MAXIMUM    DURATION    TIME OF     TIME OF
                  OF    RESERVOIR     DEPTH     STORAGE    OUTFLOW    OVER TOP   MAX OUTFLOW  FAILURE
                 PMF    W.S.ELEV    OVER DAM     AC-FT       CFS       HOURS        HOURS       HOURS

                1.00      102.28        .28         2.       174.      7.33        6.25        .00
1                           SUMMARY OF DAM OVERTOPPING/BREACH ANALYSIS FOR STATION   DAM120

PLAN  1 ...............                    INITIAL VALUE     SPILLWAY CREST     TOP OF DAM
                         ELEVATION            100.00            101.99           102.00
                         STORAGE                0.                1.               1.
                         OUTFLOW                0.                0.               1.

                RATIO    MAXIMUM      MAXIMUM    MAXIMUM    MAXIMUM    DURATION    TIME OF     TIME OF
                  OF    RESERVOIR     DEPTH     STORAGE    OUTFLOW    OVER TOP   MAX OUTFLOW  FAILURE
                 PMF    W.S.ELEV    OVER DAM     AC-FT       CFS       HOURS        HOURS       HOURS

                1.00      102.13        .13         1.        57.      5.42        6.25        .00
1                           SUMMARY OF DAM OVERTOPPING/BREACH ANALYSIS FOR STATION    DAM75

PLAN  1 ...............                    INITIAL VALUE     SPILLWAY CREST     TOP OF DAM
                         ELEVATION            100.00            101.99           102.00
                         STORAGE                0.                0.               0.
                         OUTFLOW                0.                0.               1.

                RATIO    MAXIMUM      MAXIMUM    MAXIMUM    MAXIMUM    DURATION    TIME OF     TIME OF
                  OF    RESERVOIR     DEPTH     STORAGE    OUTFLOW    OVER TOP   MAX OUTFLOW  FAILURE
                 PMF    W.S.ELEV    OVER DAM     AC-FT       CFS       HOURS        HOURS       HOURS

                1.00      102.48        .48         0.       394.     10.00        6.33        .00
1                           SUMMARY OF DAM OVERTOPPING/BREACH ANALYSIS FOR STATION    DAM85

PLAN  1 ...............                    INITIAL VALUE     SPILLWAY CREST     TOP OF DAM
                         ELEVATION            100.00            101.99           102.00
                         STORAGE                0.                0.               0.
                         OUTFLOW                0.                0.               1.

                RATIO    MAXIMUM      MAXIMUM    MAXIMUM    MAXIMUM    DURATION    TIME OF     TIME OF
                  OF    RESERVOIR     DEPTH     STORAGE    OUTFLOW    OVER TOP   MAX OUTFLOW  FAILURE
                 PMF    W.S.ELEV    OVER DAM     AC-FT       CFS       HOURS        HOURS       HOURS

                1.00      102.47        .47         0.       379.     10.42        6.33        .00
```

1 SUMMARY OF DAM OVERTOPPING/BREACH ANALYSIS FOR STATION DAM80

PLAN 1 .....

	INITIAL VALUE	SPILLWAY CREST	TOP OF DAM
ELEVATION	100.00	101.99	102.00
STORAGE	0.	0.	0.
OUTFLOW	0.	0.	1.

RATIO OF PMF	MAXIMUM RESERVOIR W.S.ELEV	MAXIMUM DEPTH OVER DAM	MAXIMUM STORAGE AC-FT	MAXIMUM OUTFLOW CFS	DURATION OVER TOP HOURS	TIME OF MAX OUTFLOW HOURS	TIME OF FAILURE HOURS
1.00	102.07	.07	0.	25.	2.33	6.17	.00

1 SUMMARY OF DAM OVERTOPPING/BREACH ANALYSIS FOR STATION DAM95

PLAN 1 .....

	INITIAL VALUE	SPILLWAY CREST	TOP OF DAM
ELEVATION	100.00	101.99	102.00
STORAGE	0.	1.	1.
OUTFLOW	0.	0.	1.

RATIO OF PMF	MAXIMUM RESERVOIR W.S.ELEV	MAXIMUM DEPTH OVER DAM	MAXIMUM STORAGE AC-FT	MAXIMUM OUTFLOW CFS	DURATION OVER TOP HOURS	TIME OF MAX OUTFLOW HOURS	TIME OF FAILURE HOURS
1.00	102.13	.13	1.	55.	4.75	6.25	.00

1 SUMMARY OF DAM OVERTOPPING/BREACH ANALYSIS FOR STATION DAM90

PLAN 1 .....

	INITIAL VALUE	SPILLWAY CREST	TOP OF DAM
ELEVATION	100.00	101.99	102.00
STORAGE	0.	1.	1.
OUTFLOW	0.	0.	1.

RATIO OF PMF	MAXIMUM RESERVOIR W.S.ELEV	MAXIMUM DEPTH OVER DAM	MAXIMUM STORAGE AC-FT	MAXIMUM OUTFLOW CFS	DURATION OVER TOP HOURS	TIME OF MAX OUTFLOW HOURS	TIME OF FAILURE HOURS
1.00	102.15	.15	1.	70.	5.08	6.25	.00

1 SUMMARY OF DAM OVERTOPPING/BREACH ANALYSIS FOR STATION DAM110

PLAN 1 .....

	INITIAL VALUE	SPILLWAY CREST	TOP OF DAM
ELEVATION	100.00	101.99	102.00
STORAGE	0.	1.	1.
OUTFLOW	0.	0.	1.

RATIO OF PMF	MAXIMUM RESERVOIR W.S.ELEV	MAXIMUM DEPTH OVER DAM	MAXIMUM STORAGE AC-FT	MAXIMUM OUTFLOW CFS	DURATION OVER TOP HOURS	TIME OF MAX OUTFLOW HOURS	TIME OF FAILURE HOURS
1.00	102.14	.14	1.	64.	5.58	6.17	.00

1 SUMMARY OF DAM OVERTOPPING/BREACH ANALYSIS FOR STATION DAM100

PLAN 1 .....

	INITIAL VALUE	SPILLWAY CREST	TOP OF DAM
ELEVATION	100.00	101.99	102.00
STORAGE	0.	0.	0.
OUTFLOW	0.	0.	1.

RATIO OF PMF	MAXIMUM RESERVOIR W.S.ELEV	MAXIMUM DEPTH OVER DAM	MAXIMUM STORAGE AC-FT	MAXIMUM OUTFLOW CFS	DURATION OVER TOP HOURS	TIME OF MAX OUTFLOW HOURS	TIME OF FAILURE HOURS
1.00	102.21	.21	0.	119.	9.08	6.25	.00

1 SUMMARY OF DAM OVERTOPPING/BREACH ANALYSIS FOR STATION DAM140

```
PLAN  1 ...............                INITIAL VALUE     SPILLWAY CREST     TOP OF DAM
                         ELEVATION         100.00            101.99            102.00
                         STORAGE             0.                1.                1.
                         OUTFLOW             0.                0.                1.

              RATIO    MAXIMUM     MAXIMUM    MAXIMUM    MAXIMUM    DURATION    TIME OF     TIME OF
               OF     RESERVOIR    DEPTH     STORAGE    OUTFLOW    OVER TOP   MAX OUTFLOW  FAILURE
              PMF      W.S.ELEV   OVER DAM    AC-FT       CFS       HOURS        HOURS      HOURS

              1.00      102.16       .16        1.        79.       6.92        6.25        .00
1                       SUMMARY OF DAM OVERTOPPING/BREACH ANALYSIS FOR STATION   DAM130

PLAN  1 ...............                INITIAL VALUE     SPILLWAY CREST     TOP OF DAM
                         ELEVATION         100.00            101.99            102.00
                         STORAGE             0.                1.                1.
                         OUTFLOW             0.                0.                1.

              RATIO    MAXIMUM     MAXIMUM    MAXIMUM    MAXIMUM    DURATION    TIME OF     TIME OF
               OF     RESERVOIR    DEPTH     STORAGE    OUTFLOW    OVER TOP   MAX OUTFLOW  FAILURE
              PMF      W.S.ELEV   OVER DAM    AC-FT       CFS       HOURS        HOURS      HOURS

              1.00      102.26       .26        1.       155.       8.42        6.33        .00
1                       SUMMARY OF DAM OVERTOPPING/BREACH ANALYSIS FOR STATION     DAM1

PLAN  1 ...............                INITIAL VALUE     SPILLWAY CREST     TOP OF DAM
                         ELEVATION         100.00            101.99            102.00
                         STORAGE             0.               11.               11.
                         OUTFLOW             0.                0.                1.

              RATIO    MAXIMUM     MAXIMUM    MAXIMUM    MAXIMUM    DURATION    TIME OF     TIME OF
               OF     RESERVOIR    DEPTH     STORAGE    OUTFLOW    OVER TOP   MAX OUTFLOW  FAILURE
              PMF      W.S.ELEV   OVER DAM    AC-FT       CFS       HOURS        HOURS      HOURS

              1.00      102.47       .47       14.       383.      10.33        6.50        .00
1                       SUMMARY OF DAM OVERTOPPING/BREACH ANALYSIS FOR STATION   DAM200

PLAN  1 ...............                INITIAL VALUE     SPILLWAY CREST     TOP OF DAM
                         ELEVATION         100.00            101.99            102.00
                         STORAGE             0.                0.                0.
                         OUTFLOW             0.                0.                1.

              RATIO    MAXIMUM     MAXIMUM    MAXIMUM    MAXIMUM    DURATION    TIME OF     TIME OF
               OF     RESERVOIR    DEPTH     STORAGE    OUTFLOW    OVER TOP   MAX OUTFLOW  FAILURE
              PMF      W.S.ELEV   OVER DAM    AC-FT       CFS       HOURS        HOURS      HOURS

              1.00      102.13       .13        0.        60.       7.25        6.42        .00
1                       SUMMARY OF DAM OVERTOPPING/BREACH ANALYSIS FOR STATION   DAM135

PLAN  1 ...............                INITIAL VALUE     SPILLWAY CREST     TOP OF DAM
                         ELEVATION         100.00            101.99            102.00
                         STORAGE             0.                1.                1.
                         OUTFLOW             0.                0.                1.

              RATIO    MAXIMUM     MAXIMUM    MAXIMUM    MAXIMUM    DURATION    TIME OF     TIME OF
               OF     RESERVOIR    DEPTH     STORAGE    OUTFLOW    OVER TOP   MAX OUTFLOW  FAILURE
              PMF      W.S.ELEV   OVER DAM    AC-FT       CFS       HOURS        HOURS      HOURS

              1.00      102.17       .17        1.        84.       6.83        6.25        .00
1                       SUMMARY OF DAM OVERTOPPING/BREACH ANALYSIS FOR STATION     DAM8
```

APPENDIX 1: OL1J.12I HEC-1 MODEL

```
PLAN  1 ...............                INITIAL VALUE     SPILLWAY CREST     TOP OF DAM
                         ELEVATION         100.00            101.99            102.00
                         STORAGE             0.                4.                4.
                         OUTFLOW             0.                0.                1.

              RATIO    MAXIMUM     MAXIMUM    MAXIMUM    MAXIMUM    DURATION    TIME OF     TIME OF
               OF     RESERVOIR    DEPTH     STORAGE    OUTFLOW    OVER TOP   MAX OUTFLOW  FAILURE
              PMF      W.S.ELEV   OVER DAM    AC-FT       CFS       HOURS        HOURS      HOURS

              1.00      102.19       .19        4.        98.      10.25        6.50        .00
1                  SUMMARY OF DAM OVERTOPPING/BREACH ANALYSIS FOR STATION     DAM7

PLAN  1 ...............                INITIAL VALUE     SPILLWAY CREST     TOP OF DAM
                         ELEVATION         100.00            101.99            102.00
                         STORAGE             0.                1.                1.
                         OUTFLOW             0.                0.                1.

              RATIO    MAXIMUM     MAXIMUM    MAXIMUM    MAXIMUM    DURATION    TIME OF     TIME OF
               OF     RESERVOIR    DEPTH     STORAGE    OUTFLOW    OVER TOP   MAX OUTFLOW  FAILURE
              PMF      W.S.ELEV   OVER DAM    AC-FT       CFS       HOURS        HOURS      HOURS

              1.00      102.43       .43        1.       337.      24.00       12.83        .00
1                  SUMMARY OF DAM OVERTOPPING/BREACH ANALYSIS FOR STATION     DAM6

PLAN  1 ...............                INITIAL VALUE     SPILLWAY CREST     TOP OF DAM
                         ELEVATION         100.00            101.99            102.00
                         STORAGE             0.                2.                2.
                         OUTFLOW             0.                0.                1.

              RATIO    MAXIMUM     MAXIMUM    MAXIMUM    MAXIMUM    DURATION    TIME OF     TIME OF
               OF     RESERVOIR    DEPTH     STORAGE    OUTFLOW    OVER TOP   MAX OUTFLOW  FAILURE
              PMF      W.S.ELEV   OVER DAM    AC-FT       CFS       HOURS        HOURS      HOURS

              1.00      102.09       .09        2.        36.       5.25        6.33        .00
1                  SUMMARY OF DAM OVERTOPPING/BREACH ANALYSIS FOR STATION     DAM2

PLAN  1 ...............                INITIAL VALUE     SPILLWAY CREST     TOP OF DAM
                         ELEVATION         100.00            101.99            102.00
                         STORAGE             0.                2.                2.
                         OUTFLOW             0.                0.                1.

              RATIO    MAXIMUM     MAXIMUM    MAXIMUM    MAXIMUM    DURATION    TIME OF     TIME OF
               OF     RESERVOIR    DEPTH     STORAGE    OUTFLOW    OVER TOP   MAX OUTFLOW  FAILURE
              PMF      W.S.ELEV   OVER DAM    AC-FT       CFS       HOURS        HOURS      HOURS

              1.00      102.15       .15        2.        69.       6.08        6.33        .00
1                  SUMMARY OF DAM OVERTOPPING/BREACH ANALYSIS FOR STATION     DAM4

PLAN  1 ...............                INITIAL VALUE     SPILLWAY CREST     TOP OF DAM
                         ELEVATION         100.00            101.99            102.00
                         STORAGE             0.                4.                4.
                         OUTFLOW             0.                0.                1.

              RATIO    MAXIMUM     MAXIMUM    MAXIMUM    MAXIMUM    DURATION    TIME OF     TIME OF
               OF     RESERVOIR    DEPTH     STORAGE    OUTFLOW    OVER TOP   MAX OUTFLOW  FAILURE
              PMF      W.S.ELEV   OVER DAM    AC-FT       CFS       HOURS        HOURS      HOURS

              1.00      101.92       .00        3.         0.        .00         .00        .00
1                  SUMMARY OF DAM OVERTOPPING/BREACH ANALYSIS FOR STATION     DAM3
```

APPENDIX 1: OL1J.12I HEC-1 MODEL

```
PLAN  1 ...............                    INITIAL VALUE     SPILLWAY CREST     TOP OF DAM
                                ELEVATION        100.00            101.99          102.00
                                STORAGE              0.                2.              2.
                                OUTFLOW              0.                0.              1.

                RATIO    MAXIMUM      MAXIMUM    MAXIMUM    MAXIMUM    DURATION     TIME OF     TIME OF
                  OF    RESERVOIR     DEPTH     STORAGE    OUTFLOW    OVER TOP   MAX OUTFLOW   FAILURE
                 PMF    W.S.ELEV    OVER DAM     AC-FT       CFS       HOURS        HOURS       HOURS

                1.00      102.14        .14         2.        62.      5.75         6.33         .00
1                         SUMMARY OF DAM OVERTOPPING/BREACH ANALYSIS FOR STATION     DAM5

PLAN  1 ...............                    INITIAL VALUE     SPILLWAY CREST     TOP OF DAM
                                ELEVATION        100.00            101.99          102.00
                                STORAGE              0.                6.              6.
                                OUTFLOW              0.                0.              1.

                RATIO    MAXIMUM      MAXIMUM    MAXIMUM    MAXIMUM    DURATION     TIME OF     TIME OF
                  OF    RESERVOIR     DEPTH     STORAGE    OUTFLOW    OVER TOP   MAX OUTFLOW   FAILURE
                 PMF    W.S.ELEV    OVER DAM     AC-FT       CFS       HOURS        HOURS       HOURS

                1.00      102.15        .15         6.        67.      7.67         6.50         .00
1                         SUMMARY OF DAM OVERTOPPING/BREACH ANALYSIS FOR STATION    DAMP1

PLAN  1 ...............                    INITIAL VALUE     SPILLWAY CREST     TOP OF DAM
                                ELEVATION        100.00            109.99          110.00
                                STORAGE              0.               10.             10.
                                OUTFLOW              0.                0.              0.

                RATIO    MAXIMUM      MAXIMUM    MAXIMUM    MAXIMUM    DURATION     TIME OF     TIME OF
                  OF    RESERVOIR     DEPTH     STORAGE    OUTFLOW    OVER TOP   MAX OUTFLOW   FAILURE
                 PMF    W.S.ELEV    OVER DAM     AC-FT       CFS       HOURS        HOURS       HOURS

                1.00      111.69       1.69        12.       512.      9.50         6.25         .00
1                         SUMMARY OF DAM OVERTOPPING/BREACH ANALYSIS FOR STATION    DAMP2

PLAN  1 ...............                    INITIAL VALUE     SPILLWAY CREST     TOP OF DAM
                                ELEVATION        100.00            109.99          110.00
                                STORAGE              0.               10.             10.
                                OUTFLOW              0.                0.              0.

                RATIO    MAXIMUM      MAXIMUM    MAXIMUM    MAXIMUM    DURATION     TIME OF     TIME OF
                  OF    RESERVOIR     DEPTH     STORAGE    OUTFLOW    OVER TOP   MAX OUTFLOW   FAILURE
                 PMF    W.S.ELEV    OVER DAM     AC-FT       CFS       HOURS        HOURS       HOURS

                1.00      110.70        .70        11.       137.      9.00         6.42         .00


*** NORMAL END OF HEC-1 ***
```

OL2J.12I HEC-1 Model (Basis of Design)

(2-year, 12-hour hyopothetical storm with all proposed Pima Freeway and SRPMIC channel constructed (1993))

```
1                                                  ****
                 FLOOD HYDROGRAPH PACKAGE HEC-1 (IBM XT 512K VERSION) -FEB 1,1985
       U.S. ARMY CORPS OF ENGINEERS, THE HYDROLOGIC ENGINEERING CENTER, 609 SECOND STREET, DAVIS, CA. 95616
                                                  ****

     THIS HEC-1 VERSION CONTAINS ALL OPTIONS EXCEPT ECONOMICS, AND THE NUMBER OF PLANS ARE REDUCED TO 3

1                                       HEC-1 INPUT                                                PAGE  1

LINE          ID.......1.......2.......3.......4.......5.......6.......7.......8.......9......10

  1           ID        ****************************************************************
  2           ID        *                                                              *
  3           ID        *                    ROBERT L. WARD, P.E.                      *
  4           ID        *                    CONSULTING ENGINEER                       *
  5           ID        *                                                              *
  6           ID        *                    OUTER LOOP FREEWAY                        *
  7           ID        *                (NORTH OF THE ARIZONA CANAL)                  *
  8           ID        *                                                              *
  9           ID        *   SCOTTSDALE PAVILIONS & OUTER LOOP HIGHWAY ARE IN-PLACE     *
 10           ID        *                ADOT BERM HAS BEEN REMOVED                    *
 11           ID        *                                                              *
 12           ID        *          HYDROLOGY ANALYSIS FOR OFFSITE DRAINAGE             *
 13           ID        *                       2-YEAR EVENT                           *
 14           ID        *          12 HOUR HYPOTHETICAL STORM DISTRIBUTION             *
 15           ID        *                                                              *
 16           ID        *      USES % IMPERVIOUS COVER TO SIMULATE DEVELOPMENT         *
 17           ID        *          INCLUDES RETENTION/DETENTION BASINS FOR             *
 18           ID        *               RESIDENTIAL & COMMERCIAL AREAS                 *
 19           ID        *                                                              *
 20           ID        *                                                              *
 21           ID        *          THIS MODEL INCLUDES THE ADDITIONAL AREA             *
 22           ID        *        PREVIOUSLY MODELED BY THE CORP OF ENGINEERS           *
 23           ID        *                                                              *
 24           ID        *     ALL CURVE NUMBERS ARE FOR 24-HOUR STORM DURATION         *
 25           ID        *     NORMAL DEPTH STORAGE ROUTING ALONG ARIZONA CANAL         *
 26           ID        *       INCLUDES CAP CROSS-DRAINAGE AT EAST BOUNDARY           *
 27           ID        *  BASE MODEL USES APRIL 1989 HYDROLOGIC REVISIONS BY R. WARD *
 28           ID        *  MARCH 1989 HIGHWAY ALIGNMENT HAS BEEN REVISED TO MID 1989  *
 29           ID        *                    HIGHWAY ALIGNMENT.                        *
 30           ID        *                                                              *
 31           ID        *                       MODEL OL2J.12I                         *
 32           ID        *                (Base Model Was OL2I.12I)                     *
 33           ID        *                                                              *
 34           ID        *      THIS MODEL SIMULATES THE IMPACT TO THE OUTER LOOP       *
 35           ID        *      OF A NORTH/SOUTH CHANNEL ALONG AN EXTENSION OF          *
 36           ID        *      96th STREET FROM THE NORTH BOUNDARY OF THE SRPMIC       *
 37           ID        *      TO THE ARIZONA CANAL                                    *
 38           ID        *                                                              *
 39           ID        *   13 DETENTION BASINS HAVE BEEN REMOVED THAT WERE ADJACENT   *
 40           ID        *   TO THE OUTER LOOP.  MODIFIED PULS CHANNEL ROUTING          *
 41           ID        *   OPERATIONS ARE USED IN-PLACE OF THE BASINS.                *
 42           ID        *   CHANNEL GEOMETRY IS BASED ON AVERAGED, APPROXIMATE XSEC    *
 43           ID        *   GEOMETRY.                                                  *
 44           ID        *                                                              *
 45           ID        *                CP 103 IS ROUTED TO SUB 360.                  *
 46           ID        *  ALL SUB-BASIN DATA & ROUTING OPERATIONS HAVE BEEN REVISED   *
 47           ID        *  TO REFLECT THE HIGHWAY ALIGNMENT CHANGE MADE BY DCCO IN     *
 48           ID        *  MID-1989.   ADDITIONAL OFFSITE DRAINAGE HAS BEEN ROUTED     *
 49           ID        *THROUGH 7000 LF OF PIPE AND INSERTED IN THE MODEL AT CP 503B *
 50           ID        *     WHICH IS AT THE NORTH SIDE OF VIA DE VENTURA             *
 51           ID        *                                                              *
```

```
          52          ID        * CHANNEL ROUTING OPERATIONS ARE REFERENCED TO OUTER LOOP     *
          53          ID        *   HIGHWAY STATIONING FROM THE HIGHWAY GENERAL PLAN          *
          54          ID        *                                                             *
          55          ID        *          ADOT BERM AT CP 546T HAS BEEN REMOVED              *
1                                                HEC-1 INPUT                                          PAGE  2

        LINE          ID.......1.......2.......3.......4.......5.......6.......7.......8.......9......10

          56          ID        * CANAL FLOWS ARE ROUTED SEPARATELY & IBW SPILLWAY HAS BEEN   *
          57          ID        * MODELED WITH A DIVERT OPERATION.
          58          ID        * THIS MODEL HAS ALL FEATURES OF MODEL OL1J.12I               *
          59          ID
          60          ID        * NORTH-SOUTH DRAINAGE CHANNEL GEOMETRY HAS BEEN REVISED TO   *
          61          ID        * REFLECT MKE FINAL DESIGN (SOIL CEMENT)
          62          ID        ***************************************************************
                      *DIAGRAM
          63          IT       5 20APR89       0     289
          64          IO       5
                      *       ***********************************************************************
                      *       BEGIN DRAINAGE AREA CONTRIBUTING DIRECTLY TO HIGHWAY DRAINAGE CHANNEL
                      *       ***********************************************************************

          65          KK     165     SUB
          66          KM        RUNOFF FROM SUB 165
          67          BA   .0133
          68          PH             .1     .24     .47     .83     .96    1.03    1.19    1.38
          69          LS             77      85
          70          UK     230    .005     .09     100
          71          RK     320    .004    .024            TRAP      10      25
*** NOLIST ***
1
                SCHEMATIC DIAGRAM OF STREAM NETWORK
INPUT
 LINE      (V) ROUTING          (--->) DIVERSION OR PUMP FLOW

  NO.      (.) CONNECTOR        (<---) RETURN OF DIVERTED OR PUMPED FLOW

  65          165
               V
               V
  72        DAM165
               V
               V
  79          156
               .
               .
  82           .          160
               .            V
               .            V
  88           .        DAM160
               .            V
               .            V
  95           .          161
               .            .
               .            .
  98           .            .          155
               .            .            V
               .            .            V
 104           .            .        DAM155
               .            .            .
               .            .            .
 111          157.........................
               V
               V
 114          151
               .
               .
 117           .          150
               .            V
               .            V
 123           .        DAM150
```

APPENDIX 2: OL2J.12I HEC-1 MODEL

```
                .           .
                .           .
130           152............
                V
                V
133           121
                .
                .
136             .          70
                .           V
                .           V
142             .         122
                .           .
                .           .
145             .           .        120
                .           .          V
                .           .          V
151             .           .     DAM120
                .           .          .
                .           .          .
158           123........................
                V
                V
161            75 ***
                V
                V
167         DAM75
                V
                V
174            85 ***
                V
                V
180         DAM85
                .
                .
187             .          80
                .           V
                .           V
193             .       DAM80
                .           V
                .           V
200             .          87
                .           .
                .           .
203            88............
                V
                V
206            96
                .
                .
209             .          95
                .           V
                .           V
215             .       DAM95
                .           .
                .           .
222            97............
                V
                V
225            91
                .
                .
228             .          90
                .           V
                .           V
234             .       DAM90
                .           .
                .           .
241            92............
                .
                .
```

APPENDIX 2: OL2J.12I HEC-1 MODEL

```
244          .        110
             .          V
             .          V
250          .     DAM110
             .          V
             .          V
257          .        101
             .          .
             .          .
260          .          .        100
             .          .          V
             .          .          V
266          .          .     DAM100
             .          .          .
             .          .          .
273        102.......................
             V
             V
276        103
             .
             .
281          .------->    103B
279       103A
             V
             V
284        361
             .
             .
291          .        360
             .          .
             .          .
297        362............
             V
             V
300        411
             V
             V
306       410B
             .
             .
312          .        410
             .          V
             .          V
318          .       410A
             .          .
             .          .
324       410C............
             V
             V
327        421
             .
             .
333          .        140
             .          V
             .          V
339          .     DAM140
             .          V
             .          V
346          .        130 ***
             .          V
             .          V
352          .     DAM130
             .          V
             .          V
359          .        420 ***
             .          V
             .          V
365          .       420A
             .          .
             .          .
371        423............
```

APPENDIX 2: OL2J.12I HEC-1 MODEL

```
                V
                V
374           401
                .
                .
380             .          240
                .            V
                .            V
386             .          246
                .            .
                .            .
389             .            .          245
                .            .            .
                .            .            .
395             .          247............
                .            V
                .            V
398             .          248
                .            .
                .            .
401             .            .          180
                .            .            .
                .            .            .
407             .            .            .         255
                .            .            .           V
                .            .            .           V
414             .            .            .         236
                .            .            .           .
                .            .            .           .
417             .            .            .           .          235
                .            .            .           .            .
                .            .            .           .            .
423             .            .            .         237............
                .            .            .           V
                .            .            .           V
426             .            .            .         181
                .            .            .           .
                .            .            .           .
429             .          182........................
                .            V
                .            V
432             .          191
                .            .
                .            .
435             .            .          195
                .            .            V
                .            .            V
441             .            .          186
                .            .            .
                .            .            .
444             .            .            .         185
                .            .            .           .
                .            .            .           .
450             .            .          187............
                .            .            V
                .            .            V
453             .            .          188
                .            .            .
                .            .            .
456             .          189............
                .            V
                .            V
459             .         DAM1
                .            .
                .            .
466             .            .          190
                .            .            .
                .            .            .
472             .          192............
                .            V
                .            V
```

APPENDIX 2: OL2J.12I HEC-1 MODEL

```
475          .          211
             .            .
             .            .
478          .            .          210
             .            .            .
             .            .            .
484          .          212............
             .            .
             .            .
489          .            .------->     429
487          .          213
             .            V
             .            V
492          .          405 ***
             .            .
             .            .
498          .            .          200
             .            .            V
             .            .            V
504          .            .       DAM200
             .            .            V
             .            .            V
511          .            .          415 ***
             .            .            .
             .            .            .
517          .            .            .         135
             .            .            .           V
             .            .            .           V
523          .            .            .      DAM135
             .            .            .           V
             .            .            .           V
530          .            .            .         425 ***
             .            .            .           .
             .            .            .           .
536          .          426.......................
             .            V
             .            V
539          .          400 ***
             .            V
             .            V
545          .         400A
             .            .
             .            .
551        402............
             V
             V
554        431
             .
             .
560          .         430C
             .            .
             .            .
566        432............
             V
             V
569        433
             .
             .
575          .         430A
             .            .
             .            .
581          .            .         440A
             .            .            .
             .            .            .
587        441........................
             V
             V
590        501
             .
             .
596          .         500A
```

APPENDIX 2: OL2J.12I HEC-1 MODEL

```
                .           .
                .           .
602             .           .        503A
                .           .           V
                .           .           V
611             .           .        503B
                .           .           .
                .           .           .
615          503C.......................
                V
                V
618         500B1
                .
                .
624             .        500B
                .           .
                .           .
630         500B2............
                V
                V
633         560A1
                .
                .
639             .        560A
                .           .
                .           .
645         560A2............
                V
                V
648         560B1
                .
                .
654             .        560B
                .           .
                .           .
660         560B2............
                V
                V
663         560C1
                .
                .
669             .        560C
                .           .
                .           .
675         560C2............
                V
                V
678           551
                .
                .
684             .        495A
                .           V
                .           V
690             .        550A ***
                .           .
                .           .
696           552............
                .
                .
699             .        540A
                .           .
                .           .
705         540A1............
                V
                V
708         545A1
                .
                .
714             .        545A
                .           .
                .           .
```

```
720        545A2............
               V
               V
723        545B1
               .
               .
729            .        545B
               .           .
               .           .
735        545B2............
               V
               V
738        545C1
               .
               .
744            .        545C
               .           .
               .           .
750        545C2............
               V
               V
753        545D1
               .
               .
759            .        545D
               .           .
               .           .
765        545D2............
               V
               V
768        545E1
               .
               .
774            .        545E
               .           .
               .           .
782            .           .-------> 545EDV
780            .        545E
               .           .
               .           .
785        545E2............
               .
               .
790            .        1270
               .           V
               .           V
796            .        1280 ***
               .           V
               .           V
802            .        1350 ***
               .           V
               .           V
808            .        1360 ***
               .           V
               .           V
814            .        1440 ***
               .           V
               .           V
820            .        1450 ***
               .           V
               .           V
826            .        1520 ***
               .           V
               .           V
832            .        1530 ***
               .           V
               .           V
838            .        1600 ***
               .           V
               .           V
844            .        1591
```

```
                .          .
                .          .
847             .          .        1260
                .          .           V
                .          .           V
853             .          .        1290 ***
                .          .           V
                .          .           V
859             .          .        1340 ***
                .          .           V
                .          .           V
865             .          .        1370 ***
                .          .           V
                .          .           V
871             .          .        1430 ***
                .          .           V
                .          .           V
877             .          .        1460 ***
                .          .           V
                .          .           V
883             .          .        1510 ***
                .          .           V
                .          .           V
889             .          .        1540 ***
                .          .           V
                .          .           V
895             .          .        1590 ***
                .          .           .
                .          .           .
901             .       1592............
                .          V
                .          V
904             .       1581
                .          .
                .          .
907             .          .        1250
                .          .           V
                .          .           V
913             .          .        1300 ***
                .          .           V
                .          .           V
919             .          .        1330 ***
                .          .           V
                .          .           V
925             .          .        1380 ***
                .          .           V
                .          .           V
931             .          .        1420 ***
                .          .           V
                .          .           V
937             .          .        1470 ***
                .          .           V
                .          .           V
943             .          .        1500 ***
                .          .           V
                .          .           V
949             .          .        1550 ***
                .          .           V
                .          .           V
955             .          .        1580 ***
                .          .           .
                .          .           .
961             .       1582............
                .          V
                .          V
964             .       1571
                .          .
                .          .
967             .          .        1240
                .          .           V
                .          .           V
```

```
973          .          .        1310 ***
             .          .           V
             .          .           V
979          .          .        1320 ***
             .          .           V
             .          .           V
985          .          .        1400 ***
             .          .           .
             .          .           .
991          .          .           .        1390
             .          .           .           V
             .          .           .           V
997          .          .           .        1391
             .          .           .           .
             .          .           .           .
1000         .          .        1392............
             .          .           V
             .          .           V
1003         .          .        1410 ***
             .          .           V
             .          .           V
1009         .          .        1480 ***
             .          .           V
             .          .           V
1015         .          .        1490 ***
             .          .           V
             .          .           V
1021         .          .        1560 ***
             .          .           V
             .          .           V
1027         .          .        1570 ***
             .          .           .
             .          .           .
1033         .       1572............
             .          V
             .          V
1036         .       1611
             .          .
             .          .
1039         .          .        1610
             .          .           .
             .          .           .
1045         .       1612............
             .          V
             .          V
1048         .       1621
             .          .
             .          .
1051         .          .        1620
             .          .           .
             .          .           .
1057         .          .           .        1630
             .          .           .           V
             .          .           .           V
1063         .          .           .        1640 ***
             .          .           .           .
             .          .           .           .
1069         .       1622........................
             .          V
             .          V
1072         .       1887
             .          .
             .          .
1078         .          .        1950
             .          .           .
             .          .           .
1084         .          .           .        1945
             .          .           .           V
             .          .           .           V
1090         .          .           .        1951
             .          .           .           .
```

```
                .         .         .         .
1093            .         .      1952.........
                .         .         V
                .         .         V
1096            .         .      1940 ***
                .         .         .
                .         .         .
1102            .         .         .      1920
                .         .         .         V
                .         .         .         V
1108            .         .         .      1941
                .         .         .         .
                .         .         .         .
1111            .         .      1942.........
                .         .         V
                .         .         V
1114            .         .      1925 ***
                .         .         V
                .         .         V
1120            .         .      1930 ***
                .         .         .
                .         .         .
1126            .         .         .      1910
                .         .         .         V
                .         .         .         V
1132            .         .         .      1900 ***
                .         .         .         V
                .         .         .         V
1138            .         .         .      1890 ***
                .         .         .         V
                .         .         .         V
1144            .         .         .      1931
                .         .         .         .
                .         .         .         .
1147            .         .      1932.........
                .         .         V
                .         .         V
1150            .         .      1885 ***
                .         .         .
                .         .         .
1156            .         .         .      1850
                .         .         .         V
                .         .         .         V
1162            .         .         .      1860 ***
                .         .         .         V
                .         .         .         V
1168            .         .         .      1870 ***
                .         .         .         V
                .         .         .         V
1174            .         .         .      1886
                .         .         .         .
                .         .         .         .
1177            .         .         .         .      1880
                .         .         .         .         .
                .         .         .         .         .
1183            .      1888.......................................
                .         V
                .         V
1186            .      1984
                .         .
                .         .
1192            .         .      1840
                .         .         .
                .         .         .
1198            .         .         .      1670
                .         .         .         V
                .         .         .         V
1204            .         .         .      1681
                .         .         .         .
                .         .         .         .
1207            .         .         .         .      1680
```

```
                 .         .         .         .         .
                 .         .         .         .         .
1213             .         .         .      1682.........
                 .         .         .         V
                 .         .         .         V
1216             .         .         .      1751
                 .         .         .         .
                 .         .         .         .
1219             .         .         .         .      1226
                 .         .         .         .         .
                 .         .         .         .         .
1230             .         .         .         .         .-------->    1228
1228             .         .         .         .      1227
                 .         .         .         .         V
                 .         .         .         .         V
1233             .         .         .         .      1225 ***
                 .         .         .         .         V
                 .         .         .         .         V
1239             .         .         .         .      1230 ***
                 .         .         .         .         V
                 .         .         .         .         V
1245             .         .         .         .      1221
                 .         .         .         .         .
                 .         .         .         .         .
1248             .         .         .         .         .        1214
                 .         .         .         .         .           V
                 .         .         .         .         .           V
1254             .         .         .         .         .        1217 ***
                 .         .         .         .         .           V
                 .         .         .         .         .           V
1260             .         .         .         .         .        1220 ***
                 .         .         .         .         .           V
                 .         .         .         .         .           V
1266             .         .         .         .         .        1222
                 .         .         .         .         .           .
                 .         .         .         .         .           .
1269             .         .         .         .      1223.........
                 .         .         .         .         V
                 .         .         .         .         V
1272             .         .         .         .      1750 ***
                 .         .         .         .         .
                 .         .         .         .         .
1278             .         .         .      1752.........
                 .         .         .         V
                 .         .         .         V
1281             .         .         .      1761
                 .         .         .         .
                 .         .         .         .
1284             .         .         .         .      1760
                 .         .         .         .         .
                 .         .         .         .         .
1290             .         .         .      1762.........
                 .         .         .         V
                 .         .         .         V
1293             .         .         .      1771
                 .         .         .         .
                 .         .         .         .
1296             .         .         .         .      1770
                 .         .         .         .         .
                 .         .         .         .         .
1302             .         .         .      1772.........
                 .         .         .         V
                 .         .         .         V
1305             .         .         .      1841
                 .         .         .         .
                 .         .         .         .
1308             .         .      1842.........
                 .         .         V
                 .         .         V
1311             .         .      1830 ***
                 .         .         .
```

```
                .         .         .
1317            .         .         .      1660
                .         .         .        V
                .         .         .        V
1323            .         .         .      1691
                .         .         .        .
                .         .         .        .
1326            .         .         .        .          1690
                .         .         .        .            .
                .         .         .        .            .
1332            .         .         .      1692............
                .         .         .        V
                .         .         .        V
1335            .         .         .      1741
                .         .         .        .
                .         .         .        .
1338            .         .         .        .          1740
                .         .         .        .            .
                .         .         .        .            .
1344            .         .         .      1742............
                .         .         .        V
                .         .         .        V
1347            .         .         .      1781
                .         .         .        .
                .         .         .        .
1350            .         .         .        .          1780
                .         .         .        .            .
                .         .         .        .            .
1356            .         .         .      1782............
                .         .         .        V
                .         .         .        V
1359            .         .         .      1831
                .         .         .        .
                .         .         .        .
1362            .         .      1832............
                .         .        V
                .         .        V
1365            .         .      1820 ***
                .         .         .
                .         .         .
1371            .         .         .      1650
                .         .         .        V
                .         .         .        V
1377            .         .         .      1701
                .         .         .        .
                .         .         .        .
1380            .         .         .        .          1700
                .         .         .        .            .
                .         .         .        .            .
1386            .         .         .      1702............
                .         .         .        V
                .         .         .        V
1389            .         .         .      1731
                .         .         .        .
                .         .         .        .
1392            .         .         .        .          1730
                .         .         .        .            .
                .         .         .        .            .
1398            .         .         .      1732............
                .         .         .        V
                .         .         .        V
1401            .         .         .      1791
                .         .         .        .
                .         .         .        .
1404            .         .         .        .          1790
                .         .         .        .            .
                .         .         .        .            .
1410            .         .         .      1792............
                .         .         .        V
                .         .         .        V
1413            .         .         .      1822
```

```
                .         .         .         .
                .         .         .         .
1416            .         .      1823.........
                .         .         V
                .         .         V
1419            .         .      1810 ***
                .         .         .
                .         .         .
1425            .         .         .      1210
                .         .         .         V
                .         .         .         V
1431            .         .         .      1201
                .         .         .         .
                .         .         .         .
1434            .         .         .         .      1207
                .         .         .         .         V
                .         .         .         .         V
1440            .         .         .         .      1204 ***
                .         .         .         .         V
                .         .         .         .         V
1446            .         .         .         .      1200 ***
                .         .         .         .         .
                .         .         .         .         .
1452            .         .         .      1202.........
                .         .         .         V
                .         .         .         V
1455            .         .         .      1191
                .         .         .         .
                .         .         .         .
1458            .         .         .         .      1186
                .         .         .         .         V
                .         .         .         .         V
1464            .         .         .         .      1187 ***
                .         .         .         .         V
                .         .         .         .         V
1470            .         .         .         .      1190 ***
                .         .         .         .         .
                .         .         .         .         .
1476            .         .         .      1192.........
                .         .         .         V
                .         .         .         V
1479            .         .         .      1181
                .         .         .         .
                .         .         .         .
1482            .         .         .         .      1173
                .         .         .         .         V
                .         .         .         .         V
1491            .         .         .         .      1174 ***
                .         .         .         .         V
                .         .         .         .         V
1497            .         .         .         .      1177 ***
                .         .         .         .         V
                .         .         .         .         V
1503            .         .         .         .      1180 ***
                .         .         .         .         .
                .         .         .         .         .
1509            .         .         .         .         .      1000
                .         .         .         .         .         V
                .         .         .         .         .         V
1515            .         .         .         .         .      1042
                .         .         .         .         .         .
                .         .         .         .         .         .
1518            .         .         .         .         .         .      1060
                .         .         .         .         .         .         V
                .         .         .         .         .         .         V
1524            .         .         .         .         .         .      1051
                .         .         .         .         .         .         .
                .         .         .         .         .         .         .
1527            .         .         .         .         .         .         .      1050
                .         .         .         .         .         .         .         .
                .         .         .         .         .         .         .         .
```

```
1534                                                    1052............
                                                           V
                                                           V
1537                                                    1041
                                                           .
                                                           .
1540                                                       .          1040
                                                           .            .
                                                           .            .
1546                                                1043.......................
                                                       V
                                                       V
1549                                                DAM8
                                                       V
                                                       V
1556                                                1011
                                                       .
                                                       .
1559                                                   .       1010
                                                       .          .
                                                       .          .
1566                                                1012............
                                                       V
                                                       V
1569                                                1110 ***
                                                       .
                                                       .
1576                                                   .       1020
                                                       .          V
                                                       .          V
1582                                                   .       1120 ***
                                                       .          .
                                                       .          .
1588                                                1121............
                                                       .
                                                       .
1593                                                   .-------->    2223
1591                                                2222
                                                       V
                                                       V
1596                                                1131
                                                       .
                                                       .
1600                                                   .       1070
                                                       .          V
                                                       .          V
1607                                                   .       1031
                                                       .          .
                                                       .          .
1610                                                   .          .          1030
                                                       .          .            .
                                                       .          .            .
1617                                                   .       1032............
                                                       .          V
                                                       .          V
1620                                                   .       1130 ***
                                                       .          .
                                                       .          .
1626                                                1132............
                                                       .
                                                       .
1631                                                   .-------->    3334
1629                                                3333
                                                       V
                                                       V
1634                                                1151
                                                       .
                                                       .
1638                                                   .       1080
                                                       .          V
                                                       .          V
```

```
1644                                                  1090 ***
                                                        V
                                                        V
1650                                                  1150 ***
                                                        .
                                                        .
1656                                            1152............
                                                        .
                                                        .
1661                                                    .-------->    4445
1659                                            4444
                                                   V
                                                   V
1664                                            1161
                                                        .
                                                        .
1668                                                  1159
                                                        .
                                                        .
1690                                                    .-------->   1159R
1687                                                1159D
                                                        V
                                                        V
1693                                                  1154 ***
                                                        V
                                                        V
1699                                                  1155 ***
                                                        .
                                                        .
1705                                                    .          1153
                                                        .             V
                                                        .             V
1711                                                    .          1101
                                                        .             .
                                                        .             .
1714                                                    .             .          1100
                                                        .             .            .
                                                        .             .            .
1720                                                    .          1102............
                                                        .             V
                                                        .             V
1723                                                    .          1156
                                                        .             .
                                                        .             .
1726                                                  1157............
                                                        V
                                                        V
1729                                                  1160 ***
                                                        .
                                                        .
1735                                                    .          1166
                                                        .             V
                                                        .             V
1741                                                    .          1165 ***
                                                        .             V
                                                        .             V
1747                                                    .          1170 ***
                                                        .             V
                                                        .             V
1753                                                    .          1162
                                                        .             .
                                                        .             .
1756                                            1163......................
                                                        .
                                                        .
1761                                                    .-------->    5556
1759                                            5555
                                                   V
                                                   V
1764                                            1182
                                                        .
```

APPENDIX 2: OL2J.12I HEC-1 MODEL

```
                .         .         .         .         .         .
1768            .         .         .         .      1183.........
                .         .         .         .         V
                .         .         .         .         V
1771            .         .         .         .      1184
                .         .         .         .         .
                .         .         .         .         .
1775            .         .         .      1185.........
                .         .         .         V
                .         .         .         V
1778            .         .         .      1646
                .         .         .         .
                .         .         .         .
1782            .         .         .         .      1645
                .         .         .         .         .
                .         .         .         .         .
1788            .         .         .      1647.........
                .         .         .         V
                .         .         .         V
1791            .         .         .      1711
                .         .         .         .
                .         .         .         .
1794            .         .         .         .      1710
                .         .         .         .         .
                .         .         .         .         .
1800            .         .         .      1712.........
                .         .         .         V
                .         .         .         V
1803            .         .         .      1721
                .         .         .         .
                .         .         .         .
1806            .         .         .         .      1720
                .         .         .         .         .
                .         .         .         .         .
1812            .         .         .      1722.........
                .         .         .         V
                .         .         .         V
1815            .         .         .      1801
                .         .         .         .
                .         .         .         .
1818            .         .         .         .      1800
                .         .         .         .         .
                .         .         .         .         .
1824            .         .         .      1802.........
                .         .         .         V
                .         .         .         V
1827            .         .         .      1811
                .         .         .         .
                .         .         .         .
1830            .         .      1812.........
                .         .         V
                .         .         V
1833            .         .      1813
                .         .         .
                .         .         .
1836            .      1985.........
                .         V
                .         V
1839            .      1986
                .         .
                .         .
1847            .         .         .<-------     3334
1845            .         .      3334
                .         .         V
                .         .         V
1848            .         .      1135 ***
                .         .         V
                .         .         V
1854            .         .      1136
                .         .         .
                .         .         .
```

```
1859          .          .          .          .<-------    4445
1857          .          .          .       4445
              .          .          .          V
              .          .          .          V
1860          .          .          .       1140 ***
              .          .          .          .
              .          .          .          .
1866          .          .       1141............
              .          .          V
              .          .          V
1869          .          .       1971
              .          .          .
              .          .          .
1874          .          .          .          .<-------    5556
1872          .          .          .       5556
              .          .          .          V
              .          .          .          V
1875          .          .          .       1972
              .          .          .          .
              .          .          .          .
1878          .          .          .          .       1970
              .          .          .          .          .
              .          .          .          .          .
1884          .          .       1973......................
              .          .          V
              .          .          V
1887          .          .       1980 ***
              .          .          .
              .          .          .
1893          .       1987............
              .          V
              .          V
1896          .       1991
              .          .
              .          .
1902          .          .       1960
              .          .          V
              .          .          V
1908          .          .       1990 ***
              .          .          .
              .          .          .
1917          .          .          .          .<-------     429
1914          .          .          .        429
              .          .          .          V
              .          .          .          V
1918          .          .          .       430B ***
              .          .          .          V
              .          .          .          V
1924          .          .          .       440B ***
              .          .          .          V
              .          .          .          V
1930          .          .          .      495B1
              .          .          .          .
              .          .          .          .
1933          .          .          .          .        304
              .          .          .          .          .
              .          .          .          .          .
1954          .          .          .          .          .------->    304R
1952          .          .          .          .       304D
              .          .          .          .          V
              .          .          .          .          V
1957          .          .          .          .        300 ***
              .          .          .          .          V
              .          .          .          .          V
1963          .          .          .          .       DAM7
              .          .          .          .          V
              .          .          .          .          V
1970          .          .          .          .        291
              .          .          .          .          .
              .          .          .          .          .
1973          .          .          .          .          .         290
```

APPENDIX 2: OL2J.12I HEC-1 MODEL

```
                 .         .         .         .         .         V
                 .         .         .         .         .         V
1979             .         .         .         .         .      DAM6
                 .         .         .         .         .         .
                 .         .         .         .         .         .
1986             .         .         .         .       292.........
                 .         .         .         .         V
                 .         .         .         .         V
1989             .         .         .         .       331
                 .         .         .         .         .
                 .         .         .         .         .
1992             .         .         .         .         .       330
                 .         .         .         .         .         V
                 .         .         .         .         .         V
1998             .         .         .         .         .      DAM2
                 .         .         .         .         .         .
                 .         .         .         .         .         .
2005             .         .         .         .       332.........
                 .         .         .         .         V
                 .         .         .         .         V
2008             .         .         .         .       231
                 .         .         .         .         .
                 .         .         .         .         .
2011             .         .         .         .         .       230
                 .         .         .         .         .         .
                 .         .         .         .         .         .
2017             .         .         .         .       232.........
                 .         .         .         .         V
                 .         .         .         .         V
2020             .         .         .         .       233
                 .         .         .         .         V
                 .         .         .         .         V
2023             .         .         .         .       220 ***
                 .         .         .         .         V
                 .         .         .         .         V
2030             .         .         .         .       445 ***
                 .         .         .         .         .
                 .         .         .         .         .
2036             .         .         .         .         .       310
                 .         .         .         .         .         V
                 .         .         .         .         .         V
2042             .         .         .         .         .      DAM4
                 .         .         .         .         .         V
                 .         .         .         .         .         V
2049             .         .         .         .         .       312
                 .         .         .         .         .         .
                 .         .         .         .         .         .
2052             .         .         .         .         .         .         320
                 .         .         .         .         .         .           .
                 .         .         .         .         .         .           .
2058             .         .         .         .         .       322.........
                 .         .         .         .         .         V
                 .         .         .         .         .         V
2061             .         .         .         .         .      DAM3
                 .         .         .         .         .         V
                 .         .         .         .         .         V
2068             .         .         .         .         .       260 ***
                 .         .         .         .         .         V
                 .         .         .         .         .         V
2075             .         .         .         .         .       451
                 .         .         .         .         .         V
                 .         .         .         .         .         V
2078             .         .         .         .         .       450 ***
                 .         .         .         .         .         .
                 .         .         .         .         .         .
2084             .         .         .         .       452.........
                 .         .         .         .         V
                 .         .         .         .         V
2087             .         .         .         .       455 ***
                 .         .         .         .         .
                 .         .         .         .         .
```

APPENDIX 2: OL2J.12I HEC-1 MODEL

```
2093          .          .          .          .          .        280
              .          .          .          .          .          V
              .          .          .          .          .          V
2099          .          .          .          .          .       DAM5
              .          .          .          .          .          V
              .          .          .          .          .          V
2106          .          .          .          .          .        250 ***
              .          .          .          .          .          V
              .          .          .          .          .          V
2112          .          .          .          .          .        460 ***
              .          .          .          .          .          .
              .          .          .          .          .          .
2118          .          .          .          .        461............
              .          .          .          .          V
              .          .          .          .          V
2121          .          .          .          .       495B ***
              .          .          .          .          .
              .          .          .          .          .
2127          .          .          .      495B2............
              .          .          .          .
              .          .          .          .
2130          .          .          .          .        270
              .          .          .          .          V
              .          .          .          .          V
2136          .          .          .          .        470 ***
              .          .          .          .          .
              .          .          .          .          .
2144          .          .          .          .          .          .<-------     2223
2142          .          .          .          .          .       2223
              .          .          .          .          .          V
              .          .          .          .          .          V
2145          .          .          .          .          .        480 ***
              .          .          .          .          .          .
              .          .          .          .          .          .
2151          .          .          .          .        481............
              .          .          .          .          V
              .          .          .          .          V
2154          .          .          .          .        490 ***
              .          .          .          .          .
              .          .          .          .          .
2160          .          .          .        491............
              .          .          .          V
              .          .          .          V
2163          .          .          .      550B ***
              .          .          .          V
              .          .          .          V
2169          .          .          .       1992
              .          .          .          .
              .          .          .          .
2172          .          .       1993............
              .          .          .
              .          .          .
2176          .       1994............
              .          V
              .          V
2181          .       2001
              .          .
              .          .
2187          .          .       2000
              .          .          .
              .          .          .
2193          .       2002............
              .          V
              .          V
2196          .        541
              .          .
              .          .
2202          .          .       540B
              .          .          .
              .          .          .
2208          .        542............
```

APPENDIX 2: OL2J.12I HEC-1 MODEL

```
                .          V
                .          V
2211            .        546
                .          .
                .          .
2219            .          .          .<-------  545EDV
2217            .          .     545EDV
                .          .          .
                .          .          .
2220            .       546T............
                .          .
                .          .
2229            .          .------->  546DIV
2225            .       546T
                .          .
                .          .
2232          547............
                V
                V
2239          531
                .
                .
2248            .       560W
                .          V
                .          V
2254            .       531A
                .          .
                .          .
2257            .          .      530AW
                .          .          .
                .          .          .
2263          532......................
                V
                V
2266          537
                .
                .
2273            .       360W
                .          .
                .          .
2279            .          .       420W
                .          .          .
                .          .          .
2285            .          .          .       410W
                .          .          .          .
                .          .          .          .
2291            .          .        381............
                .          .          V
                .          .          V
2294            .          .        380 ***
                .          .          .
                .          .          .
2300            .          .          .       400W
                .          .          .          .
                .          .          .          .
2306            .          .        371............
                .          .          V
                .          .          V
2309            .          .        370 ***
                .          .          .
                .          .          .
2315            .        372............
                .          V
                .          V
2318            .        373
                .          V
                .          V
2324            .        501
                .          .
                .          .
2330            .          .       510
```

```
                .          .          .
                .          .          .
2336            .          .          .        500W
                .          .          .          .
                .          .          .          .
2342            .        502.......................
                .          V
                .          V
2345            .        516
                .          .
                .          .
2351            .          .        515
                .          .          .
                .          .          .
2357            .        517............
                .          V
                .          V
2360            .        518
                .          V
                .          V
2366            .        519
                .          .
                .          .
2372            .          .       520A
                .          .          .
                .          .          .
2378            .       519A............
                .          V
                .          V
2381            .        521
                .          .
                .          .
2387            .          .       520B
                .          .          V
                .          .          V
2393            .          .      DAMP1
                .          .          .
                .          .          .
2401            .        522............
                .          V
                .          V
2404            .      535A1
                .          .
                .          .
2410            .          .       535A
                .          .          V
                .          .          V
2416            .          .      DAMP2
                .          .          .
                .          .          .
2424            .      535A2............
                .          V
                .          V
2427            .      535D1
                .          .
                .          .
2433            .          .       535D
                .          .          .
                .          .          .
2439            .      535D2............
                .          .
                .          .
2444            .          .------->    CWRW
2442            .       CWRS
                .          V
                .          V
2447            .      535B1
                .          .
                .          .
2453            .          .       535E
                .          .          V
```

```
                .          .          V
 2459           .          .      535B2
                .          .          .
                .          .          .
 2462           .          .          .        535B
                .          .          .          .
                .          .          .          .
 2468           .      535B3.......................
                .          V
                .          V
 2471           .      535C1
                .          .
                .          .
 2477           .          .       535C
                .          .          .
                .          .          .
 2483        548........................
                .
                .
 2491           .          .<-------  546DIV
 2489           .     546DIV
                .          .
                .          .
 2492           .          .      CANAL
                .          .          .
                .          .          .
 2497           .      546DC............
                .          V
                .          V
 2500           .        549
                .          .
                .          .
 2510           .          .------->     551
 2506           .        550
                .          .
                .          .
 2513        552............
```

(***) RUNOFF ALSO COMPUTED AT THIS LOCATION

```
1                                                    ****
                    FLOOD HYDROGRAPH PACKAGE HEC-1 (IBM XT 512K VERSION) -FEB 1,1985
          U.S. ARMY CORPS OF ENGINEERS, THE HYDROLOGIC ENGINEERING CENTER, 609 SECOND STREET, DAVIS, CA. 95616
                                                    ****
```

```
*****************************************************************
*                                                               *
*                    ROBERT L. WARD, P.E.                       *
*                    CONSULTING ENGINEER                        *
*                                                               *
*                    OUTER LOOP FREEWAY                         *
*                (NORTH OF THE ARIZONA CANAL)                   *
*                                                               *
*   SCOTTSDALE PAVILIONS & OUTER LOOP HIGHWAY ARE IN-PLACE      *
*                ADOT BERM HAS BEEN REMOVED                     *
*                                                               *
*          HYDROLOGY ANALYSIS FOR OFFSITE DRAINAGE              *
*                       2-YEAR EVENT                            *
*          12 HOUR HYPOTHETICAL STORM DISTRIBUTION              *
*                                                               *
*      USES % IMPERVIOUS COVER TO SIMULATE DEVELOPMENT          *
*          INCLUDES RETENTION/DETENTION BASINS FOR              *
*               RESIDENTIAL & COMMERCIAL AREAS                  *
*                                                               *
*                                                               *
*          THIS MODEL INCLUDES THE ADDITIONAL AREA              *
*        PREVIOUSLY MODELED BY THE CORP OF ENGINEERS            *
*                                                               *
*     ALL CURVE NUMBERS ARE FOR 24-HOUR STORM DURATION          *
```

```
*      NORMAL DEPTH STORAGE ROUTING ALONG ARIZONA CANAL        *
*        INCLUDES CAP CROSS-DRAINAGE AT EAST BOUNDARY          *
*  BASE MODEL USES APRIL 1989 HYDROLOGIC REVISIONS BY R. WARD *
*  MARCH 1989 HIGHWAY ALIGNMENT HAS BEEN REVISED TO MID 1989  *
*                     HIGHWAY ALIGNMENT.                       *
*                                                              *
*                        MODEL OL2J.12I                        *
*                  (Base Model Was OL2I.12I)                   *
*                                                              *
*       THIS MODEL SIMULATES THE IMPACT TO THE OUTER LOOP      *
*       OF A NORTH/SOUTH CHANNEL ALONG AN EXTENSION OF         *
*       96th STREET FROM THE NORTH BOUNDARY OF THE SRPMIC      *
*       TO THE ARIZONA CANAL                                   *
*                                                              *
*   13 DETENTION BASINS HAVE BEEN REMOVED THAT WERE ADJACENT   *
*   TO THE OUTER LOOP.  MODIFIED PULS CHANNEL ROUTING          *
*   OPERATIONS ARE USED IN-PLACE OF THE BASINS.                *
*   CHANNEL GEOMETRY IS BASED ON AVERAGED, APPROXIMATE XSEC    *
*   GEOMETRY.                                                  *
*                                                              *
*                 CP 103 IS ROUTED TO SUB 360.                 *
*  ALL SUB-BASIN DATA & ROUTING OPERATIONS HAVE BEEN REVISED   *
*  TO REFLECT THE HIGHWAY ALIGNMENT CHANGE MADE BY DCCO IN     *
*  MID-1989.   ADDITIONAL OFFSITE DRAINAGE HAS BEEN ROUTED     *
*THROUGH 7000 LF OF PIPE AND INSERTED IN THE MODEL AT CP 503B *
*     WHICH IS AT THE NORTH SIDE OF VIA DE VENTURA             *
*                                                              *
* CHANNEL ROUTING OPERATIONS ARE REFERENCED TO OUTER LOOP      *
*   HIGHWAY STATIONING FROM THE HIGHWAY GENERAL PLAN           *
*                                                              *
*          ADOT BERM AT CP 546T HAS BEEN REMOVED               *
* CANAL FLOWS ARE ROUTED SEPARATELY & IBW SPILLWAY HAS BEEN    *
* MODELED WITH A DIVERT OPERATION.
* THIS MODEL HAS ALL FEATURES OF MODEL OL1J.12I                *

* NORTH-SOUTH DRAINAGE CHANNEL GEOMETRY HAS BEEN REVISED TO    *
* REFLECT MKE FINAL DESIGN (SOIL CEMENT)
****************************************************************

 64 IO          OUTPUT CONTROL VARIABLES
                      IPRNT          5  PRINT CONTROL
                      IPLOT          0  PLOT CONTROL
                      QSCAL         0.  HYDROGRAPH PLOT SCALE

    IT          HYDROGRAPH TIME DATA
                       NMIN          5  MINUTES IN COMPUTATION INTERVAL
                      IDATE     20APR89  STARTING DATE
                      ITIME       0000  STARTING TIME
                         NQ        289  NUMBER OF HYDROGRAPH ORDINATES
                     NDDATE     21APR89  ENDING DATE
                     NDTIME       0000  ENDING TIME

                 COMPUTATION INTERVAL     .08 HOURS
                      TOTAL TIME BASE   24.00 HOURS

         ENGLISH UNITS

*** WARNING *** MODIFIED PULS ROUTING MAY BE NUMERICALLY UNSTABLE FOR OUTFLOWS BETWEEN      419. TO     8659.
                THE ROUTED HYDROGRAPH SHOULD BE EXAMINED FOR OSCILLATIONS OR OUTFLOWS GREATER THAN PEAK INFLOWS.
                THIS CAN BE CORRECTED BY DECREASING THE TIME INTERVAL OR INCREASING STORAGE (USE A LONGER REACH.)

*** WARNING *** MODIFIED PULS ROUTING MAY BE NUMERICALLY UNSTABLE FOR OUTFLOWS BETWEEN        0. TO     8659.
                THE ROUTED HYDROGRAPH SHOULD BE EXAMINED FOR OSCILLATIONS OR OUTFLOWS GREATER THAN PEAK INFLOWS.
                THIS CAN BE CORRECTED BY DECREASING THE TIME INTERVAL OR INCREASING STORAGE (USE A LONGER REACH.)

*** WARNING *** MODIFIED PULS ROUTING MAY BE NUMERICALLY UNSTABLE FOR OUTFLOWS BETWEEN        0. TO     8659.
                THE ROUTED HYDROGRAPH SHOULD BE EXAMINED FOR OSCILLATIONS OR OUTFLOWS GREATER THAN PEAK INFLOWS.
                THIS CAN BE CORRECTED BY DECREASING THE TIME INTERVAL OR INCREASING STORAGE (USE A LONGER REACH.)

*** WARNING *** MODIFIED PULS ROUTING MAY BE NUMERICALLY UNSTABLE FOR OUTFLOWS BETWEEN        0. TO     8659.
                THE ROUTED HYDROGRAPH SHOULD BE EXAMINED FOR OSCILLATIONS OR OUTFLOWS GREATER THAN PEAK INFLOWS.
```

```
                THIS CAN BE CORRECTED BY DECREASING THE TIME INTERVAL OR INCREASING STORAGE (USE A LONGER REACH.)

*** WARNING *** MODIFIED PULS ROUTING MAY BE NUMERICALLY UNSTABLE FOR OUTFLOWS BETWEEN      120. TO    65315.
                THE ROUTED HYDROGRAPH SHOULD BE EXAMINED FOR OSCILLATIONS OR OUTFLOWS GREATER THAN PEAK INFLOWS.
                THIS CAN BE CORRECTED BY DECREASING THE TIME INTERVAL OR INCREASING STORAGE (USE A LONGER REACH.)

*** WARNING *** MODIFIED PULS ROUTING MAY BE NUMERICALLY UNSTABLE FOR OUTFLOWS BETWEEN        0. TO    65315.
                THE ROUTED HYDROGRAPH SHOULD BE EXAMINED FOR OSCILLATIONS OR OUTFLOWS GREATER THAN PEAK INFLOWS.
                THIS CAN BE CORRECTED BY DECREASING THE TIME INTERVAL OR INCREASING STORAGE (USE A LONGER REACH.)

*** WARNING *** MODIFIED PULS ROUTING MAY BE NUMERICALLY UNSTABLE FOR OUTFLOWS BETWEEN      434. TO    65315.
                THE ROUTED HYDROGRAPH SHOULD BE EXAMINED FOR OSCILLATIONS OR OUTFLOWS GREATER THAN PEAK INFLOWS.
                THIS CAN BE CORRECTED BY DECREASING THE TIME INTERVAL OR INCREASING STORAGE (USE A LONGER REACH.)

*** WARNING *** MODIFIED PULS ROUTING MAY BE NUMERICALLY UNSTABLE FOR OUTFLOWS BETWEEN        0. TO    65970.
                THE ROUTED HYDROGRAPH SHOULD BE EXAMINED FOR OSCILLATIONS OR OUTFLOWS GREATER THAN PEAK INFLOWS.
                THIS CAN BE CORRECTED BY DECREASING THE TIME INTERVAL OR INCREASING STORAGE (USE A LONGER REACH.)

*** WARNING *** MODIFIED PULS ROUTING MAY BE NUMERICALLY UNSTABLE FOR OUTFLOWS BETWEEN      973. TO    65970.
                THE ROUTED HYDROGRAPH SHOULD BE EXAMINED FOR OSCILLATIONS OR OUTFLOWS GREATER THAN PEAK INFLOWS.
                THIS CAN BE CORRECTED BY DECREASING THE TIME INTERVAL OR INCREASING STORAGE (USE A LONGER REACH.)

*** WARNING *** MODIFIED PULS ROUTING MAY BE NUMERICALLY UNSTABLE FOR OUTFLOWS BETWEEN      149. TO    50775.
                THE ROUTED HYDROGRAPH SHOULD BE EXAMINED FOR OSCILLATIONS OR OUTFLOWS GREATER THAN PEAK INFLOWS.
                THIS CAN BE CORRECTED BY DECREASING THE TIME INTERVAL OR INCREASING STORAGE (USE A LONGER REACH.)

*** WARNING *** MODIFIED PULS ROUTING MAY BE NUMERICALLY UNSTABLE FOR OUTFLOWS BETWEEN        0. TO    50775.
                THE ROUTED HYDROGRAPH SHOULD BE EXAMINED FOR OSCILLATIONS OR OUTFLOWS GREATER THAN PEAK INFLOWS.
                THIS CAN BE CORRECTED BY DECREASING THE TIME INTERVAL OR INCREASING STORAGE (USE A LONGER REACH.)

*** WARNING *** MODIFIED PULS ROUTING MAY BE NUMERICALLY UNSTABLE FOR OUTFLOWS BETWEEN        0. TO    46938.
                THE ROUTED HYDROGRAPH SHOULD BE EXAMINED FOR OSCILLATIONS OR OUTFLOWS GREATER THAN PEAK INFLOWS.
                THIS CAN BE CORRECTED BY DECREASING THE TIME INTERVAL OR INCREASING STORAGE (USE A LONGER REACH.)

*** WARNING *** MODIFIED PULS ROUTING MAY BE NUMERICALLY UNSTABLE FOR OUTFLOWS BETWEEN        0. TO   133668.
                THE ROUTED HYDROGRAPH SHOULD BE EXAMINED FOR OSCILLATIONS OR OUTFLOWS GREATER THAN PEAK INFLOWS.
                THIS CAN BE CORRECTED BY DECREASING THE TIME INTERVAL OR INCREASING STORAGE (USE A LONGER REACH.)

*** WARNING *** MODIFIED PULS ROUTING MAY BE NUMERICALLY UNSTABLE FOR OUTFLOWS BETWEEN        0. TO    91433.
                THE ROUTED HYDROGRAPH SHOULD BE EXAMINED FOR OSCILLATIONS OR OUTFLOWS GREATER THAN PEAK INFLOWS.
                THIS CAN BE CORRECTED BY DECREASING THE TIME INTERVAL OR INCREASING STORAGE (USE A LONGER REACH.)

*** WARNING *** MODIFIED PULS ROUTING MAY BE NUMERICALLY UNSTABLE FOR OUTFLOWS BETWEEN      709. TO    91433.
                THE ROUTED HYDROGRAPH SHOULD BE EXAMINED FOR OSCILLATIONS OR OUTFLOWS GREATER THAN PEAK INFLOWS.
                THIS CAN BE CORRECTED BY DECREASING THE TIME INTERVAL OR INCREASING STORAGE (USE A LONGER REACH.)

*** WARNING *** MODIFIED PULS ROUTING MAY BE NUMERICALLY UNSTABLE FOR OUTFLOWS BETWEEN     2732. TO    91433.
                THE ROUTED HYDROGRAPH SHOULD BE EXAMINED FOR OSCILLATIONS OR OUTFLOWS GREATER THAN PEAK INFLOWS.
                THIS CAN BE CORRECTED BY DECREASING THE TIME INTERVAL OR INCREASING STORAGE (USE A LONGER REACH.)

*** WARNING *** MODIFIED PULS ROUTING MAY BE NUMERICALLY UNSTABLE FOR OUTFLOWS BETWEEN        0. TO    47063.
                THE ROUTED HYDROGRAPH SHOULD BE EXAMINED FOR OSCILLATIONS OR OUTFLOWS GREATER THAN PEAK INFLOWS.
                THIS CAN BE CORRECTED BY DECREASING THE TIME INTERVAL OR INCREASING STORAGE (USE A LONGER REACH.)

*** WARNING *** MODIFIED PULS ROUTING MAY BE NUMERICALLY UNSTABLE FOR OUTFLOWS BETWEEN        0. TO    63214.
                THE ROUTED HYDROGRAPH SHOULD BE EXAMINED FOR OSCILLATIONS OR OUTFLOWS GREATER THAN PEAK INFLOWS.
                THIS CAN BE CORRECTED BY DECREASING THE TIME INTERVAL OR INCREASING STORAGE (USE A LONGER REACH.)

*** WARNING *** MODIFIED PULS ROUTING MAY BE NUMERICALLY UNSTABLE FOR OUTFLOWS BETWEEN        0. TO    63214.
                THE ROUTED HYDROGRAPH SHOULD BE EXAMINED FOR OSCILLATIONS OR OUTFLOWS GREATER THAN PEAK INFLOWS.
                THIS CAN BE CORRECTED BY DECREASING THE TIME INTERVAL OR INCREASING STORAGE (USE A LONGER REACH.)

*** WARNING *** MODIFIED PULS ROUTING MAY BE NUMERICALLY UNSTABLE FOR OUTFLOWS BETWEEN      193. TO    87306.
                THE ROUTED HYDROGRAPH SHOULD BE EXAMINED FOR OSCILLATIONS OR OUTFLOWS GREATER THAN PEAK INFLOWS.
                THIS CAN BE CORRECTED BY DECREASING THE TIME INTERVAL OR INCREASING STORAGE (USE A LONGER REACH.)

*** WARNING *** MODIFIED PULS ROUTING MAY BE NUMERICALLY UNSTABLE FOR OUTFLOWS BETWEEN      193. TO    87306.
                THE ROUTED HYDROGRAPH SHOULD BE EXAMINED FOR OSCILLATIONS OR OUTFLOWS GREATER THAN PEAK INFLOWS.
                THIS CAN BE CORRECTED BY DECREASING THE TIME INTERVAL OR INCREASING STORAGE (USE A LONGER REACH.)
1  NO UPSTREAM INFLOW TO ROUTE - ERROR EXIT FROM ***   FDKSRM  ****
```

```
*** WARNING *** MODIFIED PULS ROUTING MAY BE NUMERICALLY UNSTABLE FOR OUTFLOWS BETWEEN     2300. TO     8198.
                THE ROUTED HYDROGRAPH SHOULD BE EXAMINED FOR OSCILLATIONS OR OUTFLOWS GREATER THAN PEAK INFLOWS.
                THIS CAN BE CORRECTED BY DECREASING THE TIME INTERVAL OR INCREASING STORAGE (USE A LONGER REACH.)

*** WARNING *** MODIFIED PULS ROUTING MAY BE NUMERICALLY UNSTABLE FOR OUTFLOWS BETWEEN     3670. TO    13733.
                THE ROUTED HYDROGRAPH SHOULD BE EXAMINED FOR OSCILLATIONS OR OUTFLOWS GREATER THAN PEAK INFLOWS.
                THIS CAN BE CORRECTED BY DECREASING THE TIME INTERVAL OR INCREASING STORAGE (USE A LONGER REACH.)

*** WARNING *** MODIFIED PULS ROUTING MAY BE NUMERICALLY UNSTABLE FOR OUTFLOWS BETWEEN     1163. TO    27907.
                THE ROUTED HYDROGRAPH SHOULD BE EXAMINED FOR OSCILLATIONS OR OUTFLOWS GREATER THAN PEAK INFLOWS.
                THIS CAN BE CORRECTED BY DECREASING THE TIME INTERVAL OR INCREASING STORAGE (USE A LONGER REACH.)

*** WARNING *** MODIFIED PULS ROUTING MAY BE NUMERICALLY UNSTABLE FOR OUTFLOWS BETWEEN      471. TO     4121.
                THE ROUTED HYDROGRAPH SHOULD BE EXAMINED FOR OSCILLATIONS OR OUTFLOWS GREATER THAN PEAK INFLOWS.
                THIS CAN BE CORRECTED BY DECREASING THE TIME INTERVAL OR INCREASING STORAGE (USE A LONGER REACH.)

*** WARNING *** MODIFIED PULS ROUTING MAY BE NUMERICALLY UNSTABLE FOR OUTFLOWS BETWEEN     1344. TO     4257.
                THE ROUTED HYDROGRAPH SHOULD BE EXAMINED FOR OSCILLATIONS OR OUTFLOWS GREATER THAN PEAK INFLOWS.
                THIS CAN BE CORRECTED BY DECREASING THE TIME INTERVAL OR INCREASING STORAGE (USE A LONGER REACH.)

*** WARNING *** MODIFIED PULS ROUTING MAY BE NUMERICALLY UNSTABLE FOR OUTFLOWS BETWEEN      996. TO     4257.
                THE ROUTED HYDROGRAPH SHOULD BE EXAMINED FOR OSCILLATIONS OR OUTFLOWS GREATER THAN PEAK INFLOWS.
                THIS CAN BE CORRECTED BY DECREASING THE TIME INTERVAL OR INCREASING STORAGE (USE A LONGER REACH.)

*** WARNING *** MODIFIED PULS ROUTING MAY BE NUMERICALLY UNSTABLE FOR OUTFLOWS BETWEEN       75. TO     2913.
                THE ROUTED HYDROGRAPH SHOULD BE EXAMINED FOR OSCILLATIONS OR OUTFLOWS GREATER THAN PEAK INFLOWS.
                THIS CAN BE CORRECTED BY DECREASING THE TIME INTERVAL OR INCREASING STORAGE (USE A LONGER REACH.)

*** WARNING *** MODIFIED PULS ROUTING MAY BE NUMERICALLY UNSTABLE FOR OUTFLOWS BETWEEN      346. TO     2262.
                THE ROUTED HYDROGRAPH SHOULD BE EXAMINED FOR OSCILLATIONS OR OUTFLOWS GREATER THAN PEAK INFLOWS.
                THIS CAN BE CORRECTED BY DECREASING THE TIME INTERVAL OR INCREASING STORAGE (USE A LONGER REACH.)

*** WARNING *** MODIFIED PULS ROUTING MAY BE NUMERICALLY UNSTABLE FOR OUTFLOWS BETWEEN     1932. TO     3762.
                THE ROUTED HYDROGRAPH SHOULD BE EXAMINED FOR OSCILLATIONS OR OUTFLOWS GREATER THAN PEAK INFLOWS.
                THIS CAN BE CORRECTED BY DECREASING THE TIME INTERVAL OR INCREASING STORAGE (USE A LONGER REACH.)

*** WARNING *** MODIFIED PULS ROUTING MAY BE NUMERICALLY UNSTABLE FOR OUTFLOWS BETWEEN      752. TO     4345.
                THE ROUTED HYDROGRAPH SHOULD BE EXAMINED FOR OSCILLATIONS OR OUTFLOWS GREATER THAN PEAK INFLOWS.
                THIS CAN BE CORRECTED BY DECREASING THE TIME INTERVAL OR INCREASING STORAGE (USE A LONGER REACH.)

*** WARNING *** MODIFIED PULS ROUTING MAY BE NUMERICALLY UNSTABLE FOR OUTFLOWS BETWEEN        0. TO     4345.
                THE ROUTED HYDROGRAPH SHOULD BE EXAMINED FOR OSCILLATIONS OR OUTFLOWS GREATER THAN PEAK INFLOWS.
                THIS CAN BE CORRECTED BY DECREASING THE TIME INTERVAL OR INCREASING STORAGE (USE A LONGER REACH.)

*** WARNING *** MODIFIED PULS ROUTING MAY BE NUMERICALLY UNSTABLE FOR OUTFLOWS BETWEEN       13. TO     3522.
                THE ROUTED HYDROGRAPH SHOULD BE EXAMINED FOR OSCILLATIONS OR OUTFLOWS GREATER THAN PEAK INFLOWS.
                THIS CAN BE CORRECTED BY DECREASING THE TIME INTERVAL OR INCREASING STORAGE (USE A LONGER REACH.)

*** WARNING *** MODIFIED PULS ROUTING MAY BE NUMERICALLY UNSTABLE FOR OUTFLOWS BETWEEN      887. TO     3522.
                THE ROUTED HYDROGRAPH SHOULD BE EXAMINED FOR OSCILLATIONS OR OUTFLOWS GREATER THAN PEAK INFLOWS.
                THIS CAN BE CORRECTED BY DECREASING THE TIME INTERVAL OR INCREASING STORAGE (USE A LONGER REACH.)
1
                                        RUNOFF SUMMARY
                                   FLOW IN CUBIC FEET PER SECOND
                                  TIME IN HOURS,  AREA IN SQUARE MILES

                                   PEAK   TIME OF   AVERAGE FLOW FOR MAXIMUM PERIOD     BASIN    MAXIMUM    TIME OF
      OPERATION        STATION     FLOW    PEAK                                         AREA     STAGE    MAX STAGE
+                                                    6-HOUR     24-HOUR     72-HOUR

      HYDROGRAPH AT
+                        165        11.    6.25        1.          0.          0.       .01
      ROUTED TO
+                      DAM165        4.    6.75        1.          0.          0.       .01
+                                                                                                102.02       6.75
      ROUTED TO
+                        156         3.    6.83        1.          0.          0.       .01

      HYDROGRAPH AT
```

+	160	19.	6.25	3.	1.	1.	.02		
ROUTED TO									
+	DAM160	6.	6.83	1.	0.	0.	.02	102.02	6.83
+									
ROUTED TO									
+	161	5.	7.00	1.	0.	0.	.02		
HYDROGRAPH AT									
+	155	20.	6.25	3.	1.	1.	.03		
ROUTED TO									
+	DAM155	6.	6.83	1.	0.	0.	.03	102.02	6.83
+									
3 COMBINED AT									
+	157	12.	7.00	3.	1.	1.	.06		
ROUTED TO									
+	151	12.	7.00	3.	1.	1.	.06		
HYDROGRAPH AT									
+	150	34.	6.25	5.	1.	1.	.04		
ROUTED TO									
+	DAM150	10.	6.83	2.	1.	1.	.04	102.04	6.83
+									
2 COMBINED AT									
+	152	19.	7.00	5.	1.	1.	.10		
ROUTED TO									
+	121	18.	7.00	5.	1.	1.	.10		
HYDROGRAPH AT									
+	70	0.	7.25	0.	0.	0.	.01		
ROUTED TO									
+	122	0.	7.33	0.	0.	0.	.01		
HYDROGRAPH AT									
+	120	11.	6.33	2.	0.	0.	.01		
ROUTED TO									
+	DAM120	4.	6.83	1.	0.	0.	.01	102.02	6.83
+									
3 COMBINED AT									
+	123	21.	7.00	5.	2.	2.	.13		
HYDROGRAPH AT									
+	75	20.	7.08	6.	2.	2.	.13		
ROUTED TO									
+	DAM75	20.	7.08	6.	2.	2.	.13	102.06	7.08
+									
HYDROGRAPH AT									
+	85	20.	7.08	6.	2.	2.	.14		
ROUTED TO									
+	DAM85	20.	7.17	6.	2.	2.	.14	102.06	7.17
+									
HYDROGRAPH AT									
+	80	8.	6.25	1.	0.	0.	.01		
ROUTED TO									
+	DAM80	2.	6.50	0.	0.	0.	.01	102.01	6.50
+									

	ROUTED TO								
+		87	2.	6.58	0.	0.	0.	.01		
	2 COMBINED AT								
+		88	21.	7.17	6.	2.	2.	.14		
	ROUTED TO								
+		96	21.	7.17	6.	2.	2.	.14		
	HYDROGRAPH AT								
+		95	10.	6.33	1.	0.	0.	.01		
	ROUTED TO								
+		DAM95	3.	6.92	1.	0.	0.	.01		
+									102.01	6.92
	2 COMBINED AT								
+		97	23.	7.17	7.	2.	2.	.15		
	ROUTED TO								
+		91	23.	7.25	7.	2.	2.	.15		
	HYDROGRAPH AT								
+		90	9.	6.33	1.	0.	0.	.02		
	ROUTED TO								
+		DAM90	0.	.08	0.	0.	0.	.02		
+									101.97	24.00
	2 COMBINED AT								
+		92	23.	7.25	7.	2.	2.	.17		
	HYDROGRAPH AT								
+		110	15.	6.25	2.	0.	0.	.02		
	ROUTED TO								
+		DAM110	3.	6.83	1.	0.	0.	.02		
+									102.01	6.83
	ROUTED TO								
+		101	3.	7.00	1.	0.	0.	.02		
	HYDROGRAPH AT								
+		100	28.	6.25	3.	1.	1.	.00		
	ROUTED TO								
+		DAM100	28.	6.25	3.	1.	1.	.00		
+									102.08	6.25
	3 COMBINED AT								
+		102	28.	6.25	10.	3.	3.	.19		
	ROUTED TO								
+		103	28.	7.25	10.	3.	3.	.19		
	DIVERSION TO								
+		103B	0.	7.25	0.	0.	0.	.19		
	HYDROGRAPH AT								
+		103A	28.	7.25	10.	3.	3.	.19		
	ROUTED TO								
+		361	26.	7.33	10.	3.	3.	.19		
+									.29	7.33
	HYDROGRAPH AT								
+		360	0.	9.42	0.	0.	0.	.03		
	2 COMBINED AT								
+		362	27.	7.33	11.	3.	3.	.22		

```
                ROUTED TO
+                   411      26.   7.42      11.      3.      3.     .22
+                                                                     .29      7.42
                ROUTED TO
+                   410B     27.   7.42      11.      3.      3.     .22
+                                                                     .29      7.42
                HYDROGRAPH AT
+                   410       1.   7.58       0.      0.      0.     .03
                ROUTED TO
+                   410A      1.   7.58       0.      0.      0.     .03
+                                                                     .01      7.67
                2 COMBINED AT
+                   410C     27.   7.42      11.      3.      3.     .25
                ROUTED TO
+                   421      27.   7.50      11.      3.      3.     .25
+                                                                     .35      7.50
                HYDROGRAPH AT
+                   140      17.   6.42       3.      1.      1.     .03
                ROUTED TO
+                   DAM140    5.   7.08       1.      0.      0.     .03
+                                                                  102.02      7.08
                HYDROGRAPH AT
+                   130      18.   6.42       4.      1.      1.     .06
                ROUTED TO
+                   DAM130   12.   6.75       3.      1.      1.     .06
+                                                                  102.04      6.75
                HYDROGRAPH AT
+                   420      10.   7.33       4.      1.      1.     .14
                ROUTED TO
+                   420A     10.   7.33       4.      1.      1.     .14
+                                                                     .13      7.33
                2 COMBINED AT
+                   423      35.   7.42      15.      4.      4.     .39
                ROUTED TO
+                   401      34.   7.50      15.      4.      4.     .39
+                                                                     .45      7.50
                HYDROGRAPH AT
+                   240      23.   6.42       4.      1.      1.     .07
                ROUTED TO
+                   246      23.   6.42       4.      1.      1.     .07
                HYDROGRAPH AT
+                   245       8.   6.33       1.      0.      0.     .02
                2 COMBINED AT
+                   247      30.   6.42       5.      1.      1.     .10
                ROUTED TO
+                   248      29.   6.50       5.      1.      1.     .10
                HYDROGRAPH AT
+                   180       2.   7.42       1.      0.      0.     .07
                HYDROGRAPH AT
+                   255      10.   6.42       2.      0.      0.     .03
```

	ROUTED TO								
+		236	10.	6.50	2.	0.	0.	.03	
	HYDROGRAPH AT								
+		235	5.	6.33	1.	0.	0.	.01	
	2 COMBINED AT								
+		237	14.	6.42	2.	1.	1.	.04	
	ROUTED TO								
+		181	14.	6.58	2.	1.	1.	.04	
	3 COMBINED AT								
+		182	41.	6.50	8.	2.	2.	.21	
	ROUTED TO								
+		191	41.	6.58	8.	2.	2.	.21	
	HYDROGRAPH AT								
+		195	45.	6.25	4.	1.	1.	.04	
	ROUTED TO								
+		186	41.	6.33	4.	1.	1.	.04	
	HYDROGRAPH AT								
+		185	28.	6.25	3.	1.	1.	.02	
	2 COMBINED AT								
+		187	62.	6.25	7.	2.	2.	.06	
	ROUTED TO								
+		188	60.	6.33	7.	2.	2.	.06	
	2 COMBINED AT								
+		189	90.	6.42	15.	4.	4.	.27	
	ROUTED TO								
+		DAM1	0.	.08	0.	0.	0.	.27	
+									101.56 24.00
	HYDROGRAPH AT								
+		190	0.	9.83	0.	0.	0.	.03	
	2 COMBINED AT								
+		192	0.	9.83	0.	0.	0.	.30	
	ROUTED TO								
+		211	0.	10.08	0.	0.	0.	.30	
	HYDROGRAPH AT								
+		210	9.	6.33	1.	0.	0.	.02	
	2 COMBINED AT								
+		212	9.	6.33	2.	1.	1.	.32	
	DIVERSION TO								
+		429	9.	.08	2.	1.	1.	.32	
	HYDROGRAPH AT								
+		213	0.	.08	0.	0.	0.	.32	
	HYDROGRAPH AT								
+		405	0.	7.17	0.	0.	0.	.34	
	HYDROGRAPH AT								
+		200	4.	6.75	1.	0.	0.	.04	
	ROUTED TO								
+		DAM200	3.	7.17	1.	0.	0.	.04	
+									102.01 7.17

```
                HYDROGRAPH AT
+                       415        3.    7.33        1.        0.        0.      .05
                HYDROGRAPH AT
+                       135       16.    6.42        3.        1.        1.      .03
                ROUTED TO
+                    DAM135        4.    7.17        1.        0.        0.      .03
+                                                                                          102.02        7.17
                HYDROGRAPH AT
+                       425        4.    7.25        1.        0.        0.      .04
                3 COMBINED AT
+                       426        8.    7.25        2.        1.        1.      .42
                HYDROGRAPH AT
+                       400        8.    7.75        4.        1.        1.      .52
                ROUTED TO
+                      400A        8.    7.83        4.        1.        1.      .52
+                                                                                              .11        7.83
                2 COMBINED AT
+                       402       42.    7.58       19.        6.        6.      .91
                ROUTED TO
+                       431       41.    7.75       19.        6.        6.      .91
+                                                                                              .53        7.75
                HYDROGRAPH AT
+                      430C        5.    7.67        3.        1.        1.      .10
                2 COMBINED AT
+                       432       45.    7.75       21.        7.        7.     1.00
                ROUTED TO
+                       433       45.    7.75       21.        7.        7.     1.00
+                                                                                              .48        7.75
                HYDROGRAPH AT
+                      430A        6.    7.33        2.        1.        1.      .08
                HYDROGRAPH AT
+                      440A        3.    8.42        2.        1.        1.      .07
                3 COMBINED AT
+                       441       52.    7.75       25.        8.        8.     1.15
                ROUTED TO
+                       501       52.    7.75       25.        8.        8.     1.15
+                                                                                              .55        7.75
                HYDROGRAPH AT
+                      500A        1.    7.92        1.        0.        0.      .03
                HYDROGRAPH AT
+                      503A        8.   12.33        1.        0.        0.      .00
                ROUTED TO
+                      503B        8.   12.58        1.        0.        0.      .00
                3 COMBINED AT
+                      503C       53.    7.75       26.        8.        8.     1.18
                ROUTED TO
+                     500B1       53.    7.83       26.        8.        8.     1.18
+                                                                                              .21        7.83
                HYDROGRAPH AT
```

```
+                    500B      1.   7.33      0.      0.      0.     .02
     2 COMBINED AT
+                    500B2    54.   7.83     27.      8.      8.    1.20
     ROUTED TO
+                    560A1    54.   7.83     27.      8.      8.    1.20
+                                                                   .17      7.83
     HYDROGRAPH AT
+                    560A      1.   7.00      0.      0.      0.     .02
     2 COMBINED AT
+                    560A2    55.   7.83     27.      9.      9.    1.22
     ROUTED TO
+                    560B1    54.   7.83     27.      9.      9.    1.22
+                                                                   .43      7.83
     HYDROGRAPH AT
+                    560B      1.   7.25      0.      0.      0.     .02
     2 COMBINED AT
+                    560B2    55.   7.83     28.      9.      9.    1.24
     ROUTED TO
+                    560C1    55.   7.92     28.      9.      9.    1.24
+                                                                   .43      7.92
     HYDROGRAPH AT
+                    560C      1.   7.83      1.      0.      0.     .04
     2 COMBINED AT
+                    560C2    56.   7.92     28.      9.      9.    1.28
     ROUTED TO
+                     551     55.   8.08     28.      9.      9.    1.28
+                                                                   .43      8.08
     HYDROGRAPH AT
+                    495A      2.   7.42      1.      0.      0.     .03
     HYDROGRAPH AT
+                    550A      7.   8.50      5.      1.      1.     .18
     2 COMBINED AT
+                     552     61.   8.08     33.     10.     10.    1.47
     HYDROGRAPH AT
+                    540A      4.   7.75      2.      1.      1.     .07
     2 COMBINED AT
+                    540A1    65.   8.08     35.     11.     11.    1.54
     ROUTED TO
+                    545A1    65.   8.08     35.     11.     11.    1.54
+                                                                   .42      8.08
     HYDROGRAPH AT
+                    545A      1.   6.58      0.      0.      0.     .01
     2 COMBINED AT
+                    545A2    65.   8.08     35.     11.     11.    1.54
     ROUTED TO
+                    545B1    65.   8.08     35.     11.     11.    1.54
+                                                                   .55      8.08
     HYDROGRAPH AT
+                    545B      1.   6.83      0.      0.      0.     .01
```

	2 COMBINED AT								
+		545B2	65.	8.08	35.	11.	11.	1.55	
	ROUTED TO								
+		545C1	65.	8.17	35.	11.	11.	1.55	
+									.56 8.17
	HYDROGRAPH AT								
+		545C	1.	7.08	0.	0.	0.	.01	
	2 COMBINED AT								
+		545C2	66.	8.17	36.	11.	11.	1.57	
	ROUTED TO								
+		545D1	65.	8.17	36.	11.	11.	1.57	
+									.53 8.17
	HYDROGRAPH AT								
+		545D	2.	7.25	1.	0.	0.	.03	
	2 COMBINED AT								
+		545D2	67.	8.17	36.	12.	12.	1.59	
	ROUTED TO								
+		545E1	67.	8.25	36.	12.	12.	1.59	
+									.55 8.25
	HYDROGRAPH AT								
+		545E	2.	7.50	1.	0.	0.	.03	
	DIVERSION TO								
+		545EDV	1.	7.50	1.	0.	0.	.03	
	HYDROGRAPH AT								
+		545E	1.	7.50	1.	0.	0.	.03	
	2 COMBINED AT								
+		545E2	67.	8.25	37.	12.	12.	1.63	
	HYDROGRAPH AT								
+		1270	0.	12.00	0.	0.	0.	.03	
	HYDROGRAPH AT								
+		1280	1.	12.17	1.	0.	0.	.06	
	HYDROGRAPH AT								
+		1350	1.	12.25	1.	0.	0.	.09	
	HYDROGRAPH AT								
+		1360	2.	12.33	2.	1.	1.	.12	
	HYDROGRAPH AT								
+		1440	2.	12.42	2.	1.	1.	.15	
	HYDROGRAPH AT								
+		1450	3.	12.50	2.	1.	1.	.18	
	HYDROGRAPH AT								
+		1520	3.	12.58	3.	1.	1.	.22	
	HYDROGRAPH AT								
+		1530	3.	12.67	3.	1.	1.	.25	
	HYDROGRAPH AT								
+		1600	4.	12.83	4.	2.	2.	.31	
	ROUTED TO								
+		1591	4.	13.33	4.	2.	2.	.31	
	HYDROGRAPH AT								
+		1260	0.	12.08	0.	0.	0.	.03	

+	HYDROGRAPH AT	1290	1.	12.25	1.	0.	0.	.06
+	HYDROGRAPH AT	1340	1.	12.33	1.	1.	1.	.10
+	HYDROGRAPH AT	1370	2.	12.42	2.	1.	1.	.13
+	HYDROGRAPH AT	1430	2.	12.50	2.	1.	1.	.16
+	HYDROGRAPH AT	1460	3.	12.58	2.	1.	1.	.19
+	HYDROGRAPH AT	1510	3.	12.67	3.	1.	1.	.22
+	HYDROGRAPH AT	1540	4.	12.75	3.	1.	1.	.26
+	HYDROGRAPH AT	1590	4.	13.00	4.	2.	2.	.32
+	2 COMBINED AT	1592	9.	13.17	7.	3.	3.	.63
+	ROUTED TO	1581	9.	13.50	7.	3.	3.	.63
+	HYDROGRAPH AT	1250	0.	12.08	0.	0.	0.	.03
+	HYDROGRAPH AT	1300	1.	12.08	1.	0.	0.	.06
+	HYDROGRAPH AT	1330	1.	12.25	1.	0.	0.	.09
+	HYDROGRAPH AT	1380	2.	12.33	2.	1.	1.	.12
+	HYDROGRAPH AT	1420	2.	12.42	2.	1.	1.	.15
+	HYDROGRAPH AT	1470	3.	12.42	2.	1.	1.	.18
+	HYDROGRAPH AT	1500	3.	12.50	3.	1.	1.	.21
+	HYDROGRAPH AT	1550	3.	12.58	3.	1.	1.	.24
+	HYDROGRAPH AT	1580	4.	12.50	4.	2.	2.	.30
+	2 COMBINED AT	1582	13.	13.17	11.	5.	5.	.93
+	ROUTED TO	1571	13.	13.58	11.	5.	5.	.93
+	HYDROGRAPH AT	1240	0.	12.08	0.	0.	0.	.03
+	HYDROGRAPH AT	1310	1.	12.08	1.	0.	0.	.06
	HYDROGRAPH AT							

+		1320	1.	12.08	1.	1.	1.	.09	
	HYDROGRAPH AT								
+		1400	1.	12.08	1.	1.	1.	.10	
	HYDROGRAPH AT								
+		1390	0.	11.08	0.	0.	0.	.02	
	ROUTED TO								
+		1391	0.	11.33	0.	0.	0.	.02	
	2 COMBINED AT								
+		1392	2.	11.83	2.	1.	1.	.13	
	HYDROGRAPH AT								
+		1410	2.	12.00	2.	1.	1.	.16	
	HYDROGRAPH AT								
+		1480	3.	12.08	2.	1.	1.	.19	
	HYDROGRAPH AT								
+		1490	3.	12.17	3.	1.	1.	.22	
	HYDROGRAPH AT								
+		1560	4.	12.17	3.	1.	1.	.25	
	HYDROGRAPH AT								
+		1570	5.	12.17	4.	2.	2.	.31	
	2 COMBINED AT								
+		1572	17.	13.08	15.	6.	6.	1.25	
	ROUTED TO								
+		1611	17.	13.17	15.	6.	6.	1.25	
	HYDROGRAPH AT								
+		1610	3.	12.83	3.	1.	1.	.25	
	2 COMBINED AT								
+		1612	20.	13.17	18.	8.	8.	1.50	
	ROUTED TO								
+		1621	20.	13.25	18.	8.	8.	1.50	
	HYDROGRAPH AT								
+		1620	5.	12.25	4.	2.	2.	.25	
	HYDROGRAPH AT								
+		1630	3.	10.08	3.	1.	1.	.11	
	HYDROGRAPH AT								
+		1640	4.	10.58	3.	1.	1.	.14	
	3 COMBINED AT								
+		1622	27.	12.83	24.	10.	10.	1.89	
	ROUTED TO								
+		1887	24.	14.67	22.	10.	10.	1.89	
+									385.26 14.67
	HYDROGRAPH AT								
+		1950	1.	11.08	1.	0.	0.	.04	
	HYDROGRAPH AT								
+		1945	2.	11.58	1.	1.	1.	.08	
	ROUTED TO								
+		1951	2.	11.75	1.	1.	1.	.08	
	2 COMBINED AT								
+		1952	2.	11.58	2.	1.	1.	.12	

+	HYDROGRAPH AT	1940	6.	10.42	5.	2.	2.	.24	
+	HYDROGRAPH AT	1920	6.	10.58	5.	2.	2.	.20	
+	ROUTED TO	1941	6.	10.83	5.	2.	2.	.20	
+	2 COMBINED AT	1942	12.	10.67	10.	4.	4.	.43	
+	HYDROGRAPH AT	1925	14.	10.92	12.	5.	5.	.50	
+	HYDROGRAPH AT	1930	16.	11.33	14.	5.	5.	.57	
+	HYDROGRAPH AT	1910	4.	10.83	3.	1.	1.	.14	
+	HYDROGRAPH AT	1900	8.	10.75	7.	3.	3.	.27	
+	HYDROGRAPH AT	1890	11.	10.92	9.	4.	4.	.36	
+	ROUTED TO	1931	11.	11.08	9.	4.	4.	.36	
+	2 COMBINED AT	1932	27.	11.17	23.	9.	9.	.93	
+	HYDROGRAPH AT	1885	29.	11.67	24.	10.	10.	1.00	
+	HYDROGRAPH AT	1850	5.	10.42	4.	1.	1.	.14	
+	HYDROGRAPH AT	1860	9.	10.58	7.	3.	3.	.26	
+	HYDROGRAPH AT	1870	14.	11.25	12.	5.	5.	.44	
+	ROUTED TO	1886	14.	11.33	12.	5.	5.	.44	
+	HYDROGRAPH AT	1880	2.	9.67	2.	1.	1.	.05	
+	4 COMBINED AT	1888	62.	12.33	55.	25.	25.	3.38	
+	ROUTED TO	1984	61.	12.75	55.	24.	24.	3.38	
+									385.67 12.75
+	HYDROGRAPH AT	1840	1.	10.83	1.	0.	0.	.03	
+	HYDROGRAPH AT	1670	1.	10.75	1.	0.	0.	.08	
+	ROUTED TO	1681	1.	11.08	1.	0.	0.	.08	
+	HYDROGRAPH AT	1680	1.	10.75	1.	0.	0.	.08	

+	2 COMBINED AT	1682	3.	10.92	2.	1.	1.	.15
+	ROUTED TO	1751	3.	11.08	2.	1.	1.	.15
+	HYDROGRAPH AT	1226	31.	12.00	25.	9.	9.	.00
+	DIVERSION TO	1228	26.	12.00	21.	8.	8.	.00
+	HYDROGRAPH AT	1227	5.	12.00	4.	1.	1.	.00
+	HYDROGRAPH AT	1225	5.	12.42	4.	2.	2.	.08
+	HYDROGRAPH AT	1230	16.	8.08	11.	4.	4.	.72
+	ROUTED TO	1221	16.	8.50	11.	4.	4.	.72
+	HYDROGRAPH AT	1214	7.	6.25	1.	0.	0.	.01
+	HYDROGRAPH AT	1217	31.	6.92	12.	3.	3.	.74
+	HYDROGRAPH AT	1220	37.	7.83	20.	6.	6.	1.41
+	ROUTED TO	1222	37.	8.00	20.	6.	6.	1.41
+	2 COMBINED AT	1223	51.	8.17	31.	10.	10.	2.13
+	HYDROGRAPH AT	1750	48.	8.83	31.	11.	11.	2.21
+	2 COMBINED AT	1752	50.	8.83	33.	12.	12.	2.36
+	ROUTED TO	1761	50.	8.92	33.	12.	12.	2.36
+	HYDROGRAPH AT	1760	1.	9.58	1.	0.	0.	.05
+	2 COMBINED AT	1762	51.	8.92	34.	12.	12.	2.41
+	ROUTED TO	1771	51.	9.00	34.	12.	12.	2.41
+	HYDROGRAPH AT	1770	1.	9.00	1.	0.	0.	.04
+	2 COMBINED AT	1772	52.	9.00	34.	12.	12.	2.44
+	ROUTED TO	1841	51.	9.25	34.	12.	12.	2.44
+	2 COMBINED AT	1842	52.	9.25	35.	12.	12.	2.47
+	HYDROGRAPH AT	1830	57.	9.42	38.	14.	14.	2.59

HYDROGRAPH AT	1660	2.	11.33	1.	0.	0.	.09
ROUTED TO	1691	2.	11.75	1.	0.	0.	.09
HYDROGRAPH AT	1690	2.	11.33	1.	1.	1.	.09
2 COMBINED AT	1692	3.	11.58	3.	1.	1.	.18
ROUTED TO	1741	3.	11.92	3.	1.	1.	.18
HYDROGRAPH AT	1740	2.	11.33	1.	1.	1.	.09
2 COMBINED AT	1742	5.	11.75	4.	1.	1.	.27
ROUTED TO	1781	5.	12.08	4.	1.	1.	.27
HYDROGRAPH AT	1780	2.	10.25	2.	1.	1.	.09
2 COMBINED AT	1782	7.	11.50	6.	2.	2.	.36
ROUTED TO	1831	7.	11.83	6.	2.	2.	.36
2 COMBINED AT	1832	61.	9.50	43.	16.	16.	2.95
HYDROGRAPH AT	1820	63.	9.58	46.	17.	17.	3.06
HYDROGRAPH AT	1650	2.	11.33	1.	0.	0.	.09
ROUTED TO	1701	2.	11.75	1.	0.	0.	.09
HYDROGRAPH AT	1700	2.	11.33	1.	1.	1.	.09
2 COMBINED AT	1702	3.	11.58	3.	1.	1.	.18
ROUTED TO	1731	3.	11.92	3.	1.	1.	.18
HYDROGRAPH AT	1730	2.	11.33	1.	1.	1.	.09
2 COMBINED AT	1732	5.	11.75	4.	1.	1.	.27
ROUTED TO	1791	5.	12.08	4.	1.	1.	.27
HYDROGRAPH AT	1790	2.	10.58	2.	1.	1.	.09
2 COMBINED AT	1792	6.	11.67	5.	2.	2.	.36
ROUTED TO							

+		1822	6.	12.00	5.	2.	2.	.36
	2 COMBINED AT							
+		1823	67.	9.75	51.	19.	19.	3.43
	HYDROGRAPH AT							
+		1810	72.	9.83	54.	20.	20.	3.54
	HYDROGRAPH AT							
+		1210	21.	8.33	12.	4.	4.	.93
	ROUTED TO							
+		1201	21.	8.67	12.	4.	4.	.93
	HYDROGRAPH AT							
+		1207	58.	6.25	6.	2.	2.	.12
	HYDROGRAPH AT							
+		1204	70.	6.75	21.	6.	6.	.75
	HYDROGRAPH AT							
+		1200	50.	7.83	27.	8.	8.	1.31
	2 COMBINED AT							
+		1202	65.	8.17	39.	12.	12.	2.24
	ROUTED TO							
+		1191	65.	8.33	39.	12.	12.	2.24
	HYDROGRAPH AT							
+		1186	30.	6.42	5.	1.	1.	.12
	HYDROGRAPH AT							
+		1187	27.	6.83	8.	2.	2.	.31
	HYDROGRAPH AT							
+		1190	25.	8.50	17.	5.	5.	1.03
	2 COMBINED AT							
+		1192	89.	8.33	55.	18.	18.	3.27
	ROUTED TO							
+		1181	89.	8.50	55.	18.	18.	3.27
	HYDROGRAPH AT							
+		1173	3.	11.00	2.	1.	1.	.00
	HYDROGRAPH AT							
+		1174	44.	6.33	9.	3.	3.	.21
	HYDROGRAPH AT							
+		1177	42.	6.75	12.	4.	4.	.45
	HYDROGRAPH AT							
+		1180	30.	8.33	20.	7.	7.	1.15
	HYDROGRAPH AT							
+		1000	5.	6.58	1.	0.	0.	.02
	ROUTED TO							
+		1042	5.	6.67	1.	0.	0.	.02
	HYDROGRAPH AT							
+		1060	8.	7.33	3.	1.	1.	.04
	ROUTED TO							
+		1051	8.	7.42	3.	1.	1.	.04
	HYDROGRAPH AT							
+		1050	1.	6.25	0.	0.	0.	.00

+	2 COMBINED AT	1052	8.	7.42	3.	1.	1.	.04	
+	ROUTED TO	1041	8.	7.67	3.	1.	1.	.04	
+	HYDROGRAPH AT	1040	19.	6.33	3.	1.	1.	.04	
+	3 COMBINED AT	1043	24.	6.42	7.	2.	2.	.10	
+	ROUTED TO	DAM8	2.	11.75	1.	0.	0.	.10	102.01 11.75
+	ROUTED TO	1011	2.	12.00	1.	0.	0.	.10	
+	HYDROGRAPH AT	1010	18.	6.33	2.	1.	1.	.04	
+	2 COMBINED AT	1012	18.	6.33	2.	1.	1.	.13	
+	HYDROGRAPH AT	1110	17.	6.42	3.	1.	1.	.15	
+	HYDROGRAPH AT	1020	18.	6.33	2.	1.	1.	.03	
+	HYDROGRAPH AT	1120	18.	6.42	3.	1.	1.	.07	
+	2 COMBINED AT	1121	35.	6.42	5.	2.	2.	.21	
+	DIVERSION TO	2223	14.	6.42	2.	1.	1.	.21	
+	HYDROGRAPH AT	2222	21.	6.42	3.	1.	1.	.21	
+	ROUTED TO	1131	20.	6.50	3.	1.	1.	.21	
+	HYDROGRAPH AT	1070	15.	6.42	2.	1.	1.	.04	
+	ROUTED TO	1031	15.	6.50	2.	1.	1.	.04	
+	HYDROGRAPH AT	1030	11.	6.50	2.	1.	1.	.03	
+	2 COMBINED AT	1032	26.	6.50	4.	1.	1.	.07	
+	HYDROGRAPH AT	1130	24.	6.67	5.	2.	2.	.13	
+	2 COMBINED AT	1132	40.	6.58	8.	3.	3.	.35	
+	DIVERSION TO	3334	20.	6.58	4.	1.	1.	.35	
+	HYDROGRAPH AT	3333	20.	6.58	4.	1.	1.	.35	
	ROUTED TO								

+	1151	19.	6.75	4.	1.	1.	.35
HYDROGRAPH AT +	1080	31.	6.33	5.	1.	1.	.08
HYDROGRAPH AT +	1090	44.	6.42	8.	2.	2.	.14
HYDROGRAPH AT +	1150	29.	6.92	10.	3.	3.	.37
2 COMBINED AT +	1152	47.	6.83	15.	5.	5.	.72
DIVERSION TO +	4445	24.	6.83	7.	2.	2.	.72
HYDROGRAPH AT +	4444	24.	6.83	7.	2.	2.	.72
ROUTED TO +	1161	22.	7.08	7.	2.	2.	.72
HYDROGRAPH AT +	1159	834.	13.00	817.	538.	538.	.00
DIVERSION TO +	1159R	776.	13.00	760.	500.	500.	.00
HYDROGRAPH AT +	1159D	58.	13.00	57.	38.	38.	.00
HYDROGRAPH AT +	1154	73.	6.33	58.	39.	39.	.16
HYDROGRAPH AT +	1155	72.	6.83	59.	41.	41.	.62
HYDROGRAPH AT +	1153	23.	6.33	3.	1.	1.	.08
ROUTED TO +	1101	24.	6.50	3.	1.	1.	.08
HYDROGRAPH AT +	1100	2.	6.33	0.	0.	0.	.00
2 COMBINED AT +	1102	25.	6.50	3.	1.	1.	.08
ROUTED TO +	1156	25.	6.75	4.	1.	1.	.08
2 COMBINED AT +	1157	96.	6.75	60.	42.	42.	.70
HYDROGRAPH AT +	1160	71.	7.58	61.	41.	41.	1.00
HYDROGRAPH AT +	1166	46.	6.25	6.	2.	2.	.11
HYDROGRAPH AT +	1165	53.	6.67	13.	4.	4.	.50
HYDROGRAPH AT +	1170	34.	7.58	16.	5.	5.	.76
ROUTED TO +	1162	33.	7.75	16.	5.	5.	.76

+ 3 COMBINED AT	1163	119.	7.58	82.	48.	48.	2.48
+ DIVERSION TO	5556	60.	7.58	41.	24.	24.	2.48
+ HYDROGRAPH AT	5555	60.	7.58	41.	24.	24.	2.48
+ ROUTED TO	1182	59.	7.67	41.	24.	24.	2.48
+ 2 COMBINED AT	1183	85.	7.83	61.	31.	31.	3.63
+ ROUTED TO	1184	85.	7.92	61.	30.	30.	3.63
+ 2 COMBINED AT	1185	169.	8.33	116.	48.	48.	6.90
+ ROUTED TO	1646	169.	8.42	116.	48.	48.	6.90
+ HYDROGRAPH AT	1645	3.	9.08	2.	1.	1.	.09
+ 2 COMBINED AT	1647	172.	8.42	118.	49.	49.	6.99
+ ROUTED TO	1711	172.	8.42	118.	49.	49.	6.99
+ HYDROGRAPH AT	1710	2.	10.25	2.	1.	1.	.09
+ 2 COMBINED AT	1712	174.	8.50	120.	49.	49.	7.09
+ ROUTED TO	1721	174.	8.50	120.	49.	49.	7.09
+ HYDROGRAPH AT	1720	3.	9.75	2.	1.	1.	.09
+ 2 COMBINED AT	1722	177.	8.50	123.	50.	50.	7.18
+ ROUTED TO	1801	177.	8.58	123.	50.	50.	7.18
+ HYDROGRAPH AT	1800	4.	9.25	3.	1.	1.	.09
+ 2 COMBINED AT	1802	181.	8.58	126.	51.	51.	7.27
+ ROUTED TO	1811	180.	8.67	126.	51.	51.	7.27
+ 2 COMBINED AT	1812	233.	9.25	176.	71.	71.	10.82
+ ROUTED TO	1813	233.	9.33	176.	71.	71.	10.82
+ 2 COMBINED AT	1985	259.	9.50	219.	95.	95.	14.20
+ ROUTED TO	1986	257.	9.75	218.	94.	94.	14.20

+								386.69	9.75
+	HYDROGRAPH AT	3334	20.	6.58	4.	1.	1.	.00	
+	HYDROGRAPH AT	1135	18.	7.17	6.	2.	2.	.11	
+	ROUTED TO	1136	18.	7.33	7.	2.	2.	.11	
+	HYDROGRAPH AT	4445	24.	6.83	7.	2.	2.	.00	
+	HYDROGRAPH AT	1140	22.	7.33	10.	3.	3.	.14	
+	2 COMBINED AT	1141	40.	7.33	16.	5.	5.	.25	
+	ROUTED TO	1971	39.	7.58	16.	5.	5.	.25	
+	HYDROGRAPH AT	5556	60.	7.58	41.	24.	24.	.00	
+	ROUTED TO	1972	57.	8.08	41.	23.	23.	.00	
+	HYDROGRAPH AT	1970	14.	9.08	10.	3.	3.	.51	
+	3 COMBINED AT	1973	100.	7.92	66.	32.	32.	.76	
+	HYDROGRAPH AT	1980	115.	8.50	77.	35.	35.	1.23	
+	2 COMBINED AT	1987	349.	9.50	291.	129.	129.	15.43	
+	ROUTED TO	1991	347.	9.67	289.	128.	128.	15.43	
+								387.01	9.67
+	HYDROGRAPH AT	1960	18.	8.33	12.	4.	4.	.38	
+	HYDROGRAPH AT	1990	34.	8.67	22.	7.	7.	.76	
+	HYDROGRAPH AT	429	9.	6.33	2.	1.	1.	.00	
+	HYDROGRAPH AT	430B	9.	6.50	2.	1.	1.	.01	
+	HYDROGRAPH AT	440B	8.	6.67	3.	1.	1.	.05	
+	ROUTED TO	495B1	7.	7.00	3.	1.	1.	.05	
+	HYDROGRAPH AT	304	336.	12.67	309.	206.	206.	.00	
+	DIVERSION TO	304R	312.	12.67	288.	191.	191.	.00	
+	HYDROGRAPH AT	304D	24.	12.67	22.	14.	14.	.00	

+	HYDROGRAPH AT	300	24.	12.83	22.	15.	15.	.03		
+	ROUTED TO	DAM7	24.	12.92	22.	15.	15.	.03	102.07	12.92
+	ROUTED TO	291	24.	13.00	22.	15.	15.	.03		
+	HYDROGRAPH AT	290	18.	6.25	2.	1.	1.	.02		
+	ROUTED TO	DAM6	0.	.08	0.	0.	0.	.02	101.27	24.00
+	2 COMBINED AT	292	24.	13.00	22.	15.	15.	.05		
+	ROUTED TO	331	24.	13.08	22.	15.	15.	.05		
+	HYDROGRAPH AT	330	21.	6.25	2.	1.	1.	.02		
+	ROUTED TO	DAM2	0.	.08	0.	0.	0.	.02	101.47	24.00
+	2 COMBINED AT	332	24.	13.08	22.	15.	15.	.07		
+	ROUTED TO	231	24.	13.08	22.	15.	15.	.07		
+	HYDROGRAPH AT	230	27.	6.33	3.	1.	1.	.04		
+	2 COMBINED AT	232	44.	6.33	22.	16.	16.	.11		
+	ROUTED TO	233	43.	6.33	22.	16.	16.	.11		
+	HYDROGRAPH AT	220	72.	6.42	24.	17.	17.	.19		
+	HYDROGRAPH AT	445	70.	6.50	24.	17.	17.	.21		
+	HYDROGRAPH AT	310	5.	6.75	2.	0.	0.	.03		
+	ROUTED TO	DAM4	0.	.08	0.	0.	0.	.03	100.54	24.00
+	ROUTED TO	312	0.	.08	0.	0.	0.	.03		
+	HYDROGRAPH AT	320	20.	6.25	2.	1.	1.	.02		
+	2 COMBINED AT	322	20.	6.25	2.	1.	1.	.05		
+	ROUTED TO	DAM3	0.	.08	0.	0.	0.	.05	101.36	24.00

```
+   HYDROGRAPH AT
                 260      17.   6.33      2.      1.      1.     .09
+   ROUTED TO
                 451      16.   6.42      2.      1.      1.     .09
+   HYDROGRAPH AT
                 450      16.   6.58      3.      1.      1.     .12
+   2 COMBINED AT
                 452      85.   6.50     27.     18.     18.     .33
+   HYDROGRAPH AT
                 455      83.   6.67     29.     18.     18.     .39
+   HYDROGRAPH AT
                 280      50.   6.33      6.      2.      2.     .06
+   ROUTED TO
                 DAM5      0.    .08      0.      0.      0.     .06
+                                                                     101.26      24.00
+   HYDROGRAPH AT
                 250      16.   6.42      3.      1.      1.     .11
+   HYDROGRAPH AT
                 460      11.   6.92      5.      1.      1.     .24
+   2 COMBINED AT
                 461      91.   6.67     33.     20.     20.     .63
+   HYDROGRAPH AT
                 495B     79.   7.08     37.     21.     21.     .75
+   2 COMBINED AT
                 495B2    86.   7.08     39.     22.     22.     .80
+   HYDROGRAPH AT
                 270      27.   6.33      4.      1.      1.     .06
+   HYDROGRAPH AT
                 470      18.   6.58      5.      1.      1.     .13
+   HYDROGRAPH AT
                 2223     14.   6.42      2.      1.      1.     .00
+   HYDROGRAPH AT
                 480      10.   6.75      3.      1.      1.     .08
+   2 COMBINED AT
                 481      27.   6.67      8.      2.      2.     .21
+   HYDROGRAPH AT
                 490      27.   7.50     14.      4.      4.     .41
+   2 COMBINED AT
                 491     108.   7.17     53.     26.     26.    1.21
+   HYDROGRAPH AT
                 550B    110.   7.33     55.     27.     27.    1.27
+   ROUTED TO
                 1992    109.   7.42     55.     26.     26.    1.27
+   2 COMBINED AT
                 1993    128.   7.58     77.     34.     34.    2.03
+   2 COMBINED AT
                 1994    426.   9.50    350.    161.    161.   17.46
```

+	ROUTED TO	2001	425.	9.58	349.	160.	160.	17.46	2.51	9.58
+	HYDROGRAPH AT	2000	6.	8.17	4.	1.	1.	.12		
+	2 COMBINED AT	2002	429.	9.58	352.	162.	162.	17.57		
+	ROUTED TO	541	428.	9.67	351.	161.	161.	17.57	2.52	9.67
+	HYDROGRAPH AT	540B	8.	7.83	5.	1.	1.	.15		
+	2 COMBINED AT	542	432.	9.67	354.	162.	162.	17.72		
+	ROUTED TO	546	432.	9.75	354.	162.	162.	17.72	2.53	9.75
+	HYDROGRAPH AT	545EDV	1.	7.50	1.	0.	0.	.00		
+	2 COMBINED AT	546T	433.	9.75	354.	162.	162.	17.72		
+	DIVERSION TO	546DIV	0.	9.75	0.	0.	0.	17.72		
+	HYDROGRAPH AT	546T	433.	9.75	354.	162.	162.	17.72		
+	2 COMBINED AT	547	470.	9.67	382.	174.	174.	19.35		
+	ROUTED TO	531	470.	9.75	382.	173.	173.	19.35	2.08	9.75
+	HYDROGRAPH AT	560W	4.	8.33	2.	1.	1.	.09		
+	ROUTED TO	531A	4.	8.92	2.	1.	1.	.09		
+	HYDROGRAPH AT	530AW	7.	8.00	5.	1.	1.	.15		
+	3 COMBINED AT	532	477.	9.67	387.	175.	175.	19.58		
+	ROUTED TO	537	477.	9.75	387.	174.	174.	19.58	1.36	9.75
+	HYDROGRAPH AT	360W	1.	9.92	1.	0.	0.	.09		
+	HYDROGRAPH AT	420W	0.	7.92	0.	0.	0.	.02		
+	HYDROGRAPH AT	410W	1.	8.00	0.	0.	0.	.02		
+	2 COMBINED AT	381	1.	7.92	1.	0.	0.	.04		

	HYDROGRAPH AT								
+		380	1.	7.92	1.	0.	0.	.06		
	HYDROGRAPH AT								
+		400W	2.	7.33	1.	0.	0.	.05		
	2 COMBINED AT								
+		371	4.	7.42	2.	1.	1.	.11		
	HYDROGRAPH AT								
+		370	4.	8.00	3.	1.	1.	.16		
	2 COMBINED AT								
+		372	5.	8.17	4.	1.	1.	.25		
	ROUTED TO								
+		373	5.	8.33	4.	1.	1.	.25		
+									7.03	8.33
	ROUTED TO								
+		501	5.	8.50	3.	1.	1.	.25		
+									7.30	8.50
	HYDROGRAPH AT								
+		510	2.	9.83	2.	1.	1.	.14		
	HYDROGRAPH AT								
+		500W	14.	8.25	9.	3.	3.	.28		
	3 COMBINED AT								
+		502	21.	8.33	14.	4.	4.	.67		
	ROUTED TO								
+		516	20.	8.50	14.	4.	4.	.67		
+									7.86	8.50
	HYDROGRAPH AT								
+		515	1.	8.08	1.	0.	0.	.03		
	2 COMBINED AT								
+		517	22.	8.42	14.	5.	5.	.70		
	ROUTED TO								
+		518	22.	8.50	14.	5.	5.	.70		
+									8.66	8.50
	ROUTED TO								
+		519	21.	8.58	14.	5.	5.	.70		
+									8.71	8.58
	HYDROGRAPH AT								
+		520A	11.	8.33	7.	2.	2.	.25		
	2 COMBINED AT								
+		519A	32.	8.50	21.	7.	7.	.95		
	ROUTED TO								
+		521	32.	8.67	21.	7.	7.	.95		
+									7.26	8.67
	HYDROGRAPH AT								
+		520B	160.	6.17	15.	4.	4.	.13		
	ROUTED TO								
+		DAMP1	0.	.08	0.	0.	0.	.13		
+									108.36	24.00
	2 COMBINED AT								
+		522	32.	8.67	21.	7.	7.	1.08		
	ROUTED TO									

+		535A1	32.	8.75	21.	7.	7.	1.08	
+									7.13 8.75
	HYDROGRAPH AT								
+		535A	114.	6.17	10.	3.	3.	.09	
	ROUTED TO								
+		DAMP2	0.	.08	0.	0.	0.	.09	
+									105.73 24.00
	2 COMBINED AT								
+		535A2	32.	8.75	21.	7.	7.	1.18	
	ROUTED TO								
+		535D1	32.	8.75	21.	7.	7.	1.18	
+									7.13 8.75
	HYDROGRAPH AT								
+		535D	1.	6.42	0.	0.	0.	.00	
	2 COMBINED AT								
+		535D2	32.	8.75	21.	7.	7.	1.18	
	DIVERSION TO								
+		CWRW	0.	8.75	0.	0.	0.	1.18	
	HYDROGRAPH AT								
+		CWRS	32.	8.75	21.	7.	7.	1.18	
	ROUTED TO								
+		535B1	32.	8.75	21.	7.	7.	1.18	
+									8.46 8.75
	HYDROGRAPH AT								
+		535E	0.	6.25	0.	0.	0.	.00	
	ROUTED TO								
+		535B2	0.	6.50	0.	0.	0.	.00	
	HYDROGRAPH AT								
+		535B	15.	6.17	1.	0.	0.	.01	
	3 COMBINED AT								
+		535B3	32.	8.75	21.	7.	7.	1.19	
	ROUTED TO								
+		535C1	32.	8.92	21.	7.	7.	1.19	
+									8.46 8.92
	HYDROGRAPH AT								
+		535C	1.	7.25	1.	0.	0.	.02	
	3 COMBINED AT								
+		548	505.	9.67	406.	182.	182.	20.79	
	HYDROGRAPH AT								
+		546DIV	0.	.08	0.	0.	0.	.00	
	HYDROGRAPH AT								
+		CANAL	1600.	.08	1600.	1600.	1600.	.00	
	2 COMBINED AT								
+		546DC	1600.	.08	1600.	1600.	1600.	.00	
	ROUTED TO								
+		549	1600.	2.08	1600.	1585.	1585.	.00	
+									5.40 2.25
	DIVERSION TO								
+		551	1600.	.08	1600.	1585.	1585.	.00	

```
     HYDROGRAPH AT
+                    550        0.     .08          0.          0.          0.        .00

     2 COMBINED AT
+                    552      505.    9.67        406.        182.        182.      20.79
1                        SUMMARY OF DAM OVERTOPPING/BREACH ANALYSIS FOR STATION   DAM165

PLAN  1 ...............                  INITIAL VALUE     SPILLWAY CREST     TOP OF DAM
                          ELEVATION          100.00            101.99           102.00
                          STORAGE                0.                1.               1.
                          OUTFLOW                0.                0.               1.

                RATIO    MAXIMUM     MAXIMUM    MAXIMUM    MAXIMUM    DURATION    TIME OF     TIME OF
                  OF    RESERVOIR     DEPTH     STORAGE    OUTFLOW    OVER TOP   MAX OUTFLOW  FAILURE
                 PMF     W.S.ELEV   OVER DAM     AC-FT       CFS       HOURS        HOURS       HOURS

                1.00      102.02        .02        1.         4.      1.83         6.75        .00
1                        SUMMARY OF DAM OVERTOPPING/BREACH ANALYSIS FOR STATION   DAM160

PLAN  1 ...............                  INITIAL VALUE     SPILLWAY CREST     TOP OF DAM
                          ELEVATION          100.00            101.99           102.00
                          STORAGE                0.                1.               1.
                          OUTFLOW                0.                0.               1.

                RATIO    MAXIMUM     MAXIMUM    MAXIMUM    MAXIMUM    DURATION    TIME OF     TIME OF
                  OF    RESERVOIR     DEPTH     STORAGE    OUTFLOW    OVER TOP   MAX OUTFLOW  FAILURE
                 PMF     W.S.ELEV   OVER DAM     AC-FT       CFS       HOURS        HOURS       HOURS

                1.00      102.02        .02        1.         6.      3.42         6.83        .00
1                        SUMMARY OF DAM OVERTOPPING/BREACH ANALYSIS FOR STATION   DAM155

PLAN  1 ...............                  INITIAL VALUE     SPILLWAY CREST     TOP OF DAM
                          ELEVATION          100.00            101.99           102.00
                          STORAGE                0.                1.               1.
                          OUTFLOW                0.                0.               1.

                RATIO    MAXIMUM     MAXIMUM    MAXIMUM    MAXIMUM    DURATION    TIME OF     TIME OF
                  OF    RESERVOIR     DEPTH     STORAGE    OUTFLOW    OVER TOP   MAX OUTFLOW  FAILURE
                 PMF     W.S.ELEV   OVER DAM     AC-FT       CFS       HOURS        HOURS       HOURS

                1.00      102.02        .02        1.         6.      3.83         6.83        .00
1                        SUMMARY OF DAM OVERTOPPING/BREACH ANALYSIS FOR STATION   DAM150

PLAN  1 ...............                  INITIAL VALUE     SPILLWAY CREST     TOP OF DAM
                          ELEVATION          100.00            101.99           102.00
                          STORAGE                0.                2.               2.
                          OUTFLOW                0.                0.               1.

                RATIO    MAXIMUM     MAXIMUM    MAXIMUM    MAXIMUM    DURATION    TIME OF     TIME OF
                  OF    RESERVOIR     DEPTH     STORAGE    OUTFLOW    OVER TOP   MAX OUTFLOW  FAILURE
                 PMF     W.S.ELEV   OVER DAM     AC-FT       CFS       HOURS        HOURS       HOURS

                1.00      102.04        .04        2.        10.      6.00         6.83        .00
1                        SUMMARY OF DAM OVERTOPPING/BREACH ANALYSIS FOR STATION   DAM120

PLAN  1 ...............                  INITIAL VALUE     SPILLWAY CREST     TOP OF DAM
                          ELEVATION          100.00            101.99           102.00
                          STORAGE                0.                1.               1.
                          OUTFLOW                0.                0.               1.

                RATIO    MAXIMUM     MAXIMUM    MAXIMUM    MAXIMUM    DURATION    TIME OF     TIME OF
```

```
                OF      RESERVOIR     DEPTH     STORAGE    OUTFLOW    OVER TOP   MAX OUTFLOW   FAILURE
               PMF      W.S.ELEV    OVER DAM     AC-FT       CFS       HOURS        HOURS       HOURS

               1.00      102.02        .02         1.         4.       2.08         6.83         .00
1                          SUMMARY OF DAM OVERTOPPING/BREACH ANALYSIS FOR STATION    DAM75

PLAN  1 ...............                    INITIAL VALUE     SPILLWAY CREST     TOP OF DAM
                        ELEVATION             100.00            101.99           102.00
                        STORAGE                 0.                0.               0.
                        OUTFLOW                 0.                0.               1.

               RATIO    MAXIMUM      MAXIMUM    MAXIMUM    MAXIMUM    DURATION    TIME OF     TIME OF
                 OF    RESERVOIR     DEPTH     STORAGE    OUTFLOW    OVER TOP   MAX OUTFLOW   FAILURE
                PMF      W.S.ELEV    OVER DAM     AC-FT       CFS       HOURS        HOURS       HOURS

               1.00      102.06        .06         0.        20.       8.83         7.08         .00
1                          SUMMARY OF DAM OVERTOPPING/BREACH ANALYSIS FOR STATION    DAM85

PLAN  1 ...............                    INITIAL VALUE     SPILLWAY CREST     TOP OF DAM
                        ELEVATION             100.00            101.99           102.00
                        STORAGE                 0.                0.               0.
                        OUTFLOW                 0.                0.               1.

               RATIO    MAXIMUM      MAXIMUM    MAXIMUM    MAXIMUM    DURATION    TIME OF     TIME OF
                 OF    RESERVOIR     DEPTH     STORAGE    OUTFLOW    OVER TOP   MAX OUTFLOW   FAILURE
                PMF      W.S.ELEV    OVER DAM     AC-FT       CFS       HOURS        HOURS       HOURS

               1.00      102.06        .06         0.        20.       9.25         7.17         .00
1                          SUMMARY OF DAM OVERTOPPING/BREACH ANALYSIS FOR STATION    DAM80

PLAN  1 ...............                    INITIAL VALUE     SPILLWAY CREST     TOP OF DAM
                        ELEVATION             100.00            101.99           102.00
                        STORAGE                 0.                0.               0.
                        OUTFLOW                 0.                0.               1.

               RATIO    MAXIMUM      MAXIMUM    MAXIMUM    MAXIMUM    DURATION    TIME OF     TIME OF
                 OF    RESERVOIR     DEPTH     STORAGE    OUTFLOW    OVER TOP   MAX OUTFLOW   FAILURE
                PMF      W.S.ELEV    OVER DAM     AC-FT       CFS       HOURS        HOURS       HOURS

               1.00      102.01        .01         0.         2.       .92         6.50         .00
1                          SUMMARY OF DAM OVERTOPPING/BREACH ANALYSIS FOR STATION    DAM95

PLAN  1 ...............                    INITIAL VALUE     SPILLWAY CREST     TOP OF DAM
                        ELEVATION             100.00            101.99           102.00
                        STORAGE                 0.                1.               1.
                        OUTFLOW                 0.                0.               1.

               RATIO    MAXIMUM      MAXIMUM    MAXIMUM    MAXIMUM    DURATION    TIME OF     TIME OF
                 OF    RESERVOIR     DEPTH     STORAGE    OUTFLOW    OVER TOP   MAX OUTFLOW   FAILURE
                PMF      W.S.ELEV    OVER DAM     AC-FT       CFS       HOURS        HOURS       HOURS

               1.00      102.01        .01         1.         3.      1.83         6.92         .00
1                          SUMMARY OF DAM OVERTOPPING/BREACH ANALYSIS FOR STATION    DAM90

PLAN  1 ...............                    INITIAL VALUE     SPILLWAY CREST     TOP OF DAM
                        ELEVATION             100.00            101.99           102.00
                        STORAGE                 0.                1.               1.
                        OUTFLOW                 0.                0.               1.

               RATIO    MAXIMUM      MAXIMUM    MAXIMUM    MAXIMUM    DURATION    TIME OF     TIME OF
                 OF    RESERVOIR     DEPTH     STORAGE    OUTFLOW    OVER TOP   MAX OUTFLOW   FAILURE
```

```
                PMF      W.S.ELEV    OVER DAM     AC-FT       CFS       HOURS        HOURS       HOURS

                1.00      101.97        .00          1.         0.        .00          .00         .00
1                           SUMMARY OF DAM OVERTOPPING/BREACH ANALYSIS FOR STATION   DAM110


PLAN  1 ...............                    INITIAL VALUE     SPILLWAY CREST     TOP OF DAM
                          ELEVATION            100.00            101.99           102.00
                          STORAGE                 0.                1.               1.
                          OUTFLOW                 0.                0.               1.

                RATIO    MAXIMUM      MAXIMUM    MAXIMUM    MAXIMUM    DURATION     TIME OF     TIME OF
                  OF    RESERVOIR     DEPTH     STORAGE    OUTFLOW    OVER TOP   MAX OUTFLOW   FAILURE
                PMF      W.S.ELEV    OVER DAM     AC-FT       CFS       HOURS        HOURS       HOURS

                1.00      102.01        .01          1.         3.       2.00         6.83         .00
1                           SUMMARY OF DAM OVERTOPPING/BREACH ANALYSIS FOR STATION   DAM100


PLAN  1 ...............                    INITIAL VALUE     SPILLWAY CREST     TOP OF DAM
                          ELEVATION            100.00            101.99           102.00
                          STORAGE                 0.                0.               0.
                          OUTFLOW                 0.                0.               1.

                RATIO    MAXIMUM      MAXIMUM    MAXIMUM    MAXIMUM    DURATION     TIME OF     TIME OF
                  OF    RESERVOIR     DEPTH     STORAGE    OUTFLOW    OVER TOP   MAX OUTFLOW   FAILURE
                PMF      W.S.ELEV    OVER DAM     AC-FT       CFS       HOURS        HOURS       HOURS

                1.00      102.08        .08          0.        28.       5.92         6.25         .00
1                           SUMMARY OF DAM OVERTOPPING/BREACH ANALYSIS FOR STATION   DAM140


PLAN  1 ...............                    INITIAL VALUE     SPILLWAY CREST     TOP OF DAM
                          ELEVATION            100.00            101.99           102.00
                          STORAGE                 0.                1.               1.
                          OUTFLOW                 0.                0.               1.

                RATIO    MAXIMUM      MAXIMUM    MAXIMUM    MAXIMUM    DURATION     TIME OF     TIME OF
                  OF    RESERVOIR     DEPTH     STORAGE    OUTFLOW    OVER TOP   MAX OUTFLOW   FAILURE
                PMF      W.S.ELEV    OVER DAM     AC-FT       CFS       HOURS        HOURS       HOURS

                1.00      102.02        .02          1.         5.       4.08         7.08         .00
1                           SUMMARY OF DAM OVERTOPPING/BREACH ANALYSIS FOR STATION   DAM130


PLAN  1 ...............                    INITIAL VALUE     SPILLWAY CREST     TOP OF DAM
                          ELEVATION            100.00            101.99           102.00
                          STORAGE                 0.                1.               1.
                          OUTFLOW                 0.                0.               1.

                RATIO    MAXIMUM      MAXIMUM    MAXIMUM    MAXIMUM    DURATION     TIME OF     TIME OF
                  OF    RESERVOIR     DEPTH     STORAGE    OUTFLOW    OVER TOP   MAX OUTFLOW   FAILURE
                PMF      W.S.ELEV    OVER DAM     AC-FT       CFS       HOURS        HOURS       HOURS

                1.00      102.04        .04          1.        12.       7.08         6.75         .00
1                           SUMMARY OF DAM OVERTOPPING/BREACH ANALYSIS FOR STATION     DAM1


PLAN  1 ...............                    INITIAL VALUE     SPILLWAY CREST     TOP OF DAM
                          ELEVATION            100.00            101.99           102.00
                          STORAGE                 0.               11.              11.
                          OUTFLOW                 0.                0.               1.

                RATIO    MAXIMUM      MAXIMUM    MAXIMUM    MAXIMUM    DURATION     TIME OF     TIME OF
                  OF    RESERVOIR     DEPTH     STORAGE    OUTFLOW    OVER TOP   MAX OUTFLOW   FAILURE
                PMF      W.S.ELEV    OVER DAM     AC-FT       CFS       HOURS        HOURS       HOURS
```

```
                1.00      101.56        .00          9.         0.       .00         .00         .00
1                         SUMMARY OF DAM OVERTOPPING/BREACH ANALYSIS FOR STATION   DAM200

PLAN  1 ...............                    INITIAL VALUE     SPILLWAY CREST     TOP OF DAM
                         ELEVATION            100.00            101.99           102.00
                         STORAGE                 0.                0.               0.
                         OUTFLOW                 0.                0.               1.

                RATIO    MAXIMUM      MAXIMUM    MAXIMUM    MAXIMUM    DURATION    TIME OF     TIME OF
                  OF    RESERVOIR     DEPTH     STORAGE    OUTFLOW    OVER TOP   MAX OUTFLOW  FAILURE
                 PMF    W.S.ELEV    OVER DAM     AC-FT       CFS       HOURS        HOURS       HOURS

                1.00      102.01        .01          0.         3.      3.00         7.17         .00
1                         SUMMARY OF DAM OVERTOPPING/BREACH ANALYSIS FOR STATION   DAM135

PLAN  1 ...............                    INITIAL VALUE     SPILLWAY CREST     TOP OF DAM
                         ELEVATION            100.00            101.99           102.00
                         STORAGE                 0.                1.               1.
                         OUTFLOW                 0.                0.               1.

                RATIO    MAXIMUM      MAXIMUM    MAXIMUM    MAXIMUM    DURATION    TIME OF     TIME OF
                  OF    RESERVOIR     DEPTH     STORAGE    OUTFLOW    OVER TOP   MAX OUTFLOW  FAILURE
                 PMF    W.S.ELEV    OVER DAM     AC-FT       CFS       HOURS        HOURS       HOURS

                1.00      102.02        .02          1.         4.      3.83         7.17         .00
1                         SUMMARY OF DAM OVERTOPPING/BREACH ANALYSIS FOR STATION     DAM8

PLAN  1 ...............                    INITIAL VALUE     SPILLWAY CREST     TOP OF DAM
                         ELEVATION            100.00            101.99           102.00
                         STORAGE                 0.                4.               4.
                         OUTFLOW                 0.                0.               1.

                RATIO    MAXIMUM      MAXIMUM    MAXIMUM    MAXIMUM    DURATION    TIME OF     TIME OF
                  OF    RESERVOIR     DEPTH     STORAGE    OUTFLOW    OVER TOP   MAX OUTFLOW  FAILURE
                 PMF    W.S.ELEV    OVER DAM     AC-FT       CFS       HOURS        HOURS       HOURS

                1.00      102.01        .01          4.         2.      4.33        11.75         .00
1                         SUMMARY OF DAM OVERTOPPING/BREACH ANALYSIS FOR STATION     DAM7

PLAN  1 ...............                    INITIAL VALUE     SPILLWAY CREST     TOP OF DAM
                         ELEVATION            100.00            101.99           102.00
                         STORAGE                 0.                1.               1.
                         OUTFLOW                 0.                0.               1.

                RATIO    MAXIMUM      MAXIMUM    MAXIMUM    MAXIMUM    DURATION    TIME OF     TIME OF
                  OF    RESERVOIR     DEPTH     STORAGE    OUTFLOW    OVER TOP   MAX OUTFLOW  FAILURE
                 PMF    W.S.ELEV    OVER DAM     AC-FT       CFS       HOURS        HOURS       HOURS

                1.00      102.07        .07          1.        24.     23.50        12.92         .00
1                         SUMMARY OF DAM OVERTOPPING/BREACH ANALYSIS FOR STATION     DAM6

PLAN  1 ...............                    INITIAL VALUE     SPILLWAY CREST     TOP OF DAM
                         ELEVATION            100.00            101.99           102.00
                         STORAGE                 0.                2.               2.
                         OUTFLOW                 0.                0.               1.

                RATIO    MAXIMUM      MAXIMUM    MAXIMUM    MAXIMUM    DURATION    TIME OF     TIME OF
                  OF    RESERVOIR     DEPTH     STORAGE    OUTFLOW    OVER TOP   MAX OUTFLOW  FAILURE
                 PMF    W.S.ELEV    OVER DAM     AC-FT       CFS       HOURS        HOURS       HOURS
```

```
                1.00       101.27         .00          1.         0.       .00          .00          .00
1                            SUMMARY OF DAM OVERTOPPING/BREACH ANALYSIS FOR STATION     DAM2

PLAN  1 ...............                    INITIAL VALUE     SPILLWAY CREST     TOP OF DAM
                         ELEVATION            100.00            101.99            102.00
                         STORAGE                 0.                2.                2.
                         OUTFLOW                 0.                0.                1.

                RATIO     MAXIMUM      MAXIMUM     MAXIMUM     MAXIMUM     DURATION     TIME OF      TIME OF
                  OF     RESERVOIR     DEPTH       STORAGE     OUTFLOW     OVER TOP    MAX OUTFLOW   FAILURE
                 PMF      W.S.ELEV    OVER DAM      AC-FT        CFS        HOURS        HOURS        HOURS

                1.00       101.47         .00          1.         0.       .00          .00          .00
1                            SUMMARY OF DAM OVERTOPPING/BREACH ANALYSIS FOR STATION     DAM4

PLAN  1 ...............                    INITIAL VALUE     SPILLWAY CREST     TOP OF DAM
                         ELEVATION            100.00            101.99            102.00
                         STORAGE                 0.                4.                4.
                         OUTFLOW                 0.                0.                1.

                RATIO     MAXIMUM      MAXIMUM     MAXIMUM     MAXIMUM     DURATION     TIME OF      TIME OF
                  OF     RESERVOIR     DEPTH       STORAGE     OUTFLOW     OVER TOP    MAX OUTFLOW   FAILURE
                 PMF      W.S.ELEV    OVER DAM      AC-FT        CFS        HOURS        HOURS        HOURS

                1.00       100.54         .00          1.         0.       .00          .00          .00
1                            SUMMARY OF DAM OVERTOPPING/BREACH ANALYSIS FOR STATION     DAM3

PLAN  1 ...............                    INITIAL VALUE     SPILLWAY CREST     TOP OF DAM
                         ELEVATION            100.00            101.99            102.00
                         STORAGE                 0.                2.                2.
                         OUTFLOW                 0.                0.                1.

                RATIO     MAXIMUM      MAXIMUM     MAXIMUM     MAXIMUM     DURATION     TIME OF      TIME OF
                  OF     RESERVOIR     DEPTH       STORAGE     OUTFLOW     OVER TOP    MAX OUTFLOW   FAILURE
                 PMF      W.S.ELEV    OVER DAM      AC-FT        CFS        HOURS        HOURS        HOURS

                1.00       101.36         .00          1.         0.       .00          .00          .00
1                            SUMMARY OF DAM OVERTOPPING/BREACH ANALYSIS FOR STATION     DAM5

PLAN  1 ...............                    INITIAL VALUE     SPILLWAY CREST     TOP OF DAM
                         ELEVATION            100.00            101.99            102.00
                         STORAGE                 0.                6.                6.
                         OUTFLOW                 0.                0.                1.

                RATIO     MAXIMUM      MAXIMUM     MAXIMUM     MAXIMUM     DURATION     TIME OF      TIME OF
                  OF     RESERVOIR     DEPTH       STORAGE     OUTFLOW     OVER TOP    MAX OUTFLOW   FAILURE
                 PMF      W.S.ELEV    OVER DAM      AC-FT        CFS        HOURS        HOURS        HOURS

                1.00       101.26         .00          4.         0.       .00          .00          .00
1                            SUMMARY OF DAM OVERTOPPING/BREACH ANALYSIS FOR STATION    DAMP1

PLAN  1 ...............                    INITIAL VALUE     SPILLWAY CREST     TOP OF DAM
                         ELEVATION            100.00            109.99            110.00
                         STORAGE                 0.               10.               10.
                         OUTFLOW                 0.                0.                0.

                RATIO     MAXIMUM      MAXIMUM     MAXIMUM     MAXIMUM     DURATION     TIME OF      TIME OF
                  OF     RESERVOIR     DEPTH       STORAGE     OUTFLOW     OVER TOP    MAX OUTFLOW   FAILURE
                 PMF      W.S.ELEV    OVER DAM      AC-FT        CFS        HOURS        HOURS        HOURS

                1.00       108.36         .00          8.         0.       .00          .00          .00
```

APPENDIX 2: OL2J.12I HEC-1 MODEL

1 SUMMARY OF DAM OVERTOPPING/BREACH ANALYSIS FOR STATION DAMP2

PLAN 1 .....

	INITIAL VALUE	SPILLWAY CREST	TOP OF DAM
ELEVATION	100.00	109.99	110.00
STORAGE	0.	10.	10.
OUTFLOW	0.	0.	0.

RATIO OF PMF	MAXIMUM RESERVOIR W.S.ELEV	MAXIMUM DEPTH OVER DAM	MAXIMUM STORAGE AC-FT	MAXIMUM OUTFLOW CFS	DURATION OVER TOP HOURS	TIME OF MAX OUTFLOW HOURS	TIME OF FAILURE HOURS
1.00	105.73	.00	6.	0.	.00	.00	.00

*** NORMAL END OF HEC-1 ***

FINCH4BM.OUT HEC-2 Model (Basis of Design)

Hydraulic model for Pima Outfall Channel.

```
1*********************************************
****************************************
 *  HEC-2 WATER SURFACE PROFILES            *                                        *  U.S. ARMY CORPS OF ENGINEERS
 *                                          *                                        *  HYDROLOGIC ENGINEERING CENTER
 *  Version   4.6.2;  May 1991              *                                        *  609 SECOND STREET, SUITE D
 *                                          *                                        *  DAVIS, CALIFORNIA 95616-4687
 *  RUN DATE    18NOV97    TIME   15:49:25  *                                        *          (916) 756-1104
 *********************************************
****************************************

                                          X     X  XXXXXXX   XXXXX              XXXXX
                                          X     X  X        X     X            X     X
                                          X     X  X        X                        X
                                          XXXXXXX  XXXX     X          XXXXX    XXXXX
                                          X     X  X        X                  X
                                          X     X  X        X     X            X
                                          X     X  XXXXXXX   XXXXX             XXXXXXX

1
   18NOV97      15:49:25                                                                                    PAGE    1

                                                                                THIS RUN EXECUTED 18NOV97    15:49:25
 ************************************
  HEC-2 WATER SURFACE PROFILES

  Version   4.6.2;  May 1991
 ************************************
```

MODEL: FINCHN4BM.IN - USES COE BACKWATER WEST OF PIMA ROAD
SPECIAL CULVERT ROUTINE AT PIMA ROAD
EVANS-KUHN CHANNEL CONNECTED TO ADOT PIMA OUTFALL CHANNEL AND
THE N-S FREEWAY CHANNEL.

RLW INITIALLY CODED THIS MODEL, USING INFORMATION AVAILABLE IN 1991.
SUBSEQUENTLY, ADOT TURNED OVER THE DESIGN AND CONSTRUCTION OF THE
CHANNEL TO THE SRPMIC IN 1993.

RLW ADDED EVANS-KUHN HEC-2 MODEL BRIDGE1.HC2 TO THE UPSTREAM END
OF RLW MODEL FINCHN1.IN TO CREATE THIS MODEL AND ELIMINATED THE ADOT
BERM INITIALLY PROPOSED IN 1990 DESIGN.

RLW ADDED SLOPE BREAK TO ADOT CHANNEL TO SIMULATE DOWNSTREAM
EXTENSION OF EKA CHANNEL ON A SLOPE OF 0.00036 FT/FT TO ELIMINATE
GRADE BREAK IN INITIAL DESIGNS.

HBJ OF SRPMIC MODIFIED RLW ORIGINAL CODE IN OCT 1996 TO REFLECT
REVISED GEOMETRY DEVELOPED BY SRPMIC.

THE Q100 VALUES WITHIN THIS MODEL ARE 5-10% MORE THAN THOSE DETERMINED
DURING HYDROLOGY WORK ASSOCIATED WITH THE TALKING STICK GOLF RESORT BY
RLW. SEE "UPDATED HYDROLOGY ANALYSIS, ARIZONA CANAL DRAINAGE
CHANNEL - DATED AUG 20, 1996.

TOPO FOR THIS MODEL IS FROM THE 1989 WLB GROUP, INC. MAPPING FOR ADOT

XSEC DATA DEVELOPED BY ROBERT L. WARD, P.E., CONSULTING ENGINEER

APPENDIX 3: FINCH4BM.OUT HEC-2 MODEL

```
        STARTING CWSEL IS BASED ON IBW INTERCEPTOR CHANNEL BACKWATER
        AS ORIGINALLY DETERMINED BY RLW IN 1993.

T1      ADOT CHANNEL ALONG NORTH BANK OF THE ARIZONA CANAL - SEPTEMBER 1996
T2      7-10'x 8' CBC (NO DEBRIS) IN-PLACE AT PIMA RD - USES SRPMIC GEOMETRY
T3      FOR EAST-WEST ADOT CHANNEL.  MODEL FINCHN4BM.IN -  SPECIAL CULVERT

J1  ICHECK    INQ       NINV      IDIR      STRT      METRIC    HVINS     Q         WSEL      FQ

      0                                       0                           5792   1280.24

J2  NPROF     IPLOT     PRFVS     XSECV     XSECH     FN        ALLDC     IBW       CHNIM     ITRACE

     1         0        -1                                      -1


1
   18NOV97      15:49:25                                                                                PAGE    2


J3  VARIABLE CODES FOR SUMMARY PRINTOUT

    38        43         1         8        26         4        29        30        66        65
    42        17        33

J5  LPRNT    NUMSEC                    ********REQUESTED SECTION NUMBERS********

   -10       -10

NC     .018      .018      .018        .1        .3

X1   19600         2       800      1200
CI    1000   1269.70                    0         0      75.5
GR    1283       800      1283      1200

X1   19574         0                              26        26        26
CI    1000   1269.18

X1   19550         0                              24        24        24
CI    1000   1270.54

       DOWNSTREAM SIDE OF NEW BOX CULVERT AT STA 193+65.64, INVERT ELEV=1270.80
       NO DEBRIS ON INTERIOR CELL WALLS


NC                                          .3        .5
X1   19366         4    962.25   1037.75    184.36    184.36    184.36
CI            1270.80                                     .01
X3       10                                                                  1278.57   1278.57
GR   1284.9    962.25   1269.99    962.25   1271.61   1037.75    1284.9   1037.75


        UPSTREAM SIDE OF NEW BOX CULVERT AT STA 191+95.64, INVERT ELEV=1271.04
        GR STATIONS HAVE BEEN ADJUSTED TO PROVIDE SYMETRICAL OUTPUT ON PLOT2


SC    7.013        .1       3.1         0         8        10       170      12.3   1271.04   1270.80
X1    19196         4    962.25   1037.75       170       170       170
X2                            2   1279.04    1284.9
X3       10                                                                  1279.04   1279.04
BT        2       800    1284.9                1200    1284.9
GR   1284.9    962.25   1270.33    962.25   1271.75   1037.75    1284.9   1037.75

        PT IMMEDIATELY UPSTREAM OF CBC INLET, LOCATION OF 100FT CHANNEL
        TRANSITION INTO CBC - STA 190+95.64


1
   18NOV97      15:49:25                                                                                PAGE    3
```

```
X1     19096         2       923      1073       100       100       100
CI      1000   1271.18                  2         2       100
GR    1283.7       923    1283.7      1073

NC                                     .1        .3
X1     19000                                     96        96        96
CI              .0014
X2      5228

X1     18900                                    100       100       100
CI              .0014

X1     18800                                    100       100       100
CI              .0014

X1     18700                                    100       100       100
CI              .0014

X1     18600                                    100       100       100
CI              .0014

X1     18500                                    100       100       100
CI              .0014

X1     18400                                    100       100       100
CI              .0014

X1     18300                                    100       100       100
CI              .0014

X1     18200                                    100       100       100
CI              .0014

X1     18100                                    100       100       100
CI              .0014
X2      5207

1
   18NOV97      15:49:25                                                PAGE    4

X1     18000                                    100       100       100
CI              .0014

X1     17900                                    100       100       100
CI              .0014
      DOWNSTREAM END OF CHANNEL TRANSITION FROM 1:1 TO 2:1, STA 178+00.00

X1     17800                                    100       100       100
CI              .0014
      UPSTREAM END OF CHANNEL TRANSITION FROM 1:1 TO 2:1, STA 177+00.00
```

```
X1    17700          2        938       1060        100        100        100
CI               .0014                     1          1
GR   1284.1        938     1284.1       1060

X1    17600                                          100        100        100
CI               .0014

        SLOPE BREAK AT STA 175+77.40 TO MATCH EXTENDED EKA CHANNEL SLOPE
        TO CORRECT 0.74 FT DIFFERENCE IN CHANNEL HEIGHTS BETWEEN ADOT'S
        CHANNEL AND THE EKA CHANNEL.

X1    17577                                        22.60      22.60      22.60
CI            1273.30

X1    17500                                        77.40      77.40      77.40
CI               .00036

X1    17400                                          100        100        100
CI               .00036

X1    17300                                          100        100        100
CI               .00036

X1    17200                                          100        100        100
CI               .00036

X1    17100                                          100        100        100
CI               .00036

        DOWNSTREAM END OF 4:1 FLOW EXPANSION AT STA 170+00.
        X3 RECORD REFLECTS EFFECTIVE FLOW AREA DUE TO 4:1 EXPANSION OUR OF
        EKA CHANNEL.  EXP/CONTRACTION COEFFICIENT INCRESED TO .4/.6 TO SIMULATE
        TURBULENCE FROM N-S CHANNEL FLOWS AND TRANSITION FROM EKA GEOMETRY.

1
   18NOV97      15:49:25                                                    PAGE    5

NC                                      .4         .6
X1    17000                                          100        100        100
CI               .00036
X3                                                             1046

X1    16957                                           43         43         43
CI               .00036

        DOWNSTREAM END OF SOUTH SIDE-SLOPE TRANSITION FROM EKA 1.5:1 TO ADOT 1:1
        AT STATION 169+11.79.  X3 RECORD IS USED TO REFLECT EFFECTIVE FLOW ARE
        DUE TO 4:1 FLOW EXPANSION OUT OF EKA CHANNEL

X1    16911                                           46         46         46
CI               .00036
X3                                                             1028
        DOWNSTREAM END OF EKA CHANNEL GEOMETRY AT ADOT STATION 168+61.79.
        THIS LOCATION IS ALSO EKA STATION 10+45

        BEGIN SRP-MIC CHANNEL, DESIGNED BY EKA
        EKA CONTOUR MODEL
        ACOC/PARKING FLOODPLAIN
        MODEL RE-CREATED BY R. WARD FROM EVANS-KUHN HEC-2 OUTPUT DATED 23JAN92
        EVANS-KUHN MODEL BRIDGE1.HC2
        X3 RECORDS HAVE BEEN MODIFIED BY R. WARD TO ELIMINATE CANAL FLOW AREA.
        GR RECORD AT STATION 191 (XSEC 1000) WAS MODIFIED TO ELEV 1273.6 TO
        ALLOW CORRECT ELMIN TO BE PRINTED IN OUTPUT SUMMARY
```

APPENDIX 3: FINCH4BM.OUT HEC-2 MODEL

```
NC      .018      .025      .018
NH         4      .018        90      .045       147      .018       205      .025       340
X1      1045        19        90       140      49.2      49.2      49.2
X2      4585
X3                                     90                 340
GR    1286.8         0    1274.8        12    1274.8        82   1283.04        90    1283.0       104
GR    1283.0       110    1282.0       115    1281.0       117    1280.0       120      1280       130
GR    1281.0       132    1281.1       140    1281.1       145   1280.54       147   1273.56       161
GR    1273.6       191   1280.54       205   1283.88       218   1283.88       340

NC                                      .1        .3
NH         4      .018        90      .045       147      .018       205      .025       340
X1      1100        19        90       140        55        55        55
X3                                     90                 340
GR    1286.8         0    1274.8        12    1274.8        82   1283.13        90      1283        97
GR    1283.0       110      1282       113      1281       116      1280       118      1280       132
GR    1280.3       140    1280.7       146   1280.57       147   1273.57       161   1273.57       172
GR    1273.6       191   1280.57       205    1283.9       218    1283.9       340

1
    18NOV97      15:49:25                                                                    PAGE     6


NH         4      .018        90      .045       147      .018       205      .025       340
X1      1700        20        90       140       600       600       600
X2      4235
X3                                     90                 340
GR      1287         0      1275        12      1275        82   1284.56        90      1284       100
GR      1284       110      1283       113      1282       115      1281       117      1280       120
GR      1280       124      1281       128    1281.1       140    1281.1       146   1280.79       147
GR    1273.8       161   1273.79       191   1280.79       205      1284       218      1284       340

NH         4      .018        90      .045       147      .018       205      .025       340
X1      2200        19        90       140       500       500       500
X2      3719
X3                                     90                 340
GR    1287.2         0    1275.2        12    1275.2        82   1283.94        90   1283.94       110
GR      1283       115      1282       118      1281       120      1280       122      1280       126
GR      1281       130    1281.5       140    1281.5       145   1280.97       147   1273.97       161
GR      1274       191   1280.97       205    1284.1       218    1284.1       340

NH         4      .018        90      .045       147      .018       205      .025       340
X1      2300        18        90       140       100       100       100
X2      3656
X3                                     90                 340
GR    1286.7         0    1275.2      11.5    1275.2      81.5   1284.81        90   1284.81       110
GR      1284       113      1283       116      1282       118      1281       120      1281       130
GR      1282       140      1282       143      1281       147      1274       161      1274       191
GR      1281       205   1284.11       217   1284.11       340

NH         4      .018        90      .045       147      .018       205      .025       340
X1      2500        18        90       140       200       200       200
X3                                     90                 340
GR    1286.8         0    1275.3      11.5    1275.3      81.5   1284.95        90   1284.95       110
GR      1284       115      1283       117      1282       120      1281       122      1281       130
GR      1282       140      1282       143   1281.08       147   1274.08       161   1274.08       191
GR    1281.1       205   1284.13       217   1284.13       340

NH         4      .018        90      .045       147      .018       205      .025       340
X1      3000        20        90       140       500       500       500
X3                                     90                 340
GR      1287         0    1275.5      11.5    1275.5      81.5   1285.35        90      1285       100
GR      1285       110      1284       120      1283       121      1282       123      1281       124
GR      1281       126      1282       130      1283       140      1283     140.1   1281.26       147
GR    1274.3       161   1274.26       191   1281.26       205   1284.19       217   1284.19       340

NH         4      .018        90      .045       147      .018       205      .025       340
X1      3400        18        90       140       400       400       400
X3                                     90                 340
GR    1287.1         0    1275.6      11.5    1275.6      81.5    1284.9        90    1284.9       110
```

```
GR      1284       116      1283       120      1282       121      1281       122      1281       127
GR      1282       140      1282       145    1281.4       147    1274.4       161    1274.4       191
GR    1281.4       205   1284.33       217   1284.33       340

1
   18NOV97      15:49:25                                                                    PAGE     7


NH         4      .018        90      .045       147      .018       205      .025       340
X1      3500        16        90       140       100       100       100
X3                                     90                 340
GR    1287.2         0    1275.7      11.5    1275.7      81.5   1284.35        90   1284.35       110
GR      1284       112      1283       120      1282       121      1281       122      1281       140
GR    1281.4       147   1274.44       161   1274.44       191   1281.44       205   1284.39       217
GR    1284.4       340

NC      .018      .025      .045        .3        .5
NH         4      .018        90      .045       147      .018       205      .025       340
X1      4000        21        90       140       500       500       500
X3                                     90                 340
GR    1287.4         0    1275.9      11.5    1275.9      81.5   1283.73        90      1284       100
GR      1284       110      1283       112      1282       113      1281       114      1280       116
GR      1280       120      1281       125      1282       130      1282       140    1282.1       145
GR    1281.6       147   1274.62       161   1274.62       191   1281.62       205   1284.58       217
GR    1284.6       340

NH         4      .018        90      .045       147      .018       227      .025       340
X1      4106        21        90       140       106       106       106
X3                                     90                 340
GR    1287.4         0    1275.9      11.5    1275.9      81.5    1283.7        90      1284       111
GR      1283       112      1283       113      1281       114      1280       116      1280       120
GR      1281       125      1282       130    1282.1       140    1282.1       145   1281.66       147
GR    1274.7       161   1274.66       191   1276.66       195   1276.66       211    1284.6       227
GR    1284.6       340

1
   18NOV97      15:49:25                                                                    PAGE     8


                                                                  THIS RUN EXECUTED 18NOV97     15:49:25
*************************************
 HEC-2 WATER SURFACE PROFILES

 Version   4.6.2;  May 1991
*************************************

NOTE- ASTERISK (*) AT LEFT OF CROSS-SECTION NUMBER INDICATES MESSAGE IN SUMMARY OF ERRORS LIST

FOR EAST-WEST ADOT CHANN

SUMMARY PRINTOUT

      SECNO        Q      CWSEL     DEPTH       VCH    TOPWID     CLSTA       BW     CUMDS      VEXT     ELMIN    K*XNCH
K*CHSL

   19600.000  5792.00   1280.24     10.54      7.28     75.50   1000.00    75.50       .00       .00   1269.70     18.00
.00

   19574.000  5792.00   1280.35     11.17      6.87     75.50   1000.00    75.50     26.00       .99   1269.18     18.00   -
20.00

   19550.000  5792.00   1280.19      9.65      7.95     75.50   1000.00    75.50     50.00      1.87   1270.54     18.00
56.67
```

19366.000	5792.00	1280.29	10.30	8.09	75.50	.00	.01	234.36	1.87	1269.99	18.00	-
2.98												
19196.000	5792.00	1281.81	11.48	7.12	75.50	.00	.01	404.36	1.87	1270.33	18.00	
2.00												
* 19096.000	5792.00	1282.50	11.32	4.17	145.29	1000.00	100.00	504.36	6.51	1271.18	18.00	
8.50												
19000.000	5228.00	1282.56	11.25	3.79	144.99	1000.00	100.00	600.36	12.03	1271.31	18.00	
1.40												
18900.000	5228.00	1282.57	11.12	3.85	144.48	1000.00	100.00	700.36	17.72	1271.45	18.00	
1.40												
18800.000	5228.00	1282.58	10.98	3.90	143.95	1000.00	100.00	800.36	23.32	1271.59	18.00	
1.40												
18700.000	5228.00	1282.58	10.85	3.96	143.42	1000.00	100.00	900.36	28.85	1271.73	18.00	
1.40												
18600.000	5228.00	1282.59	10.72	4.02	142.89	1000.00	100.00	1000.36	34.31	1271.87	18.00	
1.40												
18500.000	5228.00	1282.60	10.59	4.07	142.36	1000.00	100.00	1100.36	39.68	1272.01	18.00	
1.40												
18400.000	5228.00	1282.61	10.45	4.13	141.84	1000.00	100.00	1200.36	44.98	1272.15	18.00	
1.40												
18300.000	5228.00	1282.62	10.32	4.20	141.31	1000.00	100.00	1300.36	50.21	1272.29	18.00	
1.40												
18200.000	5228.00	1282.63	10.19	4.26	140.79	1000.00	100.00	1400.36	55.36	1272.43	18.00	
1.40												
18100.000	5207.00	1282.64	10.06	4.31	140.27	1000.00	100.00	1500.36	60.43	1272.57	18.00	
1.40												
18000.000	5207.00	1282.65	9.93	4.37	139.76	1000.00	100.00	1600.36	65.43	1272.71	18.00	
1.40												

1

18NOV97 15:49:25 PAGE 9

SECNO	Q	CWSEL	DEPTH	VCH	TOPWID	CLSTA	BW	CUMDS	VEXT	ELMIN	K*XNCH	
K*CHSL												
17900.000	5207.00	1282.66	9.80	4.44	139.24	1000.00	100.00	1700.36	70.36	1272.85	18.00	
1.40												
17800.000	5207.00	1282.67	9.68	4.51	138.73	1000.00	100.00	1800.36	75.21	1272.99	18.00	
1.40												
17700.000	5207.00	1282.64	9.50	5.00	119.01	1000.00	100.00	1900.36	79.87	1273.13	18.00	
1.40												
17600.000	5207.00	1282.65	9.38	5.07	118.77	1000.00	100.00	2000.36	84.34	1273.27	18.00	
1.40												
17577.000	5207.00	1282.66	9.36	5.09	118.72	1000.00	100.00	2022.96	85.35	1273.30	18.00	
1.12												
17500.000	5207.00	1282.68	9.35	5.09	118.70	1000.00	100.00	2100.36	88.77	1273.33	18.00	
.36												
17400.000	5207.00	1282.70	9.33	5.10	118.67	1000.00	100.00	2200.36	93.18	1273.36	18.00	
.36												

	17300.000	5207.00	1282.72	9.32	5.11	118.64	1000.00	100.00	2300.36	97.58	1273.40	18.00
.36												
	17200.000	5207.00	1282.74	9.31	5.12	118.62	1000.00	100.00	2400.36	101.95	1273.44	18.00
.36												
	17100.000	5207.00	1282.77	9.29	5.13	118.59	1000.00	100.00	2500.36	106.32	1273.47	18.00
.36												
	17000.000	5207.00	1282.76	9.25	5.59	105.25	1000.00	100.00	2600.36	110.66	1273.51	18.00
.36												
	16957.000	5207.00	1282.89	9.37	5.08	118.74	1000.00	100.00	2643.36	112.52	1273.52	18.00
.36												
	16911.000	5207.00	1282.78	9.24	6.82	87.24	1000.00	100.00	2689.36	114.52	1273.54	18.00
.36												
*	1045.000	4585.00	1282.44	8.88	1.63	99.63	1000.00	-610.00	2738.56	115.58	1273.56	45.00
.41												
	1100.000	4585.00	1282.75	9.18	1.84	102.80	1000.00	-610.00	2793.56	115.58	1273.57	45.00
.18												
	1700.000	4235.00	1283.73	9.94	1.56	106.14	1000.00	-610.00	3393.56	115.58	1273.79	45.00
.37												
	2200.000	3719.00	1284.42	10.45	1.01	250.00	1000.00	-610.00	3893.56	115.58	1273.97	45.00
.36												
	2300.000	3656.00	1284.49	10.49	1.22	228.83	1000.00	-610.00	3993.56	115.58	1274.00	45.00
.30												
	2500.000	3656.00	1284.58	10.50	1.21	228.01	1000.00	-610.00	4193.56	115.58	1274.08	45.00
.40												
	3000.000	3656.00	1284.78	10.52	.98	227.74	1000.00	-610.00	4693.56	115.58	1274.26	45.00
.36												
	3400.000	3656.00	1284.96	10.56	.85	250.00	1000.00	-610.00	5093.56	115.58	1274.40	45.00
.35												
	3500.000	3656.00	1285.02	10.58	.99	250.00	1000.00	-610.00	5193.56	115.58	1274.44	45.00
.40												
	4000.000	3656.00	1285.21	10.59	1.16	250.00	1000.00	-610.00	5693.56	115.58	1274.62	45.00
.36												
	4106.000	3656.00	1285.44	10.78	.94	250.00	1000.00	-610.00	5799.56	115.58	1274.66	45.00
.38												

SUMMARY OF ERRORS AND SPECIAL NOTES

WARNING SECNO= 19096.000 PROFILE= 1 CONVEYANCE CHANGE OUTSIDE ACCEPTABLE RANGE

WARNING SECNO= 1045.000 PROFILE= 1 CONVEYANCE CHANGE OUTSIDE ACCEPTABLE RANGE

ADOT_N_S.OUT HEC-2 Model (Basis of Design)

Partial Hydraulic model for Pima Freeway Drainage System to assist in modeling the connection between the 96th Street Storm Drain outfall, the Pima Freeway Drainage System, and the Pima Outfall Channel.

```
1*****************************************
****************************************
 *  HEC-2 WATER SURFACE PROFILES          *                                  *  U.S. ARMY CORPS OF ENGINEERS
 *                                        *                                  *  HYDROLOGIC ENGINEERING CENTER
 *  Version   4.6.2;  May 1991            *                                  *  609 SECOND STREET, SUITE D
 *                                        *                                  *  DAVIS, CALIFORNIA 95616-4687
 *  RUN DATE    25NOV97    TIME   08:25:49 *                                  *          (916) 756-1104
 *****************************************
****************************************


                                    X     X  XXXXXXX   XXXXX              XXXXX
                                    X     X  X        X     X            X     X
                                    X     X  X        X                        X
                                    XXXXXXX  XXXX     X          XXXXX    XXXXX
                                    X     X  X        X                  X
                                    X     X  X        X     X            X
                                    X     X  XXXXXXX   XXXXX             XXXXXXX
1
  25NOV97      08:25:49                                                                          PAGE    1

                                                                THIS RUN EXECUTED 25NOV97    08:25:49
*************************************
 HEC-2 WATER SURFACE PROFILES

 Version   4.6.2;  May 1991
*************************************


       MODEL: ADOT_N_S.IN - USES FINCH4BM.OUT BACKWATER AT STA 169+57
                            TO DETERMINE CWSEL IN N-S FWY CHANNEL.


J1  ICHECK    INQ       NINV      IDIR      STRT      METRIC    HVINS     Q         WSEL      FQ

      0                                       0                           1050    1282.89

J2  NPROF     IPLOT     PRFVS     XSECV     XSECH     FN        ALLDC     IBW       CHNIM     ITRACE

     1         0        -1                                      -1

J3  VARIABLE CODES FOR SUMMARY PRINTOUT

    38        43         1         8        26         4        29        30        66        65
    42        17        33

J5  LPRNT     NUMSEC                     ********REQUESTED SECTION NUMBERS********

   -10       -10
```

```
NC      .018       .018       .018        .1         .3

        DOWNSTREAM END OF ADOT PIMA FWY N-S CHANNEL.  ADOT STA 169+57 = SRPMIC
        PIMA OUTFALL CHANNEL STA 170+00

X1    16957         2        983       1027
CI     1000   1274.16                    0          1        032
GR   1285.2       983     1284.7       1027

        DOWNSTREAM END OF BOTTOM WIDTH FLAIR.  PT CURVE 1.

X1    16944         2        983       1027         13         13         13
CI              .0031                    0          1         32
GR   1285.2       983     1285.1       1027

        UPSTREAM END OF BOTTOM WIDTH FLAIR. PC CURVE 1.

1
   25NOV97      08:25:49                                                    PAGE    2

X1    16881         2        990       1021         63         63         63
CI              .0031                    0          1         20
GR   1285.4       990     1285.4       1021

        DOWNSTREAM END OF SIDE SLOPE TRANSITION FROM 2:1 ON CHANNEL LEFT
        TO VERTICAL WALL, AND FROM 4:1 ON CHANNEL RIGHT TO 1:1 SIDE SLOPE.

X1    16850         2        990       1021         31         31         31
CI              .0031                    0          1         20
GR   1285.5       990     1285.4       1021

X1    16775         2        983       1030         75         75         75
CI              .0031                    1        2.5         20
GR   1283.9       983     1283.9       1030

        UPSTREAM END OF SIDE SLOPE TRANSITION.

X1    16700         2        975       1040         75         75         75
CI              .0031                    2          4         20
GR   1282.4       975     1282.4       1040

X1    16600         2        975       1040        100        100        100
CI              .0038                    2          4         20
GR   1282.8       975     1282.8       1040

X1    16500         2        975       1040        100        100        100
CI              .0038                    2          4         20
GR   1283.2       975     1283.2       1040

X1    16400         2        975       1040        100        100        100
CI              .0038                    2          4         20
GR   1283.6       975     1283.6       1040
1
   25NOV97      08:25:49                                                    PAGE    3

                                                   THIS RUN EXECUTED 25NOV97    08:25:49
**************************************
 HEC-2 WATER SURFACE PROFILES
```

APPENDIX 4: ADOT_N_S.OUT HEC-2 MODEL

Version 4.6.2; May 1991
****

NOTE- ASTERISK (*) AT LEFT OF CROSS-SECTION NUMBER INDICATES MESSAGE IN SUMMARY OF ERRORS LIST

SUMMARY PRINTOUT

SECNO	Q	CWSEL	DEPTH	VCH	TOPWID	CLSTA	BW	CUMDS	VEXT	ELMIN	K*XNCH	K*CHSL
16957.000	1050.00	1282.89	8.73	3.31	40.73	1000.00	32.00	.00	.00	1274.16	18.00	.00
16944.000	1050.00	1282.89	8.69	3.32	40.69	1000.00	32.00	13.00	.20	1274.20	18.00	3.10
* 16881.000	1050.00	1282.73	8.34	5.21	28.34	1000.00	20.00	76.00	1.00	1274.40	18.00	3.10
16850.000	1050.00	1282.74	8.25	5.28	28.25	1000.00	20.00	107.00	1.32	1274.49	18.00	3.10
* 16775.000	1050.00	1283.00	8.28	3.69	47.00	1000.00	20.00	182.00	2.16	1274.72	18.00	3.10
16700.000	1050.00	1283.10	8.15	2.91	65.00	1000.00	20.00	257.00	3.06	1274.96	18.00	3.10
16600.000	1050.00	1283.11	7.77	3.12	65.00	1000.00	20.00	357.00	4.23	1275.34	18.00	3.80
16500.000	1050.00	1283.11	7.39	3.36	64.39	1000.00	20.00	457.00	5.40	1275.72	18.00	3.80
16400.000	1050.00	1283.11	7.01	3.64	62.13	1000.00	20.00	557.00	6.58	1276.10	18.00	3.80

1
25NOV97 08:25:49 PAGE 4

SUMMARY OF ERRORS AND SPECIAL NOTES

WARNING SECNO= 16881.000 PROFILE= 1 CONVEYANCE CHANGE OUTSIDE ACCEPTABLE RANGE

WARNING SECNO= 16775.000 PROFILE= 1 CONVEYANCE CHANGE OUTSIDE ACCEPTABLE RANGE

HEC-1 ROUTING SCHEMATIC MAP

HAND CALCULATIONS

Rip Rap Design:

HCFCD (Jan 96)

SIZE 0.5 D max $2 \times d_{50}$ min $\frac{1}{2} d_{50}$

THICKNESS Greater of $1.0 \times d_{100}$ or $1.5 d_{50}$

$d_{50} = \frac{0.001 \; V_a^3}{D_{avg}^{0.5} \; K_1^{1.5}}$ V_a = avg velocity, D_{avg} = avg depth, K_1 = Coeff [illegible]

Check for $Q_{100\text{-yr}}$ & $Q_{2\text{-yr}}$

Q_{100}

$K_1 = \left[\frac{1 - \sin^2\theta}{\sin^2\phi}\right]^{0.5}$ Assume vertical angle, 2:1 SS $K_1 = 0.73$

$d_{50} = \frac{0.001 \; (7.82 \text{ fps})^3}{9.81 (2)^2 \; (0.73)^{1.5}} = 0.51 \text{ ft}$

SIZE = 1 ft to 0.25 ft
THICK =

SIZE 2" to 12"
THICK 2'-2"

Q_2

$K_1 = 0.73$ $Q_2 = 505$ cfs

$V = 4.14$ fps
$d = 1.62$ ft

$d_{50} = \frac{0.001 \; 4.14^3}{1.62 \; (0.73)^{1.5}} = 0.09 \text{ ft}$

USE 6" – 12" Ang. Grouted Riprap
Full penetration grout.
Thickness = 2 ft

Key requirements, outlined in ADOT'S Urban Hwys, Channel Lining Design Guidelines, Feb 89.

3 Designs
1) Expansion/Contraction joints with 0.0% to 0.5% reinforcement
2) Continuous reinforcement 0.3 to 0.4%, no joints

Contin reinforced, no joints will provide most cost effective & serviceable lining

0.3 % longitudinal reinforcement ie ACDC (CCE)
0.3 % transverse reinforcement - wide channels (>>70ft)

Bottom slab thickness
min 6" for vehicle access
min 6" for tied reinforcement
min 5" for flat mesh

Channel drains

ADOT recommends
- Continuous reinforcement, no expansion/contraction jts
- Construction joints @ end-of-day's pour and for breaks more than 45 min. long
- Grade 60 reinforcing steel
  Long. reinforcement $\rho = 0.30\%$
  Transverse " $\rho = 0.30\%$ >/ 90ft bottom width

  3" clearance to grade
- Min thickness for trap. channels

  Bottom Slab
  If Vmean (fps) ≤ 10 ; 5" (6" for maint.)

  Side Slopes
  If Vmean (fps) ≤ 15 ; 5"
- Side slope
  Not exceed 2:1
  1.5:1 is okay

  ~~Design~~ for Design 1:1 cross as retaining walls for lateral earth pressures
- Transverse cutoff/stiffening wall
  Between EKA & Prima Outfall

- Continuous 12" deep vertical cutoff walls with top elevation 6" below natural grade of top of side slopes 2 ft back. The 2 ft section shall have 2% slope toward channel.

- Bottom lining has cross slope to one side of 2% with a minimum of 6" of slope

- Access ramp u/s & D/s of box culverts. Slope in direction of flow

- When going from ⌣ to ⊔, use varying ht retaining wall, designed for lateral earth pressures

- Subgrade prep?
- Pressure relief?

22-141 50 SHEETS
22-142 100 SHEETS
22-144 200 SHEETS
AMPAD

Rip Rap Design:

MCFCD (Jan 96)

SIZE DIST max $2 \times d_{50}$ min $\frac{1}{2} d_{50}$

THICKNESS Greater of $1.0 \times d_{100}$ or $1.5 d_{50}$

$$d_{50} = \frac{0.001 \; V_a^3}{D_{avg}^{0.5} \; K_1^{1.5}}$$

V_a = avg velocity
D_{avg} = avg depth
K_1 = Bank Angle Correct factor

Check for $Q_{100\text{-}yr}$ & $Q_{2\text{-}yr}$

Q_{100}

$$K_1 = \left[\frac{1 - \sin^2\theta}{\sin^2\phi} \right]^{0.5}$$ Fig 6.9 very Angular, 2:1 SS $K_1 = 0.73$

$$d_{50} = \frac{0.001 \; (7.82 \text{ fps})^3}{9.81 \text{ ft}^{0.5} \; (0.73)^{1.5}} = 0.51 \text{ ft}$$

DIST = 1 ft to 0.25 ft
THICK =

SIZE 3" to 12"
THICK 2'-3"

Q_2

$K_1 = 0.73$ $Q_2 = 505$ cfs

$V = 4.14$ fps
$d = 1.62$ ft

$$d_{50} = \frac{0.001 \; 4.14^3}{1.62 \; (0.73)^{1.5}} = 0.09 \text{ ft}$$

USE 6" – 12" Ang. Grouted RipRap
Full penetration grout.
Thickness = 2 ft

Key requirements, outlined in ADOT'S Urban Hwys, Channel Lining Design Guidelines, Feb 89.

3 Designs
1) Expansion/Contraction joints with 0.0% to 0.5% reinforcement
2) Continuous reinforcement 0.3 to 0.4%, no joints

Contin reinforced, no joints will provide most cost effective & serviceable lining

0.3 % longitudinal reinforcement ie ACDC (COE)
0.3 % transverse reinforcement - wide channels (≥ 70ft)

Bottom slab thickness
min 6" for vehicle access
min 6" for tied reinforcement
min 5" for flat mesh

Channel drains

ADOT recommends
- Continuous reinforcement, no expansion/contraction jts
- Construction joints @ end-of-day's pour and for breaks more than 45 min. long

- Grade 60 reinforcing steel
  Long. reinforcement $\rho = 0.30\%$
  Transverse " $\rho = 0.30\%$ ≥ 90ft bottom width

  3" clearance to grade

- Min thickness for trap. channels

  Bottom Slab
  If Vmean (fps) ≤ 10 ; 5" (6" for maint.)

  Side Slopes
  If Vmean (fps) ≤ 15 ; 5"

- Side slope
  Not exceed 2:1
  1.5:1 is okay

  ~~Design for~~ Design 1:1 areas as retaining walls for lateral earth pressures

- Transverse cutoff/stiffening wall
  Between EKA & Prima Outfall

- Continuous 12" deep vertical cutoff walls with top elevation 6" below natural grade at top of side slopes 2ft back. The 2ft section shall have 2% slope toward channel.

- Bottom lining has cross slope to one side of 2% with a minimum of 6" of slope

- Access ramp u/s & D/s of box culvert. Slope in direction of flow

- when going from ⌣ to ⊔, use varying ht retaining wall, designed for lateral earth pressures

- Subgrade prep?
- Pressure relief?

22-141 50 SHEETS
22-142 100 SHEETS
22-144 200 SHEETS
AMPAD

Channel Lining Design

Steel

Grade 60

0.3% Longitudinal Reinforcement
0.3% Transverse "

3" Min Clearance to grade

Max bar size No 4, ≈ 6" lining

Max spacing 12" for No 4 E.W.

Concrete Lining

2% Cross Slope bottom

2% Cross Slope - Cut off walls

Transverse cut off wall

start and end of channel

Continuous 12" deep vert. cut off walls

Access Ramp

Soil Testing

Compaction verbiage: Compacted w/in the MC range of optimum to 3 percent above optimum and 95% Compaction of ASTM D-698 or AASHTO T-99

Dense to very dense, slightly moist, lightly cemented clayey sand silty/clayey sand

Med. Plasticity = low to med. expansion

Moist. Content and Density closely monitored during construction

c 0.3 kips/ft^2

ϕ = 34°

22-141 50 SHEETS
22-142 100 SHEETS
22-144 200 SHEETS
AMPAD

$$\rho = \frac{A_s}{bd} = 0.003 = \frac{A_s}{bd}$$

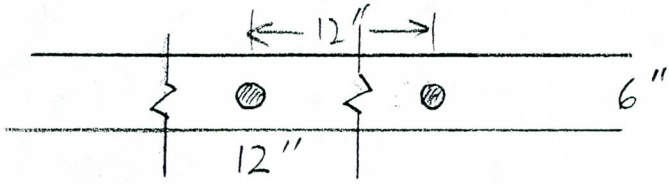

$$A_s = (0.003)\,6 \times 12 \text{ in}^2$$
$$= 0.216 \text{ in}^2$$

$$\text{No}4 = \frac{\pi}{4} D^2 = 0.196 \text{ in}^2$$
$$= 0.20 \text{ in}^2$$

22-141 50 SHEETS
22-142 100 SHEETS
22-144 200 SHEETS
AMPAD

Known: $Q_{100} = 5468$ cfs

$y_c = 5.46$ ft

$V_c = 13.26$ fps

$h_o = 1$ ft

Per Sec IX-A : Straight Drop Structure
HEC 14 Circular
Pg IX-A-1

$H = 10.63$ ft from HEC 2

$y_c = 5.46$ ft from CAHH for Q=5468 SS=0:1, BV=75.5ft, S=0.004

$y_3 = 2.15(5.46) = 11.74$ ft

$h_2 = -(h - y_o) = h_o - y_3 = 1 - 11.74 = -10.74$ ft

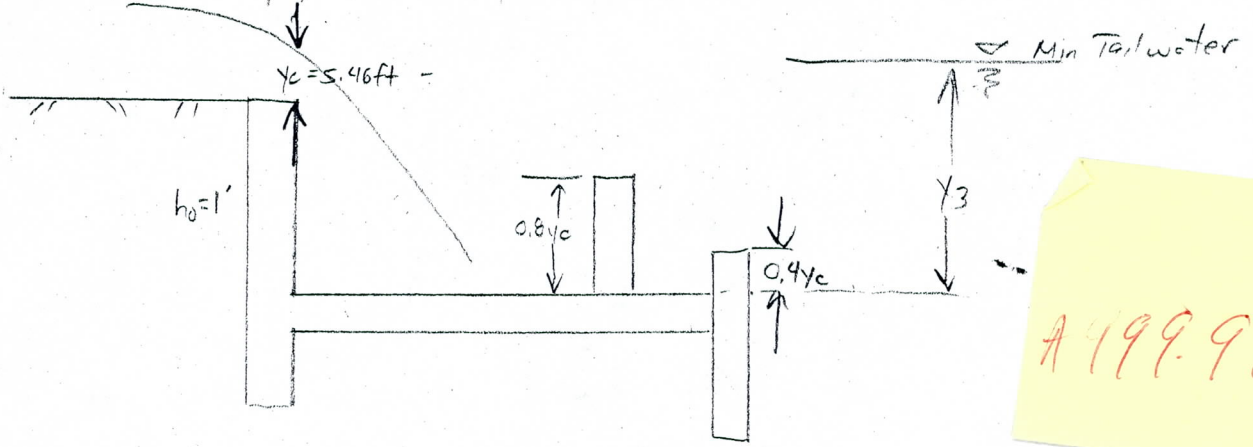

A 199.929

$h_o = -h_2 - y_3 = -10.74 - 11.74 = -1.0$ ft

$L_B = L_1 + L_2 + L_3 = L_1 + 2.55\, y_c = L_1 + 2.55(5.46) = L_1 + 8.01$ ft

Where, $L_1 = \frac{(L_t + L_s)}{2} = \frac{8.70 + 10.34}{2} = 9.52$

$L_t = \left(-0.406 + \sqrt{3.195 - 4.368 \frac{h_o}{y_c}}\right) y_c = 8.70$ ft
6.233

$L_t = 16.53$ ft

$L_s = 10.34$ ft

$L_2 = 0.8\, y_c = 0.8(5.46) = 4.37$ ft

Known: $Q_{100} = 5468$ cfs

$y_c = 5.46$ ft

$V_c = 13.26$ fps

$h_o = 1$ ft

Per Sec IX-A : Straight Drop Structure
HEC 14 Circular
Pg IX-A-1

$H = 10.63$ ft from HEC 2

$y_c = 5.46$ ft from CAHH for Q=5468 SS=0:1, BV=75.5ft, S=0.004

$y_3 = 2.15(5.46) = 11.74$ ft

$h_2 = -(h - y_o) = h_o - y_3 = 1 - 11.74 = -10.74$ ft

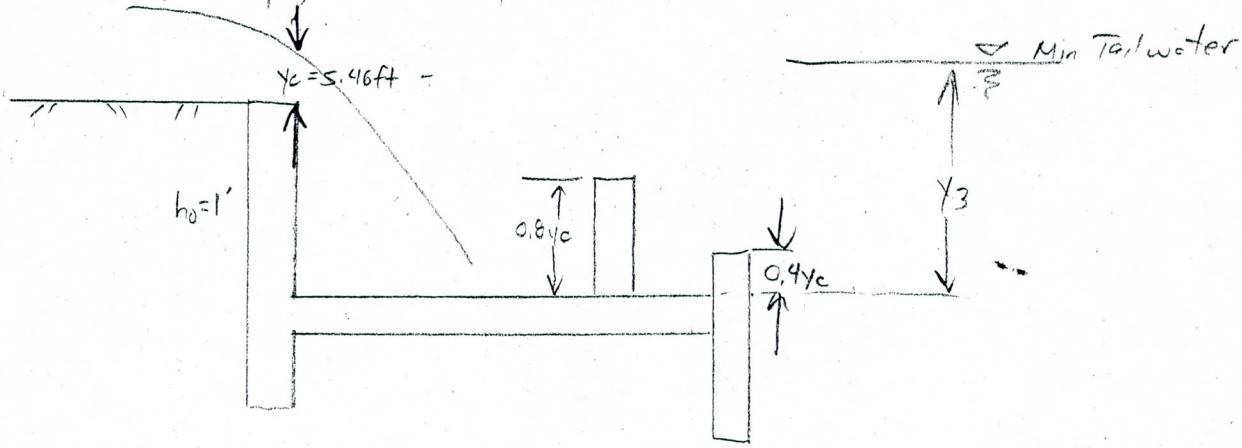

$h_o = -h_2 - y_3 = -10.74 - 11.74 = -1.0$ ft

$L_B = L_1 + L_2 + L_3 = L_1 + 2.55\, y_c = L_1 + 2.55(5.46) = L_1 + 8.01$ ft

where, $L_1 = \frac{(L_f + L_s)}{2} = \frac{8.70 + 10.34}{2} = 9.52$

$L_f = \left(-0.406 + \sqrt{3.195 - 4.368 \frac{h_o}{y_c}}\right) y_c = 8.70$ ft
6.233

$L_t = 16.53$ ft

$L_s = 10.34$ ft

$L_2 = 0.8\, y_c = 0.8(5.46) = 4.37$ ft

$L_3 > 1.75\ y_c = 9.56\,ft$

$L_B = 9.52 + 4.37 + 9.56 = 23.4 = 24\,ft$

Floor Blocks:

$H = 0.8 y_c = 0.8(5.46) = 4.37\,ft = 4'\text{-}4''$

Width & Spacing $= 0.4\ y_c = 2.2\,ft \pm 0.82\,ft$

Square in plan

50% to 60% of basin width filled

End Sill:

$0.4\ y_c = 2.2\,ft$

Sidewall height

$0.85 y_c = 4.6\,ft$, $45°$, $1:1$ $\quad H = 4.6 + 11.74 = 16.4'$

$+ Y_3$

Rip Rap

$3 * y_c = 16.4\,ft \Rightarrow 20\,ft$

$W = 75.5\,ft$

2'2"

AMPAD 22-141 50 SHEETS 22-142 100 SHEETS 22-144 200 SHEETS

1********** ********** SECTION ********** **********
********** Version 4.12 ********** **********
********** COMPUTER-AIDED HYDROLOGY & HYDRAULICS **********

PROJECT: Pima Outfall Channel
User: Salt River Pima - Maricopa Indian Community
Date: 01/21/1997 Tuesday
Time: 13:25:35
Output: PIMA_OUT

Q cfs	SIDE SLOPE LEFT h/v	SIDE SLOPE RIGHT h/v	BOTTOM WIDTH ft	BOTTOM SLOPE ft/ft	n dim	CRITICAL / NORMAL FLOW DEPTH ft	CRITICAL / NORMAL FLOW VELOCITY fps	CRITICAL / NORMAL FLOW AREA sf	CRITICAL / NORMAL FROUDE NUMBER dim	FREE-BOARD ft	TOP WIDTH @ FRBD ft
5468	.00	.00	75.50	.0014	.0130	5.46	13.26	412.3	1.000	USER	
						5.78	12.53	436.5	.918		

1

Chanel Excavation

	Vol. 1	Vol. 2	Vol. 3	Vol. 4	Vol. 5	Vol. 6	Vol. 7	Vol. 8	Vol. 9	Vol. 10	Vol. 11
From Sta.	16861	17000	17100	17200	17300	17400	17500	17600	17700	17800	17900
Area	294.9	981	978.78	978.91	1050.4	521.35	223.96	185.51	190.71	247.79	255.01
To Sta.	17000	17100	17200	17300	17400	17500	17600	17700	17800	17900	18000
Area	336.03	978.78	978.91	1050.4	521.35	223.96	185.51	190.71	247.79	255.01	295.49
Δ Length	139	100	100	100	100	100	100	100	100	100	100
Cubic Feet	43850	97989	97885	101466	78588	37266	20474	18811	21925	25140	27525

	Vol. 12	Vol. 13	Vol. 14	Vol. 15	Vol. 16	Vol. 17	Vol. 18	Vol. 19	Vol. 20	Vol. 21	Vol. 22
From Sta.	18000	18100	18200	18300	18400	18500	18600	18700	18800	18900	19000
Area	295.49	349.96	443.33	406.83	428.44	466.03	503.74	534.08	602.13	1101.1	1225
To Sta.	18100	18200	18300	18400	18500	18600	18700	18800	18900	19000	19100
Area	349.96	443.33	406.83	428.44	466.03	503.74	534.08	602.13	1101.1	1225	1130.9
Δ Length	100	100	100	100	100	100	100	100	100	100	100
Cubic Feet	32273	39665	42508	41764	44724	48489	51891	56811	85162	116307	117797

	Vol. 23	Vol. 24	Vol. 25	Vol. 26
From Sta.	19100	19365	16700	16850
Area	1130.9	1048.2	315.49	190.01
To Sta.	19200	19550	16850	16957
Area	1010.3	895.51	190.01	272.79
Δ Length	100	185	150	107.3
Cubic Feet	107061	179797	37913	24829
			ADOT	ADOT

Total C.F.	1,597,903.23
Total C.Y.	59,181.60

206

Grader Ditch Excavation

	Vol. 1	Vol. 2	Vol. 3	Vol. 4	Vol. 5	Vol. 6	Vol. 7	Vol. 8	Vol. 9	Vol. 10	Vol. 11
From Sta.	17300	17400	17500	17600	17700	17800	17900	18000	18100	18200	18300
Area	51.42	12.9	12.21	15.16	10.56	6.09	8.07	7.88	7.51	4	6
To Sta.	17400	17500	17600	17700	17800	17900	18000	18100	18200	18300	18400
Area	12.9	12.21	15.16	10.56	6.09	8.07	7.88	7.51	4	6	3.83
Δ Length	100	100	100	100	100	100	100	100	100	100	100
Cubic Feet	3216	1255.5	1368.5	1286	832.5	708	797.5	769.5	575.5	500	491.5

	Vol. 12	Vol. 13	Vol. 14	Vol. 15
From Sta.	18800	18900	19000	19100
Area	6.05	7.14	12.62	25.68
To Sta.	18900	19000	19100	19200
Area	7.14	12.62	25.68	25.17
Δ Length	100	100	100	100
Cubic Feet	659.5	988	1915	2542.5

Total C.F.	17,905.50
Total C.Y.	663.17

Fill Material

	Vol. 1	Vol. 2	Vol. 3	Vol. 4	Vol. 5	Vol. 6	Vol. 7	Vol. 8	Vol. 9	Vol. 10	Vol. 11	Vol. 12
From Sta.	16900	17000	17100	17200	17300	17400	17500	17600	17700	17800	17900	18000
Left Area	96.44	43.83	49.74	64.24	35.86	40.7	62.64	66.9	48.9	112.98	71.66	46.94
Right Area	84.64	48.74	23.59	44.58	34.58	113.98	120.29	164.6	169.04	188.75	151.89	115.35
To Sta.	17000	17100	17200	17300	17400	17500	17600	17700	17800	17900	18000	18100
Left Area	43.83	49.74	64.24	35.86	40.7	62.64	66.9	48.9	112.98	71.66	46.94	57.22
Right Area	234.95	23.59	44.58	34.58	113.98	120.29	164.6	169.04	188.75	151.89	115.35	118.21
Δ Length	100	100	100	100	100	100	100	100	100	100	100	100
Left C.F.	7013.5	4678.5	5699	5005	3828	5167	6477	5790	8094	9232	5930	5208
Right C.F.	15980	3616.5	3408.5	3958	7428	11714	14245	16682	17890	17032	13362	11678

	Vol. 13	Vol. 14	Vol. 15	Vol. 16	Vol. 17	Vol. 18	Vol. 19	Vol. 20	Vol. 21	Vol. 22	Vol. 23
From Sta.	18100	18200	18300	18400	18500	18600	18700	18800	18900	19000	19100
Left Area	57.22	76.74	110.73	70.31	43.16	41.77	58.63	64.6	41.79	33.85	23.89
Right Area	118.21	113.67	35.41	96.7	88.71	77.39	69.28	80.25	71.41	79.76	66.34
To Sta.	18200	18300	18400	18500	18600	18700	18800	18900	19000	19100	19200
Left Area	76.74	110.73	70.31	43.16	41.77	58.63	64.6	41.79	33.85	23.89	23.89
Right Area	113.67	35.41	96.7	88.71	77.39	69.28	80.25	71.41	79.76	66.34	66.34
Δ Length	100	100	100	100	100	100	100	100	100	100	100
Left C.F.	6698	9373.5	9052	5673.5	4246.5	5020	6161.5	5319.5	3782	2887	2389
Right C.F.	11594	7454	6605.5	9270.5	8305	7333.5	7476.5	7583	7558.5	7305	6634

Total C.F.	224,111.50
Total C.Y.	8,300.43

Structural Excavation

	Vol. 1	Vol. 2L	Vol. 2R	V0l. 3	Vol. 4R	V0l. 4L	Vol. 4R
From Sta.	16861	19100	19100	19200	19366	19366	16700
Area	141.56	47.89	35.53	1010.3	155.97	154.99	72.45
To Sta.	17000	19200	19200	19366	19550	19550	16957
Area	140.87	47.89	35.53	1255.9	135.05	143.02	72.45
Δ Length	139	100	100	165.64	184.4	184.4	257.3
Cubic Feet	19629	4789	3553	187683	26832	27477	18641

Total C.F.	288,603.38
Total C.Y.	10,689.01

Structural BackFill

	Vol. 1	Vol. 2	Vol. 3	Vol. 4	Vol. 5	Vol. 6	Vol. 7	Vol. 8
From Sta.	16861	19100	19100	19200	19366	19366	16700	16850
Area	68.72	24.64	23.32	29.97	115.26	107.73	62.27	62.27
To Sta.	17000	19200	19200	19366	19550	19550	16850	16957
Area	78.58	24.64	23.32	29.97	107.78	102.22	62.27	72.45
Δ Length	139	100	100	165.6	184.4	184.4	150	107.3
Cubic Feet	10237	2464	2332	4963	20564	19357	9340.5	7227.7

Total C.F.	76,486.29
Total C.Y.	2,832.83

Tota Cut	**59,844.77**
Tota Fill	**21,822.27**
Difference	**38,022.50**

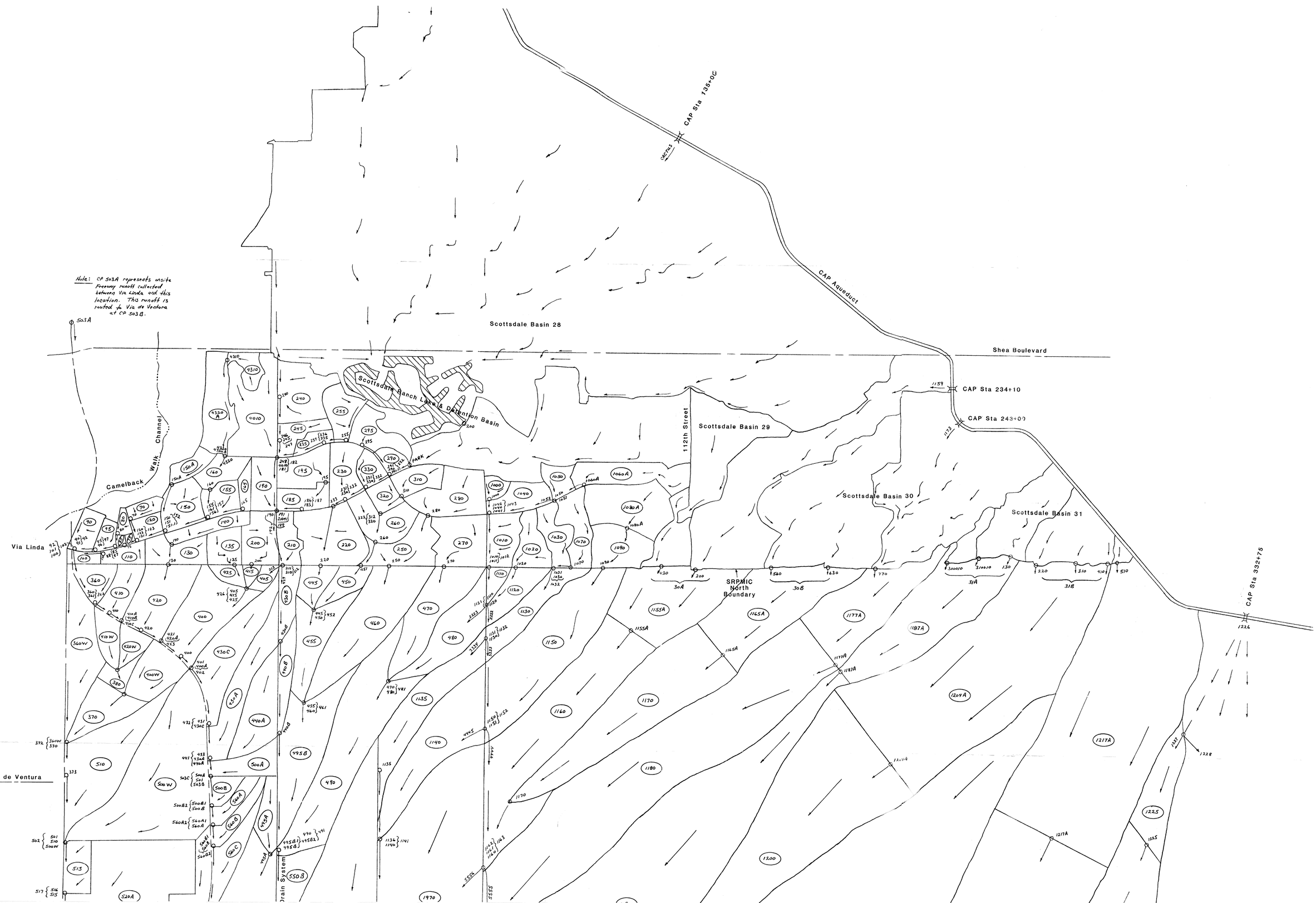
Note: CP 503A represents onsite Freeway runoff collected between Via Linda and this location. This runoff is routed to Via de Ventura at CP 503B.
503A
CAP Sta 135+00
CAP Aqueduct
Scottsdale Basin 28
Shea Boulevard
Scottsdale Ranch Lake & Detention Basin
112th Street
Scottsdale Basin 29
CAP Sta 234+10
CAP Sta 243+00
Scottsdale Basin 30
Scottsdale Basin 31
Camelback
Walk Channel
Via Linda
SRPMIC North Boundary
30A
30B
31A
31B
CAP Sta 332+75
Via de Ventura
Drain System

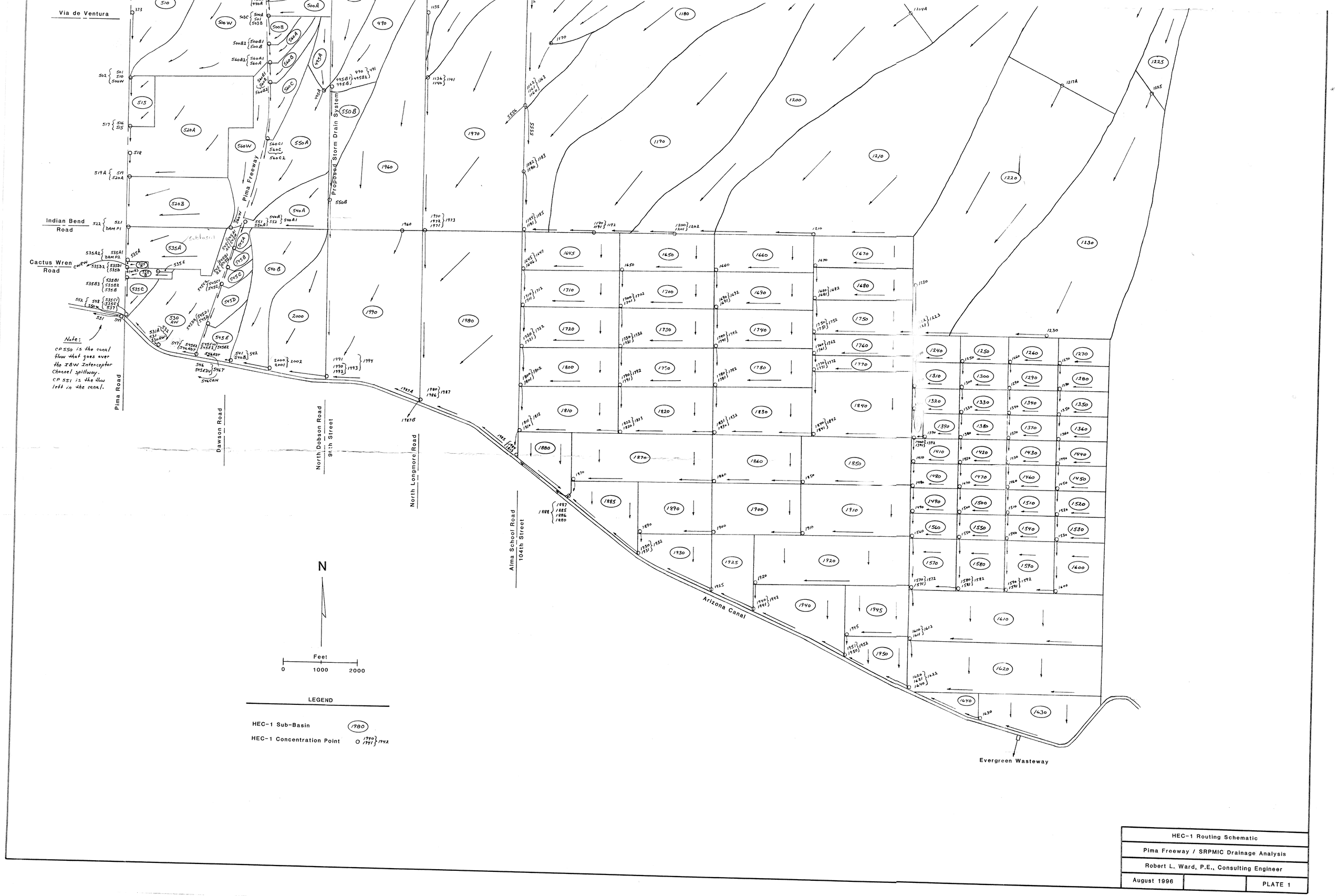

HEC-1 Routing Schematic		
Pima Freeway / SRPMIC Drainage Analysis		
Robert L. Ward, P.E., Consulting Engineer		
August 1996		PLATE 1