Property of
Flood Control District of MC Library
Please Return to
2801 W. Durango
Phoenix, AZ 85009

DRAINAGE DESIGN REPORT

CHOLLA ROAD + 84th STREET

STORM DRAIN AND DETENTION BASIN

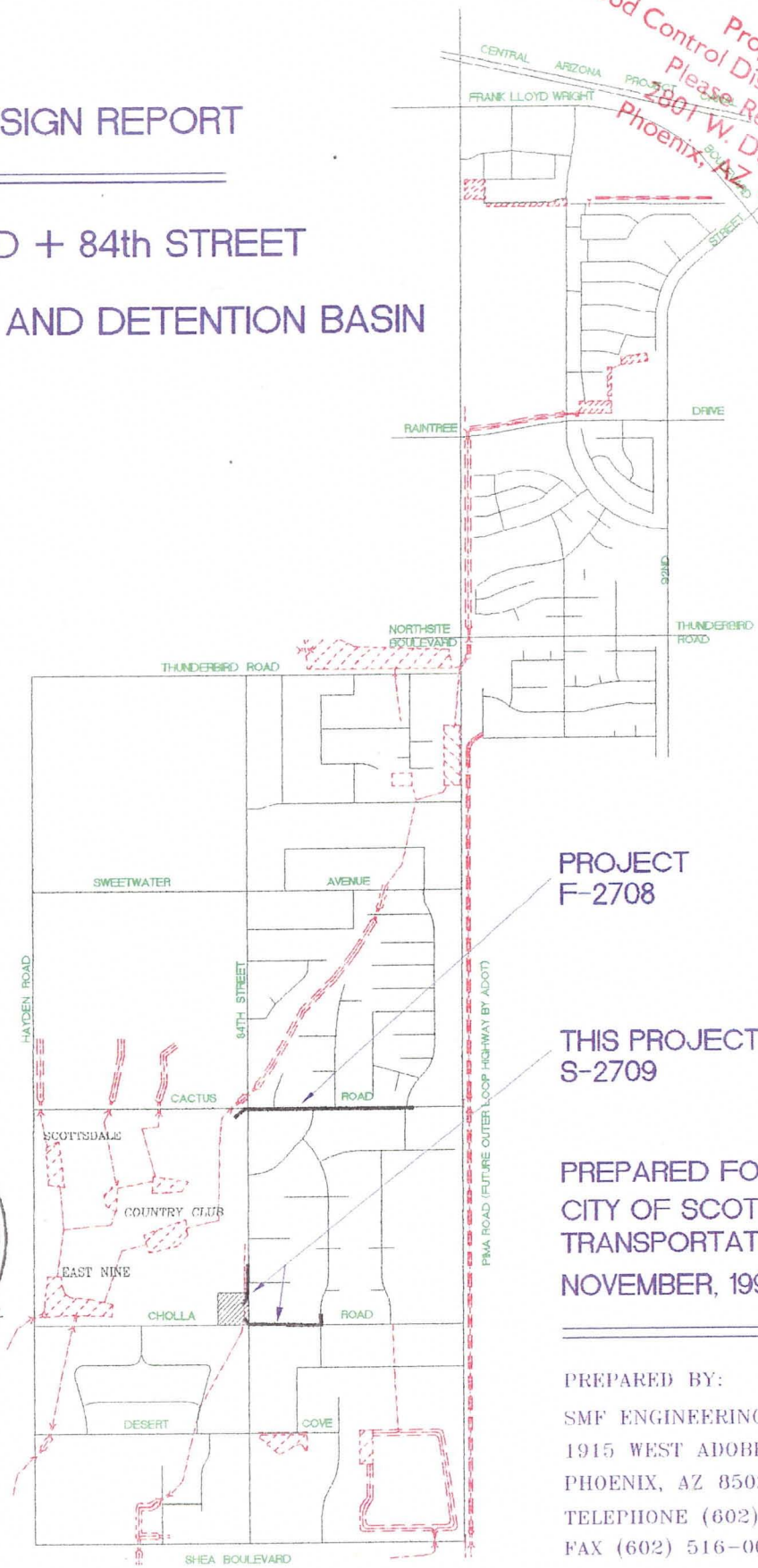

PROJECT
F-2708

THIS PROJECT
S-2709

REGISTERED PROFESSIONAL ENGINEER (CIVIL)
CERTIFICATE NO.
7561
CHARLES DEE
SCOTT
Date Signed 12/9/96
ARIZONA, U.S.A.

PREPARED FOR:
CITY OF SCOTTSDALE
TRANSPORTATION DEPARTMENT
NOVEMBER, 1996

PREPARED BY:
SMF ENGINEERING CORPORATION
1915 WEST ADOBE DRIVE, SUITE D
PHOENIX, AZ 85027
TELEPHONE (602) 516-0605
FAX (602) 516-0068

Table of Contents

1	NARRATIVE SUMMARY
2	"MAPS" EXISTING DRAINAGE FACILITIES DRAINAGE AREAS PROPOSED IMPROVEMENTS
3	STORM DRAIN FACILITIES DESIGN CRITERIA
4	HEC-1 MODEL INPUT/OUTPUT TR-55 FOR T_C
5	STORM DRAIN TRUNK HYDRAULIC GRADIENT
6	CATCH BASIN CAPACITIES SPREAD & DEPTH HEC-12
7	CATCH BASIN CONNECTOR PIPES HYDRAULIC GRADIENT
8	OUTLET WATER SURFACE CHOLLA WASH/ OUTLET PIPES

AVERY® READY INDEX™ INDEXING SYSTEM

I DESCRIPTION OF PROJECT

A. HYDROLOGY 1
B. DESIGN STANDARDS AND CRITERIA 2
C. DRAINAGE BASINS AND DIVERSION CONCEPTS 2

II MAJOR DESIGN AND EXISTING COMPONENTS

A. ADOT'S OUTER LOOP (PIMA ROAD) CHANNEL 4
B. CACTUS ROAD STORM DRAIN 5
C. EIGHTY-FOURTH STREET 6
D. CHOLLA ROAD STORM DRAIN & 84th STREET STORM DRAIN 6

TABLES

TABLE 1.1 - THUNDERBIRD CHANNEL / 84TH STREET BOX CULVERT 5
TABLE 2.1 - CHOLLA WASH SOUTH OF CHOLLA ROAD 100-YR RUNOFF 6

SECTION 1

November, 1996

I DESCRIPTION OF PROJECT

A. HYDROLOGY

Master Drainage Plan... The Master Drainage Plan[1] sets forth the various proposed major drainage components for both the Thunderbird watershed and the Cholla watershed. The Cholla Road Storm Drain, 84th Street Storm Drain and Cholla Detention Basin are three of the proposed major drainage components. The Cholla Storm Drain is a diversion component; that is, it diverts runoff discharges into Cholla Wash. The storm drains outfall into Cholla Detention Basin which outfalls into Cholla Wash. Cholla Wash is impacted by the additional flow which will be diverted into the channel at 84th Street and Cholla Road. Therefore, the proposed Cholla Detention Basin must be constructed and in service prior to placing the Cholla Road Storm Drain and 84th Street Storm Drain into service.

Outer Loop Highway... ADOT's future, depressed, Outer Loop Highway corridor will follow the Pima Road alignment. ADOT's General Plan includes a channel to be constructed on the east side of the Outer Loop Highway. For future conditions, this ADOT channel will obviate the proposed, interim Pima/Sweetwater Detention Basin (see Proposed Improvements Map, Section II, page 3).

Design Periods... The Concept Design Report[2] considers three distinct periods, which are:

1. **Existing Conditions Period** - the period prior to construction of the COS proposed drainage improvements.

2. **Interim Conditions Period** - the period subsequent to construction of the COS proposed drainage improvement but prior to ADOT's Outer Loop Highway construction. COS proposed Drainage Improvements include all features shown on Section II, page 3 except the Desert Cove Storm Drain.

3. **Future Conditions Period** - the period subsequent to construction of both the COS's proposed drainage improvements including the Desert Cove Storm Drain and ADOT's Outer Loop Highway.

---

[1] SMF Engineering Corporation, Amendment to Volume II of II, Concept Design Report, March, 1995

[2] ibid.

Existing Conditions Hydrology... The Cholla Wash Basin hydrology for existing conditions is presented in "Volume I of II - EXISTING CONDITIONS HYDROLOGY REPORT" for this project. Volume I describes the Cholla sub-basins and existing drainage facilities in the study area; defines the study area; describes drainage patterns; and describes the source of data, criteria, and methodology. Runoff discharge values were calculated at numerous concentration points for the 2, 5, 10, 25, 50, and 100-year return frequency storms with a 6-hour duration. Concentration point numbers are shown on the Volume I Drainage Area Map and Table 4.6 lists the corresponding discharge values in cfs. The map and table of Volume I have been revised to include the Thunderbird Wash/sub-basins and are presented in the Master Drainage Plan[3].

B. DESIGN STANDARDS AND CRITERIA

The design standards used for this project are City of Scottsdale Design Procedures and Criteria; Section 2 - Drainage Report Presentation; Section 2.2 - Hydrology (Revised March, 1994); Section 3 - Design of Facilities to Manage Storm Water Runoff; the City of Scottsdale code requirements; and the Design Criteria Summary prepared by SMF Engineering Corporation (included herein).

C. DRAINAGE BASINS AND DIVERSION CONCEPTS

Study Area... The study area is shown on the "Drainage Area Map" (Section II, pages 4 & 5). It consists of the Thunderbird Wash and Cholla Wash tributary sub-basins. The location of Thunderbird Wash and Cholla Wash are shown on the "Existing Drainage Facilities Map" (Section II, pages 1 & 2). Generally, the study area north of Thunderbird Road is located between Pima Road and 92nd Street; it is bordered on the north by the CAP canal. Between Shea Boulevard and Thunderbird Road, the study area is located between 82nd Street and Pima Road.

Planned Diversion Concept... If a planned diversion were to be considered, sufficient design/modeling would need to be performed to demonstrate that the affected, downstream areas are provided with at least the same level of flood protection as existed prior to the diversion.

Drainage Basin Overspillage... The study area is separated into two parts by Thunderbird channel; Cholla Basin lies south of it and Thunderbird Basin is located on the north side of it. Observation of storm events and calculations both show that overspillage from Thunderbird Basin occurs for existing conditions, during larger storms at:

---

[3] ibid.

1. The Cactus Road / 84th Street existing box culverts (overspillage into the Cholla Drainage Basin)

2. Thunderbird Channel on the east side of Pima Road (overspillage into the Pima Road Channel)

3. Thunderbird channel on the west side of Pima Road (overspillage into the Cholla Drainage Basin)

The HEC-1 models developed in this final design study account for the overspillage at those three locations.

Pima Detention Basin/ADOT's Outer Loop Channel... Pima Detention Basin was a planned, temporary, interim period facility but has been obviated by ADOT's future Outer Loop Channel. The location is shown on the Proposed Improvements Map (Section II, page 3). A part of the runoff discharge from the areas north of Thunderbird Road (700, 800 & 900 series sub-basins) would have been detained in the Pima Detention Basin, thus reducing the downstream discharge in Thunderbird Wash. However, this detention basin will <u>not</u> be constructed and the future ADOT Outer Loop Channel will divert that upstream flow from Thunderbird Channel/Wash.

The area north of Thunderbird Road is relatively large (435 acres) and is expected to contribute a significant discharge, for existing conditions, to the downstream Scottsdale Country Club (SCC) East Nine drainage facilities. The peak discharges and total volume of flow which reach those facilities will be reduced by the ADOT Outer Loop Channel diversion.

Cactus Road Diversion Component... For existing conditions, Cactus Road from 84th Street to Pima Road collects flows from those Cholla basin sub-areas north of Cactus Road and diverts those flows to 84th Street where it turns south and continues in 84th Street to Cholla Wash at Cortez Street. The hydraulic capacity of Cholla Wash is considerably less than the runoff flows which enter into it. Also, the surface runoff flows experienced in Cactus Road and 84th Street are considerably greater than the street's water conveyance capacity.

Therefore, a new storm sewer pipe is proposed in Cactus Road from about 87th Street to 84th Street. The storm sewer pipe outfalls into the SCC East Nine drainage facilities at the existing box culvert just west of 84th Street. The proposed ADOT Channel diversion will reduce the flows reaching the outfall facilities at the SCC East Nine from Thunderbird Wash, and the Cactus Road storm sewer will increase those flows. Final design of the Cactus Road storm sewer includes modeling the SCC East Nine drainage facilities to ensure a proper balance with the Pima Detention Basin. This balance ultimately resulted in improved conditions at the SCC East Nine.

Scottsdale Country Club East Nine... For both the interim and future periods, post-construction impacts to this area will be beneficial. Essentially, runoff discharges flowing into the SCC East Nine drainage facilities will be reduced. The purpose of the proposed Pima Detention Basin is to reduce flows in Thunderbird channel, reduce the storage requirement for Lake 5 of the SCC East Nine, and reduce the outflow from Lake 2 of the SCC East Nine into those communities downstream.

II MAJOR DESIGN AND EXISTING COMPONENTS

A. ADOT'S OUTER LOOP (PIMA ROAD) CHANNEL (See Map, Section II, page 1)

Design Period... "ADOT's future depressed Outer Loop Highway will follow the Pima Road alignment. ADOT's General Plan includes a channel to be constructed on the east side of the Outer Loop Highway."...[4] The Pima Detention Basin initially planned for the interim period by the City of Scottsdale will be replaced by ADOT's Outer Loop Highway channel.

Tributary Drainage Areas... The tributary area (0.68 sq mi) is bound by CAP canal on the north, Thunderbird Road on the south, Pima Road on the west and 92nd Street on the east. The area designation numbers are of the 700, 800, and 900 series. For existing conditions, runoff discharges from this area cross under Pima Road (east to west) in a box culvert located just south of Thunderbird Road; the flows continue south along the west side of Pima Road in Thunderbird wash.

Functional Parameters... ADOT's Channel will divert flows thus reducing the flow in Thunderbird Wash. The primary existing system components which this channel will have an impact on are Thunderbird channel, Cactus / 84th Street box culverts, the SCC East Nine east fairway channel, and the SCC East Nine Lake 5.

Cactus / 84th Street Box Culverts... (See existing "Drainage Facilities Map", Section II, pages 1 and 2). An existing 2-barrel 10' x 2' box culvert is located in Thunderbird channel, under 84th Street, just north of Cactus Road; also, an existing 2-barrel 10' x 2' box culvert is located in Thunderbird channel, under Cactus Road, just west of 84th Street. For existing conditions the capacity of these box culverts is insufficient. However, the box culvert capacity is sufficient for interim and future conditions. Under future conditions, runoff discharges from that part of Thunderbird drainage basin, which lies east of Pima Road, will be intercepted by the Outer Loop Highway channel, thus reducing downstream flows in Thunderbird channel.

---

[4] SMF Engineering Corporation, Hydrology Report 84th Street and Cholla Road Roadway Improvements and 83rd Place and Shea Boulevard Neighborhood Drainage Improvements, Volume I - Existing Conditions (June 21, 1993), section 3, p. 2.

However, some minor catchment facility improvement is recommended in 84th Street at the box culvert to direct street flows from north of Cactus Road into Thunderbird wash.

The following table presents a comparison of box culvert capacity versus expected peak runoff discharges in Thunderbird channel for each of the three periods.

TABLE 1.1	THUNDERBIRD CHANNEL / 84TH STREET BOX CULVERT	
Design Period	**Box Culvert Capacity (CFS)**	**100-Year Event Runoff (CFS)**
Existing Conditions	400	839
Interim Conditions	400	324
Future Conditions	400	307

Why the [illegible] Is there a DB

B. CACTUS ROAD STORM DRAIN (See Map, Section II, page 3)

Purpose... The purpose of the Cactus Road planned diversion component (storm drain) is to: 1) divert runoff discharges from Cactus Road and 84th Street into the SCC East Nine drainage system (Thunderbird watershed). These flows enter Cholla Wash at about Cortez Street for existing conditions; 2) lower the water surface elevation in Cactus Road to eliminate road closures; and 3) lower the 100-year storm water surface elevation to eliminate flooding the house floor at the southeast corner of Cactus Road and 84th Street.

Existing Conditions... The Cactus Road roadway from Pima Road to 84th Street is improved with asphalt pavement, vertical curb, gutter and sidewalk. It carries surface flows from Pima Road to 84th Street. A small culvert is positioned on the west side of the Pima Road intersection to carry flows under Cactus Road; but, a portion of the larger storm flows are diverted west along Cactus Road. Those runoff discharges north of Cactus Road flow generally south/southwest; Cactus Road intercepts the flow and diverts the discharge to 84th Street where it turns south. The HEC-2 computer model for existing conditions demonstrates that for the 100-year return frequency storm, flows are not retained within the ROW and the depth of flow exceeds eight inches. Also, at the southeast corner of Cactus Road and 84th Street, the 100-year storm water surface elevation (1395.44) exceeds the floor elevation (1395.28).

Proposed Improvements... The Proposed Improvement Plan includes a storm sewer in Cactus Road to intercept the 50-year return frequency discharge and carry it to the SCC East Nine.

However, the 100-year event level of protection is desired; the difference between the 50-year and the 100-year events will surface flow in Cactus Road, and will be intercepted at 84th Street with catch basins. The 8'x4' box section storm drain outfalls into the SCC East Fairway channel.

C. EIGHTY-FOURTH STREET (See Map, Section II, page 3)

Existing Box Culvert... The existing box culvert located under 84th Street just north of Cactus Road in Thunderbird Wash has been observed to overspill and combine with the Cactus Road surface flow. Also, calculations confirm this. For existing conditions, that flow combines with the Cactus Road flow and continues south in 84th Street to Cholla Wash near Cortez Street.

The Proposed Improvement Plan HEC-1 model includes the Pima Detention Basin which eliminates overspillage into Cactus Road and 84th Street. With the addition of ADOT's Outer Loop channel it will improve even further.

D. CHOLLA ROAD STORM DRAIN & 84th STREET STORM DRAIN

Proposed Facility... This drainage facility consists of a special catchment design in 85th Street just north of Cholla Road, a new storm sewer pipe from 85th Street to the Cholla Detention Basin at 84th Street, and a new storm sewer pipe in 84th Street, north of Cholla Road, which outfalls into Cholla Detention Basin.

Planned Diversion Concept... Existing runoff discharges flowing south in 85th Street pass through the Cholla Road intersection and continue south in 85th Street and 84th Place to Desert Cove where it turns west to 84th Street. These flows will be intercepted by the Cholla Road storm drain at the 85th Street / Cholla Road intersection and diverted west along Cholla Road to the Cholla Detention Basin at 84th Street.

For the selected plan which includes this diversion component, it must be demonstrated that the affected community downstream of the proposed diversion is provided a better level of flood protection than existed prior to the diversion. This has been demonstrated as shown in the following Table 2.1.

TABLE 2.1 CHOLLA WASH SOUTH OF CHOLLA ROAD 100-YEAR RUNOFF (CFS)

Design Period	At Cholla Road	At Desert Cove	At Shea Boulevard
Existing Conditions	365	398	674
Interim Conditions	42	129	399
Future Conditions	42	43	389

Rights-of-Way... No new ROW is required for this design component.

Alignment... The new storm sewer pipe will be located under new pavement of the Cholla Road roadway improvements; therefore, pavement cut, removal and replacement is not required.

Outfall... At Cholla Wash, where the storm sewer pipe outfalls into the Cholla Detention Basin, a special structure is required. It directs low flows into Cholla Wash with larger flows entering the Detention Basin.

Catchment Facilities... Usually, catch basins are designed to intercept flows for a 2-year storm in accordance with pavement drainage design criteria. "Catch basin or scupper inlets must be sized and located in series along a gutter grade to ensure that the estimated spread of longitudinal street flow will not exceed twelve feet (measured perpendicular to the curb face) during the peak runoff flow determined for a two-year frequency storm."[5]

Also, for the 100-year return frequency storm, ..."The inlets must also be sized and spaced to ensure that the longitudinal street flow at the peak runoff flow rates from a 100-year frequency storm is retained in the public right-of-way and is flowing at a depth no greater than eight inches above the gutter flow line."[6].

However, this proposed storm sewer is a flood control facility and the storm sewer design including catch basins will exceed the usual City criteria: the 100-year storm will be intercepted by the proposed system.

Overspillage... The Cholla basin HEC-1 model which was used for design of the Cholla Road storm drain, the 84th Street storm drain, and the Cholla detention basin was generated for future conditions. Therefore, no overspillage is received into Cholla basin from Thunderbird basin. This means that the model has been generated for conditions which will exist subsequent to construction of both ADOT's channel and the Cactus Road storm drain.

---

[5] City of Scottsdale, Design Procedures and Criteria, Section 3 - Design of Facilities to Manage Stormwater Runoff, P. 36.

[6] Ibid.

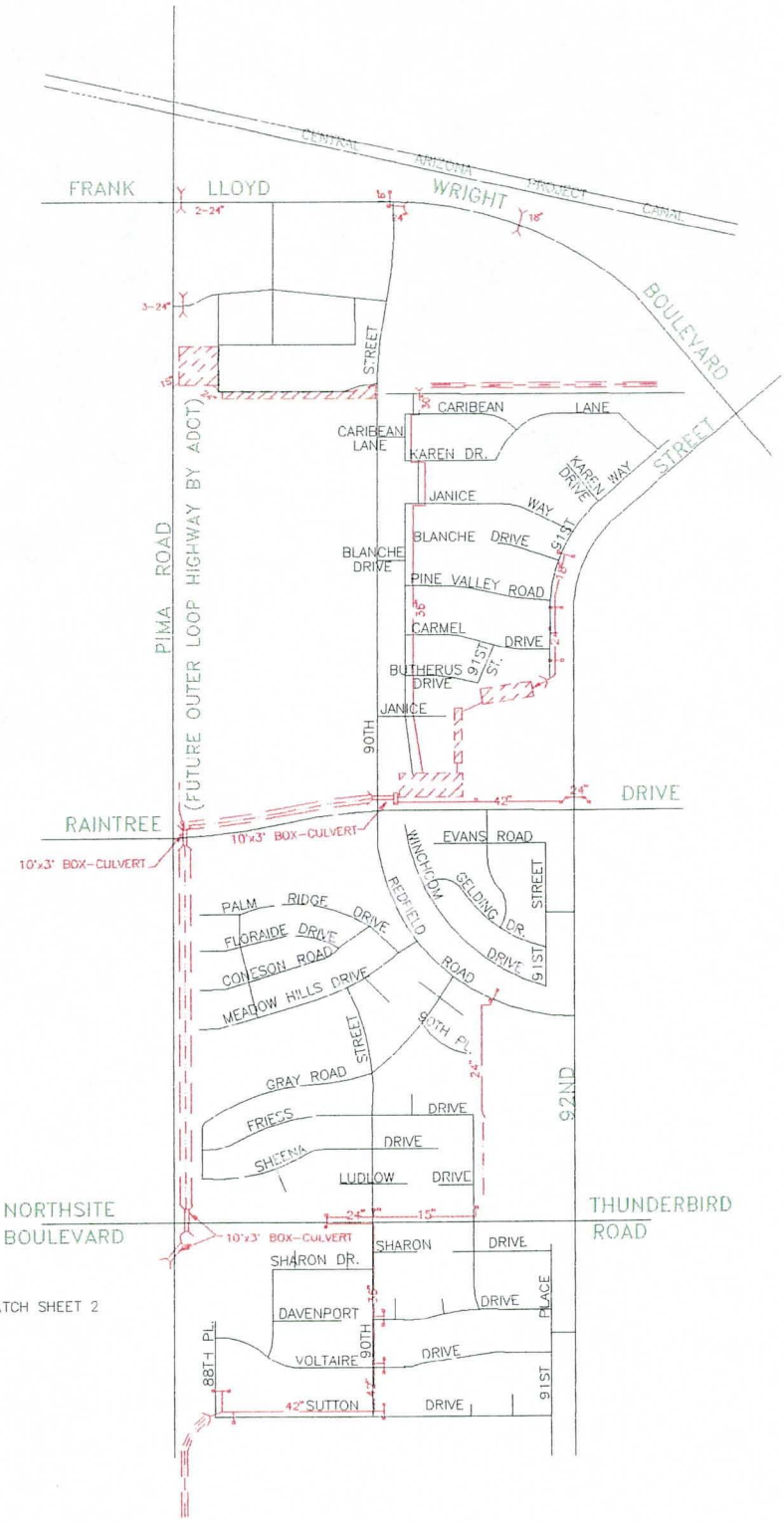

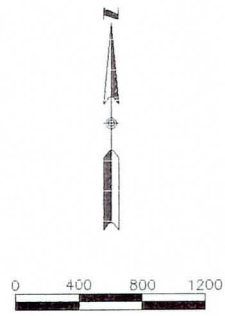

LEGEND

- EXISTING WASH
- EXISTING IMPROVED CHANNEL
- EXISTING DETENTION BASIN
- EXISTING PIPE CULVERT
- EXISTING BOX-CULVERT
- EXISTING STORM DRAIN
- CATCH BASIN
- EXISTING BERM

SMF ENGINEERING CORPORATION
1915 WEST ADOBE DRIVE , SUITE "D"
PHOENIX, AZ 85027 PHONE (602) 516-0605

DATE	REVISION	BY
ENGINEER	CITY OF SCOTTSDALE ARIZONA — MANAGEMENT SERVICES DEPARTMENT, CAPITAL PROJECT MANAGEMENT, 3939 CIVIC CENTER BLVD. SCOTTSDALE, ARIZONA 85251	
PROJECT TITLE	EXISTING DRAINAGE FACILITIES	

SCALE	DESIGNED BY	DATE	BID NO.	SHT. 1
HORIZ 1"=400' VERT.	T.M. / DRAWN BY M.L.H.	03/94 AS-BUILT	PROJECT NO. S-2709 & F-2708	OF 2

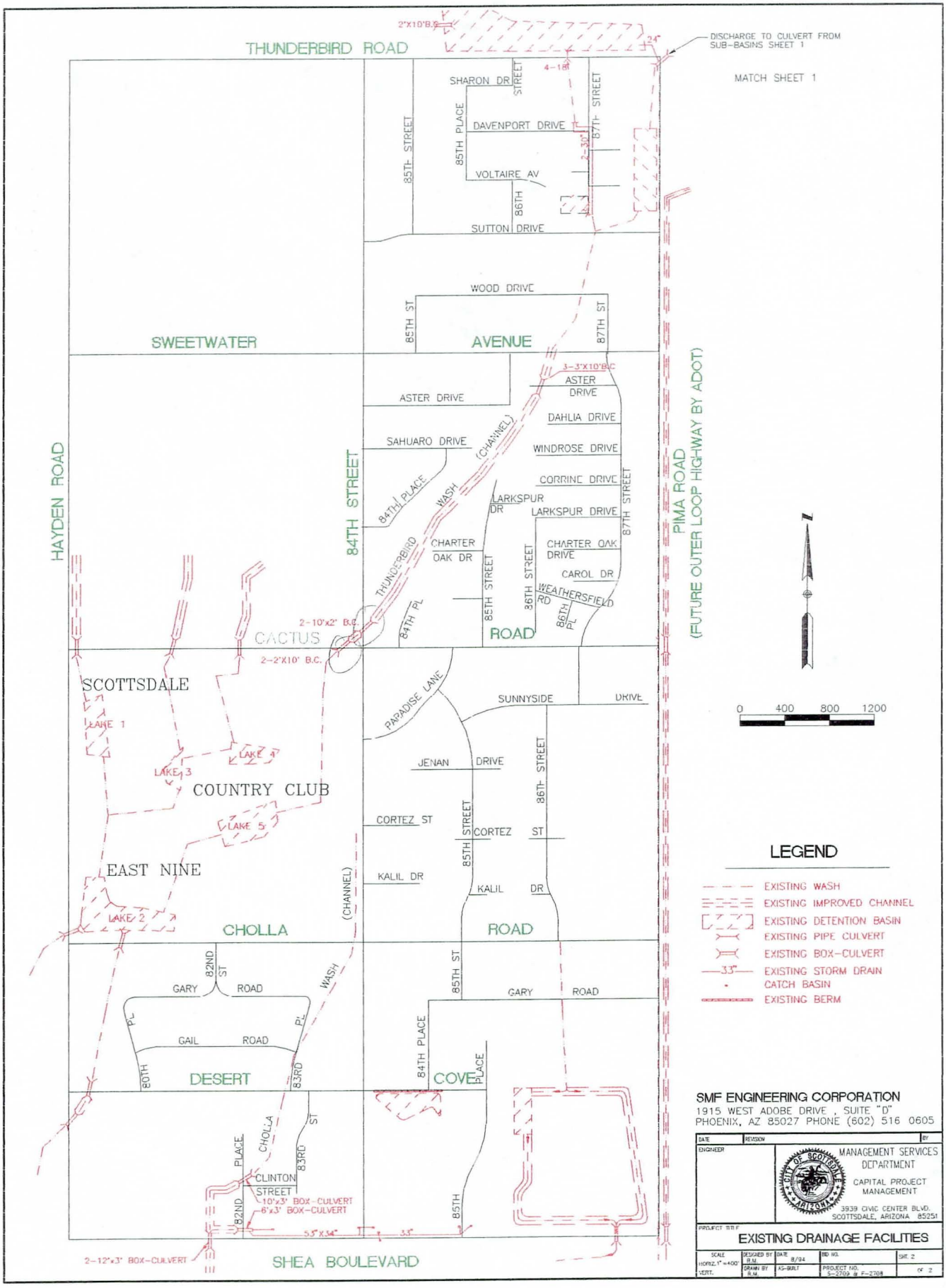
THUNDERBIRD ROAD
DISCHARGE TO CULVERT FROM SUB-BASINS SHEET 1
MATCH SHEET 1
SHARON DR
DAVENPORT DRIVE
VOLTAIRE AV
SUTTON DRIVE
85TH STREET
85TH PLACE
86TH
87TH STREET
WOOD DRIVE
SWEETWATER
AVENUE
ASTER DRIVE
DAHLIA DRIVE
SAHUARO DRIVE
WINDROSE DRIVE
CORRINE DRIVE
LARKSPUR DR
LARKSPUR DRIVE
CHARTER OAK DR
CHARTER OAK DRIVE
CAROL DR
WEATHERSFIELD RD
86TH PL
84TH PLACE
84TH STREET
HAYDEN ROAD
PIMA ROAD
(FUTURE OUTER LOOP HIGHWAY BY ADOT)
THUNDERBIRD WASH (CHANNEL)
84TH PL
CACTUS
ROAD
SCOTTSDALE
COUNTRY CLUB
EAST NINE
LAKE 1
LAKE 2
LAKE 3
LAKE 4
LAKE 5
PARADISE LANE
SUNNYSIDE DRIVE
JENAN DRIVE
CORTEZ ST
KALIL DR
CHOLLA
ROAD
(CHANNEL)
82ND ST
GARY ROAD
GAIL ROAD
80TH PL
83RD PL
DESERT
COVE
CHOLLA WASH
CLINTON STREET
10'x3' BOX-CULVERT
6'x3' BOX-CULVERT
2-12'x3' BOX-CULVERT
SHEA BOULEVARD
0 400 800 1200
LEGEND
EXISTING WASH
EXISTING IMPROVED CHANNEL
EXISTING DETENTION BASIN
EXISTING PIPE CULVERT
EXISTING BOX-CULVERT
EXISTING STORM DRAIN
CATCH BASIN
EXISTING BERM
SMF ENGINEERING CORPORATION
1915 WEST ADOBE DRIVE , SUITE "D"
PHOENIX, AZ 85027 PHONE (602) 516 0605
MANAGEMENT SERVICES DEPARTMENT
CAPITAL PROJECT MANAGEMENT
3939 CIVIC CENTER BLVD.
SCOTTSDALE, ARIZONA 85251
EXISTING DRAINAGE FACILITIES

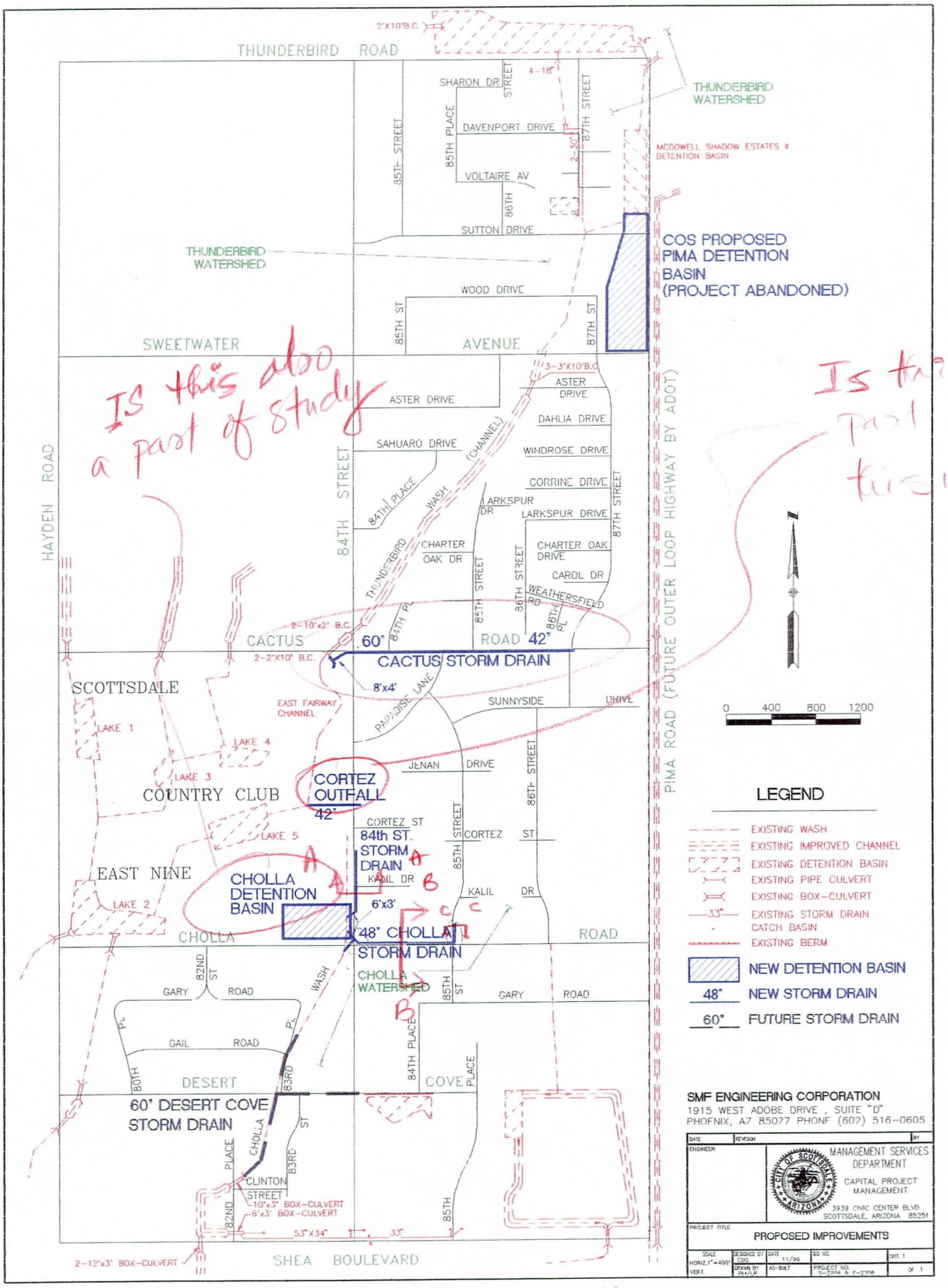

Provide x-sections of 84th st., CHOLLA RD, and 85th street.

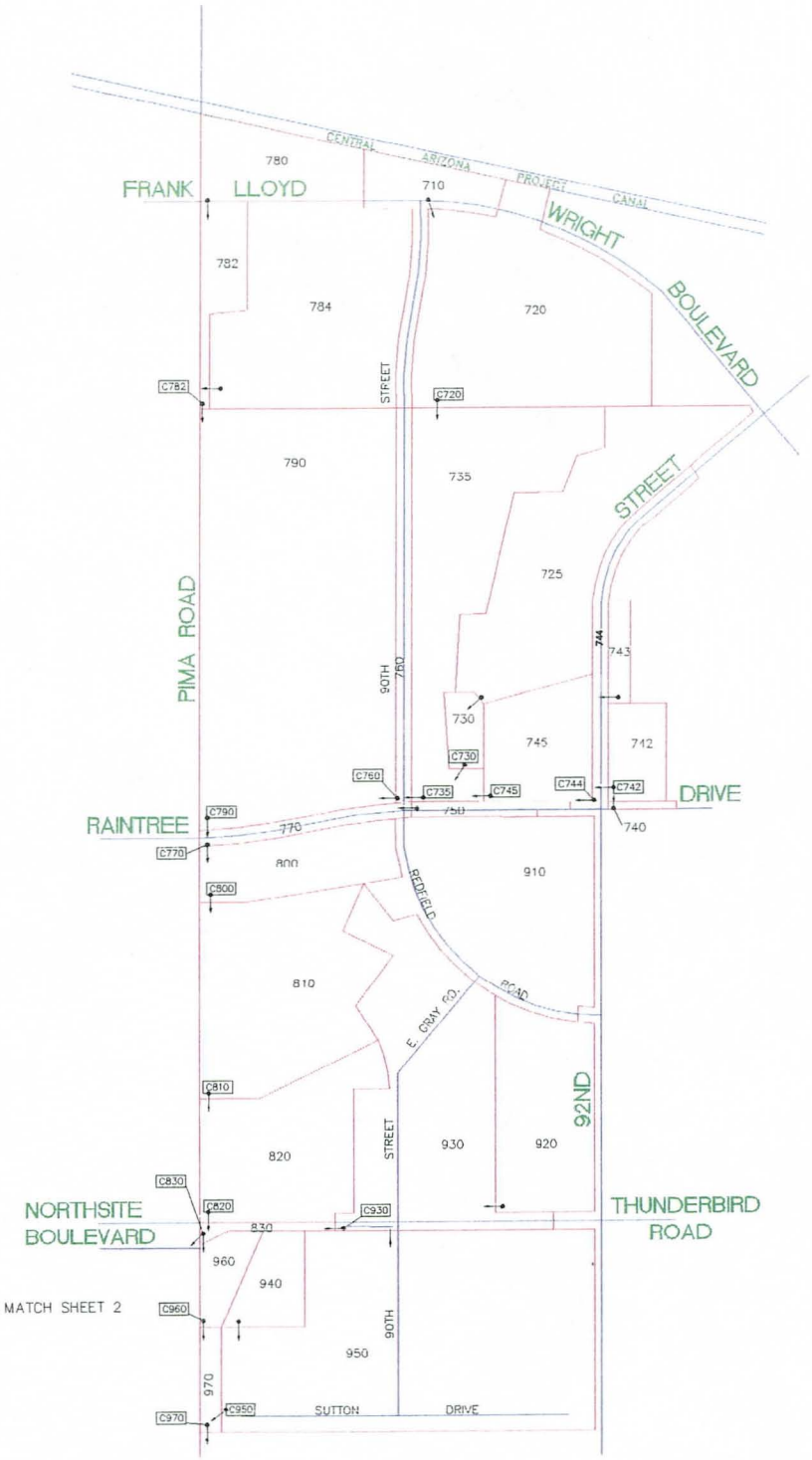

0 400 800 1200

LEGEND

380	SUB-BASIN NUMBER
C380	CONCENTRATION POINT WITH DIRECTION OF FLOW
	DIVERTED FLOW

SMF ENGINEERING CORPORATION
1915 WEST ADOBE DRIVE, SUITE "D"
PHOENIX, AZ 85027 PHONE (602) 516-0605

DATE	REVISION	BY
ENGINEER	CITY OF SCOTTSDALE ARIZONA — MANAGEMENT SERVICES DEPARTMENT, CAPITAL PROJECT MANAGEMENT, 3939 CIVIC CENTER BLVD. SCOTTSDALE, ARIZONA 85251	

PROJECT TITLE: DRAINAGE AREA MAP

SCALE	DESIGNED BY	DATE	ISD NO.	SHT. 1
HORIZ. 1"=400'	R.M.	03/94		
VERT.	DRAWN BY M.L.H.	AS-BUILT	PROJECT NO. S-2709 & F-2708	OF 2

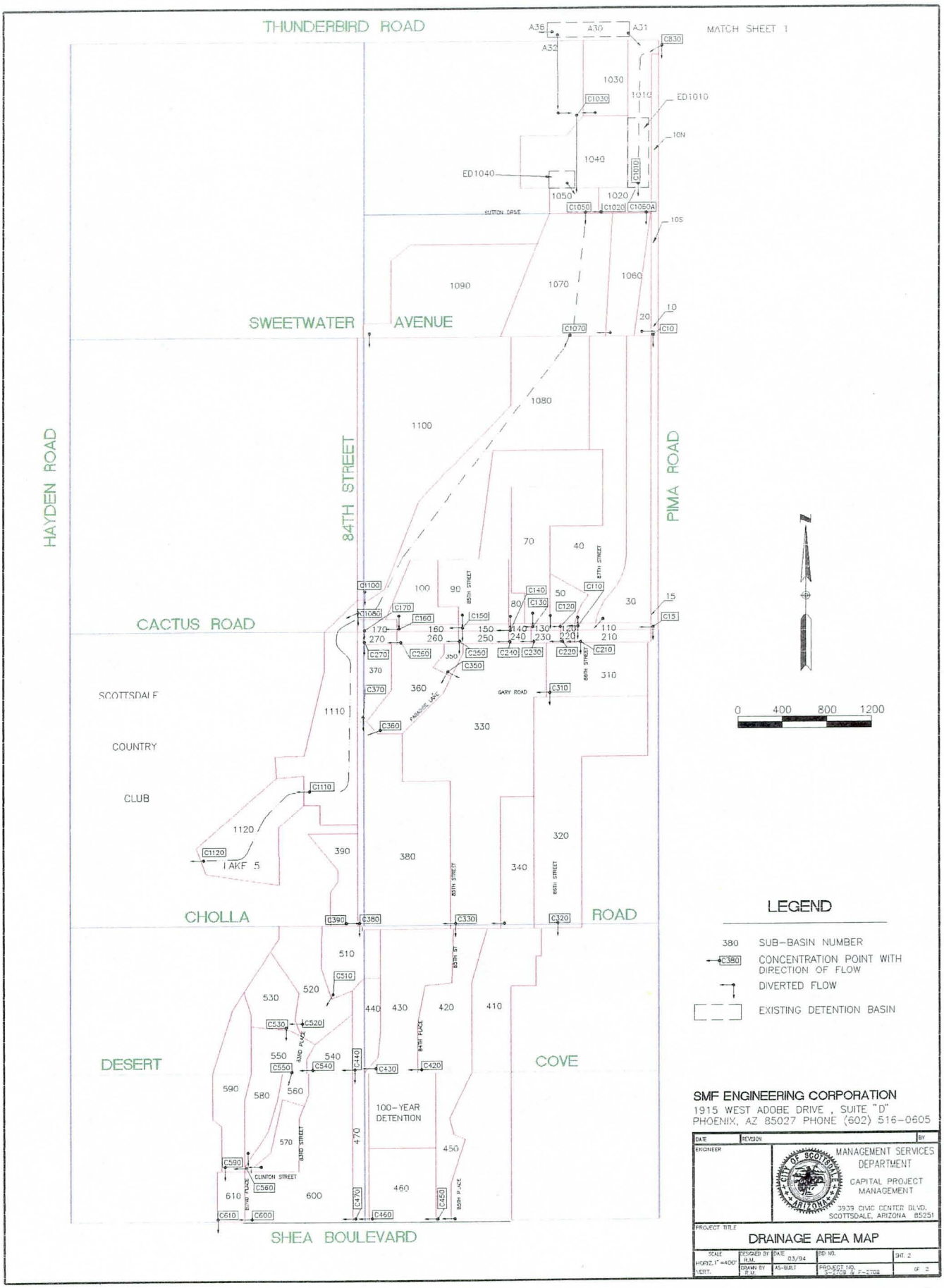
THUNDERBIRD ROAD
MATCH SHEET 1
SWEETWATER AVENUE
CACTUS ROAD
CHOLLA ROAD
SHEA BOULEVARD
HAYDEN ROAD
PIMA ROAD
84TH STREET
SCOTTSDALE COUNTRY CLUB
LAKE 5
DESERT COVE
100-YEAR DETENTION
SUTTON DRIVE
GARY ROAD
PARADISE LANE
CLINTON STREET
0 400 800 1200
LEGEND
380 SUB-BASIN NUMBER
C380 CONCENTRATION POINT WITH DIRECTION OF FLOW
DIVERTED FLOW
EXISTING DETENTION BASIN
SMF ENGINEERING CORPORATION
1915 WEST ADOBE DRIVE , SUITE "D"
PHOENIX, AZ 85027 PHONE (602) 516-0605
MANAGEMENT SERVICES DEPARTMENT
CAPITAL PROJECT MANAGEMENT
3939 CIVIC CENTER BLVD.
SCOTTSDALE, ARIZONA 85251
DRAINAGE AREA MAP
DATE
REVISION
BY
ENGINEER
PROJECT TITLE
SCALE
HORZ. 1"=400'
VERT.
DESIGNED BY R.M.
DRAWN BY R.M.
DATE 03/94
AS-BUILT
BID NO.
PROJECT NO. 3-2709 & F-2708
SHT. 2
OF 2

Date: 11-26-96
By : Charles D. Scott
SMF Engineering Corporation

Drainage Design Criteria - FINAL

City of Scottsdale
84th Street & Cholla Road
Cholla Storm Drain

1) Catch Basins:

- Calculate Peak Flows to Catch Basins with HEC-1. Use peak runoff of sub-basin. Add bypass from catch basin upstream. Assume sub-basin and bypass will peak at the same time.

- Use HEC-12 for catch basin inlet capacity, and pavement drainage spread and depth calculations.

  For Cholla Road:
  - Max Spread is 10.5 feet for a 2-year storm
  - Spread shall be within Right-of-Way for a 100-year storm
  - Max Depth is 8 inches for a 100-year storm

  For 84th Street:
  - Max Spread is 12 feet for a 2-year storm
  - Spread shall be within Right-of-Way for a 100-year storm
  - Max Depth is 8 inches for a 100-year storm

  For Cactus Road:
  - Max Spread is 23 feet for a 50-year storm
  - Max Depth is 6 inches for a 50-year storm
  - Spread shall be within Right-of-Way for a 100-year storm
  - Max Depth is 8 inches for a 100-year storm

  Clogging Factors
  - Curb Opening Inlet: 1.25 x required length
  - Grate Inlet : 2.0 x required opening
  - Combination Inlet : Curb - 1.00 x required length
    Grate - 1.00 x required opening

- Approximately 90% of the total runoff will be intercepted by each Catch Basin.

- Catch Basins in 85th St (Cholla Storm Drain) are designed to intercept the 100-year storm.

- Catch Basins at 84th Street & Cactus Road are designed to intercept the 100-year storm.

2) <u>Storm Drain</u>

- Hydraulic Gradient
  Cactus - 50-year Storm, and 100-year from 84th Street to outlet structure (8'x4' Box Sections)
  Cholla - 100-year Storm

- Assume that Catch Basins will intercept 100% of the design storm.
  Use HEC-1 to calculate design flows. Combine hydrographs going downstream. Design the Hydraulic Gradient to be a minimum of 6 inches below the catch basin depression.

- Energy losses in main line from LA County (Street and Highway Drainage) as follows:

  - Catch basin: Entrance Loss = $0.5\ V^2/2g$

  - Manhole Shaft (no increase in flow): Loss = $0.05\ V^2/2g$

  - Junction (increase in flow): Loss $(H_j) = \Delta H + H_{V1} - H_{V2}$

    Where $\Delta H = Q_2V_2 - Q_1V_1 - Q_3V_3COS(\propto)\ /\ .5(A_1+A_2) * g$

  - Expansion: Loss = $(V_1-V_2)^2/2g$

  - Expansion (Outfall): Loss = $1.0 * V^2/2g$

  - Bend (Curve): Loss = $0.002 * \propto * V^2/2g$

  - Bend (Angle): Loss = $0.0033 * \propto * V^2/2g$

  - Friction: Loss = $29 * n^2 * L * V^2/(R^{4/3} * 2g)$

- Manning's n = 0.013 (For RGRCP)
  Manning's n = 0.016 (For CIPCP)

- Minimum Velocity 3 ft/sec Flowing Full or Half Full

- Minimum pipe size is 18 inches

- Minimum cover is 3 feet

- Catch basin connector pipes are designed for the 100-year storm.

```
1**********************************************
*                                            *
*   FLOOD HYDROGRAPH PACKAGE  (HEC-1)        *
*            SEPTEMBER 1990                  *
*             VERSION 4.0                    *
*                                            *
*  RUN DATE  10/31/1996  TIME  16:46:59      *
*                                            *
**********************************************
```

```
**********************************************
*                                            *
*    U.S. ARMY CORPS OF ENGINEERS            *
*    HYDROLOGIC ENGINEERING CENTER           *
*          609 SECOND STREET                 *
*       DAVIS, CALIFORNIA 95616              *
*           (916) 756-1104                   *
*                                            *
**********************************************
```

```
X     X  XXXXXXX   XXXXX          X
X     X  X       X     X        XX
X     X  X       X              X
XXXXXXX  XXXX    X       XXXXX  X
X     X  X       X              X
X     X  X       X     X        X
X     X  XXXXXXX   XXXXX        XXX
```

THIS PROGRAM REPLACES ALL PREVIOUS VERSIONS OF HEC-1 KNOWN AS HEC1 (JAN 73), HEC1GS, HEC1DB, AND HEC1KW.

THE DEFINITIONS OF VARIABLES -RTIMP- AND -RTIOR- HAVE CHANGED FROM THOSE USED WITH THE 1973-STYLE INPUT STRUCTURE.
THE DEFINITION OF -AMSKK- ON RM-CARD WAS CHANGED WITH REVISIONS DATED 28 SEP 81. THIS IS THE FORTRAN77 VERSION
NEW OPTIONS: DAMBREAK OUTFLOW SUBMERGENCE , SINGLE EVENT DAMAGE CALCULATION, DSS:WRITE STAGE FREQUENCY,
DSS:READ TIME SERIES AT DESIRED CALCULATION INTERVAL LOSS RATE:GREEN AND AMPT INFILTRATION
KINEMATIC WAVE: NEW FINITE DIFFERENCE ALGORITHM

```
LINE          ID.......1.......2.......3.......4.......5.......6.......7.......8.......9......10

  1           ID        84TH STREET AND CHOLLA ROAD ROADWAY IMPROVEMENTS
  2           ID        2-5-10-25-50-100 yr STORM
  3           ID        INTERIM and ULTIMATE CONDITION:
  4           ID        FINAL DESIGN ********************* CHOLLA BASIN
  5           ID        --STORM DRAIN IN CHOLLA ROAD
  6           ID        --DETENTION BASIN AT SITE 1 (6+ acres)
  7           ID        --cactus sd intercepts 100-yr flow
  8           ID        --NO STORM DRAIN IN DESERT COVE
  9           ID        --no CONNECTOR AT CORTEZ TO INTERCEPT
 10           ID        --6-HOUR 10-YEAR TIME CONCENTRATION VALUES USED FOR THE UD CARDS
 11           ID        --MULTIPLIED BY 0.6 FOR THE LAG TIME
 12           ID
 13           ID        FILE CONTYCDS.DAT
              *DIAGRAM
 14           IT      2                    300
 15           IO      5
 16           JR    PREC     .36     .53     .62     .76     .88     1.0

 17           KK     310      subbasin 310 runoff
 18           BA  .01647
 19           PH                     0.88    1.61     2.6    2.84     3.0     3.3
 20           LS              77      20
 21           UD     .14

 22           KK    C320      DIVERT C310 TO 320
 23           DT    D310
 24           DI       0     100
 25           DQ       0      50

 26           KK    C330      ROUTE C310 TO 330
 27           RS       3    STOR      -1       0
 28           RC    .040    .016    .040     750   .0030
 29           RX       0      24    24.1      40    40.1      56    56.1      80
 30           RY     101   98.93   98.61   98.97   98.97   98.62   98.92     101
 31           RS       7    STOR      -1       0
 32           RC    .040    .016    .040    2000   .0060
 33           RX       0      24    24.1      40    40.1      56    56.1      80
 34           RY  101.21  100.01   99.68     100     100   99.68  100.01  101.21

 35           KK     350      subbasin 350 runoff
 36           BA  .00225
 37           LS              77      20
 38           UD     .04

 39           KK    C350      DIVERT C350 TO 360
 40           DT    D350
 41           DI       0     100
 42           DQ       0      50

 43           KK    C330      ROUTE 350 TO 330
 44           RS       7    STOR      -1       0
 45           RC    .040    .016    .040    2200   .0060
 46           RX       0      24    24.1      40    40.1      56    56.1      80
 47           RY  101.21  100.01   99.68     100     100   99.68  100.01  101.21
```

```
LINE          ID.......1.......2.......3.......4.......5.......6.......7.......8.......9......10

  48          KK     330      subbasin 330 runoff
  49          BA  .06322
  50          LS              77      20
  51          UD     .37

  52          KK    C330      COMBINE C310 AND 330 AND C350
  53          HC       3

  54          KK     340      subbasin 340 runoff
  55          BA  .01031
  56          LS              77      20
  57          UD     .14

  58          KK    C330      ROUTE 340 TO 330
  59          RS       4    STOR      -1       0
  60          RC    .040    .016    .040     440   .0022
  61          RX       0    19.8    19.8      40    40.1      42      50      60
  62          RY    82.9   82.41   81.91   82.31   82.31   82.22    82.1    82.4

  63          KK    C330      COMBINE C310 AND 340
  64          HC       2

  65          KK   C380F      ROUTE C330 TO 380F
  66          RD     300  0.0030   0.012            CIRC       4

  67          KK    380F      subbasin 380F runoff
  68          BA  .00688
  69          LS              77      20
  70          UD     .12

  71          KK   C380F      COMBINE 380F AND C330
  72          HC       2

  73          KK   C380E      ROUTE C380F TO 380E
  74          RD     300  0.0030   0.012            CIRC       4

  75          KK    380E      subbasin 380E runoff
  76          BA  .00505
  77          LS              77      20
  78          UD     .08

  79          KK   C380E      COMBINE 380E AND C380F
  80          HC       2

  81          KK   C380D      ROUTE C380E TO 380D
  82          RD     240  0.0030   0.012            CIRC       4

  83          KK    380D      subbasin 380D runoff
  84          BA  .00198
  85          LS              77      20
  86          UD     .08
```

```
LINE          ID.......1.......2.......3.......4.......5.......6.......7.......8.......9......10

  87          KK   C380D      COMBINE C380D AND 380E
  88          HC       2

  89          KK   SD700      ROUTE C380D TO SD700
  90          RD     100  0.0030   0.012            CIRC       4

  91          KK    D350      RETRIEVE D350
  92          DR    D350

  93          KK    C360      ROUTE C350 TO 360
  94          RS       5    STOR      -1       0
  95          RC    .040    .016    .040     850   .0040
  96          RX       0      24    24.1      40    40.1      56    56.1      80
  97          RY     101   98.93   98.61   98.97   98.97   98.62   98.92     101

  98          KK     360      SUBBASIN 360 RUNOFF
  99          BA  .01320
 100          LS              77      20
 101          UD     .13

 102          KK     370      SUBBASIN 370 RUNOFF
 103          BA  .00592
 104          LS              77      20
 105          UD     .10

 106          KK    C370      COMBINE D350 AND 360 AND 370
 107          HC       3

 108          KK   C380A      ROUTE C370 TO 380A
 109          RS       5    STOR      -1       0
 110          RC    .040    .016    .040     620   .0054
 111          RX       0      20    20.1      40    40.1      60    60.1      80
 112          RY     101   98.93   98.61   98.97   98.97   98.62   98.92     101

 113          KK    380A      subbasin 380A runoff
 114          BA  .00588
 115          LS              77      20
 116          UD     .12

 117          KK   C380A      COMBINE C370 AND C380A
 118          HC       2

 119          KK   C380B      ROUTE C380A TO 380B
 120          RS       5    STOR      -1       0
 121          RC    .040    .016    .040     700   .0077
 122          RX       0      20    20.1      40    40.1      60    60.1      80
 123          RY     101   98.93   98.61   98.97   98.97   98.62   98.92     101

 124          KK    380B      subbasin 380B runoff
 125          BA  .02333
 126          LS              77      20
 127          UD     .19
```

```
LINE          ID.......1.......2.......3.......4.......5.......6.......7.......8.......9......10

 128          KK   C380B      COMBINE C380A AND C380B
 129          HC       2

 130          KK   SD700      ROUTE C380B TO SD700
 131          RD     150  0.0030   0.012            CIRC       2

 132          KK    380C      subbasin 380C runoff
 133          BA  .00288
 134          LS              77      20
 135          UD     .07

 136          KK   SD700      ROUTE C380C TO SD700
 137          RD      80  0.0030   0.012            CIRC       2

 138          KK     390      subbasin 390 runoff
 139          BA  .00938
 140          LS              77
 141          UD     .16

 142          KK    C390      COMBINE C380D AND 380B AND 380C AND 390
 143          HC       4

 144          KK   SD700      NEW DETENTION BASIN (bottom avg=1373, outfall pipe=1372.48)
 145          RS       1    STOR       0
 146          SA       0    0.72    3.20    3.41    3.62    3.85
 147          SE    72.5      73      74      75      76      77
 148          SQ       0       5      16      32      46      60

 149          KK    C510      ROUTE SD700 TO 510
 150          RS       5    STOR      -1       0
 151          RC    .050    .035    .050     700   .0070
 152          RX       0      .1      17      22      28      33      50    50.1
 153          RY     102     100      99    96.5    96.5      99     100     102

 154          KK     510      SUBBASIN 510 RUNOFF
 155          BA  .01044
 156          LS              77      20
 157          UD     .05

 158          KK    C510      COMBINE SD700 AND 510
 159          HC       2

 160          KK    C520      ROUTE C510 TO 520
 161          RS       5    STOR      -1       0
 162          RC    .050    .035    .050     440   .0030
 163          RX       0      .1      17      22      28      33      50    50.1
 164          RY     102     100      99    96.5    96.5      99     100     102

 165          KK     520      SUBBASIN 520 RUNOFF
 166          BA  .01402
 167          LS              77      20
 168          UD     .09
```

```
LINE          ID.......1.......2.......3.......4.......5.......6.......7.......8.......9......10

 169          KK    C520      COMBINE C510 AND 520
 170          HC       2

 171          KK     530      SUBBASIN 530 RUNOFF
 172          BA  .00806
 173          LS              77       20
 174          UD     .14

 175          KK    C530      COMBINE C520 AND 530
 176          HC       2

 177          KK    C550      ROUTE C530 TO 550
 178          RS       4    STOR       -1        0
 179          RC    .050    .035     .050      350    .0050
 180          RX       0      .1       17       22       28       33       50     50.1
 181          RY     102     100       99     96.5     96.5       99      100      102

 182          KK     420      SUBBASIN 420 RUNOFF
 183          BA  .01719
 184          LS              77       20
 185          UD     .20

 186          KK    C430      ROUTE C420 TO 430
 187          RS       4    STOR       -1        0
 188          RC    .040    .016     .040      480    .0020
 189          RX       0      20       23       30     30.1       37       40       60
 190          RY     102    99.7    99.93      100      100    99.93     99.7      102

 191          KK     430      SUBBASIN 430 RUNOFF
 192          BA  .02202
 193          LS              77       20
 194          UD     .19

 195          KK    C430      COMBINE C420 AND 430
 196          HC       2

 197          KK     440      SUBBASIN 440 RUNOFF
 198          BA  .00731
 199          LS              77       20
 200          UD     .13

 201          KK    C440      COMBINE C430 AND 440
 202          HC       2

 203          KK    C440      DIVERT C440 TO 470
 204          DT    D440
 205          DI       0     100      200      300
 206          DQ       0      70      140      210
```

```
LINE          ID.......1.......2.......3.......4.......5.......6.......7.......8.......9......10

 207          KK    C540      ROUTE C440 TO C540
 208          RS       4    STOR      -1       0
 209          RC    .040    .016    .040     540   .0080
 210          RX       0      20      23      30    30.1      37      40      60
 211          RY     102    99.7   99.93     100     100   99.93    99.7     102

 212          KK     540      SUBBASIN 540 RUNOFF
 213          BA  .00517
 214          LS              77      20
 215          UD     .12

 216          KK    C540      COMBINE C440 AND 540
 217          HC       2

 218          KK    C550      ROUTE 540 TO C550
 219          RS       2    STOR      -1       0
 220          RC    .040    .016    .040     200   .0080
 221          RX       0      20      23      30    30.1      37      40      60
 222          RY     101    99.7   99.93     100     100   99.93    99.7     101

 223          KK     550      SUBBASIN 550
 224          BA  .00703
 225          LS              77      20
 226          UD     .08

 227          KK    C550      COMBINE 550 AND C530 AND 540
 228          HC       3

 229          KK    C560      ROUTE C550 TO 560
 230          RS       5    STOR      -1       0
 231          RC    .050    .035    .050     900   .0060
 232          RX       0      .1      20      22      28      30      50    50.1
 233          RY     102     100      99      97      97      99     100     102

 234          KK     570      SUBBASIN 570 RUNOFF
 235          BA  .00492
 236          LS              77      20
 237          UD     .16

 238          KK     580      SUBBASIN 580 RUNOFF
 239          BA  .00575
 240          LS              77      20
 241          UD     .13

 242          KK     560      SUBBASIN 560 RUNOFF
 243          BA  .00386
 244          LS              77      20
 245          UD     .11
```

```
LINE          ID.......1.......2.......3.......4.......5.......6.......7.......8.......9......10

 246          KK    C560      COMBINE C550 AND 560 AND 570 AND 580
 247          HC       4

 248          KK    C590      ROUTE C560 TO 590
 249          RS       1    STOR      -1       0
 250          RC    .050    .035    .050      55   .0030
 251          RX       0      .1      20    20.1      32    32.1      50    50.1
 252          RY     102     100      99      96      96      99     100     102

 253          KK     590      SUBBASIN 590 RUNOFF
 254          BA  .01931
 255          LS              77      20
 256          UD    0.20

 257          KK    C590      COMBINE C560 AND 590
 258          HC       2

 259          KK    C610      ROUTE C590 TO 610
 260          RS       5    STOR      -1       0
 261          RC    .050    .035    .050     600   .0030
 262          RX       0      .1      20      24      32      36      50    50.1
 263          RY     102     100      99      96      96      99     100     102

 264          KK     610      SUBBASIN 610 RUNOFF
 265          BA   .0035
 266          LS              77      20
 267          UD    0.04

 268          KK    C610      COMBINE 610 AND C590
 269          HC       2

 270          KK    D440      RETRIEVE D440
 271          DR    D440

 272          KK    C470      ROUTE D440 TO 470
 273          RS       6    STOR      -1       0
 274          RC    .040    .016    .040    1200   .0070
 275          RX       0      24    24.1      40    40.1      56    56.1      80
 276          RY  101.21  100.01   99.68     100     100   99.68  100.01  101.21

 277          KK     410      SUBBASIN 410 RUNOFF
 278          BA  .04406
 279          LS              77      20
 280          UD    0.29

 281          KK    C450      ROUTE 410 TO C450
 282          RS       1    STOR      -1       0
 283          RC    .040   0.016    .016     130   .0020
 284          RX      20      40      65      70      70      72     100     100
 285          RY   103.1   102.9  101.75  101.74  101.27  101.35  101.63  103.63
```

```
LINE          ID.......1.......2.......3.......4.......5.......6.......7.......8.......9......10

 286          KK     450      SUBBASIN 450 RUNOFF
 287          BA  .00803
 288          LS              77      20
 289          UD    0.21

 290          KK    C450      COMBINE C410 AND 450
 291          HC       2

 292          KK    C460      ROUTE C450 TO 460
 293          RS       4    STOR      -1       0
 294          RC    .040   0.016    .016     600   .0020
 295          RX      20      40      65      70      70      72     100     100
 296          RY   103.1   102.9  101.75  101.74  101.27  101.35  101.63  103.63

 297          KK     460      SUBBASIN 460 RUNOFF
 298          BA  .01398
 299          LS              77
 300          UD    0.14

 301          KK    C460      COMBINE C450 AND 460
 302          HC       2

 303          KK     470      SUBBASIN 470 RUNOFF
 304          BA  .00717
 305          LS              98
 306          UD    0.13

 307          KK    C470      COMBINE C460 AND C440 AND 470
 308          HC       3

 309          KK    C600      ROUTE C470 TO 600
 310          RS       5    STOR      -1       0
 311          RC    .040   0.016    .016     980   .0020
 312          RX      20      40      65      70      70      72     100     100
 313          RY   103.1   102.9  101.75  101.74  101.27  101.35  101.63  103.63

 314          KK     600      SUBBASIN 600 RUNOFF
 315          BA  .03036
 316          LS              77      20
 317          UD     .23

 318          KK    C600      COMBINE C470 AND 600
 319          HC       2

 320          KK    C610      ROUTE C600 TO 610
 321          RS       2    STOR      -1       0
 322          RC    .040   0.016   0.016     250   .0020
 323          RX       0      20      40      46      54      60      80     100
 324          RY     101     100      99      96      96      99     100     101
```

```
LINE          ID.......1.......2.......3.......4.......5.......6.......7.......8.......9......10

 325          KK    C610      COMBINE 610 AND C600
 326          HC       2
 327          ZZ
```

```
1*************************************************
*                                               *
*   FLOOD HYDROGRAPH PACKAGE  (HEC-1)           *
*            SEPTEMBER 1990                     *
*             VERSION 4.0                       *
*                                               *
*  RUN DATE  10/31/1996  TIME  16:46:59         *
*                                               *
*************************************************
```

```
*************************************************
*                                               *
*    U.S. ARMY CORPS OF ENGINEERS               *
*    HYDROLOGIC ENGINEERING CENTER              *
*          609 SECOND STREET                    *
*       DAVIS, CALIFORNIA 95616                 *
*           (916) 756-1104                      *
*                                               *
*************************************************
```

```
                    84TH STREET AND CHOLLA ROAD ROADWAY IMPROVEMENTS
                    2-5-10-25-50-100 yr STORM
                    INTERIM and ULTIMATE CONDITION:
                    FINAL DESIGN ******************** CHOLLA BASIN
                    --STORM DRAIN IN CHOLLA ROAD
                    --DETENTION BASIN AT SITE 1 (6+ acres)
                    --cactus sd intercepts 100-yr flow
                    --NO STORM DRAIN IN DESERT COVE
                    --no CONNECTOR AT CORTEZ TO INTERCEPT
                    --6-HOUR 10-YEAR TIME CONCENTRATION VALUES USED FOR THE UD CARDS
                    --MULTIPLIED BY 0.6 FOR THE LAG TIME

                    FILE CONTYCDS.DAT

15 IO        OUTPUT CONTROL VARIABLES
                 IPRNT          5  PRINT CONTROL
                 IPLOT          0  PLOT CONTROL
                 QSCAL         0.  HYDROGRAPH PLOT SCALE

   IT        HYDROGRAPH TIME DATA
                  NMIN          2  MINUTES IN COMPUTATION INTERVAL
                 IDATE      1   0  STARTING DATE
                 ITIME       0000  STARTING TIME
                    NQ        300  NUMBER OF HYDROGRAPH ORDINATES
                NDDATE      1   0  ENDING DATE
                NDTIME       0958  ENDING TIME
                 ICENT         19  CENTURY MARK

             COMPUTATION INTERVAL     .03 HOURS
                  TOTAL TIME BASE    9.97 HOURS

        ENGLISH UNITS
             DRAINAGE AREA          SQUARE MILES
             PRECIPITATION DEPTH    INCHES
             LENGTH, ELEVATION      FEET
             FLOW                   CUBIC FEET PER SECOND
             STORAGE VOLUME         ACRE-FEET
             SURFACE AREA           ACRES
             TEMPERATURE            DEGREES FAHRENHEIT

   JP        MULTI-PLAN OPTION
                 NPLAN          1  NUMBER OF PLANS

   JR        MULTI-RATIO OPTION
                RATIOS OF PRECIPITATION
                .36      .53      .62      .76      .88     1.00
```

1

PEAK FLOW AND STAGE (END-OF-PERIOD) SUMMARY FOR MULTIPLE PLAN-RATIO ECONOMIC COMPUTATIONS
FLOWS IN CUBIC FEET PER SECOND, AREA IN SQUARE MILES
TIME TO PEAK IN HOURS

OPERATION	STATION	AREA	PLAN		RATIOS APPLIED TO PRECIPITATION RATIO 1 .36	RATIO 2 .53	RATIO 3 .62	RATIO 4 .76	RATIO 5 .88	RATIO 6 1.00
HYDROGRAPH AT +	310	.02	1	FLOW	6.	12.	16.	23.	30.	37.
				TIME	3.17	3.20	3.20	3.20	3.17	3.17
DIVERSION TO +	D310	.02	1	FLOW	3.	6.	8.	12.	15.	18.
				TIME	3.17	3.20	3.20	3.20	3.17	3.17
HYDROGRAPH AT +	C320	.02	1	FLOW	3.	6.	8.	12.	15.	18.
				TIME	3.17	3.20	3.20	3.20	3.17	3.17
ROUTED TO +	C330	.02	1	FLOW	2.	5.	6.	10.	13.	16.
				TIME	3.50	3.47	3.43	3.40	3.37	3.33
			** PEAK STAGES IN FEET **							
			1	STAGE	99.85	99.91	99.94	99.98	100.02	100.04
				TIME	3.50	3.47	3.43	3.40	3.37	3.33
HYDROGRAPH AT +	350	.00	1	FLOW	1.	2.	3.	5.	6.	8.
				TIME	3.07	3.07	3.07	3.07	3.07	3.07
DIVERSION TO +	D350	.00	1	FLOW	1.	1.	2.	2.	3.	4.
				TIME	3.07	3.07	3.07	3.07	3.07	3.07
HYDROGRAPH AT +	C350	.00	1	FLOW	1.	1.	2.	2.	3.	4.
				TIME	3.07	3.07	3.07	3.07	3.07	3.07
ROUTED TO +	C330	.00	1	FLOW	0.	1.	1.	1.	1.	2.
				TIME	3.73	3.53	3.50	3.50	3.47	3.43
			** PEAK STAGES IN FEET **							
			1	STAGE	99.74	99.77	99.79	99.81	99.82	99.84
				TIME	3.73	3.53	3.50	3.50	3.47	3.43
HYDROGRAPH AT +	330	.06	1	FLOW	14.	27.	36.	52.	67.	82.
				TIME	3.43	3.43	3.43	3.43	3.43	3.43
3 COMBINED AT +	C330	.08	1	FLOW	16.	32.	43.	62.	79.	98.
				TIME	3.47	3.47	3.43	3.43	3.43	3.40
HYDROGRAPH AT +	340	.01	1	FLOW	4.	7.	10.	14.	19.	23.
				TIME	3.17	3.20	3.20	3.20	3.17	3.17

ROUTED TO										
+	C330	.01	1	FLOW	3.	7.	10.	14.	18.	23.
				TIME	3.30	3.27	3.27	3.23	3.23	3.23
			** PEAK STAGES IN FEET **							
			1	STAGE	82.22	82.31	82.35	82.41	82.46	82.50
				TIME	3.30	3.27	3.27	3.23	3.23	3.23
2 COMBINED AT										
+	C330	.09	1	FLOW	18.	37.	49.	70.	90.	111.
				TIME	3.43	3.43	3.43	3.40	3.40	3.37
ROUTED TO										
+	C380F	.09	1	FLOW	18.	37.	49.	70.	90.	111.
				TIME	3.43	3.43	3.43	3.43	3.40	3.40
HYDROGRAPH AT										
+	380F	.01	1	FLOW	3.	5.	7.	10.	13.	17.
				TIME	3.17	3.17	3.17	3.17	3.17	3.17
2 COMBINED AT										
+	C380F	.10	1	FLOW	19.	39.	52.	74.	95.	118.
				TIME	3.43	3.43	3.43	3.40	3.37	3.37
ROUTED TO										
+	C380E	.10	1	FLOW	19.	39.	52.	74.	95.	117.
				TIME	3.43	3.43	3.43	3.40	3.40	3.37
HYDROGRAPH AT										
+	380E	.01	1	FLOW	2.	4.	6.	9.	11.	14.
				TIME	3.10	3.13	3.13	3.10	3.10	3.10
2 COMBINED AT										
+	C380E	.10	1	FLOW	19.	40.	53.	76.	98.	121.
				TIME	3.43	3.43	3.43	3.40	3.40	3.37
ROUTED TO										
+	C380D	.10	1	FLOW	19.	40.	53.	76.	98.	121.
				TIME	3.43	3.43	3.43	3.40	3.40	3.37
HYDROGRAPH AT										
+	380D	.00	1	FLOW	1.	2.	2.	3.	4.	6.
				TIME	3.10	3.13	3.13	3.10	3.10	3.10
2 COMBINED AT										
+	C380D	.11	1	FLOW	20.	40.	54.	77.	99.	122.
				TIME	3.43	3.43	3.43	3.40	3.40	3.37
ROUTED TO										
+	SD700	.11	1	FLOW	20.	40.	54.	76.	99.	122.
				TIME	3.43	3.43	3.43	3.43	3.40	3.37
HYDROGRAPH AT										
+	D350	.00	1	FLOW	1.	1.	2.	2.	3.	4.
				TIME	3.07	3.07	3.07	3.07	3.07	3.07
ROUTED TO										
+	C360	.00	1	FLOW	0.	1.	1.	2.	2.	3.
				TIME	3.33	3.27	3.23	3.23	3.23	3.23
			** PEAK STAGES IN FEET **							
			1	STAGE	98.68	98.74	98.76	98.78	98.80	98.82

				TIME	3.33	3.27	3.23	3.23	3.23	3.23
HYDROGRAPH AT										
+	360	.01	1	FLOW	5.	10.	13.	19.	25.	31.
				TIME	3.17	3.17	3.17	3.17	3.17	3.17
HYDROGRAPH AT										
+	370	.01	1	FLOW	2.	5.	7.	10.	13.	15.
				TIME	3.13	3.13	3.13	3.13	3.13	3.13
3 COMBINED AT										
+	C370	.02	1	FLOW	7.	15.	20.	30.	39.	48.
				TIME	3.17	3.17	3.17	3.17	3.17	3.17
ROUTED TO										
+	C380A	.02	1	FLOW	7.	15.	20.	30.	38.	48.
				TIME	3.23	3.23	3.23	3.20	3.20	3.20
				** PEAK STAGES IN FEET **						
			1	STAGE	98.87	98.95	99.00	99.05	99.10	99.14
				TIME	3.23	3.23	3.23	3.20	3.20	3.20
HYDROGRAPH AT										
+	380A	.01	1	FLOW	2.	5.	6.	9.	11.	14.
				TIME	3.17	3.17	3.17	3.17	3.17	3.17
2 COMBINED AT										
+	C380A	.03	1	FLOW	9.	18.	26.	38.	49.	61.
				TIME	3.23	3.23	3.20	3.20	3.20	3.20
ROUTED TO										
+	C380B	.03	1	FLOW	9.	18.	26.	38.	48.	60.
				TIME	3.30	3.30	3.27	3.23	3.23	3.23
				** PEAK STAGES IN FEET **						
			1	STAGE	98.88	98.96	99.01	99.06	99.11	99.15
				TIME	3.30	3.30	3.27	3.23	3.23	3.23
HYDROGRAPH AT										
+	380B	.02	1	FLOW	7.	15.	20.	28.	36.	45.
				TIME	3.23	3.23	3.23	3.23	3.23	3.23
2 COMBINED AT										
+	C380B	.05	1	FLOW	15.	32.	45.	66.	85.	105.
				TIME	3.27	3.27	3.27	3.23	3.23	3.23
ROUTED TO										
+	SD700	.05	1	FLOW	15.	32.	45.	65.	84.	104.
				TIME	3.30	3.27	3.27	3.23	3.23	3.23
HYDROGRAPH AT										
+	380C	.00	1	FLOW	1.	3.	4.	5.	7.	9.
				TIME	3.10	3.10	3.10	3.10	3.10	3.10
ROUTED TO										
+	SD700	.00	1	FLOW	1.	3.	4.	5.	7.	8.
				TIME	3.10	3.10	3.10	3.10	3.10	3.10
HYDROGRAPH AT										
+	390	.01	1	FLOW	1.	3.	5.	9.	12.	16.
				TIME	3.30	3.23	3.23	3.23	3.23	3.20

4 COMBINED AT										
+	C390	.17	1	FLOW	34.	71.	95.	139.	180.	224.
				TIME	3.33	3.30	3.27	3.27	3.27	3.27
ROUTED TO										
+	SD700	.17	1	FLOW	11.	19.	24.	32.	38.	45.
				TIME	3.87	3.93	3.93	3.93	3.97	3.97
			** PEAK STAGES IN FEET **							
			1	STAGE	73.57	74.20	74.48	74.98	75.43	75.91
				TIME	3.87	3.93	3.93	3.93	3.97	3.97
ROUTED TO										
+	C510	.17	1	FLOW	11.	19.	24.	32.	38.	45.
				TIME	3.93	3.97	4.00	4.00	4.00	4.00
			** PEAK STAGES IN FEET **							
			1	STAGE	97.15	97.38	97.49	97.67	97.79	97.91
				TIME	3.93	3.97	4.00	4.00	4.00	4.00
HYDROGRAPH AT										
+	510	.01	1	FLOW	5.	11.	14.	21.	27.	33.
				TIME	3.10	3.10	3.10	3.07	3.07	3.07
2 COMBINED AT										
+	C510	.18	1	FLOW	11.	20.	24.	32.	39.	46.
				TIME	3.93	3.97	3.97	3.97	3.97	4.00
ROUTED TO										
+	C520	.18	1	FLOW	11.	20.	24.	32.	39.	46.
				TIME	3.97	4.00	4.00	4.00	4.00	4.03
			** PEAK STAGES IN FEET **							
			1	STAGE	97.34	97.63	97.77	97.99	98.14	98.29
				TIME	3.97	4.00	4.00	4.00	4.03	4.03
HYDROGRAPH AT										
+	520	.01	1	FLOW	6.	12.	16.	24.	31.	38.
				TIME	3.13	3.13	3.13	3.13	3.13	3.13
2 COMBINED AT										
+	C520	.19	1	FLOW	14.	28.	36.	50.	63.	77.
				TIME	3.13	3.13	3.13	3.13	3.13	3.13
HYDROGRAPH AT										
+	530	.01	1	FLOW	3.	6.	8.	11.	15.	18.
				TIME	3.17	3.20	3.20	3.20	3.17	3.17
2 COMBINED AT										
+	C530	.20	1	FLOW	17.	33.	43.	61.	77.	94.
				TIME	3.17	3.13	3.13	3.13	3.13	3.13
ROUTED TO										
+	C550	.20	1	FLOW	17.	33.	43.	60.	76.	92.
				TIME	3.20	3.17	3.17	3.17	3.17	3.13
			** PEAK STAGES IN FEET **							
			1	STAGE	97.40	97.80	98.01	98.30	98.53	98.75
				TIME	3.20	3.17	3.17	3.17	3.17	3.13
HYDROGRAPH AT										
+	420	.02	1	FLOW	5.	10.	14.	20.	26.	32.

				TIME	3.23	3.27	3.27	3.27	3.23	3.23
ROUTED TO										
+	C430	.02	1	FLOW	5.	10.	14.	20.	26.	32.
				TIME	3.33	3.33	3.33	3.30	3.30	3.30
			** PEAK STAGES IN FEET **							
			1	STAGE	100.11	100.23	100.29	100.37	100.45	100.51
				TIME	3.33	3.33	3.33	3.30	3.30	3.30
HYDROGRAPH AT										
+	430	.02	1	FLOW	7.	14.	18.	27.	34.	43.
				TIME	3.23	3.23	3.23	3.23	3.23	3.23
2 COMBINED AT										
+	C430	.04	1	FLOW	11.	23.	31.	45.	59.	73.
				TIME	3.30	3.30	3.27	3.27	3.27	3.27
HYDROGRAPH AT										
+	440	.01	1	FLOW	3.	5.	7.	11.	14.	17.
				TIME	3.17	3.17	3.17	3.17	3.17	3.17
2 COMBINED AT										
+	C440	.05	1	FLOW	13.	27.	37.	54.	69.	86.
				TIME	3.27	3.27	3.27	3.27	3.27	3.23
DIVERSION TO										
+	D440	.05	1	FLOW	9.	19.	26.	37.	48.	60.
				TIME	3.27	3.27	3.27	3.27	3.27	3.23
HYDROGRAPH AT										
+	C440	.05	1	FLOW	4.	8.	11.	16.	21.	26.
				TIME	3.27	3.27	3.27	3.27	3.27	3.23
ROUTED TO										
+	C540	.05	1	FLOW	4.	8.	11.	16.	21.	26.
				TIME	3.37	3.33	3.30	3.30	3.30	3.30
			** PEAK STAGES IN FEET **							
			1	STAGE	100.01	100.09	100.13	100.19	100.23	100.27
				TIME	3.37	3.33	3.30	3.30	3.30	3.30
HYDROGRAPH AT										
+	540	.01	1	FLOW	2.	4.	5.	8.	10.	12.
				TIME	3.17	3.17	3.17	3.17	3.17	3.17
2 COMBINED AT										
+	C540	.05	1	FLOW	5.	11.	14.	21.	27.	34.
				TIME	3.33	3.27	3.27	3.27	3.27	3.23
ROUTED TO										
+	C550	.05	1	FLOW	5.	10.	14.	21.	28.	34.
				TIME	3.37	3.30	3.30	3.30	3.27	3.27
			** PEAK STAGES IN FEET **							
			1	STAGE	100.03	100.11	100.15	100.21	100.26	100.31
				TIME	3.37	3.30	3.30	3.30	3.27	3.27
HYDROGRAPH AT										
+	550	.01	1	FLOW	3.	6.	8.	12.	16.	20.
				TIME	3.10	3.13	3.13	3.10	3.10	3.10

3 COMBINED AT										
+	C550	.26	1	FLOW	23.	45.	59.	85.	109.	135.
				TIME	3.20	3.17	3.17	3.17	3.17	3.17
ROUTED TO										
+	C560	.26	1	FLOW	22.	44.	58.	83.	105.	130.
				TIME	3.27	3.23	3.23	3.23	3.23	3.23
			** PEAK STAGES IN FEET **							
			1	STAGE	98.07	98.60	98.87	99.23	99.47	99.69
				TIME	3.27	3.23	3.23	3.23	3.23	3.23
HYDROGRAPH AT										
+	570	.00	1	FLOW	2.	3.	5.	7.	8.	10.
				TIME	3.20	3.20	3.20	3.20	3.20	3.20
HYDROGRAPH AT										
+	580	.01	1	FLOW	2.	4.	6.	8.	11.	13.
				TIME	3.17	3.17	3.17	3.17	3.17	3.17
HYDROGRAPH AT										
+	560	.00	1	FLOW	1.	3.	4.	6.	8.	10.
				TIME	3.13	3.17	3.17	3.13	3.13	3.13
4 COMBINED AT										
+	C560	.27	1	FLOW	26.	54.	72.	101.	129.	158.
				TIME	3.23	3.23	3.20	3.23	3.23	3.23
ROUTED TO										
+	C590	.27	1	FLOW	26.	54.	71.	101.	129.	158.
				TIME	3.27	3.23	3.23	3.23	3.23	3.23
			** PEAK STAGES IN FEET **							
			1	STAGE	97.03	97.63	97.96	98.48	98.92	99.30
				TIME	3.27	3.23	3.23	3.23	3.23	3.23
HYDROGRAPH AT										
+	590	.02	1	FLOW	6.	12.	16.	23.	29.	36.
				TIME	3.23	3.27	3.27	3.27	3.23	3.23
2 COMBINED AT										
+	C590	.29	1	FLOW	32.	66.	87.	124.	158.	195.
				TIME	3.27	3.23	3.23	3.23	3.23	3.23
ROUTED TO										
+	C610	.29	1	FLOW	32.	65.	87.	123.	156.	191.
				TIME	3.30	3.27	3.27	3.27	3.27	3.27
			** PEAK STAGES IN FEET **							
			1	STAGE	97.34	98.02	98.37	98.87	99.22	99.52
				TIME	3.30	3.27	3.27	3.27	3.27	3.27
HYDROGRAPH AT										
+	610	.00	1	FLOW	2.	4.	5.	7.	10.	12.
				TIME	3.07	3.07	3.07	3.07	3.07	3.07
2 COMBINED AT										
+	C610	.30	1	FLOW	32.	66.	88.	125.	159.	195.
				TIME	3.30	3.27	3.27	3.27	3.27	3.27
HYDROGRAPH AT										
+	D440	.00	1	FLOW	9.	19.	26.	37.	48.	60.

				TIME	3.27	3.27	3.27	3.27	3.27	3.23
ROUTED TO										
+	C470	.00	1	FLOW	9.	19.	25.	37.	48.	60.
				TIME	3.40	3.37	3.33	3.33	3.30	3.30
			** PEAK STAGES IN FEET **							
			1	STAGE	99.96	100.05	100.09	100.16	100.21	100.26
				TIME	3.40	3.37	3.33	3.33	3.30	3.30
HYDROGRAPH AT										
+	410	.04	1	FLOW	11.	22.	29.	42.	54.	67.
				TIME	3.33	3.37	3.37	3.37	3.37	3.33
ROUTED TO										
+	C450	.04	1	FLOW	11.	22.	29.	42.	54.	67.
				TIME	3.37	3.37	3.37	3.37	3.37	3.37
			** PEAK STAGES IN FEET **							
			1	STAGE	101.71	101.83	101.90	101.99	102.06	102.14
				TIME	3.37	3.37	3.37	3.37	3.37	3.37
HYDROGRAPH AT										
+	450	.01	1	FLOW	2.	5.	6.	9.	12.	15.
				TIME	3.27	3.27	3.27	3.27	3.27	3.27
2 COMBINED AT										
+	C450	.05	1	FLOW	13.	26.	35.	50.	64.	79.
				TIME	3.33	3.33	3.33	3.33	3.33	3.33
ROUTED TO										
+	C460	.05	1	FLOW	13.	26.	35.	50.	64.	79.
				TIME	3.43	3.40	3.40	3.40	3.40	3.37
			** PEAK STAGES IN FEET **							
			1	STAGE	101.73	101.87	101.93	102.04	102.12	102.21
				TIME	3.43	3.40	3.40	3.40	3.40	3.37
HYDROGRAPH AT										
+	460	.01	1	FLOW	1.	5.	9.	14.	19.	25.
				TIME	3.27	3.23	3.20	3.20	3.20	3.20
2 COMBINED AT										
+	C460	.07	1	FLOW	14.	29.	40.	58.	75.	93.
				TIME	3.40	3.40	3.37	3.37	3.37	3.33
HYDROGRAPH AT										
+	470	.01	1	FLOW	10.	15.	18.	22.	26.	30.
				TIME	3.17	3.17	3.17	3.17	3.17	3.17
3 COMBINED AT										
+	C470	.07	1	FLOW	26.	54.	73.	105.	135.	167.
				TIME	3.37	3.33	3.33	3.33	3.30	3.30
ROUTED TO										
+	C600	.07	1	FLOW	25.	53.	72.	103.	134.	166.
				TIME	3.47	3.40	3.40	3.40	3.37	3.37
			** PEAK STAGES IN FEET **							
			1	STAGE	101.86	102.06	102.17	102.32	102.46	102.58
				TIME	3.47	3.40	3.40	3.40	3.37	3.37

```
HYDROGRAPH AT
+                    600       .03    1   FLOW        8.      17.      23.      33.      43.      53.
                                           TIME      3.27     3.30     3.30     3.30     3.27     3.27

 2 COMBINED AT
+                    C600      .10    1   FLOW       32.      68.      92.     133.     172.     214.
                                           TIME      3.43     3.40     3.37     3.37     3.37     3.33

ROUTED TO
+                    C610      .10    1   FLOW       32.      68.      92.     133.     172.     213.
                                           TIME      3.43     3.40     3.40     3.37     3.37     3.37

                                       ** PEAK STAGES IN FEET **
                                       1   STAGE    96.92    97.43    97.68    98.06    98.36    98.64
                                           TIME      3.43     3.40     3.40     3.37     3.37     3.37

 2 COMBINED AT
+                    C610      .40    1   FLOW       61.     123.     166.     244.     319.     398.
                                           TIME      3.33     3.33     3.33     3.30     3.30     3.30


*** NORMAL END OF HEC-1 ***
```

TR-55 Tc and Tt THRU SUBAREA COMPUTATION VERSION 1.11

Project : 84th Street User: CDS Date: 08-19-95
County : Maricopa State: AZ Checked: ____ Date: _____
Subtitle: Subareas of Area 380 6-HOUR 10-YEAR STORM VALUE USED

---------- Subarea #1 - 380A ----------

Flow Type	2 year rain	Length (ft)	Slope (ft/ft)	Surface code	n	Area (sq/ft)	Wp (ft)	Velocity (ft/sec)	Time (hr)
Sheet	2.08	300	.01	A					0.080
Shallow Concent'd		160	.007	U					0.033
Shallow Concent'd		220	.003	U					0.069
Open Channel		160	.007		.0162	67	16		0.019

Time of Concentration = 0.20*
=====

---------- Subarea #2 - 380B ----------

Flow Type	2 year rain	Length (ft)	Slope (ft/ft)	Surface code	n	Area (sq/ft)	Wp (ft)	Velocity (ft/sec)	Time (hr)
Sheet	2.08	300	.01	A					0.080
Shallow Concent'd		700	.007	U					0.144
Open Channel		500	.003		.0162	64	16		0.091
Open Channel		20	.007		.0162	64	16		0.002

Time of Concentration = 0.32*
=====

---------- Subarea #3 - 380C ----------

Flow Type	2 year rain	Length (ft)	Slope (ft/ft)	Surface code	n	Area (sq/ft)	Wp (ft)	Velocity (ft/sec)	Time (hr)
Sheet	2.08	160	.01	A					0.048
Shallow Concent'd		280	.007	U					0.058

Time of Concentration = 0.11*
=====

---------- Subarea #4 - 380D ----------

Flow Type	2 year rain	Length (ft)	Slope (ft/ft)	Surface code	n	Area (sq/ft)	Wp (ft)	Velocity (ft/sec)	Time (hr)
Sheet	2.08	170	.01	A					0.051
Shallow Concent'd		250	.008	U					0.048
Open Channel		160	.003		.0162	64	16		0.029

Time of Concentration = 0.13*
=====

TR-55 Tc and Tt THRU SUBAREA COMPUTATION VERSION 1.11

Project : 84th Street User: CDS Date: 08-19-95
County : Maricopa State: AZ Checked: ____ Date: _____
Subtitle: Subareas of Area 380 6-HOUR 10-YEAR STORM VALUE USED

Subarea #5 - 380E

Flow Type	2 year rain	Length (ft)	Slope (ft/ft)	Surface code	n	Area (sq/ft)	Wp (ft)	Velocity (ft/sec)	Time (hr)
Sheet	2.08	180	.01	A					0.053
Shallow Concent'd		260	.008	U					0.050
Open Channel		220	.0036		.0162	.64	16		0.036

Time of Concentration = 0.14*
=====

Subarea #6 - 380F

Flow Type	2 year rain	Length (ft)	Slope (ft/ft)	Surface code	n	Area (sq/ft)	Wp (ft)	Velocity (ft/sec)	Time (hr)
Sheet	2.08	200	.01	A					0.058
Shallow Concent'd		650	.008	U					0.125
Open Channel		80	.0036		.0162	.64	16		0.013

Time of Concentration = 0.20*
=====

Subarea #7

Flow Type	2 year rain	Length (ft)	Slope (ft/ft)	Surface code	n	Area (sq/ft)	Wp (ft)	Velocity (ft/sec)	Time (hr)
Sheet	2.08	170	.01	A					0.051
Shallow Concent'd		170	.002	U					0.065
Open Channel		550	.0077		.0165		20		0.047

Time of Concentration = 0.16*
=====

Subarea #8

Flow Type	2 year rain	Length (ft)	Slope (ft/ft)	Surface code	n	Area (sq/ft)	Wp (ft)	Velocity (ft/sec)	Time (hr)
Sheet	2.08	120	.007	A					0.044
Sheet		180	.005	A					0.084
Shallow Concent'd		210	.003	U					0.066
Open Channel		520	.003		.0162	.64	16		0.094

Time of Concentration = 0.29*
=====

Subarea #9

Flow Type	2 year rain	Length (ft)	Slope (ft/ft)	Surface code	n	Area (sq/ft)	Wp (ft)	Velocity (ft/sec)	Time (hr)
Sheet	2.08	300	.0045	A					0.110
Shallow Concent'd		50	.0045	U					0.013
Open Channel		650	.006		.0251	.5	6		0.099
Open Channel		220	.005		.0251	.5	6		0.037

Time of Concentration = 0.26*
=====

TR-55 Tc and Tt THRU SUBAREA COMPUTATION VERSION 1.11

Project : 84th Street User: CDS Date: 08-19-95
County : Maricopa State: AZ Checked: ____ Date: _____
Subtitle: Subareas of Area 380 6-HOUR 10-YEAR STORM VALUE USED

--- Sheet Flow Surface Codes ---

A Smooth Surface	F Grass, Dense	--- Shallow Concentrated ---
B Fallow (No Res.)	G Grass, Burmuda	--- Surface Codes ---
C Cultivated < 20 % Res.	H Woods, Light	P Paved
D Cultivated > 20 % Res.	I Woods, Dense	U Unpaved
E Grass-Range, Short		

TR-55 Tc and Tt THRU SUBAREA COMPUTATION VERSION 1.11

Project : 84th Street and Cholla User: CDS Date: 08-19-95
County : Maricopa State: AZ Checked: ____ Date: _____
Subtitle: East of 84th Street & South of Cholla & Area 610 6HR 10YR VALUES

Subarea #1 - 410

Flow Type	10 year rain	Length (ft)	Slope (ft/ft)	Surface code	n	Area (sq/ft)	Wp (ft)	Velocity (ft/sec)	Time (hr)
Sheet	2.08	270	.007	A					0.084
Shallow Concent'd		210	.003	U					0.066
Shallow Concent'd		730	.007	U					0.150
Open Channel		180	.003		.025	0.5	2		0.039
Open Channel		1550	.007		.016	0.5	2		0.139

Time of Concentration = 0.48*
=====

Subarea #2 - 420

Flow Type	10 year rain	Length (ft)	Slope (ft/ft)	Surface code	n	Area (sq/ft)	Wp (ft)	Velocity (ft/sec)	Time (hr)
Sheet	2.08	280	.007	A					0.087
Shallow Concent'd		110	.003	U					0.035
Shallow Concent'd		230	.007	U					0.047
Open Channel		1180	.007		.025	5	2		0.166

Time of Concentration = 0.33*
=====

Subarea #3 - 430

Flow Type	10 year rain	Length (ft)	Slope (ft/ft)	Surface code	n	Area (sq/ft)	Wp (ft)	Velocity (ft/sec)	Time (hr)
Sheet	2.08	300	.007	A					0.092
Shallow Concent'd		200	.007	U					0.041
Open Channel		1050	.007		.030	5	2		0.177

Time of Concentration = 0.31*
=====

Subarea #4 - 440

Flow Type	10 year rain	Length (ft)	Slope (ft/ft)	Surface code	n	Area (sq/ft)	Wp (ft)	Velocity (ft/sec)	Time (hr)
Sheet	2.08	100	.007	A					0.038
Sheet		120	.003	A					0.074
Open Channel		780	.007		.025	5	2		0.109

Time of Concentration = 0.22*
=====

TR-55 Tc and Tt THRU SUBAREA COMPUTATION VERSION 1.11

Project : 84th Street and Cholla User: CDS Date: 08-19-95
County : Maricopa State: AZ Checked: ____ Date: _____
Subtitle: East of 84th Street & South of Cholla & Area 610 6HR 10YR VALUES

---------- Subarea #5 - 450 ----------

Flow Type	10 year rain	Length (ft)	Slope (ft/ft)	Surface code	n	Area (sq/ft)	Wp (ft)	Velocity (ft/sec)	Time (hr)
Sheet	2.08	300	.007	A					0.092
Shallow Concent'd		500	.007	U					0.103
Open Channel		600	.003		.030	.5	2		0.154

Time of Concentration = 0.35*
=====

---------- Subarea #6 - 460 ----------

Flow Type	10 year rain	Length (ft)	Slope (ft/ft)	Surface code	n	Area (sq/ft)	Wp (ft)	Velocity (ft/sec)	Time (hr)
Sheet	2.08	300	.007	A					0.092
Shallow Concent'd		340	.007	U					0.070
Open Channel		400	.002		.016	7.5	30		0.067

Time of Concentration = 0.23*
=====

---------- Subarea #7 - 470 ----------

Flow Type	10 year rain	Length (ft)	Slope (ft/ft)	Surface code	n	Area (sq/ft)	Wp (ft)	Velocity (ft/sec)	Time (hr)
Sheet	2.08	150	.005	A					0.060
Open Channel		1100	.007		.025	.5	2		0.154

Time of Concentration = 0.21*
=====

---------- Subarea #8 - 610 ----------

Flow Type	10 year rain	Length (ft)	Slope (ft/ft)	Surface code	n	Area (sq/ft)	Wp (ft)	Velocity (ft/sec)	Time (hr)
Sheet	2.08	130	.007	A					0.047
Shallow Concent'd		100	.010	U					0.017

Time of Concentration = 0.06*
=====

--- Sheet Flow Surface Codes ---

A Smooth Surface
B Fallow (No Res.)
C Cultivated < 20 % Res.
D Cultivated > 20 % Res.
E Grass-Range, Short
F Grass, Dense
G Grass, Burmuda
H Woods, Light
I Woods, Dense

--- Shallow Concentrated --- Surface Codes ---

P Paved
U Unpaved

TR-55 Tc and Tt THRU SUBAREA COMPUTATION VERSION 1.11

Project : 84th Street and Cholla User: CDS Date: 08-19-95
County : Maricopa State: AZ Checked: ____ Date: _____
Subtitle: West of 84th Street and South of Cholla 6-HOUR 10-YEAR VALUES

---------- Subarea #1 - 510 ----------

Flow Type	10 year rain	Length (ft)	Slope (ft/ft)	Surface code	n	Area (sq/ft)	Wp (ft)	Velocity (ft/sec)	Time (hr)
Sheet	2.08	80	.006	A					0.034
Shallow Concent'd		300	.01	U					0.052
Open Channel		150	.0056			.04016	8		0.009

Time of Concentration = 0.09*
=====

---------- Subarea #2 - 520 ----------

Flow Type	10 year rain	Length (ft)	Slope (ft/ft)	Surface code	n	Area (sq/ft)	Wp (ft)	Velocity (ft/sec)	Time (hr)
Sheet	2.08	70	.006	A					0.030
Shallow Concent'd		250	.007	U					0.051
Open Channel		550	.009			.0250.5	2		0.068

Time of Concentration = 0.15*
=====

---------- Subarea #3 - 530 ----------

Flow Type	10 year rain	Length (ft)	Slope (ft/ft)	Surface code	n	Area (sq/ft)	Wp (ft)	Velocity (ft/sec)	Time (hr)
Sheet	2.08	260	.007	A					0.082
Shallow Concent'd		470	.006	U					0.104
Open Channel		350	.009			.025.5	2		0.043

Time of Concentration = 0.23*
=====

---------- Subarea #4 - 540 ----------

Flow Type	10 year rain	Length (ft)	Slope (ft/ft)	Surface code	n	Area (sq/ft)	Wp (ft)	Velocity (ft/sec)	Time (hr)
Sheet	2.08	260	.007	A					0.082
Shallow Concent'd		250	.007	U					0.051
Open Channel		300	.003			.025.5	2		0.064

Time of Concentration = 0.20*
=====

TR-55 Tc and Tt THRU SUBAREA COMPUTATION VERSION 1.11

Project : 84th Street and Cholla User: CDS Date: 08-19-95
County : Maricopa State: AZ Checked: ____ Date: _____
Subtitle: West of 84th Street and South of Cholla 6-HOUR 10-YEAR VALUES

---------- Subarea #5 - 550 ----------

Flow Type	10 year rain	Length (ft)	Slope (ft/ft)	Surface code	n	Area (sq/ft)	Wp (ft)	Velocity (ft/sec)	Time (hr)
Sheet	2.08	120	.007	A					0.044
Shallow Concent'd		300	.007	U					0.062
Open Channel		230	.012		.025.5		2		0.025

Time of Concentration = 0.13*
=====

---------- Subarea #6 - 560 ----------

Flow Type	10 year rain	Length (ft)	Slope (ft/ft)	Surface code	n	Area (sq/ft)	Wp (ft)	Velocity (ft/sec)	Time (hr)
Sheet	2.08	280	.0089	A					0.079
Shallow Concent'd		160	.0023	U					0.057
Open Channel		250	.0040		.04016		8		0.019
Open Channel		500	.0060		.04016		8		0.030

Time of Concentration = 0.19*
=====

---------- Subarea #7 - 570 ----------

Flow Type	10 year rain	Length (ft)	Slope (ft/ft)	Surface code	n	Area (sq/ft)	Wp (ft)	Velocity (ft/sec)	Time (hr)
Sheet	2.08	230	.006	A					0.079
Shallow Concent'd		400	.007	U					0.082
Open Channel		450	.003		.025.5		2		0.096

Time of Concentration = 0.26*
=====

---------- Subarea #8 - 580 ----------

Flow Type	10 year rain	Length (ft)	Slope (ft/ft)	Surface code	n	Area (sq/ft)	Wp (ft)	Velocity (ft/sec)	Time (hr)
Sheet	2.08	300	.007	A					0.092
Shallow Concent'd		100	.007	U					0.021
Shallow Concent'd		150	.006	U					0.033
Open Channel		380	.005		.025.5		2		0.063

Time of Concentration = 0.21*
=====

---------- Subarea #9 - 590 ----------

Flow Type	10 year rain	Length (ft)	Slope (ft/ft)	Surface code	n	Area (sq/ft)	Wp (ft)	Velocity (ft/sec)	Time (hr)
Sheet	2.08	300	.007	A					0.092
Shallow Concent'd		400	.007	U					0.082
Open Channel		400	.0073		.03 .5		2		0.066
Open Channel		570	.005		.025.5		2		0.095

Time of Concentration = 0.33*
=====

TR-55 Tc and Tt THRU SUBAREA COMPUTATION VERSION 1.11

Project : 84th Street and Cholla User: CDS Date: 08-19-95
County : Maricopa State: AZ Checked: ____ Date: _____
Subtitle: West of 84th Street and South of Cholla 6-HOUR 10-YEAR VALUES

---------- Subarea #10 - 600 ----------

Flow Type	10 year rain	Length (ft)	Slope (ft/ft)	Surface code	n	Area (sq/ft)	Wp (ft)	Velocity (ft/sec)	Time (hr)
Sheet	2.08	300	.006	A					0.098
Shallow Concent'd		400	.010	U					0.069
Open Channel		450	.0061		.030.5		2		0.081
Open Channel		700	.0060		.030.5		2		0.127

Time of Concentration = 0.38*
=====

--- Sheet Flow Surface Codes ---

A Smooth Surface
B Fallow (No Res.)
C Cultivated < 20 % Res.
D Cultivated > 20 % Res.
E Grass-Range, Short
F Grass, Dense
G Grass, Burmuda
H Woods, Light
I Woods, Dense

--- Shallow Concentrated --- Surface Codes ---

P Paved
U Unpaved

TR-55 Tc and Tt THRU SUBAREA COMPUTATION VERSION 1.11

Project : 84th Street User: CDS Date: 08-19-95
County : Maricopa State: AZ Checked: ____ Date: _____
Subtitle: North of Cholla Road 6-HOUR 10-YEAR VALUES USED

Subarea #1 - 310

Flow Type	10 year rain	Length (ft)	Slope (ft/ft)	Surface code	n	Area (sq/ft)	Wp (ft)	Velocity (ft/sec)	Time (hr)
Sheet	2.08	300	.01	A					0.080
Shallow Concent'd		160	.007	U					0.033
Open Channel		720	.003		.0162	67	16		0.129

Time of Concentration = 0.24*
=====

Subarea #2 - 320

Flow Type	10 year rain	Length (ft)	Slope (ft/ft)	Surface code	n	Area (sq/ft)	Wp (ft)	Velocity (ft/sec)	Time (hr)
Sheet	2.08	300	.01	A					0.080
Shallow Concent'd		160	.007	U					0.033
Open Channel		750	.003		.0162	64	16		0.136
Open Channel		1600	.003		.0162	64	16		0.290

Time of Concentration = 0.54*
=====

Subarea #3 - 330

Flow Type	10 year rain	Length (ft)	Slope (ft/ft)	Surface code	n	Area (sq/ft)	Wp (ft)	Velocity (ft/sec)	Time (hr)
Sheet	2.08	300	.01	A					0.080
Shallow Concent'd		110	.007	U					0.023
Open Channel		800	.003		.0162	64	16		0.145
Open Channel		2040	.003		.0162	64	16		0.369

Time of Concentration = 0.62*
=====

Subarea #4 - 340

Flow Type	10 year rain	Length (ft)	Slope (ft/ft)	Surface code	n	Area (sq/ft)	Wp (ft)	Velocity (ft/sec)	Time (hr)
Sheet	2.08	300	.01	A					0.080
Shallow Concent'd		400	.006	U					0.089
Open Channel		500	.006		.0162	64	16		0.064

Time of Concentration = 0.23*
=====

TR-55 Tc and Tt THRU SUBAREA COMPUTATION VERSION 1.11

Project : 84th Street User: CDS Date: 08-19-95
County : Maricopa State: AZ Checked: ____ Date: _____
Subtitle: North of Cholla Road 6-HOUR 10-YEAR VALUES USED

Subarea #5 - 350

Flow Type	10 year rain	Length (ft)	Slope (ft/ft)	Surface code	n	Area (sq/ft)	Wp (ft)	Velocity (ft/sec)	Time (hr)
Sheet	2.08	70	.01	A					0.025
Open Channel		260	.006		.0162.64		16		0.033

Time of Concentration = 0.06*
=====

Subarea #6 - 360

Flow Type	10 year rain	Length (ft)	Slope (ft/ft)	Surface code	n	Area (sq/ft)	Wp (ft)	Velocity (ft/sec)	Time (hr)
Sheet	2.08	300	.01	A					0.080
Shallow Concent'd		200	.007	U					0.041
Open Channel		650	.004		.0162.64		16		0.102

Time of Concentration = 0.22*
=====

Subarea #7 - 370

Flow Type	10 year rain	Length (ft)	Slope (ft/ft)	Surface code	n	Area (sq/ft)	Wp (ft)	Velocity (ft/sec)	Time (hr)
Sheet	2.08	170	.01	A					0.051
Shallow Concent'd		170	.002	U					0.065
Open Channel		550	.0077		.0165		20		0.047

Time of Concentration = 0.16*
=====

Subarea #8 - 380

Flow Type	10 year rain	Length (ft)	Slope (ft/ft)	Surface code	n	Area (sq/ft)	Wp (ft)	Velocity (ft/sec)	Time (hr)
Sheet	2.08	120	.007	A					0.044
Sheet		180	.005	A					0.084
Shallow Concent'd		210	.003	U					0.066
Open Channel		520	.003		.0162.64		16		0.094

Time of Concentration = 0.29*
=====

Subarea #9 - 390

Flow Type	10 year rain	Length (ft)	Slope (ft/ft)	Surface code	n	Area (sq/ft)	Wp (ft)	Velocity (ft/sec)	Time (hr)
Sheet	2.08	300	.0045	A					0.110
Shallow Concent'd		50	.0045	U					0.013
Open Channel		650	.006		.0251.5		6		0.099
Open Channel		220	.005		.0251.5		6		0.037

Time of Concentration = 0.26*
=====

TR-55 Tc and Tt THRU SUBAREA COMPUTATION VERSION 1.11

Project : 84th Street User: CDS Date: 08-19-95
County : Maricopa State: AZ Checked: ____ Date: _____
Subtitle: North of Cholla Road 6-HOUR 10-YEAR VALUES USED

--- Sheet Flow Surface Codes ---

A Smooth Surface	F Grass, Dense	--- Shallow Concentrated ---
B Fallow (No Res.)	G Grass, Burmuda	--- Surface Codes ---
C Cultivated < 20 % Res.	H Woods, Light	P Paved
D Cultivated > 20 % Res.	I Woods, Dense	U Unpaved
E Grass-Range, Short		

HYDRAULIC GRADIENT WORKSHEET

SMF Engineering Corporation

Client : City of Scottsdale
Project : 84th Street and Cholla Road
Comments : New Storm Drain in Cholla Road
Final Design - 100 Yr Storm from Detention Basin to Sta 37+70 in Box Sections
50 yr Storm from Sta 37+70 to 85th Street in Box Sections & Pipe
Street Carries Difference between 100 Yr and 50 Yr Flow
Detention Basin is 6 Acres - With 7'x 3' Box Sections/Inlet

By: RM/LR
Checked: CDS

Gutter Elevation=1382.43 = 2.7

11/27/96 10:16 AM

Station	Structure	Pipe Length [ft]	Diam [ft]	Design Q [cfs]	Velocity Head Up Strm Hv1	Velocity Head Dn Strm Hv2	Pipe Frict	Angle [Degr]	Bend/ Curve	MH	Contr/ Exp	Energy Losses Angle [Degr]	D3 Q3	Angle [Degr]	D4 Q4	Junction	Total Ht	Change Hydr Grad Hv2+Ht-Hv1	Hydr Grad Elevation Up Stream	Hydr Grad Elevation Dn Stream
													2.50		2.50					
85th St	MH					0.61						45.00	39.50	45.00	39.50	0.23	0.23	0.85	1379.73	1378.88
	Pipe	209.0	4.00	79.00	0.61	0.61	**0.54**	45.00	**0.09**				2.00		2.00		0.63	0.63	1378.88	1378.25
45+43	Prefab Tee				0.61	0.70						90.00	5.50	90.00		0.18	0.18	0.27	1378.25	1377.98
	Pipe	59.0	4.00	84.50	0.70	0.70	**0.17**	45.00	**0.10**				2.00		2.00		0.28	0.28	1377.98	1377.71
44+85	Prefab Tee				0.70	0.80						90.00	5.50	90.00		0.19	0.19	0.28	1377.71	1377.42
	Pipe	235.0	4.00	90.00	0.80	0.80	**0.79**						1.50		1.50		0.79	0.79	1377.42	1376.64
42+50	Transition Manhole				0.80	0.43				**0.02**	**0.06**	90.00	2.50	90.00	2.50	-0.29	-0.21	-0.58	1376.64	1377.22
	6'x3' Box	300.0	4.58	95.00	0.43	0.43	**0.55**						1.50		1.50		0.55	0.55	1377.22	1376.67
39+50	Prefab Box X				0.43	0.46						90.00	1.50	90.00	1.50	0.06	0.06	0.08	1376.67	1376.59
	6'x3' Box	192.0	4.58	98.00	0.46	0.46	**0.37**						2.00		2.00		0.37	0.37	1376.59	1376.22
37+58	Prefab Box Cross Transition				0.46	0.52						45.00	12.00	45.00	12.00	0.18	0.18	0.24	1376.22	1375.97
	7'x3' Box	215.0	4.58	122.00	0.52	0.52	**0.44**	30.00	**0.05**								0.49	0.49	1375.97	1375.48
35+43	Headwall Outlet				0.52						**0.52**						0.52		1375.48	1375.48

Water surface in Basin = 1374.92 at the time peak occurs in storm drain
Water surface in Basin = 1375.91 at the time peak occurs in detention basin

HYDRAULIC GRADIENT WORKSHEET

SMF Engineering Corporation

Client : City of Scottsdale
Project : 84th Street and Cholla Road
Comments : New Storm Drain in Cholla Road
Final Design - 100 Yr Storm from Detention Basin to Sta 37+70 in Box Sections
50 yr Storm from Sta 37+70 to 85th Street in Box Sections & Pipe
Street Carries Difference between 100 Yr and 50 Yr Flow
Detention Basin is 6 Acres - With 6'x 3' Box Sections/Inlet

By: RM/LR
Checked: CDS

Gutter Elevation=1382.43

11/27/96 10:16 AM

Station	Structure	Pipe Length [ft]	Diam [ft]	Design Q [cfs]	Velocity Head Up Strm Hv1	Velocity Head Dn Strm Hv2	Energy Losses Pipe Frict	Angle [Degr]	Bend/ Curve	MH	Contr/ Exp	Angle [Degr]	D3 Q3	Angle [Degr]	D4 Q4	Junction	Total Ht	Change Hydr Grad Hv2+Ht-Hv1	Hydr Grad Elevation Up Stream	Hydr Grad Elevation Dn Stream
													2.50		2.50					
85th St	MH					0.61						45.00	39.50	45.00	39.50	0.23	0.23	0.85	1380.14	1379.29
	Pipe	209.0	4.00	79.00	0.61	0.61	**0.54**	45.00	**0.09**				2.00		2.00		0.63	0.63	1379.29	1378.66
45+43	Prefab Tee				0.61	0.70						90.00	5.50	90.00		0.18	0.18	0.27	1378.66	1378.39
	Pipe	59.0	4.00	84.50	0.70	0.70	**0.17**	45.00	**0.10**				2.00		2.00		0.28	0.28	1378.39	1378.12
44+85	Prefab Tee				0.70	0.80						90.00	5.50	90.00		0.19	0.19	0.28	1378.12	1377.83
	Pipe	235.0	4.00	90.00	0.80	0.80	**0.79**						1.50		1.50		0.79	0.79	1377.83	1377.05
42+50	Transition Manhole				0.80	0.43				**0.02**	**0.06**	90.00	2.50	90.00	2.50	-0.29	-0.21	-0.58	1377.05	1377.63
	6'x3' Box	300.0	4.58	95.00	0.43	0.43	**0.55**						1.50		1.50		0.55	0.55	1377.63	1377.08
39+50	Prefab Box X				0.43	0.46						90.00	1.50	90.00	1.50	0.06	0.06	0.08	1377.08	1377.00
	6'x3' Box	192.0	4.58	98.00	0.46	0.46	**0.37**						2.00		2.00		0.37	0.37	1377.00	1376.63
37+58	Prefab Box Cross Transition				0.46	0.71						45.00	12.00	45.00	12.00	0.18	0.18	0.43	1376.63	1376.20
	6'x3' Box	215.0	4.58	122.00	0.71	0.71	**0.64**	30.00	**0.07**								0.72	0.72	1376.20	1375.48
35+43	Headwall Outlet				0.71						**0.71**						0.71		1375.48	1375.48

Water surface in Basin = 1374.92 at the time peak occurs in storm drain
Water surface in Basin = 1375.91 at the time peak occurs in detention basin

HYDRAULIC GRADIENT WORKSHEET

SMF Engineering Corporation

Client : City of Scottsdale
Project : 84th Street and Cholla Road
Comments : New Storm Drain in 84th Street
Final Design - 100 Yr Storm
Detention Basin is 6 Acres

By: RM/LR
Checked: CDS
Gutter Elevation=1381.95 10:16 AM

Station	Structure	Pipe Length [ft]	Diam [ft]	Design Q [cfs]	Velocity Head Up Strm Hv1	Velocity Head Dn Strm Hv2	Energy Losses Pipe Frict	Angle [Degr]	Bend/ Curve	MH	Contr/ Exp	Angle [Degr]	D3 Q3	Angle [Degr]	D4 Q4	Junction	Total Ht	Change Hydr Grad Hv2+Ht-Hv1	Hydr Grad Elevation Up Stream	Hydr Grad Elevation Dn Stream
			3.50										2.50		2.50					
43+60	MH					0.62				0.03		45.00	30.50	45.00	30.50	0.38	0.41	1.04	1378.92	1377.88
	Pipe	320.0	3.50	61.00	0.62	0.62	1.00						2.50		2.50		1.00	1.00	1377.88	1376.88
40+50	Prefab Box Transition				0.62	0.53						90.00	22.00	90.00	22.00	0.51	0.51	0.41	1376.88	1376.46
	6'x3' Box	129.0	4.58	105.00	0.53	0.53	0.29	90.00	0.10								0.38	0.38	1376.46	1376.08
39+21	Headwall				0.53						0.53						0.53		1376.08	1376.08

Water surface in Basin = 1375.20 at the time peak occurs in storm drain
Water surface in Basin = 1375.91 at the time peak occurs in detention basin

HYDRAULIC GRADIENT WORKSHEET

SMF Engineering Corporation

Client : City of Scottsdale
Project : 84th Street and Cholla Road
Comments : New Storm Drain in 84th Street
Final Design - 100 Yr Storm
Detention Basin is 6 Acres

By: RM/LR
Checked: CDS
Gutter Elevation=1381.95 10:16 AM

Station	Structure	Pipe Length [ft]	Diam [ft]	Design Q [cfs]	Velocity Head Up Strm Hv1	Velocity Head Dn Strm Hv2	Energy Losses Pipe Frict	Angle [Degr]	Bend/ Curve	MH	Contr/ Exp	Angle [Degr]	D3 Q3	Angle [Degr]	D4 Q4	Junction	Total Ht	Change Hydr Grad Hv2+Ht-Hv1	Hydr Grad Elevation Up Stream	Hydr Grad Elevation Dn Stream
	Pipe		4.00										2.50		2.50					
43+60	MH					0.37				0.02		45.00	30.50	45.00	30.50	0.07	0.09	0.45	1380.54	1380.08
	Pipe	320.0	4.00	61.00	0.37	0.37	0.49						2.50		2.50		0.49	0.49	1380.08	1379.59
40+50	Prefab Box Transition				0.37	1.08						45.00	22.00	45.00	22.00	1.09	1.09	1.81	1379.59	1377.78
	Pipe	129.0	4.00	105.00	1.08	1.08	0.59	90.00	0.20								0.78	0.78	1377.78	1377.00
39+21	Headwall				1.08						1.08						1.08		1377.00	1377.00

Water surface in Basin = 1375.20 at the time peak occurs in storm drain
Water surface in Basin = 1375.91 at the time peak occurs in detention basin

HYDRAULIC GRADIENT WORKSHEET

SMF Engineering Corporation

Client : City of Scottsdale
Project : 84th Street and Cholla Road
Comments : New Storm Drain in 84th Street
Final Design - 100 Yr Storm
Detention Basin is 6 Acres

By: RM/LR
Checked: CDS
Gutter Elevation=1381.95 11:04 AM

Station	Structure	Pipe Length [ft]	Diam [ft]	Design Q [cfs]	Velocity Head Up Strm Hv1	Velocity Head Dn Strm Hv2	Energy Losses Pipe Frict	Angle [Degr]	Bend/ Curve	MH	Contr/ Exp	Angle [Degr]	D3 Q3	Angle [Degr]	D4 Q4	Junction	Total Ht	Change Hydr Grad Hv2+Ht-Hv1	Hydr Grad Elevation Up Stream	Hydr Grad Elevation Dn Stream
			3.00										2.50		2.50					
43+60	MH					1.16				0.06		45.00	30.50	45.00	30.50	1.14	1.19	2.35	1380.16	1377.81
	Pipe	320.0	3.00	61.00	1.16	1.16	2.28						2.50		2.50		2.28	2.28	1377.81	1375.53
40+50	Prefab Box Transition				1.16	0.53						45.00	22.00	45.00	22.00	-0.13	-0.13	-0.76	1375.53	1376.29
	6'x3' Box	129.0	4.58	105.00	0.53	0.53	0.29	90.00	0.10								0.38	0.38	1376.29	1375.91
39+21	Headwall				0.53						0.53						0.53		1375.91	1375.91

Water surface in Basin = 1375.20 at the time peak occurs in storm drain
Water surface in Basin = 1375.91 at the time peak occurs in detention basin

SMF Scott, Meyer, Ferguson
ENGINEERING CORPORATION
1915 West Adobe Drive, Suite "D"
Phoenix, Arizona 85027
Telephone (602)516-0605, FAX (602)516-0068

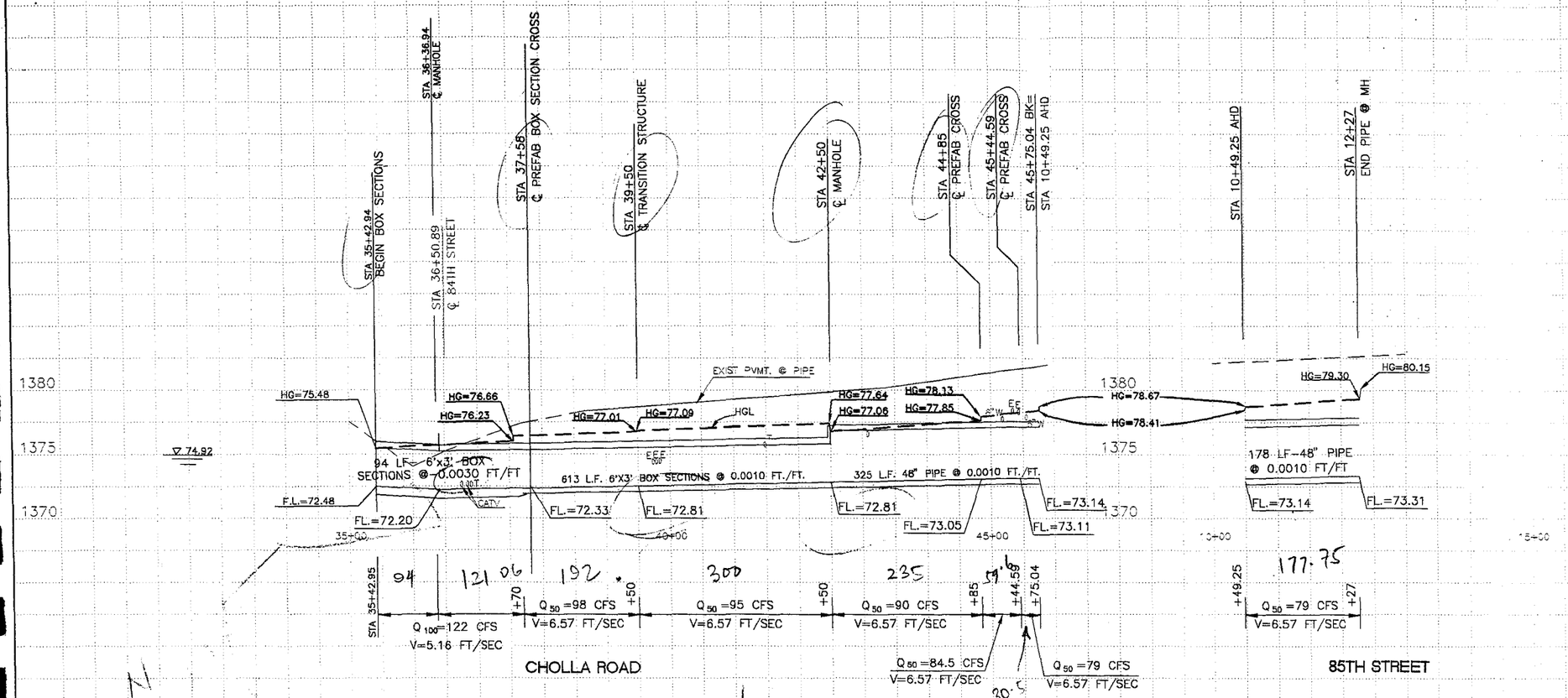

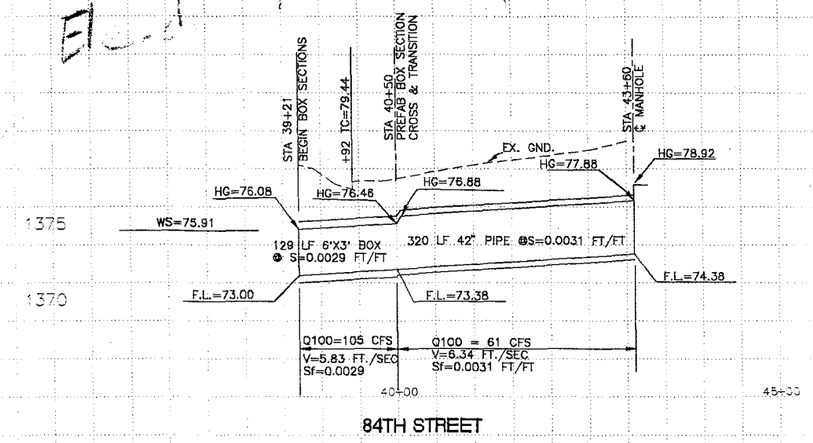

CALL TWO WORKING DAYS BEFORE YOU DIG
263-1100
1-800-STAKE-IT
(OUTSIDE MARICOPA COUNTY)

NOTE: ALL UTILITIES SHOWN ARE APPROXIMATE ONLY, BASED ON AS-BUILT INFORMATION SUPPLIED BY UTILITY COMPANIES.

PRELIMINARY –
NOT FOR CONSTRUCTION OR RECORDING

CHOLLA ROAD STORM DRAIN
100 YEAR - HYDRAULIC PROFILE

DATE	REVISION	BY

ENGINEER

REGISTERED PROFESSIONAL ENGINEER (CIVIL) CERTIFICATE NO. 7561 CHARLES DEE SCOTT ARIZONA, U.S.A.

CITY OF SCOTTSDALE ARIZONA

MUNICIPAL SERVICES DEPARTMENT
CAPITAL PROJECT MANAGEMENT
3939 CIVIC CENTER BLVD
SCOTTSDALE, ARIZONA 852

PROJECT TITLE: 84TH STREET AND CHOLLA ROAD ROADWAY IMPROVEMENTS

SCALE	DESIGNED BY	CHECKED BY	BID NO.	SHT. HG1
HORIZ. 1"=100'	CDS	CDS		
VERT. 1"=5'	DRAWN BY MC	AS-BUILT	PROJECT NO. S2709	33 OF 39

```
PAVEMENT DRAINAGE PROGRAM - HEC-12                                          Page   1
Licensed to: SMF Engineering Corporation, Phoenix, AZ  85027
Project     : 84th Street Right - New
-------------------------------------------------------------------------------
Sta 43+80                                   INPUT
Intens.= 0.00 C1=0.00  A1= 0.00 Qadd    = 30.5    Slope1= 6.0000 Gutter= 1.42 Area   = 0.00
CB ID  = 4    C2=0.00  A2= 0.00 Qrunoff= 30.5     Slope2= 0.0587 a     = 3.00 Perim  = 0.00
Curb Opening  C3=0.00  A3= 0.00 Grade   =  0.0074 Slope3= 0.0150 W     = 1.42 Length=38.00
.............................................................................................
                                            OUTPUT
Flowby=  0.0 Qtotal= 30.5 Qint= 29.9 Flowby dn=  0.6 Depth=0.53 Spread= 31.40 Veloc= 4.09
-------------------------------------------------------------------------------
Sta 40+50                                   INPUT
Intens.= 0.00 C1=0.00  A1= 0.00 Qadd    = 22.5    Slope1= 6.0000 Gutter= 1.42 Area   = 0.00
CB ID  = 5    C2=0.00  A2= 0.00 Qrunoff= 22.5     Slope2= 0.0587 a     = 3.00 Perim  = 0.00
Curb Opening  C3=0.00  A3= 0.00 Grade   =  0.0062 Slope3= 0.0100 W     = 1.42 Length=38.00
.............................................................................................
                                            OUTPUT
Flowby=  0.6 Qtotal= 23.1 Qint= 23.1 Flowby dn=  0.0 Depth=0.45 Spread= 38.08 Veloc= 3.16
-------------------------------------------------------------------------------
Sta 36+97                                   INPUT
Intens.= 0.00 C1=0.00  A1= 0.00 Qadd    =  9.0    Slope1= 6.0000 Gutter= 1.42 Area   = 0.00
CB ID  = 6    C2=0.00  A2= 0.00 Qrunoff=  9.0     Slope2= 0.0587 a     = 3.00 Perim  = 0.00
Curb Opening  C3=0.00  A3= 0.00 Grade   =  0.0041 Slope3= 0.0200 W     = 1.42 Length=20.00
.............................................................................................
                                            OUTPUT
Flowby=  0.0 Qtotal=  9.0 Qint=  9.0 Flowby dn=  0.0 Depth=0.42 Spread= 18.20 Veloc= 2.68
-------------------------------------------------------------------------------
                                         CRITERIA
Runoff computed by Rational Method   Manning`s n Gutter=0.012  Manning`s n Pavement=0.016
Clogging Factors in Sag Location:
----- Curb Opening= 1.25 Grate= 2.00 Slotted Drain= 1.25 Comb-Curb= 1.00 Comb-Grate= 1.00
Clogging Factors on Continuous Grade:
----- Curb Opening= 1.25 Grate= 2.00 Slotted Drain= 1.25 Comb-Curb= 1.00 Comb-Grate= 1.00
-------------------------------------------------------------------------------
Prepared by:          Date:11/27/96    Time:08:36:56     Checked by:        Date:
Pavement Drainage Program (C), 1991 Copyright by SMF Engineering Corporation, Phoenix, AZ
```

Licensed to: SMF Engineering Corporation, Phoenix, AZ 85027
Project : 84th Street Left - New

```
Sta 43+80                                   INPUT
Intens.= 0.00 C1=0.00  A1= 0.00 Qadd    = 30.5    Slope1= 6.0000 Gutter= 1.42 Area  = 0.00
CB ID  = 1    C2=0.00  A2= 0.00 Qrunoff= 30.5     Slope2= 0.0587 a     = 3.00 Perim = 0.00
Curb Opening  C3=0.00  A3= 0.00 Grade   =  0.0082 Slope3= 0.0180 W     = 1.42 Length=38.00
.......................................................................................
                                            OUTPUT
Flowby=  0.0 Qtotal= 30.5 Qint= 30.2 Flowby dn=  0.3 Depth=0.55 Spread= 27.29 Veloc= 4.51

Sta 40+50                                   INPUT
Intens.= 0.00 C1=0.00  A1= 0.00 Qadd    = 22.5    Slope1= 6.0000 Gutter= 1.42 Area  = 0.00
CB ID  = 2    C2=0.00  A2= 0.00 Qrunoff= 22.5     Slope2= 0.0587 a     = 3.00 Perim = 0.00
Curb Opening  C3=0.00  A3= 0.00 Grade   =  0.0074 Slope3= 0.0200 W     = 1.42 Length=38.00
.......................................................................................
                                            OUTPUT
Flowby=  0.3 Qtotal= 22.8 Qint= 22.8 Flowby dn=  0.0 Depth=0.52 Spread= 23.25 Veloc= 4.18

Sta 36+97                                   INPUT
Intens.= 0.00 C1=0.00  A1= 0.00 Qadd    =  4.5    Slope1= 6.0000 Gutter= 1.42 Area  = 0.00
CB ID  = 3    C2=0.00  A2= 0.00 Qrunoff=  4.5     Slope2= 0.0587 a     = 3.00 Perim = 0.00
Curb Opening  C3=0.00  A3= 0.00 Grade   =  0.0039 Slope3= 0.0200 W     = 1.42 Length=20.00
.......................................................................................
                                            OUTPUT
Flowby=  0.0 Qtotal=  4.5 Qint=  4.5 Flowby dn=  0.0 Depth=0.34 Spread= 14.00 Veloc= 2.24

                                          CRITERIA
Runoff computed by Rational Method   Manning`s n Gutter=0.012  Manning`s n Pavement=0.016
Clogging Factors in Sag Location:
----- Curb Opening= 1.25 Grate= 2.00 Slotted Drain= 1.25 Comb-Curb= 1.00 Comb-Grate= 1.00
Clogging Factors on Continuous Grade:
----- Curb Opening= 1.25 Grate= 2.00 Slotted Drain= 1.25 Comb-Curb= 1.00 Comb-Grate= 1.00

Prepared by:        Date:11/27/96    Time:08:37:33    Checked by:        Date:
```
Pavement Drainage Program (C), 1991 Copyright by SMF Engineering Corporation, Phoenix, AZ

Licensed to: SMF Engineering Corporation, Phoenix, AZ 85027
Project : 84th/Cholla Rd East-Left-50 Yr-CO

```
Sta 85TH ST                                   INPUT
Intens.= 0.00 C1=0.00  A1= 0.00 Qadd    = 39.5    Slope1= 6.0000 Gutter= 1.42 Area  = 0.00
CB ID  = 1    C2=0.00  A2= 0.00 Qrunoff= 39.5     Slope2= 0.0587 a     = 3.00 Perim = 0.00
Curb Opening  C3=0.00  A3= 0.00 Grade   =  0.0025 Slope3= 0.0200 W     = 2.50 Length=38.00
.......................................................................................
                                              OUTPUT
Flowby=  0.0 Qtotal= 39.5 Qint= 39.5 Flowby dn=  0.0 Depth=0.76 Spread= 35.20 Veloc= 3.17
---------------------------------------------------------------------------------------
                                              INPUT
    End of this reach of Catch Basins
    Flowby dn flows to Catch Basin  3
.......................................................................................
                                              OUTPUT
    Flowby dn=  0.0
---------------------------------------------------------------------------------------
Sta 85TH ST                                   INPUT
Intens.= 0.00 C1=0.00  A1= 0.00 Qadd    = 39.5    Slope1= 6.0000 Gutter= 1.42 Area  = 0.00
CB ID  = 2    C2=0.00  A2= 0.00 Qrunoff= 39.5     Slope2= 0.0587 a     = 3.00 Perim = 0.00
Curb Opening  C3=0.00  A3= 0.00 Grade   =  0.0025 Slope3= 0.0200 W     = 2.50 Length=38.00
.......................................................................................
                                              OUTPUT
Flowby=  0.0 Qtotal= 39.5 Qint= 39.5 Flowby dn=  0.0 Depth=0.76 Spread= 35.20 Veloc= 3.17
---------------------------------------------------------------------------------------
Sta 44+85                                     INPUT
Intens.= 0.00 C1=0.00  A1= 0.00 Qadd    =  9.0    Slope1= 6.0000 Gutter= 1.42 Area  = 0.00
CB ID  = 3    C2=0.00  A2= 0.00 Qrunoff=  9.0     Slope2= 0.0587 a     = 2.00 Perim = 0.00
Curb Opening  C3=0.00  A3= 0.00 Grade   =  0.0074 Slope3= 0.0212 W     = 1.42 Length=20.00
.......................................................................................
                                              OUTPUT
Flowby=  0.0 Qtotal=  9.0 Qint=  8.8 Flowby dn=  0.2 Depth=0.38 Spread= 15.60 Veloc= 3.42
---------------------------------------------------------------------------------------
Sta 42+50                                     INPUT
Intens.= 0.00 C1=0.00  A1= 0.00 Qadd    =  6.5    Slope1= 6.0000 Gutter= 1.42 Area  = 0.00
CB ID  = 5    C2=0.00  A2= 0.00 Qrunoff=  6.5     Slope2= 0.0587 a     = 2.00 Perim = 0.00
Curb Opening  C3=0.00  A3= 0.00 Grade   =  0.0039 Slope3= 0.0144 W     = 1.42 Length=20.00
.......................................................................................
                                              OUTPUT
Flowby=  0.2 Qtotal=  6.7 Qint=  6.7 Flowby dn=  0.0 Depth=0.35 Spread= 20.21 Veloc= 2.22
---------------------------------------------------------------------------------------
Sta 39+50                                     INPUT
Intens.= 0.00 C1=0.00  A1= 0.00 Qadd    =  5.5    Slope1= 6.0000 Gutter= 1.42 Area  = 0.00
CB ID  = 7    C2=0.00  A2= 0.00 Qrunoff=  5.5     Slope2= 0.0587 a     = 2.00 Perim = 0.00
Curb Opening  C3=0.00  A3= 0.00 Grade   =  0.0044 Slope3= 0.0200 W     = 1.42 Length=20.00
.......................................................................................
                                              OUTPUT
Flowby=  0.0 Qtotal=  5.5 Qint=  5.5 Flowby dn=  0.0 Depth=0.35 Spread= 14.80 Veloc= 2.45
---------------------------------------------------------------------------------------
Sta 37+70                                     INPUT
Intens.= 0.00 C1=0.00  A1= 0.00 Qadd    = 11.5    Slope1= 6.0000 Gutter= 1.42 Area  = 0.00
CB ID  = 9    C2=0.00  A2= 0.00 Qrunoff= 11.5     Slope2= 0.0587 a     = 2.00 Perim = 0.00
Curb Opening  C3=0.00  A3= 0.00 Grade   =  0.0016 Slope3= 0.0200 W     = 1.42 Length=20.00
.......................................................................................
                                              OUTPUT
Flowby=  0.0 Qtotal= 11.5 Qint= 11.5 Flowby dn=  0.0 Depth=0.53 Spread= 23.95 Veloc= 1.98
```

Licensed to: SMF Engineering Corporation, Phoenix, AZ 85027
Project : 84th/Cholla Rd East-Left-50 Yr-CO

CRITERIA

Runoff computed by Rational Method Manning`s n Gutter=0.012 Manning`s n Pavement=0.016
Clogging Factors in Sag Location:
----- Curb Opening= 1.25 Grate= 2.00 Slotted Drain= 1.25 Comb-Curb= 1.00 Comb-Grate= 1.00
Clogging Factors on Continuous Grade:
----- Curb Opening= 1.25 Grate= 2.00 Slotted Drain= 1.25 Comb-Curb= 1.00 Comb-Grate= 1.00

Prepared by: Date:11/27/96 Time:08:37:59 Checked by: Date:
Pavement Drainage Program (C), 1991 Copyright by SMF Engineering Corporation, Phoenix, AZ

Licensed to: SMF Engineering Corporation, Phoenix, AZ 85027
Project : 84th/Cholla Rd East-Left-100 Yr

```
Sta 85TH ST                                INPUT
Intens.= 0.00 C1=0.00  A1= 0.00 Qadd    = 49.0    Slope1= 6.0000 Gutter= 1.42 Area  = 0.00
CB ID  = 1    C2=0.00  A2= 0.00 Qrunoff= 49.0    Slope2= 0.0587 a     = 3.00 Perim = 0.00
Curb Opening  C3=0.00  A3= 0.00 Grade  =  0.0025 Slope3= 0.0200 W     = 2.50 Length=38.00
.......................................................................................
                                           OUTPUT
Flowby=  0.0 Qtotal= 49.0 Qint= 48.7 Flowby dn=  0.3 Depth=0.82 Spread= 38.20 Veloc= 3.34
---------------------------------------------------------------------------------------
                                           INPUT
   End of this reach of Catch Basins
   Flowby dn flows to Catch Basin  3
.......................................................................................
                                           OUTPUT
   Flowby dn=  0.3
---------------------------------------------------------------------------------------
Sta 85TH ST                                INPUT
Intens.= 0.00 C1=0.00  A1= 0.00 Qadd    = 49.0    Slope1= 6.0000 Gutter= 1.42 Area  = 0.00
CB ID  = 2    C2=0.00  A2= 0.00 Qrunoff= 49.0    Slope2= 0.0587 a     = 3.00 Perim = 0.00
Curb Opening  C3=0.00  A3= 0.00 Grade  =  0.0025 Slope3= 0.0200 W     = 2.50 Length=38.00
.......................................................................................
                                           OUTPUT
Flowby=  0.0 Qtotal= 49.0 Qint= 48.7 Flowby dn=  0.3 Depth=0.82 Spread= 38.20 Veloc= 3.34
---------------------------------------------------------------------------------------
Sta 44+85                                  INPUT
Intens.= 0.00 C1=0.00  A1= 0.00 Qadd    = 11.5    Slope1= 6.0000 Gutter= 1.42 Area  = 0.00
CB ID  = 3    C2=0.00  A2= 0.00 Qrunoff= 11.5    Slope2= 0.0587 a     = 2.00 Perim = 0.00
Curb Opening  C3=0.00  A3= 0.00 Grade  =  0.0074 Slope3= 0.0212 W     = 1.42 Length=20.00
.......................................................................................
                                           OUTPUT
Flowby=  0.5 Qtotal= 12.0 Qint= 11.0 Flowby dn=  1.0 Depth=0.42 Spread= 17.44 Veloc= 3.67
---------------------------------------------------------------------------------------
Sta 42+50                                  INPUT
Intens.= 0.00 C1=0.00  A1= 0.00 Qadd    =  8.5    Slope1= 6.0000 Gutter= 1.42 Area  = 0.00
CB ID  = 5    C2=0.00  A2= 0.00 Qrunoff=  8.5    Slope2= 0.0587 a     = 2.00 Perim = 0.00
Curb Opening  C3=0.00  A3= 0.00 Grade  =  0.0039 Slope3= 0.0144 W     = 1.42 Length=20.00
.......................................................................................
                                           OUTPUT
Flowby=  1.0 Qtotal=  9.5 Qint=  9.3 Flowby dn=  0.2 Depth=0.40 Spread= 23.27 Veloc= 2.39
---------------------------------------------------------------------------------------
Sta 39+50                                  INPUT
Intens.= 0.00 C1=0.00  A1= 0.00 Qadd    =  7.0    Slope1= 6.0000 Gutter= 1.42 Area  = 0.00
CB ID  = 7    C2=0.00  A2= 0.00 Qrunoff=  7.0    Slope2= 0.0587 a     = 2.00 Perim = 0.00
Curb Opening  C3=0.00  A3= 0.00 Grade  =  0.0044 Slope3= 0.0200 W     = 1.42 Length=20.00
.......................................................................................
                                           OUTPUT
Flowby=  0.2 Qtotal=  7.2 Qint=  7.2 Flowby dn=  0.0 Depth=0.38 Spread= 16.40 Veloc= 2.61
---------------------------------------------------------------------------------------
Sta 37+70                                  INPUT
Intens.= 0.00 C1=0.00  A1= 0.00 Qadd    = 11.5    Slope1= 6.0000 Gutter= 1.42 Area  = 0.00
CB ID  = 9    C2=0.00  A2= 0.00 Qrunoff= 11.5    Slope2= 0.0587 a     = 2.00 Perim = 0.00
Curb Opening  C3=0.00  A3= 0.00 Grade  =  0.0016 Slope3= 0.0200 W     = 1.42 Length=20.00
.......................................................................................
                                           OUTPUT
Flowby=  0.0 Qtotal= 11.5 Qint= 11.5 Flowby dn=  0.0 Depth=0.53 Spread= 23.95 Veloc= 1.98
```

Licensed to: SMF Engineering Corporation, Phoenix, AZ 85027
Project : 84th/Cholla Rd East-Left-100 Yr

CRITERIA

Runoff computed by Rational Method Manning`s n Gutter=0.012 Manning`s n Pavement=0.016
Clogging Factors in Sag Location:
----- Curb Opening= 1.25 Grate= 2.00 Slotted Drain= 1.25 Comb-Curb= 1.00 Comb-Grate= 1.00
Clogging Factors on Continuous Grade:
----- Curb Opening= 1.25 Grate= 2.00 Slotted Drain= 1.25 Comb-Curb= 1.00 Comb-Grate= 1.00

Prepared by: Date:11/27/96 Time:08:38:20 Checked by: Date:

Pavement Drainage Program (C), 1991 Copyright by SMF Engineering Corporation, Phoenix, AZ

Licensed to: SMF Engineering Corporation, Phoenix, AZ 85027
Project : 84th/Cholla Rd East-Right-50 Yr

```
Sta 45+93.67                                INPUT
Intens.= 0.00 C1=0.00  A1= 0.00 Qadd   =  9.0    Slope1= 6.0000 Gutter= 1.42 Area  = 0.00
CB ID  = 4    C2=0.00  A2= 0.00 Qrunoff=  9.0    Slope2= 0.0587 a     = 2.00 Perim = 0.00
Curb Opening  C3=0.00  A3= 0.00 Grade  =  0.0022 Slope3= 0.0200 W     = 1.42 Length=20.00
.......................................................................................
                                            OUTPUT
Flowby=  0.0 Qtotal=  9.0 Qint=  9.0 Flowby dn=  0.0 Depth=0.47 Spread= 20.50 Veloc= 2.11
---------------------------------------------------------------------------------------
                                            INPUT
    End of this reach of Catch Basins
    Flowby dn flows to Catch Basin  20
.......................................................................................
                                            OUTPUT
    Flowby dn=  0.0
---------------------------------------------------------------------------------------
Sta 42+50                                   INPUT
Intens.= 0.00 C1=0.00  A1= 0.00 Qadd   =  6.5    Slope1= 6.0000 Gutter= 1.42 Area  = 0.00
CB ID  = 6    C2=0.00  A2= 0.00 Qrunoff=  6.5    Slope2= 0.0587 a     = 2.00 Perim = 0.00
Curb Opening  C3=0.00  A3= 0.00 Grade  =  0.0037 Slope3= 0.0280 W     = 1.42 Length=20.00
.......................................................................................
                                            OUTPUT
Flowby=  0.0 Qtotal=  6.5 Qint=  6.5 Flowby dn=  0.0 Depth=0.41 Spread= 13.09 Veloc= 2.66
---------------------------------------------------------------------------------------
Sta 39+50                                   INPUT
Intens.= 0.00 C1=0.00  A1= 0.00 Qadd   =  5.5    Slope1= 6.0000 Gutter= 1.42 Area  = 0.00
CB ID  = 8    C2=0.00  A2= 0.00 Qrunoff=  5.5    Slope2= 0.0587 a     = 2.00 Perim = 0.00
Curb Opening  C3=0.00  A3= 0.00 Grade  =  0.0037 Slope3= 0.0220 W     = 1.42 Length=20.00
.......................................................................................
                                            OUTPUT
Flowby=  0.0 Qtotal=  5.5 Qint=  5.5 Flowby dn=  0.0 Depth=0.37 Spread= 14.36 Veloc= 2.37
---------------------------------------------------------------------------------------
Sta 37+70                                   INPUT
Intens.= 0.00 C1=0.00  A1= 0.00 Qadd   = 11.5    Slope1= 6.0000 Gutter= 1.42 Area  = 0.00
CB ID  = 10   C2=0.00  A2= 0.00 Qrunoff= 11.5    Slope2= 0.0587 a     = 2.00 Perim = 0.00
Curb Opening  C3=0.00  A3= 0.00 Grade  =  0.0016 Slope3= 0.0200 W     = 1.42 Length=20.00
.......................................................................................
                                            OUTPUT
Flowby=  0.0 Qtotal= 11.5 Qint= 11.5 Flowby dn=  0.0 Depth=0.53 Spread= 23.95 Veloc= 1.98
---------------------------------------------------------------------------------------
                                          CRITERIA
Runoff computed by Rational Method   Manning`s n Gutter=0.012  Manning`s n Pavement=0.016
Clogging Factors in Sag Location:
----- Curb Opening= 1.25 Grate= 2.00 Slotted Drain= 1.25 Comb-Curb= 1.00 Comb-Grate= 1.00
Clogging Factors on Continuous Grade:
----- Curb Opening= 1.25 Grate= 2.00 Slotted Drain= 1.25 Comb-Curb= 1.00 Comb-Grate= 1.00
---------------------------------------------------------------------------------------
Prepared by:        Date:11/27/96    Time:08:39:05    Checked by:        Date:
```
Pavement Drainage Program (C), 1991 Copyright by SMF Engineering Corporation, Phoenix, AZ

Licensed to: SMF Engineering Corporation, Phoenix, AZ 85027
Project : 84th/Cholla Rd East-Right-100 Yr

```
Sta 45+93.67                                INPUT
Intens.= 0.00 C1=0.00  A1= 0.00 Qadd    = 11.5    Slope1= 6.0000 Gutter= 1.42 Area  = 0.00
CB ID  = 4    C2=0.00  A2= 0.00 Qrunoff= 11.5    Slope2= 0.0587 a     = 2.00 Perim = 0.00
Curb Opening  C3=0.00  A3= 0.00 Grade  =  0.0022 Slope3= 0.0200 W     = 1.42 Length=20.00
.......................................................................................
                                            OUTPUT
Flowby=  0.0 Qtotal= 11.5 Qint= 11.5 Flowby dn=  0.0 Depth=0.51 Spread= 22.55 Veloc= 2.23
---------------------------------------------------------------------------------------
                                            INPUT
    End of this reach of Catch Basins
    Flowby dn flows to Catch Basin  20
.......................................................................................
                                            OUTPUT
    Flowby dn=  0.0
---------------------------------------------------------------------------------------
Sta 42+50                                   INPUT
Intens.= 0.00 C1=0.00  A1= 0.00 Qadd    =  8.5    Slope1= 6.0000 Gutter= 1.42 Area  = 0.00
CB ID  = 6    C2=0.00  A2= 0.00 Qrunoff=  8.5    Slope2= 0.0587 a     = 2.00 Perim = 0.00
Curb Opening  C3=0.00  A3= 0.00 Grade  =  0.0037 Slope3= 0.0280 W     = 1.42 Length=20.00
.......................................................................................
                                            OUTPUT
Flowby=  0.0 Qtotal=  8.5 Qint=  8.5 Flowby dn=  0.0 Depth=0.45 Spread= 14.51 Veloc= 2.84
---------------------------------------------------------------------------------------
Sta 39+50                                   INPUT
Intens.= 0.00 C1=0.00  A1= 0.00 Qadd    =  7.0    Slope1= 6.0000 Gutter= 1.42 Area  = 0.00
CB ID  = 8    C2=0.00  A2= 0.00 Qrunoff=  7.0    Slope2= 0.0587 a     = 2.00 Perim = 0.00
Curb Opening  C3=0.00  A3= 0.00 Grade  =  0.0037 Slope3= 0.0220 W     = 1.42 Length=20.00
.......................................................................................
                                            OUTPUT
Flowby=  0.0 Qtotal=  7.0 Qint=  7.0 Flowby dn=  0.0 Depth=0.40 Spread= 15.77 Veloc= 2.51
---------------------------------------------------------------------------------------
Sta 37+70                                   INPUT
Intens.= 0.00 C1=0.00  A1= 0.00 Qadd    = 11.5    Slope1= 6.0000 Gutter= 1.42 Area  = 0.00
CB ID  = 10   C2=0.00  A2= 0.00 Qrunoff= 11.5    Slope2= 0.0587 a     = 2.00 Perim = 0.00
Curb Opening  C3=0.00  A3= 0.00 Grade  =  0.0016 Slope3= 0.0200 W     = 1.42 Length=20.00
.......................................................................................
                                            OUTPUT
Flowby=  0.0 Qtotal= 11.5 Qint= 11.5 Flowby dn=  0.0 Depth=0.53 Spread= 23.95 Veloc= 1.98
---------------------------------------------------------------------------------------
                                          CRITERIA
Runoff computed by Rational Method   Manning`s n Gutter=0.012  Manning`s n Pavement=0.016
Clogging Factors in Sag Location:
----- Curb Opening= 1.25 Grate= 2.00 Slotted Drain= 1.25 Comb-Curb= 1.00 Comb-Grate= 1.00
Clogging Factors on Continuous Grade:
----- Curb Opening= 1.25 Grate= 2.00 Slotted Drain= 1.25 Comb-Curb= 1.00 Comb-Grate= 1.00
---------------------------------------------------------------------------------------
Prepared by:        Date:11/27/96    Time:08:39:17    Checked by:        Date:
```
Pavement Drainage Program (C), 1991 Copyright by SMF Engineering Corporation, Phoenix, AZ

HYDRAULIC GRADIENT WORKSHEET

SMF Engineering Corporation

Client : City of Scottsdale
Project : 84th Street and Cholla Road
Comments : New Storm Drain in Cholla Road
Final Design
Connector Pipes on South Side of Cholla Road & East Side of 85th Street (50 yr storm)
With 6'x3' Box - 100 Yr Storm Outlet Reach

By: RM/LR
Checked: CDS
11/27/96 11:14 AM

Station	Structure	Pipe Length [ft]	Diam [ft]	Design Q [cfs]	Velocity Head Up Strm Hv1	Velocity Head Dn Strm Hv2	Energy Losses Pipe Frict	Angle [Degr]	Bend/ Curve	MH	Contr/ Exp	Angle [Degr]	Q3 [cfs]	Angle [Degr]	Q4 [cfs]	Junction	Total Ht	Change Hydr Grad Hv2+Ht-Hv1	Hydr Grad Elevation Up Stream	Hydr Grad Elevation Dn Stream
																			G=1377.82	
37+70	CB					0.23					0.11						0.11	0.34	1377.03	1376.69
	Pipe	16.0	2.00	12.00	0.23	0.23	0.04	45.00	0.02								0.06	0.06	1376.69	1376.63
37+58	Prefab X				0.23														1376.63	
																			G=1378.27	
39+50	CB					0.15					0.08						0.08	0.23	1377.34	1377.12
	Pipe	16.0	1.50	5.50	0.15	0.15	0.04										0.04	0.04	1377.12	1377.08
39+50	Prefab Cross				0.15														1377.08	
																			G=1379.38	
42+50	CB					0.21					0.10						0.10	0.31	1378.00	1377.69
	Pipe	18.0	1.50	6.50	0.21	0.21	0.06										0.06	0.06	1377.69	1377.63
42+50	Transition Manhole				0.21														1377.63	
																			G=1381.53	
45+94	CB					0.13					0.06						0.06	0.19	1378.93	1378.74
	Pipe	62.0	2.00	9.00	0.13	0.13	0.08										0.08	0.08	1378.74	1378.66
45+43	Prefab Tee				0.13														1378.66	
																			G=1382.38	
12+44	CB					1.00					0.50						0.50	1.51	1381.93	1380.42
	Pipe	24.0	2.50	39.50	1.00	1.00	0.19	45.00	0.09								0.28	0.28	1380.42	1380.14
12+44	Manhole				1.00														1380.14	

HYDRAULIC GRADIENT WORKSHEET

SMF Engineering Corporation

Client : City of Scottsdale
Project : 84th Street and Cholla Road
Comments : New Storm Drain in Cholla Road
Final Design - 100 Yr Storm
Connector Pipes on North Side of Cholla Road and West Side of 85th Street (50 yr storm)
With 6'x3' Box - 100 Yr Storm Outlet Reach

By: RM/LR
Checked: CDS
11/27/96 11:14 AM

Station	Structure	Pipe Length [ft]	Diam [ft]	Design Q [cfs]	Velocity Head Up Strm Hv1	Velocity Head Dn Strm Hv2	Energy Losses Pipe Frict	Angle [Degr]	Bend/ Curve	MH	Contr/ Exp	Angle [Degr]	Q3 [cfs]	Angle [Degr]	Q4 [cfs]	Junction	Total Ht	Change Hydr Grad Hv2+Ht-Hv1	Hydr Grad Elevation Up Stream	Hydr Grad Elevation Dn Stream
																			G=1377.82	
37+70	CB					0.23					0.11						0.11	0.34	1377.03	1376.69
	Pipe	16.0	2.00	12.00	0.23	0.23	0.04	45.00	0.02								0.06	0.06	1376.69	1376.63
37+58	Prefab Cross				0.23														1376.63	
																			G=1378.30	
39+50	CB					0.15					0.08						0.08	0.23	1377.34	1377.12
	Pipe	16.0	1.50	5.50	0.15	0.15	0.04										0.04	0.04	1377.12	1377.08
39+50	Prefab Box X				0.15														1377.08	
																			G=1379.52	
42+50	CB					0.21					0.10						0.10	0.31	1378.00	1377.68
	Pipe	16.0	1.50	6.50	0.21	0.21	0.05										0.05	0.05	1377.68	1377.63
42+50	Transition Manhole				0.21													-0.21	1377.63	
																			G=1380.87	
44+85	CB					0.13					0.06						0.06	0.19	1378.33	1378.14
	Pipe	16.0	2.00	9.00	0.13	0.13	0.02										0.02	0.02	1378.14	1378.12
44+85	Prefab Tee				0.13													-0.13	1378.12	
																			G=1382.40	
12+44	CB					1.00					0.50						0.50	1.51	1381.93	1380.42
	Pipe	24.0	2.50	39.50	1.00	1.00	0.19	45.00	0.09								0.28	0.28	1380.42	1380.14
12+44	Manhole				1.00														1380.14	

HYDRAULIC GRADIENT WORKSHEET

SMF Engineering Corporation

Client : City of Scottsdale
Project : 84th Street and Cholla Road
Comments : New Storm Drain in Cholla Road
Final Design
Connector Pipes on South Side of Cholla Road & East Side of 85th Street (50 yr storm)
With 7'x3' Box - 100 Yr Storm Outlet Reach

By: RM/LR
Checked: CDS
11/27/96 01:19 PM

Station	Structure	Pipe Length [ft]	Diam [ft]	Design Q [cfs]	Velocity Head Up Strm Hv1	Velocity Head Dn Strm Hv2	Energy Losses Pipe Frict	Angle [Degr]	Bend/ Curve	MH	Contr/ Exp	Angle [Degr]	Q3 [cfs]	Angle [Degr]	Q4 [cfs]	Junction	Total Ht	Change Hydr Grad Hv2+Ht-Hv1	Hydr Grad Elevation Up Stream	Hydr Grad Elevation Dn Stream
																			G=1377.82	
37+70	CB					0.23					0.11						0.11	0.34	1376.62	1376.28
	Pipe	16.0	2.00	12.00	0.23	0.23	0.04	45.00	0.02								0.06	0.06	1376.28	1376.22
37+58	Prefab X				0.23														1376.22	
																			G=1378.27	
39+50	CB					0.15					0.08						0.08	0.23	1376.93	1376.71
	Pipe	16.0	1.50	5.50	0.15	0.15	0.04										0.04	0.04	1376.71	1376.67
39+50	Prefab Cross				0.15														1376.67	
																			G=1379.38	
42+50	CB					0.21					0.10						0.10	0.31	1377.59	1377.28
	Pipe	18.0	1.50	6.50	0.21	0.21	0.06										0.06	0.06	1377.28	1377.22
42+50	Transition Manhole				0.21														1377.22	
																			G=1381.53	
45+94	CB					0.13					0.06						0.06	0.19	1378.52	1378.33
	Pipe	62.0	2.00	9.00	0.13	0.13	0.08										0.08	0.08	1378.33	1378.25
45+43	Prefab Tee				0.13														1378.25	
																			G=1382.38	
12+44	CB					1.00					0.50						0.50	1.51	1381.52	1380.01
	Pipe	24.0	2.50	39.50	1.00	1.00	0.19	45.00	0.09								0.28	0.28	1380.01	1379.73
12+44	Manhole				1.00														1379.73	

HYDRAULIC GRADIENT WORKSHEET

SMF Engineering Corporation

Client : City of Scottsdale
Project : 84th Street and Cholla Road
Comments : New Storm Drain in Cholla Road
Final Design - 100 Yr Storm
Connector Pipes on North Side of Cholla Road and West Side of 85th Street (50 yr storm)
With 7'x3' Box - 100 Yr Storm Outlet Reach

By: RM/LR
Checked: CDS
11/27/96 01:19 PM

Station	Structure	Pipe Length [ft]	Diam [ft]	Design Q [cfs]	Velocity Head Up Strm Hv1	Velocity Head Dn Strm Hv2	Energy Losses Pipe Frict	Angle [Degr]	Bend/ Curve	MH	Contr/ Exp	Angle [Degr]	Q3 [cfs]	Angle [Degr]	Q4 [cfs]	Junction	Total Ht	Change Hydr Grad Hv2+Ht-Hv1	Hydr Grad Elevation Up Stream	Hydr Grad Elevation Dn Stream
																			G=1377.82	
37+70	CB					0.23					0.11						0.11	0.34	1376.62	1376.28
	Pipe	16.0	2.00	12.00	0.23	0.23	0.04	45.00	0.02								0.06	0.06	1376.28	1376.22
37+58	Prefab Cross				0.23														1376.22	
																			G=1378.30	
39+50	CB					0.15					0.08						0.08	0.23	1376.93	1376.71
	Pipe	16.0	1.50	5.50	0.15	0.15	0.04										0.04	0.04	1376.71	1376.67
39+50	Prefab Box X				0.15														1376.67	
																			G=1379.52	
42+50	CB					0.21					0.10						0.10	0.31	1377.59	1377.27
	Pipe	16.0	1.50	6.50	0.21	0.21	0.05										0.05	0.05	1377.27	1377.22
42+50	Transition Manhole				0.21													-0.21	1377.22	
																			G=1380.87	
44+85	CB					0.13					0.06						0.06	0.19	1377.92	1377.73
	Pipe	16.0	2.00	9.00	0.13	0.13	0.02										0.02	0.02	1377.73	1377.71
44+85	Prefab Tee				0.13													-0.13	1377.71	
																			G=1382.40	
12+44	CB					1.00					0.50						0.50	1.51	1381.52	1380.01
	Pipe	24.0	2.50	39.50	1.00	1.00	0.19	45.00	0.09								0.28	0.28	1380.01	1379.73
12+44	Manhole				1.00														1379.73	

HYDRAULIC GRADIENT WORKSHEET

SMF Engineering Corporation

Client : City of Scottsdale
Project : 84th Street and Cholla Road
Comments : New Storm Drain in 84th Street
Final Design
Connector Pipes on 84th Street, North of Cholla Road (100 yr storm)

By: RM/LR
Checked: CDS
11/27/96 01:19 PM

Station	Structure	Pipe Length [ft]	Diam [ft]	Design Q [cfs]	Velocity Head Up Strm Hv1	Velocity Head Dn Strm Hv2	Energy Losses Pipe Frict	Angle [Degr]	Bend/ Curve	MH	Contr/ Exp	Angle [Degr]	Q3 [cfs]	Angle [Degr]	Q4 [cfs]	Junction	Total Ht	Change Hydr Grad Hv2+Ht-Hv1	Hydr Grad Elevation Up Stream	Hydr Grad Elevation Dn Stream
																			G=1381.95	
43+74	CB,LT					0.60					0.30						0.30	0.90	1379.96	1379.06
	Pipe	18.0	2.50	30.50	0.60	0.60	0.08	45.00	0.05								0.14	0.14	1379.06	1378.92
43+60	Manhole				0.60														1378.92	
																			G=1382.01	
43+74	CB,RT					0.60					0.30						0.30	0.90	1380.01	1379.11
	Pipe	30.0	2.50	30.50	0.60	0.60	0.14	45.00	0.05								0.19	0.19	1379.11	1378.92
43+60	Manhole				0.60														1378.92	
																			G=1379.32	
40+50	CB,LT					0.33					0.16						0.16	0.49	1377.41	1376.92
	Pipe	15.0	2.50	22.50	0.33	0.33	0.04										0.04	0.04	1376.92	1376.88
40+50	Manhole				0.33														1376.88	
																			G=1379.52	
40+50	CB,RT					0.33					0.16						0.16	0.49	1377.45	1376.96
	Pipe	30.0	2.50	22.50	0.33	0.33	0.08										0.08	0.08	1376.96	1376.88
40+50	Manhole				0.33														1376.88	
																			G=1377.17	
36+97	CB,RT					0.13					0.06						0.06	0.19	1376.51	1376.32
	Pipe	36.00	2.00	9.00	0.13	0.13	0.05										0.05	0.05	1376.32	1376.27
36+97	CB,LT				0.13														1376.27	
																			G=1377.17	
36+97	CB,LT					0.29					0.14						0.14	0.43	1376.27	1375.84
	Pipe	22.00	2.00	13.50	0.29	0.29	0.07	45.00	0.03								0.09	0.09	1375.84	1375.75
36+15	Prefab Box Tee, Cholla Strm Dr.				0.29														1375.75	

SMF Scott, Meyer, Ferguson
ENGINEERING CORPORATION
1915 West Adobe Drive, Suite "D"
Phoenix, Arizona 85027
Telephone (602)516-0605, FAX (602)516-0068

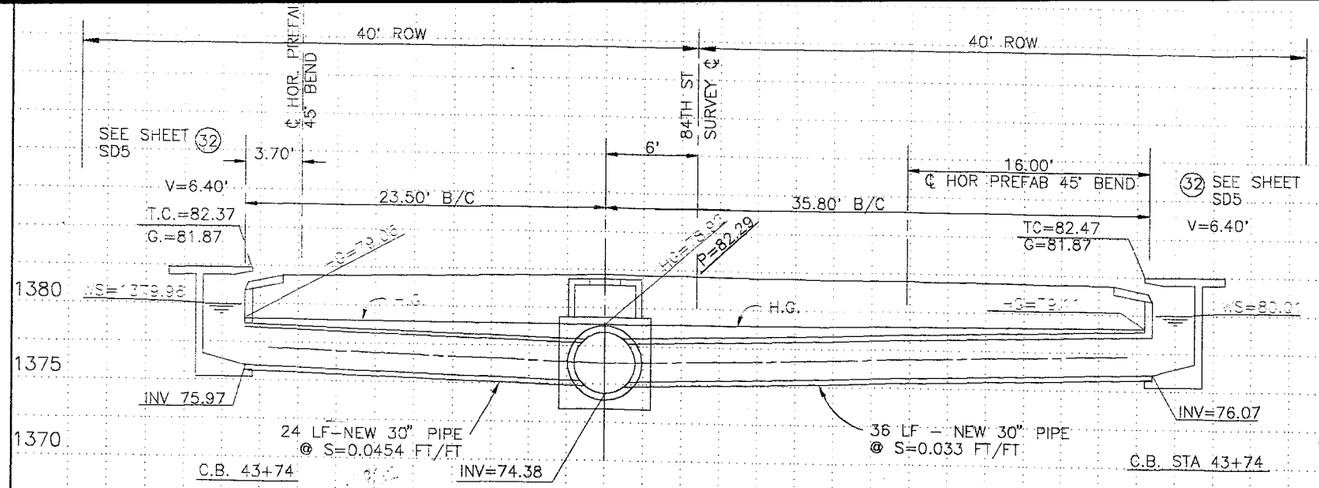

84TH STREET STA 43+60

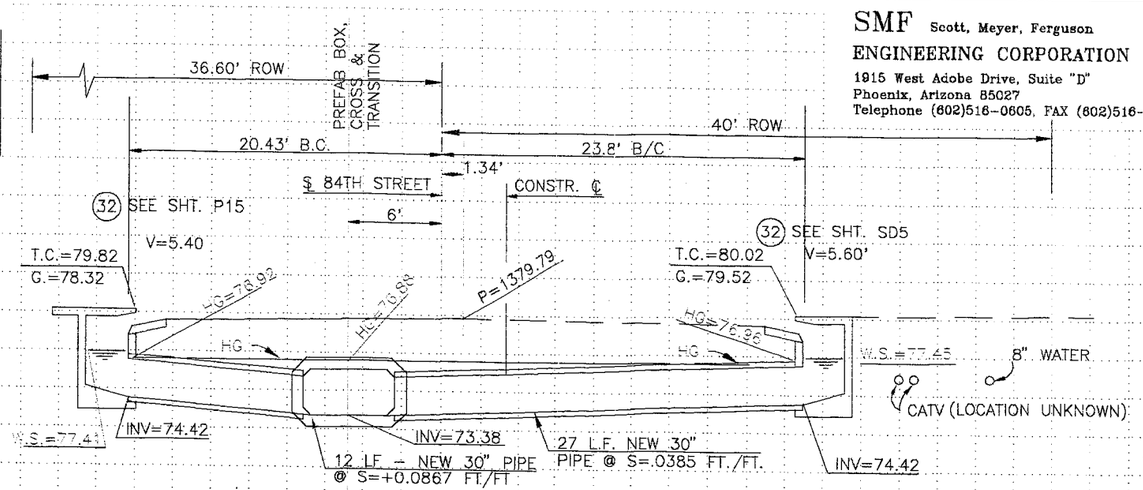

84TH STREET STA 40+50

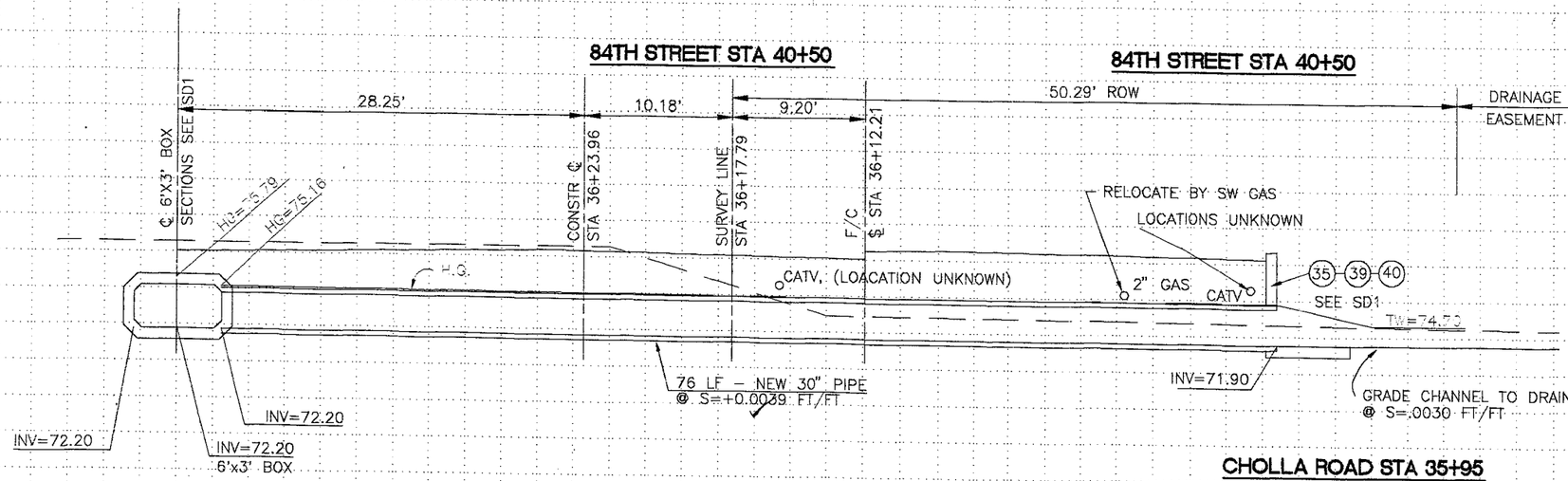

84TH STREET STA 40+50

CHOLLA ROAD STA 35+95

STORM DRAIN BOX SECTION STA 36+36.94

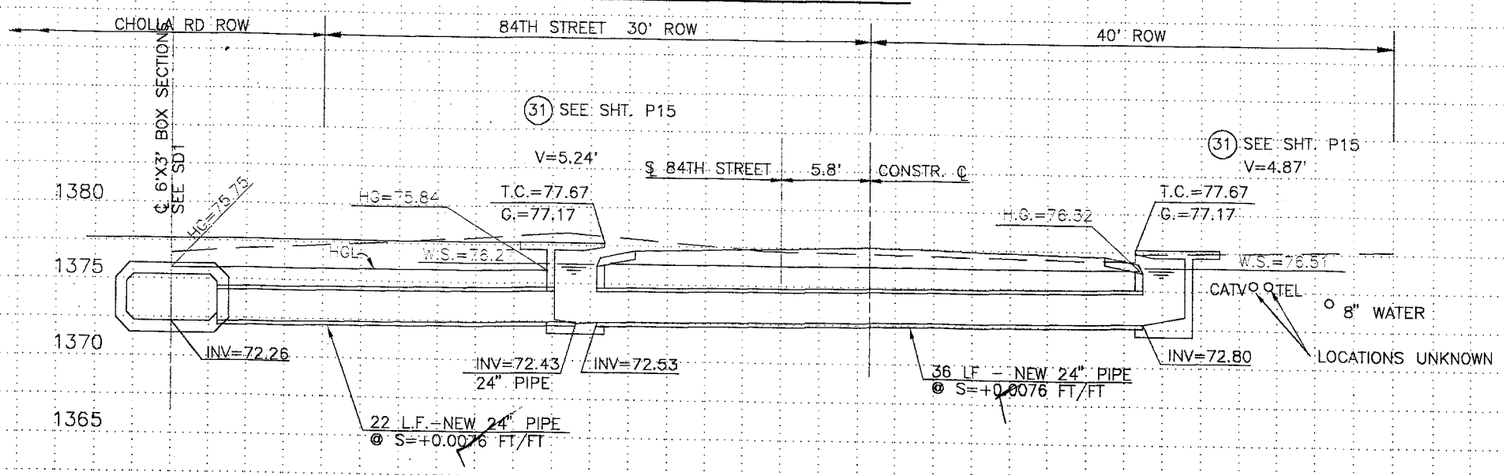

84TH STREET STA 36+97.76

84TH STREET STA 36+97.57

BOX SECTION STA 36+15.40

CALL TWO WORKING DAYS BEFORE YOU DIG 263-1100 (CLOSE HANDOOR COUNTY)

NOTE: ALL UTILITIES SHOWN ARE APPROXIMATE ONLY, BASED ON AS-BUILT INFORMATION SUPPLIED BY UTILITY COMPANIES.

* THE ELEVATION OF EXISTING UTILITIES IS UNKNOWN UNLESS NOTED ON THE PROFILE.

PRELIMINARY -
NOT FOR CONSTRUCTION OR RECORDI

CONNECTOR PIPE PROFILES

DATE	REVISION	B

ENGINEER: REGISTERED PROFESSIONAL ENGINEER (CIVIL) CERTIFICATE NO. 7561 CHARLES DEE SCOTT ARIZONA, U.S.A.

CITY OF SCOTTSDALE ARIZONA

MUNICIPAL SERVICES DEPARTMENT
CAPITAL PROJECT MANAGEMENT
3939 CIVIC CENTER B
SCOTTSDALE, ARIZONA 8

PROJECT TITLE: 84TH STREET AND CHOLLA ROAD ROADWAY IMPROVEMENTS

SCALE	DESIGNED BY	CHECKED BY	BID NO.

SMF Scott, Meyer, Ferguson
ENGINEERING CORPORATION
1915 West Adobe Drive, Suite "D"
Phoenix, Arizona 85027
Telephone (602)516-0605, FAX (602)516-008

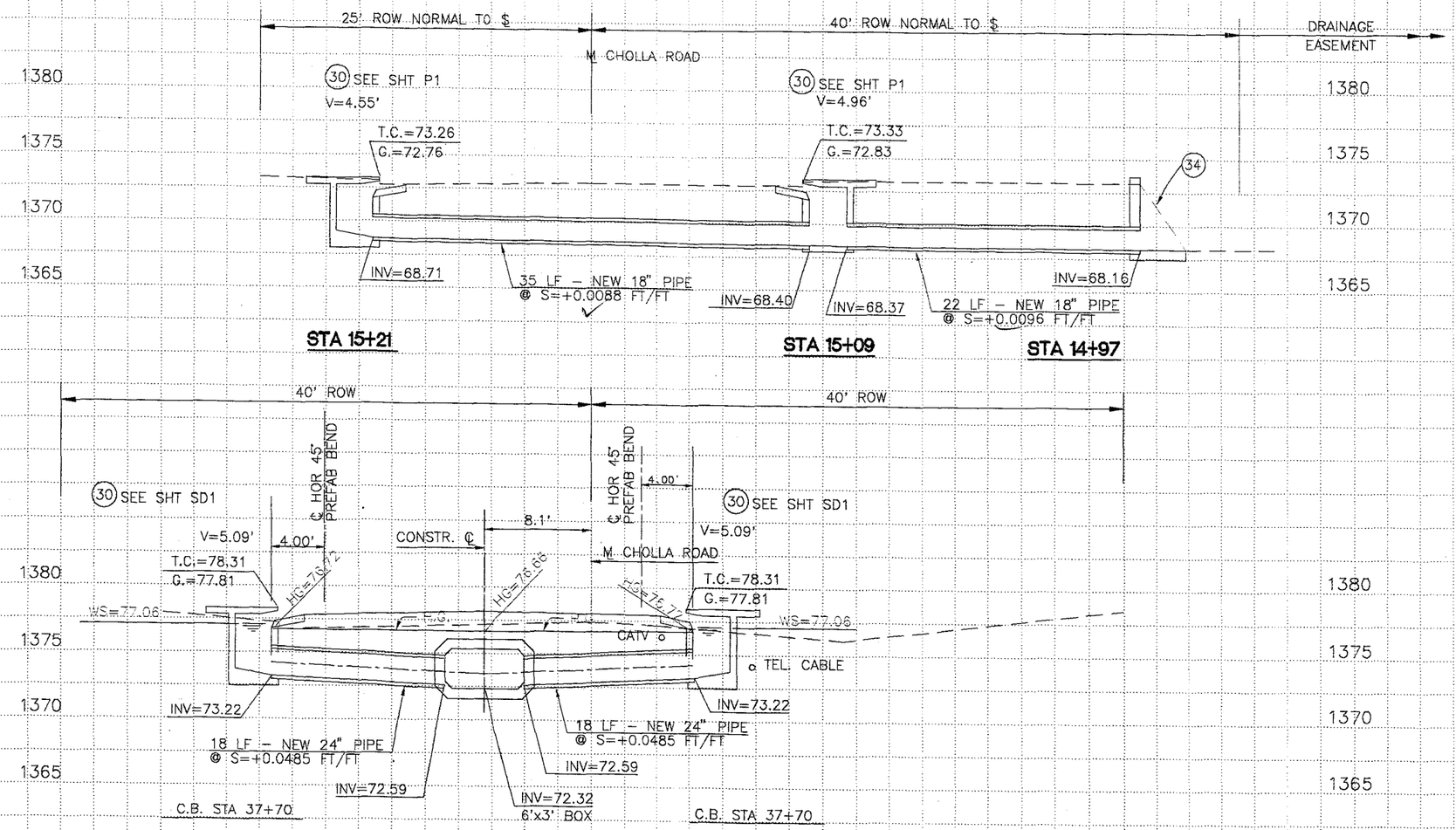

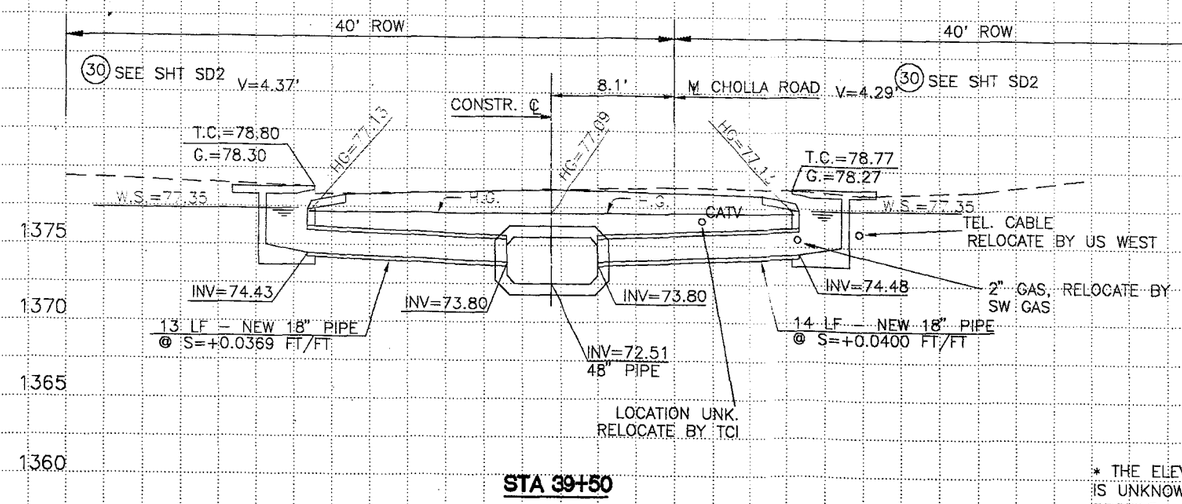

NOTE: ALL UTILITIES SHOWN ARE APPROXIMATE ONLY, BASED ON AS-BUILT INFORMATION SUPPLIED BY UTILITY COMPANIES.

* THE ELEVATION OF EXISTING UTILITIES IS UNKNOWN UNLESS NOTED ON THE PROFILE.

PRELIMINARY –
NOT FOR CONSTRUCTION OR RECORD

CONNECTOR PIPE PROFILES

DATE	REVISION

ENGINEER: REGISTERED PROFESSIONAL ENGINEER (CIVIL) CERTIFICATE NO. 7561 CHARLES DEE SCOTT ARIZONA, U.S.A.

CITY OF SCOTTSDALE ARIZONA

MUNICIPAL SERVIC
DEPARTMENT
CAPITAL PROJE
MANAGEMENT
3939 CIVIC CENTER
SCOTTSDALE, ARIZONA

PROJECT TITLE: 84TH STREET AND CHOLLA ROAD ROADWAY IMPROVEMENTS

SCALE	DESIGNED BY	CHECKED BY	BID NO.

SMF Scott, Meyer, Ferguson
ENGINEERING CORPORATION
1915 West Adobe Drive, Suite "D"
Phoenix, Arizona 85027
Telephone (602)516-0605, FAX (602)516-0068

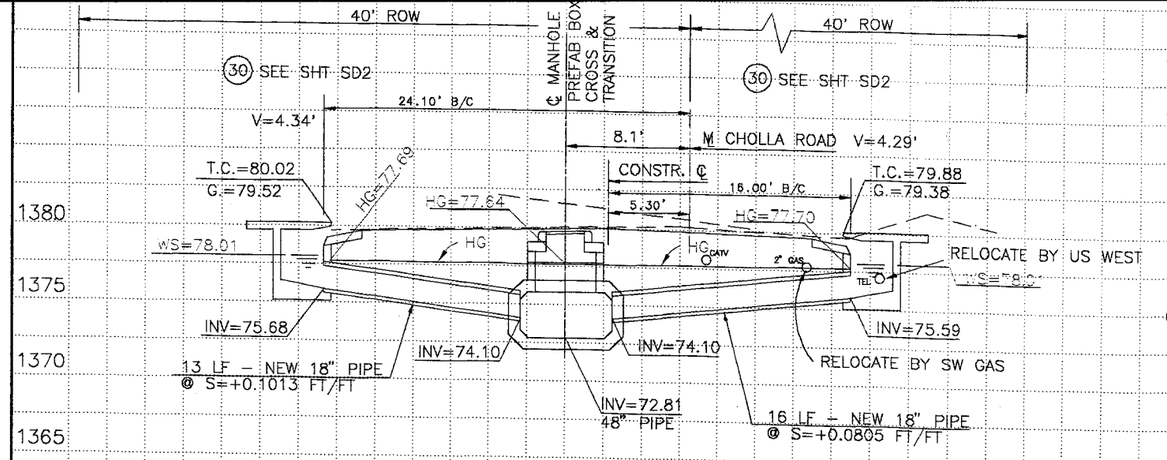

STA 42+50

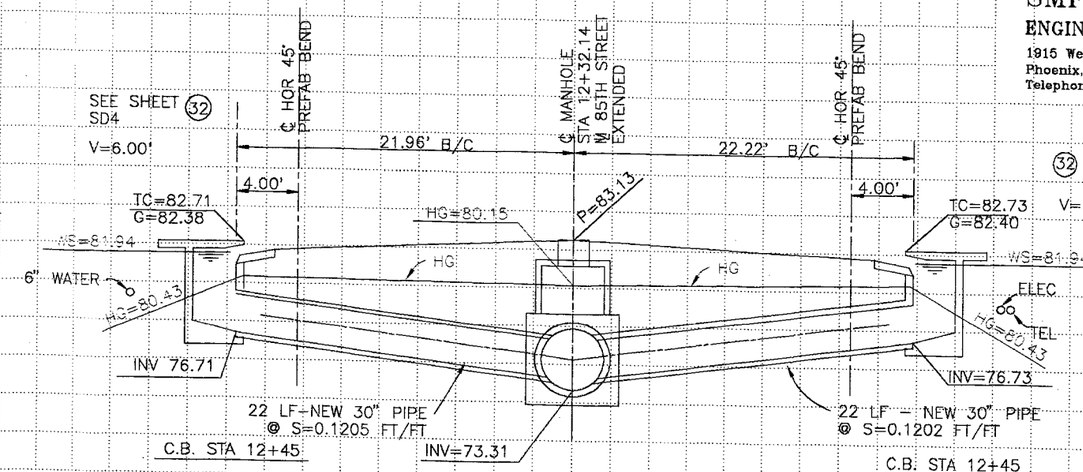

M.H. STA 12+32.14 85TH STREET

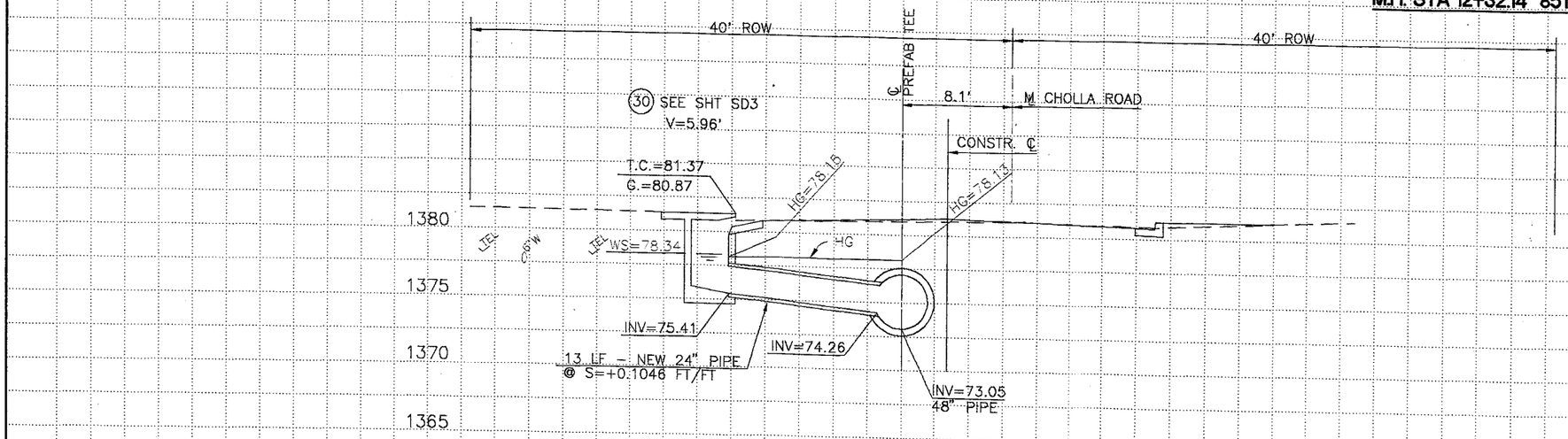

STA 44+85

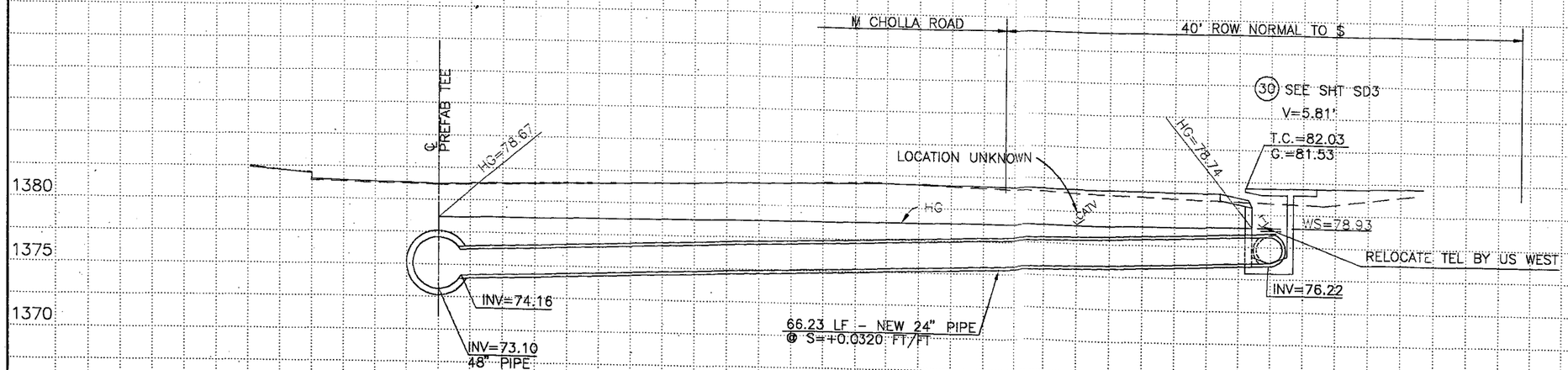

PIPE STA 45+44.59

CONSTR ℄ STA 45+93.67

* THE ELEVATION OF EXISTING UTILITIES IS UNKNOWN UNLESS NOTED ON THE PROFILE.

CALL TWO WORKING DAYS BEFORE YOU DIG
263-1000
1-800-STAKE-IT
(OUTSIDE MARICOPA COUNTY)

NOTE: ALL UTILITIES SHOWN ARE APPROXIMATE ONLY, BASED ON AS-BUILT INFORMATION SUPPLIED BY UTILITY COMPANIES.

PRELIMINARY - NOT FOR CONSTRUCTION OR RECORD

CONNECTOR PIPE PROFILES

DATE	REVISION

ENGINEER

REGISTERED PROFESSIONAL ENGINEER (CIVIL) CERTIFICATE NO. 7561 CHARLES DEE SCOTT ARIZONA, U.S.A.

CITY OF SCOTTSDALE ARIZONA

MUNICIPAL SERVICES DEPARTMENT
CAPITAL PROJECT MANAGEMENT
3939 CIVIC CENTER
SCOTTSDALE, ARIZONA

PROJECT TITLE
84TH STREET AND CHOLLA ROAD ROADWAY IMPROVEMENTS

SCALE | DESIGNED BY | CHECKED BY | BID NO.

CURRENT DATE: 11-26-1996
CURRENT TIME: 12:03:34

FILE DATE: 11-22-1996
FILE NAME: CHOLLA

FHWA CULVERT ANALYSIS
HY-8, VERSION 6.0

CULV NO.	SITE DATA: INLET ELEV. (ft)	OUTLET ELEV. (ft)	CULVERT LENGTH (ft)	CULVERT SHAPE, MATERIAL, INLET: BARRELS SHAPE MATERIAL	SPAN (ft)	RISE (ft)	MANNING n	INLET TYPE
1	72.20	71.90	76.00	1 RCP	3.00	3.00	.012	CONVENTIONAL
2								
3								
4								
5								
6								

SUMMARY OF CULVERT FLOWS (cfs) FILE: CHOLLA DATE: 11-22-1996

ELEV (ft)	TOTAL	1	2	3	4	5	6	ROADWAY	ITR
72.20	0.0	0.0	0.0	0.0	0.0	0.0	0.0	0.00	0
73.32	4.5	0.0	0.0	0.0	0.0	0.0	0.0	0.00	0
73.91	9.0	0.0	0.0	0.0	0.0	0.0	0.0	0.00	0
74.08	13.5	0.0	0.0	0.0	0.0	0.0	0.0	0.00	0
74.24	18.0	0.0	0.0	0.0	0.0	0.0	0.0	0.00	0
74.42	22.5	0.0	0.0	0.0	0.0	0.0	0.0	0.00	0
74.61	27.0	0.0	0.0	0.0	0.0	0.0	0.0	0.00	0
75.03	31.5	0.0	0.0	0.0	0.0	0.0	0.0	0.00	0
75.27	36.0	0.0	0.0	0.0	0.0	0.0	0.0	0.00	0
75.51	40.5	0.0	0.0	0.0	0.0	0.0	0.0	0.00	0
75.78	45.0	0.0	0.0	0.0	0.0	0.0	0.0	0.00	0
0.00	0.0	0.0	0.0	0.0	0.0	0.0	0.0	OVERTOPPING	

SUMMARY OF ITERATIVE SOLUTION ERRORS FILE: CHOLLA DATE: 11-22-1996

HEAD ELEV (ft)	HEAD ERROR (ft)	TOTAL FLOW (cfs)	FLOW ERROR (cfs)	% FLOW ERROR
72.20	0.000	0.00	0.00	0.00
73.32	0.000	4.50	0.00	0.00
73.91	0.000	9.00	0.00	0.00
74.08	0.000	13.50	0.00	0.00
74.24	0.000	18.00	0.00	0.00
74.42	0.000	22.50	0.00	0.00
74.61	0.000	27.00	0.00	0.00
75.03	0.000	31.50	0.00	0.00
75.27	0.000	36.00	0.00	0.00
75.51	0.000	40.50	0.00	0.00
75.78	0.000	45.00	0.00	0.00

<1> TOLERANCE (ft) = 0.010 <2> TOLERANCE (%) = 1.000

CURRENT DATE: 11-26-1996
CURRENT TIME: 12:03:34

FILE DATE: 11-22-1996
FILE NAME: CHOLLA

PERFORMANCE CURVE FOR CULVERT 1 - 1(3.00 (ft) BY 3.00 (ft)) RCP

DIS-CHARGE FLOW (cfs)	HEAD-WATER ELEV. (ft)	INLET CONTROL DEPTH (ft)	OUTLET CONTROL DEPTH (ft)	FLOW TYPE <F4>	NORMAL DEPTH (ft)	CRIT. DEPTH (ft)	OUTLET DEPTH (ft)	TW DEPTH (ft)	OUTLET VEL. (fps)	TW VEL. (fps)
0.00	72.20	0.00	-0.30	0-NF	0.00	0.00	0.00	0.00	0.00	0.00
4.50	73.32	0.85	1.12	3-M1t	0.63	0.65	1.24	1.24	1.64	1.51
9.00	73.91	1.27	1.71	1-S2n	0.91	0.94	0.91	1.55	5.00	1.75
13.50	74.08	1.62	1.88	1-S2n	1.12	1.17	1.12	1.78	5.61	1.93
18.00	74.24	1.91	2.04	1-S2n	1.31	1.35	1.31	1.97	6.05	2.06
22.50	74.42	2.17	2.22	1-S2n	1.50	1.52	1.50	2.14	6.39	2.15
27.00	74.61	2.41	2.41	1-S2n	1.67	1.67	1.67	2.32	6.68	2.16
31.50	75.03	2.63	2.83	3-M1t	1.85	1.82	2.46	2.46	5.09	2.19
36.00	75.27	2.86	3.07	3-M1t	2.03	1.94	2.58	2.58	5.58	2.23
40.50	75.51	3.09	3.31	3-M1t	2.23	2.07	2.69	2.69	6.06	2.27
45.00	75.78	3.33	3.58	3-M1t	2.46	2.18	2.79	2.79	6.61	2.31

El. inlet face invert 72.20 ft El. outlet invert 71.90 ft
El. inlet throat invert 0.00 ft El. inlet crest 0.00 ft

***** SITE DATA ***** CULVERT INVERT **********

INLET STATION	0.00 ft
INLET ELEVATION	72.20 ft
OUTLET STATION	76.00 ft
OUTLET ELEVATION	71.90 ft
NUMBER OF BARRELS	1
SLOPE (V/H)	0.0039
CULVERT LENGTH ALONG SLOPE	76.00 ft

***** CULVERT DATA SUMMARY **********

BARREL SHAPE	CIRCULAR
BARREL DIAMETER	3.00 ft
BARREL MATERIAL	CONCRETE
BARREL MANNING'S n	0.012
INLET TYPE	CONVENTIONAL
INLET EDGE AND WALL	GROOVED END IN HEADWALL
INLET DEPRESSION	NONE

CURRENT DATE: 11-26-1996
CURRENT TIME: 12:03:34

FILE DATE: 11-22-1996
FILE NAME: CHOLLA

---------- TAILWATER ----------

***** USER DEFINED CHANNEL CROSS-SECTION

FILE NAME: CHOLLAT
FILE DATE: 11-16-96

MAIN CHANNEL ONLY

LEFT CHANNEL BOUNDARY	0
RIGHT CHANNEL BOUNDARY	0
MANNING n LEFT OVER BANK	0.000
MANNING n MAIN CHANNEL	0.037
MANNING n RIGHT OVER BANK	0.000
SLOPE OF CHANNEL	0.0030 ft/ft

CROSS-SECTION COORD. NO.	X (ft)	Y (ft)
1	0.00	77.00
2	3.00	76.00
3	6.00	75.00
4	15.00	74.00
5	20.00	71.90
6	25.00	74.00
7	27.00	75.00
8	32.00	76.00
9	40.00	77.00

******* UNIFORM FLOW RATING CURVE FOR DOWNSTREAM CHANNEL

FLOW (cfs)	W.S.E. (ft)	FROUDE NUMBER	DEPTH (ft)	VEL. (f/s)	SHEAR (psf)
0.00	71.90	0.000	0.00	0.00	0.00
4.50	73.14	0.339	1.24	1.51	0.11
9.00	73.45	0.352	1.55	1.75	0.13
13.50	73.68	0.360	1.78	1.93	0.15
18.00	73.87	0.366	1.97	2.06	0.17
22.50	74.04	0.371	2.14	2.15	0.18
27.00	74.22	0.372	2.32	2.16	0.18
31.50	74.36	0.375	2.46	2.19	0.19
36.00	74.48	0.377	2.58	2.23	0.19
40.50	74.59	0.379	2.69	2.27	0.20
45.00	74.69	0.381	2.79	2.31	0.20

Note: Shear stress was calculated using R.

---------- ROADWAY OVERTOPPING DATA ----------

WEIR COEFFICIENT	2.70
EMBANKMENT TOP WIDTH	0.00 ft
CREST LENGTH	50.00 ft
OVERTOPPING CREST ELEVATION	76.00 ft