43rd Avenue Detention Basin Stepped Spillway Design Report

Prepared For:

FLOOD CONTROL DISTRICT OF MARICOPA COUNTY

Prepared By:

BRW

JANUARY 18TH, 2002

TABLE OF CONTENTS

Chapter **Page**

1.0 INTRODUCTION 1

1.1 Authorization & Project Description 1
1.2 Study Purpose 1

2.0 HYDROLOGY 2

3.0 ANALYSIS AND DESIGN 2

3.1 Design Criteria 2
3.2 Proposed Spillway and Associated Structures 2

4.0 REFERENCES 5

List of Figures

Figure

1 Location Map

List of Appendices

Appendix

A Hydraulic Analysis and Design of Stepped Spillway
B Copies of Selected References
C Structural Analysis and Design of Stepped Spillway
D Geotechnical Report by Speedie and Associates on Uplift and Other Geotechnical Issues Related to the Stepped Spillway
E Design Plans

REGISTERED PROFESSIONAL ENGINEER (CIVIL)
CERTIFICATE NO. 26132
SYED NASIR RAZA
Date Signed 1-18-02
ARIZONA, U.S.A.

1.0 INTRODUCTION

1.1 Authorization & Project Description

This design report is prepared by BRW, Inc. to document the analysis/design for the 43rd Avenue Detention Basin Stepped Spillway. The 43rd Avenue Detention Basin is located at the southeast corner of the 43rd Avenue/Southern Avenue intersection (See Figure 1). The study was authorized by the Flood Control District of Maricopa County (FCDMC).

1.2 Study Purpose

The purpose of this report is to document the design criteria/analyses associated with the design of the 43rd Avenue Detention Basin Stepped Spillway and associated facilities.

A general summary of the scope of work for this project is as follows:

- Prepare hydraulic analysis and design for the stepped spillway.
- Prepare structural analysis and design of the stepped spillway and associated upstream box culvert and interception chamber.
- Prepare a geotechnical analysis and design for the underdrain system and investigation of potential uplift pressures.
- Integrate hydraulic design of the stepped spillway with aesthetic, landscape and community use values.
- Prepare construction plans for the stepped spillway and associated improvements.

Figure 1-1
Location Map

Figure 1-1
Location Map

43Ave Detention Basin Stepped Spillway Design Report

BRW

2.0 HYDROLOGY

Design flow for the stepped spillway was provided by the FCDMC. It was recommended that the 100-year frequency discharge of 1022 cfs be used for analysis and design.

3.0 ANALYSIS AND DESIGN

3.1 Design Criteria

Criteria for the project are based on Flood Control District of Maricopa County's Hydraulic Drainage Manual (Ref. 1) and published literature on design of Stepped Spillways (Ref. 2-7). Guiding principles behind the design are:

- Stepped spillway and stilling basin will be designed for energy dissipation, safety and economic efficiency.
- Hydraulic and structural design of the stepped spillway will be integrated with aesthetic, landscape architecture and community use values.

3.2 Proposed Stepped Spillway and Associated Structures

Significant features of the stepped spillway and associated structures design are described below (please refer to the design calculations in Appendix A and the plans in Appendix E):

- A triple cell reinforced concrete 10'W x 5'H box culvert is located just upstream of the spillway.
- A concrete interception chamber 31.83'W x 5'H x 5'W is connected to the upstream side of the triple cell box culvert.
- A limited grading of the area just upstream of the interceptor chamber is designed to direct flows into the interceptor chamber.
- A catch basin is located just upstream of the interceptor chamber to intercept nuisance flows (e.g., from subdivision lawn watering).
- A stilling basin is provided at the toe of the stepped spillway.
- A raised slab is provided downstream of the stilling basin to confine/shorten the hydraulic jump and dissipate energy without extending the length of the stilling basin.

- A grasscrete area is provided on one side of the bottom of the spillway to minimize erosion during the frequent storm events.

- Flared spillway is provided with a 4:1 expansion (typical expansion rate as suggested in US Army Corps of Engineers' publications such as the HEC-RAS manuals). Flare results in spreading of flow and dissipation of energy.

- Underdrain system of perforated pipes within trench drains are provided to remove subsurface water and reduce the potential for uplift pressures.

- *Aesthetic and community use features include an amphitheatre look for the stepped spillway, pedestrian access steps, surface color and treatment measures, handrails and the flared appearance of the stepped spillway. Raised slab downstream of the stilling basin may be used as a stage. Grasscrete below the spillway will also be a usable area for access to the 'amphitheatre'.*

Certain hydraulic design features include:

- Design flow for the spillways is the 100-year peak flow of 1022 cfs.

- Longitudinal slope is 5H:1V with 7 foot 6 inches wide steps and 1-foot 6 inches risers. Slope conforms to side slope of detention basin.

- Width of spillway is based on flow conditions resulting from a unit discharge of 32 cfs/foot width.

- The 100-year peak flow depth at the crest is based on weir flow/critical depth analysis.

- Nappe flow is anticipated for low flow conditions and skimming flow for higher flows such as the 100-year peak flow.

- Stilling basin is designed for the 100-year peak flow and is based on the residual energy at the toe of the stepped spillway. The stilling basin design is for a Froude Number range of 2.5 – 4.5 as recommended in Reference 5.

- Spillway training walls are designed for flowing water depth with a 90% air concentration and a safety factor of 1.5 (Ref. 3).

It may be noted that an EXCEL spreadsheet (see Appendix A) was developed to design the stepped spillway. The flared nature of the spillway was used to check flow conditions at the toe of the spillway and reduce the length of the stilling

basin. Consequently, two worksheets have been developed within the same EXCEL design file.

The following publications have been used to compute the energy dissipation and other analytical and design requirements for the spillways (see Appendix B):

1. Hubert Chanson, PhD, *Hydraulic Design of Stepped Spillways and Downstream Energy Dissipators* (2001)(Ref. 2).

2. Robert M. Boes, PhD, *Two Phase Flow and Energy Dissipation on Stepped Spillways* (2000)(Ref. 3).

3. US Dept. of Agriculture, Soil Conservation Service, *Chute Spillways Engineering Handbook Section 14, Standard Drawing No. ES-86, Sheets 1-14* (October 1997)(Ref. 4).

4. Ven Te Chow, PhD, *Open Channel Hydraulics pages 410-411* (1959)(Ref. 5).

5. US Dept. of Interior, Bureau of Reclamation, *Hydraulic Design of Stilling Basins and Energy Dissipators* (1978)(Ref. 6).

6. Hubert Chanson, PhD, *Current Expertise and Experience on Stepped Chute Flows – Hydraulics of Stepped Spillways* (May, 2001)(Ref. 7).

Structural analysis and design of the spillway (see Appendix C) was prepared to address a certain degree of uncertainty regarding uplift pressures by designing a thickened slab section. Other considerations included cracking and provision of construction and expansion joints.

Geotechnical analysis was done to investigate potential for uplift, design an underdrain system and recommend excavation, backfill and subgrade preparation requirements (see Appendix D).

Please refer to the following appendices for an understanding of the design of the stepped spillway and associated items:

A Hydraulic Analysis and Design of Stepped Spillway
B Copies of Selected References
C Structural Analysis and Design of Stepped Spillway
D Geotechnical Report by Speedie and Associates on Uplift and Other Geotechnical Issues Related to the Stepped Spillway
E Design Plans

An additional resource for understanding the design are the special provisions for this project.

4.0 REFERENCES

1. Flood Control District of Maricopa County, *Drainage Design Manual for Maricopa County, AZ Volume II Hydraulics*, January 28, 1996.

2. Hubert Chanson, PhD, *Hydraulic Design of Stepped Spillways and Downstream Energy Dissipators* (2001).

3. Robert M. Boes, PhD, *Two Phase Flow and Energy Dissipation on Stepped Spillways* (2000).

4. US Dept. of Agriculture, Soil Conservation Service, *Chute Spillways Engineering Handbook Section 14, Standard Drawing No. ES-86, Sheets 1-14* (October 1997).

5. Ven Te Chow, PhD, *Open Channel Hydraulics pages 410-411* (1959).

6. US Dept. of Interior, Bureau of Reclamation, *Hydraulic Design of Stilling Basins and Energy Dissipators* (1978)

7. Hubert Chanson, PhD, *Current Expertise and Experience on Stepped Chute Flows – Hydraulics of Stepped Spillways* (May, 2001).

APPENDICES

APPENDIX A

Hydraulic Analysis and Design of Stepped Spillway

43rd Avenue Detention Basin
FCDMC Project No. 1170831

Design of Stepped Spillway -- Using Flow at Crest

References:

1. Hubert Chanson, PhD, Hydraulic Design of Stepped Spillways and Downstream Energy Dissipators (2001)
2. Robert M. Boes, PhD, Two Phase Flow and Energy Dissipation on Stepped Spillways (2000)
3. US Dept. of Agriculture, Soil Conservation Service, Chute Spillways Engineering Handbook Section 14, Standard Drawing No. ES-86, Sheets 1-14 (October 1997).
4. Ven Te Chow, PhD, Open Channel Hydraulics pages 410-411 (1959).
5. US Dept. of Interior, Bur. of Reclamation, Hydraulic Design of Stilling Basins & Energy Dissipators (1978)

Given:

100-year Peak Flow Q100 =	1022 cfs =	28.94 cms
(per Bobbie Ohler, Project Manager with FCDMC on 10-05-01)		
Upstream of spillway is a 3 cells 10'Wx5'H Box Culvert with following flow characteristics:		
(per FCDMC 100% Submittal - Preliminary Not for Construction Plans dated 02-01)		
Q100/Cell =	340.67 cfs =	9.65 cms
Manning's roughness =	0.015	
Longitudinal slope (1014.3-1014.2)/20 =	0.005 ft/ft =	0.005 m/m
Flow width =	10 ft =	3.05 m
Flow depth =	3.14 ft =	0.96 m
Flow area =	31.4 sq ft	2.92 sq m
Wetted Perimeter =	16.28 ft	4.96 m
100-year Peak Flow Q100 =	340.81 cfs =	9.65 cms
At the spillway:		
Crest Elevation =	1014.03 ft =	309.08 m
Toe Elevation =	1003.53 ft =	305.88 m
Assume Toe Elevation =	1003.53 ft =	305.88 m
Height of spillway =	10.5 ft =	3.20 m
At 5H:1V side slope:		
Assume width of spillway at crest Ws =	***31.83 ft =***	***9.70 m***
Length of spillway Ls =	52.5 ft =	16.00 m
Slope of spillway Ss = 5H:1V =	0.2 ft/ft =	0.2 m/m
For steps assume:		
Step tread width = Ts	7.5 ft =	2.29 m
Step height = Hs	1.5 ft =	0.46 m

1. Prediction of Flow Regime (Ref. 1)

Flow per unit width @ top of spwy q = Q100/Ws =	32.11 cfs/ft width =	2.98 cms/m width
Critical depth dc = (q^2/g)^0.33 =	3.14 ft =	0.97 m
Critical depth dc/Step height Hs =	2.09	2.12
Nappe flow condition prevails if dc/Hs < 0.89 - 0.4 (Hs/Ts)		
0.89 - 0.4 (/Hs/Ts) =	0.81	0.81
Therefore nappe flow condition is not satisfied		
Skimming flow condition prevails if dc/Hs > 1.2 - 0.325 (Hs/Ts)		
1.2 - 0.325 (Hs/Ts) =	1.135	1.135
Therefore skimming flow condition is satisfied		

43rd Avenue Detention Basin
FCDMC Project No. 1170831

Design of Stepped Spillway -- Using Flow at Crest

2. Hydraulics of Skimming Flow (Ref. 1)

Distance to inception point of air entrapment is computed by the formulae:

$$\frac{L}{h \times \cos a} = \frac{9.719 \times (\sin a)^{0.0796} \times q^{0.713}}{(((g \times \sin a) \times (h \times \cos a)^3)^{0.5})^{0.713}}$$

and

$$\frac{d}{h \times \cos a} = \frac{0.4034 \times q^{0.592}}{(\sin a)^{0.04} \times ((g \times \sin a)^{0.5} \times (h \times \cos a)^3)^{0.592}}$$

where
L = distance from crest measured along invert
D = flow depth measured normal to invert
a = chute slope
q = discharge per unit width
g = gravitational constant

Therefore	a = tan -1 (Hs/Ws) =	11.31	degrees	
	q =	32.11 cfs/ft width =	2.98	cms/m width
	h =	1.5 ft =	0.46	m
	g =	32.2 ft/sec^2	9.80	m/sec^2
and	L =	15.59 m =	51.14	ft
However, spillway length along the slope =		53.54 ft =	16.32	m

Therefore the inception point for air entrapment condition is theoretically reached and flow becomes nappe flow just above the toe of the spillway.

3. Residual Energy at Toe of Stepped Spillway (Ref. 1 and 2)

According to Ref.1

Residual energy at toe Hres = $d \times \cos a + q^2/(2 \times g \times d^2)$

According to Ref.2

Clear water depth $d = \dfrac{0.23 \times q^{0.65} \times Hs^{0.03}}{g^{0.33} \times (\sin a)^{0.33}}$

Therefore, d =	0.37 m =	1.21 ft
And, Hres =	3.70 m =	12.15 ft

4. Spillway Training Wall Height (Ref. 2)

Flow depth with 90 % air concentration H90,u is given by the equation:

H90,u/Hs =	$0.53 \times Fr^p$	p = 0.54 for 30 degrees & 0.59 for 50 degrees
Froude Number Fr =	$q/(g \times \sin a \times Hs^3)^{0.5}$	
Therefore Fr =	6.96	
And, H90,u =	0.69 m =	2.27 ft

Design Height of Training Wall hd = N x H90,u

Safety Factor N =	1.5	
Therefore Hd =	1.04 m =	3.40 ft
Use Hd =	1.07 m =	3.5 ft

5. Energy Dissipator at toe of Spillway (Ref. 3)

43rd Avenue Detention Basin
FCDMC Project No. 1170831

Design of Stepped Spillway -- Using Flow at Crest

I) At toe of spillway Froude # F1 (as defined in Ref. 3) is given by the equation

F1 = V1^2 / (g x d1) =

Entrance depth d1 =	1.21 ft =	0.37 m
(same as clear water depth d)		
Entrance velocity V1 = q/d1 =	26.56 ft/sec =	8.10 m/sec
Therefore, F1 =	18.12	

ii) Sequent flow depth d2 to depth d1 at toe

d2 = d1 x (-1 + (8 x Fr + 1)^0.5)/2

Therefore, d2 =	6.70 ft =	2.04 m

iii) Required height of tailwater above floor of stilling basin d21

d21 = 1.4 x d1 x F1^0.45 =	6.23 ft =	1.90 m

iv) Length of stilling basin including end sill Lb

Lb = 4.5 x d2/F1^0.38 =	10.02 ft =	3.06 m

v) Height of Sidewall J

J = d2/3 + d21 =	8.47 ft =	2.58 m

vi) Height of end sill s

s = 0.07 x d2 =	0.47 ft =	0.14 m

6. End Berm to Create Required Tailwater Depth (Ref. 4)

Froude Number F is given by

F = V1/(gd1)^0.5 = 4.26

Discharge over unit width of weir qw is given by

qw= 0.433 x (2 x g x d2/(d2+h))^0.5 x H^3/2

Head water depth over berm H = qw^2/3 / (0.433 x (2g x d2/(d2+h))^0.5)^2/3

From fig. 15-12, Ref. 4, height of berm h is given by

h/d1 =	1.57	for F =	4.26
Therefore, height of berm h =	1.90 ft =		0.58 m
Check h with above formula for H			
H =	4.78 ft =		1.46 m
h = d2 - H =	1.91 ft =		0.58 m
Therefore, height of berm h =	1.91	= 1.90	OK

Distance from toe of spillway to berm X is given by

X = 5(h+d3) =	7.76 m =	25.46	ft

where d3 is assumed to be critical depth dc

7. Horizontal Apron Stilling Basin (Ref. 5)

I) At toe of spillway Froude # F (as defined in Ref. 5) is given by the equation

43rd Avenue Detention Basin
FCDMC Project No. 1170831

Design of Stepped Spillway -- Using Flow at Crest

F = V1 / (g x d1)^0.5 =		
Entrance depth d1 =	1.21 ft =	0.37 m
(same as clear water depth d)		
Entrance velocity V1 = q/d1 =	26.56 ft/sec =	8.10 m/sec
Therefore, F =	4.26	

ii) Sequent flow depth d2 to depth d1 at toe

d2 = d1 x (-1 + (8 x Fr + 1)^0.5)/2

Therefore, d2 =	6.70 ft =	2.04 m
From Fig. 7 of Ref, 5 L/d2 =	5.83	
Hydraulic Jump Length L =	39.05 ft =	11.90 m

43rd Avenue Detention Basin
FCDMC Project No. 1170831

Design of Stepped Spillway -- Using Flow at Bottom Step

References:

1. Hubert Chanson, PhD, Hydraulic Design of Stepped Spillways and Downstream Energy Dissipators (2001)
2. Robert M. Boes, PhD, Two Phase Flow and Energy Dissipation on Stepped Spillways (2000)
3. US Dept. of Agriculture, Soil Conservation Service, Chute Spillways Engineering Handbook Section 14, Standard Drawing No. ES-86, Sheets 1-14 (October 1997).
4. Ven Te Chow, PhD, Open Channel Hydraulics pages 410-411 (1959).
5. US Dept. of Interior, Bur. of Reclamation, Hydraulic Design of Stilling Basins & Energy Dissipators (1978)

Given:

100-year Peak Flow Q100 =	1022 cfs =	28.94 cms
(per Bobbie Ohler, Project Manager with FCDMC on 10-05-01)		
Upstream of spillway is a 3 cells 10'Wx5'H Box Culvert with following flow characteristics:		
(per FCDMC 100% Submittal - Preliminary Not for Construction Plans dated 02-01)		
Q100/Cell =	340.67 cfs =	9.65 cms
Manning's roughness =	0.015	
Longitudinal slope (1014.3-1014.2)/20 =	0.005 ft/ft =	0.005 m/m
Flow width =	10 ft =	3.05 m
Flow depth =	3.14 ft =	0.96 m
Flow area =	31.4 sq ft	2.92 sq m
Wetted Perimeter =	16.28 ft	4.96 m
100-year Peak Flow Q100 =	340.81 cfs =	9.65 cms
At the spillway:		
Crest Elevation =	1014.03 ft =	309.08 m
Toe Elevation =	1003.53 ft =	305.88 m
Assume Toe Elevation =	1003.53 ft =	305.88 m
Height of spillway =	10.5 ft =	3.20 m
At 5H:1V side slope:		
Width of spwy at bot. Ws= 31.83x2x5x10.5x0.25=	***58.08 ft =***	***17.70 m (4:1 flow expansion)***
Length of spillway Ls =	52.5 ft =	16.00 m
Slope of spillway Ss =	0.2 ft/ft =	0.2 m/m
For steps assume:		
Step tread width = Ts	7.5 ft =	2.29 m
Step height = Hs	1.5 ft =	0.46 m

1. Prediction of Flow Regime (Ref. 1)

Flow per unit width @ top of spwy q = Q100/Ws =	17.60 cfs/ft width =	1.63 cms/m width
Critical depth dc = (q^2/g)^0.33 =	2.11 ft =	0.65 m
Critical depth dc/Step height Hs =	1.41	1.42
Nappe flow condition prevails if dc/Hs < 0.89 - 0.4 (Hs/Ts)		
0.89 - 0.4 (/Hs/Ts) =	0.81	0.81
Therefore nappe flow condition is not satisfied		
Skimming flow condition prevails if dc/Hs > 1.2 - 0.325 (Hs/Ts)		
1.2 - 0.325 (Hs/Ts) =	1.135	1.135
Therefore skimming flow condition is satisfied		

43rd Avenue Detention Basin
FCDMC Project No. 1170831

Design of Stepped Spillway -- Using Flow at Bottom Step

2. Hydraulics of Skimming Flow (Ref. 1)

Distance to inception point of air entrapment is computed by the formulae:

$$\frac{L}{h \times \cos a} = \frac{9.719 \times (\sin a)^{0.0796} \times q^{0.713}}{((g \times \sin a)^{0.5} \times (h \times \cos a)^3)^{0.713}}$$

and

$$\frac{d}{h \times \cos a} = \frac{0.4034 \times q^{0.592}}{(\sin a)^{0.04} \times ((g \times \sin a)^{0.5} \times (h \times \cos a)^3)^{0.592}}$$

where
L = distance from crest measured along invert
D = flow depth measured normal to invert
a = chute slope
q = discharge per unit width
g = gravitational constant

Therefore

a = tan -1 (Hs/Ws) =	11.31	degrees		
q =	17.60	cfs/ft width =	1.63	cms/m width
h =	1.5	ft =	0.46	m
g =	32.2	ft/sec^2	9.80	m/sec^2

and L =	10.15	m =	33.31	ft
However, spillway length along the slope =	53.54	ft =	16.32	m

Therefore the inception point for air entrapment condition is not reached and flow continues as skimming flow to the toe of the spillway.

3. Residual Energy at Toe of Stepped Spillway (Ref. 1 and 2)

According to Ref.1

Residual energy at toe Hres = $d \times \cos a + q^2/(2 \times g \times d^2)$

According to Ref.2

Clear water depth d = $\frac{0.23 \times q^{0.65} \times Hs^{0.03}}{g^{0.33} \times (\sin a)^{0.33}}$

Therefore, d =	0.25 m =	0.82 ft
And, Hres =	2.44 m =	8.00 ft

4. Spillway Training Wall Height (Ref. 2)

Flow depth with 90 % air concentration H90,u is given by the equation:

H90,u/Hs = $0.53 \times Fr^p$ p = 0.54 for 30 degrees & 0.59 for 50 degrees

Froude Number Fr = $q/(g \times \sin a \times Hs^3)^{0.5}$

Therefore Fr =	3.81	
And, H90,u =	0.50 m =	1.64 ft

Design Height of Training Wall hd = N x H90,u

Safety Factor N =	1.5	
Therefore Hd =	0.75 m =	2.46 ft
Use Hd =	0.76 m =	2.5 ft

5. Energy Dissipator at toe of Spillway (Ref. 3)

43rd Avenue Detention Basin
FCDMC Project No. 1170831

Design of Stepped Spillway -- Using Flow at Bottom Step

I) At toe of spillway Froude # F1 (as defined in Ref. 3) is given by the equation

F1 = V1^2 / (g x d1) =		
Entrance depth d1 =	0.82 ft =	0.25 m
(same as clear water depth d)		
Entrance velocity V1 = q/d1 =	21.52 ft/sec =	6.56 m/sec
Therefore, F1 =	17.58	

ii) Sequent flow depth d2 to depth d1 at toe

d2 = d1 x (-1 + (8 x Fr + 1)^0.5)/2		
Therefore, d2 =	4.46 ft =	1.36 m

iii) Required height of tailwater above floor of stilling basin d21

d21 = 1.4 x d1 x F1^0.45 =	4.16 ft =	1.27 m

iv) Length of stilling basin including end sill Lb

Lb = 4.5 x d2/F1^0.38 =	6.75 ft =	2.06 m

v) Height of Sidewall J

J = d2/3 + d21 =	5.65 ft =	1.72 m

vi) Height of end sill s

s = 0.07 x d2 =	0.31 ft =	0.10 m

6. End Berm to Create Required Tailwater Depth (Ref. 4)

Froude Number F is given by

F = V1/(gd1)^0.5 = 4.19

Discharge over unit width of weir qw is given by

qw= 0.433 x (2 x g x d2/(d2+h))^0.5 x H^3/2

Head water depth over berm H = qw^2/3 / (0.433 x (2g x d2/(d2+h))^0.5)^2/3

From fig. 15-12, Ref. 4, height of berm h is given by

h/d1 =	1.53 for F =	4.19
Therefore, height of berm h =	1.25 ft =	0.38 m
Check h with above formula for H		
H =	3.20 ft =	0.98 m
h = d2 - H =	1.26 ft =	0.38 m
Therefore, height of berm h =	1.26 =	1.25 OK

Distance from toe of spillway to berm X is given by

X = 5(h+d3) =	5.17 m =	16.96 ft

where d3 is assumed to be critical depth dc

7. Horizontal Apron Stilling Basin (Ref. 5)

I) At toe of spillway Froude # F (as defined in Ref. 5) is given by the equation

43rd Avenue Detention Basin
FCDMC Project No. 1170831

Design of Stepped Spillway -- Using Flow at Bottom Step

F = V1 / (g x d1)^0.5 =		
Entrance depth d1 =	0.82 ft =	0.25 m
(same as clear water depth d)		
Entrance velocity V1 = q/d1 =	21.52 ft/sec =	6.56 m/sec
Therefore, F =	4.19	
ii) Sequent flow depth d2 to depth d1 at toe		
d2 = d1 x (-1 + (8 x Fr + 1)^0.5)/2		
Therefore, d2 =	4.46 ft =	1.36 m
From Fig. 7 of Ref, 5 L/d2 =	5.82	
Hydraulic Jump Length L =	25.94 ft =	7.91 m

APPENDIX B

Copies of Selected References

Includes 3 ½" x 5" disk attached to front cover

Hydraulic design of stepped spillways and downstream energy dissipators

Hubert Chanson
Reader – Fluid Mechanics, Hydraulics & Environmental Engineering
Department of Civil Engineering
The University of Queensland
Brisbane
QLD 4072
Australia
Email: h.chanson@mailbox.uq.edu.au

Abstract

Stepped channels and spillways have been used for centuries. Recently, new construction materials (eg RCC, gabions) and design techniques (eg embankment overtopping protection) have increased the interest in stepped chutes. The steps produce considerable energy dissipation along the chute and reduce the size of the required downstream energy dissipation basin. This paper reviews the hydraulic characteristics of modern stepped spillways. The basic flow patterns are described. Basic equations are developed, taking into account the free surface aeration in skimming flows. The calculations of the residual energy to be dissipated in the downstream dissipator are discussed. Simple design guidelines for the downstream energy dissipators are provided for use by professionals.

1 Introduction

Recent advances in technology have permitted the construction of large dams, reservoirs and channels [40]. This progress has necessitated the development of new design and construction techniques, particularly with the provision of adequate flood release facilities and safe dissipation of the kinetic energy of the flow. The latter may be achieved by the construction of steps on the spillway (Figures 1 and 2). A stepped chute design significantly increases the rate of energy dissipation taking

place along the spillway face, and eliminates or reduces greatly the need for a large energy dissipator at the toe of the chute.

Although the stepped cascade design was common at the end of the 19th century, much expertise has been lost since [15]. Current expertise is limited to simple geometries (ie flat horizontal steps in prismatic chutes) despite some recent interest in stepped spillway design [20, 11].

In this paper, the author first reviews the basic hydraulic characteristics of stepped channels. Then he discusses the estimate of the residual energy and provides design guidelines to size the downstream energy dissipator. The results are applied to steep stepped chutes with skimming flow that are characteristic of modern concrete spillway designs (Figures 1 and 2).

2 Hydraulics of stepped chutes: basic flow regimes

A stepped chute consists of an open channel with a series of drops in the invert. For a given chute geometry, the flow pattern may be either nappe flow at low flow rates, transition flow for intermediate discharges or skimming flow at larger flow rates (Figure 3).

At low flows (ie nappe flow regime), the total fall is divided into a number of small free-falls. The energy dissipation occurs by jet break-up in air, by jet impact on the step, and possibly with the formation of hydraulic jump on the step. The step height must be relatively large for nappe flow. This situation is not often practical but may apply to relatively flat stepped channels or at low flow rates.

For a given step geometry, an increase in flow rate may bring an intermediate flow pattern between nappe and skimming flow – the transition flow regime (Figure 3b). The transition flow is characterised by a pool of recirculating waters and often a very small air cavity, and significant spray and water deflection immediately downstream of the stagnation point. Downstream of the spray region, the supercritical flow is decelerated up to the downstream step edge. The transition flow pattern exhibits significant longitudinal variations of the flow properties on each step. It does not present the coherent appearance of skimming flows.

In a skimming flow regime, the water flows down the stepped face as a coherent stream, skimming over the steps and cushioned by the recirculating fluid trapped between them (Figures 2 and 3c). The external edges of the steps form a pseudo-bottom over which the flow skims. Beneath this, recirculating vortices develop and

are maintained through the transmission of shear stress from the water flowing past the edge of the steps. At the upstream end, the flow is smooth and no air entrainment occurs. After a few steps the flow is characterised by a strong air entrainment (Figure 2). For an observer standing on the bank, the aerated free surface has the same appearance as a self-aerated flow down a smooth invert spillway.

1.1 Prediction of the flow regime

The type of stepped flow regime is a function of the discharge and step geometry. The writer reanalysed a large number of experimental observations of changes in flow regimes. The data are summarised in Appendix I and all but one were obtained with flat horizontal steps. For each set of data, Column 6 indicates the type of transition: from nappe to transition flow (NA-TRA) or from transition to skimming flow (TRA-SK). The indication (NA-SK) suggests that the researchers ignored the transition flow regime.

Overall the results suggest that the upper limit of nappe flow may be approximated as:

$$\frac{d_c}{h} = 0.89 - 0.4 * \frac{h}{l} \qquad \text{Transition NA-TRA (1)}$$

where

d_c is the critical depth,
h is the step height, and
l is the step length,

while the lower limits of skimming flow may be estimated as:

$$\frac{d_c}{h} = 1.2 - 0.325 * \frac{h}{l} \qquad \text{Transition TRA-SK (2)}$$

Both equations are compared with the experimental data in Figure 4. Two issues must be clearly understood.

- Equations 1 and 2 were deduced for flat horizontal steps with h/l ranging from 0.05 to 1.7 (ie $3.4 < \alpha < 60°$); there is no information on their validity outside of that range and their accuracy is no better than +/-10%;
- Equations 1 and 2 characterise a change in flow regime for uniform or quasi-uniform flows only. For rapidly varied flows, the results are inaccurate. For example, at the upstream end of a stepped chute, the accelerating waters could flow as thick free-falling nappes before becoming a skimming flow regime further downstream [12].

2 Hydraulics of skimming flow

Modern concrete stepped spillways operate in a skimming flow regime (Figures 1 and 2). At the upstream end, the free surface is clear and transparent. However, a turbulent boundary layer develops along the chute invert. When the outer edge of the boundary layer reaches the free surface, free surface aeration takes place (Figure 2). The distance to the inception point of air entrainment and the flow depth at inception are best correlated by:

$$\frac{L_I}{h*\cos\alpha} = 9.719*(\sin\alpha)^{0.0796}*\left(\frac{q_w}{\sqrt{g*\sin\alpha}*(h*\cos\alpha)^3}\right)^{0.713} \quad (3)$$

$$\frac{d_I}{h*\cos\alpha} = \frac{0.4034}{(\sin\alpha)^{0.04}}*\left(\frac{q_w}{\sqrt{g*\sin\alpha*(h*\cos\alpha)^3}}\right)^{0.592} \quad (4)$$

where

L_I is the distance from the crest (measured along the invert),
D_I is the flow depth measured normal to the channel invert,
α is the chute slope,
q_w is the discharge per unit width, and
g is the gravitational constant [11] (Figure 3).

Model and prototype data are compared with Equation 3 in Figure 5. Note the good agreement between the statistical correlation and prototype data at Trigomil dam (Q_w = 1100m^3/sec). The results indicate consistently that the dimensionless distance from crest and flow depth increase with increasing dimensionless discharge (Figure 5). Further, the rate of boundary layer growth is about 2.8 times larger on stepped channels than on smooth chutes.

2.1 Rapidly varied flow at the inception point

Visual observations and detailed point measurements indicate that the flow properties are rapidly varied next to and immediately downstream of the inception point of air entrainment. Side view observations suggest that some air is entrapped in the step cavity(ies) upstream of the visual location of free-surface aeration (Figure 6).

Immediately upstream the flow is extremely turbulent and the free surface appears to be subjected to a flapping mechanism. At irregular time intervals, a water jet impinges on the horizontal step face and air is trapped in the step cavity [24, 7, 26]. An instant later, a rapid unsteady flow bulking is observed downstream (Figure 6).

Precise LDA velocity measurements by Ohtsu and Yasuda [29] indicate that, immediately upstream of the inception point, the turbulent velocity fluctuations are large, with dimensionless streamwise fluctuations u'/V of about 15-18% and normal velocity fluctuations v'/V of about 2-4%, where u' and v' are the root mean square of longitudinal and lateral components of turbulent velocity, respectively (Figure 6c). In Figure 6c, observed values of $v' \approx 0.14$m/sec next to the free surface are large enough to initiate air bubble entrainment [10].

Immediately downstream of the inception point, time-averaged air concentration data show a sudden aeration. For example, an increase in mean air concentration ΔC_{mean} = 25% along a distance $\Delta s = 6.5 * d_c$ down a 30° slope for d_c/h = 5.2 [5]; an increase in mean air concentration ΔC_{mean} = 55% in 18 step heights down a 53° slope for $d_c/h \leq 2$ [26]; an increase in mean air concentration ΔC_{mean} = 32% in 2 step heights down a 22° slope for d_c/h = 1.1, where C_{mean} is the mean air concentration.

2.2 Gradually varied flow properties

Downstream of the inception point, the flow is fully developed and the flow properties tend gradually to uniform equilibrium (ie normal flow conditions). While the flow resistance on smooth invert chutes is primarily skin friction, skimming flows over stepped chute are characterised by significant form losses. The water skims over the step edges with formation of recirculating vortices between the main stream and the step corners. Form drag is predominant. The reanalysis of over 650 laboratory and prototype data showed that the dimensionless friction coefficient f (or Darcy friction factor) is about 0.1-0.3, with an analytical development implying $f = 0.2$ [14]. The results are independent of the step height within limits ($1 \leq d_c/h \leq 10$).

On smooth invert chutes, the gradually varied flow properties are deduced from the differential form of the energy equation or backwater equation:

$$\frac{\partial H}{\partial s} = -S_f \tag{5}$$

where

H is the mean total head,
S_f is the friction slope, and
S is the longitudinal coordinate in the flow direction.

In stepped chute flows, several researchers, including the writer, have attempted unsuccessfully to apply the backwater equation (Equation 5) based on the Darcy-Weisbach friction factor and without introducing "fudging" coefficients.

It is believed that two basic assumptions of the backwater calculations are violated in skimming flows. These are (a) the flow must be gradually varied and (b) the flow resistance must be the same as for a uniform flow [17,14]. The form drag and associated cavity recirculation are very energetic processes and the flow properties in the mixing layer are rapidly varied. A number of researchers showed drastic differences between void fraction and velocity data measured at the step edge and above the cavity at one step, as well as from one step to the adjacent ones [29, 27]. The concept of gradual variation of the flow resistance is inappropriate in a form

drag-dominated skimming flow. (Indeed Equation 5 assumes a one-dimensional flow motion that is untrue.)

2.3 Free surface aeration

In the fully developed flow region, free surface aeration is significant. Turbulence acting next to the free surface is large enough to overcome both surface tension for the entrainment of air bubbles and buoyancy to carry the bubbles downward. The diffusion of air bubbles may be approximated by a simple analytical model:

$$C = 1 - \tanh^2\left(K' - \frac{y}{2 * D' * Y_{90}}\right) \tag{6}$$

where

C	is the void fraction (or air concentration),
tanh	is the hyperbolic tangent function,
y	is the distance normal to the pseudo-invert formed by the step edges,
Y_{90}	is the distance where C = 90%,
D'	is a dimensionless turbulent diffusivity,
K'	is an integration constant, and
D' and K'	are functions of the mean air content C_{mean} only (Table 1), where C_{mean} is the depth averaged air content defined in terms of Y_{90}:

$$C_{mean} = \frac{1}{Y_{90}} * \int_0^{Y_{90}} C * dy \tag{7}$$

Equation 6 was tested successfully with stepped chute data obtained in models and prototype (Figure 7) although it was originally developed for smooth invert chute flows [13].

In the gradually varied flow region, experimental data show a gradual increase in mean air content along the chute (Figure 8). For a channel of constant width and channel slope, the analytical solution of the continuity equation for air yields:

$$\frac{1}{(1-C_e)^2} * Ln\left(\frac{1-C_{mean}}{C_e - C_{mean}}\right) - \frac{1}{(1-C_e)*(1-C_{mean})} = k_o * s' + K_o \quad (8)$$

where K_o and k_o are:

$$k_o = \frac{u_r * d_1 * \cos\alpha}{q_w}$$

$$K_o = \frac{1}{1-C_e} * \left(\frac{1}{1-C_e} * Ln\left(\frac{1-C^*}{C_e - C^*}\right) - \frac{1}{1-C^*}\right)$$

d_1 is the flow depth at the inception point ($s = L_1$), $s' = (s - L_1)/d_1$,
s is the longitudinal coordinate in the invert, and
C^* is the mean air concentration at the reference location ($s = L_1$) [42, 10].

The uniform equilibrium mean air content C_e is a function of the slope α only. For slopes less than 50°, it may be estimated as: $C_e = 0.9*\sin\alpha$.

Equation 8 allows the calculations of the average air concentration C_{mean} as a function of the distance along the chute independently of the velocity, roughness and flow depth. Results are compared with experimental data in Figure 8. The calculations were performed with u_r = 0.4m/sec and C^* = 0.2. The former value is characteristic of millimetric size bubbles and it was used for the Aviemore dam spillway modelling [10].

Experimental works by Boes [5], and Matos [26], suggest that a reasonable approximation is $C^* = 0.2$ at the inception point: ie to take into account the sudden flow aeration in the rapidly varied flow immediately downstream of the inception point.

3 Residual energy downstream of stepped chutes

Design engineers need to predict accurately the downstream kinetic energy of the flow to size the energy dissipator. At the downstream end of the chute, the residual head equals:

$$H_{res} = d * \cos\alpha + \frac{q_w^{\ 2}}{2 * g * d^2} \tag{9}$$

where d is the clear water depth:

$$d = \int_0^{Y90} (1 - C) * dy \tag{10}$$

For steep chutes ($\alpha \sim 35$ to $55°$), both the flow acceleration and boundary layer development affect the flow properties significantly. The complete flow calculations can be tedious and backwater calculations are not suitable (see above). Complete calculations of developing flow and uniform equilibrium flow may be combined to provide a general trend which may be used for a preliminary design (Figure 9).

Ideally, the maximum velocity at the downstream chute end is:

$$V_{max} = \sqrt{2 * g * (H_{max} - d * \cos\alpha)} \tag{11}$$

where

H_{max} is the upstream total head,
d is the ideal flow depth ($d = q_w/V_{max}$), and
V_{max} is the ideal fluid flow velocity (Figure 9a).

In practice the downstream flow velocity U_w is smaller than the theoretical velocity V_{max} because of friction losses.

In Figure 9, the mean flow velocity is plotted as U_w/V_{max} versus H_{max}/d_c where V_{max} is the theoretical velocity (Equation 11), H_{max} is the upstream total head and d_c is the critical depth. Both developing flow calculations and uniform equilibrium flow calculations are shown. Fitting curves are plotted to connect these lines (Figure 9b).

Experimental data based upon air concentration distribution measurements are compared with theoretical calculations in the developing flow region and in the uniform equilibrium flow region. The curves are valid for skimming flow with slopes ranging from 35 to 55° (ie 1V:2.1H to 1V:0.7H).

The stepped chute data and calculations are also compared with smooth chute calculations [14]. Larger energy dissipation takes place along a stepped spillway, compared with a smooth chute, and the size of the downstream stilling basin can be reduced with a stepped chute.

4 Design of the energy dissipator

The residual energy is to be dissipated in a downstream energy dissipator.

Energy dissipation on dam spillways is achieved usually by a standard stilling basin, in which a hydraulic jump is created to dissipate a large amount of flow energy and to convert the flow from supercritical to subcritical conditions, a high velocity water jet taking off from a flip bucket and impinging into a downstream plunge pool, or a plunging jet pool in which the spillway flow impinges and the kinetic energy is dissipated in turbulent recirculation. The stilling basin is the common type of dissipators for weirs and small dams. Most energy is dissipated in a hydraulic jump assisted by appurtenances (eg step, baffle blocks) to increase the turbulence. The energy dissipator must be designed to operate safely for a wide range of flow rates and tailwater flow conditions.

The basic steps in the spillway design procedure are: selecting the crest elevation and width; determining the design discharge Q_w from risk analysis and flood routing; calculating the upstream head above spillway crest for the design flow rate; and choosing the apron elevation.

For the design flow conditions, the flow properties at the chute toe may be estimated using Figure 9. Figure 9 provides an estimate of the flow velocity U_w, the clear-water flow depth $d = q_w/U_w$ and the residual energy (Equation 9) as a function of the maximum head above chute toe and flow rate. For a hydraulic jump stilling

basin, the conjugate (subcritical) flow conditions are deduced from the momentum equation and the roller length may be calculated from empirical correlations [23]. The apron length must be greater than the jump length. Then the jump height rating level must be compared with the tailwater rating level. If the jump height rating level does not match the tailwater rating level, the hydraulic jump will not take place on the apron.

4.1 Design application: Riou dam

A simple design application is the Riou dam (Figure 1).

Completed in 1990, the dam is a 22m high RCC gravity structure. The overflow stepped spillway is designed to pass 110m^3/sec. It consists of a broad crest (W = 96m) followed by a straight chute with 42 steps (h = 0.43m, l = 0.72m) and a 5m long stilling basin.

At design flow conditions, Figure 3 indicates that the spillway operates in a skimming flow regime. The point of free surface aeration inception is located about 11 step heights downstream of the crest (Equation 3). At the downstream end of the chute, the mean air content will be about 0.5 (Equation 8). Figure 9 predicts U_w = 7.1m/sec and d = 0.16m at the downstream end of the chute. For the corresponding Froude number, the head loss in the hydraulic jump is 54% of the residual head at the downstream end of the chute (H_{res} = 2.7m) and the roller length is about 5.2m. This result is consistent with the size of the stilling basin.

For the same structure equipped with a smooth-invert chute (α = 59°), the flow properties at the downstream end of the chute would be: U_w = 13.2m/sec, H_{res} = 9m and the Froude number 14.4. This value corresponds to a strong hydraulic jump associated with large invert pressure fluctuations and high risks of bed erosion.

In summary, the selection of a stepped chute at the Riou dam provides a means to reduce the size and cost of the downstream stilling basin. At design flow, 85% of the total head loss is dissipated on the stepped chute and the residual head is dissipated in the stilling basin.

5 Conclusion

The recent interest in stepped chutes has been associated with the development of new construction material and design techniques. The steps increase significantly the

rate of energy dissipation taking place along the chute and reduce the size of the required downstream energy dissipation basin.

For a given chute geometry and flow rate per unit width, the flow regime may be either a nappe flow, transition or skimming flow (Figure 3). Experimental observations are summarised in Figure 4 and Appendix I. Modern stepped spillways are characterised by a steep slope and large flow rates for which the waters spill as a skimming flow. On the upper steps, the free surface is smooth and glassy, and no free-surface aeration is observed. Turbulence is however generated by the stepped invert and a turbulent boundary layer develops until the outer edge reaches the free surface. That location, called the inception point of air entrainment, is characterised by sudden flow aeration and by rapidly varied flow properties. Downstream the fully developed flow is aerated and the flow characteristics vary gradually. Free surface aeration may be calculated using Equations 6 and 8. The clear water flow velocity U_w cannot be computed with "traditional" equations but it may be estimated using a graphical method (Figure 9). With the knowledge of the air-water flow properties, the downstream energy dissipator may be designed more accurately. An example is developed for the Riou dam (Figure 1).

Despite an increased knowledge of stepped channel flows, there is a lack of expertise and knowledge on the hydraulic characteristics of skimming flows past flat slopes, the hydraulics of the transition flow regime, the mechanisms of flow recirculation in skimming flow regime, and the air-water gas transfer process in the nappe and skimming flow regimes. Furthermore, the present paper has characterised the hydraulics of skimming flow for prismatic rectangular channels with flat horizontal steps. Little information is available for non-rectangular channels and three-dimensional flows.

Acknowledgements

The writer acknowledges the helpful assistance of the following people (in alphabetical order): Dr R Baker (University of Salsford, UK), John Laboon (US Bureau of Reclamation), Dr J Matos (IST, Portugal), Dr A N Pinheiro (IST, Portugal), Professor I Ohtsu (Nihon University, Japan), Dr J L Sanchez-Bribiesca and F Gonzalez-Villareal (UNAM, Mexico), Dr L Toombes (University of Queensland, Australia), Dr Y Yasuda (Nihon University, Japan).

Notation

C	air concentration defined as the volume of air per unit volume (NB: it is also called void fraction);
C_e	equilibrium depth averaged air concentration for uniform equilibrium flow;
C_{mean}	depth averaged air concentration defined as: $(1 - Y_{90}) * C_{mean} = d$; $(1-c)Y_{90}$, d
C^*	integration constant characteristic of the rapid free surface aeration next to the inception point;
D'	dimensionless air bubble diffusivity (defined by [13]);
d	equivalent clear-water flow depth (m) defined as: $d = \int_0^{Y_{90}} (1 - C) * dy$;
d_I	flow depth at the inception point (m);
d_c	critical flow depth (m); for a rectangular channel: $d_c = \sqrt[3]{q_w^{\,2} / g}$;
d_1	step pool height (m);
F^*	Froude number defined in terms of the step roughness height: $F^* = q_w / \sqrt{g * \sin\alpha * (h * \cos\alpha^3)}$;
f	Darcy friction factor;
g	gravity constant (m^2/sec), or acceleration of gravity;
H	total head (m);
H_{dam}	dam height (m): ie dam crest head above downstream toe;
H_{max}	maximum head available (m) using the spillway toe as datum;
H_{res}	residual head (m) at the dowsntream end of the spillway chute, using the spillway toe as datum;
h	height of steps (m) (measured vertically);
K_o	integration constant;
K'	integration constant (defined by [13]);
k_o	integration constant;
L_I	distance from the start of growth of boundary layer to the inception point of air entrainment;
l	horizontal length of steps (m) (measured perpendicular to the vertical direction);

Q_w	water discharge (m^3/sec);
q_w	water discharge per unit width (m^2/sec);
S_f	friction slope;
s	curvilinear coordinate (m): ie distance measured along the channel bottom;
s'	dimensionless curvilinear coordinate : $s' = (s - L_I)/d_I$;
U_w	clear-water flow velocity (m/sec): $U_w = q_w/d_I$;
u'	root mean square of longitudinal component of turbulent velocity (m/sec);
u_r	rise bubble velocity (m/sec);
V	local velocity (m/sec);
V_{max}	ideal fluid velocity (m/sec) at the chute toe;
v'	root mean square of lateral component of turbulent velocity (m/sec);
W	channel width (m);
Y_{90}	characteristic depth (m) where the air concentration is 90%;
α	channel slope.

Subscript

I	inception point of free surface aeration;
w	water flow.

References

1 BaCaRa, "Etude de la dissipation d'energie sur les evacuateurs à marches", ('Study of the energy dissipation on stepped spillways'), *Rapport d'Essais*, Projet National BaCaRa, CEMAGREF-SCP, Aix-en-Provence, France, 111 pages (in French), October 1991

2 Baker R, "Brushes clough wedge block spillway - Progress Report No 3", *SCEL Project Report No SJ542-4*, University of Salford, UK, 47 pages, November 1994

3 Beitz E & Lawless M, "Hydraulic model study for dam on GHFL 3791 Isaac River at Burton Gorge", *Water Resources Commission Report*, Ref No REP/24.1, Brisbane, Australia, September 1992

4 Bindo M, Gautier J & Lacroix F, "The stepped spillway of M'Bali dam", *International Water Power & Dam Construction*, Vol 45, No 1, pp35-36, 1993

5 Boes R M, "Physical model study on two-phase cascade flow", *Proc 28th IAHR Congress*, Graz, Austria, Session S1, 6 pages (CD-ROM), 1991

6 Boes R M, "Zweiphasenstroõmung und energieumsetzung auf grosskaskaden", ('Two-phase flow and energy dissipation on cascades'), *PhD Thesis*, VAW-ETH, Zürich, Switzerland (in German), 2000

7 Chamani M R, "Air inception in skimming flow regime over stepped spillways", *Intl Workshop on Hydraulics of Stepped Spillways*, Zürich, Switzerland, H E Minor & W H Hager, Editors, Balkema Publ, pp61-67, 2000

8 Chamani M R & Rajaratnam N, "Onset of skimming flow on stepped spillways", *Jl of Hyd Engrg*, ASCE, Vol 125, No 9, pp969-971, 1999b

9 Chamani M R & Rajaratnam N, "Characteristics of skimming flow over stepped spillways", *Jl of Hyd Engrg*, ASCE, Vol 125, No 4, pp361-368, 1999a

10 Chanson H, "Self-aerated flows on chutes and spillways" *Jl of Hyd Engrg*, ASCE, Vol 119, No 2, pp220-243. Discussion: Vol 120, No 6, pp778-782, 1993

11 Chanson H, "Hydraulic design of stepped cascades, channels, weirs and spillways", *Pergamon*, Oxford, UK, 292 pages, January 1995

12 Chanson H, "Prediction of the transition nappe/skimming flow on a stepped channel", *Jl of Hyd Res*, IAHR, Vol 34, No 3, pp421-429, 1996

ASU shelf 13 Chanson H, "Air bubble entrainment in free surface turbulent shear flows", *Academic Press*, London, UK, 401 pages, 1997

ASU 11/2/01 14 Chanson H, "The hydraulics of open channel flows: an introduction", *Edward Arnold*, London, UK, 512 pages, 1999

15 Chanson H, "Forum article. Hydraulics of stepped spillways: current status", *Jl of Hyd Engrg*, ASCE, Vol 126, No 9, 2000

16 Chanson H, Yasuda Y & Ohtsu I, "Flow resistance in skimming flow: a critical review", *Intl Workshop on Hydraulics of Stepped Spillways*, Zürich, Switzerland, H E Minor & W H Hager, Editors, Balkema Publ, pp95-102, 2000

17 Chow V T, "Open channel hydraulics", *McGraw-Hill*, New York, USA, 1959

18 DNR, Private Communication, 1989

19 Elviro V & Mateos C, "Spanish research into stepped spillways", *Intl Jl Hydropower & Dams*, Vol 2, No 5, pp61-65, 1995

20 Essery I T S & Horner M W, "The hydraulic design of stepped spillways", *CIRIA Report No 33*, 2nd Edition, London, UK, January 1978

21 Frizell K H & Mefford B W, "Designing spillways to prevent cavitation damage", *Concrete International*, Vol 13, No 5, pp58-64, 1991

22 Haddad A A, "Water flow over stepped spillway", *Masters Thesis*, Polytechnic of Bari, Italy, 1998

23 Hager W H, Bremen R & Kawagoshi N, "Classical hydraulic jump: length of roller", *Jl of Hyd Res*, IAHR, Vol 28, No 5, pp591-608, 1990

24 Horner M W, "An analysis of flow on cascades of steps", *PhD Thesis*, Univ of Birmingham, UK, 1969

25 Kells J A, "Comparison of energy dissipation between nappe and skimming flow regimes on stepped chutes – discussion", *Jl of Hyd Res*, IAHR, Vol 33, No 1, pp128-133, 1995

ASU shelf 26 Matos J, "Hydraulic design of stepped spillways over RCC dams," *Intl Workshop on Hydraulics of Stepped Spillways*, Zürich, Switzerland, H E Minor & W H Hager, Editors, Balkema Publ, pp187-194, 2000

27 Matos J, Sanchez M, Quintela A & Dolz J, "Characteristic depth and pressure profiles in skimming flow over stepped spillways", *Proc 28th IAHR Congress*, Graz, Austria, Session B14, 6 pages (CD-ROM), 1999

28 Montes J S, Private Communication (in Chanson 1996), 1994

29 Ohtsu I & Yasuda Y, "Characteristics of flow conditions on stepped channels", *Proc 27th IAHR Biennal Congress*, San Francisco, USA, Theme D, pp583-588, 1997

30 Peyras L, Royet P & Degoutte G, "Ecoulement et dissipation sur les déversoirs en gradins de gabions", ('Flows and dissipation of energy on gabion weirs'), *Jl La Houille Blanche*, No 1, pp37-47 (in French), 1991

31 Pinheiro A N & Fael C S, "Nappe flow in stepped channels – occurrence and energy dissipation", *Intl Workshop on Hydraulics of Stepped Spillways*, Zürich, Switzerland, H E Minor & W H Hager, Editors, Balkema Publ, pp119-126, 2000

32 Ru S X, Tang C Y, Pan R W & He X M, "Stepped dissipator on spillway face", *Proc 9th APD-IAHR Congress*, Singapore, Vol 2, pp193-200, 1994

33 Ruff J F & Frizell K H "Air concentration measurements in highly-turbulent flow on a steeply-sloping chute", *Proc Hydraulic Engineering Conf*, ASCE, Buffalo, USA, Vol 2, pp999-1003, 1994

34 Sanchez-Bribiesca J L & Gonzalez-Villareal F, "Spilling floods cost effectively", *International Water Power & Dam Construction*, Vol 48, No 5, pp16-20, 1996

35 Shvainshtein A M, "Stepped spillways and energy dissipation", *Gidrotekhnicheskoe Stroitel'stvo*, No 5, pp15-21 (in Russian), 1999. (Also Hydrotechnical Construction, Vol 3, No 5, 1999, pp275-282)

36 Sorensen R M, "Stepped spillway hydraulic model investigation", *Jl of Hyd Engrg*, ASCE, Vol 111, No 12, pp1461-1472. Discussion: Vol 113, No 8, pp 1095-1097, 1985

37 Stephenson D, "Stepped energy dissipators", *Proc Intl Symp on Hydraulics for High Dams*, IAHR, Beijing, China, pp1228-1235, 1988

38 Tozzi M J, "Caracterização/comportamento de escoamentos em vertedouros com paramento em degraus", ('Hydraulics of stepped spillways'), *PhD Thesis*, University of São Paulo, Brazil (in Portuguese), 1992

39 Tozzi M, Taniguchi E & Ota J, "Air concentration in flows over stepped spillways", *Proc 1998 ASME Fluids Eng Conf*, FEDSM'98, Washington DC, USA, Paper FEDSM98-5053, 7 pages (CD-ROM), 21-25 June, 1998

40 Vischer D & Hager W H, "Dam hydraulics", *John Wiley*, Chichester, UK, 316 pages, 1998

41 Wahrheit-Lensing A, "Selbstbeluftung und energieumwandlung beim anfluss uber treppenformige entlastungsanlagen", ('Self-aeration and energy dissipation in flow over stepped spillways'), *PhD Thesis*, Karlsruhe University, Germany, 164 pages (in German), 1996

42 Wood I R, "Air water flows", *Proc 21st IAHR Congress*, Melbourne, Australia, Keynote address, pp18-29, 1985

43 Yasuda Y & Ohtsu I, "Flow resistance of skimming flow in stepped channels", *Proc 28th IAHR Congress*, Graz, Austria, Session B14, 6 pages (CD-ROM), 1999

44 Zhou Hui, "Hydraulic performances of skimming flow over stepped spillway", *Proc 10th APD-IAHR Congress*, Langkawi Island, Malaysia, pp1-8, August 1996

Ref (1)	Slope α [deg] (2)	$\frac{h}{l}$ (3)	Step height h (m) (4)	$\frac{d_c}{h}$ Onset (5)	Type of transition (6)	Remarks (7)
Horner (1969)	22.8	0.42	0.029	0.81	NA-SK	30-step model.
	27.8	0.53	0.036	0.8	NA-SK	Horiz steps.
	36.4	0.74	0.051	0.82	NA-SK	Fig 4.16
	40.4	0.85	0.069	0.79	NA-SK	
Essey & Horner (1978)	11.3	0.2	0.05	1.15	NA-SK	Flat horizontal steps
	22.8	0.42	0.029	0.81	NA-SK	
	27.7	0.53	0.036	0.82	NA-SK	
	36.4	0.74	0.05	0.82	NA-SK	
	40.1	0.84	0.057	0.8	NA-SK	
Peyras *et al* (1991)	18.4	0.33	0.2	0.74	NA-SK	Gabion. Flat horizontal steps
	26.6	0.5	0.2	0.67	NA-SK	
	45	1	0.2	0.61	NA-SK	
Beitz & Lawless (1992)	51.3	1.25	0.02	0.4	NA-SK	Flat horizontal steps
DNR (1989)	18.4	0.33	0.067	0.56	NA-SK	Pooled steps: $d_c/h = 0.1$
Montes (1994)	45	1	-	0.62	NA-SK	Flat horizontal steps
	36.9	0.75	-	0.9	NA-SK	
Kells (1995)	45	1	-	0.5	NA-SK	Gabions: horizontal capped (impervious) steps
Stephenson (1988)	45	1	7.543	0.74	NA-SK	Flat horizontal steps
	26.6	0.5	5.996	0.77	NA-SK	
	18.4	0.33	4.871	0.79	NA-SK	
	11.3	0.2	3.609	0.83	NA-SK	
Elviro & Mateos (1995)	53.1	1.33	-	0.51	NA-TRA	
	53.1	1.33	-	0.72	TRA-SK	
Ru *et al* (1994)	53.1	1.33	0.08	0.57	NA-SK	Model E (or B4). Flat horizontal steps ▶

Appendix I. Experimental data: transition flow conditions (*cont on pp224-225*).

Ref (1)	Slope α (deg) (2)	$\frac{h}{l}$ (3)	Step height h (m) (4)	$\frac{d_c}{h}$ Ohtsu (5)	Type of transition (6)	Remarks (7)
Ohtsu & Yasuda (1997)	-	0.35	-	1.08	TRA-SK	Flat horizontal steps. Lower limit of skimming flow
	-	0.58	-	0.95	TRA-SK	
	-	1	-	0.83	TRA-SK	
	-	1.44	-	0.8	TRA-SK	
	-	0.35	-	0.79	NA-TRA	Upper limit of nappe flow
	-	0.58	-	0.77	NA-TRA	
	-	1	-	0.6	NA-TRA	
Haddad (1998)	25.6	0.48	0.024	0.98	TRA	Flat horizontal steps. Transition
	13.5	0.24	0.024	1.37	NA-TRA	Upper limit of nappe flow
	13.5	0.24	0.024	1.46	TRA-SK	Lower limit of skimming flow
	6.8	0.12	0.024	0.88	NA-TRA	W = 0.75m
	6.8	0.12	0.024	1.15	TRA-SK	
	13.5	0.24	0.024	0.88	NA-TRA	
	13.5	0.24	0.024	1.11	TRA-SK	
	25.6	0.48	0.024	0.72	NA-TRA	
	25.6	0.48	0.024	0.98	TRA-SK	
Chamani & Rajaratnam (1999)	59.1	1.67	-	0.26	NA-TRA	Flat horizontal steps. h = 0.125, 0.0625, 0.0312m
	59.1	1.67	-	0.22	NA-TRA	
	59.1	1.67	-	0.2	NA-TRA	
	51.3	1.25	-	0.36	NA-TRA	h = 0.125 & 0.03125m
	51.3	1.25	-	0.32	NA-TRA	
Pinheiro & Fael (2000)	18.4	0.33	0.05	0.95	NA-SK	Flat horizontal steps. W = 0.7m
	14	0.25	0.05	1.16	NA-SK	
Shvainshtein (1999)	38.7	0.8	0.05	0.72	NA-SK	W = 0.48m
	51.3	1.25	0.0625	0.72	NA-SK	Flat horizontal steps
Boes (2000)	30	0.58	-	0.83	NA-SK	Supercritical inflow
	50	1.19	-	0.74	NA-SK	Flat horizontal steps

Appendix I. Experimental data: transition flow conditions

Ref (1)	Slope α (deg) (2)	$\frac{h}{l}$ (3)	Step height h (m) (4)	$\frac{d_c}{h}$ Output (5)	Type of transition (6)	Remarks (7)
Present study	3.4	0.06	-	1.07	NA-TRA	Supercritical inflow. Flat horizontal steps. h = 0.143 & 0.07m. W = 0.5m
	22	0.4	0.1	0.53	NA-TRA	Broad-crest. Flat horizontal steps. h = 0.10m. W = 1m
	22	0.4	0.1	0.97	TRA-SK	

Notes

Type of transition:

NA-SK = from nappe to skimming flow;

NA-TRA = from nappe to transition flow;

TRA-SK = from transition to skimming flow;

TRA = transition flow conditions.

Data re-analysis by the author.

Appendix I. Experimental data: transition flow conditions

C_{mean} (1)	D' (2)	K' (3)
0.01	0.007312	68.70445
0.05	0.036562	14.0029
0.1	0.073124	7.16516
0.15	0.109704	4.88517
0.2	0.146489	3.74068
0.3	0.223191	2.567688
0.4	0.3111	1.93465
0.5	0.423441	1.508251
0.6	0.587217	1.178924
0.7	0.878462	0.896627

Table 1. Relationship between C_{mean}, D' and K' (after [13])

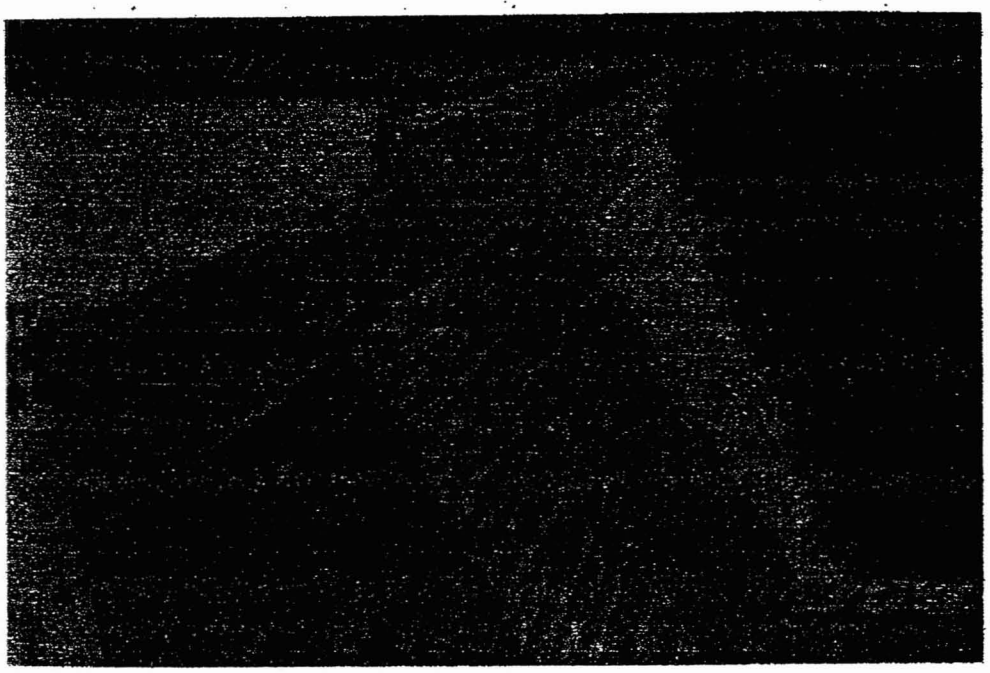

Figure 1. Riou dam, France (1990) – H_{dam} = 22m, RCC gravity dam with overflow stepped spillway (design flow: 110m³/sec, h = 0.43m, α = 59°)
(a) view from the right bank (note the broad crest design)

Figure 1. Riou dam, France (1990) – H_{dam} = 22m, RCC gravity dam with overflow stepped spillway (design flow: 110m³/sec, h = 0.43m, α = 59°)
(b) view from the downstream in 1998 (note the short stilling basin)

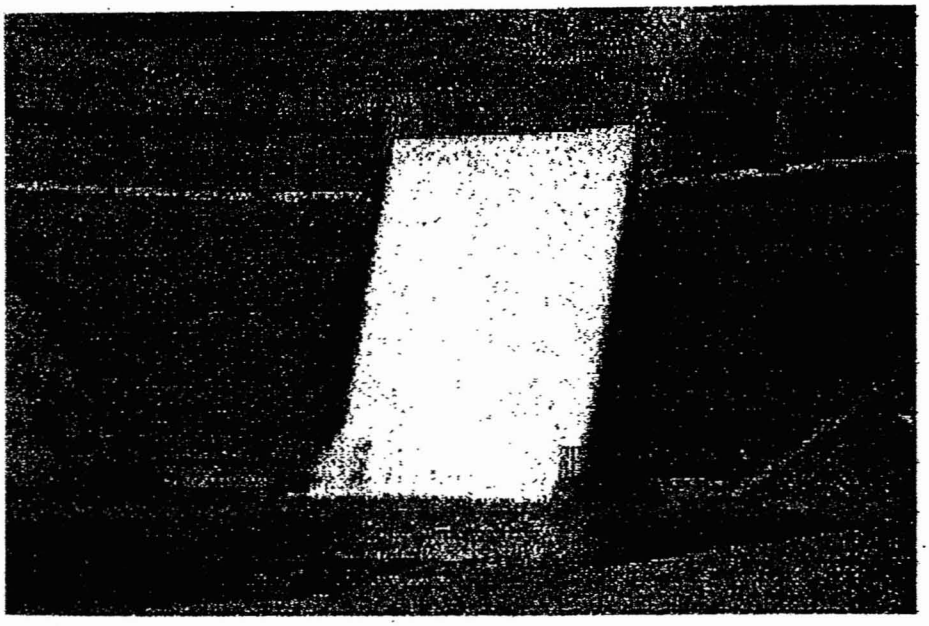

Figure 2. Santa Cruz dam, New Mexico, USA, in 1991 – H_{dam} = 46m, 1929 concrete arch dam reinforced by RCC and conventional concrete buttresses in 1987, with a new stepped spillway (design flow: 56.3m³/sec)

(Courtesy of the US Bureau of Reclamation)

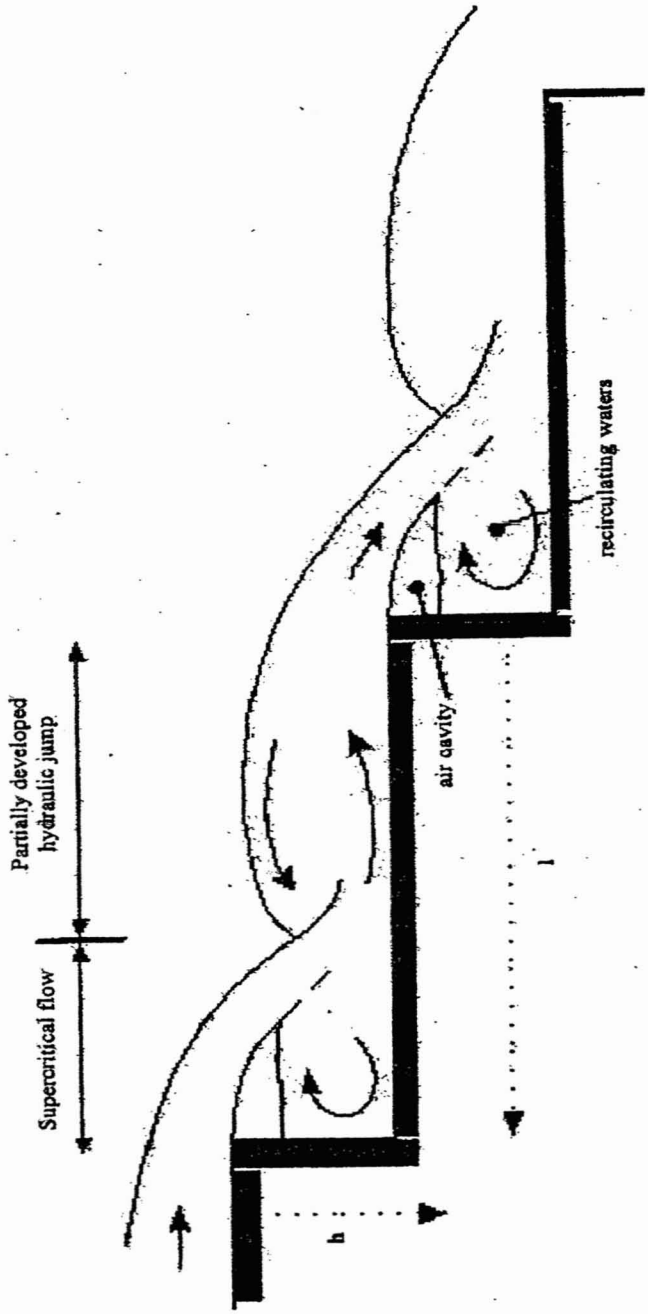

Figure 3. Basic flow regimes above a stepped chute
(a) Nappe flow regime with hydraulic jump

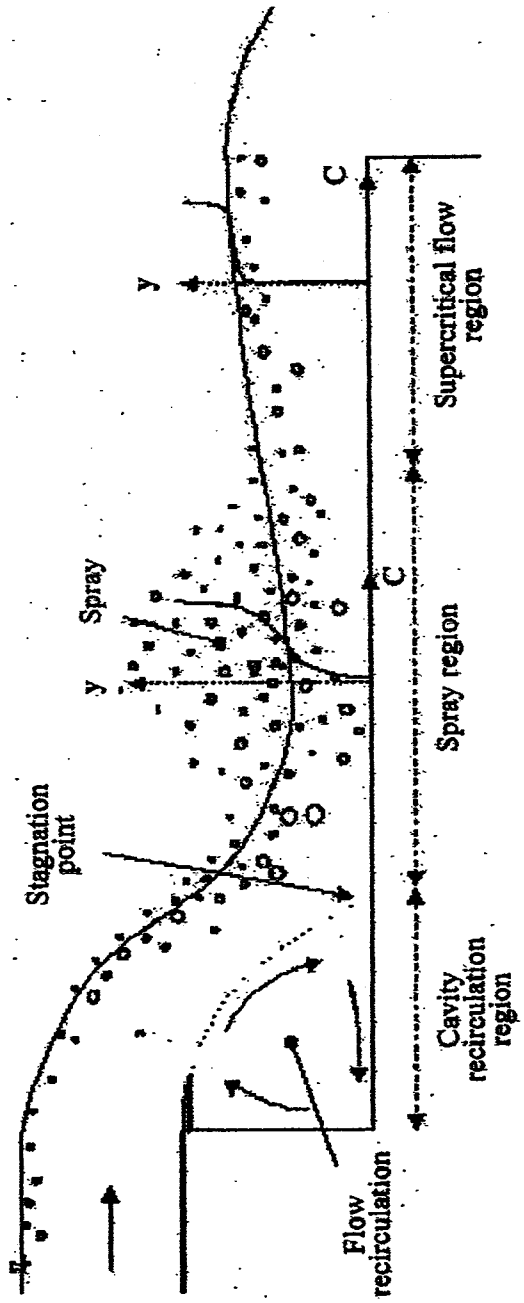

Figure 3. Basic flow regimes above a stepped chute
(b) A form of transition flow regime

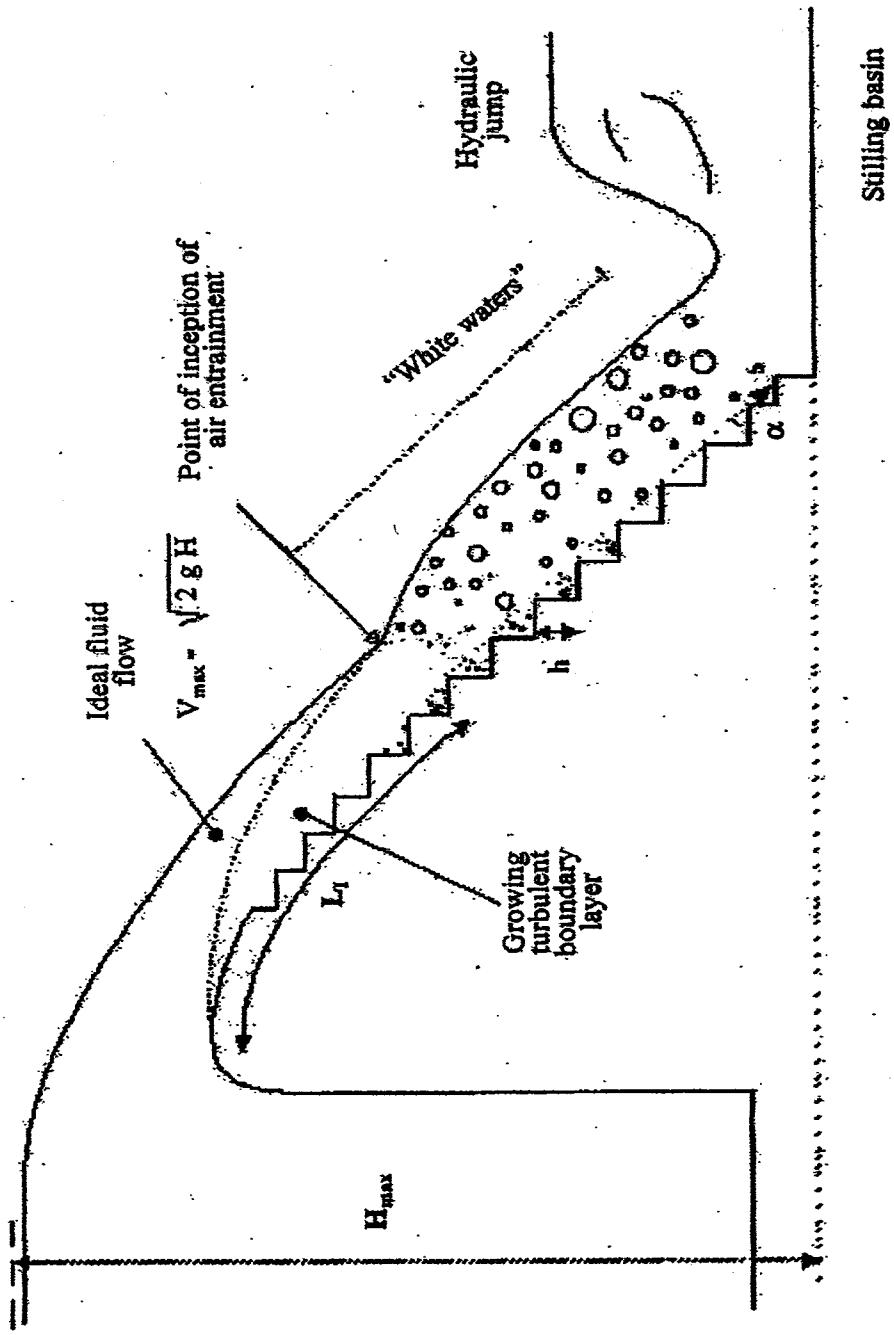

Figure 3. Basic flow regimes above a stepped chute
(c) Skimming flow regime with stable cavity recirculation

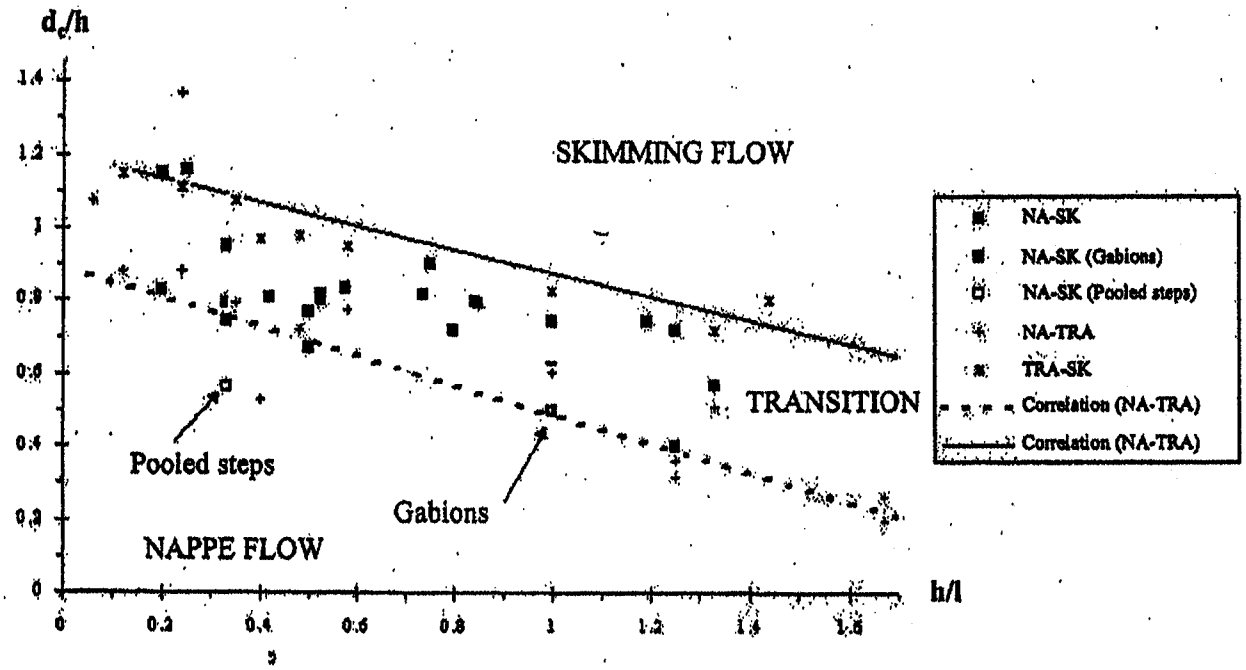

Figure 4. Flow conditions for the transition from nappe to skimming flow. Summary of experimental data (Appendix I)

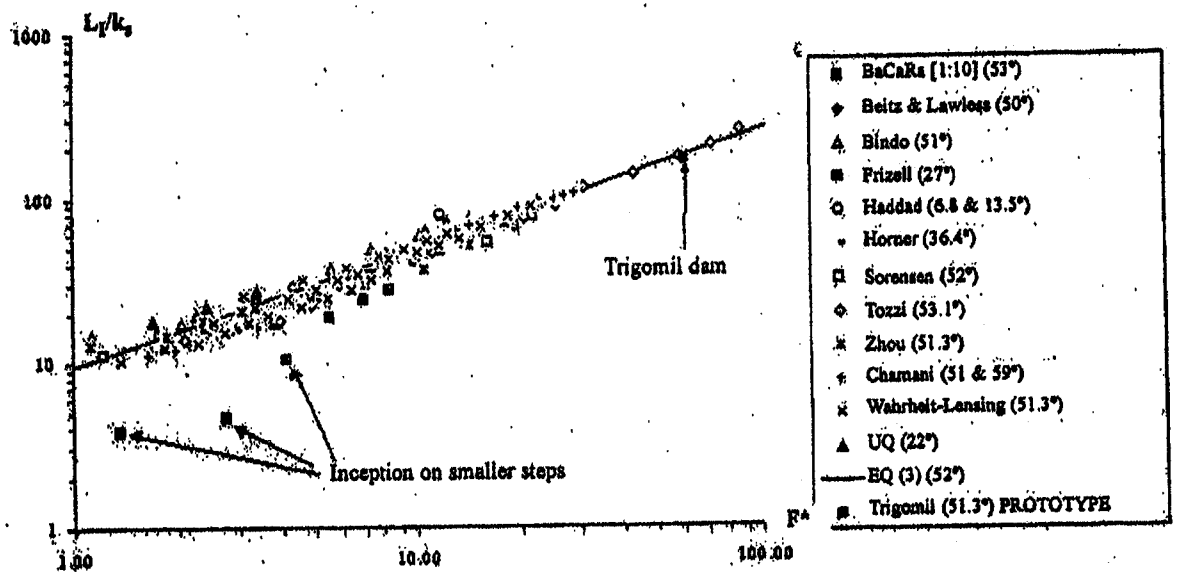

Model data: BaCaRa [1], Beitz and Lawless [3], Bindo *et al* [4], Frizell and Mefford [21], Haddad [22], Horner [24], Sorensen [36], Tozzi [38]. Present study, Wahrheit-Lensing [41], Zhou [44] - Prototype data: Trigomal dam (Sanchez-Bribiesca and Gonzalez-Villareal [34]), Brushes Clough dam (Baker [2])

Figure 5. Dimensionless distance to the inception point of air entrainment: $L_i/(h^* \cos\alpha)$ as a function of $F^* = q_w/\sqrt{g^* \sin\alpha^* (h^* \cos\alpha)^3}$

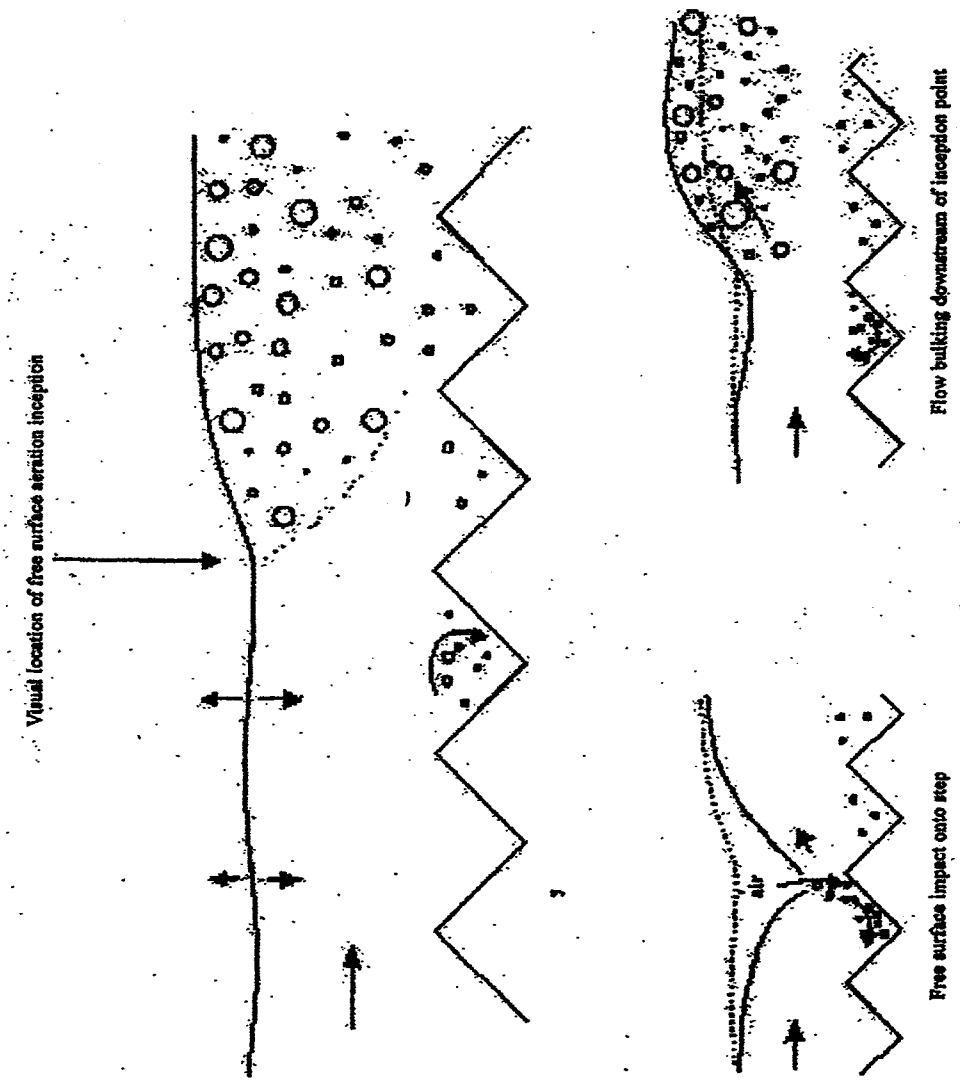

Figure 6. Rapidly varied flow region at the inception point of free surface aeration (a) Flow mechanisms next to the inception point

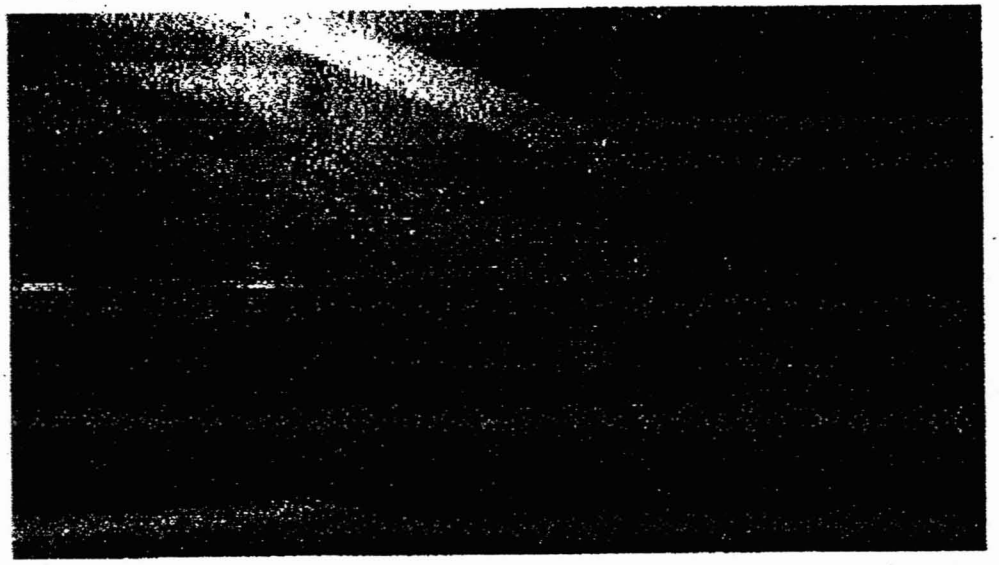

Figure 6. Rapidly varied flow region at the inception point of free surface aeration. (b) Experiment at the University of Queensland: $\alpha = 22°$, $h = 0.1$m, $W = 1$m, $d_c/h = 1.23$ – Flow from top left to bottom right. (Note the step cavity aeration upstream of free surface aeration location)

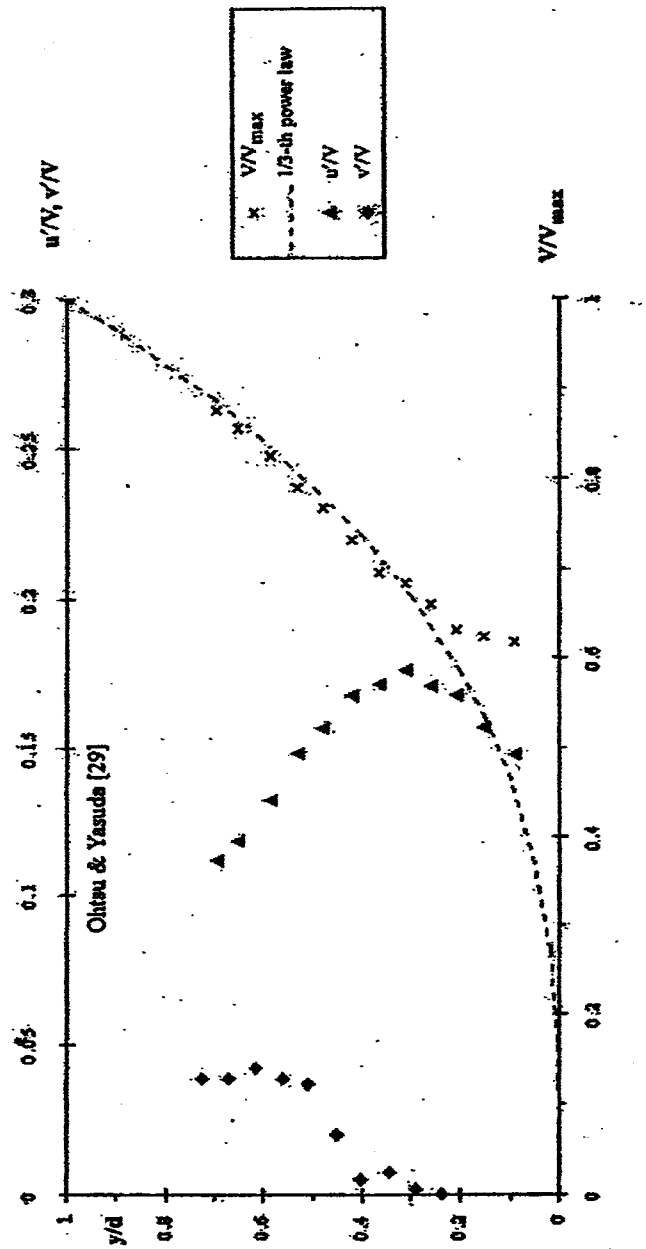

Figure 6. Rapidly varied flow region at the inception point of free surface aeration. (c) Velocity and velocity fluctuation distributions at the point of inception (Ohtsu & Yasuda [29] - $\alpha = 19°$, h = 0.05m, qw = 0.089m²/sec – Measurements at the step edge (Step 7)

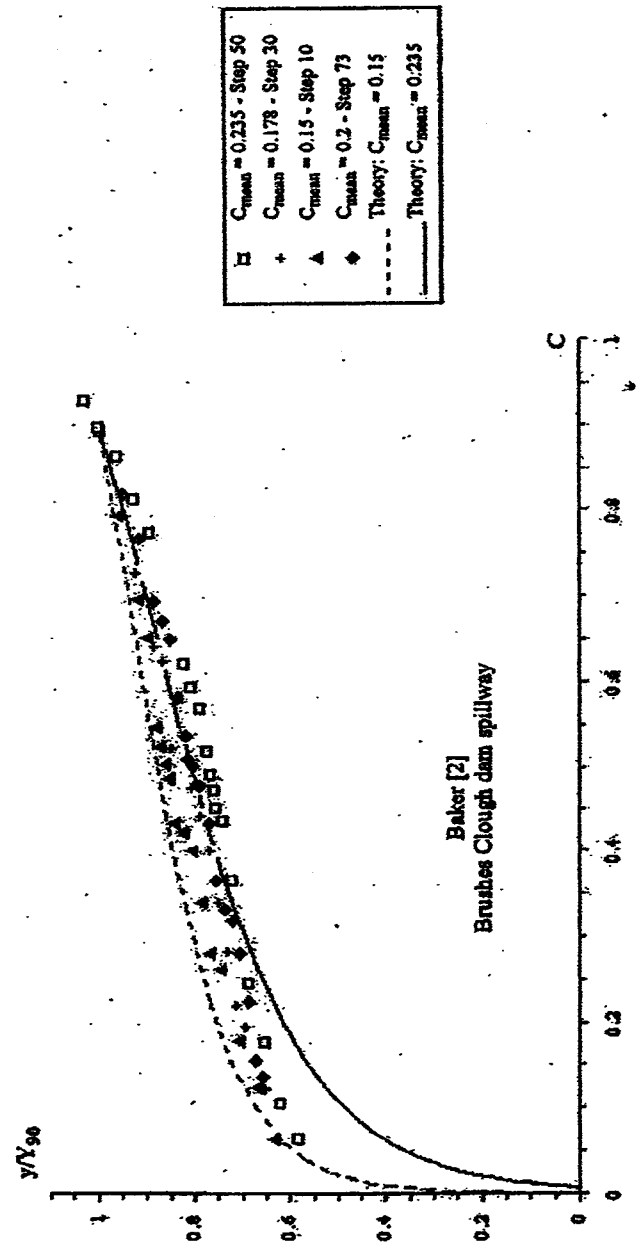

Figure 7. Void fraction distributions in stepped chute flows: comparison with Equation 6. (a) Prototype data (Baker [2])

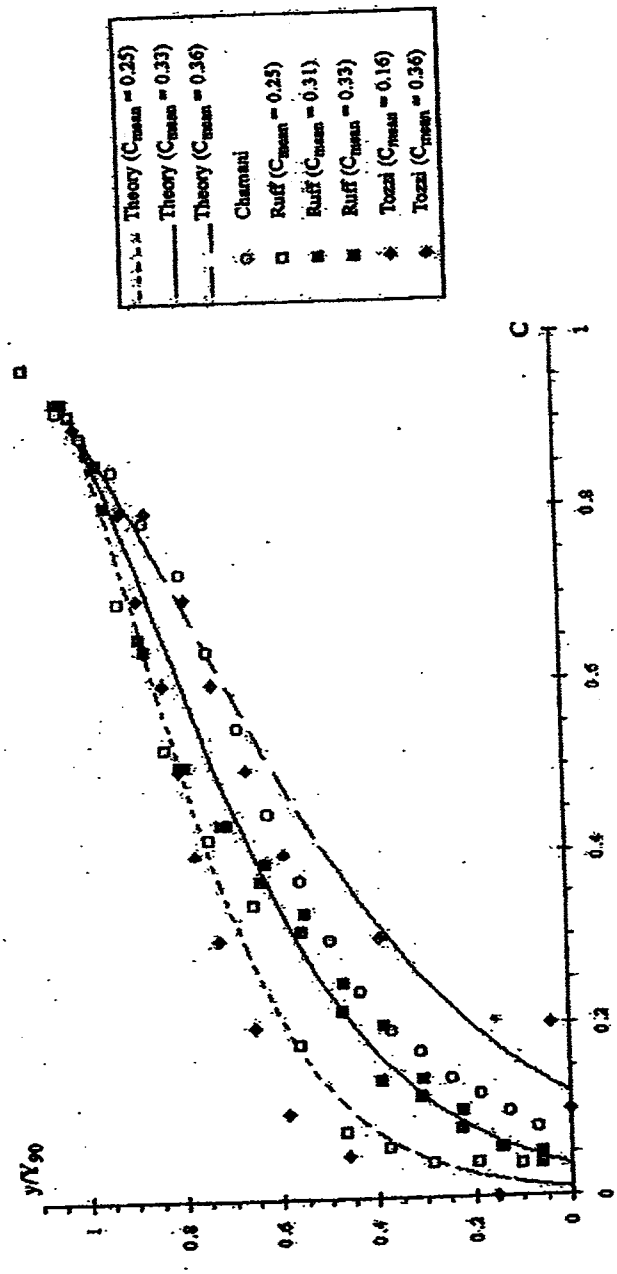

Figure 7. Void fraction distributions in stepped chute flows: comparison with Equation 6. (b) **Model data:** Ruff & Frizell [33], Tozzi *et al* [39], Chamani & Rajaratnam [9].

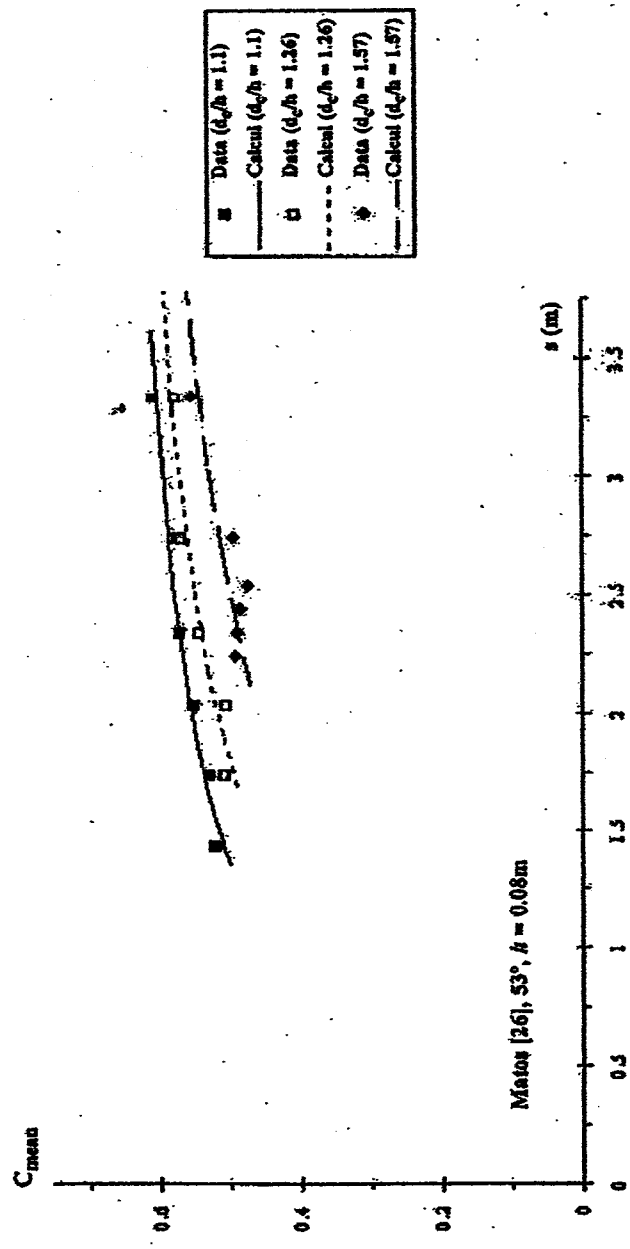

Figure 8. Self aerated flows on stepped chute: comparison between computations (Equation 8) and experimental data: $\alpha = 53.1°$, $h = 0.08$m, $u_r = 0.4$m/sec, Matos [26]

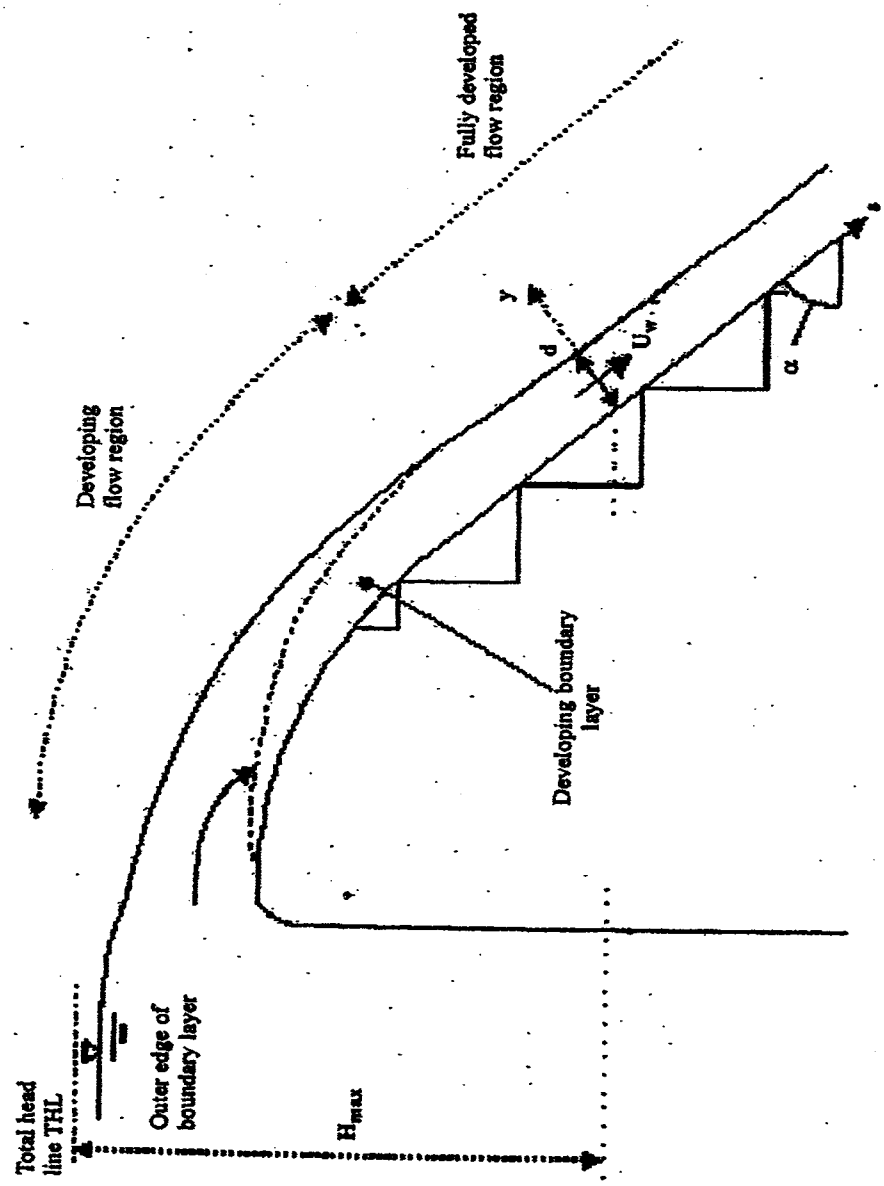

Figure 9. Residual flow velocity at the downstream end of the chute
(a) Definition sketch

CHANSON, H. (2001). "Hydraulic Design of Stepped Spillways and Downstream Energy Dissipators." Dam Engineering, Vol. 11, No. 4, pp. 205-242 (ISSN 0 617 00563 X).

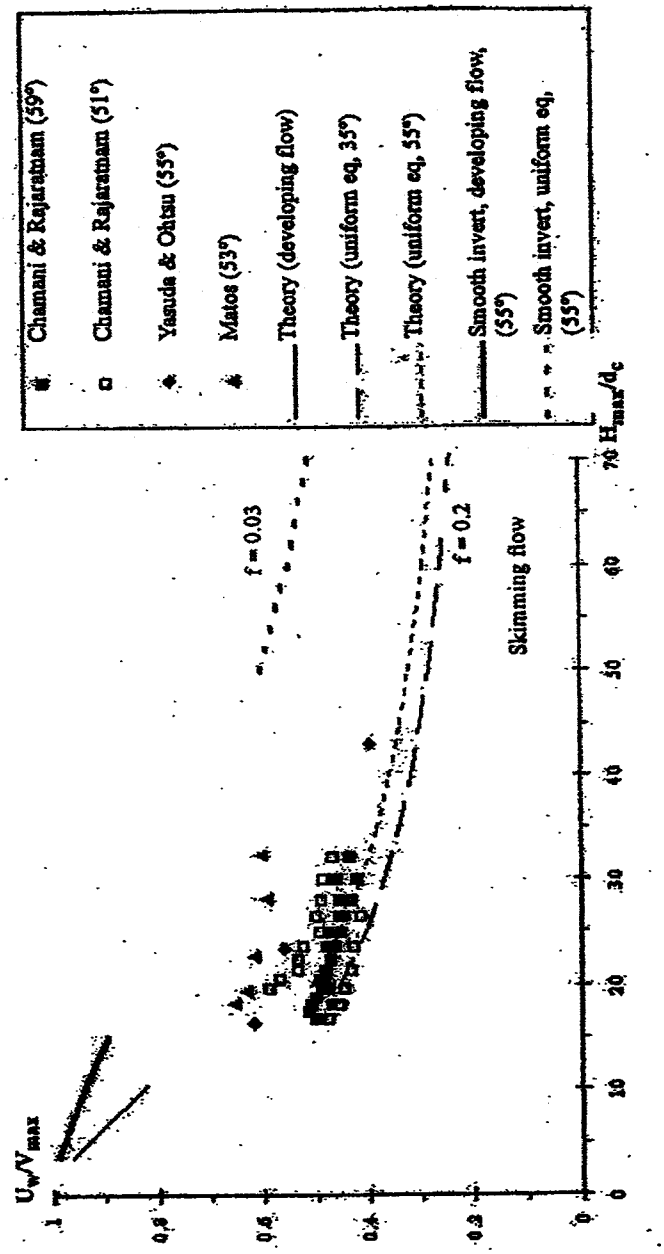

Figure 9. Residual flow velocity at the downstream end of the chute
(b) Data: Chamani & Rajaratnam [9], Yasuda & Ohtsu [43], Matos [26]

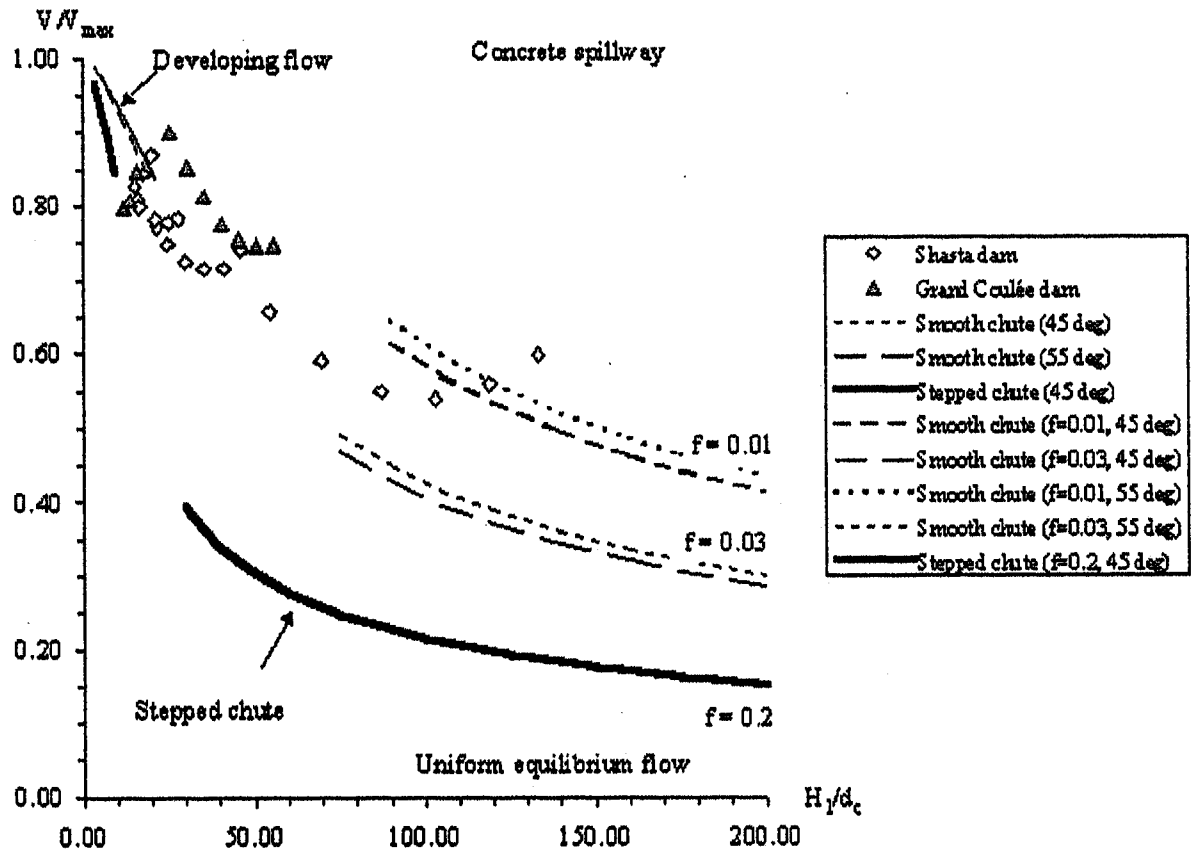
V/V max
Developing flow
Concrete spillway
1.00
0.80
0.60
0.40
0.20
0.00
0.00
50.00
100.00
150.00
200.00
H1/dc
f= 0.01
f= 0.03
f= 0.2
Stepped chute
Uniform equilibrium flow
Shasta dam
Grand Coulée dam
Smooth chute (45 deg)
Smooth chute (55 deg)
Stepped chute (45 deg)
Smooth chute (f=0.01, 45 deg)
Smooth chute (f=0.03, 45 deg)
Smooth chute (f=0.01, 55 deg)
Smooth chute (f=0.03, 55 deg)
Stepped chute (f=0.2, 45 deg)

→ Nasir Raza - BRW
Fax (602) 230-9189

TWO-PHASE FLOW AND ENERGY DISSIPATION ON STEPPED SPILLWAYS

Robert M. Boes[a]

Abstract

Based on model experiments, design guidelines for stepped spillways are developed for different chute slopes. Particular emphasis is placed on the onset of skimming flow, the location of the inception point of air entrainment, the maximum unit discharge possible without cavitation risk, the energy dissipation characteristics, the length to attain uniform flow and the required training wall height.

Introduction

Stepped spillways have regained popularity over the last one and a half decades with the evolution of the RCC dam construction technique. A stepped chute can be economically integrated on the downstream face of an RCC gravity dam. Another common application is the use of stepped overlays on the downstream face of embankment dams as emergency spillways to safely pass the PMF over the crest of the dam. Advantages of stepped spillways include ease of construction, reduction of cavitation risk potential, and reduction of the stilling basin dimensions at the downstream toe of the dam due to continuous energy dissipation along the chute. Overviews of spillways with particular focus on stepped chutes are given in References 1-3.

Because general design guidelines for stepped spillways are still not available despite increased research activities around the world, hydraulic model investigations on skimming flow were conducted at VAW of ETH Zurich, Switzerland. Details on the experimental set-up and the novel fiber-optical instrumentation used are given in References 4-6.

Transition from nappe flow to skimming flow

Two distinct flow regimes are found on stepped spillways, so-called nappe flow and skimming flow. In nappe flow the steps act as a series of overfalls with the water plunging from one step to another (Figure 1a); in skimming flow the water flows as a coherent stream over the pseudo-bottom formed by the step corners. Nappe flow is generally found for low discharges and large steps. For small steps or larger discharges such as the design discharge, the water skims over the step corners and recirculating zones develop in the triangular niches formed by the step faces and the pseudo-bottom (Figure 1b). The transition from nappe to skimming flow can be expressed as the ratio of critical flow depth h_c and step height s. Skimming flow begins with ratios larger than[5]

[a]*Dr. sc. techn., Research Hydraulic Engineer, Laboratory of Hydraulics, Hydrology and Glaciology (VAW), ETH-Zentrum, CH-8092 Zurich, Switzerland*

$$\frac{h_c}{s} = 0.91 - 0.14 \tan\phi \qquad \text{for } 26° < \phi < 55°. \qquad (1)$$

Eq.(1) is in approximate agreement with the transition functions given by earlier studies[7-9] and is applicable for chute inclination angles of approximately $26° < \phi < 55°$ or slopes between 1V:2H and 1V:0.7H. A certain risk of acoustic noise due to vibrations of the falling jets exists in the nappe flow regime, especially for wide spillways where the cavity below the nappe is not aerated over the entire width. However, as is illustrated by a typical prototype example in Figure 1a, the nappe aeration at the free surface is rather large due to the high degree of turbulence caused by the macro-roughness of the steps, so that excessive sub-pressures beneath the falling nappe are unlikely to occur. However, further studies on the pressure distribution for the transition between nappe and skimming flow are recommended.

a) b)

Figure 1. a) Nappe flow with $h_c/s \approx 0.2$ on *Urft Dam* stepped spillway, Germany, with downstream slope of 1V:1.5H ($\phi \approx 34°$) (courtesy of Dr. V. Spork, RWTH Aachen, Germany); b) Skimming flow over model steps with $h_c/s \approx 1.73$ at a slope of 1V:1.73H ($\phi = 30°$).

Air entrainment

The point where the turbulent boundary layer reaches the free surface, where the degree of tubulence is large enough to entrain air into the water flow, is the so-called inception point of air entrainment. For the designer of a stepped chute, knowing the location of the inception point is important to have an idea of the unaerated spillway zone which is potentially prone to cavitation damage due to large sub-pressures. An analysis of new model data[5,6] for three different chute slopes has shown that the vertical distance $z_i \approx L_i \sin\phi$ (Figure 2) from the spillway crest to the inception point can be described by (Figure 3)

$$\frac{z_i}{s} = 4.93\,Fr.^{0.84} \qquad \text{for } 26° < \phi < 55°, \qquad (2)$$

where $Fr_* = q/(g \sin\phi s^3)^{1/2}$ is a roughness Froude number containing the relevant parameters of stepped spillway flow such as unit discharge q, step height s, chute inclination angle ϕ (Figure 2), and $g = 9.81$ m/s^2 is the acceleration of gravity.

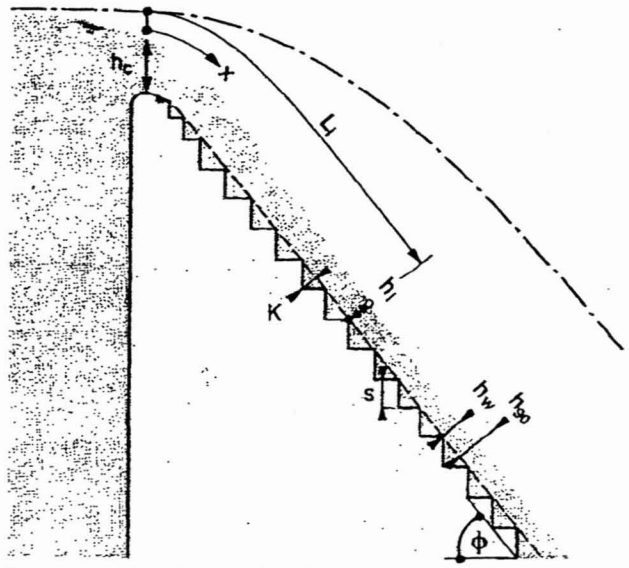

Figure 2. Side view of a stepped spillway: (---) pseudo-bottom, flow region with (▩) equivalent clear water of depth h_w and (▤) mixture of depth h_{90}, (—·—) energy head, and (○) inception point.

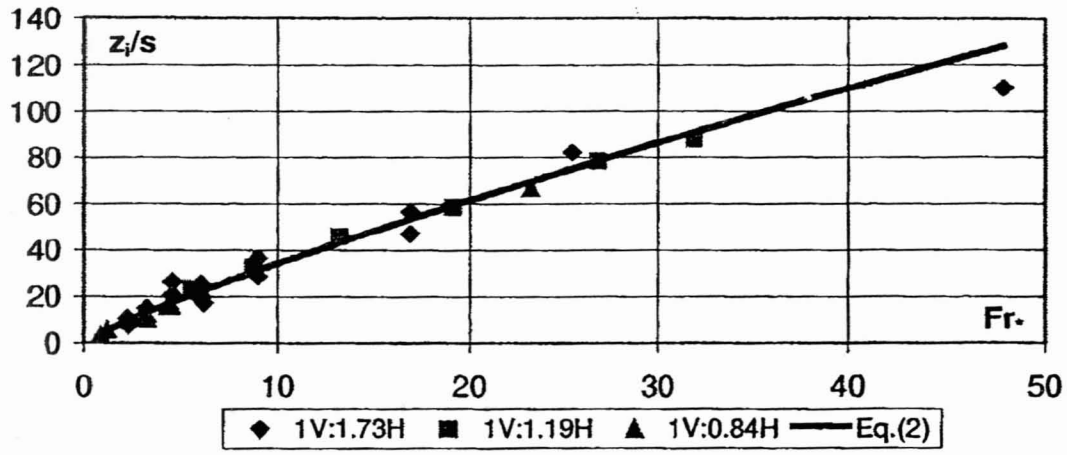

Figure 3. Non-dimensional vertical distance z_i/s from the spillway crest to the inception point as function of the roughness Froude number Fr_* for different spillway slopes.

If $z_i \approx L_i \sin\phi$ is introduced and Eq.(2) is written in dimensional form, the unaerated or black water length L_i becomes

$$L_i = 4.93 \frac{q^{0.84}}{g^{0.42} (\sin\phi)^{1.42} s^{0.26}} \qquad \text{for } 26° < \phi < 55°. \qquad (3)$$

Eq.(3) suggests a small influence of the step height on L_i, whereas the unit discharge predominantly determines the location of the inception point. Doubling the step height leads to a reduction of the black water length of only 16.5%, whereas L_i increases by 79% when the unit discharge is doubled. The steeper the spillway slope, the sooner the water flow becomes aerated. An increase in slope from 1V:2H to 1V:0.8H (ϕ = 26.6° to 51.3°) reduces L_i by about 55%.

In the case of high velocities, the hydrodynamic pressures on the step surfaces or at the step corners may fall below the vapour pressure, resulting in cavitation which might cause severe damage to the spillway concrete. Although steps form large offsets away from the flow direction and thus inhibit cavitation from residing on the boundary[10], the placement of an aerator to artificially entrain air might be of interest in the black water region of a stepped spillway. Air Entrainment can also be achieved by bridge-supporting piles downstream of the spillway crest as for the Puebla de Cazalla Dam in Spain[11]. Further research on the hydrodynamic pressure fluctuations should shed more light on the cavitation risk potential of stepped spillways, particularly in the unaerated spillway zone.

Selection of step height

When designing a stepped spillway, the height and downstream slope of the dam as well as the design discharge are normally given. The maximum unit discharge is either determined by the spillway width due to limited site conditions, or by hydraulic constraints as discussed below. In selecting the step height of a cascade spillway, the designer usually chooses from a certain range of values determined by the dam construction procedure. For RCC dams, for example, the step height is usually one to four times the thickness of a compacted lift of typically 0.3 m, i.e. between 0.3 and 1.2 m. Two main aspects have to be considered when selecting the step height and are discussed in the following, (1) cavitation risk potential, and (2) energy dissipation rate of a cascade.

Cavitation risk

Based on the fundamental work of Peterka[12] and experience with aerated high velocity flow[10,13], a local air concentration of about 5 to 8% is a minimum value widely accepted today by design engineers to avoid cavitation damage to concrete faces. A re-analysis of the air concentration C_b at the step corners (index b) for three different inclination angles suggests the following values for fully aerated uniform flow (Index u, Figure 4), with Fr* as defined above[5,6]

$$C_{b,u} = 0.75 sin\phi - 0.30 - (1.8 \cdot 10^{-2} sin\phi - 8.1 \cdot 10^{-3}) Fr_* \qquad \text{for } 26° < \phi < 55°. \tag{4}$$

The air concentration distribution along the pseudo-bottom can be approximated by

$$\frac{C_b(x)}{C_{b,u}} = 1 - exp\left[\left(3.8 \cdot 10^{-2} sin\phi - 5.4 \cdot 10^{-2}\right)\left(\frac{x - L_i}{h_{90,u}} + 24 - 31 sin\phi\right)\right] \qquad \text{for } 26° < \phi < 55°, \tag{5}$$

with the streamwise coordinate x starting on the spillway crest (Figure 2). The aerated spillway portion $x - L_i$ is normalized with the characteristic mixture flow depth for uniform

flow $h_{90,u}$ which can be computed from Eq.(14), whereas L_i is taken from Eq.(3). Although the data scatter is rather large for Eq.(5), as exemplified by Figure 5 for $\phi = 40°$, it gives an idea that downstream of the inception point of air entrainment the air concentration at the chute bottom develops rather quickly towards a uniform value.

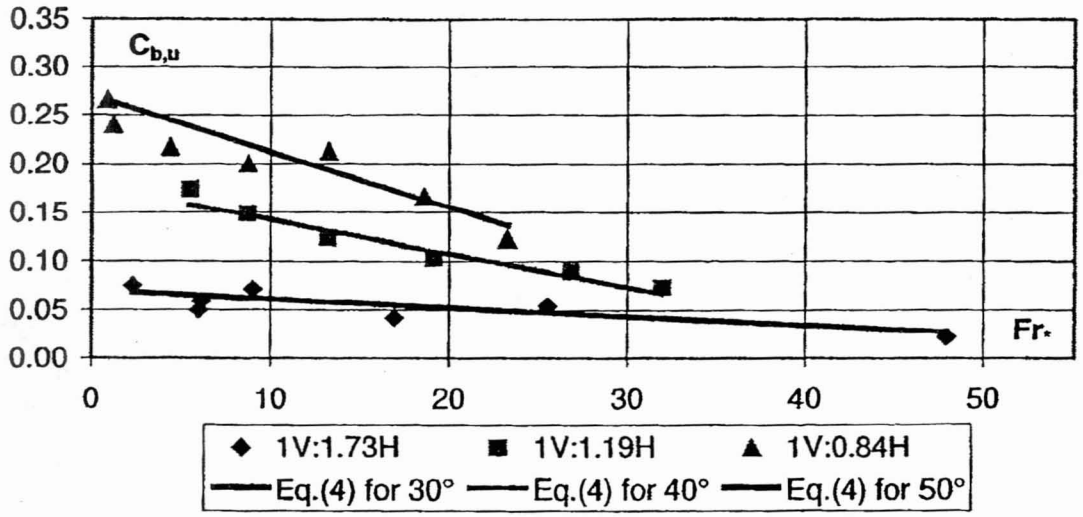

Figure 4. Bottom air concentration in uniform flow $C_{b,u}$ as function of the roughness Froude number Fr* for different spillway slopes.

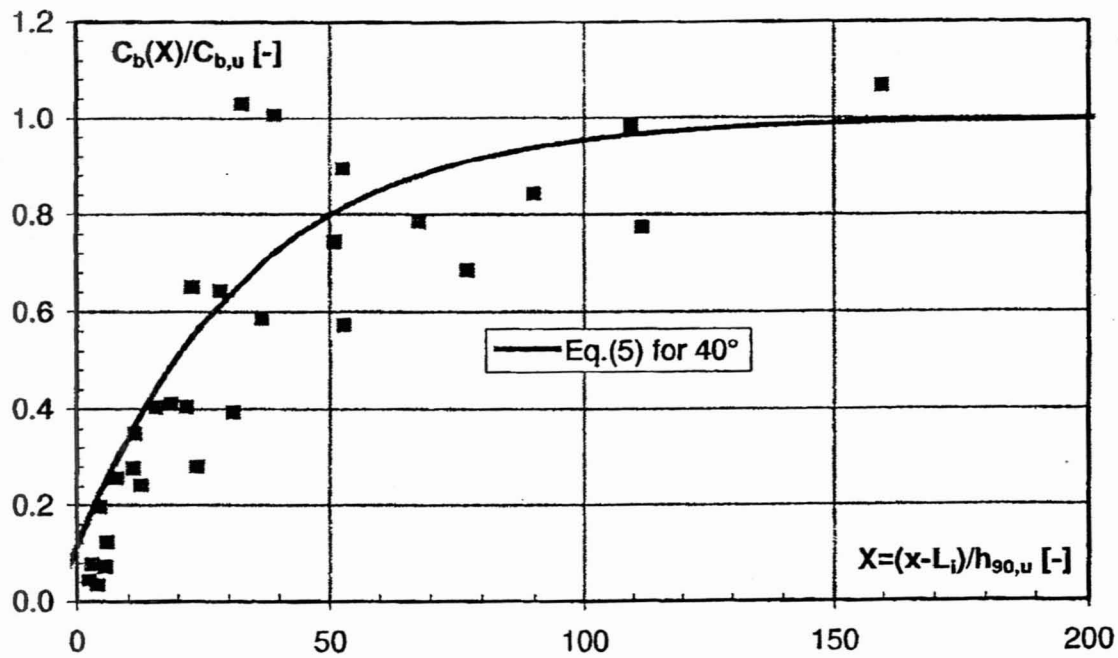

Figure 5. Normalized bottom air concentration $C_b/C_{b,u}$ as function of the normalized streamwise coordinate $X = (x-L_i)/h_{90,u}$ for a 1V:1.19H spillway slope ($\phi = 40°$).

If $C_b = 0.05$ is considered a minimum value to avoid cavitation damage, the maximum roughness Froude number must not exceed $Fr_{\cdot max} = q_{max}/(g\, s^3 \sin\phi)^{1/2} = 22.8$, 36.7 and 38.6 for slopes of 1V:1.73H ($\phi = 30°$), 1V:1.19H ($\phi = 40°$) and 1V:0.84H ($\phi = 50°$), respectively, according to Eq.(4). The maximum unit discharge q_{max} to provide a bottom air concentration in *uniform flow* large enough to avoid cavitation damage even for very high flow velocities thus amounts to values between $q_{max} = 8.3$ and 66.3 m^2/s for step heights between s = 0.3 and 1.2 m at a 1V:1.73H spillway slope (Table 1), which is close to typical downstream faces of embankment dams. For a gravity dam with a typical downstream slope of about 1V:0.84H, q_{max} increases from 17.4 m^2/s for s = 0.3 m to 139.2 m^2/s for s = 1.2 m (Table 1). The latter value is far beyond the maximum unit discharge of about 25 to 30 m^2/s commonly accepted today as a limiting value[3]. Some authors even recommend a critical unit discharge of only $q_{max} = 10\ m^2/s$ to $15\ m^2/s$ [10,11]. However, all C-results presented are on the safe side for design purposes, because the aeration tends to be more pronounced in the prototype than suggested by model results due to a higher degree of turbulence[5,14].

Table 1: Maximum unit discharge q_{max} in m^2/s that can be spilled without risk of cavitation damage for *uniform flow* as function of spillway slope and step height.

ϕ [°]	Slope V:H	s [m]			
		0.3	0.6	0.9	1.2
30	1:1.73	8.3	23.4	43.1	66.3
40	1:1.19	15.2	42.9	78.7	121.2
50	1:0.84	17.4	49.2	90.4	139.2

From the definition of the roughness Froude number, q_{max} increases with $s^{3/2}$, i.e. increasing the step height by a factor of 4 increases q_{max} by a factor of 8. Regarding cavitation risk, higher steps allow a considerably larger maximum water discharge to be released over a stepped spillway than small steps (Table 1). In other words, higher steps have a smaller cavitation potential than small steps for a given discharge. Furthermore, the spillway length needed to attain uniform aerated flow decreases slightly with increasing step height[15] (see Eq.(6)). However, the range of discharges in the nappe flow regime increases with increasing step height according to Eq.(1). Like the black water region upstream of the inception point, the downstream developing region up to $X(C_b = 0.05)$ might also be prone to cavitation damage in the case of velocities greater than approximately 13 m/s [11]. In this case, an aerator placed in the unaerated spillway region downstream from the crest, as previously proposed, would again be required to attain a sufficient air content at the step corners along a stepped chute.

Regarding the horizontal and vertical step faces in the step niches, experimental results[5] have shown that a minimum air concentration of between 5 and 25% can be found in the near-uniform region of a stepped spillway with a slope of 1V:0.84H ($\phi = 50°$). The higher air concentrations are found in the upper half of the vertical face, where the negative pressure minima occur[16]. For all discharges tested, the minimum pressures were well above the critical cavitation values, however. Therefore, no risk of cavitation damage is expected in the step niches of stepped spillways for fully-aerated flow.

Energy dissipation

For the designer of a stepped spillway, knowledge of the energy dissipation along the chute is essential for an adequate design of the downstream stilling basin or any other energy dissipator. Two methods to compute the residual energy head H_{res} at the spillway toe should be distinguished, whether uniform aerated flow (index u) is attained or not. According to Reference 17 and 18 this is the case for approximate relative dam heights $H_{dam}/h_c \geq 20$ and $H_{dam}/h_c \geq 25$ to 30, respectively, whereas Reference 15 gives a distance L_u parallel to the pseudo-bottom of

$$L_u = \frac{8.6\,q^{0.71}}{s^{0.07}(\cos\phi)^{0.07}(\sin\phi)^{0.28}}, \tag{6}$$

where L_u is measured from the spillway crest. New experimental data[5,6] on relative residual energy as function of the relative dam height are plotted in Figure 6 for chute slopes of 1V:1.73H ($\phi = 30°$), 1V:1.19H ($\phi = 40°$) and 1V:0.84H ($\phi = 50°$) together with the analytical curve for uniform flow[19]

$$\frac{H_{res}}{H_{max}} = \frac{\left(\frac{f_{w,u}}{8\sin\phi}\right)^{1/3}\cos\phi + \frac{\alpha}{2}\left(\frac{f_{w,u}}{8\sin\phi}\right)^{-2/3}}{\frac{H_{dam}}{h_c} + \frac{3}{2}}, \tag{7}$$

where H_{max} denotes the reservoir head, $f_{w,u}$ is the Darcy-Weisbach friction factor for uniform equivalent clear water flow and α is the kinetic energy correction coefficient. Figure 6 shows that Eq.(7) departs from the experimental data for approximately $H_{dam}/h_c <$ 30 and 25 for $\phi = 50°$ and 40°, respectively, whereas for $\phi = 30°$ even for small relative dam heights of about $H_{dam}/h_c = 15$ the data fall on the curve analytically deducted for uniform flow. Another criteria for the attainment of uniform aerated flow that takes into account the spillway slope can thus be derived

$$L_u \approx (57 - 13/\sin\phi)\, h_c \qquad \text{for } 26° < \phi < 55°. \tag{8}$$

Eq.(8) suggests that the distance needed to attain uniform flow increases with the chute slope, although the flow becomes aerated within a considerably shorter distance from the spillway crest as indicated by Eq.(3). For instance, for a given unit discharge of $q = 20\ m^2/s$ with a critical depth of $h_c = (q^2/g)^{1/3} = 3.44$ m the flow becomes uniform only after a distance of $L_u \approx 107$, 127 and 138 m for a given chute inclination angle of $\phi = 30°$, 40° and 50°, respectively.

If uniform aerated flow is attained, i.e. $L_{chute} \geq L_u$ according to Eq.(8), the relative residual energy head H_{res}/H_{max} at the toe of ungated stepped spillways can be calculated from Eq.(7) with conservative friction factors of $f_{w,u} = 0.09$ for $\phi = 30°$ and $f_{w,u} = 0.06$ for 40° and 50°. If uniform flow is not attained, i.e. $L_{chute} < L_u$, the energy head at the spillway toe should be computed as

$$H_{res} = z + h_w \cos\phi + \alpha\frac{q^2}{2gh_w^{\,2}}, \tag{9}$$

where z is the elevation above a reference level, usually the stilling basin bottom. According to the experimental results[5], the kinetic energy coefficient $\alpha = 1.21$ on the

average, which approximately agrees with the proposed value of 1.16 for stepped spillways[20] and with $1.20 < \alpha < 1.26$ for spillway aerators[21]. It takes into account the non-uniform velocity distribution in a cross-section if the flow velocity $u_w = q/h_w$ is calculated from the continuity equation, with h_w as the *equivalent clear water depth* in two-phase flow, i.e. the flow depth that would result without aeration of the flow. Assuming critical flow on the spillway crest, the equivalent clear water depth h_w along a stepped chute is expressed in general form by[22]

$$h_w(x) = \frac{h_{w,u}}{1-\left(1-\frac{h_{w,u}}{h_c}\right) exp\left(-\frac{10}{3}\frac{h_{w,u}^2 \sin\phi}{h_c^3} x\right)} \qquad \text{for } 26° < \phi < 55°. \qquad (10)$$

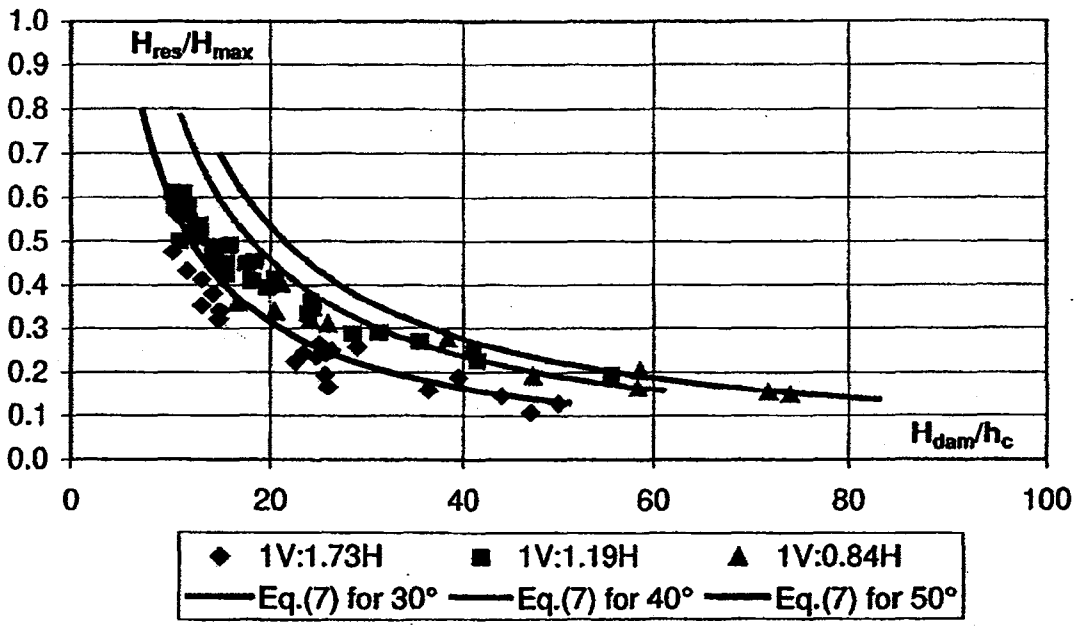

Figure 6. Relative residual energy H_{res}/H_{max} as function of relative dam height H_{dam}/h_c for different spillway slopes; approximation by Eq.(7) with $\alpha = 1.15$ and friction factors of $f_{w,u} = 0.105$ ($\phi = 30°$), 0.07 ($\phi = 40°$) and 0.075 ($\phi = 50°$).

The uniform equivalent clear water depth can be approximated by (Figure 7)

$$\frac{h_{w,u}}{s} = 0.23\,Fr.^{0.65} \qquad \text{for } 26° < \phi < 55°, \qquad (11)$$

or, in dimensional form, by

$$h_{w,u} = \frac{0.23\,q^{0.65} s^{0.03}}{g^{0.33} (\sin\phi)^{0.33}} \qquad \text{for } 26° < \phi < 55°. \qquad (12)$$

Eq.(12) suggests a small effect of the step height s on the uniform equivalent clear water depth and thus on the drawdown curve (Eq.(10)) and energy head (Eq.(9)). In fact, a slight increase of the energy dissipation with increasing step height was observed for a

given dam height even for large values H_{dam}/h_c where uniform flow is attained[23,24]. Therefore, higher steps are preferable from the energy dissipation standpoint.

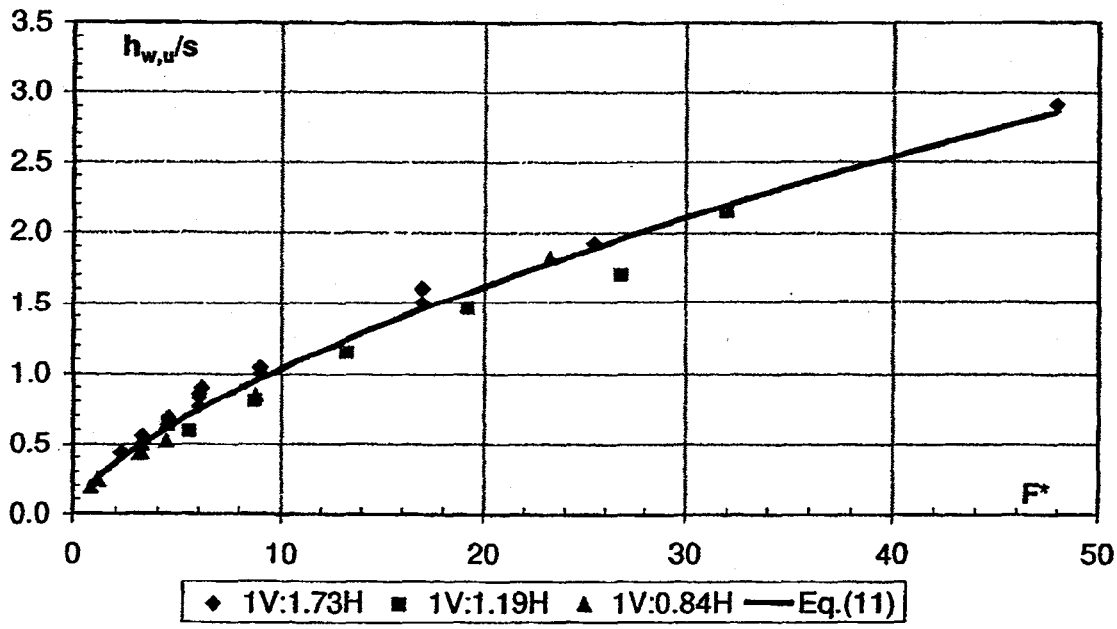

Figure 7. Relative uniform equivalent flow depth $h_{w,u}/s$ as function of the roughness Froude number Fr_* for different spillway slopes.

Selection of training wall height

The considerable aeration on stepped chutes leads to bulking of the flow which has to be taken into account in the design of spillway training walls. The characteristic mixture flow depth h_{90} with a surface air concentration of 90% serves as a guide for the design in the aerated or white water region. Starting from the inception point of air entrainment, the air-water mixture is described by a supercritical backwater curve. In non-dimensional form, the mixture flow depth can be expressed by[22]

$$\frac{h_{90}(x)}{h_{90,u}} = \tanh\left(1.1\frac{h_{90,u}^{\ 2}\sin\phi}{h_c^{\ 3}}(x-L_i)\right) \qquad \text{for } 26° < \phi < 55°, \qquad (13)$$

where L_i is calculated from Eq.(3) and $h_{90,u}$ denotes the uniform mixture flow depth that is again function of the roughness Froude number Fr_* and is found to be

$$\frac{h_{90,u}}{s} = 0.53\,Fr_*^{\,p} \qquad \text{for } 26° < \phi < 55°. \qquad (14)$$

The exponent p = 0.54 for ϕ = 30° and 40° and p = 0.59 for ϕ = 50°. The volumetric portion of the water phase is almost negligible above h_{90}, but the developing *spray* can lead to fog or icy roads in winter or have other undesirable effects as in the case of the Alicura Dam in Argentina[13].

The mixture depth h_{95} is about 12% larger than h_{90}, whereas $h_{99}/h_{90} \approx 1.4$ [5]. It is recommended to consider the erosion potential in the non-overflow section of a dam when designing training walls. The proposed design height h_d for side walls reads

$$h_d = \eta \cdot h_{90}, \tag{15}$$

with a safety factor $\eta = 1.2$ for concrete dams with no concern of erosion on the downstream face and $\eta = 1.5$ in case of emergency spillways on embankment dams prone to erosion. The safety factors take into account the increase of the spray height in the prototype due to a higher turbulence degree as compared to the model results[5].

Conclusions

Design guidelines for stepped spillways are presented based on experimental data on two-phase cascade flow. The main conclusions to be drawn are

- Large steps are preferable to small ones regarding both prevention of cavitation damage and energy dissipation capacity.
- The energy dissipation rates are smaller than suggested by most former model studies due to insufficient consideration of the flow aeration on stepped spillways.
- The required distance for the attainment of fully aerated uniform flow is increasing with the *sine* of the chute slope and can be expressed as function of the latter and the critical flow depth.
- Training walls should be designed for the mixture flow depth h_{90} together with a safety factor η depending on the erosion potential of the downstream face of the dam.

References

1 Chanson, H. (1994). Hydraulic design of stepped cascades, channels, weirs and spillways. Pergamon: Oxford, UK.

2 Vischer, D.L. & Hager, W.H. (1998). *Dam hydraulics*. Wiley: Chichester, UK.

3 Minor, H.-E. (2000). Spillways for high velocities. *Proc. Workshop Hydraulics of Stepped Spillways*, Laboratory of Hydraulics, Hydrology and Glaciology (VAW), ETH Zurich, Switzerland (H.-E. Minor & W.H. Hager, eds.). Balkema, Rotterdam, The Netherlands: 3-10.

4 Boes, R.M. & Hager, W.H. (1998). Fiber-optical experimentation in two-phase cascade flow. *Proc. Intl. RCC Dams Seminar*, Denver, USA (K. Hansen, ed.).

5 Boes, R.M. (2000). Zweiphasenströmung und Energieumsetzung auf Grosskaskaden (Two-phase flow and energy dissipation on cascades). *Doctoral Dissertation N° 13510*. ETH Zurich, Switzerland (in German).

6 Schläpfer, D. (2000). Treppenschussrinnen (Stepped Spillways). *Diploma Thesis*. Laboratory of Hydraulics, Hydrology and Glaciology (VAW), ETH Zurich, Switzerland (in German).

7 Rajaratnam, N. (1990). Skimming flow in stepped spillways. *Journal of Hydraulic Engineering* **116**(4): 587-591.

8 Stephenson, D. (1991). Energy dissipation down stepped spillways. *Intl. Water Power & Dam Construction* **43**(9): 27-30.

9 Yasuda, Y. & Ohtsu, I. (1999). Flow resistance of skimming flows in stepped channels. *Proc. 28th IAHR Congress*, Graz, Austria (H. Bergmann, R. Krainer, H. Breinhälter, eds.): CD-ROM, Theme B14.
10 Frizell, K.H. & Mefford, B.W. (1991). Designing spillways to prevent cavitation damage. *Concrete International* **13**(5): 58-64.
11 Mateos Iguácel, C. & Elviro García, V. (1992). The use of stepped spillways in energy dissipation. *Intl. Symposium on Dams and Extreme Floods*, ICOLD, Granada, Spain: 241-250.
12 Peterka, A.J. (1953). The effect of entrained air on cavitation pitting. *Joint Meeting Paper*, IAHR/ASCE, Minneapolis, USA: 507-518.
13 Minor, H.-E. (1987). Erfahrungen mit Schußrinnenbelüftung (Experience with chute aeration). *Wasserwirtschaft* **77**(6): 292-295 (in German).
14 Boes, R.M. (2000). Scale effects in modelling two-phase stepped spillway flow. *Proc. Workshop Hydraulics of Stepped Spillways,* Laboratory of Hydraulics, Hydrology and Glaciology (VAW), ETH Zurich, Switzerland (H.-E. Minor & W.H. Hager, eds.). Balkema, Rotterdam, The Netherlands: 53-60.
15 Christodoulou, G.C. (1999). Design of stepped spillways for optimal energy dissipation. *Hydropower & Dams* **6**(5): 90-93.
16 Sánchez Juny, M., Pomares, J. & Dolz, J. (2000). Pressure field in skimming flow over a stepped spillway. *Proc. Workshop Hydraulics of Stepped Spillways,* Laboratory of Hydraulics, Hydrology and Glaciology (VAW), ETH Zurich, Switzerland (H.-E. Minor & W.H. Hager, eds.). Balkema, Rotterdam, The Netherlands: 137-145.
17 Yildiz, D. & Kas, I. (1998). Hydraulic performance of stepped chute spillways. *Hydropower & Dams* **5**(4): 64-70.
18 Matos, J. & Quintela, A. (1995). Guidelines for the hydraulic design of stepped spillways for concrete dams. *ICOLD Energy Dissipation Bulletin.*
19 Chanson, H. (1994). Comparison of energy dissipation between nappe and skimming flow regimes on stepped chutes. *Journal of Hydraulic Research* **32**(2): 213-218.
20 Matos, J. (1999). Private communication.
21 Matos, J. (1990). O arejamento como medida de protecção contra a erasão de cavitação em obras hidráulicas (On aeration as a protection method against cavitation erosion of hydraulic structures). *MSc Thesis*, Technical University of Lisbon, Portugal.
22 Hager, W.H. & Boes, R.M. (2000). Backwater and drawdown curves in stepped spillway flows. *Proc. Workshop Hydraulics of Stepped Spillways,* Laboratory of Hydraulics, Hydrology and Glaciology (VAW), ETH Zurich, Switzerland (H.-E. Minor & W.H. Hager, eds.). Balkema, Rotterdam, The Netherlands: 129-136.
23 Boes, R.M & Minor, H.-E. (2000). Guidelines for the hydraulic design of stepped spillways. *Proc. Workshop Hydraulics of Stepped Spillways,* Laboratory of Hydraulics, Hydrology and Glaciology (VAW), ETH Zurich, Switzerland (H.-E. Minor & W.H. Hager, eds.). Balkema, Rotterdam, The Netherlands: 163-170.
24 Boes, R. (1999). Physical model study on two-phase cascade flow. *Proc. JFK Student Paper Competition, 28th IAHR Congress*, Graz, Austria (H. Bergmann, R. Krainer, H. Breinhälter, eds.): CD-ROM, S1.1.

Ref #3

ENGINEERING
HANDBOOK

chute spillways

section
14

U. S. DEPARTMENT OF AGRICULTURE
SOIL CONSERVATION SERVICE

PREFACE

SECTION 14

CHUTE SPILLWAYS

The aim of this handbook is to present in brief and usable form information on the application of engineering principles to the problems of soil and water conservation. While this information will be sufficient for the solution of most problems, other sources of reference material should be used when applicable.

The scope of the handbook necessarily is limited to phases of engineering which pertain directly to the program of the Soil Conservation Service. Therefore, emphasis is given to problems involving the use, conservation, and disposal of water, and the design and use of structures most commonly used for water control. Typical problems in soil and water conservation are described, basic considerations are set forth, and step-by-step procedures are outlined to enable the engineer to understand a recommended solution. These solutions will help in training engineers and will promote nation-wide uniformity in procedures. Since some phases of the field of conservation engineering are relatively new, further experience may result in improved methods which will require revision of the handbook from time to time.

This section of the Engineering Handbook has been written by Paul D. Doubt, civil engineer. Richard M. Matthews and other members of the Design Section staff have helped materially with the calculations and in the preparation of charts and examples. This work was done under the general direction of M. M. Culp, Head, Design Section. A preliminary draft was submitted to field engineers and others for review. Their suggestions led to improvements in the text and are sincerely appreciated.

Many sources of information have been utilized in developing the material. Original contributions are acknowledged in the text.

PREFACE

REVISION OF OCTOBER 1977

This revision removes the references to concrete volumes which appeared in the original handbook. Concrete volumes for the elements of chute spillways may be obtained by using currently approved computer programs.

CONTENTS

SECTION 14

CHUTE SPILLWAYS

Subject	Page
1. Introduction	
Definitions	1.1
Component Parts	1.1
Material	1.1
Purposes	1.3
Hydrology	1.3
Capacity-Cost Relationship	1.3
Design Discharge	1.3
2. Hydraulic Design	
Functions of Inlets	2.1
Standing Waves	2.1
General Criteria to Accomplish Functions of Inlets	2.2
Head Over the Crest of an Inlet	2.6
Freeboard of an Inlet	2.6
Recommended No-Wave Freeboard	2.7
Recommended Wave Freeboard for Inlets	2.7
Capacities with and without Freeboard	2.7
Symbols	2.8
Straight Inlets	2.10
Design Criteria of Straight Inlet	2.10
Discharge-Head Relationship for a Straight Inlet	2.10
Capacity of a Straight Inlet	2.11
Box Inlets	2.19
Classification of Variations of Box Inlet	2.19
Design Criteria of Box Inlet	2.20
Free-Flow Conditions	2.21
Submerged-Flow Conditions	2.21
Capacities	2.22
Head-Discharge Relationship for Box Inlet with Narrow Approach Channel	2.25
Box Inlet with Dike Effect	2.26
Determination of the Value Q_λ	2.27
Determination of the Value B	2.28
Side-Channel Inlet	2.111
Capacities	2.112
Vertical Curve Section	
Function of Vertical Curve Section	2.117
Vertical Curve Used to Change a Channel Bottom of Zero Slope to a Slope s_v	2.117
Slope s_v of Bottom of Vertical Curve Section Connecting the Upper and Lower Vertical Curves	2.118
Vertical Curve used to change a Channel Bottom of Slope s_v to Slope s_o	2.120

Subject	Page
Replacement of Vertical Curves by Straight Chords	2.120
Freeboard	2.120
Capacity	2.121
Channels	
Function of Channels	2.139
Freeboard	2.139
Air Entrainment	2.139
Capacity	2.141
SAF Outlets	
Function of SAF Outlet	2.189
Freeboard	2.189
Hydraulic Criteria	2.189
3. Dimensions of Chute Spillway	
Introduction	3.1
First Situation--Introduction	3.2
Relationship of Hydraulic Design, Structural Design, and Economics	3.4
Relationship of Spillway Storage, Design Discharge Q_r, Vertical Drop Z, and Site Location	3.5
Outline of the Method for Determining the Dimensions of a Chute	3.6
I. The Associated Spillway is Insignificant	3.7
A. Bottom Slope of Spillway is Known	3.7
1. Chute spillways having associated appurtenance costs which are not significantly dependent on the dimensions of the chute	3.7
2. Chute spillways having associated appurtenance costs which are dependent on the dimensions of the chute	3.8
B. Bottom Slope of Spillway is Unknown	3.9
1. Chute spillways having associated appurtenance costs which are dependent on the dimensions of the chute	3.9
II. The Associated Spillway Storage is Significant	3.10
A. Bottom Slope of the Spillway is Known	3.10
1. Chute spillways having associated appurtenance costs which are not dependent on the dimensions of the chute	3.10
2. Chute spillways having associated appurtenance costs which are dependent on the dimensions of the chute	3.10
B. Bottom Slope of Spillway is Unknown	3.11
1. Chute spillways having associated appurtenance costs which are dependent on the dimensions of the chute	3.11
Types of Inlets for other Functions or when the Wave Freeboard is Sufficiently Large	3.11

ENGINEERING STANDARD DRAWINGS

SECTION 14

CHUTE SPILLWAYS

Title	Drawing No.	Page
Hydraulic Design Criteria and Charts for SAF Stilling Basin	ES-73	2.193
Water-Surface Profiles, Accelerated Supercritical Flow	ES-78	2.143
Straight Inlets	ES-82	2.13
Channels	ES-84	2.185
Side Channel Inlets	ES-85	2.113
SAF Outlets	ES-86	2.197
Vertical Curve Sections	ES-88	2.123
Flat-Rectangular Weir Box Inlet	ES-90	2.31
Rounded-Rectangular Weir Box Inlet	ES-91	2.55
Flat-Trapezoidal Weir Box Inlet	ES-92	2.79
Rounded-Trapezoidal Weir Box Inlet	ES-93	2.95
Water-Surface Profiles, Accelerated Supercritical Flow	ES-147	2.178

SECTION 14

CHUTE SPILLWAYS

1. INTRODUCTION

Definitions. Chute spillways are defined as open channels with steep slopes, in which flow has supercritical velocities. They usually consist of an inlet, vertical curve section, channel, and outlet. The major part of the drop in water surface takes place in a channel. Flow passes through the inlet and down a paved, steeply sloped channel to the floor of the outlet. (See ES-78, page 2.143.) Various designs and proportions are in use. Further research and systematic evaluations of experience with existing structures will lead to continued improvement in design and proportions. However, confidence can be placed in the design principles contained herein, for they are conservative when available information does not permit them to be stated precisely.

The word "chute" will be used to mean chute spillway.

Component Parts. As mentioned before, a chute is generally composed of four component parts, namely:

a. Inlet
b. Vertical curve section
c. Paved, steeply sloped channel
d. Outlet

In most instances, these component parts are structurally independent. Five types of inlets are in common use, three of which are treated in this section. The five types are:

a. Straight inlet (See ES-82, page 2.13.)
b. Box inlet (See ES-90, ES-91, ES-92, and ES-93, pages 2.31, 2.55, 2.79, and 2.95.)
c. Side-channel inlet (See ES-85, page 2.113.)
d. Culvert inlet (See Fig. 1a, page 1.2.)
e. Drop inlet or box-culvert inlet (See Fig. 1b, page 1.2.)

Culverts and drop inlets will be considered in the Engineering Handbook sections on Culverts and Drop Inlets. Figures 1a and 1b are schematic drawings. No inference concerning the proper proportioning of such inlets is to be made from these drawings.

Material. Reinforced concrete is by far the most widely used material for chute construction, and has proved to be satisfactory from the standpoints of long life and low construction and maintenance costs. This section considers only chutes constructed of reinforced concrete.

Purposes. Chutes are used for the following purposes:

a. To control the gradient in either natural or constructed channels.
b. To serve as reservoir spillways for flood-control and water-conservation structures, and sediment-collecting structures.

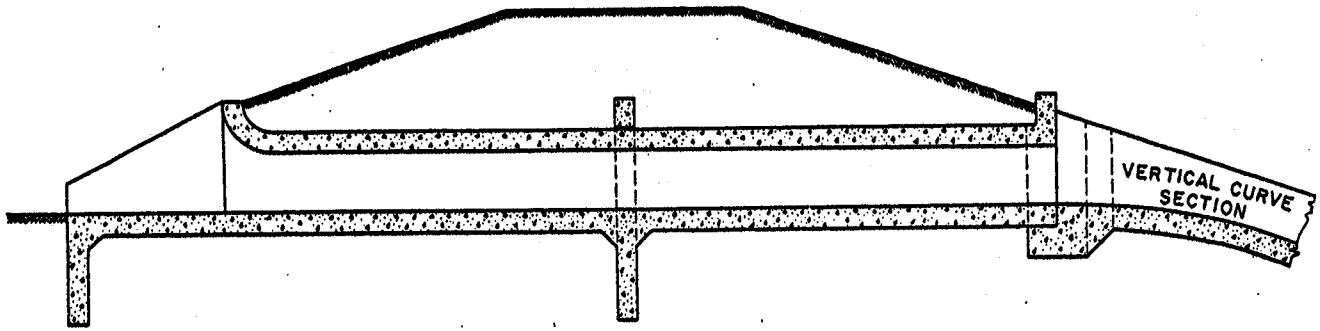

FIGURE-1a
CULVERT INLET
(NON-PRESSURE FLOW)
SECTION ALONG CENTER-LINE

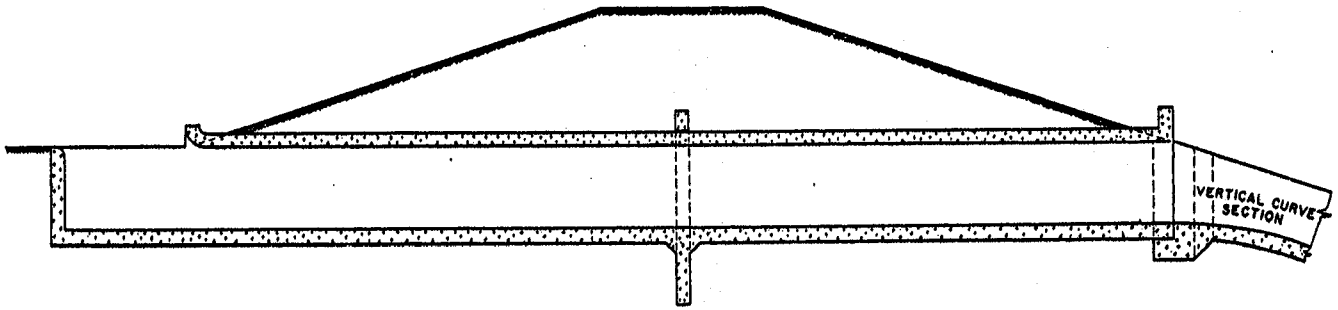

FIGURE-1b
BOX-CULVERT INLET
(NON-PRESSURE FLOW)
SECTION ALONG CENTER-LINE

Methods of determining discharges and hydrographs from watersheds are discussed in the Engineering Handbook, Section 4, Hydrology. Determination of the rate of runoff or the hydrograph of runoff into the reservoir associated with the chute should be related to:

a. Expected life of the structure, which depends on the quality and type of material used.

b. Type and amount of damage that would result from various runoff rates through the chute that are greater than its capacity.

c. Probability or frequency of partial or complete failure as a result of the lack of spillway capacity.

The capacity-cost relationship of a chute is such that increasing the capacity of a chute causes a smaller rate of increase in the cost for concrete. Thus, insurance against failure because of a lack of capacity can be obtained for a relatively small increase in the total cost of the structure. The initial cost of a chute is usually much lower than the cost of replacing a chute that has failed completely.

The discharge the spillway is expected to convey is determined from hydrologic data and possibly reservoir routing and economic considerations. This discharge Q_r is the design discharge. Throughout the Chute Spillway Section, Q_r will be the symbol used to designate design discharge and the symbol q_r will be used to designate the design discharge per foot width of chute. When routing is considered, the design discharge is dependent in part on the relationship of the discharge head over the crest of the spillway itself. See Engineering Handbook, Section 5, Hydraulics, for methods of routing floods through reservoirs.

2. HYDRAULIC DESIGN

The hydraulic design of any structure is based on the purposes or objectives it is to accomplish. The purposes for which chutes are used have been listed. The explicit objective of chutes is to convey all discharges equal to or less than a given design discharge Q_r from one elevation to a lower elevation in a manner which will not cause erosion between the two elevations. To accomplish this objective, the various component parts of the chute need to be properly proportioned to perform certain functions. These functions and the hydraulic design of the components are considered in this part. Sometimes chutes are designed to fulfill additional objectives besides the one explicitly stated above.

Functions of Inlets. The inlet of a chute has several functions. They are:

a. Convey and guide all discharges equal to or less than a given design discharge to the vertical-curve section or steep, paved channel in a manner that will not cause any appreciable waves in the steep channel of the chute.

b. Provide a positive cutoff of flow by piping under and around the chute channel.

c. Permit all discharges equal to or less than a given design discharge to pass safely through the inlet between the spillway crest and top of the sidewalls.

Further explanatory remarks are made concerning these functions before the hydraulic design of the three types of inlets are considered.

Standing Waves. Flow of water through the inlet to the steep, vertical-curve section passes from subcritical to supercritical. (See Engineering Handbook, Section 5, Hydraulics.) A phenomenon known as "standing waves" can occur when flow is supercritical. The standing waves can attain heights several times the average depth of flow and persist downstream, sometimes almost undiminished in height, through the length of the steep channel. Standing waves can occur when any one of the following conditions exists in the steep channel:

a. The walls of the steep channel are not parallel; i.e., the walls converge or diverge.

b. The walls of the steep channel are not straight; i.e., the chute is curved in a longitudinal direction.

c. The sidewalls of the steep channel are not vertical; i.e., the sidewall has a side slope.

d. The bottom of the steep channel is not level in a direction perpendicular to the axis of the channel; i.e., the channel bottom has a cross slope.

e. The direction of flow in the steep channel is not parallel to the sidewalls.

f. The flow has an appreciably unequal distribution of velocities (or energy) in a channel cross section.

g. The flow has an appreciably unequal distribution of discharge in a channel cross section.

h. An irregularity or obstruction exists in the channel.

An example of a standing wave is shown by several photographs. Figure 2 shows a plan view of a reinforced concrete spillway and the approximate directions in which subsequent photographs were taken. Observe that the spillway crest is level and is a segment of a circular arc. All flow downstream from the crest is supercritical. Figure 2a shows the flow of water over the crest. The head on the crest is approximately 3.5 ft and the discharge over the crest is approximately 4000 cfs. The direction of flow at the crest is variable and at any point is in the direction toward the center of curvature of the crest. Figure 2b shows a standing wave reflected diagonally from the far wall. Observe that no flow occurs on a small area along the near wall. Every condition except conditions (c) and (h), page 2.1, contributes to the development of this standing wave. The channel walls immediately below the spillway crest are neither parallel nor straight. The channel bottom immediately below the crest is a warped surface. Flow over the crest is not in a direction parallel to the sidewalls. The discharge per foot length over the crest is uniform, but is not presented to the steep channel uniformly; thus, unequal distribution of velocities and discharge are present in the channel. Figure 2c shows the poor flow conditions through the channel and overtopping of the left wall by a discharge which is less than 30 percent of the design discharge.

A sharp corner in the sidewall or irregularity or obstruction in the channel where supercritical flow exists will have no effect on flow upstream from any such obstruction as long as the obstruction does not induce subcritical flow. The effect of any such obstruction in supercritical flow is to cause a standing wave to occur diagonally from the obstruction downstream to the sidewall. This standing wave will then be reflected diagonally downstream again and again from the sidewalls. These statements are made on the assumption that no other obstructions are placed to "cancel out" the standing wave. It is not to be implied that steep channels having curvature in their alignment or having a cross slope in their bottoms cannot be designed to function properly. In general, the design of such channels should be checked by hydraulic model studies.

General Criteria to Accomplish Functions of Inlets. The first listed function of the inlet can be accomplished if the inlet conveys the water so that velocity and discharge distribution are uniform at the entrance to the vertical curve, and the direction of flow is parallel to the axis of the chute. Uniform velocity and discharge distribution at the entrance of the vertical curve section require that both the water surface and floor at this section be level transversely. Uniform discharge distribution requires that this section be rectangular. The transverse water-surface profile can be made level by one of the following methods:

a. Providing sufficient length of a level prismatic channel upstream from this section. (See ES-82, page 2.13, for example.)

b. Providing a level cross weir of sufficient height at this section. (See ES-85, page 2.113, for example.)

Flow by piping can be prevented by construction of an adequate anti-seep collar.

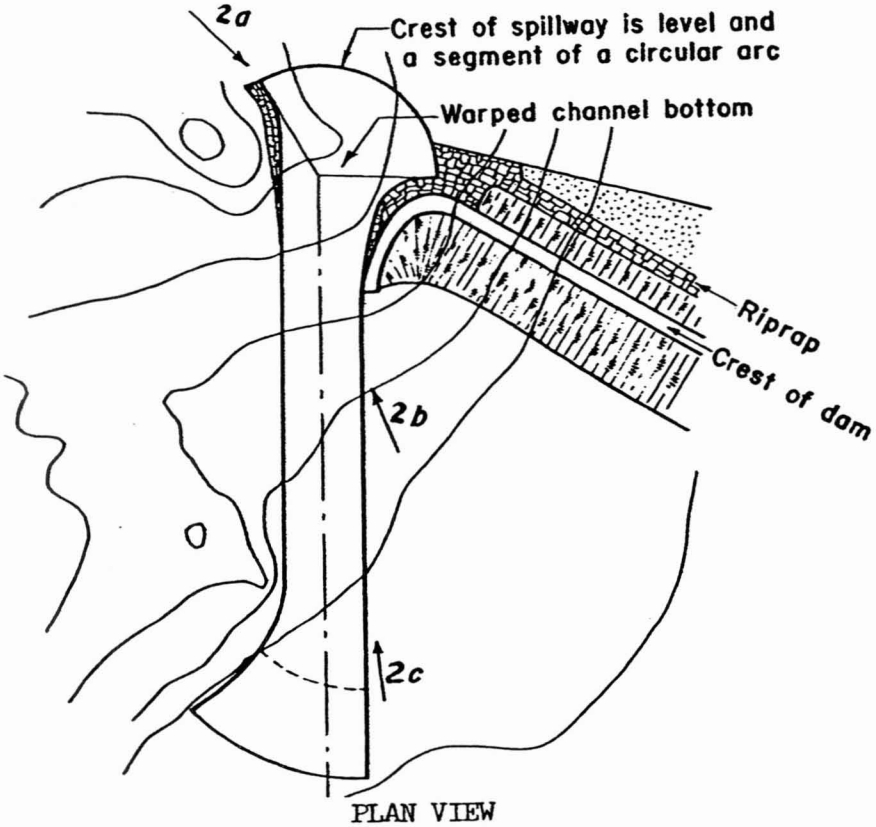

PLAN VIEW

Arrows indicate directions photographs were taken.

FIGURE 2

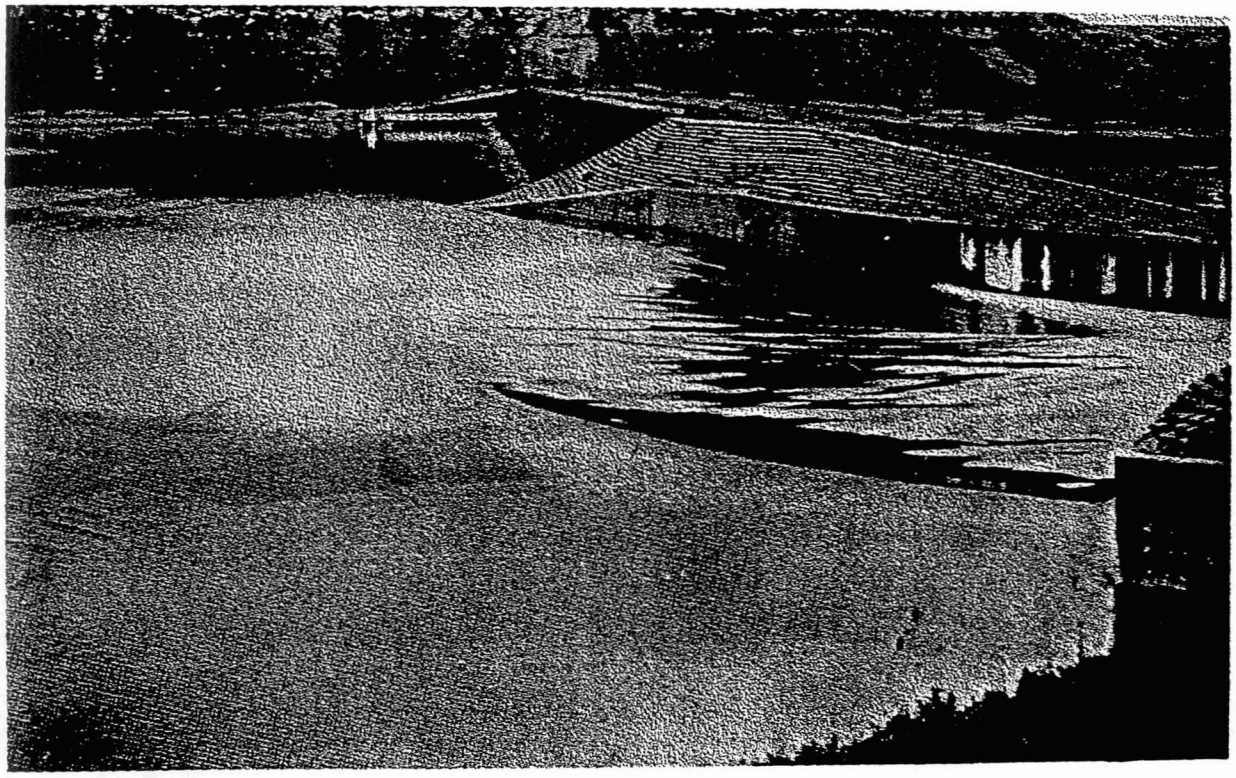

FIGURE 2a

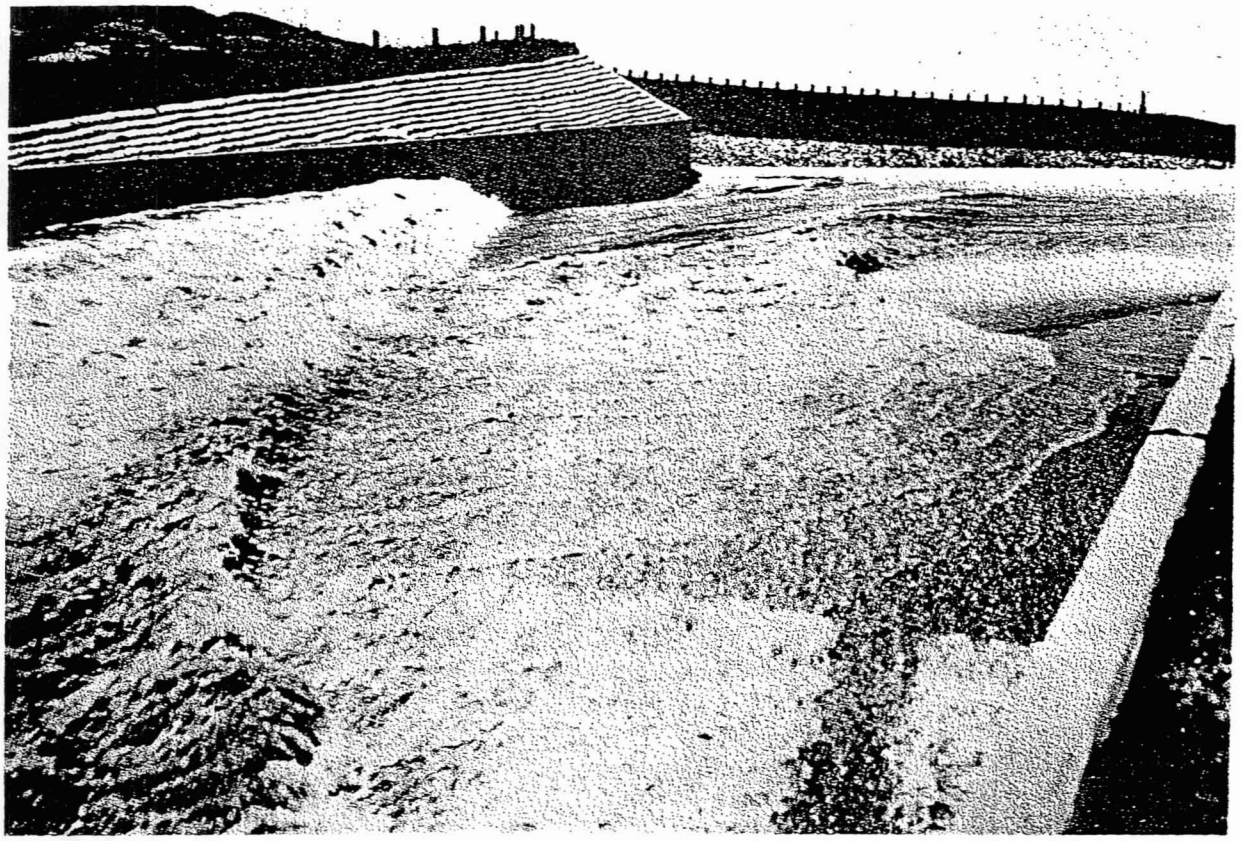

FIGURE 2b

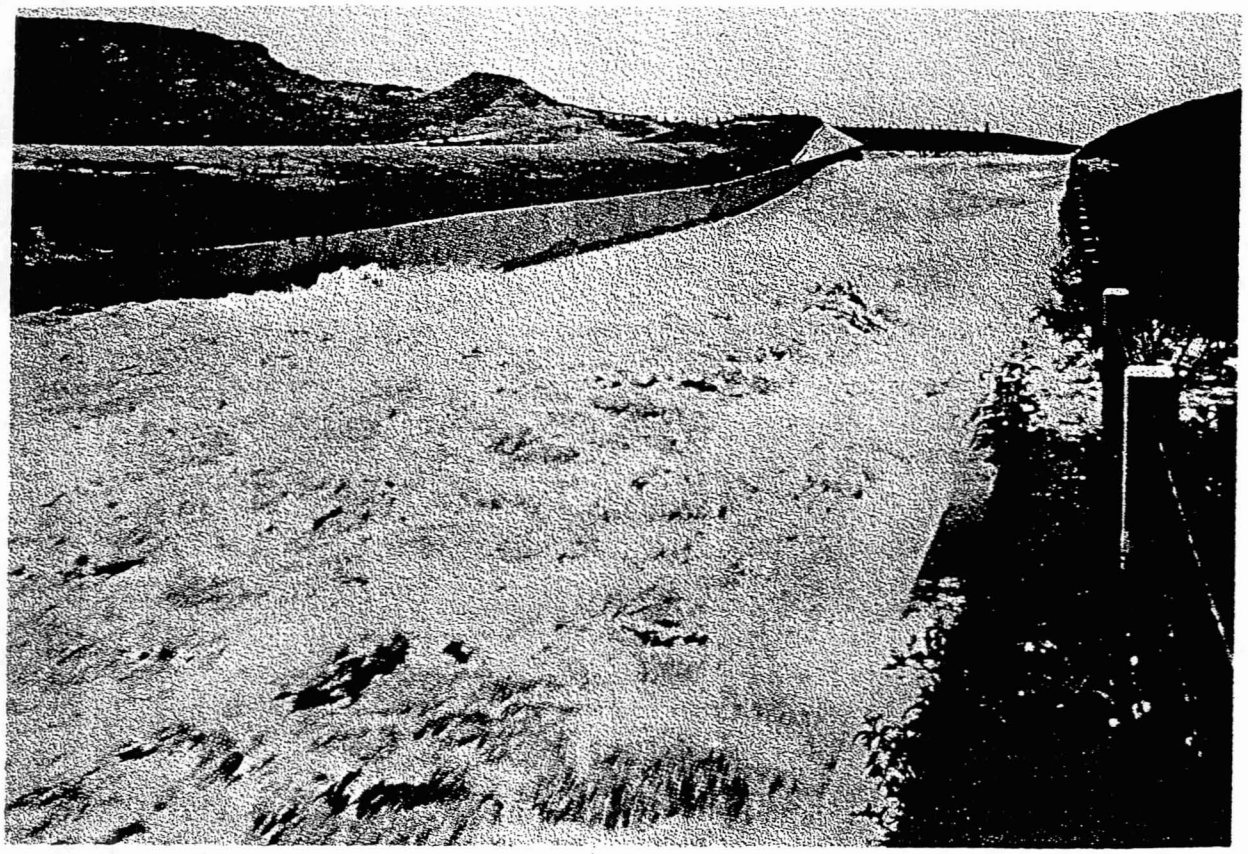

FIGURE 2c

All the factors presented by the third function are not recognized by some engineers. Ignoring that the distance between the elevation of the spillway crest and a maximum water-surface elevation at the inlet is a determinable quantity can lead to appreciably higher structural costs by improper choice of inlet type or chute dimensions. Selection of the type of inlet is not an arbitrary choice nor is the width of the chute. The type of inlet is determined on the factual basis of:

a. Functional uses
b. Physical conditions of a site
c. Economy

A detailed explanation of methods to determine the type of inlet and its dimensions is given in part 3. A few limited explanatory remarks in the form of examples suggesting some of the elements which are involved in this determination will be made here.

Some inlets are designed for additional functional uses. For example, a culvert inlet is used to provide a crossing for vehicles, equipment, pedestrians, or livestock. As will be seen later, culvert inlets may be used for other reasons.

An illustration of how the physical conditions of a site determines the type of inlet follows. A site may require that the head over the crest be restricted to prevent inundation of certain areas or objects. (See page 2.6 for definition of head over the crest.) Whenever the head over the crest is reduced, the length of the inlet crest must be increased to prevent lowering the capacity of the inlet. A physical condition which requires that the head over the crest be small may determine the type of inlet and its dimensions. A physical condition of this type might dictate that a box inlet be used.

In another example, a site which requires that the spillway be placed adjacent to or in a steep bank might dictate the use of a side-channel spillway.

An example in which economics might dictate that a box inlet be used follows. Frequently a chute is associated with a high or long embankment. The amount of head required over the crest of the inlet for a given design discharge has an important influence on the cost of the associated embankment. The amount of head over the crest of the inlet can always be decreased without decreasing the inlet capacity by increasing the length of the crest. When the head over the crest is decreased, the height of the embankment can be decreased by the same amount. If the associated embankment yardage is of considerable height or length, a large decrease in embankment yardage is made by choosing a smaller head over the crest. The saving in cost of embankment yardage may be greater by this choice than the cost of additional concrete yardage required for a chute with a box inlet.

One other example will be given which involves the use of a box-culvert inlet. Spillways of reservoirs having large surface areas must be designed with wave freeboards. When this freeboard becomes large, it might be more economical to build a box-culvert inlet instead of a box inlet or a straight-culvert inlet.

All chutes should be designed with the proper type of inlet and a set of dimensions in accordance with the basic facts presented by the particular site. These basic facts are a matter for field determination.

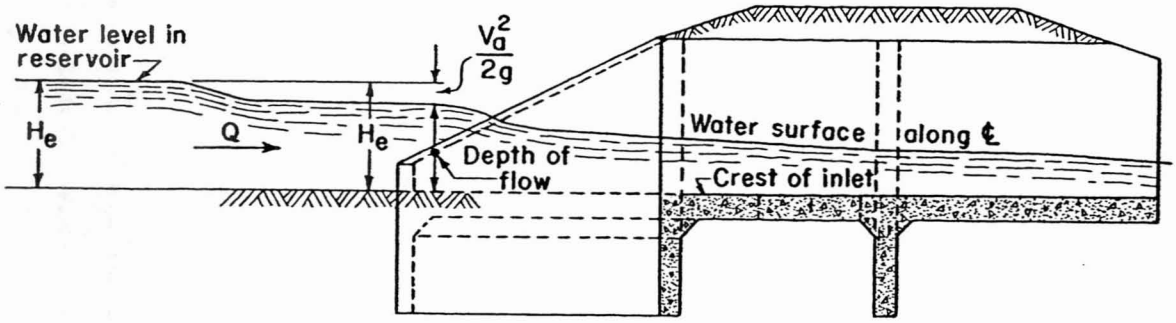

FIGURE 3

Head over the crest of an inlet is the sum of the depth of water above the crest and the velocity head at the section near the entrance of the inlet at which the head over the crest H_e is measured. (See Fig. 3.) This head is the specific energy head referenced to the crest and is measured in feet. Spillways for reservoirs have a head over the crest H_e equal to the difference in elevation of the water surface in the reservoir near the entrance of the inlet and the elevation of the crest if friction losses between the reservoir and inlet entrance are negligible. The head over the crest corresponding to the design discharge Q_r (see part 1) is the design head over the crest h_r.

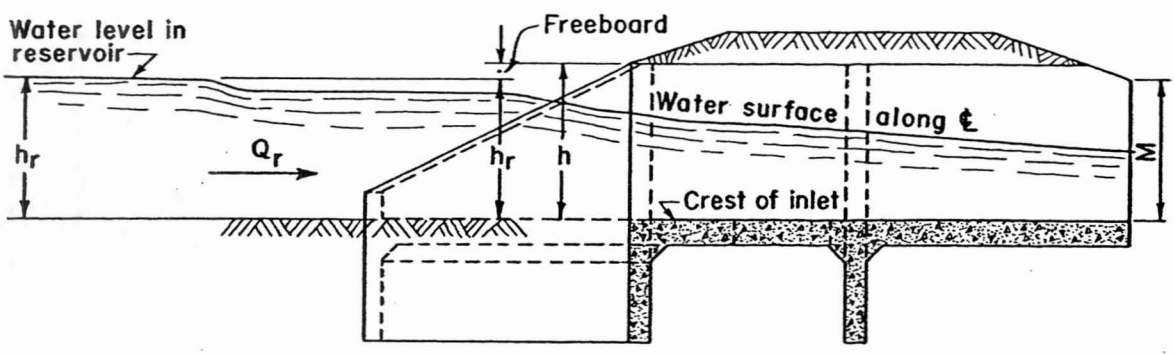

FIGURE 4

Freeboard of an inlet is the difference in the sidewall height h above the crest and the design head h_r over the crest of the inlet. (See Fig. 4.) It is measured in feet and is a safety factor to prevent overtopping of the inlet. The overtopping could be a result of one or more causes. Among the causes are wave action, inability to predict closely the capacity of the inlet, decreased capacity of the inlet due to some unpredicted condition (see definition of capacity, page 2.7), and a larger discharge requirement than the design discharge Q_r due to inability to predict runoff with precision.

Since it is possible to estimate wave heights by Stephenson's equation or a modification of that equation, the freeboard requirement for wave action will be considered separately from freeboard requirement for other causes.

These other causes are common to all structures. The freeboard requirement of structures in which wave action is anticipated will be the sum of the freeboard requirement for wave actions and the freeboard requirements for the other causes. Freeboard requirement for these other causes is known as no-wave freeboard.

Recommended No-wave Freeboard. Where no wave action is anticipated, it is convenient to express freeboard in terms of design discharge. It is logical that the freeboard should be dependent on the design discharge Q_r and the vertical drop Z from the crest of the inlet to the floor of the outlet. The recommended freeboard f_r for inlets having no wave action expressed in units of discharge is

$$f_r = (0.20 + 0.003\ Z)\ Q_r = Q_{mi} - Q_{si} \qquad 2.1$$

where Q_r = design discharge in cfs
Z = vertical drop from the crest of the inlet to the floor of the outlet in ft
f_r = recommended freeboard expressed as a discharge in cfs

The choice of this safety factor, or freeboard, is somewhat an arbitrary quantity and for this reason, as well as convenience, capacities of various component parts of the chute will be given without freeboard.

Recommended Wave Freeboard for Inlets. For inlets in which wave heights are approximated, an additional freeboard is required. The wave heights may be approximated by one of the four formulas, 3.8, 3.9, 3.10, or 3.11, page 3.8, Engineering Handbook, Section 11, Drop Spillways. The recommended total freeboard for inlets of chutes is the sum of the approximated wave heights and the freeboard recommended for inlets in which no wave action is anticipated.

Capacities With and Without Freeboard. (See next section, Symbols.) The distinction in the meanings of the words "design discharge," "capacity," and "required capacity" is important. The design discharge Q_r is the discharge that the inlet (or chute) is required to convey and is determined by hydrological and reservoir-routing considerations. The capacity Q_{si} of the inlet is the discharge that the inlet is capable of conveying with the recommended freeboard (see page 2.11) and is determined in part by the dimensions of the inlet. This capacity will be used infrequently in this Chute Spillway Section of the Handbook. The capacity without freeboard Q_{mi} of the inlet is the discharge that the inlet is capable of conveying without freeboard. It is greater than the capacity Q_{si} and is determined solely by the dimensions of the inlet. The difference in the capacity Q_{si} of the inlet with the recommended freeboard and the capacity without freeboard Q_{mi} is the recommended freeboard of the inlet expressed in discharge cfs instead of feet. The required capacity without freeboard Q_{fr} is the design discharge Q_r increased by the recommended freeboard expressed as a discharge. The required capacity without freeboard becomes

$$Q_{fr} = Q_r + f_r$$

or by Eq. 2.1

$$Q_{fr} = (1.20 + 0.003\ Z)\ Q_r \qquad 2.2$$

where Q_{fr} = required capacity without freeboard in cfs
Q_r = design discharge in cfs
Z = vertical distance from crest of inlet to floor of outlet in ft

The chute spillway is designed to have a capacity without freeboard as great as the required capacity without freeboard Q_{fr}; thus, the capacity without freeboard Q_{mi}, $Q_{m\nu}$, Q_{mc}, and Q_{mo} of the various component parts will all be at least as large as Q_{fr}. This gives each component part approximately the same factor of safety. The capacity without freeboard usually will be slightly larger than the required capacity, because only component parts of even dimensions are considered. A component part of a given size or set of dimensions will have associated with it a maximum discharge which it is capable of conveying without freeboard. This maximum discharge is the capacity without freeboard Q_m of that component part which is equal to or slightly greater than the required capacity without freeboard Q_{fr}, because the next smaller component part has a capacity without freeboard less than Q_{fr}.

Symbols. The symbol Q with subscripts is being used for both discharge and capacity. For instance, the symbol Q with the subscript m is used to designate the capacity of the chute without freeboard Q_m. The capacity of the chute without freeboard is dependent upon the size of the chute or on the various dimensions of the chute. The subscript i is added to the subscript m to designate the capacity of the inlet without freeboard Q_{mi}. Likewise, the subscript ν is added to denote the vertical curve section, the subscript c to designate the channel, and the subscript o is added to m to signify the outlet. For example, Q_{mi}, $Q_{m\nu}$, Q_{mc}, Q_{mo}, and Q_m are respectively the capacity without freeboard of the inlet, the vertical curve section, the channel, the outlet, and the chute as a whole. The capacity without freeboard of the chute as a whole Q_m is equal to the smallest of the values Q_{mi}, $Q_{m\nu}$, Q_{mc}, and Q_{mo}.

The symbol Q_s designates the capacity of the chute with the recommended freeboard. The value of Q_s is dependent on the dimensions of the chute and the recommended freeboard. The subscripts i, ν, c, and o will have the same meaning as before and Q_{si}, $Q_{s\nu}$, Q_{sc}, Q_{so}, and Q_s are respectively the capacity with the recommended freeboard of the inlet, vertical curve section, channel, outlet, and the chute as a whole. The capacity with the recommended freeboard of the chute Q_s is equal to the smallest of the values Q_{si}, $Q_{s\nu}$, Q_{sc}, and Q_{so}. Observe that an inlet with given dimensions will have a definite capacity without freeboard regardless of the recommended freeboard. The capacity of this inlet with the recommended freeboard is dependent not only on the dimensions of the inlet but also on the recommended freeboard.

The dimensions of the straight inlet, namely h, M, and W will be used to determine the capacity without freeboard of the inlet Q_{mi}. The dimensions M, N, $\mathcal{Z}$, and W will be used to determine the capacity without freeboard of the vertical curve section. The dimensions N and W are used for determining Q_{mc}; J, L_B, Z, and W are used to determine Q_{mo} These determinations will be given where the discussions of the various component parts are made. Since the width of the chute W is used in determining the capacity

without freeboard for each of the component parts, the symbol q will be used to denote the discharge per foot width. Likewise, the symbols q_{mi}, q_{mv}, q_{mc}, q_{mo}, and q_m are used to designate respectively the capacity without freeboard per foot width of the inlet, vertical curve section, channel, outlet, and the chute as a whole.

The discharge Q through a chute can be any quantity ranging in value from zero to the capacity without freeboard Q_m. If Q is greater than Q_m, then the chute is overtopped and the discharge relationships given for component parts are not applicable.

The design discharge Q_r is that discharge the chute and each of its component parts is required to convey with the recommended freeboard. The required capacity without freeboard Q_{fr} of the chute and each of its component parts is obtained by use of Q_r in Eq. 2.1. Thus the capacity without freeboard of each of the component parts Q_{mi}, Q_{mv}, Q_{mc}, and Q_{mo} will be equal to or slightly larger than the required capacity without freeboard Q_{fr} because only even dimensioned component parts are considered in evaluating Q_{mi}, Q_{mv}, Q_{mc}, and Q_{mo}.

The definition of the few additional symbols will be considered at their first appearance.

CHUTE SPILLWAYS: SAF OUTLETS
The General Layout Drawing

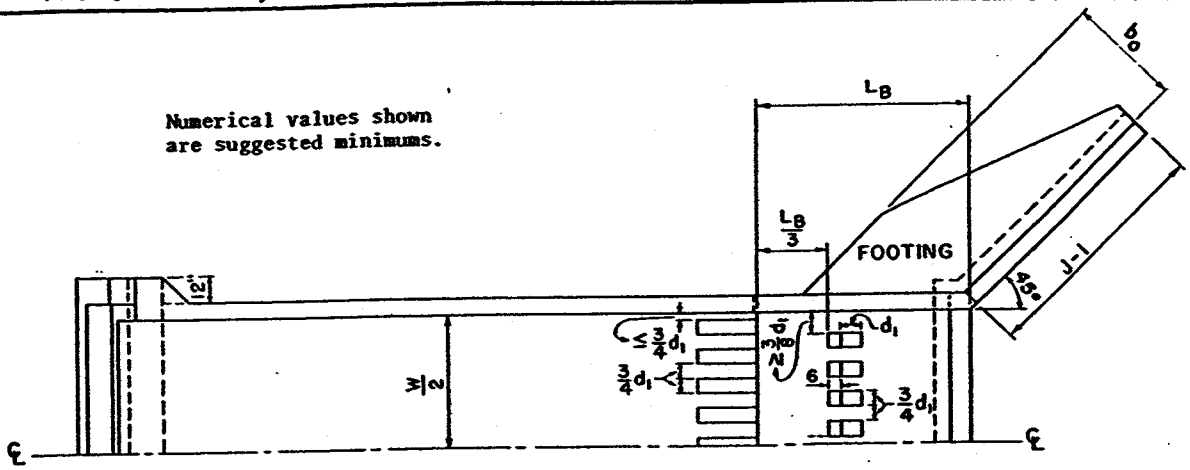

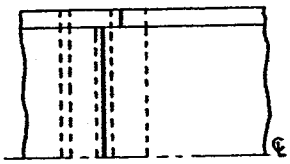

ALTERNATE JOINT DETAIL

HALF-PLAN

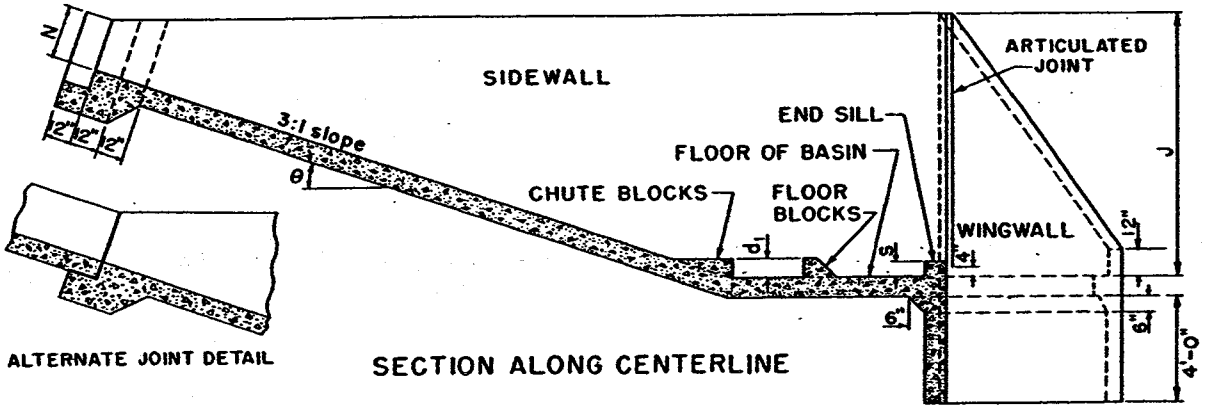

ALTERNATE JOINT DETAIL

SECTION ALONG CENTERLINE

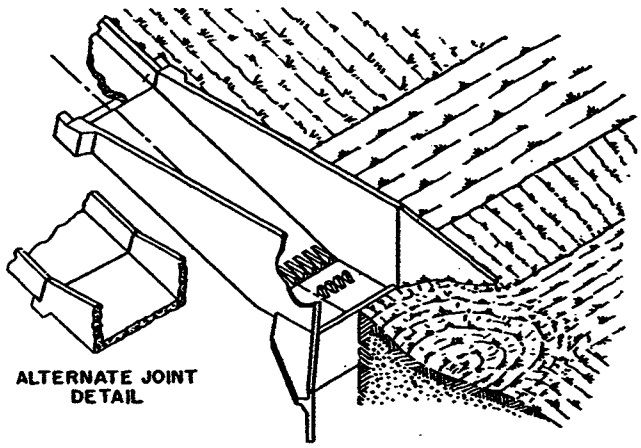

ALTERNATE JOINT DETAIL

ISOMETRIC VIEW

NOTE—

Hydraulic Criteria and Formulas are given by ES-73, or by sheets 2, 6, and 7 of this drawing.

Capacities for this structure are given on sheets 2 through 7 of this drawing.

The backfill will be limited to one of the following heights, whichever is least:

1. Top of sidewall and wingwall.
2. $\frac{2}{3}d_2'$ above the floor of the basin.
3. 5 feet above the floor of the basin.

REFERENCE:	U. S. DEPARTMENT OF AGRICULTURE SOIL CONSERVATION SERVICE ENGINEERING DIVISION- DESIGN SECTION	STANDARD DWG. NO. ES-86 SHEET 1 OF 8 SHEETS DATE 3-30-54
Revised: 11-1-54		

Revised 10/77

CHUTE SPILLWAYS: SAF OUTLETS;

Definition of symbols and Formulas

DEFINITION OF SYMBOLS

F_1 = Froude's number $\equiv \frac{v_1^2}{gd_1}$ at entrance of SAF basin (dimensionless number)
J = Height of sidewalls of SAF above floor in ft
L_B = Length of SAF basin (including end sill) in ft
d_1 = Height of floor and chute blocks above floor of SAF basin in ft
d_1 = Entrance depth of water without air to SAF basin in ft
s = Height of transverse end sill above floor of SAF basin in inches
d_2' = Required height of tailwater above floor of SAF basin in ft
d_2 = Sequent depth of flow to depth d_1 in ft
v_1 = Entrance velocity of water to SAF basin in ft/sec
W = Width of SAF outlet in ft
Q_r = Design discharge in cfs
Q_{fr} = Recommended required capacity without freeboard of SAF outlet in cfs
Q_{mo} = Capacity without freeboard of SAF outlet in cfs
Q_{so} = Capacity of SAF outlet in cfs
q_r = Design discharge per foot width in cfs/ft
q_{mo} = Capacity without freeboard of SAF outlet per foot width in cfs/ft
s_o = Slope of bottom of channel in the SAF outlet ft/ft
N = Perpendicular height of sidewalls above channel floor at upstream end of SAF outlet in ft
g = Acceleration due to gravity--32.16 ft/sec^2

DESIGN FORMULAS

$3 \leq F_1 \leq 300$

1. $F_1 = \frac{v_1^2}{gd_1}$
2. $d_2 = \frac{d_1}{2}\left(-1 + \sqrt{8F_1 + 1}\right)$
3. $d_2' = 1.4\, d_1 F_1^{0.45}$
4. $L_B = \frac{4.5\, d_2}{F_1^{0.38}}$
5. $J = \frac{d_2}{3} + d_2'$
6. $s = 0.07\, d_2$

$Q_{fr} = (1.20 + 0.003\, Z)\, Q_r$

The backfill will be limited to one of the following heights, whichever is least:

1. Top of sidewall and wing-wall.
2. $\frac{2}{3}d_2'$ above the floor of the basin.
3. 5 feet above the floor of the basin.

REFERENCE	U.S. DEPARTMENT OF AGRICULTURE SOIL CONSERVATION SERVICE ENGINEERING DIVISION - DESIGN SECTION	STANDARD DWG. NO. ES-86 SHEET 2 OF 8 DATE February 1954

Revised 10/77

CHUTE SPILLWAYS: SAF OUTLETS

Dimensions and Capacities

$S_0 = \frac{1}{3}$

J = 3.0 to 10.5

J	L_B	H	b_0	d_1	q_{mo}
3.0	3.0	2.00	2.75	0.3330	6.061
3.5	3.0	2.00	3.00	0.3100	6.913
3.5	3.5	2.00	3.00	0.3800	7.638
3.5	4.0	2.00	3.00	0.4720	8.354
4.0	3.5	2.00	3.50	0.3640	8.518
4.0	4.0	2.00	3.50	0.4410	9.305
4.5	3.5	2.00	4.00	0.3470	9.490
4.5	4.0	2.00	4.00	0.4205	10.323
5.0	3.5	2.00	4.25	0.3315	10.409
5.0	4.0	2.00	4.25	0.4015	11.322
5.0	4.5	2.00	4.25	0.4750	12.160
5.0	5.0	2.00	4.25	0.5550	13.043
5.5	3.5	2.00	4.25	0.3185	11.291
5.5	4.0	2.00	4.25	0.3860	12.273
5.5	4.5	2.00	4.25	0.4560	13.201
5.5	5.0	2.00	4.25	0.5300	14.098
5.5	5.5	2.00	4.25	0.6100	15.036
6.0	3.5	2.00	4.25	0.3085	12.216
6.0	4.0	2.00	4.25	0.3725	13.261
6.0	4.5	2.00	4.25	0.4400	14.256
6.0	5.0	2.00	4.25	0.5100	15.198
6.0	5.5	2.00	4.25	0.5870	16.172
6.0	6.0	2.00	4.25	0.6660	17.116
6.5	3.5	2.00	4.25	0.3000	13.155
6.5	4.0	2.00	4.25	0.3595	14.218
6.5	4.5	2.00	4.25	0.4250	15.300
6.5	5.0	2.00	4.25	0.4925	16.302
6.5	5.5	2.00	4.25	0.5650	17.317
6.5	6.0	2.00	4.25	0.6410	18.333
6.5	6.5	2.00	4.25	0.7240	19.331
6.5	7.0	2.00	4.25	0.8040	20.261
7.0	4.0	2.00	4.25	0.3490	15.120
7.0	4.5	2.00	4.25	0.4125	16.335
7.0	5.0	2.00	4.25	0.4780	17.424
7.0	5.5	2.00	4.25	0.5455	18.438
7.0	6.0	2.00	4.25	0.6200	19.530
7.0	6.5	2.00	4.25	0.6990	20.551
7.0	7.0	2.00	4.25	0.7780	21.551
7.0	7.5	2.00	4.25	0.8615	22.550
7.0	8.0	2.00	4.25	0.9480	23.558
7.5	4.0	2.00	4.25	0.3395	16.177
7.5	4.5	2.00	4.25	0.4000	17.340
7.5	5.0	2.00	4.25	0.4645	18.487
7.5	5.5	2.00	4.25	0.5290	19.626
7.5	6.0	2.00	4.25	0.6013	20.740
7.5	6.5	2.00	4.25	0.6760	21.835
7.5	7.0	2.00	4.25	0.7520	22.898
7.5	7.5	2.00	4.25	0.8350	23.965
7.5	8.0	2.00	4.25	0.9150	24.888
7.5	8.5	2.00	4.25	1.0000	25.970
7.5	8.5	2.25	4.25	1.0000	25.970
7.5	8.5	2.50	4.25	1.0000	25.970
8.0	4.5	2.00	4.25	0.3900	18.408
8.0	5.0	2.00	4.25	0.4525	19.639
8.0	5.5	2.00	4.25	0.5145	20.760
8.0	6.0	2.00	4.25	0.5850	21.967
8.0	6.5	2.00	4.25	0.6570	23.126
8.0	7.0	2.00	4.25	0.7310	24.196
8.0	7.5	2.00	4.25	0.8080	25.250
8.0	8.0	2.00	4.25	0.8850	26.285
8.0	8.5	2.00	4.25	0.9700	27.354
8.0	9.0	2.00	4.25	1.0580	28.460
8.0	9.0	2.25	4.25	1.0580	28.460
8.0	9.0	2.50	4.25	1.0580	28.460
8.0	9.5	2.25	4.25	1.1450	29.541
8.0	9.5	2.50	4.25	1.1450	29.541
8.0	9.5	2.75	4.25	1.1450	29.541
8.0	9.5	3.00	4.25	1.1450	29.541
8.5	5.0	2.00	4.25	0.4410	20.683
8.5	5.5	2.00	4.25	0.5015	21.865
8.5	6.0	2.00	4.25	0.5700	23.142
8.5	6.5	2.00	4.25	0.6390	24.346
8.5	7.0	2.00	4.25	0.7110	25.418
8.5	7.5	2.00	4.25	0.7860	26.567
8.5	8.0	2.00	4.25	0.8620	27.756
8.5	8.5	2.00	4.25	0.9400	28.856
8.5	9.0	2.00	4.25	1.0270	29.957
8.5	9.0	2.25	4.25	1.0270	29.957
8.5	9.5	2.00	4.25	1.1150	30.997
8.5	9.5	2.25	4.25	1.1150	30.997
8.5	9.5	2.50	4.25	1.1150	30.997
8.5	9.5	2.75	4.25	1.1150	30.997
8.5	10.0	2.50	4.25	1.2030	32.060
8.5	10.0	2.75	4.25	1.2030	32.060
8.5	10.0	3.00	4.25	1.2030	32.060
9.0	5.0	2.00	4.25	0.4300	21.737
9.0	5.5	2.00	4.25	0.4910	23.028
9.0	6.0	2.00	4.25	0.5570	24.369
9.0	6.5	2.00	4.25	0.6220	25.595
9.0	7.0	2.00	4.25	0.6930	26.784
9.0	7.5	2.00	4.25	0.7650	27.961
9.0	8.0	2.00	4.25	0.8410	29.099
9.0	8.5	2.00	4.25	0.9170	30.261
9.0	9.0	2.00	4.25	1.0000	31.400
9.0	9.0	2.25	4.25	1.0000	31.400
9.0	9.5	2.00	4.25	1.0840	32.520
9.0	9.5	2.25	4.25	1.0840	32.520
9.0	9.5	2.50	4.25	1.0840	32.520
9.0	10.0	2.25	4.25	1.1700	33.638
9.0	10.0	2.50	4.25	1.1700	33.638
9.0	10.0	2.75	4.25	1.1700	33.638
9.0	10.5	2.50	4.25	1.2600	34.776
9.0	10.5	2.75	4.25	1.2600	34.776
9.0	10.5	3.00	4.25	1.2600	34.776
9.0	11.0	2.75	4.25	1.3500	35.892
9.0	11.0	3.00	4.25	1.3500	35.892
9.0	11.0	3.25	4.25	1.3500	35.892
9.0	11.0	3.50	4.25	1.3500	35.892
9.0	11.0	3.75	4.25	1.3500	35.892
9.5	5.5	2.00	4.25	0.4800	24.240
9.5	6.0	2.00	4.25	0.5450	25.533
9.5	6.5	2.00	4.25	0.6100	26.901
9.5	7.0	2.00	4.25	0.6775	28.116
9.5	7.5	2.00	4.25	0.7470	29.320
9.5	8.0	2.00	4.25	0.8200	30.545
9.5	8.5	2.00	4.25	0.8940	31.692
9.5	9.0	2.00	4.25	0.9760	32.940
9.5	9.5	2.00	4.25	1.0540	34.097
9.5	9.5	2.25	4.25	1.0540	34.097
9.5	10.0	2.00	4.25	1.1390	35.252
9.5	10.0	2.25	4.25	1.1390	35.252
9.5	10.0	2.50	4.25	1.1390	35.252
9.5	10.5	2.25	4.25	1.2220	36.355
9.5	10.5	2.50	4.25	1.2220	36.355
9.5	10.5	2.75	4.25	1.2220	36.355
9.5	11.0	2.50	4.25	1.3100	37.466
9.5	11.0	2.75	4.25	1.3100	37.466
9.5	11.0	3.00	4.25	1.3100	37.466
9.5	11.0	3.25	4.25	1.3100	37.466
9.5	11.5	3.00	4.25	1.4040	38.680
9.5	11.5	3.25	4.25	1.4040	38.680
9.5	11.5	3.50	4.25	1.4040	38.680
9.5	11.5	3.75	4.25	1.4040	38.680
9.5	12.0	3.00	4.25	1.4940	39.815
9.5	12.0	3.25	4.25	1.4940	39.815
9.5	12.0	3.50	4.25	1.4940	39.815
9.5	12.0	3.75	4.25	1.4940	39.815
9.5	12.0	4.00	4.25	1.4940	39.815
10.0	5.5	2.00	4.25	0.4720	25.323
10.0	6.0	2.00	4.25	0.5335	26.782
10.0	6.5	2.00	4.25	0.5970	28.059
10.0	7.0	2.00	4.25	0.6625	29.349
10.0	7.5	2.00	4.25	0.7300	30.660
10.0	8.0	2.00	4.25	0.8010	31.880
10.0	8.5	2.00	4.25	0.8740	33.168
10.0	9.0	2.00	4.25	0.9530	34.451
10.0	9.5	2.00	4.25	1.0300	35.638
10.0	10.0	2.00	4.25	1.1100	36.797
10.0	10.0	2.25	4.25	1.1100	36.797
10.0	10.5	2.00	4.25	1.1930	37.957
10.0	10.5	2.25	4.25	1.1930	37.957
10.0	10.5	2.50	4.25	1.1930	37.957
10.0	11.0	2.50	4.25	1.2750	39.079
10.0	11.0	2.75	4.25	1.2750	39.079
10.0	11.0	3.00	4.25	1.2750	39.079
10.0	11.5	2.75	4.25	1.3650	40.268
10.0	11.5	3.00	4.25	1.3650	40.268
10.0	12.0	3.00	4.25	1.4550	41.540
10.0	12.0	3.25	4.25	1.4550	41.540
10.0	12.0	3.50	4.25	1.4550	41.540
10.0	12.5	3.50	4.25	1.5500	42.703
10.0	12.5	3.75	4.25	1.5500	42.703
10.0	12.5	4.00	4.25	1.5500	42.703
10.5	6.0	2.00	4.25	0.5230	27.902
10.5	6.5	2.00	4.25	0.5850	29.367
10.5	7.0	2.00	4.25	0.6500	30.745
10.5	7.5	2.00	4.25	0.7160	32.041
10.5	8.0	2.00	4.25	0.7870	33.369
10.5	8.5	2.00	4.25	0.8570	34.580
10.5	9.0	2.00	4.25	0.9310	35.882
10.5	9.5	2.00	4.25	1.0050	37.135
10.5	10.0	2.00	4.25	1.0850	38.355
10.5	10.0	2.25	4.25	1.0850	38.355

REFERENCE:

U. S. DEPARTMENT OF AGRICULTURE
SOIL CONSERVATION SERVICE
ENGINEERING DIVISION- DESIGN SECTION

STANDARD DWG. NO.
ES-86
SHEET 3 OF 8
DATE 9-8-54

Revised 10/77

CHUTE SPILLWAYS: SAF OUTLETS

Dimensions and Capacities

$S_o = \frac{1}{3}$

J = 10.5 to 13.0

J	L_B	H	b_o	d_1	q_{mo}
10.5	10.5	2.00	4.25	1.1650	39.610
10.5	10.5	2.25	4.25	1.1650	39.610
10.5	10.5	2.50	4.25	1.1650	39.610
10.5	11.0	2.25	4.25	1.2460	40.744
10.5	11.0	2.50	4.25	1.2460	40.744
10.5	11.0	2.75	4.25	1.2460	40.744
10.5	11.5	2.50	4.25	1.3300	41.962
10.5	11.5	2.75	4.25	1.3300	41.962
10.5	11.5	3.00	4.25	1.3300	41.962
10.5	12.0	2.75	4.25	1.4160	43.188
10.5	12.0	3.00	4.25	1.4160	43.188
10.5	12.0	3.25	4.25	1.4160	43.188
10.5	12.0	3.50	4.50	1.4160	43.188
10.5	12.5	3.00	4.50	1.5120	44.528
10.5	12.5	3.25	4.50	1.5120	44.528
10.5	12.5	3.50	4.50	1.5120	44.528
10.5	13.0	3.25	4.50	1.6080	45.828
10.5	13.0	3.50	4.50	1.6080	45.828
10.5	13.0	3.75	4.50	1.6080	45.828
10.5	13.5	3.25	4.50	1.7000	46.886
10.5	13.5	3.50	4.50	1.7000	46.886
10.5	13.5	3.75	4.50	1.7000	46.886
10.5	13.5	4.00	4.50	1.7000	46.886
10.5	13.5	4.25	4.50	1.7000	46.886
11.0	6.0	2.00	4.50	0.5140	29.118
11.0	6.5	2.00	4.50	0.5745	30.621
11.0	7.0	2.00	4.50	0.6375	32.003
11.0	7.5	2.00	4.50	0.7010	33.298
11.0	8.0	2.00	4.50	0.7710	34.695
11.0	8.5	2.00	4.50	0.8400	36.036
11.0	9.0	2.00	4.50	0.9110	37.260
11.0	9.5	2.00	4.50	0.9860	38.651
11.0	10.0	2.00	4.50	1.0620	39.878
11.0	10.5	2.00	4.50	1.1400	41.154
11.0	10.5	2.25	4.50	1.1400	41.154
11.0	11.0	2.00	4.50	1.2200	42.456
11.0	11.0	2.25	4.50	1.2200	42.456
11.0	11.0	2.25	4.50	1.2200	42.456
11.0	11.5	2.50	4.75	1.3050	43.783
11.0	11.5	2.75	4.75	1.3050	43.783
11.0	11.5	3.00	4.75	1.3050	43.783
11.0	12.0	2.50	4.75	1.3880	45.041
11.0	12.0	2.75	4.75	1.3880	45.041
11.0	12.0	3.00	4.75	1.3880	45.041
11.0	12.5	3.00	4.75	1.4750	46.168
11.0	12.5	3.25	4.75	1.4750	46.168
11.0	13.0	3.00	4.75	1.5650	47.420
11.0	13.0	3.25	4.75	1.5650	47.420
11.0	13.0	3.50	4.75	1.5650	47.420
11.0	13.0	3.75	4.75	1.5650	47.420
11.0	13.5	3.50	4.75	1.6600	48.638
11.0	13.5	3.75	4.75	1.6600	48.638
11.0	13.5	4.00	4.75	1.6600	48.638
11.0	14.0	4.00	4.75	1.7500	49.700
11.0	14.0	4.25	4.75	1.7500	49.700
11.5	6.5	2.00	4.75	0.5640	31.725
11.5	7.0	2.00	4.75	0.6270	33.231
11.5	7.5	2.00	4.75	0.6900	34.673
11.5	8.0	2.00	4.75	0.7570	36.109
11.5	8.5	2.00	4.75	0.8270	37.587
11.5	9.0	2.00	4.75	0.8930	38.801
11.5	9.5	2.00	4.75	0.9670	40.179
11.5	10.0	2.00	4.75	1.0420	41.522
11.5	10.0	2.25	4.75	1.0402	41.522
11.5	10.5	2.00	4.75	1.1200	42.896
11.5	10.5	2.25	4.75	1.1200	42.896
11.5	11.0	2.25	4.75	1.1920	44.104
11.5	11.0	2.50	4.75	1.1920	44.104
11.5	11.5	2.25	4.75	1.2720	45.347
11.5	11.5	2.50	4.75	1.2720	45.347
11.5	11.5	2.75	4.75	1.2720	45.347
11.5	12.0	2.25	4.75	1.3550	46.613
11.5	12.0	2.50	4.75	1.3550	46.613
11.5	12.0	2.75	4.75	1.3550	46.613
11.5	12.0	3.00	4.75	1.3550	46.613
11.5	12.5	2.75	5.00	1.4400	47.880
11.5	12.5	3.00	5.00	1.4400	47.880
11.5	12.5	3.25	5.00	1.4400	47.880
11.5	13.0	3.00	5.00	1.5280	49.278
11.5	13.0	3.25	5.00	1.5280	49.278
11.5	13.0	3.50	5.00	1.5280	49.278
11.5	13.5	3.25	5.00	1.6180	50.482
11.5	13.5	3.50	5.00	1.6180	50.482
11.5	13.5	3.75	5.00	1.6180	50.482
11.5	13.5	4.00	5.00	1.6180	50.482
11.5	14.0	3.75	5.00	1.7030	51.686
11.5	14.0	4.00	5.00	1.7030	51.686
11.5	14.5	3.75	5.00	1.8120	52.942
11.5	14.5	4.00	5.00	1.8120	52.942
11.5	14.5	4.25	5.00	1.8120	52.942
11.5	14.5	4.50	5.00	1.8120	52.942

J	L_B	H	b_o	d_1	q_{mo}
12.0	6.5	2.00	4.75	0.5500	32.835
12.0	7.0	2.00	5.00	0.6170	34.552
12.0	7.5	2.00	5.00	0.6785	35.995
12.0	8.0	2.00	5.00	0.7440	37.498
12.0	8.5	2.00	5.00	0.8120	38.935
12.0	9.0	2.00	5.00	0.8770	40.254
12.0	9.5	2.00	5.00	0.9475	41.595
12.0	9.5	2.25	5.00	0.9475	41.595
12.0	10.0	2.00	5.00	1.0200	42.993
12.0	10.0	2.25	5.00	1.0200	42.993
12.0	10.5	2.25	5.00	1.0960	44.388
12.0	11.0	2.25	5.00	1.1680	45.668
12.0	11.5	2.25	5.00	1.2500	47.063
12.0	11.5	2.50	5.00	1.2500	47.063
12.0	12.0	2.25	5.00	1.3300	48.412
12.0	12.0	2.50	5.00	1.3300	48.412
12.0	12.0	2.75	5.00	1.3300	48.412
12.0	12.5	2.25	5.00	1.4120	49.702
12.0	12.5	2.50	5.00	1.4120	49.702
12.0	12.5	2.75	5.00	1.4120	49.702
12.0	12.5	3.00	5.00	1.4120	49.702
12.0	12.5	3.25	5.00	1.4120	49.702
12.0	13.0	2.50	5.00	1.5000	51.075
12.0	13.0	2.75	5.00	1.5000	51.075
12.0	13.0	3.00	5.00	1.5000	51.075
12.0	13.0	3.25	5.00	1.5000	51.075
12.0	13.5	3.00	5.00	1.5850	52.305
12.0	13.5	3.25	5.00	1.5850	52.305
12.0	13.5	3.50	5.00	1.5850	52.305
12.0	13.5	3.75	5.00	1.5850	52.305
12.0	14.0	3.50	5.00	1.6700	53.523
12.0	14.0	3.75	5.00	1.6700	53.523
12.0	14.5	3.50	5.00	1.7630	54.829
12.0	14.5	3.75	5.00	1.7630	54.829
12.0	14.5	4.00	5.00	1.7630	54.829
12.0	14.5	4.25	5.00	1.7630	54.829
12.0	15.0	4.00	5.25	1.8600	56.172
12.0	15.0	4.25	5.25	1.8600	56.172
12.0	15.0	4.50	5.25	1.8600	56.172
12.0	15.0	4.75	5.25	1.8600	56.172
12.5	7.0	2.00	5.00	0.6070	35.813
12.5	7.5	2.00	5.00	0.6670	37.252
12.5	8.0	2.00	5.00	0.7300	38.836
12.5	8.5	2.00	5.00	0.7990	40.389
12.5	9.0	2.00	5.00	0.8610	41.715
12.5	9.0	2.25	5.00	0.8610	41.715
12.5	9.5	2.00	5.25	0.9300	43.152
12.5	9.5	2.25	5.25	0.9300	43.152
12.5	10.0	2.25	5.25	1.0010	44.594
12.5	10.5	2.25	5.25	1.0760	46.000
12.5	11.0	2.25	5.25	1.1480	47.355
12.5	11.0	2.50	5.25	1.1480	47.355
12.5	11.5	2.25	5.25	1.2250	48.692
12.5	11.5	2.50	5.25	1.2250	48.692
12.5	12.0	2.50	5.25	1.3030	50.035
12.5	12.0	2.75	5.25	1.3030	50.035
12.5	12.5	2.50	5.25	1.3830	51.378
12.5	12.5	2.75	5.25	1.3830	51.378
12.5	12.5	3.00	5.25	1.3830	51.378
12.5	13.0	2.50	5.25	1.4650	52.740
12.5	13.0	2.75	5.25	1.4650	52.740
12.5	13.0	3.00	5.25	1.4650	52.740
12.5	13.5	3.00	5.25	1.5550	54.114
12.5	13.5	3.25	5.25	1.5550	54.114
12.5	13.5	3.50	5.25	1.5550	54.114
12.5	14.0	3.00	5.25	1.6370	55.412
12.5	14.0	3.25	5.25	1.6370	55.412
12.5	14.0	3.50	5.25	1.6370	55.412
12.5	14.0	3.75	5.25	1.6370	55.412
12.5	14.5	3.50	5.25	1.7300	56.744
12.5	14.5	3.75	5.25	1.7300	56.744
12.5	14.5	4.00	5.25	1.7300	56.744
12.5	15.0	3.75	5.25	1.8180	57.994
12.5	15.0	4.00	5.25	1.8180	57.994
12.5	15.0	4.25	5.25	1.8180	57.994
12.5	15.0	4.50	5.25	1.8180	57.994
12.5	15.5	4.00	5.50	1.9200	59.328
12.5	15.5	4.25	5.50	1.9200	59.328
12.5	15.5	4.50	5.50	1.9200	59.328
12.5	15.5	4.75	5.50	1.9200	59.328
13.0	7.0	2.00	5.25	0.6000	37.320
13.0	7.5	2.00	5.50	0.6560	38.682
13.0	8.0	2.00	5.50	0.7185	40.236
13.0	8.5	2.00	5.50	0.7850	41.762
13.0	8.5	2.25	5.50	0.7850	41.762
13.0	9.0	2.00	5.50	0.8480	43.248
13.0	9.0	2.25	5.50	0.8480	43.248
13.0	9.5	2.25	5.50	0.9170	44.704
13.0	10.0	2.25	5.50	0.9860	46.145
13.0	10.5	2.25	5.50	1.0570	47.565
13.0	10.5	2.50	5.50	1.0570	47.565
13.0	11.0	2.25	5.50	1.1300	48.986
13.0	11.0	2.50	5.50	1.1300	48.986

REFERENCE:

U. S. DEPARTMENT OF AGRICULTURE
SOIL CONSERVATION SERVICE
ENGINEERING DIVISION- DESIGN SECTION

STANDARD DWG. NO.
ES- 86
SHEET 4 OF 8
DATE 9-8-54

Revised 10/77

CHUTE SPILLWAYS: SAF OUTLETS

Dimensions and Capacities

$S_o = \frac{1}{3}$

J = 13.0 to 15.0

J	L_B	H	b_o	d_1	q_{mo}
13.0	11.5	2.50	5.50	1.2040	50.327
13.0	12.0	2.50	5.50	1.2850	51.729
13.0	12.5	2.50	5.50	1.3600	53.176
13.0	12.5	2.75	5.50	1.3600	53.176
13.0	13.0	2.50	5.50	1.4380	54.500
13.0	13.0	2.75	5.50	1.4380	54.500
13.0	13.0	3.00	5.50	1.4380	54.500
13.0	13.5	2.75	5.50	1.5230	55.818
13.0	13.5	3.00	5.50	1.5230	55.818
13.0	13.5	3.25	5.50	1.5230	55.818
13.0	14.0	2.75	5.50	1.6080	57.164
13.0	14.0	3.00	5.50	1.6080	57.164
13.0	14.0	3.25	5.50	1.6080	57.164
13.0	14.0	3.50	5.50	1.6080	57.164
13.0	14.5	3.25	5.50	1.6980	58.581
13.0	14.5	3.50	5.50	1.6980	58.581
13.0	14.5	3.75	5.50	1.6980	58.581
13.0	15.0	3.75	5.50	1.7800	59.897
13.0	15.0	4.00	5.50	1.7800	59.897
13.0	15.5	3.75	5.50	1.8800	61.288
13.0	15.5	4.00	5.50	1.8800	61.288
13.0	15.5	4.25	5.50	1.8800	61.288
13.0	15.5	4.50	5.50	1.8800	61.288
13.0	15.5	4.75	5.50	1.8800	61.288
13.0	16.0	3.75	5.50	1.9700	62.548
13.0	16.0	4.00	5.50	1.9700	62.548
13.0	16.0	4.25	5.50	1.9700	62.548
13.0	16.0	4.50	5.50	1.9700	62.548
13.0	16.0	4.75	5.50	1.9700	62.548
13.5	7.5	2.00	5.50	0.6450	39.990
13.5	8.0	2.00	5.50	0.7070	41.572
13.5	8.0	2.25	5.50	0.7070	41.572
13.5	8.5	2.00	5.50	0.7710	43.137
13.5	8.5	2.25	5.50	0.7710	43.137
13.5	9.0	2.25	5.50	0.8350	44.673
13.5	9.5	2.25	5.50	0.9010	46.267
13.5	10.0	2.25	5.50	0.9700	47.724
13.5	10.0	2.50	5.50	0.9700	47.724
13.5	10.5	2.25	5.50	1.0400	49.140
13.5	10.5	2.50	5.50	1.0400	49.140
13.5	11.0	2.50	5.50	1.1120	50.596
13.5	11.5	2.50	5.50	1.1850	52.140
13.5	12.0	2.50	5.50	1.2600	53.550
13.5	12.0	2.75	5.50	1.2600	53.550
13.5	12.5	2.50	5.50	1.3350	54.935
13.5	12.5	2.75	5.50	1.3350	54.935
13.5	13.0	2.75	5.50	1.4130	56.308
13.5	13.0	3.00	5.50	1.4130	56.308
13.5	13.5	2.75	5.75	1.4970	57.784
13.5	13.5	3.00	5.75	1.4970	57.784
13.5	13.5	3.25	5.75	1.4970	57.784
13.5	14.0	2.75	5.75	1.5800	59.250
13.5	14.0	3.00	5.75	1.5800	59.250
13.5	14.0	3.25	5.75	1.5800	59.250
13.5	14.0	3.50	5.75	1.5800	59.250
13.5	14.5	2.75	5.75	1.6650	60.606
13.5	14.5	3.00	5.75	1.6650	60.606
13.5	14.5	3.25	5.75	1.6650	60.606
13.5	14.5	3.50	5.75	1.6650	60.606
13.5	14.5	3.75	5.75	1.6650	60.606
13.5	15.0	2.75	5.75	1.7500	61.950
13.5	15.0	3.00	5.75	1.7500	61.950
13.5	15.0	3.25	5.75	1.7500	61.950
13.5	15.0	3.50	5.75	1.7500	61.950
13.5	15.0	3.75	5.75	1.7500	61.950
13.5	15.5	3.75	5.75	1.8380	63.227
13.5	15.5	4.00	5.75	1.8380	63.227
13.5	16.0	4.25	5.75	1.9280	64.588
13.5	16.0	4.50	5.75	1.9280	64.588
13.5	16.0	4.75	5.75	1.9280	64.588
14.0	8.0	2.00	5.75	0.6960	42.943
14.0	8.0	2.25	5.75	0.6960	42.943
14.0	8.5	2.25	5.75	0.7600	44.536
14.0	9.0	2.25	5.75	0.8210	46.181
14.0	9.5	2.25	5.75	0.8890	47.828
14.0	9.5	2.50	5.75	0.8890	47.828
14.0	10.0	2.25	5.75	0.9540	49.274
14.0	10.0	2.50	5.75	0.9540	49.274
14.0	10.5	2.50	5.75	1.0240	50.739
14.0	11.0	2.50	5.75	1.0930	52.191
14.0	11.5	2.50	5.75	1.1640	53.660
14.0	11.5	2.75	5.75	1.1640	53.660
14.0	12.0	2.50	5.75	1.2380	55.153
14.0	12.0	2.75	5.75	1.2380	55.153
14.0	12.5	2.75	5.75	1.3130	56.630
14.0	13.0	2.75	5.75	1.3880	58.087
14.0	13.5	2.75	5.75	1.4680	59.527
14.0	13.5	3.00	5.75	1.4680	59.527
14.0	14.0	2.75	5.75	1.5500	61.039
14.0	14.0	3.00	5.75	1.5500	61.039
14.0	14.0	3.25	5.75	1.5500	61.039
14.0	14.5	3.00	5.75	1.6320	62.506
14.0	14.5	3.25	5.75	1.6320	62.506

J	L_B	H	b_o	d_1	q_{mo}
14.0	14.5	3.50	5.75	1.6320	62.506
14.0	15.0	3.00	5.75	1.7150	63.884
14.0	15.0	3.25	5.75	1.7150	63.884
14.0	15.0	3.50	5.75	1.7150	63.884
14.0	15.0	3.75	5.75	1.7150	63.884
14.0	15.5	3.00	5.75	1.8020	65.279
14.0	15.5	3.25	5.75	1.8020	65.279
14.0	15.5	3.50	5.75	1.8020	65.279
14.0	15.5	3.75	5.75	1.8020	65.279
14.0	15.5	4.00	5.75	1.8020	65.279
14.0	16.0	3.00	6.00	1.8900	66.623
14.0	16.0	3.25	6.00	1.8900	66.623
14.0	16.0	3.50	6.00	1.8900	66.623
14.0	16.0	3.75	6.00	1.8900	66.623
14.0	16.0	4.00	6.00	1.8900	66.623
14.0	16.0	4.25	6.00	1.8900	66.623
14.0	16.0	4.50	6.00	1.8900	66.623
14.0	16.5	3.25	6.00	1.9820	67.982
14.0	16.5	3.75	6.00	1.9820	67.982
14.0	16.5	4.00	6.00	1.9820	67.982
14.0	16.5	4.25	6.00	1.9820	67.982
14.0	16.5	4.50	6.00	1.9820	67.982
14.0	16.5	4.75	6.00	1.9820	67.982
14.0	16.5	5.00	6.00	1.9820	67.982
14.0	16.5	5.25	6.00	1.9820	67.982
14.5	8.0	2.25	6.00	0.6900	44.367
14.5	8.5	2.25	5.75	0.7490	46.064
14.5	9.0	2.25	6.00	0.8100	47.628
14.5	9.0	2.50	6.00	0.8100	47.628
14.5	9.5	2.25	6.00	0.8760	49.275
14.5	9.5	2.50	6.00	0.8760	49.275
14.5	10.0	2.50	6.00	0.9400	50.901
14.5	10.5	2.50	6.00	1.0080	52.416
14.5	11.0	2.50	6.00	1.0750	53.858
14.5	11.0	2.75	6.00	1.0750	53.858
14.5	11.5	2.50	6.00	1.1460	55.409
14.5	11.5	2.75	6.00	1.1460	55.409
14.5	12.0	2.75	6.00	1.2200	56.974
14.5	12.5	2.75	6.00	1.2940	58.424
14.5	13.0	2.75	6.00	1.3700	60.006
14.5	13.0	3.00	6.00	1.3700	60.006
14.5	13.5	3.00	6.00	1.4500	61.553
14.5	14.0	3.00	6.00	1.5300	63.036
14.5	14.5	3.00	6.00	1.6100	64.480
14.5	14.5	3.25	6.00	1.6100	64.480
14.5	15.0	3.00	6.00	1.6900	65.741
14.5	15.0	3.25	6.00	1.6900	65.741
14.5	15.0	3.50	6.00	1.6900	65.741
14.5	15.5	3.00	6.00	1.7720	67.159
14.5	15.5	3.25	6.00	1.7720	67.159
14.5	15.5	3.50	6.00	1.7720	67.159
14.5	15.5	3.75	6.00	1.7720	67.159
14.5	16.0	3.25	6.00	1.8560	68.579
14.5	16.0	3.50	6.00	1.8560	68.579
14.5	16.0	3.75	6.00	1.8560	68.579
14.5	16.0	4.25	6.00	1.8560	68.579
14.5	16.5	3.25	6.00	1.9500	70.020
14.5	16.5	3.75	6.00	1.9500	70.020
14.5	16.5	4.00	6.00	1.9500	70.020
15.0	8.5	2.25	6.00	0.7375	47.348
15.0	8.5	2.50	6.00	0.7375	47.348
15.0	9.0	2.25	6.00	0.7990	49.099
15.0	9.0	2.50	6.00	0.7990	49.099
15.0	9.5	2.50	6.00	0.8640	50.760
15.0	10.0	2.50	6.00	0.9280	52.432
15.0	10.5	2.50	6.25	0.9940	53.974
15.0	10.5	2.75	6.25	0.9940	53.974
15.0	11.0	2.50	6.25	1.0600	55.491
15.0	11.0	2.75	6.25	1.0600	55.491
15.0	11.5	2.75	6.25	1.1350	57.147
15.0	12.0	2.75	6.25	1.2030	58.646
15.0	12.5	2.75	6.25	1.2750	60.116
15.0	12.5	3.00	6.25	1.2750	60.116
15.0	13.0	2.75	6.25	1.3500	61.628
15.0	13.0	3.00	6.25	1.3500	61.628
15.0	13.5	3.00	6.25	1.4250	63.128
15.0	14.0	3.00	6.25	1.5050	64.640
15.0	14.0	3.25	6.25	1.5050	64.640
15.0	14.5	3.00	6.25	1.5860	66.136
15.0	14.5	3.25	6.25	1.5860	66.136
15.0	15.0	3.00	6.25	1.6640	67.558
15.0	15.0	3.25	6.25	1.6640	67.558
15.0	15.0	3.50	6.25	1.6640	67.558
15.0	15.5	3.25	6.25	1.7470	69.007
15.0	15.5	3.50	6.25	1.7470	69.007
15.0	15.5	3.75	6.25	1.7470	69.007
15.0	16.0	3.25	6.25	1.8250	70.445
15.0	16.0	3.50	6.25	1.8250	70.445
15.0	16.0	3.75	6.25	1.8250	70.445
15.0	16.5	3.25	6.25	1.9170	71.983
15.0	16.5	3.50	6.25	1.9170	71.983
15.0	16.5	3.75	6.25	1.9170	71.983
15.0	16.5	4.00	6.25	1.9170	71.983

REFERENCE:

U. S. DEPARTMENT OF AGRICULTURE
SOIL CONSERVATION SERVICE
ENGINEERING DIVISION- DESIGN SECTION

STANDARD DWG. NO.
ES- 86
SHEET 5 OF 8
DATE 9-8-54

Revised 10/77

CHUTE SPILLWAYS: SAF OUTLETS

Capacities without freeboard for various dimensions

J in feet
L_B in feet

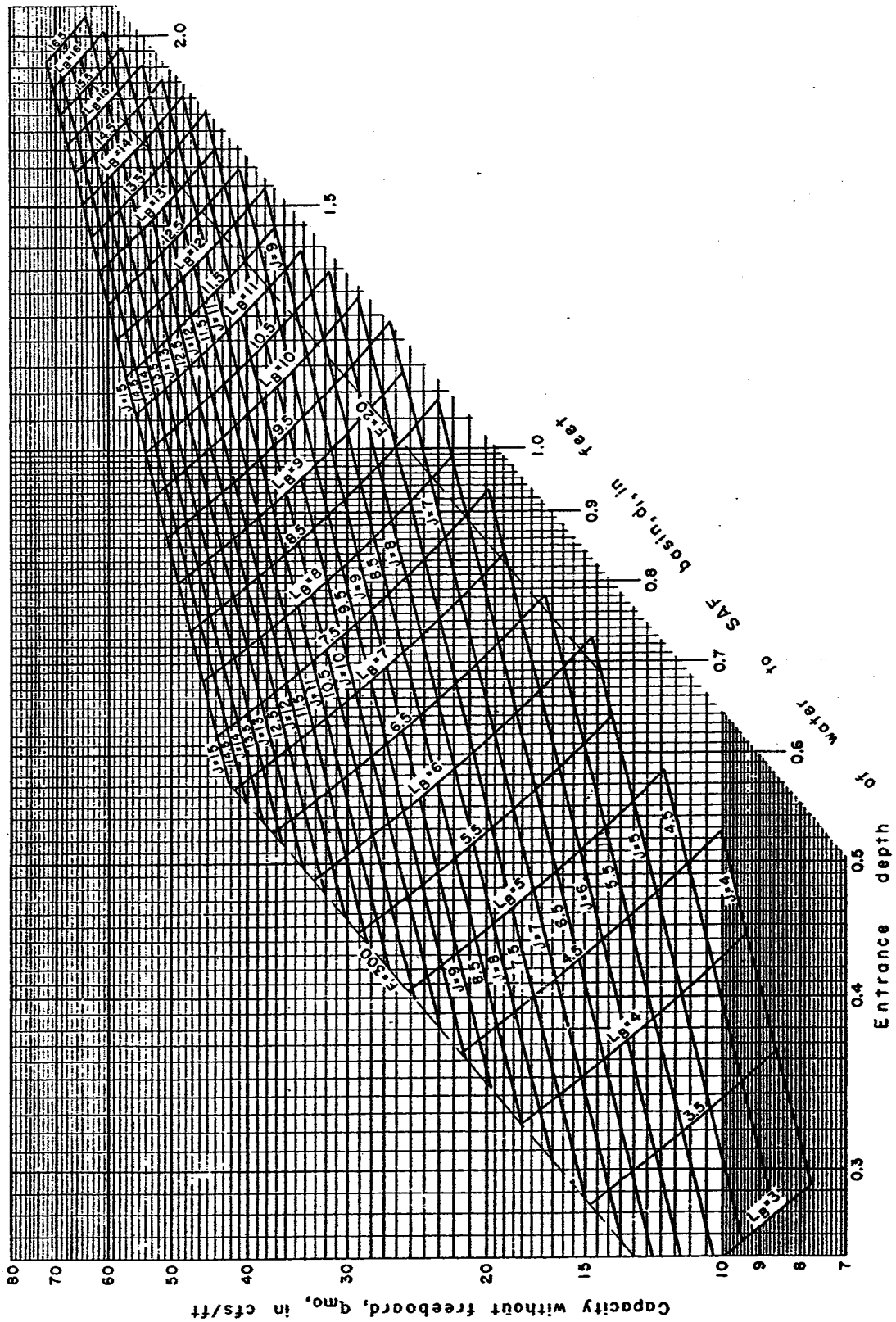

REFERENCE

Bloisdell, F. W. "Development And Hydraulic Design, Saint Anthony Falls Stilling Basin." (SAF Stilling Basin) Trans. A S C E 113P, 483-561, 1948

This diagram was developed by Paul D. Doubt, Engineering Design Section.

U. S. DEPARTMENT OF AGRICULTURE
SOIL CONSERVATION SERVICE

ENGINEERING DIVISION-DESIGN SECTION

STANDARD DWG. NO.
ES-86

SHEET 6 OF
DATE 3-2-54

Revised 10/77

CHUTE SPILLWAYS: SAF OUTLETS

Tailwater requirment and end sill height.

d_2' in feet
s in inches

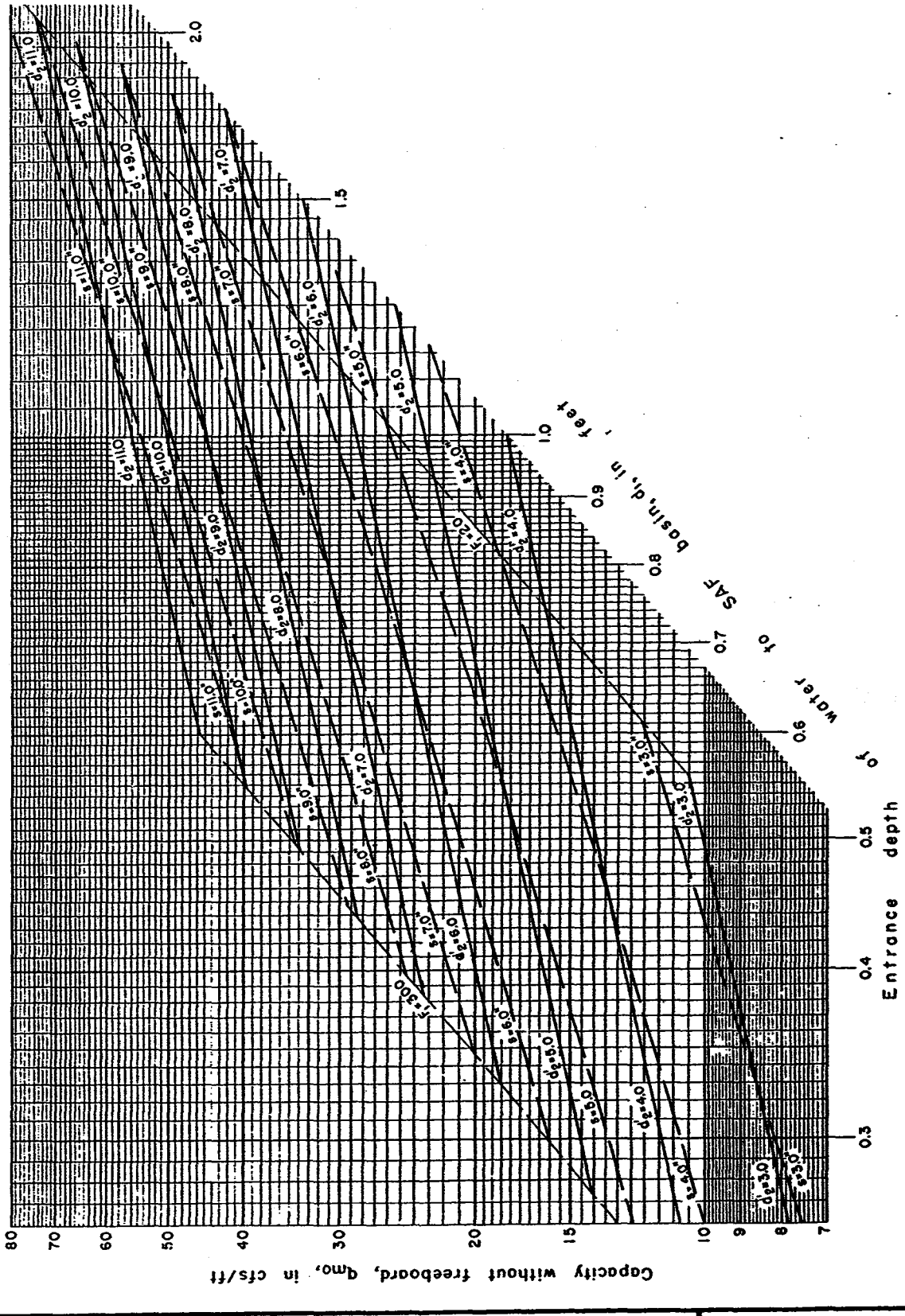

REFERENCE

Bleisdell, F. W. "Development And Hydraulic Design, Saint Anthony Falls Stilling Basin." (SAF Stilling Basin) Trans. A S C E 113 P, 483-561, 1948

This diagram was developed by Paul D. Doubt, Engineering Design Section.

U. S. DEPARTMENT OF AGRICULTURE
SOIL CONSERVATION SERVICE
ENGINEERING DIVISION-DESIGN SECTION

STANDARD DWG. NO.
ES-86
SHEET 7 OF 8
DATE 2-25-54

CHUTE SPILLWAYS: SAF OUTLETS, Example

EXAMPLE

Given: A chute having a straight inlet, a bottom slope of 3 to 1 and a vertical drop of Z = 50 ft from the crest of inlet to the floor of the outlet. The design discharge is 200 cfs W = 8 ft $\mathcal{Z}$ = 8 ft

Determine:
1. Required capacity without freeboard.
2. The height of the channel sidewalls, N, and entrance depth, d_1, of flow to SAF outlet without air entrainment.
3. Dimensions of SAF outlet.
4. Required depth of tailwater.

Solution:

1. The required capacity without freeboard, Q_{fr}, is

$$Q_{fr} = (1.20 + 0.003\ Z)\ Q_r$$

$$Q_{fr} = [1.20 + (0.003)(50)]\ 200 = 270 \text{ cfs}$$

$$q_{fr} = \frac{Q_{fr}}{W} = \frac{270}{8} = 33.75 \text{ cfs/ft}$$

2. The required height of channel sidewalls, N, is read from table 3b of ES-88 as

$$N = 2.00 \text{ ft}$$

The entrance depth of flow without air entrainment, d_1, is obtained from ES-78. Interpolation for this depth between W = 6 and W = 10 from sheets 9 and 11 obtain

$$d_1 = 0.659 \text{ ft}$$

3. The dimensions of the SAF may be read from ES-73 or ES-86.

a. The dimensions of the SAF as given on sheet 6 of ES-86 when q = 33.75 cfs/ft and d_1 = 0.659 ft is

$$J = 11.5 \text{ ft};\ L_B = 7.5 \text{ ft}$$

The height of the end sill as given on sheet 7 of ES-86 when q = 33.75 cfs/ft and d_1 = 0.659 ft is

$$s = 8 \text{ inches}$$

Since the value of d_1 is known, the size and spacing of floor and chute blocks can be determined from sheet 1 of ES-73.

b. The dimensions of the SAF outlet may also be determined by ES-73. The entrance velocity to the SAF outlet is determined by the formula

$$v_1 = \frac{q}{d_1} = \frac{33.75}{0.659} = 51.2 \text{ ft/sec}$$

From sheet 2 of ES-73 when v_1 = 51.2 ft/sec and d_1 = 0.659 ft read the dimensions

$$J = 11.5 \text{ ft};\ L_B = 7.5 \text{ ft}$$

The height of the end sill is read from sheet 3 of ES-73 as s = 8 inches

4. The SAF outlet will not cause dissipation of the kinetic energy unless it has sufficient tailwater height. Serious erosion will occur in the erodible channel downstream from the SAF outlet whenever sufficient tailwater depth is not present. The required tailwater depth d_2' may be read from sheet 7 of ES-86 or sheet 3 of ES-73.

$$d_2' = 8.1 \text{ ft}$$

McGRAW-HILL CIVIL ENGINEERING SERIES

HARMER E. DAVIS, *Consulting Editor*

BABBITT, DOLAND, AND CLEASLEY · Water Supply Engineering
BENJAMIN · Statically Indeterminate Structures
CHOW · Open-channel Hydraulics
DAVIS, TROXELL, AND WISKOCIL · The Testing and Inspection of Engineering Materials
DUNHAM · Advanced Reinforced Concrete
DUNHAM · Foundations of Structures
DUNHAM · The Theory and Practice of Reinforced Concrete
DUNHAM AND YOUNG · Contracts, Specifications, and Law for Engineers
HALLERT · Photogrammetry
HENNES AND EKSE · Fundamentals of Transportation Engineering
KRYNINE AND JUDD · Principles of Engineering Geology and Geotechnics
LEONARDS · Foundation Engineering
LINSLEY, KOHLER, AND PAULHUS · Applied Hydrology
LINSLEY, KOHLER, AND PAULHUS · Hydrology for Engineers
LUEDER · Aerial Photographic Interpretation
MATSON, SMITH, AND HURD · Traffic Engineering
MEAD, MEAD, AND AKERMAN · Contracts, Specifications, and Engineering Relations
PEURIFOY · Construction Planning, Equipment, and Methods
PEURIFOY · Estimating Construction Costs
TROXELL AND DAVIS · Composition and Properties of Concrete
TSCHEBOTARIOFF · Soil Mechanics, Foundations, and Earth Structures
WANG AND ECKEL · Elementary Theory of Structures
WINTER, URQUHART, O'ROURKE, AND NILSON · Design of Concrete Structures

OPEN-CHANNEL HYDRAULICS

VEN TE CHOW, Ph.D.

Professor of Hydraulic Engineering
University of Illinois

McGRAW-HILL BOOK COMPANY

New York Toronto London

1959

jump will be forced upstream and may finally be drowned. If the point is at the right of the curve, the rise is too low, and the jump will be forced downstream toward the abrupt rise and may finally be washed out.

If a point $(F, y_3/y_1)$ lies in the diagram below the line $y_3 = y_c$, then the normal downstream flow is supercritical. A jump is followed by a critical section created over the crest of the abrupt rise, so that the rise acts as a weir, and the design diagram (Fig. 15-11) for the sharp-crested weir may be used.

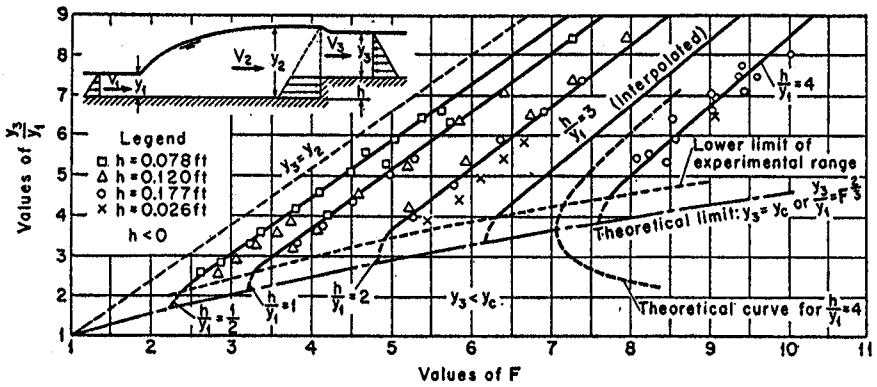

FIG. 15-13. Experimental relations among F, y_3/y_1, and h/y_1 for an abrupt rise. (*After Forster and Skrinde* [23].)

For design purposes, the diagram (Fig. 15-13) can be used to determine the necessary length and depth of stilling basin when V_1, y_1, and y_3 are known. It is proposed that a point $(F, y_3/y_1)$ be first defined for conditions at or near maximum discharge and that the corresponding value of h/y_1 be determined by interpolation. By repeating this procedure for other discharges within the expected range of discharge, a largest required value of h can be obtained. This value should be used for the highest required rise. A minimum height of rise necessary to prevent the jump from being washed out can also be thus determined.

15-10. Control of Jump by Abrupt Drop. The control of hydraulic jump by sills is useful if the downstream depth is smaller than the sequent depth for a normal jump. If the downstream depth is larger than the sequent depth for a normal jump, a drop in the channel floor must be used in order to ensure a jump. This condition occurs generally at the end of the expansion of a supercritical flow.

For a given approaching Froude number, the downstream depth of a drop may fall in any of the five regions as shown in Fig. 15-14*a*. The lower limit of region 1 is the depth at which the jump will begin to travel upstream. The upper limit of region 5 is the depth at which the jump

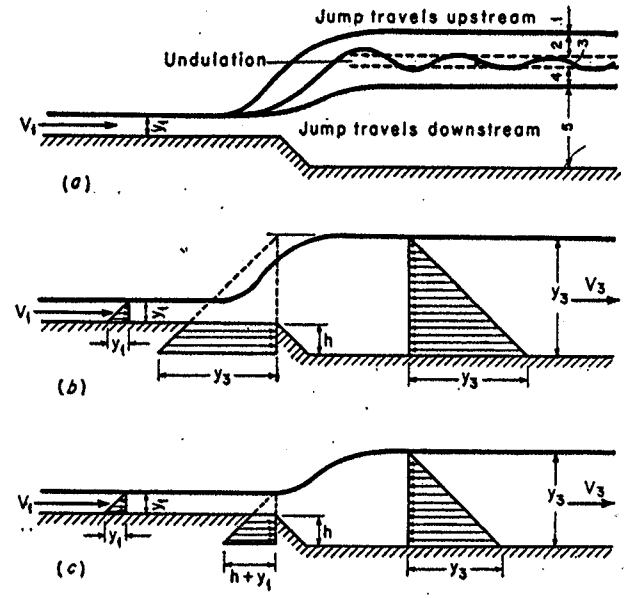

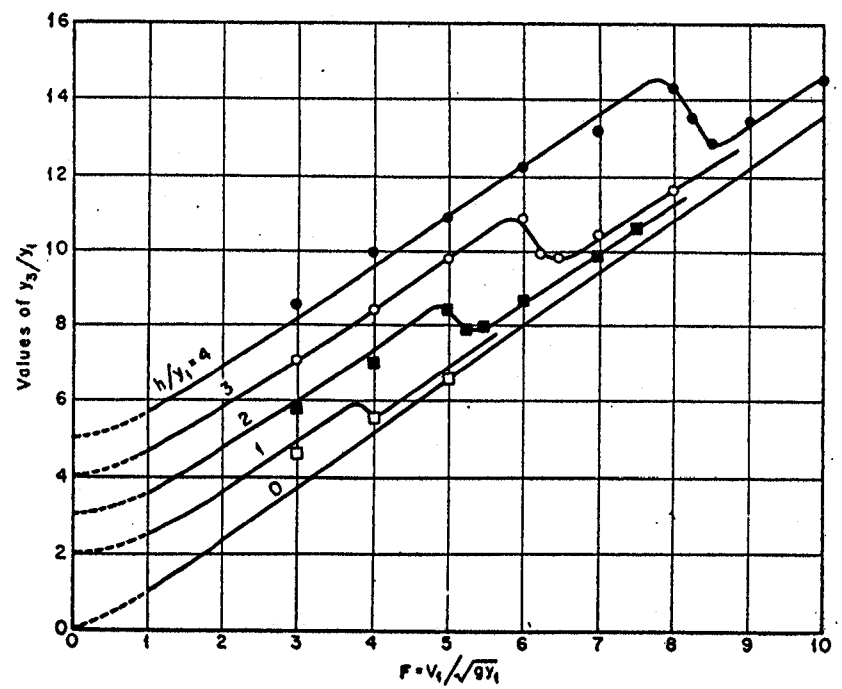

FIG. 15-14. Experimental and analytical relations among F, y_3/y_1, and h/y_1 for an abrupt drop. (*After E. Y. Hsu* [47].)

a wide range of discharge. Thus, y_3/y_1 in Eq. (15-3) can be dropped. If submergence occurs, the jump is forced upstream with possible drowning as a result.

In the diagram, any point is represented by a pair of coordinates $(\mathbf{F}, h/y_1)$. If the point lies within the curves, hydraulic jump will occur, with its relative position indicated by the corresponding interpolated value of X/y_2. Points lying above and to the left of an interpolated curve represent the conditions under which the weir is too high, so that the jump will be forced upstream and possibly drowned at the source. Points lying to the right of the curve represent the conditions under which the weir is too low, so that the jump will be forced downstream and possibly washed out. When the weir is as low as this, it may be crossed only by a single undular surface rise, forming a standing swell (Fig. 15-6).

For design purposes, it is proposed that the curve $X/y_2 = 5$ in the diagram be used. Laboratory experience has shown that the highest required weir does not necessarily occur under conditions of maximum discharge [20]. Consequently, the highest required weir should have the largest required value of h within the expected range of discharge as determined from the diagram.

B. Control by Broad-crested Weir. For a broad-crested weir, if the downstream depth is lower than the critical depth on top of the weir, that is, if $y_3 < (2y_2 + h)/3$, the tailwater will not affect appreciably the relation between the head water elevation and the discharge. Thus, the discharge over a unit width of the weir can be written[1]

$$q = 0.433\sqrt{2g}\left(\frac{y_2}{y_2 + h}\right)^{1/3} H^{3/2} \tag{15-4}$$

Since $q = V_1 y_1$, $H = y_2 - h$, and $\mathbf{F} = V_1/\sqrt{gy_1}$, the above equation can be reduced to

$$2.667\mathbf{F}^2\left(1 + \frac{h/y_1}{y_2/y_1}\right) = (y_2/y_1 - h/y_1)^3 \tag{15-5}$$

When a hydraulic jump is effected by the weir, y_2/y_1 can be related to $\mathbf{F}$ through Eq. (3-21). Then, Eq. (15-5) becomes

$$\frac{21.33\mathbf{F}^2}{\sqrt{1 - 8\mathbf{F}^2} - 1} = \frac{(\sqrt{1 + 8\mathbf{F}^2} - 1 - 2h/y_1)^3}{(\sqrt{1 + 8\mathbf{F}^2} - 1 + 2h/y_1)} \tag{15-6}$$

This equation gives the relation between h/y_1 and $\mathbf{F}$ and can be plotted as the curve shown in Fig. 15-12. Forster and Skrinde [23] have found that this curve coincides with the experimental data for an abrupt rise with $y_3 = y_c$ for $X = 5(h + y_3)$. Despite the lack of further experimental data, this curve may be used as a guide in proportioning a stilling basin using broad-crested weir as jump control, provided $y_3 < (2y_2 + h)/3$.

[1] This is Eq. (3-17) except that y_1 is replaced by y_3.

A broad-crested weir has certain advantages in comparison with some other types of control. It has greater structural stability than a sharp-crested weir and usually requires lower cost of excavation than an abrupt rise.

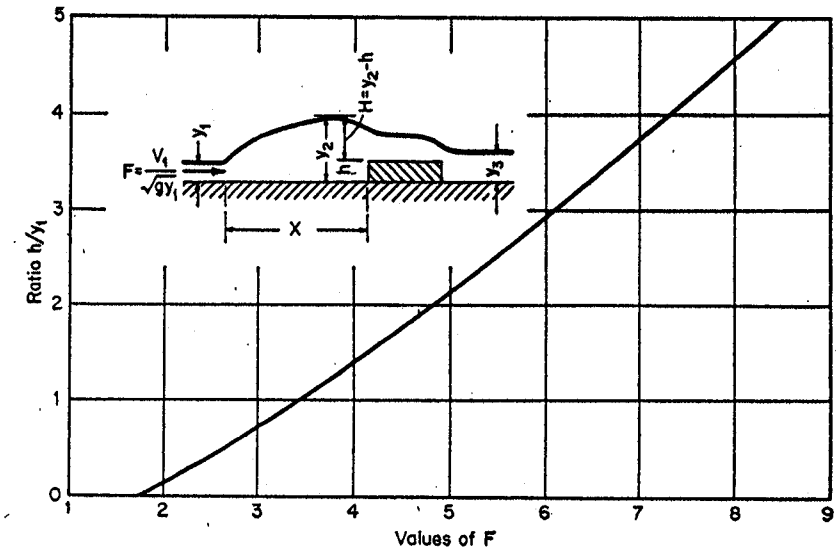

FIG. 15-12. Analytical relations between $\mathbf{F}$ and h/y_1 for a broad-crested weir. (*After Forster and Skrinde* [23].)

C. Control by Abrupt Rise. From the experimental data, Forster and Skrinde [23] have developed a diagram (Fig. 15-13) showing the relations among $\mathbf{F}$, y_3/y_1, and h/y_1 of an abrupt rise for $X = 5(h + y_3)$. The consistency of the relations was verified by a theoretical analysis, using the momentum theory, similar to that made for a broad-crested weir (Example 3-2). This diagram permits the prediction of the performance of a given abrupt rise when V_1, y_1, y_2, y_3, and h are known.

In the diagram, a point $(\mathbf{F}, y_3/y_1)$ lying above the line $y_3 = y_2$ represents the condition of $y_3 > y_2$ in which the abrupt rise would serve only to increase the drowning effect. For a point lying within the experimental range between the lines for $y_3 = y_2$ and $y_3 = y_c$, the position of the point relative to the corresponding h/y_1 curve indicates the effect of the abrupt rise on the flow pattern. Thus, if the point lies on the corresponding h/y_1 curve, a jump will form with $X = 5(h + y_3)$. If the point lies on the left and above the curve, the rise is too high, and the

greater than the sequent depth is advisable to make certain that the jump will stay on the apron.

6. When the Froude number is greater than 10, a stilling basin using the jump as a dissipator may no longer be the most economical dissipation device. In this case, the difference between the initial and sequent depths is great, and, generally speaking, a very deep basin with high retaining wall is required. The cost of the stilling basin may not be commensurate with the results obtained. A bucket type of dissipator[1] may give comparable results at lower cost.

15-9. Control of Jump by Sills. The hydraulic jump can be controlled or effected by sills of various designs, such as sharp-crested weir, broad-crested weir, and abrupt rise and drop in channel floor. The function of the sill is to ensure the formation of a jump and to control its position under all probable operating conditions.

Interesting experiments [46] have shown that the forces acting on the sill in a jump decrease rapidly to a minimum as the downstream end of the jump is moved upstream to a position approximately over the sill. The force then increases slowly to a constant value as the jump is moved farther upstream. This change in force on the sill is probably due to a change in the velocity distribution from one end of the jump to the other, since nonuniform distribution of velocity is a characteristic of such rapidly varied flow. As a result, the momentum in the nonuniform-distribution section is greatly increased. Theoretically speaking, the control of hydraulic jump by sills can be analyzed by the momentum theory. Because of lack of accurate knowledge of the velocity distribution, however, the theoretical analysis cannot predict the quantitative result very closely. For useful design information one has to rely upon experimental studies.

Dimensional analysis shows that the relations between the Froude number $\mathbf{F}_1$ or $\mathbf{F}$ of the approaching flow, the height h of the sill, the approaching depth y_1, the depth y_2 upstream from the sill, the distance X from the toe of the jump to the sill, and the downstream depth y_3 may be expressed as

$$\frac{h}{y_1} = \phi\left(\mathbf{F}, \frac{X}{y_2}, \frac{y_3}{y_1}\right) \tag{15-3}$$

This function can be determined quantitatively by model studies. The

[1] This is an upturned bucket provided at the toe of a spillway to deflect the overflow up through the tailwater. If the tailwater is high enough to submerge the bucket, a roller will form downstream from the bucket and tend to move bed materials toward the dam, thus preventing serious scour at the toe of the dam. On the other hand, if the tailwater is low, the overflow will be thrown up and out so that it will strike a solid-rock channel, if any, at a safe distance below the dam. See [44], [45], and Arts. 14-10 and 14-11.

exact position of the jump, as controlled by the sill, however, cannot be determined analytically. In the model study, this position can be represented by the ratio between X and y_2. The ratio is taken as constant in each test, having a magnitude sufficient to ensure a complete jump. In the design, the length of a stilling basin should be made at least equal to X. For economic reasons, however, the length of the basin

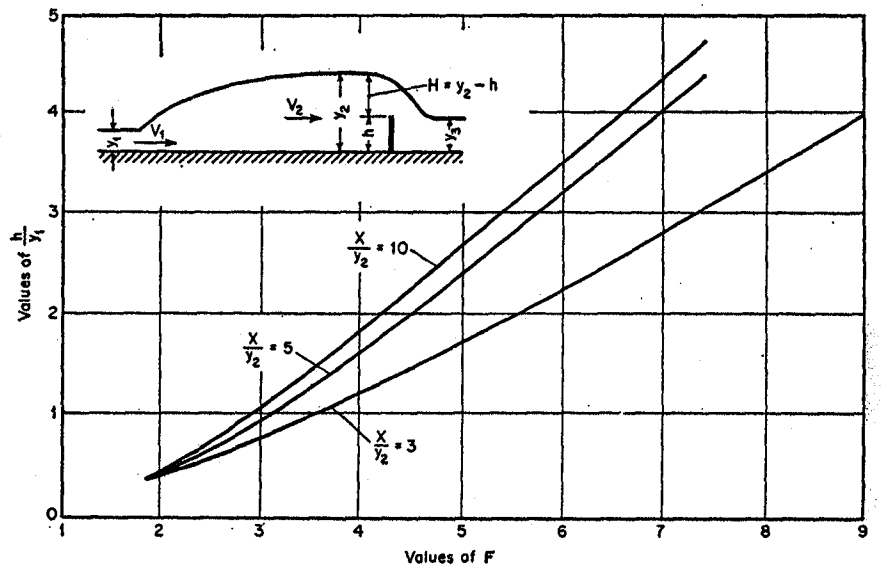

FIG. 15-11. Experimental relations among F, h/y_1, and X/y_2 for a sharp-crested weir. (*After Forster and Skrinde* [23].)

may be designed for less than X, provided that the high bottom velocities at the end of the basin have reached a value considered safe for the downstream channel condition.

A. Control by Sharp-crested Weir. On the basis of experimental data and theoretical analysis, Forster and Skrinde [23] have developed a diagram (Fig. 15-11) showing the relations among (1) Froude number $\mathbf{F}$ of the approaching flow, (2) the ratio between the weir height h and the approaching depth y_1, and (3) the ratio between the distance X from the toe of the jump to the weir and the depth y_2 upstream from the weir. This diagram permits an analysis of the effect of a given weir for known approach and tailwater conditions, provided that the normal tailwater depth y_3 does not affect the discharge over the weir crest;[1] that is, provided $y_3 < y_2 - 0.75h$. Ordinarily, unsubmerged conditions prevail over

[1] This condition was first observed by Bazin (see reference [12] of Chap. 14) and later demonstrated theoretically by Bakhmeteff [27].

A WATER RESOURCES TECHNICAL PUBLICATION

ENGINEERING MONOGRAPH No. 25

Hydraulic Design of Stilling Basins and Energy Dissipators

UNITED STATES DEPARTMENT
OF THE INTERIOR
BUREAU OF RECLAMATION

Contents

	Page
Preface	*iii*
Introduction	1
Section 1.—General Investigation of the Hydraulic Jump on Horizontal Aprons (Basin I)	
Hydraulic Jump Experiments	5
Experimental Results	6
The Froude Number	6
Applicability of Hydraulic Jump Formula	6
Length of Jump	7
Energy Absorption in Jump	14
Forms of the Hydraulic Jump	15
Practical Considerations	16
Water-Surface Profiles and Pressures	17
Conclusions	17
Application of Results (Example 1)	17
Section 2.—Stilling Basin for High Dam and Earth Dam Spillways and Large Canal Structures (Basin II)	
Results of Compilation	19
Tail water depth	20
Chute blocks	20
Dentated sill	20
Additional details	23
Verification Tests	23
Tail water depth	23
Length of basin	26
Water-surface profiles	26
Conclusions	26
Aids in computation	29
Application of results (Example 2)	30

CONTENTS

Page

Section 3.—Short Stilling Basin for Canal Structures, Small Outlet Works, and Small Spillways (Basin III)

Introduction 33
Development 33
Verification Tests 34
Stilling Basin Performance and Design 35
Chute blocks 35
Baffle piers 35
End sill 37
Tail water depth 37
Length of basin 37
Water surface and pressure profiles 38
Recommendations 38
Application of results (Example 3) 39

Section 4.—Stilling Basin Design and Wave Suppressors for Canal Structures, Outlet Works and Diversion Dams (Basin IV)

Jump Characteristics—Froude Numbers 2.5 to 4.5 43
Stilling Basin Design—Froude Numbers 2.5 to 4.5 45
Development tests 45
Final Tests 45
Deflector blocks 45
Tail water depth 46
Basin length and end sill 46
Performance 46
Alternative Stilling Basin IV—Small Drops 46
Performance 46
Design 46
Wave Suppressors 47
Raft type wave suppressor 47
Underpass type wave suppressor 48
General description 48
Performance 48
General design procedure 52
Sample problem (Example 4) 55

Section 5.—Stilling Basin With Sloping Apron (Basin V)

Previous Experimental Work 57
Sloping Apron Tests 58
Tail water depth (Case D) 58
Length of jump (Case D) 62
Expression for jump on sloping apron (Case D) 62
Jump characteristics (Case B) 64
Experimental results (Case B) 65
Length of jump (Case B) 70

Section 1

General investigation of the hydraulic jump on horizontal aprons (Basin I)

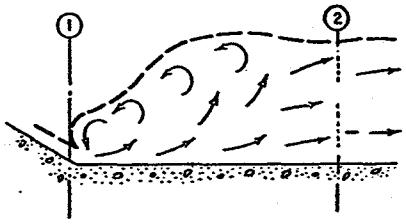

A TREMENDOUS amount of experimental, as well as theoretical, work has been performed in connection with the hydraulic jump on a horizontal apron. To mention a few of the experimenters who contributed basic information, there are: Bakhmeteff and Matzke (*1, 9*),[1] Safranez (*3*), Woycicki (*4*), Chertonosov (*10*), Einwachter (*11*), Ellms (*12*), Hinds (*14*), Forchheimer (*21*), Kennison (*22*), Kozeny (*23*), Rehbock (*24*), Schoklitsch (*25*), Woodward (*26*), and others. There is probably no phase of hydraulics that has received more attention; however, from a practical viewpoint, there is still much to be learned.

The first phase of this study consisted of observing and measuring the hydraulic jump in its various forms. The results were then correlated with those of others, the primary purpose being to become better acquainted with the overall jump phenomenon. The objectives of the study were: (1) to determine the applicability of the hydraulic jump formula for the entire range of conditions experienced in design; (2) to determine the length of the jump over the entire practical range and to correlate the findings with results of other experimenters where possible; and (3) to observe, catalog, and evaluate the various forms of the jump.

Hydraulic Jump Experiments

Observation of the hydraulic jump throughout its entire range required tests in all six test flumes. As indicated in Table 1, this involved about 125 tests for discharges of 1 to 28 c.f.s. The number of flumes used enhanced the value of the results in that it was possible to observe the degree of similitude obtained for the various sizes of jumps. Greatest reliance was placed on the results from the larger flumes, since the action in small jumps is too rapid for the eye to follow and, also, friction and viscosity become a measurable factor. This was demonstrated by the fact that the length of jump obtained from the two smaller flumes, A and F, was consistently shorter than that observed

[1] Numbers refer to references in "Bibliography."

for the larger flumes. Out-of-scale frictional resistance on the floor and side walls produced a short jump. As testing advanced and this deficiency became better understood, some allowance was made for this effect in the observations.

Experimental Results

Definitions of the symbols used in connection with the hydraulic jump on a horizontal floor are shown in Figure 4. The procedure followed in each test of this series was to establish a flow and then gradually increase the tail water depth until the front of the jump moved upstream to Section 1, indicated in Figure 4. The tail water depth was then measured, the length of the jump recorded, and the depth of flow entering the jump, D_1, was obtained by averaging a generous number of point gage measurements taken immediately upstream from Section 1. The results of the measurements and succeeding computations are tabulated in Table 1. The measured quantities are tabulated as follows: total discharge (Col. 3); tail water depth (Col. 6); length of jump (Col. 11), and depth of flow entering jump (Col. 8).

Column 1 indicates the test flumes in which the experiments were performed, and Column 4 shows the width of each flume. All computations are based on discharge per foot width of flume; unit discharges (q) are shown in Column 5.

The velocity entering the jump V_1, Column 7, was computed by dividing q (Col. 5) by D_1 (Col. 8).

The Froude Number

The Froude number, Column 10, Table 1, is:

$$F_1=\frac{V_1}{\sqrt{gD_1}} \qquad (1)$$

where F_1 is a dimensionless parameter, V_1 and D_1 are velocity and depth of flow, respectively, entering the jump, and g is the acceleration of gravity. The law of similitude states that where gravitational forces predominate, as they do in open channel phenomena, the Froude number should have the same value in model and prototype. Therefore, a model jump in a test flume

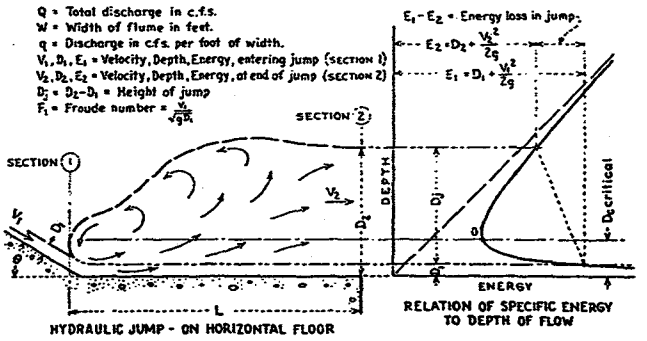

FIGURE 4.—*Definition of symbols (Basin I).*

will have the identical characteristics of a prototype jump in a stilling basin, if the Froude numbers of the incoming flows are the same. Although energy conversions in a hydraulic jump bear some relation to the Reynolds number, gravity forces predominate, and the Froude number becomes most useful in plotting stilling basin characteristics. Bakhmeteff and Matzke (*1*) demonstrated this application in 1936 when they related stilling basin characteristics to the square of the Froude number, $\frac{V^2}{gD_1}$, which they termed the kinetic flow factor.

The Froude number, equation (1), is used throughout this monograph. As the acceleration of gravity is a constant, the term g could be omitted. However, its inclusion makes the expression dimensionless, and the form shown as equation (1) is preferred.

Applicability of Hydraulic Jump Formula

The theory of the hydraulic jump in horizontal channels has been treated thoroughly by others (see "Bibliography"), and will not be repeated here. The expression for the hydraulic jump, based on pressure-momentum may be written (*15*):

$$D_2=-\frac{D_1}{2}+\sqrt{\frac{D_1^2}{4}+\frac{2V_1^2D_1}{g}}$$

or (2)

$$D_2=-\frac{D_1}{2}+\sqrt{\frac{D_1^2}{4}+\frac{2V_1^2D_1^2}{gD_1}}$$

where D_1 and D_2 are the depths before and after the jump, Figure 4. These depths are often called conjugate or sequent depths.

Transposing D_1 to the left side of the equation and substituting F_1^2 for $\frac{V_1^2}{gD_1}$.

$$\frac{D_2}{D_1}=-1/2+\sqrt{1/4+2F_1^2}$$

or (3)

$$\frac{D_2}{D_1}=1/2\,(\sqrt{1+8F_1^2}-1)$$

Equation (3) shows that the ratio of depths is a function of the Froude number. The ratio $\frac{D_2}{D_1}$ is plotted with respect to the Froude number on Figure 5. The line, which is virtually straight except for the lower end, represents the above expression for the hydraulic jump; the points, which are experimental, are from Columns 9 and 10, Table 1. The agreement is excellent over the entire range, indicating that equation (3) is applicable when the flow enters the jump at an appreciable angle to the horizontal.

There is an unsuspected characteristic in the curve, however, which is mentioned here but will be enlarged on later. Although the tail water depth, recorded in Column 6 of Table 1, was sufficient to bring the front of the jump to Section 1 (Fig. 4) in each test, the ability of the jump to remain at Section 1 for a slight lowering of tail water depth became more difficult for the higher and lower values of the Froude number. The jump was least sensitive to variation in tail water depth in the middle range, or values of F_1 from 4.5 to 9.

Length of Jump

The length of the jump measurement, Column 11, Table 1, was the most difficult to determine. Special care was therefore given to this measurement. Where chutes or overfalls were used, the front of the jump was held at the intersection of the chute and the horizontal floor, as shown in Figure 4. The length of jump was measured from this point to a point downstream where either the high-velocity jet began to leave the floor or to a point on the surface immediately downstream from the roller. whichever was the longer. In the case of Flume F, where the flow discharged from a gate onto a horizontal floor, the front of the jump was maintained just downstream from the completed contraction of the entering jet. In both cases the point at which the high-velocity jet begins to rise from the floor is not fixed, but tends to shift upstream and downstream. This is also true of the roller on the surface. It was at first difficult to repeat length observations within 5 percent by either criterion, but with practice satisfactory measurements became possible. It was the intention to judge the length of the jump from a practical standpoint; in other words, the end of the jump, as chosen, would represent the end of the concrete floor and side walls of a conventional stilling basin.

The length of jump has been plotted in two ways. Although the first method is perhaps the better method, the second is the more common and useful. The first method is shown in Figure 6 where the ratio, length of jump to D_1 (Col. 13, Table 1), is plotted with respect to the Froude number (Col. 10) for results from the six test flumes. The resulting curve is of fairly uniform curvature, which is the principal advantage of these coordinates. The second method of plotting, where the ratio, length of jump to the conjugate tail water depth D_2 (Col. 12) is plotted with respect to the Froude number, is presented in Figure 7. This latter method of plotting will be used throughout the study. The points represent the experimental values.

In addition to the curve established by the test points, curves representing the results of three other experimenters are shown in Figure 7. The best known and most widely accepted curve for length of jump is that of Bakhmeteff and Matzke (*1*) which was determined from experiments made at Columbia University. The greater portion of this curve, labeled "1," is at variance with the present experimental results. Because of the wide use this curve has experienced, a rather complete explanation is presented regarding this disagreement.

The experiments of Bakhmeteff and Matzke were performed in a flume 6 inches wide, having a limited testing head. The depth of flow entering the jump was adjusted by a vertical slide gate. The maximum discharge was approximately 0.7 c.f.s., and the thickness of the jet entering the jump, D_1, was 0.25 foot for a Froude number of 1.94. The results up to a Froude number of 2.5 are in agreement with the present experiments. To increase the Froude number, it was necessary for Bakhmeteff and Matzke to decrease the gate

TABLE 1.—*Natural stilling basin with horizontal floor (Basin I)*

Test flume (1)	S=tan Slope of floor (2)	Q c.f.s. (3)	W Width of stilling basin ft. (4)	q per ft. of W (5)	TW=D_2 ft. (6)	V_1 ft. per sec. (7)	D_1 ft. (8)	$\frac{D_2}{D_1}$ (9)	$F_1=\frac{V_1}{\sqrt{gD_1}}$ (10)	L Length of jump ft. (11)	$\frac{L}{D_2}$ (12)	$\frac{L}{D_1}$ (13)	$E_1=d_1+\frac{V_1^2}{2g}$ ft. (14)	$E_2=d_2+\frac{V_2^2}{2g}$ ft. (15)	$E_L=E_1-E_2$ ft. (16)	$\frac{E_L}{D_1}$ (17)	$\frac{E_L}{E_1}$ % (18)	Gate opening ft. (19)
A	0	3.000	4.915	0.610	0.564	8.47	0.072	7.83	5.56	3.0	5.32	42	1.187	0.582	0.605	8.40	51.0	
		3.500		0.712	0.612	8.79	.081	7.56	5.44	3.3	5.39	41	1.282	0.633	0.649	8.01	50.6	
		4.000		0.814	0.651	8.95	.091	7.15	5.23	3.5	5.38	38	1.336	0.675	0.661	7.26	49.5	
		4.500		0.916	0.694	8.98	.102	6.80	4.96	3.8	5.48	37	1.354	0.721	0.633	6.21	46.8	
		5.000		1.017	0.730	9.08	.112	6.52	4.78	4.1	5.62	37	1.392	0.760	0.632	5.64	45.4	
B	0	4.300	2.000	2.150	1.480	17.48	.123	12.03	8.78	9.0	6.08	73	4.868	1.513	3.355	27.28	68.9	
		5.000		2.500	1.600	17.48	.143	11.19	8.15	10.1	6.31	71	4.888	1.638	3.250	22.73	66.5	
		3.000		1.500	1.236	17.24	.087	14.20	10.30	7.5	6.07	86	4.702	1.259	3.443	39.57	73.2	
		6.000		3.000	1.754	17.54	.171	10.26	7.47	10.6	6.04	62	4.948	1.799	3.149	18.42	63.6	
		7.000		3.500	1.908	17.59	.199	9.59	6.95	11.5	6.03	58	5.003	1.960	3.043	15.29	60.8	
		8.000		4.000	2.016	17.47	.229	8.80	6.43	12.3	6.10	54	4.968	2.077	2.891	12.62	58.2	
		7.000		3.500	1.900	17.41	.201	9.45	6.84	11.5	6.05	57	4.908	1.953	2.955	14.70	60.2	
		3.110		1.550	1.240	17.61	.088	14.09	10.46	7.9	6.37	90	4.903	1.264	3.639	41.35	74.2	
		4.100		2.050	1.440	17.52	.117	12.31	9.03	8.7	6.04	74	4.883	1.471	3.412	29.16	69.9	
		5.975		2.988	1.760	17.58	.170	10.35	7.51	10.2	5.80	60	4.969	1.805	3.164	18.61	63.7	
		7.010		3.505	1.900	17.52	.200	9.50	6.90	11.3	5.95	56	4.967	1.953	3.014	15.07	60.7	
		8.000		4.000	2.030	17.54	.228	8.90	6.48	12.6	6.21	55	5.006	2.090	2.916	12.79	58.3	
		4.150		2.075	1.450	17.44	.119	12.18	8.91	8.8	6.07	74	4.842	1.482	3.360	28.24	69.4	
		5.500		2.750	1.691	17.40	.158	10.70	7.72	10.7	6.33	68	4.860	1.732	3.128	19.80	64.4	
		6.000		3.000	1.764	17.44	.172	10.26	7.41	11.0	6.24	64	4.895	1.809	3.086	17.94	63.0	
		6.500		3.250	1.827	17.38	.187	9.77	7.08	11.3	6.18	60	4.878	1.876	3.002	16.05	61.5	
		2.000		1.000	1.000	17.24	.058	17.24	12.62	6.4	6.40	110	4.674	1.016	3.658	63.07	78.3	
		2.500		1.250	1.104	17.36	.072	15.33	11.40	6.7	6.07	93	4.752	1.124	3.628	50.39	76.3	
		3.000		1.500	1.235	17.44	.086	14.36	10.48	7.4	5.99	86	4.809	1.258	3.551	41.29	73.8	
		3.500		1.750	1.325	17.50	.100	13.25	9.75	7.8	5.89	78	4.856	1.352	3.504	35.04	72.2	
		4.000		2.000	1.433	17.39	.115	12.46	9.04	8.5	5.93	74	4.811	1.463	3.348	29.11	69.6	
		4.500		2.250	1.517	17.44	.129	11.76	8.56	9.4	6.20	73	4.852	1.551	3.301	25.59	68.0	
		5.000		2.500	1.599	17.24	.145	11.03	7.98	10.0	6.25	69	4.761	1.637	3.124	21.54	65.6	
		5.500		2.750	1.691	17.40	.158	10.70	7.72	10.7	6.33	68	4.860	1.732	3.128	19.80	64.4	
C	0	1.000	1.500	0.667	0.910	20.21	.033	27.58	19.55	5.0	5.49	152	6.375	0.918	5.457	165.36	85.6	
		1.500		1.000	1.125	20.43	.048	23.44	16.76	6.4	5.69	133	6.785	1.137	5.648	117.07	83.2	
		2.000		1.333	1.300	21.16	.063	20.63	14.86	7.7	5.92	122	7.016	1.316	5.700	90.48	81.2	
		2.500		1.667	1.465	21.39	.078	18.78	13.48	8.9	6.08	114	7.169	1.485	5.684	72.87	79.3	
		3.000		2.000	1.615	21.74	.092	17.55	12.63	9.7	6.01	105	7.431	1.639	5.792	62.96	77.9	
		3.380		2.253	1.730	22.09	.102	16.96	12.19	10.8	6.24	106	7.679	1.756	5.923	58.07	77.1	
		4.000		2.667	1.890	22.79	.117	16.15	11.74	11.1	5.87	95	8.152	1.921	6.261	53.51	76.5	
		4.440		2.960	2.010	23.13	.128	15.70	11.39	12.3	6.11	96	8.435	2.044	6.391	49.93	75.8	

	1.250		0.833	0.914	17.35	.048	19.04	13.96	5.4	5.91	112	4.723	0.927	3.796	79.08	80.4
	1.750		1.167	1.135	18.82	.062	18.30	13.32	6.5	5.73	105	5.563	1.151	4.412	71.16	79.3
	2.250		1.500	1.320	19.48	.077	17.14	12.37	7.8	5.91	101	5.969	1.340	4.629	60.12	77.6
	2.750		1.833	1.468	20.37	.090	16.31	11.97	9.1	6.20	101	6.533	1.492	5.041	56.01	77.1
	3.250		2.167	1.616	20.84	.104	15.54	11.39	10.0	6.19	96	6.849	1.644	5.205	50.05	76.0
	3.750		2.500	1.736	21.19	.118	14.71	10.87	11.0	6.34	93	7.091	1.768	5.323	45.11	75.1
	4.250		2.833	1.870	21.14	.134	13.96	10.18	11.6	6.20	87	7.074	1.905	5.169	38.57	73.1
D	0 4.000	3.970	1.008	1.110	20.16	.050	22.20	15.89	6.5	5.86	130	6.361	1.123	5.238	104.76	82.3
	5.000		1.259	1.220	20.31	.062	19.68	14.37	7.5	6.15	121	6.467	1.236	5.231	84.37	80.9
	6.000		1.511	1.376	20.43	.074	18.19	13.23	8.4	6.24	114	6.549	1.365	5.184	70.05	79.2
	7.000		1.763	1.460	20.50	.086	16.98	12.32	9.0	6.16	105	6.612	1.483	5.129	59.64	77.6
	8.000		2.015	1.570	20.56	.098	16.02	11.55	9.7	6.18	99	6.662	1.595	5.067	51.70	76.1
	9.000		2.267	1.670	20.80	.109	15.32	11.11	10.0	5.99	92	6.827	1.699	5.128	47.05	75.1
	8.080		2.035	1.600	20.56	.099	16.16	11.52	9.5	5.94	96	6.663	1.625	5.038	50.89	75.6
	11.730		2.955	1.962	21.41	.138	14.22	10.16	12.4	6.32	90	7.256	1.997	5.259	38.11	72.5
	10.000		2.519	1.752	20.99	.120	14.60	10.68	10.4	5.94	87	6.961	1.784	5.177	43.14	74.4
	3.000		0.756	0.954	19.89	.038	25.11	12.98	5.4	5.66	142	6.181	0.964	5.217	137.29	84.4
	5.000		1.259	1.250	20.31	.062	20.16	14.37	7.4	5.92	119	6.467	1.266	5.201	83.89	80.4
	7.000		1.763	1.452	20.50	.086	16.88	12.12	8.7	5.99	101	6.612	1.475	5.137	59.73	77.7
	9.000		2.267	1.693	20.80	.109	15.53	11.11	10.5	6.20	96	6.827	1.721	5.106	46.84	74.8
	11.720		2.952	1.922	21.39	.138	13.93	10.15	11.4	5.93	83	7.243	1.959	5.284	38.29	73.0
	10.000		2.519	1.780	20.99	.120	14.83	10.68	11.2	6.29	93	6.961	1.811	5.150	42.92	74.0
	12.000		3.023	1.953	21.29	.142	13.75	9.96	12.3	6.30	87	7.180	1.990	5.190	36.55	72.3
	14.000		3.526	2.163	21.63	.163	13.27	9.44	13.0	6.01	80	7.428	2.204	5.224	32.05	70.3
	16.000		4.030	2.330	22.02	.183	12.73	9.07	13.8	5.92	75	7.712	2.376	5.336	29.16	69.2
	18.000		4.534	2.495	22.56	.201	12.41	8.87	15.4	6.17	77	8.104	2.546	5.558	27.65	68.6
	4.980		1.254	1.220	20.23	.062	19.68	14.32	7.0	5.74	113	6.417	1.236	5.181	83.56	80.7
	10.000		2.519	1.792	20.99	.120	14.93	10.68	11.0	6.14	92	6.961	1.823	5.138	42.82	73.8
	11.000		2.771	1.867	21.15	.131	14.25	10.30	11.3	6.05	86	7.077	1.901	5.176	39.51	73.1
	13.000		3.275	2.009	21.55	.152	13.22	9.74	12.4	6.17	82	7.363	2.050	5.313	34.95	72.2
	15.000		3.778	2.180	21.84	.173	12.60	9.25	13.3	6.10	77	7.580	2.226	5.354	30.95	70.6
	6.500		1.637	1.412	20.46	.080	17.65	12.75	8.9	6.30	111	6.580	1.433	5.147	64.34	78.2
	4.980		1.254	1.220	20.23	.062	19.68	14.32	7.0	5.74	113	6.417	1.236	5.181	83.56	80.7
	17.000		4.282	2.410	22.30	.192	12.56	8.77	14.6	6.05	76	7.914	2.461	5.453	28.40	68.9
	19.000		4.786	2.560	22.79	.210	12.19	8.77	15.3	5.98	73	8.275	2.614	5.661	26.96	68.4
	21.000		5.290	2.656	23.20	.228	11.65	8.56	16.0	6.02	70	8.586	2.717	5.869	25.74	68.4
	26.160		6.589	3.060	24.22	.272	11.25	8.19	19.4	6.34	71	9.381	3.132	6.249	22.97	66.6
	22.980		5.788	2.842	24.12	.240	11.84	8.68	18.7	6.58	78	9.274	2.907	6.367	26.53	68.7
	23.930		6.028	2.845	23.74	.254	11.20	8.30	18.3	6.43	72	8.998	2.915	6.083	23.95	67.6
	28.370		7.147	3.202	24.56	.291	11.00	8.02	21.0	6.56	72	9.657	3.279	6.378	21.92	66.0

TABLE 1.—*Natural stilling basin with horizontal floor (Basin I)*—Continued

Test flume (1)	S=tan Slope of floor (2)	Q c.f.s. (3)	W Width of stilling basin ft. (4)	q per ft. of W (5)	TW=D_2 ft. (6)	V_1 ft. per sec. (7)	D_1 ft. (8)	$\frac{D_2}{D_1}$ (9)	$F_1=\frac{V_1}{\sqrt{gD_1}}$ (10)	L Length of jump ft. (11)	$\frac{L}{D_2}$ (12)	$\frac{L}{D_1}$ (13)	$E_1=d_1+\frac{V_1^2}{2g}$ ft. (14)	$E_2=d_2+\frac{V_2^2}{2g}$ ft. (15)	$E_L=E_1-E_2$ ft. (16)	$\frac{E_L}{D_1}$ (17)	$\frac{E_L}{E_1}$ % (18)	Gate opening ft. (19)
E	0	5.000	3.970	1.259	0.840	10.49	.120	7.00	5.34	5.0	5.95	42	1.831	0.875	0.956	7.97	52.2	Dam 1.5′ high.
		6.000		1.511	0.940	10.57	.143	6.57	4.92	5.6	5.96	39	1.880	0.980	0.900	6.29	47.9	
		7.000		1.763	0.990	10.75	.164	6.04	4.67	5.9	5.96	36	1.960	1.039	0.921	5.62	47.0	
		8.000		2.014	1.080	10.89	.185	5.84	4.46	6.3	5.83	34	2.029	1.134	0.895	4.84	44.1	
		9.000		2.266	1.160	11.05	.205	5.66	4.30	6.6	5.69	28	2.104	1.219	0.885	4.32	42.1	
		11.000		2.770	1.260	11.17	.248	5.08	3.95	7.1	5.63	32	2.188	1.335	0.853	3.44	39.0	
		4.000		1.008	0.770	10.28	.098	7.86	5.79	4.7	6.10	48	1.742	0.796	0.946	9.65	54.3	
		10.000		2.518	1.220	11.09	.227	5.37	4.10	6.9	5.66	30	2.139	1.286	0.853	3.76	39.9	
		10.002		2.518	1.080	8.99	.280	3.86	3.00	6.0	5.56	21	1.536	1.164	0.372	1.33	24.2	Dam 10″ high.
		9.000		2.266	1.000	8.78	.258	3.88	3.05	5.5	5.50	21	1.457	1.080	0.377	1.46	25.9	
		8.000		2.014	0.960	8.76	.230	4.17	3.22	5.0	5.21	22	1.413	1.029	0.384	1.67	27.2	
		7.000		1.763	0.900	8.24	.214	4.21	3.13	4.7	5.22	22	1.269	0.961	0.308	1.44	24.3	
		6.000		1.511	0.820	8.39	.180	4.56	3.48	4.3	5.24	24	1.274	0.873	0.401	2.23	31.5	
		5.000		1.259	0.760	7.77	.162	4.69	3.40	4.1	5.39	25	1.102	0.803	0.299	1.85	27.2	
		4.000		1.007	0.660	7.75	.130	5.08	3.79	3.7	5.61	28	1.064	0.697	0.367	2.82	34.5	
		3.000		0.755	0.570	7.95	.100	5.70	4.21	3.3	5.79	33	1.082	0.597	0.485	4.85	44.8	
		5.084		1.281	0.620	5.80	.221	2.81	2.17	2.6	4.19	12	0.744	0.686	0.058	0.26		Dam 6″ high.
		3.675		0.926	0.510	5.12	.168	3.04	2.20	2.5	4.90	15	0.576	0.561	0.015	0.09		
		2.440		0.615	0.410	5.44	.113	3.63	2.85	2.2	5.36	19	0.573	0.445	0.128	1.13		
		7.680		1.934	0.770	5.69	.340	2.26	1.72	3.0	3.90	9	0.874	0.866	0.008	0.02		
		6.000		1.511	0.690	5.68	.266	2.59	1.93	2.8	4.06	10	0.768	0.765	0.003	0.01		
F	0	0.960	1.000	0.960	0.792	12.15	.079	10.03	7.62	4.0	5.05	51	2.371	0.815	1.556	19.70	65.6	0.125
		0.815		0.815	0.653	9.59	.085	7.68	5.80	3.0	4.59	35	1.513	0.677	0.836	9.84	55.3	
		0.680		0.680	0.540	8.61	.079	6.84	5.40	2.4	4.44	30	1.230	0.565	0.665	8.42	54.1	
		1.580		1.580	0.992	11.70	.135	7.35	5.61	6.2	6.25	46	2.261	1.031	1.230	9.11	54.4	.208
		1.200		1.200	0.740	8.89	.135	5.48	4.26	4.3	5.81	32	1.362	0.781	0.581	4.30	42.7	
		1.400		1.400	0.880	10.37	.135	6.52	4.97	5.4	6.14	40	1.805	0.919	0.886	6.56	49.1	
		2.230		2.230	1.220	12.89	.173	7.05	5.46	7.3	5.98	42	2.753	1.272	1.481	8.56	53.8	.281
		1.730		1.730	0.927	10.00	.173	5.36	4.24	5.2	5.61	30	1.726	0.981	0.745	4.31	43.2	
		1.250		1.250	0.644	7.23	.173	3.72	3.06	3.4	5.28	20	0.985	0.702	0.283	1.64	28.7	
		1.150		1.150	0.581	6.65	.173	3.36	2.82	3.1	5.34	18	0.860	0.642	0.218	1.26	25.3	
		1.400		1.400	0.638	6.69	.210	3.04	2.57	3.3	5.17	16	0.901	0.712	0.189	0.90	21.0	.333

		1.850		1.850	0.882	8.81	.210	4.20	3.39	5.0	5.67	24	1.415	0.950	0.465	2.21	32.9	
					1.075	10.48	.210	5.12	4.03	6.2	5.77	30	1.915	1.140	0.775	3.69	40.5	
					1.345	13.05	.210	6.40	5.02	8.2	6.10	39	2.854	1.410	1.444	6.88	50.6	
					0.753	7.29	.251	3.00	2.56	3.5	4.65	14	1.076	0.845	0.231	0.92	21.5	0.396
					1.023	9.36	.251	4.08	3.29	5.6	5.47	22	1.611	1.105	0.506	2.02	31.4	
					1.235	11.08	.251	4.92	3.90	7.2	5.83	29	2.157	1.314	0.843	3.36	39.1	
					1,427	12.61	.251	5.69	3.44	8.4	5.89	33	2.720	1.504	1.216	4.84	44.7	
					0.704	6.67	.285	2.47	2.20	3.2	4.55	11	0.976	0.817	0.159	0.56	16.3	.458
					1.016	8.91	.285	3.56	2.94	5.3	5.22	19	1.518	1.113	0.405	1.42	26.7	
					1.219	10.53	.285	4.28	3.48	7.0	5.74	25	2.007	1.313	0.694	2.44	34.6	
					1.435	12.14	.285	5.04	4.01	8.3	5.78	29	2.574	1.525	1.049	3.68	40.8	

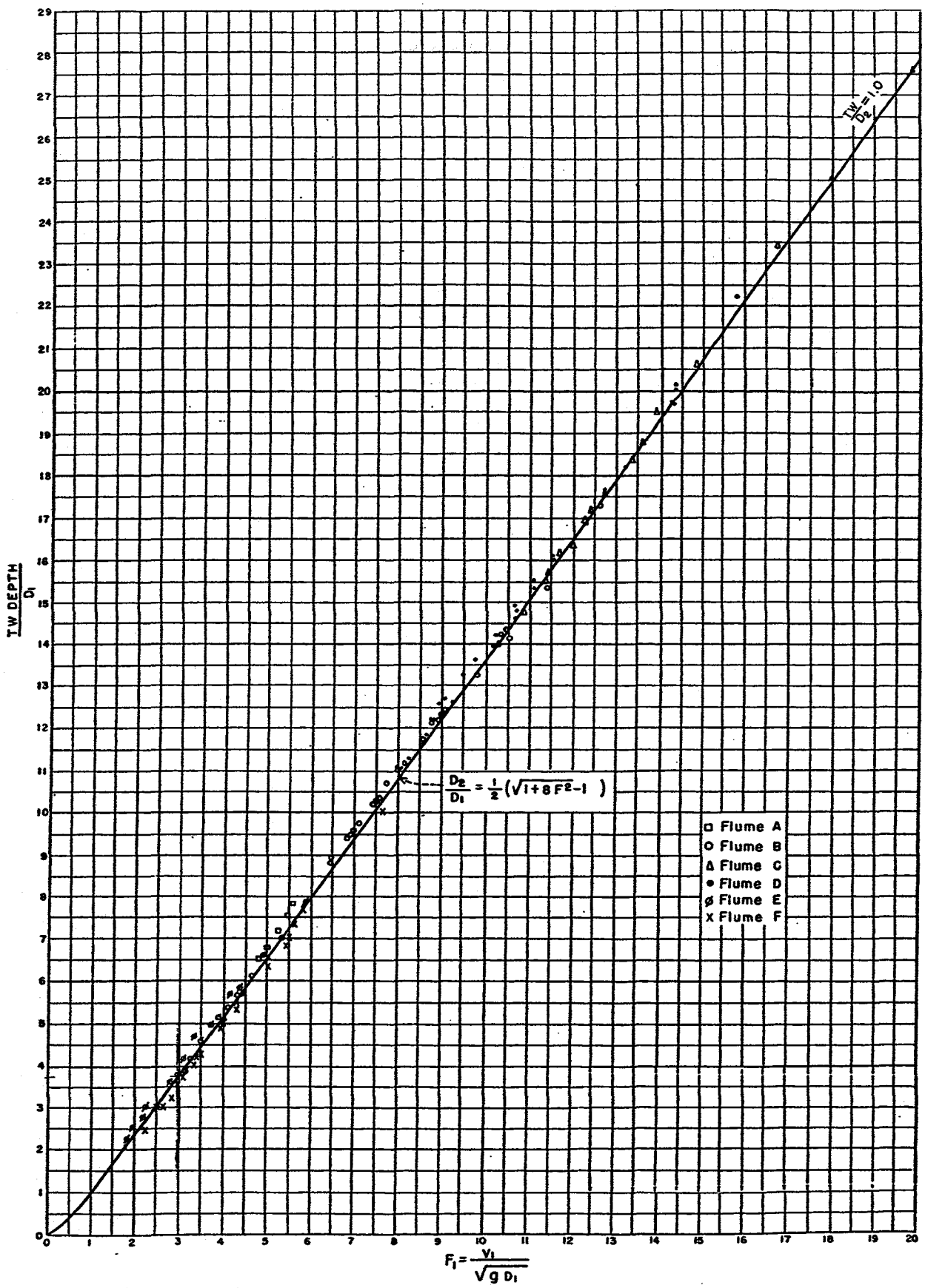

FIGURE 5.—*Ratio of tail water depth to D_1 (Basin I).*

5,2 605
3

opening. The extreme case involved a discharge of 0.14 c.f.s. and a value of D_1 of 0.032 foot, for $F_1=8.9$, which is much smaller than any discharge or value of D_1 used in the present experiments. Thus, it is reasoned that as the gate opening decreased, in the 6-inch-wide flume, frictional resistance in the channel downstream increased out of proportion to that which would have occurred in a larger flume or a prototype structure. Thus, the jump formed in a shorter length than it should. In laboratory language, this is known as "scale effect," and is construed to mean that prototype action is not faithfully reproduced. It is quite certain that this was the case for the major portion of curve 1. In fact, Bahkmeteff and Matzke were somewhat dubious concerning the small-scale experiments.

To confirm the above conclusion, it was found that results from Flume F, which was 1 foot wide, became erratic when the value of D_1 approached 0.10. Figures 6 and 7 show three points obtained with a value of D_1 of approximately 0.085. The three points are given the symbol ⊠ and fall short of the recommended curve.

The two remaining curves, labeled "3" and "4," on Figure 7, portray the same trend as the recommended curve. The criterion used by each experimenter for judging the length of the jump is undoubtedly responsible for the displacement. The curve labeled "3" was obtained at the Technical University of Berlin on a flume ½ meter wide by 10 meters long. The curve labeled "4" was determined from experiments performed at

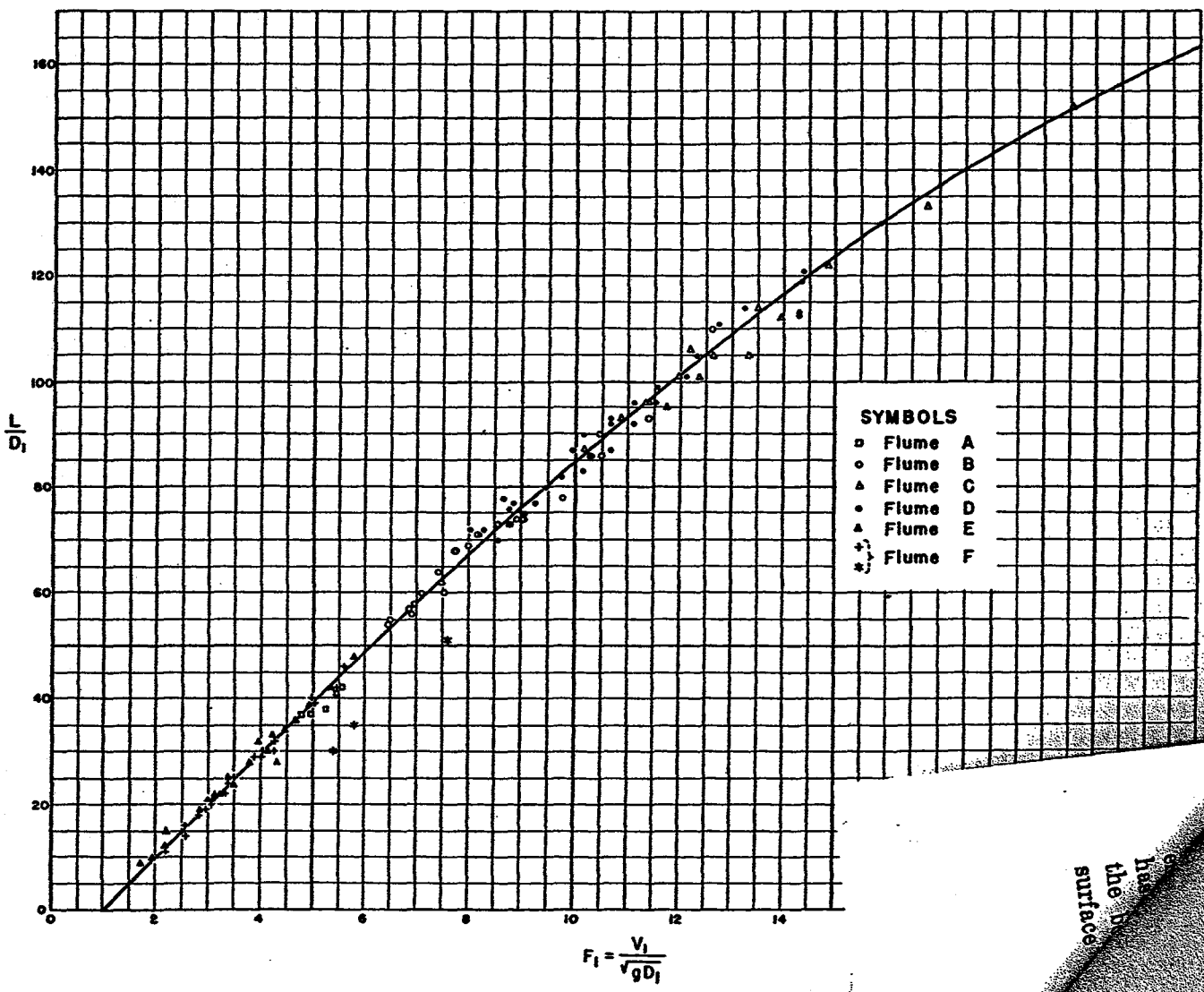

FIGURE 6.—*Length of jump in terms of D_1 (Basin I).*

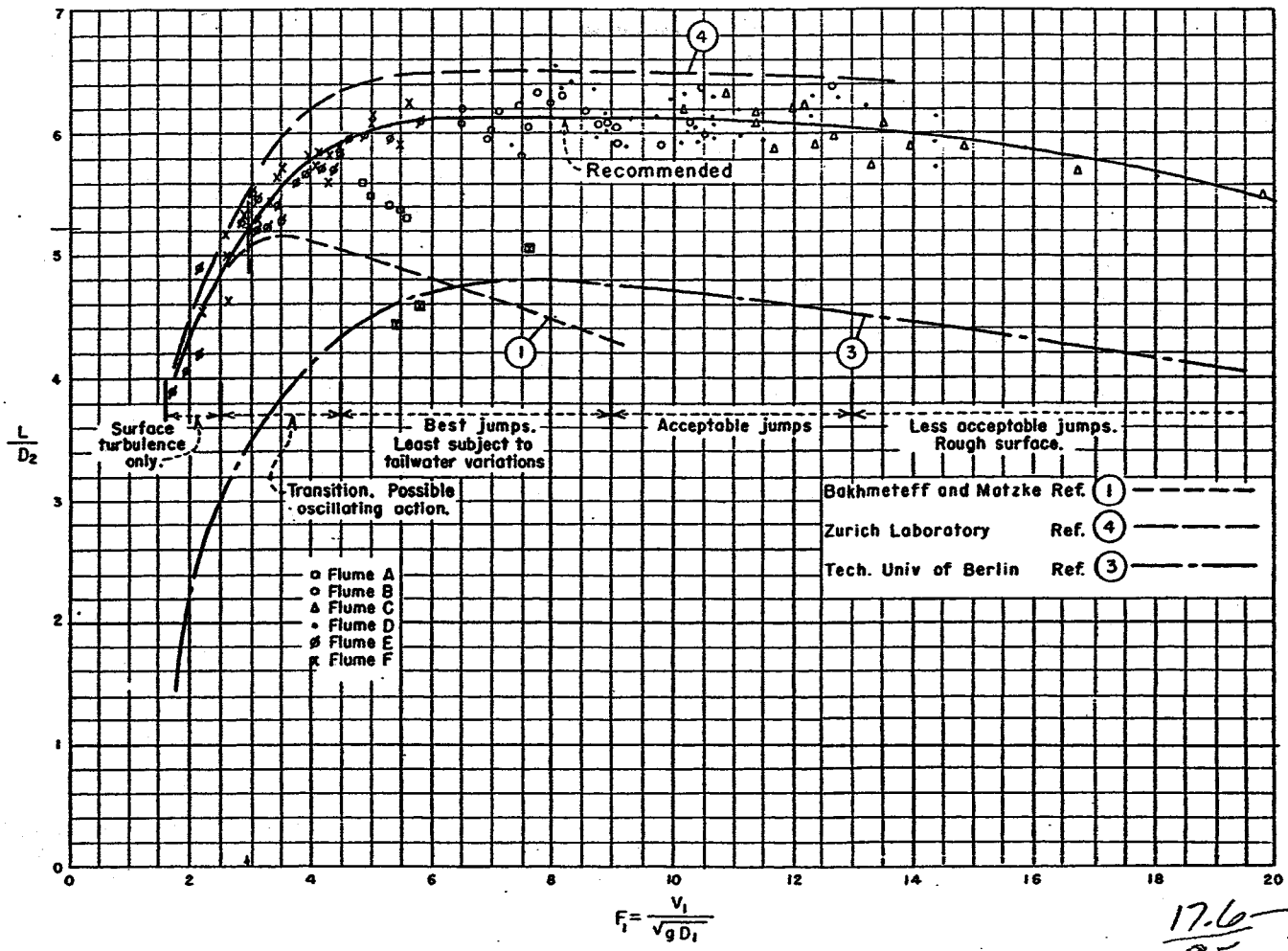

17.6 / 9.5 Cos

FIGURE 7.—*Length of jump in terms of D_2 (Basin I).*

the Federal Institute of Technology, Zurich, Switzerland, on a flume 0.6 of a meter wide and 7 meters long. The curve numbers are the same as the reference numbers in the "Bibliography" which refer to the work.

As can be observed from Figure 7, the test results from Flumes B, C, D, E, and F plot sufficiently well to establish a single curve. The five points from Flume A, denoted by squares, appear somewhat erratic and plot to the right of the general curve. Henceforth, reference to Figure 7 will concern only the recommended curve, which is considered applicable for general use.

Energy Absorption in Jump

With the experimental information available, the energy absorbed in the jump may be computed. Columns 14 through 18, Table 1, list the computations, and the symbols may be defined by consulting the specific energy diagram in Figure 4. Column 14 lists the total energy, E_1, entering the jump at Section 1 for each test. This is simply the depth of flow, D_1, plus the velocity head computed at the point of measurement. The energy leaving the jump, which is the depth of flow plus the velocity head at Section 2, is tabulated in Column 15. The differences in the values of Columns 14 and 15 constitute the loss of energy, in feet of water, attributed to the conversion, Column 16. Column 18 lists the percentage of energy lost in the jump, E_L, to the total energy entering the jump, E_1. This percentage is plotted with respect to the Froude number and is shown as the curve to the left on Figure 8. For a Froude number of 2.0, which would correspond to a relatively thick jet entering the jump at low velocity, the curve shows the

energy absorbed in the jump to be about 7 percent of the total energy entering. Considering the other extreme, for a Froude number of 19, which would be produced by a relatively thin jet entering the jump at very high velocity, the absorption by the jump would amount to 85 percent of the energy entering. Thus, the hydraulic jump can perform over a wide range of conditions. There are poor jumps and good jumps, the most satisfactory occurring over the center portion of the curve.

Another method of expressing the energy absorption in a jump is to express the loss, E_L, in terms of D_1. The curve to the right on Figure 8 shows the ratio $\frac{E_L}{D_1}$ (Column 17, Table 1) plotted against the Froude number. Losses in feet of head are obtained from this method.

Forms of the Hydraulic Jump

The hydraulic jump may occur in at least four different distinct forms on a horizontal apron, as shown in Figure 9. All of these forms are encountered in practice. The internal characteristics of the jump and the energy absorption in the jump vary with each form. Fortunately these forms, some of which are desirable and some undesirable, can be cataloged conveniently with respect to the Froude number, as shown in Figure 9.

When the Froude number is unity, the water is flowing at critical depth; thus a jump cannot form. This corresponds to Point 0 on the specific energy diagram of Figure 4. For values of the Froude number between 1.0 and 1.7, there is only a slight difference in the conjugate depths D_1 and D_2. A slight ruffle on the water surface is the

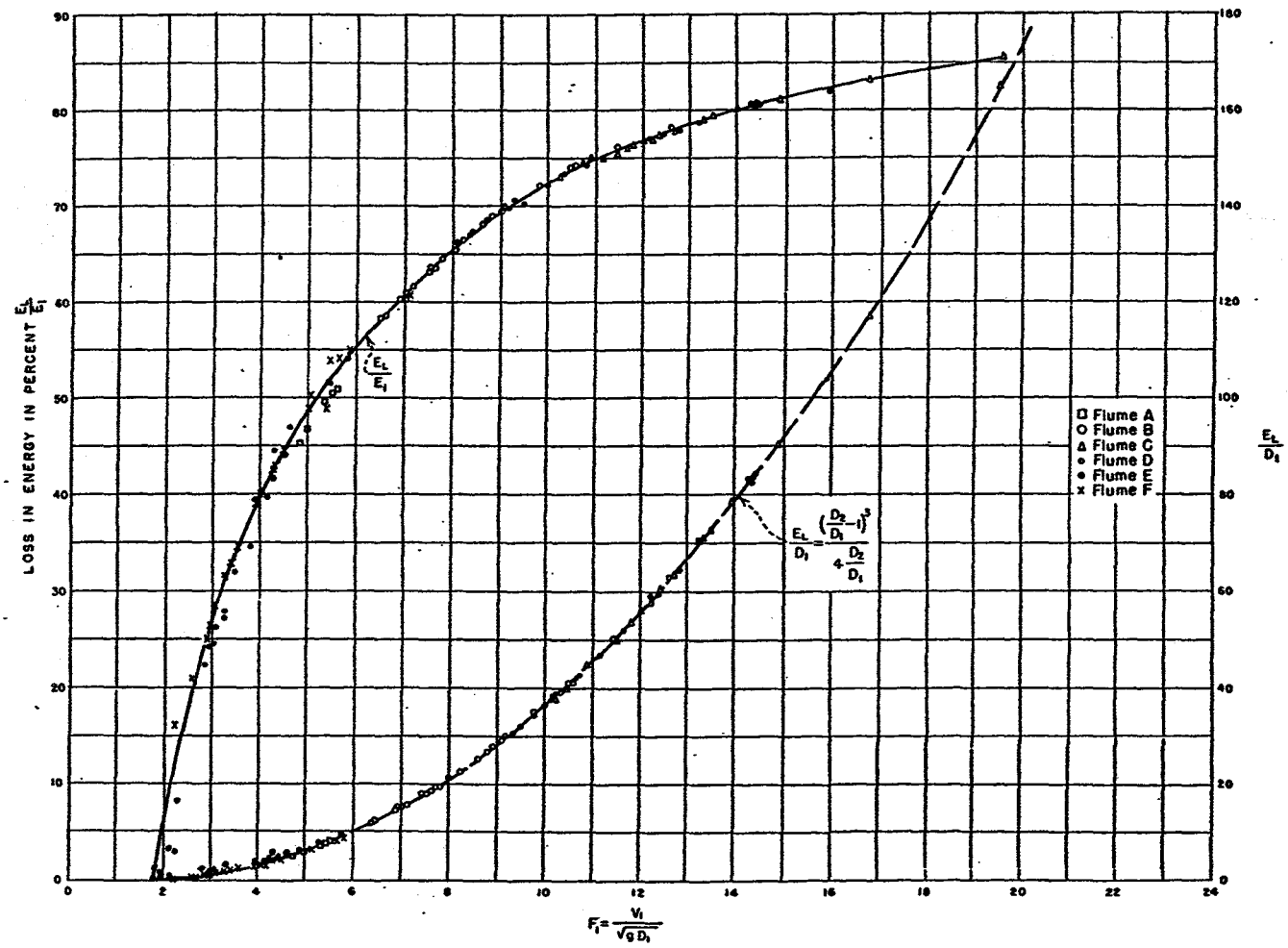

FIGURE 8.—*Loss of energy in jump on horizontal floor (Basin I).*

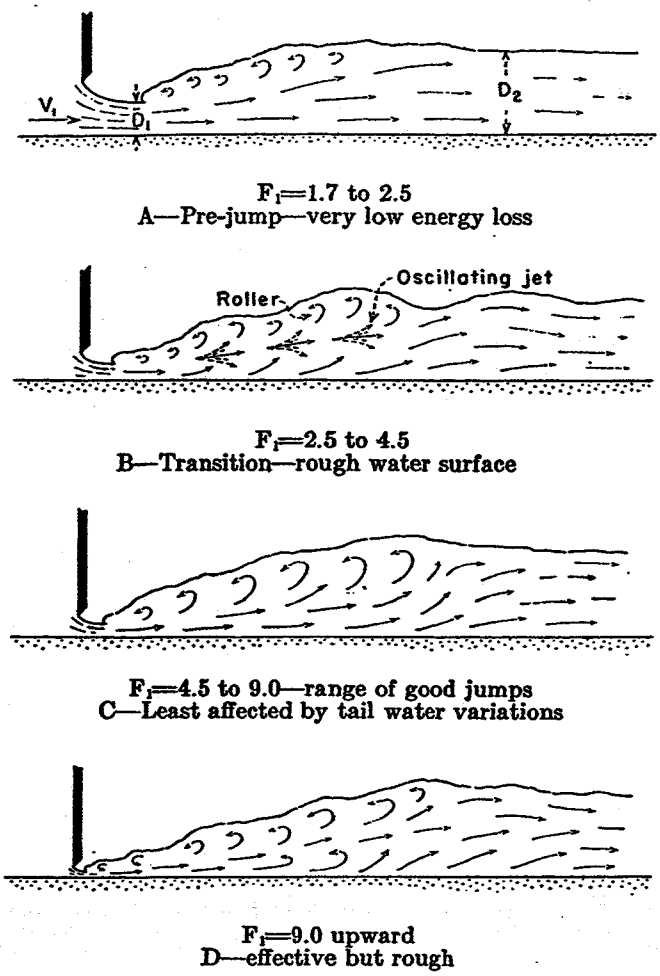

F_1=1.7 to 2.5
A—Pre-jump—very low energy loss

F_1=2.5 to 4.5
B—Transition—rough water surface

F_1=4.5 to 9.0—range of good jumps
C—Least affected by tail water variations

F_1=9.0 upward
D—effective but rough

FIGURE 9.—*Jump forms (Basin I).*

only apparent feature that differentiates this flow from flow at critical depth. As the Froude number approaches 1.7, a series of small rollers develop on the surface as indicated in Figure 9A, and this action remains much the same but with further intensification up to a value of about 2.5. In this range there is no particular stilling basin problem involved; the water surface is quite smooth, the velocity throughout the cross section is fairly uniform, and the energy loss is less than 20 percent, Figure 8.

Figure 9B indicates the type of jump that may be encountered at values of the Froude number from 2.5 to 4.5. This type has a pulsating action and is usually seen in low head structures. The entering jet oscillates from bottom to surface and has no regular period. Turbulence occurs near the bottom at one instant and entirely on the surface the next. Each oscillation produces a large wave of irregular period which in prototype structures has been observed to travel for miles causing damage to earth banks and riprap. This problem is of sufficient importance that a separate section, Section 4, has been devoted to the practical aspects of design.

A well-stabilized jump can be expected for the range of Froude numbers between 4.5 and 9, Figure 9C. In this range, the downstream extremity of the surface roller and the point at which the high-velocity jet tends to leave the floor occur in practically the same vertical plane. The jump is well balanced and the action is thus at its best. The energy absorption in the jump for Froude numbers from 4.5 to 9 ranges from 45 to 70 percent, Figure 8.

As the Froude number increases above 9, the form of the jump gradually changes to that shown in Figure 9D; V_1 is very high, D_1 is comparatively small, and the difference in conjugate depths is large. The high-velocity jet no longer carries through for the full length of the jump; that is, the downstream extremity of the surface roller now becomes the determining factor in judging the length of the jump. Slugs of water rolling down the front face of the jump intermittently fall into the high-velocity jet, generating additional waves downstream, and a rough surface can prevail. Figure 8 shows that the energy dissipation for these jumps is high and may reach 85 percent.

The limits of the Froude number given above for the various forms of jump are not definite values but overlap somewhat depending on local factors. Returning to Figure 7, it is found that the length curve catalogs the various forms of the jump. The flat portion of the curve indicates the range of best operation. The steep portion of the curve to the left definitely indicates an internal change in the form of the jump. In fact, two changes are manifest, the form shown in Figure 9A and the form, which might better be called a transition stage, shown in Figure 9B. The right end of the curve on Figure 7 also indicates a change in form, but to less extent.

Practical Considerations

Although the academic rather than the practical viewpoint is stressed in this section, a few of the practical aspects of stilling basin design

should be discussed. Considering the four forms of jump just discussed, the following are pertinent:

1. All jump forms shown in Figure 9 are encountered in stilling basin design.
2. The form in Figure 9A requires no baffles or special devices in the basin. The only requirement is to provide the proper length of pool, which is relatively short. This can be obtained from Figure 7.
3. The form in Figure 9B presents wave problems which are difficult to overcome. This jump is frequently encountered in the design of canal structures, diversion or low dam spillways, and even outlet works. Baffle piers or appurtenances in the basin are of little value. Waves are the main source of difficulty and methods for coping with them are discussed in Section 4. The present information may prove valuable in that it will help to restrict the use of jumps in the 2.5 to 4.5 Froude number range. In many cases the critical range cannot be avoided, but in others the jump may be brought into the desirable range by altering the dimensions of the structure.
4. No particular difficulty is encountered in the form shown in Figure 9C. Arrangements of baffles and sills will be found valuable as a means of shortening the length of basin. This is discussed in Sections 2 and 3.
5. As the Froude number increases, the jump becomes more sensitive to tail water depth. For numbers as low as 8, a tail water depth greater than the conjugate depth is advisable to be certain that the jump will stay on the apron. This phase is discussed in more detail in the following sections.
6. When the Froude number is greater than 10, the difference in conjugate depths is great, and, generally speaking, a very deep basin with high training walls is required. On high spillways the cost of the stilling basin may not be commensurate with the results obtained. A bucket-type dissipator may give comparable results at less cost. On lower head structures the action in the basin will be rugged in appearance with surface disturbances being of greatest concern.
7. High Froude numbers will always occur for flow through extremely small gate openings on even the smallest structures. Unless the discharge for these conditions represents an appreciable percentage of the design flow, the high Froude numbers have no significance.

Water-Surface Profiles and Pressures

Water-surface profiles for the jump on a horizontal floor were not measured as these have already been determined by Bakhmeteff and Matzke (*1*), Newman and LaBoon (*19*), and Moore (*27*, *18*). It has been shown by several experimenters that the vertical pressures on the floor of the stilling basin are virtually the same as the static head indicated by the water-surface profile.

Conclusions

The foregoing experiments and discussion serve to associate the Froude number with the hydraulic jump and stilling basin design. The ratio of conjugate depths, the length of jump, the type of jump to be expected, and the losses involved have all been related to this number. The principal advantage of this form of presentation is that one may analyze the problem, provide the solution, and determine the probable performance characteristics from relatively simple and rapid calculations.

Application of Results (Example 1)

Water flowing under a sluice gate discharges into a rectangular stilling basin the same width as the gate. The average velocity and the depth of flow after contraction of the jet is complete are: $V_1=85$ ft. per sec. and $D_1=5.6$ feet. Determine the conjugate tail water depth, the length of basin required to confine the jump, the effectiveness of the basin to dissipate energy, and the type of jump to be expected.

$$F_1=\frac{V_1}{\sqrt{gD_1}}=\frac{85}{\sqrt{32.2\times5.6}}=6.34$$

Entering Figure 5 with this value

$$\frac{D_2}{D_1}=8.5$$

The conjugate tail water depth

$$D_2=8.5\times5.6=47.6 \text{ feet}$$

Entering the recommended curve on Figure 7 with a Froude number of 6.34.

$$\frac{L}{D_2}=6.13$$

Length of basin necessary to confine the jump

$$L=6.13\times47.6=292 \text{ feet}$$

Entering Figure 8 with the above value of the Froude number, it is found that the energy absorbed in the jump is 58 percent of the energy entering.

By consulting Figure 9, it is apparent that a very satisfactory jump can be expected.

The following sections deal with the more practical aspects of stilling basin design, such as modifying the jump by baffles and sills to increase stability and shorten the length.

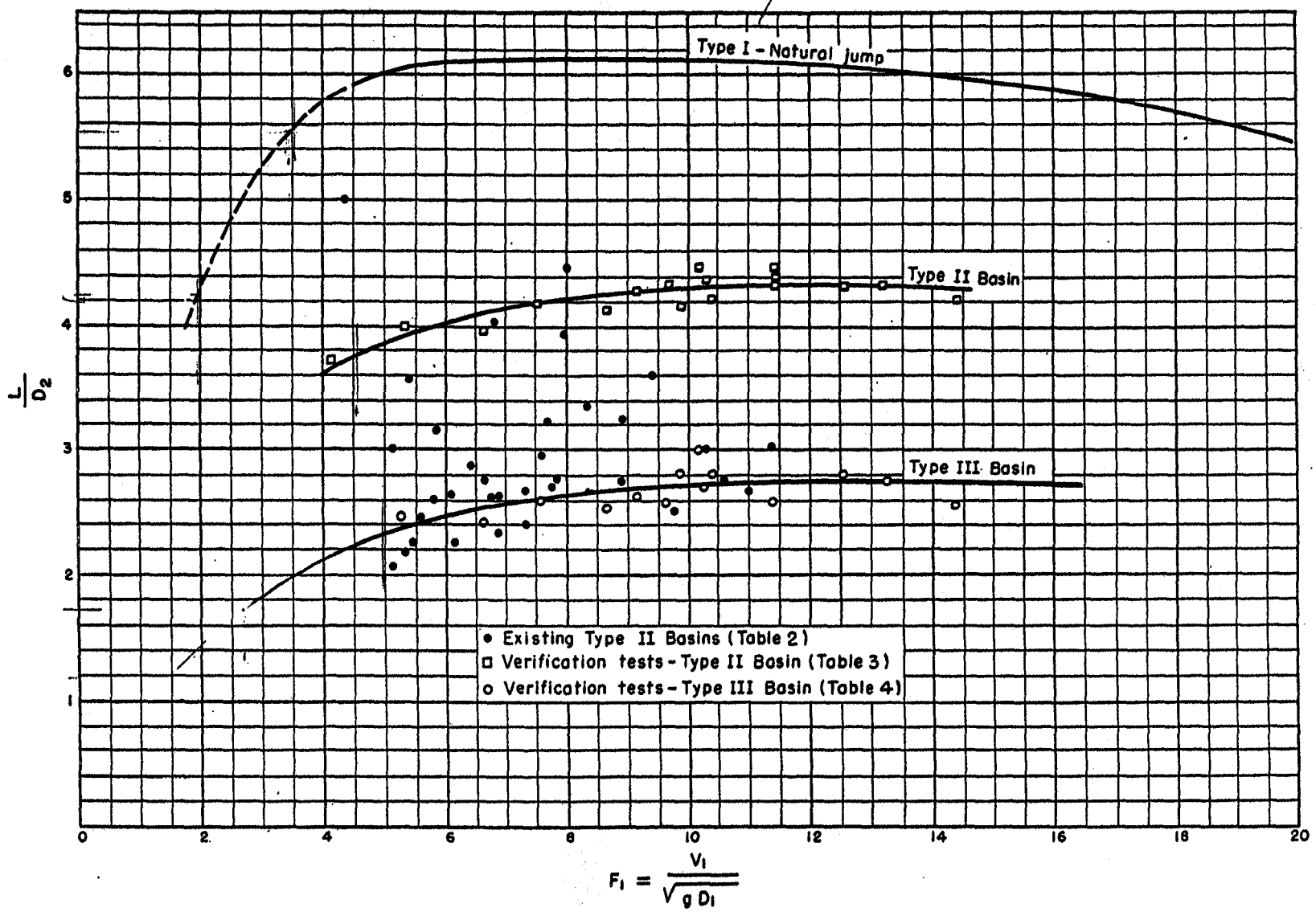

FIGURE 12.—*Length of jump on horizontal floor (Basins I, II, and III).*

Allow 2.6 picas
Margin to trim

Section 4

Stilling basin design and wave suppressors for canal structures, outlet works, and diversion dams (Basin IV)

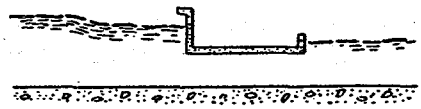

THIS section concerns the characteristics of the hydraulic jump for Froude numbers between 2.5 and 4.5 and the design of an adequate stilling basin, designated as Basin IV. The low Froude number range is encountered principally in the design of canal structures, but occasionally low dams and outlet works fall in this category. In the 2.5 to 4.5 Froude number range, Figure 9B, the jump is not fully developed and the previously discussed methods of design do not apply. The main problem concerns the waves created in the unstable hydraulic jump, making the design of a suitable wave suppressor a part of the stilling basin problem.

Four means of reducing wave heights are discussed. The first is an integral part of the stilling basin design and should be used only in the 2.5 to 4.5 Froude number range. The second may be considered to be an alternate design and may be used over a greater range of Froude numbers. These types are discussed as a part of the stilling basin design. The third and fourth devices are considered as appurtenances which may be included in an original design or added to an existing structure. Also, they may be used in any open channel flow-way without consideration of the Froude number. These latter devices are described under the heading Wave Suppressors.

Jump Characteristics—Froude Number 2.5 to 4.5

For low values of the Froude number, 2.5 to 4.5, the entering jet oscillates intermittently from bottom to surface, as indicated in Figure 9B, with no particular period. Each oscillation generates a wave which is difficult to dampen. In narrow structures, such as canals, waves may persist to some degree for miles. As they encounter obstructions in the canal, such as bridge piers, turnouts, checks, and transitions, reflected waves may

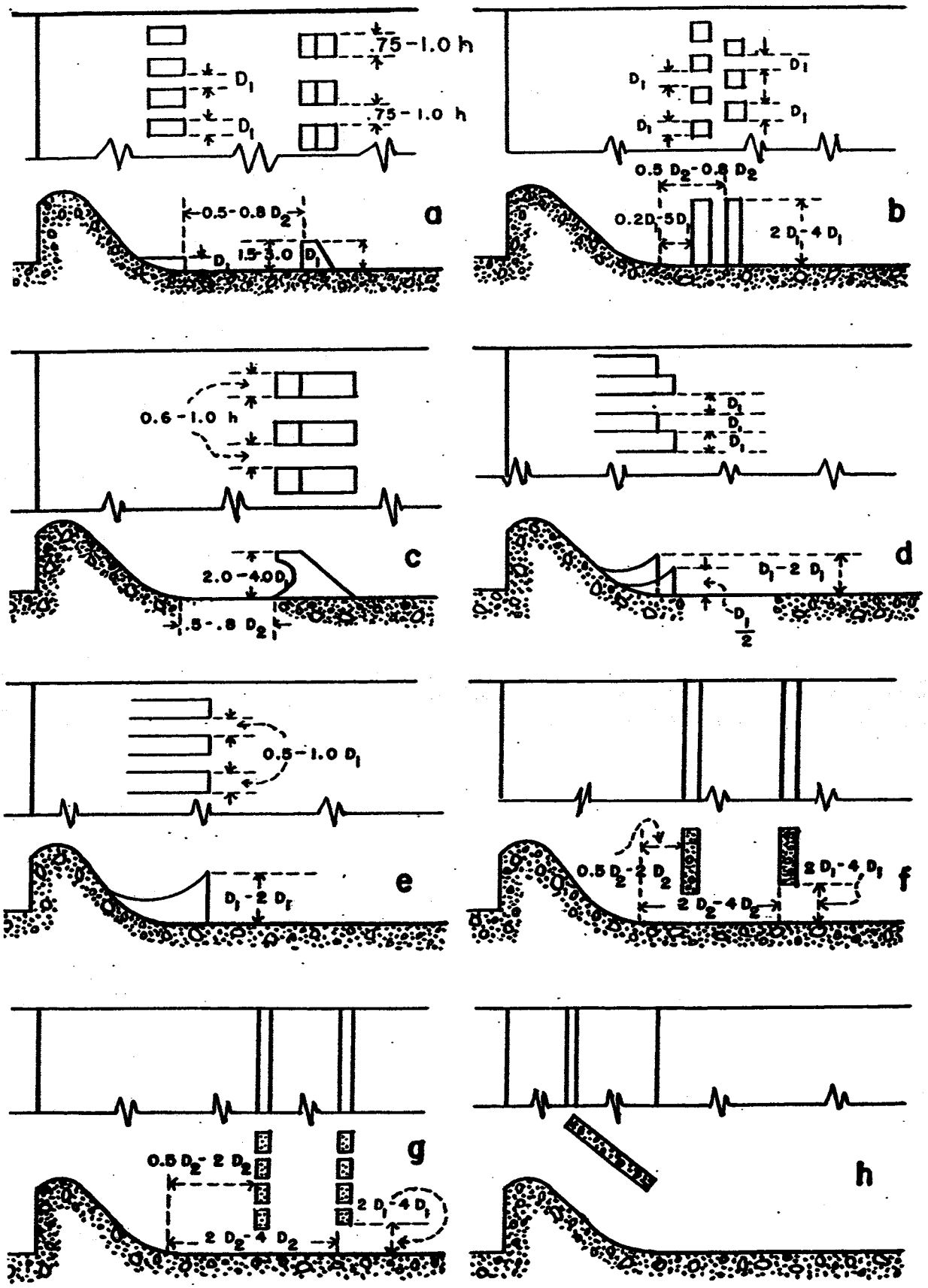

FIGURE 21.—*Record of appurtenances (Basin IV).*

be generated which tend to dampen, modify, or intensify the original wave. Waves are destructive to earth-lined canals and riprap and produce undesirable surges at gaging stations and in measuring devices. Structures in this range of Froude numbers are the ones which have been found to require the most maintenance.

On wide structures, such as diversion dams, wave action is not as pronounced when the waves can travel laterally as well as parallel to the direction of flow. The combined action produces some dampening effect but also results in a choppy water surface. These waves may or may not be dissipated in a short distance. Where outlet works operating under heads of 50 feet or greater fall within the range of Froude numbers between 2.5 and 4.5, a model study of the stilling basin is imperative. A model study is the only means of including preventive or corrective devices in the structure to assure proper performance.

Stilling Basin Design—Froude Number 2.5 to 4.5

Development tests. The best way to combat a wave problem is to eliminate the wave at its source by altering the condition which generates the wave. For the stilling basin preceded by an overfall or chute, two schemes were apparent for eliminating waves at their source. The first was to break up the entering jet by opposing it with directional jets deflected from baffle piers or sills. The second was to bolster or intensify the roller, shown in the upper portion of Figure 9B, by directional jets deflected from large chute blocks.

The first method was unsuccessful in that the number and size of appurtenances necessary to break up the jet occupied so much volume that the devices themselves posed an obstruction to the flow. This conclusion was based on tests in which various shaped baffle and guide blocks were systematically placed in a stilling basin in combination with numerous types of spreader teeth and deflectors in the chute. The program involved dozens of tests, and not until all possible ideas were tried was this approach abandoned. A few of the basic ideas tested are shown in Figure 21, a, b, c, f, g, and h.

Final Tests

Deflector blocks. The second approach, that of attempting to intensify the roller, yielded better results. Large blocks, similar to but larger than chute blocks, were placed on the chute; no changes were made in the stilling basin proper. The object was to direct a jet into the base of the roller in an attempt to strengthen it and thereby stabilize the jump. After a number of trials, using blocks with a curved top, the roller was actually intensified and the jump action was improved. Sketches d and e in Figure 21 indicate the only schemes that showed promise, although many variations were tried. Approximations of these curved top blocks were then tested to make the field construction as simple as possible. The dimensions and proportions of the adopted deflector blocks are shown in Figure 22.

The tests showed that it was desirable to place as few appurtenances as possible in the path of the flow, as volume occupied by appurtenances helps to create a backwater problem, thus requiring higher training walls. Also, random placement of blocks is apt to create a new wave problem in addition to the original problem. The number of deflector blocks shown in Figure 22 is a minimum requirement to accomplish the purpose set forth. The width of the blocks is shown equal to D_1 and this is the maximum width recommended. From a hydraulic standpoint it is desirable that the blocks be constructed narrower than indicated, preferably $0.75D_1$. The ratio of block width to spacing should be maintained as 1:2.5. The extreme

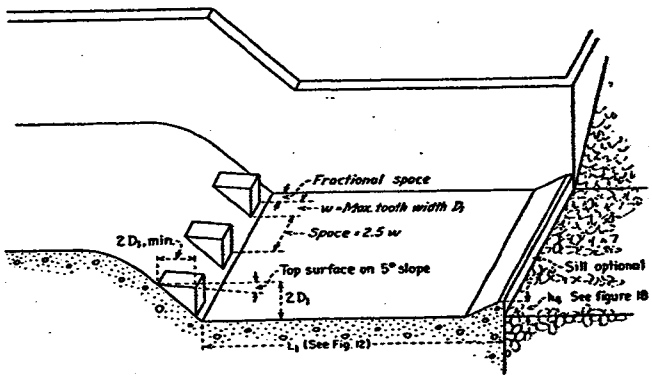

FIGURE 22.—*Proportions for Froude numbers 2.5 to 4.5 (Basin IV).*

tops of the blocks are $2D_1$ above the floor of the stilling basin. The blocks may appear to be rather high and, in some cases, extremely long; but this is essential as the jet leaving the top of the blocks must play at the base of the roller to be effective. To accommodate the various slopes of chutes and ogee shapes encountered, the horizontal top length of the blocks should be at least $2D_1$. The upper surface of each block is sloped at 5° in a downstream direction as it was found that this feature resulted in better operation, especially for discharges lower than the design flow.

Tail water depth. A tail water depth 5 to 10 percent greater than the conjugate depth is strongly recommended for Basin IV. Since the jump is very sensitive to tail water depth at these low values of the Froude number, a slight deficiency in tail water depth may allow the jump to sweep completely out of the basin. The jump performs much better and wave action is diminished if the tail water depth is increased to approximately $1.1D_2$.

Basin length and end sill. The length of Basin IV, which is relatively short, can be obtained from the upper curve in Figure 12. No baffle piers are needed in the basin, as these will prove a greater detriment than aid. The addition of a small triangular sill placed at the end of the apron for scour control is desirable. An end sill of the type used on Basin III is satisfactory, Figure 18.

Performance. If designed for the maximum discharge, Basin IV will perform satisfactorily for lesser flows. Waves downstream from the stilling basin will still be in evidence but will be of the ordinary variety usually encountered with jumps of a higher Froude number. Basin IV is applicable to rectangular cross sections only.

Alternative Stilling Basin IV—Small Drops

Performance. An alternative basin for reducing wave action at the source, for values of the Froude number between 2.5 and 4.5, is particularly applicable to small drops in canals. The Froude number in this case is computed for flow at the top of the drop rather than at the bottom and should be about 0.5. A series of steel rails, channel irons, or timbers in the form of a grizzly are installed at the drop, as shown in Figure 23. The overfalling jet is separated into

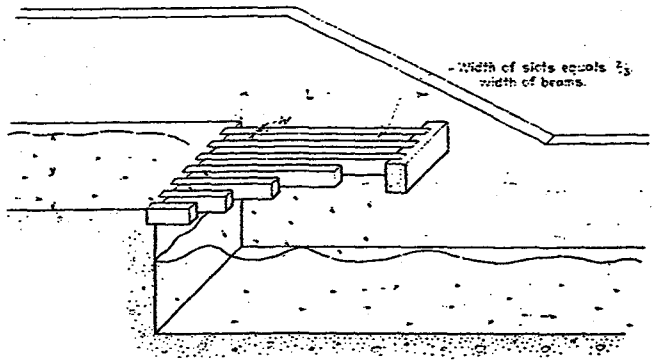

FIGURE 23.—*Drop-type energy dissipator for Froude numbers 2.5 to 4.5 (Alternative Basin IV).*

a number of long, thin sheets of water which fall nearly vertically into the canal below. Energy dissipation is excellent and the usual wave problem is avoided. If the rails are tilted downward at an angle of 3° or more, the grid is self-cleaning.

The use of this device is particularly justified when the Froude number is below 3.0. If use of a jump were possible the maximum energy loss would be less than 27 percent, as indicated in Figure 8. The suggested device accomplishes nearly as much energy loss and provides a smooth water surface in addition.

Design. Two spacing arrangements of the beams were tested in the laboratory: in the first, the spacing was equal to the width of the beams; in the second, the spacing was two-thirds of the beam width. The latter was the more effective. In the first, the length of beams required was about 2.9 times the depth of flow (y) in the canal upstream; in the second, it was necessary to increase the length to approximately 3.6y. The following expression can be used for computing the length of beams:

$$L=\frac{Q}{CSN\sqrt{2gy}} \qquad (4)$$

where Q is the total discharge in c.f.s., C is an experimental coefficient, S is the width of a space in feet, N is the number of spaces, g is the acceleration of gravity, and y is the depth of flow in the canal upstream (see Fig. 23). The value of C for the two arrangements tested was 0.245.

Should it be desired to maintain a certain level in the canal upstream, the grid may be made

APPENDIX C

Structural Analysis and Design of Stepped Spillway

BRW

JOB 43 Ave Detention Basin SHEET NO. 1
MADE BY WR DATE 11/01 JOB NO.
CHECKED BY RB DATE 1/02 SEC SHT. NO.
CALCULATIONS FOR

DESIGN SPILLWAY STRUCTURE
WALL DESIGN:

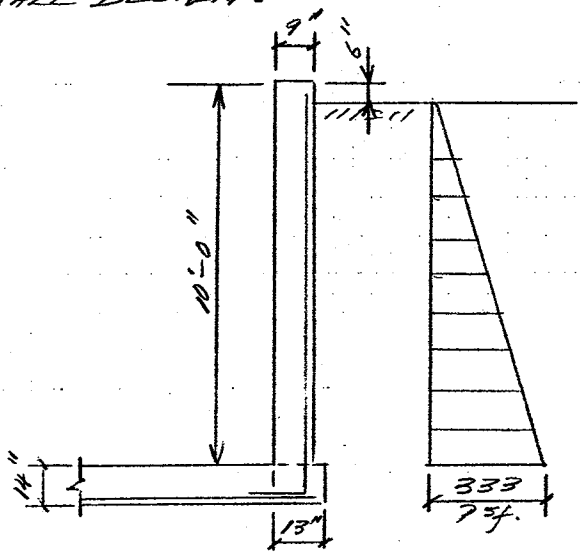

Registered Professional Engineer (Civil)
CERTIFICATE NO. 35174
WILLIAM A. RODRIGUEZ
Date Signed 1-18-02
ARIZONA, U.S.A.

Refer to Geotechnical Report by Spudie & Assocs., dated 5/27/98

Active Pressure = 35 pcf. (unrestrained wall)

$$P_A = \frac{(35\,pcf)(9.5')^2}{2} = 1{,}579\ lb/'$$

$$M_{MAX} = \frac{(1579\ lb/')(9.5')}{3} = 5{,}001\ lb\cdot'/ft.$$

Try #6 @ 12" : $A_s = 0.44\ in^2/'$

$$d = 9'' - 2''cl. - \frac{3}{8}'' = 6.62''$$

$$np = \frac{9(0.44)}{(12)(6.62)} = 0.0498\ ,\quad \rho = 0.00554$$

$$k = 0.269,\quad j = 0.910$$

$$f_s = \frac{(5.0 \times 12)}{(0.44)(0.910)(6.62)} = 22.64\ ksi < 24\ ksi \quad \underline{O.K.}$$

$$f_c = \frac{2(0.00554)(2264)}{0.269} = 0.93\ ksi < 0.4(3\ ksi) = 1.2\ ksi \quad \underline{O.K.}$$

Shear is O.K. by Inspection

BRW

JOB 43 Av. SHEET NO. 2
MADE BY WR DATE 11/01 JOB NO.
CHECKED BY RB DATE 1/02 SEC SHT. NO.
CALCULATIONS FOR

Check ρ_{min}:

$$\rho_{min} = 1.85\left(\frac{9''}{6.62''}\right)^2 \frac{\sqrt{3000}}{60{,}000}\left(\frac{0.91}{0.90}\right) = 0.00316 < 0.00554 \quad \underline{O.K.}$$

Use #6 @ 12"

Development Length

$$A_{req'd} = \frac{(5 \times 12)}{(24)(0.91)(6.62)} = 0.415 \text{ in}^2/'$$

$$l_{dh} = \frac{1{,}200\,(3/4'')}{\sqrt{3000}}(0.7)\left(\frac{0.415}{0.44}\right) = 10.85''$$

l_{dh} (provided) $= 14'' - 3''cl = 11'' > 10.85''$ O.K.

SLAB DESIGN

Try #5 @ 12": $A_s = 0.31 \text{ in}^2/'$

$$d = 14'' - 3''cl - \frac{5}{16}'' = 10.68''$$

$$n\rho = \frac{9(0.31)}{(12)(10.68)} = 0.0218, \quad \rho = 0.00242$$

$k = 0.188, \quad j = 0.937$

$$f_s = \frac{(5 \times 12)}{(0.31)(0.937)(10.68)} = 19.33 \text{ ksi} < 24 \text{ ksi} \quad \underline{O.K.}$$

f_c is O.K. by Inspection

$$\rho_{min} = 1.85\left(\frac{14}{10.68}\right)^2 \frac{\sqrt{3000}}{60{,}000}\left(\frac{0.937}{0.90}\right) = 0.0030 > 0.00242$$

BRW

JOB 43 AVE. SHEET NO. 3
MADE BY NR DATE 11/01 JOB NO.
CHECKED BY RB DATE 1/02 SEC SHT. NO.
CALCULATIONS FOR

But, $A_{req'd} = \frac{(5 \times 12)}{(24)(0.937)(10.68)} \cong 0.25\ in^2/_1 > \frac{0.31\ in^2}{1.33} = 0.23\ in^2/_1$

Try #6 @ 12": $A_s = 0.44\ in^2/_1 > 0.25\ in^2/_1$ O.K.

Use #6 @ 12"

Development Length:

l_{dh} (provided) = 9" + 4" − 3" cl. = 10"

$l_{dh} = \frac{0.04(0.44)(60{,}000)}{\sqrt{3{,}000}}(0.8)\left(\frac{0.250}{0.44}\right) \cong 9" < 10"$ o.k.

Shrinkage & Temperature Reinf.

Refer to AASHTO 8.20

$A_{req'd} = 0.125\ in^2/_1$ in each direction.

Try #4 @ 12"

$A_s = 0.20\ in^2/_1 > 0.125\ in^2/_1$ o.k.

BRW

JOB 43rd Av. SHEET NO. 4
MADE BY AR DATE 1/02 JOB NO.
CHECKED BY RB DATE 1/02 SEC SHT. NO.
CALCULATIONS FOR

DESIGN OPEN CHAMBER

WALL DESIGN:

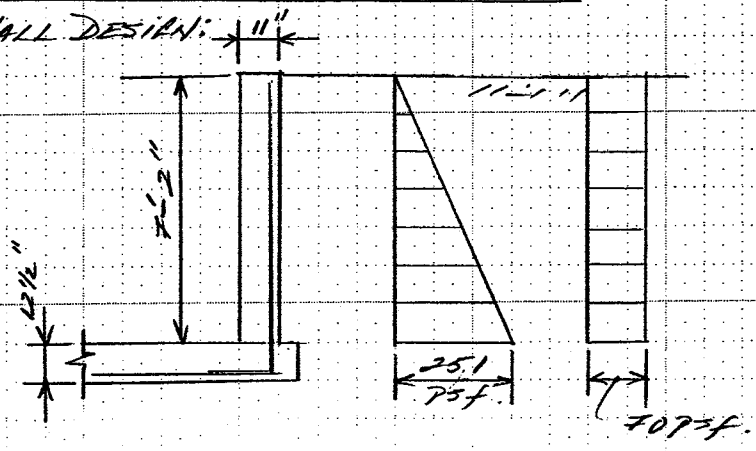

$\sigma_{surcharge} = 35\,psf/' \times 2' = 70\,psf$

$\sigma_h = 35\,psf/' \times 7.167' = 251\,psf$

$$M_{MAX} = \frac{(251\,psf)(7.167')^2}{6} + \frac{(70\,psf)(7.167')^2}{2} = 3{,}946\ lb\cdot'/ft$$

Try #5 @ 12": $A_s = 0.31\,in^2/'$ ✓

$d = 11" - 2"cl - \frac{5}{16}" = 8.68"$ ✓

$$\rho = \frac{9(0.31)}{(12)(8.68)} = 0.0268, \quad \rho = 0.00298$$

$k = 0.206, \quad j = 0.931$

$$f_s = \frac{(3.95 \times 12)}{(0.31)(0.931)(8.68)} = 18.92\,ksi < 24\,ksi \quad \underline{O.K.}$$ ✓

$$f_c = \frac{2(0.00298)(18.92)}{0.206} = 0.55\,ksi < 1.2\,ksi \quad \underline{O.K.}$$ ✓

Check ρ_{min}:

$$\rho_{min} = 1.85\left(\frac{11"}{8.68"}\right)^2 \frac{\sqrt{3{,}000}}{60{,}000}\left(\frac{0.931}{0.90}\right) = 0.00281 < 0.00298 \quad O.K.$$ ✓

<u>Use #5 @ 12"</u> ✓

BRW

JOB 43rd Av. SHEET NO. 5
MADE BY AR DATE 1/02 JOB NO.
CHECKED BY PB DATE 1/02 SEC SHT. NO.
CALCULATIONS FOR

Development Length

$A_{req'd} = \frac{(3.95 \times 12)}{(24)(0.931)(8.68)} = 0.24 \text{ in}^2/'$

$l_{dh} = \frac{1{,}200(5/8")}{\sqrt{3{,}000}}(0.7)\left(\frac{0.24}{0.31}\right) = 7.42"$

l_{dh} (provided) $= 12\frac{1}{2}" - 3"cl - \frac{3}{4}"\phi_b = 8.75" > 7.42"$ O.K.

SLAB DESIGN

$M_{MAX} \cong 3.95$ k·'/ft.

Try #5 @ 12": $A_s = 0.31 \text{ in}^2/'$

$d = 12.5" - 3"cl - \frac{3}{4}"\phi_b - \frac{5}{16}" = 8.43"$

$\rho = \frac{9(0.31)}{(12)(8.43)} = 0.0276$, $\rho = 0.00306$

$k = 0.209$, $j = 0.930$

$f_s = \frac{(3.95 \times 12)}{(0.31)(0.93)(8.43)} = 19.50 \text{ ksi} < 24 \text{ ksi}$ O.K.

f_c is O.K. by Inspection.

$\rho_{min} = 1.85\left(\frac{12.5"}{8.43"}\right)^2 \frac{\sqrt{3{,}000}}{60{,}000}\left(\frac{0.93}{0.90}\right) = 0.00384 > 0.00306$

$\therefore A_s(\text{min.}) = (0.00384)(12)(8.43 \text{ sq}) = 0.39 \text{ in}^2/'$

Try #6 @ 12": $A_s = 0.44 \text{ in}^2/' > 0.39 \text{ in}^2/'$ O.K.

Use #6 @ 12"

BRW

JOB 43rd Av. SHEET NO. 6

MADE BY WR DATE 1/02 JOB NO.

CHECKED BY RB DATE 1/02 SEC SHT. NO.

CALCULATIONS FOR

Development Length

$$A_{req'd} = \frac{(3.95 \times 12)}{(24)(0.95xy)(8.43)} = 0.26 \text{ in}^2/\text{'}$$

$$l_{dh}(req'd) = \frac{0.04(0.44)(60{,}000)}{\sqrt{3{,}000}}(0.8)\left(\frac{0.26}{0.44}\right) = 9.11''$$

$$l_{dh}(provided) = 11'' + 4'' - 3''\ cl. = 12'' > 9.11''$$ O.K.

BRW

JOB 43rd AVE. SHEET NO. 7
MADE BY AR DATE 1/02 JOB NO.
CHECKED BY RB DATE 1/02 SEC SHT. NO.
CALCULATIONS FOR

DESIGN PARAPETS OVER CULVERT

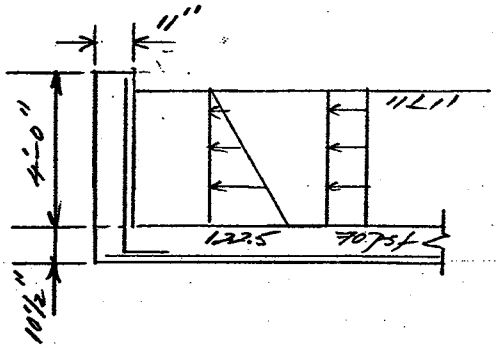

$\sigma_A = 35\,psf/_1 \times 4'\,xy = 140\,psf$

$\sigma_{surcharge} = 35\,psf/_1 \times 2' = 70\,psf$

$M_{MAX} = \frac{(140\,psf)(4')^2}{6} + \frac{(70\,psf)(4')^2}{2} = 933\ ft\cdot lb/ft$ ✓

Try #4 @ 12": $A_s = 0.20\,in^2/_1$

$d = 11" - 2"\,cl - \frac{1}{4}" = 8.75"$

$m\rho = \frac{9(0.20)}{(12)(8.75)} = 0.0171, \quad \rho = 0.00190$

$k = 0.168, \quad j = 0.943$

$f_s = \frac{(0.933 \times 12)}{(0.20)(0.943)(8.75)} = 6.8\,ksi << 24\,ksi$ O.K. ✓

f_c is O.K. by Inspection ✓

Development Length:

$A_{req'd} = \frac{(0.933 \times 12)}{(24)(0.943)(8.75)} = 0.06\,in^2/_1$ ✓

$l_{dh} = \frac{1{,}200\,(1/2")}{\sqrt{3{,}000}}(0.7) = 7.67"$ ✓

$l_{dh}\,(provided) = 10.5" - 1"\,cl. - 3/4"\,\phi_b = 8.75" > 7.67"$ O.K. ✓

APPENDIX D

Geotechnical Report by Speedie and Associates on Uplift and Other Geotechnical Issues Related to the Stepped Spillway

SPEEDIE
AND ASSOCIATES

Gregg A. Creaser, P.E.
Brett P. Creaser, P.E.
Donald L. Cornelison, P.E.
Steven A. Griess, P.E.
Timothy J. Rheinschmidt, R.G.

December 11, 2001

Nasir Raza, P.E.,
BRW Inc.
7720 N. 16th Street, Suite 100
Phoenix, AZ 85020

RE: Project No. 011184SA
Flood Detention Basin – Spillway Uplift
SEC 43rd Avenue and Southern Avenue
Phoenix, AZ

Dear Nasir:

As requested, Speedie & Associates conducted an evaluation of uplift potential and site preparation for the proposed spillway structure at the subject site. The purpose of this work was to provide information for design of the spillway. Speedie & Associates previously conducted a geotechnical investigation (Report 980172SA, dated Oct 16, 1998) at the proposed detention basin for the Flood Control District of Maricopa County (FCDMC). Speedie and Associates reviewed the geotechnical report, preliminary drawings for the basin and spillway, and hydrologic information (elevation, storage and pump rates) e-mailed from BRW Inc. December 3, 2001. This letter report presents our findings and recommendations for the proposed spillway.

BACKGROUND

Spillway Structure

Based on preliminary drawings, the total difference in potential head from inlet to basin is approximately 20 feet. An apron slab, raised concrete slab, and low flow channel are planned for the spillway outlet. We understand that some potential exists for overflow of the inlet swale and that this may result in the flow 'out-flanking' the spillway structure (personal communication with Mike Lopez, FCDMC)

Hydrologic Information

It is our understanding from the HEC-1 hydrologic model data (e-mailed from BRW Inc., December 3, 2001) that water levels in the basin will be between elevation 1002 feet (empty) and 1021 feet (full). Water will drain by gravity from the basin from full condition until the water level drops to elevation 1014 feet. Below that elevation, the water will be pumped at approximately 5 cu.ft./second (personal communication with Mike Lopez, FCDMC).

Background Geotechnical Information

As the soil logs indicate, the upper soils comprise very stiff sandy clay, silty clay, and sandy silt. Underlying these are medium dense sandy silt and silty sand followed by dense to very dense well graded sand at approximately 16 feet below existing grade. The lower unit may comprise sand, gravel and cobbles (SGC).

The upper clayey soils in the retention basin area exhibit a potential for volume increase due to wetting on the order of 3.2 percent when compacted to moistures and densities normally expected during construction. When subjected to an axial pressure of 2,200 psf, and undisturbed sample exhibited additional strain on the order of 2.5 percent when inundated.

Existing ground elevation is between approximately elevation 1019 feet and 1022 feet (personal conversation with Nasir Raza, BRW Inc December 3, 2001).

Based on water level readings taken at the 'well' location drilled during the geotechnical investigation, groundwater is located at approximately 27 feet below existing grade.

ANALYSIS AND RECOMMENDATIONS

Design for Uplift

Uplift of the spillway, especially the apron and raised concrete slab at the outlet, has been one focus of this investigation. Based on the soil logs, hydrologic information (drawdown rate), and preliminary drawings, it is our opinion that uplift will not be a major concern for the apron and raised slab. However, some subgrade preparation and under-drains are recommended to mitigate potential concerns for percolation and pore pressures adjacent to the upper structure, collapse of native soils, and erosion. The structure need not be designed for uplift pressures as a result of mitigative measures (special provisions). Weep holes are not required. Special provisions include a French drain and trench drains.

These recommendations assume that a major rise in groundwater elevation has not occurred since the well readings were taken and that a sudden rise will not occur at the spillway elevation.

Based on simple drawdown calculations using the hydrologic data, the basin will take in excess of 72 hours to empty from the 1014 elevation. However, we understand that the hydrologic model does not account for water percolation through the bottom of the basin. Percolation rates could potentially be significant through the lower sand and gravel deposits on site. This would result in faster drawdown rates than our calculations show. However, the basin landscaping will likely include placement of a layer of topsoil and turf (personal conversation with Michael Lopez, FCDMC). This landscaping and eventual silt collection over time would mitigate potential percolation. Performance of a water balance to include these effects is beyond the scope of this report.

Based on the soil logs, the lower portion of the structure will likely be located in the well-graded sand or SGC deposits. Therefore, unbalanced hydraulic or uplift pressures are unlikely due to the slow drawdown. However, as additional protection, special provisions are recommended that include a transverse trench drain (French Drain) keyed into these deposits under the apron. This is shown in Figure 1. The French drain should conform to ADOT 2000 Standard Specifications for Road and Bridge Construction Section 506. The recommended pipe material is 12-inch diameter perforated plastic drain pipe per Section 506-2.01(D). Covered solid pipe risers per Section 506-2.02 should be provided at each end of the trench for purposes of cleaning. Drain rock aggregate should conform to Section 506-2.03. Geotextile filter fabric should conform to Section 1014-9. Detail 'A' shows a proposed trench drain section. Construction traffic across the trenches should <u>not</u> be allowed due to the shallow trench cover over the drain pipes.

Potential uplift pressures of approximately 500 psf could develop under the upper spillway if no mitigative measures are taken and inlet water is allowed to freely drain downward and surcharge next to or under the concrete structure. In order to mitigate surcharging, special provisions are recommended that comprise trench drains located at foundation level on the upstream side and flanks of the spillway and under the centerline of the spillway. Based on low to moderate flows, the recommended pipe material is 6-inch diameter perforated plastic pipe per Section 506-2.01(D). A minimum grade of 0.5% is recommended for pipe and trench bottom. The attached sketch, Figure 1, shows this arrangement. The pipe outlets should be connected to the drainpipe in the French drain. Construction traffic across the trenches should <u>not</u> be allowed due to the shallow trench cover over the drainpipes.

Regular maintenance should include inspection (and cleaning if necessary) to avoid plugging of the pipe, especially at the outlet. Cleaning methods that would lead to pressurizing the pipe or drain trenches should be avoided.

Subgrade Preparation

The entire area to be occupied by the proposed construction should be stripped of all vegetation, debris, rubble and obviously loose surface soils. Due to the presence of loose or compressible upper soils, the entire area to be occupied by the proposed structure should be over-excavated and recompacted to a depth of at least 1.0 feet below proposed underside of the structure. In order to reduce the swell potential, on the upper reach of the spillway where clayey soils are present, they should be removed to a depth of 1.0 feet below the bottom of the slab and replaced with low swell potential material as discussed below. Allowance should be made for placement of trench drains on the upstream side and flanks of the structure. Fill placement and quality should be as defined in the 'Fill and Backfill' section of this report.

Fill and Backfill

Native soils are considered suitable for use in general grading fills provided oversized material (>3 inches) is first removed. Soils with a classification of CL or SC should **not** be allowed or used in the top foot of subgrade fill or as retaining wall backfill except as a surface seal. The upper 2 feet of wall backfill should consist of soils with a classification of CL or SC to mitigate potential infiltration adjacent to the concrete structure. In addition, erosion protection should be provided for the surficial soils adjacent to the spillway in the event that the inlet swale overflows and 'out-flanks' the spillway.

The top foot of subgrade fill under the spillway should be completed with an approved low or non-expansive granular native soil selectively taken from the deeper basin cuts.

Fill should be placed on subgrade that has been properly prepared and approved by a Soils Engineer. Fill must be wetted and thoroughly mixed to achieve optimum moisture content, ±2 percent. Fill should be placed in horizontal lifts of 8-inch thickness (or as dictated by compaction equipment) and compacted to the percent of maximum dry density per ASTM D-698 set forth as follows:

A.	Spillway Structure		
	1.	Below footing level	95
	2.	Below slabs-on-grade (non-expansive soils)	95
	3.	Wall Backfill (non-expansive soils)	95
	4.	Wall Backfill (expansive soils)	90
B.	Pavement Subgrade or Fill		95
C.	Utility Trench Backfill		
	1.	More than 2.0' below finish S/G	95
	2.	Within 2.0' of finish S/G	95

Prior to placing any engineered fill, the exposed grade should be scarified to a depth of 8 inches, moisture conditioned to optimum (±2 percent) and compacted to at least 95 percent of maximum dry density as determined by ASTM D-698.

A representative of the geotechnical engineer should examine all subgrade once subexcavation is complete and prior to backfilling to ensure removal of all deleterious material.

GENERAL

The scope of this investigation and report does not include regional considerations such as seismic activity and ground fissures resulting from subsidence due to groundwater withdrawal, nor any considerations of hazardous releases or toxic contamination of any type.

Our analysis of data and the recommendations presented herein are based on the assumption that soil conditions do not vary significantly from those found at specific sample locations. Our work has been performed in accordance with generally accepted engineering principles and practice; this warranty is in lieu of all other warranties expressed or implied.

We recommend that a representative of the Soils Engineer observe and test the earthwork and foundation portions of this project to ensure compliance to project specifications and the field applicability of subsurface conditions which are the basis of the recommendations presented in this report. If any significant changes are made in the scope of work or type of construction that was assumed in this report, we must review such revised conditions to confirm our findings if the conclusions and recommendations presented herein are to apply.

Respectfully submitted,
SPEEDIE & ASSOCIATES

Brian Lingnau, PhD, P.Eng.

Gregg A. Creaser, P.E.

Registered Professional Engineer (Civil)
CERTIFICATE NO.
14388
GREGG ALAN
CREASER
Date Signed 12-11-01
ARIZONA, U.S.A.

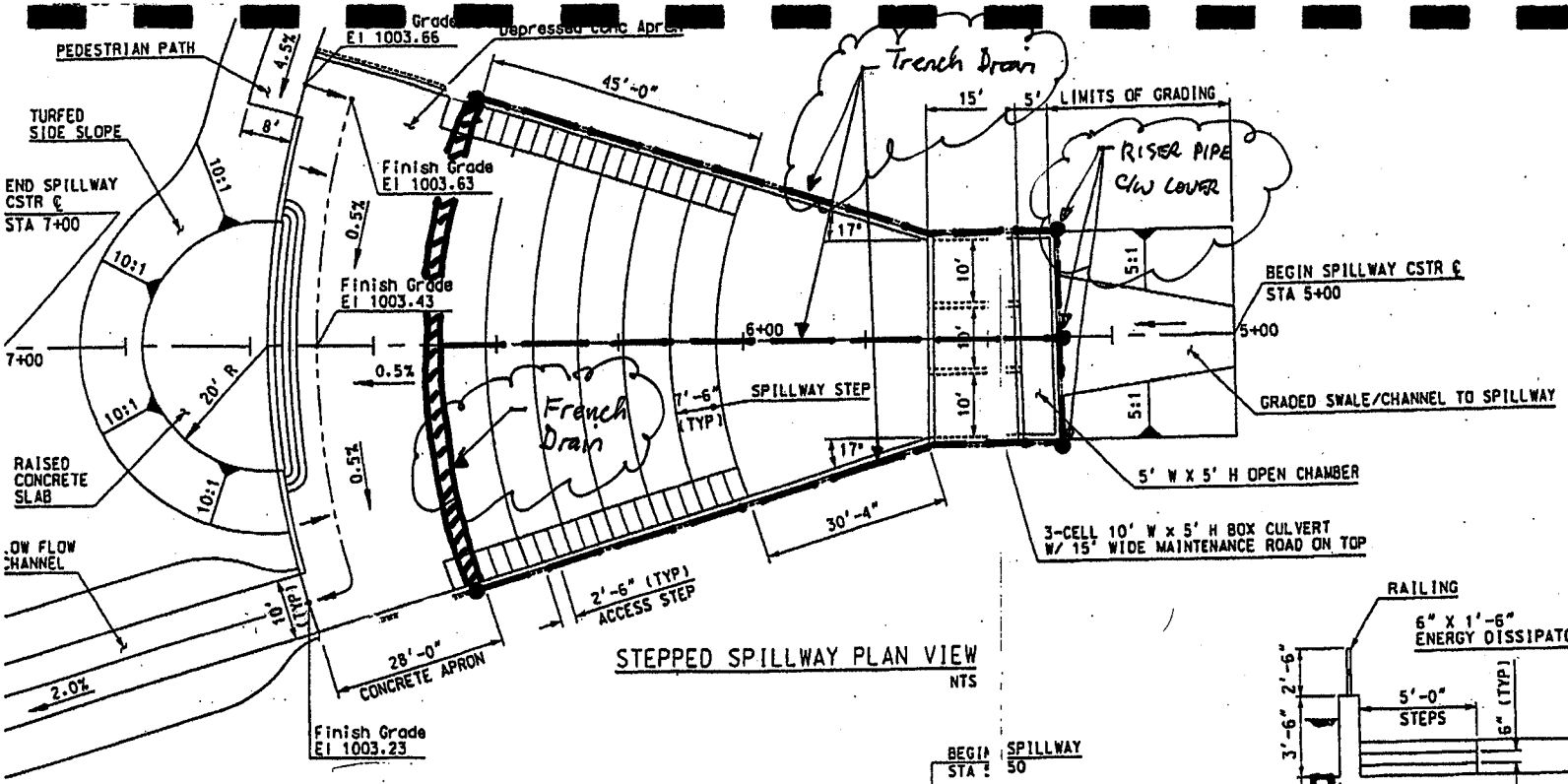

STEPPED SPILLWAY PLAN VIEW
NTS

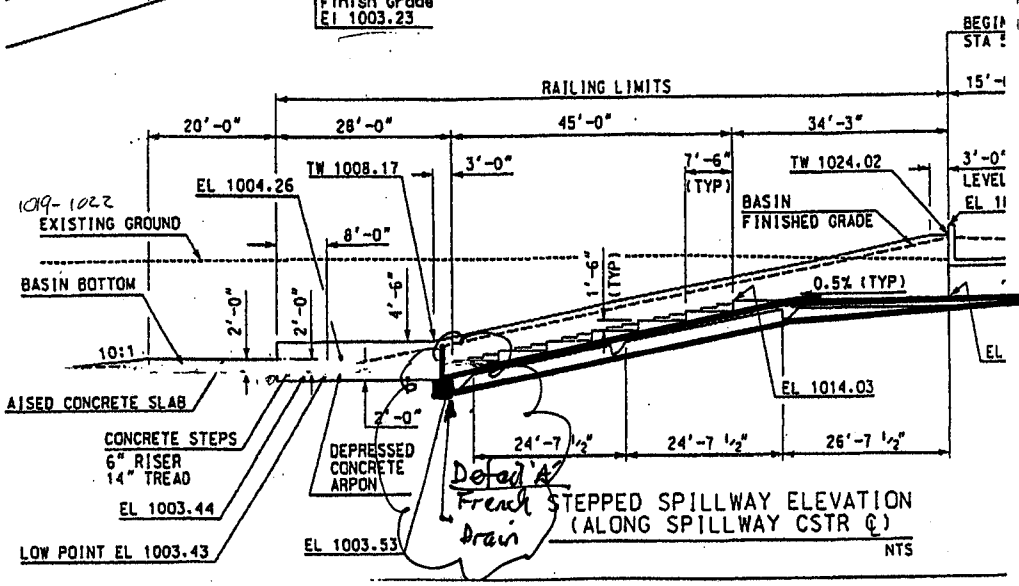

STEPPED SPILLWAY ELEVATION (ALONG SPILLWAY CSTR ℄)
NTS

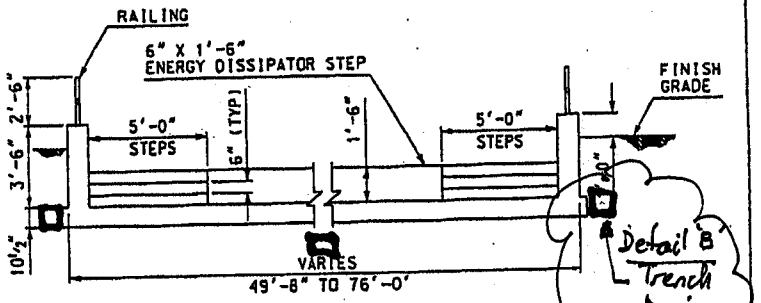

B STEPPED SPILLWAY SECTION
SCALE: 1/2" = 1'-0

NOTE:
HORIZONTAL DIMENSIONS & ELEVATIONS MEASURED ALONG CONSTRUCTION ℄

BRW

PRELIMINARY
NOT FOR CONSTRUCTION

NO.	REVISION	BY	DATE
3			
2			
1			

FLOOD CONTROL DISTRICT OF MARICOPA COUNTY
ENGINEERING DIVISION

43RD AVENUE DETENTION BASIN
FCD PROJECT NO. 1170831
100% SUBMITTAL

	BY	DATE
DESIGNED	NR	10/31/01
DRAWN	MSK	10/31/01
CHECKED	-	

FIGURE 1

SPILLWAY PLAN & ELEVATION

SHEET OF

TOTAL P.03

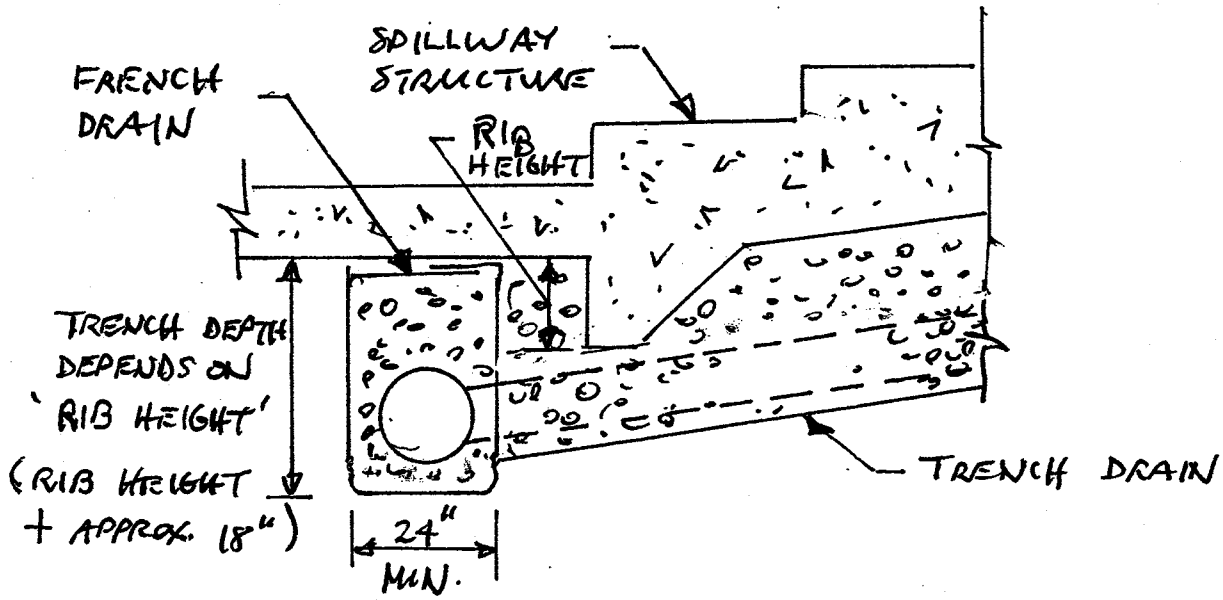

DETAIL 'A': FRENCH DRAIN (UNDER SPILLWAY)
N.T.S.
PER SPEEDIE & ASSOCIATES REPORT 011184SA

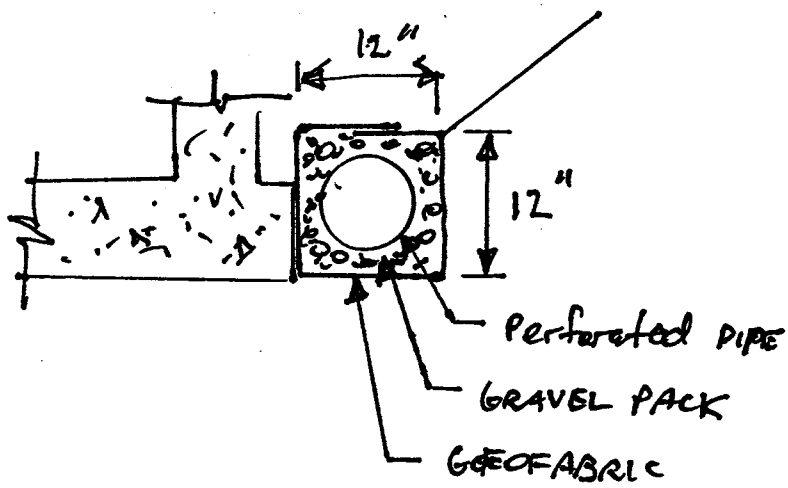

DETAIL 'B': TRENCH DRAIN (ADJ. TO SPILLWAY)
N.T.S.
PER SPEEDIE & ASSOCIATES REPORT 011184SA

APPENDIX E

Design Plans

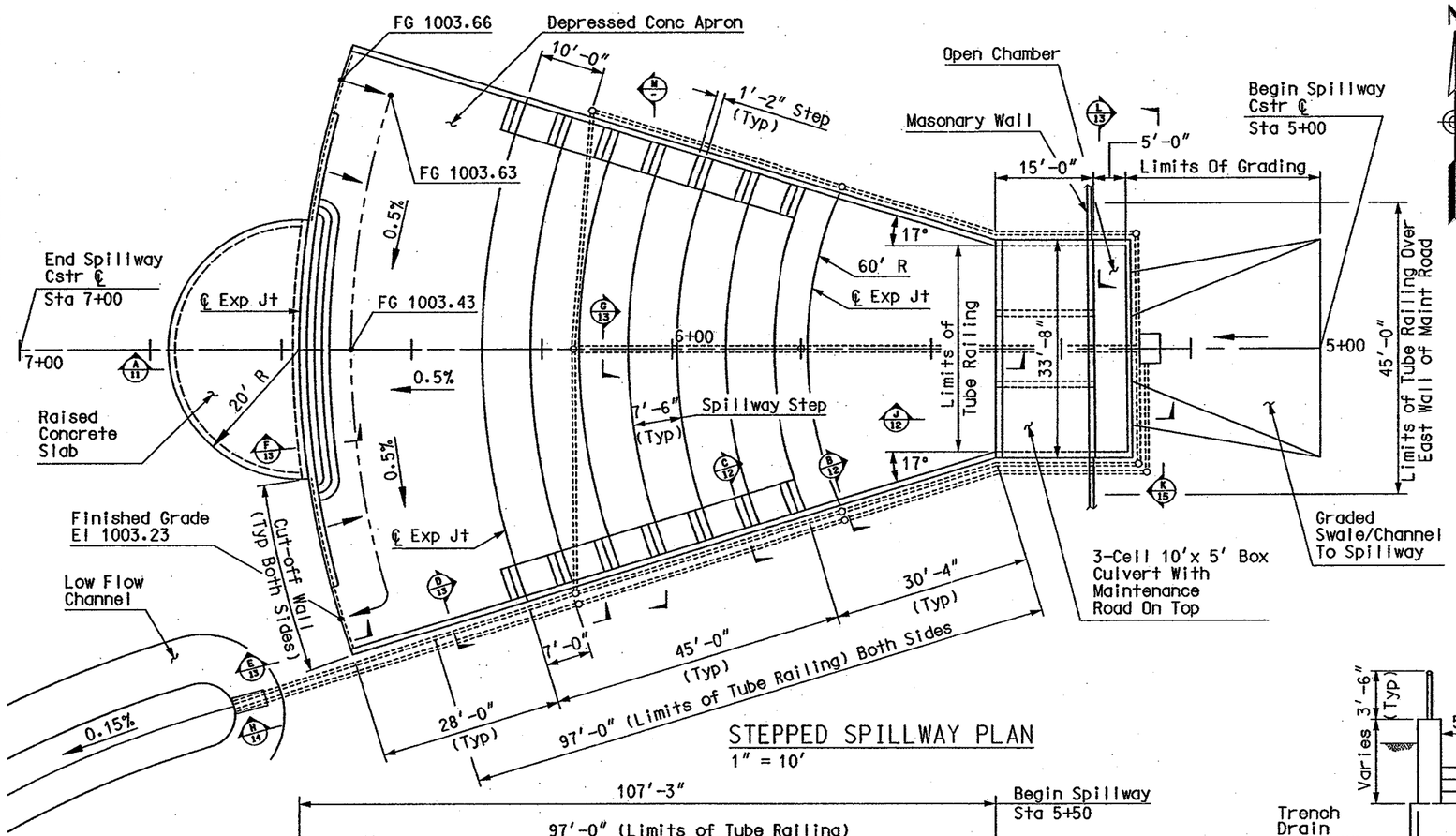

STEPPED SPILLWAY PLAN

1" = 10'

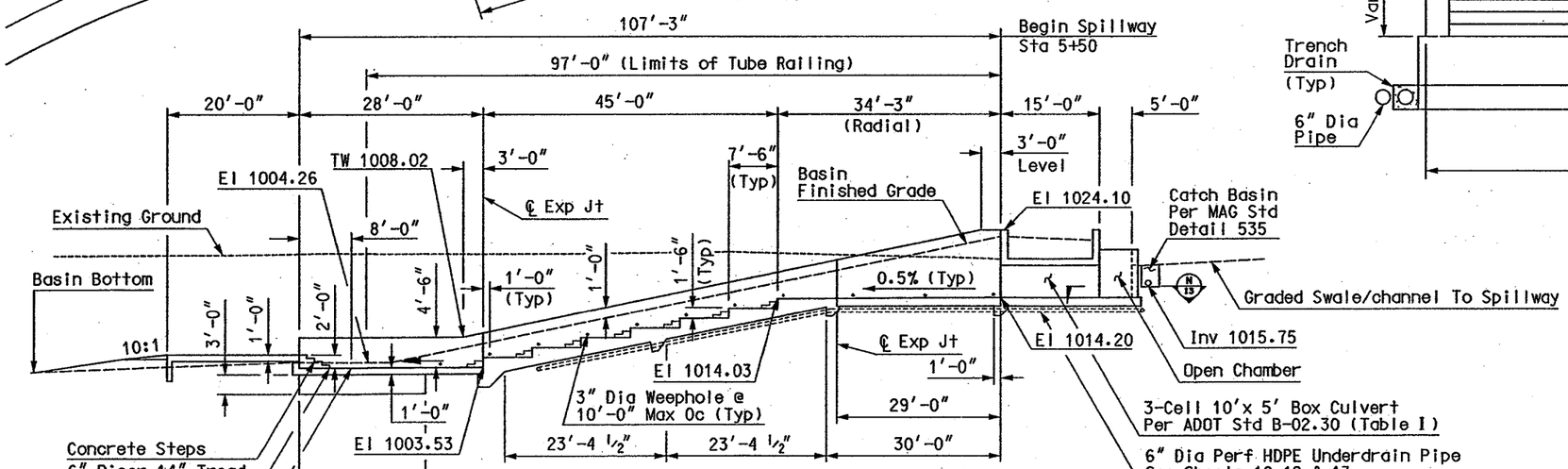

STEPPED SPILLWAY ELEVATION (ALONG SPILLWAY CSTR ℄)

1" = 10'

(Railing & Drains Not Shown For Clarity)

NOTE:

Horizontal Dimensions & Elevations For Spillway Structure Measured Along Construction ℄

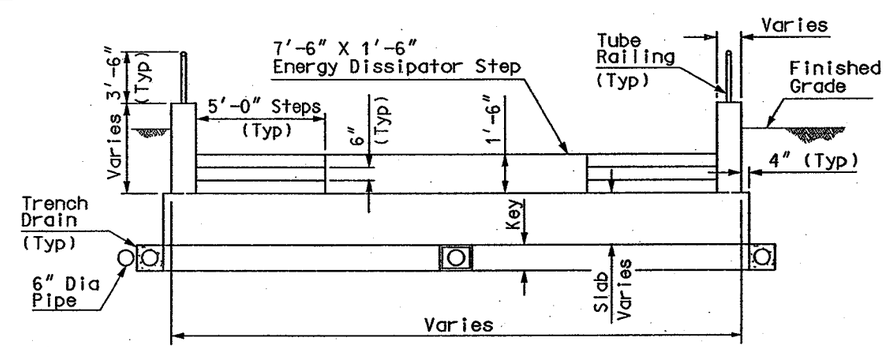

SECTION

NTS

GENERAL NOTES:

Construction Specifications:

MAG Uniform Standard Specifications And Details For Public Works Construction, 1998 Edition With 2000 Revisions.

Stresses:

Concrete .....f'c = 3,000 Psi
Reinforcing Steel ....fs = 24,000 Psi

All Concrete Shall Be Class "A" Unless Noted Otherwise.

All Reinforcing Steel Shall Conform To ASTM Spec A615.

Reinforcing Steel Shall Be Furnished As Grade 60.

All Bend Dimensions For Reinforcing Steel Shall Be Out-to-Out Of Bars. All Placement Dimensions For Reinforcing Steel Shall Be To Center Of Bars Unless Noted Otherwise. All Bend Or Hook Dimensions Not Shown Shall Be Standard Bends Or Hooks.

All Reinforcing Steel Shall Have 2 Inch Clear Cover Unless Noted Otherwise.

All Retaining Walls Shall Have Construction Joints Spaced At Not More Than 30'-0" Apart Or As Shown. Reinforcing Steel Shall Project Through The Joint.

Spillway Subgrade & Fill/Backfill Prep Shall be in Accordance with the Special Provisions.

PRELIMINARY
NOT FOR CONSTRUCTION

NO.	REVISION	BY	DATE
3			
2			
1			

FLOOD CONTROL DISTRICT OF MARICOPA COUNTY

43RD AVENUE DETENTION BASIN
FCD PROJECT NO. 1170831
100% SUBMITTAL

	BY	DATE
DESIGNED	NR	12/20/01
DRAWN	BMM	12/20/01
CHECKED	WAR	12/20/01

Registered Professional Engineer (Civil) Certificate No. 26132 Syed Nasir Raza Arizona, U.S.A. 1-18-02

BRW
7720 N. 16th Street
Suite 300
Phoenix, Arizona 85020
(602) 234-1591

DRAWING NO.	SPILLWAY PLAN, ELEVATION AND SECTION	SHEET OF 9 36

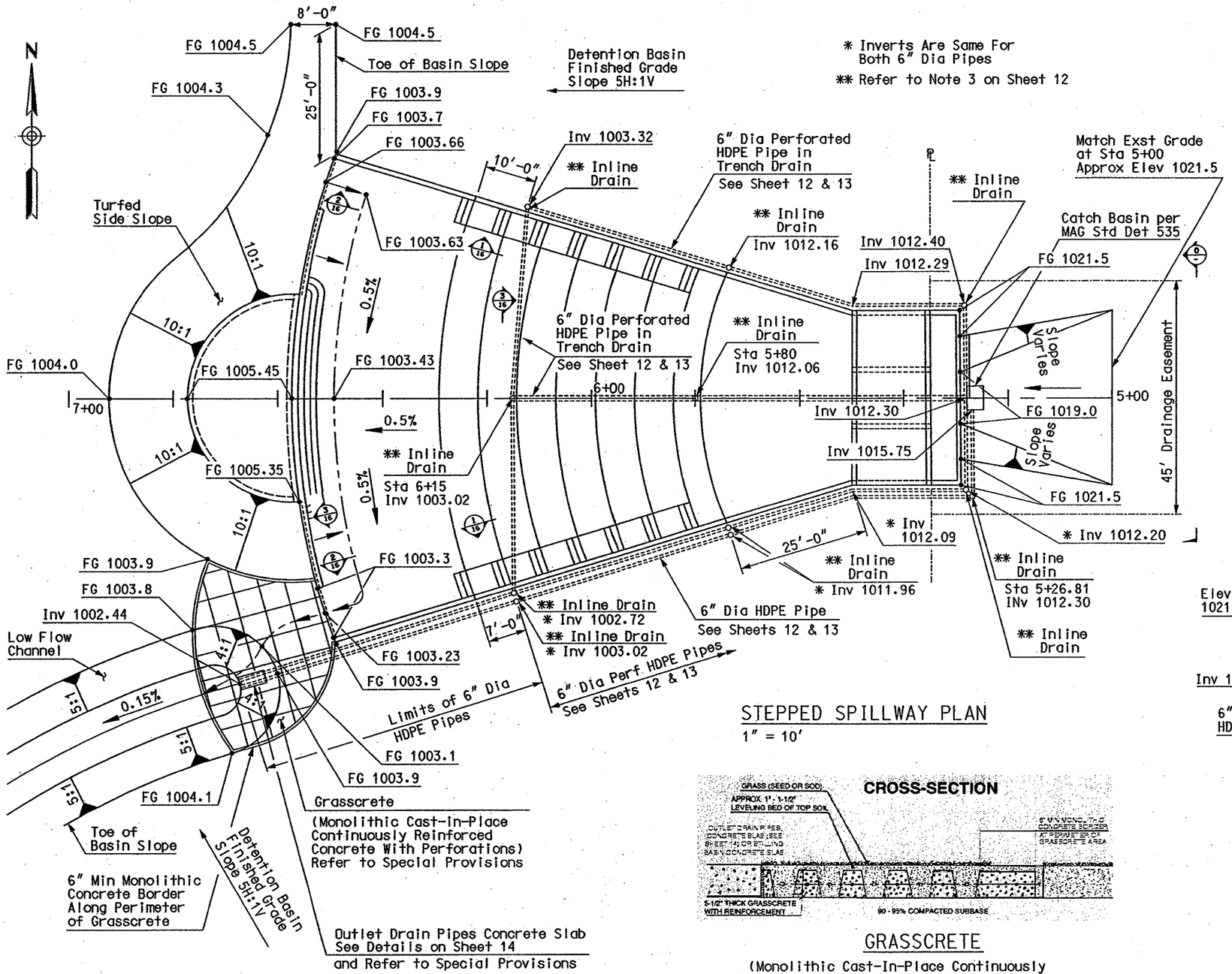

STEPPED SPILLWAY PLAN

1" = 10'

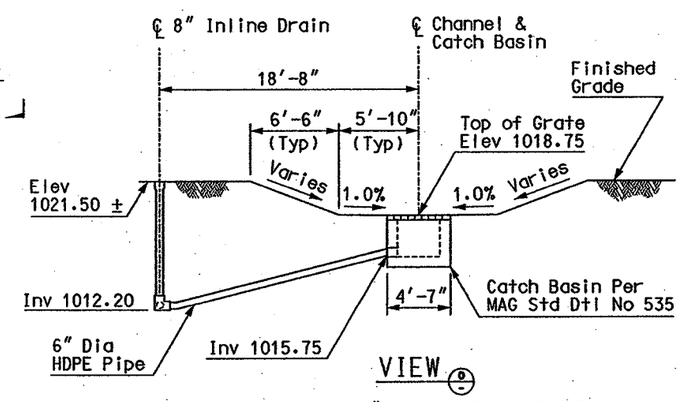

VIEW

Profile of 6" Dia Non Perf HDPE Pipe

GRASSCRETE

(Monolithic Cast-In-Place Continuously Reinforced Concrete Slab with Perforation)

NOTE:

Use 6" x 6" - 6 Ga x 6 Ga Welded Wire Fabric Chaired between 2 and 3 Inches Above Subgrade.

PRELIMINARY

NOT FOR CONSTRUCTION

NO.	REVISION	BY	DATE
3			
2			
1			

FLOOD CONTROL DISTRICT OF MARICOPA COUNTY

43RD AVENUE DETENTION BASIN
FCD PROJECT NO. 1170831
100% SUBMITTAL

	BY	DATE
DESIGNED	NR	12/20/01
DRAWN	MSK	12/20/01
CHECKED	WAR	12/20/01

Registered Professional Engineer (Civil) CERTIFICATE 26132 SYED NASIR RAZA ARIZONA U.S.A.

BRW
7720 N. 16th Street
Suite 100
Phoenix, Arizona 85020
(602) 234-1551

DRAWING NO.

DRAINAGE AND GRADING PLAN AND DETAILS

SHEET OF 10 36

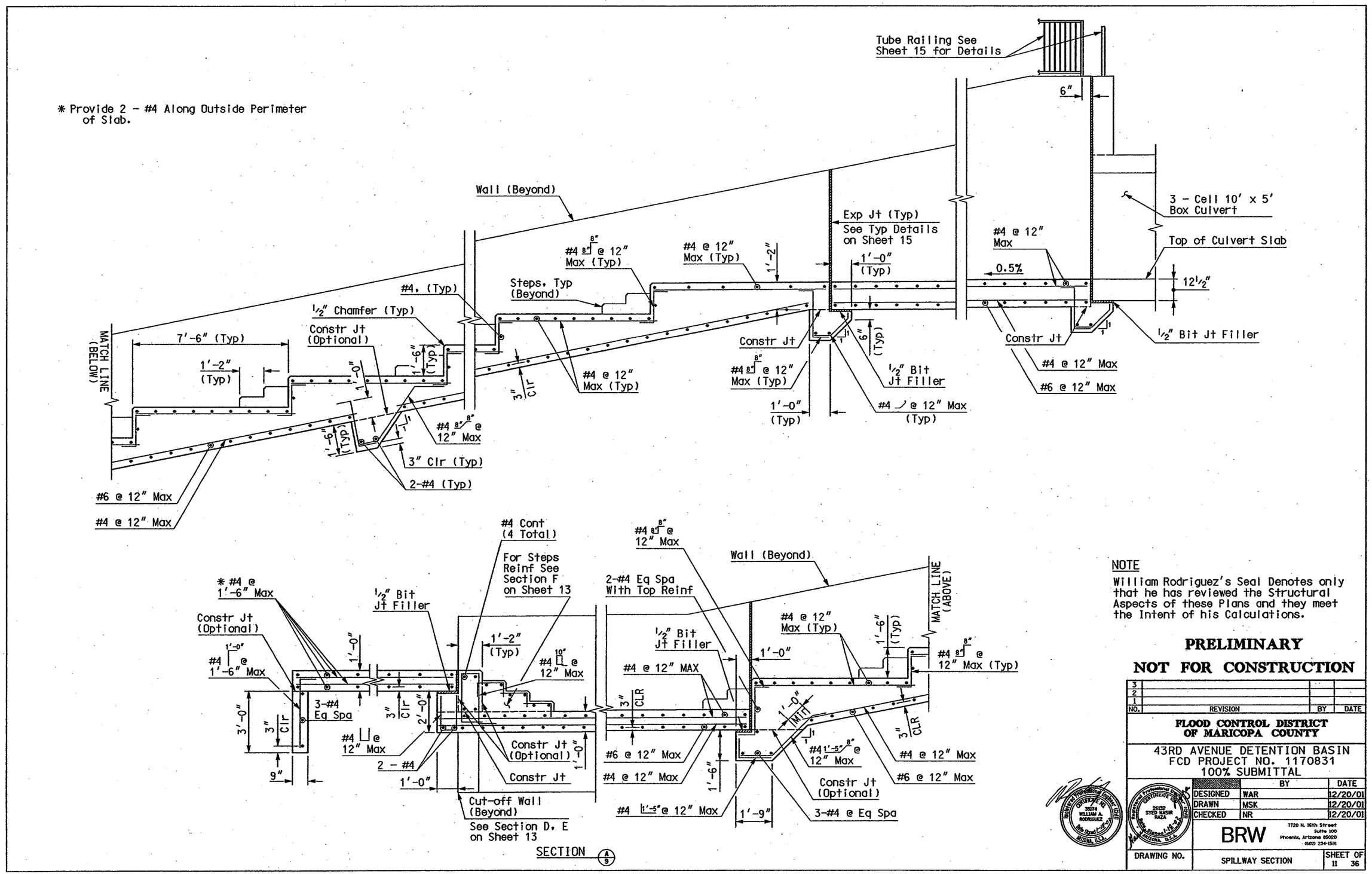

NOTE

William Rodriguez's Seal Denotes only that he has reviewed the Structural Aspects of these Plans and they meet the Intent of his Calculations.

PRELIMINARY

NOT FOR CONSTRUCTION

NO.	REVISION	BY	DATE
3			
2			
1			

FLOOD CONTROL DISTRICT OF MARICOPA COUNTY

43RD AVENUE DETENTION BASIN
FCD PROJECT NO. 1170831
100% SUBMITTAL

	BY	DATE
DESIGNED	WAR	12/20/01
DRAWN	MSK	12/20/01
CHECKED	NR	12/20/01

BRW
7720 N. 16th Street
Suite 100
Phoenix, Arizona 85020
(602) 234-1501

DRAWING NO.

SPILLWAY SECTION

SHEET 11 OF 36

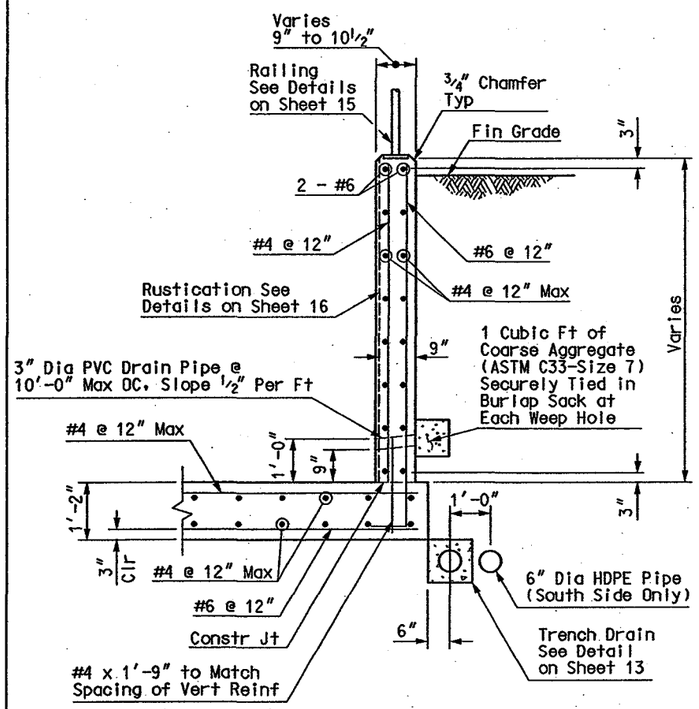

SECTION B/9

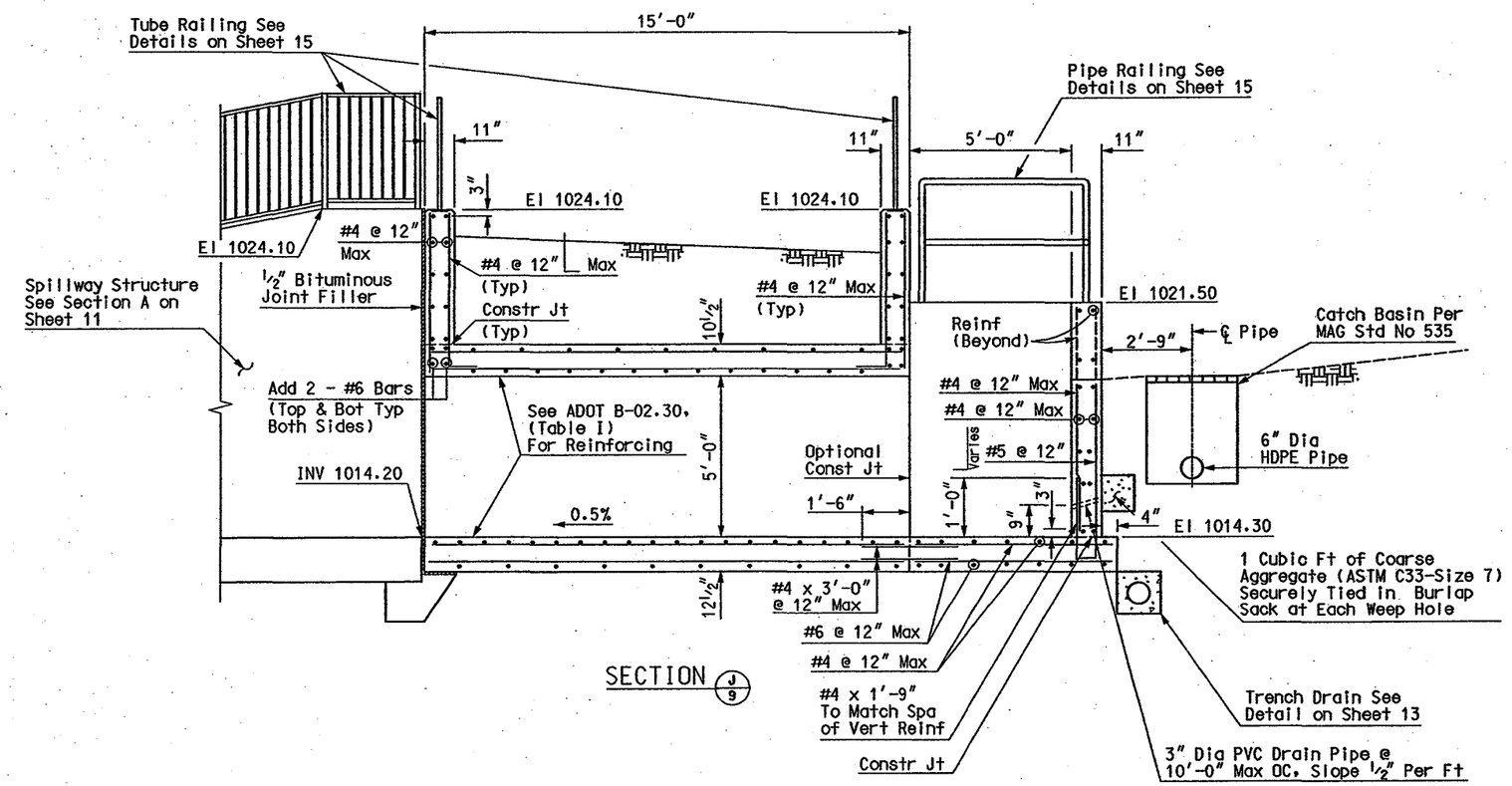

SECTION J/9

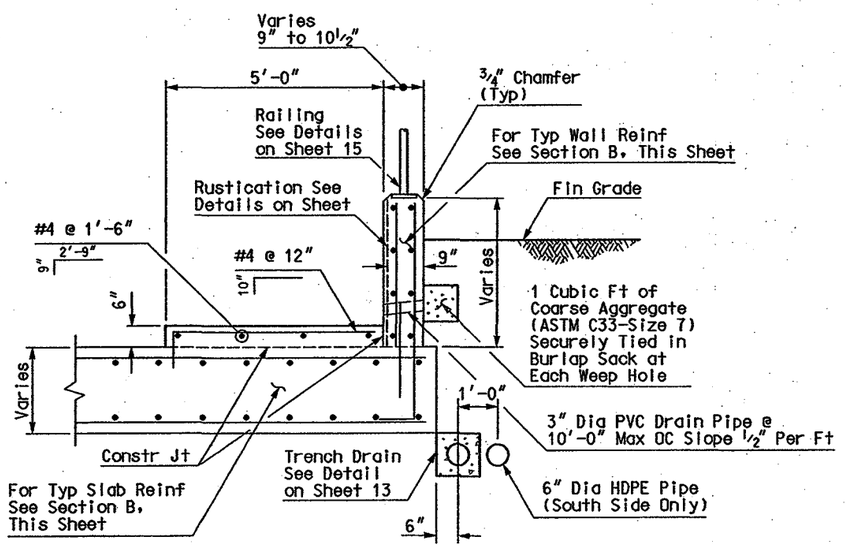

SECTION C/9

NOTES:

1. For Trench Drain & Geotextile Filter Fabric Specs, See Special Provisions.
2. Subdrain Pipes Shall Be High Density Polyethylene (HDPE), N-12 Per Advanced Drainage Systems, Inc. (ADS) or Approved Equal. Perforated Pipe Shall Be Class 2 and Wrapped with "Sock" per ADS or Approved Equal.
3. Provide 8" Inline Drain, 6" N-12 Tee, 6" N-12 Riser Pipe & Solid Cast Iron Grate Per ADS or Approved Equal.

NOTE

William Rodriguez's Seal Denotes only that he has reviewed the Structural Aspects of these Plans and they meet the Intent of his Calculations.

PRELIMINARY

NOT FOR CONSTRUCTION

NO.	REVISION	BY	DATE
3			
2			
1			

FLOOD CONTROL DISTRICT OF MARICOPA COUNTY

43RD AVENUE DETENTION BASIN
FCD PROJECT NO. 1170831
100% SUBMITTAL

	BY	DATE
DESIGNED	WAR	12/20/01
DRAWN	MSK	12/20/01
CHECKED	NR	12/20/01

BRW
7720 N. 16th Street
Suite 100
Phoenix, Arizona 85020
(602) 234-1591

DRAWING NO.

SPILLWAY SECTIONS

SHEET 12 OF 36

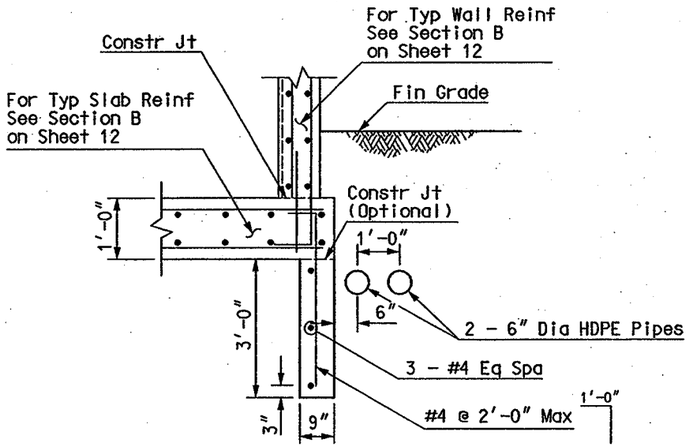

SECTION D/9

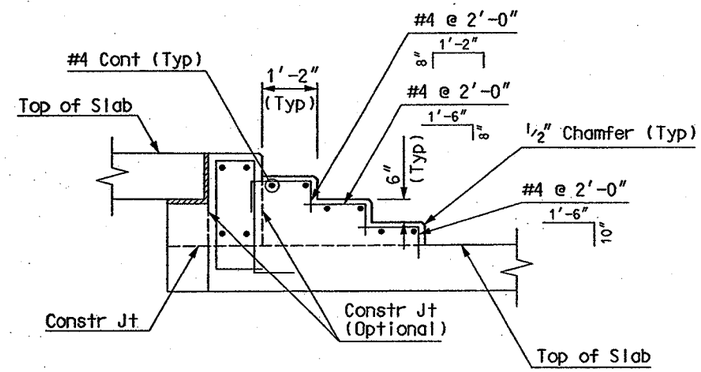

SECTION F/9

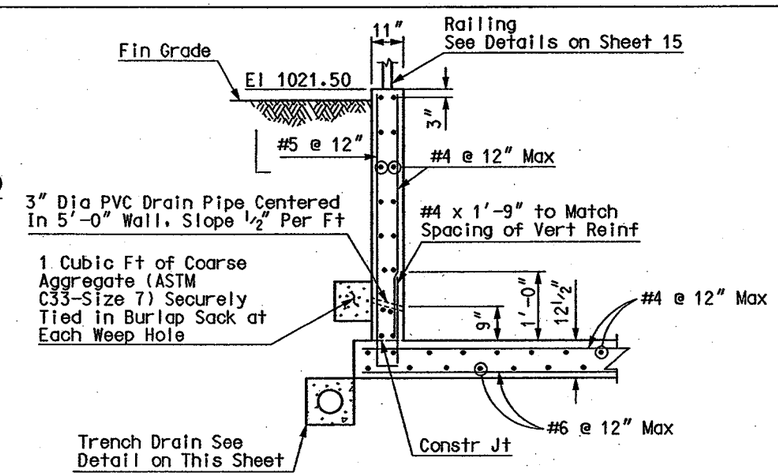

SECTION L/9

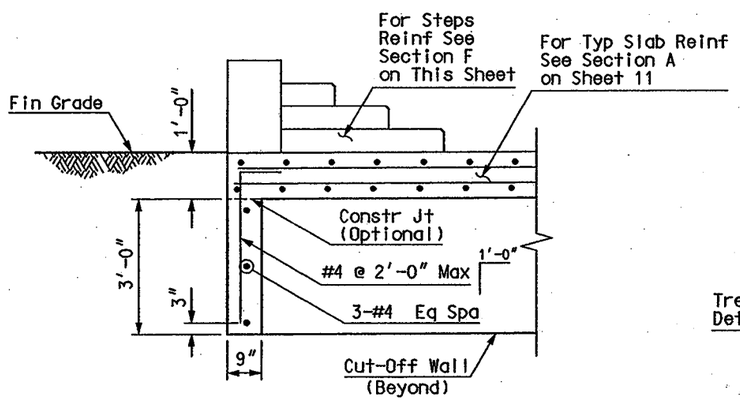

SECTION E/9

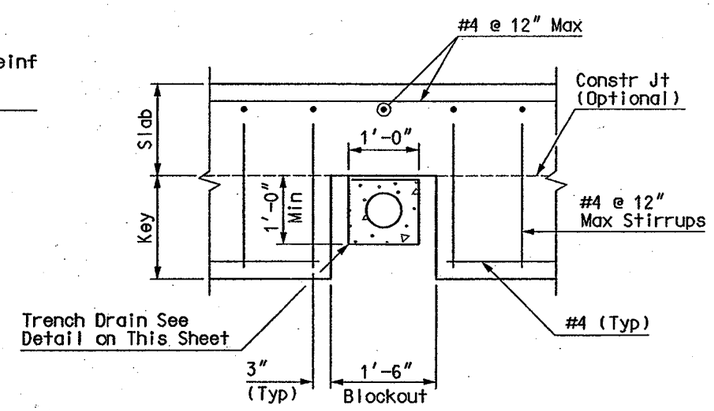

SECTION G/9

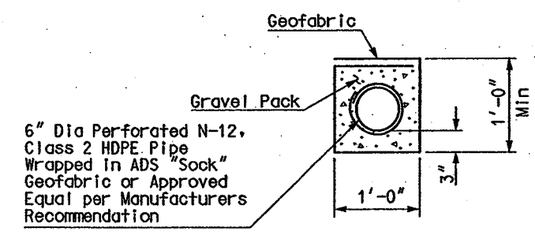

TYPICAL TRENCH DRAIN DETAIL

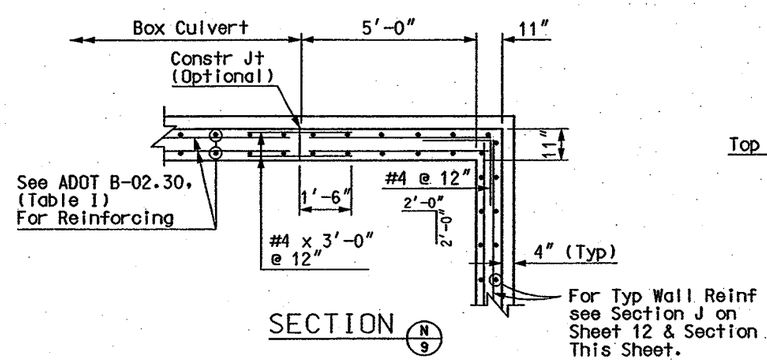

SECTION N/9

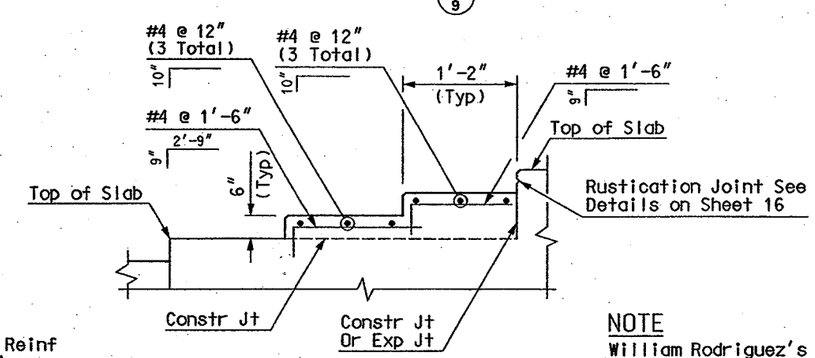

TYPICAL ACCESS STEP REINF

PRELIMINARY

NOT FOR CONSTRUCTION

NO.	REVISION	BY	DATE
3			
2			
1			

FLOOD CONTROL DISTRICT OF MARICOPA COUNTY

43RD AVENUE DETENTION BASIN
FCD PROJECT NO. 1170831
100% SUBMITTAL

	BY	DATE
DESIGNED	WAR	12/20/01
DRAWN	BMM	12/20/01
CHECKED	NR	12/20/01

BRW
7720 N. 16th Street
Suite 100
Phoenix, Arizona 85020
(602) 234-3591

DRAWING NO.

SPILLWAY SECTIONS AND DETAILS

SHEET 13 OF 36

NOTE

William Rodriguez's Seal Denotes only that he has reviewed the Structural Aspects of these Plans and they meet the Intent of his Calculations.

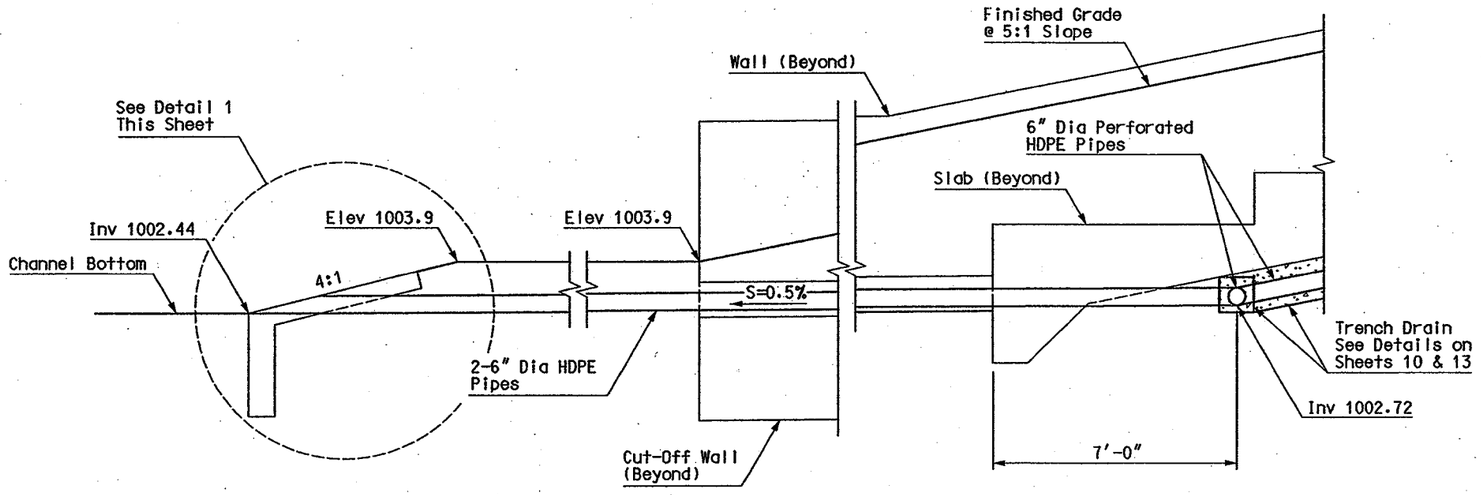

VIEW (H/9)

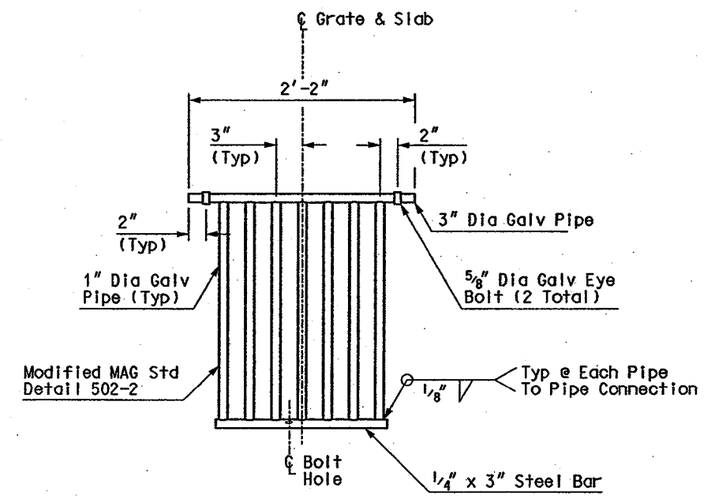

Grate Detail

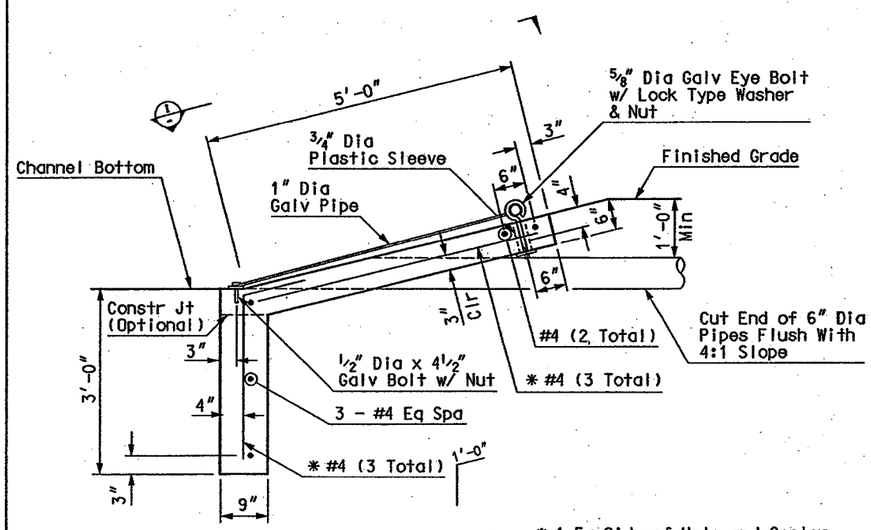

* 1 Ea Side of Hole and Center

DETAIL (1/-)

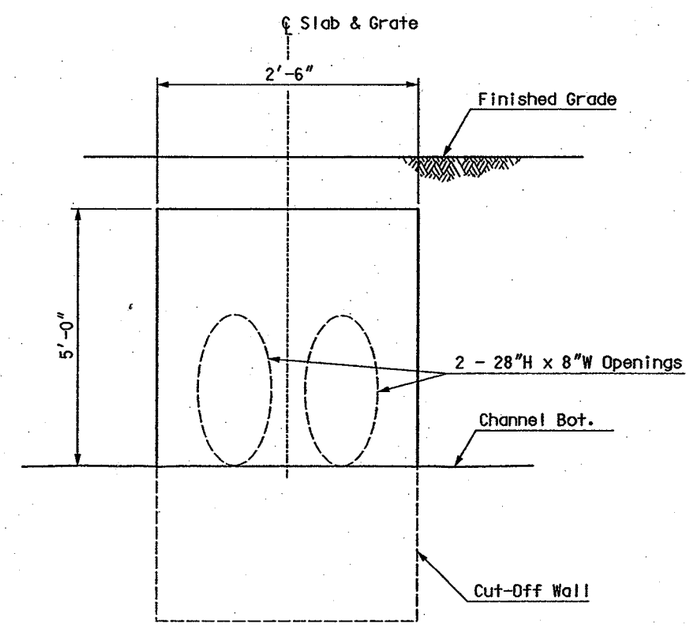

VIEW (1/-)

Grate not Shown
For Clarity, See
Detail, This Sheet

NOTE

William Rodriguez's Seal Denotes only that he has reviewed the Structural Aspects of these Plans and they meet the Intent of his Calculations.

PRELIMINARY

NOT FOR CONSTRUCTION

NO.	REVISION	BY	DATE
3			
2			
1			

FLOOD CONTROL DISTRICT OF MARICOPA COUNTY

43RD AVENUE DETENTION BASIN
FCD PROJECT NO. 1170831
100% SUBMITTAL

	BY	DATE
DESIGNED	WAR	12/20/01
DRAWN	MSK	12/20/01
CHECKED	NR	12/20/01

BRW
7720 N. 16th Street
Suite 100
Phoenix, Arizona 85020
(602) 234-1591

DRAWING NO.

SPILLWAY DETAILS

SHEET 14 OF 36

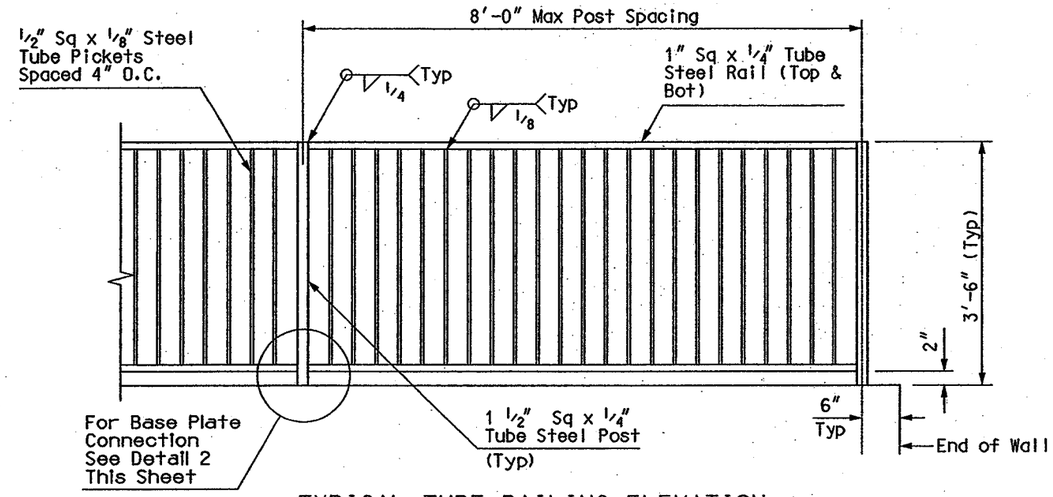

TYPICAL TUBE RAILING ELEVATION

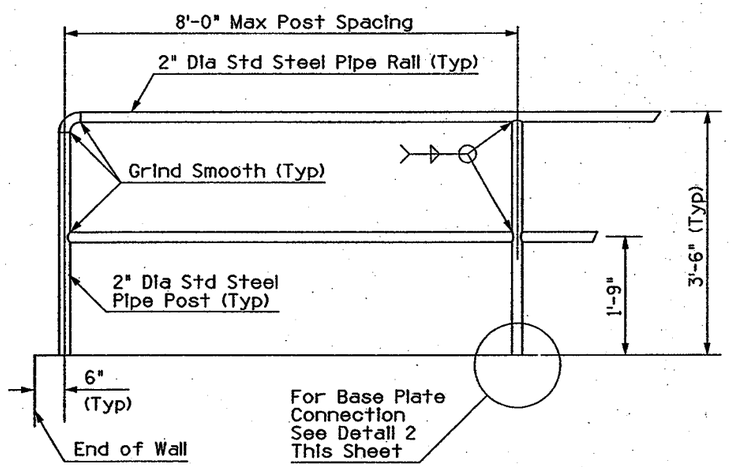

TYPICAL PIPE RAILING ELEVATION

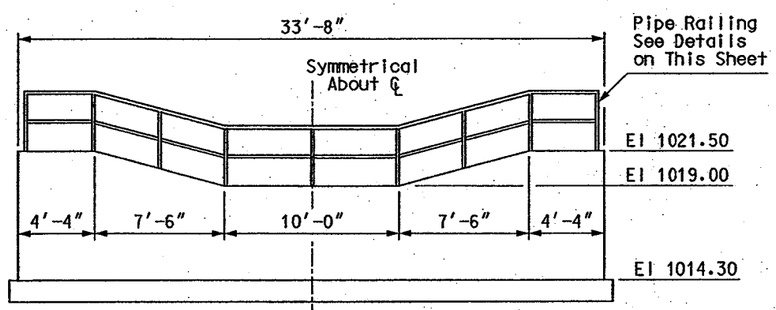

VIEW K/9

(Drains and Basin not shown for Clarity)

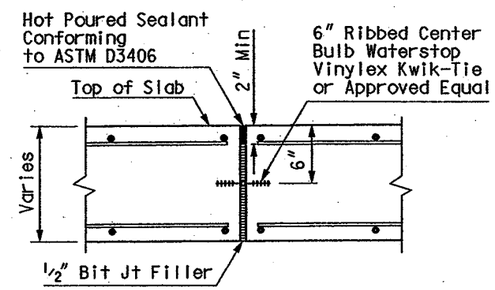

SLAB

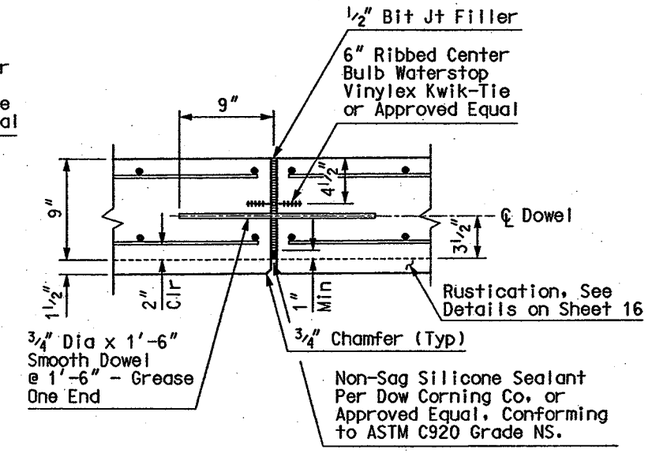

WALL

TYP EXPANSION JOINTS

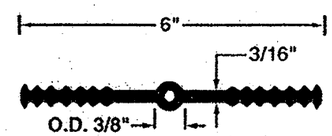

WATERSTOP DETAIL

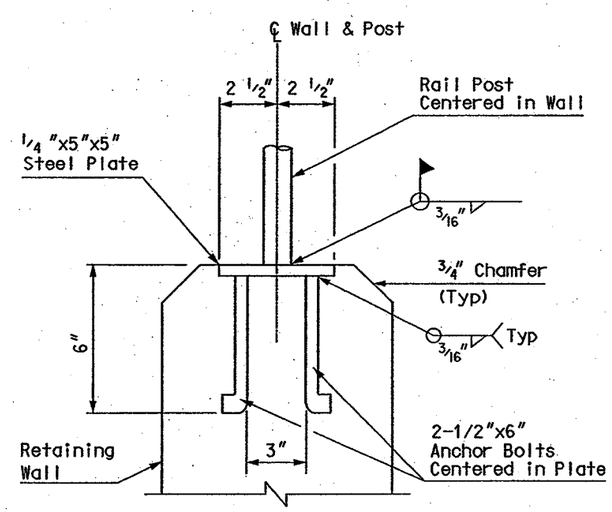

DETAIL 2/-

NOTES:

1. Grind Smooth to Touch all Metal Connections. (Typ).
2. Steel Fence. Paint Color to be Rust-Selected by FCDMC.
3. All Railing to be Painted Per Project Special Provisions.
4. Post shall be Vertical.
5. All Base Plates and Posts shall Conform to ASTM A36.
6. All Pipes and Tubes Shall Conform to ASTM A53, Grade B.
7. All Welding shall Conform to the Requirements of ANSI/AWS D1.1:1998 Structural Welding Code.

NOTE

William Rodriguez's Seal Denotes only that he has reviewed the Structural Aspects of these Plans and they meet the Intent of his Calculations.

NO.	REVISION	BY	DATE
3			
2			
1			

FLOOD CONTROL DISTRICT OF MARICOPA COUNTY

43RD AVENUE DETENTION BASIN
FCD PROJECT NO. 1170831
100% SUBMITTAL

	BY	DATE
DESIGNED	WAR	12/20/01
DRAWN	MSK	12/20/01
CHECKED	WAR	12/20/01

BRW
7720 N. 16th Street
Suite 100
Phoenix, Arizona 85020
(602) 234-1591

DRAWING NO.

RAILING DETAILS AND MISC DETAILS

SHEET 15 OF 36

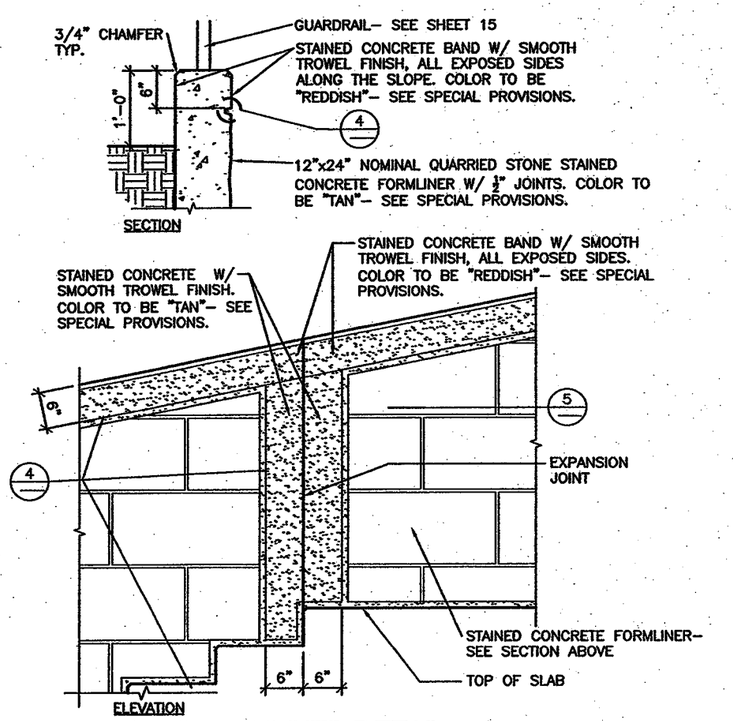

1 SPILLWAY FORMLINER DETAIL

1" = 1'-0" 03300-11

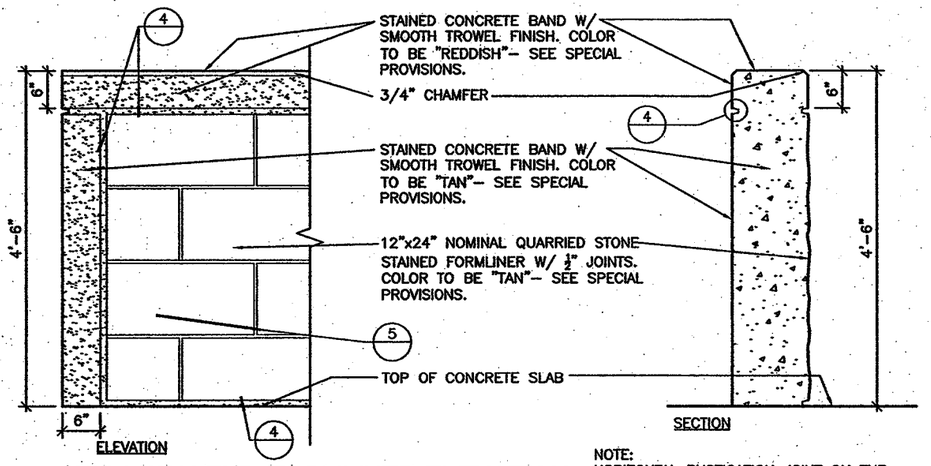

2 SPILLWAY END FORMLINER ELEVATION

1" = 1'-0" 03300-9

NOTE:
HORIZONTAL RUSTICATION JOINT ON THE OUTSIDE OF THE SPILLWAY DIES INTO GRADE OF BASIN SIDE SLOPES.

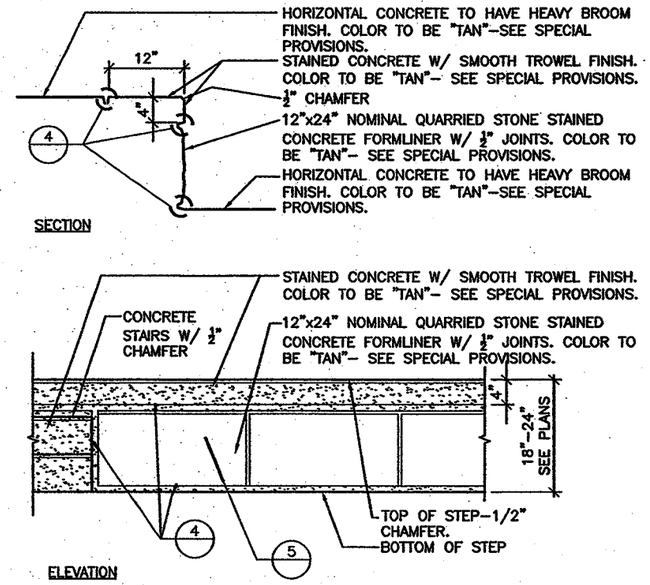

3 SPILLWAY STEPS FORMLINER ELEVATION

1" = 1'-0" 03300-10

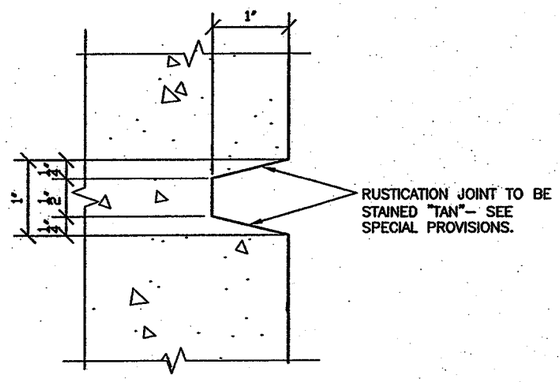

4 RUSTICATION JOINT- TYPICAL

1"=1" 03300-18

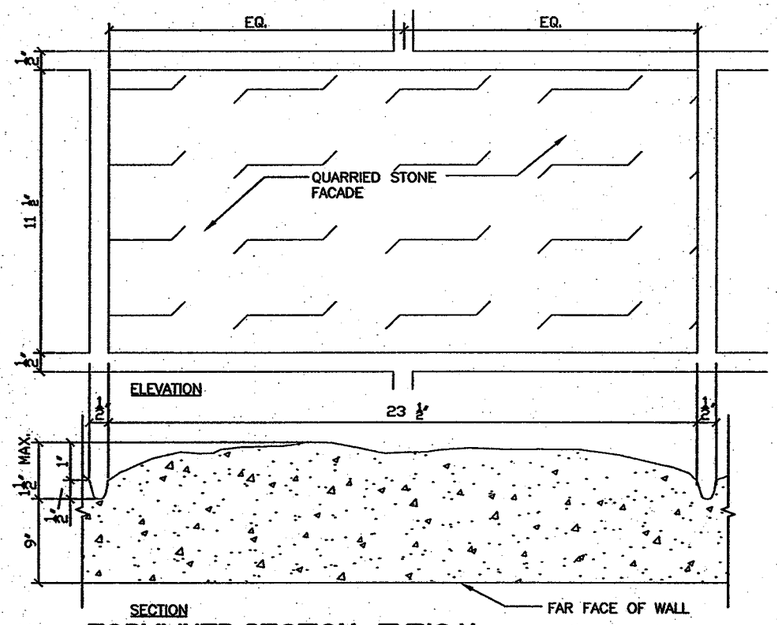

5 FORMLINER SECTION- TYPICAL

NTS 03300-19

NO.	REVISION	BY	DATE
3			
2			
1			

FLOOD CONTROL DISTRICT OF MARICOPA COUNTY

43RD AVENUE DETENTION BASIN
FCD PROJECT NO. 1170831
100% SUBMITTAL

	BY	DATE
DESIGNED		
DRAWN		
CHECKED		

27770 MICHAEL G. PARK ARIZONA, U.S.A.

BRW
7720 N. 16th Street
Suite 100
Phoenix, Arizona 85020
(602) 234-1591

DRAWING NO. 16

AESTHETIC DETAILS

SHEET 16 OF 36