FLOOD CONTROL DISTRICT OF MARICOPA COUNTY

Property of
Flood Control District of MC Library
Please Return to
2801 W. Durango
Phoenix, AZ 85009

ENGINEERING CALCULATIONS

FOR

THE GLENDALE AVENUE BRIDGE

AT

THE A.C.D.C.

Registered Professional Engineer (Civil)
CERTIFICATE NO. 10217
WILLIAM STEPHEN KANTOR, JR.
Date Signed 8/31/89
ARIZONA, U.S.A.

PREPARED FOR:

THE FLOOD CONTROL DISTRICT

OF

MARICOPA COUNTY

AUGUST 1989

ENTRANCO ENGINEERS, INC.
ENGINEERS ENVIRONMENTAL SCIENTISTS PLANNERS
2400 W. DUNLAP AVENUE, SUITE 100
PHOENIX, ARIZONA 85021
(602)264-1228

ENTRANCO ENGINEERS, INC.

SHEET NO ____ OF ____

JOB NO 388510-10-

PROJECT Glendale Ave Bridge

CALCULATIONS FOR ____

MADE BY ____ DATE ____ CHECKED BY WGK DATE 6/89

BRIDGE DESIGN CALCULATIONS

TABLE of CONTENTS

DESIGN CRITERIA — 1-2

APPROACH SLAB DESIGN — 3-4

BOX GIRDER DESIGN — 5-20

SUBSTR. LOADS — 21-

CASSION DESIGN — 30

CAP BEAM DESIGN — 39

SIDEWALK + BARRIER RAIL DESIGN — 44

WING WALL DESIGN — 47

ENTRANCO ENGINEERS, INC.

SHEET NO 1 OF ____

JOB NO ____ - -

PROJECT Glendale Ave Bridge

CALCULATIONS FOR Glendale Ave Bridge @ ACDC (Design Basis)

MADE BY Jmly DATE 6/89 CHECKED BY WSK DATE 6/89

Bridge Description

New Simple Span Pre-cast Pre-stressed concrete Box Beam Girder Bridge 4'-0" x 2'-3"

Length ℄ Brg To ℄ Brg = 51'-3 3/4"

Girder Length 53'-8" (23 segments)

3" Cement Concrete Overlay (Non-composite)

Roadway – 44'-0" F/curb To F/curb
8'-0" Sidewalk RT + LT.

Skew – 31° 44' 11" ~~LT.~~ Rt

Design ~

Loading HS-20 44

Dead Load includes 25 psf for Future wearing surf. + 9" thick future channel walls.

Design AASHTO 1983 Revised To Date
(Service Load method)

Allowable Stresses:

(Concrete)

Girders	$f_c' =$ 6,000 psi	$f_{ci}' =$ 4000 psi
Drilled shaft, Cap Beam, Back Wall, Wing Walls	$f_c' =$ 4,000 psi	$f_c =$ 1600 psi
Barrier Rail, PCCP, App Slab	$f_c' =$ 3,000	$f_c =$ 1200 psi

(Reinforcement)

$f_y =$ 60 ksi $f_s =$ 24 ksi ASTM 615

Pre-T Strand (270 ksi) 1/2" ϕ -7 wire Low Relax Strand

ENTRANCO ENGINEERS, INC.

SHEET NO 2 OF ____

JOB NO ____ - ____

PROJECT ____

CALCULATIONS FOR ____

MADE BY JMH DATE 6/89 CHECKED BY WSK DATE 6/89

Soils Report: Glendale Ave and 16th St. Bridge over proposed ALDC Canal
March 6, 1989 (Revision #1)
Western Technologies Inc.

Concrete wt. = 160 lb/ft³
Soil wt = 118 lb/ft³

ENTRANCO ENGINEERS, INC.

SHEET NO 3 OF ____
PROJECT NO ____

PROJECT Glendale Ave Bridge @ ACDC
SUBJECT Approach Slab
MADE BY WSK DATE 8/89 CHECKED BY JEM DATE 8/89

Compute Approach Slab Length

depth = 16" = 1'-4"

Solve for Length 'X' (See Dwg Rt)

$X = (40.7 + 2.5 + 1.33)(\tan 27.5) = 21.8'$

USE 24' ⊥ ℄ Brg & Reinf // to ℄

∴ Span along ℄ = 24/Cos 31°44'11" (Skew)

S = 28.22' // ℄

Assume Bearing Width 1/6 L

∴ Brg Wid = 28.22/6 = 4.7'

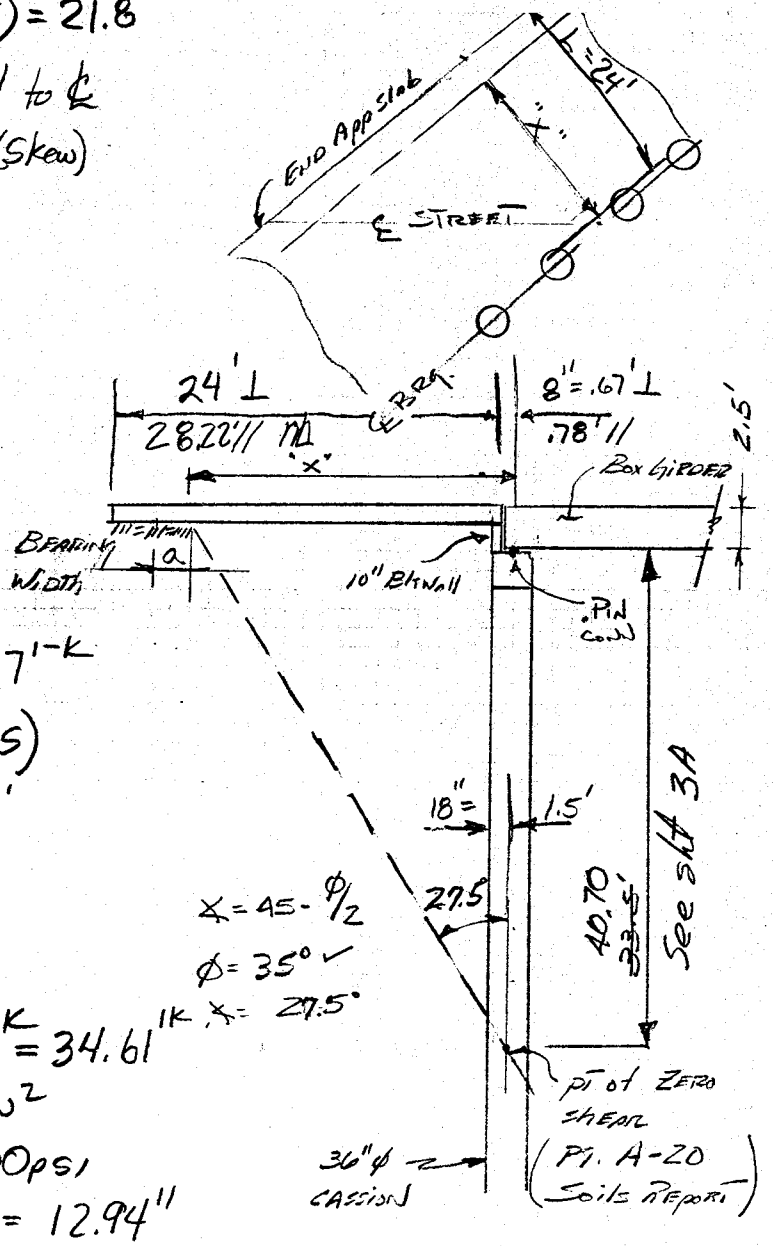

Eff Slab Span

$L = 28.22 - 4.7 - \frac{.83'}{\cos \text{Skew}}$ = (seat @ Abut)

L = 22.54'

Dead Load = 150#/ft³ × 1.33 × 1 = 200#/ft

$M_{DL} = wL^2/8 = .200^{K/'} \times 22.54^2/8 = 12.7'^{-K}$

$M_{LL} = 1.3 \frac{PL}{4} \div E$ $\quad E = (4 + 0.06S)$

E = 5.35'

$M_{LL} = 1.3(16)(22.54)/(4 \times 5.35)$

$M_{LL} = 21.91'^{-K}$

$\underline{M_T = M_{DL} + M_{LL}} = 12.70 + 21.91'^{-K} = 34.61'^{K}$

$\alpha = 45 - \phi/2$

$\phi = 35°$ ✓

$\alpha = 27.5°$

Assume #9 @ 8" $A_s = 1.5\ in^2$

$f'_c = 4000_{psi}$, $f_c = 1600_{psi}$, $f_s = 24000_{psi}$

$d = 16 - \underset{clear}{2} - \underset{bar}{1.125/2} - 1/2"(\text{Wear Surf.}) = 12.94"$

p = .0097 n = 8 K = .324 J = .892

Check Stresses

$f_s = M/A_sJd = 34.61(12)/(1.5 \times .892 \times 12.94) = 23988 < 24^{ksi}$ OK

$f_c = 2M/KJbd^2 = 830.64/(.324 \times .892 \times 12 \times 12.94^2) = 1430 < 1600$ OK

USE: d = 1'-4"; #9 @ 8" f'c = 4000psi

OUTPUT INFORMATION

DISTRIBUTED LOAD CURVE — 2 POINTS

X,IN	LOAD,LBS/IN
0.00	0.700D+02
330.00	0.870D+03

LOADING NUMBER 1

BOUNDARY CONDITION CODE = 1
LATERAL LOAD AT THE PILE HEAD = -0.600D+05 LBS
MOMENT AT THE PILE HEAD = 0.000D+00 IN-LBS
AXIAL LOAD AT THE PILE HEAD = 0.140D+06 LBS

X IN	DEFLECTION IN	MOMENT LBS-IN	SHEAR LBS	SOIL REACTION LBS/IN	TOTAL STRESS LBS/IN**2	FLEXURAL RIGIDITY LBS-IN**2
0.00	0.848D-02	0.386D-06	-0.600D+05	0.000D+00	0.137D+03	0.411D+12
6.00	0.229D-01	-0.361D+06	-0.595D+05	0.000D+00	0.201D+03	0.411D+12
12.00	0.373D-01	-0.718D+06	-0.590D+05	0.000D+00	0.264D+03	0.411D+12
18.00	0.516D-01	-0.107D+07	-0.583D+05	0.000D+00	0.327D+03	0.411D+12
24.00	0.658D-01	-0.142D+07	-0.576D+05	0.000D+00	0.388D+03	0.411D+12
30.00	0.800D-01	-0.177D+07	-0.568D+05	0.000D+00	0.449D+03	0.411D+12
36.00	0.939D-01	-0.211D+07	-0.559D+05	0.000D+00	0.509D+03	0.411D+12
42.00	0.108D+00	-0.244D+07	-0.549D+05	0.000D+00	0.568D+03	0.411D+12
48.00	0.121D+00	-0.277D+07	-0.538D+05	0.000D+00	0.626D+03	0.411D+12
54.00	0.135D+00	-0.309D+07	-0.527D+05	0.000D+00	0.683D+03	0.411D+12
60.00	0.148D+00	-0.341D+07	-0.514D+05	0.000D+00	0.739D+03	0.411D+12
66.00	0.160D+00	-0.371D+07	-0.501D+05	0.000D+00	0.793D+03	0.411D+12
72.00	0.173D+00	-0.401D+07	-0.487D+05	0.000D+00	0.845D+03	0.411D+12
78.00	0.185D+00	-0.430D+07	-0.472D+05	0.000D+00	0.896D+03	0.411D+12
84.00	0.196D+00	-0.458D+07	-0.456D+05	0.000D+00	0.946D+03	0.411D+12
90.00	0.208D+00	-0.485D+07	-0.439D+05	0.000D+00	0.993D+03	0.411D+12
96.00	0.219D+00	-0.511D+07	-0.421D+05	0.000D+00	0.104D+04	0.411D+12
102.00	0.229D+00	-0.536D+07	-0.402D+05	0.000D+00	0.108D+04	0.411D+12
108.00	0.239D+00	-0.560D+07	-0.383D+05	0.000D+00	0.112D+04	0.411D+12
114.00	0.248D+00	-0.582D+07	-0.363D+05	0.000D+00	0.116D+04	0.411D+12
120.00	0.257D+00	-0.603D+07	-0.341D+05	0.000D+00	0.120D+04	0.411D+12
126.00	0.266D+00	-0.623D+07	-0.319D+05	0.000D+00	0.124D+04	0.411D+12
132.00	0.274D+00	-0.642D+07	-0.296D+05	0.000D+00	0.127D+04	0.411D+12
138.00	0.281D+00	-0.659D+07	-0.273D+05	0.000D+00	0.130D+04	0.411D+12
144.00	0.288D+00	-0.675D+07	-0.248D+05	0.000D+00	0.133D+04	0.411D+12
150.00	0.294D+00	-0.689D+07	-0.222D+05	0.000D+00	0.135D+04	0.411D+12
156.00	0.299D+00	-0.702D+07	-0.196D+05	0.000D+00	0.138D+04	0.411D+12
162.00	0.304D+00	-0.713D+07	-0.168D+05	0.000D+00	0.140D+04	0.411D+12
168.00	0.309D+00	-0.722D+07	-0.140D+05	0.000D+00	0.141D+04	0.411D+12
174.00	0.312D+00	-0.730D+07	-0.111D+05	0.000D+00	0.142D+04	0.411D+12
180.00	0.315D+00	-0.736D+07	-0.813D+04	0.000D+00	0.144D+04	0.411D+12
186.00	0.318D+00	-0.740D+07	-0.505D+04	0.000D+00	0.144D+04	0.411D+12
192.00	0.319D+00	-0.742D+07	-0.188D+04	0.000D+00	0.145D+04	0.411D+12
198.00	0.321D+00	-0.742D+07	0.138D+04	0.000D+00	0.145D+04	0.411D+12
204.00	0.321D+00	-0.740D+07	0.472D+04	0.000D+00	0.144D+04	0.411D+12
210.00	0.321D+00	-0.736D+07	0.815D+04	0.000D+00	0.144D+04	0.411D+12
216.00	0.320D+00	-0.730D+07	0.117D+05	0.000D+00	0.143D+04	0.411D+12
222.00	0.318D+00	-0.722D+07	0.153D+05	0.000D+00	0.141D+04	0.411D+12
228.00	0.316D+00	-0.712D+07	0.190D+05	0.000D+00	0.139D+04	0.411D+12
234.00	0.313D+00	-0.699D+07	0.228D+05	0.000D+00	0.137D+04	0.411D+12
240.00	0.310D+00	-0.684D+07	0.266D+05	0.000D+00	0.135D+04	0.411D+12
246.00	0.306D+00	-0.667D+07	0.306D+05	0.000D+00	0.131D+04	0.411D+12
252.00	0.302D+00	-0.648D+07	0.346D+05	0.000D+00	0.128D+04	0.411D+12
258.00	0.297D+00	-0.626D+07	0.387D+05	0.000D+00	0.124D+04	0.411D+12
264.00	0.291D+00	-0.601D+07	0.430D+05	0.000D+00	0.120D+04	0.411D+12
270.00	0.285D+00	-0.574D+07	0.473D+05	0.000D+00	0.115D+04	0.411D+12
276.00	0.278D+00	-0.544D+07	0.517D+05	0.000D+00	0.110D+04	0.411D+12
282.00	0.271D+00	-0.512D+07	0.561D+05	0.000D+00	0.104D+04	0.411D+12
288.00	0.263D+00	-0.477D+07	0.607D+05	0.000D+00	0.978D+03	0.411D+12
294.00	0.255D+00	-0.439D+07	0.654D+05	0.000D+00	0.911D+03	0.411D+12
300.00	0.247D+00	-0.398D+07	0.701D+05	0.000D+00	0.839D+03	0.411D+12
306.00	0.238D+00	-0.354D+07	0.749D+05	0.000D+00	0.762D+03	0.411D+12
312.00	0.229D+00	-0.308D+07	0.798D+05	0.000D+00	0.680D+03	0.411D+12
318.00	0.220D+00	-0.258D+07	0.848D+05	0.000D+00	0.593D+03	0.411D+12
324.00	0.210D+00	-0.206D+07	0.899D+05	0.000D+00	0.500D+03	0.411D+12
330.00	0.200D+00	-0.150D+07	0.951D+05	0.000D+00	0.402D+03	0.411D+12
336.00	0.190D+00	-0.912D+06	0.969D+05	-0.257D+03	0.298D+03	0.411D+12
342.00	0.180D+00	-0.334D+06	0.947D+05	-0.487D+03	0.196D+03	0.411D+12
348.00	0.170D+00	0.227D+06	0.912D+05	-0.690D+03	0.177D+03	0.411D+12
354.00	0.160D+00	0.763D+06	0.865D+05	-0.866D+03	0.272D+03	0.411D+12
360.00	0.150D+00	0.127D+07	0.809D+05	-0.102D+04	0.361D+03	0.411D+12
366.00	0.141D+00	0.174D+07	0.744D+05	-0.114D+04	0.444D+03	0.411D+12
372.00	0.131D+00	0.216D+07	0.673D+05	-0.124D+04	0.519D+03	0.411D+12
378.00	0.122D+00	0.255D+07	0.596D+05	-0.131D+04	0.587D+03	0.411D+12
384.00	0.112D+00	0.288D+07	0.516D+05	-0.137D+04	0.646D+03	0.411D+12
390.00	0.103D+00	0.317D+07	0.433D+05	-0.140D+04	0.696D+03	0.411D+12
396.00	0.947D-01	0.340D+07	0.349D+05	-0.141D+04	0.738D+03	0.411D+12
402.00	0.863D-01	0.359D+07	0.265D+05	-0.140D+04	0.770D+03	0.411D+12
408.00	0.782D-01	0.372D+07	0.182D+05	-0.137D+04	0.794D+03	0.411D+12
414.00	0.704D-01	0.381D+07	0.101D+05	-0.133D+04	0.809D+03	0.411D+12
420.00	0.630D-01	0.385D+07	0.225D+04	-0.128D+04	0.816D+03	0.411D+12
426.00	0.559D-01	0.384D+07	-0.520D+04	-0.121D+04	0.814D+03	0.411D+12
432.00	0.491D-01	0.379D+07	-0.122D+05	-0.113D+04	0.805D+03	0.411D+12
438.00	0.427D-01	0.369D+07	-0.187D+05	-0.104D+04	0.789D+03	0.411D+12
444.00	0.366D-01	0.356D+07	-0.246D+05	-0.939D+03	0.766D+03	0.411D+12
450.00	0.308D-01	0.340D+07	-0.299D+05	-0.832D+03	0.737D+03	0.411D+12
456.00	0.253D-01	0.321D+07	-0.346D+05	-0.718D+03	0.703D+03	0.411D+12
462.00	0.201D-01	0.299D+07	-0.385D+05	-0.597D+03	0.664D+03	0.411D+12
468.00	0.152D-01	0.274D+07	-0.417D+05	-0.471D+03	0.622D+03	0.411D+12
474.00	0.104D-01	0.249D+07	-0.442D+05	-0.338D+03	0.576D+03	0.411D+12
* 480.00	0.595D-02	0.222D+07	-0.458D+05	-0.201D+03	0.528D+03	0.411D+12
486.00	0.166D-02	0.194D+07	-0.466D+05	-0.581D+02	0.479D+03	0.411D+12
492.00	-0.247D-02	0.166D+07	-0.465D+05	0.901D+02	0.430D+03	0.411D+12
498.00	-0.646D-02	0.138D+07	-0.455D+05	0.244D+03	0.381D+03	0.411D+12
504.00	-0.103D-01	0.111D+07	-0.435D+05	0.404D+03	0.334D+03	0.411D+12
510.00	-0.141D-01	0.860D+06	-0.406D+05	0.570D+03	0.289D+03	0.411D+12
516.00	-0.178D-01	0.628D+06	-0.367D+05	0.744D+03	0.248D+03	0.411D+12
522.00	-0.214D-01	0.422D+06	-0.316D+05	0.925D+03	0.212D+03	0.411D+12
528.00	-0.250D-01	0.249D+06	-0.255D+05	0.111D+04	0.181D+03	0.411D+12
534.00	-0.286D-01	0.116D+06	-0.183D+05	0.131D+04	0.158D+03	0.411D+12
540.00	-0.321D-01	0.307D+05	-0.976D+04	0.152D+04	0.143D+03	0.411D+12
546.00	-0.357D-01	0.000D+00	0.000D+00	0.174D+04	0.137D+03	0.411D+12

* Point of ⊖ Deflection

$L = 486\,IN + \frac{17}{42}6'' = 488.4'' = 40.70'$

ENTRANCO ENGINEERS, INC.

PROJECT Glendale Ave BR
SUBJECT Approach Slab
MADE BY WSK DATE 8/89 CHECKED BY JEM DATE 8/87

Check Edge Beam for Approach Slab

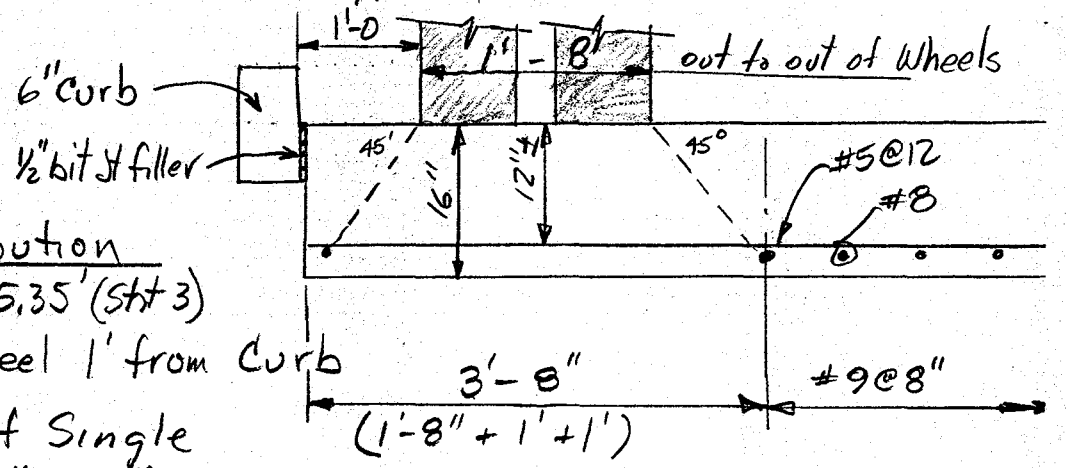

Compute Distribution

Normal Slab = 5.35' (sht 3)

Edge Strip: wheel 1' from Curb

Loaded area of Single Dual Wheel = 10" x 20"

(See Chp 4 p 38-41 Concrete pipe Hdbk)

Assume load dist. @ 45° from Top of Slab to dist. Steel

$\therefore E = 1' + 1'\text{-}8'' + 1' = 3.67'$

(1' = dist to Curb; 1'-8" = loaded Tire width)

Then $M_{DL} = 12.7^{1\text{-}k}$ (sht 3)

$M_{LL} = (1.3 \times 16 \times 22.54/4)\,\frac{1}{3.67} = 31.94^{1\text{-}k}$ (Dist)

$M_{TL} = 44.64^{1\text{-}k}$

Assume #9 @ 5" $n = 8$ $f'_c = 4000$ $f_c = 1600$ $f_s = 24000$

$A_s = 2.4\,in^2$ $p = .015$ $K = .384$ $J = .872$

Check Stresses

$f_s = M/A_s jd = 44.64 \times 12/(2.4 \times .872 \times 12.94) = 19{,}781$ psi OK

$f_c = 2M/KJbd^2 = 1071.36/.384 \times .872 \times 12 \times 12.94^2 = 1592$ psi < 1600 OK

USE #9 @ 5" IN outside 4' of Approach Slab

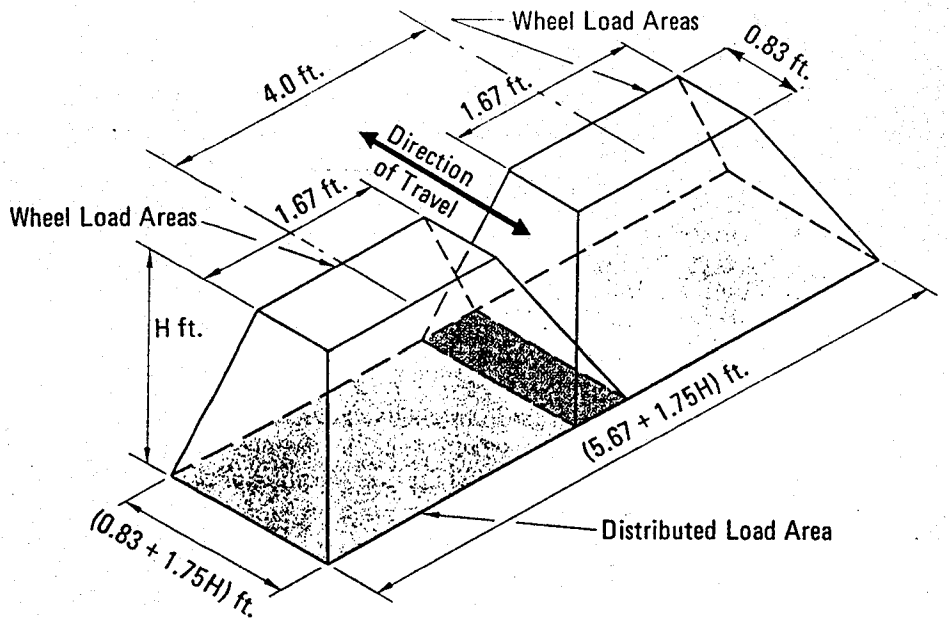

Figure 4.27. Distributed Load Area—Two HS 20 Trucks Passing.

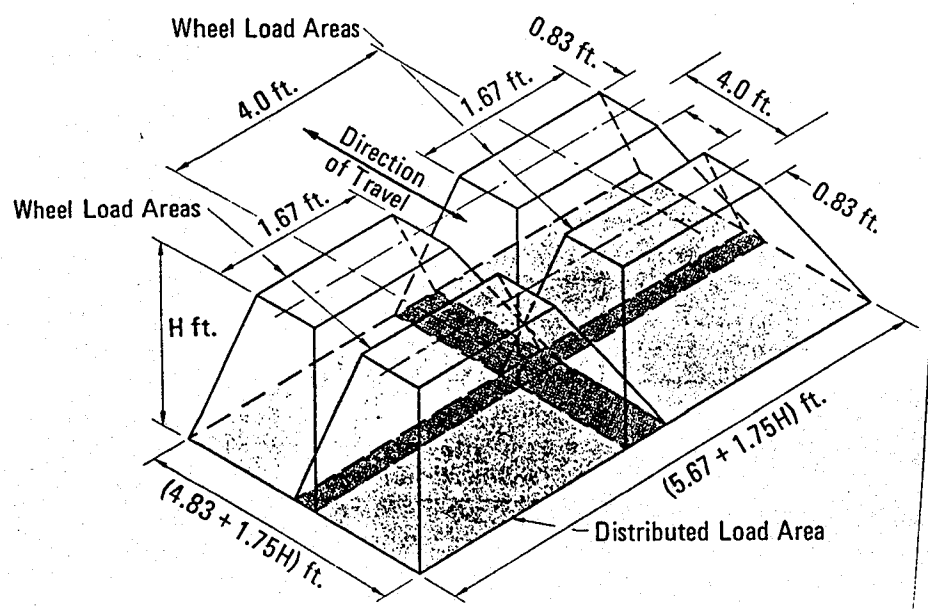

Figure 4.28. Distributed Load Area—Alternate Loads in Passing Mode

Table 4.11. Impact Factors for Traffic Loads.

Height of Cover	Impact Factor
0'-0" to 1'-0"	30%
1'-1" to 2'-0"	20%
2'-1" to 2'-11"	10%
3'-0" and Greater	0

Note: Impact factors recommended by the American Association of State Highway and Transportation Officials in "Standard Specifications for Highway Bridges", Twelfth Edition.

Table 4.12. Critical Loading Configurations.

H, feet	P, pounds	A_{LL}, Square Feet
$H < 1.33$	16,000	(0.83 + 1.75H) (1.67 + 1.75H) *(See Fig. 4.26)*
$1.33 \leq H < 4.10$	32,000	(0.83 + 1.75H) (5.67 + 1.75H) *(See Fig. 4.27)*
$4.10 \leq H$	48,000	(4.83 + 1.75H) (5.67 + 1.75H) *(See Fig. 4.28)*

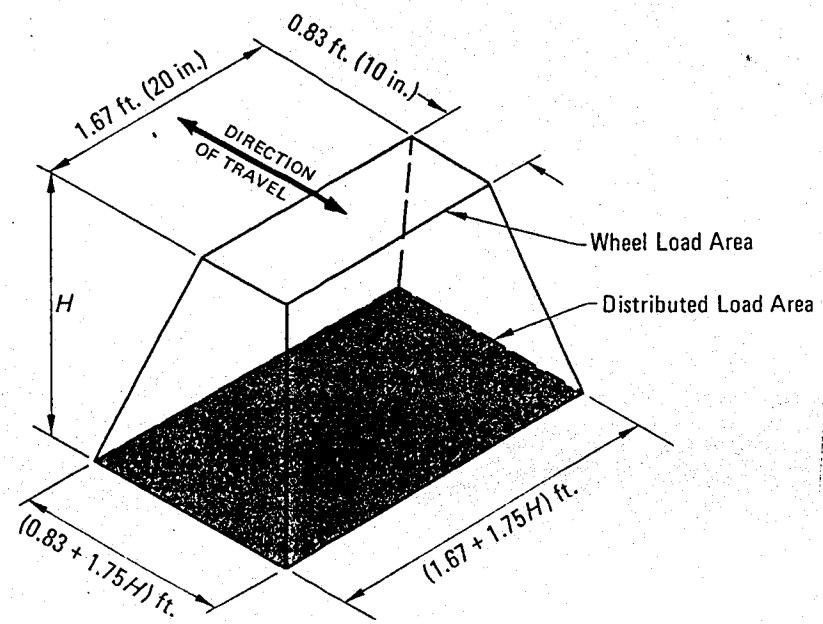

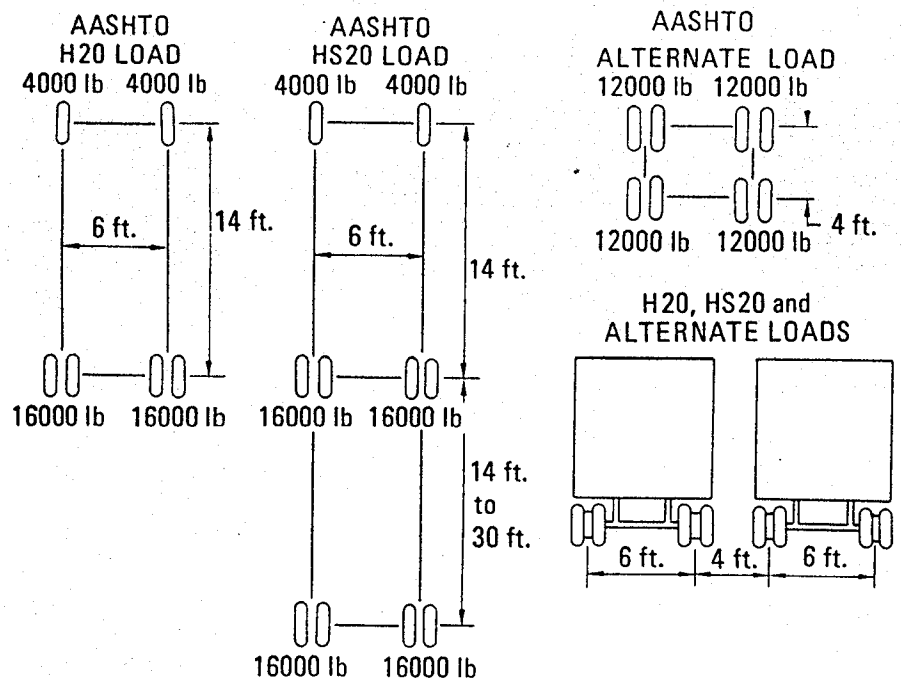

Figure 4.24. Live Load Spacing.

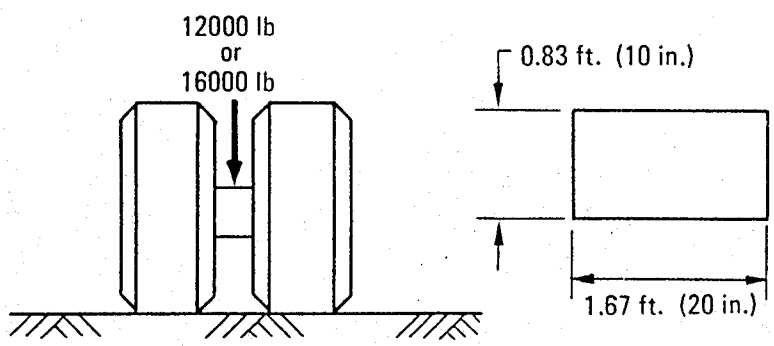

Figure 4.25. Wheel Load Surface Contact Area.

dual wheel, two HS 20 trucks passing, and alternate loads in the passing mode are shown in *Figures 4.26, 4.27* and *4.28*. The maximum value for average pressure intensity is obtained under various conditions of live load and depth of pipe. As shown in *Figures 4.27* and *4.28*, at greater depths the distributed loaded areas overlap, and the maximum pressure will develop under either the truck passing or the alternate loads in passing mode conditions. The depths for these transitions is shown in *Table 4.12*, along with the total loading, and rectangular areas that will produce the critical load effect.

Highways

Pavements designed for heavy truck traffic substantially reduce the pressure transmitted through a wheel to the subgrade, and consequently to underlying concrete pipe. The pressure reduction is so great that generally the live load can be neglected. The pressure intensity, however, can be estimated as discussed previously through use of *Equations 4.41* and *4.42* and *Tables 4.5* through *4.10*. For heavy duty asphalt or flexible pavements, the reduction in intensity will be comparable to that for concrete pavements. The economies that can be realized by the reduction of pipe strength requirements can be substantial and should not be overlooked.

For intermediate thicknesses of asphalt or flexibile pavements, there is no generally accepted theory for estimating load distribution effects. The layered system theory, first advanced by Burmister in 1943, has been extended and solved for conditions that could apply to concrete pipe. However, this theory is not in common use. Local engineering practices control the basis for estimating the live load.

Relatively thin pavements do not reduce the pressure transmitted from the wheel to the subgrade to any significant degree. Such pavements are generally considered as unsurfaced roadways for determination of the effect of live loads on buried concrete pipe. As discussed previously, *Equations 4.39* and *4.40* and *Table 4.4* can be used to estimate the pressure intensity. A more practical method as accepted by AASHTO is developed in the following paragraphs.

Load Assumptions

The maximum highway wheel loads generally considered for design purposes are those specified by AASHTO for HS 20 truck and alternate load configurations as illustrated in *Figure 4.24*. The critical axle loads for these configurations are carried on dual wheels. The contact area of the dual wheels is assumed to be oval in shape and is approximately equal to the wheel load divided by the tire pressure. Several assumptions are normally made to simplify the evaluation process. For an HS 20 wheel load, 16,000 pounds, the contact pressure is assumed equal to the tire pressure of 80 pounds per square inch. The contact area, therefore, is 16,000 pounds divided by 80 pounds per square inch, or 200 square inches, and can be approximated by a rectangle, as shown in *Figure 4.25*, with a length of 20 inches and a width of 10 inches. The possible combinations of load applications are a single dual wheel load, two HS 20 trucks passing, and the alternate load configuration in the passing mode. For highway loadings, AASHTO recommends that the live load be increased by an impact factor when the pipe is less than three feet beneath the pavement surface. The recommended impact factors are presented in *Table 4.11*.

Load Distribution Assumptions

At depths, *H*, below the surface, the length and the width of the rectangle are assumed to increase by the value of 1.75H. The conditions for a single

ENTRANCO ENGINEERS, INC.

SHEET NO 5 OF ____

JOB NO 88510-10-924

PROJECT GLENDALE AVE / ACDC BR

CALCULATIONS FOR PRESTRESSED BOX BEAM

MADE BY WM DATE 5/89 CHECKED BY WSK DATE 6/89

Recheck 8/89

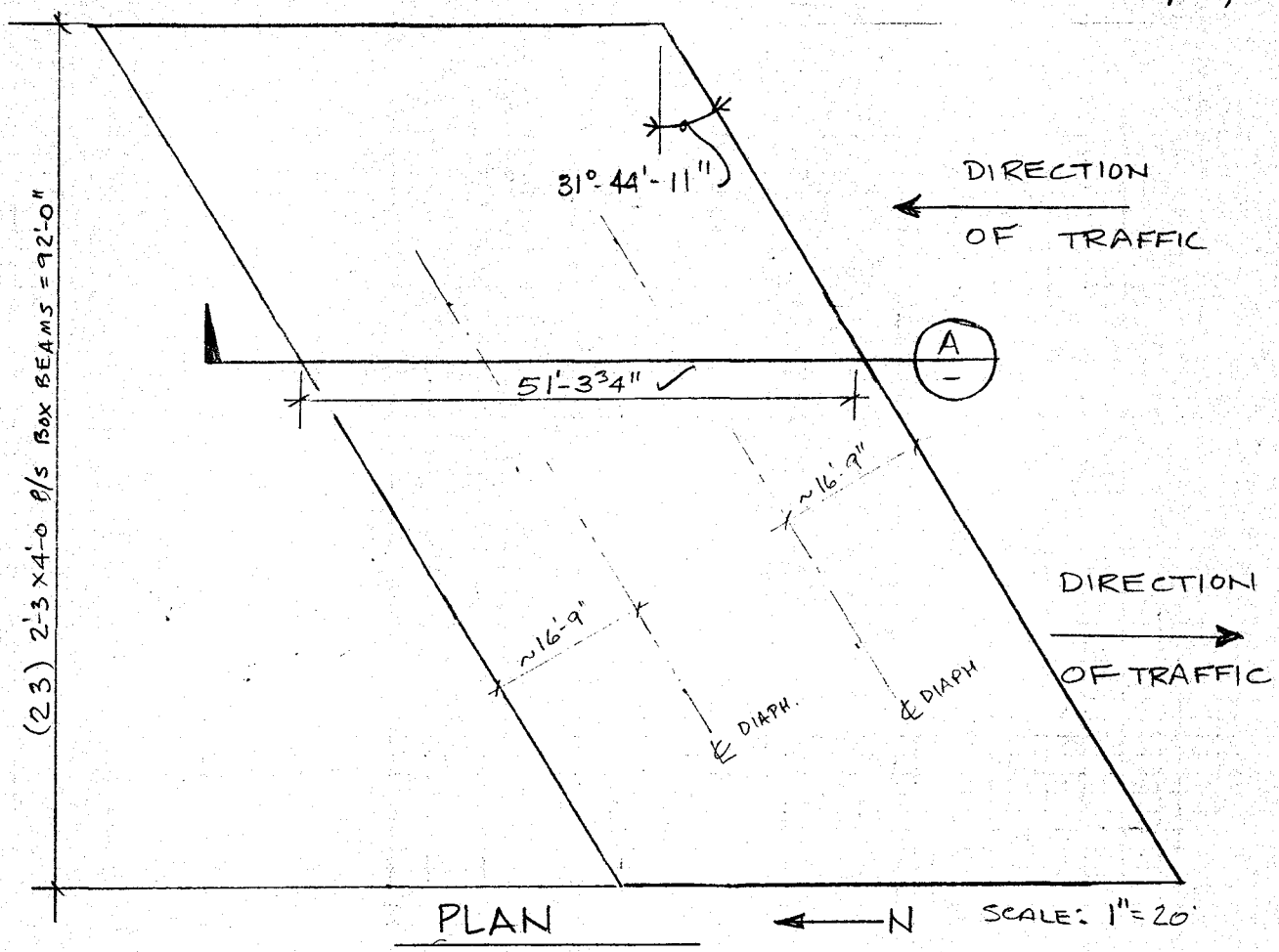

PLAN

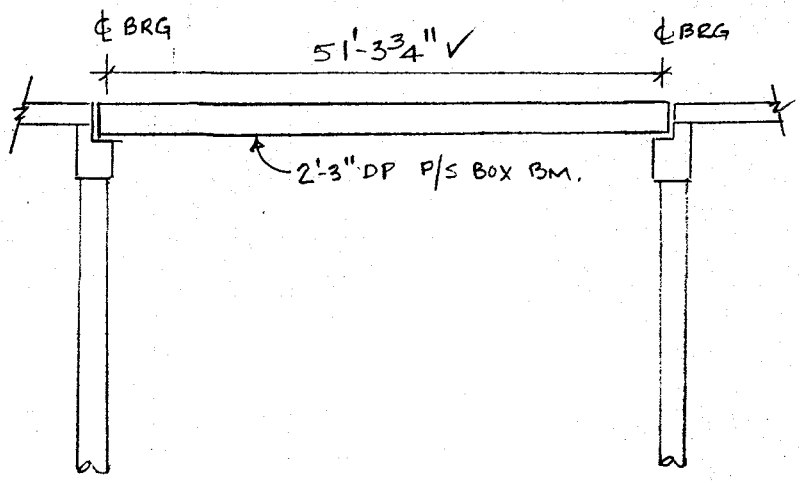

A SECTION

ENTRANCO ENGINEERS, INC.

SHEET NO 6 OF ____

JOB NO ____ - -

PROJECT GLENDALE AVE/ ACDC BR.

CALCULATIONS FOR P/S BOX BEAMS

MADE BY WM DATE 5/89 CHECKED BY WSK DATE 6/89

Revised WSK 8/89 WM 8/89

MATERIAL & SECTION PROPERTIES

CONCRETE: HARD ROCK AGGREGATE - 150 PCF

f'_{ci} = 4.0 KSI ✓

f'_c = ~~6.0~~ 5.0 KSI ✓, E_c = ~~4696~~ 4289 KSI ✓

MILD REINF: ASTM A-615, f_Y = 60 KSI, f_s = 24 KSI

OR

ASTM A-706, f_Y = 60 KSI, f_s = 24 KSI

P/S STEEL: ASTM A-415, f_{pu} = 270 KSI

7-WIRE, LOW RELAXATION, ½" DIA.

$A_{p/s}$ = 0.1531 IN² ✓

E_{ps} = 28000 KSI ✓ E_s = 29,000 KSI

SECTION PROPERTIES

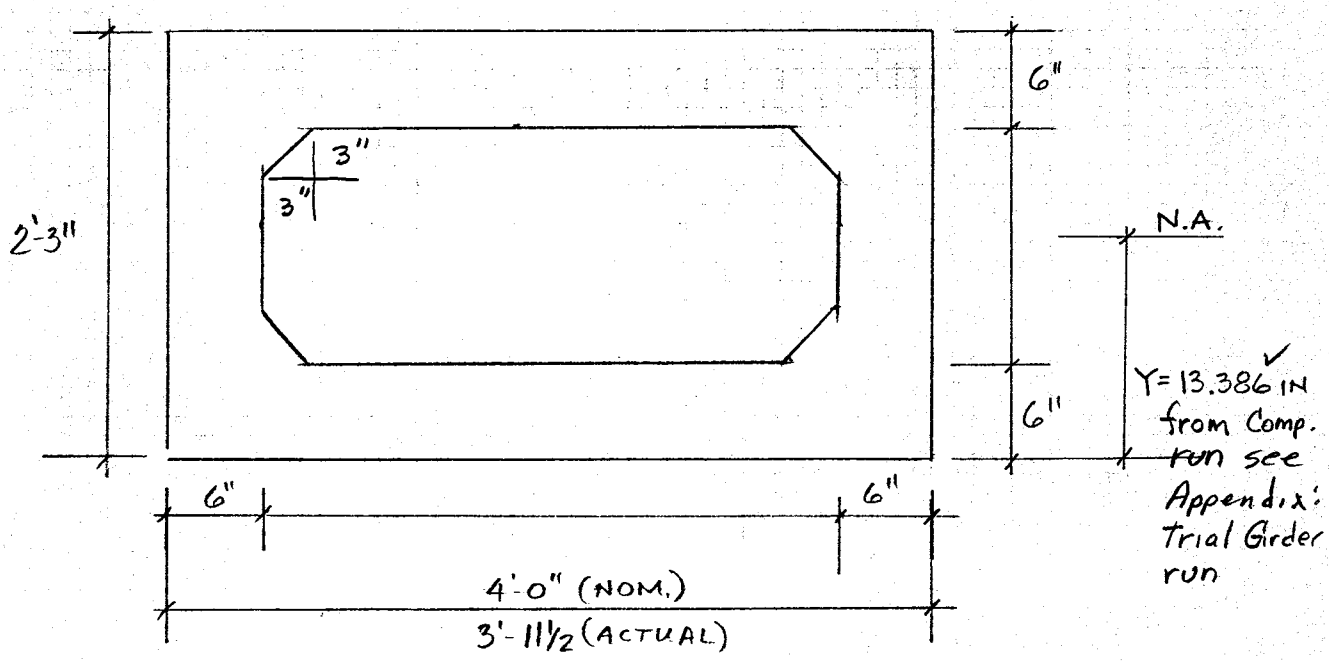

A = 760.8 IN²

I = 68656 IN⁴

S_T = 5043.2 IN³

S_B = 5128.8 IN³

H = 27 IN

WT = 792 PLF (NOT INCL DIAPHRAGMS)

Reviewers Note

Girder Section is available locally. Deflection criteria AASHTO 8.9.3.1 determined selection of 6" webs and Top & Bot Slabs. See Sht 19

ENTRANCO ENGINEERS, INC.

SHEET NO 6A OF ____

JOB NO ____ - ____

PROJECT Glendale

CALCULATIONS FOR P/S Box Beam - Top Slab

MADE BY WSK DATE 6/89 CHECKED BY WM DATE 6/89

Rev WSK 8/89 Rechecked JEM 8/89

Top Slab Reinforcement Assume Wheel on Slab no Topping

effective span - AASHTO 3.24.1 & 8.8

$S = 2 - 11\frac{1}{2} + 6'' = 3.46'$

Pos $M_{LL} = ((S+2)/32)\,16 \times 1.3$ per ft $= 3.55^{1-K}$ 3.24.3.1

Neg $M_{LL} = +M_{LL} = 42588''-\#$

Dead Load: Assume 4" Max Topping ∴ 10" Conc: $w = 125\#/ft$

Pos $M_{DL} = w\ell^2/24 = 125\ 3.46^2/24 = 62.35 \times 12 = 748''-\#$

Neg $M_{DL} = w\ell^2/12 = 2 \times M_{DL} = 1496''\#$

USE $f'c = 5000$ $f_y = 60KSI$ $n = 7$ $d = 6'' - 1(\text{cover}) - 5/8/2(\text{bar}) = 4.69''$

$f_c = 2000$

TOTAL $M = M_{LL} + M_{DL} = 42588 + 1496 = 44084''\#$ Neg Mom Controls

Try $A_s = M/f_s jd = 44084/24000 \cdot .9\ 4.75 = .43\ in^2$

use 7½" Spacing to match Stirrup Spacing

Try #5 @ 7½" ∴ $A_s = .50$ (.32) ρ .0089 $K = .296$ $J = .901$

Check Stresses for #5@7.5

$f_s = 44084/.50 \times .901 \times 4.69 = 20865 < 24^{KSI}$ OK

$f_c = 2 \times 44084/.296 \times .901 \times 12 \times 4.69^2 = 1252 < 2000$ OK

Check #4@ 7.5 $A_s = .32$ $\rho = .0056$ K .244 J .919 $f_s = 31558 > 20$ No good

Dist Steel

$A_s = .5\ in^2$ $D_s = .67 \times 1.5 = .34\ in^2$

USE 2#4 in middle of Slab

So USE 6#4s bot Mat

4#4 top Mat

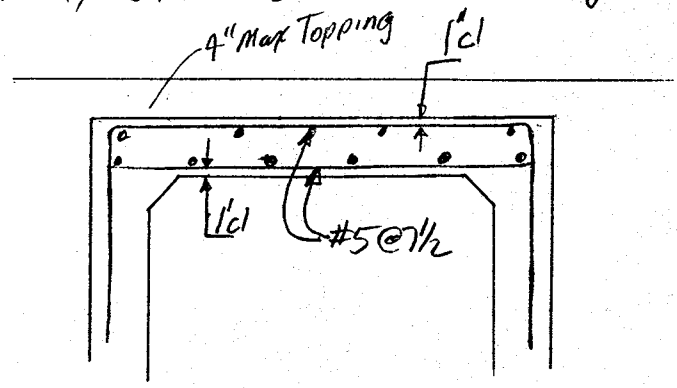

USE #5@7½" Top & Bot.

ENTRANCO ENGINEERS, INC.

SHEET NO 7 OF ____

JOB NO 88510-10-

PROJECT GLENDALE AVE/ACDC BR.

CALCULATIONS FOR ____

MADE BY WM DATE 5/89 CHECKED BY WSK DATE 6/89

P/S BEAMS DESIGN AS SIMPLE SPAN, LEN = 51.33'

LOADS : LL = LIVE LOAD, HS20-~~44~~ TRUCK OR (2) 24K AXLES AT 4' (Doesn't Control)

DL = DEAD LOAD OF BEAMS

SDL = SUPERIMPOSED DEAD LOAD, IE SIDEWALK, BARRIERS, UTILITIES, WEARING SURFACE

I = IMPACT FACTOR APPLIED TO LL ACCORDING TO AASHTO 3.8.2.2

$$I = \frac{50}{51.3+125} = 0.284$$

DESIGN FOR LL OF 60 PSF ON SIDEWALKS (AASHTO 3.14.1.1)

ASSUME EVEN DISTRIBUTION OF ALL SDL SINCE THEY ARE APPLIED AFTER TRANSVERSE POST-TENSIONING & JOINT-KEYWAY GROUTING (AASHTO 3.23.2.3.2 & 3.23.2.3.1) ✓

SELF-WEIGHT OF BOX BEAM (EXCLUDING DIAPHRAGMS)

$$\left[\frac{760}{144}(.150)\right] = .792 \text{ KLF}$$

USE ~~0.800~~ KLF ✓ 0.792

CONCRETE BARRIERS

(~~2.48~~ 2.00 SF/1)(.15) 2 = ~~0.74~~ 0.60; .74/23 = ~~0.032~~ .026, USE ~~0.040~~ .026

SIDEWALKS

(9' x .83 x .15) 2 = 2.24; 2.24/23 = 0.097, USE 0.100 ✓

WEARING SURFACE (3" Conc —

~~37.5~~ ~~28~~ PSF x 4' = ~~0.100~~ 0.150 KLF

~~0.100~~ .150

UTILITIES

NONE

FUTURE WEARING SURFACE (SAME AS ABOVE) 25#/ft²

0.100 ~~1.17~~

ALL D.L. w_{DL} = ~~1.140~~ KLF

3

ENTRANCO ENGINEERS, INC.

SHEET NO 8 OF ____

JOB NO ____ - ____

PROJECT GLENDALE AVE / ACDC BR.

CALCULATIONS FOR ____

MADE BY WM DATE 5/89 CHECKED BY ____ DATE ____

WHEEL LOAD DISTRIBUTION (AASHTO 3.23.4)

$C = K(w/L) = 1.0(92/51.33) = 1.792$

$D = 5 + N_L/10 + \left(3 - \frac{2N_L}{7}\right)\left(1 - \frac{C}{3}\right)^3$

$= 5 + .7 + \left(3 - \frac{2\times 7}{7}\right)\left(1 - \frac{1.792}{3}\right) = 5.862$

$S = (12N_L + 9)/N_G = (12\times 7 + 9)/23 = 4.043$

$D.F. = S/D = 4.043/5.862 = \underline{0.690}$ ✓

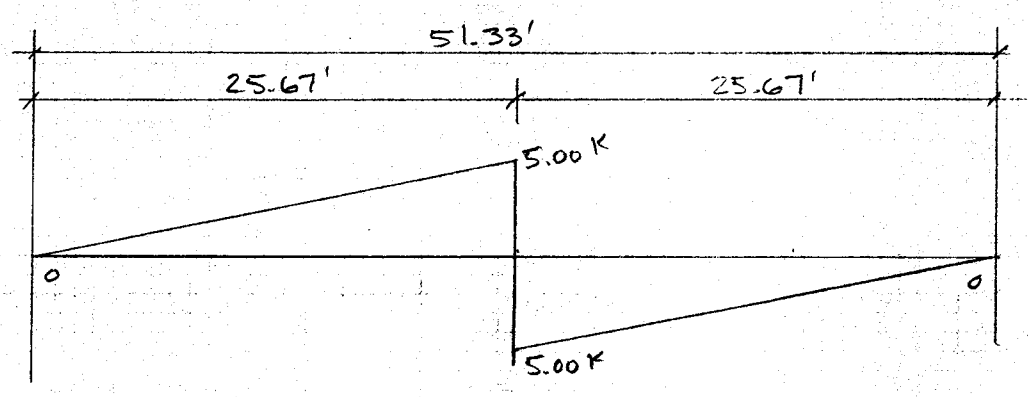

SHEAR INFLUENCE AT MIDSPAN DUE TO 10K LOAD

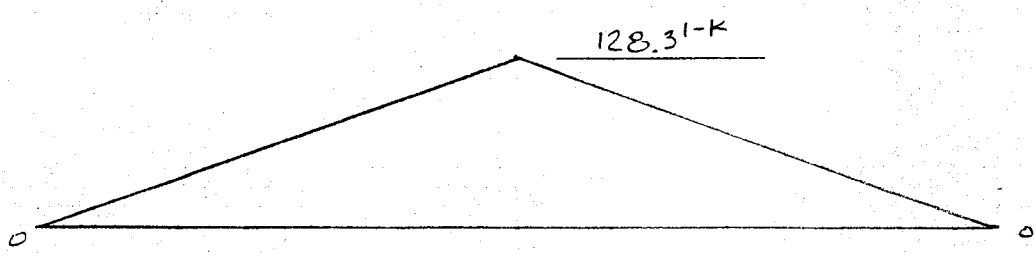

MOMENT INFLUENCE AT MIDSPAN DUE TO 10K LOAD

DIAPHRAGM WEIGHT (2 PER BOX BM)

$P = (\cancel{3.0}\ 2.95 \times 1.25 \times 3.15)(.150\ \text{PCF}) = \cancel{1.77}\ 1.74\ \text{K}$, USE 1.80 K. ea

ENTRANCO ENGINEERS, INC.

SHEET NO 9 OF ____

JOB NO ____ - ____ - ____

PROJECT GLENDALE AVE / ACDC BR.

CALCULATIONS FOR P/S BOX BEAM

MADE BY WM DATE 5/89 CHECKED BY WSK DATE 6/89

DESIGN MOMENTS (PER BOX BEAM)

TOTAL DL MOMENT @ MIDSPAN:

(ALL DL EXCEPT DIA.) $M = wL^2/8 = \cancel{1.14}\,(1.17)(51.33)/8 = 375.5^{1\text{-}K}$ 385.0

(DIAPHRAGM) $M = Pa = \cancel{1.80}\,(1.74)(16.75) = 30.2$ 29.2

2 load equally spaced
See AISC Bm Eq

$405.7^{1\text{-}K}$ ✓ 414.2

$\Delta = 2.1\% < 4\%$
Say OK
WSK

TOTAL LL MOMENT @ MIDSPAN:

$M_{50} = 627.9^{1\text{-}K}$ (L = 50') (AASHTO, APP A, LOADING HS20-44

$M_{52} = 663.6^{1\text{-}K}$ (L = 52')

INTERPOLATING —

$$M_{51.33} = \left[\frac{51.33-50}{52-50}\right](663.6-627.9) + 627.9 = 651.6^{1\text{-}K}$$ ✓ (FOR L = 51.33')

DESIGN TRUCK LL MOMENT (INCL IMPACT)

$$M = 651.6\,\underset{\text{GIR/LN.}}{\left(\tfrac{1}{2}\right)}\underset{\text{D.F.}}{(0.690)}\underset{\text{IMPACT}}{(1.284)} = 288.6^{1\text{-}K}$$ ✓

GIRDER (ONLY) D.L. MOMENT (M_{sw})

$$M_{sw} = 0.792(51.33)^2/8 = 261.0^{1\text{-}K}$$ ✓

LOCATION OF AXLES FOR MAX L.L. MOM & DEFL AT ℄ GIRDER

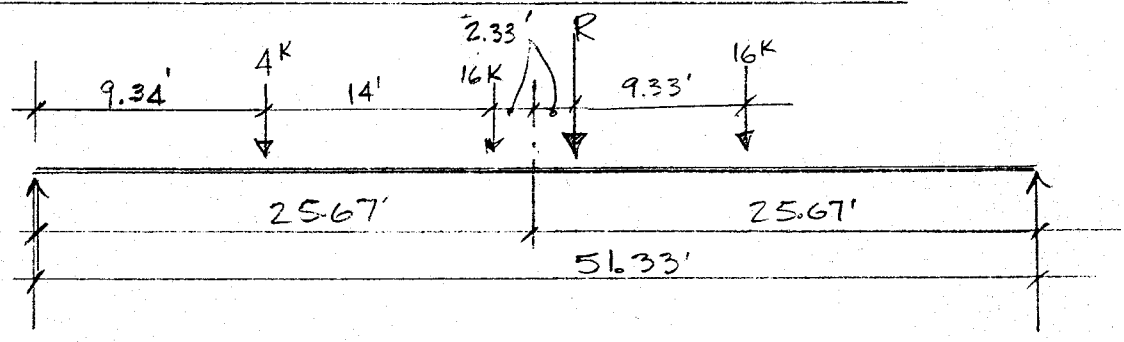

R = RESULTANT OF WHEEL LOADS = 4 + 16 + 16 = 36K

$$\bar{x} = \frac{4(0) + 16(14) + 16(28)}{36} = 18.667'$$ (FROM 4K LOAD)

ENTRANCO ENGINEERS, INC.

SHEET NO 10 OF ____

JOB NO ____ - ____

PROJECT GLENDALE AVE/ACDC BR.

CALCULATIONS FOR ____

MADE BY WM DATE 5/89 CHECKED BY WSK DATE 6/89

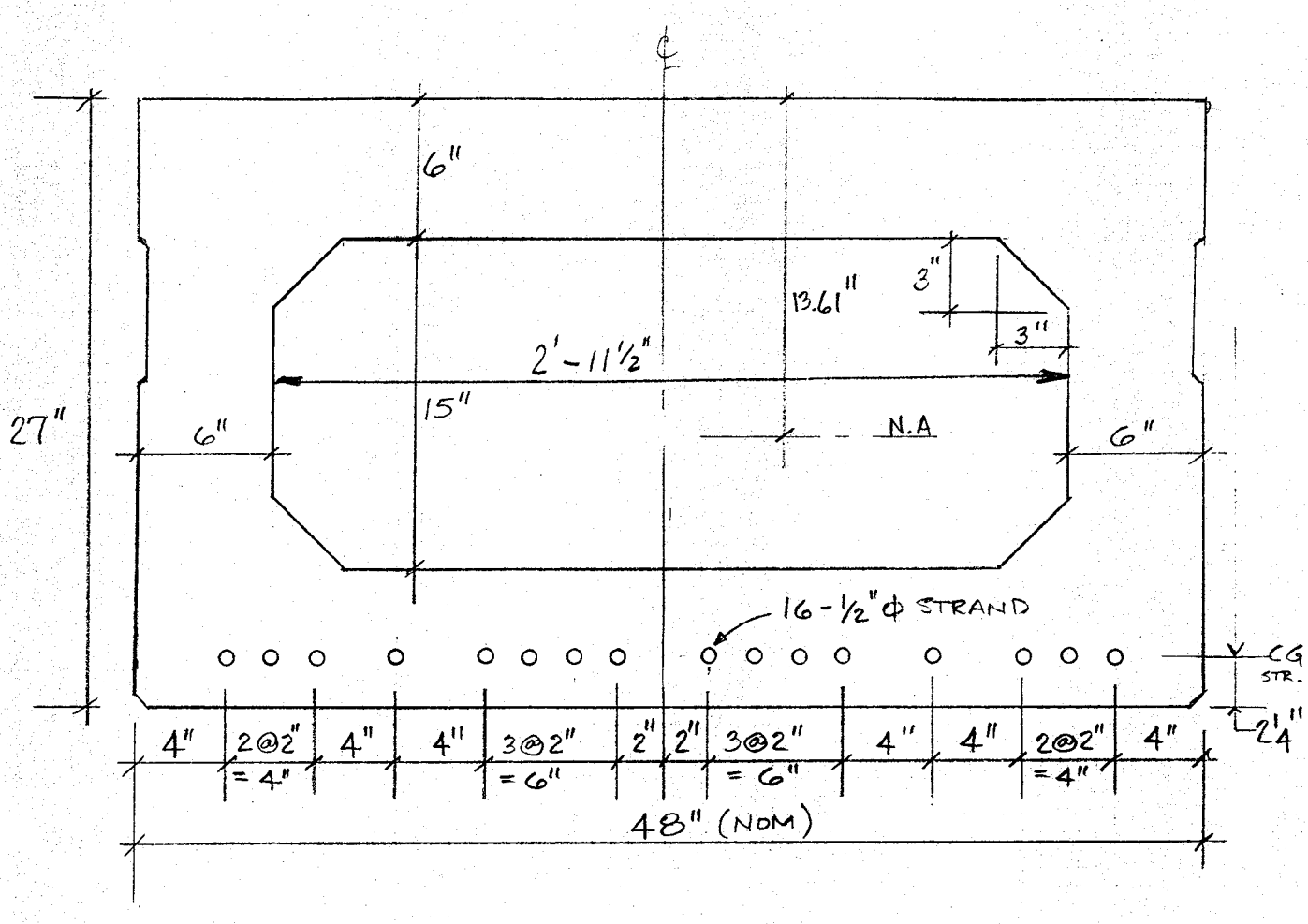

NO. ½" Φ STRANDS = 16 ✓

AREA EA. STRAND = 0.1531 ✓

JACKING STRESS: $f_s = 0.75 f'_s$ ✓

$f'_s = 270$ KSI ✓

$E_{STRAND} = 28{,}000$ KSI

TOTAL JACKING FORCE = $(.75)(270)(.1531 \times 16) = 496^K$

STRAND STRESS @ RELEASE: $f_{si} = 0.69 f'_s = .69(270) = 186.3$ KSI

FORCE @ RELEASE = $A_{ps} f_{si} = (16 \times .1531)(.69 \times 270)$
$= 456.4^K$

$e = 27'' - 2.25 - 13.61 = 11.14''$ ✓

from trial Comp run See Appendix - WSK

ENTRANCO ENGINEERS, INC.

SHEET NO 11 OF ____

JOB NO ____

PROJECT GLENDALE AVE/ACDC BR

CALCULATIONS FOR ____

MADE BY WM DATE 5/89 CHECKED BY WSK DATE 6/89

PRESTRESS LOSSES

TOTAL LOSSES : $\Delta f_s = SH + ES + CR_c + CR_s$ (AASHTO 9-3)

$SH = 17{,}000 - 150RH$ (RH = 40%)

$SH = 17{,}000 - 150(40) = 11{,}000$ PSI

$ES = \frac{E_s}{E_{ci}}(f_{cIR})$, $E_s = 28000$ KSI

$E_{ci} = 33(150)^{3/2}\sqrt{4000}$ ✓

$= 3{,}834{,}000$ PSI

$f_{cIR} = \frac{A_{ps}f'_s}{A_g} + \frac{A_{ps}f'_s e^2}{I} - \frac{M_{sw}e}{I}$ ($M_{sw} = \frac{.792 \times 51.33^2}{8}(12)$ $= 3132$ '-K

$= \frac{456.4}{760.8} + \frac{456.4(11.14)^2}{68656} - \frac{3132(11.14)}{68656}$

$= 0.917$ KSI (COMP.)

$ES = \frac{(28000)}{(3834)}[0.917] = 6.70$ KSI (@ MID SPAN)

$CR_c = 12f_{cIR} - 7f_{cds}$ (AASHTO 9-9)

$M_{TDL} - M_{sw} = 405.7(12) - 3132$
$= 1736$ '-K

$f_{cds} = (M_{DL} - M_{sw})\, e/I$

$= (1736)(11.14)/68656 = 0.282$ KSI

$CR_c = 12(.917) - 7(.282) =$

$= 9.03$ KSI

$CR_s = 5000 - 0.10ES - 0.05(SH + CR_c)$ (AASHTO 9-10A)

$= 5000 - 0.10(6700) - 0.05(11{,}000 + 9030)$

$= 3329$ PSI

TOTAL LOSSES :

$11{,}000 + 6700 + 9030 + 3329 = \underline{\underline{30{,}059}}$ PSI ✓

ENTRANCO ENGINEERS, INC.

SHEET NO 12 OF ____

JOB NO ____ - ____

PROJECT ____

CALCULATIONS FOR ____

MADE BY WM DATE 5/89 CHECKED BY WSK DATE 6/89

Rechecked WSK 8/89

FINAL PRESTRESS FORCE / STRAND (AFTER ALL LOSSES)

$F_s = [(.75 \times 270{,}000) - 30059](.1531)$

$= 26{,}401$ PSI $\longrightarrow$ USE $F_s = 26{,}400$ #

(PER STRAND)

FINAL P/S FORCE / GIRDER (AFTER ALL LOSSES)

$F_G = 26.4(16) = 422.4^K$

STRESSES (@ $x = 0$ · END OF GIRDER, $x = 25.67$ – MIDSPAN)

AT RELEASE : $f'_{ci} = 4000$ psi

$$f_{\substack{TOP\\BOT}} = \frac{A_{ps} f_{si}}{A_g} \mp \frac{A_{ps} f_{si} e}{S_{\substack{TOP\\BOT}}} \pm \frac{M_o}{S_{\substack{TOP\\BOT}}} \qquad \left(\begin{matrix} + = \text{COMP} \\ - = \text{TENS} \end{matrix}\right)$$

@ $x = 0$

$$f_{TOP} = \frac{456.4}{760.8} - \frac{456.4(11.14)}{5043.2} + 0 = -0.408 \text{ KSI}$$

$(< 7.5\sqrt{f'_c} = 474.3$

$$f_{BOT} = 0.600 + \frac{456.4(11.14)}{5128.8} - 0 = +1.591 \text{ KSI}$$

$(< \cancel{.6} f'_{ci} = \cancel{1.60}$ KSI$)$

$.6 f'_{ci} = 2.40$ OK

@ $x = 25.67'$

$$f_{TOP} = 0.600 - \frac{456.4(11.14)}{5043.2} + \frac{261(12)}{5043.2} = +0.213 \text{ KSI}$$

OK

$$f_{BOT} = 0.600 + \frac{456.4(11.14)}{5128.8} - \frac{261(12)}{5128.8} = +0.981 \text{ KSI}$$

OK

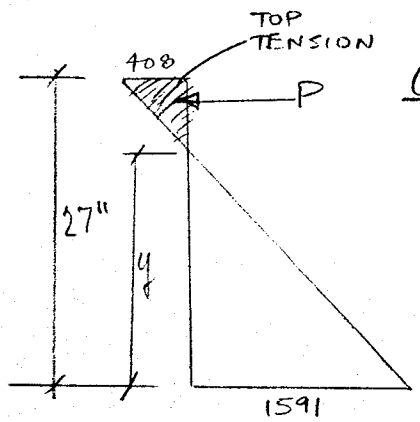

Calc tension Reinf @ Girder ends WSK

$$\frac{y}{1591} = \frac{27}{1591 + 408} \Rightarrow y = 21.5''$$

$$P = \frac{408}{2}(27 - 21.5)(48'') = 53856^{\#}$$

$$A_s = \frac{53856}{24000} = 2.24 \text{ IN}^2$$

CONTROLS

See next P.

PROVIDE: (8) #5 × 12" 8' @ TOP/end

ENTRANCO ENGINEERS, INC.

SHEET NO 13 OF ____

JOB NO - -

PROJECT GLENDALE AVE / ACDC BR.

CALCULATIONS FOR P/S BOX BEAM

MADE BY WM DATE 6/89 CHECKED BY WSK DATE 6/89

Rechecked 8/89

FINAL STRESSES (AFTER LOSSES) $f'_c = 5000$

$$f_{\substack{TOP\\BOT}} = \frac{F_s N_s}{A_g} \underset{+}{-} \frac{F_s N_s e}{S_{\substack{TOP\\BOT}}} \underset{-}{+} \frac{M_{TL}}{S_{\substack{TOP\\BOT}}}$$

(+ = COMP, − = TENS.)

@ $x = 0$

$$f_{TOP} = \frac{422.4}{760.8} - \frac{(422.4)(11.14)}{5043.2} + 0 = -0.378 \text{ KSI}$$

$(< 7.5\sqrt{f'_c} = \cancel{580}\ 530 \text{ KSI})$ OK ✓

$$f_{BOT} = 0.555 + \frac{4705.5}{5128.8} - 0 = +1.472 \text{ KSI}$$

$(< .4 f'_c = \cancel{2.4}\ 2.0 \text{ KSI})$ OK

@ $x = 25.67$

$$f_{TOP} = 0.555 - \frac{4705.5}{5043.2} + \frac{(\overset{DL}{405.7} + \overset{L+I}{288.6})(12)}{5043.2} = +1.274 \text{ KSI}$$

$(< .4 f'_c)$ OK ✓

$$f_{BOT} = 0.555 + \frac{4705.5}{5128.8} - \frac{8331.6}{5128.8} = -0.152 \text{ KSI}$$ OK

$(< 6\sqrt{f'_c} = \cancel{465}\ 424 \text{ PSI})$ OK

$x = 0$ Calc Tension Reinf. at girder ends WSK

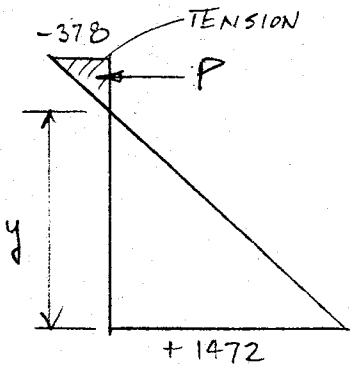

$$\frac{y}{1472} = \frac{27}{1472+378} \Rightarrow y = 21.5''$$

$$P = \frac{378}{2}(27-21.5)(48'') = 49920^{\#}$$

$$A_{s(Req)} = \frac{P}{f_y} = \frac{49920}{24000} = 2.08 \text{ IN}^2$$

PROVIDE: (7)-#5x 1' 8'

$(A_s = 2.17 \text{ IN}^2)$

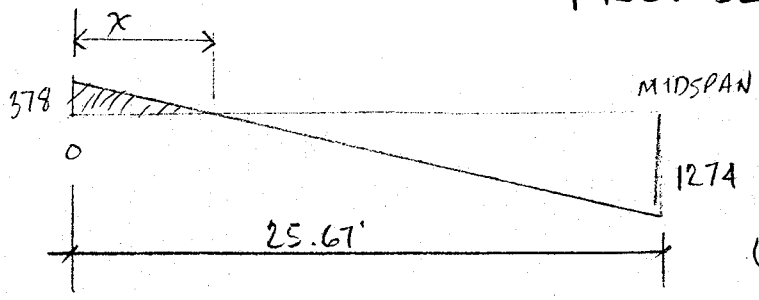

$$\frac{x}{378} = \frac{25.67}{378+1274} \Rightarrow x = 5.87$$

use 8' (2' for Der)

USE 8#5 from p. 12 (10 provided)

ENTRANCO ENGINEERS, INC.

SHEET NO 13A OF ____

JOB NO ____ - ____

PROJECT ____

CALCULATIONS FOR P/S Girder - Axial Load from Substructure

MADE BY WSK DATE 6/89 CHECKED BY WM DATE 6/89

Check girder stresses after channel Excavation.

Axial load from Substructure now applied to girder

P_A = 13.57 K/ft from back wall (see sht 40)

P_a/girder = 4' x 13.57K = 54.28K

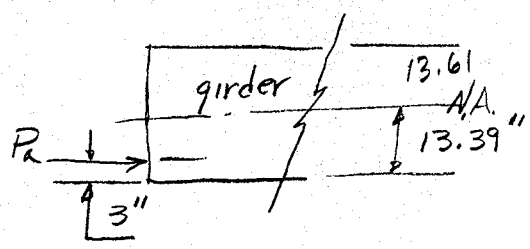

Then ΔP_a = 54.28K / 760.8 IN² = ~~71.3~~ 0 psi

This 0 is ballanced by elastic shorten of girder from P_a ∴ ΔP_a = ~~0~~

Also $\Delta M = P_a \times e$ = 54.3 x 10.39" = 564.2 K-"

Therefore @ x = 0, final stresses (See sht 13)

$\Delta f_{bot} = \frac{Mc}{I} = 564.2 \times \frac{13.39}{68656 \text{ IN}^4} = 110$ psi

$\Delta f_{TOP} = 564.2 \times -\frac{13.69}{68656} = -112.5$ psi

∴ Final f_{bot} = 1472 + 110 = 1582 psi < .4f'c = ~~2.4~~ 2.0 ksi OK

f_{TOP} = -378 - 112.5 = -490.5 < 7.5√f'c = ~~581~~ 530 psi OK

and @ x = 25.67 (℄)

Final f_{TOP} = 1274 psi - 112.5 = 1162 OK

f_{bot} = -152 psi + 110 = 42 psi OK

ENTRANCO ENGINEERS, INC.

SHEET NO 14 OF ____

JOB NO 88510-10

PROJECT GLENDALE AVE/ACDC BR

CALCULATIONS FOR FLEXURAL (BENDING) DESIGN OF GIRDER

MADE BY WM DATE 6/89 CHECKED BY WSK DATE 6/89

Recheck WSK 8/89

FLEXURAL STRENGTH $f'_c = 5000$ psi

$$\phi M_n = \phi\left[A_s^* f_{su}^* d\left(1 - 0.6\frac{p^* f_{su}^*}{f'_c}\right)\right] \quad \text{(AASHTO 9-13)}$$

$$f_{su}^* = f'_s\left(1 - 0.5\frac{p^* f'_s}{f'_c}\right) \quad \text{(AASHTO 9-17)}$$

$p^* = A_s^*/bd$, $A_s^* = 16(.1531) = 2.45$ IN^2 ✓

$b = 48''$, $d = 24.75$ $(27'' - 2 - \frac{1/2}{2})$

$= \frac{2.45}{48(24.75)} = 0.00206$ $f'_s = 270$ KSI ✓

$f'_c = \cancel{6.0}\ 5.0$ KSI

$$f_{su}^* = 270\left(1 - 0.5\frac{.00206(270)}{\cancel{6.0}\ 5.0}\right)$$

$= \cancel{257.5}\ 255.0$ KSI ✓

$\phi = 1.0$ (AASHTO 9.14)

$$\phi M_n = 1.0\left[(2.45)(\cancel{257.5}\ 255.0)(24.75)\left(1 - 0.6\frac{(.00206)(\cancel{257.5}\ 255.0)}{\cancel{6.0}\ 5.0}\right)\right]$$

$= \cancel{14,786}\ 14,488$ ''-K ✓

$$M_u = 1.3\left[(\gamma_D)(M_{DL}) + 1.67(M_{L+I})\right]$$

$$= 1.3\left[(1.0)(405.7) + 1.67(288.6)\right](12) = 13,848\ ''\text{-K} \checkmark$$

$< \phi M_n$ OK ✓

MAXIMUM STEEL (AASHTO 9.18.1)

$$p^*\frac{f_{su}^*}{f'_c} = (.00206)\left(\frac{\cancel{257.5}\ 255}{\cancel{6.0}\ 5}\right) = \cancel{0.09}\ 0.105 << 0.30 \text{ OK} \checkmark$$

MINIMUM STEEL (AASHTO 9.18.2) $f_{pe} = \frac{422.4}{760.8} + \frac{422.4(11.14)}{5128.8} = 1.473$

$$M_{CR} = \frac{I_g}{Y_{BOT}}\left[7.5\sqrt{f'_c} + f_{pe} - f_{DL}\right] \quad f_{DL} = \frac{405.7(12)}{5128.8} = 0.949$$

$= 5128.8[\cancel{.581}\ 530 + 1.47 - 0.949]$ ✓

$= \cancel{5652}\ 5392$ ''-K, $1.2(\cancel{5652}\ 5392) = \cancel{6782}\ 6470$ ''-K $<< 14,786$ ''-K ✓ OK

ENTRANCO ENGINEERS, INC.

SHEET NO 15 OF ____

JOB NO 88510-10 -

PROJECT GLENDALE AVE / ACDC BR

CALCULATIONS FOR SHEAR, MOMENT, INFLUENCE DIAGRAMS (GIRDER)

MADE BY WM DATE 6/89 CHECKED BY WSK DATE 6/89

DEAD LOADS

$w_D = 1.14 + 1.23$ KLF (INCL DIAPHRAGMS)

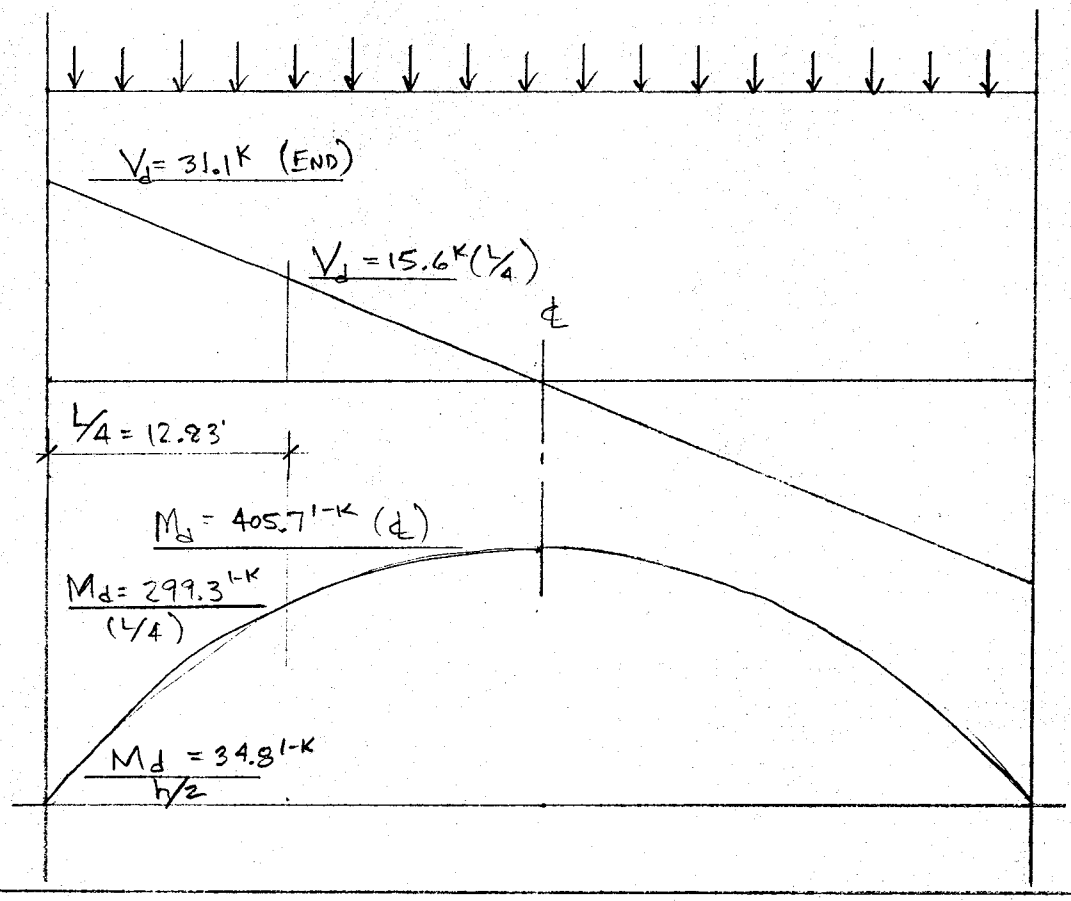

LIVE LOAD - INFLUENCE LINES FOR 10^K MOVING LOAD

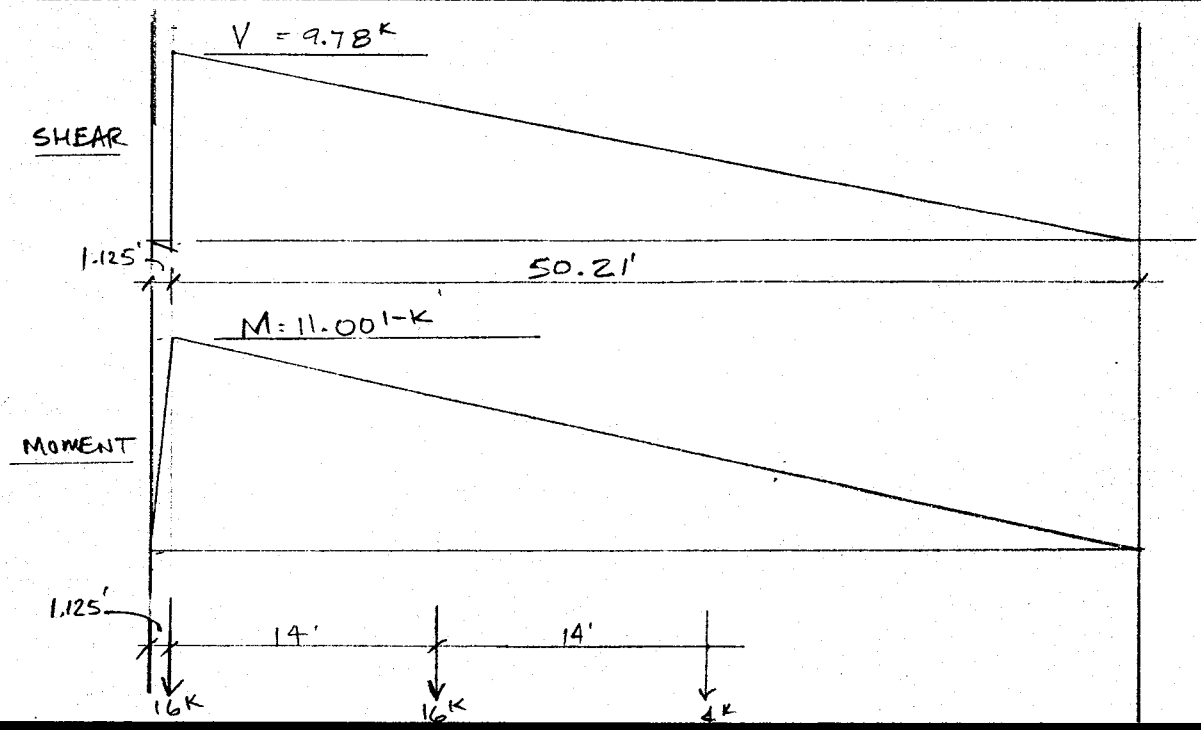

ENTRANCO ENGINEERS, INC.

SHEET NO 16 OF

JOB NO 88510-10-

PROJECT GLENDALE AVE/ACDC BR

CALCULATIONS FOR INFLUENCE LINES

MADE BY WM DATE 6/89 CHECKED BY WSK DATE 6/89

INFLUENCE LINES FOR 10K MOVING LOAD

AT MIDSPAN

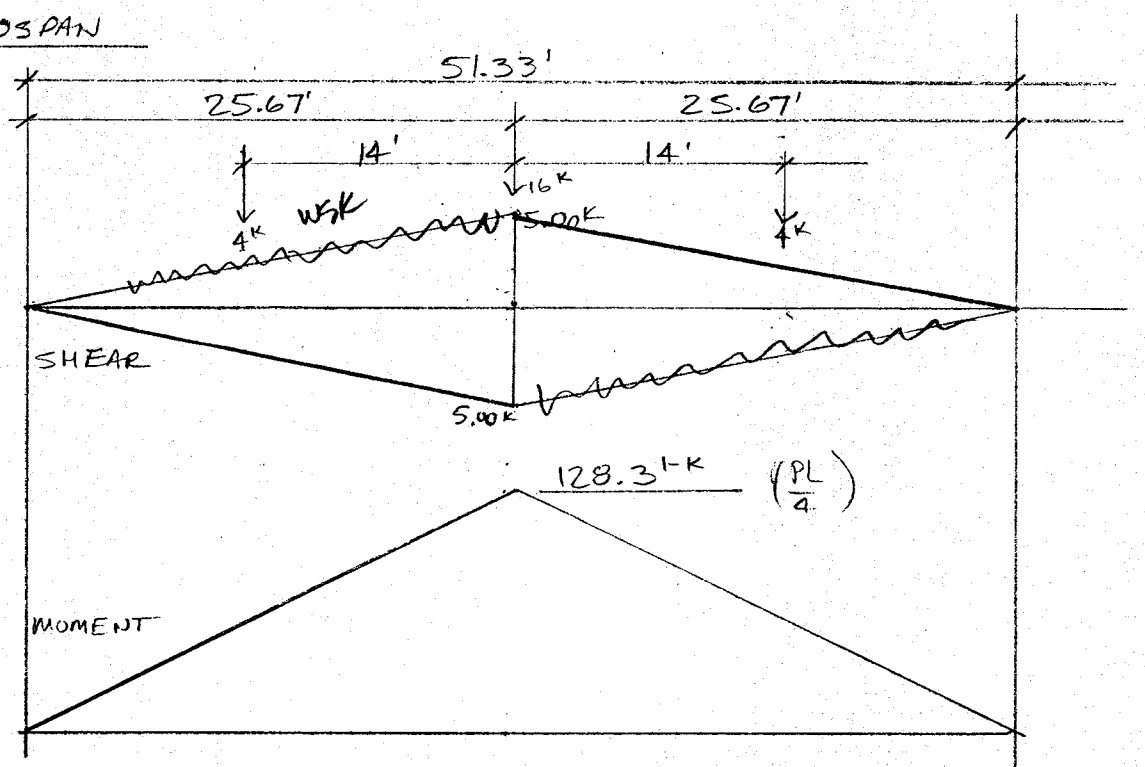

AT L/4 = 12.83'

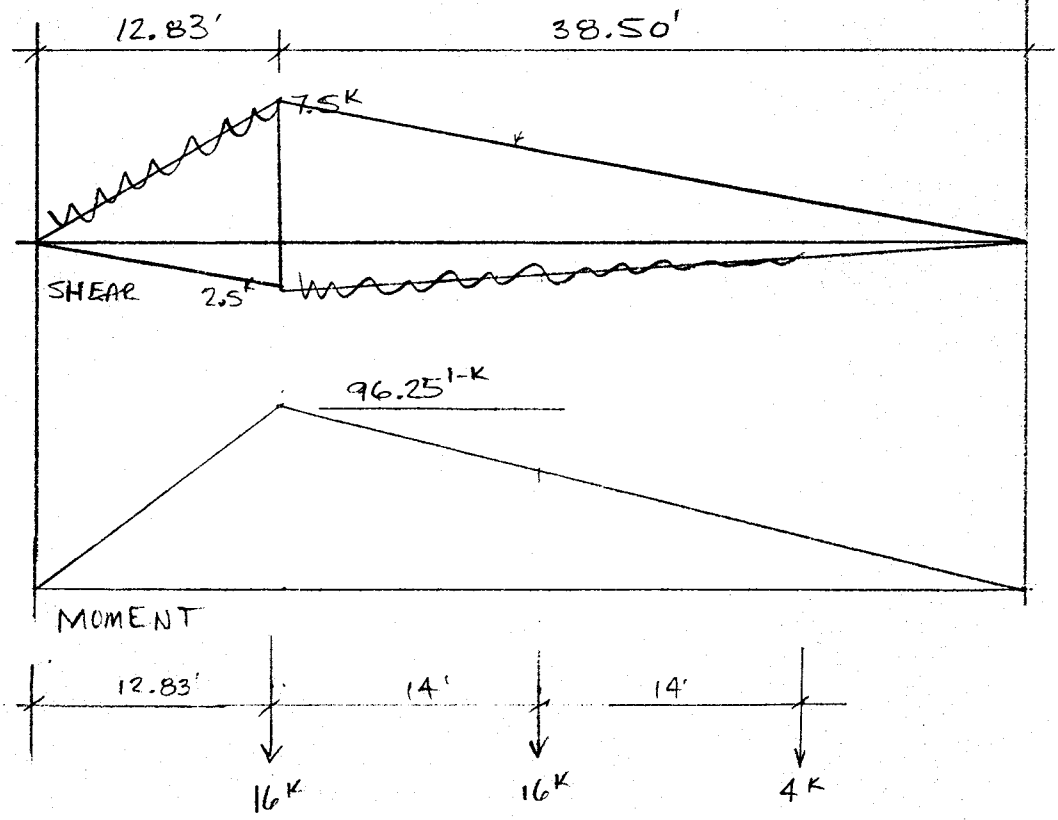

ENTRANCO ENGINEERS, INC.

SHEET NO 17 OF ____

JOB NO 88510 -10-

PROJECT GLENDALE AVE/ACDC BR

CALCULATIONS FOR SHEAR

MADE BY WM DATE 6/89 CHECKED BY WSK DATE 6/89

Recheck WSK 8/89

SHEAR DESIGN (AASHTO 9.20) ✓

$f'_c = 5000$

$\phi = .9$

$V_u \le \phi(V_c + V_s)$ (AASHTO 9-26) ✓

WHERE V_c IS THE LESSER OF V_{ci} OR V_{cw}

$$V_{ci} = 0.6\sqrt{f'_c}\,b'd + V_d + \frac{V_i M_{CR}}{M_{MAX}} \geq 1.7\sqrt{f'_c}\,b'd =$$

$$1.7(\sqrt{6000})(12\times 24.75) = 39100^{\#}$$

$$V_{cw} = (3.5\sqrt{f'_c} + 0.3 f_{pc})b'd + V_p$$

SHEAR AT MIDSPAN $d = 27 - 2.25 = 24.75''$, $b = 12''$

see P.10

$$M_{CR} = \frac{I}{Y_b}\left[6\sqrt{f'_c} + f_{pe} - f_d\right] = \frac{68656}{13.386}\left[6\sqrt{\cancel{6000}\ 5000}^{\,424} + 1473 - 949\right]\frac{1}{1000}$$

$$= \cancel{5071}\ 4864 \text{ 11-K} ✓$$

$V_d = 0$ (UNFACTORED D.L. SHEAR)

$$V_i = \frac{(1.923)}{10}\left[4(2.27) + 16(5.0) + 16(2.27)\right] = 24.12^{K} ✓$$

$$M_{MAX} = \frac{(1.3)(1.67)(\overset{DF}{.69})(\overset{I}{1.284})}{10}\left[4(58.3) + 16(128.3) + 16(58.3)\right] = 620.0^{1\text{-}K} ✓$$

$$V_{ci} = \frac{0.6\sqrt{\cancel{6000}\ 5000}\,(12\times 24.75)}{1000} + 0 + \frac{24.12(5071)}{620.0(12)} = \underline{\underline{\cancel{30.24}\ 29.03^{K}}} \quad \left(\begin{matrix}\text{MIN } V_{ci}\\ 39.1^{K}\end{matrix}\right)$$

$$f_{pc} = .555 - 4705.5\left(\frac{13.61-6}{68656}\right) + 8331.6\left(\frac{13.61-6}{68656}\right) = 0.957 \text{ KSI}$$

(comp)

$V_p = 0$ (VERTICAL COMP. OF P/S FORCE) Straight strands — WSK

$$V_{cw} = \left[(3.5\sqrt{\cancel{6000}\ 5000} + 0.3(957)\right]\frac{(12\times 24.75)}{1000} = \underline{\underline{\cancel{165.8}\ 158.8^{K}}} \gg 39.1^{K}\ (V_{ci})$$

$V_c = V_{ci} = 39.10^{K}$

$V_u = V_d + V_i = 0 + 24.12 = 24.12^{K} < \phi V_c = 35.2^{K}$

PROVIDE MIN SHEAR A_s ✓

ENTRANCO ENGINEERS, INC.

SHEET NO 18 OF ____

JOB NO 885/210 -

PROJECT GLENDALE AVE / ACDC BR.

CALCULATIONS FOR SHEAR

MADE BY WM DATE 6/89 CHECKED BY WSK DATE 6/89

Recheck WSK 8/89

SHEAR @ 1/4 PTS (L/4)

$f_{pe} = 1473$ psi (See p14), $f_d = \frac{M_d Y_b}{I} = \frac{299.3(12)(13.386)}{68656} = 0.700$ KSI (p.15)

$$M_{CR} = \frac{68656}{13.386}\left[6\sqrt{\cancel{6000}\ 5000} + 1473 - 700\right]\frac{1}{1000}$$

$$= \cancel{6348}\ 6141^{\text{'-K}}$$

$V_d = 15.6^K$ ✓ TOTAL D.L.

$$V_i = \frac{(1.923)}{10}\left[(16)(7.5) + 16(\cancel{1.51}\ 4.77) + 4(\cancel{0.68}\ 2.05)\right] = \cancel{28.0}\ 39.33^K$$

$$M_{MAX} = \left(\frac{1.923}{10}\right)\left[(16)(96.25) + 16(62.1) + 4(26.25)\right] = 507.4^{\text{'-K}}$$ ✓

$$V_{ci} = \frac{.6\sqrt{\cancel{6000}\ 5000}\,(12 \times 24.75)}{1000} + 15.6 + \frac{\cancel{28.0}\ 39.33\,(6348)}{507.4\,(12)} = \cancel{58.6^K}\ 69.2^K$$ ← GOVERNS

$$f_{pc} = .555 - \frac{4705.5(13.61-6)}{68656} + \frac{\left[\left(\cancel{507.4}\ M_{L+I}/2.17\right) + \cancel{299.3}\ M_{DL}\right](12)(13.61-6)}{68656}$$

$$= 0.743$$

$$V_{cw} = \left[3.5\sqrt{\cancel{6000}\ 5000} + 0.3(743)\right]\left(\frac{12 \times 24.75}{1000}\right) = \cancel{145.6}\ 139.7^K > 58.6^K$$

$$V_u = 15.6(1.3) + \cancel{28.0}\ 39.33 = \cancel{48.3}\ 59.6^K$$ ✓

$$\phi V_c = .9(\cancel{58.6}\ 69.2) = \cancel{52.7}\ 62.3^K > \cancel{48.3}\ 59.6^K$$ ✓ ∴ PROVIDE MIN V_s ✓

$$A_{v(MIN)} = \frac{50\,b's}{f_{sy}} = \frac{50(12)(12)}{40{,}000} = 0.18\ \text{IN}^2/'$$ ✓

FOR # 4 @ 15" $A_{s(PROV)} = 0.32\ \text{IN}^2/'$ ✓

USE #5 @ 15" to match top Stirrup. OK

ENTRANCO ENGINEERS, INC.

SHEET NO 19 OF ____

JOB NO 88510-10-

PROJECT GLENDALE AVE / ACDC BR

CALCULATIONS FOR SHEAR

MADE BY WM DATE 6/89 CHECKED BY WSK DATE 6/89

Recheck WSK 8/89

SHEAR @ h/2 ($h/2 = 27/2 = 13.5''$)

$$F_{ps(h/2)} = \frac{13.5}{50(.5)}\left[16(26.4)\right] = 228.1^K$$

$$f_{pe} = \frac{228.1}{760.8} + \frac{228.1(11.14)}{5128.8} = 0.795 \text{ KSI}$$

$$f_d = \frac{M_d Y_b}{I} = \frac{34.8(13.386)(12)}{68656} = 0.081^{KSI}$$

$$M_{CR} = \frac{68656}{13.386}\left[6\frac{\sqrt{5000}}{1000} + 7.95 - 81\right]\frac{1}{1000} = 5838 \text{ 1-K}$$

$V_d = 31.1^K$ (See sht 15)

$$V_i = \frac{1.923}{10}\left[16(9.78) + 16(7.05) + 4(4.33)\right] = 55.1^K$$

$$M_{MAX} = \frac{1.923}{10}\left[16(11.0) + 16(7.93) + 4(4.87)\right] = 62.0^{1\cdot K}$$

$$V_{ci} = \frac{.6\sqrt{5000}}{1000}(12 \times 24.75) + 31.1 + \frac{55.1(5838)}{62.0(12)} = 476^K$$

$$f_{pc} = \frac{228.1}{760.8} - \frac{228.1(13.61-6)}{5128.8} + 0 = 0.034 \text{ KSI}$$

$$V_{cw} = \left[3.5\sqrt{5000} + 0.3(49)\right]\left(\frac{12 \times 24.75}{1000}\right) = 76.5^K \quad \leftarrow \text{GOVERNS}$$

$$V_c = V_{cw} = 76.5^K$$

$$V_u = V_d + V_i = 31.1(1.3) + 55.1 = 95.5$$

$$V_{s(Req'd)} \geq \frac{V_u}{\phi} - V_c = \frac{95.5}{.9} - 76.5 = 29.6^K$$

$$A_{v(Req'd)} = \frac{V_s\, S}{f_{sy}\, d} = \frac{29.6(12)}{40(24.75)} = 0.36 \text{ IN}^2/\text{FT} \quad \text{(AASHTO 9-30)}$$

$$A_{v(PROV)} = \#4 @ 7\tfrac{1}{2}'' = (2)(.2)\left(\frac{12}{7.5}\right) = 0.64 \text{ IN}^2/1 \quad \text{OK}$$

ENTRANCO ENGINEERS, INC.

SHEET NO 20 OF ____

JOB NO 88510-10-

PROJECT GLENDALE AVE / ACDC BR

CALCULATIONS FOR GIRDER DEFLECTION

MADE BY WM DATE 6/89 CHECKED BY WGK Recheck WSK DATE 6/89 6/89

CAMBER & DEFLECTION (@ ℄)

REF PCI HNBK, TABLE 4.6.3

See Next page

INITIAL CAMBER @ RELEASE

$f'_{ci} = 4.0$ KSI

$E_{ci} = 33(150)^{3/2}\sqrt{4000}$

$= 3834$ KSI

$$\Delta_{PS} = \frac{PeL^2}{8EI} = \frac{(456.4)(11.14)(51.33)^2(144)}{8(3834)(68656)}$$

$= 0.92'' \uparrow$

$$\Delta_{SW} = \frac{5\,wL^4}{384\,EI} = \frac{5(.792+.07)(51.33)^4(172.8)}{384(3834)(68656)} = 0.51'' \downarrow$$

Box DIA.

$\Delta_i = 0.92 - 0.51 = 0.41'' \uparrow$ (CAMBER AT RELEASE)

AT ERECTION (~30 DAYS AFTER RELEASE)

PCI HNBK

$\Delta_{PS} = 0.92(1.80) = 1.656 \uparrow$

$\Delta_{SW} = 0.51(1.85) = -0.944 \downarrow$

$0.713 \uparrow$ 0.7125 – WSK

AT LONG TERM W/ FULL D.L

$$\Delta_{TDL} = \frac{5(0.24)(51.33)^4(172.8)}{384(\cancel{4696}\ 4289)(68656)} = \cancel{0.12}\ 0.13 \downarrow$$

$w_{DL} = 0.1 + 0.1 + 0.04$

$= 0.24$ KLF

$E_c = 33(150)^{3/2}\sqrt{\cancel{6000}\ 5000}$

$= \cancel{4696}\ 4289$

$\uparrow \Delta_{PS} = 0.92(2.45) = 2.254 \uparrow$

$\downarrow \Delta_{SW} = 0.51(2.70) = 1.377 \downarrow$

$\downarrow \Delta_{DL} = 0.\cancel{12}\ 13(3.00) = \cancel{0.360}\ 0.390 \downarrow$

$\cancel{0.517}\ 0.487 \uparrow$

SAY 1/2" (LONG TERM CAMBER)

LL DEFLECTION (SEE P. 9 – AXIAL LOCATION DIAGRAM)

$$\Delta_{LL} = \frac{\Sigma[Pb(\frac{3}{4}L^2 - b^2)]}{12\,EI} = \frac{[(\frac{16}{4})(42)(212) + (16)(28)(1192) + (16)(14)(1780)](172.8)(1.284)}{12(\cancel{4696}\ 4289)(68656)}$$

$= \cancel{0.56}\ 0.61'' \downarrow$ INSTANTANEOUS DEFLECTION

$$\text{SPAN}/\text{LL DEFL} = 51.33(12)/\cancel{0.555}\ 0.613 = \cancel{1110}\ 1005 > 1000 \quad \text{OK}$$

(AASHTO 8.9.3.1)

Sht 20A

$$\Delta\ell = \frac{5w\ell^4}{384\,E_c\,I_e} = \frac{5\left(\frac{0.280}{12}\right)(70 \times 12)^4}{384\,(4287)\,(14{,}970)}$$

$$= 2.36 \text{ in.}$$

4.6.5 Long-Time Camber/Deflection

ACI 318-83 provides an equation for estimating the long-time deflection of non-prestressed reinforced concrete members (Sect. 9.5.2.5):

$$\lambda = \frac{\xi}{1+50\rho'} \qquad \text{(Eq. 4.6.5)}$$

where ξ is a factor related to length of time, and ρ' is the ratio of compressive reinforcement. No such guide is given for prestressed concrete.

The determination of long-time cambers and deflections in precast, prestressed members is somewhat more complex because of (1) the effect of prestress and the loss of prestress over time, (2) the strength gain of concrete after release of prestress, and because (3) the camber or deflection is important not only at the "initial" and "final" stages, but also at erection, which occurs at some intermediate stage, usually from 30 to 60 days after casting.

It has been customary in the design of precast, prestressed concrete to estimate the camber of a member after a period of time by multiplying the initial calculated camber by some factor, usually based on the experience of the designer. To properly use these "multipliers," the upward and downward components of the initial calculated camber should be separated in order to take into account the effects of loss of prestress, which only affect the upward component.

Fig. 4.6.3 provides suggested multipliers which can be used as a guide in estimating long-time cambers and deflections for typical members, i.e., those members which are within the span-depth ratios recommended in this Handbook (see Sect. 3.2.2). Derivation of these multipliers is contained in a paper by Martin.[9]

Long-time effects can be substantially reduced by adding non-prestressed reinforcement in prestressed concrete members. The reduction effects proposed by Shaikh and Branson[10] can be applied to the approximate multipliers of Fig. 4.6.3 as follows:

$$C_2 = \frac{C_1 + A_s/A_{ps}}{1 + A_s/A_{ps}} \qquad \text{(Eq. 4.6.6)}$$

where C_1 = multiplier from table
C_2 = revised multiplier
A_s = area of non-prestressed reinforcement
A_{ps} = area of prestressed steel

Fig. 4.6.3 Suggested multipliers to be used as a guide in estimating long-time cambers and deflections for typical members

		Without Composite Topping	With Composite Topping
	At erection:		
(1)	Deflection (downward) component — apply to the elastic deflection due to the member weight at release of prestress	1.85	1.85
(2)	Camber (upward) component — apply to the elastic camber due to prestress at the time of release of prestress	1.80	1.80
	Final:		
(3)	Deflection (downward) component — apply to the elastic deflection due to the member weight at release of prestress	2.70	2.40
(4)	Camber (upward) component — apply to the elastic camber due to prestress at the time of release of prestress	2.45	2.20
(5)	Deflection (downward) — apply to elastic deflection due to superimposed dead load only	3.00	3.00
(6)	Deflection (downward) — apply to elastic deflection caused by the composite topping	—	2.30

ENTRANCO ENGINEERS, INC.

SHEET NO 21 OF ____

JOB NO ____ - -

PROJECT Glendale Bridge @ ACOC

CALCULATIONS FOR Substructure

MADE BY Jmly DATE 4/5/89 CHECKED BY WSK DATE 6/89

APPROACH SLAB PROVIDED — NO LL SURCHARGE ON CAISSON. ORIGINAL DESIGN W/ Caissons @ 8' c-c
FINAL DESIGN @ 7' c-c

VERTICAL FOUNDATION LOADS *

3" Conc. Wearing Course	$(3/12)(150^{\#})(4')$	150 #/Lf/Box ✓
Box Girder DL	5.75 ft (150)	793 #/Lf/Box ✓ see p7
Box Girder End Diaph DL	$\left(\frac{3.5+1}{2}\right)(3')(1.25')(150)$	1,265 #/Box ✓
Box Girder Int. Diaph. DL	(3.15')(3')(1.25)(150)	7,772 #/Box – 2ea/2
Overlay SDL	25 psf (4')	100 #/Lf/Box ✓
Barrier SDL	A=2.0 ft x 150 x 2 = 600 #/Lf/23 Boxes	26 #/Lf/Box ✓
Sidewalk SDL	$\frac{(0.8+.67)}{2}(2)(9')(150) = \frac{1984\ \#/Lf}{23\ \text{Boxes}}$	86 #/Lf/Box – slightly low
Fence SDL	35 #/Lf x 2 /23 Boxes	3 #/Lf/Box ✓
Back Wall DL	1.125(0.83)(150#)(4')	560 #/Box ✓
Cap Beam	3'(2.92' max)(150)(4')	5,256 #/Box
1/2 Appr. Slab DL	(1.33')(24'/2)(4')(150)	9,598 #/Box ✓
Drilled Cassion	1239.50 − 1215.06 = 24.44'(1.5²)π(150) BTm of Cap To Channel Btm	25,913 #/pile *
Future Wall	(9/12)(7')(24')(150)	18,900 #/pile ✓

* Caisson wt. below channel neglected

ENTRANCO ENGINEERS, INC.

SHEET NO 22 OF ____

JOB NO - -

PROJECT Glendale Bridge @ ASOL

CALCULATIONS FOR Substructure

MADE BY Jmly DATE 4/5/89 CHECKED BY WSK DATE 6/89

TOTAL VERTICAL DEAD LOAD PER GIRDER (see sht 21)

BK WALL TO BK WALL

$\frac{55.84'}{2} \times$ uniform Loads [150 + 793 + 100 + 26 + 86 + 3] = 32,331 #/gir.

girder

point Loads [1,265 + 1,772 + 560 + 5,256 + 9,598] = 18,451 #/gir.

Σ = 50,782 #/gir.

DL per cassion = $\frac{23 \text{ gir}}{16 \text{ cass.}}(50.8^k) + 25.9^k + 18.9^k = 117.8^k$

DL/cassion — only caissons under Abut — DL wall

TOTAL DL CASSION

LIVE LOADS. (Do NOT Include Impact.)

maximum Reaction per 1 Truck HS-20

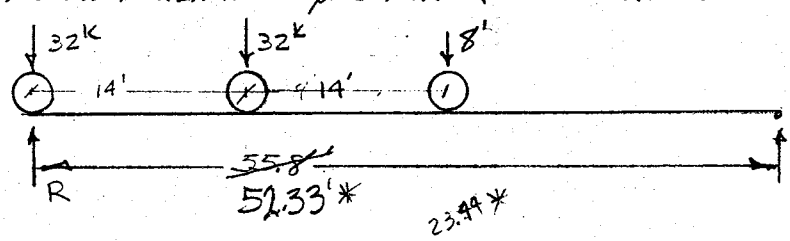

$R = 32^k + \frac{55.8-14}{55.8}(32^k) + \frac{55.8-28}{55.8}(8^k) = 59.96^k$/LANE

59.77* Leave as is.

42+32 = 74'-0" curb/curb. - 7 Lanes. per AASHTO 3.12.1 USE 0.75 Reduction Factor

Truck LL per cassion $59,960^{\#}(7)\frac{(.75)}{16} = 19.67^k$. cassion

A little high - WSK

OR USE AASHTO 3.23.4 Load Dist. Factor ~

$N_L = 7$ $c = K(W/L)$

$N_g = 23$ $c = 1.0\left(\frac{92}{52.3}\right)$

$W = 92'$ $c = 1.76$

$L = 52.3'$ $1.76 < 3$ USE Eq. (3-13)

$K = 1.0$

ENTRANCO ENGINEERS, INC.

SHEET NO 23 OF ____

JOB NO ____ - ____

PROJECT Glendale Ave Br @ ACDC

CALCULATIONS FOR Substructure

MADE BY Smly DATE 4/24/89 CHECKED BY WSK DATE 6/89

$$D = 5 + \frac{N_L}{10} + \left(3 - \frac{2N_L}{7}\right)\left(1 - \frac{C}{3}\right)^2$$ AASHTO EQ (3-13)

$$= \left(5 + \frac{7}{10}\right) + \left(3 - \frac{2(7)}{7}\right)\left(1 - \frac{1.74}{3}\right)^2$$

$D = 5.87$ ←

$$S = \frac{12N_L + 9}{N_g} = \frac{12(7) + 9}{23} = 4.04' \checkmark$$ AASHTO EQ (3-12)

$$\text{Load Factor} = S/D = \frac{4.04}{5.87} = \underline{0.688} \checkmark$$ ← Wheel Load/Girder Fraction

$$\frac{59.96^k}{2}/\text{lane}\,(.688) = \underline{20.6^k}/\text{girder}$$

$$20.6^k/\text{girder}\ (23\ \text{girders})\ (0.75) = 355.3^k$$

Lane Red. Factor

$$355.3^k/16\ \text{cassions} = \underline{22.2^k/\text{cassion}}$$ Controls ← Total Vert Load

$22.2^k > 19.67^k$; use 22.2^k

Total Vertical Load on Cassion

$$\overset{DL}{117.8^k} + \overset{LL}{22.2^k} = 140^k/\text{cassion} \checkmark$$

Check Bearing Stress –

$$\frac{140^k}{(1.5)^2 \cdot \pi} = \underline{19.8\ ksf}$$

$19.8^{ksf} < 20$ ksf ok AASHTO Pg 43. Table 4.2.3A Cemented Sand & Gravel & Soil Report Addendum date 6/27/89

ENTRANCO ENGINEERS, INC.

SHEET NO 23A OF ____

JOB NO 88510-10-810

PROJECT FCD BRIDGES AT ACDC - 16TH ST/Glendale Ave

CALCULATIONS FOR Substructure Stability

MADE BY WSK DATE 7/89 CHECKED BY ____ DATE ____

Design Assumptions: See Soils Report by WTI

Equivalent soil pressure = 50psf/ft Restrained cond.

Passive pressure = 750 psf/ft

Coeff. base friction = .40 or .3 when used w/ P_p

USE Active pressure across full 7' Pile spacing above bottom of Channel.

USE Active Pressure across only Pile width below channel bottom.

USE Passive Resisting pressure across one pile ϕ below channel bottom

All soil in active area undisturbed.

* See next sheet for Diagram

COMPUTE FACTOR SAFTY FOR OVERTURNING (About top of Cap Bm)

$$M_{Resisting} = 364.5\,(\underset{14376}{27.44} + \overset{39.44}{18} - 6.0) + 42(27.44 + 18) = 16266^{'K}$$

$$M_{overturning} = 24.01(\overset{329}{27.44/2}) + 131.77(\overset{2410}{27.44 - 9.15}) + 80.84(\overset{2946}{27.44 + 18 - 9.0})$$
$$+ 24.3(\underset{958}{27.44 + 18 - 6}) = 6644^{'K}$$

$$FS = M_R/M_o = 16266/6644 = 2.45 > 1.5 \quad OK$$

ENTRANCO ENGINEERS, INC.

SHEET NO 23B OF ____

JOB NO ____ - ____ - ____

PROJECT Glendale Ave Bridge

CALCULATIONS FOR CAISSON

MADE BY WSK DATE 8/89 CHECKED BY JEM DATE 8/89

EXTERNAL FORCE CHECK —

FACTOR SAFTY SLIDING >1.5

FACTOR SAFTY OVERTURNING>1.5

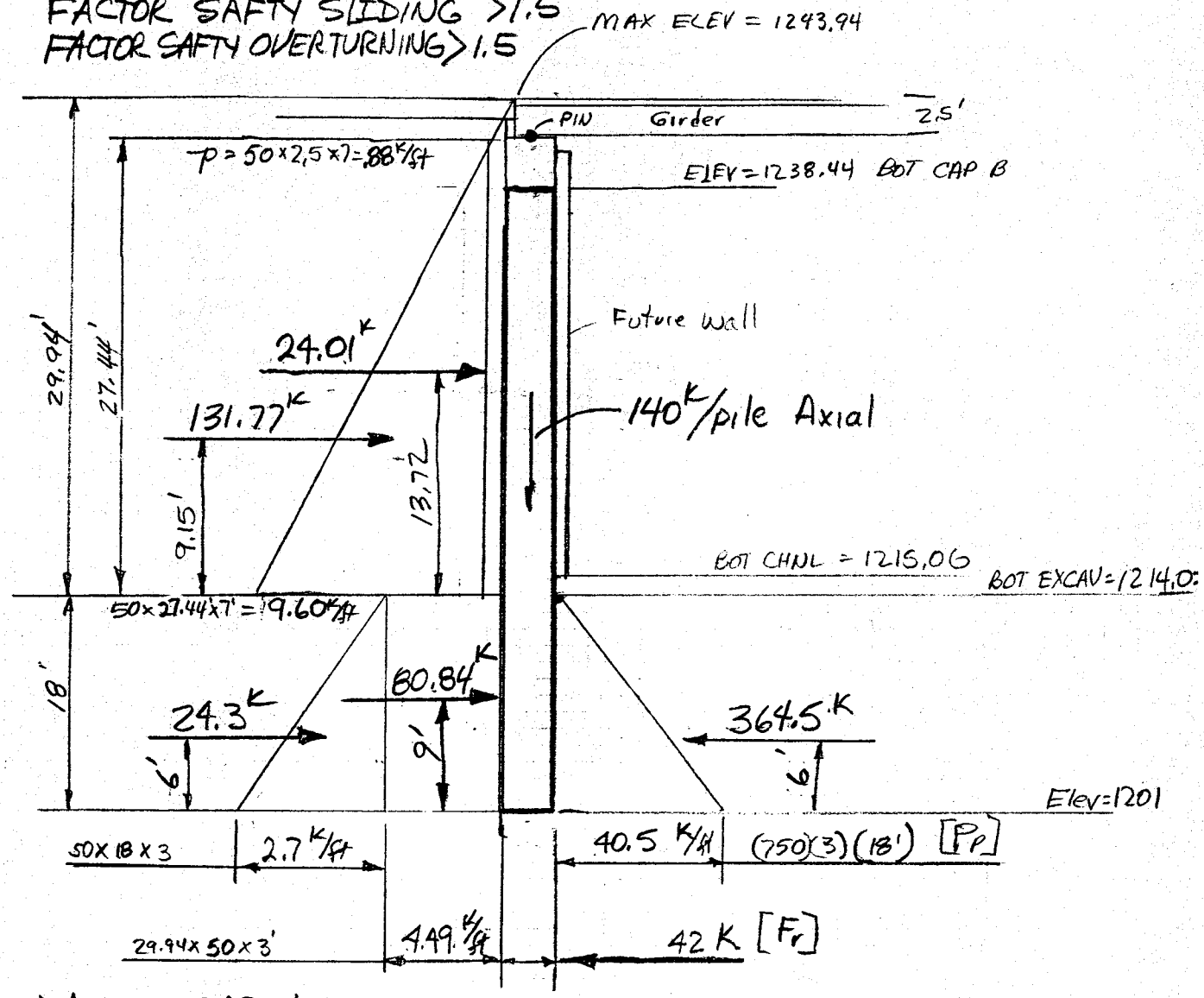

FACTOR SAFTY SLIDING

Friction Resistence: TDL = 140 K (see sht 23)

f_r = .4 w/o pass res R_f = .3 × 140 K = 42 K

f_r = .3 w/ " " ↑ w/ Passive Res.

ΣLateral Forces

ΣF→ = 24.01 + 131.77 + 80.84 + 24.3 = 260.92 K →

ΣF← = 364.5 + 42 (friction) = 406.5 ←

FACTOR SAFTY SLIDING = 406.5/260.92 = 1.56 > 1.5 OK

ENTRANCO ENGINEERS, INC.

SHEET NO 23C OF ____
PROJECT NO ____

PROJECT Glendale Ave Bridge
SUBJECT Substructure – Caissons
MADE BY WSK DATE 8/89 CHECKED BY JEM DATE 8/89

Check Bottom of Pile for Uniform Soil Distribution

CUT FREEBODY of PILE @ Pt of Fixity $\Delta = 0$
See Shts 25C & 25D for Soil Distribution.

$M = .185 \times 10^7$
$V = .466 \times 10^5$

Depth	Soil Pressure	Force		Arm"	M resisting
488"					
492"	90	90×4/2 =	180	2'	360
		90×6 =	540	7'	3780
498"	244	154×6/2 =	462	8"	3696
		244×6 =	1464	13	19032
504"	404	160×3 =	480	14	6720
		404×6	2424	19	46,056
510"	570	166×3	498	20	9960
		570×6	3420	25	85500
516"	744	174×3	522	26	13572
		744×6	4464	31	138384
522"	925	181×3	543	32	17376
		925×6	5550	37	205350
528"	1110	185×3	555	38	21,090
		1110×6	6660	43	286,380
534"	1310	200×3	600	44	26400
		1310×6	7860	49	385140
540"	1520	210×3	630	50	31500
		1520×6	9120	55	501600
546"	1740	220×3	660	56	36960
			Σ 46,632		Σ 1,847,496

Resultant of Soil Resist. = 1847496/46632 = 3.30'

ENTRANCO ENGINEERS, INC.

SHEET NO 23L OF ____
PROJECT NO ____

PROJECT Glendale Ave Bridge
SUBJECT Caisson
MADE BY WSK DATE 8/89 CHECKED BY JEM DATE 8/89

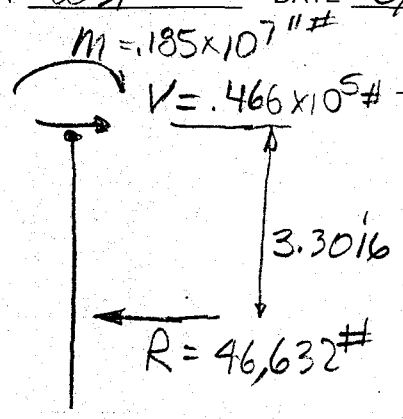

Check EQUILIBRIUM
about pt Fixity

Σ Moments about top

$.185\times10^7 = 154,166.7'\# = 154.167'\#$

$\therefore +154,167'\# - 46,632\# \times 3.3016' \cong 0$ (209)

$\therefore P/A + Mc/I = \frac{140^K}{707 ft^2} + \cancel{0}\, Mc/I = 19.8 < 20^K$

OK

ENTRANCO ENGINEERS, INC.

SHEET NO 24 OF ____

JOB NO ____ - ____

PROJECT Glendale Ave Bridge @ ACDC

CALCULATIONS FOR Summary of Loads (Abutment)

MADE BY Jmly DATE 4/6/89 CHECKED BY WSK DATE 6/89

Pile Loads — Table 3.22.1A AASHTO

D (Dead Load) = 117.8^k/cassion ✓

L (Live Load) = 22.2^k/cassion ✓ AASHTO HS20-44 Loading

I (Impact) = 0 AASHTO 3.8.1.2 ✓

E (Earth) = 50 lb/ft^2 Equiv. Fluid pressure (pg. 5 Soils Report) ✓
AT-Rest (Restrained) condition

LL Surcharge = 0' Approach Slab length sufficient.

(Based on 8' spacing of cassions)* Strutted 36"ϕ cassion w/ 4% steel. (pg A-18 Soils Report)
Max moment = *970 k-ft/cassion
Max Shear = *108.7^k/cassion

$\beta_E = 1.0$ AASHTO 3.22.4

$\beta = 0$ No groundwater encountered in Boring Holes. Additionally, using B=0 would be conservative if Bouancy forces were present they would decrease the vertical loads

SF (Stream Flow) = 0 Piles are not in channel. Future channel wall will resist any force created by the shear friction of the water flowing past the wall.

W (Wind) = 50 psf for girders & Beams AASHTO 3.15.1.1.1

ℓ = 55.8' (Length of Bridge Superstr) BK Wall to Bk wall

Superstr height = Girder 2.25' + Barrier 2.67 + S/W ± 1.0' = 5.92' A = 5.92(55.8') = 330 ☐

W = 330 ☐ (50 psf) 1/2 = 8,250#/Abutment ←

= 8,250/14 = *590#/cassion ←
Applied @ Top of cassion ⊥ Twi Bent.

ENTRANCO ENGINEERS, INC.

SHEET NO 25 OF ____

JOB NO ____ - -

PROJECT Glendale Ave Bridge @ ACDC

CALCULATIONS FOR Summary of Loads (Abutment)

MADE BY Jmy DATE 4/7/89 CHECKED BY WSK DATE 6/89

Recked WSK 8/89

WL (Wind on Live Load) ~ 100 plf Transverse
40 plf Longitudinal
AASHTO 3.15.2.1.3 ✓

W_L (Trans.) ✓ = 100 (55.8)(1/2)(1/~~14~~ 16) = ~~200~~ 174 #/Cassion* ← Rev for 16 Caissons

W_L (Long.) ✓ 40 (55.8)(1/2)(1/~~14~~ 16) = ~~80~~ 70 #/Cassion* ←

* Applied @ Top of Cassion. @ 8' Caisson Spacing

LF (Long. Force from Live Load) ✓ AASHTO 3.9.1

5% (Live Ld) = 0.05 (22.2^k) = 1.11 k/Cassion ←
@ 7' spacing

R = 0 N/A ✓

S (Shrinkage) ✓ S = Ø - Most all shrinkage of Box Girders will take place prior to placement of grout in 3"Ø hole.

T (Temperature) ✓

Use point of fixity of cassion @ point of max. moment in cassion (zero shear) GeoTech Report, page A-20, ℓ = 33.5' from top of cap to pt of fixity. ∴ Use ℓ = 33.5'
Use Temp. Range of 100°, max = 120° F

* Caisson Spacing revised to 7' c-c
See Rerun Computer Analysis for 36" Caission

Sht 25A

```
*************************************************************
*     PROGRAM LPILE1                                        *
*     (C) COPYRIGHT 1985 ENSOFT, INC.                       *
*     ALL RIGHTS RESERVED                                   *
*     ---------------------------------------------------   *
*                                                           *
*                  PREPARED ESPECIALLY FOR                  *
*                                                           *
*                WESTERN TECHNOLOGIES, INC.                 *
*                                                           *
*                PHOENIX, ARIZONA 85040                     *
*                                                           *
*                     LICENSE NO. 115                       *
*                                                           *
*************************************************************
```

PROGRAM LPILE1
(C) COPYRIGHT 1985 ENSOFT, INC.
ALL RIGHTS RESERVED

Glendale Ave & 16th St Bridges; Strutted w/36" Dia Piers & 4% Steel

UNITS--ENGLISH UNITS

I N P U T I N F O R M A T I O N

THE LOADING IS STATIC

PILE GEOMETRY AND PROPERTIES

PILE LENGTH = 546.00 IN
2 POINTS

X	DIAMETER	MOMENT OF INERTIA	AREA	MODULUS OF ELASTICITY
IN	IN	IN**4	IN**2	LBS/IN**2
0.00	36.000	0.102D+06	0.102D+04	0.403D+07
546.00	36.000	0.102D+06	0.102D+04	0.403D+07

SOILS INFORMATION

X AT THE GROUND SURFACE = 330.00 IN

1 LAYER(S) OF SOIL

LAYER 1
THE SOIL IS A SAND
X AT THE TOP OF THE LAYER = 330.00 IN
X AT THE BOTTOM OF THE LAYER = 1000.00 IN
MODULUS OF SUBGRADE REACTION = 0.225D+03 LBS/IN**3

DISTRIBUTION OF EFFECTIVE UNIT WEIGHT WITH DEPTH
2 POINTS

X,IN	WEIGHT,LBS/IN**3
330.00	0.80D+00
1000.00	0.80D+00

DISTRIBUTION OF STRENGTH PARAMETERS WITH DEPTH
2 POINTS

X,IN	C,LBS/IN**2	PHI,DEGREES	E50
330.00	0.000D+00	0.450D+02	-----
1000.00	0.000D+00	0.450D+02	-----

BOUNDARY AND LOADING CONDITIONS

DISTRIBUTED LOAD CURVE 2 POINTS

X,IN	LOAD,LBS/IN
0.00	0.700D+02
330.00	0.870D+03

LOADING NUMBER 1

BOUNDARY-CONDITION CODE = 1
LATERAL LOAD AT THE PILE HEAD = -0.600D+05 LBS
MOMENT AT THE PILE HEAD = 0.000D+00 IN-LBS
AXIAL LOAD AT THE PILE HEAD = 0.140D+06 LBS

FINITE-DIFFERENCE PARAMETERS

NUMBER OF PILE INCREMENTS = 91
DEFLECTION TOLERANCE ON DETERMINATION OF CLOSURE = 0.100D-05 IN
MAXIMUM NUMBER OF ITERATIONS ALLOWED FOR PILE ANALYSIS = 100
MAXIMUM ALLOWABLE DEFLECTION = 0.36D+03 IN

OUTPUT CODES

KOUTPT = 1
KPYOP = 0
INC = 1

25C

O U T P U T I N F O R M A T I O N

****

DISTRIBUTED LOAD CURVE 2 POINTS

X, IN	LOAD, LBS/IN
0.00	0.700D+02
330.00	0.870D+03

LOADING NUMBER 1

BOUNDARY CONDITION CODE = 1
LATERAL LOAD AT THE PILE HEAD = -0.600D+05 LBS
MOMENT AT THE PILE HEAD = 0.000D+00 IN-LBS
AXIAL LOAD AT THE PILE HEAD = 0.140D+06 LBS

X IN	DEFLECTION IN	MOMENT LBS-IN	SHEAR LBS	SOIL REACTION LBS/IN	TOTAL STRESS LBS/IN**2	FLEXURAL RIGIDITY LBS-IN**2
*****	**********	**********	**********	**********	**********	**********
PIN @ TOP CAP BM 0.00	0.848D-02	0.386D-06	-0.600D+05	0.000D+00	0.137D+03	0.411D+12
6.00	0.229D-01	-0.361D+06	-0.595D+05	0.000D+00	0.201D+03	0.411D+12
12.00	0.373D-01	-0.718D+06	-0.590D+05	0.000D+00	0.264D+03	0.411D+12
18.00	0.516D-01	-0.107D+07	-0.583D+05	0.000D+00	0.327D+03	0.411D+12
24.00	0.658D-01	-0.142D+07	-0.576D+05	0.000D+00	0.388D+03	0.411D+12
30.00	0.800D-01	-0.177D+07	-0.568D+05	0.000D+00	0.449D+03	0.411D+12
36.00	0.939D-01	-0.211D+07	-0.559D+05	0.000D+00	0.509D+03	0.411D+12
42.00	0.108D+00	-0.244D+07	-0.549D+05	0.000D+00	0.568D+03	0.411D+12
48.00	0.121D+00	-0.277D+07	-0.538D+05	0.000D+00	0.626D+03	0.411D+12
54.00	0.135D+00	-0.309D+07	-0.527D+05	0.000D+00	0.683D+03	0.411D+12
60.00	0.148D+00	-0.341D+07	-0.514D+05	0.000D+00	0.739D+03	0.411D+12
66.00	0.160D+00	-0.371D+07	-0.501D+05	0.000D+00	0.793D+03	0.411D+12
72.00	0.173D+00	-0.401D+07	-0.487D+05	0.000D+00	0.845D+03	0.411D+12
78.00	0.185D+00	-0.430D+07	-0.472D+05	0.000D+00	0.896D+03	0.411D+12
84.00	0.196D+00	-0.458D+07	-0.456D+05	0.000D+00	0.946D+03	0.411D+12
90.00	0.208D+00	-0.485D+07	-0.439D+05	0.000D+00	0.993D+03	0.411D+12
96.00	0.219D+00	-0.511D+07	-0.421D+05	0.000D+00	0.104D+04	0.411D+12
102.00	0.229D+00	-0.536D+07	-0.402D+05	0.000D+00	0.108D+04	0.411D+12
108.00	0.239D+00	-0.560D+07	-0.383D+05	0.000D+00	0.112D+04	0.411D+12
114.00	0.248D+00	-0.582D+07	-0.363D+05	0.000D+00	0.116D+04	0.411D+12
120.00	0.257D+00	-0.603D+07	-0.341D+05	0.000D+00	0.120D+04	0.411D+12
126.00	0.266D+00	-0.623D+07	-0.319D+05	0.000D+00	0.124D+04	0.411D+12
132.00	0.274D+00	-0.642D+07	-0.296D+05	0.000D+00	0.127D+04	0.411D+12
138.00	0.281D+00	-0.659D+07	-0.273D+05	0.000D+00	0.130D+04	0.411D+12
144.00	0.288D+00	-0.675D+07	-0.248D+05	0.000D+00	0.133D+04	0.411D+12
150.00	0.294D+00	-0.689D+07	-0.222D+05	0.000D+00	0.135D+04	0.411D+12
156.00	0.299D+00	-0.702D+07	-0.196D+05	0.000D+00	0.138D+04	0.411D+12
162.00	0.304D+00	-0.713D+07	-0.168D+05	0.000D+00	0.140D+04	0.411D+12
168.00	0.309D+00	-0.722D+07	-0.140D+05	0.000D+00	0.141D+04	0.411D+12
174.00	0.312D+00	-0.730D+07	-0.111D+05	0.000D+00	0.142D+04	0.411D+12
180.00	0.315D+00	-0.736D+07	-0.813D+04	0.000D+00	0.144D+04	0.411D+12
186.00	0.318D+00	-0.740D+07	-0.505D+04	0.000D+00	0.144D+04	0.411D+12

192.00	0.319D+00	-0.742D+07	-0.188D+04	0.000D+00	0.145D+04	0.411D+12
198.00	0.323D+00	-0.742D+07	0.138D+04	0.000D+00	0.145D+04	0.411D+12
204.00	0.321D+00	-0.740D+07	0.472D+04	0.000D+00	0.144D+04	0.411D+12
210.00	0.321D+00	-0.736D+07	0.815D+04	0.000D+00	0.144D+04	0.411D+12
216.00	0.320D+00	-0.730D+07	0.117D+05	0.000D+00	0.143D+04	0.411D+12
222.00	0.318D+00	-0.722D+07	0.153D+05	0.000D+00	0.141D+04	0.411D+12
228.00	0.316D+00	-0.712D+07	0.190D+05	0.000D+00	0.139D+04	0.411D+12
234.00	0.313D+00	-0.699D+07	0.228D+05	0.000D+00	0.137D+04	0.411D+12
240.00	0.310D+00	-0.684D+07	0.266D+05	0.000D+00	0.135D+04	0.411D+12
246.00	0.306D+00	-0.667D+07	0.306D+05	0.000D+00	0.131D+04	0.411D+12
252.00	0.302D+00	-0.648D+07	0.346D+05	0.000D+00	0.128D+04	0.411D+12
258.00	0.297D+00	-0.626D+07	0.387D+05	0.000D+00	0.124D+04	0.411D+12
264.00	0.291D+00	-0.601D+07	0.430D+05	0.000D+00	0.120D+04	0.411D+12
270.00	0.285D+00	-0.574D+07	0.473D+05	0.000D+00	0.115D+04	0.411D+12
276.00	0.278D+00	-0.544D+07	0.517D+05	0.000D+00	0.110D+04	0.411D+12
282.00	0.271D+00	-0.512D+07	0.561D+05	0.000D+00	0.104D+04	0.411D+12
288.00	0.263D+00	-0.477D+07	0.607D+05	0.000D+00	0.978D+03	0.411D+12
294.00	0.255D+00	-0.439D+07	0.654D+05	0.000D+00	0.911D+03	0.411D+12
300.00	0.247D+00	-0.398D+07	0.701D+05	0.000D+00	0.839D+03	0.411D+12
306.00	0.238D+00	-0.354D+07	0.749D+05	0.000D+00	0.762D+03	0.411D+12
312.00	0.229D+00	-0.308D+07	0.798D+05	0.000D+00	0.680D+03	0.411D+12
318.00	0.220D+00	-0.258D+07	0.848D+05	0.000D+00	0.593D+03	0.411D+12
324.00	0.210D+00	-0.206D+07	0.899D+05	0.000D+00	0.500D+03	0.411D+12
330.00	0.200D+00	-0.150D+07	0.951D+05	0.000D+00	0.402D+03	0.411D+12
336.00	0.190D+00	-0.912D+06	0.969D+05	-0.257D+03	0.298D+03	0.411D+12
342.00	0.180D+00	-0.334D+06	0.947D+05	-0.487D+03	0.196D+03	0.411D+12
348.00	0.170D+00	0.227D+06	0.912D+05	-0.690D+03	0.177D+03	0.411D+12
354.00	0.160D+00	0.763D+06	0.865D+05	-0.866D+03	0.272D+03	0.411D+12
360.00	0.150D+00	0.127D+07	0.809D+05	-0.102D+04	0.361D+03	0.411D+12
366.00	0.141D+00	0.174D+07	0.744D+05	-0.114D+04	0.444D+03	0.411D+12
372.00	0.131D+00	0.216D+07	0.673D+05	-0.124D+04	0.519D+03	0.411D+12
378.00	0.122D+00	0.255D+07	0.596D+05	-0.131D+04	0.587D+03	0.411D+12
384.00	0.112D+00	0.288D+07	0.516D+05	-0.137D+04	0.646D+03	0.411D+12
390.00	0.103D+00	0.317D+07	0.433D+05	-0.140D+04	0.696D+03	0.411D+12
396.00	0.947D-01	0.340D+07	0.349D+05	-0.141D+04	0.738D+03	0.411D+12
402.00	0.863D-01	0.359D+07	0.265D+05	-0.140D+04	0.770D+03	0.411D+12
408.00	0.782D-01	0.372D+07	0.182D+05	-0.137D+04	0.794D+03	0.411D+12
414.00	0.704D-01	0.381D+07	0.101D+05	-0.133D+04	0.809D+03	0.411D+12
420.00	0.630D-01	0.385D+07	0.225D+04	-0.128D+04	0.816D+03	0.411D+12
426.00	0.559D-01	0.384D+07	-0.520D+04	-0.121D+04	0.814D+03	0.411D+12
432.00	0.491D-01	0.379D+07	-0.122D+05	-0.113D+04	0.805D+03	0.411D+12
438.00	0.427D-01	0.369D+07	-0.187D+05	-0.104D+04	0.789D+03	0.411D+12
444.00	0.366D-01	0.356D+07	-0.246D+05	-0.939D+03	0.766D+03	0.411D+12
450.00	0.308D-01	0.340D+07	-0.299D+05	-0.832D+03	0.737D+03	0.411D+12
456.00	0.253D-01	0.321D+07	-0.346D+05	-0.718D+03	0.703D+03	0.411D+12
462.00	0.201D-01	0.299D+07	-0.385D+05	-0.597D+03	0.664D+03	0.411D+12
468.00	0.152D-01	0.274D+07	-0.417D+05	-0.471D+03	0.622D+03	0.411D+12
474.00	0.104D-01	0.249D+07	-0.442D+05	-0.338D+03	0.576D+03	0.411D+12
480.00	0.595D-02	0.222D+07	-0.458D+05	-0.201D+03	0.528D+03	0.411D+12
486.00	0.166D-02	0.194D+07	-0.466D+05	-0.581D+02	0.479D+03	0.411D+12
492.00	-0.247D-02	0.166D+07	-0.465D+05	0.901D+02	0.430D+03	0.411D+12
498.00	-0.646D-02	0.138D+07	-0.455D+05	0.244D+03	0.381D+03	0.411D+12
504.00	-0.103D-01	0.111D+07	-0.435D+05	0.404D+03	0.334D+03	0.411D+12
510.00	-0.141D-01	0.860D+06	-0.406D+05	0.570D+03	0.289D+03	0.411D+12
516.00	-0.178D-01	0.628D+06	-0.367D+05	0.744D+03	0.248D+03	0.411D+12
522.00	-0.214D-01	0.422D+06	-0.316D+05	0.925D+03	0.212D+03	0.411D+12
528.00	-0.250D-01	0.249D+06	-0.255D+05	0.111D+04	0.181D+03	0.411D+12
534.00	-0.286D-01	0.116D+06	-0.183D+05	0.131D+04	0.158D+03	0.411D+12
540.00	-0.321D-01	0.307D+05	-0.976D+04	0.152D+04	0.143D+03	0.411D+12
546.00	-0.357D-01	0.000D+00	0.000D+00	0.174D+04	0.137D+03	0.411D+12
X	Δ	M	V	SOIL REAC.	TOTAL STRESS	

40.7' → 492.00

OUTPUT VERIFICATION

THE MAXIMUM MOMENT IMBALANCE FOR ANY ELEMENT = 0.681D-06 IN-LBS
THE MAX. LATERAL FORCE IMBALANCE FOR ANY ELEMENT = -0.122D-06 LBS

OUTPUT SUMMARY

PILE-HEAD DEFLECTION	=	0.848D-02 IN
MAXIMUM BENDING MOMENT	=	-0.742D+07 LBS-IN
MAXIMUM SHEAR FORCE	=	0.969D+05 LBS
NO. OF ITERATIONS	=	4
NO. OF ZERO DEFLECTION POINTS	=	1

S U M M A R Y T A B L E
****

BOUNDARY CONDITION BC1	BOUNDARY CONDITION BC2	AXIAL LOAD LBS	PILE HEAD DEFLECTION IN	MAX. MOMENT IN-LBS	MAX. SHEAR LBS
-0.6000D+05	0.0000D+00	0.1400D+06	0.8485D-02	-0.7418D+07	0.9694D+05

25F

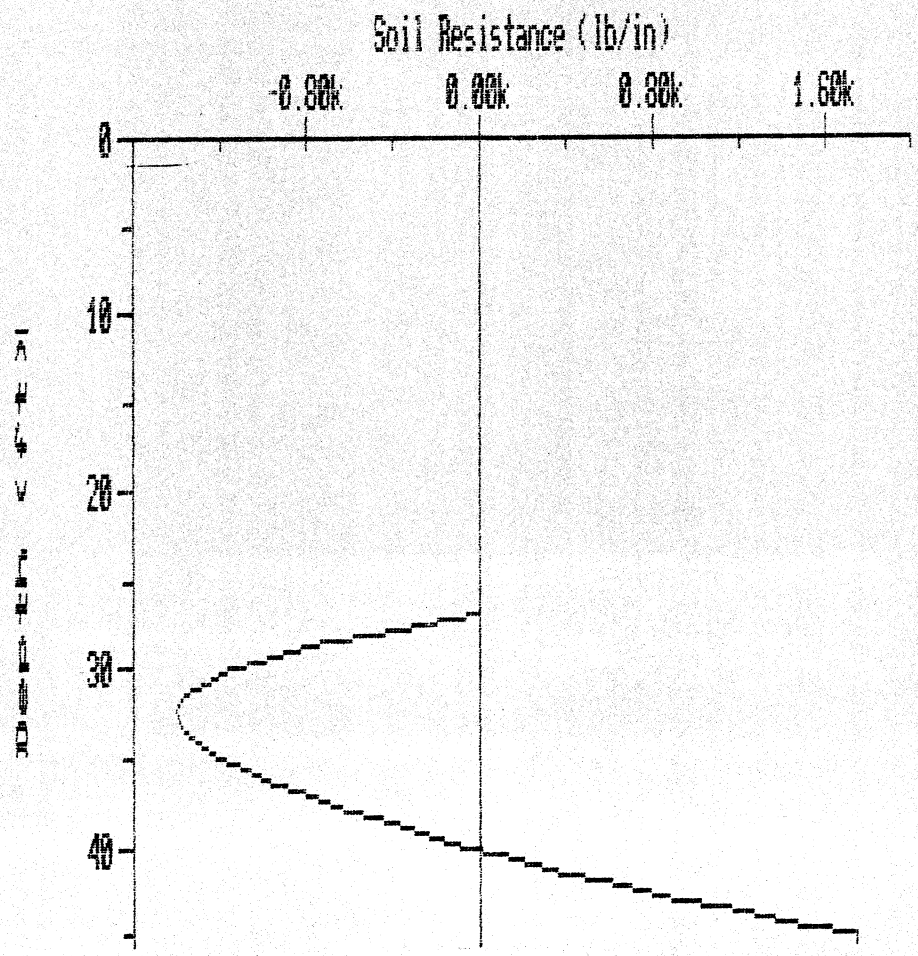

Soil Response Curve

INTERNAL WORK SHEETS

Project/Subject: 16th Street & Glendale Avenue Bridges — Job No. 2128J186

36" ϕ piers w/4% steel @ 7-foot c.c. spacing — Date 6/28/89 — Sheet 2 of 2

By F. Costello

Ckd. RB 6/28/89

Lateral Analysis Cont'd:

SOIL #1 TO CANAL

$\phi = 37°$; $\gamma = 125$ pcf

$k_o = 1 - \sin\phi = 0.4$

$p_o = k_o \gamma h(7) = 9975$ lb/ft

$P_o = \frac{1}{2} h p_o = 142$ kips

SOIL #2 BELOW CANAL

$\phi = 45°$; $\gamma = 135$ pcf

$k_p = \frac{1+\sin\phi}{1-\sin\phi} = 5.8$

$p_p = k_p \gamma h(3) = 34{,}227$ lb/ft

$P_p = \frac{1}{2} h p_p = 248$ kips

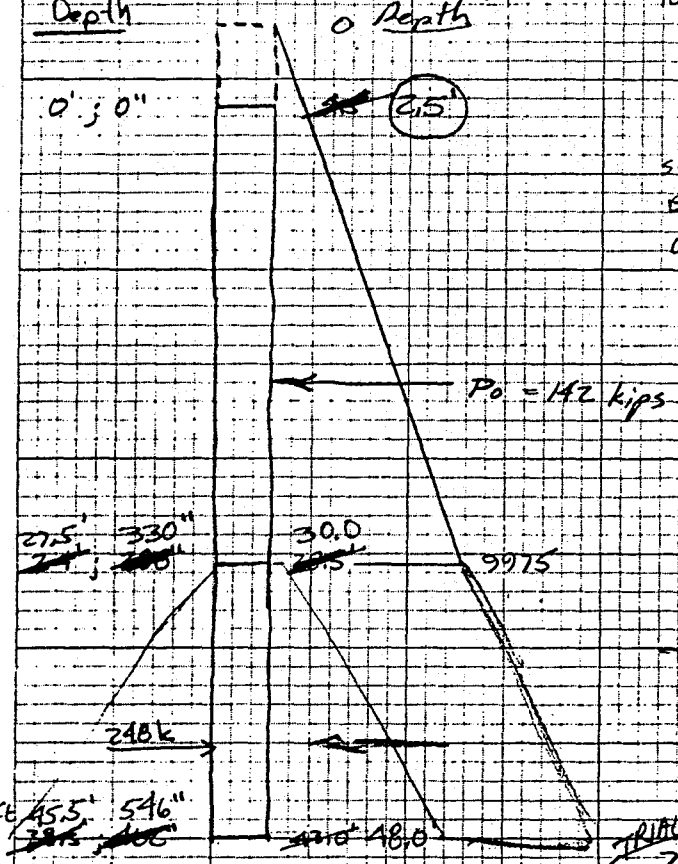

Try this for 1st computer run

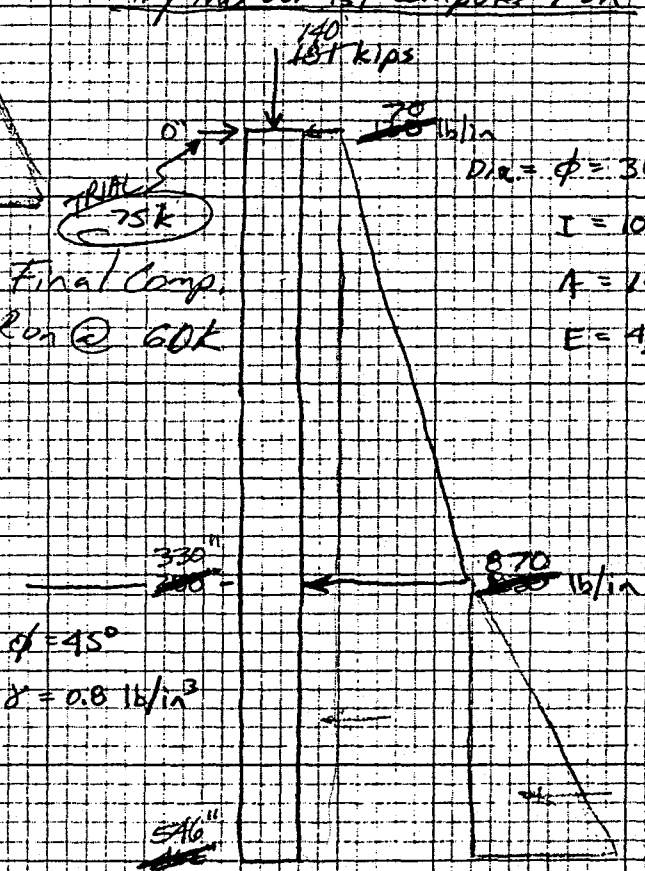

Dia = ϕ = 36"

I = 102,000 in⁴

A = 1020 in²

E = 4,030,000 psi

Final Comp. Run @ 60k

$\phi = 45°$

$\gamma = 0.8$ lb/in³

Deflection vs. Lateral Load from Computer Runs

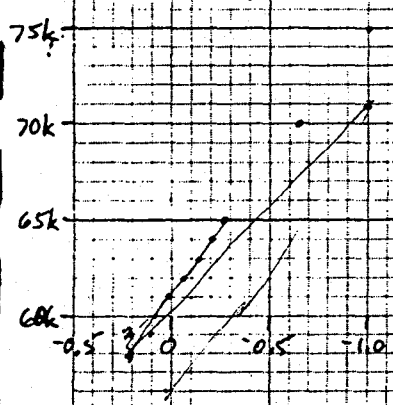

ENTRANCO ENGINEERS, INC.

SHEET NO 26 OF ____

JOB NO ____ - -

PROJECT Glendale Ave Br. at ACDC

CALCULATIONS FOR Substructure

MADE BY Jmg DATE 4/20/89 CHECKED BY WSK DATE 6/89

TEMPERATURE ~

℄ To ℄ Brg. – 52.33' ✓

Use 75° @ Time of Pour

Δ Temp Rise $= (120°-75°)(6\times10^{-6})(52.33')(12) = \underline{0.17'' = 0.014\ ft}$

Δ Temp Fall $= (75°-20°)(6\times10^{-6})(52.33')(12) = \underline{0.207'' = 0.017\ ft}$

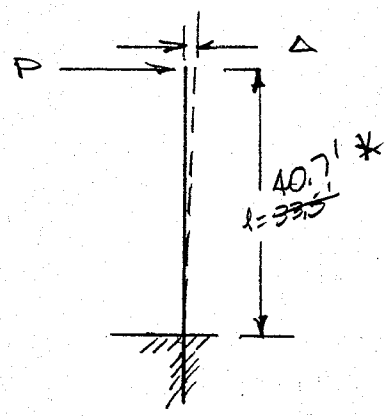

$\Delta = \dfrac{Pl^3}{3EI}$ ✓

Solve for P – $P = \dfrac{\Delta\, 3EI}{l^3}$ ✓

$E = 0.403\times10^7\ lb/in^2 = 580{,}320\ k/sf$ ✓

$I = 0.102\times10^6\ in^4 = 4.919\ ft^4$ ✓

Page A-18 Soils Report Cassion Stiffness ✓

$P_{Temp\ Rise} = \dfrac{(0.014')(3)(580{,}320)(4.919)}{(\cancel{33.5}\ 40.7)^3} = \underline{\cancel{3.2^k}\ 1.78^k/\text{cassion}}$

$P_{Temp\ Fall}\quad 3.2^k\left(\dfrac{.017}{.014}\right) = \underline{\cancel{3.88^k}\ 2.16^k/\text{cassion.}}$ ✓

Momement (Temp.)

$m = P(l)$

Momement Rise $= \cancel{3.2^k}\ 1.78\ (\cancel{33.5'}\ 40.7) = \underline{\cancel{107.2}\ 72.4\ k\text{-}ft/\text{cassion}}$

Moment Fall $= \cancel{3.88^k}\ 2.16\ (\cancel{33.5'}) = \underline{\cancel{130}\ 87.9\ k\text{-}ft./\text{cassion}}$

* Revised Cassion Run by WTI See sheets

ENTRANCO ENGINEERS, INC.

SHEET NO 27 OF ____

JOB NO ____ - -

PROJECT Glendale Ave Br. @ ACDC

CALCULATIONS FOR Substructure

MADE BY Jmh DATE 4/20/89 CHECKED BY WSK DATE 6/89

Summary of Loads

Load	Vert.	Along ℄ of Br Shear	Along ℄ of Br Moment	⊥ To Br. ℄ Shear	⊥ To Br. ℄ Moment
DL	117.8^k	—	—	—	—
LL	22.2^k	—	—	—	—
E	—	$\ddagger 95^k$	$\ddagger 848.8^{k'}$	—	—
W	—	—	—	0.6^k	$20.1^{k'}$
W_{LL} (Trans)	—	—	—	0.2^k	$6.7^{k'}$
W_{LL} (Long.)	—	0.08^k	$2.68^{k'}$	—	—
LF	—	1.11^k	$37.2^{k'}$	—	—
T (Rise)	—	3.2^k	$107.2^{k'}$	—	—
T (Fall)	—	-3.88^k	$-130^{k'}$	—	—

‡ factored from Earth Load @ 8' spacing of Caissons

EQ Loading is not applicable for this structure and is not included in the Load Summary. It is classified as "SPC" Catergory 'A' per Sections 3.4 & 4.2 of "AASHTO Guide Specifications for Seismic Design of Highway Bridges" 1983. (However, Connections will be Analized per Sec. 4.6)

See Sht 29A

Eccentric Loading of Superstr To Cap Beam –

$e = 5''$

$$M_{Ecc} = \left(\frac{5''}{12}\right)(117.8^k + 22.2^k)$$

$$M_{Ecc} = \underline{58.3^{k'}}$$

Ignore Moment Induced To pile by Eccentric Loading; Since it would Decrease the Design Moment of the Cassion.

Conservative – WSK ✓

ENTRANCO ENGINEERS, INC.

SHEET NO 28 OF ____

JOB NO ____ - -

PROJECT Glendale Ave Br @ ACDC

CALCULATIONS FOR Substs

MADE BY [illegible] DATE 4/20/89 CHECKED BY WSK DATE 6/89

rechecked WSK 8/89

Summary of Combined Group Loads.
Service Load Design (AASHTO 3.22.1)

Group	Vert.	Along ℄ of Br. Shear	Along ℄ of Br. Moment	⊥ To ℄ of Br. Shear	⊥ To ℄ of Br. Moment	% Stress
I	140k	95k	848.8k'	—	—	100%
II	117.8k	95k	848.8k'	0.6k	20.1k'	125%
III	140k	96.2k	888.7k'	0.4k	12.7k'	125%
IV Rise	140k	98.2k	956.0k'	—	—	125%
IV Fall	140k	91.12k	718.8k'	—	—	125%
V Rise	117.8k	98.2k	956.0k'	0.6k	20.1k'	140%
V Fall	117.8k	91.1k	718.8k'	0.6k	20.1k'	140%
VI Rise	140k	99.4k	995.9k'	0.4k	12.7k'	140%
VI Fall	140k	92.3k	758.7k'	0.4k	12.7k'	140%
VII	117.8k	95k	848.8k'	—	—	133%

$\beta_E = 1.0$; $\gamma = 1.0$

Group VIII is same as Group I except @ 140% of Basic Unit Stress.

Group IX is same as Group II except @ 150% of the Basic Unit Stress.

Δ 8/89 NOTE: Loading from Revised Computer Analysis
Lowers Shear in Group I to 60k/pile
Lowers Mom in Group I to 618 1-k/pile
USE SAME ANALYSIS THAT follows

ENTRANCO ENGINEERS, INC.

SHEET NO 29 OF ____

JOB NO ____ - ____

PROJECT Glendale Ave Br. @ ALDC

CALCULATIONS FOR Substructure

MADE BY JMG DATE 4/20/89 CHECKED BY WGK DATE 6/89

Load Case Comparison

Compare loads on an equal basis by combining the two directions & dividing by the % overstress:

$$\frac{\sqrt{(\text{Load along } \mathcal{C})^2 + (\text{Load} \perp \text{To } \mathcal{C})^2}}{\%} (100)$$

Group	Vert.	Shear	Moment
I	140^k	95^k	848.8$^{k'}$
II	94.2^k	76^k	679.2$^{k'}$
III	112^k	76.9^k	711$^{k'}$
IV$_R$	112^k	78.6^k	764.8$^{k'}$
IV$_F$	112^k	72.9^k	575$^{k'}$
V$_R$	84.1^k	70.1^k	683$^{k'}$
V$_F$	84.1^k	65^k	513.6$^{k'}$
VI$_R$	100^k	71^k	711.4$^{k'}$
VI$_F$	100^k	65.9^k	542.0$^{k'}$
VII	117.8^k	71.3^k	636.7$^{k'}$

← Governs cassion design

ENTRANCO ENGINEERS, INC.

SHEET NO 29A OF ____

JOB NO ____ - - ____

PROJECT ____

CALCULATIONS FOR ____

MADE BY WSK DATE 6/89 CHECKED BY ____ DATE ____

EARTHQUAKE CONSIDERATIONS

AASHTO 3.21 & AASHTO Guide Specs for Seismic Design of Highway Bridges

AASHTO Guide: 4.2

Seismic Performance Category A

AASHTO Guide: 4.6

Total DL/girder = 50.8^K See Sht 22

EQ = .2 × 50.8 = 10.2^K

Try # 8 bar: A_s = .79 in^2

∴ A_v = 10200#/.79 in^2 = 12911 psi OK

< .4fy = 24 ksi

#6 bar would be sufficient

AASHTO 10.32

Table 10.32.1.A

USE # 8 bar @ each end of girder in 3" ϕ hole.

ENTRANCO ENGINEERS, INC.

SHEET NO 30 OF ____

JOB NO ____ - -

PROJECT Glendale Ave Br @ ACDC

CALCULATIONS FOR Substructure

MADE BY JMG DATE 4/24/89 CHECKED BY WSK DATE 6/89

CASSION DESIGN. (MOMENT CARRYING COLUMNS.)

VERT. LOAD. = 140^k ✓

MOMENT = 848.8$^{k\text{-}'}$ ✓

GROUP I Controls – WSK ✓

PER AASHTO 8.15.4 (COMPRESSION MEMBERS)

DESIGN PER AASHTO ARTICLE 8.16.4 & 8.16.5 ✓

$P_u = (140^k)(1.3) = \underline{182^k}$ ← ✓

$M_u = (848.8^{k\text{-}'})(1.3) = \underline{1{,}103^{k\text{-}'}}$ ← ✓

TO DEVELOP PRELIMINARY DESIGN – USE "ACI COLUMN DESIGN HANDBOOK" ACI 340-2R-85, USE SECTION 7.22.3 LOAD-MOMENT STRENGTH INTERACTION CHART. good

ASSUME #5 SPIRAL, 2½" CLEAR TO SPIRAL AND #11 BAR MAIN REINFORCEMENT. ; $\gamma = 0.78$ for 36"φ pier.

∴ USE CHART C4-60.75 & DETERMINE ρ.

for $\dfrac{\phi P_n}{A_g} = \dfrac{182}{\pi(1.5)^2(144)} = \underline{0.179 \text{ ksi}}$

AND $\dfrac{\phi M_n}{A_g\, h} = \dfrac{1{,}103(12)}{\pi(1.5)^2(144)(36)} = \underline{0.361 \text{ ksi}}$

FROM CHART $\rho_{min} = 0.02$, INCREASE TO $\rho = 0.03$. TO ANTICIPATE THE INCREASED CAPACITY REQUIRED FOR SLENDERNESS EFFECT.

$A_{st} = 0.03(\pi)(1.5)^2(144) = 30.53 \text{ in}^2$

TRY 20 #11 bars $A_{st} = 20(1.56) = \underline{31.20 \text{ in}^2}$ ←

COLUMNS 7.22.3—Load-moment strength interaction diagram for C4-60.75 spirally reinforced columns

References: ACI 318-83, Sections 9.3.2.2, 10.2, and 10.3; ACI Publication SP-7, pp. 152–182

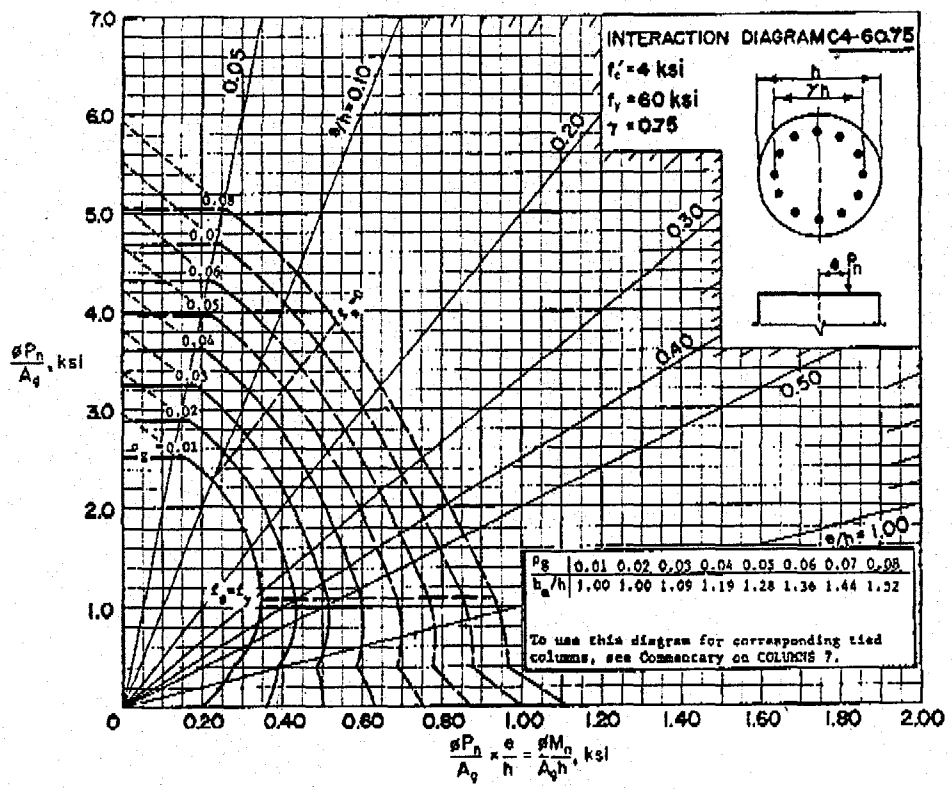

COLUMNS 7.22.4—Load-moment strength interaction diagram for C4-60.90 spirally reinforced columns

References: ACI 318-83, Sections 9.3.2.2, 10.2, and 10.3; ACI Publication SP-7, pp. 152–182

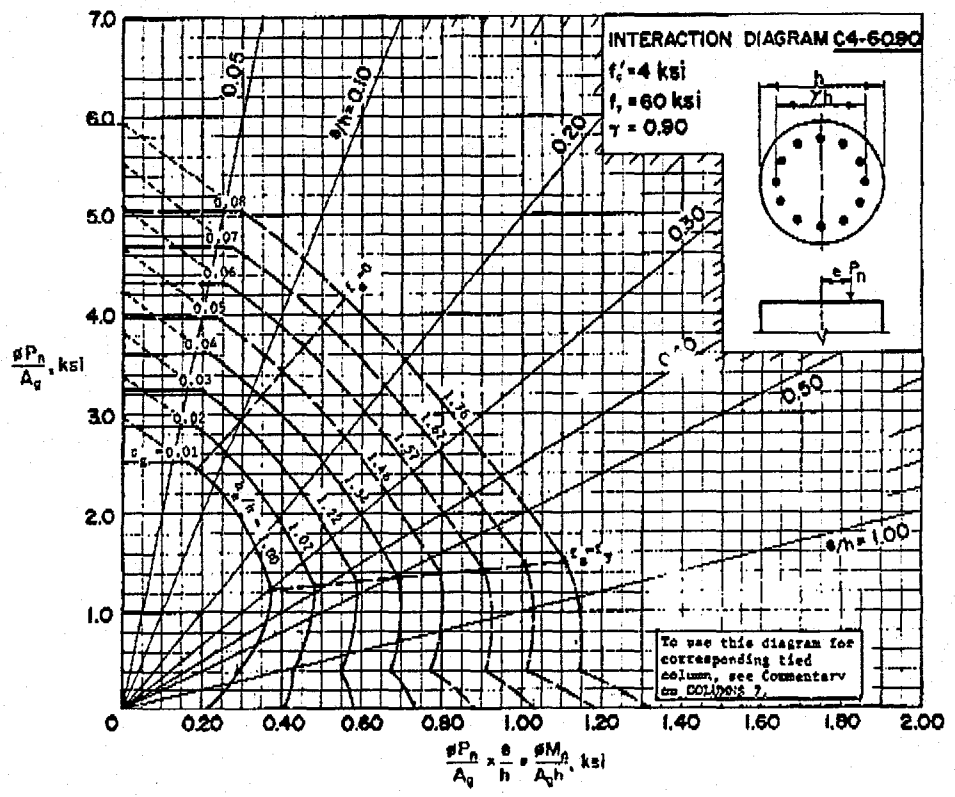

For use of these Design Aids, see Columns Examples 1–8 and 11–16.

ENTRANCO ENGINEERS, INC.

SHEET NO 31 OF ____

JOB NO ____ - ____

PROJECT Glendale Ave Br @ ALDL

CALCULATIONS FOR ____

MADE BY JMG DATE 4/26/89 CHECKED BY WSK ✓ DATE 6/89

Using 20 - #11 bars would be adequate per Load Factor Design.

Check Service Load Requirements: AASHTO 8.16.4.1.2 (a) Eq. (8-29)

$$P_{N\,MAX} = 0.35\left[0.85\left[0.85 f_c'(A_g - A_{st}) + f_y A_{st}\right]\right]$$

$$= 0.35\left[0.85\left[0.85(4)\left(\frac{\pi(36)^2}{4} - 31.2\right) + 60(31.20)\right]\right]$$

AASHTO 8.15.4

$P_{N\,MAX} = \underline{1555^k}$ $\qquad$ $\underline{1555^k \gg 182^k \therefore \text{ok}}$ ✓

Determine ϕP_o per AASHTO 8.16.4.2.1 Eq (8-31)

$\phi = 1.0$

$$\phi P_o = \left(0.85 f_c'(A_g - A_{st}) + A_{st} f_y\right)$$

Axial Capacity = ϕP_o (35%) per AASHTO 8.15.4

$$\phi P_o = 0.35\left[0.85(4)\left(\frac{\pi(36)^2}{4} - 31.20\right) + 60(31.2)\right]$$

$= \underline{1{,}829^k}$ ——— CONTROLS - WSK ✓

ENTRANCO ENGINEERS, INC.

SHEET NO 32 OF ____

JOB NO ____ - -

PROJECT ____

CALCULATIONS FOR ____

MADE BY Jmly DATE 5/22/89 CHECKED BY WSK DATE 6/89

WSK: 2½" Clear to spiral OK per AASHTO 8.22.1
Minimum: 2"

TRIAL SECTION

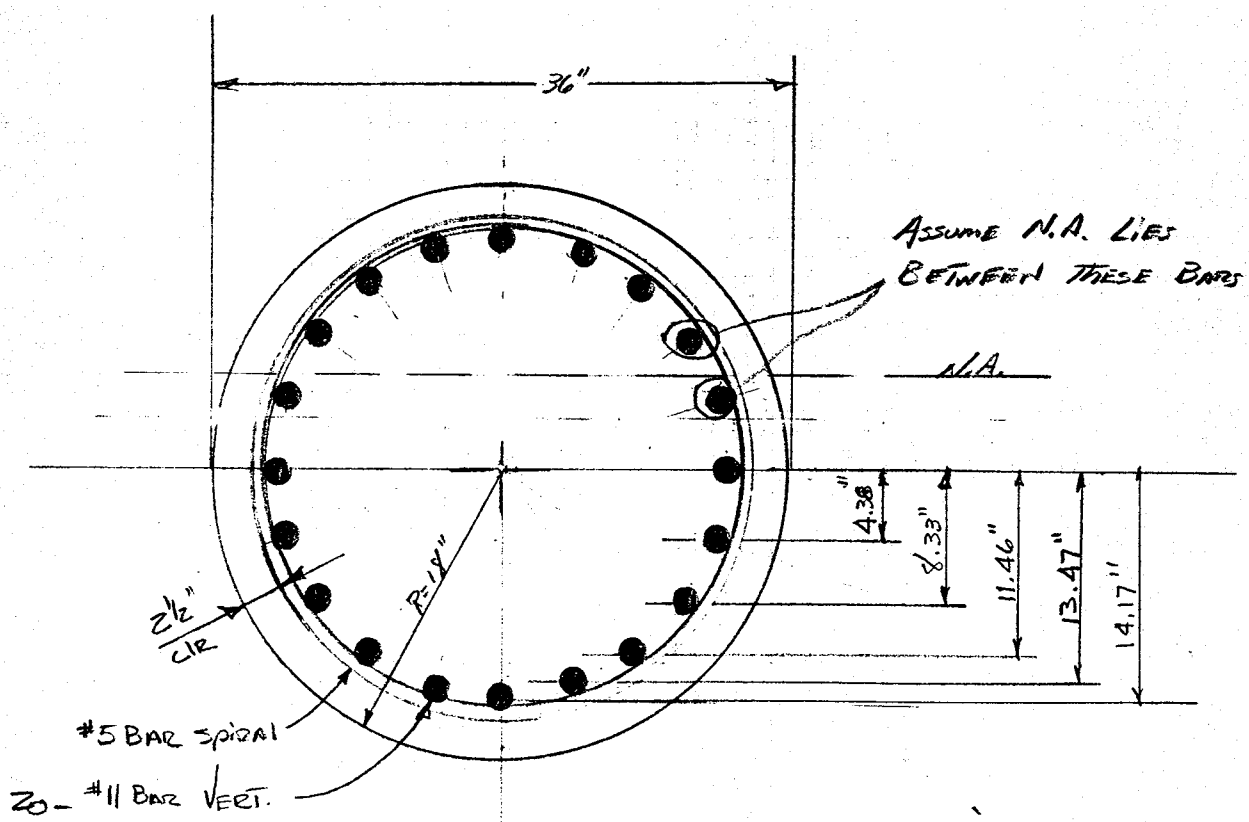

ENTRANCO ENGINEERS, INC.

SHEET NO 33 OF ____

JOB NO ____

PROJECT ____

CALCULATIONS FOR ____

MADE BY JMY DATE 5/29/89 CHECKED BY WSK DATE 6/89

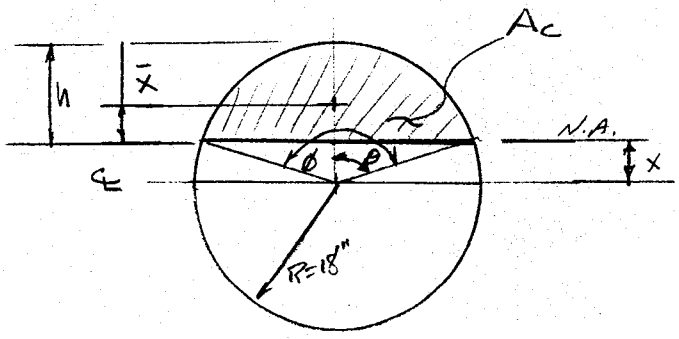

RADIANS DEGREES

$$A_c = \tfrac{1}{2} R^2 (\phi - \sin\phi)$$

$$\bar{x} = \left(\frac{\sin\theta}{\theta} - \cos\theta\right) R$$

$$h = R[1 - \cos\theta]$$

Solve for X (Location of N.A.) This will occur when Equilibrium is Reached. IE: when Moment of Concrete Compression + Moment of Compression Steel − Moment of Tension Steel = 0.

Locate N.A. Based on Ultimate material stresses. This will yield approximately the same N.A. Location when based on Service Loads.

Moment of Compression Steel About N.A.

$$[60 - 4](1.56\,in^2) \times [2(8.33" - x) + 2(11.46" - x) + 2(13.47" - x) + (14.17" - x)]$$

Deduct Area of Concrete

$$= 7{,}049.08 - 611.52x$$

Moment of Tension Steel About N.A.

$$60(1.56)[2(x) + 2(4.38" + x) + 2(8.33" + x) + 2(11.46" + x) + 2(13.47 + x) + 14.17x + 2(4.38" - x)$$

$$9{,}192.45 + 842.4x$$

$2\phi_0$ = central angle, radians $\qquad \alpha$ = angle at A, radians $\qquad a$ = radius

$L = 2\phi_0 a$ = segment length $\qquad h$ = segment height $\qquad \alpha = \phi_0 = 2\tan^{-1}\dfrac{h}{c}$

$S_k = \sin\phi_k \qquad C_k = \cos\phi_k \qquad k = 0, 1, 2$

For definitions of x_C, y_C, I_{xx}, I_{yy}, I_{xy}, M_x, M_y see Secs. 21.05–21.06.
For other properties of circular segment see Secs. 4.05–4.06.

(1) Segment AB in X_A, Y_A

$$M_{Ax} = 2(S_0 - \phi_0 C_0)a^2 \qquad M_{Ay} = 2\phi_0 S_0^2 a^2$$

$$x_C = aS_0 \qquad y_C = \left(\frac{S_0}{\phi_0} - C_0\right)a$$

$$I_{Axx} = (\phi_0 - 3S_0C_0 - 2\phi_0C_0)a^3$$

$$I_{Ayy} = 2S_0(S_0 - \phi_0C_0)a^3$$

$$I_{Axy} = (\phi_0 - S_0C_0 + 2\phi_0S_0^2)a^3$$

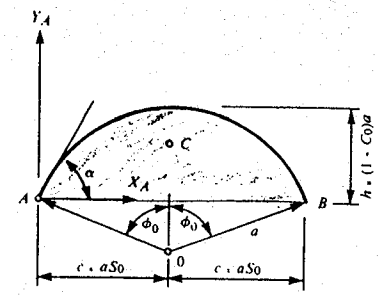

$\phi_0 \leqslant \pi/2$

(2) Segment AB in X_0, Y_0

$$M_{0x} = 2S_0a^2 \qquad M_{0y} = 0$$

$$x_C = 0 \qquad y_C = \frac{aS_0}{\phi_0}$$

$$I_{0xx} = (\phi_0 + S_0C_0)a^3$$

$$I_{0yy} = (\phi_0 - S_0C_0)a^3$$

$$I_{0xy} = 0$$

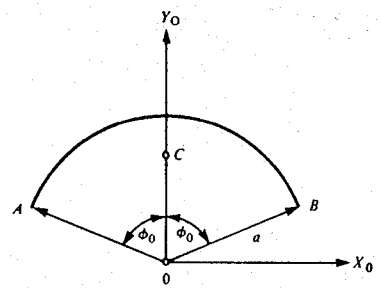

$\phi_0 \leqslant \pi$

(3) Segment AB in X_C, Y_C

$$M_{Cx} = 0 \qquad M_{Cy} = 0$$

$$x_C = 0 \qquad y_C = 0$$

$$I_{Cxx} = \left(\phi_0 + S_0C_0 - \frac{2S_0^2}{\phi_0}\right)a^3$$

$$I_{Cyy} = (\phi_0 - S_0C_0)a^3$$

$$I_{Cxy} = 0$$

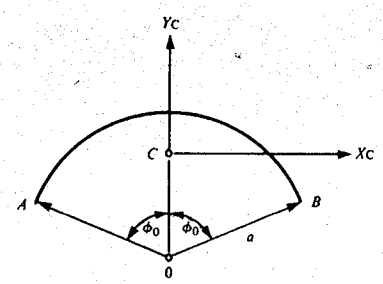

$\phi_0 \leqslant \pi$

(4) Segment AB in X_V, Y_V

$$M_{Vx} = -2(\phi_0 - S_0)a^2 \qquad M_{Vy} = 0$$

$$x_C = 0 \qquad y_C = \left(1 - \frac{S_0}{\phi_0}\right)a$$

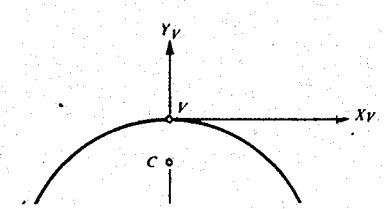

For Equilibrium –

$$0.85(4\,ksi)(A_c)(\bar{x}) + 7{,}049.08 - 611.52x = 9{,}192.45 + 842.4x$$

By Trial & Error $\underline{x = 5.02''}$ – Distance To N.A. measured from ℄ of pile.

$\therefore$ $A_c = 330.59\ in^2$

$\bar{x} = 8.399''$ measured from N.A. To Centroid of Segment.

$8.399'' + 5.02'' = \underline{13.419''}$ – Centroid of Segment measured from ℄ of Pile

Determine Moment Capacity – (20 – #11 bars)

$$d = [1(18 + 14.17'') + 2(18 + 13.47'') + 2(18 + 11.46'') + 2(18 + 8.33'') + 2(18 + 4.38'') + 2(18) + 2(18 - 4.38'')] \div 13$$

$d = \underline{24.207''}$

$$d' = [1(18 - 14.17) + 2(18 - 13.47) + 2(18 - 11.46) + 2(18 - 8.33) \div 7$$

$d' = \underline{6.473''}$

$a/2$ is Equiv. To $18'' - 13.419'' = \underline{4.581''}$

Use AASHTO (Eq 8-25) d, d' & $a/2$ have been modified To be used in Eq. 8-25 (see above)

$$\phi M_N = \phi[(A_s - A_s')f_y(d - a/2) + A_s' f_y(d - d')] \quad (Eq\ 8\text{-}25)$$

$A_s = 20(1.56) = 31.20 \text{ in}^2$

$A_s' = 7(1.56) = 10.92 \text{ in}^2$

$f_y = 60 \text{ ksi}$

$\phi M_N = 1.0\left[(31.2-10.92)(60)(24.207-4.581)+(10.92)(60)(24.207-6.473)\right]$

$= 35{,}500^{k\text{-}in} = 2958.3^{k\text{-}ft}$

USE $0.35\,\phi M_N = 0.35(2958.3) = \underline{1{,}035.4^{k\text{-}ft}}$

EQUIV. SERVICE LOAD MOMENT CAPACITY
AASHTO 8.15.4.

$1035.4^{k\text{-}ft} > 848.8^{k\text{-}ft}$

GROUP I GOVERNING LOADING

OK

OK WGK

EVALUATE MOMENT CAPACITY DUE SLENDERNESS EFFECTS. AASHTO 8.16.5.2.7

CALCULATE MOMENT MAGNIFIER δ

$$\delta = \frac{C_m}{1-\frac{P_u}{\phi P_c}} \geq 1.0 \quad (\text{Eq. } 8\text{-}41)$$

$P_u = 2.5(140^k) = 350^k$; $\phi = 1.0$ $C_m = 1.0$

PER AASHTO 8.15.4

$$P_c = \frac{\pi EI}{(k\ell_u)^2} \quad (\text{Eq. } 8\text{-}42)$$

$K = 0.80$ AASHTO TABLE C-1 PG. 357 CASE (b)

$\ell_u = 33.5'$ — PAGE 4-20 SOILS REPORT

ENTRANCO ENGINEERS, INC.

SHEET NO 36 OF ____

JOB NO ____ - ____

PROJECT ____

CALCULATIONS FOR GLENDALE (SUB-TR.)

MADE BY JMG DATE 5/29/89 CHECKED BY WSK DATE 6/89

$$EI = \frac{\frac{E_c I_g}{2.5}}{1+\beta_d} \quad (\text{Eq. } 8\text{-}44)$$

$$\beta_d = \frac{D L_m}{\Sigma_m} = 1.0$$

$$E_c = 33(155)^{1.5}\sqrt{4{,}000} = 4{,}027{,}555 \text{ psi} = 579{,}968 \text{ ksf.}$$

$$I_g = \frac{1}{4}\pi(1.5)^4 = 3.976 \text{ ft.}^4$$

$$EI = \frac{(579{,}968)(3.976)/2.5}{(1+1)} = 461{,}190 \text{ k-ft.}^2$$

$$P_c = \frac{\pi^2(461{,}190)}{(0.8\times 33.5)^2} = \underline{6{,}337.4}^{\,k}$$

$$\delta_b = \frac{1.0}{1-\frac{350}{6337.4}} = 1.058; \quad \underline{\text{USE } 1.06} \leftarrow$$

<u>DETERMINE which Eqn. Applies. PER AASHTO 8.16.4.3</u>

$P_u < 0.1 f_c' A_g$ (EQN 8-39)

$0.1 f_c' A_g = 0.1(4)\left(\pi\frac{(36)^2}{4}\right) = 407^k > 140^k$ <u>THEREFORE</u>

<u>Column moment governs</u>
<u>DESIGN & USE EQN 8-38</u>

$$\frac{M_{ux}}{\phi M_{nx}} + \frac{M_{uy}}{\phi M_{ny}} \le 1 \quad (\text{EQN } 8\text{-}38)$$

$$\frac{848.8(1.06)}{1{,}035.4} = 0.87 < 1.0 \quad \underline{\text{ok}}$$

* <u>USE 20 - #11 bars w/ 2½" CLEAR TO the Spiral</u>
<u>Full Length of CAISSON</u>

ENTRANCO ENGINEERS, INC.

SHEET NO 27 OF ____

JOB NO ____ - -

PROJECT ____

CALCULATIONS FOR ____

MADE BY Jmly DATE 5/31/89 CHECKED BY WSK DATE 6/89

Spiral Design per AASHTO 8.18.2.2

min spiral Reinf. = $\rho_s = 0.45\left(\frac{A_g}{A_c} - 1\right)\frac{f_c'}{f_y}$ (Eqn 8-62)

$A_g = \frac{\pi}{4}(36)^2 = 1{,}018 \text{ in}^2$

$A_c = \frac{\pi}{4}(36-5)^2 = 754.8 \text{ in}^2$

$\rho_s = 0.45\left(\frac{1018}{754.8} - 1\right)\frac{4}{60} = 0.0105$

Volume = $0.0105\left[\frac{\pi(31)^2}{4}\right]12'' = 95.1 \text{ in}^3$ of steel Reqd per foot Length of pile

Circumference = $(31 - 0.625)(\pi)$
= 95.43 in

Use #5 bar $A_s = 0.31 \text{ in}^3/\text{in}$

$\frac{95.1 \text{ in}^3}{0.31 \text{ in}^3/\text{in}} = 306.8$ inches of #5 Bar Reqd in 1 foot pile Length.

$\frac{306.8 \text{ in}}{95.43 \text{ in}} = 3.21$ Turns per 1 foot of pile.

$\frac{12''}{3.21} = 3.73$ in pitch.

∴ Use #5 bar or 5/8" smooth wire with a 3½" inch pitch.

ENTRANCO ENGINEERS, INC.

SHEET NO 38 OF ____

JOB NO ____ - -

PROJECT ____

CALCULATIONS FOR ____

MADE BY dmt DATE 5/31/89 CHECKED BY WSK DATE 6/89

EVALUATE CAISSON SHEAR CAPACITY AASHTO 8.15.5.1.2

$V = 95^k$ ← for 8' Caisson Spacing ; less for 7' spacing

$v = \frac{V}{b_w d}$ (Eqn 8-3) $b_w = 36''$

$d = 24.2''$ — AASHTO 8.15.5.1.2

$v = \frac{95^k}{(36)(24.2)} = 0.109 \text{ ksi} = \underline{109 \text{ psi}}$ ←

DETERMINE Allowable SHEAR AASHTO 8.15.5.2.2

$v_c = 0.9\left(1 + 0.0006\frac{N}{A_g}\right)\sqrt{f_c'}$ (Eqn. 8-5)

$N = 140^k = 140{,}000$ lbs.

$A_g = 1018 \text{ in}^2$

$v_c = 0.9\left(1 + 0.0006\left(\frac{140{,}000}{1{,}018}\right)\right)\sqrt{4{,}000} = 61.6 \text{ psi} < 109 \text{ psi}$

∴ REQUIRES SHEAR REINF.

$A_v = \frac{(v - v_c)\, b_w s}{f_s}$ (Eqn 8-7)

$A_v = \frac{(109 - 61.6)(36)(s)}{24{,}000} = 0.0711s$

for 2 - #5's $A_v = 2(.31) = 0.62 \text{ in}^2$

$s = \frac{0.62 \text{ in}^2}{.0711} = 8.72$ in Spacing Required

$\underline{8.72'' > 3\tfrac{1}{2}''}$ spiral pitch ok

Cap Beam Design.

Shear Transferred To Cap beam by cassions is 95^k per cassion. @ 8' spacing

The Cap Beam Transfers 95^k/cassion shear To The Superstr. by a combination of: (#11 bar Dowel Centered @ End of Ea Girder + Back Wall on Top of Cap Beam.) This Analysis will be very conservative by ignoring the Resistive contribution of the #11 Dowels & Using the Back wall only To Resist the shear Load. The #11 Dowel will be Evaluated Later To Resist only The Earthquake Lateral Force.

Determine Reinf. Reqd in Back Wall for Cassion shear Resistance:

$$f_s = 0.4 f_y = 0.4(60{,}000) = 24{,}000 \text{ psi}$$

(Eqn 8-10) $$A_{s\,Reqd} = A_{vf} = \frac{V}{f_s \mu (7')} = A_{vf} = \frac{95{,}000}{24{,}000(1.0)(7')} = 0.565 \text{ in}^2/\text{ft}.$$

$\mu = 1.0$ w/ Roughened surface

may use #5's @ 6" o/c $A_s = 0.62 \text{ in}^2/\text{ft} > 0.565 \text{ in}^2/\text{ft}$.

– or – #7 bars @ 12" o/c $A_s = 0.60 \text{ in}^2/\text{ft} > 0.565 \text{ in}^2/\text{ft}$

Use <u>#5 Bars @ 6" o/c</u> on Back Face of Back Wall.

ENTRANCO ENGINEERS, INC.

SHEET NO 40 OF ____

JOB NO - -

PROJECT ____

CALCULATIONS FOR ____

MADE BY JMG DATE 5/31/89 CHECKED BY WSK DATE 6/89

7/8 x 108.7^k (See Sht 24)

DESIGN CAP BEAM TO RESIST THE 95^k/CASSION SHEAR LD. DISTRIBUTED TO THE BACKWALL AS A UNIFORM LOAD.

$\frac{95^k}{7'} = 13.57\ ^k/_{lf}$

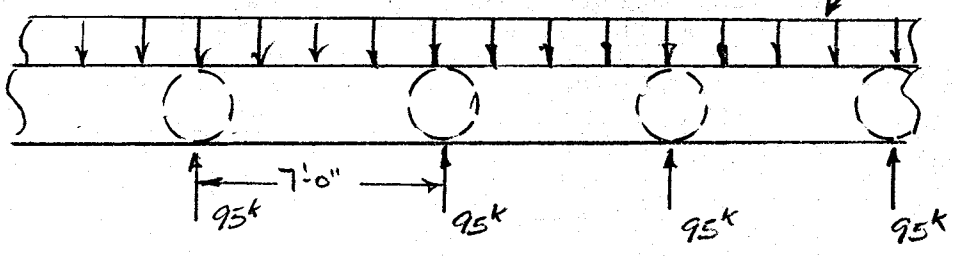

(PLAN) NTS.

$M_{max} = 0.1071\, wl^2$ ← AISC STEEL BOOK (8th Ed) Pg. 2-127, 39.

$= 0.1071(13.57)(7)^2$

$= 71.21^{k\text{-}ft} = \underline{855}^{k\text{-}in}$

$A_{s\,REQD} = \frac{M}{jdf_s}$ $d = 36'' - 2'' - .625 - \frac{0.88}{2} = 32.94''$

$A_s = \frac{855^{k\text{-}in}}{(0.89)(32.94'')(24)} = 1.22\ in^2$ ASSUME

TRY 2-#7 BARS $A_s = 2(.60) = 1.20\ in^2$ & RE-ANALIZE

$\rho = \frac{1.20\ in^2}{(24)(32.94)} = 0.00152$ $k = \sqrt{2(n)(\rho) + (n\rho)^2} - n\rho$

$= \left[2(7.0)(.00152) + (.00152)(7)\right]^{1/2} - (7)(.00152)$

$k = 0.135$ $j = 1 - \frac{.135}{3}$ $j = 0.954$

$M_s = A_s(f_s)(j)(d) = (1.20)(24)(.954)(32.94) = 905^{k\text{-}in} > 855^{k\text{-}in}$ ok

USE 2-#7 EA SIDE

Check Shear -

$V_{max} = 0.607\, wl = 0.607(13.57)(7') = 57.6^k$

$V = \frac{57.6^k}{(24)(32.94'')} = 0.0729 = \underline{72.9\ psi}$

ENTRANCO ENGINEERS, INC.

SHEET NO 41 OF ____

JOB NO ____ - -

PROJECT ____

CALCULATIONS FOR ____

MADE BY Jmy DATE 6/1/89 CHECKED BY WSK DATE 6/89

Allowable shear provided by concrete only — AASHTO 8.15.5.2.1

$V_c = 0.95\sqrt{f_c'} = 0.95\sqrt{4{,}000} = 60 \text{ psi} < 72.9 \text{ psi}$

∴ shear reinf. req'd.

$$A_v = \frac{(V - V_c)(b_w)(s)}{f_s} \quad \text{(Eqn 8-7)}$$

$$A_v = \frac{(72.9 - 60)(24")(s)}{24{,}000}$$

$A_v = 0.013s$ Try #4 bars. ; $A_v = 2(.20) = 0.40 \text{ in}^2$

$$s = \frac{0.40}{0.013} = 30.7"$$

min. shear spacing per AASHTO 8.19.3

24" or d/2 ; $d/2 = \frac{32.9}{2} = 16.4"$

Upsized to #5 bar @ 6" o/c

USE #4 hoops @ 12" o/c

SEE Following

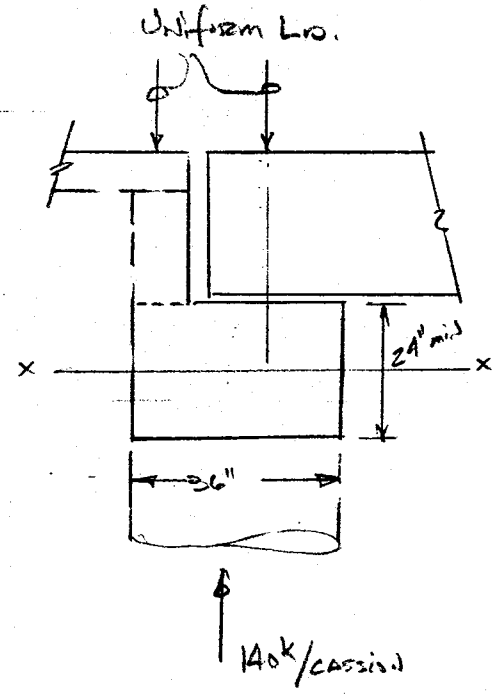

Design for flexure & shear about x-x axis.

Bkwall & Box girders. Distribute load to cassion as uniform load.

$w = 140^k/7 = 20 \text{ k/ft}$

$M_{max} = 0.1071(w)(l)^2$

$= 0.1071(20^k/ft)(7)^2$

$= 104.96^{k\text{-}ft} = \underline{1260^{k\text{-}in}}$

ENTRANCO ENGINEERS, INC.

SHEET NO 42 OF ____

JOB NO ____ - -

PROJECT ____

CALCULATIONS FOR ____

MADE BY tmh DATE 6/1/89 CHECKED BY WSK DATE 6/89

$$A_{s_{REQD}} = \frac{M}{jdf_s} \qquad d = 24'' - 1.5'' - .50 - \frac{.88}{2} = 21.56''$$

$$A_{s_{REQD}} = \frac{1260^{k-''}}{(0.9)(21.56)(24)} = 2.7 in^2$$

USE 5 #7 BARS.

$5(.60) = 3.0 in^2$

$$\rho = \frac{A_s}{bd} = \frac{3.0 in^2}{36(21.56)} = 0.00387$$

$$K = \sqrt{2n\rho + (n\rho)^2} - n\rho \qquad n = 7.2$$

$$K = \sqrt{2(7.2)(.00387) + [(7.2)(0.00387)]^2} - (7.2)(.00387)$$

$$K = 0.206 \qquad j = 1 - K/3 = 1 - \frac{.206}{3} = .93$$

$$M = A_s f_s jd$$

$$= 3.0(24)(.93)(21.56)$$

$$= 1,443^{k-in} > 1260^{k-in} \checkmark$$

USE 5 #7 BARS TOP & BTM

CHECK SHEAR

$$V_{max} = 0.607\, wl = .607(20^k/ft)(7') = 85^k$$

$$v = \frac{85^k}{(36)(21.56)} = 0.109 \text{ ksi} = \underline{109 \text{ psi}}$$

$$V_c = 0.95\sqrt{f_c'} = .95\sqrt{4,000} = 60 \text{ psi} < 109 \text{ psi}$$

∴ SHEAR REINF REQ'D

$$A_v = \frac{(V - V_c)(b_w)(s)}{f_s} \quad (\text{Eqn. } 8\text{-}7)$$

$$A_v = \frac{(109 - 60)(36)s}{24,000}; \quad A_v = 0.0735. \quad \text{Try \#5 bars.}$$

$$A_v = 2(.31) = 0.62 \qquad s = \frac{.62}{.0735} = 8.4''$$

AASHTO 8.19.3

$d/2 = 21.5''/2 = 10.75''$ mins.

USE #5 bar hoops @ 6" o/c ✓

ENTRANCO ENGINEERS, INC.

SHEET NO 43 OF ____

JOB NO ____ - -

PROJECT ____

CALCULATIONS FOR ____

MADE BY dmh DATE 6/1/89 CHECKED BY WGK DATE 6/89

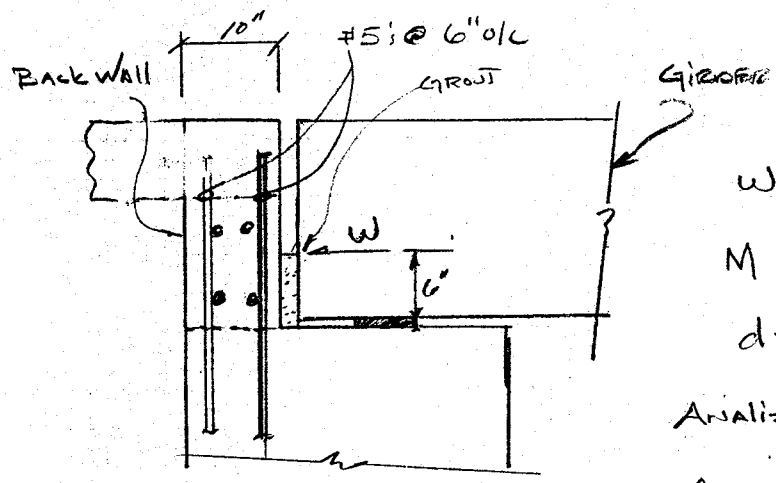

$w = 13.57^{k}/ft.$ worst case conservative

$M = 13.57(6") = \underline{81.42}^{k\text{-}in}/ft.$

$d = 10" - 1.5" - \frac{.625}{2} = 8.18"$

Analize #5's @ 6" for moment.

$\rho = \frac{A_s}{b_w(d)} = \frac{0.62}{(12)(8.18)} = 0.0063$

$k = \sqrt{2(7)(0.0063) + [(7)(0.0063)]^2} - (7)(0.0063)$; $k = 0.256$

$j = 1 - \frac{.256}{3} = 0.914$

$M_s = A_s f_s j d = (0.62)(24)(.914)(8.18)$

$= 111.3^{k\text{-}in} > 81.42$ ok

$f_s = \frac{81.42^{k\text{-}in}}{(.62)(.914)(8.18)} = 17.56^{ksi} < 24^{ksi}$ ok

$f_c = \frac{81.42^{k\text{-}in}(2)}{(.914)(.256)(12)(8.18)^2}$ $0.866^{ksi} = 866$ psi $<$ 1,600 psi ok

A conservative area of steel was selected for bending moment as an added factor of safty for shear-friction reinforcement in back face of wall.

AASHTO 8.20.1 $.125\left(\frac{10}{12} * 1.13'\right) = 0.116 in^2$

Use 4 - #5 bars longitudinal

ENTRANCO ENGINEERS, INC.

SHEET NO 44 OF ____

JOB NO ____ - -

PROJECT ____

CALCULATIONS FOR ____

MADE BY Jmly DATE 6/2/89 CHECKED BY WSK DATE 6/89

SIDEWALK / BARRIER RAIL DESIGN

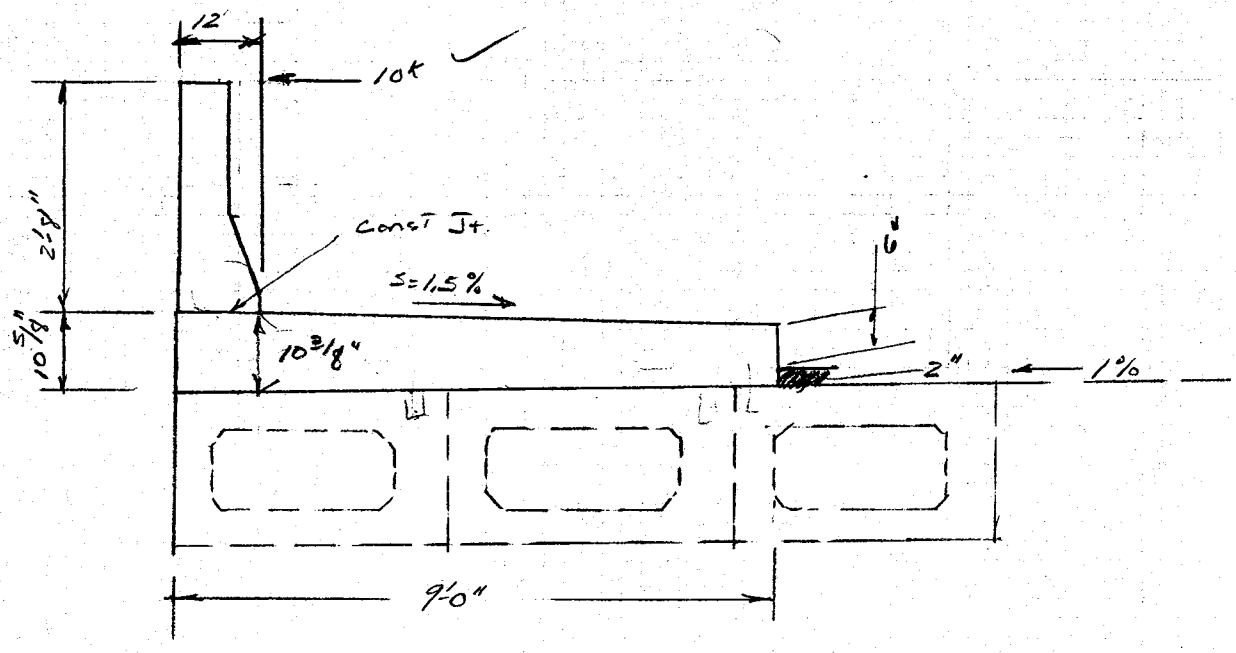

MOMENT @ BTM of BARRIER RAIL

AASHTO 3.24.5.2. $E = 0.8X + 5$

$E = 0.8\left(\frac{15}{2}\right) + 5 = 5.4'$

$$M_x = \frac{10^k(2.667)(12)}{5.4} = 59.27^{k\text{-}in}$$

USE 3,000 psi CONCRETE.
60,000 psi REINF.

$f_c = .4(3{,}000) = 1200\,psi$

$f_y = .4(60{,}000) = 24{,}000\,psi$

ASSUME #5 REBAR.

$d = 12'' - 2 - \frac{.625}{2}$

$d = 9.68''$

ENTRANCO ENGINEERS, INC.

SHEET NO 45 OF ____

JOB NO ____ - -

PROJECT ____

CALCULATIONS FOR ____

MADE BY Jmy DATE 6/5/89 CHECKED BY WSK DATE 6/89

$E_c = 33(155)^{1.5}\sqrt{3,000} = 3,487,965$ psi

$E_s = 29\times10^6$ psi

$n = E_s/E_c = \frac{29\times10^6}{3,487,965} = 8.3$ USE $n = 8$

$k = \frac{1}{1+f_s/f_{cn}} = \frac{1}{1+\frac{24,000}{1200(8)}} = 0.286$

$j = 1 - k/3 = 0.904$

$A_{s\,REQD} = \frac{M}{jd\,f_s} = \frac{59,267^{\text{lb-in}}}{(0.904)(9.68)(24,000)} = 0.282$ in²/ft.

USE #5 bars @ 9" o/c ✓ $0.31\left(\frac{12}{9}\right) = 0.41$ in² > .282

USE #5 Bars @ 18" o/c EW in sidewalk for Distribution Temp & shrinkage.

check Horz Shear Between Face of Sidewalk

MAX Shear = $10^k/5.4 = 1.85$ K/ft.

$V_u = 1.3(1.85) = 2.4$ K/ft

$V_s = \frac{A_v f_y d}{s}$ USE s = 18"

$\frac{2.4}{.85} = \frac{A_v(60)(8.06)}{18"}$ $A_v = 0.105$ in²/18"

USED #5 bars @ 18" o/c = 0.31 > .105 ok

ENTRANCO ENGINEERS, INC.

SHEET NO 46 OF ____

JOB NO ____ - ____

PROJECT ____

CALCULATIONS FOR ____

MADE BY JMH DATE 6/5/89 CHECKED BY WGK DATE 6/89

Check Horz Shear Between Deck & Sidewalk

$10^k / 5.4 = 1.85^k/ft$ width.

Per AASHTO 8.16.6.4.4

Eqn (8-56) $V_n = A_{vf} f_y \mu$ use $\mu = 0.6$

$$A_{vf} = \frac{1.85^k/ft}{(24^{ksi})(.6)} = 0.128 \text{ in}^2/ft.$$

Can use #4 Bar @ 18" o/c $12/18(.2) = 0.133 \text{ in}^2 > 0.128$

Use 2 - #4 Bars @ 18" o/c for added safety

Embed into Top Deck of Precast Box Girder

5" - Depth Epoxy Resin.

ENTRANCO ENGINEERS, INC.

SHEET NO 47 OF ____

JOB NO ____ - -

PROJECT Glendale Ave @ ACDC

CALCULATIONS FOR Wing Wall Design

MADE BY WSK DATE 8/89 CHECKED BY JEM DATE 8/89

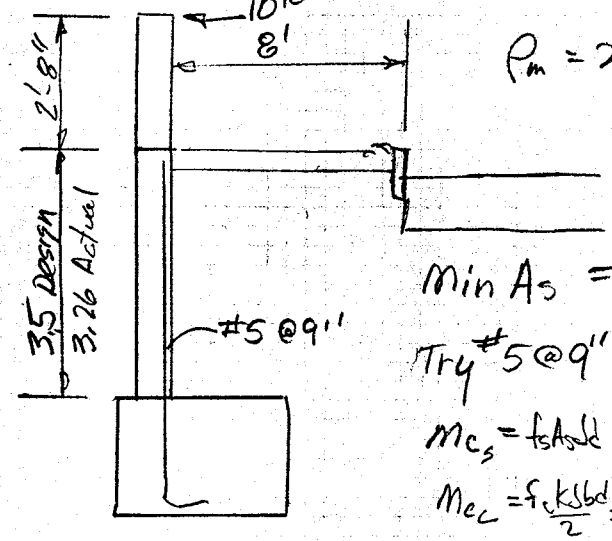

$\rho_m = 200/f_y = .00333$

$d = 12 - 2 - .625/2 = 9.69''$

$\text{Min } A_s = 200/f_y \, bd = .39 \text{ IN}^2$ (12, 9.69)

Try #5 @ 9" $A_s = .41$ $f'_c = 4000$ $\rho = .0036$, $K = .213$, $J = .929$

$M_{c_s} = f_s A_s J d = 24^{KSI} \times .41 \text{ IN}^2 \times \frac{.929 \times 9.69}{12} = 7.38'^K$

$M_{c_c} = \frac{f_c k J b d^2}{2} = 14.86'^K$

CASE 1 2' line load Surcharge $\gamma = 30$ PCF

$M = .030 \; 5.5^3/6 = 0.83'^K < 7.38'^K$ OK

CASE 2 RAIL LOADING + 4' EARTH PRESSURE

Distribution of 10^K Load $E = .8X + 3.75 \therefore = .8 \times 6.17 + 3.75 = 9.09'$

$M = \frac{10^K}{8.69} \times 6.17' + .03 \times 3.5^3/6 = 7.10 + 0.21 = 7.31 < 7.38$

Check Stresses

$f_s = 7.31 \times 12000 / .929 \times .413 \times 9.69'$ $23594 < 24^{KSI}$ OK

$f_c = 2 \times 7.31 \times 1200 / .213 \times .929 \times 12 \times 9.69^2 = 787 < 1600$ OK

USE #5 @ 9"