Property of
Flood Control District of MC Library
Please Return to
2801 W. Durango
Phoenix, AZ 85009

PRELIMINARY
DATE _____
_____
_____
_____

FINAL DESIGN CALCULATIONS FOR THE MARYLAND AVENUE BRIDGE AND UTILITY RELOCATIONS AT THE ARIZONA CANAL DIVERSION CHANNEL

FLOOD CONTROL DISTRICT
OF MARICOPA COUNTY
PROJECT NUMBER 88-39

DECEMBER 1989
PREPARED AND SUBMITTED BY:

T. Y. LIN INTERNATIONAL
1817 NORTH SEVENTH STREET, SUITE 175
PHOENIX, ARIZONA 85006
PHONE: (602) 253-1225

CALCULATION INDEX

SECTION	ITEM	PAGES
1.0	SURVEY DATA	1.01 - 1.12
2.0	GEOMETRY	2.01 - 2.13
3.0	CRITERIA & LOADS	3.01 - 3.02
4.0	BOX GIRDERS	4.01 - 4.17
5.0	ABUTMENTS	5.01 - 5.42
6.0	DRILLED SHAFTS	6.01 - 6.28
7.0	APPROACH SLABS	7.01 - 7.02
8.0	QUANTITIES	8.01 - 8.12
9.0	APPENDIX	9.01 - 9.36

1.0 SURVEY DATA

MARYLAND AVENUE BRIDGE

+ OFFSET ARE TO THE LEFT
- OFFSET ARE TO THE RIGH

CONTROL POINTS

STATION		NORTH	EAST	
POINT 221		920682.87	463142.54	✓
POINT 227		920681.93	463076.62	✓
POINT 11		920682.44	460341.01	✓
1700		920710.13	462667.09	✓
1800		920711.32	462767.08	✓
1900		920712.51	462867.07	✓
2000	POINT 10	920713.71	462967.07	✓
2100		920714.90	463067.06	✓
2200		920716.09	463167.05	✓
2300		920717.28	463267.04	✓
2324.96	POINT 12	920717.57	463292.00	✓
2400		920718.47	463367.04	✓
2500		920719.66	463467.03	✓
2600		920720.85	463567.02	✓

DRS

POINT	STA	OFFSET	NORTH	EAST
10	2000	0	920713.71	462967.07
100	1597.950	30.160	920739.08	462564.68
101	1603.043	26.497	920735.47	462569.82
102	1604.104	24.613	920733.60	462570.90
103	1652.785	26.432	920736.00	462619.56
104	1658.183	24.583	920734.22	462624.98
105	1658.638	26.894	920736.53	462625.41
106	1658.049	30.174	920739.81	462624.78
107	1658.799	40.017	920749.66	462625.41
108	1671.044	33.530	920743.32	462637.73
109	1664.118	26.685	920736.39	462630.89
110	1667.197	26.790	920736.53	462633.97
111	1713.743	19.200	920729.50	462680.60
112	1718.167	39.304	920749.65	462684.78
113	1735.493	40.570	920751.12	462702.09
114	1738.236	28.586	920739.17	462704.98
115	1738.899	19.121	920729.72	462705.76
116	1778.249	30.511	920741.57	462744.97
117	1777.546	20.535	920731.59	462744.38
118	1781.880	35.936	920747.04	462748.53
119	1809.861	31.677	920743.12	462776.56
120	1810.993	27.102	920738.55	462777.75
121	1811.108	21.040	920732.50	462777.94
122	1823.241	30.315	920741.91	462789.96
123	1876.388	22.927	920735.16	462843.19
124	1877.291	32.108	920744.35	462843.98
125	1889.368	39.703	920752.09	462855.97
126	1606.706	-30.826	920678.20	462574.17
127	1607.202	-24.483	920684.55	462574.59
128	1613.682	-20.462	920688.65	462581.02
129	1612.323	-30.051	920679.04	462579.77
130	1642.483	-30.083	920679.37	462609.93
131	1642.826	-20.463	920688.99	462610.16
132	1647.486	-24.430	920685.08	462614.87

133	1647.775	-30.700	920678.81	462615.23
134	1674.622	-30.671	920679.16	462642.08
135	1674.658	-24.458	920685.38	462642.04
136	1681.213	-20.423	920689.49	462648.54
137	1686.153	-13.090	920696.88	462653.40
138	1686.302	-26.314	920683.66	462653.70
139	1699.585	-29.906	920680.22	462667.03
140	1747.031	-33.671	920677.03	462714.51
141	1755.002	-32.160	920678.63	462722.47
142	1769.067	-29.896	920681.06	462736.50
143	1770.110	-30.311	920680.66	462737.55
144	1772.563	-24.381	920686.62	462739.93
145	1766.061	-20.323	920690.60	462733.38
146	1798.223	-20.340	920690.96	462765.54
147	1791.418	-24.361	920686.86	462758.79
148	1788.492	-30.529	920680.66	462755.94
149	1789.688	-29.990	920681.21	462757.12
150	1875.856	-26.590	920685.64	462843.25
151	1960.920	-30.054	920683.19	462928.35
152	1966.541	-28.328	920684.98	462933.95
153	1967.377	-27.146	920686.17	462934.77
154	1964.518	-30.086	920683.20	462931.94
155	1969.686	-39.284	920674.06	462937.22
156	1972.742	-35.881	920677.50	462940.24
157	1973.620	-38.584	920674.81	462941.15
158	1987.846	-38.675	920674.89	462955.37
159	1997.618	-24.545	920689.13	462964.98
160	1999.802	-20.059	920693.65	462967.11
161	1964.828	23.319	920736.60	462931.62
162	1967.620	20.901	920734.22	462934.44
163	1973.234	20.262	920733.65	462940.06
164	1977.555	20.725	920734.16	462944.37
165	1988.255	20.135	920733.70	462955.08
166	1951.737	-9.859	920703.27	462918.92
167	1958.266	-2.972	920710.24	462925.37
168	1961.682	-11.511	920701.74	462928.89
169	1976.743	-4.614	920708.81	462943.86
170	1889.556	23.420	920735.81	462856.35
171	1948.802	34.897	920747.99	462915.45
172	1950.615	36.215	920749.33	462917.25
173	1950.505	23.381	920736.50	462917.29
174	1960.614	33.768	920747.00	462927.28
175	1971.571	36.747	920750.11	462938.20
176	1967.822	50.143	920763.46	462934.29
177	1967.587	36.213	920749.53	462934.22
178	1973.351	32.695	920746.08	462940.03
179	1974.775	26.767	920740.17	462941.52
180	1985.354	27.617	920741.15	462952.09
181	2002.037	42.071	920755.80	462968.60
182	2009.534	38.947	920752.66	462976.14
183	2007.722	41.955	920755.75	462974.29
184	2007.377	37.807	920751.60	462973.99
185	2005.008	41.519	920755.28	462971.58
186	2017.366	42.229	920756.14	462983.93
187	2020.788	34.525	920748.47	462987.44
188	2035.753	39.043	920753.17	463002.35

189	2020.187	64.495	920778.44	462986.48	
190	2045.748	69.086	920783.33	463011.99	
191	2048.645	71.671	920785.95	463014.85	
192	2043.166	40.689	920754.90	463009.74	
193	2034.355	23.244	920737.36	463001.14	
194	2059.650	26.024	920740.44	463026.40	
195	2061.159	22.941	920737.37	463027.95	
196	2072.280	31.336	920745.90	463038.97	
197	2073.065	30.198	920744.77	463039.77	
198	2073.768	28.880	920743.46	463040.48	GAS
199	2073.181	28.624	920743.20	463039.90	
200	2074.983	27.589	920742.17	463040.71	
201	2074.412	26.049	920740.64	463041.16	
202	2141.525	26.147	920741.53	463108.27	
203	2139.642	27.686	920743.05	463106.37	
204	2139.847	28.793	920744.16	463106.56	
205	2138.191	31.427	920746.78	463104.87	
206	2135.647	30.530	920745.85	463102.34	
207	2135.844	28.974	920744.29	463102.55	GAS
208	2139.775	31.408	920746.77	463106.46	
209	2161.260	26.111	920741.73	463128.00	
210	2191.336	-25.745	920690.24	463158.69	
211	2178.005	-2.289	920713.54	463145.08	
212	2171.589	-25.813	920689.94	463138.95	
213	2176.187	-34.330	920681.48	463143.65	
214	2176.808	-32.110	920683.70	463144.24	
215	2174.172	-30.834	920684.95	463141.59	
216	2108.391	-30.793	920684.20	463075.81	
217	2109.666	-34.618	920680.39	463077.14	
218	2104.486	-25.949	920689.00	463071.85	
219	2089.560	-25.936	920688.84	463056.93	
220	2076.523	-3.426	920711.19	463043.62	
221	2175.090	-32.930	920682.87	463142.54	✓ DRS
222	2156.660	0.131	920715.70	463123.71	
223	2108.661	-35.457	920679.54	463076.14	
224	2112.057	-41.629	920673.41	463079.61	
225	2107.449	-36.441	920678.55	463074.94	
226	2110.200	-41.741	920673.28	463077.75	
227	2109.207	-33.091	920681.93	463076.62	✓ DRS
228	2120.485	-51.677	920663.47	463088.16	
229	2117.252	-53.450	920661.65	463084.94	
230	2076.877	-36.121	920678.50	463044.37	
231	2057.053	-25.811	920688.57	463024.42	
232	2036.153	-27.163	920686.97	463003.54	
233	2025.438	-33.496	920680.51	462992.90	
234	2032.694	-16.540	920697.56	462999.95	
235	2047.761	-15.064	920699.21	463015.00	
236	2045.249	-8.280	920705.96	463012.41	
237	2029.664	-6.368	920707.69	462996.80	
238	2009.995	-32.247	920681.58	462977.44	
239	1998.722	-40.600	920673.09	462966.27	
240	1995.670	-40.469	920673.19	462963.22	
241	2037.571	-40.985	920673.17	463005.12	
242	2025.696	-42.191	920671.82	462993.26	
243	2049.085	-33.912	920680.38	463016.55	
244	2065.704	-41.626	920672.86	463033.26	

245	2059.902	-38.708	920675.71	463027.42
12	2324.97	0	920717.57	463292
300	2100.925	-64.154	920650.75	463068.74
301	2096.696	-67.092	920647.76	463064.55
302	2086.836	-72.167	920642.57	463054.75
303	2182.813	-49.986	920665.89	463150.45
304	2187.165	-48.255	920667.67	463154.78
305	2201.594	-43.408	920672.69	463169.15
306	2218.534	-48.846	920667.46	463186.16
307	2211.697	-45.390	920670.83	463179.28
308	2213.863	-39.946	920676.30	463181.38
309	2217.309	-39.124	920677.16	463184.82
310	2236.445	-33.210	920683.30	463203.88
311	2231.937	-40.003	920676.46	463199.45
312	2220.494	-28.484	920687.84	463187.88
313	2207.258	-32.096	920684.07	463174.68
314	2203.061	-3.177	920712.94	463170.14
315	2230.107	-23.910	920692.53	463197.43
316	2264.051	-1.940	920714.90	463231.11
317	2270.155	-12.624	920704.29	463237.34
318	2271.433	-39.291	920677.64	463238.94
319	2266.990	-39.945	920676.93	463234.50
320	2270.368	-40.610	920676.31	463237.89
321	2291.635	-40.022	920677.15	463259.15
322	2295.104	-39.983	920677.23	463262.62
323	2290.372	-24.001	920693.15	463257.69
324	2296.396	-7.761	920709.46	463263.52
325	2302.976	-2.446	920714.86	463270.04
326	2122.673	51.824	920766.98	463089.11
327	2128.631	54.299	920769.52	463095.03
328	2150.652	53.996	920769.48	463117.06
329	2168.953	24.377	920740.08	463135.71
330	2157.606	46.522	920762.09	463124.10
331	2123.371	101.368	920816.53	463089.21
332	2124.423	101.321	920816.49	463090.27
333	2149.321	71.725	920787.19	463115.51
334	2179.794	70.456	920786.29	463146.00
335	2187.371	43.626	920759.55	463153.90
336	2196.574	55.881	920771.91	463162.95
337	2204.199	43.685	920759.81	463170.72
338	2202.234	40.322	920756.42	463168.80
339	2225.529	48.799	920765.18	463191.99
340	2223.160	48.119	920764.47	463189.63
341	2226.500	67.010	920783.40	463192.74
342	2225.720	81.536	920797.91	463191.79
343	2248.921	74.767	920791.42	463215.07
344	2254.496	80.363	920797.08	463220.58
345	2247.564	86.110	920802.75	463213.58
346	2246.612	118.334	920834.96	463212.24
347	2260.296	125.163	920841.95	463225.85
348	2258.525	124.617	920841.38	463224.08
349	2278.978	27.270	920744.29	463245.69
350	2298.127	34.947	920752.19	463264.75
351	2297.110	42.486	920759.72	463263.64
352	2299.300	48.647	920765.90	463265.76

1.05

353	2303.369	54.821	920772.13	463269.75
354	2324.383	40.056	920757.61	463290.94
355	2344.856	44.976	920762.77	463311.35
356	2255.720	32.197	920748.94	463222.38
357	2349.940	42.758	920760.62	463316.46
358	2346.060	24.376	920742.19	463312.80
359	2350.415	25.879	920743.75	463317.14
360	2369.675	20.379	920738.48	463336.46
361	2391.409	20.568	920738.92	463358.19
362	2393.608	24.113	920742.49	463360.35
363	2369.791	24.314	920742.41	463336.53
364	2391.734	27.670	920746.03	463358.43
365	2409.578	30.832	920749.40	463376.24
366	2425.141	32.496	920751.25	463391.78
367	2442.086	35.403	920754.36	463408.69
368	2486.678	26.410	920745.90	463453.39
369	2299.333	96.143	920813.40	463265.23
370	2300.754	96.655	920813.92	463266.64
371	2337.544	103.014	920820.72	463303.35
372	2338.880	103.488	920821.21	463304.68
373	2353.026	97.688	920815.58	463318.90
374	2369.071	92.745	920810.83	463335.00
375	2379.413	82.104	920800.31	463345.47
376	2416.438	63.504	920782.15	463382.71
377	2473.039	53.537	920772.86	463439.43
378	2496.882	32.568	920752.18	463463.52
379	2520.397	27.339	920747.23	463487.09
380	2544.275	28.192	920748.37	463510.96
381	2568.440	36.495	920756.96	463535.02
382	2571.544	29.138	920749.64	463538.22
383	2586.607	27.608	920748.29	463553.30
384	2592.592	35.068	920755.82	463559.19
385	2595.309	32.536	920753.32	463561.94
386	2617.033	22.264	920743.30	463583.78
387	2662.197	24.690	920746.27	463628.91
388	2572.449	2.369	920722.88	463539.44
389	2568.025	-6.780	920713.68	463535.12
390	2570.860	-40.422	920680.07	463538.36
391	2568.313	-40.008	920680.46	463535.81
392	2552.712	-40.245	920680.03	463520.21
393	2549.601	-40.257	920679.98	463517.10
394	2552.627	-6.522	920713.75	463519.72
395	2548.606	2.516	920722.74	463515.60
396	2432.939	0.539	920719.39	463399.96
397	2428.556	-40.250	920678.55	463396.06
398	2412.146	-40.516	920678.09	463379.66
399	2415.380	-0.071	920718.57	463382.41
400	2361.949	-15.997	920702.01	463329.17
401	2357.774	-15.168	920702.79	463324.99
402	2354.159	-5.955	920711.96	463321.26
403	2349.503	-25.994	920691.87	463316.85
404	2351.320	-16.333	920701.55	463318.55
405	2344.800	-19.899	920697.90	463312.07
406	2342.141	-14.790	920702.98	463309.35
407	2347.295	-5.490	920712.34	463314.39
408	2341.958	-5.982	920711.79	463309.06

409	2343.231	-25.660	920692.12	463310.57
410	2336.978	-25.820	920691.89	463304.32
411	2328.732	-14.497	920703.11	463295.94
412	2336.543	9.656	920727.36	463303.46
413	2015.789	612.313	921326.15	462975.56
414	2275.998	358.896	921075.85	463238.76
415	2294.271	334.837	921052.01	463257.32
416	2300.351	339.509	921056.76	463263.35
222			920715.9	463123.71
500	2528.882	-445.507	920274.72	463501.21

(4)

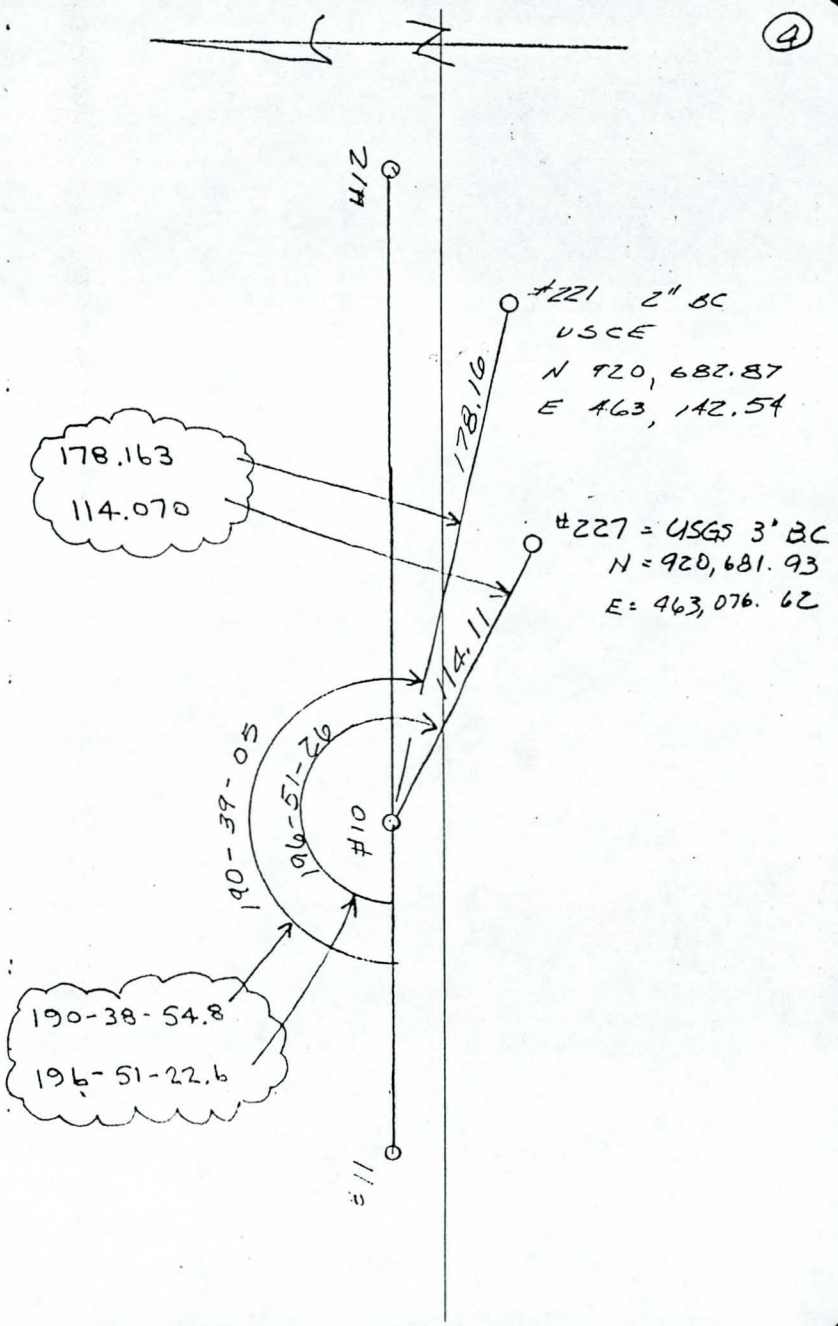

T.Y.L.I.
CALCULATIONS

MARYLAND AVENUE BRIDGE

+ OFFSET ARE TO THE LEFT
- OFFSET ARE TO THE RIGHT

POINT	STA	OFFSET	NORTH	EAST
100	1597.950	30.160	920745.18	462565.36
101	1603.043	26.497	920741.51	462570.45
102	1604.104	24.613	920739.63	462571.51
103	1652.785	26.432	920741.45	462620.19
104	1658.183	24.583	920739.60	462625.59
105	1658.638	26.894	920741.91	462626.05
106	1658.049	30.174	920745.19	462625.46
107	1658.799	40.017	920755.03	462626.21
108	1671.044	33.530	920748.55	462638.45
109	1664.118	26.685	920741.70	462631.53
110	1667.197	26.790	920741.81	462634.60
111	1713.743	19.200	920734.22	462681.15
112	1718.167	39.304	920754.32	462685.58
113	1735.493	40.570	920755.59	462702.90
114	1738.236	28.586	920743.60	462705.64
115	1738.899	19.121	920734.14	462706.31
116	1778.249	30.511	920745.53	462745.66
117	1777.546	20.535	920735.55	462744.95
118	1781.880	35.936	920750.95	462749.29
119	1809.861	31.677	920746.69	462777.27
120	1810.993	27.102	920742.12	462778.40
121	1811.108	21.040	920736.06	462778.52
122	1823.241	30.315	920745.33	462790.65
123	1876.388	22.927	920737.94	462843.80
124	1877.291	32.108	920747.12	462844.70
125	1889.368	39.703	920754.72	462856.78
126	1606.706	-30.826	920684.19	462574.11
127	1607.202	-24.483	920690.53	462574.61
128	1613.682	-20.462	920694.55	462581.09
129	1612.323	-30.051	920684.96	462579.73
130	1642.483	-30.083	920684.93	462609.89
131	1642.826	-20.463	920694.55	462610.23
132	1647.486	-24.430	920690.59	462614.89
133	1647.775	-30.700	920684.32	462615.18
134	1674.622	-30.671	920684.34	462642.03
135	1674.658	-24.458	920690.56	462642.07
136	1681.213	-20.423	920694.59	462648.62
137	1686.153	-13.090	920701.93	462653.56
138	1686.302	-26.314	920688.70	462653.71
139	1699.585	-29.906	920685.11	462666.99
140	1747.031	-33.671	920681.35	462714.44
141	1755.002	-32.160	920682.86	462722.41
142	1769.067	-29.896	920685.12	462736.48
143	1770.110	-30.311	920684.71	462737.52
144	1772.563	-24.381	920690.64	462739.97
145	1766.061	-20.323	920694.69	462733.47
146	1798.223	-20.340	920694.68	462765.63
147	1791.418	-24.361	920690.65	462758.83
148	1788.492	-30.529	920684.49	462755.90
149	1789.688	-29.990	920685.03	462757.10
150	1875.856	-26.590	920688.43	462843.26

RECEIVED
JUL 07 1989
TVLI PHOENIX

151	1960.920	-30.054	920684.96	462928.33
152	1966.541	-28.328	920686.69	462933.95
153	1967.377	-27.146	920687.87	462934.79
154	1964.518	-30.086	920684.93	462931.93
155	1969.686	-39.284	920675.73	462937.09
156	1972.742	-35.881	920679.14	462940.15
157	1973.620	-38.584	920676.43	462941.03
158	1987.846	-38.675	920676.34	462955.25
159	1997.618	-24.545	920690.47	462965.03
160	1999.802	-20.059	920694.96	462967.21
161	1964.828	23.319	920738.34	462932.24
162	1967.620	20.901	920735.92	462935.03
163	1973.234	20.262	920735.28	462940.64
164	1977.555	20.725	920735.74	462944.96
165	1988.255	20.135	920735.15	462955.66
166	1951.737	-9.859	920705.16	462919.14
167	1958.266	-2.972	920712.04	462925.67
168	1961.682	-11.511	920703.50	462929.09
169	1976.743	-4.614	920710.40	462944.15
170	1889.556	23.420	920738.44	462856.96
171	1948.802	34.897	920749.91	462916.21
172	1950.615	36.215	920751.23	462918.02
173	1950.505	23.381	920738.40	462917.91
174	1960.614	33.768	920748.78	462928.02
175	1971.571	36.747	920751.76	462938.98
176	1967.822	50.143	920765.16	462935.23
177	1967.587	36.213	920751.23	462935.00
178	1973.351	32.695	920747.71	462940.76
179	1974.775	26.767	920741.78	462942.18
180	1985.354	27.617	920742.63	462952.76
181	2002.037	42.071	920757.09	462969.44
182	2009.534	38.847	920753.86	462976.94
183	2007.722	41.955	920756.97	462975.13
184	2007.377	37.807	920752.82	462974.79
185	2005.008	41.519	920756.54	462972.42
186	2017.366	42.229	920757.24	462984.77
187	2020.788	34.525	920749.54	462988.20
188	2035.753	39.043	920754.06	463003.16
189	2020.187	64.495	920779.51	462987.59
190	2045.748	69.086	920784.10	463013.16
191	2048.645	71.671	920786.69	463016.05
192	2043.166	40.689	920755.70	463010.57
193	2034.355	23.244	920738.26	463001.76
194	2059.650	26.024	920741.04	463027.06
195	2061.159	22.941	920737.96	463028.57
196	2072.280	31.336	920746.35	463039.69
197	2073.065	30.198	920745.21	463040.47
198	2073.768	28.880	920743.90	463041.18
199	2073.181	28.624	920743.64	463040.59
200	2073.983	27.589	920742.60	463041.39
201	2074.412	26.049	920741.07	463041.82
202	2141.525	26.147	920741.16	463108.93
203	2139.642	27.686	920742.70	463107.05
204	2139.847	28.793	920743.81	463107.25
205	2138.191	31.427	920746.44	463105.60
206	2135.647	30.530	920745.55	463103.05

RECEIVED
JUL 07 1989
TULI PHOENIX

1.10

207	2135.844	28.974	920743.99	463103.25
208	2139.775	31.408	920746.42	463107.18
209	2161.260	26.111	920741.13	463128.67
210	2191.336	-25.745	920689.27	463158.74
211	2178.005	-2.289	920712.73	463145.41
212	2171.589	-25.813	920689.20	463139.00
213	2176.187	-34.330	920680.69	463143.59
214	2176.808	-32.110	920682.91	463144.22
215	2174.172	-30.834	920684.18	463141.58
216	2108.391	-30.793	920684.22	463075.80
217	2109.666	-34.618	920680.40	463077.07
218	2104.486	-25.949	920689.07	463071.89
219	2089.560	-25.936	920689.08	463056.97
220	2076.523	-3.426	920711.59	463043.93
221	2175.090	-32.930	920682.09	463142.50
222	2156.660	0.131	920715.15	463124.07
223	2108.661	-35.457	920679.56	463076.07
224	2112.057	-41.629	920673.39	463079.47
225	2107.449	-36.441	920678.58	463074.86
226	2110.200	-41.741	920673.28	463077.61
227	2109.207	-33.091	920681.93	463076.62
228	2120.485	-51.677	920663.34	463087.89
229	2117.252	-53.450	920661.57	463084.66
230	2076.877	-36.121	920678.90	463044.29
231	2057.053	-25.811	920689.20	463024.46
232	2036.153	-27.163	920687.85	463003.56
233	2025.438	-33.496	920681.52	462992.85
234	2032.694	-16.540	920698.48	463000.10
235	2047.761	-15.064	920699.95	463015.17
236	2045.249	-8.280	920706.74	463012.66
237	2029.664	-6.368	920708.65	462997.07
238	2009.995	-32.247	920682.77	462977.40
239	1998.722	-40.600	920674.42	462966.13
240	1995.670	-40.469	920674.55	462963.08
241	2037.571	-40.985	920674.03	463004.98
242	2025.696	-42.191	920672.83	462993.10
243	2049.085	-33.912	920681.10	463016.49
244	2065.704	-41.626	920673.39	463033.11
245	2059.902	-38.708	920676.31	463027.31
300	2100.925	-64.154	920650.86	463068.33
301	2096.696	-67.092	920647.92	463064.10
302	2086.836	-72.167	920642.85	463054.24
303	2182.813	-49.986	920665.03	463150.22
304	2187.165	-48.255	920666.76	463154.57
305	2201.594	-43.408	920671.61	463169.00
306	2218.534	-48.846	920666.17	463185.94
307	2211.697	-45.390	920669.63	463179.10
308	2213.863	-39.946	920675.07	463181.27
309	2217.309	-39.124	920675.89	463184.72
310	2236.445	-33.210	920681.81	463203.85
311	2231.937	-40.003	920675.01	463199.34
312	2220.494	-28.484	920686.53	463187.90
313	2207.258	-32.096	920682.92	463174.67
314	2203.061	-3.177	920711.84	463170.47
315	2230.107	-23.910	920691.11	463197.52

RECEIVED
JUL 07 1989
TYLI PHOENIX

316	2264.051	-1.940	920713.08	463231.46
317	2270.155	-12.624	920702.39	463237.56
318	2271.433	-39.291	920675.73	463238.84
319	2266.990	-39,945	920675.07	463234.40
320	2270.368	-40.610	920674.41	463237.78
321	2291.635	-40.022	920674.99	463259.04
322	2295.104	-39.983	920675.03	463262.51
323	2290.372	-24.001	920691.01	463257.78
324	2296.396	-7.761	920707.26	463263.80
325	2302.976	-2.446	920712.57	463270.38
326	2122.673	51.824	920766.84	463090.08
327	2128.631	54.299	920769.32	463096.04
328	2150.652	53.996	920769.01	463118.06
329	2168.953	24.377	920739.39	463136.36
330	2157.606	46.522	920761.54	463125.01
331	2123.371	101.368	920816.38	463090.78
332	2124.423	101.321	920816.34	463091.83
333	2149.321	71.725	920786.74	463116.73
334	2179.794	70.456	920785.47	463147.20
335	2187.371	43.626	920758.64	463154.78
336	2196.574	55.881	920770.90	463163.98
337	2204.199	43.685	920758.70	463171.61
338	2202.234	40.322	920755.34	463169.64
339	2225.529	48.799	920763.81	463192.94
340	2223.160	48.119	920763.14	463190.57
341	2226.500	67.010	920782.03	463193.91
342	2225.720	81.536	920796.55	463193.13
343	2248.921	74.767	920789.78	463216.33
344	2254.496	80.363	920795.38	463221.90
345	2247.564	86.110	920801.13	463214.97
346	2246.612	118.334	920833.35	463214.02
347	2260.296	125.163	920840.18	463227.70
348	2258.525	124.617	920839.63	463225.93
349	2278.978	27.270	920742.29	463246.39
350	2298.127	34.947	920749.96	463265.53
351	2297.110	42.486	920757.50	463264.52
352	2299.300	48.647	920763.66	463266.71
353	2303.369	54.821	920769.84	463270.78
354	2324.383	40.056	920755.07	463291.79
355	2344.856	44.976	920759.99	463312.26
356	2255.720	32.197	920747.21	463223.13
357	2349.940	42.758	920757.77	463317.35
358	2346.060	24.376	920739.39	463313.47
359	2350.415	25.879	920740.90	463317.82
360	2369.675	20.379	920735.40	463337.08
361	2391.409	20.568	920735.58	463358.82
362	2393.608	24.113	920739.13	463361.02
363	2369.791	24.314	920739.33	463337.20
364	2391.734	27.670	920742.69	463359.14
365	2409.578	30.832	920745.85	463376.99
366	2425.141	32.496	920747.51	463392.55
367	2442.086	35.403	920750.42	463409.49
368	2486.678	26.410	920741.43	463454.09
369	2299.333	96.143	920811.16	463266.74
370	2300.754	96.655	920811.67	463268.16
371	2337.544	103.014	920818.03	463304.95

RECEIVED
JUL 10 1989
TULLI PHOENIX

1.12

372	2338.880	103.488	920818.50	463306.29
373	2353.026	97.688	920812.70	463320.43
374	2369.071	92.745	920807.76	463336.48
375	2379.413	82.104	920797.12	463346.82
376	2416.438	63.504	920778.52	463383.85
377	2473.039	53.537	920768.55	463440.45
378	2496.882	32.568	920747.58	463464.29
379	2520.397	27.339	920742.36	463487.81
380	2544.275	28.192	920743.21	463511.68
381	2568.440	36.495	920751.51	463535.85
382	2571.544	29.138	920744.15	463538.95
383	2586.607	27.608	920742.62	463554.02
384	2592.592	35.068	920750.08	463560.00
385	2595.309	32.536	920747.55	463562.72
386	2617.033	22.264	920737.28	463584.44
387	2662.197	24.690	920739.71	463629.61
388	2572.449	2.369	920717.38	463539.86
389	2568.025	-6.780	920708.24	463535.43
390	2570.860	-40.422	920674.59	463538.27
391	2568.313	-40.008	920675.01	463535.72
392	2552.712	-40.245	920674.77	463520.12
393	2549.601	-40.257	920674.76	463517.01
394	2552.627	-6.522	920708.49	463520.03
395	2548.606	2.516	920717.53	463516.01
396	2432.939	0.539	920715.56	463400.35
397	2428.556	-40.250	920674.77	463395.96
398	2412.146	-40.516	920674.50	463379.55
399	2415.380	-0.071	920714.94	463382.79
400	2361.949	-15.997	920699.02	463329.36
401	2357.774	-15.168	920699.85	463325.18
402	2354.159	-5.955	920709.06	463321.57
403	2349.503	-25.994	920689.02	463316.91
404	2351.320	-16.333	920698.68	463318.73
405	2344.800	-19.899	920695.12	463312.21
406	2342.141	-14.790	920700.23	463309.55
407	2347.295	-5.490	920709.53	463314.70
408	2341.958	-5.982	920709.03	463309.37
409	2343.231	-25.660	920689.36	463310.64
410	2336.978	-25.820	920689.20	463304.39
411	2328.732	-14.497	920700.52	463296.14
412	2336.543	9.656	920724.67	463303.95
413	2015.789	612.313	921327.33	462983.20
414	2275.998	358.896	921073.91	463243.41
415	2294.271	334.837	921049.85	463261.68
416	2300.351	339.509	921054.53	463267.76
500	2528.882	-445.507	920269.51	463496.29

XINEOHA ITU
JUL 07 1989
RECEIVED

2.0 GEOMETRY

```
02 "BASELINE.PGL"
02
02 Rev.    0       10JUL89  Dan Shiosaka
02                          Verify baseline and stationing points
02
02 Rev.    1       03AUG89  Dan Shiosaka
02                          By direction from the FCDMC, the monument line
02                          survey performed by Jerry R. Jones and furnished
02                          by the FCDMC shall be used for geometric control.
02
02 Rev.    2       08AUG89  Dan Shiosaka
02                          On 07AUG89, via telephone conversation between
02                          FCDMC, Ed Raleigh, and TYLI, Mitch Smith, the
02                          survey information shown on the 30% Submittal
02                          should be used:
02                          i.e. disregard Rev. 1,
02                          revert back to Rev. 0.
02
08 010 012                                        / Control point coordinates
   10          920713.7051          462967.0653

   11          920682.4415          460341.0114

   12          920717.5735          463292.0023

08 017 023                                        / Station point coordinates
   17          920710.1338          462667.0866

   18          920711.3242          462767.0795

   19          920712.5146          462867.0724

   20          920713.7051          462967.0653

   21          920714.8955          463067.0583

   22          920716.0859          463167.0512

   23          920717.2764          463267.0441

13 010 011                                        / Backsight  16th Street
   10 TO    11 DIST=    2626.240  BR= S  89 19  4.5 W

13 010 012                                        / Frontsight 20th Street NB
   10 TO    12 DIST=     324.960  BR= N  89 19  4.5 E

13 011 012                                        / Check baseline bearing
   11 TO    12 DIST=    2951.200  BR= N  89 19  4.5 E

02
13 017 018                                        / Check station
   17 TO    18 DIST=     100.000  BR= N  89 19  4.5 E

13 018 019                                        / Check station
   18 TO    19 DIST=     100.000  BR= N  89 19  4.5 E

13 019 020                                        / Check station
   19 TO    20 DIST=     100.000  BR= N  89 19  4.5 E

13 020 021                                        / Check station
   20 TO    21 DIST=     100.000  BR= N  89 19  4.5 E

13 021 022                                        / Check station
   21 TO    22 DIST=     100.000  BR= N  89 19  4.5 E

13 022 023                                        / Check station
   22 TO    23 DIST=     100.000  BR= N  89 19  4.5 E

02
07 120                                            / Delete point
07 146                                            / Delete point
07 117 123                                        / Delete points
02
02                                                / Insert End Of File
04
```

```
02 "ACDC.PGL"
02
02 Rev.    0       10JUL89  Dan Shiosaka
02                          Create ACDC centerline (PGL)
02
02 Rev.    1       08AUG89  Dan Shiosaka
02                          Received transmittal 24JUL89 from FCDMC
02                          with new ACDC alignment south of Maryland.
02                          Fit curves at new PI 575, 585, 595, to PI 605.
02                          Further south is far beyond project scope.
02
02
05 545  922129.42   462148.78                          / PI 545

  POINT   545 BEING REDEFINED.
  OLD COORDINATES     922129.4200     462148.7800

   545         922129.4200         462148.7800

05 550  921732.49   462251.10                          / PI 550

  POINT   550 BEING REDEFINED.
  OLD COORDINATES     921732.4900     462251.1000

   550         921732.4900         462251.1000

05 555  921613.25   462420.81                          / PI 555

  POINT   555 BEING REDEFINED.
  OLD COORDINATES     921613.2500     462420.8100

   555         921613.2500         462420.8100

05 560  921049.73   463005.62                          / PI 560

  POINT   560 BEING REDEFINED.
  OLD COORDINATES     921049.7300     463005.6200

   560         921049.7300         463005.6200

02
05 575  920370.0583 463411.7167                        / PI 575          #1
   575         920370.0583         463411.7167

05 585  919933.00   463737.00                          / PI 585          #1
   585         919933.0000         463737.0000

05 595  919863.00   463937.00                          / PI 595          #1
   595         919863.0000         463937.0000

05 605  919668.00   464132.00                          / PI 605          #1
   605         919668.0000         464132.0000

02
02 05 570  920461.05   463357.35                        / PI 570
02 05 580  920284.19   463388.07                        / PI 580
02 05 590  919848.32   463707.64                        / PI 590
02 05 600  919786.80   463892.20                        / PI 600
02 05 620  918932.00   464741.00                        / PI 620
02
13 545 550                                             / Tan brg & length
  545 TO   550 DIST=     409.906  BR= S  14 27 17.7 E

13 550 555                                             / Tan brg & length
  550 TO   555 DIST=     207.412  BR= S  54 54 27.8 E

13 555 560                                             / Tan brg & length
  555 TO   560 DIST=     812.131  BR= S  46  3 43.7 E

02
13 560 575                                             / Tan brg & length  #1
  560 TO   575 DIST=     791.750  BR= S  30 51 28.3 E

13 575 585                                             / Tan brg & length  #1
  575 TO   585 DIST=     544.820  BR= S  36 39 31.3 E

13 585 595                                             / Tan brg & length  #1
  585 TO   595 DIST=     211.896  BR= S  70 42 35.8 E

13 595 605                                             / Tan brg & length  #1
```

```
595 TO   605 DIST=    275.772  BR= S  45  0   .0 E

02
02 13 560 570                                          / Tan brg & length
02 13 570 580                                          / Tan brg & length
02 13 580 590                                          / Tan brg & length
02 13 590 600                                          / Tan brg & length
02 13 600 620                                          / Tan brg & length
02
50   1 545 550 555 551 552 553 350.    0   84807.60  0 / Curve 1 @ PI 550

CURVE NUMBER     1

RADIUS  =     350.000  CHORD   =      242.011
TANG    =     128.958  ARC     =      247.112
DC      =      16.370  EXT     =       23.002
DELTA   =  40 27 10.1  BK TANG =      280.948

PC (  551) STA =     850 + 88.548
PT (  553) STA =     853 + 35.660
PI (  550) STA =     852 + 17.506 BK
               =     852 +  6.702 AHD


POINT   551 BEING REDEFINED.
OLD COORDINATES     921857.3658     462218.9097


POINT   553 BEING REDEFINED.
OLD COORDINATES     921658.3527     462356.6170


POINT   552 BEING REDEFINED.
OLD COORDINATES     921944.7322     462557.8302

 551         921857.3658         462218.9097

 553         921658.3527         462356.6170

 552         921944.7322         462557.8302

50   2 553 555 560 556 557 558 350.    0      -1     0 / Curve 2 @ PI 555

CURVE NUMBER     2

RADIUS  =     350.000  CHORD   =       53.981
TANG    =      27.071  ARC     =       54.035
DC      =      16.370  EXT     =        1.045
DELTA   =   8 50 44.1  BK TANG =       51.383

PC (  556) STA =     853 + 87.043
PT (  558) STA =     854 + 41.077
PI (  555) STA =     854 + 14.114 BK
               =     854 + 14.006 AHD


POINT   556 BEING REDEFINED.
OLD COORDINATES     921628.8130     462398.6597


POINT   558 BEING REDEFINED.
OLD COORDINATES     921594.4660     462440.3037


POINT   557 BEING REDEFINED.
OLD COORDINATES     921342.4335     462197.4465

 556         921628.8130         462398.6597

 558         921594.4660         462440.3037

 557         921342.4335         462197.4465

50   3 558 560 570 561 562 563 605.    0      -1     0 / Curve 3 @ PI 560

CURVE NUMBER     3

RADIUS  =     605.000  CHORD   =      160.075
TANG    =      80.747  ARC     =      160.546
DC      =       9.470  EXT     =        5.365
```

```
DELTA   =  15 12 15.4  BK TANG =      704.313

PC (  561) STA =     861 + 45.390
PT (  563) STA =     863 +  5.936
PI (  560) STA =     862 + 26.138 BK
               =     862 + 25.189 AHD


POINT   561 BEING REDEFINED.
OLD COORDINATES     921105.7587     462947.4745


POINT   563 BEING REDEFINED.
OLD COORDINATES     920980.4132     463047.0361


POINT   562 BEING REDEFINED.
OLD COORDINATES     920670.1026     462527.6785

 561         921105.7587         462947.4745

 563         920980.4132         463047.0361

 562         920670.1026         462527.6785

02
50   4 563 575 585 576 577 578 1350    0      -1     0 / Curve 4 @ PI 575   #1

CURVE NUMBER     4

RADIUS  =    1350.000  CHORD   =      136.620
TANG    =      68.398  ARC     =      136.679
DC      =       4.244  EXT     =        1.732
DELTA   =   5 48  2.9  BK TANG =      642.605

PC (  576) STA =     869 + 48.541
PT (  578) STA =     870 + 85.220
PI (  575) STA =     870 + 16.939 BK
               =     870 + 16.822 AHD

 576         920428.7738         463376.6348

 578         920315.1892         463452.5533

 577         921121.2026         464535.5319

50   5 578 585 595 586 587 588 250.    0      -1     0 / Curve 5 @ PI 585   #1

CURVE NUMBER     5

RADIUS  =     250.000  CHORD   =      146.400
TANG    =      76.555  ARC     =      148.577
DC      =      22.918  EXT     =       11.459
DELTA   =  34  3  4.5  BK TANG =      399.868

PC (  586) STA =     874 + 85.087
PT (  588) STA =     876 + 33.664
PI (  585) STA =     875 + 61.642 BK
               =     875 + 57.109 AHD

 586         919994.4129         463691.2931

 588         919907.7100         463809.2571

 587         920143.6746         463891.8447

50   6 588 595 605 596 597 598 400.    0      -1     0 / Curve 6 @ PI 595   #1

CURVE NUMBER     6

RADIUS  =     400.000  CHORD   =      177.987
TANG    =      91.281  ARC     =      179.489
DC      =      14.324  EXT     =       10.283
DELTA   =  25 42 35.8  BK TANG =       44.060

PC (  596) STA =     876 + 77.724
PT (  598) STA =     878 + 57.213
PI (  595) STA =     877 + 69.005 BK
               =     877 + 65.932 AHD
```

2.05

```
   596          919893.1549          463850.8432

   598          919798.4542          464001.5458

   597          919515.6115          463718.7030

02
02 50   4 563 570 580 571 572 573 400.    0      -1     0 / Curve 4 @ PI 570
02 50   5 573 580 590 581 582 583 300.    0      -1     0 / Curve 5 @ PI 580
02 50   6 583 590 600 591 592 593 349.5   0      -1     0 / Curve 6 @ PI 590
02 50   7 593 600 620 601 602 603 350.    0      -1     0 / Curve 7 @ PI 600
02
30 999 560 570 011 012                                   / Intersection
   999          920716.5342          463204.7009

02
30 998 560 575 011 012                                   / Verify intersection
   998          920716.5342          463204.7010

02                                                       / changed negligibly.
02
13  20 999                                               / Maryland Station
   20 TO   999 DIST=     237.652  BR= N  89 19  4.5 E

51   3 999                                               / ACDC     Station

  POINT     C/L STATION     OFFSET

   999     866 + 13.329      -.000
04
```

22 + 37.65

EXTEND DEMOLITION PLAN
APPROX 500'

PT STA 870 + 85.23
(471.90', CLOSE ENOUGH)

```
02 "BENCH.MKS"
02
02 Rev.    0       12JUL89  Dan Shiosaka
02                          Establish stations and offsets of benchmarks,
02                          brass caps (B.C.) on south sides of ABT 1 & ABT 2.
02
05 227  920681.93   463076.62                    / USGS (R-365) B.C. (point 227)
   227          920681.9300         463076.6200

05 221  920682.87   463142.54                    / USACOE       B.C. (point 221)
   221          920682.8700         463142.5400

02
25 777 227 020 023                               / Maryland station and offset
   777          920715.0047         463076.2262

  FROM PT.    20 TO PT.   777   DIST=      109.1686

  FROM PT.   227 TO PT.   777   DIST=       33.0770

25 771 221 020 023                               / Maryland station and offset
   771          920715.7895         463142.1481

  FROM PT.    20 TO PT.   771   DIST=      175.0952

  FROM PT.   221 TO PT.   771   DIST=       32.9218

02
51 003 777 771                                   / ACDC     station and offset

  POINT     C/L STATION     OFFSET

   777     865 + 48.746    111.073
   771     865 + 81.884     54.080
51 004 777 771                                   / ACDC     station and offset

  POINT     C/L STATION     OFFSET

   777     865 + 48.746    111.073
   771     865 + 81.884     54.080
04
```

```
02 "BORING.LOG"
02
02 Rev.    0       14JUL89  Dan Shiosaka
02                          Establish stations and offsets of deep borings.
02
05 001  920708.00   463163.00                    / Boring No. 1
    1          920708.0000         463163.0000

05 002  920708.00   463268.00                    / Boring No. 2
    2          920708.0000         463268.0000

02
25 501 001 020 023                               / Maryland station and offset
   501         920716.0366         463162.9043

  FROM PT.    20 TO PT.   501   DIST=      195.8529

  FROM PT.     1 TO PT.   501   DIST=        8.0371

25 502 002 020 023                               / Maryland station and offset
   502         920717.2864         463267.8894

  FROM PT.    20 TO PT.   502   DIST=      300.8454

  FROM PT.     2 TO PT.   502   DIST=        9.2871

02
51 003 001 002                                   / ACDC     station and offset

  POINT     C/L STATION     OFFSET

    1      865 + 99.266     40.175
    2      866 + 53.122    -49.961
51 004 001 002                                   / ACDC     station and offset

  POINT     C/L STATION     OFFSET

    1      865 + 99.266     40.175
    2      866 + 53.122    -49.961
04
```

```
02 "20THST.PGL"
02
02 Rev.    0        19JUL89  Dan Shiosaka
02                           Establish PCs and PTs of 20th Street north of
02                           Maryland Avenue
02
22 0010 0012 0354   40.06   89 10 30            / First  PC
   354          920757.6197          463290.9487

22 0010 0012 0013  277.00   74 21 42.5          / Sirst  PT
    13          920983.4120          463214.1636

22 0010 0012 0014  540.54   64 33 12.5          / Second PC
    14          921202.8745          463053.9552

22 0010 0012 0015  733.30   66 29 44            / Second PT
    15          921386.5019          462991.5630

02
13 0012 0354                                     /        Tangent
   12 TO   354 DIST=      40.060  BR= N   1 30 25.5 W

13 0354 0013                                     / First  Chord
  354 TO    13 DIST=     238.491  BR= N  18 46 53.8 W

13 0013 0014                                     /        Tangent
   13 TO    14 DIST=     271.718  BR= N  36  7 46.4 W

13 0014 0015                                     / Second Chord
   14 TO    15 DIST=     193.938  BR= N  18 45 59.5 W

04
```

17 16 28.3

17 20 52.6 ← 34° 41 45.2

TAN = N 36 07 46.4 W

CHORD = N 18 45 59.5 W

ANGLE = 17 21 46.9'

(2) TAN = N 01 24 12.6 W

DELTA = 34° 43 33.8

R ≈ 324.935

(1) DELTA = 34 41 45.2

CHORD = 238.491

R ≈ 399.920

```
01
01
02 19JUL89 Dan Shiosaka
02
02         Command were executed interactively on the screen to get
02         the location of the following points related to 20th St.
02         north of Maryland Ave.
02
08 900 906
   900          920882.5091          463287.8231

   901          920870.5158          463252.5561

   902          920747.6138          462891.1537

   903          921284.9340          462994.0515

   904          921294.6882          463022.7591

   905          921394.4606          463316.4008

   906          920717.5729          463291.9510

13 012 906                                / Error at monument line
   12 TO   906 DIST=        .051  BR= S  89 19  4.8 W

13 906 900                                / POB to PI1
  906 TO   900 DIST=     164.988  BR= N   1 26  1.2 W

13 900 903                                / PI1 to PI2
  900 TO   903 DIST=     498.244  BR= N  36  7 46.4 W

13 903 015                                / PI2 to POE
  903 TO    15 DIST=     101.598  BR= N   1 24 12.6 W

13 902 354                                / Radial at PC1
  902 TO   354 DIST=     399.920  BR= N  88 33 58.8 E

13 902 013                                / Radial at PT1
  902 TO    13 DIST=     399.920  BR= N  53 52 13.6 E

13 905 014                                / Radial at PC2
  905 TO    14 DIST=     324.935  BR= S  53 52 13.6 W

13 905 015                                / Radial at PT2
  905 TO    15 DIST=     324.935  BR= S  88 35 47.4 W

02
50 001 906 900 903 354 902 013 399.920 0 2000 0  / Check fit curve 001

  CURVE NUMBER     1

  RADIUS  =     399.920  CHORD   =      238.491
  TANG    =     124.928  ARC     =      242.175
  DC      =      14.327  EXT     =       19.059
  DELTA   = 34 41 45.2  BK TANG =       40.059

  PC (  354) STA =      20 + 40.059
  PT (   13) STA =      22 + 82.234
  PI (  900) STA =      21 + 64.988 BK
                 =      21 + 57.306 AHD


  POINT   354 BEING REDEFINED.
  OLD COORDINATES     920757.6197     463290.9487


  POINT    13 BEING REDEFINED.
  OLD COORDINATES     920983.4120     463214.1636


  POINT   902 BEING REDEFINED.
  OLD COORDINATES     920747.6138     462891.1537

   354         920757.6197          463290.9487

    13         920983.4120          463214.1636
```

5/8" OK

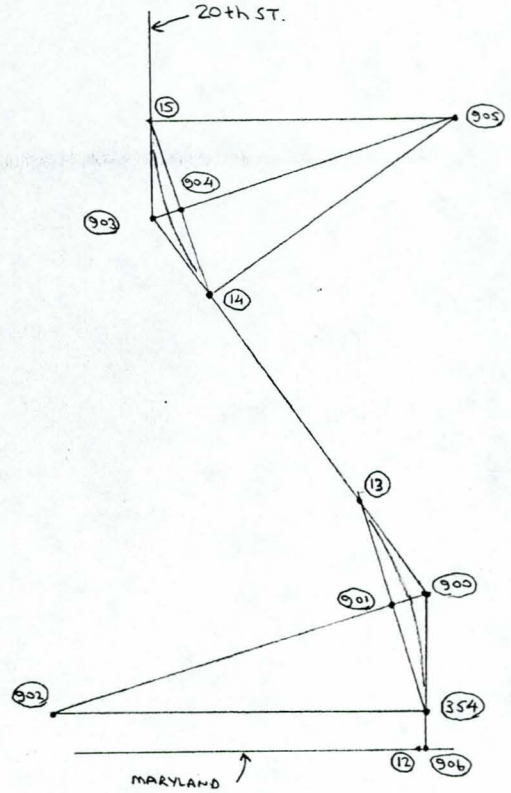

```
  902          920747.6139          462891.1539

50 002 013 903 015 014 905 015 324.935 0   -1 0  / Check fit curve 002

  CURVE NUMBER     2

  RADIUS  =     324.935  CHORD   =      193.937
  TANG    =     101.598  ARC     =      196.938
  DC      =      17.633  EXT     =       15.513
  DELTA   =  34 43 33.8  BK TANG =      271.718

  PC (   14) STA =      25 + 53.952
  PT (   15) STA =      27 + 50.890
  PI (  903) STA =      26 + 55.550 BK
                 =      26 + 49.291 AHD


  POINT    14 BEING REDEFINED.
  OLD COORDINATES     921202.8745     463053.9552


  POINT    15 BEING REDEFINED.
  OLD COORDINATES     921386.5019     462991.5630


  POINT   905 BEING REDEFINED.
  OLD COORDINATES     921394.4606     463316.4008

   14          921202.8746          463053.9552

   15          921386.5018          462991.5630

  905          921394.4606          463316.4006

02
13 012 354                            / Check survey radial  ✓
   12 TO   354 DIST=      40.060  BR= N   1 30 25.5 W

11 010 012 354                        / Check survey angle   ✓
PTS.    10    12   354    ANG=  89  10  30.0

13 012 013                            / Check survey radial  ✓
   12 TO    13 DIST=     277.000  BR= N  16 19 13.0 W

11 010 012 013                        / Check survey angle   ✓
PTS.    10    12    13    ANG=  74  21  42.5

13 012 014                            / Check survey radial  ✓
   12 TO    14 DIST=     540.540  BR= N  26  7 43.0 W

11 010 012 014                        / Check survey angle   ✓
PTS.    10    12    14    ANG=  64  33  12.5

13 012 015                            / Check survey radial  ✓
   12 TO    15 DIST=     733.300  BR= N  24 11 11.5 W

11 010 012 015                        / Check survey angle   ✓
PTS.    10    12    15    ANG=  66  29  44.0

11 012 354 900                        / Non-colinearity of as-built
PTS.    12   354   900    ANG= 180   4  24.3                    00-04-24.3   OK

11 012 354 900                        /     Colinearity correction
PTS.   ~~12~~  354   900    ANG= 180   4  24.3                    TYPO ERROR

04


11 906 354 900                        / Colinearity correction   ✓
PTS.   906   354   900    ANG= 180   0    .0

04
```

EXISTING PROFILE ALONG ℄ MARYLAND

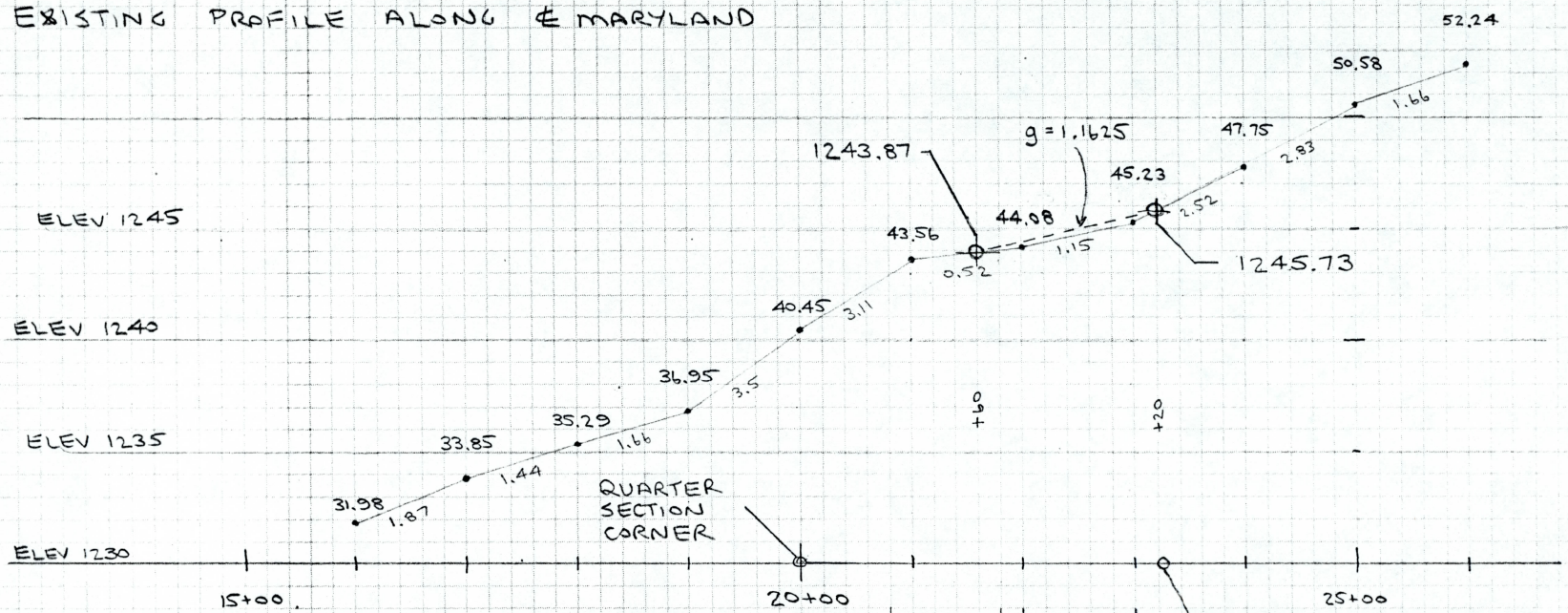

AZ CANAL (+/-)

ACDC (+/-)

B.C.
20th ST NORTH OF MARYLAND

STATION ELEVATIONS ABOVE LINE
INCREMENTAL GRADES (%) BELOW LINE

SEE NEXT SHEET

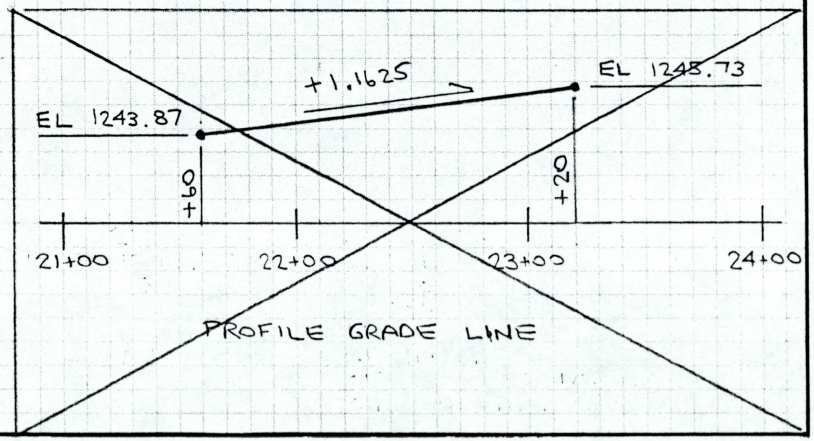

T.Y. LIN INTERNATIONAL
STRUCTURAL ENGINEERING
1817 N. 7th St., Suite 270, Phoenix, AZ 85006

PROJECT: FCDMC 88-39
ITEM: MARYLAND AVE BRIDGE
DESIGN: PROFILE
DATE: 07 JUL 89 DRS

SHEET: 2.11
OF
REVISION:

T.Y. LIN INTERNATIONAL STRUCTURAL ENGINEERING 1817 N. 7th St., Suite 270, Phoenix, AZ 85006	PROJECT: FCDMC 88-39 ITEM: MARYLAND AVE BRIDGE DESIGN: PROFILE DATE: 20JUL89 DRS	SHEET: 2.12 OF REVISION:

SUBSEQUENT TO THE ORIGINAL SURVEY, AN ADDITIONAL "DATA POINT" WAS REQUESTED AT THE END OF THE EASTERN APPROACH SLAB OF THE ARIZONA CANAL BRIDGE

STA = 21 + 77 (+/-)
EL = 1244.14

USE THE ABOVE DATA AS BEGIN PROJECT AND
USE END PROJECT = STA 23+20

BY INTERPOLATION

STA 23+00 EL = 1245.23
STA 23+20 EL = 1245.73
STA 24+00 EL = 1247.75

FOR PROJECT USE GRADE FROM BEGIN PROJECT (+/-) TO END PROJECT (+/-) :

$$g = \frac{1245.73 - 1244.14}{2320 - 2177}$$

$$g = +1.112\%$$

SEE NEXT SHEET

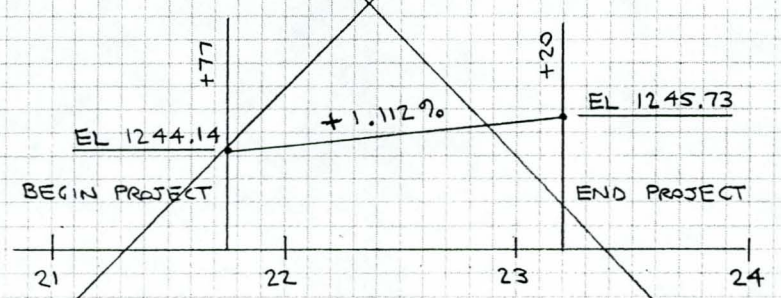

CONTRACTOR TO MATCH T.O. AC PAVEMENT WITH EXISTING ROADWAY ELEVATIONS AT PROJECT LIMITS

Project	FCDMC 88-39
Item	Maryland Ave. Bridge
Design	Profile
Date	22-Sep-89

	Station	Elevation
Begin profile	21+77.00	1244.270
End profile	23+08.00	1245.293

Grade 0.781%

Station	Elevation	Station	Elevation	Station	Elevation	Station	Elevation
		22+01.00	1244.457	22+51.00	1244.848	23+01.00	1245.238
		22+02.00	1244.465	22+52.00	1244.856	23+02.00	1245.246
		22+03.00	1244.473	22+53.00	1244.863	23+03.00	1245.254
		22+04.00	1244.481	22+54.00	1244.871	23+04.00	1245.262
		22+05.00	1244.489	22+55.00	1244.879	23+05.00	1245.270
		22+06.00	1244.496	22+56.00	1244.887	23+06.00	1245.277
		22+07.00	1244.504	22+57.00	1244.895	23+07.00	1245.285
		22+08.00	1244.512	22+58.00	1244.903	23+08.00	1245.293
		22+09.00	1244.520	22+59.00	1244.910	23+09.00	1245.301
		22+10.00	1244.528	22+60.00	1244.918	23+10.00	1245.309
		22+11.00	1244.536	22+61.00	1244.926	23+11.00	1245.316
		22+12.00	1244.543	22+62.00	1244.934	23+12.00	1245.324
		22+13.00	1244.551	22+63.00	1244.942	23+13.00	1245.332
		22+14.00	1244.559	22+64.00	1244.949	23+14.00	1245.340
		22+15.00	1244.567	22+65.00	1244.957	23+15.00	1245.348
		22+16.00	1244.575	22+66.00	1244.965	23+16.00	1245.355
		22+17.00	1244.582	22+67.00	1244.973	23+17.00	1245.363
		22+18.00	1244.590	22+68.00	1244.981	23+18.00	1245.371
		22+19.00	1244.598	22+69.00	1244.988	23+19.00	1245.379
		22+20.00	1244.606	22+70.00	1244.996	23+20.00	1245.387
		22+21.00	1244.614	22+71.00	1245.004		
		22+22.00	1244.621	22+72.00	1245.012		
		22+23.00	1244.629	22+73.00	1245.020		
		22+24.00	1244.637	22+74.00	1245.027		
		22+25.00	1244.645	22+75.00	1245.035		
		22+26.00	1244.653	22+76.00	1245.043		
21+77.00	1244.270	22+27.00	1244.660	22+77.00	1245.051		
21+78.00	1244.278	22+28.00	1244.668	22+78.00	1245.059		
21+79.00	1244.286	22+29.00	1244.676	22+79.00	1245.067		
21+80.00	1244.293	22+30.00	1244.684	22+80.00	1245.074		
21+81.00	1244.301	22+31.00	1244.692	22+81.00	1245.082		
21+82.00	1244.309	22+32.00	1244.700	22+82.00	1245.090		
21+83.00	1244.317	22+33.00	1244.707	22+83.00	1245.098		
21+84.00	1244.325	22+34.00	1244.715	22+84.00	1245.106		
21+85.00	1244.332	22+35.00	1244.723	22+85.00	1245.113		
21+86.00	1244.340	22+36.00	1244.731	22+86.00	1245.121		
21+87.00	1244.348	22+37.00	1244.739	22+87.00	1245.129		
21+88.00	1244.356	22+38.00	1244.746	22+88.00	1245.137		
21+89.00	1244.364	22+39.00	1244.754	22+89.00	1245.145		
21+90.00	1244.372	22+40.00	1244.762	22+90.00	1245.152		
21+91.00	1244.379	22+41.00	1244.770	22+91.00	1245.160		
21+92.00	1244.387	22+42.00	1244.778	22+92.00	1245.168		
21+93.00	1244.395	22+43.00	1244.785	22+93.00	1245.176		
21+94.00	1244.403	22+44.00	1244.793	22+94.00	1245.184		
21+95.00	1244.411	22+45.00	1244.801	22+95.00	1245.191		
21+96.00	1244.418	22+46.00	1244.809	22+96.00	1245.199		
21+97.00	1244.426	22+47.00	1244.817	22+97.00	1245.207		
21+98.00	1244.434	22+48.00	1244.824	22+98.00	1245.215		
21+99.00	1244.442	22+49.00	1244.832	22+99.00	1245.223		
22+00.00	1244.450	22+50.00	1244.840	23+00.00	1245.231		

3.0 CRITERIA & LOADS

T.Y. LIN INTERNATIONAL
STRUCTURAL ENGINEERING
1817 N. 7th St., Suite 270, Phoenix, AZ 85006

PROJECT:	FCDMC 88-39
ITEM:	MARYLAND AVE BRIDGE
DESIGN:	BOX GIRDERS
DATE:	02 JUN 89 DRS 9-18-89 FP

SHEET: 3.01 OF ____ REVISION:

LOADING : CONSIDER 48" WIDE BOX

	INTERIOR GIRDERS	EXTERIOR GIRDERS
DEAD LOADS		
BOX GIRDER SELF WEIGHT	0.86 KLF	0.86 KLF
DRIVING SURFACE 2" @ 150 PCF	0.10 KLF	N/A.
SIDEWALK 10" ± @ 150 PCF	N/A	0.50 KLF
PIPES (ASSUME 1 - 20"ϕ SCH 40 H_2O FULL)	N/A	0.24 KLF
STEEL = 122.9 PLF WATER = 120.4 PLF		
PED BARRIER & FENCE (EST.)	N/A	0.40 KLF
CONCRETE = 0.30 KLF EST. STEEL = 0.10 KLF EST.		
INTERMEDIATE DIAPHRAGM	2^K	2^K
LIVE LOADS ON ROADWAY	HS 20-44	N/A
LIVE LOADS ON SIDEWALK (60 PSF)	N/A	0.24 KLF
(REDUCTION IN LOAD INTENSITY N/A)		
OVERLOAD PROVISIONS	NONE	NONE
TRAFFIC LANES	USE 1 WHEEL LINE	N/A
IMPACT $I = 50(L+125)$	USE 30% MAX	N/A
$L = 46' \pm$ (53' ± @ 30° SKEW)	CONSERVATIVE	
LONGITUDINAL FORCES	5% of LL @ 6'-0" ABOVE DECK	
CENTRIFUGAL FORCES	N/A	N/A

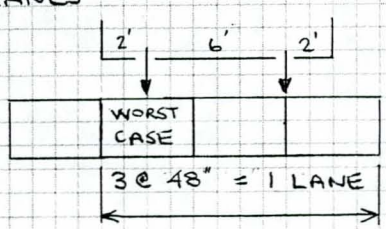

LOADING : CONSIDER 48" WIDE BOX (CONT'D)

- WIND LOADS CONSIDERED FOR TRANSVERSE DESIGN (TO ABUTMENTS)
- OVERTURNING FORCES FROM WIND LOADING NEGLIGIBLE
- THERMAL FORCES EVALUATED WITH ABUTMENT DESIGN (INTEGRAL ABUTMENTS)
- UPLIFT LOADS NOT APPLICABLE
- STREAM CURRENT, FLOATING ICE, DRIFT, BUOYANCY NOT APPLICABLE
- EARTH PRESSURES CONSIDERED AT ABUTMENT DESIGN
- EARTH QUAKE FORCES CONSIDERED AT ABUTMENT DESIGN

4.0 BOX GIRDERS

BOX GIRDER DESIGN

SECTION DEPTH:

ELEVATION OF ROADWAY IN VICINITY OF BRIDGE

NEAR ABT 1 = 1244 — AMC MAP #19 19 NOV 87

NEAR ABT 2 = 1245

ELEVATIONS OF ACDC IN VICINITY OF BRIDGE

STATION 866 + 13.33 — USACE PLATE 9

INVERT AT WALLS = 1216.12

INVERT AT ℄ CHANNEL = 1215.72

B = WIDTH = 40'

H = HEIGHT = 24.5'

S = SLOPE = +0.0003

TOP OF WALLS = 1240.62

ASSUME DRIVING SURFACE OF 2"

ASSUME FUTURE WEARING SURFACE 2" (FOR LOADING ONLY)

ASSUME 26 ft @ 0.02'/ft CROSS SLOPE = 0.52'

TOP OF BOX ELEV = 1244 (MIN) − 2" − 0.52' (CROSS SLOPE)

= 1243.31 ←

BOT OF BOX ELEV = 1240.62 ←

MAXIMUM BOX SECTION = 2.69' = 32" ±

TRY 48" W x 31" D BOX GIRDERS

BRIDGE WIDTH:

SCALED ROADWAY WIDTH = 1.25" x 41.5 SCALE = 52' — AMC AERIAL PHOTO

SIDEWALKS = 2@ 8' = 16'

BARRIERS = 2@ 1' ± = 2

1'-0" ± CANT + 17 @ 4'-0" + 1'-0" ± CANT = 70'

BOX GIRDER DESIGN

48" X 31" BOX GIRDER

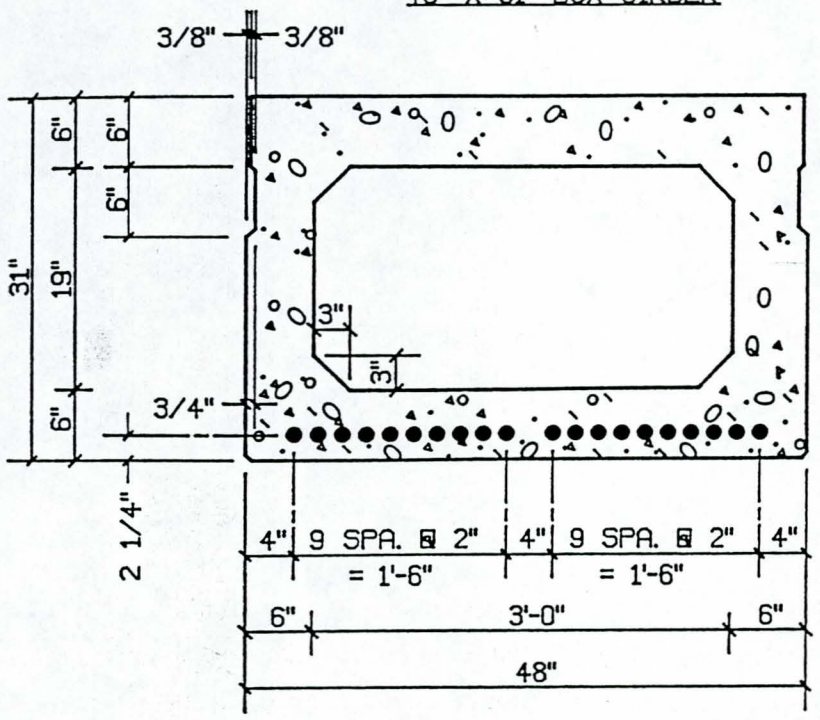

A (IN²)	I (IN⁴)	YT (IN)	YB (IN)	ST (IN³)	SB (IN³)
817.2	99161	15.57	15.43	6368.3	6427.0

CONCRETE DIMENSIONS AND PROPERTIES

(PRESTRESS DESIGN / LAYOUT TO FOLLOW)

FOR SELF WEIGHT, USE "GROSS AREA"

A = 48 × 31 − 36 × 19 + 2 × 3 × 3 = 822 □ IN.

SELF WT = 822 / 144 × 0.150 = 0.86 KLF

FOR ONE INTERMEDIATE DIAPHRAGM, ASSUME THICKNESS OF 36"

A = 36 × 19 − 2 × 3 × 3 = 666 □ IN.

SELF WT = 666 / 144 × 3 × 0.150 = 2 K

BOX GIRDER DESIGN

DESIGN SPAN LENGTH $\approx$ 45/cos 31 = 52.5'

ϕ = 1.0 FOR FLEXURE 9.14
ϕ = 0.9 FOR SHEAR

— f_c' = 5000
f_{ci}' = 3500

INITIAL $\begin{cases} 0.6 f_{ci}' = 2100 = f_c \\ 7.5\sqrt{f_{ci}'} = 444 = f_t \end{cases}$ 9.15.2

FINAL $\begin{cases} 0.4 f_c' = 2000 = f_c \\ 6\sqrt{f_c'} = 424 = f_t \end{cases}$

— f_s' = 270 KSI $0.70 f_s' = 189000 = f_s$ 9.15.1

$0.75 f_s' = 202500 = f_s$ JACKING

ESTIMATED TOTAL LOSSES = 45000 9.16.2

— NORMAL REINFORCEMENT
ASTM A 615 GR 40 FOR #4, 5, 6
GR 60 FOR #7 AND LARGER

f_s = 20000 FOR GR 40
f_s = 24000 FOR GR 60

BOX GIRDER DESIGN

SUMMARY OF MOMENTS AND SHEARS FOR SPAN LENGTH OF 52.5 ft

PER 48" WIDE BOX	INTERIOR GIRDERS		EXTERIOR GIRDERS	
	V	M	V	M
BOX GIRDER SELF WEIGHT	22.6	296.3	22.6	296.3
DRIVING SURFACE	2.6	34.5	–	–
SIDEWALK	–	–	13.1	172.3
PIPES	–	–	6.3	82.7
PED BARRIER & FENCE	–	–	10.5	137.8
INTERMEDIATE DIAPHRAGM	1.0	26.3	1.0	26.3
LIVE LOAD ROADWAY	29.7	341 ±	–	–
SIDEWALK	–	–	6.3	82.7
IMPACT	6.7	76.5	–	–

MAXIMUM PERMISSIBLE PRESTRESS (EFFECTIVE FORCE AT RELEASE) BASED UPON ALLOWABLE (TOP) TENSION

$$-P_o\left(\frac{1}{A} - \frac{e}{S}\right) = f_t$$

$$-P_o\left(\frac{1}{817.2} - \frac{15.43-2}{6368.3}\right) = 444$$

$P_o \leq 501.6$ K MAXIMUM PERMISSIBLE INITIAL FORCE

STRESSES, IN TERMS OF FORCE, P

$$f_t = P\left(\frac{1}{A} + \frac{e}{S_T}\right) = P\left(\frac{1}{817.2} - \frac{15.43-2}{6368.3}\right) = \frac{P}{1129.70}$$

$$f_b = P\left(\frac{1}{A} - \frac{e}{S_B}\right) = P\left(\frac{1}{817.2} + \frac{15.43-2}{6427.0}\right) = \frac{P}{301.81}$$

T.Y. LIN INTERNATIONAL STRUCTURAL ENGINEERING 1817 N. 7th St., Suite 270, Phoenix, AZ 85006	PROJECT: FCDMC 88-39 ITEM: MARYLAND AVE BRIDGE DESIGN: Box GIRDERS DATE: 05JUN89 DRS 9-18-89 FP	SHEET: 4.05 OF REVISION:

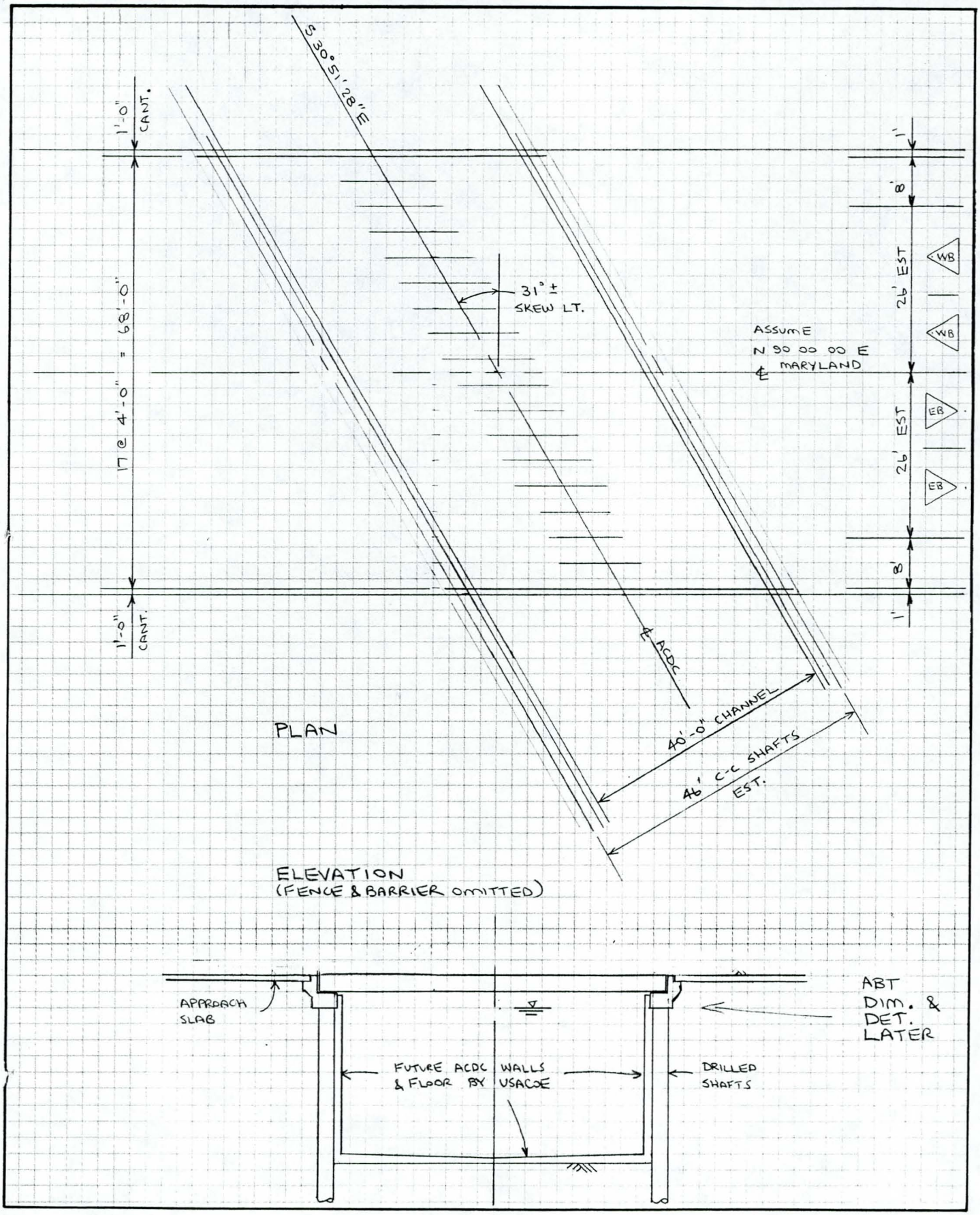

T.Y. LIN INTERNATIONAL
STRUCTURAL ENGINEERING
1817 N. 7th St., Suite 270, Phoenix, AZ 85006

PROJECT:	FCDMC 88-39
ITEM:	MARYLAND AVE BRIDGE
DESIGN:	BOX GIRDERS
DATE:	05 JUN 89 DRS 9-18-89 FP

SHEET: 4.06
OF
REVISION:

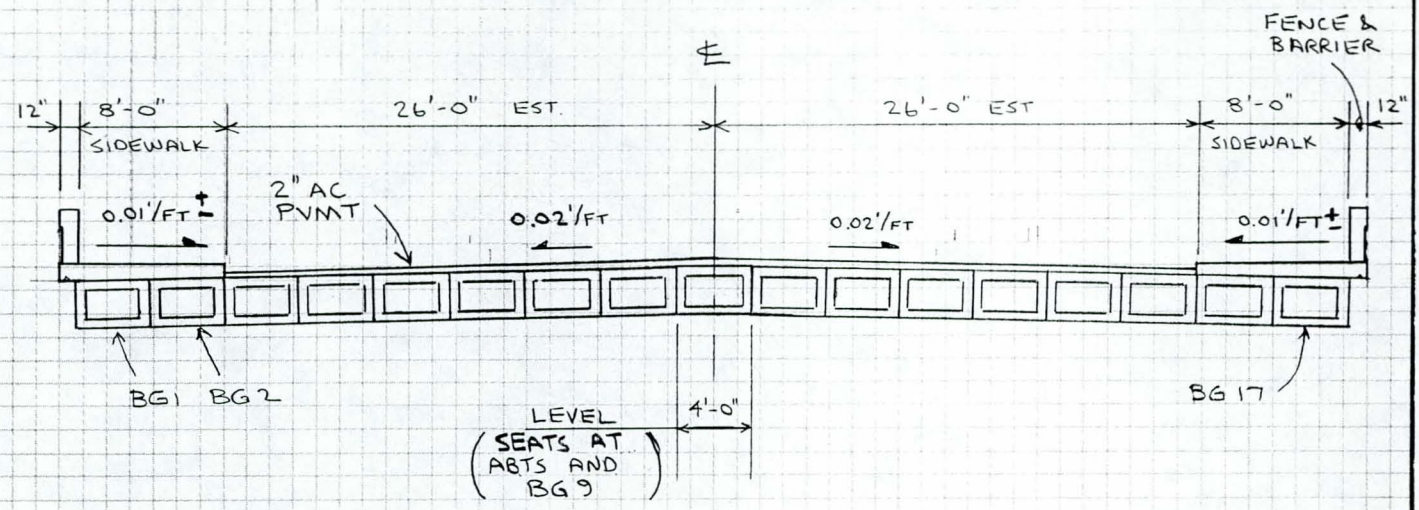

SECTION

Project: FCDMC 88-39
Item: Maryland Avenue Bridge
Design: Box Girders
Date: 14-Jun-89 Dan Shiosaka 9-18-89 FP

Box Girder Design

Area = 817.20 in^2 S (top) = 6368.30 in^3 S (bot) = 6427.00 in^3

Shears and moments (per box girder) for span length 52.50 feet

Loading Description	Loading w (klf) or P (k)	Interior Girders V (k)	Interior Girders M (ft-k)	Exterior Girders V (k)	Exterior Girders M (ft-k)
Box girder self weight	0.86	22.48	295.00	22.48	295.00
Driving surface	0.10	2.63	34.45		
Sidewalk	0.50			13.13	172.27
Piping and supports	0.24			6.39	83.82
Pedestrian barrier and fence	0.40			10.50	137.81
Intermediate diaphragm	2.00 k	1.00	26.25	1.00	26.25
Total D.L.		***26.18***	***355.71***	***53.49***	***715.16***
Live load (roadway)	HS 20-44	29.68	340.73		
Impact		8.90	102.22		
Live load (sidewalk)	0.24			6.30	82.69
L.L. & Impact		***38.58***	***442.95***	***6.30***	***82.69***
Future Wear Surface	0.10	2.63	34.45		
(Future) D.L.		***2.63***	***34.45***	***0.00***	***0.00***

Number of 0.5" diameter strands	16	Eccentricity (inches)	-13.18
Steel Area (square inches)	2.448		
Stress at transfer	189.00 ksi		
Estimated losses	45.00 ksi		
Initial Prestress	***463 k***	***-508.17***	***-508.17***
Final Prestress	***353 k***	***-387.18***	***-387.18***

Load Combinations (Stress Check)

Initial	Top	-279	ok	-956	ok
DL + P0	Bottom	-851	ok	-180	ok
Final	Top	-1272	ok	-1205	ok
DL + Pf + LL + I	Bottom	481	ok	335	ok

Allowable Stresses

		Tension	Compression
Initial	(psi)	444	-2100
Final	(psi)	424	-2000

CAMBER CALCULATIONS

PROVIDE CAMBER TO OFFSET DEFLECTION DUE TO DEAD LOAD AND PRESTRESS

LARGEST DL IS ON EXTERIOR GIRDERS

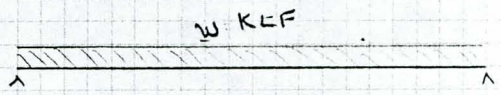

w = 2 KLF EXTERIOR
w = 1 KLF INTERIOR

PRESTRESS EQUIVALENT LOADING

M = 508 FT-K AT RELEASE
= 387 FT-K AT FINAL

$$\Delta_{DL} = \frac{5(w)(52.5\ FT)^4\ 1728}{384(4031\ K/IN^2)(99161\ IN^4)} = 0.43w \quad (INCH)$$

$$\Delta_{PS} = \frac{M\ell^2}{8EI} = \frac{(M\ FT\text{-}K)(52.5\ FT)^2\ 1728}{8(4031\ K/IN^2)(99161\ IN^4)} = \frac{M}{671} \quad (INCH)$$

ESTIMATED CAMBERS

	EXTERIOR *	INTERIOR	WEIGHTED AVG
INITIAL	0.10" ↓	0.33" ↑	0.28" ↑
FINAL	0.28" ↓	0.15" ↑	0.05" ↑

EXTERIOR GIRDERS <u>CAN</u> <u>NOT</u> EXPERIENCE "DIFFERENT" DEFLECTIONS THAN THE INTERIOR DUE TO THROUGH BOLTS

i.e. SIDEWALK D.L. AND TRAFFIC L.L. ARE DISTRIBUTED AMONG ADJACENT BOX GIRDERS.

BOX GIRDER DESIGN

"MILD STEEL"

DECK SLAB (SPAN ≈ 3.5') TRANSVERSE REINF

$DL = 0.5(0.150) = 0.075$ K/FT

$M_{DL} = (0.075)(3.5)^2/8 = 0.115$ FT-K PER FOOT

$M_{LL} = \left(\frac{S+2}{32}\right) P_{20}$ 3.24

$= \left(\frac{3.5+2}{32}\right) 16^K$

$= 2.75$ FT-K PER FOOT

$I = 30\%$ MAX

$M_{TOTAL} = 0.115 + 1.30(2.75)$

$= 3.69$ FT-K PER FOOT

$d = 3\frac{1}{2}''$

$A_s = \frac{3.69}{1.76(3.5)} = 0.60$ IN²/FT

USE 3 #4 PER FOOT
(#4 @ 6" BELOW LONGITUDINALS
#4 @ 12" MAX ABOVE LONGITUDINALS)

DECK SLAB LONGITUDINAL REINF
PROVIDE THE EQUIVALENT TO TEMPERATURE REINF
OR DISTRIBUTION REINF, WHICHEVER IS GREATER

TEMPERATURE

$\frac{1}{8}$ SQ IN × 4 = 0.500 IN²

BOX GIRDER DESIGN

"MILD STEEL"

DISTRIBUTION REINF

$$\% = \frac{220}{\sqrt{S}} \leq 67\%$$

$$0.67\,(0.60\ \text{IN}^2/\text{FT})(4\ \text{FT}) = 1.60\ \text{IN}^2$$

USE # 4 @ 6" (8 TOTAL)
DECK SLAB LONGITUDINAL

SOFFIT SLAB LONGITUDINAL REINF
MINIMUM STEEL 9.18

$$\phi M_n \geq 1.2\ M_{CR}$$

MODULUS OF RUPTURE $= 7.5\sqrt{f_c'} = 530$ PSI

$$1.2\ M_{CR} = 1.2\,(530)(6427\ \text{IN}^3)/12000 = 341\ \text{FT-K}$$

$$\phi M_n = \phi\left[A_s^*\, f_{su}^*\, d\left(1 - 0.6\,\frac{p^*\, f_{su}^*}{f_c'}\right)\right] \qquad 9.13$$

$$p^* = A_s^*/bd = 2.448/48'' \times 28.75'' = 0.00177$$

$$f_{su}^* = f_s'\,(1 - 0.5\,p^*\, f_s'/f_c')$$
$$= 270\,(1 - 0.5 \times 0.00177 \times 270/5)$$
$$= 257\ \text{KSI}$$

$$\therefore\quad \phi M_n = 1.0\left[2.448\,(257)\,\frac{28.75}{12}\left(1 - 0.6\,\frac{0.00177 \times 257}{5}\right)\right]$$

$$\phi M_n = 1425\ \text{FT-K} \gg 341\ \text{FT-K} \quad \text{OK}$$

BOX GIRDER DESIGN

SHEAR REINF , $\phi = 1.0$

TOTAL GIRDER REACTION $V_u = 26.10^K + 2.63^K + 38.58^K$
$= 67.31$ K

DUE TO DEAD LOAD, FUTURE DEAD LOAD, LIVE LOAD & IMPACT

CONCRETE SHEAR STRENGTH V_c = LESSER OF V_{ci} V_{cw}

$V_{ci} = 1.7\sqrt{f_c'}\, b'd$
$= 1.7\sqrt{5000}\,(12")(28.75") / 1000$
$= 41$ K ← GOVERNS

$V_{cw} = (3.5\sqrt{f_c'} + 0.3 f_{pc})\, b'd + V_p$
$= (3.5\sqrt{5000} + 0.3\,(353000/817.20))(12")(28.75") + 0$
$= 130$ K

STEEL SHEAR STRENGTH REQUIRED

V_s REQD $= 67^K - 41^K$
$= 26^K$

A_v MIN $= \dfrac{50\, b'\, s}{f_{sy}}$

$= \dfrac{50 \times 12 \times 12"}{24000}$

$= 0.30$ SQ IN PER FOOT

$V_s = \dfrac{A_v f_{sy} d}{s}$

$A_v = \dfrac{V_s s}{f_{sy} d} = \dfrac{26000 \times 12}{24000 \times 28.75} = 0.45$ SQ IN PER FOOT

2 LEGS # 4 @ 9"
0.53 > 0.45 SQ. IN.

BOX GIRDER DESIGN

SHEAR REINF

SINCE THE "CAP" PORTIONS OF THE TOP STIRRUP SERVES AS TOP DECK REINF, USE 12" MAX SPACING FROM L/4 TO 3L/4 WHERE SHEAR REINF REQUIREMENTS DIMINISH TO Av MIN.

BOX GIRDER DESIGN ℄ LENGTH = 53'-2½"

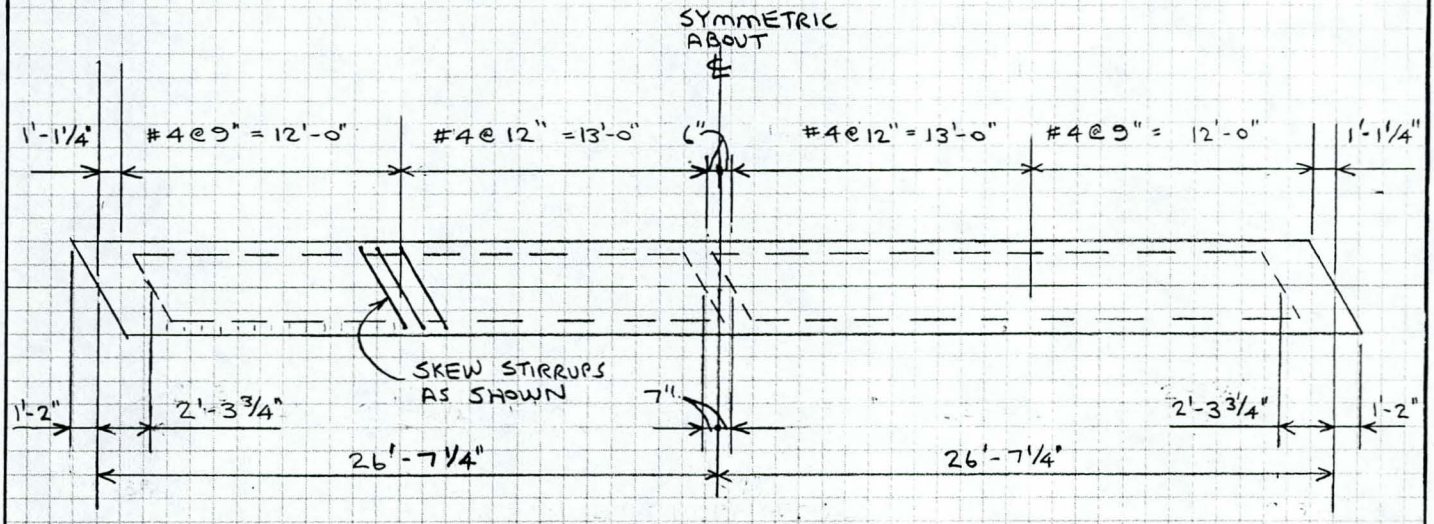

SKEW = 30° 10' 33" TYP DIAPHRAGMS AND STIRRUPS
STIRRUP SPACING SHOWN ABOVE PLAN
BOX GIRDER AND DIAPHRAGM DIMENSIONS SHOWN BELOW PLAN
ALL DIMENSIONS MEASURED ALONG ℄ BOX GIRDERS

T.Y. LIN INTERNATIONAL STRUCTURAL ENGINEERING 1817 N. 7th St., Suite 270, Phoenix, AZ 85006	PROJECT: FCDMC 88-39 ITEM: MARYLAND AVE BRIDGE DESIGN: BOX GIRDERS DATE: 09 AUG 89 DRS 9-18-89 FP	SHEET: 4.13 OF REVISION:

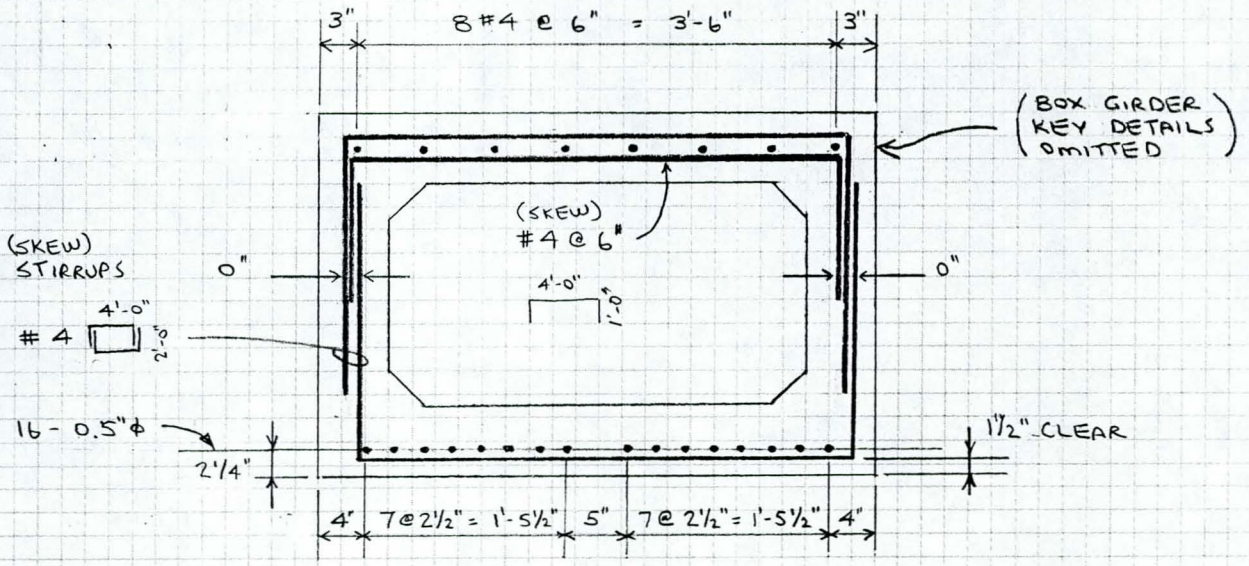

TYPICAL SECTION

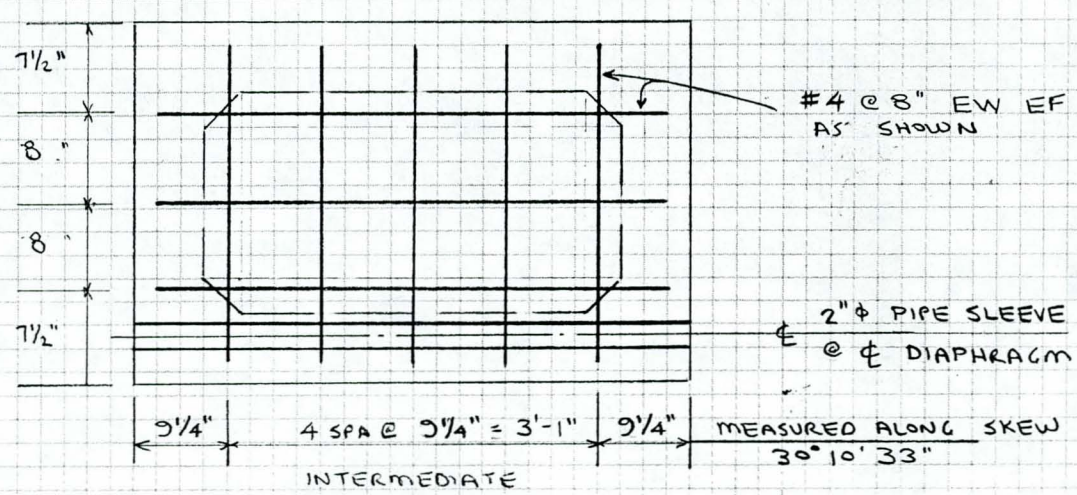

INTERMEDIATE DIAPHRAGM SECTION

(EXCEPT THOSE WITH INTERNAL UTILITIES)

T.Y. LIN INTERNATIONAL STRUCTURAL ENGINEERING 1817 N. 7th St., Suite 270, Phoenix, AZ 85006	PROJECT: FCDMC 88-39 ITEM: MARYLAND AVE BRIDGE DESIGN: MISC. DETAILS DATE: 10AUG 89 DRS 9-18-89 FP	SHEET: 4.14 OF REVISION:

SIDEWALK & PARAPET DETAILS

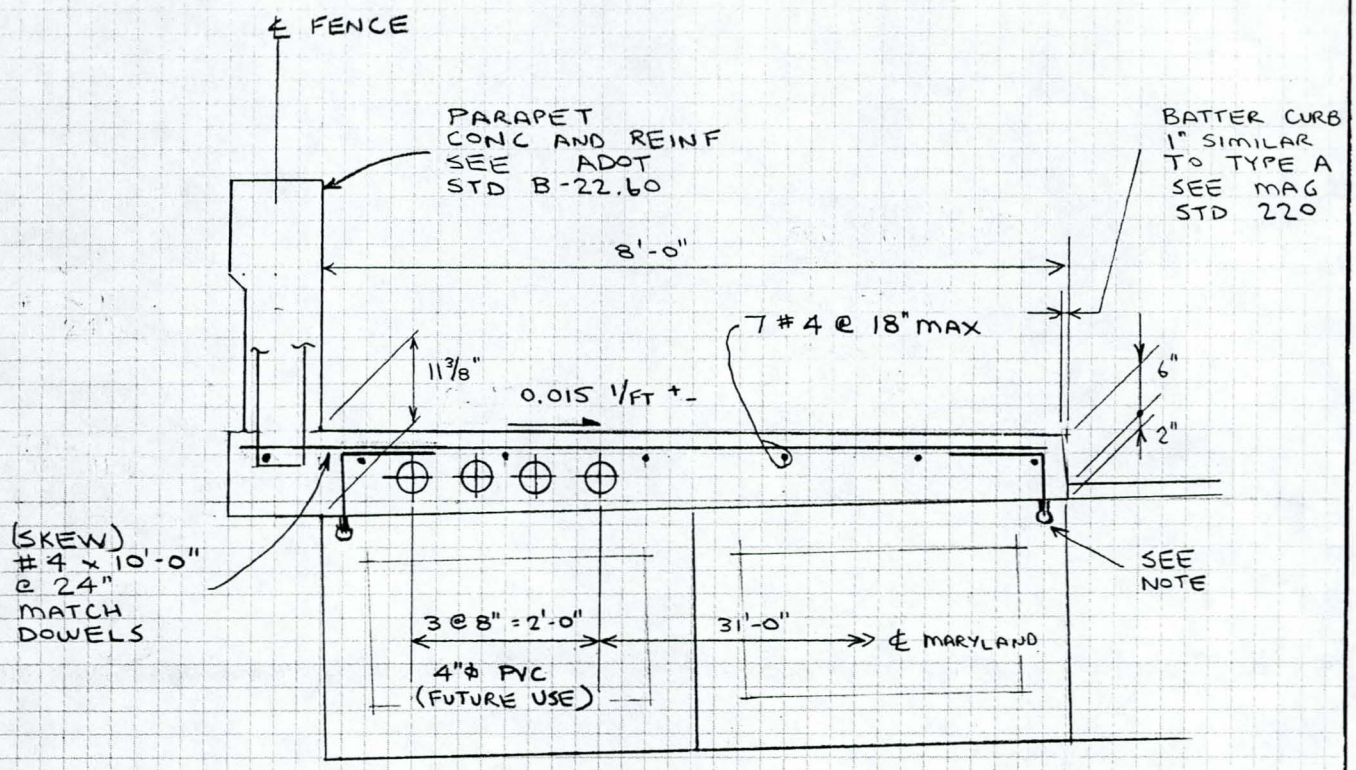

BG-01 BG-02

BG-17 OPP BG-16 OPP

NOTE: SUPPLIER'S OPTION SIDEWALK ANCHORS
#4 THREADED LOOP FERRULE INSERTS @ 24" OC OR
#4 DOWELS (18" EMBEDMENT, 18" PROJECTION) @ 24" OC

T.Y. LIN INTERNATIONAL STRUCTURAL ENGINEERING 1817 N. 7th St., Suite 270, Phoenix, AZ 85006	PROJECT: FCDMC 88-39 ITEM: MARYLAND AVENUE BRIDGE DESIGN: UTILITIES DATE: 29 AUG 89 DRS 9-18-89 FP	SHEET: 4.15 OF REVISION:

UTILITIES (INTERNAL)

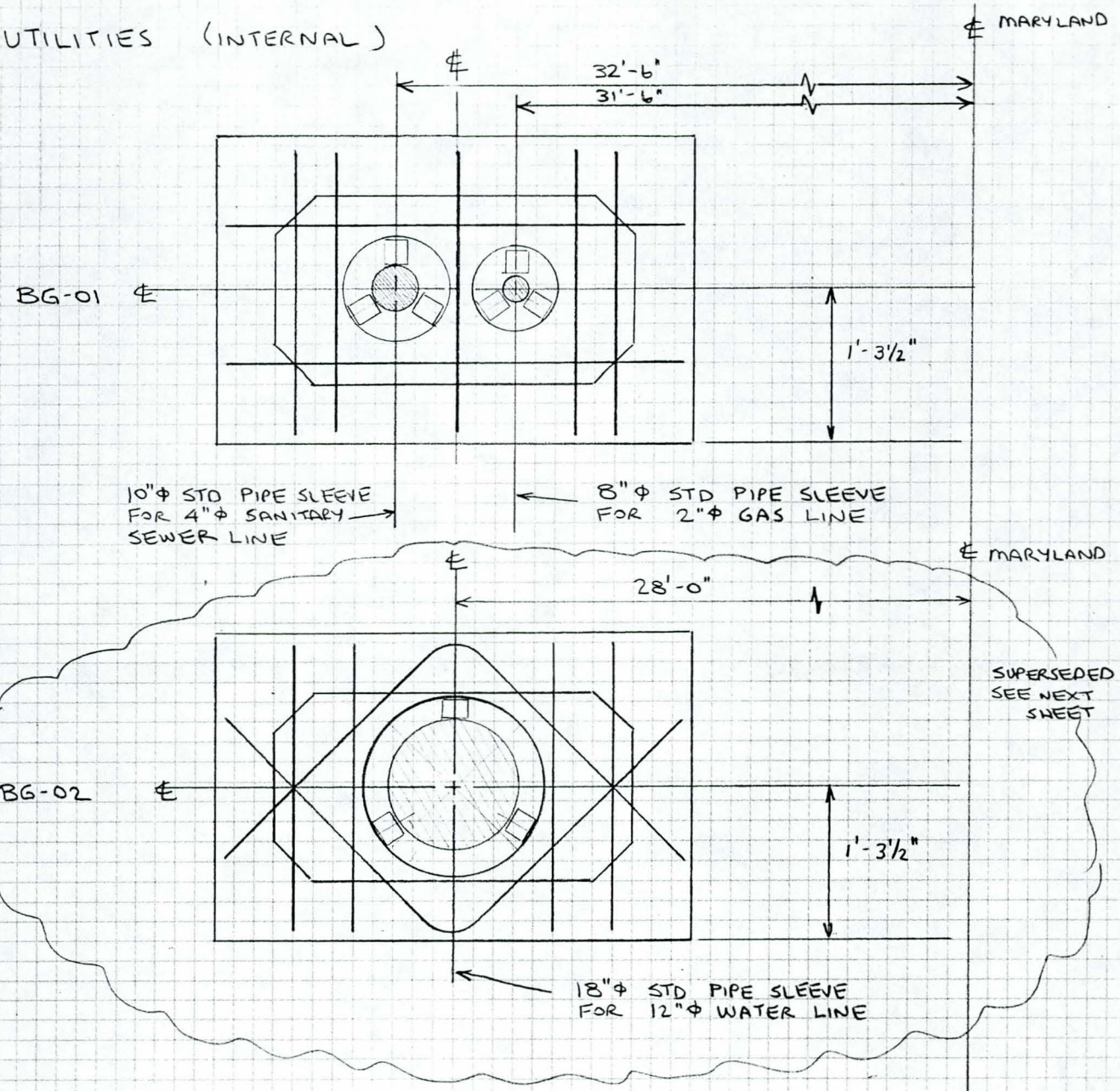

GAP 10"Φ = 2¾"
GAP 8"Φ = 2¾"
GAP 18"Φ = 2¼"

USE 4x4 CUT TO 2" ⊄ REDWOOD SKIDS

USE REFERENCE TO BRW DETAIL

T.Y. LIN INTERNATIONAL
STRUCTURAL ENGINEERING
1817 N. 7th St., Suite 270, Phoenix, AZ 85006

PROJECT:	FCDMC 88-39
ITEM:	Maryland Ave Bridge
DESIGN:	Utilities
DATE:	09-20-89 FP 20SEP89 DRS

SHEET: 4.16
OF
REVISION:

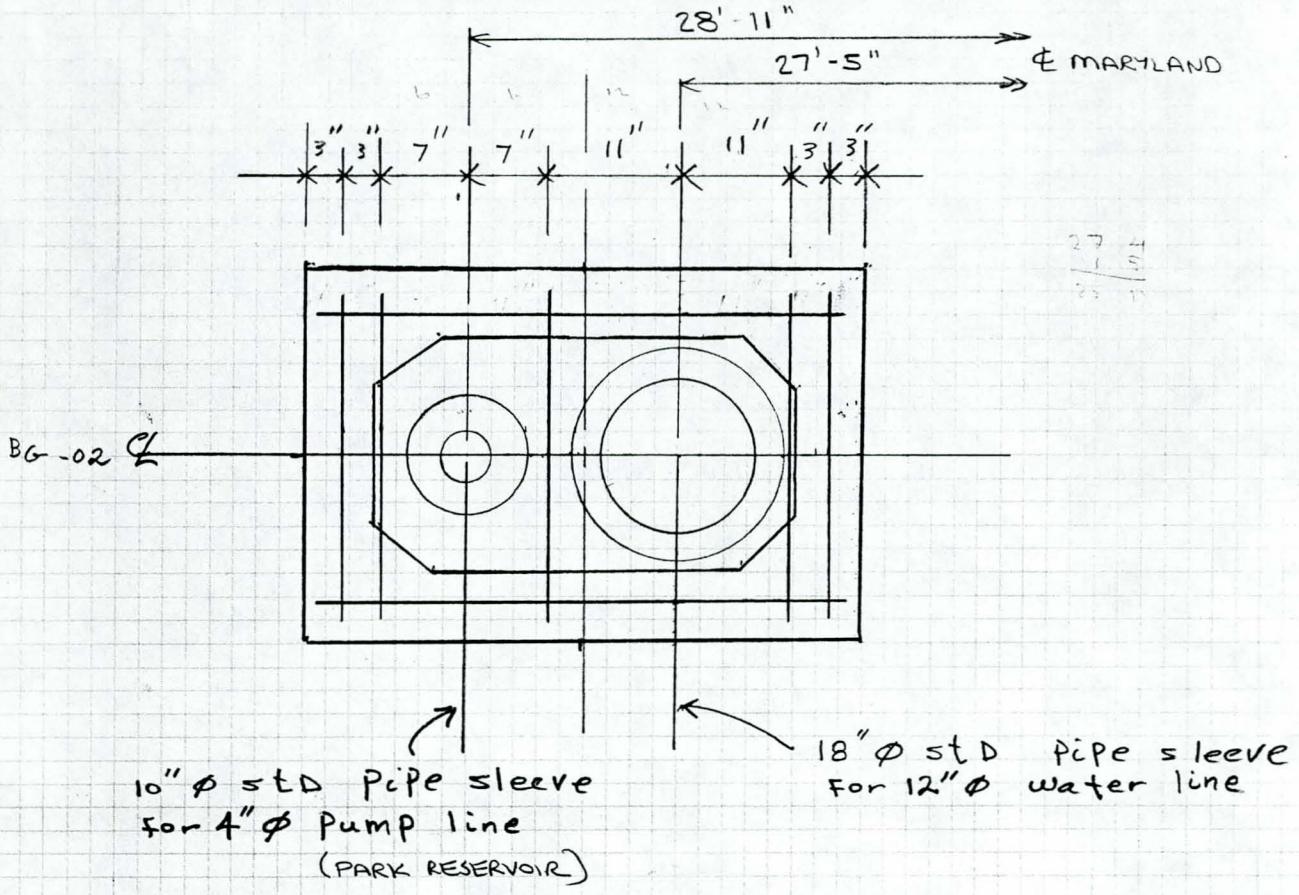

BG-02

4.17
(REF)

UTILITIES
ORDER
BY BRW

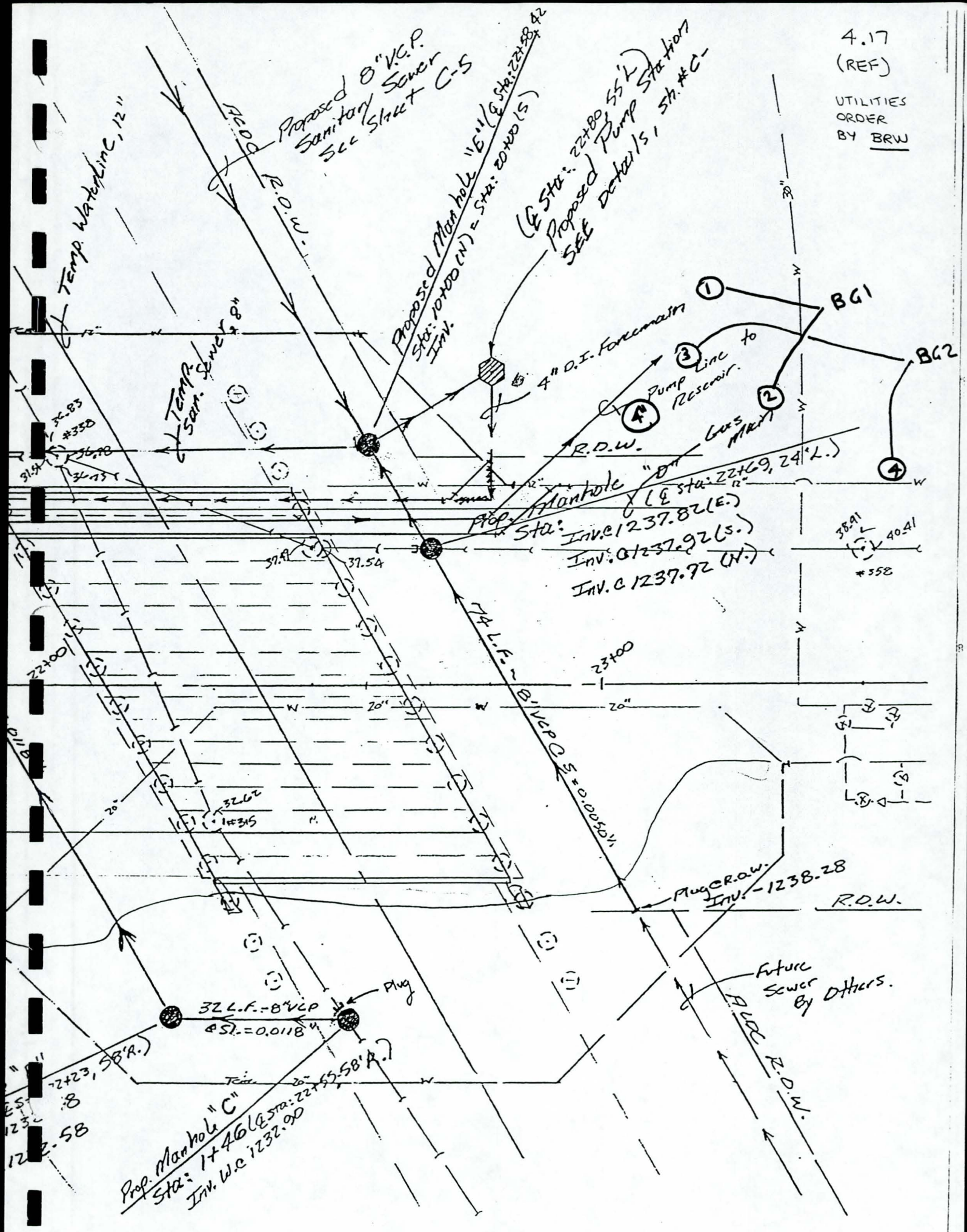

5.0 ABUTMENTS

UTILITIES (EXTERNAL) SUPPORTED AT ABTS.

CHECK FLEXURAL STRENGTH OF UNSUPPORTED 20"Φ SCH 40 WATER PIPE SAY SPAN = 54'

D.L. STEEL = 123 PLF
D.L. WATER = 120 PLF

$M = (0.123 + 0.120)(54')^2/8 = 89$ ft-K

$f_b = \dfrac{89 \times 12}{170 \text{ IN}^3} = 6.3$ KSI VERY SMALL

USE STEEL PIPE SPANNING FROM ABT 1 TO ABT 2 WITH WELDED JOINTS

WALL TH. = 0.593"

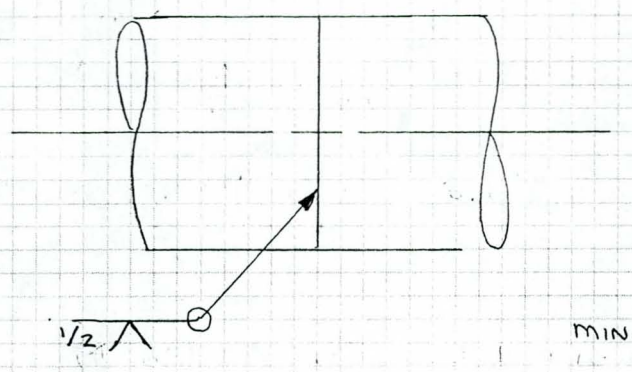

MINIMUM WELD REQ'D

DEFLECTION $\Delta \approx \dfrac{5(0.243 \text{ K/FT})(54 \text{ FT})^4 \; 1728}{384(29000 \text{ K/IN}^2)(1704 \text{ IN}^4)} = 0.94"$

$\Delta \approx L/\underline{\underline{689}}$ VERY SMALL, SAY OK

T.Y. LIN INTERNATIONAL STRUCTURAL ENGINEERING 1817 N. 7th St., Suite 270, Phoenix, AZ 85006	PROJECT: FCDMC ITEM: MARYLAND AVE BRIDGE DESIGN: FIBER OPTIC CABLE ALT 1 DATE: 06 NOV 89 DRS chk KS 11/89	SHEET: 5.02 OF REVISION:

REF DWG A$-93HK (A7-0883)

OFFSET OF CABLE VARIES FROM 31' LEFT TO 27' LEFT OF MONUMENT LINE IN THE VICINITY OF THE BRIDGE.

LOCATIONS OF ADJACENT DRILLED SHAFTS

36 cos (30.1758°) = 31.1215
− 1.5
29.62 TO INSIDE FACE OF LAST 36" D.S.

28 cos (30.1758°) = 24.21
+ 1.5
25.71 TO OUTSIDE FACE OF SECOND LAST D.S.

AVAILABLE "WINDOW" = 3.91 FEET

USE MIDPOINT OFFSET = 27.66' = 27'-8"

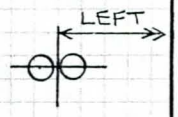

ELEVATION OF CABLE VARIES FROM EL 1243 TO 1240 IN THE VICINITY OF THE BRIDGE.
TOP OF WALL ELEV OF ACDC = 1240.62

ABUTMENT ELEVATIONS

	ABT 1	ABT 2
SEAT TOP OF CONC	1241.08	1241.47
BOTTOM OF FTG	1238.00	1238.50

HIGHEST ℄ ELEVATION

1241.08
− 0.17 COVER
− 0.10 REBAR
− 0.19 PIPE RADIUS

1240.62 ℄ CABLE IN 4" PIPE (4½" OD)

i.e. LOWER HALF OF PIPE MUST BE BELOW TOP OF ACDC WALLS

T.Y. LIN INTERNATIONAL STRUCTURAL ENGINEERING 1817 N. 7th St., Suite 270, Phoenix, AZ 85006	PROJECT: FCDMC ITEM: MARYLAND AVE BRIDGE DESIGN: FIBER OPTIC CABLE ALT 2 DATE: 06 NOV 89 DRS chks 11/89	SHEET: 5.03 OF REVISION:

REF DWG A$-931HK (A7-0883)

IN LIEU OF SUSPENDING CABLE BELOW BG-02, CHECK A LOCATION ADJACENT TO BG-01 (NORTH SIDE)

LOCATIONS OF ADJACENT DRILLED SHAFTS

44 cos (30.1758) = 38.04'
−2.00
36.04' TO INSIDE FACE OF FIRST 48" D.S.

36 cos (30.1758) = 31.12
+1.50
32.62' TO OUTSIDE FACE OF LAST 36" D.S.

AVAILABLE "WINDOW" = 3.42'

USE OFFSET = 34'-6" (MID THICKNESS OF CURTAIN WALL)

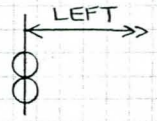

ABUTMENT ELEVATIONS

	ABT 1	ABT 2
TOP OF CURTAIN WALL	1243.44	1243.83
BOT OF CURTAIN WALL	1240.92	1241.32

USE ℄ ELEV 1242.00

FOR ALT 1 USE THREADED INSERTS IN PRECAST BG-02

FOR ALT 2 USE THREADED INSERTS IN CAST-IN-PLACE OVERHANG OF SIDEWALK

T.Y. LIN INTERNATIONAL STRUCTURAL ENGINEERING 1817 N. 7th St., Suite 270, Phoenix, AZ 85006	PROJECT: FCDMC 88-39 ITEM: MARYLAND AVE BRIDGE DESIGN: ABUTMENT DATE: 11 JUL 89 DRS 9-18-89 FP	SHEET: 5.04 OF REVISION:

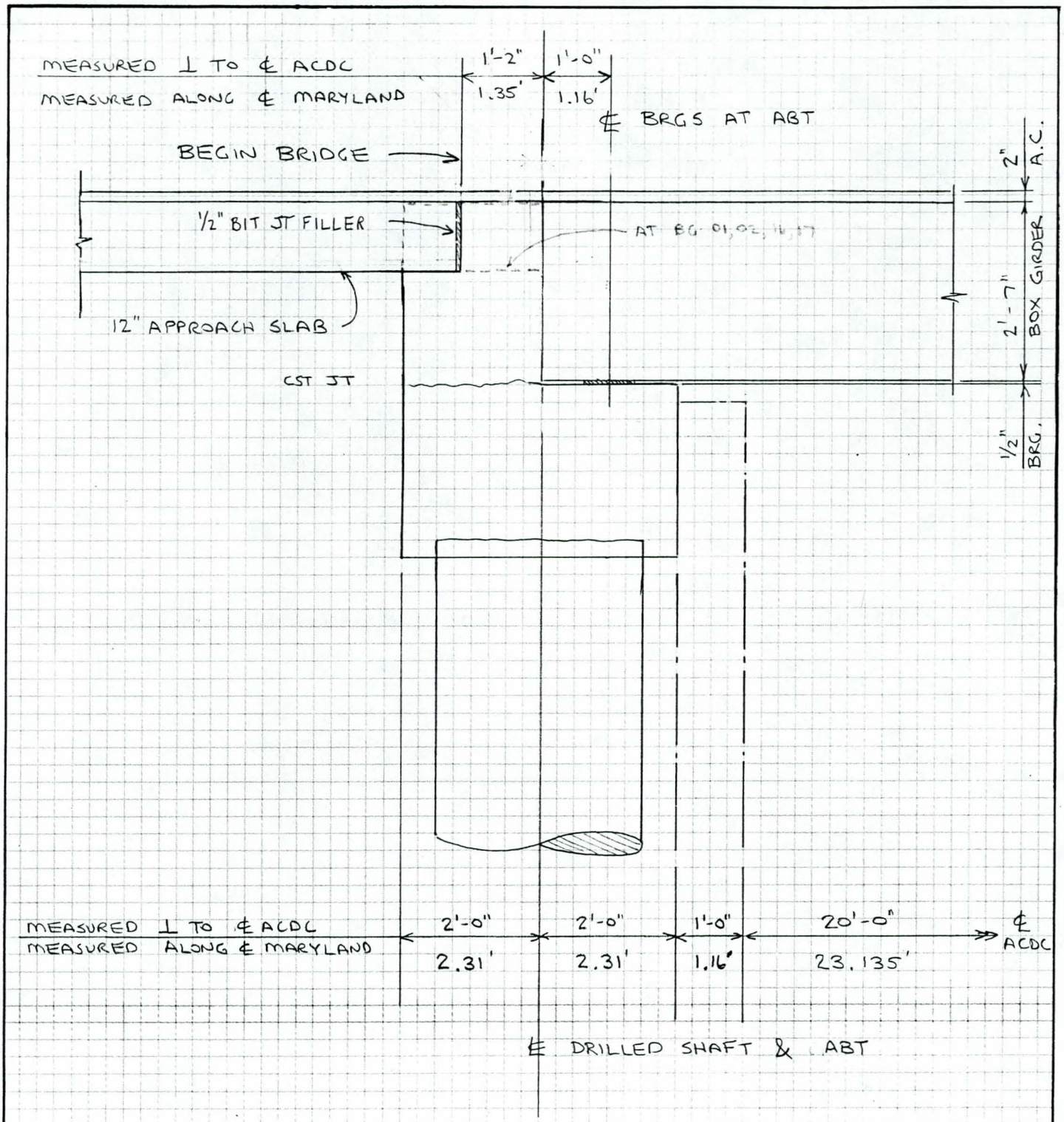

SECTION PERPENDICULAR TO ACDC

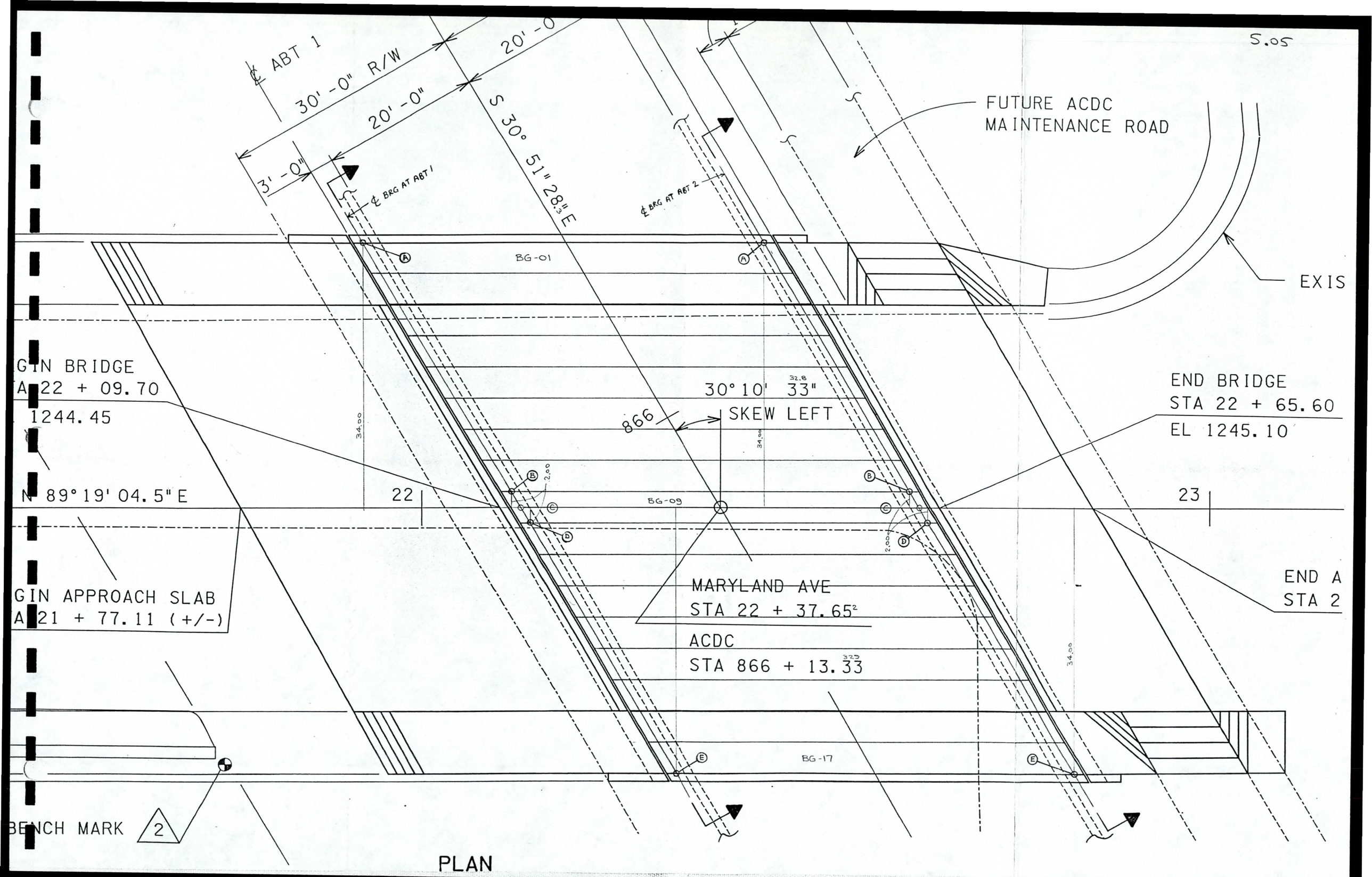
5.05
℄ ABT 1
30' -0" R/W
20' -0"
20' -0"
3' -0"
S 30° 51" 28.3" E
℄ BRG AT ABT 1
℄ BRG AT ABT 2
FUTURE ACDC
MAINTENANCE ROAD
EXIS
BG-01
GIN BRIDGE
A 22 + 09.70
1244.45
N 89° 19' 04.5" E
22
30° 10' 33"
SKEW LEFT
866
34.00
BG-09
23
END BRIDGE
STA 22 + 65.60
EL 1245.10
END A
STA 2
GIN APPROACH SLAB
A 21 + 77.11 (+/-)
MARYLAND AVE
STA 22 + 37.65
ACDC
STA 866 + 13.33
BG-17
BENCH MARK
2

PLAN

5.06

SAME AS

2.13

Project	FCDMC 88-39
Item	Maryland Ave. Bridge
Design	Profile
Date	22-Sep-89

	Station	Elevation		
Begin profile	21+77.00	1244.270		
End profile	23+08.00	1245.293	Grade	0.781%

Station	Elevation	Station	Elevation	Station	Elevation	Station	Elevation
		22+01.00	1244.457	22+51.00	1244.848	23+01.00	1245.238
		22+02.00	1244.465	22+52.00	1244.856	23+02.00	1245.246
		22+03.00	1244.473	22+53.00	1244.863	23+03.00	1245.254
		22+04.00	1244.481	22+54.00	1244.871	23+04.00	1245.262
		22+05.00	1244.489	22+55.00	1244.879	23+05.00	1245.270
		22+06.00	1244.496	22+56.00	1244.887	23+06.00	1245.277
		22+07.00	1244.504	22+57.00	1244.895	23+07.00	1245.285
		22+08.00	1244.512	22+58.00	1244.903	23+08.00	1245.293
		22+09.00	1244.520	22+59.00	1244.910	23+09.00	1245.301
		22+10.00	1244.528	22+60.00	1244.918	23+10.00	1245.309
		22+11.00	1244.536	22+61.00	1244.926	23+11.00	1245.316
		22+12.00	1244.543	22+62.00	1244.934	23+12.00	1245.324
		22+13.00	1244.551	22+63.00	1244.942	23+13.00	1245.332
		22+14.00	1244.559	22+64.00	1244.949	23+14.00	1245.340
		22+15.00	1244.567	22+65.00	1244.957	23+15.00	1245.348
		22+16.00	1244.575	22+66.00	1244.965	23+16.00	1245.355
		22+17.00	1244.582	22+67.00	1244.973	23+17.00	1245.363
		22+18.00	1244.590	22+68.00	1244.981	23+18.00	1245.371
		22+19.00	1244.598	22+69.00	1244.988	23+19.00	1245.379
		22+20.00	1244.606	22+70.00	1244.996	23+20.00	1245.387
		22+21.00	1244.614	22+71.00	1245.004		
		22+22.00	1244.621	22+72.00	1245.012		
		22+23.00	1244.629	22+73.00	1245.020		
		22+24.00	1244.637	22+74.00	1245.027		
		22+25.00	1244.645	22+75.00	1245.035		
		22+26.00	1244.653	22+76.00	1245.043		
21+77.00	1244.270	22+27.00	1244.660	22+77.00	1245.051		
21+78.00	1244.278	22+28.00	1244.668	22+78.00	1245.059		
21+79.00	1244.286	22+29.00	1244.676	22+79.00	1245.067		
21+80.00	1244.293	22+30.00	1244.684	22+80.00	1245.074		
21+81.00	1244.301	22+31.00	1244.692	22+81.00	1245.082		
21+82.00	1244.309	22+32.00	1244.700	22+82.00	1245.090		
21+83.00	1244.317	22+33.00	1244.707	22+83.00	1245.098		
21+84.00	1244.325	22+34.00	1244.715	22+84.00	1245.106		
21+85.00	1244.332	22+35.00	1244.723	22+85.00	1245.113		
21+86.00	1244.340	22+36.00	1244.731	22+86.00	1245.121		
21+87.00	1244.348	22+37.00	1244.739	22+87.00	1245.129		
21+88.00	1244.356	22+38.00	1244.746	22+88.00	1245.137		
21+89.00	1244.364	22+39.00	1244.754	22+89.00	1245.145		
21+90.00	1244.372	22+40.00	1244.762	22+90.00	1245.152		
21+91.00	1244.379	22+41.00	1244.770	22+91.00	1245.160		
21+92.00	1244.387	22+42.00	1244.778	22+92.00	1245.168		
21+93.00	1244.395	22+43.00	1244.785	22+93.00	1245.176		
21+94.00	1244.403	22+44.00	1244.793	22+94.00	1245.184		
21+95.00	1244.411	22+45.00	1244.801	22+95.00	1245.191		
21+96.00	1244.418	22+46.00	1244.809	22+96.00	1245.199		
21+97.00	1244.426	22+47.00	1244.817	22+97.00	1245.207		
21+98.00	1244.434	22+48.00	1244.824	22+98.00	1245.215		
21+99.00	1244.442	22+49.00	1244.832	22+99.00	1245.223		
22+00.00	1244.450	22+50.00	1244.840	23+00.00	1245.231		

122438

PROJECT Nº _____ DESIGN _____ DRAFTING _____

(48" BOX WIDTH = 4.627' ON SKEW)

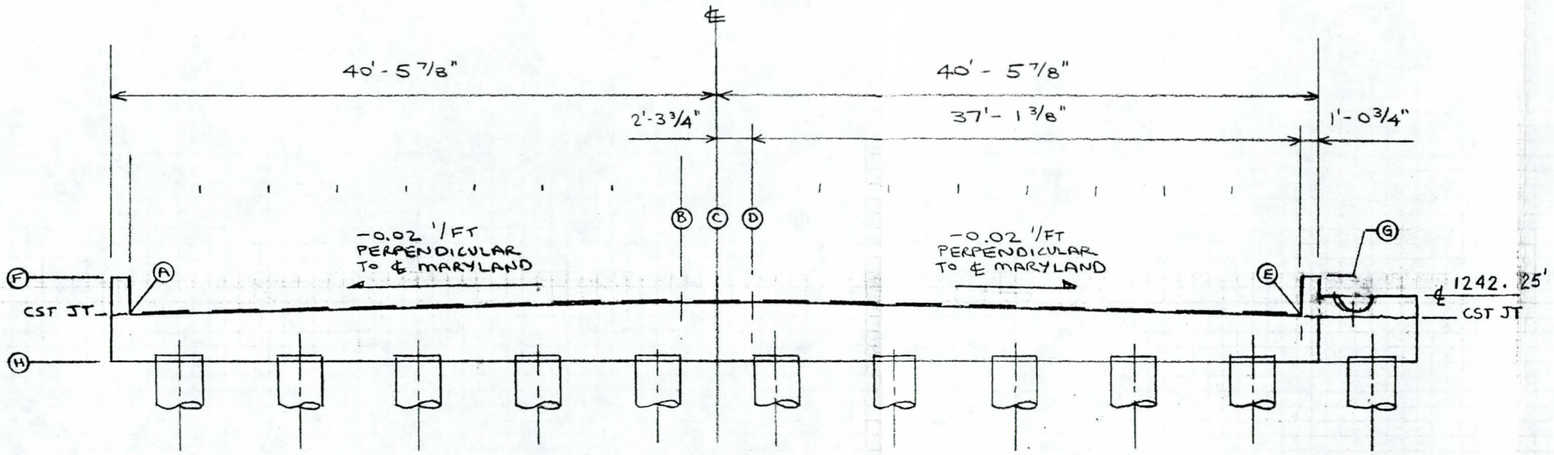

SECTION
ALL DIMENSIONS MEASURED
ALONG ℄ BRG AT ABT, UNO

KEYPOINT	STA	OFFSET	TOC EL
ABT 1			
A	21+92.43	34' LEFT	1240.92
B	22+11.04	2' LEFT	1241.71
C	22+12.20	–	1241.71
D	22+13.37	2' RIGHT	1241.72
E	22+31.97	34' RIGHT	1241.23
F	21+91.85	35' LEFT	1243.44
G	22+32.55	35' RIGHT	1243.75
H	–	–	1238.00
ABT 2			
A	22+43.33	34' LEFT	1241.32
B	22+61.94	2' LEFT	1242.10
C	22+63.10	–	1242.11
D	22+64.26	2' RIGHT	1242.12
E	22+82.87	34' RIGHT	1241.63
F	22+42.75	35' LEFT	1243.83
G	22+83.45	35' RIGHT	1244.15
H	–	–	1238.50

Ⓐ EDGE OF BRIDGE SEAT, LP AT BG-01
Ⓑ HP BETWEEN BG-08 AND BG-09
Ⓒ ℄ MARYLAND AVENUE
Ⓓ HP BETWEEN BG-09 AND BG-10
Ⓔ EDGE OF BRIDGE SEAT, LP AT BG-17
Ⓕ TOP OF NORTH CURTAIN BLOCK
Ⓖ TOP OF SOUTH CURTAIN BLOCK
Ⓗ BOT OF FOUNDATION

20" PIPE ON SOUTH SIDE
OFFSET = 37'-0" RT
(42'-9 5/8" MEASURED ALONG ℄ BRG ABTS.)
℄ ELEV = 1242.25

THICKNESS OF CAP BEAM

	MIN = Ⓐ - Ⓗ	MAX = Ⓓ - Ⓗ
ABT 1	2'-11" ±	3'-8 5/8"
ABT 2	2'-9 7/8"	3'-7 1/2"

ELEVATION CORRECTIONS
TOC AT CURTAIN BLOCK
3" = 0.25 BELOW DECK
TOC AT BRIDGE SEAT
2" + 31" + 1/2" = 2.79' BELOW DECK

CROSS SLOPE = 2% NORMAL CROWN

Nº.	REVISION	DATE

T.Y. LIN INTERNATIONAL
STRUCTURAL ENGINEERING
1817 N. Seventh St. Ste. 270, Phoenix AZ 85006 Tel. (602)253-1225

Issued For	Date	By

SHEET TITLE: ABUTMENT KEYPOINT ELEVATIONS
PROJECT: FCDMC 88-39 MARYLAND AVENUE BRIDGE
SHEET Nº. 5.07

ABUTMENT DESIGN

SUMMARY OF VERTICAL LOADS ON INTERIOR GIRDERS

- SUPERSTRUCTURE (4' WIDE BOX)

END SHEAR	DL = 26.1 K	≈	6.5 KLF
(NO IMPACT)	LL = 29.7 K	≈	7.4 KLF
A.C. PVMT	DL2 = 2.6 K	≈	0.7 KLF

- ABUTMENT SELF WT ESTIMATE

CAP BEAM BOTTOM PORTION

4' x x' x 0.150 = 1.7 MIN FOR x = 2.8'
2.3 MAX FOR x = 3.8'

INTEGRAL BACK WALL

2' x 2.6' x 0.150 = 0.8 KLF

2.5 KLF TO 3.1 KLF

- APPROACH SLAB

DL = (0.150 + 0.025)(18'/2) = 1.6 KLF
LL = 33.8 K / 12 FT = 2.8 KLF

DL = 6.5 + 0.7 + (2.5 to 3.1) + 1.6 = 11.3 KLF TO 11.9 KLF
LL = 7.4 + 2.8 = 10.2 KLF

SUMMARY OF HORIZONTAL LOADS

- BOX GIRDER LONGITUDINAL FORCE (1/2 AT EACH ABT)

5% (0.640 KLF x 52.5' + 18K) $\frac{4'}{12'} \cdot \frac{1}{2}$ = 0.4K PER BOX

- WIND LOAD ON STRUCTURE (1/2 AT EACH ABT)

0.050 (52.5')(2.6' + 2.7') 1/2 = 7K TRANSVERSE TOTAL
0.012 (52.5')(2.6' + 2.7') 1/2 = 1.7K LONG'L TOTAL

- WIND LOAD ON LIVE LOAD

0.100 (52.5) 1/2 = 2.6K TRANSVERSE TOTAL
0.040 (52.5) 1/2 = 1.1K LONG'L TOTAL

ABUTMENT DESIGN

SUMMARY OF HORIZONTAL LOADS

- THERMAL FORCES

LONGITUDINAL DIRECTION

$\alpha L \Delta T = (6.5E-06)(52.5' \times 12)(+30°, -40°)$

= 0.12" EXPANSION (0.06" EACH END)
= 0.16" CONTRACTION (0.08" EACH END)

SINCE THE THERMAL MOVEMENTS ARE SO SMALL, AND SINCE 1/2" BIT JT FILLER IS PROVIDED AT EACH END, THE THERMAL EFFECTS ARE NEGLIGIBLE.

- SEISMIC LOADING

REFERENCE "GUIDE SPECIFICATION FOR SEISMIC DESIGN OF HIGHWAY BRIDGES," 1983, AASHTO.

SEISMIC ZONE = 2, A = 0.22g

DESIGN CONNECTION BETWEEN BRIDGE SPAN AND ABUTMENT TO RESIST GRAVITY REACTION (DL) × 0.22.

$0.22(26.1^K + 2.6^K) = 6.3^K$ AT EACH END OF EACH BOX

CAN BE LONG'L OR TRANSV.

ABUTMENT DESIGN
(CONTINUOUS BEAM) VERTICAL LOADS FLEXURE

LL = 10.2 KLF
DL = 11.9 KLF MAX

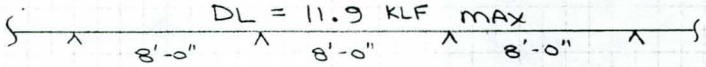

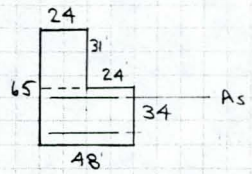

22.1 KLF NORMAL = 19.1 KLF ALONG ℄ ABT

TRY RECTANGULAR SECTION

USE $M = wl^2/10$ NEGATIVE OVER DRILLED SHAFTS

$$M = (19.1 \text{ KLF})(8')^2/10 = 122 \text{ FT-K}$$

$$A_s = \frac{M}{ad} = \frac{122}{1.76 \times 31} = 2.24 \text{ IN}^2$$

PER DIRECTION FROM THE FCDMC, CONSIDER POSSIBLE DIFF. SETTEMENT OF DRILLED SHAFTS BY ASSUMING THAT A 1/4" SETTLEMENT TOTALLY UNLOADS ONE SHAFT AND THE EFFECTIVE SPAN BECOMES 16' AT ONE LOCATION

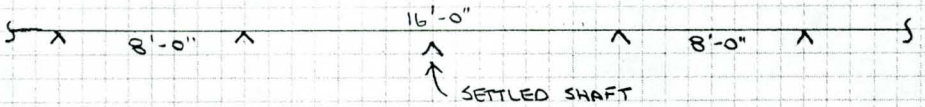

$$M^+ = 0.2187(19.1 \text{ KLF})(8')^2 = 267 \text{ FT-K}$$
$$M^- = -0.2813(19.1 \text{ KLF})(8')^2 = -344 \text{ FT-K}$$

$$A_s = \frac{344}{1.76 \times 31} = 6.30 \text{ IN}^2 \quad \text{TOP OF CAP BEAM}$$

$$A_s = \frac{267}{1.76 \times 28} = 5.42 \text{ IN}^2 \quad \text{BOT OF CAP BEAM}$$

USE 7 #9 AT EQUAL SPA
TOP AND BOTTOM OF CAP
BEAM (SPA = 7")
SIDE COVER = 3" EA SIDE

ABUTMENT DESIGN
(CONTINUOUS BEAM) VERTICAL LOADS SHEAR

FOR UNIFORMLY DISTRIBUTED LOADING

$V = 8\,ft\,(19.1\ KLF) = 153\ K$ PER SHAFT
$= 76\ T$ PER SHAFT

FOR CONSERVATISM, DESIGN FOR $V = 153\ K$ IN LIEU OF THE VALUE AT "d" FROM THE FACE OF THE SUPPORT.

$$v = \frac{V}{bd} = \frac{153000\ \#}{48'' \times 28''} = 114\ PSI$$

$$v_c = 0.95\sqrt{f'_c} = 60\ PSI$$

$$A_v = \frac{(v - v_c)\,b\,s}{f_s} = \frac{(114 - 60)\,48 \times 12}{24000} = 1.30\ IN^2/FT$$

USE #5 STIRRUPS
4 LEGS @ 8" (MEASURED ⊥ TO BRIDGE)
@ 9¼" (MEASURED ALONG ℄ ABT)

$A_v = 1.61 > 1.30$ OK

VERTICAL CANTILEVER DESIGN
BACK WALL SECTION

ASSUME ALL LONGITUDINAL LOADS ARE IMPARTED ON BACK WALL WITH NO SOIL / APPROACH SLAB RESISTENCE.
CONSIDER ONLY ONE BOX GIRDER

GROUP II FORCE $= \frac{W}{125\%} = \frac{1.7^K}{1.25} = 1.4^K$

GROUP III FORCE $= \frac{0.3W + WL + LF}{125\%} = \frac{0.3(1.7) + 1.1 + 0.4}{1.25} = 1.6^K$

GROUP VII FORCE $= \frac{EQ}{133\%} = \frac{6.3^K}{1.33} = 4.7^K$ ← GOVERNS

ABUTMENT DESIGN

BACK WALL

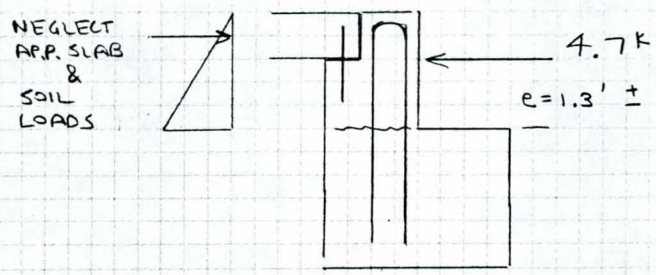

$M = 4.7^K \times 1.3' = 6.1$ FT-K

$A_s = \frac{M}{ad} = \frac{6.1}{1.76 \times 21''} = 0.17$ IN² PER BOX, ... SMALL.

USE #4 @ 8" MEAS ⊥ TO BRIDGE
@ 9¼" MEAS ALONG ℄ ABT

$A_s = 0.26$ IN²/FT
($A_s = 1.56$ IN²/BOX)

DESIGN DOWEL TO CONNECT BOX TO ABT BRIDGE SEAT
ASSUME ALL TRANSVERSE LOADS ARE IMPARTED ON DOWEL
CONSIDER ONLY ONE BOX GIRDER

GROUP II FORCE $= \frac{W}{125\%} = \frac{7^K}{1.25} = 5.6^K$ ← GOVERNS

GROUP III FORCE $= \frac{0.3W + WL}{125\%} = \frac{0.3(7^K) + 2.6^K}{1.25} = 3.8^K$

GROUP VII FORCE $= \frac{EQ}{133\%} = \frac{6.3}{1.33} = 4.7^K$

$\frac{5.6^K}{24 \text{ KSI}} = 0.23$ IN²

USE ONE #5 DOWEL
PER BOX EACH END.

(GROUT INTO A 2"Φ OPENING)

T.Y. LIN INTERNATIONAL STRUCTURAL ENGINEERING 1817 N. 7th St., Suite 270, Phoenix, AZ 85006	PROJECT: FCDMC ITEM: MARYLAND AVE BRIDGE DESIGN: ABUTMENT DATE: 30 AUG 89 DRS 09-18-89 FP	SHEET: 5.13 OF REVISION:

ABUTMENT DESIGN

REINFORCEMENT SUMMARY

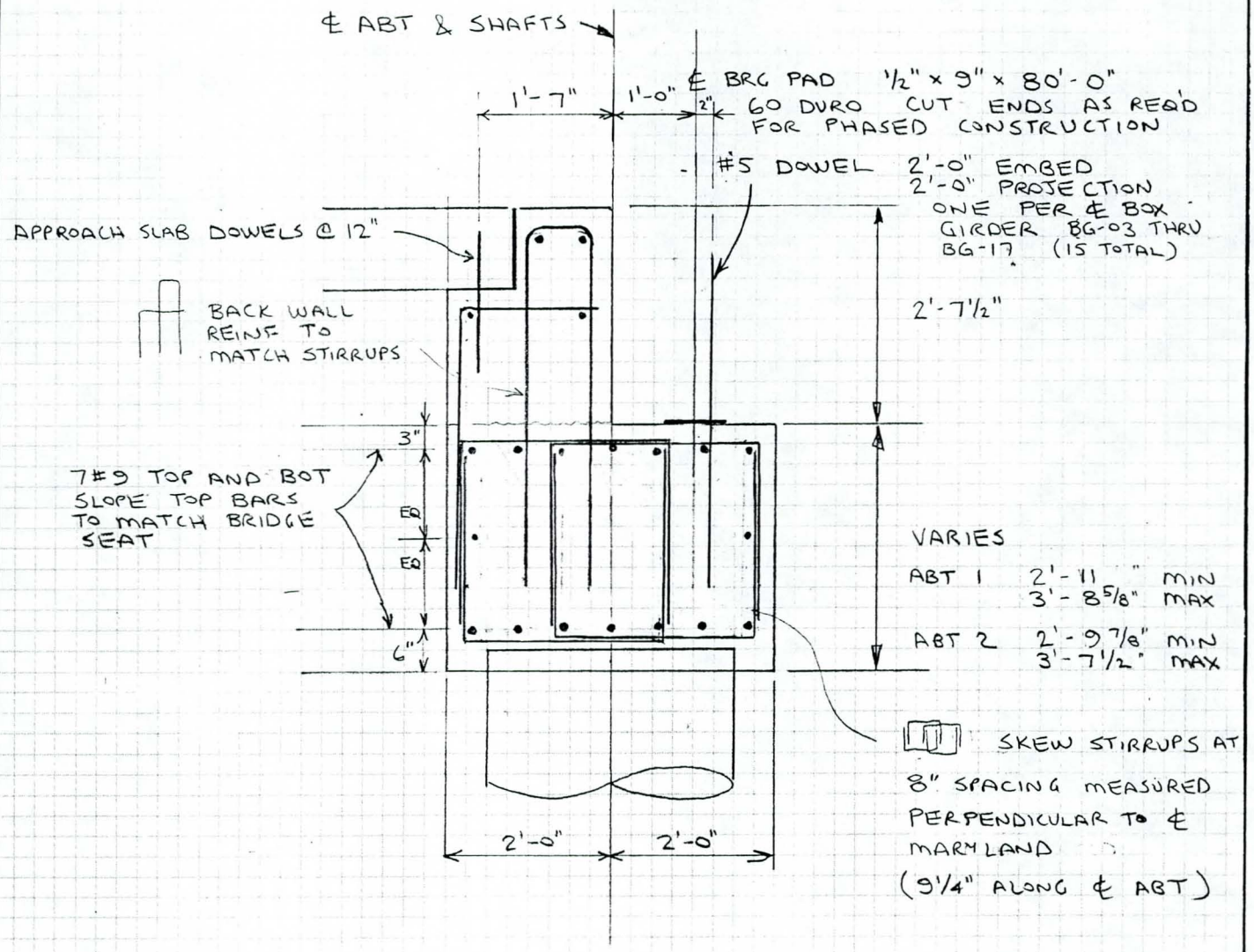

ALL ABT REINF #5 UNO

DISPLACE #9 BOTTOM REINF MAX 2" TO CLEAR DRILLED SHAFT REINF

DISPLACE SETS OF #5 BACK WALL REINF MAX 8" TO CLEAR INTERIOR UTILITIES SLEEVES

LAP SPLICE HORIZONTAL BARS (6 #5 AND 14 #9 TOTAL) AT CST JT BETWEEN PHASE 1 AND PHASE 2 CONSTRUCTION

SPECIAL DESIGN CONSIDERATIONS

PER TELEPHONE DISCUSSION WITH FCDMC ON 25OCT89, THEY REQUESTED A CHECK OF THE FOLLOWING CONDITION:

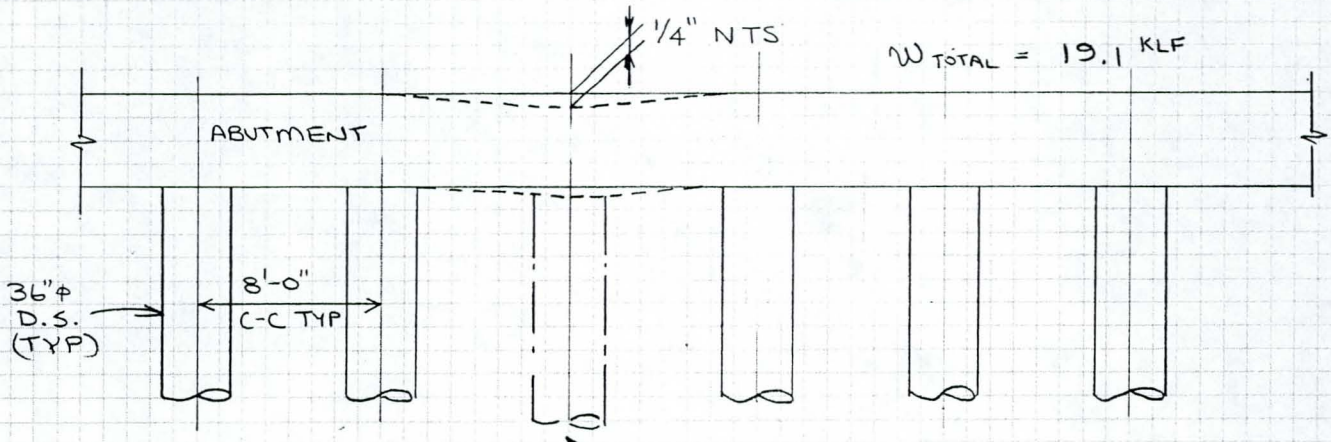

ASSUME 1/4" DIFFERENTIAL SETTLEMENT OF A DRILLED SHAFT, INDUCES 1/4" DEFLECTION OF ABUTMENT;

COMPARE THE CORRESPONDING FORCE REQUIRED TO CAUSE SUCH A DEFLECTION WITH THE DRILLED SHAFT REACTION;

IF THE DRILLED SHAFT REMAINS IN COMPRESSION, DESIGN THE ABUTMENT FOR THE RESULTING MOMENTS.

IF THE DRILLED SHAFT BECOMES UNLOADED, CHECK THE REDISTRIBUTION OF LOAD ON ADJACENT SHAFTS.

SPECIAL DESIGN CONSIDERATIONS

ABUTMENT SECTION
(AT SHALLOW SECTION)

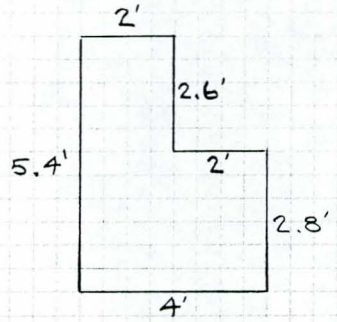

$E = 519120 \ K/FT^2$
$(f_c' = 4000)$

	A	y	Ay	I	Ad^2
BOT	11.2	1.4	15.68	7.32	8.28
TOP	5.2	4.1	21.32	2.93	17.61
Σ	16.4	2.26	37	10.25 + 25.89	= 36.14 FT^4

DRILLED SHAFT

$A = 7.07 \ FT^2$
$I = 3.98 \ FT^4$

SPECIAL DESIGN CONSIDERATIONS

2-DIM FRAME MODEL

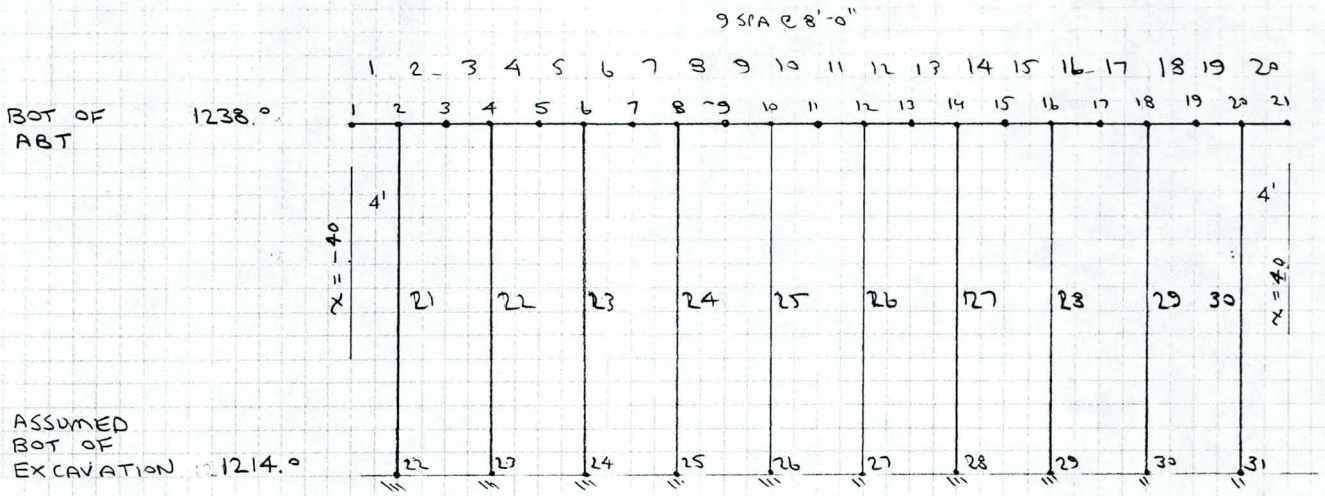

INVERT AT WALLS = 1216.12
BOTTOM OF SHAFT = 1184.00

$w = 19.1$ KLF ELEMENTS 1~20

CASE 1 NORMAL BOUNDARY CONDITIONS

CASE 2 DELETE VERT SUPPORT AT SHAFTS 22 & 27

CASE 3 FORCE 1/4" ↓ DISPLACEMENT AT SHAFTS 22 & 27

2D FRAME DESIGN -- T. Y. LIN INTERNATIONAL

FCDMC Maryland Avenue Bridge Abutment Design 10NOV89 Dan Shiosaka

DP— 13 SHEETS COMPUTER INPUT/OUTPUT

NUMBER OF MEMBERS	=	30
NUMBER OF JOINTS	=	31
NUMBER OF MATERIAL PROP.	=	2
NUMBER OF SECTION PROP.	=	2

2D FRAME DESIGN -- T. Y. LIN INTERNATIONAL

FCDMC Maryland Avenue Bridge Abutment Design 10NOV89 Dan Shiosaka

*** COORDINATES OF JOINTS ***

JOINT	X	Y
1	-40.000	1238.000
2	-36.000	1238.000
3	-32.000	1238.000
4	-28.000	1238.000
5	-24.000	1238.000
6	-20.000	1238.000
7	-16.000	1238.000
8	-12.000	1238.000
9	-8.000	1238.000
10	-4.000	1238.000
11	.000	1238.000
12	4.000	1238.000
13	8.000	1238.000
14	12.000	1238.000
15	16.000	1238.000
16	20.000	1238.000
17	24.000	1238.000
18	28.000	1238.000
19	32.000	1238.000
20	36.000	1238.000
21	40.000	1238.000
22	-36.000	1214.000
23	-28.000	1214.000
24	-20.000	1214.000
25	-12.000	1214.000
26	-4.000	1214.000
27	4.000	1214.000
28	12.000	1214.000
29	20.000	1214.000
30	28.000	1214.000
31	36.000	1214.000

2D FRAME DESIGN -- T. Y. LIN INTERNATIONAL

FCDMC Maryland Avenue Bridge Abutment Design 10NOV89 Dan Shiosaka

*** SUPPORT CONDITIONS ***

RESTRAINT	SUPPORT JOINTS									
X-DIR	22	23	24	25	26	27	28	29	30	31
Y-DIR	22	23	24	25	26	27	28	29	30	31
R-DIR	22	23	24	25	26	27	28	29	30	31

2D FRAME DESIGN -- T. Y. LIN INTERNATIONAL

FCDMC Maryland Avenue Bridge Abutment Design 10NOV89 Dan Shiosaka

*** MATERIAL PROPERTIES ***

CODE	MODULUS OF ELASTICITY	POISSON'S RATIO
1	5.1912E+05	.200
2	5.1912E+05	.200

*** SECTION PROPERTIES ***

CODE	AXIAL AREA	MOMENT OF INERTIA	SHEAR AREA	KII	KJJ	KIJ
1	16.0000	36.00000	16.0000	4.000	4.000	2.000
2	7.0000	4.00000	7.0000	4.000	4.000	2.000

2D FRAME DESIGN -- T. Y. LIN INTERNATIONAL

FCDMC Maryland Avenue Bridge Abutment Design 10NOV89 Dan Shiosaka

*** MEMBER INFORMATION ***

MEMBER	START JOINT	END JOINT	LENGTH	MATERIAL CODE	SECTION CODE
1	1	2	4.000	1	1
2	2	3	4.000	1	1
3	3	4	4.000	1	1
4	4	5	4.000	1	1
5	5	6	4.000	1	1
6	6	7	4.000	1	1
7	7	8	4.000	1	1
8	8	9	4.000	1	1
9	9	10	4.000	1	1
10	10	11	4.000	1	1
11	11	12	4.000	1	1
12	12	13	4.000	1	1
13	13	14	4.000	1	1
14	14	15	4.000	1	1
15	15	16	4.000	1	1
16	16	17	4.000	1	1
17	17	18	4.000	1	1
18	18	19	4.000	1	1
19	19	20	4.000	1	1
20	20	21	4.000	1	1
21	2	22	24.000	2	2
22	4	23	24.000	2	2
23	6	24	24.000	2	2
24	8	25	24.000	2	2
25	10	26	24.000	2	2
26	12	27	24.000	2	2
27	14	28	24.000	2	2
28	16	29	24.000	2	2
29	18	30	24.000	2	2
30	20	31	24.000	2	2

2D FRAME DESIGN -- T. Y. LIN INTERNATIONAL

FCDMC Maryland Avenue Bridge Abutment Design 10NOV89 Dan Shiosaka

UNIFORM LOADING WITH ALL 10 SHAFTS SUPPORTING

UNIFORM LOAD (UP POSITIVE)

START MEMBER	LAST MEMBER	MAGNITUDE
1	20	-19.10

2D FRAME DESIGN -- T. Y. LIN INTERNATIONAL

FCDMC Maryland Avenue Bridge Abutment Design 10NOV89 Dan Shiosaka

UNIFORM LOADING WITH ALL 10 SHAFTS SUPPORTING

JOINT DISPLACEMENTS

JOINT	X	Y	R
1	-.000001	-.001170	.000025
2	-.000001	-.001036	.000014
3	-.000001	-.001057	.000006
4	-.000001	-.000993	.000001
5	-.000001	-.001049	-.000001
6	-.000001	-.000999	-.000001
7	-.000001	-.001059	-.000001
8	.000000	-.001007	-.000001
9	.000000	-.001064	.000000
10	.000000	-.001010	.000000
11	.000000	-.001065	.000000
12	.000000	-.001010	.000000
13	.000000	-.001064	.000000
14	.000000	-.001007	.000001
15	.000001	-.001059	.000001
16	.000001	-.000999	.000001
17	.000001	-.001049	.000001
18	.000001	-.000993	-.000001
19	.000001	-.001057	-.000006
20	.000001	-.001036	-.000014
21	.000001	-.001170	-.000025
22	.000000	.000000	.000000
23	.000000	.000000	.000000
24	.000000	.000000	.000000
25	.000000	.000000	.000000
26	.000000	.000000	.000000
27	.000000	.000000	.000000
28	.000000	.000000	.000000
29	.000000	.000000	.000000
30	.000000	.000000	.000000
31	.000000	.000000	.000000

2D FRAME DESIGN -- T. Y. LIN INTERNATIONAL

FCDMC Maryland Avenue Bridge Abutment Design 10NOV89 Dan Shiosaka

UNIFORM LOADING WITH ALL 10 SHAFTS SUPPORTING

MEMBER END FORCES

	I--------- START JOINT		----------II--------- END JOINT		----------I	
MEM NO.	AXIAL P	SHEAR V	MOMENT M	AXIAL P	SHEAR V	MOMENT M
1	.000	.000	.000	.000	76.400	-152.800
2	-.295	80.526	148.033	.295	-4.126	21.272
3	-.295	4.126	-21.272	.295	72.274	-115.023
4	-.324	78.077	114.553	.324	-1.677	44.953
5	-.324	1.676	-44.953	.324	74.724	-101.141
6	-.299	76.587	101.532	.299	-.187	52.016
7	-.299	.187	-52.016	.299	76.213	-100.035
8	-.285	76.291	100.263	.285	.109	52.102
9	-.285	-.109	-52.102	.285	76.509	-101.132
10	-.282	76.400	101.185	.282	.000	51.615
11	-.282	.000	-51.615	.282	76.400	-101.185
12	-.285	76.509	101.132	.285	-.109	52.102
13	-.285	.109	-52.102	.285	76.291	-100.263
14	-.299	76.213	100.036	.299	.187	52.016
15	-.299	-.187	-52.016	.299	76.587	-101.532
16	-.324	74.723	101.141	.324	1.677	44.953
17	-.324	-1.676	-44.953	.324	78.076	-114.553
18	-.295	72.274	115.023	.295	4.126	21.272
19	-.295	-4.126	-21.272	.295	80.526	-148.033
20	.000	76.400	152.800	.000	.000	.000
21	156.926	.295	4.767	-156.926	-.295	2.319
22	150.350	.029	.470	-150.350	-.029	.219
23	151.311	-.025	-.391	-151.311	.025	-.199
24	152.504	-.014	-.228	-152.504	.014	-.116
25	152.909	-.003	-.052	-152.909	.003	-.027
26	152.909	.003	.052	-152.909	-.003	.027
27	152.504	.014	.228	-152.504	-.014	.116
28	151.311	.025	.391	-151.311	-.025	.199
29	150.350	-.029	-.470	-150.350	.029	-.219
30	156.926	-.295	-4.767	-156.926	.295	-2.319

2D FRAME DESIGN -- T. Y. LIN INTERNATIONAL

FCDMC Maryland Avenue Bridge Abutment Design 10NOV89 Dan Shiosaka

UNIFORM LOADING WITH ALL 10 SHAFTS SUPPORTING

SUPPORT REACTIONS

JOINT	RX	RY	MOMENT
22	-.295	156.926	2.319
23	-.029	150.350	.219
24	.025	151.311	-.199
25	.014	152.504	-.116
26	.003	152.909	-.027
27	-.003	152.909	.027
28	-.014	152.504	.116
29	-.025	151.311	.199
30	.029	150.350	-.219
31	.295	156.926	-2.319
SUM	.000	1528.000	.000

2D FRAME DESIGN -- T. Y. LIN INTERNATIONAL

FCDMC Maryland Avenue Bridge Abutment Design 10NOV89 Dan Shiosaka

UNIFORM LOADING WITH 1/4" SETTLEMENT AT SHAFTS 22 & 27

JOINT LOAD

JOINT	FX	FY	MZ	
23	.000	-.021	.000	--- DISPLACEMENT
28	.000	-.021	.000	--- DISPLACEMENT

UNIFORM LOAD (UP POSITIVE)

START MEMBER	LAST MEMBER	MAGNITUDE
1	20	-19.10

2D FRAME DESIGN -- T. Y. LIN INTERNATIONAL

FCDMC Maryland Avenue Bridge Abutment Design 10NOV89 Dan Shiosaka

UNIFORM LOADING WITH 1/4" SETTLEMENT AT SHAFTS 22 & 27

JOINT DISPLACEMENTS

JOINT	X	Y	R
1	-.000176	-.001551	-.000968
2	-.000176	-.005388	-.000978
3	-.000186	-.009910	-.000777
4	-.000196	-.012382	-.000008
5	-.000207	-.009919	.000714
6	-.000217	-.005774	.000777
7	-.000220	-.003111	.000547
8	-.000222	-.001341	.000276
9	-.000222	-.000835	.000006
10	-.000222	-.001298	-.000263
11	-.000225	-.003006	-.000530
12	-.000228	-.005593	-.000758
13	-.000239	-.009639	-.000704
14	-.000249	-.012091	-.000016
15	-.000260	-.009776	.000672
16	-.000272	-.005858	.000730
17	-.000275	-.003402	.000525
18	-.000279	-.001659	.000319
19	-.000280	-.000865	.000176
20	-.000281	-.000367	.000116
21	-.000281	.000021	.000105
22	.000000	.000000	.000000
23	.000000	-.020830	.000000
24	.000000	.000000	.000000
25	.000000	.000000	.000000
26	.000000	.000000	.000000
27	.000000	.000000	.000000
28	.000000	-.020830	.000000
29	.000000	.000000	.000000
30	.000000	.000000	.000000
31	.000000	.000000	.000000

2D FRAME DESIGN -- T. Y. LIN INTERNATIONAL

FCDMC Maryland Avenue Bridge Abutment Design 10NOV89 Dan Shiosaka

UNIFORM LOADING WITH 1/4" SETTLEMENT AT SHAFTS 22 & 27

MEMBER END FORCES

	I--------- START JOINT		----------II	--------- END JOINT		----------I
MEM NO.	AXIAL P	SHEAR V	MOMENT M	AXIAL P	SHEAR V	MOMENT M
1	.000	.000	.000	.000	76.400	-152.800
2	20.885	739.439	488.072	-20.885	-663.039	2316.885
3	20.885	663.038	-2316.885	-20.885	-586.638	4816.238
4	21.406	-692.427	-4809.246	-21.406	768.827	1886.738
5	21.407	-768.827	-1886.737	-21.407	845.227	-1341.371
6	5.438	29.005	1082.492	-5.438	47.395	-1119.270
7	5.438	-47.395	1119.271	-5.438	123.795	-1461.650
8	.014	79.189	1372.633	-.014	-2.789	-1208.678
9	.014	2.789	1208.678	-.014	73.611	-1350.323
10	5.928	122.987	1444.027	-5.928	-46.587	-1104.880
11	5.928	46.586	1104.880	-5.928	29.814	-1071.334
12	22.257	817.089	1332.823	-22.257	-740.689	1782.734
13	22.257	740.688	-1782.734	-22.257	-664.288	4592.685
14	23.034	-658.831	-4581.966	-23.034	735.231	1793.842
15	23.034	-735.231	-1793.842	-23.034	811.631	-1299.884
16	8.160	75.349	1058.244	-8.160	1.051	-909.649
17	8.160	-1.051	909.648	-8.160	77.451	-1066.653
18	1.947	173.689	964.520	-1.947	-97.289	-422.563
19	1.947	97.289	422.563	-1.947	-20.889	-186.206
20	.000	76.400	152.800	.000	.000	.000
21	815.839	-20.885	-335.272	-815.839	20.885	-165.961
22	-1279.066	-.522	-6.992	1279.066	.522	-5.530
23	874.233	15.968	258.879	-874.233	-15.968	124.356
24	202.983	5.425	89.017	-202.983	-5.425	41.176
25	196.598	-5.914	-93.704	-196.598	5.914	-48.241
26	846.903	-16.329	-261.489	-846.903	16.329	-130.410
27	-1323.120	-.777	-10.722	1323.120	.777	-7.924
28	886.981	14.874	241.641	-886.981	-14.874	115.334
29	251.140	6.213	102.132	-251.140	-6.213	46.979
30	55.511	1.947	33.407	-55.511	-1.947	13.328

2D FRAME DESIGN -- T. Y. LIN INTERNATIONAL

FCDMC Maryland Avenue Bridge Abutment Design 10NOV89 Dan Shiosaka

UNIFORM LOADING WITH 1/4" SETTLEMENT AT SHAFTS 22 & 27

SUPPORT REACTIONS

JOINT	RX	RY	MOMENT
22	20.885	815.839	-165.961
23	.522	-1279.066	-5.530
24	-15.968	874.233	124.356
25	-5.425	202.983	41.176
26	5.914	196.598	-48.241
27	16.329	846.903	-130.410
28	.777	-1323.120	-7.924
29	-14.874	886.981	115.334
30	-6.213	251.140	46.979
31	-1.947	55.511	13.328
	---	---	---
SUM	.000	1528.001	-16.894

SPECIAL DESIGN CONSIDERATIONS

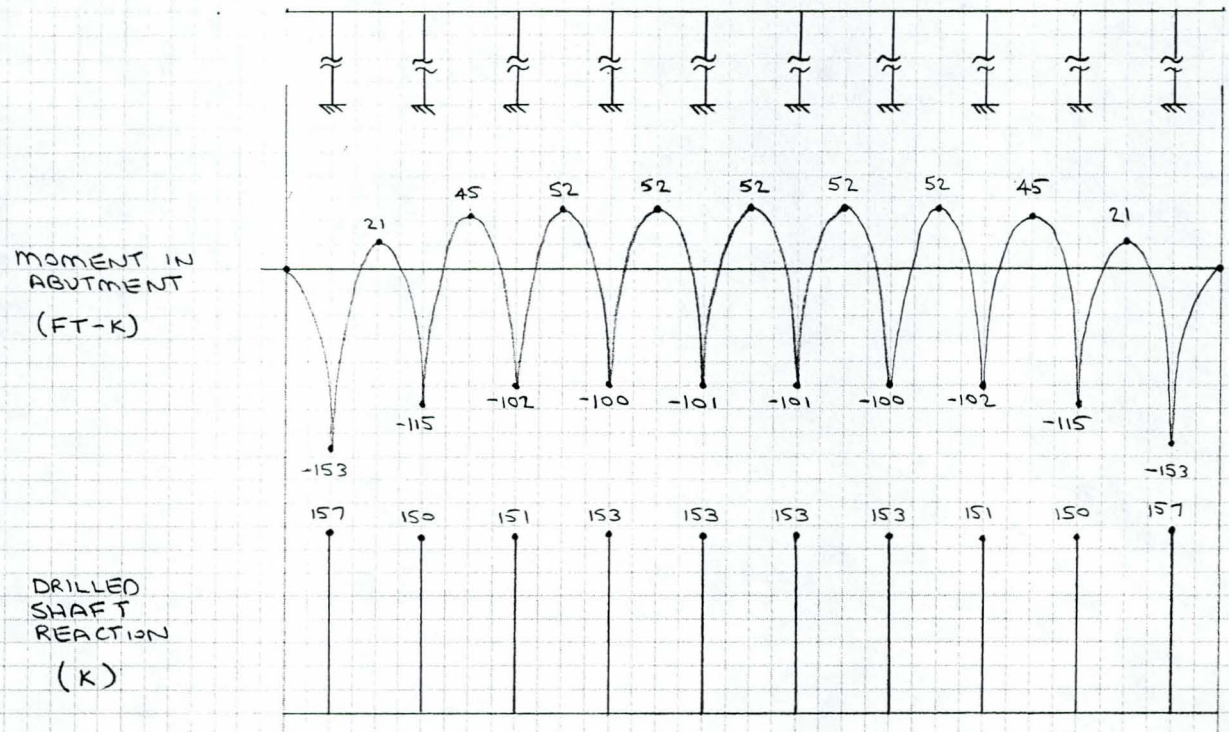

ABUTMENT MOMENTS
AND
DRILLED SHAFT REACTIONS

2D FRAME DESIGN -- T. Y. LIN INTERNATIONAL

FCDMC Maryland Avenue Bridge Abutment Design 10NOV89 Dan Shiosaka DP/ 9 SHEETS OF COMPUTER INPUT / OUTPUT

NUMBER OF MEMBERS = 30

NUMBER OF JOINTS = 31

NUMBER OF MATERIAL PROP. = 2

NUMBER OF SECTION PROP. = 2

2D FRAME DESIGN -- T. Y. LIN INTERNATIONAL

FCDMC Maryland Avenue Bridge Abutment Design 10NOV89 Dan Shiosaka

*** COORDINATES OF JOINTS ***

JOINT	X	Y
1	-40.000	1238.000
2	-36.000	1238.000
3	-32.000	1238.000
4	-28.000	1238.000
5	-24.000	1238.000
6	-20.000	1238.000
7	-16.000	1238.000
8	-12.000	1238.000
9	-8.000	1238.000
10	-4.000	1238.000
11	.000	1238.000
12	4.000	1238.000
13	8.000	1238.000
14	12.000	1238.000
15	16.000	1238.000
16	20.000	1238.000
17	24.000	1238.000
18	28.000	1238.000
19	32.000	1238.000
20	36.000	1238.000
21	40.000	1238.000
22	-36.000	1214.000
23	-28.000	1214.000
24	-20.000	1214.000
25	-12.000	1214.000
26	-4.000	1214.000
27	4.000	1214.000
28	12.000	1214.000
29	20.000	1214.000
30	28.000	1214.000
31	36.000	1214.000

2D FRAME DESIGN -- T. Y. LIN INTERNATIONAL

FCDMC Maryland Avenue Bridge Abutment Design 10NOV89 Dan Shiosaka

*** SUPPORT CONDITIONS ***

RESTRAINT	SUPPORT JOINTS									
X-DIR	22	23	24	25	26	27	28	29	30	31
Y-DIR	22	24	25	26	27	29	30	31		
R-DIR	22	23	24	25	26	27	28	29	30	31

2D FRAME DESIGN -- T. Y. LIN INTERNATIONAL

FCDMC Maryland Avenue Bridge Abutment Design 10NOV89 Dan Shiosaka

*** MATERIAL PROPERTIES ***

CODE	MODULUS OF ELASTICITY	POISSON'S RATIO
1	5.1912E+05	.200
2	5.1912E+05	.200

*** SECTION PROPERTIES ***

CODE	AXIAL AREA	MOMENT OF INERTIA	SHEAR AREA	KII	KJJ	KIJ
1	16.0000	36.00000	16.0000	4.000	4.000	2.000
2	7.0000	4.00000	7.0000	4.000	4.000	2.000

2D FRAME DESIGN -- T. Y. LIN INTERNATIONAL

FCDMC Maryland Avenue Bridge Abutment Design 10NOV89 Dan Shiosaka

*** MEMBER INFORMATION ***

MEMBER	START JOINT	END JOINT	LENGTH	MATERIAL CODE	SECTION CODE
1	1	2	4.000	1	1
2	2	3	4.000	1	1
3	3	4	4.000	1	1
4	4	5	4.000	1	1
5	5	6	4.000	1	1
6	6	7	4.000	1	1
7	7	8	4.000	1	1
8	8	9	4.000	1	1
9	9	10	4.000	1	1
10	10	11	4.000	1	1
11	11	12	4.000	1	1
12	12	13	4.000	1	1
13	13	14	4.000	1	1
14	14	15	4.000	1	1
15	15	16	4.000	1	1
16	16	17	4.000	1	1
17	17	18	4.000	1	1
18	18	19	4.000	1	1
19	19	20	4.000	1	1
20	20	21	4.000	1	1
21	2	22	24.000	2	2
22	4	23	24.000	2	2
23	6	24	24.000	2	2
24	8	25	24.000	2	2
25	10	26	24.000	2	2
26	12	27	24.000	2	2
27	14	28	24.000	2	2
28	16	29	24.000	2	2
29	18	30	24.000	2	2
30	20	31	24.000	2	2

2D FRAME DESIGN -- T. Y. LIN INTERNATIONAL

FCDMC Maryland Avenue Bridge Abutment Design 10NOV89 Dan Shiosaka

UNIFORM LOADING WITHOUT VERTICAL SUPPORT AT SHAFTS 22 & 27

UNIFORM LOAD (UP POSITIVE)

START MEMBER	LAST MEMBER	MAGNITUDE
1	20	-19.10

2D FRAME DESIGN -- T. Y. LIN INTERNATIONAL

FCDMC Maryland Avenue Bridge Abutment Design 10NOV89 Dan Shiosaka

UNIFORM LOADING WITHOUT VERTICAL SUPPORT AT SHAFTS 22 & 27

JOINT DISPLACEMENTS

JOINT	X	Y	R
1	-.000019	-.001210	-.000079
2	-.000019	-.001494	-.000090
3	-.000020	-.001988	-.000076
4	-.000021	-.002191	.000000
5	-.000022	-.001982	.000075
6	-.000023	-.001502	.000081
7	-.000023	-.001275	.000057
8	-.000023	-.001043	.000029
9	-.000023	-.001040	.000001
10	-.000023	-.001039	-.000027
11	-.000023	-.001265	-.000055
12	-.000024	-.001483	-.000078
13	-.000025	-.001950	-.000072
14	-.000026	-.002153	-.000001
15	-.000027	-.001960	.000070
16	-.000028	-.001501	.000076
17	-.000028	-.001292	.000055
18	-.000028	-.001062	.000032
19	-.000028	-.001037	.000013
20	-.000028	-.000967	-.000001
21	-.000028	-.001047	-.000012
22	.000000	.000000	.000000
23	.000000	-.002191	.000000
24	.000000	.000000	.000000
25	.000000	.000000	.000000
26	.000000	.000000	.000000
27	.000000	.000000	.000000
28	.000000	-.002153	.000000
29	.000000	.000000	.000000
30	.000000	.000000	.000000
31	.000000	.000000	.000000

2D FRAME DESIGN -- T. Y. LIN INTERNATIONAL

FCDMC Maryland Avenue Bridge Abutment Design 10NOV89 Dan Shiosaka

UNIFORM LOADING WITHOUT VERTICAL SUPPORT AT SHAFTS 22 & 27

MEMBER END FORCES

	I--------- START JOINT		----------II	--------- END JOINT		----------I
MEM	AXIAL	SHEAR	MOMENT	AXIAL	SHEAR	MOMENT
NO.	P	V	M	P	V	M
1	.000	.000	.000	.000	76.400	-152.800
2	1.933	149.832	183.801	-1.933	-73.432	262.725
3	1.933	73.432	-262.725	-1.933	2.968	403.652
4	1.962	-2.969	-403.334	-1.962	79.369	238.660
5	1.962	-79.368	-238.660	-1.962	155.768	-231.613
6	.304	71.646	204.739	-.304	4.754	-70.953
7	.304	-4.754	70.954	-.304	81.154	-242.768
8	-.255	76.752	233.581	.255	-.352	-79.375
9	-.255	.351	79.375	.255	76.049	-230.770
10	.358	81.283	240.480	-.358	-4.883	-68.150
11	.358	4.883	68.150	-.358	71.517	-201.419
12	2.043	153.049	228.411	-2.043	-76.649	230.986
13	2.043	76.649	-230.985	-2.043	-.249	384.782
14	2.111	.249	-383.867	-2.111	76.151	232.063
15	2.111	-76.151	-232.063	-2.111	152.551	-225.341
16	.552	74.785	200.023	-.552	1.615	-53.681
17	.553	-1.614	53.681	-.553	78.014	-212.939
18	-.064	82.754	202.808	.064	-6.354	-24.592
19	-.064	6.354	24.592	.064	70.046	-151.977
20	.000	76.400	152.800	.000	.000	.000
21	226.232	-1.933	-31.001	-226.232	1.933	-15.379
22	.000	-.029	-.317	.000	.029	-.384
23	227.415	1.657	26.875	-227.415	-1.657	12.903
24	157.905	.560	9.188	-157.905	-.560	4.244
25	157.331	-.613	-9.710	-157.331	.613	-5.001
26	224.567	-1.686	-26.992	-224.567	1.686	-13.461
27	.000	-.068	-.914	.000	.068	-.721
28	227.337	1.559	25.318	-227.337	-1.559	12.094
29	160.768	.616	10.131	-160.768	-.616	4.656
30	146.446	-.064	-.823	-146.446	.064	-.704

2D FRAME DESIGN -- T. Y. LIN INTERNATIONAL

FCDMC Maryland Avenue Bridge Abutment Design 10NOV89 Dan Shiosaka

UNIFORM LOADING WITHOUT VERTICAL SUPPORT AT SHAFTS 22 & 27

SUPPORT REACTIONS

JOINT	RX	RY	MOMENT
22	1.933	226.232	-15.379
23	.029	.000	-.384
24	-1.657	227.415	12.903
25	-.560	157.905	4.244
26	.613	157.331	-5.001
27	1.686	224.567	-13.461
28	.068	.000	-.721
29	-1.559	227.337	12.094
30	-.616	160.768	4.656
31	.064	146.446	-.704
	---	---	---
SUM	.000	1528.000	-1.752

T.Y. LIN INTERNATIONAL STRUCTURAL ENGINEERING 1817 N. 7th St., Suite 270, Phoenix, AZ 85006	PROJECT: FCDMC ITEM: MARYLAND AVE BRIDGE DESIGN: ABUTMENTS DATE: 13 NOV 89 DRS DPL	SHEET: 5.40 OF REVISION:

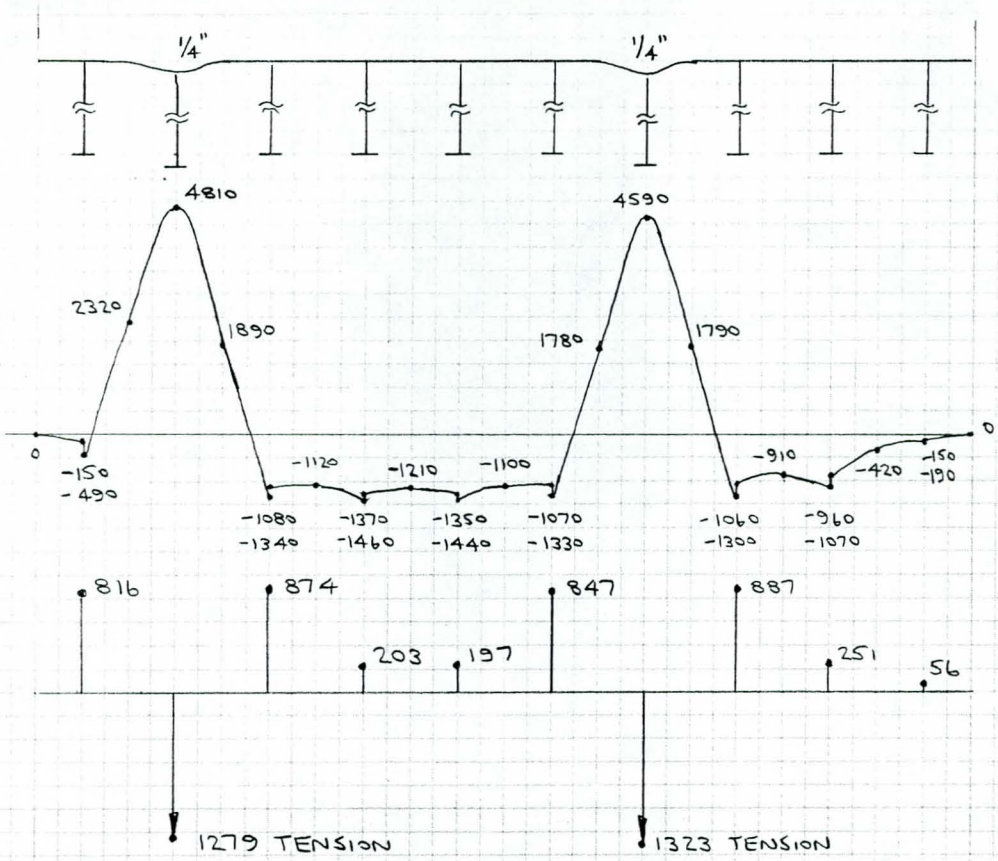

PER RECOMMENDATION OF FCDMC

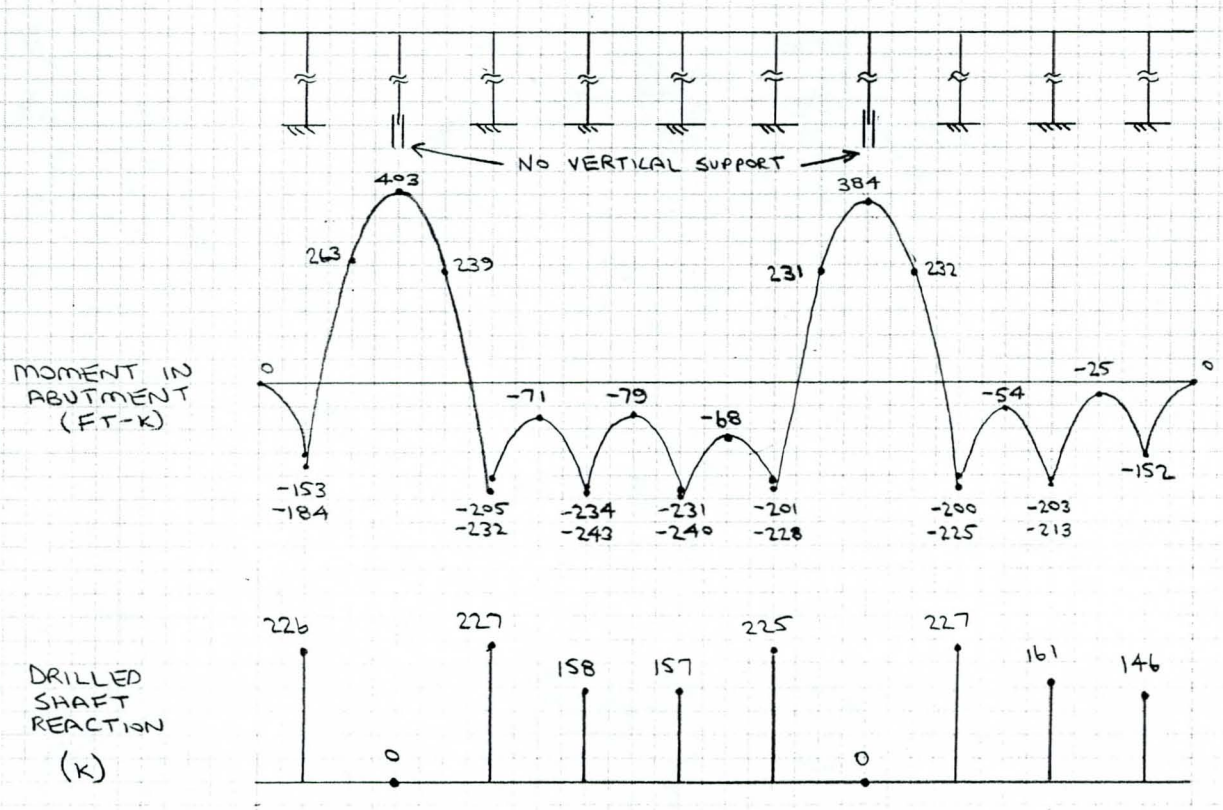

SPECIAL DESIGN CONSIDERATIONS

SUMMARY

SINCE DRILLED SHAFT CANNOT EXERT PULL-DOWN (TENSILE) FORCE ≈ 1300 K, ASSUMPTION OF 1/4" DEFLECTION OF ABUTMENT IS NOT CORRECT.

REDISTRIBUTION OF LOAD DUE TO "INEFFECTIVE" DRILLED SHAFT IS AS FOLLOWS

ALL SHAFTS EFF	ADJACENT TO ASSUMED INEFFECTIVE SHAFT	AT ELEV 1184 CAPACITY (END BRG ONLY)
$P = 157^K$	$P = 227^K$	$q_{SAFE} = 289^K$

DESIGN IS OK

MOMENT IN 2DIM-FRAME ANALYSIS

m+ = 403 (LARGEST VALUE)

m− = 225 (LARGEST VALUE)

PROVIDED *

(7 SQ IN)(1.76)(31")' = 382 52 OK

* ASSUMED d = 31" IS AT THE SHALLOWEST PART OF THE ABUTMENT AND NEGLECTING CONTRIBUTION OF THE ENTIRE BACK WALL FOR COMPRESSIVE STRENGTH. ACTUAL d INCLUDING BACK WALL ≫ 33"

DESIGN IS OK.

dist load on drilled shafts:

$$w_{DL\ bridge} = \frac{53.25}{2}\left(2(.025) + \frac{.851}{4} + \frac{2[(9)(.734) + 2.403](.15)]}{68} + \overset{\text{max}}{.5} + .010\right) = 8.517 \text{ KLF}$$

$$w_{DL\ abt} = [1.25(1) + 2(1.625) + 4(3.24) + 9(1)].15 = \quad 3.969 \text{ KLF}$$

12.486 KLF

lanes = 26(2)/12 = 4.333

$$w_{LL\ bridge} = \left[4.333(59.4) + 2(8)\left(\frac{53.25}{2}\right)(.085)\right] / ((26)(2) + 2(8)) = \quad 4.318 \text{ KLF}$$

$$w_{LL\ abt} = 4.333\ (29.3)\ /68 = \quad 1.867 \text{ KLF}$$

6.185 KLF

total = $\boxed{18.671 \text{ KLF}}$ < 19.1 OK

6.0 DRILLED SHAFTS

T.Y. LIN INTERNATIONAL STRUCTURAL ENGINEERING 1817 N. 7th St., Suite 270, Phoenix, AZ 85006	PROJECT: FCDMC 88-39	SHEET: 6.01
	ITEM: MARYLAND AVE BRIDGE	OF
	DESIGN: FOUNDATION PLAN	REVISION:
	DATE: 07JUL89 DRS 09-18-89 FP	

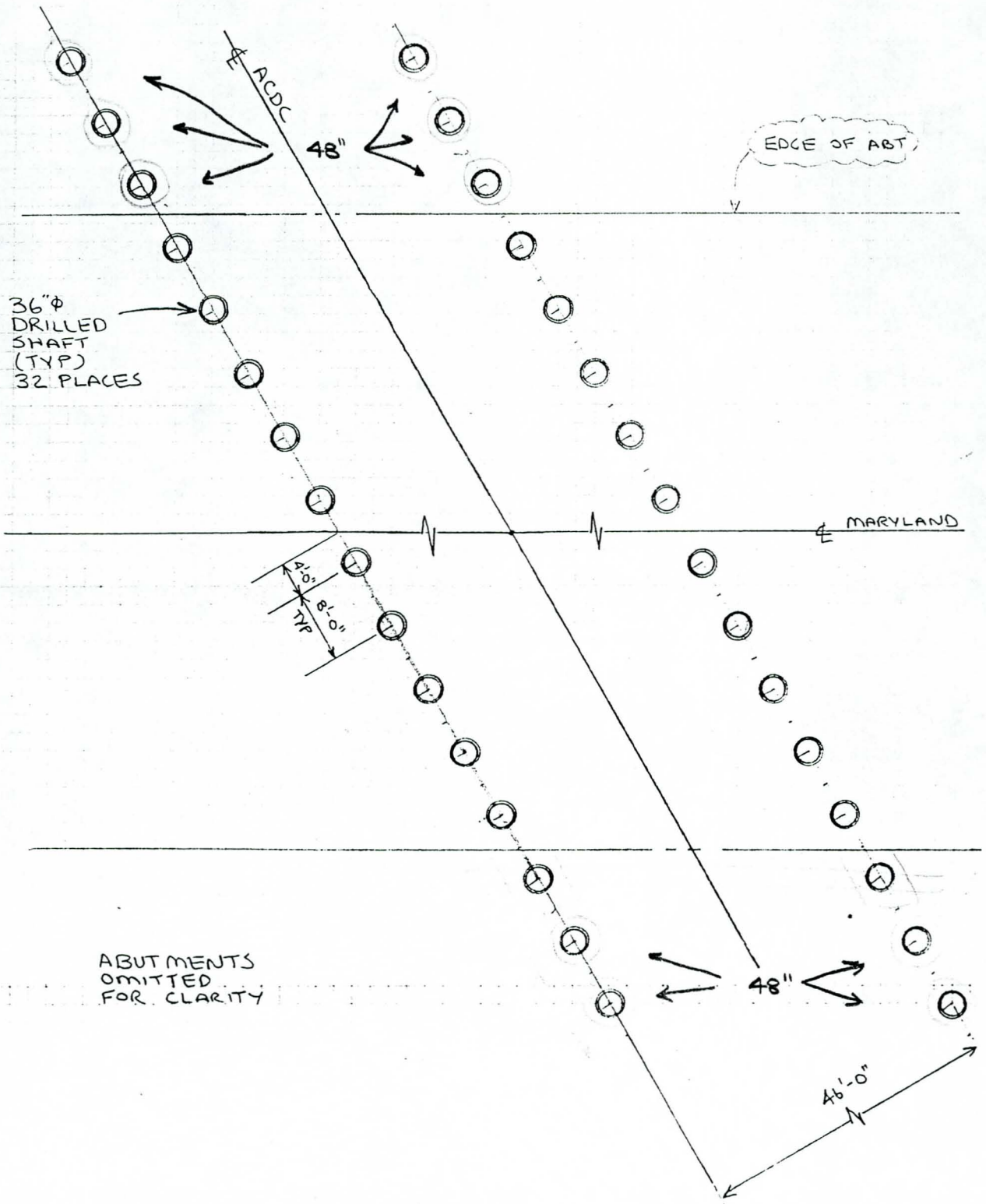

DRILLED SHAFTS

DESIGN APPROACH

DESIGN UPPER PORTION OF DRILLED SHAFT AS PROPPED CANTILEVER: THE FLOOR OF THE ACDC AT THE FIXED END, AND THE SUPERSTRUCTURE AT THE PROPPED END

CHECK THE SUPERSTRUCTURE FOR THE ADDITIONAL COMPRESSION DUE TO THE PROP REACTION

DESIGN LOWER PORTION OF DRILLED SHAFT AS EMBEDDED PILE SUBJECTED TO THE BASE MOMENT AND SHEAR

THE VERTICAL LOAD MAKES THE UPPER PORTION A BEAM-COLUMN, AND NEEDS TO BE EVALUATED FOR SETTLEMENT OF THE LOWER SECTION.

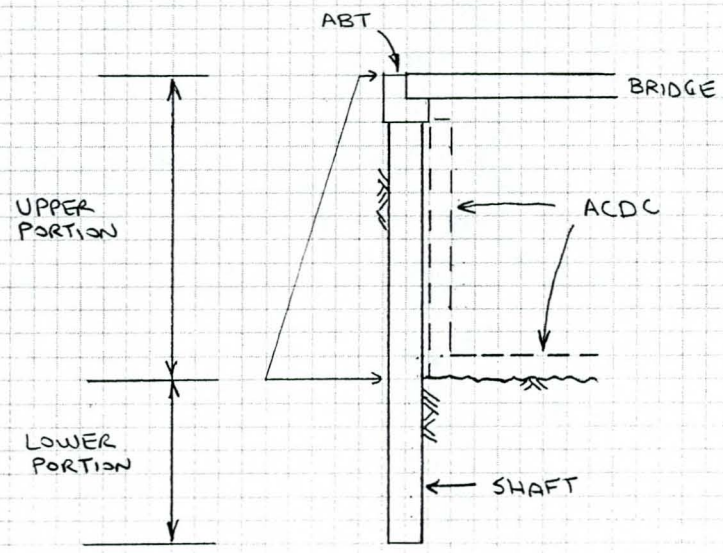

DRILLED SHAFTS

DESIGN UPPER PORTION

GRADE ELEV ≐ 1245 (HIGH SIDE AT ABT 2)

ACDC INVERT = 1216.12 AT WALLS

ACDC WALL HEIGHT = 24.50 FT

ASSUME ACDC FLOOR = 2.00 FT THICKNESS

SHAFT UPPER LENGTH = 1245 − 1214 = 31 FT

SHAFT SPACING = 8 FT

2FT SURCHARGE = 0.48 KLF

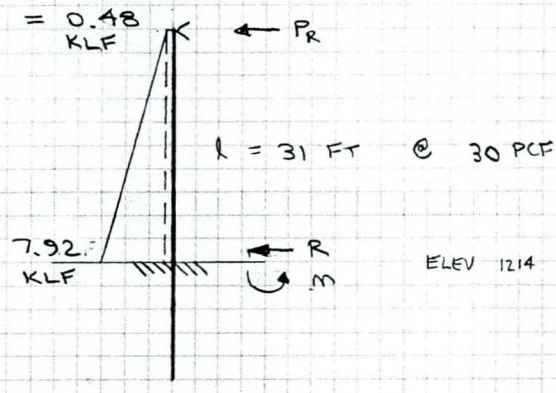

ℓ = 31 FT @ 30 PCF HORIZ × 8ft

ELEV 1214

FOR PURE CANTILEVER

UNIFORM LOAD $\Delta_1 = \dfrac{w\ell^4}{8EI} = w\ell\,\dfrac{\ell^3}{8EI}$

TRIANGULAR LOAD $\Delta_2 = \dfrac{W\ell^3}{15EI}$

$\Delta_1 = 14.88\,\ell^3/8EI = 1.86\,\ell^3/EI$

$\Delta_2 = 115.32\,\ell^3/15EI = 7.668\,\ell^3/EI$

PROPPED REACTION $\Delta = \dfrac{P_R\ell^3}{3EI}$

$P_R = \dfrac{3EI}{\ell^3}\Delta \quad \dfrac{3EI}{\ell^3}\left(9.548\,\ell^3/EI\right) = 28.644^K$

$R = 14.88^K + 115.32^K - 28.644^K = 101.556^K$

$M = 14.88^K(15.5') + 115.32^K(10.33') - 28.644^K(31') = 534$ FT-K

DRILLED SHAFTS

AXIAL FORCE = 153 K PER SHAFT FROM ABUTMENT DESIGN

"PROP" FORCE = 29 K TO BE ADDED TO SUPERSTRUCTURE FOR CHECK

BASE SHEAR = 102 K

BASE MOMENT = 534 FT-K

CHECK SHEAR STRESS IN CONCRETE (SPIRAL REINF)

$$v = \frac{V}{b_w d} = \frac{102000 \text{ LB}}{36'' \times 29''} = 98 \text{ PSI}$$

$$v_c = 0.95\sqrt{4000} = 60 \text{ PSI}$$

$$A_v = \frac{(98-60)\,36'' \times 12''}{24000} = 0.68 \text{ IN}^2/\text{FT}$$

PITCH = 3" (4 WINDS PER FOOT = 8 LEGS)

$A_{SPIRAL} = 0.11 \text{ IN}^2$

8 LEGS × 0.11 = 0.88 IN^2/FT > 0.68 IN^2/FT

USE 3/8"φ 60 KSI
SPIRAL WIRE TIES AT 3" PITCH

COLUMN INTERACTION : SEE FOLLOWING DATA AND DIAGRAM

$$e = M/P = \frac{534 \text{ FT-K}}{153 \text{ K}} \times 12 = 41.88 \text{ INCHES}$$

BY INTERPOLATION

M_U = 1782 FT-K , 35% M_U = 624 FT-K > 53.4 FT-K OK

35% P_U = 624 × 12 / 41.88 = 179 K > 153 K OK

DRILLED SHAFTS

THE DRILLED SHAFT IS DESIGNED BY THE "BASIC" PROGRAM IN WHICH

- THE ROUND SHAPE IS REPRESENTED BY A STACK OF EQUIVALENT RECTANGULAR SLICES, THE TOTAL AREA OF WHICH EQUALS THAT OF THE CIRCLE.
- THE REBAR IS "ASSIGNED" TO THE SLICE IN WHICH THE CENTROID OCCURS.
- THE ALLOWABLE STRESS DESIGN CAPACITY IS TAKEN AS 35% OF THE LOAD FACTOR DESIGN CAPACITY USING $\phi = 1.0$.
- SLENDERNESS OF THE DRILLED SHAFT IS NEGLIGIBLE SINCE IT IS BRACED AGAINST SIDESWAY BY FRAME ACTION IN BOTH DIRECTIONS

FROM THE "WORST CASE" LOADING, THE UTILIZATION IS APPROXIMATELY

$$\frac{534 \text{ FT-K APPLIED}}{624 \text{ FT-K ALLOWABLE}} = 86\%$$

ALSO NOTE THAT, SINCE THE ECCENTRICITY IS GREATER THAN THE BALANCED CONDITION, EXCLUSION OF THE D.S. SELF WEIGHT IS CONSERVATIVE : AN INCREASE IN AXIAL FORCE CAUSES A REDUCTION IN ECCENTRICITY AND AN INCREASE IN CORRESPONDING MOMENT CAPACITY.

FOR EMBEDDED PORTION DESIGN CONSIDER SELF WEIGHT

$$153^K + (31 ft)(1.06 \text{ KLF}) =$$
$$153^K + 33^K \text{ EXPOSED SELF WT.} = 186^K$$

EQUIVALENT WIDTH OF RECTANGULAR SLICES
FOR ROUND SECTIONS (maximum 50 slices)

Project FCDMC 88-39
Item Maryland Avenue Bridge
Design Drilled Shafts
Date 31AUG89 Dan Shiosaka

Diameter 36.0 inches
Area 1017.9 square inches

Provide input to define the section from the extreme fiber to the CL

Slice Thick.	Ext.Rad. Distance	Chord Length	Arc Length	Sector Area	Segment Area	Equiv. Width	Slice Area
1.20	1.2	12.9	13.2	119.0	10.4	8.7	10.4
1.20	2.4	18.0	18.8	169.2	29.1	15.6	18.7
1.20	3.6	21.6	23.2	208.5	53.0	19.9	23.8
1.20	4.8	24.5	26.9	242.2	80.7	23.1	27.7
1.20	6.0	26.8	30.3	272.5	111.5	25.7	30.8
1.20	7.2	28.8	33.4	300.4	144.9	27.8	33.4
1.20	8.4	30.5	36.3	326.7	180.5	29.7	35.6
1.20	9.6	31.8	39.1	351.6	217.9	31.2	37.4
1.20	10.8	33.0	41.7	375.6	256.8	32.4	38.9
1.20	12.0	33.9	44.3	398.8	297.0	33.5	40.2
1.20	13.2	34.7	46.8	421.5	338.2	34.3	41.2
1.20	14.4	35.3	49.3	443.7	380.2	35.0	42.0
1.20	15.6	35.7	51.7	465.6	422.8	35.5	42.6
1.20	16.8	35.9	54.1	487.3	465.8	35.8	43.0
1.20	18.0	36.0	56.5	508.9	508.9	36.0	43.2

℄ AXIS OF SYMM.

INPUT INTO "BASIC" PROGRAM

REBAR LAYOUT FOR MODEL

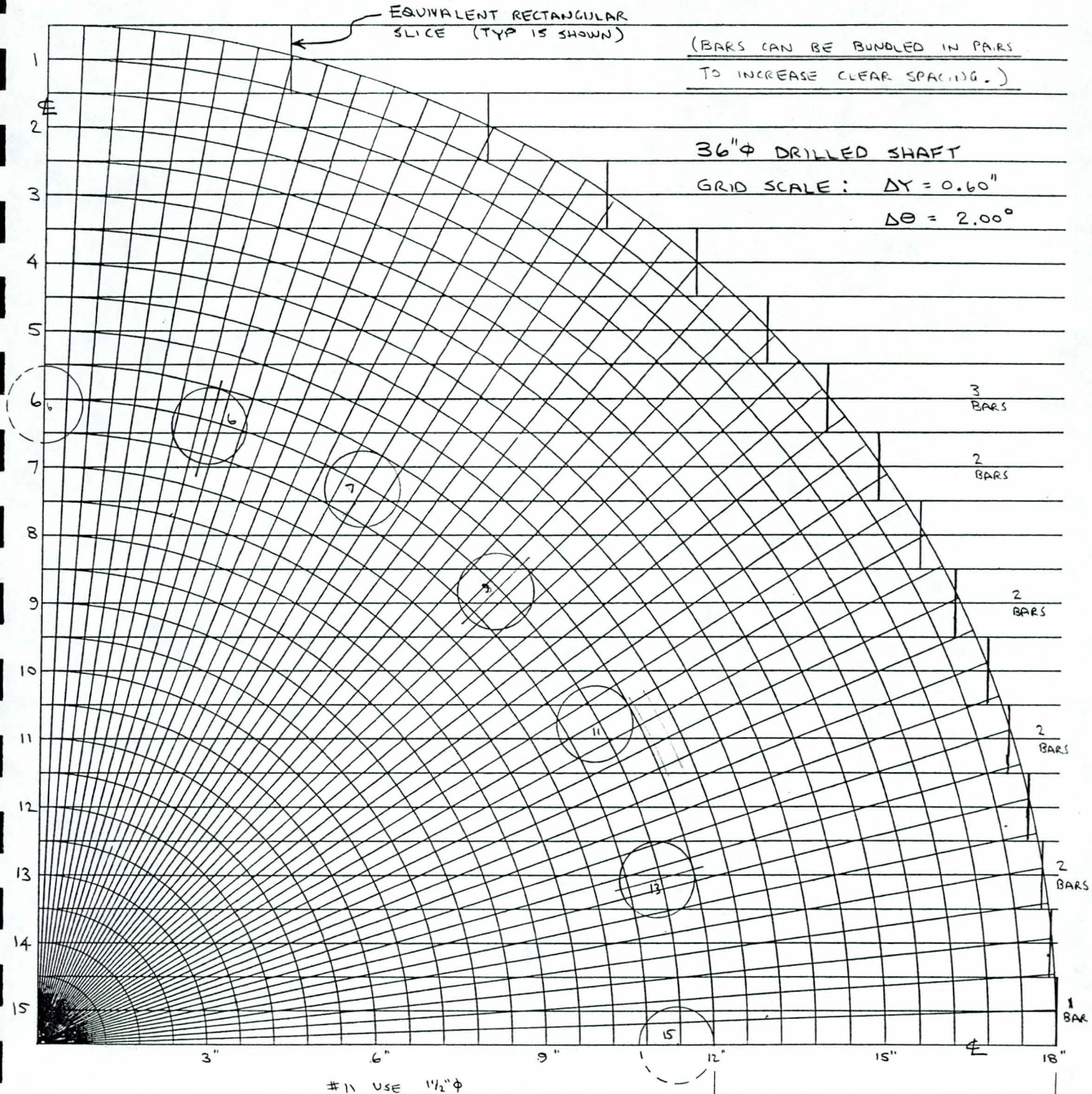

(#11 @ 15°)
TOTAL 24 BARS
$A_s = 37.44 \text{ in}^2$
$A_c = 1018 \text{ in}^2$
$\rho \approx 3.68\ \%$

$18" - 6" - \frac{1}{2}\left(\frac{11}{8}\right) \doteq 11\frac{1}{4}"$

31 AUG 89 DRG
09-18-89 FP

6.08

```
2000 DATA "Drilled Shaft 36in, 6in cover - 24 #11",30,4.0,60,2900
0,1.0
2010 DATA 1.20,08.7,0
2020 DATA 1.20,15.6,0
2030 DATA 1.20,19.9,0
2040 DATA 1.20,23.1,0
2050 DATA 1.20,25.7,0
2060 DATA 1.20,27.8,4.68
2070 DATA 1.20,29.7,3.12
2080 DATA 1.20,31.2,0
2090 DATA 1.20,32.4,3.12
2100 DATA 1.20,33.5,0
2110 DATA 1.20,34.3,3.12
2120 DATA 1.20,35.0,0
2130 DATA 1.20,35.5,3.12
2140 DATA 1.20,35.8,0
2150 DATA 1.20,36.0,1.56
2160 DATA 1.20,36.0,1.56
2170 DATA 1.20,35.8,0
2180 DATA 1.20,35.5,3.12
2190 DATA 1.20,35.0,0
2200 DATA 1.20,34.3,3.12
2210 DATA 1.20,33.5,0
2220 DATA 1.20,32.4,3.12
2230 DATA 1.20,31.2,0
2240 DATA 1.20,29.7,3.12
2250 DATA 1.20,27.8,4.68
2260 DATA 1.20,25.7,0
2270 DATA 1.20,23.1,0
2280 DATA 1.20,19.9,0
2290 DATA 1.20,15.6,0
2300 DATA 1.20,08.7,0
```

31 AUG 89 DRS
09-18-89 FP

6.09

Column Interaction Diagram for
Drilled Shaft 36in, 6in cover - 24 #11

Input Echo

Number of slices in input: 30
f'c (ksi): 4
fy (ksi): 60
E (ksi): 29000
Phi Factor: 1

INTERACTION VALUES FOR

Drilled Shaft 36in, 6in cover - 24 #11

POINT	FORCE	MOMENT	ECCENTRICITY	
1	+1052.42	+1842.99	+21.01	BALANCED CONDITION
2	-1994.61	+39.58	-0.24	
3	-1949.72	+101.06	-0.62	
4	-1892.34	+174.80	-1.11	
5	-1694.43	+378.00	-2.68	
6	-1439.77	+624.38	-5.20	
7	-1186.31	+846.53	-8.56	
8	-917.97	+1059.45	-13.85	
9	-656.87	+1241.75	-22.68	
10	-394.07	+1407.77	-42.87	
11	-141.76	+1543.20	-130.64	
12	+120.94	+1658.75	+164.59	
13	+378.08	+1743.61	+55.34	
14	+647.87	+1806.05	+33.45	
15	+920.56	+1841.70	+24.01	
16	+1208.91	+1825.57	+18.12	
17	+1503.60	+1789.62	+14.28	
18	+1772.56	+1750.63	+11.85	
19	+2022.10	+1706.46	+10.13	
20	+2257.04	+1653.22	+8.79	
21	+2469.64	+1597.42	+7.76	
22	+2680.15	+1533.66	+6.87	
23	+2877.04	+1461.49	+6.10	
24	+3055.11	+1388.18	+5.45	
25	+3234.12	+1305.14	+4.84	
26	+3395.41	+1223.11	+4.32	
27	+3558.20	+1130.11	+3.81	
28	+3713.09	+1032.93	+3.34	
29	+3848.26	+939.93	+2.93	
30	+3969.27	+849.93	+2.57	
31	+4096.20	+745.63	+2.18	
32	+5580.576			AXIAL FORCE ONLY

AREA OF SECTION = 1018.08
STEEL RATIO = 0.0368
MOMENT OF INERTIA = 82709.68
MOMENT OF INERTIA DUE TO STEEL = 2484.52

DRILLED SHAFTS

CHECK THE SUPERSTRUCTURE FOR AN ADDITIONAL 29 K PER DRILLED SHAFT ACTING NORMAL TO THE ROW LINE

ADDITIONAL COMPRESSIVE FORCE PER BOX GIRDER

$$P = (10 \text{ SHAFTS})(29^K)(\cos 30.176°) / 17 \text{ BOXES}$$
$$\doteq 15 \text{ KIPS}$$

$$C = \frac{P}{A} = \frac{15000 \text{ LB}}{817 \text{ IN}^2} = 18 \text{ PSI}$$

WORST CASE COMPRESSIVE STRESSES

$1272 + 18 = 1290$ PSI $<$ 2000 PSI STILL OK

DRILLED SHAFTS OK AS EXPOSED BEAM COLUMN
SUPERSTRUCTURE IS OK WITH ADDITIONAL COMPRESSION

NOW CHECK EMBEDDED PORTION FOR BASE SHEAR AND MOMENT, AND VERTICAL LOAD CAPACITY.:

$P = 186^K$ (ABUTMENT REACTION 153^K PLUS EXPOSED SELF WEIGHT OF 33^K)
SUBMERGED SELF WEIGHT NEGLIGIBE

$V = 102^K$

$M = 534$ FT-K

ASSUME DEPTH EMBEDMENT $> 4.0\,\phi = 12.0$ FT

TIP ELEVATION MUST BE SET AT OR BELOW $< 1214 - 12$ FT ≈ 1202.00

CHECK DRILLED SHAFT THEN
CHECK SOIL CAPACITY

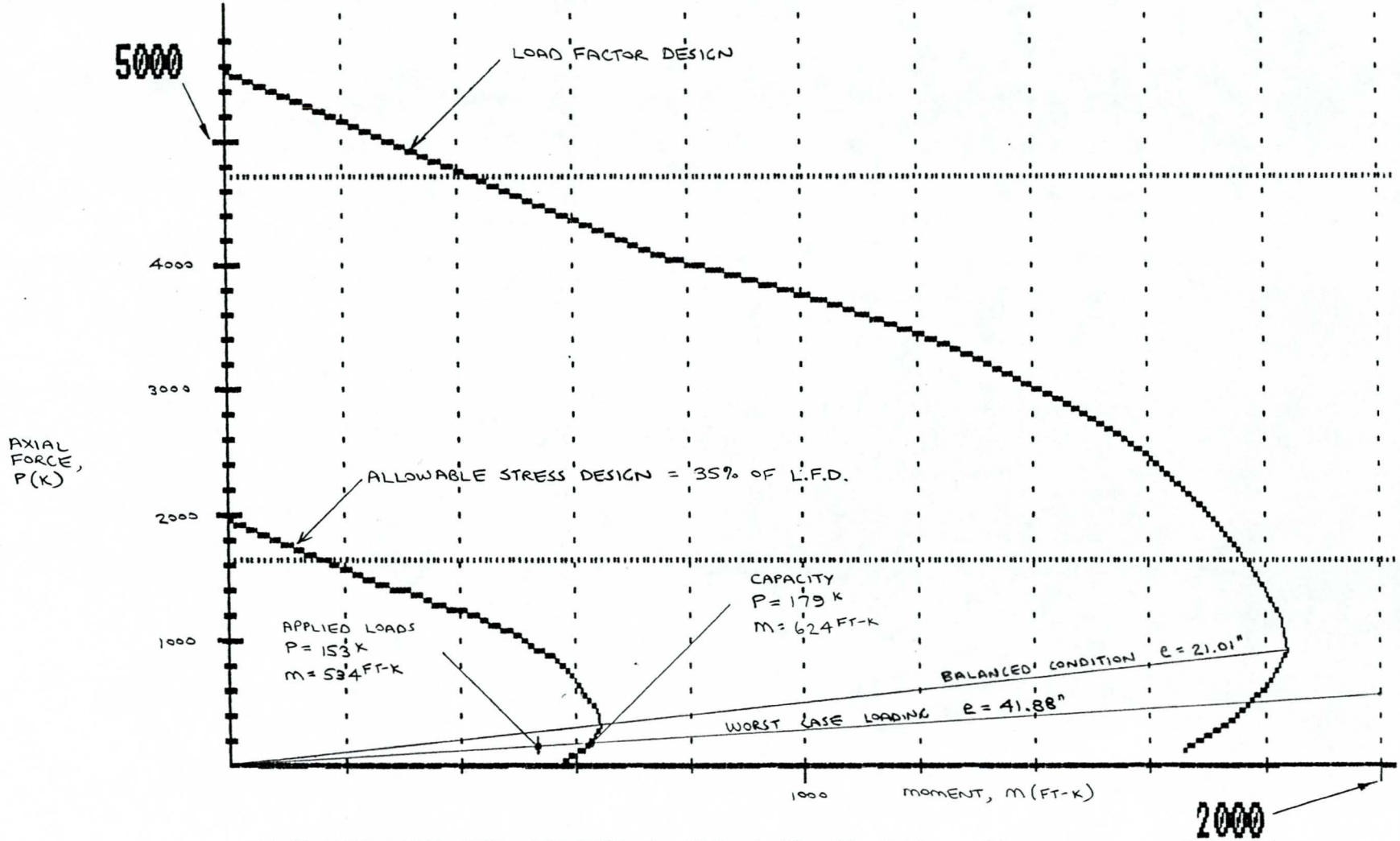

P-M DIAGRAM FOR COLUMN Drilled Shaft 36in, 6in cover - 24 #11

UPPER PORTION

Ok

05SEP89 DRS
09-18-89 FP

DRILLED SHAFTS

FROM NAVFAC DM-7 FIG 13-4
FOR L/T > 4 AT A DEPTH Z = 1.25 T = 3.75 FEET,

M = Fm (m)
= 0.76 (534 FT-K)
= 406 FT-K FROM APPLIED MOMENT

M = Fm (V T)
= 0.76 (102 K x 3 FT)
= 233 FT-K FROM APPLIED SHEAR

M_{TOTAL} = 639 FT-K

P = 186 K

e = 41.23"

M_U = 1777 FT-K 35% M_U = 622 FT-K
35% P_U = 622 FT-K / 41.23" x 12 = 181 K

2.7% OVER ALLOWABLE STRESSES, SAY OK.

SAME REINF AS UPPER PORTION.

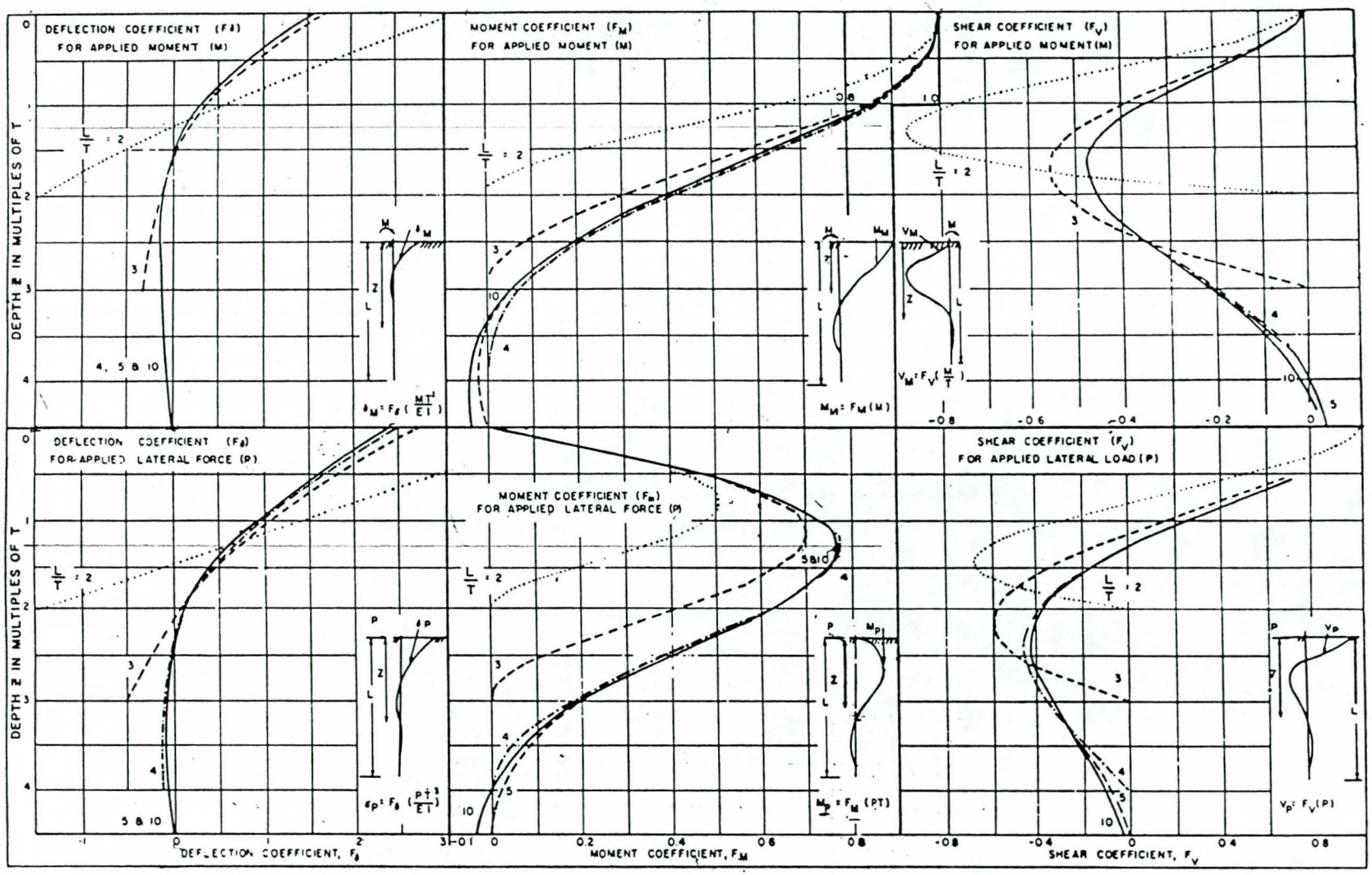

FIGURE 13-4
Influence Values for Pile with Applied Lateral Load and Movement
(Case I. Flexible Cap or Hinged End Condition)

7-13-16

REFERENCE

6.13
REF

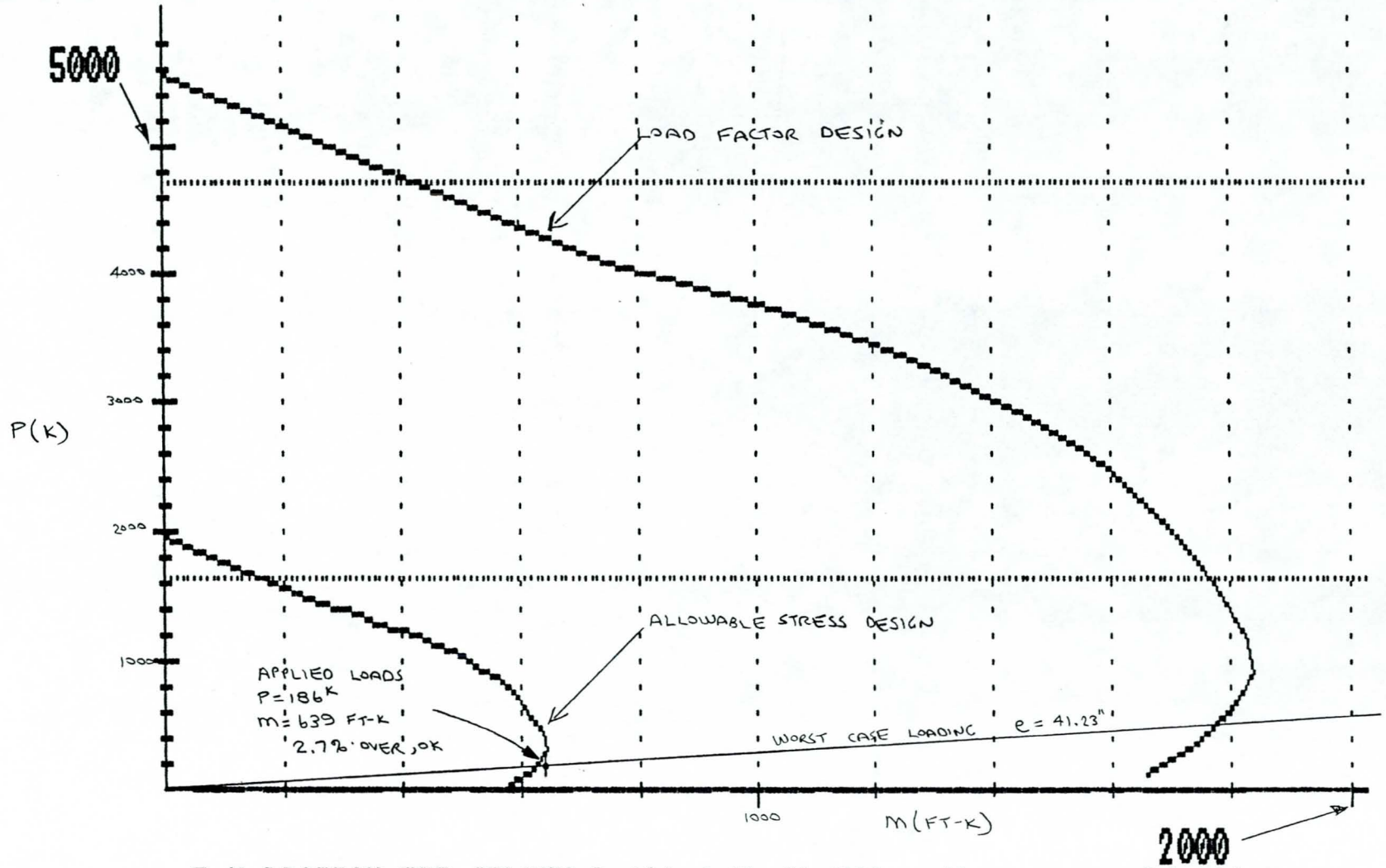

P-M DIAGRAM FOR COLUMN Drilled Shaft 36in, 6in cover - 24 #11

Ok

05 SEP 89 DRS
09-18-89 FP

LOWER PORTION

DRILLED SHAFTS

CHECK SOILS FOR VERTICAL LOADING

VERTICAL LOAD = 186 K

FROM PAGES 2 AND 3 OF SHB ADDENDUM #1 TO REPORT E89-68, CHECK THE CAPACITIES FOR END BEARING AND SIDE SHEAR:

ϕ = DIAMETER = 3.0

q_{SAFE} = 186 K REQUIRED

ASSUME MIN. 10' EMBEDMENT BELOW ACDC

TIP ELEV = 1214 - 10

= 1204.00 MAX ELEV.

END BEARING q_{SAFE} = 241 K

SIDE SHEAR q_{SAFE} = 55 K

IF BOTH ARE CONSIDERED

q_{SAFE} = 296 K > 186 K 59%

IF SIDE SHEAR IS NEGLECTED

q_{SAFE} = 241 K > 186 K 30%, OK

SINCE VERTICAL LOADING CAPACITY (AT THE RECOMMENDED MINIMUM SHAFT EMBEDMENT OF 10 ft BELOW ACDC) IS OK, THE LATERAL LOADING CASES MAY GOVERN THE DESIGN.

CHECK THE SMALLER OF COHESIVE AND COHESIONLESS CAPACITIES. FROM PAGES 7, AND 8 OF SHB REPORT E89-68

COHESIVE SOIL RECOMMENDED PROPERTIES

C_u = 1000 LB/FT^2

COHESIONLESS SOIL RECOMMENDED PROPERTIES

K_P = 3.0

γ = 120 LB/FT^3

FOR BOTH CASES, THE SHAFTS ARE "FREE-HEADED"

DRILLED SHAFTS

COHESIVE SOIL ASSUMPTION

LATERAL LOAD CAPACITY USE F.S. = 1.75

$$\frac{P}{C_u D^2} = \frac{(102^K) \times 1.75}{(1.0\ K/FT^2)(3\ FT)^2} \doteq 20$$

FROM FIGURE 5, FOR $P/C_u D^2 = 20$ AND $e/D = 2$

$L/D = 10$

$L = 30$ FT ← GOVERNS

COHESIONLESS SOIL ASSUMPTION

LATERAL LOAD CAPACITY USE F.S. = 1.75

$$\frac{P}{K_p D^3 \gamma} = \frac{(102^K) \times 1.75}{3.0\ (3\ FT)^3\ (0.120\ K/FT^3)} = 18$$

FROM FIGURE 6, FOR $P/K_p D^3 \gamma = 18$ AND $e = 5.2$ FT

TRYING

$L = 21$ FT $\quad \left.\begin{array}{l} L/D = 7 \\ e/L = 0.25 \end{array}\right\}$ OK

$L = 21$ FT

SHAFT TIP ELEVATION

1214 − 30 = ELEV 1184.0 FT.

QUANTITY OF DRILLED SHAFTS "UNDER" THE ABUTMENTS

ABT 1	11 (1238 − 1184)	=	594 FT
ABT 2	11 (1238.5 − 1184)	=	600 FT
			1194 FT

PILE DESIGN

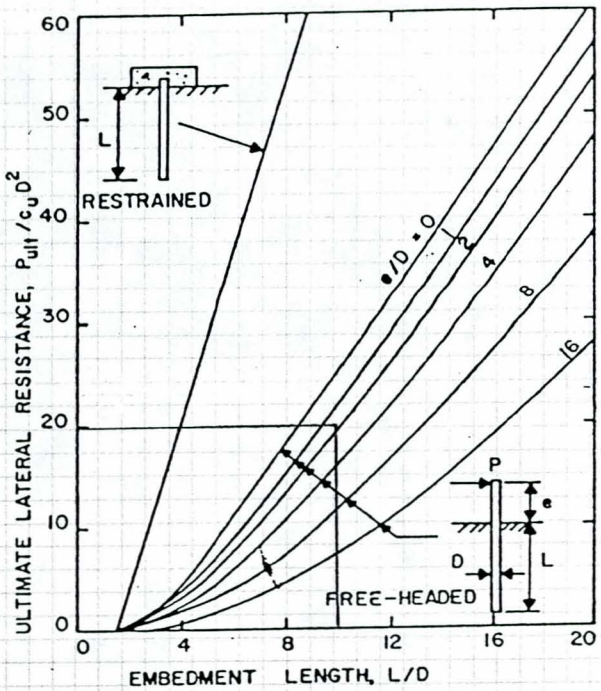

FIG. 5.—ULTIMATE LATERAL RESISTANCE FOR COHESIVE SOILS RELATED TO EMBEDMENT LENGTH

$e = M/P$

$e = 534^{FT\text{-}K} / 102^{K}$

$e = 5.2$ FT

$e/d = 5.2 / 3.0$

$e/d = 1.7$

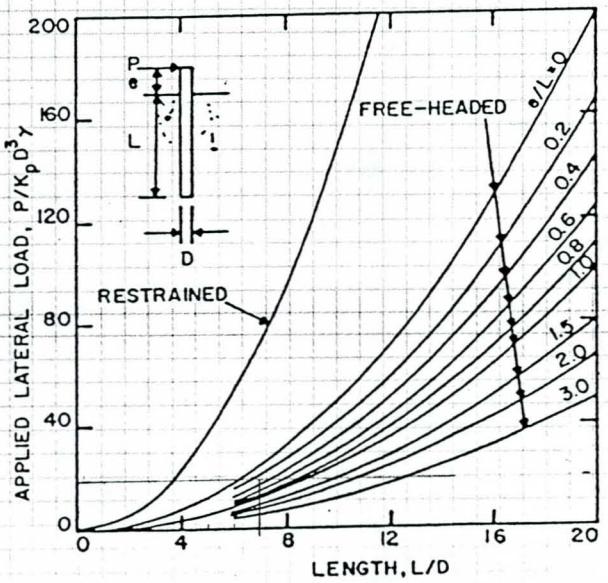

FIG. 6.—ULTIMATE LATERAL RESISTANCE FOR COHESIONLESS SOILS RELATED TO EMBEDMENT LENGTH

$e = M/P = 5.2$ FT

DRILLED SHAFTS

FOR THE DRILLED SHAFTS BEYOND THE WIDTH OF THE ABUTMENTS AND BRIDGE, THERE IS NO SUPERSTRUCTURE TO PROP THE END OF THE CANTILEVER.

FOR THESE SHAFTS ASSUME NO SURCHARGE SINCE THEY ARE OUTSIDE THE "ROADWAY TEMPLATE". ALTHOUGH TOP OF SHAFT IS AT BOT OF ABT EL 1238, 1238.5 DESIGN FOR:

1. EL 1243 ± CONSERVATIVE

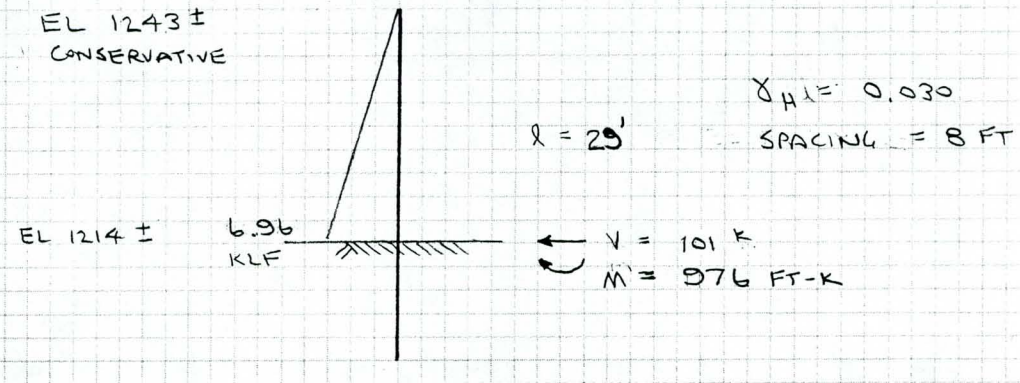

AXIAL FORCE IS DUE TO SELF WEIGHT ONLY

$$P = (1.06 \text{ KLF})(31) = 33 \text{ K}$$

TIP ELEVATION WILL NOT BE CONTROLLED BY VERTICAL LOAD

EQUIVALENT LOADING SYSTEM

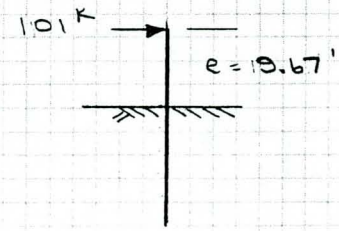

BY COMPARISON 36"Φ IS INSUFFICIENT

TRY 48"Φ

SPACING WILL BE KEPT THE SAME FOR SIMPLICITY

I.E. CLEAR SPACE BETWEEN SHAFTS DECREASES

EQUIVALENT WIDTH OF RECTANGULAR SLICES
FOR ROUND SECTIONS (maximum 50 slices)

Project FCDMC 88-39
Item Maryland Avenue Bridge
Design Drilled Shafts
Date 07SEP89 DRShiosaka

Diameter 48.0 inches
Area 1809.6 square inches

Provide input to define the section from the extreme fiber to the CL

Slice Thick.	Ext.Rad. Distance	Chord Length	Arc Length	Sector Area	Segment Area	Equiv. Width	Slice Area
1.60	1.6	17.2	17.6	211.5	18.5	11.6	18.5
1.60	3.2	23.9	25.1	300.9	51.8	20.8	33.3
1.60	4.8	28.8	30.9	370.7	94.2	26.5	42.4
1.60	6.4	32.6	35.9	430.6	143.4	30.8	49.3
1.60	8.0	35.8	40.4	484.5	198.2	34.3	54.8
1.60	9.6	38.4	44.5	534.1	257.6	37.1	59.4
1.60	11.2	40.6	48.4	580.8	320.9	39.5	63.3
1.60	12.8	42.5	52.1	625.1	387.4	41.6	66.5
1.60	14.4	44.0	55.6	667.7	456.6	43.2	69.2
1.60	16.0	45.3	59.1	709.0	528.0	44.6	71.4
1.60	17.6	46.3	62.4	749.3	601.3	45.8	73.2
1.60	19.2	47.0	65.7	788.8	675.9	46.7	74.7
1.60	20.8	47.6	69.0	827.7	751.6	47.3	75.7
1.60	22.4	47.9	72.2	866.4	828.0	47.8	76.4
1.60	24.0	48.0	75.4	904.8	904.8	48.0	76.7

INPUT INTO "BASIC" PROGRAM

REBAR LAYOUT FOR MODEL

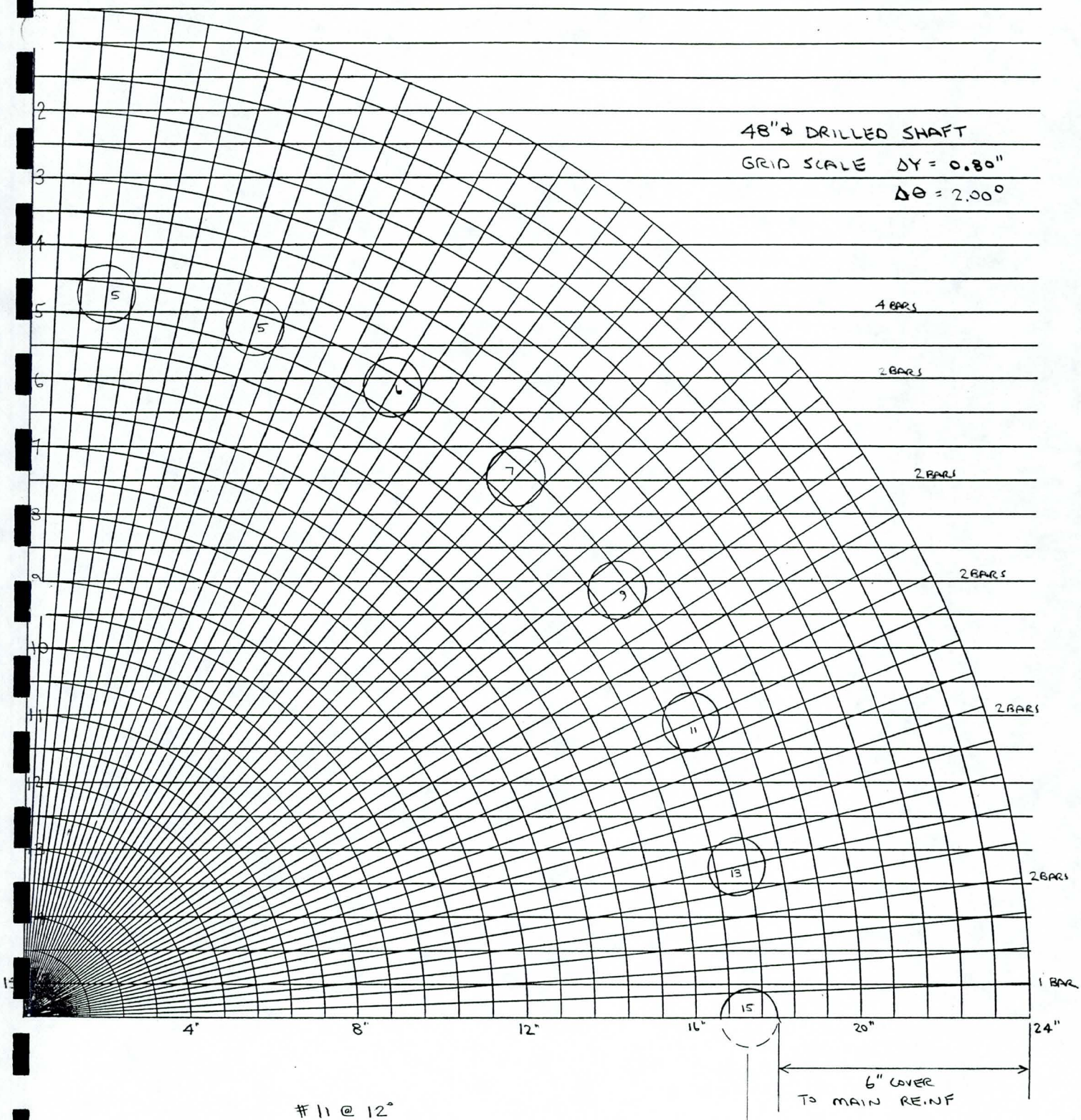

#11 @ 12"

TOTAL 30 BARS

$A_s = 46.8 \text{ in}^2$

$A_c = 1810$

$\rho \approx 2.59\%$

$24 - 6 - \frac{1}{2}\left(\frac{12}{9}\right) \doteq 17\frac{1}{4}"$

```
2000 DATA "Drilled Shaft 48in, 6in cover - 30 #11",30,4.0,60,2900
0,1.0
2010 DATA 1.60,11.6,0
2020 DATA 1.60,20.8,0
2030 DATA 1.60,26.5,0
2040 DATA 1.60,30.8,0
2050 DATA 1.60,34.3,6.24
2060 DATA 1.60,37.1,3.12
2070 DATA 1.60,39.5,3.12
2080 DATA 1.60,41.6,0
2090 DATA 1.60,43.2,3.12
2100 DATA 1.60,44.6,0
2110 DATA 1.60,45.8,3.12
2120 DATA 1.60,46.7,0
2130 DATA 1.60,47.3,3.12
2140 DATA 1.60,47.8,0
2150 DATA 1.60,48.0,1.56
2160 DATA 1.60,48.0,1.56
2170 DATA 1.60,47.8,0
2180 DATA 1.60,47.3,3.12
2190 DATA 1.60,46.7,0
2200 DATA 1.60,45.8,3.12
2210 DATA 1.60,44.6,0
2220 DATA 1.60,43.2,3.12
2230 DATA 1.60,41.6,0
2240 DATA 1.60,39.5,3.12
2250 DATA 1.60,37.1,3.12
2260 DATA 1.60,34.3,6.24
2270 DATA 1.60,30.8,0
2280 DATA 1.60,26.5,0
2290 DATA 1.60,20.8,0
2300 DATA 1.60,11.6,0
```

Column Interaction Diagram for
Drilled Shaft 48in, 6in cover - 30 #11

Input Echo

Number of slices in input: 30
f'c (ksi): 4
fy (ksi): 60
E (ksi): 29000
Phi Factor: 1

INTERACTION VALUES FOR

Drilled Shaft 48in, 6in cover - 30 #11

POINT	FORCE	MOMENT	ECCENTRICITY	
1	+2209.85	+4154.82	+22.56	BALANCED CONDITION
2	-2478.93	+93.81	-0.45	
3	-2399.12	+239.54	-1.20	
4	-2204.55	+543.91	-2.96	
5	-1809.96	+1105.76	-7.33	
6	-1440.08	+1605.21	-13.38	
7	-1067.82	+2068.56	-23.25	
8	-695.50	+2490.92	-42.98	
9	-335.69	+2855.91	-102.09	
10	+23.10	+3185.69	+1654.71	
11	+369.84	+3462.48	+112.35	
12	+726.05	+3701.27	+61.17	
13	+1076.39	+3888.13	+43.35	
14	+1439.61	+4034.45	+33.63	
15	+1805.79	+4134.22	+27.47	
16	+2175.42	+4155.60	+22.92	
17	+2588.54	+4075.43	+18.89	
18	+2977.13	+3981.47	+16.05	
19	+3343.39	+3877.38	+13.92	
20	+3693.36	+3758.04	+12.21	
21	+4018.07	+3629.40	+10.84	
22	+4337.15	+3484.05	+9.64	
23	+4639.81	+3321.06	+8.59	
24	+4920.67	+3150.10	+7.68	
25	+5199.21	+2960.05	+6.83	
26	+5456.62	+2765.54	+6.08	
27	+5712.28	+2550.85	+5.36	
28	+5956.40	+2325.85	+4.69	
29	+6176.02	+2103.48	+4.09	
30	+6382.03	+1876.31	+3.53	
31	+6565.37	+1661.54	+3.04	
32	+8802.608			AXIAL FORCE ONLY

AREA OF SECTION = 1809.92
STEEL RATIO = 0.0259
MOMENT OF INERTIA = 261353.74
MOMENT OF INERTIA DUE TO STEEL = 7218.43

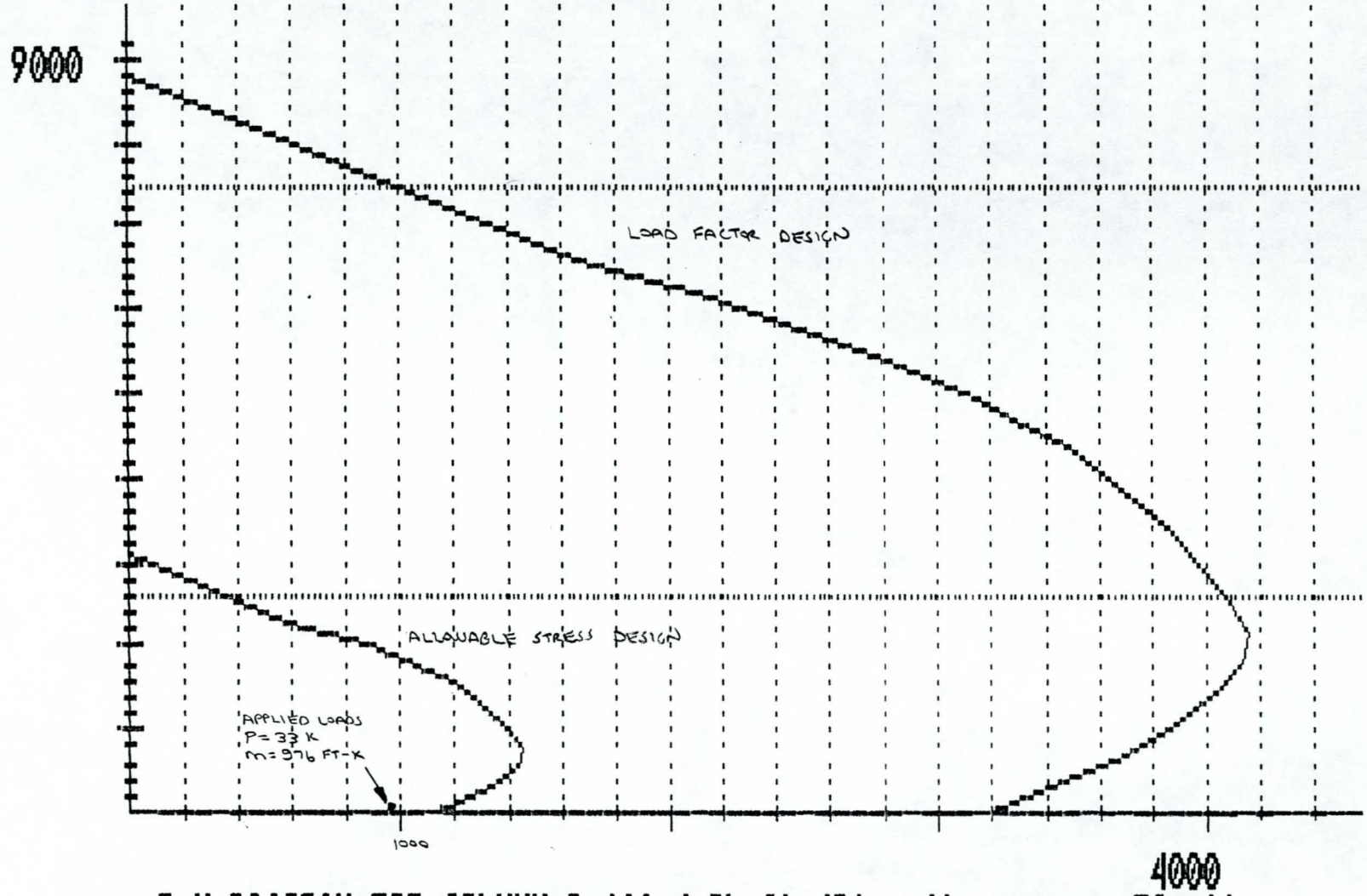

P-M DIAGRAM FOR COLUMN Drilled Shaft 48in, 6in cover - 30 #11

Ok

"WING" SHAFTS OUTSIDE THE ABTS

09-18-89 FP

DRILLED SHAFTS

48" ϕ DESIGN (BEAM COLUMN)

$$e = \frac{M}{P} = \frac{976 \text{ FT-K}}{33 \text{ K}} = 355 \text{ INCHES}$$

FROM INTERACTION OUTPUT INTERPOLATION

$M_U = 2942$ FT-K
$P_U = 99$ K

			APPLIED LOADS	
35% M_U = 1030 FT-K	>	976 FT-K	OK
35% P_U = 35 K	>	33 K	OK

CHECK SOIL CAPACITY FOR LATERAL LOADS

COHESIVE SOIL ASSUMPTION

$$\frac{P}{C_U D^2} = \frac{101^K \times 1.75}{(1.0 \text{ K/FT}^2)(4 \text{ FT})^2} = 11$$

FROM FIGURE 5, FOR $P_U/C_U D^2 = 11$, AND $e/D = 2.4$

$L/D = 7.6$

$L = 7.6 \times 4 = 30.4$ FT ← GOVERNS

COHESIONLESS SOIL ASSUMPTION

$$\frac{P}{K_p D^3 \gamma} = \frac{101^K (1.75)}{3.0 (4)^3 (0.120)} = 8$$

FROM FIGURE 6 FOR $P/K_p D^3 \gamma = 8$ AND $e = 9.67$ FT

TRYING

$L = 20$ FT $\quad \left.\begin{array}{l} L/D = 5 \\ e/L = 0.5 \end{array}\right\}$ $L = 20$ OK

TIP ELEVATION IS ≈ 3 FT BELOW
OTHERS = ELEV 1181.00 FT

PILE DESIGN

$e/D = 9.67/4$
$= 2.4$

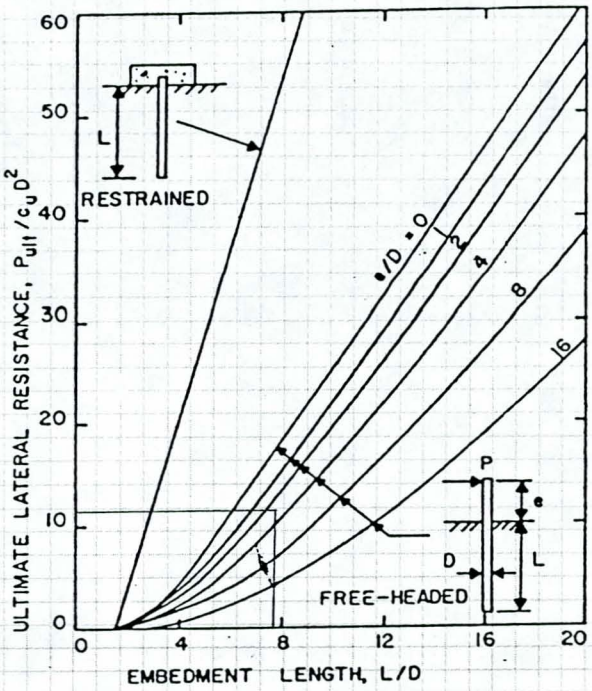

FIG. 5.—ULTIMATE LATERAL RESISTANCE FOR COHESIVE SOILS RELATED TO EMBEDMENT LENGTH

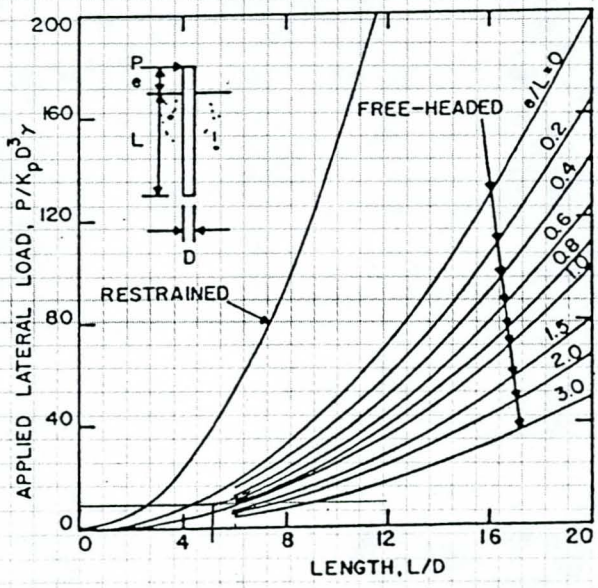

FIG. 6.—ULTIMATE LATERAL RESISTANCE FOR COHESIONLESS SOILS RELATED TO EMBEDMENT LENGTH

T.Y. LIN INTERNATIONAL
STRUCTURAL ENGINEERING
1817 N. 7th St., Suite 270, Phoenix, AZ 85006

PROJECT:	FCDMC 88-39
ITEM:	MARYLAND AVE BRIDGE
DESIGN:	DRILLED SHAFTS
DATE:	08 SEP 89 DRS 09-18-89 FP

SHEET: 6.26
OF
REVISION:

DRILLED SHAFT

EST QTY OF 48" ϕ

ABT 1 5 (1238 - 1181) = 285 FT

ABT 2 5 (1238.5 - 1181) = 288 FT

573 FT OF 48" ϕ SHAFTS

T.Y. LIN INTERNATIONAL STRUCTURAL ENGINEERING 1817 N. 7th St., Suite 270, Phoenix, AZ 85006	PROJECT: FCDMC ITEM: MARYLAND AVENUE BRIDGE DESIGN: ATTACHMENT OF ACDC WALLS DATE: 07 DEC 89 DRS 08-DEC-89	SHEET: 6.27 OF REVISION:

(NOT BY BRIDGE CONTRACTOR)

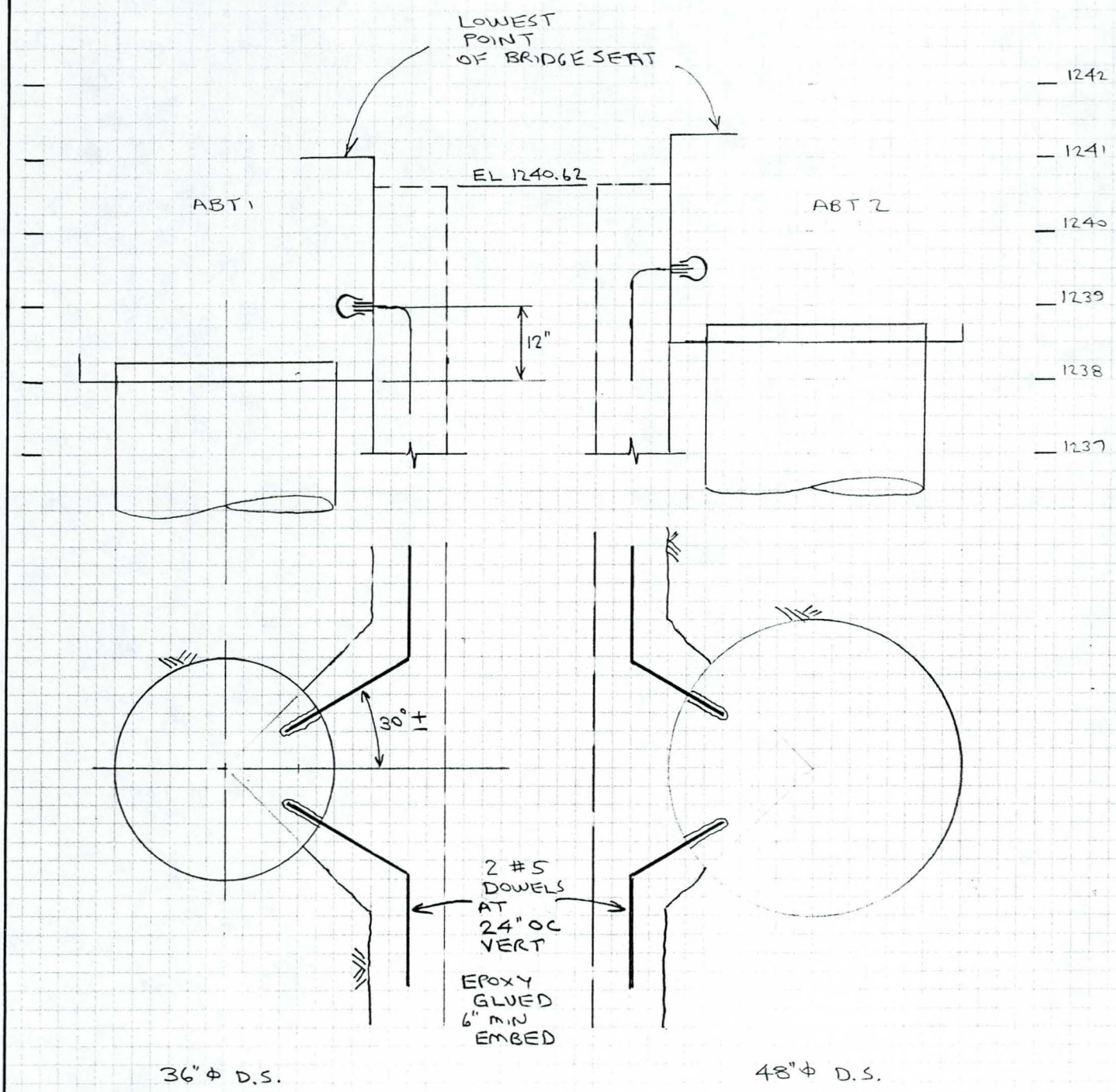

(NOT BY BRIDGE CONTRACTOR)

ACDC WALL DEAD LOAD (VERTICAL)

8 FT × 1 FT × 1 FT × 0.150 KCF = 1.2 K/FT OF DRILLED SHAFT

SHEAR CAPACITY OF #5
ASSUME 0.40 × 60 KSI × 0.31 SQ.IN. = 7.44 K PER BAR

SPACING REQD = 7.44 / 1.2 = 6 FT >> 2 FT PROVIDED

SOIL LOAD (LATERAL)

INTENSITY AT THE BOTTOM = 7.92 KLF (WORST CASE)

TENSILE CAPACITY OF BAR
ASSUME THE SAME 7.44 K PER BAR

SPACING REQD = (7.44 K × 2 BARS) / 7.92 KLF ≈ 2 FT.

USE #5 PAIRS AT 24" O.C. VERTICALLY
DRILLED AND EPOXY GLUED

USE #5 AT 24" HORIZONTALLY ALONG ABTS
THREADED INSERTS

7.0 APPROACH SLABS

APPROACH SLAB DESIGN

PER DIRECTION FROM THE FCDMC, THE APPROACH SLAB MUST BE DESIGNED TO SPAN LONGITUDINALLY FROM THE ABUTMENT LEDGE TO THE END OF SLAB (OR AT LEAST TO END OF POTENTIAL SOIL FAILURE WEDGE):

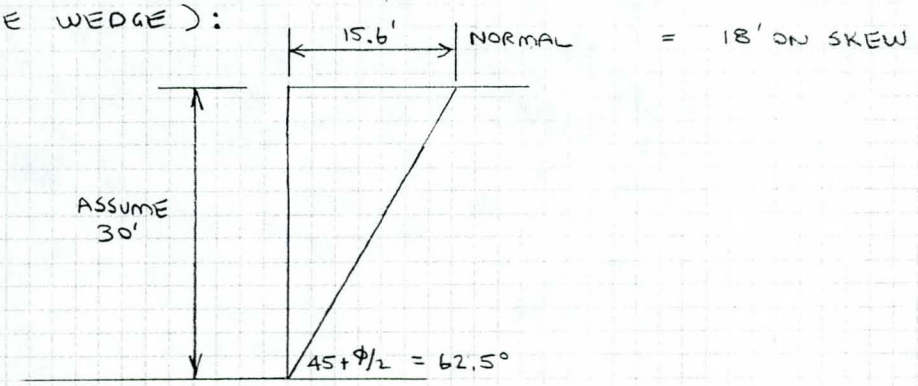

AT ABT 1 APPROACH SLAB IS ABOUT 33' LONGITUDINAL
AT ABT 2 " " " " 20' "

USE DESIGN SPAN = 18'
USE ADOT STD B-19.11 FOR ALL EXCEPT BOTTOM REINF:
TRY T = 12"
d = 9" (3" COVER AGAINST EARTH)

$w_{DL} = 0.150$ KLF PER FOOT WIDTH
$w_{DL2} = 0.025$ KLF A.C. PAVEMENT

$M_{DL} = (0.150 + 0.025)(18')^2/8 = 7.09$ FT-K

$M_{LL} = 900S = 900(18) = 16.20$ FT-K 3.24.3.2

$M = 7.09 + (1+30\%)(16.20) = 28.15$ FT-K

$A_s = \frac{M}{ad} = \frac{28.15}{1.76 \times 9} = 1.78$ IN²/FT

BOTTOM LONG. #9 @ 6" OC 2.00 □"

DISTRIBUTION REINF = $100/\sqrt{S} \leq 50\%$
= 24% = 0.43 IN²/FT
BOTTOM TRANS. # 6 @ 12" OC 0.44 □"

SPECIAL DESIGN CONSIDERATIONS

PER INSTRUCTIONS FROM THE FCDMC ON 25 OCT 89 THE EXTENT OF THE APPROACH SLAB AT ABT 2 SHALL BE INCREASED AS ILLUSTRATED BELOW

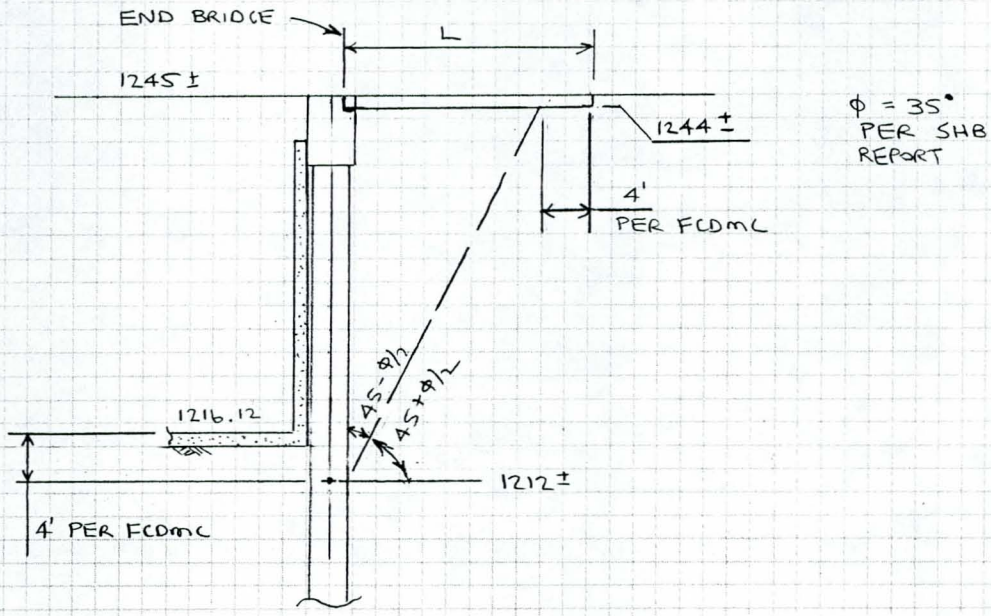

PERPENDICULAR LENGTH $= (1244 - 1212)\tan(45 - 35/2) + 4$
$= 16.66 + 4$
$= 20.66$ FT

(RECALL: DESIGN SPAN USED = 18', OK)

LENGTH ALONG MARYLAND $= 20.66 / \cos(30.18°)$
≈ 23.90

22 + 65.60 + 23.90 = STA 22 + 89.50

USE STA 22 + 89.70
(45' PARALLEL TO ℄ ACDC)

WAS 22 + 85.07

ADDITIONAL 241 SQ.FT. OF 12" THICK SLAB

APPROX 9 CY

8.0 QUANTITIES

T.Y. LIN INTERNATIONAL
STRUCTURAL ENGINEERING
1817 N. 7th St., Suite 270, Phoenix, AZ 85006

PROJECT:	FeDMC
ITEM:	Maryland Ave Bridge
DESIGN:	Quantities
DATE:	09-27-89 FP

SHEET: 8.01
OF
REVISION:

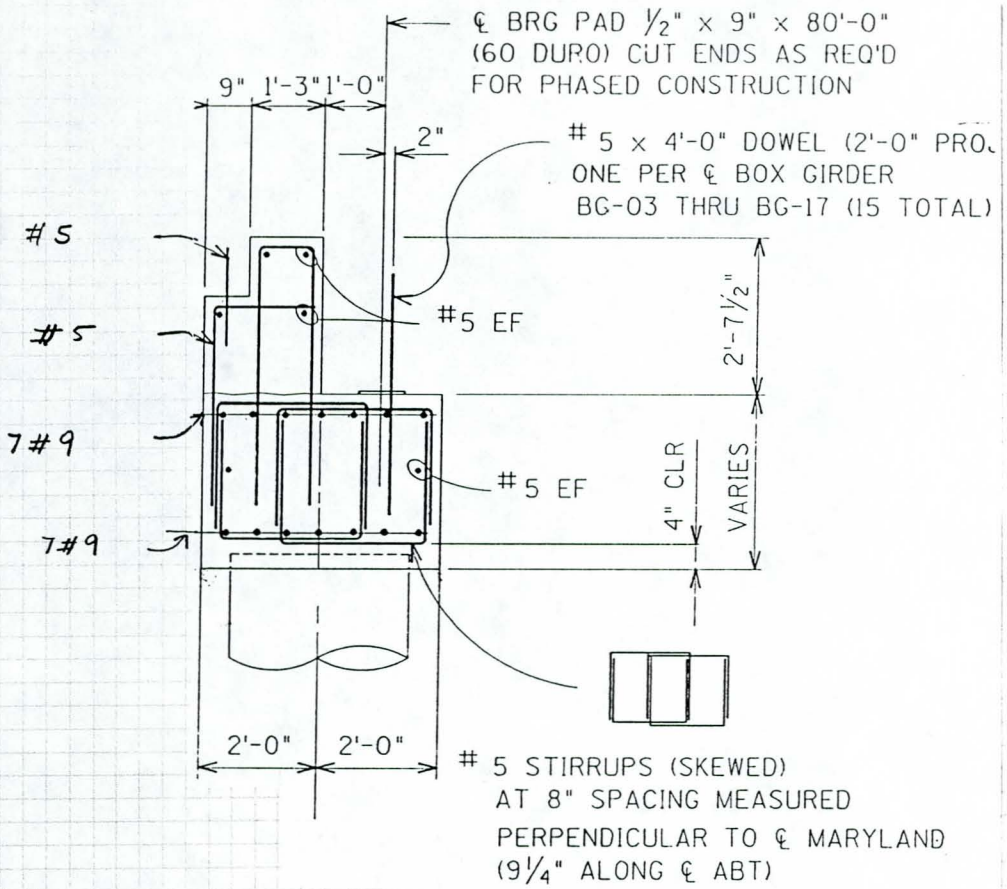

V_c Back wall

$(1' \times 1.25')(2.625') = 3.28\ ft^3/ft$

$(1' \times 0.75' \times 1.625') = 1.22\ ft^3/ft$

$4.5\ ft^3/ft$

$4.5\ ft^3/ft\ /\ 27\ ft^3/cy = 0.17\ cy/ft$

V_c Cap Beam

$(1' \times 4' \times 3.28') = 13.12\ ft^3/ft$

$13.12\ ft^3/ft\ /\ 27\ ft^3/cy = 0.49\ cy/ft$

Back wall

$A_s = 1.67(1.043) = 1.74\ LB/ft$

$A_s = 4(1.043)$

$= 4.17\ LB/ft$

$12.92(1.043)$

$= 13.47\ LB/ft$

$19.38\ LB/ft\ /\ 0.17\ cy/ft$

114 LB/cy

Cap Beam

$A_s = 14(3.4) = 47.6$ LB/ft
$1.67(1.043) = 1.74$ LB/ft
$12''/8''(25.3)(1.043) = 39.6$ LB/ft

88.94 LB/ft / 0.49 CY/ft

182 CY/ft

Approach Slab

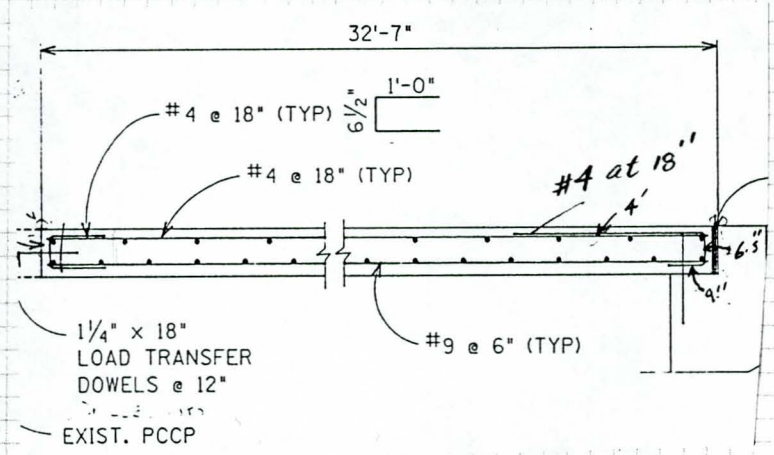

Vc Approach Slab (ABT 1)

$= 1' \times 1' \times 33' = 33$ ft³/ft or 1.22 CY/ft

$A_s = 12''/18''(0.668)(32.25') = 14.36$ LB/ft

$A_s = 12''/18''(0.668)(7.83') = 3.5$

$A_s = (0.668)(22) = 14.7$

$A_s = 12''/6''(3.4)(32.25') = 219.3$

$A_s = (33)(1.502) = 49.6$

301.5 LB/ft

247 LB/CY

ABT 2 $V_c = 1' \times 1' \times 19.47' = 19.47$ ft³/ft or 0.72 CY/ft

T.Y. LIN INTERNATIONAL STRUCTURAL ENGINEERING 1817 N. 7th St., Suite 270, Phoenix, AZ 85006	PROJECT: FEDMC ITEM: Maryland Ave Bridge DESIGN: Quantities DATE: 9-28-89 FP	SHEET: 8.03 OF REVISION:

$A_s = 12''/18''(0.668)(19.14') = 8.5$ LB/ft

$A_s = 12''/18''(0.668)(7.83') = 3.5$ LB/ft

$A_s = (0.668)(13) = 8.7$ LB/ft

$A_s = 12''/6''(3.4)(19.14') = 130.2$ LB/ft

$A_s = (1.502)(20) = 30.04$ LB/ft

180.94 LB/ft

251.3 LB/cy

PARAPET

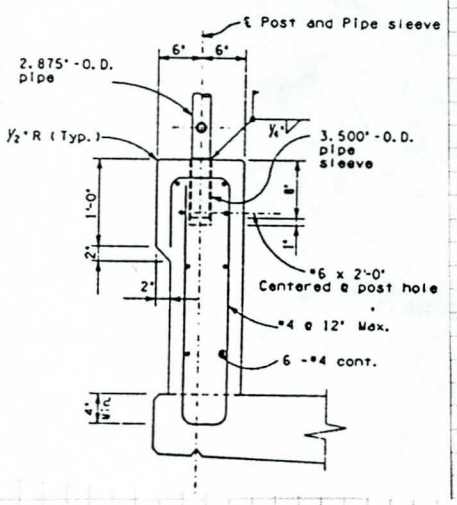

$V_c = 2.40$ ft³/ft or 0.089 CY/ft

$A_s = 6(0.668) = 4$ LB/ft

$A_s = (0.668)(7.67') = 5.12$ LB/ft

$9.12 \times 1.1 = 10$ lbs/cy

1.1 Factor

112 lbs/cy

T.Y. LIN INTERNATIONAL STRUCTURAL ENGINEERING 1817 N. 7th St., Suite 270, Phoenix, AZ 85006	PROJECT: FCDMC ITEM: MARYLAND AVE BRIDGE DESIGN: QUANTITIES DATE: 15 JUL 89 DRS 09-18-89 FP	SHEET: 8.04 OF REVISION:

QUANTITIES

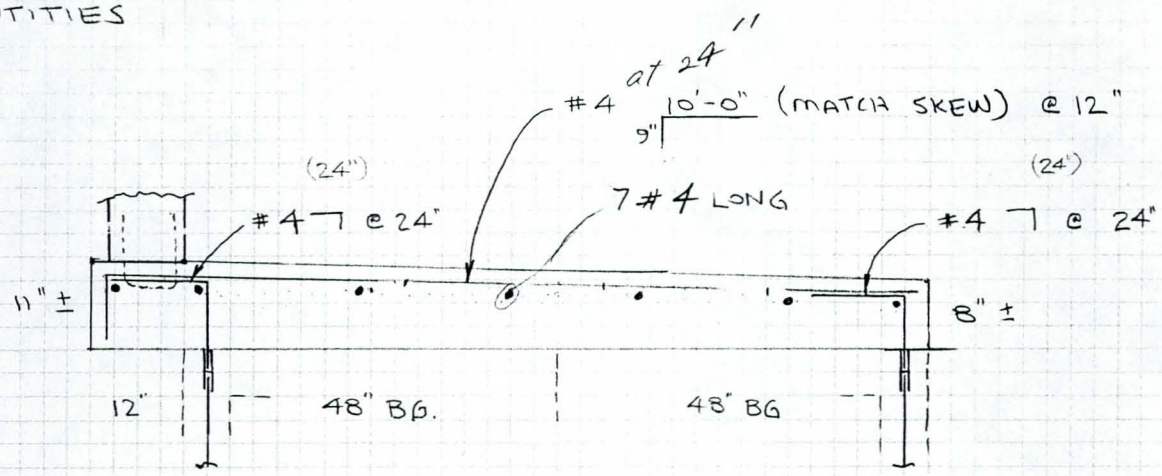

2% BRIDGE CROSS SLOPE
1.5% SIDEWALK SLOPE

0.035 x 96 = 3.36 SAY 3".5 DIFFERENCE

i.e. 8" AT GUTTER
11" AT PARAPET

$V_c = (9')(1')(0.79) = 7.12\ ft^3/ft$
$= 0.26\ CY/FT$

$A_s = (7)(0.668) = 4.68\ lbs/cy$

$A_s = \frac{12''}{24''}(0.668)(7.67') = 2.56\ lbs/cy$

$A_s = 12''/24''(0.668)(4') = 1.34\ lbs/cy$

8.6 lbs/cy or **66 LBS/CY**

QUANTITIES

STRUCTURAL EXCAVATION (ADOT STD B-19.30) TYP ABT SECTION

ABT PLAN DIMENSIONS ≈ 4' x 81'
ABT DEPTH TO BOTTOM ≈ 6'

STRUCTURAL EXCAVATION (NO NEAT LINES ON DRILLED SHAFTS)

V ≈ (4'+3') x (81'+3') x (6') 2 ABTS
= 7056 CUBIC FT
= 261 CY

STRUCTURAL BACKFILL (ADOT STD B-19.40) TYP ABT SECTION WITH APP. SLABS

STRUCTURAL BACKFILL FOR CASE WHERE ORIGINAL GROUND LINE IS AT OR ABOVE FINAL ELEV

V ≈ 1.5' W x 81' L x 3.75' DEEP x 2 ABTS
= 911 CUBIC FT
= 34 CY

8.06

DRS 27 DEC 89

ESTIMATED STRUCTURE QUANTITIES					
NUMBER	ITEM	UNIT	QUANTITY	UNIT COST	TOTAL
206 - 1	STRUCTURAL EXCAVATION	CY	280	$20.00	$5,600
206 - 2	STRUCTURE BACKFILL	CY	48	$30.00	$1,449
505 - 1	CLASS "AA" CONCRETE (f'c = 4000)	CY	262	$250.00	$65,530
N/A	* 4" dia SCH 40 PVC PIPE (SLEEVES)	LF	464		
505 - 2	GRADE 60 REINFORCING STEEL	LBS	57,030	$0.45	$25,664
505 - 3	36" DIAMETER DRILLED SHAFTS	LF	1,199	$90.00	$107,910
505 - 4	48" DIAMETER DRILLED SHAFTS	LF	575	$120.00	$69,000
505 - 5	MECHANICAL COMPRESSION SEALS	LS	1	$1,020.00	$1,020
506 - 1	PRECAST PRESTRESSED CONC BOX GIRDERS	EA	17	$6,500.00	$110,500
N/A	** GRADE 60 THREAD BAR	LBS	90		
N/A	** 18" dia SCH 40 STEEL PIPE (SLEEVE)	LF	58		
N/A	** 10" dia SCH 40 STEEL PIPE (SLEEVES)	LF	116		
N/A	** 8" dia SCH 40 STEEL PIPE (SLEEVE)	LF	58		
520 - 1	ORNAMENTAL STEEL FENCE	LF	130	$75.00	$9,750
SP - 9	PARK WATER PUMP STATION	LS	1	$16,350.00	$16,350
* Quantities for information only. Materials to be included with item 505 - 1.					
** Quantities for information only. Materials to be included with item 506 - 1.					
	SUBTOTAL OF ITEMS FOR STRUCTURES				$412,772
	SUBTOTAL OF ITEMS FOR CIVIL (FROM BRW)				$198,929
	TOTAL ESTIMATED CONSTRUCTION COST				$611,701

CLASS "AA" CONCRETE (f'c = 4000)

* IF INPUT W = AREA, THEN INPUT T = 1

	L (FT)	W (FT)	T (FT)	V (CY)
ABT 1				
CAP BEAM	86.97	4.00	3.60	46.38
BACK WALL *	80.97	4.25	1.00	12.75
APP. SLAB	32.60	52.00	1.00	62.79
ABT 2				
CAP BEAM	86.97	4.00	3.30	42.52
BACK WALL *	80.97	4.25	1.00	12.75
APP. SLAB	24.00	52.00	1.00	46.22
BRIDGE N S/W	53.00	9.00	0.81	14.26
BRIDGE S S/W	53.00	9.00	0.81	14.26
N PARAPET *	58.00	2.38	1.00	5.10
S PARAPET *	58.00	2.38	1.00	5.10
		TOTAL		262.12

8.08

DRS 27DEC89

GRADE 60 REINFORCING STEEL

	LBS/CY	CY	LBS	
ABT 1				
CAP BEAM	196.40	46.38	9109.82	
BACK WALL	116.00	12.75	1478.45	
APP. SLAB	249.00	62.79	15633.51	
SUBTOTAL				26221.78
ADD MISC	15%			3933.27
ABT 2				
CAP BEAM	196.40	42.52	8350.67	
BACK WALL	116.00	12.75	1478.45	
APP. SLAB	252.70	46.22	11680.36	
SUBTOTAL				21509.47
ADD MISC	15%			3226.42
BRIDGE N S/W	34.80	14.26		496.14
BRIDGE S S/W	34.80	14.26		496.14
N PARAPET	112.70	5.10		574.98
S PARAPET	112.70	5.10		574.98
TOTAL				57033.19

8.09
DRS 27 DEC 89

** GRADE 60 THREAD BAR

NORMAL WIDTH	SKEW RADIANS	TRUE LENGTH	SPLICE FACTOR	TOTAL LENGTH
68.00	0.53	78.66	1.10	86.53

5/8" DIAMETER	UNIT WEIGHT	1.04
	TOTAL WEIGHT	90.25

36" DIAMETER DRILLED SHAFT and
48" DIAMETER DRILLED SHAFTS

		QTY	LENGTH	TOTAL
ABT 1				
	N 48"	3.00	57.25	171.75
	BRIDGE	11.00	54.25	596.75
	S 48"	2.00	57.25	114.5
ABT 2				
	N 48"	3.00	57.75	173.25
	BRIDGE	11.00	54.75	602.25
	S 48"	2.00	57.75	115.5
Total	36"			1199.00
Total	48"			575.00

ORNAMENTAL STEEL FENCE

	QTY	LENGTH	TOTAL
N WALL	1.00	65.00	65.00
S WALL	1.00	65.00	65.00
	TOTAL		130.00

8.10

DRS 27 DEC 89

** 18" dia SCH 40 STEEL PIPE (SLEEVE)		58.00
** 10" dia SCH 40 STEEL PIPE (SLEEVES)		116.00
** 8" dia SCH 40 STEEL PIPE (SLEEVE)		58.00
* 4" dia SCH 40 PVC PIPE (SLEEVES)		464.00
Length of sleev	58.00	
No. of sleeves	4.00	
No. of sidewalk	2.00	

PARK WATER PUMP STATION

	Quantity	Price	Total
Manhole			2500.00
Pumps			6000.00
12" PVC Inlet	55	30.00	1650.00
4" Steel Outlet	100	20.00	2000.00
6" PVC Convey	280	15.00	4200.00
			16350.00

ACDC MARYLAND AVENUE
ITEM DESCRIPTION

PAVING QUANTITIES

ITEM NO.	REMOVAL ITEMS:	UNIT	QUANTITY	UNIT PRICE	TOTAL
350-1	REMOVE A.C. PAVEMENT	S.Y.	560	1.50	$ 840.00
350-2	REMOVE SIDEWALK	S.F.	177	2.00	$ 354.00
350-3	REMOVE CURB AND GUTTER	L.F.	82	3.00	$ 246.00

ITEM NO.	CONTSTRUCTION ITEMS:	UNIT	QUANTITY	UNIT PRICE	TOTAL
301-1	SUBGRADE PREPARATION	S.Y.	1,261	2.00	$ 2,522.00
310-1	4" AGGREGRATE BASE COURSE	S.Y.	1,261	2.00	$ 2,522.00
315-1	BITUMINOUS PRIME COAT, MC-30	TON	1.2	350.00	$ 420.00
321-1	EMULSIFIED BITUMINOUS TACK COAT	TON	.5	700.00	$ 350.00
321-2	2" ASPHALTIC CONCRETE PAVEMENT, TYPE D-1/2	S.Y.	1,261	4.00	$ 5,044.00
321-3	1" ASPHALTIC CONCRETE PAVEMENT, TYPE D-1/2	S.Y.	766	3.00	$ 2,298.00
340-1	CONCRETE CURB AND GUTTER, MAG DET 220, TYPE "A", H=6"	L.F.	82	8.00	$ 656.00
340-2	VERTICAL CONCRETE CURB, MAG DET. 222 TYPE "A", H=6"	L.F.	168	7.00	$ 1,176.00
340-3	CONCRETE SIDEWALK, C.O.P. DET P-1230	S.F.	181	3.00	$ 543.00
SP-1	TEMPORARY CONCRETE BARRIER, ADOT STD C-2.01	L.F.	464	15.00	$ 6,960.00
SP-2	RELOCATE CONCRETE BARRIER	L.F.	272	15.00	$ 4,080.00
345-1	ADJUST VALVE BOX, MAG DET 391-1 TYPE "A"	EACH	7	200.00	$ 1,400.00
340-4	CONCRETE DRIVEWAY PAVEMENT C.O.P. DET P-1255	S.F.	693	3.00	$ 2,079.00
SP-3	4" P.V.C. CONDUIT	L.F.	83	10.00	$ 830.00
401-1	SIGNAGE AND STRIPPING (TRAFFIC CONTROL)	L.S.	1	10,000.00	$ 10,000.00
SP-5	TEMPORARY BITUMINOUS SIDEWALK	S.F.	1,185	1.00	$ 1,185.00
	SUBTOTAL				43,505.00

8.11 REF

ACDC MARYLAND AVENUE
ITEM DESCRIPTION

WATER QUANTITIES

ITEM NO.	REMOVAL ITEMS:	UNIT	QUANTITY	UNIT PRICE	TOTAL
350-6	REMOVE WATER LINE	L.F.	309	5.00	$ 1,545.00
350-9	REMOVE 12" GATE VALVE	EACH	1	200.00	200.00

ITEM NO.	CONSTRUCTION ITEMS:	UNIT	QUANTITY	UNIT PRICE	TOTAL
630-1	12" GATE VALVE AND BOX, MAG STD 391-1	EACH	1	850.00	$ 850.00
610-1	12" WATER LINE, D.I.P. CL 52, STD 301, 302	L.F.	153	30.00	$ 4,590.00
610-2	20" WATER LINE, STEEL, WELDED JOINTS	L.F.	162	110.00	$ 17,820.00
610-3	RELOCATE AND REPLACE FIRE HYDRANT	L.S.	1	1,500.00	$ 1,500.00
610-4	FIRE HYDRANT ASSEMBLY	EACH	1	2,000.00	2,000.00
610-5	6" GATE VALVE & BOX MAG STD 391-1	EACH	1	450.00	450.00
610-6	AIR RELIEF VALVE	EACH	1	250.00	250.00

SANITARY SEWER QUANTITIES

ITEM NO.	REMOVAL ITEMS:	UNIT	QUANTITY	UNIT PRICE	TOTAL
350-7	REMOVE SANITARY SEWER	L.F.	185	10.00	$ 1,850.00
350-8	REMOVE SANITARY SEWER MANHOLE	EACH	3	150.00	$ 450.00

ITEM NO.	CONTSTRUCTION ITEMS:	UNIT	QUANTITY	UNIT PRICE	TOTAL
SP-6	4" D.I. FORCEMAIN		135	30.00	$ 4,050.00
615-1	4" SANITARY SEWER SERVICE, P.V.C. SCH 40	L.F.	76	20.00	$ 1,520.00
615-3	8" SANITARY SEWER, V.C.P.	L.F.	2,903	11.00	$ 31,933.00
625-1	SANITARY SEWER MANHOLE, MAG DET 420 MAG DET 424	EACH	16	2,000.00	$ 32,000.00
SP-4	WASTE WATER PUMPING STATION	L.S.	1	50,000.00	$ 50,000.00
775	MASONRY FENCE 4" CONCRETE	L.F.	86	20.00	$ 1,720.00
SP-7	6" TEMPORARY CHAIN LINK FENCE	L.F.	216	6.00	$ 1,296.00
SP-8	6'x6' CHAIN LINK FENCE	EACH	2	600.00	$ 1,200.00
615-4	SANITARY SEWER CLEANOUT	EACH	1	200.00	$ 200.00
	SUBTOTAL				$155,424.00
TOTAL					$198,929.00

8.12 REF

9.0 APPENDIX

9.01

MARYLAND AVENUE BRIDGE

+ OFFSET ARE TO THE LEFT
- OFFSET ARE TO THE RIGHT

CONTROL POINTS

STATION		NORTH	EAST
2000	POINT 10	920713.71	462967.07
2100		920714.90	463067.06
2200		920716.09	463167.05
2300		920717.28	463267.04
2324.96	POINT 12	920717.57	463292.00
2000		920713.71	462967.07
1900		920712.51	462867.07
1800		920711.32	462767.08
1700		920710.13	462667.09
POINT 11		920682.44	460341.01

221
227

REQUIRES COORD TRANSFORM BY ROTATION

POINT	STA	OFFSET	NORTH	EAST
100	1597.950	30.160	920745.18	462565.36
101	1603.043	26.497	920741.51	462570.45
102	1604.104	24.613	920739.63	462571.51
103	1652.785	26.432	920741.45	462620.19
104	1658.183	24.583	920739.60	462625.59
105	1658.638	26.894	920741.91	462626.05
106	1658.049	30.174	920745.19	462625.46
107	1658.799	40.017	920755.03	462626.21
108	1671.044	33.530	920748.55	462638.45
109	1664.118	26.685	920741.70	462631.53
110	1667.197	26.790	920741.81	462634.60
111	1713.743	19.200	920734.22	462681.15
112	1718.167	39.304	920754.32	462685.58
113	1735.493	40.570	920755.59	462702.90
114	1738.236	28.586	920743.60	462705.64
115	1738.899	19.121	920734.14	462706.31
116	1778.249	30.511	920745.53	462745.66
117	1777.546	20.535	920735.55	462744.95
118	1781.880	35.936	920750.95	462749.29
119	1809.861	31.677	920746.69	462777.27
120	1810.993	27.102	920742.12	462778.40
121	1811.108	21.040	920736.06	462778.52
122	1823.241	30.315	920745.33	462790.65
123	1876.388	22.927	920737.94	462843.80
124	1877.291	32.108	920747.12	462844.70
125	1889.368	39.703	920754.72	462856.78
126	1606.706	-30.826	920684.19	462574.11
127	1607.202	-24.483	920690.53	462574.61
128	1613.682	-20.462	920694.55	462581.09
129	1612.323	-30.051	920684.96	462579.73
130	1642.483	-30.083	920684.93	462609.89
131	1642.826	-20.463	920694.55	462610.23
132	1647.486	-24.430	920690.59	462614.89
133	1647.775	-30.700	920684.32	462615.18
134	1674.622	-30.671	920684.34	462642.03
135	1674.658	-24.458	920690.56	462642.07
136	1681.213	-20.423	920694.59	462648.62

Superseded
Date 13JUL89

RECEIVED
JUL 07 1989
TYLI PHOENIX

137	1686.153	-13.090	920701.93	462653.56
138	1686.302	-26.314	920688.70	462653.71
139	1699.585	-29.906	920685.11	462666.99
140	1747.031	-33.671	920681.35	462714.44
141	1755.002	-32.160	920682.86	462722.41
142	1769.067	-29.896	920685.12	462736.48
143	1770.110	-30.311	920684.71	462737.52
144	1772.563	-24.381	920690.64	462739.97
145	1766.061	-20.323	920694.69	462733.47
146	1798.223	-20.340	920694.68	462765.63
147	1791.418	-24.361	920690.65	462758.83
148	1788.492	-30.529	920684.49	462755.90
149	1789.688	-29.990	920685.03	462757.10
150	1875.856	-26.590	920688.43	462843.26
151	1960.920	-30.054	920684.96	462928.33
152	1966.541	-28.328	920686.69	462933.95
153	1967.377	-27.146	920687.87	462934.79
154	1964.518	-30.086	920684.93	462931.93
155	1969.686	-39.284	920675.73	462937.09
156	1972.742	-35.881	920679.14	462940.15
157	1973.620	-38.584	920676.43	462941.03
158	1987.846	-38.675	920676.34	462955.25
159	1997.618	-24.545	920690.47	462965.03
160	1999.802	-20.059	920694.96	462967.21
161	1964.828	23.319	920738.34	462932.24
162	1967.620	20.901	920735.92	462935.03
163	1973.234	20.262	920735.28	462940.64
164	1977.555	20.725	920735.74	462944.96
165	1988.255	20.135	920735.15	462955.66
166	1951.737	-9.859	920705.16	462919.14
167	1958.266	-2.972	920712.04	462925.67
168	1961.682	-11.511	920703.50	462929.09
169	1976.743	-4.614	920710.40	462944.15
170	1889.556	23.420	920738.44	462856.96
171	1948.802	34.897	920749.91	462916.21
172	1950.615	36.215	920751.23	462918.02
173	1950.505	23.381	920738.40	462917.91
174	1960.614	33.768	920748.78	462928.02
175	1971.571	36.747	920751.76	462938.98
176	1967.822	50.143	920765.16	462935.23
177	1967.587	36.213	920751.23	462935.00
178	1973.351	32.695	920747.71	462940.76
179	1974.775	26.767	920741.78	462942.18
180	1985.354	27.617	920742.63	462952.76
181	2002.037	42.071	920757.09	462969.44
182	2009.534	38.847	920753.86	462976.94
183	2007.722	41.955	920756.97	462975.13
184	2007.377	37.807	920752.82	462974.79
185	2005.008	41.519	920756.54	462972.42
186	2017.366	42.229	920757.24	462984.77
187	2020.788	34.525	920749.54	462988.20
188	2035.753	39.043	920754.06	463003.16
189	2020.187	64.495	920779.51	462987.59
190	2045.748	69.086	920784.10	463013.16
191	2048.645	71.671	920786.69	463016.05
192	2043.166	40.689	920755.70	463010.57

Superseded
Date 13JUL89

Superseded
Date

RECEIVED
JUL 07 1989
TYLI PHOENIX

193	2034.355	23.244	920738.26	463001.76
194	2059.650	26.024	920741.04	463027.06
195	2061.159	22.941	920737.96	463028.57
196	2072.280	31.336	920746.35	463039.69
197	2073.065	30.198	920745.21	463040.47
198	2073.768	28.880	920743.90	463041.18
199	2073.181	28.624	920743.64	463040.59
200	2073.983	27.589	920742.60	463041.39
201	2074.412	26.049	920741.07	463041.82
202	2141.525	26.147	920741.16	463108.93
203	2139.642	27.686	920742.70	463107.05
204	2139.847	28.793	920743.81	463107.25
205	2138.191	31.427	920746.44	463105.60
206	2135.647	30.530	920745.55	463103.05
207	2135.844	28.974	920743.99	463103.25
208	2139.775	31.408	920746.42	463107.18
209	2161.260	26.111	920741.13	463128.67
210	2191.336	-25.745	920689.27	463158.74
211	2178.005	-2.289	920712.73	463145.41
212	2171.589	-25.813	920689.20	463139.00
213	2176.187	-34.330	920680.69	463143.59
214	2176.808	-32.110	920682.91	463144.22
215	2174.172	-30.834	920684.18	463141.58
216	2108.391	-30.793	920684.22	463075.80
217	2109.666	-34.618	920680.40	463077.07
218	2104.486	-25.949	920689.07	463071.89
219	2089.560	-25.936	920689.08	463056.97
220	2076.523	-3.426	920711.59	463043.93
> 221	2175.090	-32.930	920682.09	463142.50
222	2156.660	0.131	920715.15	463124.07
223	2108.661	-35.457	920679.56	463076.07
224	2112.057	-41.629	920673.39	463079.47
225	2107.449	-36.441	920678.58	463074.86
226	2110.200	-41.741	920673.28	463077.61
227	2109.207	-33.091	920681.93	463076.62 ← DATUM
228	2120.485	-51.677	920663.34	463087.89
229	2117.252	-53.450	920661.57	463084.66
230	2076.877	-36.121	920678.90	463044.29
231	2057.053	-25.811	920689.20	463024.46
232	2036.153	-27.163	920687.85	463003.56
233	2025.438	-33.496	920681.52	462992.85
234	2032.694	-16.540	920698.48	463000.10
235	2047.761	-15.064	920699.95	463015.17
236	2045.249	-8.280	920706.74	463012.66
237	2029.664	-6.368	920708.65	462997.07
238	2009.995	-32.247	920682.77	462977.40
239	1998.722	-40.600	920674.42	462966.13
240	1995.670	-40.469	920674.55	462963.08
241	2037.571	-40.985	920674.03	463004.98
242	2025.696	-42.191	920672.83	462993.10
243	2049.085	-33.912	920681.10	463016.49
244	2065.704	-41.626	920673.39	463033.11
245	2059.902	-38.708	920676.31	463027.31
300	2100.925	-64.154	920650.86	463068.33
301	2096.696	-67.092	920647.92	463064.10

Superseded
Date 13JUL89

Superseded
Date

RECEIVED
JUL 07 1989
TYLI PHOENIX

302	2086.836	-72.167	920642.85	463054.24
303	2182.813	-49.986	920665.03	463150.22
304	2187.165	-48.255	920666.76	463154.57
305	2201.594	-43.408	920671.61	463169.00
306	2218.534	-48.846	920666.17	463185.94
307	2211.697	-45.390	920669.63	463179.10
308	2213.863	-39.946	920675.07	463181.27
309	2217.309	-39.124	920675.89	463184.72
310	2236.445	-33.210	920681.81	463203.85
311	2231.937	-40.003	920675.01	463199.34
312	2220.494	-28.484	920686.53	463187.90
313	2207.258	-32.096	920682.92	463174.67
314	2203.061	-3.177	920711.84	463170.47
315	2230.107	-23.910	920691.11	463197.52
316	2264.051	-1.940	920713.08	463231.46
317	2270.155	-12.624	920702.39	463237.56
318	2271.433	-39.291	920675.73	463238.84
319	2266.990	-39.945	920675.07	463234.40
320	2270.368	-40.610	920674.41	463237.78
321	2291.635	-40.022	920674.99	463259.04
322	2295.104	-39.983	920675.03	463262.51
323	2290.372	-24.001	920691.01	463257.78
324	2296.396	-7.761	920707.26	463263.80
325	2302.976	-2.446	920712.57	463270.38
326	2122.673	51.824	920766.84	463090.08
327	2128.631	54.299	920769.32	463096.04
328	2150.652	53.996	920769.01	463118.06
329	2168.953	24.377	920739.39	463136.36
330	2157.606	46.522	920761.54	463125.01
331	2123.371	101.368	920816.38	463090.78
332	2124.423	101.321	920816.34	463091.83
333	2149.321	71.725	920786.74	463116.73
334	2179.794	70.456	920785.47	463147.20
335	2187.371	43.626	920758.64	463154.78
336	2196.574	55.881	920770.90	463163.98
337	2204.199	43.685	920758.70	463171.61
338	2202.234	40.322	920755.34	463169.64
339	2225.529	48.799	920763.81	463192.94
340	2223.160	48.119	920763.14	463190.57
341	2226.500	67.010	920782.03	463193.91
342	2225.720	81.536	920796.55	463193.13
343	2248.921	74.767	920789.78	463216.33
344	2254.496	80.363	920795.38	463221.90
345	2247.564	86.110	920801.13	463214.97
346	2246.612	118.334	920833.35	463214.02
347	2260.296	125.163	920840.18	463227.70
348	2258.525	124.617	920839.63	463225.93
349	2278.978	27.270	920742.29	463246.39
350	2298.127	34.947	920749.96	463265.53
351	2297.110	42.486	920757.50	463264.52
352	2299.300	48.647	920763.66	463266.71
353	2303.369	54.821	920769.84	463270.78
354	2324.383	40.056	920755.07	463291.79
355	2344.856	44.976	920759.99	463312.26
356	2255.720	32.197	920747.21	463223.13
357	2349.940	42.758	920757.77	463317.35

Superseded
Date 13 JUL 89

RECEIVED
JUL 07 1989
TYLI PHOENIX

9.05

358	2346.060	24.376	920739.39	463313.47
359	2350.415	25.879	920740.90	463317.82
360	2369.675	20.379	920735.40	463337.08
361	2391.409	20.568	920735.58	463358.82
362	2393.608	24.113	920739.13	463361.02
363	2369.791	24.314	920739.33	463337.20
364	2391.734	27.670	920742.69	463359.14
365	2409.578	30.832	920745.85	463376.99
366	2425.141	32.496	920747.51	463392.55
367	2442.086	35.403	920750.42	463409.49
368	2486.678	26.410	920741.43	463454.09
369	2299.333	96.143	920811.16	463266.74
370	2300.754	96.655	920811.67	463268.16
371	2337.544	103.014	920818.03	463304.95
372	2338.880	103.488	920818.50	463306.29
373	2353.026	97.688	920812.70	463320.43
374	2369.071	92.745	920807.76	463336.48
375	2379.413	82.104	920797.12	463346.82
376	2416.438	63.504	920778.52	463383.85
377	2473.039	53.537	920768.55	463440.45
378	2496.882	32.568	920747.58	463464.29
379	2520.397	27.339	920742.36	463487.81
380	2544.275	28.192	920743.21	463511.68
381	2568.440	36.495	920751.51	463535.85
382	2571.544	29.138	920744.15	463538.95
383	2586.607	27.608	920742.62	463554.02
384	2592.592	35.068	920750.08	463560.00
385	2595.309	32.536	920747.55	463562.72
386	2617.033	22.264	920737.28	463584.44
387	2662.197	24.690	920739.71	463629.61
388	2572.449	2.369	920717.38	463539.86
389	2568.025	-6.780	920708.24	463535.43
390	2570.860	-40.422	920674.59	463538.27
391	2568.313	-40.008	920675.01	463535.72
392	2552.712	-40.245	920674.77	463520.12
393	2549.601	-40.257	920674.76	463517.01
394	2552.627	-6.522	920708.49	463520.03
395	2548.606	2.516	920717.53	463516.01
396	2432.939	0.539	920715.56	463400.35
397	2428.556	-40.250	920674.77	463395.96
398	2412.146	-40.516	920674.50	463379.55
399	2415.380	-0.071	920714.94	463382.79
400	2361.949	-15.997	920699.02	463329.36
401	2357.774	-15.168	920699.85	463325.18
402	2354.159	-5.955	920709.06	463321.57
403	2349.503	-25.994	920689.02	463316.91
404	2351.320	-16.333	920698.68	463318.73
405	2344.800	-19.899	920695.12	463312.21
406	2342.141	-14.790	920700.23	463309.55
407	2347.295	-5.490	920709.53	463314.70
408	2341.958	-5.982	920709.03	463309.37
409	2343.231	-25.660	920689.36	463310.64
410	2336.978	-25.820	920689.20	463304.39
411	2328.732	-14.497	920700.52	463296.14
412	2336.543	9.656	920724.67	463303.95
413	2015.789	612.313	921327.33	462983.20

Superseded
Date 13JUL89

RECEIVED
JUL 07 1989
TYLI PHOENIX

414	2275.998	358.896	921073.91	463243.41
415	2294.271	334.837	921049.85	463261.68
416	2300.351	339.509	921054.53	463267.76
500	2528.882	-445.507	920269.51	463496.29

Superseded
Date 13 JUL 89

RECEIVED
JUL 07 1989
TYLI PHOENIX

Horizontal Control
20th St. & Maryland Bridge
7/4/89 R. Bert
M. Stowman

T @	10	BS 11	FS 12
		37-46-51	
①		217-46-54	180-00-03
②		37-46-54	180-00-00
③		217-46-55	180-00-01
④		37-46-51	179-59-56
Ⓜ			180-00-00

Dist. 10 TO 11
2626 48 @ 90-46-04
HD= 2626 24

Dist 10 TO 12
325.02 @ 88-53-57
HD= 324.96

TYLI PHOENIX

②

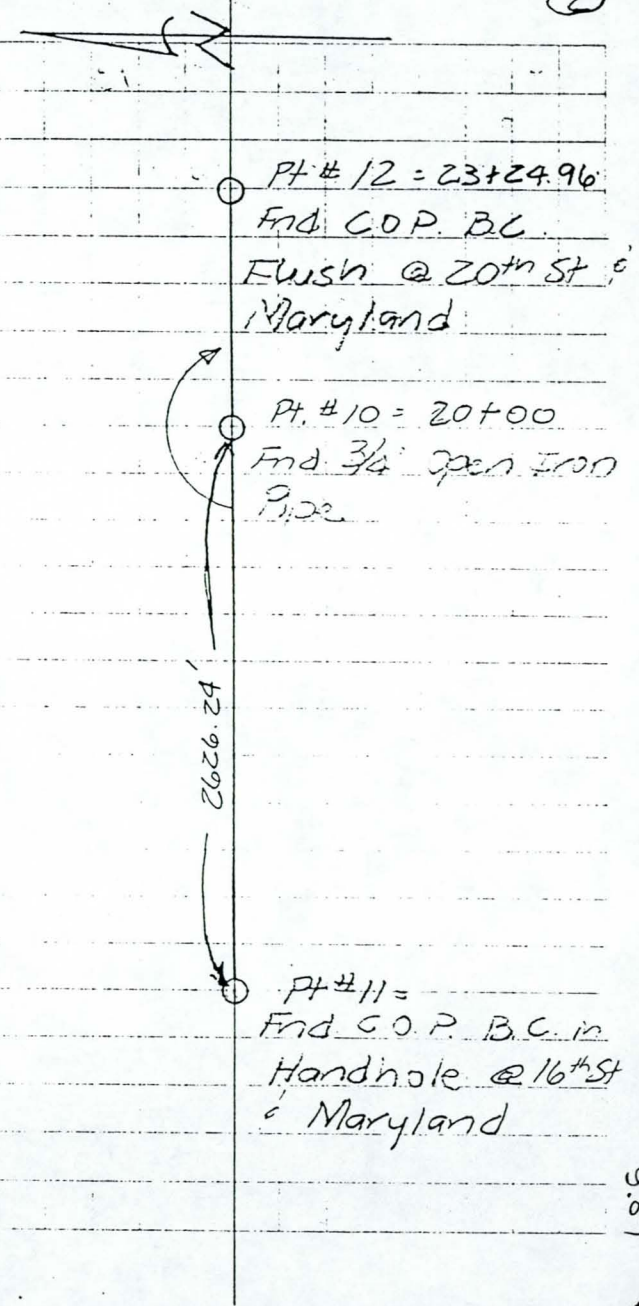

L.O.G

T @ 12 BS 10 FS 13

01-02-12

① 75-24-00 74-21-48

② 149-45-37 74-21-37

Dist 12 TO 13

277.00 @ 270-40-24

T @ 12 BS 10 FS 14

231-55-47

① 296-29-10 64-33-23

② 01-02-12 64-33-02

Dist 12 TO 14

540.54 @ 270-14-07

T @ 12 BS 10 FS 15

35-43-44

① 102-13-24 66-29-40

② 168-43-12 66-29-48

Dist 12 TO 15

733.30 @ 89-46-28

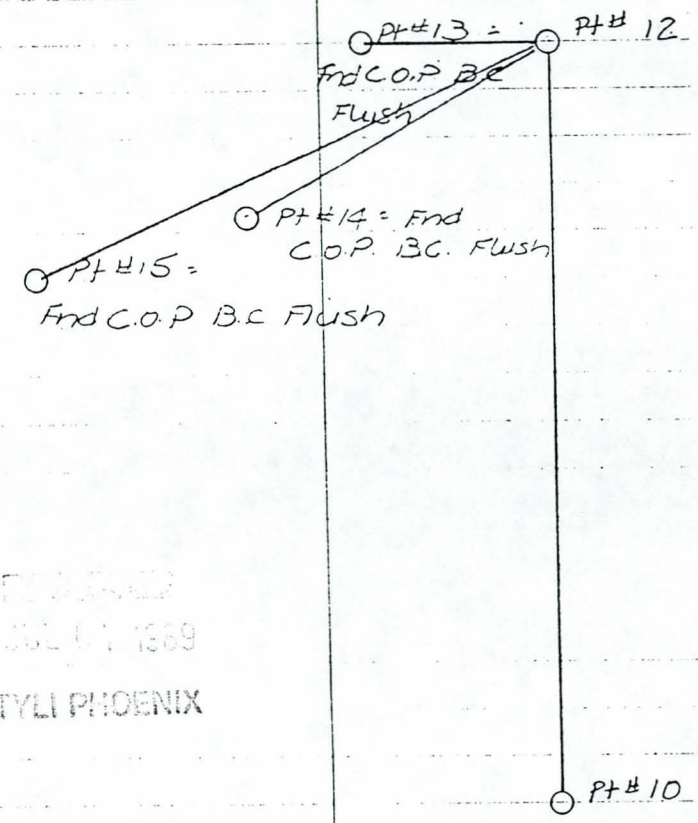

TYLI PHOENIX

④

RECEIVED
JUL 07 1989
TYLI PHOENIX

0.09

Cross Sections on Maryland Ave.

(5)

	Lt		M	Rt		
17+00	351	3410	3385	3353	3347	3395
	404	198	0	184	198	204
	Fence	EP		Lip	℄	T/C
					340	3402
					299	245
					Fence	B/W
16+50		333			3281	
		330			330	
16+00	3260	3213	3220	3198	3172	3167	3181
	206	200	187	0	185	192	204
	T/C	℄	Lip		Lip	℄	T/C
	3265	323	326			3209	3227
	246	310	400			330	246
	B/W	Fence					B/W

	Lt.			℄		Rt	
	368	3702	3715	3695	3657	3651	3699
19+00	330	234	81	0	181	194	200
		EP	Crown Line		Lip	℄	T/C
	368					375	3706
	400					291	241
						Fence	B/W
18+50		366			362		
		330			300		
18+00	3598	3557	3554	3529	3482	3477	3525
	330	200	55	0	183	196	202
		EP	Crown Line		Lip	℄	T/C
	3621					359	3535
	400					300	242
						Fence	B/W
17+50		357	354			349	
		400	332			300	

RECEIVED
JUL 1989
TYLI PHOENIX

	Lt.			℄	Rt		
							⑦
21+00	4429	4338	4339	4356	4349	4331	
	263	260	235	00	30	260	
	Top of Conc. Barrier	℄ on Deck	EP		EP Begin Conc	Edge of Conc	
					433	433	
					400	330	
20+50	435	432			417	365	
	400	330			255	400	
20+00	401	4066	4047	4045	4016	4009	4056
End Curb, Gutter & Sidewalk	260	213	10	00	183	196	202
		EP	Crown Line		Lip	℄	T/C
	391	379			366	389	4063
	330	400			400	300	242
							B/W
19+50	373	371			382		
	400	330			300		

RECEIVED
JUL 01 1999
TYLI PHOENIX

	Lt.			Rt		
23+00	45.57	45.58	45.65	45.23	45.06	43.7	43.9
	39.4	36.3	11.1	0.0	2.9	33.0	40.0
	Æ	Lip	Crown Line		EP		
	45.97	46.02					
	40.4	45.0					
	T/C	B/W					
22+50		44.5	44.6		44.0		
		40.0	33.0		40.0		
22+00	44.1	43.95	44.20	44.08	44.06	43.7	43.9
	33.0	24.8	10.3	0.0	2.5	33.0	40.0
		EP	Crown Line		EP		
	44.0						
	40.0						
21+50		43.7	43.7		43.78		
		40.0	33.0		26.0		

	Lt.				Rt.	
25+00	51 36	50 90	50 96	50 58	49 6	49 1
	20 9	20 3	19 0	0 0	25 0	40 4
	T/C	℄	Lip	EP		Fence
	51 13	51 20	51 3	51 3		
	25 1	29 6	33 0	40 0		
	F/W	B/W				
24+50	49 8	49 6			48 2	
	40 0	33 0			40 0	
24+00	48 35	47 90	47 99	47 75	47 59	47 2	46 9
	20 6	20 0	18 7	0 0	2 0	25 0	40 3
	T/C	℄	Lip		EP		Fence
	48 15	48 16	48 1				
	27 5	31 6	40 0				
	Front of Walk	B/W					
23+50	46 9	46 9			45 7		
	45 0	40 0			40 5		
					Fence		

	Lt		℄		Rt	
26+00	53.22	53.29	52.54	52.4	51.1	50.7
	21.6	20.2	1.3	0.2	25.0	40.0
	℄	Lp	EP			
	53.66	53.69	53.66	53.5		
	22.2	34.1	38.0	40.0		
	T/C	F/W	B/W			
25+50		52.2			49.8	
		40.2			40.2	

51.6

Radial Topo 6-26-89

R. Bert

m Stowman

T@ 10 BS 11

Shot #	Horiz Angle	Dist	Elev.	
100	4-17-24	403.18		
	3-49-08	397.84		
	3-33-27	396.66		
	4-21-12	348.22		
	4-06-49	342.70	32.91 32.88 33.38 33.48	L.P E T/C B/W
	4-30-17	342.42		
	5-02-34	343.28		
	6-41-21	343.54		
	5-49-12	330.66		
	4-32-33	336.94		
	4-36-08	333.88		
	3-50-14	286.90	34.28	
	7-56-21	284.56	34.31	
	8-43-12	267.60	34.95	
	6-13-56	263.32		
	4-11-18	261.80	34.68	
	7-50-03	223.84		
	5-16-27	223.40	35.15	
	9-21-20	221.06	36.02	
	9-27-31	192.76	36.17	
120	8-09-36	190.94		

Description

Begin Stucco Fence

F/H

Brick Planter

G/W

End C & G & SW

P/P w/Str. Lt. E-W NE-SE

End Planter / End Stucco Fence

Begin Block Fence

W/M

G/W

Speed Limit Sign

W. Edge of D/W @ EP

W. Edge of D/W 1' South of End of Block Fence

E Edge of D/W

Telco Pedestal

E. Edge of D/W @ EP

W/M

W. Edge of D/W @ EP

W. Edge of D/W

E Edge of D/W Begin Oleanders

P/P Line E-W

9-16

Shot #	Horiz. ∡	Dist	Elev.	Description
121	6-21-21	190.06	35.59	E. Edge of D/W @ ED
	9-43-54	179.34		W/m
	10-30-28	125.72	36.42	W. Edge of Dirt D/W.
	14-39-47	126.84	36.60	W. Edge of D/W / End Oleanders
	19-44-30	117.54	36.62	E. Edge of D/W Begin Block Fence to N.
	355-31-06	394.50	32.26	Gate Post @ Face of 6" Curb @ E. Edge of D/W
	356-26-00	393.56	32.36	E. Edge of D/W @ B/W
	356-58-05	386.86	32.35	E Wing of D/W @ TBC
	355-34-03	388.84		NW Corn. Block Planter 3' High
	355-11-25	358.78		NE " " " "
	356-43-16	357.76	32.93	W. Wing of D/W @ TBC
	356-02-08	353.36	33.06	W. Edge of D/W @ B/W Begin 6" Curb S.
	355-01-07	353.56	32.81	Gate Post @ W. Edge of D/W
	354-36-54	326.82	33.24	Gate Post @ E " " "
	355-42-03	326.26	33.54	E. Edge of D/W @ B/W Begin 6" Curb S.
	356-20-04	319.44	33.62	E Wing of D/W @ TBC
	357-36-42	314.12	N.Rim - 33.36 Nut - 32.28	W/V
	355-12-18	314.80		F/H
	354-18-54	301.90		∡Pt. in 3' Block Wall
	352-25-06	27 ~~3~~55.20		P/P Lines E-W-NW
	352-31-18	247.10		W/m
	352-37-25	232.86		End 3' Block Wall
	352-29-20	231.88	35.57	Gate Post @ W. Edge of D/W
	353-52-53	228.74	34.96	W. Edge of D/W @ B/W Begin 6" Curb S.
145	355-02-06	234.82	34.77	W. Wing of D/W @ TBC

Shot #	Horiz ∡	Dist	Elev.		Desc.
146	354-14-38	202.80	35.18		E Wing of D/W @ TBC
	353-20-18	210.00	35.21		E Edge of D/W @ B/W Begin 6" Curb S.
	351-47-12	213.70	35.78		Gate Post @ E Edge of D/W
	351-53-04	212.44			Begin 4' Block & Wrought Iron Fence
	347-54-39	126.96			No Parking Sign
	322-26-20	49.30			∡ Pt in Block & Wrought Iron Fence
	319-44-51	43.84	40.32		B.C. on SRP Irrig Box SRVWUA BM
	320-14-06	42.44			N.E. Corn. of 4'x7'x2' SRP Irrig. Box
	319-42-15	46.52			N.W " " " " " " "
	307-39-22	49.62			∡ Pt in Block & Wrought Iron Fence
	307-13-23	45.06			End Block & Wrought Iron Fence
	304-21-38	46.74			W. End 3' Wrought Iron Gate
	287-26-44	40.54			E. END " " " "
	275-32-37	24.66			No Parking Sign
	270-34-00	20.06			End Curb, Gutter & Side Walk @ TBC
	33-32-42	42.20	N Rim	39.16	w/v
			Nut	37.32	
	32-50-30	38.54	N Rim	39.13	w/v
			Nut	37.61	
	37-07-35	33.57	N Rim	39.32	w/v
			Nut	36.21	
	42-43-07	30.55	N Rim	39.62	w/v
			Nut	37.63	
	59-44-42	23.31	N Rim	39.95	w/v
			Nut	35.53	
	348-27-18	49.26	N Rim	38.39	w/v
			Nut	36.20	
	355-55-36	41.84	N Rim	38.76	w/v
			Nut	37.13	
	343-16-45	40.01	N Rim	38.75	w/v
			Nut	36.64	
	348-46-43	23.71	N Rim	39.53	w/v
			Nut	36.94	
170	11-58-21	112.90	36.74		W. Edge of D/W @ EP

Shot #	Horiz ∠	Dist	Elev.	Desc.
171	34-16-42	61.96	37 40	Mail Box Edge of D/W
	36-15-12	61.24		F/H
	25-17-09	54.74	38 45	E Edge of D/W @ EP
	40-36-32	51.88		W/M
	52-16-21	46.46	37 75	S.E. Corn Dirt Parking Lot
	57-18-38	59.58	37 13	E Edge of Dirt Parking Lot
	48-10-09	48.60		Shrub
	50-49-04	42.18	N/G: 38 9	Shrub
	46-41-54	36.78	N/G: 39 4	G/W
	62-03-41	31.26	N/G: 40 0	P/P Lines E-W-N
	92-46-18	42.12		S.E. Corn Fence
	103-47-22	40.00	36 88	# 30" Conc Pipe S.E. Flow
	100-25-43	42.66	36 90	# 8" Conc Pipe N.W. Flow
	101-02-30	38.52	39 90	SW Corn. of Top of Headwall
	96-52-42	41.82		NW Corn. " " " "
	112-21-15	45.66	42 9	Top of Bank
	121-03-12	40.30	N/G: 42 6	P/P Lines S-NW
	132-28-52	52.94	N/G: 43 4	G/W
	107-22-48	67.58	44 0	Top of Bank
	123-30-44	82.86	43 3	Top of Bank
	124-09-57	86.62	42 30	Top of Conc Liner
	136-41-31	59.32	N Rm: 43 43	S.S. M.H. EF = 29.68 SW F = 29.48
	145-55-06	41.48	42 08	W. Edge Canal Access Rd @ EP
	156-25-45	65.08	42 64	N.W. Corn Conc Bridge Deck
195	159-26-18	65.32	42 80	EP @ W. Edge of Bridge Deck

Shot #	Horiz ∠	Dist.	Elev.	Desc.
196	156-33-42	78.78	43 97	
197	157-32-40	79.06		
198	158-37-12	79.22		
199	158-38-15	78.58		
200	159-32-57	78.96	43 96	
201	160-42-24	78.84	43 00	
202	169-31-57	143.92	43 69	
203	168-47-09	142.36	44 64	
204	168-21-57	142.78		
205	167-11-16	141.72	44 66	
206	167-18-57	139.04		
207	167-57-35	138.90		
208	167-20-09	143.26		Bike Route Sign
209	170-48-09	163.36	43 73	
210	187-39-48	193.06	43 81	
211	180-44-12	178.02	44 13	
212	188-33-18	173.52	43 86	
213	191-01-33	179.50		
214	190-17-36	179.70		
215	190-02-21	176.88	44 66	
216	195-51-34	112.68	44 19	
217	197-31-10	115.00	44 22	
218	193-56-49	107.66	43 40	
219	196-09-03	93.24	43 13	
220	182-33-48	76.60	43 17	

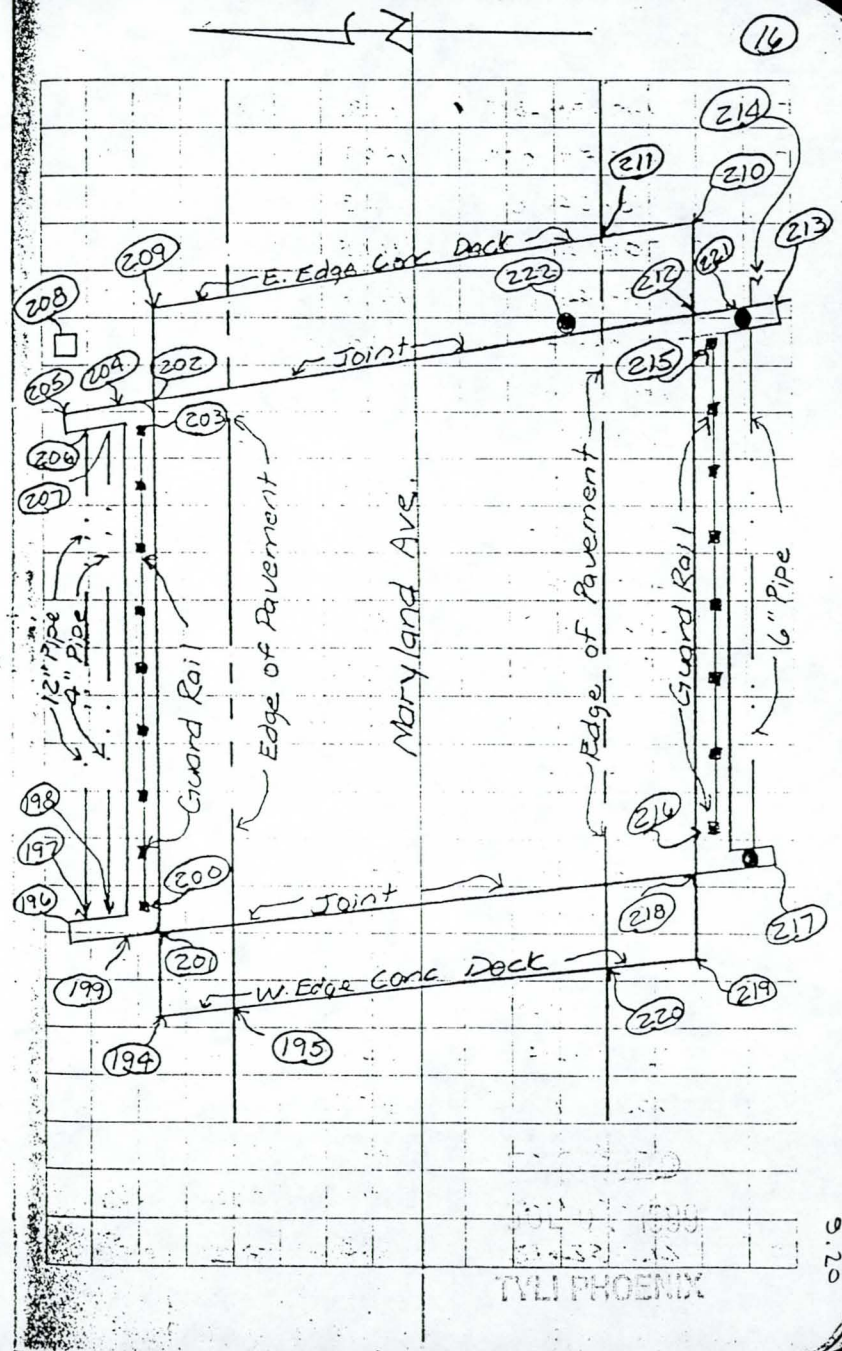

TYLI PHOENIX

221	190-39-05	178.16	44.70	
222	179-57-07	156.66	44.08	
	198-04-18	114.30	44.11	
	200-22-48	119.54	44.20	
	198-44-03	113.46	43.26	
	200-44-43	117.84	43.39	
	196-51-26	114.11	1244.22	
	203-12-54	131.10	42.79	
	204-30-22	128.86	43.5	
	205-10-00	84.94	42.9	
	204-20-32	62.62	42.3	
	216-55-06	45.22	41.4	
	232-47-09	42.06		
	206-50-03	36.64		
	197-30-18	50.08	41.80	
	190-22-13	46.00		
	192-07-00	30.34	N Rim = 41.37	
	252-46-44	33.76		
	271-48-12	40.62	36.1	N/G
	276-06-24	40.70		
	227-29-18	55.60	36.5	
	238-39-25	49.40		
	214-38-24	59.66		
	212-21-21	77.78	37.2	N/G
245	212-52-12	71.32		

(17)

2" B.C. U.S.C.E.
Copper Welded Rod Labeled AC-38 USCE
N.W. Corn. Trash Rack
S.W. Corn. Trash Rack
N.W. Corn. Conc. Pad in Front of Trash Rack
S.W " " " " " " "
3" B.C. U.S.G.S. B.M. City of Phoenix Datum = 1244.16
T.O.L. Canal W. Side
T.O.B.
T.O.B. W Edge Access Rd.
T.O.B.
T.O.B.
P/P w/Transformer Lines E-W N-S
Left Turn Sign
S.E. Corn Asphalt Pad
N.E. " " "
S.S.M.H. NE = 28.57 WE = 28.37
Willow Tree
4' Metal Corral Fence N.W. Corn.
Shrub
Toe of Slope @ Fence
Palo Verde Tree
2 - 4" Mesquite Trees
N.E. Corn 4' Corral Fence
Palo Verde Tree

RECEIVED JUL 07 1989 CITY OF PHOENIX

9.21

T @ 12 BS 10

Shot #	Horiz ∡	Dist.	Elev.
300	344-01-14	233.04	437
	343-37-15	237.92	439
	343-08-23	248.82	369
	340-37-33	150.68	4245
	340-42-00	146.00	438
	340-36-54	130.78	438
	335-20-48	117.10	
	338-09-42	122.02	
	340-13-25	118.06	
	340-01-38	114.54	
	339-26-03	94.54	
	336-43-51	101.26	
	344-44-54	108.28	
	344-44-50	122.00	438
	358-30-25	121.94	4401
	345-51-07	97.82	N Rim: 4358
	358-10-31	60.94	4459
	347-01-42	56.24	4429
	323-43-12	66.40	4397
	325-25-51	70.40	
	323-21-17	68.04	
	309-46-57	52.08	4445
	306-45-00	49.90	
323	325-14-33	42.10	4446

Desc.
W. Edge Canal Access Rd
TOB
TOE
TOL E. Edge Canal
TOB W. Edge Canal Access Rd.
E. Edge Canal Access Rd.
G/W
G/W
G/W
12" Diam Palo Verde Tree
G/W
W. End 3½' Rock Fence
Guy Pole wire N.N.E. to P/P
P/P w/Str. Lt Lines S-N-W.
E. Edge Access Rd. @ EP
S.S.M.H.
W. Edge of D/W @ EP
∡ Pt. in W. Edge of D/W
W. Edge of D/W
E. End 3½' Rock Fence
Gate Post
Gate Post E. Edge of D/W
W. End 1½' Rock Fence
E. Edge of D/W

6.22

Shot #	Horiz ∡	Dist	Elev	Desc
324	344-48-00	29.60	44.86	∡ Pt. in E. Edge of D/W
	353-39-09	22.12	45.13	E. Edge of D/W @ E.P.
	14-22-10	208.82	41.98	T.O.L. E. Side Canal
	15-27-36	203.70	43.7	T.O.B.
	17-12-42	182.48	43.9	E. Edge Access Rd
	8-52-51	157.90	43.70	E. Edge Access Rd @ EP
	15-32-06	173.70		S. End of 2' Redwood Fence
	26-41-43	225.64		Point on line of Redwood Fence
	26-48-18	224.68		Inside Face of 2" High 6" Curb conc. Begin Curve
	22-12-48	189.72		P.O.C of Curb
	25-53-22	161.36		18" Diam Pine Tree
	17-35-33	144.34		W. End 3' Redwood Rail Fence
	23-31-18	140.02		P.O.C. of Curb
	19-53-15	128.42		E. End Redwood Fence
	18-11-18	129.18	N Rim = 44.08	S.S. M.H. E ℄ = 36.78 W ℄ = 36.73 N ℄ = 36.83
	26-08-27	110.76	N Rim: 44.06 Nut 43.35	W/V
	25-17-57	112.60		W/M
	34-14-18	119.10		Rainbird Spr.
	39-24-24	128.44		10" Diam Pine Tree
	44-31-00	106.64		Herberger Pk # 2 Sign S. End
	48-45-18	106.80		" " " " N. End
	48-03-03	115.78		P.O.C in Curb
	56-29-30	141.92		72" Diam Willow Tree
	62-40-39	140.88		Metal Lt. Post
348	61-56-14	141.22		P.O.C. in Curb

9.23

Shot #	Horiz. ∠	Dist	Elev	
349.	30-40-12	53.46	4548	Lip
			4547	℄
	52-28-54	44.06	4590	T/C
			4598	B/W
	56-45-18	50.80		
	62-11-24	55.00		
	68-30-12	58.92	4551	Lip
			4550	℄
	89-10-30	40.06	4590	T/C
			4581	B/W
	113-51-49	49.18	4636	Lip
			4637	℄
	24-56-18	76.36	4683	T/C
			4694	B/W
	120-17-39	49.52		
	130-52-44	32.24	N.Rim =	4 ~~5~~66
	134-31-37	36.30	5665	
	155-29-54	49.14	5697	Lip
			5693	℄
	162-48-03	69.56	5740	T/C
			5752	B/W
	160-38-46	72.76		
	151-31-37	51.00		
	157-29-30	72.28		
	159-58-48	90.06		
	162-01-42	105.32		
	163-10-54	122.36		
	170-43-30	163.86		
	75-04-29	99.50	4497	
	75-56-24	99.64	4498	
	96-57-52	103.78	4535	
	97-39-39	104.42	4538	
373	106-01-45	101.64		

Desc.	
S.W. Curb Return @ TBC Begin C & G & S/W	
℄ Handicap Ramp @ TBC	Elev. = 4551
2-2" PVC Pipes 2' Above Ground	
Yield & Street Sign	
N.W. C.R @ TBC	
C.O.P. BC Flush	Elev. = 4599
N.E. C.R. @ TBC	
P/P w/Str. Lt. Lines E-W NW-SW	
2-2" PVC Pipes 2' Above Ground	
S.S.M.H. W℄ = ~~4~~3891	E℄ = ~~5~~4091
℄ Handicap Ramp @ TBC	
S.E. C.R. @ TBC	
S/W Breaks from Curb Begin Curve	
Front of Walk 4' wide	
B/W Begin Curve	
B/W	
Front of Walk	
P/P Lines E-W	
Front of Walk	
Front of Walk	
℄ @ ℄ of Scupper	
℄ 10' wide Valley Gutter @ Lp	
℄ 10' " " " " "	
℄ @ ℄ of Scupper	
Palo Verde	

3.24

Shot #	Horiz ∠	Dist	Elev	Desc
374	115-26-11	102.70		Mesquite Tree
375	123-33-11	98.52	North TB 46.5 ℄ 45.1 South TB 46.4	℄ 4' Swale
376	145-13-54	111.36	North TB 48.2 ℄ 47.4 South TB 48.0	℄ 4' Swale
377	160-07-23	157.46	North TB 50.0 ℄ 49.2 South TB 50.1	℄ 4' Swale
378	169-16-24	174.98		Palo Verde
	172-02-12	197.34		Front of Walk
	172-40-30	221.12		4" China Berry ?
	171-28-32	246.20		Front of Walk
	173-15-39	248.30		3" China Berry ?
	173-58-36	263.10		3" China Berry ?
	172-32-06	269.92		Front of Walk
	173-08-15	272.30		P/P w/Str. Lt. Lines E-W
	175-38-27	292.92		Front of Walk @ TBC End S/W Curves
	175-48-46	338.14		S.S.M.H.
	179-27-06	247.50	52.35	E. Edge of D/W @ EP
	181-35-52	243.16	51.75	E. Edge of D/W
	189-20-06	249.20		W. End of 2' Rock Fence
	189-20-10	246.62	49.92	E. Edge of D/W
	190-01-16	231.28	49.87	W. Edge of D/W
	190-09-36	228.22		E. Edge of 2' Rock Fence
	181-38-27	227.76	51.49	W. Edge of D/W
395	179-21-20	223.66	51.94	E.W. Edge of D/W @ EP

9.25

Shot #	Horiz ∡	Dist	Elev		Desc.
396	179-42-50	107.98	48 76		E. Edge of D/W @ E.P.
	201-13-57	111.14	47 91		W. End of Rock Fence @ E. Edge of D/W
	204-55-30	96.14	47 59		E. End of Rock Fence @ W. Edge of D/W
	180-02-42	90.42	48 26		W. Edge of D/W @ EP
	203-23-15	40.30	N.Rim Nut	46 17 41 79	W/V
	204-48-30	36.15	N.Rim Nut	46 13 41 38	W/V
	191-31-39	29.80	N.Rim Nut	46 36 42 85	W/V
	226-38-38	35.75			Delineator Sign
	211-46-57	31.01	N.Rim Nut	45 95 42 65	W/V
	225-05-08	28.10	N.Rim Nut	45 80 43 57	W/V
	220-43-21	22.67	N.Rim Nut	45 71 43 68	W/V
	193-48-33	23.00	N.Rim Nut	46 22 42 43	W/V
	199-23-22	18.02	N.Rim Nut	46 20 43 85	W/V
	234-32-48	31.50			F/H
	245-02-24	28.48			Delineator Sign
	255-24-51	14.98			Not a Thru Street Sign
	140-10-57	15.08	N.Rim Nut	46 35 45 37	W/V
413	63-12-35	685.94	N.Rim =	45 04	S.S.M.H. ℄ N = 36.59 ℄ S = 36.69 ℄ W = 36.79
414	82-13-53	362.22			N.W. Corn Pump Fence - Chain Link 6' High
	CWIR (#222)				
	TR AC 38	BS 10			
Shot #	Horiz ∡	Dist	Elev		Desc
500	230-07-46	580.64	N.Rim 44 01		S.S.M.H. ℄ N = 37 36 ℄ S. = 37 61 ℄ E. = 37 41
415	84-45-48	336.24			S.W. Corn Pump Fence
416	85-51-15	340.40			S.E. Corn Pump Fence

9.26

Level Loop Between BC. in H.H
@ 16th St & Maryland and USGS BC. on
Bridge 7-4-89 R Bert
M. Stowman

+	HI	−	Elev	Desc.
			1244.16	USGS BM Elev = 1244.22
				C.O.P Datum : 1244.16
2.68				
		11.68		
1.91				
		8.36		
1.29				
		7.65		
4.61				
		7.03		
1.95				
		9.4		
1.93				
		7.50		
3.07				
		3.05	1202.64	C.O.P BC Elev = 1202.67
1.49		5.01		16th St & Maryland

RECEIVED
JUL 07 1989
TVL PHOENIX

SUPERSEDED
08AUG89 DRS

9.28

```
02 "BASELINE.PGL"
02
02 Rev.    0        10JUL89  Dan Shiosaka
02                           Verify baseline and stationing points
02
02 Rev.    1        03AUG89  Dan Shiosaka
02                           By direction from the FCDMC, the monument line
02                           survey performed by Jerry R. Jones and furnished
02                           by the FCDMC shall be used for geometric control.
02
08 010 012                                        / Control point coordinates
   10          920713.7051          462967.0653

   11          920682.4415          460341.0114

   12          920717.5735          463292.0023

08 017 023                                        / Station point coordinates
   17          920710.1338          462667.0866

   18          920711.3242          462767.0795

   19          920712.5146          462867.0724

   20          920713.7051          462967.0653

   21          920714.8955          463067.0583

   22          920716.0859          463167.0512

   23          920717.2764          463267.0441

13 010 011                                        / Backsight  16th Street
  10 TO    11 DIST=    2626.240  BR= S  89 19  4.5 W

13 010 012                                        / Frontsight 20th Street NB
  10 TO    12 DIST=     324.960  BR= N  89 19  4.5 E

13 011 012                                        / Check baseline bearing
  11 TO    12 DIST=    2951.200  BR= N  89 19  4.5 E

02
13 017 018                                        / Check station
  17 TO    18 DIST=     100.000  BR= N  89 19  4.5 E

13 018 019                                        / Check station
  18 TO    19 DIST=     100.000  BR= N  89 19  4.5 E

13 019 020                                        / Check station
  19 TO    20 DIST=     100.000  BR= N  89 19  4.5 E

13 020 021                                        / Check station
  20 TO    21 DIST=     100.000  BR= N  89 19  4.5 E

13 021 022                                        / Check station
  21 TO    22 DIST=     100.000  BR= N  89 19  4.5 E

13 022 023                                        / Check station
  22 TO    23 DIST=     100.000  BR= N  89 19  4.5 E

02
02 NEW DEFINITION OF THE BASELINE
02 *****************************
02
05 120  920714.89   462967.81                     / New baseline Sta 20+00.00
  120          920714.8900          462967.8100

05 146  920733.17   465615.18                     / New baseline Sta 46+47.86
  146          920733.1700          465615.1800

02
13 120 146                                        / Baseline bearing
 120 TO   146 DIST=    2647.433  BR= N  89 36 15.8 E

02
24 120 146 117    -300.00                         / Tick mark 17
  117          920712.8186          462667.8172

24 120 146 118    -200.00                         / Tick mark 18
  118          920713.5090          462767.8148
```

$$\frac{2647.433}{0.99983846} = 2647.86$$

SUPERSEDED
08 AUG 89 DRS

9.29

```
24 120 146 119    -100.00                    / Tick mark 19
   119         920714.1995        462867.8124

02
24 120 146 121     100.00                    / Tick mark 21
   121         920715.5805        463067.8076

24 120 146 122     200.00                    / Tick mark 22
   122         920716.2710        463167.8052

24 120 146 123     300.00                    / Tick mark 23
   123         920716.9614        463267.8028

02
02                                           / How much variation?
02
13 017 117                                   / At Sta 17
   17 TO   117 DIST=      2.782  BR= N  15 13 19.5 E

13 018 118                                   / At Sta 18
   18 TO   118 DIST=      2.305  BR= N  18 35 58.0 E

13 019 119                                   / At Sta 19
   19 TO   119 DIST=      1.840  BR= N  23 42 35.5 E

13 020 120                                   / At Sta 20
   20 TO   120 DIST=      1.399  BR= N  32  8 49.3 E

13 021 121                                   / At Sta 21
   21 TO   121 DIST=      1.015  BR= N  47 34 13.3 E

13 022 122                                   / At Sta 21
   22 TO   122 DIST=       .776  BR= N  76 12 51.1 E

13 023 123                                   / At Sta 22
   23 TO   123 DIST=       .822  BR= S  67 27 30.2 E

04
```

QUITE A BIT OF VARIATION IN 600 FEET!

ACEVEDO-KEEGAN SURVEY GAVE GOOD CORRELATION WITH BENCH MARKS.

JERRY R. JONES SURVEY WOULD BE SLIGHTLY OFF ON AERIAL MAPPING AND BRASS CAPS.

SUPERSEDED
03AUG 89 DRS

9.30

```
02 "BASELINE.PGL"
02 Rev.    0      10JUL89   Dan Shiosaka
02                           Verify baseline and stationing points
02
08 0010 0012                                        / Control point coordinates
    10          920713.7051          462967.0653

    11          920682.4415          460341.0114

    12          920717.5735          463292.0023

08 0017 0023                                        / Station point coordinates
    17          920710.1338          462667.0866

    18          920711.3242          462767.0795

    19          920712.5146          462867.0724

    20          920713.7051          462967.0653

    21          920714.8955          463067.0583

    22          920716.0859          463167.0512

    23          920717.2764          463267.0441

13 0010 0011                                        / Backsight  16th Street
   10 TO    11 DIST=    2626.240  BR= S  89 19  4.5 W

13 0010 0012                                        / Frontsight 20th Street NB
   10 TO    12 DIST=     324.960  BR= N  89 19  4.5 E

13 0011 0012                                        / Check baseline bearing
   11 TO    12 DIST=    2951.200  BR= N  89 19  4.5 E

02
13 0017 0018                                        / Check station
   17 TO    18 DIST=     100.000  BR= N  89 19  4.5 E

13 0018 0019                                        / Check station
   18 TO    19 DIST=     100.000  BR= N  89 19  4.5 E

13 0019 0020                                        / Check station
   19 TO    20 DIST=     100.000  BR= N  89 19  4.5 E

13 0020 0021                                        / Check station
   20 TO    21 DIST=     100.000  BR= N  89 19  4.5 E

13 0021 0022                                        / Check station
   21 TO    22 DIST=     100.000  BR= N  89 19  4.5 E

13 0022 0023                                        / Check station
   22 TO    23 DIST=     100.000  BR= N  89 19  4.5 E

04
```

SUPERSEDED
08AUG89 DRS

9.31

```
02 "ACDC.PGL"
02 Rev.    0      10JUL89   Dan Shiosaka
02                           Create ACDC centerline (PGL)
02
05 545  922129.42   462148.78                          / PI 545
   545          922129.4200          462148.7800

05 550  921732.49   462251.10                          / PI 550
   550          921732.4900          462251.1000

05 555  921613.25   462420.81                          / PI 555
   555          921613.2500          462420.8100

05 560  921049.73   463005.62                          / PI 560
   560          921049.7300          463005.6200

05 570  920461.05   463357.35                          / PI 570
   570          920461.0500          463357.3500

05 580  920284.19   463388.07                          / PI 580
   580          920284.1900          463388.0700

05 590  919848.32   463707.64                          / PI 590
   590          919848.3200          463707.6400

05 600  919786.80   463892.20                          / PI 600
   600          919786.8000          463892.2000

05 620  918932.00   464741.00                          / PI 620

  POINT   620 BEING REDEFINED.
  OLD COORDINATES     918932.0000     464741.0000

   620          918932.0000          464741.0000

02
13 545 550                                              / Tan brg & length
  545 TO   550 DIST=     409.906  BR= S  14 27 17.7 E

13 550 555                                              / Tan brg & length
  550 TO   555 DIST=     207.412  BR= S  54 54 27.8 E

13 555 560                                              / Tan brg & length
  555 TO   560 DIST=     812.131  BR= S  46  3 43.7 E

13 560 570                                              / Tan brg & length
  560 TO   570 DIST=     685.754  BR= S  30 51 28.3 E

13 570 580                                              / Tan brg & length
  570 TO   580 DIST=     179.508  BR= S   9 51 13.6 E

13 580 590                                              / Tan brg & length
  580 TO   590 DIST=     540.470  BR= S  36 14 52.9 E

13 590 600                                              / Tan brg & length
  590 TO   600 DIST=     194.543  BR= S  71 33 54.2 E

13 600 620                                              / Tan brg & length
  600 TO   620 DIST=    1204.635  BR= S  44 47 53.5 E

02
50   1 545 550 555 551 552 553 350.    0   84807.60  0 / Curve 1 @ PI 550

  CURVE NUMBER     1

  RADIUS  =     350.000  CHORD   =      242.011
  TANG    =     128.958  ARC     =      247.112
  DC      =      16.370  EXT     =       23.002
  DELTA   =  40 27 10.1  BK TANG =      280.948

  PC (  551) STA =     850 + 88.548
  PT (  553) STA =     853 + 35.660
  PI (  550) STA =     852 + 17.506 BK
                 =     852 +  6.702 AHD

   551         921857.3658          462218.9097

   553         921658.3527          462356.6170

   552         921944.7322          462557.8302
```

SUPERSEDED
08AUG89 DRS


```
50   2 553 555 560 556 557 558 350.    0      -1     0 / Curve 2 @ PI 555

  CURVE NUMBER     2

  RADIUS  =     350.000  CHORD   =       53.981
  TANG    =      27.071  ARC     =       54.035
  DC      =      16.370  EXT     =        1.045
  DELTA   =   8 50 44.1  BK TANG =       51.383

  PC (  556) STA =     853 + 87.043
  PT (  558) STA =     854 + 41.077
  PI (  555) STA =     854 + 14.114 BK
                 =     854 + 14.006 AHD

   556         921628.8130         462398.6597

   558         921594.4660         462440.3037

   557         921342.4335         462197.4465

50   3 558 560 570 561 562 563 605.    0      -1     0 / Curve 3 @ PI 560

  CURVE NUMBER     3

  RADIUS  =     605.000  CHORD   =      160.075
  TANG    =      80.747  ARC     =      160.546
  DC      =       9.470  EXT     =        5.365
  DELTA   =  15 12 15.4  BK TANG =      704.313

  PC (  561) STA =     861 + 45.390
  PT (  563) STA =     863 +  5.936
  PI (  560) STA =     862 + 26.138 BK
                 =     862 + 25.189 AHD

   561         921105.7587         462947.4745

   563         920980.4132         463047.0361

   562         920670.1026         462527.6785

50   4 563 570 580 571 572 573 400.    0      -1     0 / Curve 4 @ PI 570

  CURVE NUMBER     4

  RADIUS  =     400.000  CHORD   =      145.816
  TANG    =      74.150  ARC     =      146.636
  DC      =      14.324  EXT     =        6.815
  DELTA   =  21  0 14.7  BK TANG =      530.856

  PC (  571) STA =     868 + 36.792
  PT (  573) STA =     869 + 83.428
  PI (  570) STA =     869 + 10.942 BK
                 =     869 +  9.278 AHD

   571         920524.7038         463319.3175

   573         920387.9935         463370.0397

   572         920319.5398         462975.9406

50   5 573 580 590 581 582 583 300.    0      -1     0 / Curve 5 @ PI 580

  CURVE NUMBER     5

  RADIUS  =     300.000  CHORD   =      136.981
  TANG    =      70.348  ARC     =      138.200
  DC      =      19.099  EXT     =        8.138
  DELTA   =  26 23 39.3  BK TANG =       35.009

  PC (  581) STA =     870 + 18.438
  PT (  583) STA =     871 + 56.638
  PI (  580) STA =     870 + 88.786 BK
                 =     870 + 86.289 AHD

   581         920353.5007         463376.0310

   583         920227.4564         463429.6658

   582         920404.8410         463671.6053
```

SUPERSEDED
08AUG89 DRS


```
50   6 583 590 600 591 592 593 349.5   0      -1     0 / Curve 6 @ PI 590

  CURVE NUMBER     6

  RADIUS  =     349.500  CHORD   =      212.037
  TANG    =     111.261  ARC     =      215.431
  DC      =      16.394  EXT     =       17.282
  DELTA   =  35 19  1.3  BK TANG =      358.860

  PC (  591) STA =     875 + 15.498
  PT (  593) STA =     877 + 30.929
  PI (  590) STA =     876 + 26.759 BK
                 =     876 + 19.668 AHD

   591         919938.0480         463641.8534

   593         919813.1362         463813.1914

   592         920144.7010         463923.7130

50   7 593 600 620 601 602 603 350.    0      -1     0 / Curve 7 @ PI 600

  CURVE NUMBER     7

  RADIUS  =     350.000  CHORD   =      162.026
  TANG    =      83.275  ARC     =      163.509
  DC      =      16.370  EXT     =        9.770
  DELTA   =  26 46   .6  BK TANG =         .008

  PC (  601) STA =     877 + 30.937
  PT (  603) STA =     878 + 94.446
  PI (  600) STA =     878 + 14.212 BK
                 =     878 + 11.171 AHD

   601         919813.1338         463813.1986

   603         919727.7088         463950.8764

   602         919481.0946         463702.5189

02
30 999 560 570 011 012                           / Intersection
   999         920716.5342         463204.7009

02
13  20 999                                       / Maryland Station
   20 TO   999 DIST=     237.652  BR= N  89 19  4.5 E                    22+37.65

51   3 999                                       / ACDC     Station

  POINT     C/L STATION     OFFSET

   999     866 + 13.329       .000
04
```

SKEW = 30° 10' 32.8" LEFT

= (30.1757°)

SIN SKEW = 0.5027

COS SKEW = 0.8645 SEC SKEW = 1.1568

TAN SKEW = 0.5814

Project	FCDMC 88-39
Item	Maryland Ave. Bridge
Design	Profile
Date	20-Jul-89

	Station	Elevation		
Begin profile	21+77.00	1244.14		
End profile	23+20.00	1245.73	Grade	1.112%

Station	Elevation	Station	Elevation	Station	Elevation	Station	Elevation
		22+01.00	1244.407	22+51.00	1244.963	23+01.00	1245.518
		22+02.00	1244.418	22+52.00	1244.974	23+02.00	1245.530
		22+03.00	1244.429	22+53.00	1244.985	23+03.00	1245.541
		22+04.00	1244.440	22+54.00	1244.996	23+04.00	1245.552
		22+05.00	1244.451	22+55.00	1245.007	23+05.00	1245.563
		22+06.00	1244.462	22+56.00	1245.018	23+06.00	1245.574
		22+07.00	1244.474	22+57.00	1245.030	23+07.00	1245.585
		22+08.00	1244.485	22+58.00	1245.041	23+08.00	1245.597
		22+09.00	1244.496	22+59.00	1245.052	23+09.00	1245.608
		22+10.00	1244.507	22+60.00	1245.063	23+10.00	1245.619
		22+11.00	1244.518	22+61.00	1245.074	23+11.00	1245.630
		22+12.00	1244.529	22+62.00	1245.085	23+12.00	1245.641
		22+13.00	1244.540	22+63.00	1245.096	23+13.00	1245.652
		22+14.00	1244.551	22+64.00	1245.107	23+14.00	1245.663
		22+15.00	1244.563	22+65.00	1245.118	23+15.00	1245.674
		22+16.00	1244.574	22+66.00	1245.130	23+16.00	1245.686
		22+17.00	1244.585	22+67.00	1245.141	23+17.00	1245.697
		22+18.00	1244.596	22+68.00	1245.152	23+18.00	1245.708
		22+19.00	1244.607	22+69.00	1245.163	23+19.00	1245.719
		22+20.00	1244.618	22+70.00	1245.174	23+20.00	1245.730
		22+21.00	1244.629	22+71.00	1245.185		
		22+22.00	1244.640	22+72.00	1245.196		
		22+23.00	1244.651	22+73.00	1245.207		
		22+24.00	1244.663	22+74.00	1245.219		
		22+25.00	1244.674	22+75.00	1245.230		
		22+26.00	1244.685	22+76.00	1245.241		
21+77.00	1244.140	22+27.00	1244.696	22+77.00	1245.252		
21+78.00	1244.151	22+28.00	1244.707	22+78.00	1245.263		
21+79.00	1244.162	22+29.00	1244.718	22+79.00	1245.274		
21+80.00	1244.173	22+30.00	1244.729	22+80.00	1245.285		
21+81.00	1244.184	22+31.00	1244.740	22+81.00	1245.296		
21+82.00	1244.196	22+32.00	1244.752	22+82.00	1245.307		
21+83.00	1244.207	22+33.00	1244.763	22+83.00	1245.319		
21+84.00	1244.218	22+34.00	1244.774	22+84.00	1245.330		
21+85.00	1244.229	22+35.00	1244.785	22+85.00	1245.341		
21+86.00	1244.240	22+36.00	1244.796	22+86.00	1245.352		
21+87.00	1244.251	22+37.00	1244.807	22+87.00	1245.363		
21+88.00	1244.262	22+38.00	1244.818	22+88.00	1245.374		
21+89.00	1244.273	22+39.00	1244.829	22+89.00	1245.385		
21+90.00	1244.285	22+40.00	1244.840	22+90.00	1245.396		
21+91.00	1244.296	22+41.00	1244.852	22+91.00	1245.408		
21+92.00	1244.307	22+42.00	1244.863	22+92.00	1245.419		
21+93.00	1244.318	22+43.00	1244.874	22+93.00	1245.430		
21+94.00	1244.329	22+44.00	1244.885	22+94.00	1245.441		
21+95.00	1244.340	22+45.00	1244.896	22+95.00	1245.452		
21+96.00	1244.351	22+46.00	1244.907	22+96.00	1245.463		
21+97.00	1244.362	22+47.00	1244.918	22+97.00	1245.474		
21+98.00	1244.373	22+48.00	1244.929	22+98.00	1245.485		
21+99.00	1244.385	22+49.00	1244.941	22+99.00	1245.497		
22+00.00	1244.396	22+50.00	1244.952	23+00.00	1245.508		

SUPERSEDED
22 SEP 89

9.35

Project	FCDMC 88-39
Item	Maryland Ave. Bridge
Design	Profile
Date	11-Jul-89

	Station	Elevation
Begin profile	21+60.00	1243.87
End profile	23+20.00	1245.73

Grade 1.1625%

Station	Elevation	Station	Elevation	Station	Elevation	Station	Elevation
		22+01.00	1244.35	22+51.00	1244.93	23+01.00	1245.51
		22+02.00	1244.36	22+52.00	1244.94	23+02.00	1245.52
		22+03.00	1244.37	22+53.00	1244.95	23+03.00	1245.53
		22+04.00	1244.38	22+54.00	1244.96	23+04.00	1245.54
		22+05.00	1244.39	22+55.00	1244.97	23+05.00	1245.56
		22+06.00	1244.40	22+56.00	1244.99	23+06.00	1245.57
		22+07.00	1244.42	22+57.00	1245.00	23+07.00	1245.58
		22+08.00	1244.43	22+58.00	1245.01	23+08.00	1245.59
		22+09.00	1244.44	22+59.00	1245.02	23+09.00	1245.60
21+60.00	1243.87	22+10.00	1244.45	22+60.00	1245.03	23+10.00	1245.61
21+61.00	1243.88	22+11.00	1244.46	22+61.00	1245.04	23+11.00	1245.63
21+62.00	1243.89	22+12.00	1244.47	22+62.00	1245.06	23+12.00	1245.64
21+63.00	1243.90	22+13.00	1244.49	22+63.00	1245.07	23+13.00	1245.65
21+64.00	1243.92	22+14.00	1244.50	22+64.00	1245.08	23+14.00	1245.66
21+65.00	1243.93	22+15.00	1244.51	22+65.00	1245.09	23+15.00	1245.67
21+66.00	1243.94	22+16.00	1244.52	22+66.00	1245.10	23+16.00	1245.68
21+67.00	1243.95	22+17.00	1244.53	22+67.00	1245.11	23+17.00	1245.70
21+68.00	1243.96	22+18.00	1244.54	22+68.00	1245.13	23+18.00	1245.71
21+69.00	1243.97	22+19.00	1244.56	22+69.00	1245.14	23+19.00	1245.72
21+70.00	1243.99	22+20.00	1244.57	22+70.00	1245.15	23+20.00	1245.73
21+71.00	1244.00	22+21.00	1244.58	22+71.00	1245.16		
21+72.00	1244.01	22+22.00	1244.59	22+72.00	1245.17		
21+73.00	1244.02	22+23.00	1244.60	22+73.00	1245.18		
21+74.00	1244.03	22+24.00	1244.61	22+74.00	1245.20		
21+75.00	1244.04	22+25.00	1244.63	22+75.00	1245.21		
21+76.00	1244.06	22+26.00	1244.64	22+76.00	1245.22		
21+77.00	1244.07	22+27.00	1244.65	22+77.00	1245.23		
21+78.00	1244.08	22+28.00	1244.66	22+78.00	1245.24		
21+79.00	1244.09	22+29.00	1244.67	22+79.00	1245.25		
21+80.00	1244.10	22+30.00	1244.68	22+80.00	1245.27		
21+81.00	1244.11	22+31.00	1244.70	22+81.00	1245.28		
21+82.00	1244.13	22+32.00	1244.71	22+82.00	1245.29		
21+83.00	1244.14	22+33.00	1244.72	22+83.00	1245.30		
21+84.00	1244.15	22+34.00	1244.73	22+84.00	1245.31		
21+85.00	1244.16	22+35.00	1244.74	22+85.00	1245.32		
21+86.00	1244.17	22+36.00	1244.75	22+86.00	1245.33		
21+87.00	1244.18	22+37.00	1244.77	22+87.00	1245.35		
21+88.00	1244.20	22+38.00	1244.78	22+88.00	1245.36		
21+89.00	1244.21	22+39.00	1244.79	22+89.00	1245.37		
21+90.00	1244.22	22+40.00	1244.80	22+90.00	1245.38		
21+91.00	1244.23	22+41.00	1244.81	22+91.00	1245.39		
21+92.00	1244.24	22+42.00	1244.82	22+92.00	1245.40		
21+93.00	1244.25	22+43.00	1244.83	22+93.00	1245.42		
21+94.00	1244.27	22+44.00	1244.85	22+94.00	1245.43		
21+95.00	1244.28	22+45.00	1244.86	22+95.00	1245.44		
21+96.00	1244.29	22+46.00	1244.87	22+96.00	1245.45		
21+97.00	1244.30	22+47.00	1244.88	22+97.00	1245.46		
21+98.00	1244.31	22+48.00	1244.89	22+98.00	1245.47		
21+99.00	1244.32	22+49.00	1244.90	22+99.00	1245.49		
22+00.00	1244.34	22+50.00	1244.92	23+00.00	1245.50		

SUPERSEDED
20 JUL 89 DRS

T.Y. LIN INTERNATIONAL STRUCTURAL ENGINEERING 1817 N. 7th St., Suite 270, Phoenix, AZ 85006	PROJECT: FCDMC 88-39 ITEM: MARYLAND AVENUE BRIDGE DESIGN: UTILITIES DATE: 23 JUN 89 DRS	SHEET: 9.36 OF REVISION:

UTILITIES (INTERNAL)

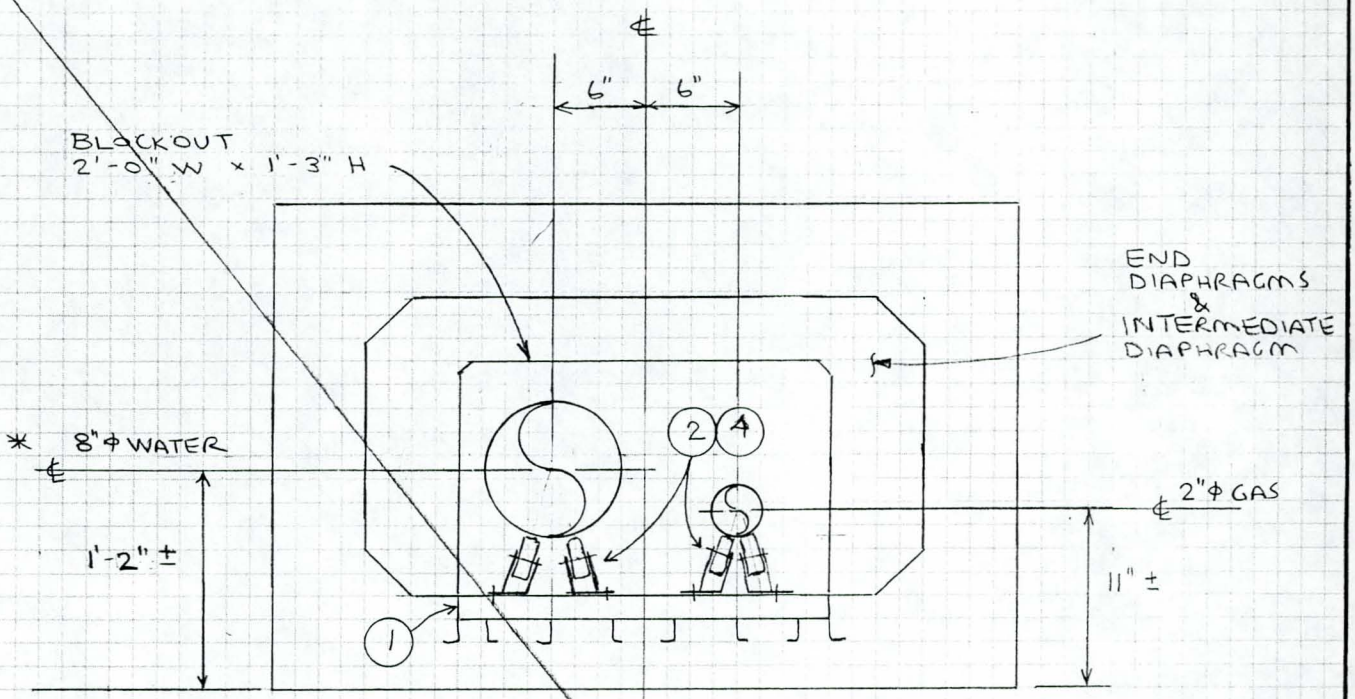

* 8"Φ WATER FROM AZ CANAL TO GRANADA PARK RESERVOIR

NORMAL SECTION BG1

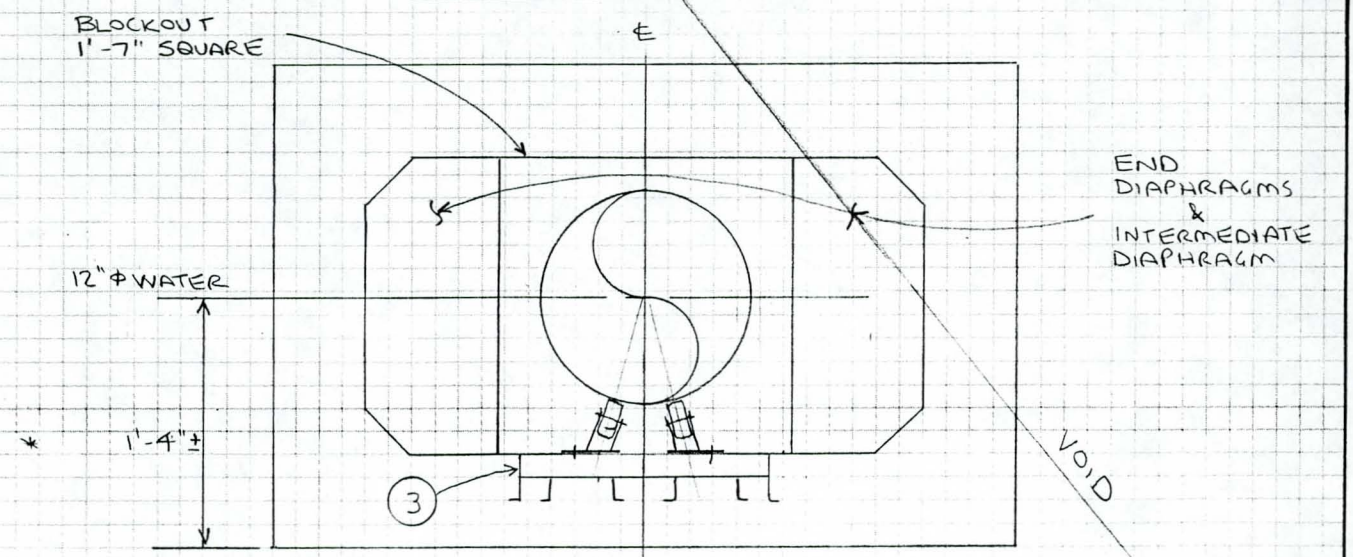

VOID

NORMAL SECTION BG2

1.	P3256	CONCRETE INSERT OR EQUIV	3 REQD
2.	P2475	PIPE ROLLER OR EQUIV	18 REQD
3.	P3254	CONCRETE INSERT OR EQUIV	3 REQD
4.	P1010	SPRING NUTS OR EQUIV	36 REQD