Final Calcs., Received 3/24/88

STRUCTURAL CALCULATIONS

Property of
Flood Control District of MC Library
Please Return to
2801 W. Durango
Phoenix, AZ 85009

FOR

NORTHERN AVENUE BRIDGE

AT ACDC

F.C.D. CONTRACT 87-58

PREPARED FOR

FLOOD CONTROL DISTRICT OF MARICOPA COUNTY

rga engineering corporation

MARCH, 1988

RGA #87026

A118.807

2000 E. Indian School Road-Suite 401 • Phoenix, Arizona 85016-6741 • (602) 957-6191

engineering corporation

project NORTHERN AVE. BRIDGE no. 87026
client FLOOD CONTROL DIST. design CG/AGA date 11/87
subject STRUCTURAL CALCULATIONS checked sal date 12/87

INDEX

Registered Professional Engineer CERTIFICATE NO. 17709 ASHOK G. ANALYE Date Signed 12/22/87 ARIZONA, U.S.A.

TITLE	PAGE NO.
DESIGN LOADS	1-3
DESIGN OF VOIDED SLABS	4-14
DESIGN OF BEARING PADS	15-17
DESIGN OF ABUTMENT WALL	18-27
DESIGN OF WING WALLS	28-31
DESIGN OF DRILLED SHAFTS	32-40
MISC. DETAILS	41-46
APPROXIMATE QUANTITIES	47-51
SUPPORTING DATA	

rga engineering corporation

project NORTHERN AVE. BRIDGE no. 87026
client FLOOD CONTROL DIST. design CG/AGA date 11/87
subject DESIGN checked sal date 12/87

Design span = 53'-10" (℄ - ℄ of cols.) − 3'-0" (width of abut. wall) + 21" (beam depth) = 52.6' (AASHTO 9.6)

DESIGN LOADS

(i) DEAD LOAD

NOTE: Av. conc. thickness. For strength purposes min. of 4" considered.

(1) Self-wt. of voided decks

(2) 25 psf of future wearing surface + 4½" Concrete + 5 psf Misc.

(3) Wt. of concrete curbs (sidewalks) distributed through the width of the bridge (an approx. wt. of 2.8 k/ft is divided into 21 to apply to each slab)

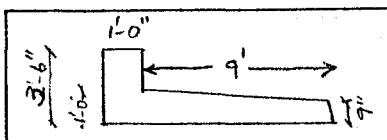

Area of C.S = $3.5 \times 1 + \left(\frac{1+0.75}{2}\right) \times 9 - \frac{3''}{12} \times 10$ (No topping below sidewalk)

∴ wt = $8.875 \times 0.15\ k/ft^3 \times 2 = 2.7\ k/ft$

(ii) LIVE LOAD

AASHTO HS20-44 loading

Try a S IV-48 AASHTO voided slab

Section Properties

Area = 703 in²

I = 34,517 in⁴

S = 3,287 in³

Wt. = 0.73 k/ft

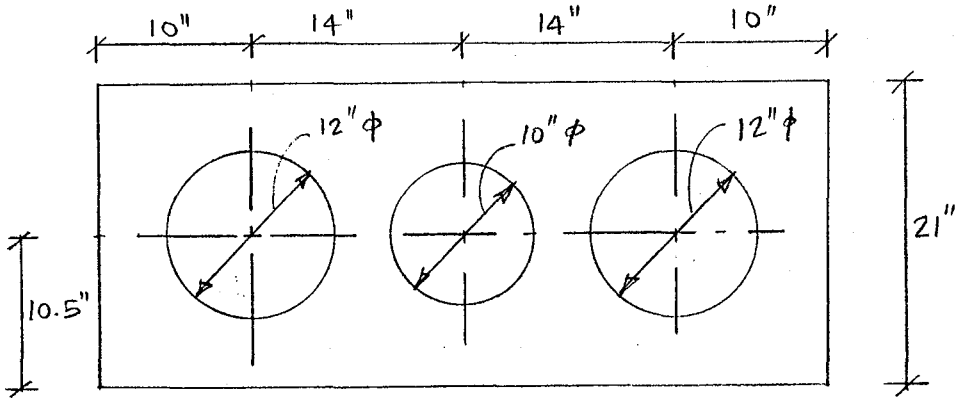

f'_{ci} = 4,000 psi & f'_c = 5,500 psi

engineering corporation

project NORTHERN AVE. BRIDGE no. 87026
client FLOOD CONTROL DIST. design CG/AGA date 3/88
subject DESIGN checked date

SECTION PROPERTIES (COMPOSITE)

CG of Composite Section

E_c (topping) [4000 psi] = 3834 ksi

E_c (beam) [5,500 psi] = 4496 ksi

$n = \frac{3834}{4496} = 0.853$

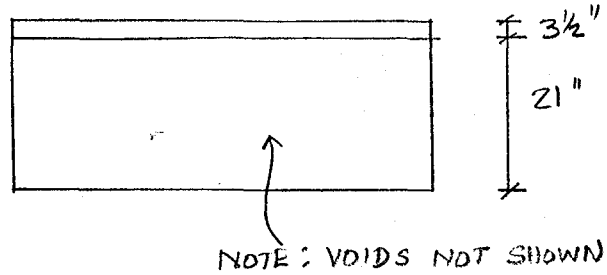

		Area	y	Ay
Topping	3½ × 48 × 0.853 =	143	22.75	3253.3
beam		703	10.5	7381.5
		846		10,634.8

$$y_{cb} = \frac{10,634.8}{846} = 12.57''$$

$$I \text{ of Composite section} = 34,517 + \frac{(40.9)(3.5)^3}{12} + 703(2.07)^2 + 143(10.18)^2$$

$$= 52,495 \text{ in}^4$$

$$S_{cb} = \frac{52,495}{12.57} = 4176 \text{ in}^3$$

$$S_{ctg} = \frac{52,495}{8.43} = 6227 \text{ in}^3$$

$$S_{ct} = \frac{52,495}{11.93} = 4400 \text{ in}^3$$

engineering corporation

project NORTHERN AVE. BRIDGE no. 87026
client FLOOD CONTROL DIST. design CG/AGA date 11/87
subject DESIGN checked [illegible] date 12/87

DESIGN MOMENTS

(i) Dead Load Moment

Load on precast section (Self-wt) $= 0.73\ k/ft + 0.23\ k/ft$ (≈ 4½" topping) $= 0.96\ k/ft$

Moment @ mid span (precast section) $= \frac{wl^2}{8} = \frac{0.96 \times 52.6^2}{8} = 332$ k-ft

Moment @ mid span (composite loading) $= \frac{0.25 \times 52.6^2}{8} = 86.5$ k-ft (≈ curb + W.S + Misc.)

(ii) Live Load Moment

Load fraction $= \frac{S}{D}$ (AASHTO 3.23.4.3 ; Eqn. 3-11)

where $S = \frac{12 N_L + 9}{N_g}$ (Eqn. 3-12)

$D = 5 + \frac{N_L}{10} + \left(3 - \frac{2N_L}{7}\right)\left(1 - \frac{c}{3}\right)^2$ when $c \leq 3$ (Eqn. 3-13)

$D = 5 + \frac{N_L}{10}$ when $c > 3$ (Eqn. 3.14)

$N_L = \frac{64}{12} = 5.33$ say 5 lanes

$N_g = 21$

$\therefore S = \frac{12 \times 5 + 9}{21} = 3.29$

$c = 0.8 \times \left(\frac{84}{52.6}\right) = 1.28$

N_L - Total no. of traffic lanes

N_g - Number of longitudinal beams.

$c = k\left(W/L\right)$ $k = 0.8$ for rectangular beams w/circular voids

W = overall width of bridge

L - span length in feet.

$\therefore D = 5 + \frac{5}{10} + \left(3 - \frac{2 \times 5}{7}\right)\left(1 - \frac{1.28}{3}\right)^2 = 6.02$

$\therefore$ Load fraction $= \frac{3.29}{6.02} = 0.547$ wheels/slab

engineering corporation

project NORTHERN AVE. BRIDGE no. 87026
client FLOOD CONTROL DIST. design CG/AGA date 11/87
subject DESIGN checked [illegible] date 12/87

Live Load Impact = $I = \dfrac{50}{L+125}$ (AASHTO 3.8.2)

$$= \frac{50}{52.6+125} = 0.28$$

From AASHTO tables (Appendix A), Max. Moment = 674.3 k-ft/lane

$\therefore$ LL/beam = 674.3 k'/lane $\times \frac{1}{2}$ (wheel) $\times$ 0.547 (wheels/slab) $\times$ 1.28 (impact)

$$= 236 \text{ k-ft}$$

Max. Moment position for a moving load: When the mid-span of the beam bisects the line joining the load (under which the max. moment is assumed to occur) and the C.G. of the wheel loads, the max. moment occurs at this configuration

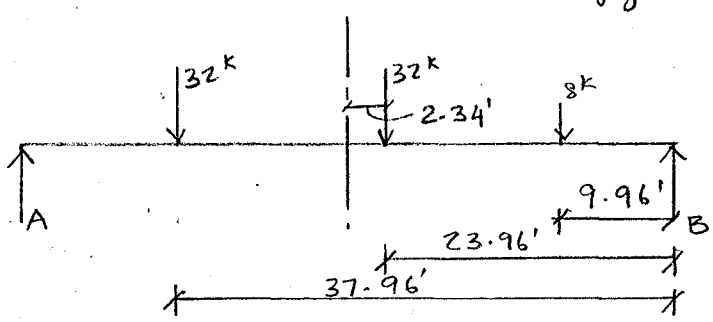

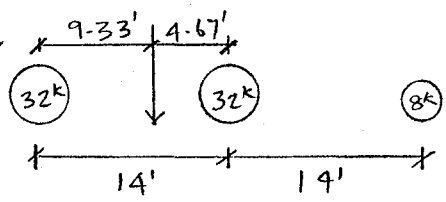

CG from left end $= \dfrac{32\times14+8\times28}{32+32+8}$

$$= 9.33'$$

$R_A \times 52.6 = 32\times37.96 + 32\times23.96 + 8\times9.96 \Rightarrow R_A = 39.18^k$

$\therefore$ Moment @ 2.34' from ℄ $= 39.18 \times \left(\dfrac{52.6}{2} + 2.34\right) - 32\times14$

$$= 674.1 \text{ k-ft/lane} \simeq 674.3 \text{ k'/lane} \quad \underline{\text{ok}}$$

rga engineering corporation

project NORTHERN AVE. BRIDGE no. 87026
client FLOOD CONTROL DIST. design CG/AGA date 11/87
subject DESIGN checked [illegible] date 12/87

PRESTRESSING STRANDS

Estimate number of strands based on stresses at service load.

Bottom fiber stress due to design loads, $f_b = \frac{(M_{DL} + M_{LL})}{S_b}$

$(M_{DL} + M_{LL})$ at mid span = 86.5 + 236 = 322.5 k-ft
(on composite section)

$\therefore f_b$ (@ 0.5 ℓ) $= \frac{332 \times 12}{3287} + \frac{322.5 \times 12}{4176} = 2.14$ ksi

Allowable tensile stress = $6\sqrt{f'_c}$ (AASHTO 9.15.2.2)

$= 6\sqrt{5{,}500} = 445$ psi (T)

$\therefore$ Prestress required = 2140.0 − 445 = 1695 psi

Bottom fiber stress due to prestress $= \frac{P}{A} + \frac{Pe}{S_b}$

where P = Prestressing force after all the losses.

e = eccentricity = 10.5 − 2.4 = 8.1"
CG of strands.

ie $\frac{P}{703} + \frac{8.1\,P}{3287} = 1.695 \Rightarrow P = 436$ kips

Assuming a loss of 17.5%, final prestressing force/strand

$= (0.7 \times 270) \times 0.153 \times 0.825 = 23.8$ kips

$\therefore$ No. of strands required $= \frac{436}{23.8} = 18.4 \simeq 19$. (For symmetry, try 20)

Try 20 - ½"φ 270^k strands W/initial pull of 70% of Fpu

engineering corporation

project NORTHERN AVE. BRIDGE no. 87026
client FLOOD CONTROL DIST. design CG/AGA date 11/87
subject DESIGN checked Dal date 12/87

FLEXURAL STRENGTH

$M_u = 1.3\,M_{DL} + 2.17\,M_{LL} = 1.3\times(332+86.5) + 2.17(236) = 1056.2$ k-ft

For rectangular sections (AASHTO 9.17.2),

$$\phi M_n = \phi\left[A_s^*\, f_{su}^*\, d\left(1 - 0.6\,\frac{p^*\, f_{su}^*}{f'_c}\right)\right]$$

$$f_{su}^* = f'_s\left(1 - 0.5\,p^*\,\frac{f'_s}{f'_c}\right) \quad \text{(AASHTO 9.17.4)}$$

$$p^* = A_s^*/bd = \frac{20\times 0.153}{48\times 22.1} = 0.00289 \quad \text{where } d = 24\tfrac{1}{2} - \overset{\text{CG of strands}}{2.4''} = 22.1''$$

$$\therefore f_{su}^* = 270\left(1 - 0.5\times 0.00289\times\frac{270}{4}\right) = 243.7 \text{ ksi}$$

$$\therefore \phi M_n = 1\left[20\times 0.153\times 243.7\times 22.1\left(1 - 0.6\times 0.00289\times\frac{243.7}{4.0}\right)\right]$$

$$\phi M_n = 14739 \text{ k-in} = 1229 \text{ k-ft} > 1056 \text{ k-ft} \quad \text{ok}$$

MAXIMUM & MINIMUM STEEL REQUIREMENTS

(1) Max. steel for rectangular sections (AASHTO 9.18.1)

$$\text{Reinforcement index} = p^*\,\frac{f_{su}^*}{f'_c}$$

$$= 0.00289\times\frac{243.7}{4.0} = 0.18 < 0.3 \quad \text{ok.}$$

(2) Min. Steel (AASHTO 9.18.2)

$$\phi M_n \geq 1.2\times M_{cr}$$

$$1.2\times M_{cr} = 1.2\times S_{cb}\left(\frac{P}{A_c} + \frac{Pe}{S_b} + f_r - \frac{M_D}{S_b}\right) + \overset{\text{due to self-wt + topping}}{M_D}\ ;\quad f_{cr} = 7.5\sqrt{f'_c} = 556 \text{ psi}$$

$$= 1.2\times 4176\left(\frac{436}{703} + \frac{436\times 8.1}{3287} + 0.556 - \frac{332\times 12}{3287}\right) + 332\times 12 = 9188 \text{ k-in} < 14739 \text{ k-in}$$

ok

project NORTHERN AVE. BRIDGE no. 87026
client FLOOD CONTROL DIST. design CG/AGA date 11/87
subject DESIGN checked gal date 12/87

PRESTRESS LOSSES (AASHTO 9.16.2)

Total losses $\Delta f_s = SH + ES + CR_c + CR_s$

(i) Shrinkage losses (SH)

$SH = 17{,}000 - 150 \times R.H$ ← mean annual ambient relative humidity in percent [for phoenix, R.H = 40% from fig. 9.16.2.1.1]

$= 17{,}000 - 150 \times 40 = 11{,}000$ psi

(ii) Elastic Shortening (ES)

$$ES = \frac{E_s}{E_{ci}} f_{cir}$$

f_{cir} = concrete stress at level of prestressing steel immediately after transfer.

$$= \frac{P_{si}}{A_c} + \frac{P_{si} e^2}{I} - \frac{M_D e}{I}$$

← self-wt. moment $= \frac{wl^2}{8} = \frac{0.73 \times 52.6^2}{8}$ ← PG. 1

Assume 5% prestress loss immediately after transfer.

$\therefore P_{si} = 0.95 \times (0.7 \times 270) \times 20 \times 0.153 = 549.4$ kips.

$$f_{cir} = \frac{549.4}{703} + \frac{549.4 \times 8.1^2}{34{,}517} - \frac{252.5 \times 12 \times 8.1}{34{,}517} = 1.1 \text{ ksi}$$

$$E_{ci} = 33 w^{1.5} \sqrt{f'_{ci}} = 33 \times 150^{1.5} \times \sqrt{4{,}000} = 3.83 \times 10^6 \text{ psi}$$

$$\therefore ES = \frac{28}{3.83} \times 1100 = 8042 \text{ psi}$$

engineering corporation

project NORTHERN AVE. BRIDGE no. 87026
client FLOOD CONTROL DIST. design CG/AGA date 11/87
subject DESIGN checked pal date 12/87

(iii) Creep of concrete (CR_c)

$$CR_c = 12 f_{cir} - 7 f_{cds}$$

f_{cds} = concrete stress at level of prestressing steel due to SDL

$$= \frac{\overset{\text{topping}}{79.5} \times 12 \times 8.1}{34,517} + \frac{\overset{\text{composite DL}}{86.5} \times 12 \times 8.1}{52,495} = 0.384 \text{ ksi}$$

$$CR_c = 12 \times 1100 - 7 \times 384 = 10,512 \text{ psi}$$

(iv) Relaxation of prestress steel (CR_s)

$$CR_s = 5,000 - 0.1ES - 0.05(SH + CR_c) \quad \text{[LOW LAX STRANDS]}$$

$$= 5,000 - 0.1 \times 8042 - 0.05(11,000 + 10,512)$$

$$= 3120 \text{ psi}$$

$\therefore$ Total loss $= 11,000 + 8042 + 10,512 + 3120 = 32,674$ psi

$$\% \text{ loss} = \frac{32,674}{0.7 \times 270 \times 10^3} \times 100 = 17.3\% \simeq 17.5\% \quad \underline{ok}$$

INITIAL LOSSES: Back check

$$\% \text{ Loss in ES} = \frac{8042}{0.7 \times 270 \times 10^3} \times 100 = 4.3\%$$

$$\% \text{ Loss in prestressing steel relaxation} = \frac{3.12}{0.7 \times 270} \times 100 = 1.65\% \text{ (Final)}$$

Assuming 0.8% (approx. half of 1.65%) as the initial relaxation loss, total initial loss = 5.1% $\simeq$ 5% assumed ok

engineering corporation

project NORTHERN AVE. BRIDGE no. 87026
client FLOOD CONTROL DIST. design CG/AGA date 11/87
subject DESIGN checked dal date 12/87

CONCRETE STRESSES

$P_{si} = 0.95\,(0.7 \times 270) \times 0.153 \times 20 = 549.4^k$ $\quad A = 703\ in^2$

$P_{se} = 0.827\,(0.7 \times 270) \times 0.153 \times 20 = 478.3^k$ $\quad S = 3{,}287\ in^3$

$e = 8.1\ in.$

LOAD	Transfer stress @ 2' from ends.		0.5 l @ service load	
	f_b	f_t	f_b	f_t (beam)
P/A	782	782	681	681
Pe/S	1354	-1354	1178	-1178
M_D/S	-135 (self-wt.)	135 (self-wt)	-1212 (sdl + slab) -249 (SDL)	1212 (self + slab) 167 (SDL)
M_L/S	—	—	-678	455
Total stress	2001	-437	-280	1337
Allowable stress (AASHTO 9.15.2)	$0.6 \times f'_{ci}$ = 2400 psi ok	Max. $7.5\sqrt{f'_{ci}}$ = 474 psi (T) $3\sqrt{f'_{ci}}$ = 190 psi (T) Needs top reinf. See P. 9	$6\sqrt{f'_c}$ = 445 psi (T) ok	$0.4\,f'_c$ = 2,200 psi ok

S_b = 3287 (beam) ; 4176 (composite)

S_t = 3287 (beam) ; 6227 (composite beam) ; 4400 (composite top)

Stress in topping = $\dfrac{(86.5 + 236) \times 12}{4400}$ = 880 psi < 0.4 × 4000 = 1600 psi ok

engineering corporation

project NORTHERN AVE. BRIDGE no. 87026
client FLOOD CONTROL DIST. design CG/AGA date 11/87
subject DESIGN checked gal date 12/87

TOP REINFORCEMENT (TO RELIEVE EXCESS TRANSFER STRESS)

(AASHTO 9-15-2)

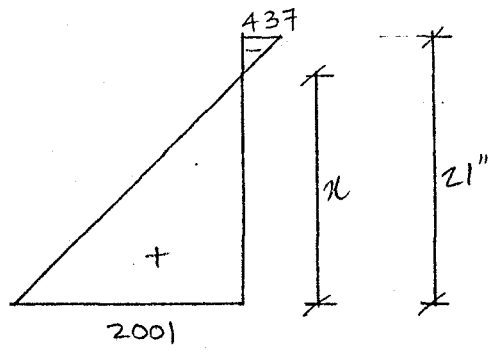

$$\frac{2001+437}{21} = \frac{2001}{x}$$

$x = 17.2''$

∴ Total tension to be taken by top reinf. $= \frac{1}{2} \times (21-17.2) \times 437 \times 48$

$= 39{,}854$ lbs.

Use Grade 60 bars; However, design as grade 40 bars

Area of steel required $= \frac{39{,}854}{20 \times 1000} = \underline{\underline{1.99 \text{ in}^2}}$ [Use 7 #5 bars; $A_s = 2.17$]

SHEAR STRENGTH (consider only the slab conservatively)

(per 1979 interim AASHTO specs. – a more conservative approach)

Check shear at quarter point

$V_D = 1.21 \text{ k/ft} \times \frac{52.6}{4} = 15.9 \text{ k/beam}$. (Total DL including self-wt.)

$$V_L = \left(\frac{39.45}{52.6} + \frac{25.45}{52.6}\right) \times 32 + \left(\frac{11.45}{52.6}\right) \times 8$$

$= 41.2$ k/lane

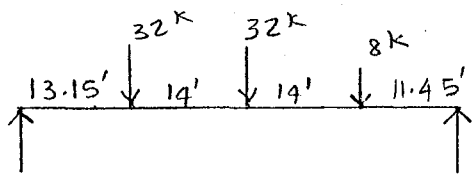

$V_L = 41.2 \times \frac{1}{2}$ (wheel) $\times 0.547$ (wheels/slab) $\times 1.28 = 14.4$ k/beam

engineering corporation

project NORTHERN AVE. BRIDGE no. 87026
client FLOOD CONTROL DIST. design CG/AGA date 11/87
subject DESIGN checked [illegible] date 12/87

$V_u = 1.3 \times V_D + 2.17 \times V_L = 51.9^k$

$V_c = 0.06 f'_c b' j d$ but not greater than $0.180 b' j d$

($j = 1 - 0.6 p^* f_{su}^*/f'_c$ & from p. 5, $j = 1 - 0.6 \times 0.0033 \times 247.3/5.5$)

$j = 0.91$; $b' = 48 - 2(12") - 10" = 14"$; $d = 21 - 2.4 = 18.6"$

$\therefore V_c = 0.06 \times 5.5 \times 14 \times 0.91 \times 18.6 = 78.2^k$

$0.18 \times b' j d = 0.18 \times 14 \times 0.91 \times 18.6 = 42.7^k$ ← governs.

$$\frac{A_v}{s} = \frac{(V_u - \phi V_c)}{2\phi f_{sy} j d} = \frac{(51.9 - 0.9 \times 42.7)}{2 \times 0.9 \times 40 \times 0.91 \times 18.6} = 0.011 \text{ in}^2/\text{in}$$

$$\left(\frac{A_v}{s}\right)_{min} = \frac{100 b'}{f_{sy}} = \frac{100 \times 14}{40{,}000} = 0.035 \text{ in}^2/\text{in}$$ ← governs.

Provide #4 - 4 legged stirrups @ 12" o/c ⇒ $\frac{A_v}{s} = 0.07 \text{ in}^2/\text{in}$ ok

DEFLECTIONS (Ref: PCI design hand book - 3rd ed.)
(camber multipliers - Fig. 4-6-3, Page 4-46)

(a) at transfer

$$\Delta = \frac{Pel^2}{8EI} = \frac{549.4 \times 8.1 \times (52.6 \times 12)^2}{8 \times 3834 \times 34{,}517} = 1.67" \uparrow$$

(due to prestress)

$$\Delta (\text{due to self wt}) = \frac{5}{384}\frac{wl^4}{EI} = \frac{5}{384} \times \frac{0.73 \times (52.6 \times 12)^4}{3834 \times 34{,}517 \times 12} = 0.95" \downarrow$$

Net = $0.72" \uparrow$

engineering corporation

project NORTHERN AVE. BRIDGE no. 87026
client FLOOD CONTROL DIST. design CG/AGA date 11/87
subject DESIGN checked [illegible] date 12/87

(b) at erection

camber = 1.67 × 1.80 = 3.01" ↑

deflection = 0.95 × 1.85 = 1.76" ↓

Net = 1.25" ↑

(c) due to DL immediately after erection

(1) D.L deflection (topping) $= \frac{5}{384} \times \frac{0.36/12 \times (52.6 \times 12)^4}{4496 \times 34,517} = 0.40$ ↓

∴ Net camber = 1.25 − 0.4 = 0.85 ↑

(d) Long term

due to prestress = 1.67 × 2.20 = 3.674" ↑

due to self-wt. = 0.95 × 2.40 = 2.280" ↓

due to D.L (topping) = 0.40 × 2.3 = 0.920" ↓

due to D.L (SDL) = 0.09 × 3.0 = 0.270" ↓

0.204 ↑

(2) D.L deflection (SDL) $= \frac{5}{384} \times \frac{\frac{0.12}{12}(52.6 \times 12)^4}{4496 \times 52,495} = 0.09"$

engineering corporation

project NORTHERN AVE. BRIDGE no. 87026
client FLOOD CONTROL DIST. design CG/AGA date 11/87
subject DESIGN checked ad date 12/87

(e) Live Load deflection (@ the load position where max. moment is produced)

Use Conjugate beam method.

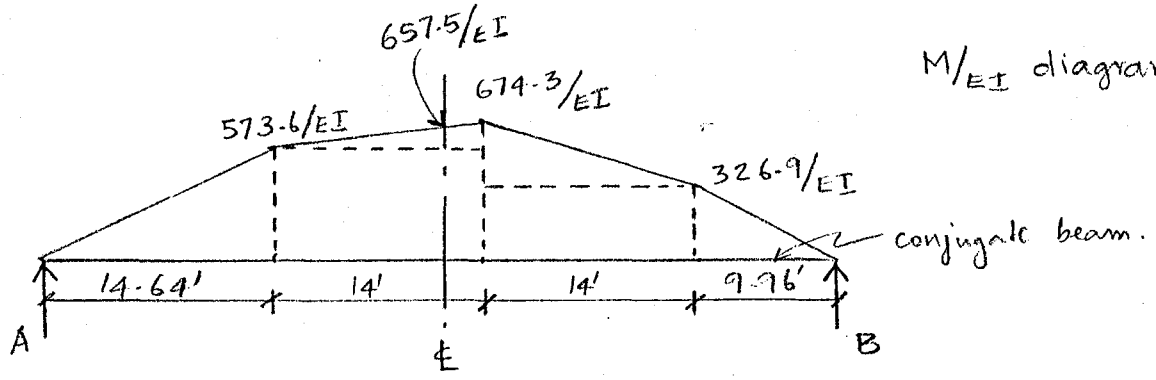

$$R_A \times 52.6 = \frac{1}{2} \times 573.6 \times 14.64\left(\frac{14.64}{3} + 37.96\right) + 573.6 \times 14\left(\frac{14}{7} + 23.96\right)$$

$$+ \frac{1}{2} \times 100.7 \times 14\left(\frac{14}{3} + 23.96\right) + 326.9 \times 14\left(\frac{14}{2} + 9.96\right)$$

$$+ \frac{1}{2} \times 347.4 \times 14\left(\frac{2}{3} \times 14 + 9.96\right) + \frac{1}{2} \times 326.9 \times 9.96 \times \frac{2}{3} \times 9.96$$

$$\therefore R_A = 11103.10 \left[\frac{k\text{-}ft^2}{k\text{-}in^2}\right]$$

Moment @ mid-span $11103.1 \times \frac{52.6}{2} - \frac{1}{2} \times 573.6 \times 14.64\left(\frac{14.64}{3} + 11.66\right)$

$$- 573.6 \times 11.66 \times \frac{11.66}{2} - \frac{1}{2} \times 83.9 \times \frac{11.66^2}{3}$$

$$= \frac{181671}{EI} \quad \frac{k\text{-}ft^3}{k\text{-}in^2}$$

$$= \frac{181671 \times 1728}{4496 \times 52{,}495} \times \underbrace{\frac{1}{2} \times 0.547 \times 1.28}_{\text{per beam}}$$

$$\therefore \text{deflection} = 0.46'' < \frac{L}{1{,}000} \; (0.63'')$$

rga engineering corporation

project NORTHERN AVE. BRIDGE no. 87026
client FLOOD CONTROL DIST. design CG/AGA date 11/87
subject DESIGN checked eal date 12/87

DESIGN SUMMARY

f'_{ci} = 4,000 psi ; f'_c = 5,500 psi

P_w (working force after all losses) = 478.3 kips.

P_i (Jacking force) = 579 k

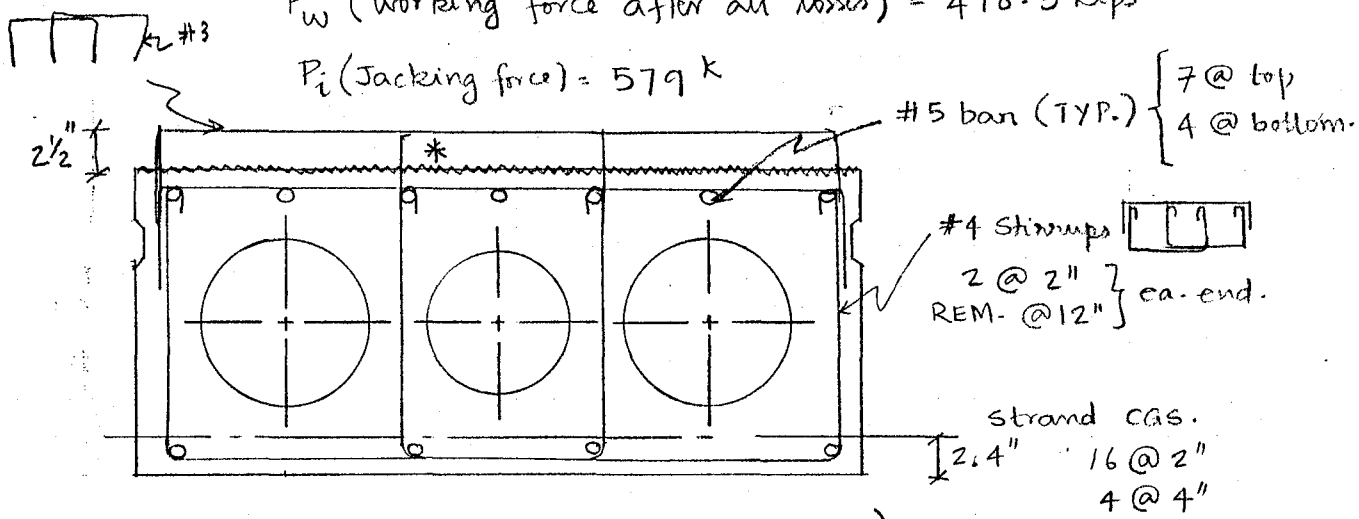

* Roughen the top surface (amplitude of ¼")

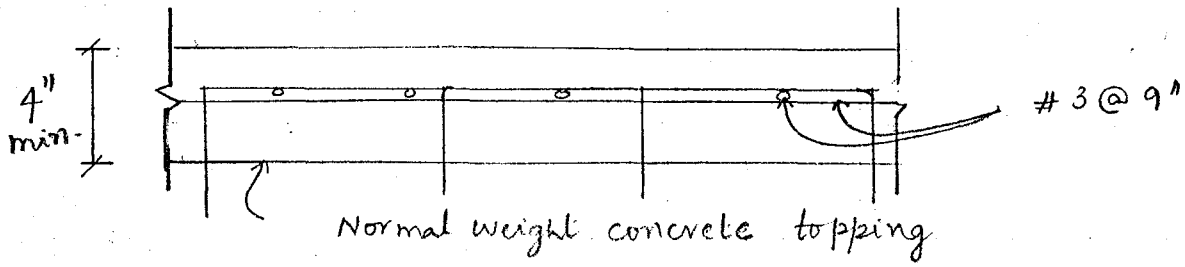

engineering corporation

project NORTHERN AVE. BRIDGE no. 87026
client FLOOD CONTROL DIST. design CG date 2/88
subject DESIGN checked [illegible] date 2/88

CHECK FOR HORIZONTAL SHEAR TRANSFER

Actual horizontal shear stress = $v = \frac{V_u Q}{I b}$

Dead Load reacn. = $1.21 \times \frac{52.6}{2} = 31.8^k$

includes 4½" average concrete thickness

Live Load reacn. = $59.3^k/_{lane} \times \frac{1}{2} \times 0.547 \times 1.28 = 20.8^k/_{beam}$

$\therefore V_u = 1.3(31.8) + 2.17(20.8) = 86.5^k$

$\therefore v = \frac{86.5 \times 3\frac{1}{2} \times 48 \times (22.75 - 12.9)}{52{,}495 \times 4.8} = 0.057 \text{ ksi} = 57 \text{ ksi} < 300 \text{ psi}$

ok

Article 9.20.4.2 met and top of precast member intentionally roughened.

engineering corporation

project NORTHERN AVE. BRIDGE no. 87026
client FLOOD CONTROL DIST. design CG date 2/88
subject DESIGN checked Sal date 2/88

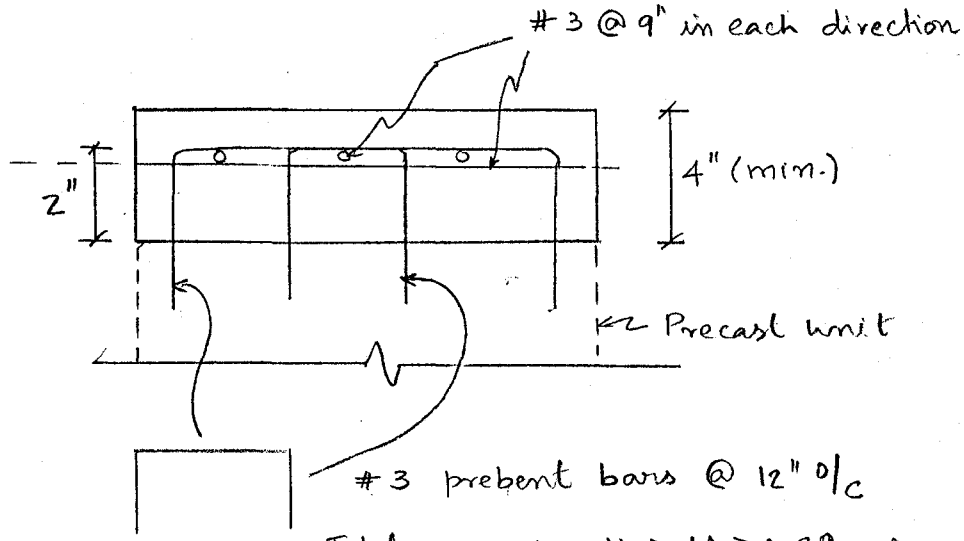

Total area = 4×0.11 = 0.44 > 0.22 as required by 9.20.4.2

Clear cover available for #3 ties = 3½ − 2 = 1½" ok

(AASHTO 8-22 ; Concrete exposed to earth or weather
Stirrups, ties and spirals 1½")

engineering corporation

project NORTHERN AVE. BRIDGE no. 87026
client FLOOD CONTROL DIST. design CG/AGA date 11/87
subject DESIGN checked Sal date 12/87

DESIGN OF BEARING PAD

Ref: AASHTO section 14 & PCI design handbook - 3rd ed. (P. 3.6 - 3.9)

Self-wt + Conc. topping + curbs + DL = 1.21 k/ft

Assuming 2 pads/4' width, Reaction/pad = $\frac{1.21 \times 52.6}{2 \times 2}$ = 15.9 k

Live load reacn. = $\frac{59.3 \times \frac{1}{2} \times 0.547}{2}$ = 8.12 k

Total reacn./pad = 15.9 + 8.1 = 24.0 k

The horizontal strain due to creep, shrinkage and prestress will be calculated based on the procedure in PCI design handbook.

Design temp. = 40°F (moderate)

Average ambient R.H = 40

$\frac{P_{si}}{A}$ = 782 psi (from page 8 of calcs.)

Volume/surface ratio = $\frac{703}{2(21+48)}$ = 5.0

(a) @ 60 days

From table 3.3.1:

Creep strain = 169×10^{-6} in/in; Shrinkage strain = 292×10^{-6} in/in.

From table 3.3.2: (for prestress & conc. strength)

Creep correction factor = $0.94 + \left(\frac{182}{200}\right)(1.25 - 0.94) = 1.22$

project NORTHERN AVE. BRIDGE no. 87026
client FLOOD CONTROL DIST. design CG/AGA date 11/87
subject DESIGN checked Sal date 12/87

From table 3.3.3 (for R-H)

Creep correction = 1.25 & Shrinkage Correction = 1.43

From table 3.3.4 (for volume/surface ratio)

Creep correction = 0.36 & Shrinkage correction = 0.31

Total strain = $169 \times 10^{-6} \times 1.22 \times 1.25 \times 0.36 + 292 \times 10^{-6} \times 1.43 \times 0.31$

$= 2.20 \times 10^{-4}$ in/in

(b) @ Final

From table 3.3.1

Creep strain = 315×10^{-6} in/in ; Shrinkage strain = 560×10^{-6} in/in.

Factors from tables 3.3.2 and 3.3.3 same as for 60 days.

From table 3.3.4 ;

Creep correction = 0.74 & Shrinkage correction = 0.64

Total strain = $315 \times 10^{-6} \times 1.22 \times 1.25 \times 0.74 + 560 \times 10^{-6} \times 1.43 \times 0.64$

$= 8.70 \times 10^{-4}$

Difference from 60 days to final = $8.70 \times 10^{-4} - 2.2 \times 10^{-4}$

$= 6.50 \times 10^{-4}$

Temp. strain = $6 \times 10^{-6} \times 40^{\circ} = 2.4 \times 10^{-4}$

Total shortening = $6.50 \times 10^{-4} \times 52.6 \times 12 + 2.4 \times 10^{-4} \times \frac{52.6}{2} \times 12 = \underline{0.50''}$

project NORTHERN AVE. BRIDGE no. 87026
client FLOOD CONTROL DIST. design CG/AGA date 11/87
subject DESIGN checked Sal date 12/87

From P-6-15 ("Design Recommendations"), PCI design hand book, the volume change strains may be reduced by one half when calculating horizontal movement, Δ, because of compensating creep and slip in the bearing pad.

$$\therefore \Delta = \frac{0.50}{2} = 0.25''$$

Per AASHTO specs, $T \geq 2 \times \Delta = 0.50''$; Try a $\frac{3}{4}'' \times 12'' \times 7\frac{1}{2}''$ pad (w width, w length) w/ $2-\frac{1}{8}''$ & $1-\frac{1}{2}''$ laminations.

Check slippage:

$$F_s = \frac{GA}{T}\Delta_s = \frac{100 \times (7\frac{1}{2} \times 12) \times 0.25''}{0.75} = 3{,}000\ \# = 3^k \simeq \frac{15.9}{5} \quad \underline{ok}$$

$$\text{Shape factor} = \frac{7.5 \times 12}{2 \times 0.50\,(7.5+12)} = 4.62; \quad \frac{GS}{\beta} = \frac{100 \times 4.62}{1.8} = 256.6 \text{ psi}$$

$$\text{Actual comp. stress} = \frac{24 \times 10^3}{7.5 \times 12} = 266.6 \text{ psi} \simeq \text{Allowable.} \quad \underline{ok}$$

Compressive strain (from AASHTO chart 14.2.4.A) $< 3\%$ $\underline{ok}$

Use a 50 durometer $\frac{3}{4}'' \times 12'' \times 7\frac{1}{2}''$ elastomeric pad.

engineering corporation

project NORTHERN AVE no. 87026

client FLOOD CONTROL DISTRICT design AGA date 11/87

subject ABUTMENT - PRELIMINARY checked Gal date 12/87

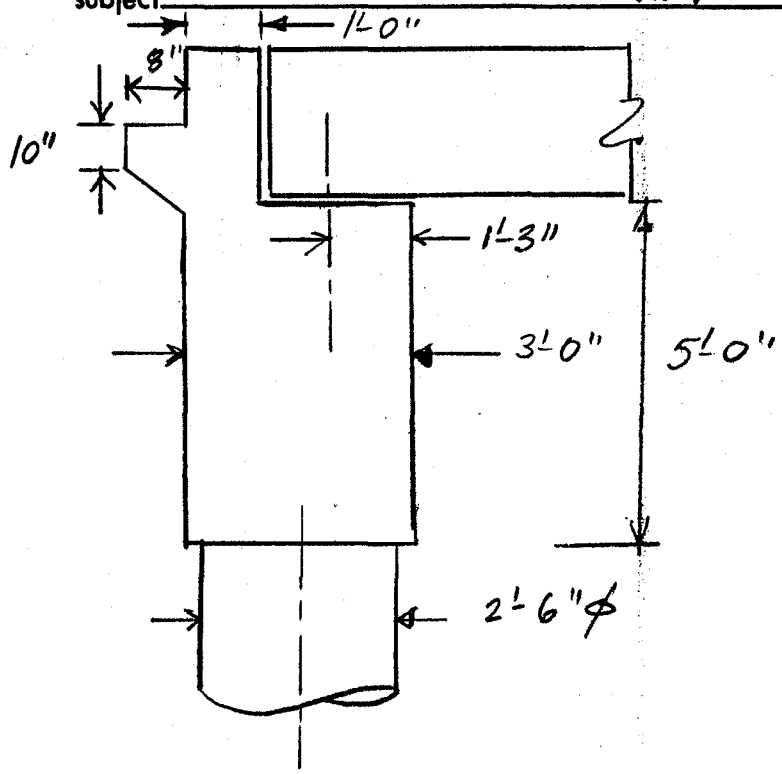

engineering corporation

project NORTHERN AVE BRIDGE @ ACOC no. 87026
client FLOOD CONTROL DIST. design AGA date 11/87
subject ABUTMENT DESIGN checked al date 12/87

SIZING OF ABUTMENT DIMENSION (PRELIMINARY)

(I) ABUTMENT SEAT SIZE TO BE >

1) SIZE OF PAD SIZE = 12"X12" (Based on DL + LL Reactions)

2) SEISMIC REQUIREMENT = 9.05" (Based on Single Span Bridge, Seismic Performance category A.) (See Next page)

Provide for 2'-0"

(II) ABUTMENT MAIN WALL

GREATER THAN

(1) SIZE OF PILE SHAFT = 2'-6" ϕ

Provide for 3'-0"

(III) HEIGHT OF WALL (BEARING SURFACE OF BEAM TO TOP OF DRILLED SHAFT; SEE PAGE 18)

Provide 5'-0"

engineering corporation

project NORTHERN AVE no. 87026
client FLOOD CONTROL DIST design AGA date 11/87
subject ABUTMENT DESIGN checked pal date 12/87

REF : Guide Specifications for Seismic Design of Highway Bridges 1983

4.5 Design Requirements for Single Span Bridge

Seismic Performance category = A (Accln. Coeff = 0.06 < 0.09)
∴ category A

Minimum Bearing Seat Size = N = 8 + 0.02L + 0.08H (in)

= N = 8 + 0.02×52.5

= 9.05 in.

L = 52.5'

H = 0 (single span bridges)

Seismic Longitudinal & Transverse Force PER ABUTMENT (EQ)

= (Gravity Reaction @ Abutment)
(Acceleration Coeff)

$$= \underbrace{1.21\ k/ft}_{DL(total} \times \frac{52.6}{2} \times 21 \times 0.06 = 40.0\ k$$

$$EQ/FT = \frac{40.0}{84} = 0.48\ k/ft$$

SEISMIC LONGITUDANAL:

$\gamma_{passive} = 250$ psf

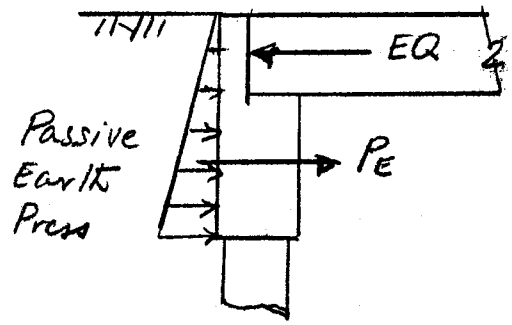

$$P_E = \frac{\gamma_{passive}\, h^2}{2}$$

$$\cong 0.250 \times \frac{7^2}{2}$$

$$= 6.13\ k/ft. > 0.48\ \frac{k}{ft}$$

engineering corporation

project NORTHERN AVE BRIDGE @ ACDC no. 87026
client FLOOD CONTROL DIST. design AGA date 11/87
subject ABUTMENT DESIGN checked gal date 12/87

CHECK STABILITY

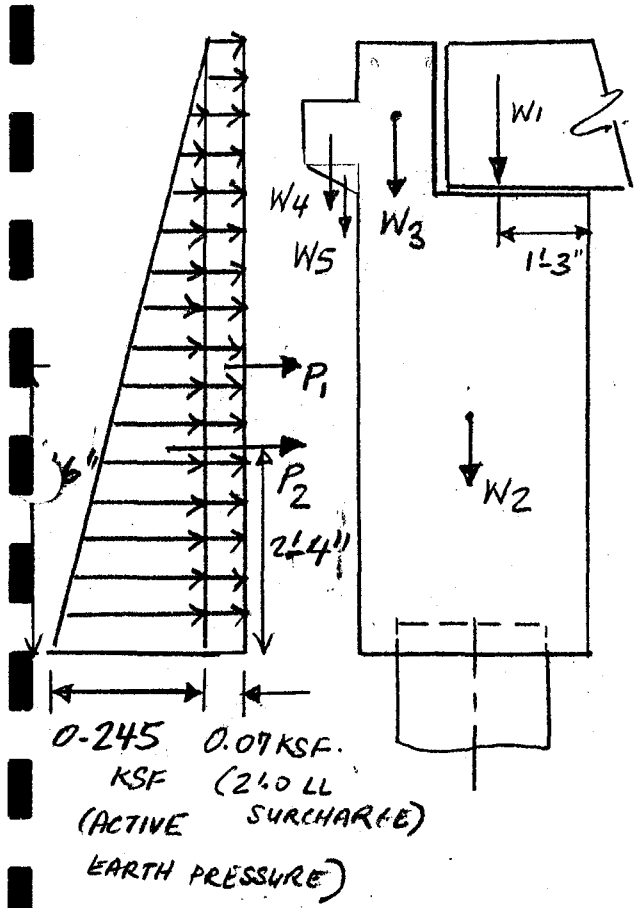

LOAD DEFINITIONS:

VERT LOADS
W2, W3, W4, W5 = DEAD LOADS OF ABUT WALL COMPONENTS.

W1 = DEAD LOAD REACTION FROM SUPERSTRUCT.

LATERAL LOADS.
P_1 = EQUIVALENT EARTH SURCHARE LOAD.

P_2 = ACTIVE EARTH PRESSURE

W1

DEAD LOAD REACTION

SUPERSTRUCT $= \frac{1.21 \times 52.6^{K}}{2 \times 4 \text{ FT.}}$ + SOLID DIAPH. $+ \left\{ \frac{\pi (1)^2}{4} + \pi \frac{(10/12)^2}{4} \right\} 0.15 \times \frac{1}{4}$

$W_1 = 8.12 \frac{K}{FT}$

NOTE: ALL LOADS ARE COMPUTED PER FOOT WIDTH OF WALL

engineering corporation

project NORTHERN AVENUE BRIDGE @ ACDC no. 87026
client FLOOD CONTROL DISTRICT. design AGA date 11/87
subject ABUTMENT DESIGN checked gal date 12/87

$W_2 = 3.0 \times 5.0 \times 0.15 = 2.25$ K/FT.

$W_3 = 1.0 \times 2.0 \times 0.15 = 0.30$ K/FT

$W_4 = \frac{8}{12} \times \frac{8}{12} \times 0.15 = 0.067$ K/FT.

$W_5 = \frac{8 \times 8}{144} \times \frac{1}{2} \times 0.15 = 0.033$ K/FT.

$P_1 = 0.07 \times 7 = 0.49$ K/FT

$P_2 = \frac{1}{2} \times 0.245 \times 7 = 0.86$ K/FT.

$M_{OT} = 0.49 \times 3.50 + 0.86 \times 2.33 = 3.71 \frac{\text{KFT}}{\text{FT}}$

$M_{REST} = 8.12 \times 1.25 + 2.25 \times 1.50 + 0.30 \times 2.50$
$+ 0.067 \times 3.33 + 0.033 \times 3.22$
$= 14.6$ k-ft/ft

FACTOR OF SAFETY $= \frac{14.6}{3.71} = 3.94$

Unexcavated channel Condition

engineering corporation

project NORTHERN AVE. BRIDGE no. 87026
client FLOOD CONTROL DIST. design CG/AGA date 11/87
subject ABUTMENT DESIGN checked [illegible] date 12/87

The abutment will be designed as a simple beam supported by the drilled shaft and the deck slab restraining it from moving in the horizontal direction. The lateral earth pressure will be applied to the abutment wall. Since the abutment is very rigid in the vertical direction (5' high), the steel requirements for bending in this plane will not be governing, however, it will be checked.

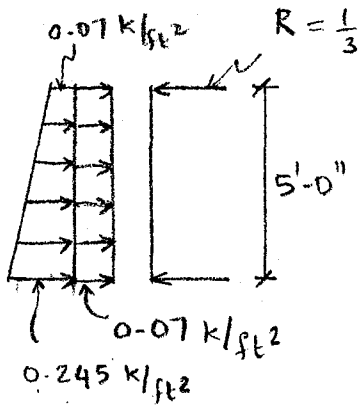

$R = \frac{1}{3}(0.175 \times 5/2) + \frac{1}{2}(0.14 \times 5) = 0.496$ k/ft

Eq. fluid pressure = 35 pcf.

Considering a unit width,

M_{max} due to Δ^r load $= 0.1238\, wl$

$= 0.1238 \times \frac{1}{2} \times 0.175 \times 5 \times 5$

$= 0.27$ k-ft/ft @ 2.9' from top.

M @ 2.9' from top due to uniform load $= \frac{wx}{2}(l-x)$

$= \frac{0.14 \times 2.9}{2}(5 - 2.9)$

$= 0.43$ k-ft/ft

$\therefore$ Total Moment $= 0.27 + 0.43 = 0.7$ k-ft/ft.

$A_s = \frac{0.7 \times 12}{7/8 \times 20 \times 29''} = 0.017$ in²/ft

engineering corporation

project NORTHERN AVE. BRIDGE no. 87026
client FLOOD CONTROL DIST. design CG/AGA date 11/87
subject ABUTMENT DESIGN checked Sal date 12/87

Min. reinforcement = $0.0015 \times 1' \times 3' \times 144 = 0.65\ in^2/ft$. (ACI 14-3)

Try #5 bars ; No. required = $\frac{0.65}{0.31} \simeq 2$ bars. [$0.65 \simeq 0.62$ ok]

Since vertical bars are provided @ both faces,

#5 @ 12" provides an area of $0.62\ in^2/ft > 0.52\ in^2/ft$. ok

Provide #4 @ 12" for horizontal bars @ both faces.

$A_s = 0.2\ in^2/ft > 1/8\ in^2/ft$ (temperature & shrinkage steel)

BENDING IN VERTICAL PLANE

D.L + L.L reacn. = $\frac{1.21 \times 52.6}{2} + 59.3 \times \frac{1}{2} \times 0.547 \times 1.28 = 51.8\ k/beam$

Assume 21.2' of support below the approach slab caves in and hence the abutment will have to support the DL reaction of the approach slab as well as LL reaction from HS20-44 loading. The load from the approach slab will act continuous on the abutment, whereas the loads from the deck units can be assumed concentrated, due to the fact that bearing pads have been provided.

engineering corporation

project NORTHERN AVE. BRIDGE no. 87026
client FLOOD CONTROL DIST. design CG/AGA date 11/87
subject ABUTMENT DESIGN checked Sal date 12/87

span - 6'-0"

Self-wt. of approach slab = $\frac{21.2 \times 1.33 \times 0.15}{2}$ = 2.10 k/ft

LL (on approach slab) = $42.7^k \times 5$ (lanes)$/84 \times 1.28$ = 3.25 k/ft

LL reacn. = $59.3 \times \frac{1}{2} \times 0.547 \times 1.28$ = $20.76^k/2$ = 10.4^k/pad

[The same distribution factors as used in the deck design has been used here since no other guidance is available for such a condition]

The pads are placed at 2' o/c. For max. moment, use config. shown.

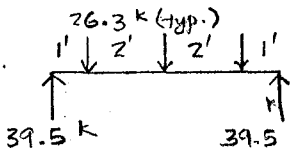

Conc. load from each pad = $\frac{31.8}{2} + 10.4 = 26.3^k$ (using a DL of 1. k/ft)

Self-wt + app-slab + LL on approach-slab

∴ Max. Moment = $\frac{8 \times 6^2}{8} + (39.5 \times 3 - 26.3 \times 2)$ = 102.0 k-ft

A_s required = $\frac{102.0 \times 12}{7/8 \times 20 \times 56}$ = 1.25 in²

Provide #6 @ 12" o/c Area = 0.44 × 4 = 1.76 in² > 1.25 in² ok

Shear stress $v = \frac{8 \times 6/2 + 39.5}{36 \times 56}$ = 0.030 ksi

Capacity of concrete in shear = $0.95\sqrt{f'_c}$ (AASHTO 8-15-5-2)

= $\frac{0.95\sqrt{3,500}}{1000}$ = 0.056 ksi > 0.030 ksi

ok

engineering corporation

project NORTHERN AVE. BRIDGE no. 87026
client FLOOD CONTROL DIST. design CG/AGA date 11/87
subject ABUTMENT DESIGN checked [illegible] date 12/87

BACKWALL

The reaction due to the lateral earth pressure acts approximately @ 1' from the abutment wall section. This reacn. induces a cantilever moment about the abutment wall.

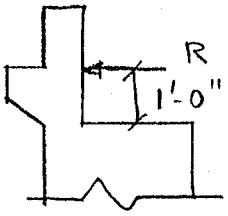

$M_{cant.} = R \times 1'\text{-}0'' = 0.496 \times 1' = 0.496$ k-ft/ft

pg. 28

$A_s = \dfrac{0.496 \times 12}{7/8 \times 20 \times 9.5} = 0.04$ in²/ft.

Provide # 5 × ⊓ @ 12" o/c ; Area = 0.31 in²/ft > 0.04 in²/ft. ok

Shear stress $v = \dfrac{0.496}{12 \times 9.5} = 0.004$ ksi ok

rga engineering corporation

project NORTHERN AVE. BRIDGE no. 87026
client FLOOD CONTROL DIST. design CG/AGA date 11/87
subject ABUTMENT DESIGN checked [illegible] date 12/87

* 2" increase from preliminary assumption - OK

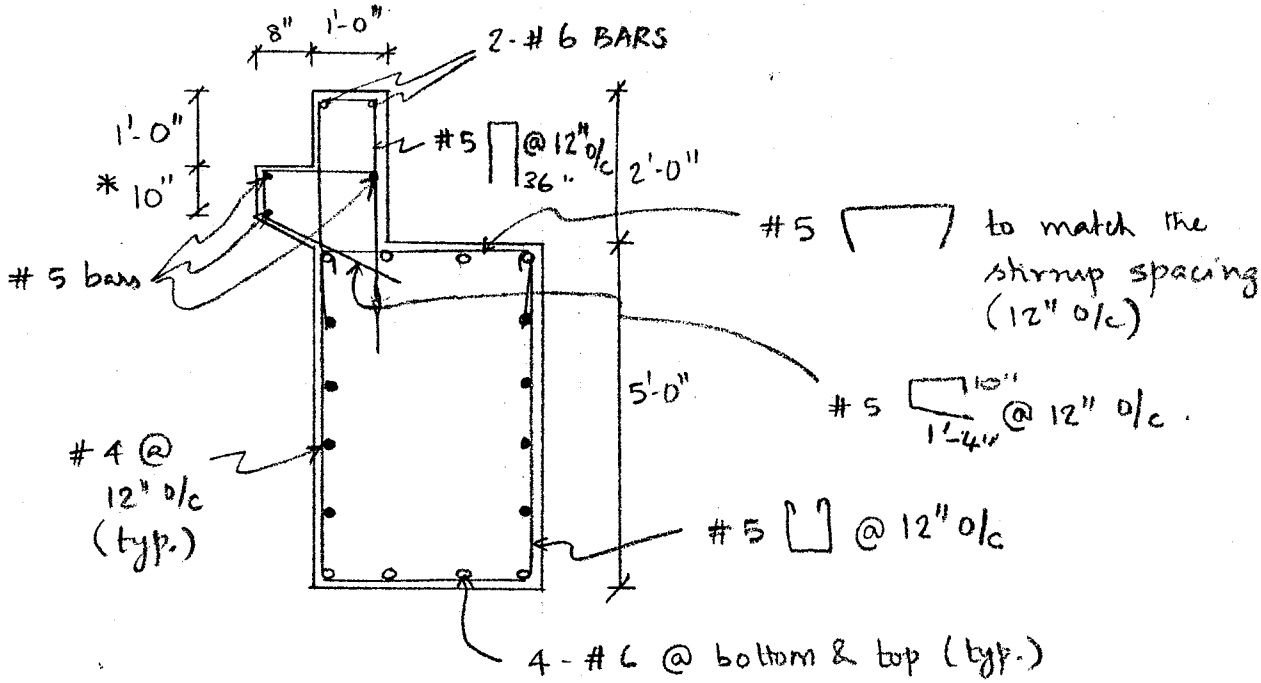

CLEAR COVER = 3"

f'_c = 3,500 psi

engineering corporation

project NORTHERN AVE BRIDGE no. 87026
client FLOOD CONTROL DIST design AGA. date 11/87
subject WING WALL DETAILS checked ool date 12/87

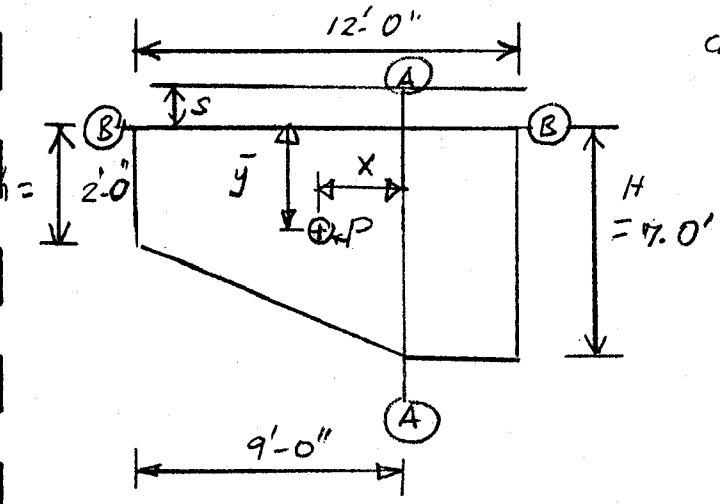

CANTILEVER WINGWALL DESIGN.

LENGTH = 12'-0"

HEIGHT = 7'-0".

THICKNESS OF WALL = 12"

SYMBOL NOTATION

S = surcharge in Ft = 2.0'.

h = End Height of Wing Wall.

H = Maximum Height of Wing Wall.

L = Length of wall controlling design

W = Equivalent Fluid Press = 35 lb/ft²

(Ref: Bridge Design Practice Manual; California 1963)

(I) Moment @ AA $= M_{AA} = \frac{WL^2}{24}\left[3h^2 + (H+4S)(H+2h)\right]$

$$P = \frac{WL}{6}\left[H^2 + (h+H)(h+3S)\right]$$

$$\bar{X} = \frac{M_{AA}}{P}.$$

project NORTHERN AVENUE BRIDGE @ ACDC no. 87026.
client FLOOD CONTROL DIST design AGA & CG date 11/87
subject WING WALL DETAILS checked pal date 12/87

(II) Moment @ BB $= M_{BB}$

$$= \frac{WL}{12}\left[(H+h+2s)(H^2+h^2)+2shH\right]$$

$$\bar{y} = \frac{M_{BB}}{P}$$

Moment @ AA

Consider $L = 12'\text{-}0''$

$$\therefore M_{AA} = \frac{0.035 \times 12^2}{24}\left[3 \times 2^2 + (7+4\times 2)(7+2\times 2)\right]$$

$$= \frac{0.035 \times 144}{24}\left[177\right] = 37.2 \text{ k-ft}$$

Allowable stress in steel = 20 ksi

$d = 12'' - 3'' - 0.5 - 0.625/2$

$$\therefore A_s = \frac{M}{7/8 \times f_s \times d} = \frac{37.2 \times 12}{7/8 \times 20 \times 8.2} = 3.13 \text{ in}^2$$

No. of #5 bars required $= \frac{3.13}{0.31} \simeq 10$ bars $\Rightarrow A_s = 3.10 \text{ in}^2$

engineering corporation

project NORTHERN AVE. BRIDGE no. 87026
client FLOOD CONTROL DIST. design CG/AGA date 11/87
subject WING WALL DETAILS checked [illegible] date 12/87

Spacing of #5 bars : $\frac{7' \times 12'' - 3'' \times 2}{9} = 8.7''$

Provide a spacing of 8" < Max. spacing 18" ok

The steel on the exterior face of the wing wall is based on the minimum requirements only.

∴ Provide #4 bars @ 18" in the exterior face

Vertical Reinforcement

Provide shrinkage and temperature reinforcement.

Use #4 bars ⊔ @ 18" o/c (Max. spacing)

∴ Area of steel = $\frac{0.2}{18} \times 12 = 0.13 \text{ in}^2/\text{ft} > \frac{1}{8} \text{ in}^2/\text{ft}$ ok.

rga engineering corporation

project NORTHERN AVE. BRIDGE no. 87026
client FLOOD CONTROL DIST. design CG/AGA date 11/87
subject WING WALL DETAILS checked gal date 12/87

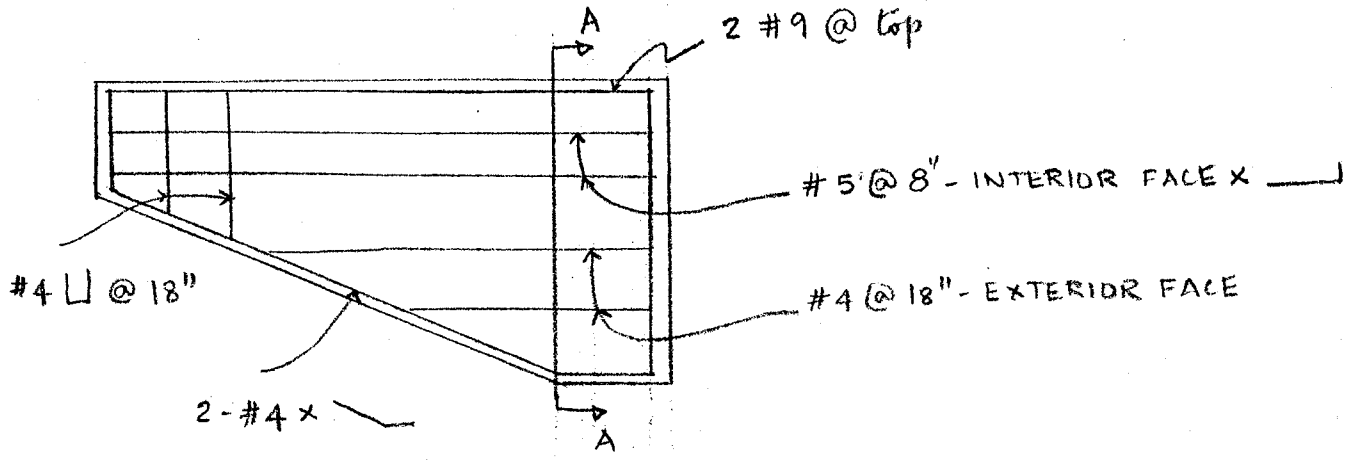

CLEAR COVER = 3"

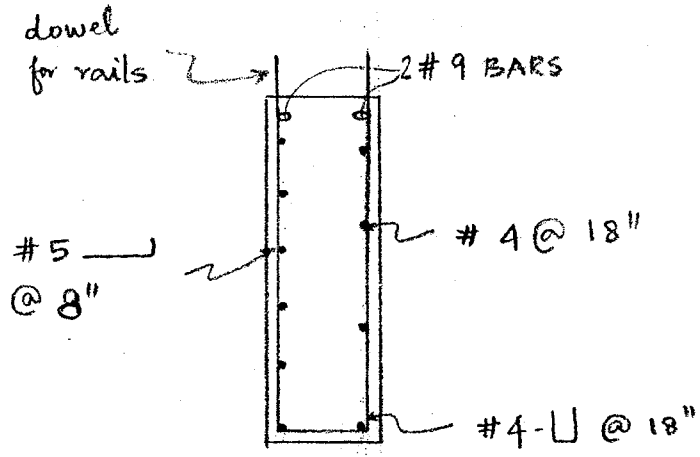

SECTION A-A (NOT TO SCALE)

engineering corporation

project NORTHERN AVE. BRIDGE no. 87026
client FLOOD CONTROL DIST. design CG/AGA date 11/87
subject DESIGN checked Sal date 12/87

DRILLED SHAFT DESIGN

AXIAL LOADS

solid diaphragm

$$\text{Dead load (superstructure)} = \frac{1.21 \times 52.6}{2 \times 4} + \left\{ 2\frac{\pi(1)^2}{4} + \frac{\pi\left(\frac{10}{12}\right)^2}{4} \right\} \times 2 \times \frac{0.15}{4}$$

$$= 8.12 \text{ k/ft} \times 6 = \underline{48.7^k}$$

$$\text{Abutment wall weight} = W_2 + W_3 + W_4 + W_5 \quad (\text{Page } 22)$$

$$= 2.25 + 0.3 + 0.067 + 0.033$$

$$= 2.65 \text{ k/ft} \times 6 = \underline{16^k}$$

$$\text{Wt. of channel lining} = \frac{8''}{12} \times 22.5' \times 0.15 \times 6 = \underline{13.5^k}$$

$$\text{Self-wt. of column} = \frac{\pi(2.5)^2}{4} \times 40' \times 0.15 = \underline{29.5^k}$$

per soils report (pt. of inflection)

$$\text{Live Load reaction} = \frac{59.3 \times \frac{1}{2} \times 0.547 \times 1.28}{4} \times 6 = \underline{31.2^k}$$

The D.L & L.L act with an eccentricity of 3".

$$\text{Total dead load (@ bott)} = 48.7 + 16 + 13.5 + 29.5 = 107.7^k$$

$$\text{Total dead load (@ top)} = 107.7 - 29.5^k - 13.5 = 64.7^k$$

engineering corporation

project NORTHERN AVE. BRIDGE no. 87026
client FLOOD CONTROL DIST. design CG/AGA date 11/87
subject DESIGN checked Sal date 12/87

LATERAL LOADS

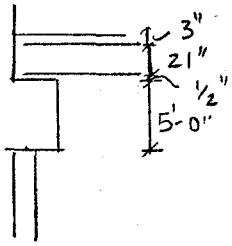

(i) Longitudinal Forces (AASHTO 3.9)
(3 lanes of traffic in each direction)

$L.F = (0.64 \times 52.6 + 18) \times \frac{5}{100} \times 3 \times 0.9 = 7^k$ @ 6' above floor deck

$= \frac{7^k}{14} = 0.5^k/\text{column}$

Moment due to L.F @ top of drilled shaft $= 0.5 \times (6' + 2' + 5')$

$= 6.5$ k-ft

(ii) Wind loads (W) (AASHTO 3.15)

Tributary area for wind $= \left(\frac{53.3}{2} + \underset{\text{wing wall}}{10}\right) \times \left(\underset{\text{Rail height}}{3.42 + 2}\right) = 198.6 \text{ ft}^2$

$\therefore W = 50 \text{ psf} \times 198.6 = 9.93^k$ @ 2.71' from bottom of deck slab

$= 9.93/14 = 0.71^k/\text{col.}$

Moment due to W @ top of drilled shaft $= 0.71(2.71 + 5) = 5.47$ k-ft

0.71^k will be used in group III & V loadings.

For groups III & VI,

$W = 0.3 \times 0.71 = 0.21^k/\text{col.}$

$WL = \frac{100}{1000} \times \frac{52.6}{2} = 2.6^k = 2.6/14 = 0.19^k/\text{col.}$

Total $= 0.4^k/\text{col.}$

Moment due to W & WL @ top of shaft $= 0.21(2.71 + 5) + 0.19(6 + 2 + 5) = 4.1$ k-ft

(iii) Thermal forces (T) (AASHTO 3.16)

Δ due to temp. variations $= 6 \times 10^{-6} \times 40^{\circ} \times \frac{52.6}{2} \times 12 = 0.08''$/EA. END

Thermal force induced due to this shear deformation of the pad, $T = \frac{G \cdot A}{t} \Delta$

$$= \frac{\overset{\text{assumed}}{110} \times 90}{3/4} \times 0.08 = 1056 \# \Rightarrow 1.06^{k} \times \frac{42}{14} = 3.2^{k}/\text{col.}$$

Thermal force @ top of drilled shaft $= 5.1^{k}$ force & $3.2 \times 5' = 16$ k-ft

(iv) Earthquakes (EQ)

A detailed seismic analysis is not required for single span bridges. (Section 4.5 - Guide specifications for seismic design of highway bridges - 1983)

No consideration of seismic forces is required for the design of structural components except for the design of the connection of the superstructure to the substructure as specified in sec. 4.6. (Section 8.2 - Guide specifications .....)

∴ Earthquake forces will not be considered for the design of drilled shaft.

engineering corporation

project NORTHERN AVE. BRIDGE no. 87026
client FLOOD CONTROL DIST. design CG/AGA date 11/87
subject DESIGN checked Sal date 12/87

GR.	D	L+I	E	SF	W	WL	LF	EQ	T	Total Lateral Load
I	64.7^k	31.2^k	E	—	0	0	0	0	0	0
II	64.7^k	0	E	—	0.71	0	0	0	0	0.71
III	64.7^k	31.2^k	E	—	0.21	0.19	0.5	0	0	0.64
IV	64.7^k	31.2^k	E	—	0	0	0	0	3.2^k	3.2
V	64.7^k	0	E	—	0.71	0	0	0	3.2^k	3.3
VI	64.7^k	31.2^k	E	—	0.21	0.19	0.5	0	3.2^k	3.72
VII	64.7^k	0	E	—	0	0	0	☆	0	0
VIII	64.7^k	31.2^k	E	—	0	0	0	0	0	0
IX	64.7^k	0	E	—	0.71	0	0	0	0	0.71
X	64.7^k	31.2^k	E	—	0	0	0	0	0	0

☆ - Earthquake load not considered.

E - The lateral earth pressure. Same as considered in the soils report.

Max. Lateral load = 3.72^k (GR. VI);

Max. Moment @ top of col. due to (D.L+L.L) eccentricity and Lateral loads acting above the top of col. } = 47 k-ft (GR. VI)

engineering corporation

project NORTHERN AVE. BRIDGE no. 87026
client FLOOD CONTROL DIST. design CG/AGA date 11/87
subject COLUMN DESIGN checked Sal date 12/87

DISCUSSION ON THE SELECTION OF DESIGN FORCES

The drilled shaft was analysed two different ways by the soil and foundation engineers (Thomas-Hartig & Associates). The first method was to consider the drilled shaft fixed at the bottom and free at the top. The second method was to consider the drilled shaft as a propped cantilever, where the superstructure (the precast units) act as the supports or the struts. But the actual situation falls in between the above mentioned models. The maximum design forces were chosen from both cases and thus produced a conservative design. The maximum value of moment (450 K-ft) was obtained from the cantilever model. The max. strut load to limit the deflection to zero (68K per drilled shaft or 11K/ft of the abutment) was obtained from the propped cantilever model. The drilled shaft will be designed using the 450 K-ft moment and the abutment backwall and steel requirements will be checked using the 68K/drilled shaft lateral load.

engineering corporation

project NORTHERN AVE. BRIDGE no. 87026
client FLOOD CONTROL DIST. design CG/AGA date 11/87
subject DESIGN checked Sal date 12/87

The soils report gives the analysis for 2 cases. The 1st case consists of a lateral load (active pressure and vehicle surcharge), and a load of 11^k at the pile head. The 2nd case consists of active pressure and vehicle surcharge along with 13^k of seismic load. Since the lateral loads (other than active soil pressure), as calculated in the previous pages is almost negligible, the moment given in case 1 (450 k-ft) will be considered conservatively.

Case 1.

$$P = 107.7^k + 31.2^k = 138.9^k$$

$$M = 450 \text{ k-ft}$$

$$\frac{P}{f'_c A_g} = \frac{138.90}{4 \times 706.9} = 0.049$$

$$\frac{12M}{f'_c t A_g} = \frac{12 \times 450}{4 \times 30 \times 706.9} = 0.064$$

$$g = \frac{30 - \left[\underbrace{2 \times 3''}_{\text{cover}} + \underbrace{2 \times 0.625''}_{\text{assume \#5 spirals}} + \underbrace{2.44}_{\text{eq. dia of 3-\#11 bundled bars}}\right]}{30} = 0.68$$

From diagram 37b [Reinforced Concrete Design - Working Stress method - ACI publication]

$$\rho_g = 0.052 \Rightarrow A_s = 0.052 \times 706.9 = 36.76 \text{ in}^2$$

interpolating between $g = 0.6$ & $g = 0.7$

engineering corporation

project NORTHERN AVE. BRIDGE no. 87026
client FLOOD CONTROL DIST. design CG/AGA date 11/87
subject DESIGN checked sal date 12/87

Case 2

$P = 64.7^k$; $M = 450$ k-ft (conservative)

$$\frac{P}{f'_c A_g} = \frac{64.7}{4 \times 706.9} = 0.022$$

$$\frac{12M}{f'_c t A_g} = 0.064$$

interpolated between $g = 0.6$ & $g = 0.7$

$\rho_g = 0.053$; $A_s = 0.053 \times 706.9 = 37.46 \text{ in}^2$

Provide 24 # 11 bars ; $A_s = 24 \times 1.56 = 37.44 \text{ in}^2 \simeq 37.46 \text{ in}^2$ ok

Ratio of spiral reinforcement (AASHTO 8.18.2.2)

$$\rho_s = 0.45\left(\frac{A_g}{A_c} - 1\right)\frac{f'_c}{f_y}$$

$$= 0.45\left(\frac{706.9}{452.4} - 1\right) \times \frac{4}{60} = 0.0169$$

$$\rho_s = \frac{\text{volume of spiral in one hoop}}{\text{volume of core in one pitch}}$$

$$= \frac{A_s \pi (D_c - D_s)}{A_c S}$$

where S - Spiral pitch
D_c - core diameter
D_s - Spiral diameter
A_s - Spiral area

consider a #5 spiral
diameter > 0.375"

engineering corporation

project NORTHERN AVE. BRIDGE no. 87026
client FLOOD CONTROL DIST. design CG/AGA date 11/87
subject DESIGN checked sal date 12/87

$$\therefore \quad s = \frac{0.31 \times \pi (24 - 0.625)}{452.4 \times 0.0169} = 2.98''$$

Spacing limitations : $s > 1''$
(clear spacing) $s < 3''$
$s > 1\frac{1}{3} \times$ agg. size.

$\therefore$ Use # 5 spiral @ 3" o/c

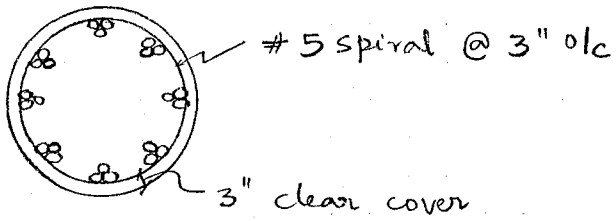

Spacing : Considering a bar bundle

equivalent diameter $= \sqrt{\frac{3 \times 1.56 \times 4}{\pi}} = 2.44''$

$\therefore 1.5 \times d = 3.66''$

Actual spacing $\cong \frac{\pi \times 20.4}{8} - 2 \times 1.41 = 5.2''$ (clear) $> 3.66''$ ok

Development length : Consider in tension, since it is conservative.

The basic development length $= \frac{0.04 A_b f_y}{\sqrt{f'_c}}$ AASHTO 8-25-1

but not less than $0.0004 d_b f_y$

engineering corporation

project NORTHERN AVE. BRIDGE no. 87026
client FLOOD CONTROL DIST. design CG/AGA date 11/87
subject DESIGN checked eal date 12/87

The basic development length can be multiplied by 0.75
(AASHTO 8-25-3.3)

For bundled bars, the development length shall be increased by 20%
(AASHTO 8-28)

Basic development length : $\frac{0.04 \times 1.56 \times 60{,}000}{\sqrt{4{,}000}} = 59.2''$ ← governs.

$0.0004 \times 1.41 \times 60{,}000 = 33.8''$

Development length $= \frac{59.2''}{12} \times 0.75 \times 1.2 = 4.4'$ Say $\underline{4'\text{-}6''}$

rga engineering corporation

project NORTHERN AVE. BRIDGE no. 87026
client FLOOD CONTROL DIST. design CG date 2/88
subject DESIGN checked [illegible] date 2/88

LENGTH OF APPROACH SLAB

The unsupported length of the app. slab shall be the maximum of the following two criteria.

(1) A failure plane at an angle of $(45° - \phi/2)$ from the point of maximum moment of the drilled shaft extends to the roadway surface. The horizontal distance between the intersection of the failure plane with the roadway surface and the drilled shaft ℄ shall be considered as unsupported length of the slab.

(2) The unsupported length shall be half of the height from the deck to the point of maximum moment in the drilled shaft.

(1) $\phi = 29°$ (Soils report from Thomas Hartig Assoc.)

Point of max. moment (Computer Output - soils) (or fixity)
$= 336'' = 28'$ from top of shaft.

$45° - \phi/2 = 30.5$

Height from top of deck $= 28' + 5' + 2' = 35'$

$\therefore$ Length of approach slab $= \tan 30.5 \times 35 + 4'$ (for bearing) $\simeq \underline{24.5'}$ ← governs.

(2) Length $= \frac{35}{2} + 4' = \underline{21.5'}$

engineering corporation

project NORTHERN AVE. BRIDGE no. 87026
client FLOOD CONTROL DIST. design CG date 2/88
subject DESIGN checked MR date 2/88

DESIGN OF APPROACH SLAB

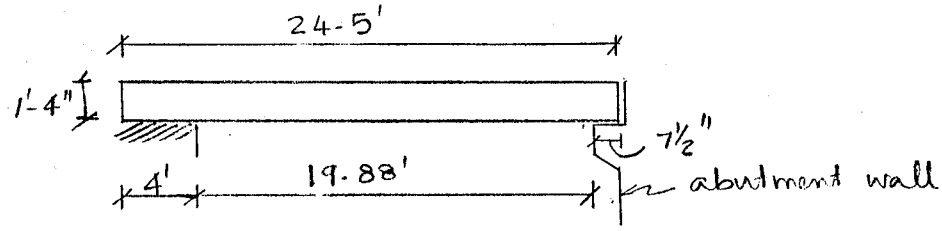

Span length (AASHTO 3.24.1)

= Center to center of supports but ≯ clear span + thickness of slab

$= (19.88 + 2' + 3\frac{1}{2}'') \not> 19.88' + 1.33$

∴ span = 21.21

Considering a foot width,

D.L moment $= \frac{Wl^2}{8} = \frac{0.20 \times 21.21^2}{8} = 11.25$ k-ft/ft

L.L moment (AASHTO 3.24.3.2)

For HS 20 loading,

L.L.M = 9005 ft lbs $= \frac{900 \times 21.21}{1000} = 19.1$ k-ft/ft

Total service moment $= 11.25 + 19.1 \times \underset{\text{impact}}{1.3} = 36.1$ k-ft

The approach slab will be designed as a doubly reinforced rectangular section.

engineering corporation

project NORTHERN AVE. BRIDGE no. 87026
client FLOOD CONTROL DIST. design CG date 2/88
subject DESIGN checked MR date 2/88

(Ref: Reinforced Concrete Design; Wang & Salmon)

$M_w = 36.1$ K-ft

$f_s = 24{,}000$ psi, $f'_c = 4{,}000$, $f_c = 1600$ psi $n = 8$

$$k = \frac{all \cdot f_c}{all \cdot f_s/n + all \cdot f_c} = \frac{1600}{\frac{24{,}000}{8} + 1600} = 0.348$$

$$j = 1 - k/3 = 1 - \frac{0.348}{3} = 0.884 \; ; \; \rho = \frac{k \times all \cdot f_c}{2 \times all \cdot f_s} = 0.0116$$

$$R = \frac{1}{2} \times (all \cdot f_c)\, jk = \frac{1}{2} \times 1600 \times 0.884 \times 0.348 = 246 \text{ psi}$$

$$M_w = Rbd^2 \quad \therefore \quad d = \sqrt{\frac{M_w}{Rb}} = \sqrt{\frac{36.1 \times 10^3 \times 12}{246 \times 12}} = 12.1''$$

Try a section of total depth $= 12 + 3'' + \frac{1.00}{2} = 15.5''$ (≈ dia of #8 bar)

Since the actual depth (12") is slightly less than the required (12.1"), compression reinforcement will be provided for a balanced design.

STEEL REQUIREMENTS

Moment capacity of ideal section $M_{w1} = Rbd^2$

$$= \frac{246 \times 12 \times 12^2}{12 \times 1000} = 35.4 \text{ k-ft}$$

$A_{s1} = \rho bd = 0.0116 \times 12 \times 12.0 = 1.67 \text{ in}^2$

also $A_{s1} = \frac{M_{w1}}{f_s jd} = \frac{35.4 \times 12}{24 \times 0.884 \times 12} = 1.67 \text{ in}^2$

engineering corporation

project NORTHERN AVE. BRIDGE no. 87026
client FLOOD CONTROL DIST. design CG date 2/88
subject DESIGN checked MR date 2/88

$M_{W2} = M_W - M_{W1} = 36.1 - 35.4 = 0.7$ k-ft

Compression C_2 in the top reinforcement or tension T_2 in the additional bottom steel $= \dfrac{M_{W2}}{(d-d')}$ $\left[\begin{array}{l} d = 12.0'' \\ d' = \underset{\text{cover}}{2.5''} + \dfrac{\overset{\text{\#4 bar}}{0.50}}{2} = 2.75'' \end{array} \right.$

$\therefore\ C_2 = T_2 = \dfrac{0.7 \times 12}{(12.0 - 2.75)} = 0.91$ k

$A_{s_2} = \dfrac{T_2}{all \cdot f_s} = \dfrac{0.91}{24} = 0.04\ in^2$

$\therefore\ A_s = A_{s_1} + A_{s_2} = 1.67 + 0.04 = 1.71\ in^2$; Try #9 @7", $A_s = 1.71\ in^2$

$f_{c_1} = (all \cdot f_c)(kd - d')/kd$

$= 1600\left(\dfrac{0.348 \times 12 - 2.75}{0.348 \times 12}\right)$

$= 546$ psi

$A'_s = \dfrac{C_2}{(2n-1) f_{c_1}} = \dfrac{0.70 \times 10^3}{15 \times 546}$

$= 0.09\ in^2$; Try #4 @14", $A_s = 0.17\ in^2$

engineering corporation

project NORTHERN AVE. BRIDGE no. 87026
client FLOOD CONTROL DIST. design CG date 2/88
subject DESIGN checked MR date 2/88

CHECK FOR STRESSES

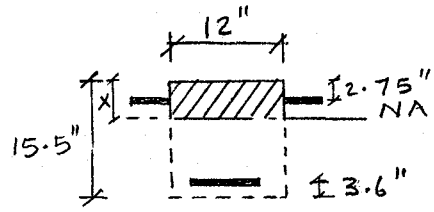

Taking moments of the areas about the NA,

$$\frac{12x^2}{2} + (2\times 8 - 1)\times 0.17\,(x - 2.75) = 8\times 1.71\times(11.9 - x)$$

ie $6x^2 + 2.55x - 7.01 = 162.8 - 13.68x$

ie $6x^2 + 16.23x - 169.8 = 0$

$$\Rightarrow \quad x = \frac{-16.23 \pm \sqrt{16.23^2 + 4\times 6\times 169.8}}{2\times 6} = 4.14''$$

Moment of Inertia $I = \frac{12\times 4.14^3}{3} + (2\times 8-1)0.17\,(4.14-2.75)^2 + 8\times 1.71\,(11.9-4.14)^2$

$= 1113 \text{ in}^4$

$f_s = \frac{Mcn}{I} = \frac{36.1\times 12\times 10^3\times 7.76\times 8}{1113} = 24{,}163$ psi $\simeq$ 24,000 psi ok
(> allowable by 0.7%)

$f_c = \frac{Mc}{I} = \frac{36.1\times 12\times 10^3\times 4.14}{1113} = 1611$ psi $\simeq$ 1600 psi ok
(> allowable by 0.7%)

$f_s' = \frac{My(2n)}{I} = \frac{36.1\times 12\times 10^3\times 1.39\times 16}{1113} = 8656$ psi ok

Bond & Shear - ok per AASHTO 3.24.4.

Min. depth (AASHTO 8.9.2) $= 1.1\times\left(\frac{S+10}{30}\right) = 1.1\times\left(\frac{21.21+10}{30}\right) = 1.14' < 1.3'$ ok

engineering corporation

project NORTHERN AVE. BRIDGE no. 87026
client FLOOD CONTROL DIST. design CG date 2/88
subject DESIGN checked date

∴ USE

9 @ 7" (BOTTOM STEEL)

4 @ 14" (TOP STEEL)

Distribution steel = $\frac{100}{\sqrt{S}}$ % (AASHTO 3.24.10)

$= \frac{100}{\sqrt{21.21}} = 21.7\%$ of main reinforcement.

∴ area = $0.217 \times 1.71 = 0.37 \text{ in}^2/\text{ft}$

Provide # 5 @ 10" o/c ⇒ $A_s = 0.37 \text{ in}^2/\text{ft}$ ok

engineering corporation

project NORTHERN AVE. BRIDGE no. 87026
client FLOOD CONTROL DIST. design CG/AGA date 11/87
subject DESIGN checked Sal date 12/87

BACKWALL CHECK

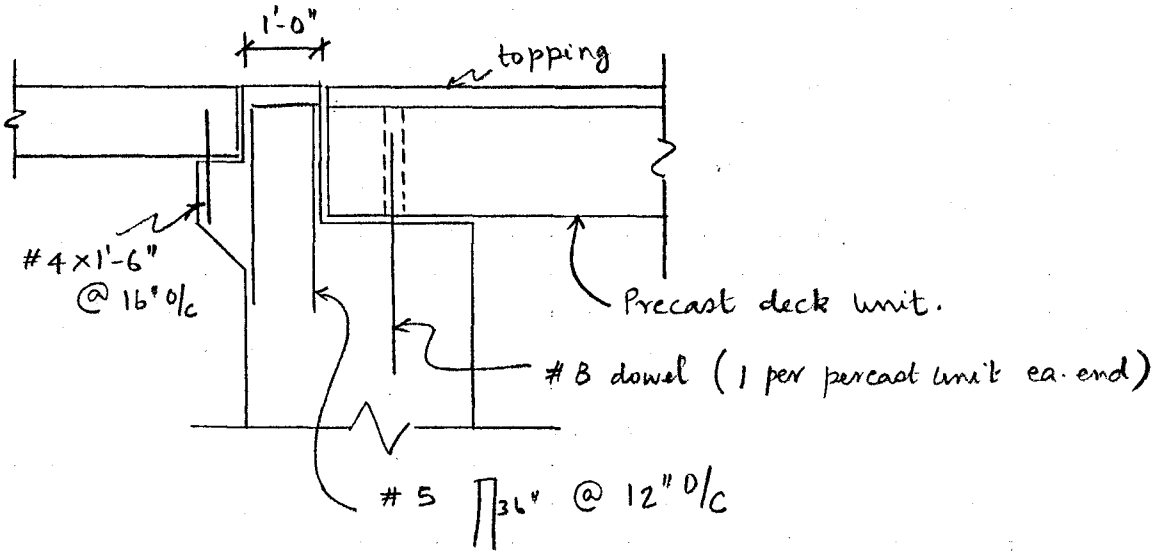

The ∏ bars resist the lateral strut load by shear friction.

$V_n = A_{vf} f_y \mu$ (AASHTO eqn. 8.56)

$= (0.31 \times 2) \times 40 \times 1.4 = 34.72$ k/ft ← governs.

V_n shall not be greater than $0.2 f'_c A_{cv}$ nor $800 A_{cv}$ in pounds. (AASHTO 8.16.6.4.4)

$0.2 f'_c A_{cv} = 0.2 \times \frac{3,500}{1,000} \times 12'' \times 12'' = 100.8$ k/ft.

width of back wall; along the strut wall.

$800 A_{cv} = \frac{800 \times 12 \times 12}{1,000} = 115.2$ k/ft

$V_u = 11$ k/ft (from soils report) $\times \underbrace{1.3 \times 1.3}_{\text{Load factors}} = 18.6$ k/ft

$\phi V_n = 0.85 \times 34.72 = 29.5$ k/ft > 18.6 k/ft OK

engineering corporation

project NORTHERN AVE. BRIDGE no. 87026
client FLOOD CONTROL DIST. design CG/AGA date 11/87
subject DESIGN checked Sal date 12/87

CONNECTION BETWEEN THE SUPERSTRUCTURE & SUBSTRUCTURE

Ref: Guide Specifications for Seismic Design of Highway Bridges - 1983

Section 4-5

The connections between the bridge span and the abutments shall be designed both longitudinally and transversely to resist the gravity reaction force at the abutment multiplied by the acceleration coefficient of the site.

$\frac{1.13 \times 52.6}{2}$

Design force $= 0.09 \times 29.72^k = 2.67^k$

Design ultimate force $= 1.3 \times 2.67 = 3.47^k \simeq 3.5^k$

Shear capacity of #8 bar $= 0.4 F_y \times 0.79$

$= 0.4 \times 60 \times 0.79$

$= 19^k > 3.5^k$ ok

engineering corporation

project NORTHERN AVE. BRIDGE no. 87026
client FLOOD CONTROL DIST. design CG/AGA date 11/87
subject BARRIER DESIGN checked pal date 12/87

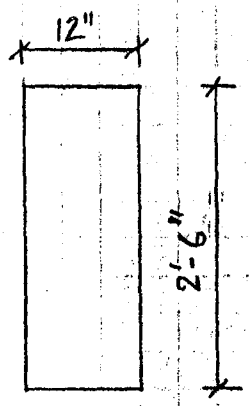

Highway design loading = 10^k @ the top (AASHTO 2.7.1.3)

$\therefore$ Moment @ the base $= 10 \times 2.5$
$= 25.0$ k-ft.

The transverse force can be spread over a longitudinal length of 5 feet (AASHTO 2.7.1.3.6)

$\therefore$ Moment/ft $= \frac{25}{5} = 5.0$ k-ft

$A_s = \frac{M}{7/8\, f_s d} = \frac{5.0 \times 12}{7/8 \times 20 \times 8} = 0.43$ in^2/ft (d = 8" conser.)

Provide #5 @ 6" ; $A_s = 0.62$ in^2/ft > 0.43 in^2/ft ok

$f_c = \frac{2M}{kjbd^2} = \frac{2 \times 5.0 \times 12 \times 10^3}{0.375 \times 7/8 \times 12 \times 8^2} = 476$ psi $< f_c$ (1200 psi) ok

Min. shrinkage & temperature reinforcement = 1/8 in^2/ft in each direction.

Spacing $\not> 3 \times$ (wall or slab thickness) or 18" (AASHTO 8.20)

engineering corporation

project NORTHERN AVE. BRIDGE no. 87026
client FLOOD CONTROL DIST. design CG/AGA date 11/87
subject BARRIER DESIGN checked sal date 12/87

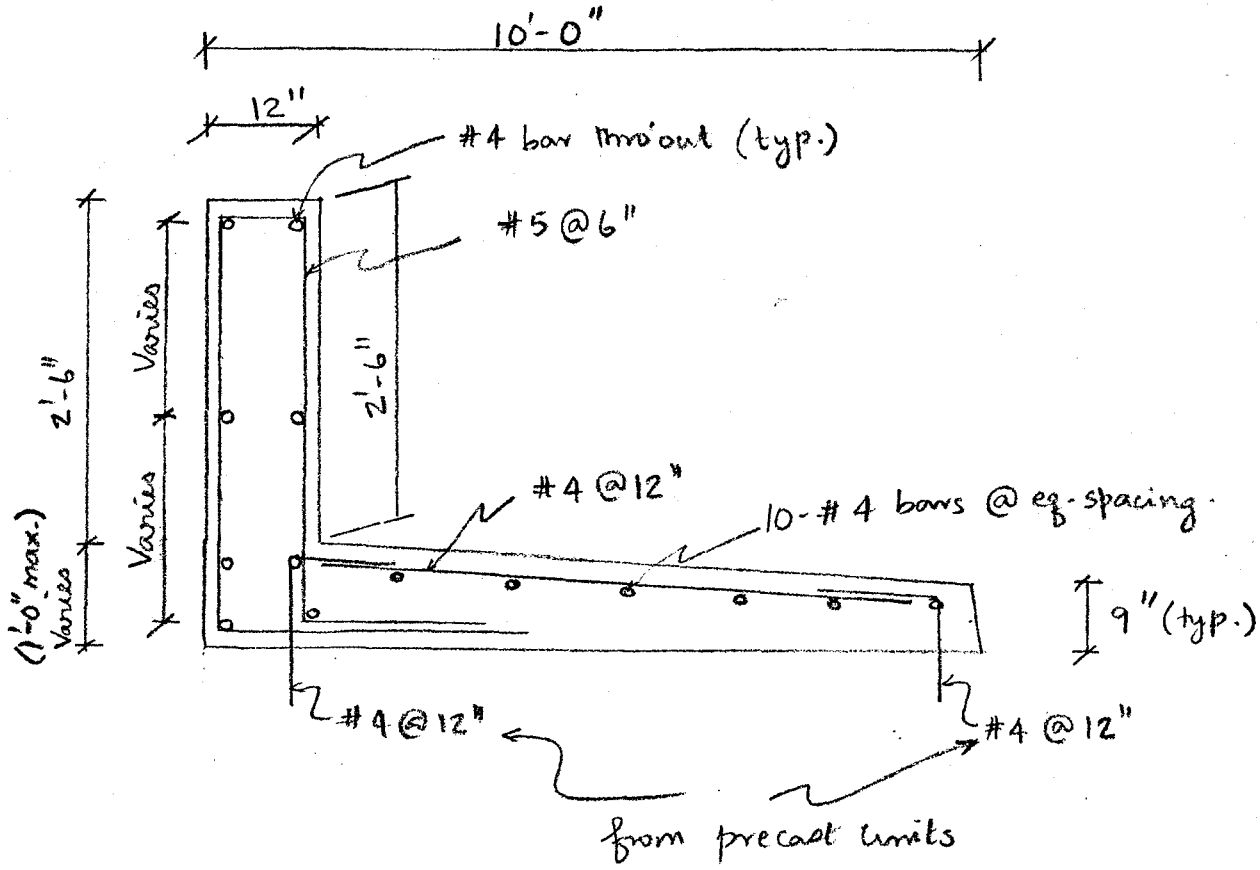

engineering corporation

project NORTHERN AVE. BRIDGE no. 87026
client FLOOD CONTROL DIST. design CG/AGA date 11/87
subject WALL DESIGN (ABOVE THE WING WALL) checked ODL date 12/87

Wall ~ 3' high × 10' long

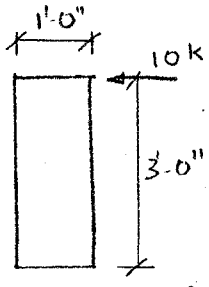

Highway design loading = 10^k @ the top (AASHTO 2.7.1.3)

∴ Moment @ base = 10 × 3 = 30 k-ft.

The transverse force can be spread over a longitudinal length of 5 feet (AASHTO 2.7.1.3.6)

$$\therefore \text{Moment/ft} = \frac{30}{5} = 6 \text{ k-ft}$$

$$A_s = \frac{M}{\frac{7}{8} f_s d} = \frac{6 \times 12}{\frac{7}{8} \times 20 \times 8} = 0.51 \text{ in}^2/\text{ft}.$$

Provide #5 @ 6" ; $A_s = 0.62 \text{ in}^2/\text{ft} > 0.51 \text{ in}^2/\text{ft}$ OK

Minimum shrinkage & temperature reinforcement = $\frac{1}{8}$ in^2/ft in each direction.

Spacing $\not>$ 3×(wall or slab thickness) or 18" (AASHTO 8.20)

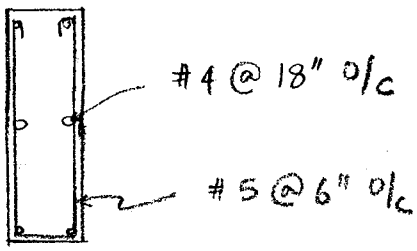

engineering corporation

project NORTHERN AVE. BRIDGE no. 87026
client FLOOD CONTROL DIST. design CG/AGA date 11/87
subject QUANTITIES checked Sal date 12/87

(1) Precast Prestressed voided slabs = 21 Nos.

(2) Concrete topping (f'_c = 4,000 psi)

Av. thickness = $4\frac{1}{2}''$

volume = $64' \times 55.2' \times \frac{4\frac{1}{2}}{12} \times \frac{1}{27}$ = 49.1 cy.

(3) Abutment walls

(a) Concrete (f'_c = 4,000 psi)

Area of cross-section = $5\times3 + 1\times2 + \frac{10\times8}{144} + \frac{1}{2}\times\frac{8\times8}{144}$ = 17.78 ft^2

volume (2 walls) = $2 \times 17.78 \times \frac{85.1}{27}$ = 112.1 cy.

(b) Reinforcing bars

Length (#4 bars) = $8\times85.1\times2\times1.05$ (w/ laps) $+ 1.5\times65\times2$ = 1624.7 ft.

Length (#5 bars) = 3(straight) + 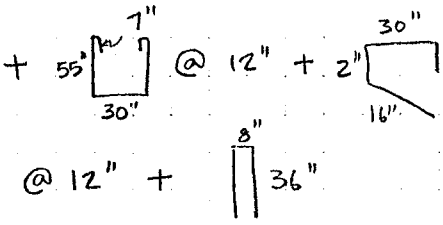

$= 3\times85.1\times2\times1.05 + (154\times86\times2 + 58\times86\times2 + 50\times86\times2 + 80\times86\times2)/12$

= 5438.1 ft

Length (#6 bars) = $10\times85.1\times2\times1.05$ = 1787.1 ft.

Weight = $1624.7\times0.668 + 5438.1\times1.043 + 1787.1\times1.502$ = 9441.5 lbs.

project NORTHERN AVE. BRIDGE no. 87026
client FLOOD CONTROL DIST. design CG/AGA date 11/87
subject QUANTITIES checked Sal date 12/87

(4) Wing Walls

(a) Concrete (f'_c = 4,000 psi)

Area of cross section $= 2\times12 + 5.1\times3 + \frac{1}{2}\times5.1\times9 + \overbrace{3.5\times10 + 1\times2.5}^{\text{Above G.L}}$

$= 99.75\ ft^2$

Volume (4 walls) $= 4\times99.75\times\frac{1'}{27} = \underline{\underline{14.8\ cy.}}$

(b) Reinforcing bars

Length (#4 bars) $= 6\,(\text{Straight}) + 9\times\underset{8''}{\sqcup}\,5'(\text{av.}) + 6\,(\text{Straight})$ ← above G.L

$= 6\times8'(\text{av.}) + 9\times\frac{128}{12} + 6\times10 = 204\ ft.$

Length (#5 bars) $= 11\,(\text{Straight}) + \underbrace{14\times\,|\,5' + 11\times\overset{8''}{\sqcap}\,1'\text{-}6''}_{\text{above G.L}}$

$= 11\times8'(\text{av.}) + 70' + 11\times3.67 = 198.4\ ft.$

Length (#9 bars) $= 2\times12 = 24\ ft.$

Weight $= (204\times0.668 + 198.4\times1.043 + 24\times3.4)\times4 = \underline{\underline{1699.2\ lbs.}}$

(5) Sidewalk and barrier

(a) Concrete (f'_c = 3,000 psi)

Area of Cross section $= 3.5\times1 + 3.25\times1 + 0.875\times9 + 0.75\times9 = 21.4$

Volume $= 21.4\times55.2\times\frac{1}{27} + 4\times10\times0.81\times9.0\times\frac{1}{27}$

$= \underline{\underline{54.5\ cy.}}$

project NORTHERN AVE. BRIDGE no. 87026
client FLOOD CONTROL DIST. design CG/AGA date 11/87
subject QUANTITIES checked Sal date 12/87

(b) Reinforcing bars

Length (#4 bars) = 14(straight) + 56 (transverse)

$= 14 \times 55.2 + 56 \times 7.58 = 1197.3$ ft

Length (#5 bars) = $110 \times 9.54 = 1049.4$ ft

Weight = $2(1197.3 \times 0.668 + 1049.4 \times 1.043) + 733.5 \times 0.668$
(for sidewalk beyond the bridge)

$= \underline{\underline{4278.6 \text{ lbs.}}}$

(6) Approach slabs

(a) Concrete ($f'_c = 4{,}000$ psi)

Volume $= \dfrac{2 \times 24.5 \times 84 \times 1}{27} = \underline{\underline{152.4 \text{ cy.}}}$

(b) Reinforcing bars

#4 @ 14" (T) $= 84\left(\dfrac{24.5}{1.17} + 1\right) = 1843 \text{ ft} \times 1.1 = 2027.3$ ft

#4 × 7½" [1'-0" @ 14" $= 2.63\left(\dfrac{84}{1.17} + 1\right) = 191.5$ ft.

#4 × [4'-0" 7½" 9" @ 7" $= 5.38\left(\dfrac{84}{0.58} + 1\right) = 784.6$ ft

#5 @ 10" (T) $= 84 \times 30.5 = 2563.5 \text{ ft.} \times 1.1 = 2819.9$ ft

#9 @ 7" (L) $= 24\left(\dfrac{84}{0.58} + 1\right) = 3499.8$ ft.

Weight $= (2027.3 + 191.5 + 784.6) \times 0.668 + 2819.9 \times 1.043 + 3499.8 \times 3.4$

$= \underline{\underline{16{,}846.8 \text{ lbs.}}}$

engineering corporation

project NORTHERN AVE. BRIDGE no. 87026
client FLOOD CONTROL DIST. design CG/AGA date 11/87
subject QUANTITIES checked SAC date 12/89

(7) Excavation & Backfill

(a) Excavation

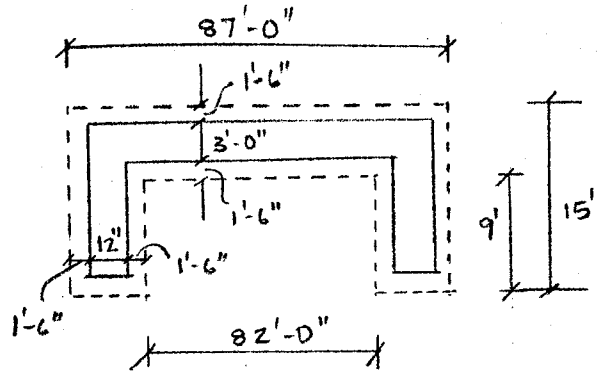

Depth of excavation = $\frac{9' + 2'}{2} = 5.5'$
(ABUTMENT)

Area of excavation = $87.0 \times 15 - 9' \times 82.0 = 567\ ft^2$

volume of excavation = $567 \times 5.5 \times 2 \times \frac{1}{27} = \underline{\underline{231}}$ cu.yards.

Approach slab

volume = $(24.5+1)(84.0+2) \times 2 \times \frac{2}{27} = 324.9$ cu.yards.

Total excavation = $\underline{\underline{555.9 \text{ cu. yards.}}}$

engineering corporation

project NORTHERN AVE. BRIDGE no. 87026
client FLOOD CONTROL DIST. design CG/AGA date 11/87
subject QUANTITIES checked Sal date 12/87

(b) Backfill

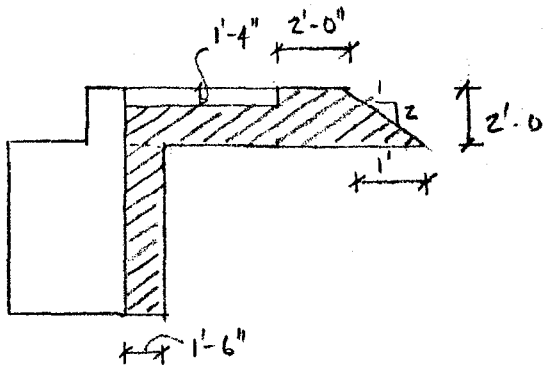

SECTION AA

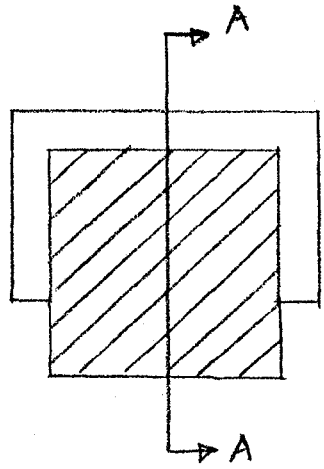

volume of backfill = $\left(1.5' \times 5' \times 85.0 + 2 \times 26.5 \times 85.0 + \frac{1}{2} \times 2 \times 1 \times 85.0 - 24.5 \times 85.0 \times 1\right) \times \frac{2}{27}$

= 233 cu. yards.

Diagram 37b. *(continued)* $f'_c = 4{,}000$; $f_y = 60{,}000$

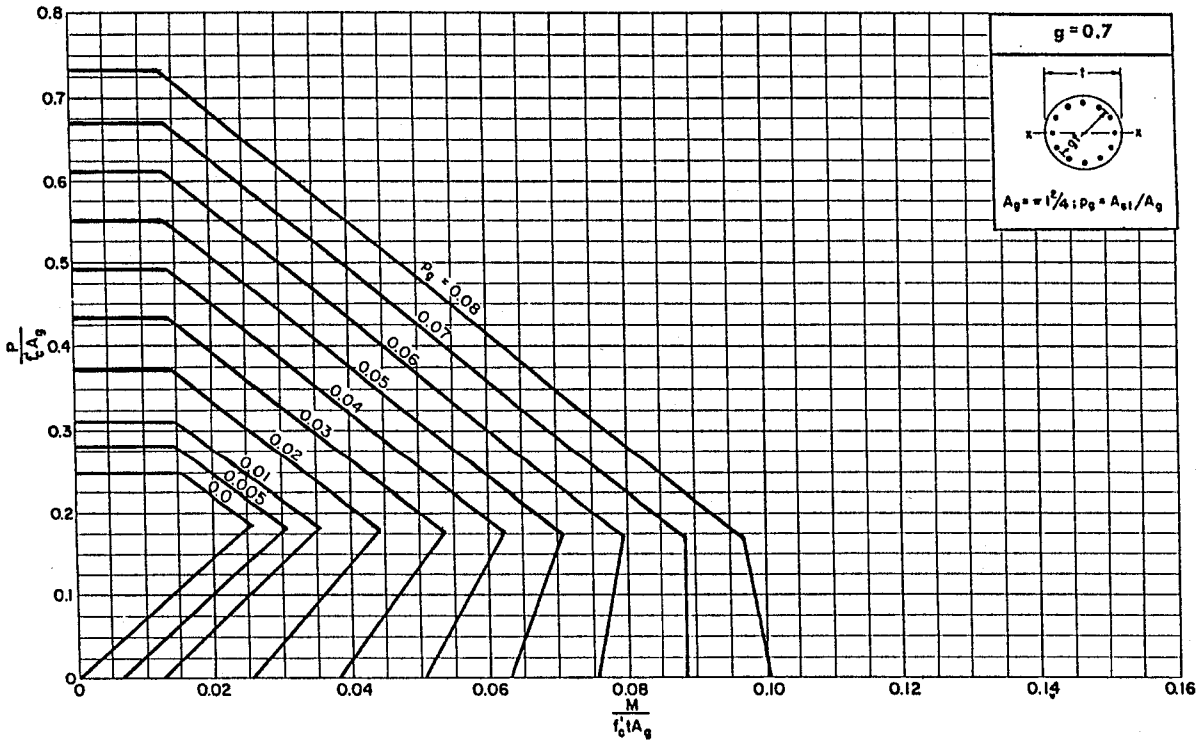

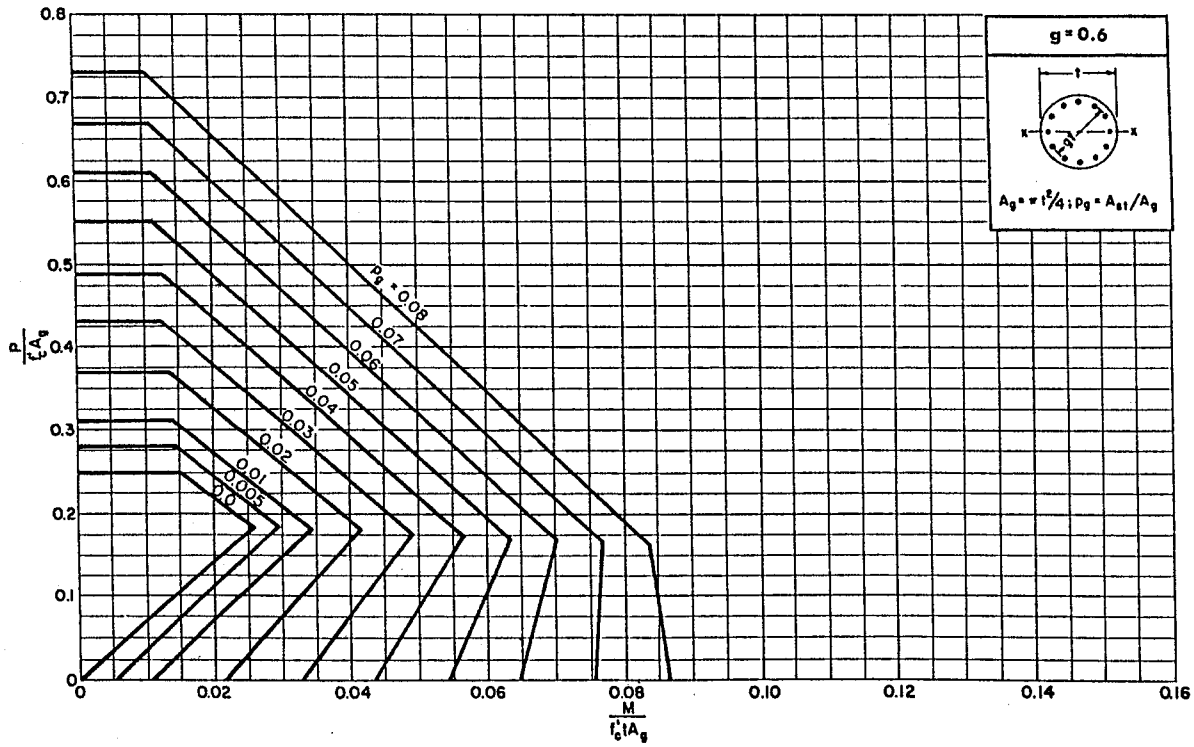

THOMAS-HARTIG & ASSOCIATES, INC.

TOM W. THOMAS, P.E. · HARRY E. HARTIG, P.E.
Soil and Foundation Engineering · Materials Testing
7031 West Oakland Street Chandler, Arizona 85226 602/961-1169

James R. Morrow
John P. Boyd, P.E.
Charles H. Atkinson, P.E.
Donald J. Spadola, P.E.

Glen K. Copeland, P.E.
James M. Willson, P.E.
Frank M. Guerra, P.E.

Roger A. Brewer, P.E.
Steven A. Haire, P.E.
Chet L. Pearson, P.E.
Kenneth L. Ricker, P.E.

23 July 1987

RGA Engineering Corportion
2633 W. Indian School Road
Suite 401
Phoenix, Arizona 85016

Attention: Robert T. Herz

Project: ACDC Bridge at Northern Avenue
Phoenix, Arizona

Project No: 87-0480
Supplement No. 1

At your request this firm has performed additional engineering analysis for the subject project for closely spaced drilled piers with a strutted abutment pier cap. The bridge superstructure will be designed to act like a strut between the abutments. We recommend that 2 1/2 foot diameter drilled piers founded at least 19 feet below the channel bottom (approximately 47 feet below existing grade) be used to support the bridge and channel walls both during construction and permanently. The allowable vertical load capacity in end bearing of the straight-shaft drilled piers is 103 kips. Drilled pier settlement is estimated to be less than 3/4 inch.

This lateral load capacity of the drilled pier retention system restrained from lateral deflection was evaluated using Com 624G. The program was originally written by Reese and Sullivan at the University of Texas at Austin and has been adapted for IBM PC compatible computers by Geosoft. The program is an elastic analysis for laterally loaded deep foundations using finite difference solution to the soil-structure interaction problem. The load conditions used in the analysis of the system included:

1. A vertical load on the top of the pier equal to 1100 kips (total abutment load) divided by 14 drilled piers (number of drilled piers planned in each abutment).

2. Modeling the lateral load (at-rest pressure and vehicle surcharge)exerted by the soil and channel wall as a triangular load on the pier extending

from the roadway to the bottom of the channel (28 feet). In addition, a 800 kip-foot moment was applied to the top of the element to account for vertical load eccentricity.

3. Applying a pseudo-static seismic load at the top of the drilled pier (bottom of the abutment pier cap) equal to 25% of the vertical dead load applied to the drilled pier.

4. Applying a strut load to limit the top deflection to near zero.

The computer printout for the lateral system is attached. The strut load to limit deflection was computed to be 68 kips per drilled pier or 11 kips per lineal foot of abutment.

The top of the drilled pier was assumed to be approximately 7 feet below existing grade to allow for the depth of the bridge superstructure and the abutment cap. The lateral soil load between the drilled piers was assumed to be fully transferred by soil arching to the adjacent drilled pier.

This supplement shall be attached to the original report and become a part thereof. If you have any questions, or if we can be of further service, please call.

Respectfully submitted,

THOMAS-HARTIG & ASSOCIATES, INC.

By: _____ Reviewed by: _____

Registered Professional Engineer (Civil) CERTIFICATE NO. 10971 KENNETH L. RICKER Date Signed 4-23-87 ARIZONA, U.S.A.

Kenneth L. Ricker, P.E.

Registered Professional Engineer (Civil) CERTIFICATE NO. 6858 GLEN K. COPELAND Date Signed 4-23-87 ARIZONA, U.S.A.

Glen K. Copeland, P.E.

/jea

Copies to: Addressee (5)

```
*****************************************************
*                                                   *
*    LATERALLY LOADED PILE ANALYSIS   -  COM624G    *
*                                                   *
*    PC ADAPTATION OF COM624                        *
*                                                   *
*    ORIGINALLY WRITTEN BY REESE AND SULLIVAN AT    *
*    UNIVERSITY OF TEXAS AT AUSTIN                  *
*                                                   *
*    ADAPTED FOR PC USE BY                          *
*                                                   *
*    GEOSOFT                                        *
*    1442 LINCOIN AVE., SUITE 146                   *
*    ORANGE, CA 92665  (714) 998-4030               *
*                                                   *
*    PORTIONS (C) COPYRIGHT 1984 GEOSOFT            *
*                                                   *
*****************************************************
```

1

87-480 CASES 3 & 4 KO M = M AVE = 800 K-FT

UNITS--ENGL

INPUT INFORMATION

DISTRIBUTED LOAD CURVE 2 POINTS

X,IN	LOAD,LBS/IN
.00	.217D+03
252.00	.559D+03

THE LOADING IS STATIC

PILE GEOMETRY AND PROPERTIES

PILE LENGTH = 480.00 IN
MODULUS OF ELASTICITY OF PILE = .360D+07 LBS/IN**2
1 SECTION(S)

X IN	DIAMETER IN	MOMENT OF INERTIA IN**4	AREA IN**2
.00			
	30.000	.398D+05	.707D+03
480.00			

SOILS INFORMATION

X AT THE GROUND SURFACE = 252.00 IN

1 LAYER(S) OF SOIL

LAYER 1
THE SOIL IS A SAND
X AT THE TOP OF THE LAYER = 252.00 IN
X AT THE BOTTOM OF THE LAYER = 480.00 IN
MODULUS OF SUBGRADE REACTION = .500D+03 LBS/IN**3

DISTRIBUTION OF EFFECTIVE UNIT WEIGHT WITH DEPTH
2 POINTS

X,IN	WEIGHT,LBS/IN**3
252.00	.81D-01
480.00	.81D-01

DISTRIBUTION OF STRENGTH PARAMETERS WITH DEPTH
2 POINTS

X,IN	C,LBS/IN**2	PHI,DEGREES	E50
252.00	.000D+00	38.000	*****
480.00	.000D+00	38.000	*****

FINITE DIFFERENCE PARAMETERS
NUMBER OF PILE INCREMENTS = 80
TOLERANCE ON DETERMINATION OF DEFLECTIONS = .100D-04 IN
MAXIMUM NUMBER OF ITERATIONS ALLOWED FOR PILE ANALYSIS = 100
MAXIMUM ALLOWABLE DEFLECTION = .30D+03 IN

INPUT CODES
OUTPT = 1
KCYCL = 1
KBC = 1
KPYOP = 1
INC = 2
87-480 CASES 3 & 4 KO M = M AVE = 800 K-FT

UNITS--ENGL

OUTPUT INFORMATION

****

GENERATED P-Y CURVES

THE NUMBER OF CURVES = 1
THE NUMBER OF POINTS ON EACH CURVE = 17

DEPTH IN	DIAM IN	PHI	GAMMA LBS/IN**3	A	B	PCT	PCD
108.00	30.00	38.0	.81D-01	.96	.60	.47D+04	.21D+05

Y IN	P LBS/IN
.000	.000
.042	855.664
.083	1194.312
.125	1451.539
.167	1666.986
.208	1855.889
.250	2026.017
.292	2181.970
.333	2326.733
.375	2462.374
.417	2590.397
.458	2711.932
.500	2827.857
1.125	4528.330
31.125	4528.330
61.125	4528.330
91.125	4528.330

PILE LOADING CONDITION

APPLIED MOMENT AT PILE HEAD = .686D+06 LBS-IN
LATERAL LOAD AT PILE HEAD = -.473D+05 LBS
AXIAL LOAD AT PILE HEAD = .103D+06 LBS

X IN	DEFLECTION IN	MOMENT LBS-IN	TOTAL STRESS LBS/IN**2	DISTR. LOAD LBS/IN	SOIL MODULUS LBS/IN**2	FLEXURAL RIGIDITY LBS-IN**2
*****	**********	**********	**********	**********	**********	**********
.00	-.235D-02	.686D+06	.405D+03	.217D+03	.000D+00	.143D+12
12.00	.238D-01	.132D+06	.196D+03	.233D+03	.000D+00	.143D+12
24.00	.501D-01	-.389D+06	.293D+03	.250D+03	.000D+00	.143D+12
36.00	.760D-01	-.874D+06	.476D+03	.266D+03	.000D+00	.143D+12
48.00	.101D+00	-.132D+07	.644D+03	.282D+03	.000D+00	.143D+12
60.00	.125D+00	-.173D+07	.797D+03	.298D+03	.000D+00	.143D+12
72.00	.147D+00	-.209D+07	.934D+03	.315D+03	.000D+00	.143D+12
84.00	.167D+00	-.240D+07	.105D+04	.331D+03	.000D+00	.143D+12
96.00	.184D+00	-.267D+07	.115D+04	.347D+03	.000D+00	.143D+12
108.00	.199D+00	-.289D+07	.124D+04	.364D+03	.000D+00	.143D+12
120.00	.211D+00	-.306D+07	.130D+04	.380D+03	.000D+00	.143D+12
132.00	.220D+00	-.317D+07	.134D+04	.396D+03	.000D+00	.143D+12
144.00	.225D+00	-.322D+07	.136D+04	.412D+03	.000D+00	.143D+12
156.00	.228D+00	-.322D+07	.136D+04	.429D+03	.000D+00	.143D+12
168.00	.227D+00	-.315D+07	.133D+04	.445D+03	.000D+00	.143D+12
180.00	.223D+00	-.302D+07	.128D+04	.461D+03	.000D+00	.143D+12
192.00	.216D+00	-.282D+07	.121D+04	.478D+03	.000D+00	.143D+12
204.00	.206D+00	-.255D+07	.111D+04	.494D+03	.000D+00	.143D+12
216.00	.193D+00	-.221D+07	.979D+03	.510D+03	.000D+00	.143D+12
228.00	.179D+00	-.180D+07	.823D+03	.526D+03	.000D+00	.143D+12
240.00	.162D+00	-.131D+07	.639D+03	.543D+03	.000D+00	.143D+12
252.00	.144D+00	-.738D+06	.425D+03	.559D+03	.000D+00	.143D+12
264.00	.126D+00	-.114D+06	.189D+03	.000D+00	.165D+04	.143D+12
276.00	.107D+00	.480D+06	.327D+03	.000D+00	.406D+04	.143D+12
288.00	.891D-01	.101D+07	.528D+03	.000D+00	.721D+04	.143D+12
300.00	.720D-01	.145D+07	.694D+03	.000D+00	.110D+05	.143D+12
312.00	.563D-01	.178D+07	.817D+03	.000D+00	.156D+05	.143D+12
324.00	.424D-01	.198D+07	.892D+03	.000D+00	.212D+05	.143D+12
336.00	.305D-01	.205D+07	.919D+03	.000D+00	.270D+05	.143D+12
348.00	.206D-01	.200D+07	.901D+03	.000D+00	.326D+05	.143D+12
360.00	.128D-01	.186D+07	.847D+03	.000D+00	.379D+05	.143D+12
372.00	.678D-02	.164D+07	.767D+03	.000D+00	.401D+05	.143D+12
384.00	.244D-02	.139D+07	.671D+03	.000D+00	.660D+05	.143D+12
396.00	-.502D-03	.111D+07	.566D+03	.000D+00	.720D+05	.143D+12
408.00	-.232D-02	.843D+06	.464D+03	.000D+00	.750D+05	.143D+12
420.00	-.330D-02	.595D+06	.371D+03	.000D+00	.750D+05	.143D+12
432.00	-.367D-02	.383D+06	.291D+03	.000D+00	.817D+05	.143D+12
444.00	-.365D-02	.214D+06	.227D+03	.000D+00	.922D+05	.143D+12
456.00	-.341D-02	.935D+05	.181D+03	.000D+00	.102D+06	.143D+12
468.00	-.308D-02	.228D+05	.155D+03	.000D+00	.108D+06	.143D+12
480.00	-.272D-02	.000D+00	.146D+03	.000D+00	.114D+06	.143D+12

$\frac{144}{12} = 12'$

$\frac{336}{12} = 28'$

$+ 5$

$33'$

OUTPUT VERIFICATION

THE MAXIMUM MOMENT IMBALANCE FOR ANY ELEMENT = -.118D-06 IN-LBS
THE MAX. LATERAL FORCE IMBALANCE FOR ANY ELEMENT = .228D-07 LBS

COMPUTED LATERAL FORCE AT PILE HEAD = -.47290D+05 LBS
COMPUTED MOMENT AT PILE HEAD = .68600D+06 IN-LBS
COMPUTED SLOPE AT PILE HEAD = .21579D-02

THE OVERALL MOMENT IMBALANCE = -.351D-04 IN-LBS
THE OVERALL LATERAL FORCE IMBALANCE = .218D-06 LBS

OUTPUT SUMMARY

```
PILE HEAD DEFLECTION   =  -.235D-02 IN
MAXIMUM BENDING MOMENT =  -.323D+07 IN-LBS
MAXIMUM TOTAL STRESS   =   .136D+04 LBS/IN**2
MAXIMUM SHEAR FORCE    =   .520D+05 LBS
NO. OF ITERATIONS      =        18
MAXIMUM DEFLECTION ERROR  =  .719D-05 IN
```

87-480 CASES 3 & 4 KO M = M AVE = 800 K-FT

S U M M A R Y T A B L E

LATERAL LOAD (LBS)	BOUNDARY CONDITION BC2	AXIAL LOAD (LBS)	YT (IN)	ST (IN/IN)	MAX. MOMENT (IN-LBS)	MAX. STRESS (LBS/IN**2)
-.473D+05	.686D+06	.103D+06	-.235D-02	.216D-02	-.323D+07	.136D+04

THOMAS-HARTIG & ASSOCIATES, INC.

TOM W. THOMAS, P.E. · HARRY E. HARTIG, P.E.
Soil and Foundation Engineering · Materials Testing
7031 West Oakland Street Chandler, Arizona 85226 602/961-1169

James R. Morrow
John P. Boyd, P.E.
Charles H. Atkinson, P.E.
Donald J. Spadola, P.E.

Glen K. Copeland, P.E.
James M. Willson, P.E.
Frank M. Guerra, P.E.

Roger A. Brewer, P.E.
Steven A. Haire, P.E.
Chet L. Pearson, P.E.
Kenneth L. Ricker, P.E.

RGA Engineering Corp.
2633 West Indian School Road, Suite 401
Phoenix, Arizona 85016

27 August 1987

Attention: Robert T. Herz

Project: ACDC Bridge at Northern Avenue
Phoenix, Arizona

Project No. 87-0480
Supplement No. 2

Reference: Broms, Bengt B.,
"Lateral Resistance of Piles in Cohesionless Soils", Journal of the Soil Mechanics and Foundation Division, Proceedings of the American Society of Civil Engineers, May, 1964.

At the request of Nick Karan, we have performed additional lateral pile design analyses for the subject project. The additional lateral pile analyses were hand calculated based on the "Broms" approach, as detailed in the referenced paper. The results of the Broms Analyses are presented in this letter supplement.

We would like to point out that the lateral pile analysis performed in our original report, dated 25 June 1987, was based on a more rigorous approached based on a computer program titled COM624G. This computer analysis was performed in accordance with the Flood Control District of Maricopa County's Scope of Work (FCD 87-10), Specifications, Item 8, which states that lateral pile load capacities may be designed in accordance with NAVFAC DM-7.2, May 1982. The computer program we used was COM624G, a refined version of COM622, which is recommended in DM-7.2 (page 7.2-235) for use in lateral pile analysis.

RECEIVED
AUG 29 1987
RGA PHOENIX

Results of the "Broms" analysis and the computer (COM624G) analysis are presented in the attached tabulation for comparison. As can be seen in the table, the computer method results in slightly more conservative design moments than does the hand method (Broms), while the Broms method predicts slightly more (0.4 inch more) ground-line deflection than the computer method.

The main reason that the Broms method predicts more movement is the use of very conservative values of lateral subgrade modulus. In our calculations, we reduced the already conservative recommended static modulus by 50% to account for the effect of cyclic (seismic) loads. After numerous pile load tests, presented in the referenced paper, Broms states that in almost all cases the calculated lateral pile deflections considerably exceed the measured lateral deflections, due to the over-conservative values of subgrade modulus used in the analyses. The computer analysis is probably somewhat more realistic because it models the lateral soil response using non-linear p-y curves which are based on data correlating soil strength and density parameters with results of numerous instrumented pile load tests in similar soils.

This supplement shall be attached to the original report and become a part thereof.

Please call if you have any questions.

Respectfully submitted,

THOMAS-HARTIG & ASSOCIATES, INC.

By _____ Reviewed by: _____

Steven A. Haire, P.E. Kenneth L. Ricker, P.E.

/cb

Addressee (5)

TABLE 1

Load Case[1]	Pile Diameter (ft)	Embedded Length (ft)	Free Length (ft)	Equivalent Groundline Loading Shear (k)	Equivalent Groundline Loading Moment (k-ft)	Method of Calculation[2]	Maximum Moments (k-ft)	Depth[3] (ft)	Groundline Deflection (in)
1	2.5	19	21	50.2	-64	Hand	-268	12	0.5
						Computer	-268	12	0.1
						Hand	+98	26	
						Computer	+171	28	
2	3.0	28	21	34.2	+376	Hand	+466	25	0.8
						Computer	+502	26	0.4

[1]Case 1: Strutted Cantilever (No lateral deflection at top of pier)
Case 2: Free Cantilever (No restraint at top of pier)

[2]Hand calculations using Broms method for groundline deflections and moments below the groundline

[3]Depth below top of pile