ENGINEERING DIVISION
LIBRARY

Property of
Flood Control District of MC Library
Please Return to
2801 W. Durango
Phoenix, AZ 85009

43RD AVENUE BRIDGE OVER ARIZONA CANAL DIVERSION CHANNEL CONTRACT FCD 84-9

STRUCTURAL CALCULATIONS

PREPARED FOR

FLOOD CONTROL DISTRICT

OF

MARICOPA COUNTY

FEBRUARY 1985

A118.810

BENSON & GERDIN, INC.

CONSULTING ENGINEERS

3150 NORTH SEVENTH STREET PHOENIX, ARIZONA 85014 PHONE (602) 264-0136

ROGER D. BENSON, P.E. HAROLD E. GERDIN, P.E.

February 18, 1985

D. E. Sagramoso, P.E.
Chief Engineer and General Manager
Flood Control District of Maricopa County
3335 West Durango Street
Phoenix, Arizona 85009

Reference: 43rd Avenue Bridge over Arizona Canal Diversion Channel
Contract No. FCD-84-9
Structural Calculations

Dear Sir:

Pursuant to our agreement for engineering services relative to the above referenced project, we respectfully submit the structural calculations for this project.

Yours very truly,

BENSON & GERDIN, INC.
CONSULTING ENGINEERS

Michael E. Kennelly

Michael E. Kennelly, P.E.

MEK:lr
Encl.

BENSON & GERDIN, INC. CONSULTING ENGINEERS PHONE (602) 264-0136	SHT. NO. 1 OF 104
M.C. Flood Control District	JOB NO. 2327 J
Arizona Canal Diversion Channel	BY MEK DATE 1984
43rd Ave Bridge	CHKD. AG DATE 2-14-85
	REV.

INDEX

TITLE	SHT. NO	TITLE	SHT NO
INDEX	1	Elastomeric Pads	46 - 47
Basis of Design	2	Diaphragms	48 - 49
Deck Slab	3 - 17	Anchor Bolts	50 - 52
Prestress Girder - Simple Span	18 - 25	Pier	53 - 62
· Continuous	26 - 34	Abutment	63 - 81
Continuity Reinf.	35 - 37	Post-Tension Girder Alt.	82 - 91
Cont. Girder Stresses	38 - 40	Retaining Walls & Floor	92 - 97
Girder Details	41	Girder Deflections	98 - 101
Foundation Loading	42 - 45	Deck Slab Phase II	102 - 104

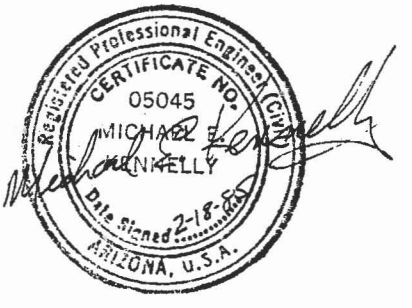

BENSON & GERDIN, INC. CONSULTING ENGINEERS PHONE (602) 264-0136	SHT. NO. 2 OF
M.C.F.C.D	JOB NO. 2327 J
A.C.D.C	BY ME DATE 6-14-1984
43RD AVE BRIDGE	CHKD. AG DATE 2-14-85
	REV.

BASIS OF DESIGN

LOCATION: 43RD AVE @ PEORIA AVE PHOENIX AZ.

SUPERSTRUCTURE:

ROADWAY WIDTH:	68'-0"
SIDEWALKS:	2 @ 5'-6"
OVERALL WIDTH:	81'-0"
SKEW:	36° 42' 14" Right
Girders:	11- AASHTO Type III
	2 span continuous
Slab:	8" cast-in-place conc.

LOADING: AASHTO HS 20-44 : 25 psf wearing surface allow.

Abutments Cont. Retaining Wall on Spread Footing
PIER Cont. Wall on Spread Footing

SPECIFICATIONS: DESIGN: AASHTO 1983 w/ revisions
CONSTRUCTION: ADOT 1982 w/ revisions

STRESSES:

CONCRETE:			REBAR		
Deck Slab	$f'_c = 4500$	$f_c = 1400$	#6 & Smaller	Gr 40	$f_s = 20000$
Abut & PIER	$f'_c = 4000$	$f_c = 1600$	#7 & Larger	Gr 60	$f_s = 24000$
All Other	$f'_c = 3000$	$f_c = 1200$	Prestress Strand	7 wire	$f'_s = 270000$

Soils REPORT:

WESTERN TECHNOLOGIES
Job No 2124 J 151
July 23, 1984
REV. August 24, 1984

BENSON & GERDIN, INC. CONSULTING ENGINEERS PHONE (602) 264-0138	SHT. NO. 3 OF
	JOB NO. 3817
	BY MEK DATE 5-14-84
Deck Slab	CHKD. AG DATE 2-14-85
	REV.

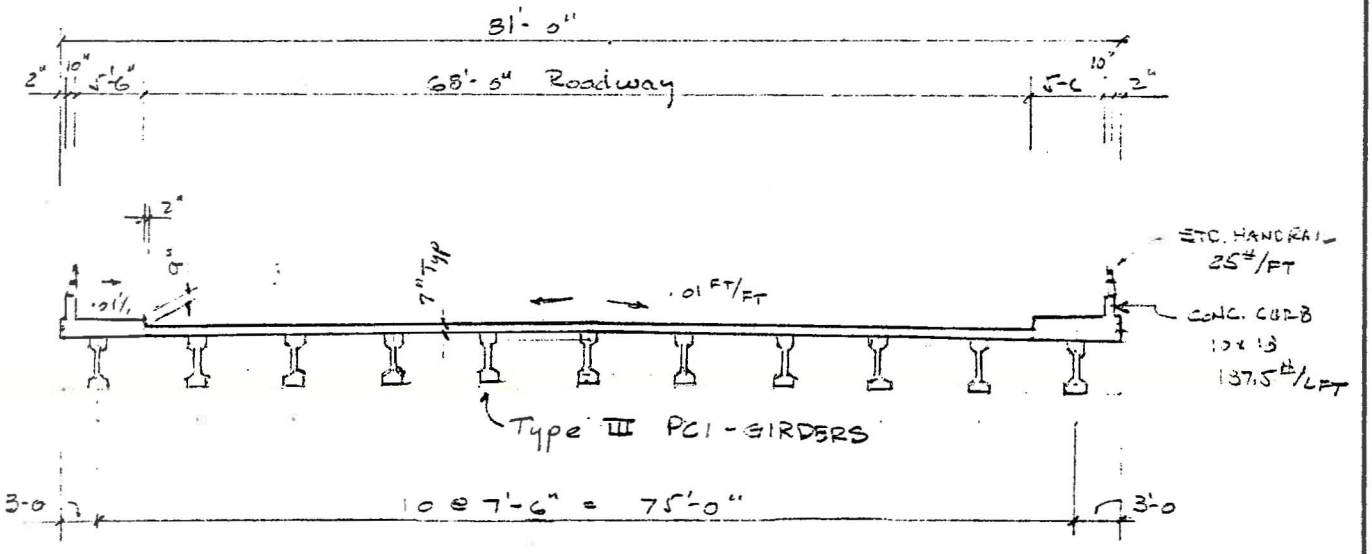

TYP. CROSS SECTION

1" = 15'

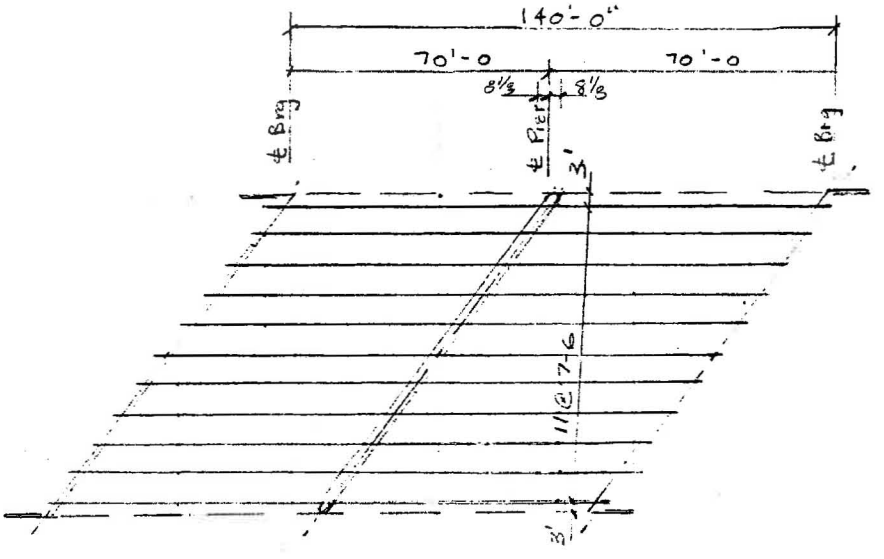

TYP GIRDER LAYOUT

1" = 50'

Deck Slab

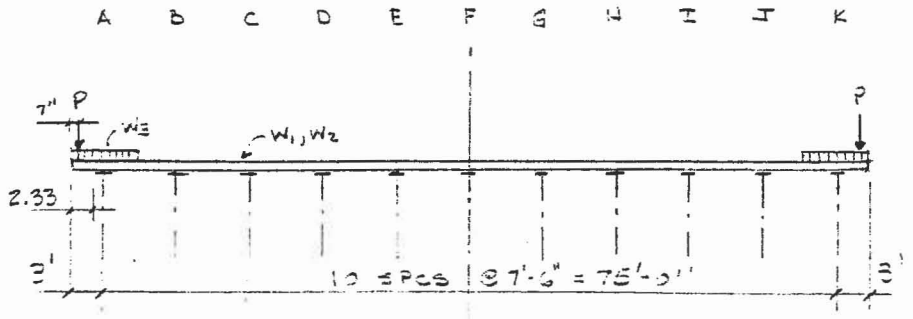

DEAD LOAD

W_1	WEARING SURFACE	35.0 PSF
W_2	8" CONC. SLAB	100.0 PSF
W_3	$9\frac{3}{4}$" (AVG) CONC. S/W	121.9 PSF
P	$\frac{187.5}{\text{curb}}$ & $\frac{25}{\text{rail}}$	212.5 PLF

FIXED END MOMS 68' ROADWAY

CANTILEVER

(a) at ℄ Girder $L_1 = 3.0'$

$M_{CANT.}$ $W_2 L_1^2/2$ = .450 ^{1K}

$W_3 L_1^2/2$ = .549

$P(L_1 - 7")$ = .514

1.513 ^{1K}

(b) at Face of Girder $L_1 = 3.0 - \frac{9"}{2} = 2.67'$

M_{CANT} $W_2 L_1^2/2$ = .356 ^{1K}

$W_3 L_1^2/2$ = .434 ^{1K}

$P(L_1 - 7")$ = .444 ^{1K}

1.234 ^{1K}

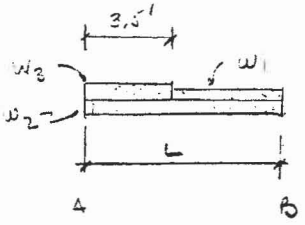

SPAN A-B $L = 7.5$

	k	FEM$_{AB}$	FEM$_{BA}$
W_1	.533	.043 ^{1K}	.086 ^{1K}
W_2	1	.469	.469
W_3	.467	.363	.151
		.875 ^{1K}	.706 ^{1K}

DECK SLAB

FIXED END MOMENTS Cont'd

INT. SPAN $L = 7.5$

$FEM = (W_1 + W_2)\, L^2/12 = .586^{1K}$

MOMENTS - 68' ROADWAY

SYMM ℄

	0	-.50	-.25	-.25	-.25	-.25	-.25	-.25	-.25	-.25	
FEM	+1.513	-.875	+.706	-.586	+.586	-.586	+.586	-.586	+.586	-.586	+.586
UNCAL		.638		+.120	-0-		-0-		-0-		-0-
M'		-.350	+.062	+.062	-.016	-.016	+.004	+.004	-.001	-.001	
$M'_L + M'_R$		-.288	+.238	+.046	+.046	-.012	-.012	+.003	+.003	-.001	
(-) M @ support	-1.513		-.480		-.616		-.579		-.588		-.586
R_S	.878	.729	.548	.469	.469	.469	.469	.469	.469	.469	.469
R_M	-	+.138	-.138	-.018	+.018	+.005	-.005	-.001	+.001	-	-
R	1.745		.861		.961		.932		.939		.938

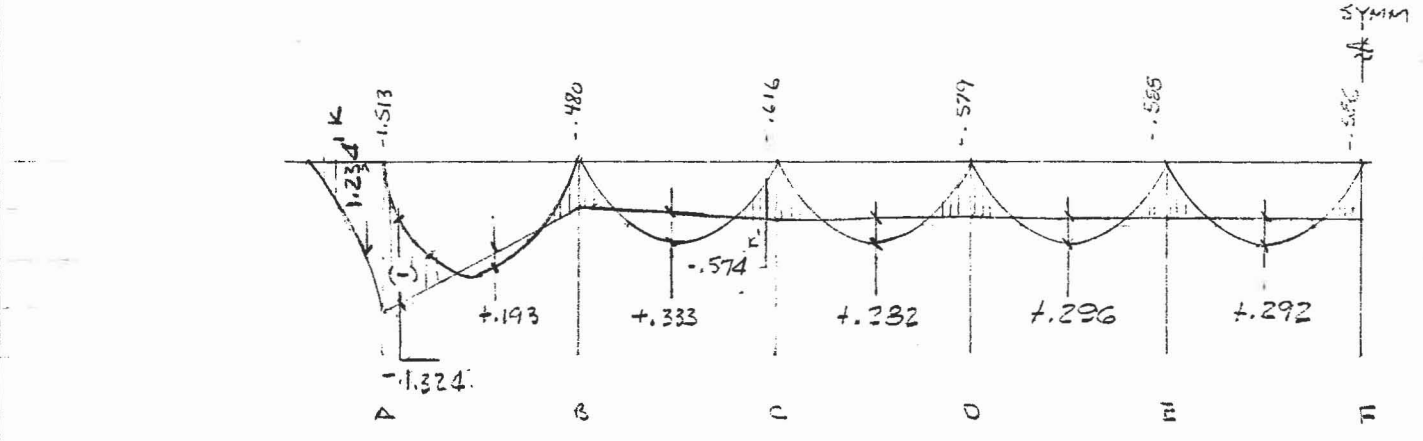

Deck Slab

S/W Loading

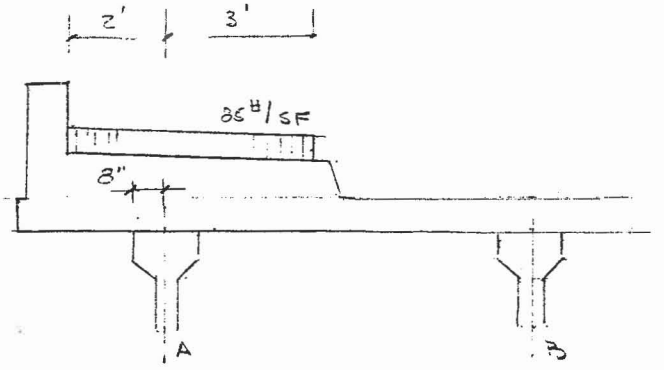

$W_L = 85^{\#}/SF$ § 3.14.1.1

CANTILEVER MOM

(a) @ ½ Girder

$85 \times 2^2/2 = 0.17^{K'}$

b) @ Face of Girder $L_1 = 2.5' - 3''/2 = 1.67'$

$85 \times 1.67^2/2 = 0.118^{K'}$

FEM

$k = 3/7.5 = 0.4$

$FEM_{AB} = 0.209^{K'}$

$FEM_{BA} = 0.071^{K'}$

	0	-.50	-.75	-.25	-.25	-.25	-.25	-.25	-.25	-.25	
FEM	+0.170	-.209	+.071								
UNBAL		-.039		+.071							
M'		+.034	-.028	-.028	+.008	+.008	-.002	-.002	+.001	+.001	0
$M_1' + M_2$		+.006	+.006	-.020	-.020	+.006	+.006	-.001	-.001		
(-)M @ SUPPORT	-0.17		-.049		+.012		-.004		0		0
R_S	.170	.204	.051								
R_M		+.016	-.016								
	0.390		.035								

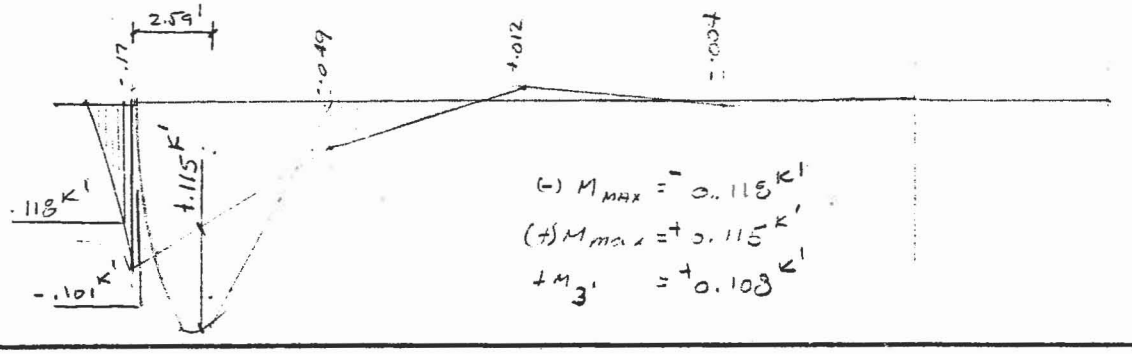

(-) $M_{MAX} = -0.118^{K'}$

(+) $M_{max} = +0.115^{K'}$

$+M_{3'} = +0.108^{K'}$

BENSON & GERDIN, INC. CONSULTING ENGINEERS PHONE (602) 264-0136	SHT. NO. 7 OF
	JOB NO. 2327 J
	BY MEK DATE 6-15-81
	CHKD. AG DATE 2-14-85
Deck Slab	REV.

Traffic Loading on C/N

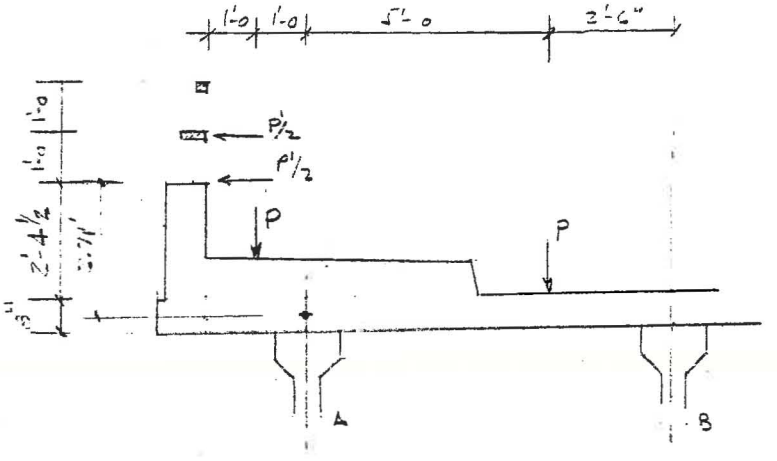

$P = \frac{16 \times 1.3}{E}$ $X = 1.0'$

$E = .8 \times 1.0 + 3.75 = 4.55$

$P = 4.6^K$

$P' = 10^K / E'$

$E' = .8 \times 2.42 + 5.0 = 6.94$

$P' = 1.44^K$

CANTILEVER MOM

P Load

@ ℄ Girder

$4.6 \times 1 = 4.6^{K'}$ ⟸ Govs.

@ Fc Girder

$4.6 \times .33 = 1.53^{K'}$

@ Support $L_1 = 1.0 - .33$

$4.6 \times .67 =$

P' Load

@ ℄ Slab

$1.44/2 \times 2.71 + 1.44/2 \times 3.71 = 4.62^{'K}$

F.E.M A-B

$k = 5/7.5 = 0.67$

$FEM_{AB} = 2.56^{K'}$

$FEM_{BA} = 5.11^{K'}$

	0	-.50	-.25	-.25	-.25	-.25	-.25	-.25	-.25	-.25	
FEM	+4.60	-2.56	+5.11								
UNBAL		+2.04	+5.11								
M'		-.337	-1.265	-1.265	+.339	+.339	-.091	-.091	+.024	+.024	-.007
$M'_i + M'_k$		-1.652	-1.652	-.926	-.926	+.248	+.248	-.067	-.067	+.017	+.017
(-) M @ Support		-4.599		-2.193		+.587		-.157		+.043	-.010
Rs	4.60	1.53	3.07								
Rm		+.32	-.32	+.37	-.37	-.10	-.10	+.03	+.03		
		6.45		3.12							

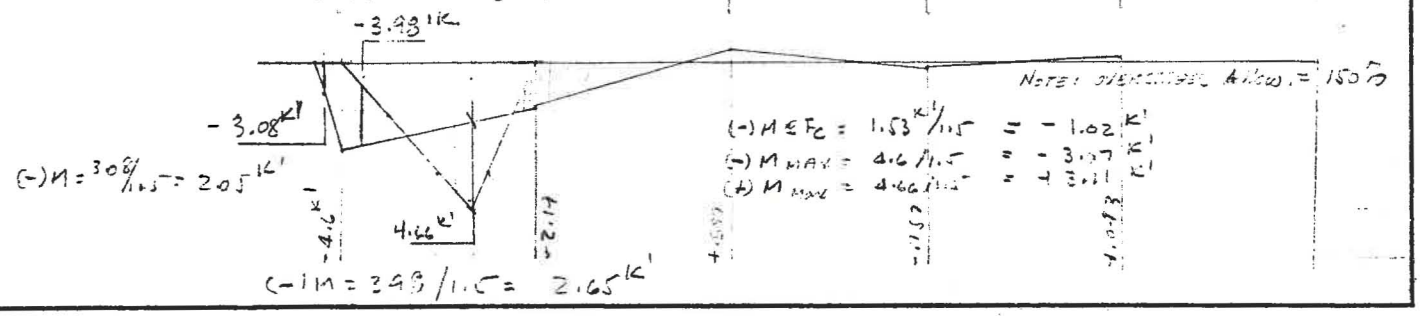

Note: Overstress Allow. = 150%

(-) M @ Fc = $1.53^{K'}/1.5 = -1.02^{K'}$

(-) $M_{MAX} = 4.6/1.5 = -3.07^{K'}$

(+) $M_{MAX} = 4.66/1.5 = +3.11^{K'}$

(-) M = $3.08/1.5 = 2.05^{K'}$

(-) M = $3.98/1.5 = 2.65^{K'}$

BENSON & GERDIN, INC. CONSULTING ENGINEERS PHONE (602) 264-0136	SHT. NO. 8 OF
	JOB NO. 2327 J
	BY MEK DATE 9-[illegible]
	CHKD. AG DATE 2-14-85
Deck Slab	REV.

Water Line Hangers

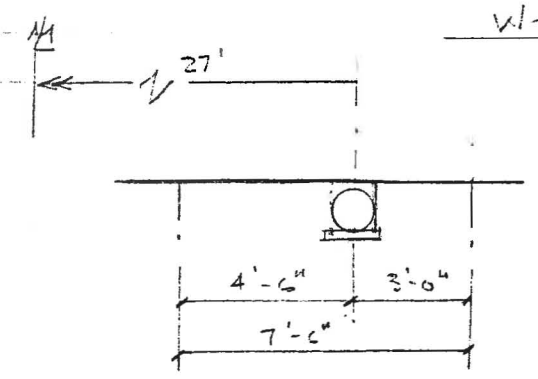

Hanger M.A.G P-1395
rods - 2 @ 1⅛" ϕ × 24"
bracket L 3×3×⅜ × 18"
Pipe 12ϕ Ductile Iron M.J.

WT:

Rods: 7.4 × 2 = 14.8
L : 7.2 × 1.5 = 14.4
29.2#

MJDI = 49#/FT
Water = 49#/FT
98#/LF

CAPACITY OF HANGER

1⅛ϕ bolt (TEN) = 19.9K

L V = P/2 M = PL/4
v_{allow} = 14 ksi f_b = 22 ksi
3×3×⅜ S = .833 Area web = ⅜ × 2½ = 0.94
P = 2 × .94 × 14 = 26.3K
P = (4 × 22 × .833 / 15" = 4.9K ⟸ Gous

Max Spcing = 4.9 / .1 = 49 FT

CAPACITY OF PIPE Try 20' oc.

2.1 ERL = 3" + 1.5 × 12 = 21
2.2 P'_v = 20 (49+49) / 13.2 × 21 = 7.1
2.3 D/T = 88 fig 2 ∴ t = 13.2/88 = 0.15
3.1 P_i = 2(150+100) = 500
t = (500 × 13.2) / 2 × 42000 = .08 + [illegible]
4.0 t = .15 + .08 + .06 = .29 Class 50 t = 0.31 table 3

5 $f = \frac{9 \times 7.1 \times \overline{13.2}^2 \times \overline{20}^2}{213.29}$ = 20880 < 48000 ok

$y = \frac{30 \times 20880 \times \overline{20}^2}{13.2 \times 24 \times 10^6}$ = 0.79"

Try 10' spc. $y = .79 \times \left(\frac{10}{20}\right)^2$ = 0.20" ⟸ use 10' o.c.

BENSON & GERDIN, INC. CONSULTING ENGINEERS PHONE (602) 264-0136	SHT. NO. 9 OF
	JOB NO. 2327 J
	BY MK DATE 9-14-84
	CHKD. AG DATE 2-14-85
DECK SLAB	REV.

Water Line Hanger

Distr. P load over 5'

P 20 FT Span

Note: 20 FT used to give Maximum possible Loading

Hanger = 30#

Pipe + H_2O = 1960#

1990# × 1/5 = 398#

use 0.4K

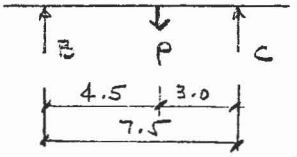

FEM_{BC} = 0.280 K'

FEM_{CB} = 0.432 K'

	A		B		C		D		E		℄
	0	-.5	-.25	-.25	-.25	-.25	-.25	-.25	-.25	-.25	-.25
FEM				-.288	+.432						
UNBAL			-.288		+.432						
M'		-.062	+.125	+.125	-.149	-.149	+.040	+.040	-.011	-.011	+.003
$(M'_L + M'_R)$		+.063	+.063	-.024	-.024	-.109	-.109	+.029	+.029	-.008	-.003
(-) M SUPPORT		0	-.183		-.259		+.069		-.019		+.005
C_S				.160	.240						
C_M		-.025	+.025	-.009	+.009	+.044	-.044	+.012	+.012	+.033	-.003
C				.151	.249						

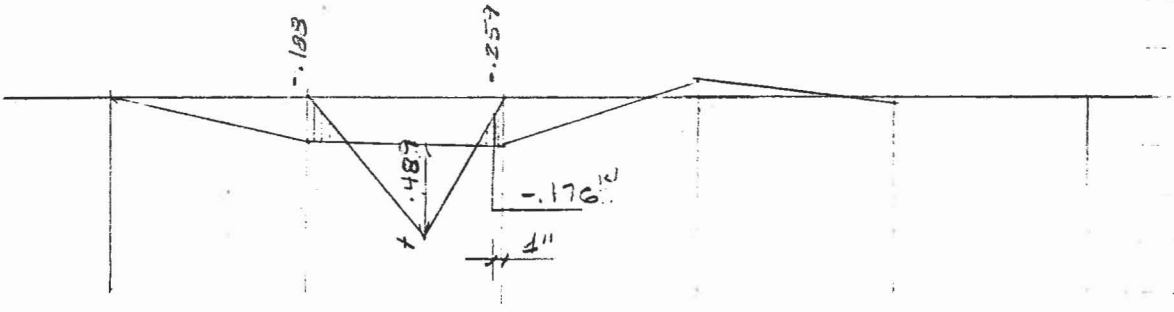

Design L.L. Moments

$I = 0.3$ $C = 0.5$ (Continuity)

$S = 7.5 - 1.33 + 0.67 = 6.84$ Ft. § 3.24.1.2

$P_{20} = 16^K$

$\pm M_{LL} = \gamma(S+2)P_{20}/32 = 3.54^{K'}$

$I = 0.3(3.54) = 1.06$

$\pm M_{LLI} = 4.60^{K'}$

Slab Design

Cover: = 2" clr top $d_T = 8 - 2 - \frac{5}{8} = 5.6"$ (-) M

= 1" clr bottom $d_b = 8 - 1 - \frac{5}{8} = 6.6"$ (+) M

$f'_c = 4000$ $f_c = 1800$ $\alpha = 1.44$ $n = 8$ $f_s = 20$ ksi

Max (-) M_{DL} @ Support C -0.574 (Sht 5)

(-) M_{Pipe} -0.176 (Sht 9)

(-) M_{LL} -4.600

$\boxed{-5.350}$ $d = 5.6"$

Max (+) M_{DL} @ Span B-C $+0.333$ (Sht 5)

(+) M_{DIPE} $+0.483$ (Sht 9)

(+) M_{LL} $+4.600$

$\boxed{+5.416}$ $d = 6.6"$

(-)M @ Support C $A_s = M/ad = 0.66$ $\#5 @ 5\frac{1}{2}$ $A_s = 0.63$

$\rho = \frac{3(A_s)}{12(d)} = 0.0810$ $k = \sqrt{2\rho n} - \rho n = 6.82$ $j = .89$

$f_c = M k/d^2 = 1.16$ ksi

$f_s = 12M/A_s jd = 13.94$ ksi

(+)M @ Span B-C $A_s = M/ad = 0.57$ $\#5 @ 6\frac{1}{2}"$ $A_s = 0.57$

$\rho = \frac{3(A_s)}{12(d)} = .0576$ $k = \sqrt{2\rho n} - \rho n = 7.72$ $j = .90$

$f_c = M k/d^2 = .96$ ksi OK

$f_s = 12M/A_s jd = 19.20$ ksi

DISTRIBUTION BARS

$\%_0 = \frac{220}{\sqrt{S}} < 67\%$ in middle $\frac{1}{2}$ S § 3.24.10.2
$\frac{1}{4}$ in each $\frac{1}{4}$ S

$S = 6.54'$ D.C. % $= \frac{220}{\sqrt{6.54}} = 34 > 67$ use 67%

$A_s = 0.57^{\square"}$

Dist. $A_s = .57 \times .67 = 0.38^{\square"}/FT$

$S/2 = 3.42'$ $A_s = .38 \times 3.42 = 1.30^{\square"}$ 5-#5 $A_s = 1.55$
$S/4 = 1.71'$ $A_s = 1.30 \times 1/4 = 0.32^{\square"}$ 2-#5 $A_s = .62$

CANTILEVER MOM.

D.L. carried by 5" deck $d = 5.6"$
L.L. carried by deck & S/W $d = 15.6"$

@ M

	℄ Beam A	
D.L.	-1.324 K'	-1.324 K'
S/W LL	-.118	-.101
Traffic LL	-2.05	-2.65 ⇐ GOVS.

D.L. $-1.324^{K'}$ OK $< 5.17^{K'}$

Traffic LL $A_s = M/20i = \frac{2.65}{1.44 \times 15.6} = 0.12^{\square"}$
#4 @ 15"

PARAPET WALL

See SHT 7 Trans. Load $P' = 10/5 = 2^K$

$M = 3/2 \times (1.5 + 2.5) = 4^{K'}$

$d = 10" - 1" - \frac{3}{8}" = 8.6"$

$A_s = 4/1.44 \times 8.6 = 0.32$ #5 @ 12 $A_s = 0.31$

$np = \frac{8(A_s)}{12(d)} = 0.024$ $k = 2/kj = 10.41$ $j = 0.93$

$f_c = M\$/d^2 = 0.59$ ksi $f_s = 12M/A_s jd = 19.36$ ksi OK

BENSON & GERDIN, INC. CONSULTING ENGINEERS PHONE (602) 264-0136	SHT. NO. 12 OF
	JOB NO. 2327 J
	BY MEK DATE 9-13-84
	CHKD. AG DATE 2-14-85
Deck Slab	REV.

ACUTE CORNER

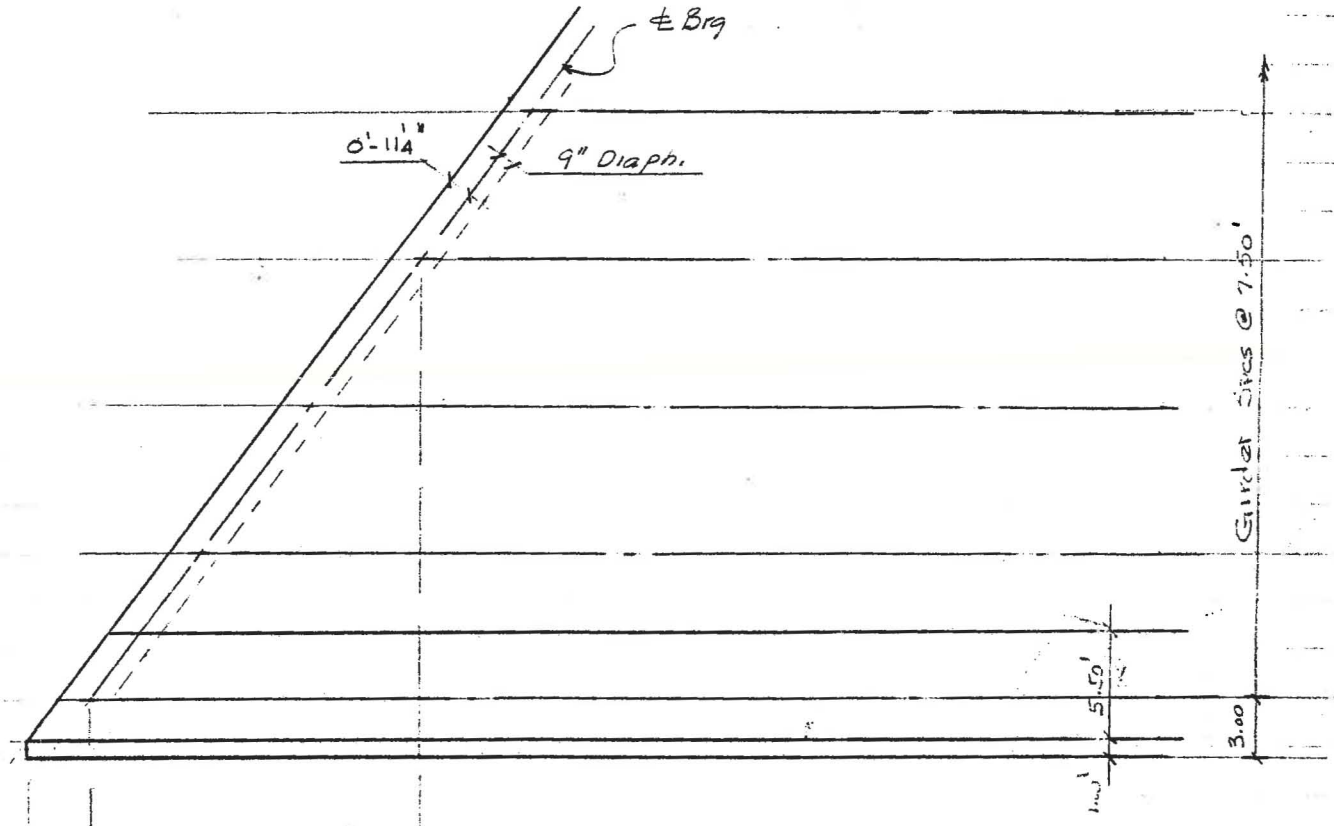

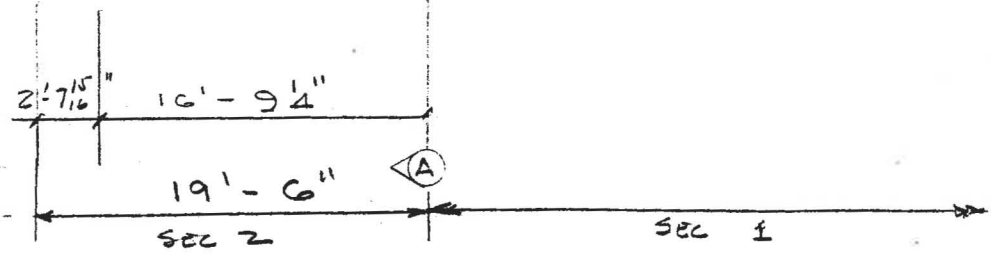

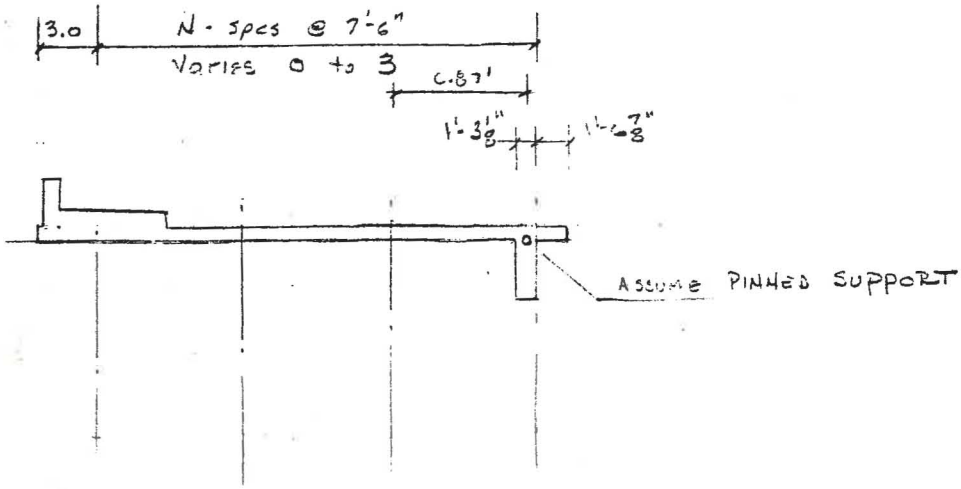

SECTION A

Acute Corner Cont'd

$N = 3$

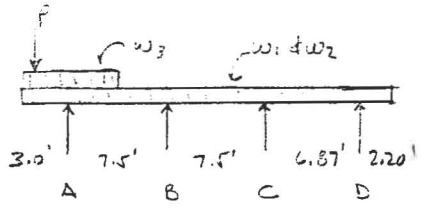

CANT. M_A = 1.513$^{K'}$ SHT 4

FEM_{AB} = 0.875$^{K'}$ ✓

FEM_{BA} = 0.706$^{K'}$ ✓

$FEM_{BC} = FEM_{CB}$ = 0.586$^{K'}$ SHT 5

$FEM_{CD} = FEM_{DC} = (w_1+w_2)\ell^2/12$ = 0.492$^{K'}$

CANT M_D $(w_1+w_2)\ 2.20^2/2$ = 0.302$^{K'}$

$R_{AB} = R_{BC}$ = 1/7.5 = 0.133

R_{CD} = 1/6.87 = 0.146

0.279

$DF_{CB} = .133/.279 = 0.473 \times -1/2 = -0.239$

$DF_{CD} = .146/.279 = 0.522 \times -1/2 = -0.261$

	0	-.50	-.25	-.25	-.239	-.261	-.50	0
FEM	+1.513	-0.875	+.706	-.586	+.586	-.492	+.492	-.302
UNBAL		+.638		+.120		+.094		+.190
M'		-.349	+.062	+.062	-.017	-.018	-.086	
$M'_L + M'_R$		-.287	-.287	+.045	+.045	-.104	-.104	
-)M SUPPORT	-1.513		-0.481		-.614		-.302	
ℓ_s	.375	.729	.548	.469	.469	.429	.429	.275
k_{in}		1.138	-.138	-.018	+.018	+.045	-.045	
R		1.745	0.861		0.961		0.659	

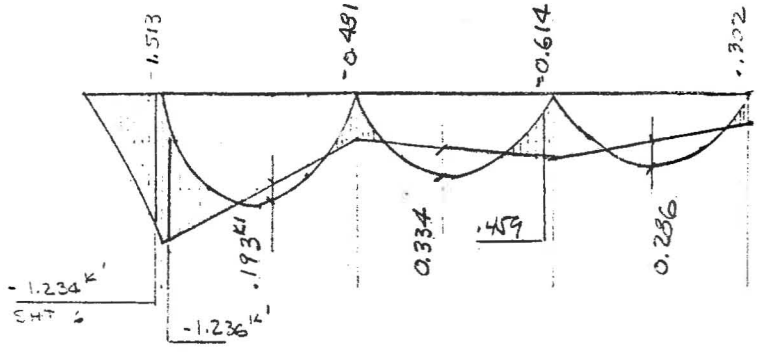

DECK SLAB

ACUTE CORNER (CONT'd)

N = 1

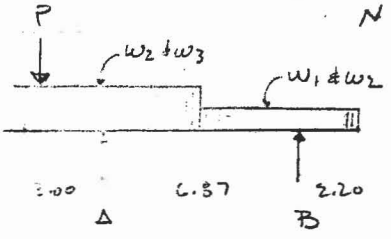

CANT M_L = 1.513 K' SHT 4

CANT M_R = 0.302 K' SHT 13

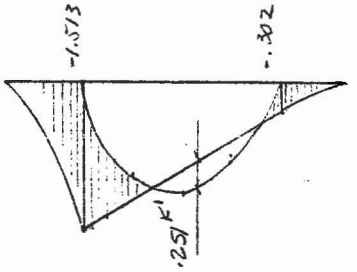

(-)M	-1.513	-.302
R_S	.878 | .729	.548 | .275
R_M	+.176	-.176
R	1.783 K	.647 K

LIVE LOAD

Span B-C I = 0.3 γ = 1.0 (No continuity)

S = 6.84'

$\pm M = \gamma(S+2)P_{20}/32 = 4.42^{K'}$

$I = 0.3(4.42) = 1.33^{K'}$

5.75 K'

Max (-) M_C

M_{DL}	-.459	SHT. 13
M_{pipe}	-.176	SHT. 9
M_{LL}	5.750	
	6.385 K'	d = 5.6"

MAX (+) M_{B-C}

M_{DL}	+.333	SHT 13
M_{pipe}	+.483	SHT 9
M_{LL}	+5.750	
	6.566 K'	d = 6.6"

(-)M_L $A_s = M/ad = 0.79^{a''}$ #6 @ 6½ A_s = .91

$n\rho = \frac{3(A_s)}{12(d)} = .0966$ $\gamma = 2/kj = 6.42$ j = 0.88

$f_c = M\gamma/d^2 = 1.31$ ksi $f_s = 12M/A_s jd = 19.19$ ksi OK

(+)M_{BC} A_s = .69 #6 @ 7½ A_s = 0.70

$n\rho$ = .0707 γ = 7.16 j = .90

f_c = 1.08 ksi f_s = 18.95 ksi OK

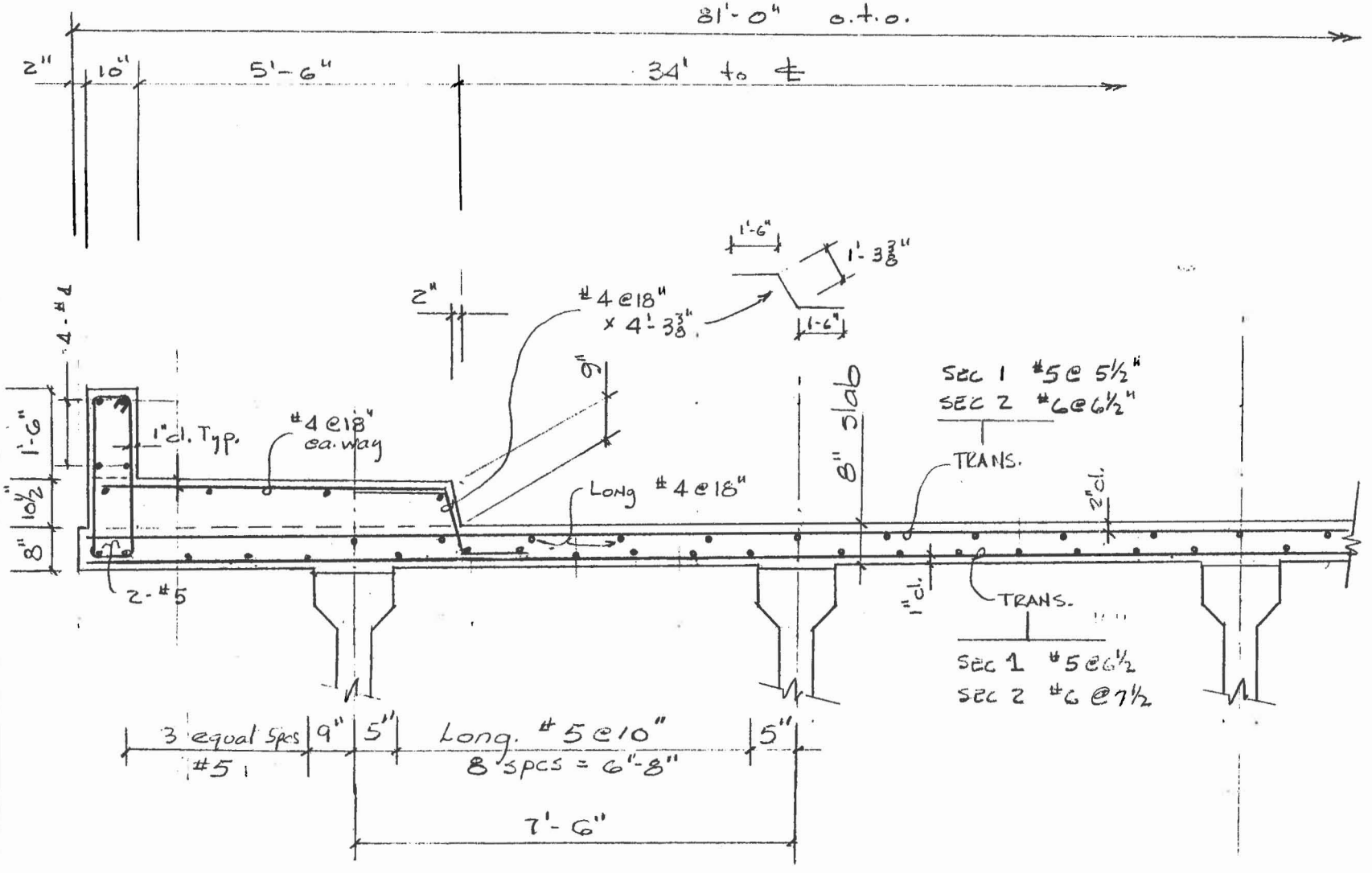

Typical Deck Cross section

SCALE: 3/8" = 1'-0"

Deck Slabs

BENSON & GERDIN, INC. CONSULTING ENGINEERS PHONE (602) 264-0136

SHT. NO. 15 OF

JOB NO. 2327J

BY MBK DATE 9-13-84

CHKD. AG DATE 2-14-85

REV.

Deck Slab

Acute Corner (cont'd)

Distr. Steel = 67%

$A_s = .70 \times .67 = 0.47$

Middle - ½ S = 3.42 FT x .47 = 1.61" = 5-#5 = 1.55

Ext. - ¼ S = 1.61/4 = 0.40" = 2-#5 = .62

CORNER OVERHANG

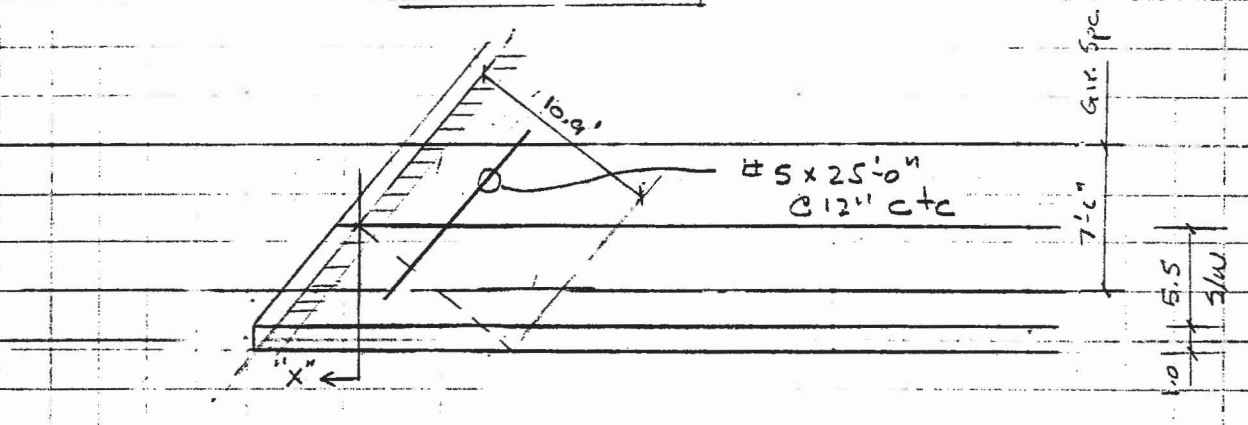

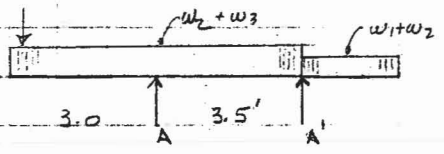

CANT M_L = 1.513 K'

CANT M_R = .302 K'

(-) M		-1.513	-.302	
R_s	.875	.388	.388	.275
R_m		.346	-.346	
R		1.612	0.317	

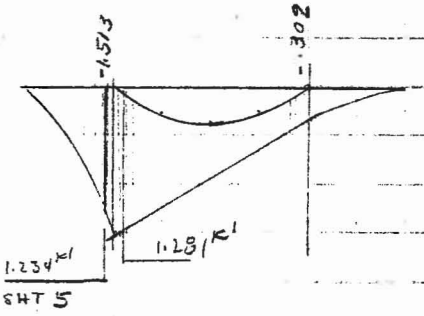

(-) M = 1.281 K' < 6.53 K' #6 @ 6½ OK for DL in 8" slab

DECK SLAB

Acute Corner Cont'd

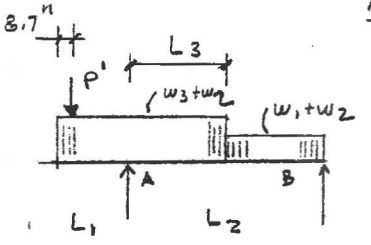

α = Sk $\angle$ = 36°-42'14"

$L_1 = 3/\cos\alpha = 3.75'$

$L_2 = 7.5/\cos\alpha = 9.35'$

$L_3 = 3.5/\cos\alpha = 4.36$

$P' = 212.5 \text{ PLF}/\cos\alpha = 265 \text{ PLF}$

$w_1 =$ 25 psf

$w_2 =$ 100 psf

$w_3 =$ 121.9 psf

CANT. MOM M_A^{DL}

@ ℄ Girder $.222 \times \overline{3.75}^2/2 + .265(3.75 - .72) = 2.36^{K'}$

@ Support $.222 \times \overline{3.33}^2/2 + .265(3.33 - .72) = 1.92^{K'}$

S/W LL

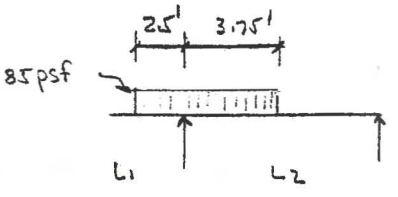

CANT MOM M_A^{LL}

@ ℄ Girder $.085 \times \overline{2.5}^2/2 = 0.26^{K'}$

@ Support $.085 \times \overline{2.08}^2/2 = 0.18^{K'}$

$M_{DL+LL} = 1.92 + .18 = 2.10^{K'}$

$d = 8" - (2" + \frac{3}{4} + \frac{1}{2} + \frac{3}{8}) = 4.5"$ $A_s = M/ad = 0.32$ #5@12" $A_s = .31$

$np = \frac{8(A_s)}{12(d)} = .0474$ $k = 2/kj = 8.30$ $j = .91$

$f_c = M k/d^2 = 0.86 \text{ ksi}$

$f_s = 12M/A_s jd = 19.85 \text{ ksi}$ OK

Traffic L.L

P = 4.6^K LL+I SHT 7

X to ℄ Girder = $\frac{(7 - \frac{2}{12})}{\cos\alpha} = .42'$

$M_{LL+I} = 1.93^{K'} < 2.10$ design OK

Prestress Girder.

AASHTO TYPE III S = 69'-2"

Girder designed as simple span:

SECTION PROPERTIES

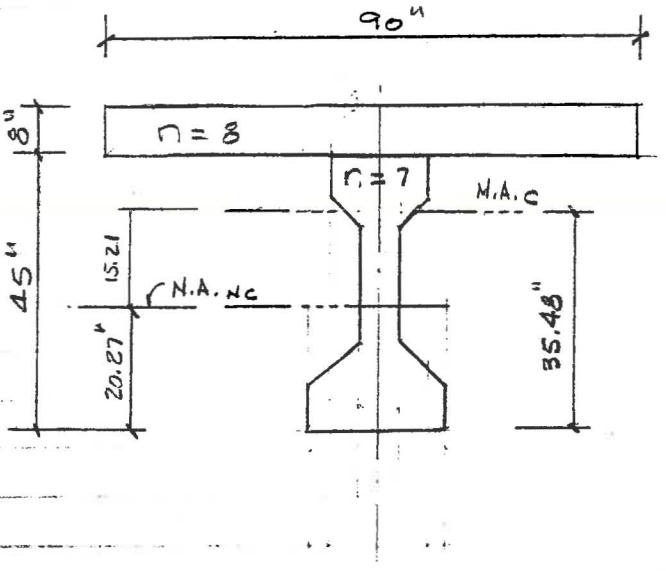

EFF FLG. § 9.8.1.1 & 8.10.1

1) = 69.25 x 12/4 = 207.6"

2) = Beam Spcg = 90" ⟸

3) = 12(8") + 7½" = 103.5"

TYPE III

A = 560 in² I = 125,390

y_b = 20.27 y_t = 24.73

S_b = 6186 S_t = 5070

μ^2 = 125,390/560 = 223.91

K_T = 223.91/20.27 = 11.05" k_b = 223.91/24.73 = 9.05"

COMPOSITE

	A	y	Ay	$\bar{y}$	$A\bar{y}^2$	I_o	
Girder	560	20.27	11351.2	-15.21	129552.7	125390	
Flg 8×90×7/8	630	49	30870	13.52	115157.95	3360	
	1190		42221.2		244710.65	128750	I = 373461 in⁴
		y_{bc} = 35.48					S_{bc} = 10526 in³
		y_{tg} = 9.52					S_{TG} = 39229 in³
		y_{ts} = 17.52					S_{ts} = 21316 in³

Prestressed Girders - Simple Span

Moments & Shears

Interior Girder

Dead Load:

		K/FT	End V^K	End M^K'	¼ Pt V^K	¼ Pt M^K'	℄ V^K	℄ M^K'	
Girder:	$560/144 \times .15$	.583	20.2^K	–	10.1	262.1	–	350	M_G
Deck Slab	$.100 \times 7.5$	.750	26.0^K		13.0^K	337.2	–	449.6	M_S
½" B.U.	$.04 \times 1.33 \times .15$	= .008							
S/W	$121.9 \times \frac{6.5}{11} \times 2$	= .144							
Curb & Rail	$212.5 \times 2/11$	= .039							
Water line	$.1 \times 1/11$	= .009							
W. Surface	$.225 \times 7.5$	= .188							
Diaphragm @ ½ Pts	$[3.17 \times .75 \times 7.5 - .62 \times .75 \times 5.04_{Avg} - 560/144] \times .15$	1.80^K	0.9^K	–	0.9^K	15.6	–	28.6	M_D
			60.5^K	–	30.7^K	706.5^K'	–	1060.8^K'	

LIVELOAD:

INTERIOR $I = \frac{50}{69.25+125} = 0.257$ Distr = $7.7/5.5 = 1.364$ WHEELS

$P_I = 16 \times 1.257 \times 1.364 = 27.4^K$

EXTERIOR Distr = $3/7.5 = 0.4$ $P_E = 16 \times 1.257 \times .4 = 8.0^K$

Midspan:

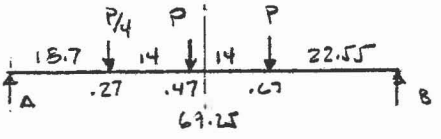

$R_A = V_a = P(.73/4 + .53 + .33) = 1.04P^K$

$V_{.47} = +0.79P \; ; \; -0.21P$

$(+)M_{.47} = 1.04P \times 32.7 - 14 \times P/4 = 30.51P^{K'}$

$M_I = 536.0^{K'}$

$M_E = 244.1^{K'}$

¼ Point:

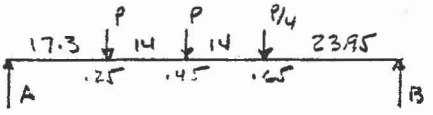

$R_A = V_a = P(.73/4 + .55 + .75) = 1.39P^K$

$V_{.25} = +1.39P$

$(+)M_{.25} = 1.39P \times 17.3 - \quad = 24.05P^{K'}$

$M_I = 659.0^{K'}$

$M_E = 192.4^{K'}$

End:

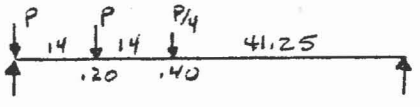

$R_A = V_a = P(1.0 + .80 + \frac{.60}{4}) = 1.95P$

$(+)M_o = 0$

PRESTRESSED GIRDER - SIMPLE SPAN

GIRDER ANALYSIS

MIDSPAN: (-) TENSION

	TOP SLAB		TOP FLANGE		BOTTOM FLANGE	
M_G			$\frac{350\times12}{5070}$ =	.828	$\frac{350\times12}{6136}$ =	.679
M_S+M_D			$\frac{478.2\times12}{5070}$ =	1.132	$\frac{478.2\times12}{6136}$ =	.928
M_C	$\frac{232.6\times12}{21316}$ =	.131	$\frac{232.6\times12}{39229}$ =	.071	$\frac{232.6\times12}{10526}$ =	.265
M_{LL+I}	$\frac{836\times12}{21316}$ =	.471	$\frac{836\times12}{39229}$ =	.256	$\frac{836\times12}{10526}$ =	.953
		+ .602 ksi		+ 2.287 ksi		- 2.825 ksi

1/4 POINTS:

M_G			$\frac{262.1\times12}{5070}$ =	.620	$\frac{262.1\times12}{6136}$ =	.508
M_S+M_D			$\frac{352.8\times12}{5070}$ =	.835	$\frac{352.8\times12}{6186}$ =	.684
M_C	$\frac{174.4\times12}{21316}$ =	.098	$\frac{174.4\times12}{39229}$ =	.053	$\frac{174.4\times12}{10526}$ =	.199
M_{LL+I}	$\frac{659\times12}{21316}$ =	.371	$\frac{659\times12}{39229}$ =	.202	$\frac{659\times12}{10526}$ =	.751
		+ .469 ksi		+ 1.110 ksi		= - 2.142 ksi

NOTE:

INTERIOR GIRDER CONTROLS DESIGN

§ 3.23.2.3.1.4 by INSPECTION

PRESTRESSED Girder - Simple Span

Girder Design

$f'_c = 5$ ksi $f_t = .4\sqrt{f'_c}$; $f_b = -.6\sqrt{f'_c}$

$f'_{ci} = 4$ ksi $f_t = -3\sqrt{f'_{ci}}$; $f_b = .6 f'_{ci}$

$f'_s = 270$ ksi

½" $A_s = .153$ / STRAND

ALLOWABLE	TOP	BOT
Release	-.19	2.4
Service	2.0	-.42

	f_{si}	f_{se}
.7 × 270	189.0	189.0
Losses	24.0	54
	165	135

$f_{se}/f_{si} = 135/165 = .818$

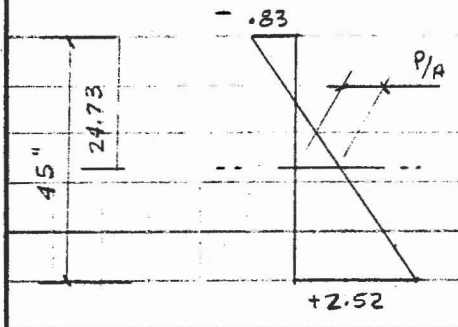

Top Stress: $-.828 + (-.19) = -1.018$

$-1.018 \times .818 = .833$

Bot. Stress: $2.825 + (-.424) = 2.40$

or $(2.4 + .68)(.818) = 2.52$

$P/A = (2.52 - (-.83))\frac{24.73}{45} - .83 = 1.011$

$P = 566.2$ 28-½"ϕ

$\therefore P = 573.3$ $P/A = 1.033$

$e_{req'd} = (2.52/1.033 - 1)(-11.05) = -15.91"$

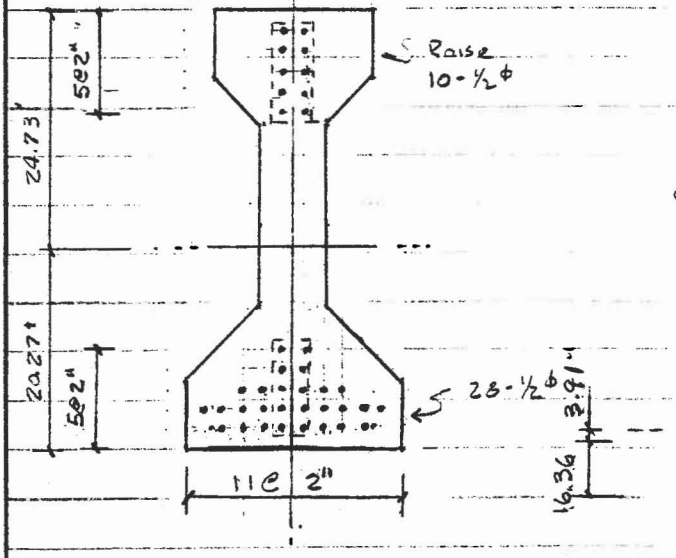

e_c: $[4(11.27) + 6(14.27) + 10(16.27) + 8(18.27)] \times 1/28 = 15.70"$

e_{end}: $[10(18.73) - 4(14.27) - 8(16.27) - 6(18.27)] \times 1/28 = -3.91"$

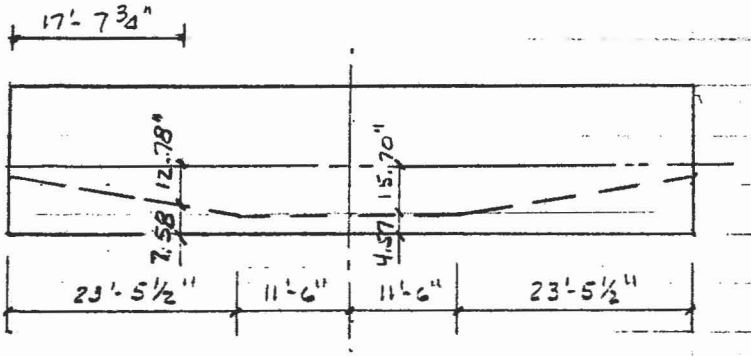

Girder - Losses

(a) SHRINKAGE:

RH = 40 $17000 - 150(40)$ SH: 11000

(b) ELASTIC SHORTENING

$$ES = E_s/E_{ci} \times f_{cir}$$

$f_{ci} = 4$ ksi
$E_s = 28 \times 10^3$ ksi
$E_c = 3605$ ksi
$e = 15.70''$
$I = 125390$

$$f_{cir} = F/A + \frac{Fe^2}{I} - \frac{M_n^{db} \times e}{I}$$

$f_i = .63 \times 270 = 170.1$
$F_i = 170.1 \times 28 \times .153 = 728.7^K$
$M_n^{db} = 350^{k'}$ (SHT 20)
Init. Relaxation = $.035 \times 189 = 6.62$

165.8 ksi

F_i	728.7	708.1	710.8	710.1
F_i/A	1.30	1.26	1.27	1.27
$F_i e^2/I$	1.43	1.39	1.40	1.40
$M_n^{db} e/I$	-.53	-.53	-.53	-.53
f_{cir}	2.20	2.12	2.14	2.14
ES	17.09	16.47	16.62	16.62

ES = 16620

(c) CREEP

$$CR_c = 12 f_{cir} - 7 f_{cds}$$

$$f_{cds} = \frac{M_n^s e}{I} + \frac{M_c^d [e + (y' - y)]}{I'}$$

$M_n^s = 473.2^{k'}$
$M_c^d = 232.6^{k'}$

$y' = 35.43$ $y = 20.27$ $I' = 373461$

$f_{cds} = .718 + .231 = .949$

$12 \times 2.14 - 7 \times .949 =$ CR_c 19037

(d) STEEL RELAXATION:

$$CR_s = 20000 - .4(ES) - .2(SH + CR_c)$$ CR_s 7345

Σ Loss = $\Delta f = SH + ES + CR_c + CR_s$ 54052

$\cong$ 54 ksi assumed OK

PRESTRESSED GIRDER - SIMPLE SPAN

Girder Stresses (-) TENSION

F_i = 165.3 x 28 x .153 = 710.3 K
F = 135 x 28 x .153 = 578.3 K

	℄ e = -15.70"		1/4 Pt. e = -12.69"		End e = -3.91"	
	Top	Bot	Top	Bot	Top	Bot
F_i/A	1.27	1.27	1.27	1.27	1.27	1.27
$F_i e/S$	-2.20	1.80	-1.78	1.46	-.55	.45
M_G/S M_G = 350 K' @ ℄	.83	-.68	.62	-.51	-	-
@ Release	-.10	2.39	.11	2.22	.72	1.72
F/A	1.03	1.03	1.03	1.03	1.03	1.03
Fe/S	-1.79	1.45	-1.46	1.19	-.45	.37
M_G/S	.83	-.68	.62	-.51	-	-
	.07	1.82	.19	1.71	.58	1.40
$(M_S+M_D)/S$ 478.2 K' @ ℄	1.13	-.93	.84	-.68	-	-
	1.20	.89	1.03	1.03	.58	1.40
M_C/S_C 232.6 K' @ ℄	.07	-.26	.05	-.20	-	-
	1.27	.63	1.08	.83	.58	1.40
$M_{(LL+I)}/S_C$ 836.0 K' @ ℄	.26	-.95	.20	-.75	-	-
	1.53	-.32	1.28	.08	.58	1.40

@ Release:

$f'_{ci} = 2.39/.6 = 4$ ksi — use $f'_{ci} = 4000$

allow Ten = $3\sqrt{f'_{ci}} = -.19$ ksi > -.10

@ Service Load:

$f'_c = 1.53/.4 = 3.83$ ksi — use $f'_c = 5000$

allow Ten. = $6\sqrt{f'_c} = -.42 > -.32$ OK

ULTIMATE CAPACITY

Cracking Moment

§ 9.18.2.1

$f'_c = 5$ ksi

$f_r = 7.5\sqrt{f'_c} = .53$ ksi

$f_b^{P/S} = 1.03 + 1.47 = 2.50$ ksi

$f_r = .53$ ksi

Max Tens to Crack $= -3.03$ ksi

$S_b = -10526''^3$

$M_{cr} = \frac{-3.03 \times -10526}{12} = 2657.8^{K'}$

ULTIMATE CAPACITY

§ 9.17.1

n/a

$A_s^* = 28 \times .153 = 4.28''^2$

$b = 90'' \times (7/8) = 78.75''$

$d = 8.5 + 24.73 + 15.7 = 48.93''$

$f'_s = 270$ ksi

$f'_c = 4.5$ ksi

$\rho^* = \frac{4.28}{78.75 \times 48.93} = .00111$

$f_{su}^* = 270\left(1 - 0.5\frac{.00111 \times 270}{4.5}\right) = 261$ ksi § 9.17.4.1 Eq. 9-17

CK. NEUTRAL AXIS $1.4 \times 48.93 \times .00111 \times 261 / 4.5 = 4.41$

$< 8''$ use EQ 9-13

$\therefore M_n = 4.28 \times 261 \times 48.93\left(1 - .6 \times \frac{.00111 \times 261}{4.5}\right) \times 1/12$

$= 4378.9^{K'}$

$M_u = 1.3[1060.8 + 1.67 \times 836] = 3194^{'K} < 4378.9$ OK

OK//

MAX. - MIN STEEL

ANALYZE as Rect. Section: $.00111 \times 261/4.5 = .06 < .3$ OK § 9.18.1

$1.2 M_{CR} = 3159.4 < 4378.9$ OK § 9.18.2.1

PRESTRESSED GIRDER.

SHEAR

§ 9.20 foot note.

USE 1979 INTERIM.

$P = 27.4^K$ LL+I

MIDSPAN:

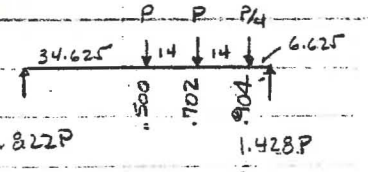

$V_{0.5} = .822 \times 27.4 = 22.52^K$

$\Delta \quad 22.52 - 27.4 = -4.88^K$

1/4 P_T:

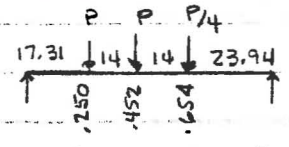

$V_{0.25} = 1.385 \times 27.4 = 37.95^K$

$V_u = 1.3 [V_{DL} + 1.67 V_{LL+I}] - V_{P/S}$

$V_{P/S} = 578.5^K \times \frac{11.79}{281.5} = -24.2^K$

	d = 37.4" 1/4 Pt.		d = 40.4" ℄	
	V	V_u	V	V_u
DL (SHT 20)	30.7	39.9	-	
LL + I	38.0	82.5	22.5	48.8
	68.7	122.4	22.5	48.8
$-V_P$		-24.2		-
		98.2		48.8
V_C		41.2		44.5
V_S		57.0		4.3^K
Av/Ft		0.26		.02
2-#4 spacing		18"		24"

1/4 P_T $V_C = .06 \times 5 \times 7 \times \frac{7}{8} \times 37.4" = 68.7^K$

$V_C = .180 \times 7 \times \frac{7}{8} \times 37.4 = 41.2^K$ ← Govs

℄ $V_C = .06 \times 5 \times 7 \times \frac{7}{8} \times 40.4" = 74.2^K$

$V_C = .180 \times 7 \times \frac{7}{8} \times 40.4" = 44.5^K$ ⇐ Govs

$A_{V\,MIN} = 100 \times 7 \times 12 / 40000 = .21^{in^2}/FT$

Max S = 24" - $4\sqrt{f'_c} \times b' d = 74.0^K$

2-#4 $A_V = .40^{in^2}/FT$

$A_{V.25} = 4.55 \times 10^{-3} V_S$; $A_{V.5} = 4.24 \times 10^{-3} V_S$

use 2-#4 @ 18" outside 1/4 to 19' from end of girder

2-#4 @ 24" $V_S = \frac{.40 \times 2 \times 40 \times \frac{7}{8} \times 37.4}{24} = 43.6$

	.25	.30	.35	.40	.45	.50
V_u	97.5	87.8	78.0	68.3	58.5	43.3
V_P	-24.9	-24.9	-	-	-	-
V_C	-41.2	-39.3	-44.5	-44.5	-44.5	-44.5
V_S	56.3	23.6	33.5	23.8	14.0	4.3

PRESTRESSED GIRDERS - CONTINUOUS

MOMENTS & SHEARS

DEAD LOAD M

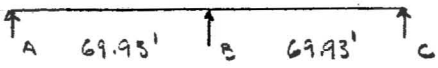

$M_{G.1}$, M_S, & M_D - Simple Span
See Sheet # 19

$W_c = .388^{K}/_{LF}$

$FEM = w_c l^2/12 = 158.1^{K'}$

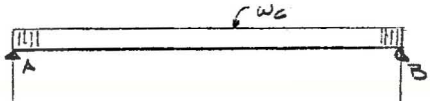

FEM	-158.1 →	+158.1
C.O. -1/2		+79.0
(-) M	0	+237.1 K'

R_S	13.57	13.57 | 13.57
R_M	-3.39	+3.39 | +3.39
	10.18 K	33.92 K

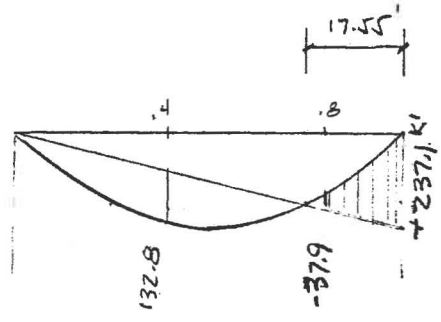

LIVE LOAD: M

@ .4 L (+M)

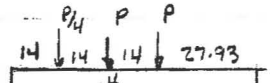

FEM	-520.9 →	+475.7
C.O. -1/2		+260.5
	0	-736.2
(-) M		-368.1 K'

$P_{I\,(LL+I)} = 27.4^{K}$ SHT. 20

$FEM_{AB} = \frac{P}{L^2}\left(\frac{55.93^2}{4}\times 14 + 41.93^2 \times 28 + 27.93^2 \times 42\right)$

$= 19.01\,P = 520.9^{K'}$

$FEM_{BA} = P/L^2\left(\frac{14^2 \times 55.93}{4} + 28^2 \times 41.93 + 42^2 \times 27.93\right)$

$= 17.36\,P = 475.7^{K}$

$R_A^S = \frac{P}{69.93}\left(\frac{55.93}{4} + 41.93 + 27.93\right) = 1.2\,P = 32.88^{K}$

$M_{.4}^{LL} = 32.88 \times 28 - \frac{27.4}{4}\times 14 - .4 \times 368.1$

$= +677.5^{K'}$ ⟸ GOVERNS

LANE LOAD

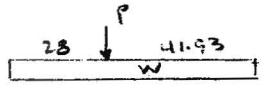

FEM	-379.2 →	+327.6
C.O. -1/2		+189.6
		517.2
(-) M		-258.6 K'

$W = .64 \times 1/2 \times 1.364 \times 1.257 = 0.55^{K}/_{LF}$

$P = 18 \times 1/2 \times 1.364 \times 1.257 = 15.4^{K}$

$FEM_{AB} = .55 \times \frac{69.93^2}{12} + \frac{15.4}{(69.93)^2} \times 41.93^2 \times 28 = 379.2^{K'}$

$FEM_{BA} = .55 \times \frac{69.93^2}{12} + \frac{15.4}{(69.93)^2} \times 28^2 \times 41.93 = 327.6^{K'}$

$R_A^S = .55 \times 69.93 \times 1/2 + .6 \times 15.4 = 28.47^{K}$

$M_{.4}^{LL} = 28.47 \times 28 - .55 \times 28^2/2 = 581.6^{K'}$

PRESTRESSED GIRDER - CONTINUOUS

MOMENTS & SHEARS

LIVE LOAD M

0.8L (+) M

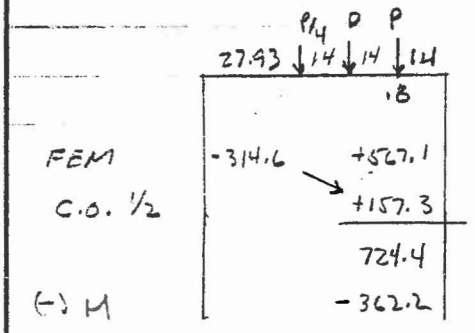

$$FEM_{AB} = \frac{P}{L^2}\left(\frac{42^2 \times 27.93}{4} + \overline{28}^2 \times 41.93 + \overline{14}^2 \times 55.93\right)$$
$$= 11.48P = 314.6^{K'}$$

$$FEM_{BA} = \frac{P}{L^2}\left(\frac{27.93^2 \times 42}{4} + 41.93^2 \times 28 + 55.93^2 \times 14\right)$$
$$= 20.70P = 567.1^{K'}$$

$$R_A^S = P/69.93\left(14 + 28 + 42/2\right) = .75P = 30.55^K$$
$$R_B^S = (2.25 - .75)P = 1.50P = 41.10^K$$
$$M_{.8}^{LL} = 41.1 \times 14 - .8 \times 362.2$$
$$= +285.6^{K'} \Longleftarrow \text{GOVS.}$$

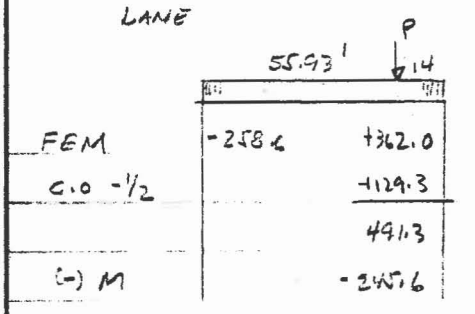

$$FEM_{AB} = .55 \times \frac{69.93^2}{12} + \frac{15.4}{(69.93)^2} \times \overline{14}^2 \times 55.93 = 253.6^{K'}$$
$$FEM_{BA} = .55 \times 69.93^2/12 + \frac{15.4}{(69.93)^2} \times 55.93^2 \times 14 = 362.0^{K'}$$

$$R_B^S = .55 \times 69.93 \times 1/2 + .8 \times 15.4 = 31.55^K$$
$$M_{.8}^{LL} = 31.55 \times 14 - .55 \times 14^2/2 - .8 \times 245.6$$
$$= +191.3^{K'}$$

MAX (-) M @ B

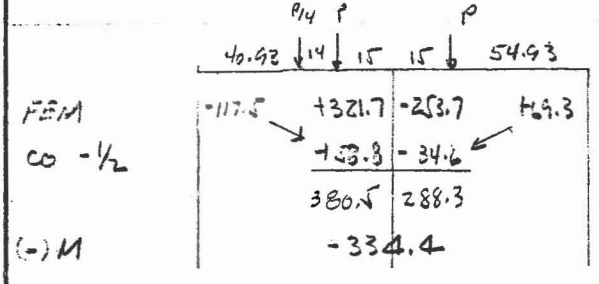

$$FEM_{AB} = \frac{P}{(69.93)^2}\left[\frac{29^2 \times 40.93}{4} + \overline{15}^2 \times 54.93\right] = 4.29P = 117.5^{K'}$$
$$FEM_{BA} = P/69.93^2\left[\frac{40.93^2 \times 29}{4} + 54.93^2 \times 15\right] = 11.74P = 321.7^{K'}$$
$$FEM_{BC} = P/69.93^2\left[54.93^2 \times 15\right] = 9.26P = 253.7^{K'}$$
$$FEM_{CB} = P/69.93^2\left[15^2 \times 54.93\right] = 2.53P = 69.3^{K'}$$

$$(-)M_B^{LL} = 334.4^{K'}$$

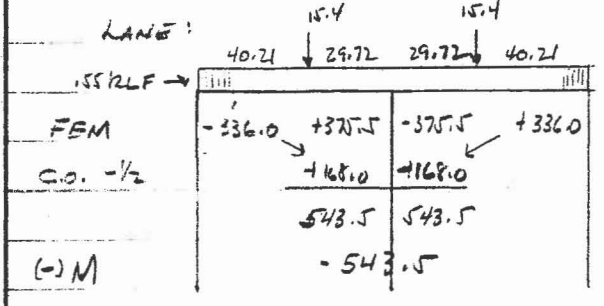

$$FEM_{AB} = \left[.55 \times \frac{69.93^2}{12} + \frac{15.4}{(69.93)^2} \times 29.72^2 \times 40.21\right] = 336.5^{K'}$$
$$FEM_{BA} = \left[.55 \times \frac{69.93^2}{12} + \frac{15.4}{(69.93)^2} \times 40.21^2 \times 29.72\right] = 375.5^{K'}$$

$$M_B^{LL} = 543.5^{K'} \Longleftarrow \text{GOVS}$$

Prestressed Girders - Continuous

Moments & Shears cont'd

Liveload M

(-) M Span A-B

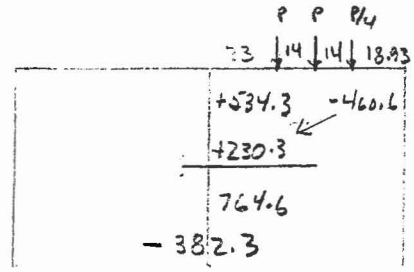

$R_A = 5.47 \downarrow$

$$FEM_{BC} = \frac{P}{(69.93)^2}\left[\frac{\overline{18.93}^2 \times 51}{4} + \overline{32.93}^2 \times 37 + \overline{46.93}^2 \times 23\right]$$
$$= 19.50\,P = 534.3^{K'}$$
$$FEM_{CB} = \frac{P}{\overline{69.93}^2}\left[\frac{\overline{51}^2 \times 18.93}{4} + \overline{37}^2 \times 32.93 + \overline{23}^2 \times 46.93\right]$$
$$= 16.81\,P = 460.6^{K'}$$
$$M_B^{LL} = -382.3^{K'}$$

Govs

LANE

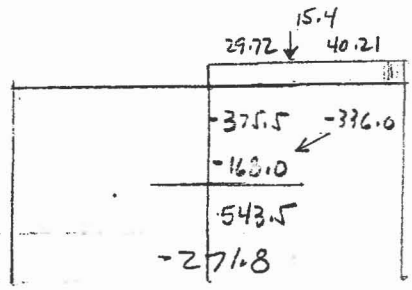

$FEM_{BC} = -375.5^{K'}$
$FEM_{CB} = 336.0^{K'}$ } SHT 29

$$M_B^{LL} = -275.8^{K'}$$

Liveload Shear

V @ A

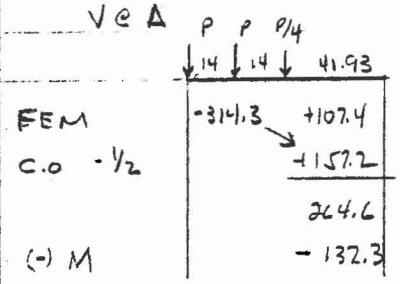

$$FEM_{AB} \quad \frac{P}{\overline{69.93}^2}\left[\overline{55.93}^2 \times 14 + \frac{\overline{41.93}^2 \times 28}{4}\right] = 11.47P = 314.3^{K'}$$
$$FEM_{BA} \quad \frac{P}{\overline{69.93}^2}\left[\overline{14}^2 \times 55.93 + \frac{\overline{28}^2 \times 41.93}{4}\right] = 3.92P = 107.4^{K'}$$
$$V_A^{LL} = R_A^{LL} = \frac{P}{69.93}\left[\frac{41.93}{4} + 55.93 + 69.93\right] - \frac{132.3}{69.93} = 51.5^{K}$$

Govs

LANE

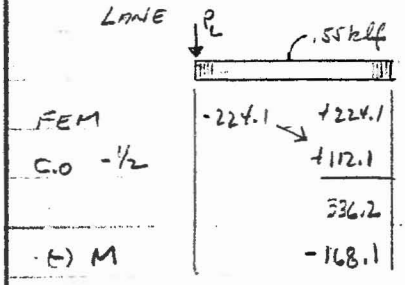

$$P_L = 26/2 \times 1.364 \times 1.257 = 22.3^{K}$$
$$FEM_{AB} = FEM_{BA} = .55 \times \overline{69.93}^2/12 = 224.1$$
$$V_A^{LL} = R_A^{LL} = 22.3 + .55 \times \frac{69.93}{2} - \frac{168.1}{69.93} = 43.9^{K}$$

Prestressed Girder - Continuous

Moments & Shears cont'd

Liveload Shear

+ V @ .4L

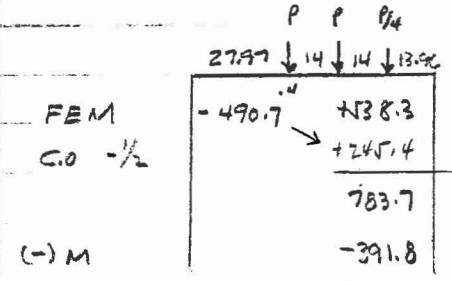

$L' = .6 \times 69.93 = 42'$ $\quad I = \frac{50}{42+125} = .299 \approx .30$

$P = 27.4 \times \frac{1.30}{1.257} = 28.3$

$FEM_{AB} = \frac{P}{69.93^2}\left[\frac{13.96^2 \times 55.97}{4} + 27.96^2 \times 1.49 + 41.96^2 \times 27.97\right]$

$= 17.34\,P = 490.7^{K}$

$FEM_{BA} = \frac{P}{69.93^2}\left[\frac{55.97^2 \times 13.96}{4} + 41.97^2 \times 27.96 + 27.97^2 \times 41.96\right]$

$= 19.02\,P = 538.3$

$V_{.4}^{u} = R_A^{u} = \frac{P}{69.93}\left[\frac{13.96}{4} + 27.96 + 41.96\right] - \frac{391.8}{69.93}$

$= 24.1^{K}$ ⟸ GOVS

LANE

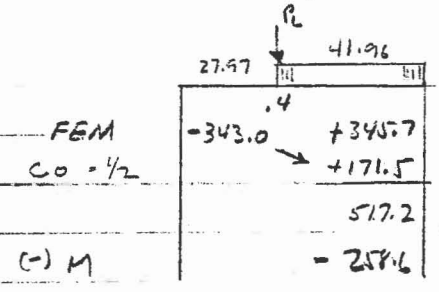

$w_{LL} = .55 \times \frac{1.3}{1.257} = .57$ $\quad P_L = 22.3 \times 1.3/1.257 = 23.1^{K}$

$k = 41.96/69.93 = .600$

$FEM_{AB} = \frac{23.1}{69.93^2} \times 41.96^2 \times 27.97 + \frac{.57 \times 69.93^2}{12} \times .6^3\,(4 - 3 \times .6)$

$= 343.0$

$FEM_{BA} = \frac{23.1}{69.93^2} \times 27.97^2 \times 41.96 + \frac{.57 \times 69.93^2}{12} \times .6^2\,(6 - 8 \times .6 + 3 \times .6^2)$

$= 345.7$

$+V_{.4}^{u} = R_A^{u} = 23.1 \times \frac{41.96}{69.93} + .57 \times \frac{41.96}{2} \times 1/69.93 - \frac{253.6}{69.93}$

$= 17.3^{K}$

−V @ .4L

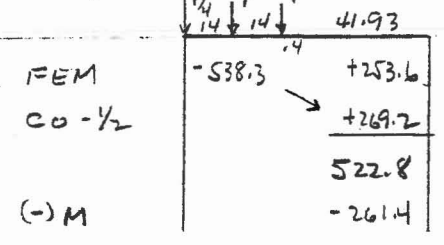

$FEM_{AB} = \frac{P}{69.93^2}\left[55.93^2 \times 14 + 41.93^2 \times 28\right] = 19.02\,P = 538.3$

$FEM_{BA} = \frac{P}{69.93^2}\left[14^2 \times 55.93 + 28^2 \times 41.93\right] = 8.96\,P = 253.6$

$-V_{.4} = R_B = \frac{28.3}{69.93}(14+28) + \frac{261.4}{69.93} = 20.7^{K}$

GOVS

LANE

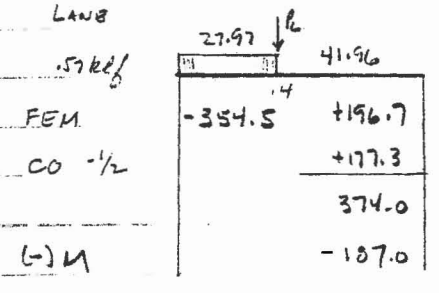

$FEM_{AB} = \frac{23.1}{69.93^2}\left(41.96^2 \times 27.97\right) + \frac{.57 \times 69.93^2}{12} \times .4^2\,(6 - 8 \times .4 + 3 \times .4^2)$

$= 354.5$

$FEM_{BA} = \frac{23.1}{69.93^2}\left(27.97^2 \times 41.96\right) + \frac{.57 \times 69.93^2}{12} \times .4^3\,(4 - 3 \times .4)$

$= 196.7$

$-V_{.4}^{u} = R_B^{u} = 23.1 \times \frac{27.97}{69.93} + .57 \times \frac{27.97^2}{2 \times 69.93} + \frac{187}{69.93}$

$= 15.1^{K}$

Prestressed Girders Continuous

Moments & Shears Cont'd

Liveload Shear

$-V$ @ B

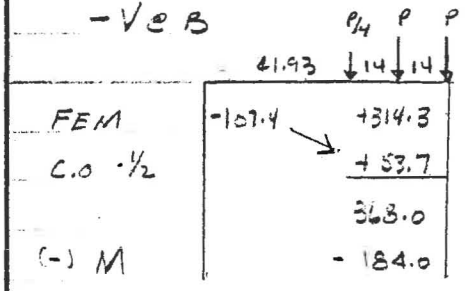

$P = 27.4^K$

$FEM_{AB} = 107.4^{K'}$
$FEM_{BA} = 314.3^{K'}$ } SHT 29

$-V_B^{LL} = R_B^{LL} = \frac{P}{69.93}\left[\frac{41.93}{4} + 55.93 + 69.93\right] + \frac{114}{69.93}$

$= 56.1^K$ ⟸ Gous

Lane

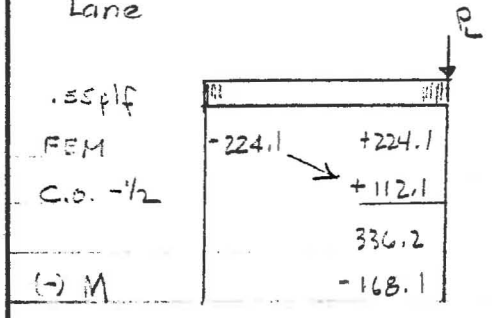

$FEM_{AB} = FEM_{BA} = 224.1^{K'}$ SHT 30

$-V_B^{LL} = R_B^{LL} = .55 \times \frac{69.93}{2} + 22.3 + \frac{168.1}{69.93} = -43.9^K$

Shrinkage & Creep

Ref: P.C.A. Bulletin
EB 014.01E

Deck $f'_c = 4500$ $E_b = 4.07 \times 10^6$ Loading @ 28 days
Gir. init. $f'_{ci} = 4000$ $E_{ci} = 3.60 \times 10^6$ Release @ 1 day Vol. Ratio = 4.0
Gir. Final $f'_c = 5000$ $E_c = 4.29 \times 10^6$ humidity 40%

Creep Factors

$\epsilon_c = .42 \times 10^{-6}$ (Fig 5)
$\alpha = 1.8$ (Fig 6)
size = 1.2 (Fig 7)
creep remaining 40% (Fig 8)

$\epsilon_c = .42 \times 10^{-6} \times 1.8 \times 1.2 \times .6 = .544 \times 10^{-6}$

$\phi = \epsilon_c / \epsilon_e = \epsilon_c \times E = .544 \times 10^{-6} \times 3.60 \times 10^6$
$\phi = 1.9584$

$(1 - e^{-\phi}) = \underline{0.86}$ creep

$\frac{(1 - e^{-\phi})}{\phi} = \underline{0.44}$ shrinkage

MOMENTS & SHEARS cont'd

SHRINKAGE MOMENTS

$M_S = \epsilon_s \times E_b \times A_b \left(e'_2 - t/2\right)$

$\epsilon_s = 6\times10^{-4} \times .4 \times 1.1$
$= 2.64\times10^{-4}$

$M_S = 2.64\times10^{-4} \times 3824\times10^3 \times 728 \left(18.02 - \frac{3}{2}\right) \times 1/12$
$= 858.7^{K'}$

$M_B = -3/2 \times 858.7 = -1288.0^{K'}$

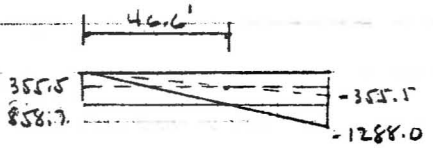

$\left(\frac{1-e^{-\phi}}{\phi}\right) M_S = 377.8^{K'}$

$\left(\frac{1-e^{-\phi}}{\phi}\right) M_B = -566.7^{K'}$

$L = 69.93'$
$L' = 69.25'$
$M_B = -3/2\, M_S$
$b = 90"$
$t = 8"$
$e'_2 = 17.52 + .5 = 18.02$
$f'_{c\,(SLAB)} = 4.5\ ksi$
$E_c = 3824\ ksi$
$A_b = 8\times90 + 1/2\times16 = 728$

DEAD LOAD MOMENTS (CREEP RESISTING)

$+M_B @ .5L$
$= 350 + 485.7 + 119.6$
$= 955.3^{K'}$

$M_B = -M_{DL}$
$M_B = -955.3^{K'}$

$(1-e^{-\phi})\, M_B = -821.6^{K'}$

Prestress Creep

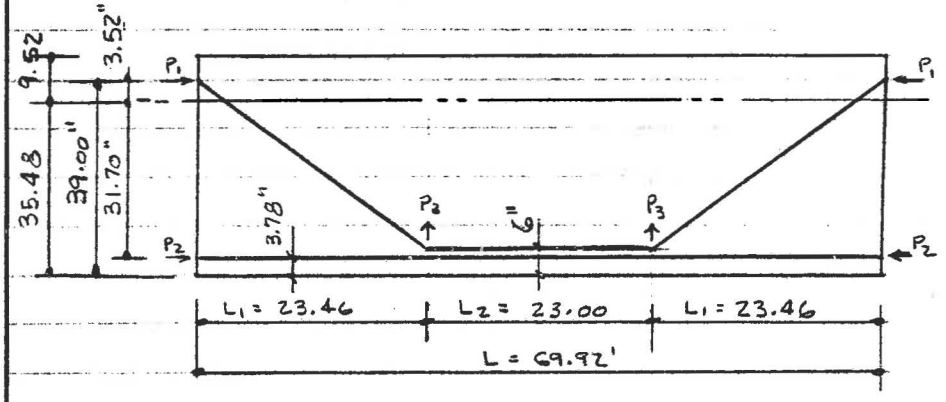

$f_s = 135\ ksi$
$P(1/2\,t) = 20.655$

$P_1 = 10 \times 20.655 = 206.6^K$
$P_2 = 18 \times 20.655 = 371.8^K$
$P_3 = 206.6 \times \frac{33.0}{(23.46\times12)} = 24.2^K$

$d_1 = 3.52"$
$d_2 = 31.70"$
$d_3 = 33.0"$

$\left[P/S\ SLOPE\right] = \frac{P_1 d_1 L}{2EI} - \frac{P_2 d_2 L}{2EI} - \frac{P_3 (L_1)^2}{2EI} - \frac{P_3 L_1 L_2}{2EI}$

$M_B = -\frac{3EI}{L}\left[P/S\ SLOPE\right]$

Prestressed Girder - Continuous

Moments & Stresses Cont'd.
Shrinkage & Creep

[P/S slope]

$$\frac{P_1 d_1 L}{2EI} = 206.6 \times 3.52 \times 69.92 \times 12/2 = +305{,}083.4 \times 1/EI$$

$$-\frac{P_2 d_2 L}{2EI} = -371.8 \times 31.70 \times 69.92 \times 12/2 = -4{,}144{,}487.9 \times 1/EI$$

$$-\frac{P_3 L_1^2}{2EI} = -24.2 \times 23.46^2 \times 144/2 = -958{,}967.5 \times 1/EI$$

$$-\frac{P_3 L_1 L_2}{2EI} = -24.2 \times 23.46 \times 23.0 \times 144/2 = -940{,}164.2 \times 1/EI$$

$$-6{,}533{,}531.2 \times 1/EI$$

$$M_B = \frac{-3EI}{69.92 \times 12}\left[\frac{-6{,}538{,}531.2}{EI}\right] \times 1/12 = 1948.2$$

$$(1 - e^{-\phi}) M_B = +1675.5^{K'}$$

Summary

$$M_B^{SHr} = -566.7$$
$$M_B^{DL} = -821.6$$
$$M_B^{P/S} = +1675.5$$
$$+287.2^{K'}$$

PRESTRESSED GIRDER - CONTINUOUS

SUMMARY MOM & SHEAR

MOMENT: Kip-Ft. $L = 69'-3"$ $L' = 69'-11"$ $L/L' = .9905$

		0	.2L	.4L	.5L	.6L	.8L	1.0L
M_G: 0.583 K/FT		-	223.8	335.7	349.7	335.7	223.8	-
M_{DECK}: 0.763 K/FT		-	292.6	439.0	457.3	439.0	292.6	-
M_{DIAPH}: P = 0.9 K		-	12.5	24.9	28.7	24.9	12.5	-
① ΣM_{DL}^{NC}		-	528.9	799.6	835.7	799.6	528.9	-
M_{CURB}: 0.388 K/FT		-	103.7	132.9	119.6	87.8	-31.8	-225.9
② ΣM_{DL}^{NC+C}		-	632.6	932.5	955.3	887.4	497.1	-225.9
③ + $M_{(LL+I)}^{C}$	L/L'	-	504.9	677.5	655.3	585.0	300.4	-176.5
④ - $M_{(LL+I)}$	$-382.3^{K'}$ L/L'	-	-75.7	-151.5	-189.3	-227.2	-302.9	-378.6
⑤ - $M_{(LL+I)}$	$-543.5^{K'}$ L/L'	-					-81.0	-533.3
ΣM_{TOT} Max 2+3		-	1137.5	1610.0	1610.6	1472.4	797.5	-402.4
ΣM_{TOT} Min 2+4/5		-	556.9	781.0	766.0	660.2	194.2	-764.2

SHEAR - KIPS

		0	.2L	.4L	.5L	.6L	.8L	1.0L
V_G: 0.583 K/FT		+20.2	12.1	4.0	-	-4.0	-12.1	-20.2
V_{DECK}: 0.763 K/FT		26.4	15.9	5.3	-	-5.3	-15.9	-26.4
V_{DIAPH}: P = 0.9 K		0.9	0.9	0.9	-	-0.9	-0.9	-0.9
ΣV_{DL}^{NC}		47.5	28.9	10.2	-	-10.2	-28.9	-47.5
V_{curb} .388 K/FT	0 @ 0.379 L	10.2	4.80	-0.6	-3.30	-6.0	-11.3	-16.70	-17.0
V_{LL+I}	+	51.5	37.8	24.1				
	-			-20.7	-26.6	-32.5	-44.3	-56.1
ΣV_{TOT}		109.2	71.5	33.7				
				-11.1	-29.9	-48.7	-84.5	-120.3

Prestress Girder - Continuous

0.2 0.4 0.6 0.8

Moment - K.I.P Ft.

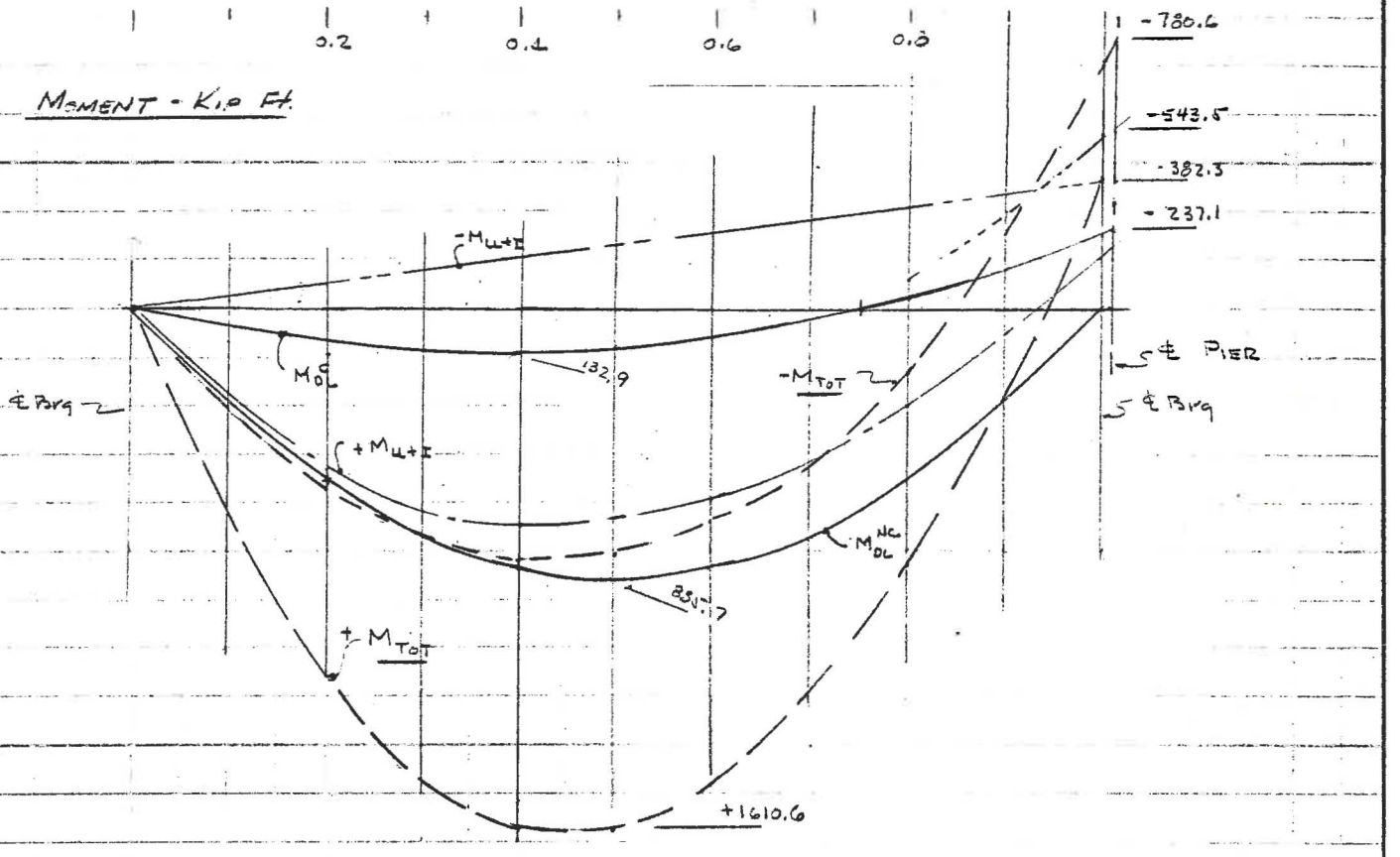

Shear - K I P S

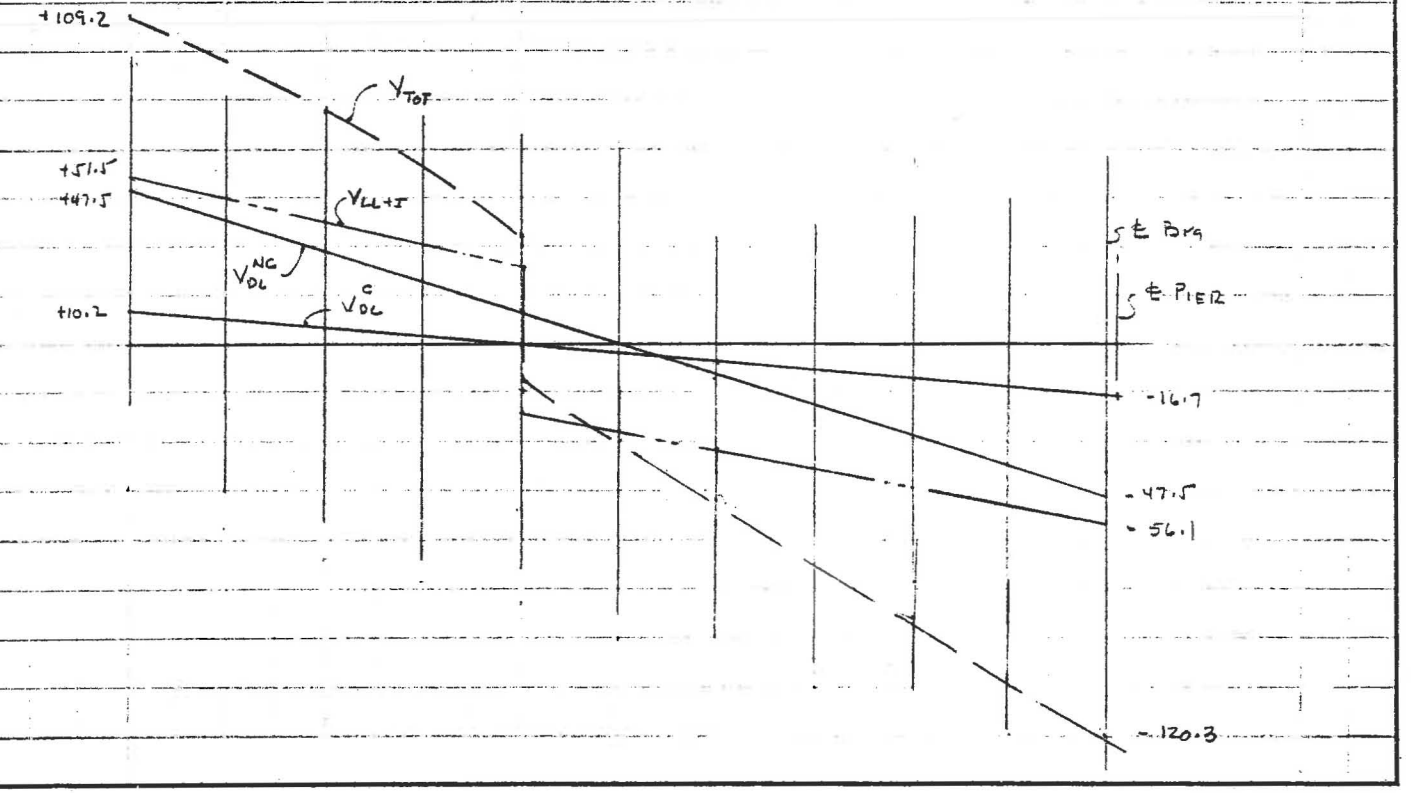

PRESTRESSED GIRDER - CONTINUOUS

NEG. MOM. REINFORCEMENT § 9.7.2.3

$\phi = 1.0$

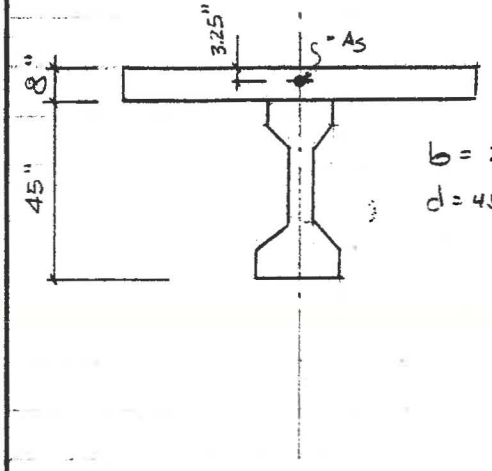

- DLc = -237.1
- LL+I = -543.5
- 780.6

$M_U = 1.3(237.1 + 1.67(543.5)) = 1488.2$

$b = 22"$

$d = 45 + 8 - 3.25 = 49.75$

$\frac{M_U}{bd^2} = 328$ $\rho = .0055$ Fig 13 PCA EB04.01E

$A_s = .0055 \times 22 \times 49.75 = 6.02$

Try 8 - #8 $A_s = 6.32^{\square"}$

CK M_U

$a = \frac{6.34 \times 60000}{.85 \times 5000 \times 22} = 4.07"$ ∴ IN Bot. Flg.

$M_u = 6.34 \times 60 (49.75 - \frac{4.07}{2}) \times 1/12 = 1512.6$

> 1488.2 OK

CUT-OFF 2 - #8 A_s - 6 - #8 = 4.74

$a = \frac{4.74 \times 60000}{.85 \times 5000 \times 22} = 3.04$

$M_U = 4.74 \times 60 (49.75 - \frac{3.04}{2}) \times 1/12 = 1143.0^{K'}$

CUT-OFF 2 - #8 9' from ℄

M @ 5' DLc = -157.2
LL+I = -371.3
M_U = 1010.5 OK $l_d = 4'$

CUT-OFF 4 - #8 A_s = 4 - #8 = 3.16

$a = \frac{3.16 \times 60}{.85 \times 5 \times 22} = 2.03$

$M_U = 3.16 \times 60 (49.75 - \frac{2.03}{2}) 1/12 = 770.0^{K'}$

CUT-OFF 4 - #8 @ 16' from ℄

M @ 12' DLc = -61.6
LL+I - 316.7
M_U = 767.8

CUT-OFF 6 - #8 A_s = 2 - #8 = $1.58^{\square"}$

$a = \frac{1.58 \times 60}{.85 \times 5 \times 22} = 1.01$

$M_U = 1.58 \times 60 (49.75 - \frac{1.01}{2}) 1/12 = 389.0^{K'}$

CUT OFF 6 - #8 @ 32' from ℄

M @ 28'
DLc +85.6
LL+I -229.2
M_U -386.3

REMAINING 2 - #8 to continue to ℄ Brg @ Abut

PRESTRESSED CONCRETE CONTINUOUS

Neg. Mom Reinforcement

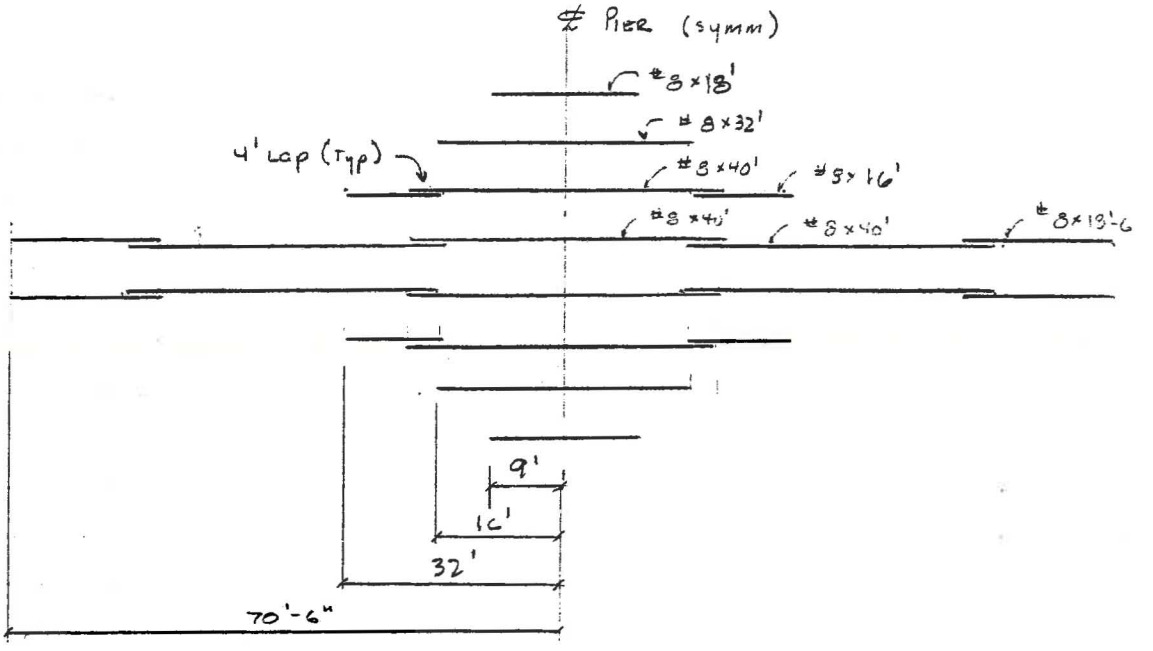

NEG. MOM REINFORCEMENT
TYP. OVER EACH Girder

SECTION MODULUS (-) Mom Area

$A_s = 6.32^{\square''}$ try kd = 12.46 d = 49.75

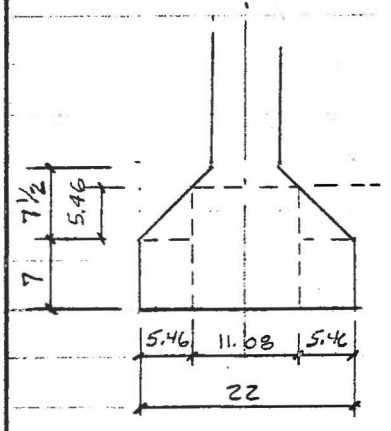

n=7	A	Y	AT	$\bar{Y}$	$A\bar{Y}^2$	I_o
8-#8 7x6.32	44.24	49.75	2200.94	37.30	61516.14	-
7x5.46x2	76.44	3.5	267.54	-33.95	6118.70	189.90
5.46x5.46	29.81	3.82	262.94	-33.63	392.14	49.37
11.08x12.46	138.06	6.23	860.09	-6.22	5335.75	1736.13
	288.55		3591.51		73407.72	2025.40
					I =	75433

y_b = 12.45 ≅ kd
y_t = 32.55
y_{A_s} = 37.30

S_b = 6059
S_t = 2317
S_{A_s} = 2022

PRESTRESS GIRDER - CONTINUOUS

POSITIVE MOMENT CONNECTION

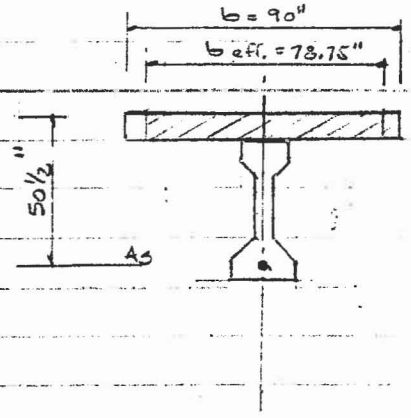

$+M_B = +287.2^{k'}$

$f'_c = 5\ ksi \quad n = 7$

$f_s = .6f_y \leq 36\ ksi$

try $kd = 4.20 \quad jd = 49.1"$

$A_s = 287.2 \times 12 / 49.1 \times 36 = 1.95$

$14 - \frac{1}{2}\Phi = 2.14$

$np = 7 \times 2.14 / 78.75 \times 50.5 = .00377$

$k = .0831 \quad j = .972 \quad kd = 4.20$ ok

$$I_{TRANS} = \frac{78.75 \times 4.20^3}{12} + 78.75 \times 4.20 \left(\frac{4.20}{2}\right)^2 + 7 \times 2.14 \times (50.5 - 4.20)^2$$

$$= 34057"^4$$

$f_c = 12 \times 319.3 \times 4.20 / 34057 = 0.47\ ksi$

$f_s = 12 \times 319.3 \times 46.7 \times 7 / 34057 = 36.78\ ksi$ ok

BOND: allow $= .0.1 \times 5000 = 500 > 350$ use 350

$\Sigma_o = 1.38$

$$l_{reqd} = \frac{36 \times .153}{1.38 \times .35} = 11.4" \text{ say } 12"$$

ALT: $A_s = 1.95$ 4 - #7 Gr 60 $A_s = 2.40"^2$

$$l_d = \frac{.04 \times .60 \times 60000}{\sqrt{4500}} = 21.5" \times 1.95/2.40 = 17.5"$$

or $.0004 \times .875 \times 60000 = 21"$

$f_H = 540 \times \sqrt{4500} = 36.2\ ksi$

$$l_e = \frac{.04 \times .6 \times 36200}{\sqrt{4500}} = 13"$$

$17.5 - 13 = 4.5"$

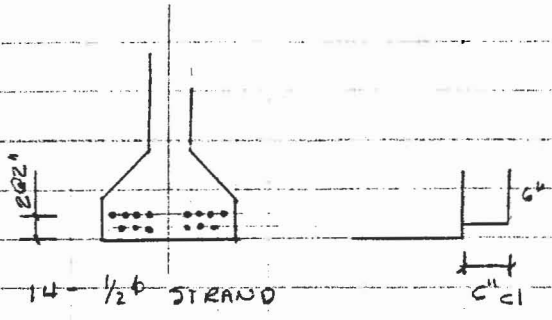

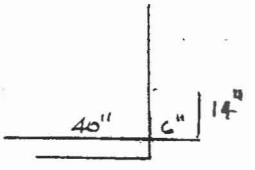

#7 ALT
$\ell = 5'-0$

CK Girder Stresses

Stress @ release same as simple span

$f'_c = 5$ ksi — SHT 24 $f'_{ci} = 4$ ksi

$f_r = 7.5\sqrt{f'_c} = 0.53$ ksi

Cracking moment @ top of deck slab - composite section

$M_{cr} = f_r \cdot S_c^t = .53 \times 21316 \times 1/12 = 941.4^{k'}$

$M_{DL}^c + M_{LLI}^c = 764.2^{k'}$ ∴ No Cracking

$F = 573.3^k$

XL	.2		.4		.5		.6		.8		1.0	
e	11.04"		15.70"		15.70"		15.70"		11.04"		4.08"	
	Top	Bot	Top	Bot	Top	Bot	Top	Bot	Top	Bot	Top	Bot
F/A	1.03	1.03	1.03	1.03	1.03	1.03	1.03	1.03	1.03	1.03	1.03	1.03
Fe/S	-1.28	1.05	-1.79	1.47	-1.79	1.47	-1.79	1.47	-1.28	1.05	-0.46	.38
Mg/S	.53	-.43	.79	-.65	.83	-.68	.79	-.65	.53	-.43	-	-
	.28	1.65	.03	1.85	.07	1.82	.03	1.85	.28	1.65	.57	1.41
				↗								
M_{DL}^{NC}/S	.72	-.59	1.10	-.90	1.15	-.94	1.10	-.90	.72	-.59	-	-
	1.00	1.06	1.13	.95	1.22	.88	1.13	.95	1.00	1.06	.57	1.41
M_{DL}^c/S_c	.03	-.12	.04	-.15	.04	-.14	.03	-.10	-.01	.04	-.07	.26
	1.03	.94	1.17	.80	1.26	.74	1.16	.85	.99	1.10	.50	1.67
M_{LLI}^c/S_c	.15	-.58	.21	-.77	.20	-.75	.18	-.67	.09	-.34	-.16	.61
	1.18	.36	1.38	.03	1.46	-.01	1.34	.18	1.08	.76	.34	2.28
												↗

$f'_c = f_c/.4 = 1.85/.4 = 4.625$ § 9.15.2.2

$f'_c = f_c/.6 = 2.28/.6 = 3.80$ § 9.7.2.4

use $f'_c = 5$ksi

Note: @ 1.0 L actual prestress effect is less than shown due to development length.

Prestressed Girder - Continuous

Shear

§9.20

V_c = Lesser of V_{ci} or V_{cw}

f'_c = 5 ksi

$V_{ci\,min} = 1.7\sqrt{f'_c}\,b'd = .84d$ §9.20.2.2

b' = 7"

$A_{V\,MIN} = 50b's/f_{sy} = .105"^2/Ft$ or $.22"^2/Ft$ ← Stows

ϕ = 1.0 §9.14

$S_{MAX} = 24"$ IF $V_s < 4\sqrt{f'_c}\,b'd = 71.3^{lk}$

$d_{min} = .8h = 36"$

$\Delta v = 12V_s/f_{sy}d$

XL	.027	.1	.2	.3	.4	.5	.6	.7	.8	.9	.973
$\bar{c}$ INS	4.86	7.42	10.94	14.45	15.70	15.70	15.70	14.45	10.94	7.42	4.86
d - INS	36"	36"	36"	39.7	40.4	40.4	40.4	39.2	36"	36"	36"
M_{DL}^{NC}	86.5	296.7	528.9	696.4	799.6	835.7	799.6	696.4	528.9	296.7	86.5
M_{DL}^{C}	18.3	61.1	103.7	127.6	132.9	119.6	87.8	37.2	-31.8	-119.6	-195.3
$M_{DL}^{TOT} = M_d$	104.8	357.8	632.6	824.0	932.5	955.3	887.4	733.6	497.1	177.1	-108.8
M_{LL}^{C}	87.6	294.0	504.9	632.7	677.4	655.3	585.0	466.7	300.4	86.0	-448.8
M_u	326.4	1103.4	1918.5	2444.8	2682.9	2664.5	2423.6	1966.9	1298.4	416.9	-1115.8
V_{DL}^{NC}	45.0	38.2	28.9	19.5	10.2	-	-10.2	-19.5	-28.9	-38.2	-45.0
V_{DL}^{C}	9.4	7.5	4.8	2.1	-0.6	-3.3	-6.0	-8.6	-11.3	-14.0	-16.0
$V_{DL}^{TOT} = V_d$	54.4	45.7	33.7	21.6	9.6	-3.3	-16.2	-28.1	-40.2	-52.2	-64.0
V_{LL+I}^{C}	49.7	44.7	37.8	31.1	24.1	-26.5	-32.4	-38.2	-44.1	-49.9	-54.2
V_u	178.6	156.4	125.9	95.6	64.8	-61.8	-91.4	-119.5	-148.0	-176.2	-197.0
$f_d = M_{DL}^{NC}/S + M_{DL}^{C}/S_c$	-.19	-.64	-1.14	-1.50	-1.70	-1.76	-1.65	-1.39	-.99	-.44	-.14
$f_{pe} = F/A + Fe/S$	-	1.73	2.06	2.38	2.50	2.50	2.50	2.38	2.06	1.73	-
$f_{pc} = F/A - \frac{Fe\,\Delta Y}{I} + \frac{M_{DL}^{NC}\Delta Y}{I}$	.12	.94	1.04	1.03	1.10	1.15	1.10	1.03	1.04	.94	.12
$M_{cr} = I/Y_t(6\sqrt{f'_c} + f_{pc} - f_d)$	705.5	1328.3	1179.1	1144.0	1073.9	1021.3	1117.7	1240.5	1310.7	1503.7	-929.3
$M_{MAX} = M_u - M_d$	221.6	745.6	1285.9	1620.8	1750.4	1709.2	1536.2	1233.3	801.3	239.8	1007.0
$V_i = V_u - V_d$	124.2	110.7	92.2	74.0	55.2	58.5	75.2	91.4	107.8	124.0	136.0
$V_{ci} = 0.6\sqrt{f'_c}\,b'd + V_d + \frac{V_i M_{cr}}{M_{max}}$	180.3	244.7	178.9	85.5	55.5	50.2	82.9	131.7	227.2	840.4	197.2
$V_p = 206.6 \times 35.22/281.5$	-	25.8	25.8	25.8	-	-	-	25.8	25.8	25.8	-
$V_{cw} = (3.5\sqrt{f'_c} + .3f_{pc})b'd + V_p$	71.4	159.2	166.8	178.5	163.3	167.6	163.3	178.5	166.8	159.2	71.4
V_c	71.4	159.2	128.9	85.5	55.5	50.2	82.9	131.7	166.8	159.2	71.4
$V_s = V_u - V_c$	107.2	-	-	10.1	9.3	11.6	8.5	-	-	17.0	125.6
A_v req'd	0.39	.22	.22	.22	.22	.22	.22	.22	.22	.22	1.05
#4 spcg	5"	22"	22"	22"	22"	22"	22"	22"	22"	22"	4½"
#5 spcg	8"	24"	24"	24"	24"	24"	24"	24"	24"	24"	7"

Prestressed Girder

SHEAR

1979 INTERIM § 1.6.13

$\phi = 0.90$

$f'_c = 5$ ksi

$J = 7/8$

$A_{V\,min} = 100\,b'\,s/f_{sy} = .21''^2/FT$ Gr 40

$V_c = .06 f'_c b' jd = 1.84d$ ksi

$V_{c\,max} = 180\,b'\,jd = 1.10d$ ksi ← GOVS

$S_{max} = .75h = 33.75''$

$A_v = \frac{(V_u - V_c)s}{2 f_{sy} jd} = \frac{V_s}{d} \times .171$

XL	.027	.1	.2	.3	.4	.5	.6	.7	.8	.9	.973
e-ins	4.86	7.42	10.94	14.45	15.70	15.70	15.70	14.45	10.94	7.42	4.86
d-ins	29.6	32.2	35.7	39.2	40.4	40.4	40.4	39.2	35.7	32.2	29.6
V_{DL}^{TOT}	54.4	45.7	33.7	21.6	9.6	-3.3	-16.2	-28.1	-40.2	-52.2	-61.0
V_{LL+I}	49.7	44.7	37.8	31.1	24.1	-26.5	-32.4	-38.2	-44.1	-49.9	-54.2
V_u/ϕ	198.5	173.8	125.9	106.2	72.0	68.7	101.6	132.7	148.0	195.8	218.8
V_c	32.6	35.4	39.3	43.1	44.4	44.4	44.4	43.1	39.3	35.4	32.6
V_P	-	25.8	25.8	25.8	-	-	-	25.8	25.8	25.8	-
V_s	165.9	112.6	60.8	37.3	28.0	24.3	57.2	63.8	82.9	134.6	186.2
A_v $''^2/FT$	0.96	.60	.29	.22	.22	.22	.24	.28	.40	.71	1.08
2-#4 spcs	5''	8''	16''	22''	22''	22''	20''	17''	12''	6½''	4''
2-#5 spcs	7½''	12''	26''	33''	33''	33''	30''	26''	18''	10½''	6½''

END REGION

§ 9.21.3

$F_i = 710.3 \times 4\% = 28.4^K$

$A_s = 28.4/20 = 1.42''^2$ over $294/4 = 7.4''$

$A_s = 1.42/7.4 = .19''^2/in$

2-#4 $A_s = .40$ $s = .40/.19 = 2.1''$

2-#5 $A_s = .62$ $s = .62/.19 = 3.26''$

Girder Design

Shear Stirrups @ End § 9.21.3

$F = 710.3$ $.04F = 28.4^K$

2- #4 bars $20ksi \times .40 = 8^K$

2 - # 5 bars $20ksi \times .62 = 12.4^K$

$d = 36" \div 4 = 9"$

Stirrups

$28.4/8 = 4$ pair

$28.41/12.4 = 3$ Pair

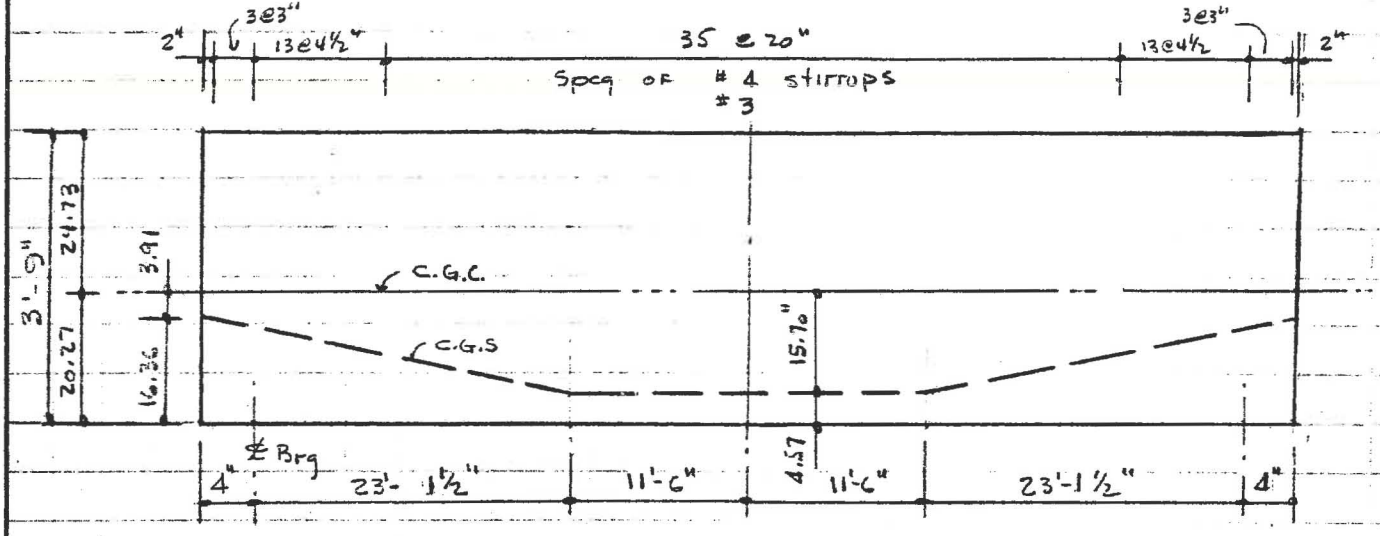

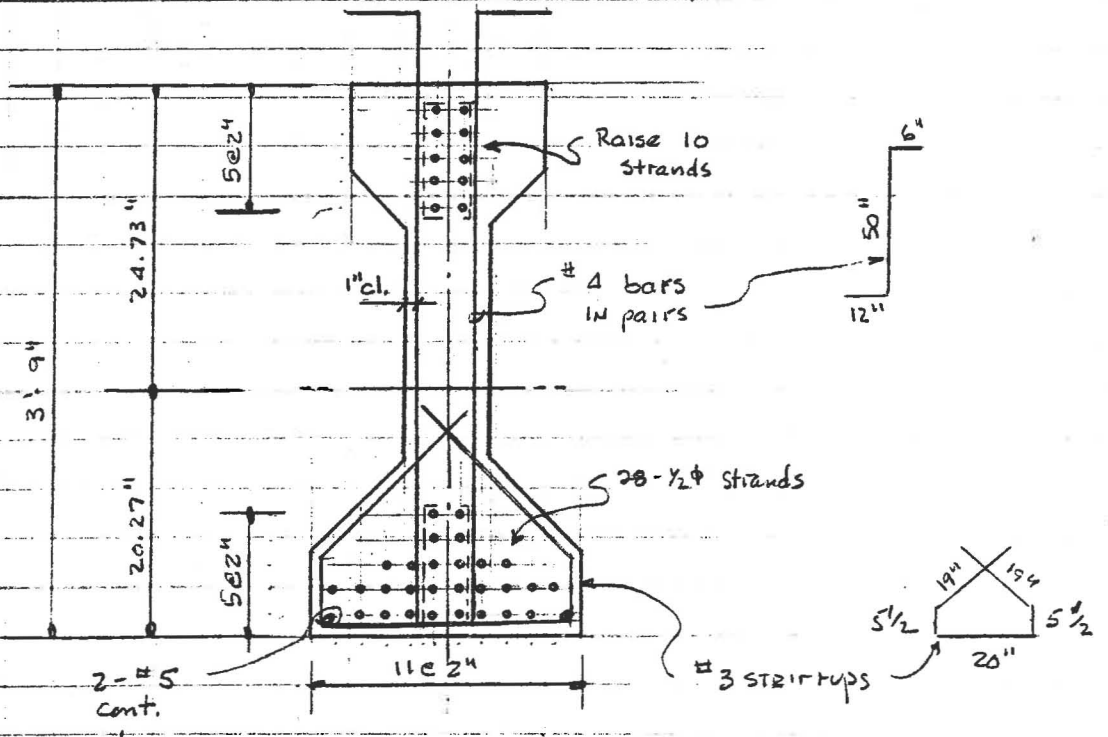

Superstructure Loads to Foundation.

DEAD LOAD

$L = 69.13'$ $L' = 69.25'$

Girder Reactions

	Abutment		Pier	
	Ext. Gir	Int. Gir	Ext. Gir	Int. Gir.
Girder .583 kpf	20.4K	20.4K	40.8K	40.8K
8" Slab .10 K/SF	24.2K	26.8K	46.6K	52.0
Abut Diaph: 2.8K	1.4K	2.8K	-	-
Int. Diaph: 1.5K	.5K	.9K	1.0K	1.8K
Composite:				
Wearing Surface, S/W, Parapet Hdrl, waterline .388 kpf	10.2K	10.2K	33.9K	33.9K
	56.7K	61.1	122.3	128.5K
Total Reaction (2 Ext + 9 Int)	663.3K		1401.1K	

LIVE LOAD No Impact:

SHT 30 $P_I = 21.8^K$; $P_E = 6.4^K$

$R_A = 1.83P$ $R_p = 2.05P$

	12.0K	41.0K	13.1K	44.7K
S/W 60 psf				
§ 3.14.1 .060 x 5 x 3/11 = .054 kpf				
From comp. DL $R = .054/.388 \times R_{DL}$	1.4K	1.4K	4.7K	4.7K
UPLIFT	5.5K	5.5K	5.5K	5.5K

WIND LOADS § 3.15

§ 3.15.2.1

WIND ON STRUCTURE

Trans: 50 psf } Simultaneous
Long: 12 psf }

WIND ON LIVELOAD

Trans: 100 PLF } Simultaneous
Long: 40 PLF }

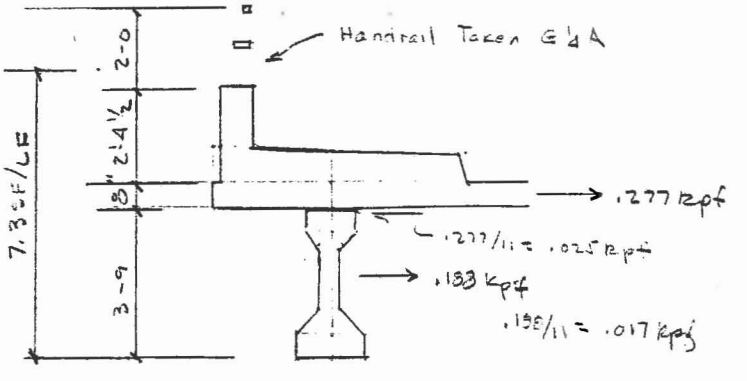

Long. Loads Taken by Pier

Trans. Loads Taken by Abut & Pier - distr by Considering deck to Act as a deep beam.

SUPERSTRUCTURE LOADS TO FOUNDATION

WIND CONT'd § 3.15

TRANS. WIND:

$50 \times 7.3 + 100 = .465$ kpf

LONG:

$12 \times 7.3 + 40 = .128$ kpf

$F = .128 \times 139.86 = 17.9^K$ < $W = 12.3^K$, $WL = 5.6^K$

per anchor = 1.63^K (PIER ONLY)

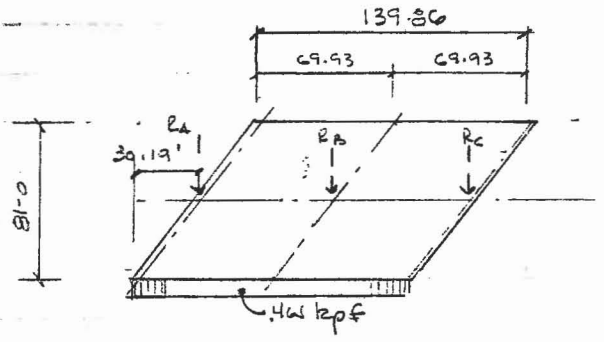

R_A, R_B, R_C = Resultant of 11 girder reactions

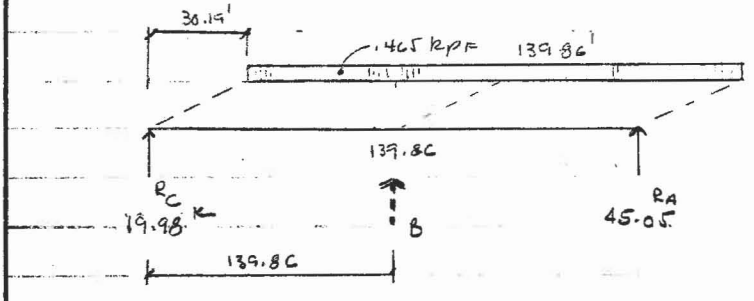

simple beam

$139.86\, R_A = .465 \times 139.86 \times \left(\frac{139.86}{2} + 39.19\right)$

$R_A = 46.56^K$

$R_B = .465 \times 139.86 - R_A$

$R_B = 18.48^K$

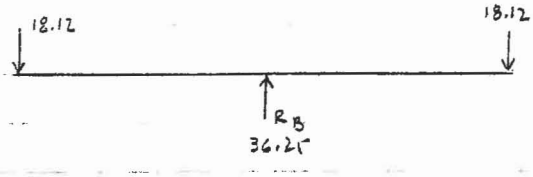

$a = (139.86 - 39.19) \times 12 = 1316$ $\quad w = .465/12 = .03875^K/in.$

$l = 139.86 \times 12 = 1678.3$

$x = 69.93 \times 12 = 839.2$

$$\Delta_B \cong \frac{.03875 \times 839.2}{24 \times EI \times 1678.3}\left[1316^2(2\times1678.3 - 1316)^2 - 2\times1316\times839.2^2(2\times1678.3 - 1316) + 1678.3\times839.2^3\right]$$

$$= \frac{8.073\times10^{-4}}{EI}\left[7.212\times10^{12} - 3.782\times10^{12} + 9.919\times10^{11}\right]$$

$$= 3.570\times10^{9}/EI$$

R_T	1.86	36.25	26.92
R/ANCHOR	0.17^K	3.30^K	2.45^K
R_T WIND	1.46	28.45	21.13
R_T WL	.40	7.80	5.79

Δ_B for conc. load $= \frac{R_B \times 1678.3^3}{48\,EI} = \frac{9.548\times10^7 R_B}{EI}$

$\therefore P = \frac{3.570\times10^9}{9.548\times10^7}$

$P = 36.25^K$

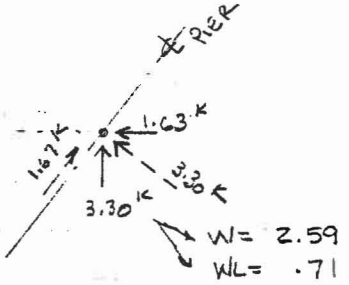

PIER

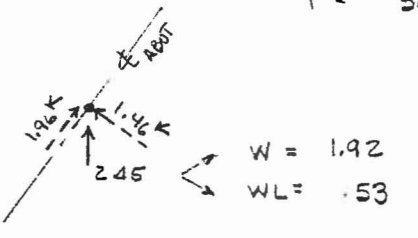

ABUTMENT

SUPERSTRUCTURE LOADS TO FOUNDATION

OVERTURNING (WIND uplift) § 3.15.3

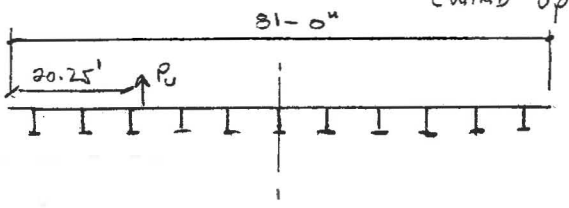

20 psf × Area d

$A_d = 81 \times 139.56 = 11328.7\ \square'$

$P_u = .020 \times A_d = 226.6^K$

$= 1.621 kpf$

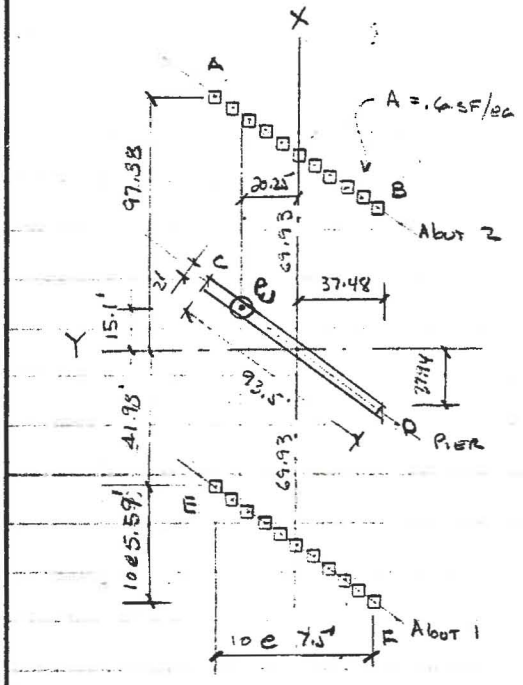

I_{x-x}

	A	d	Ad^2
.6 × 4	2.4	37.5	33750
.6 × 4	2.4	30.0	2160.0
.6 × 4	2.4	22.5	1215.0
.6 × 4	2.4	15.0	540.0
.6 × 4	2.4	7.5	135.0
.6 × 2	1.2	—	—
PIER I_o	187		48705.5
	200.2 SF		56130.5 FT^4

I_{Y-Y}

	A	d	Ad^2
.6 × 2	1.2	97.38	11496.6
"	1.2	92.29	10220.9
"	1.2	86.70	9020.3
"	1.2	81.11	7894.6
"	1.2	75.52	6843.9
"	1.2	69.93	5868.2
"	1.2	64.34	4967.6
"	1.2	58.75	4141.9
"	1.2	53.16	3391.2
"	1.2	47.75	2736.1
"	1.2	41.98	2114.8
PIER I_o	187	—	37590.2
	200.25 F		156286.2 FT^4

$M_{xx} = 226.6 \times 20.25 = 4588.65^{K'}$

$M_{yy} = 226.6 \times 15.1 = 3421.66^{K'}$

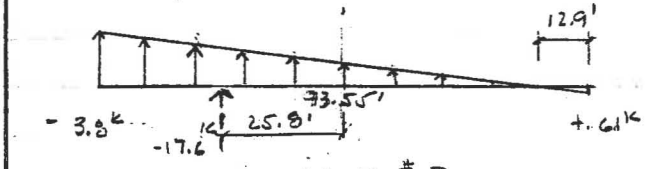

ABUT # 2

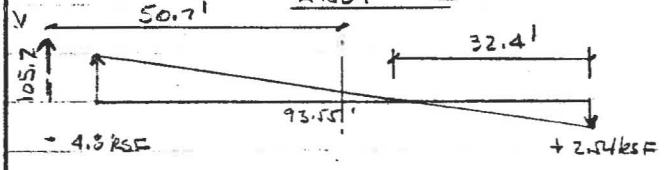

PIER

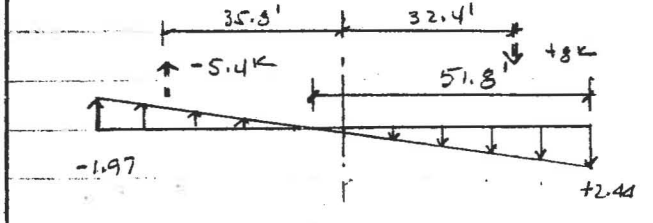

(-) = uplift

Pt	P/A	± Mxx c / I	± Myy c / I	PSF ΣR
A	-1.13	-3.06	-2.14	-6.33 K
B	-1.13	+3.06	-0.91	+1.02
C	-1.13	-3.06	-0.61	-4.80
D	-1.13	+3.06	+0.61	+2.54
E	-1.13	-3.06	+0.91	-3.28
F	-1.13	+3.06	+2.14	+4.07

ΣR -17.6 -211.4 -5.448 = 226.4 OK

SUPERSTRUCTURE LOAD TO FOUNDATION

Longitudinal Forces § 3.9.1

TAKEN by PIER

Lane Load = .64 klf + 18^K

LF = 5%

5 Lanes

Assume 3 in one direction

Lane lgth = 139.36'

# Lanes	LF	Reduction	LF/Girder	
1	5.4^K	1.00	0.5^K	
2	10.8^K	1.00	1.0^K	
3	16.2^K	.90	1.3^K	⇐ GOVS

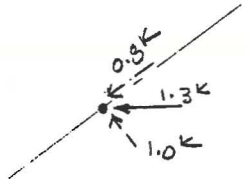

EARTHQUAKE § 3.21

GUIDE SPECIFICATIONS for SEISMIC Design of Highway Bridges AASHTO 1983

IMPORTANCE CLASSIFICATION : II § 3.3

Acceleration Coefficient : .07 Eq 3

Seismic Performance Category "A" Table 1

§ 4.6 EQ = 0.2 × DL Reactin in unrestrained direction

§ 6.2 No Special Foundatin design requirements

§ 4.9.1 MINIMUM SUPPORT LENGTH

L = 139.36' H_{pier} = 22'

$N = 8 + .02(139.36) + .08(22) = 12.6''$

Bouyancy § 3.19

There is sufficient freeboard, 2.3 FT

∴ Bouyancy & Stream flow will not be considered for the superstructure

Elastomeric Bearing Pads

Abutment

$R_{DL} = 61.1^K$
$R_{LL} = \frac{42.4^K}{103.5}$ } SHT 42

TEMP: +30° & −40° L = 69.93' §3.16

Expansion: $.6\times10^{-5}\times69.93\times12\times30 = 0.15"$

Contraction: $.6\times10^{-5}\times69.93\times12\times-40 = -0.20"$

W = 22" − 1" = 21"

$\text{Area} = \frac{61.1}{.5} = 122.2^{\square"}$

$= 103.5/.8 = 129.4^{\square"}$ ⟸ Govs

$L_{req'd} = 129.4/21 = 6.2"$

Use Pad 7×21 $A = 147^{\square"}$

$T_{MIN} = \frac{(.15+.20)}{.5} = 0.7"$

$t_{req'd} = \frac{7\times21}{2\times5(7+21)} = 0.525"$

SF > 5

use $\frac{3}{8}"$ t $SF = \frac{7\times21}{2\times\frac{3}{8}(7+21)} = 7 > 5$ OK

comp. stress $= \frac{103.5}{7\times21} = 704$ psi use H = 60

Slippage for $t = \frac{3}{8}" = \frac{61.1^K\times3/8}{5\times(7\times21)}\times1.9 \div 160 = 0.37" > .20$

T_{MIN} controls use pad 7×21 of 2-$\frac{3}{8}$" Layers

SF = 7

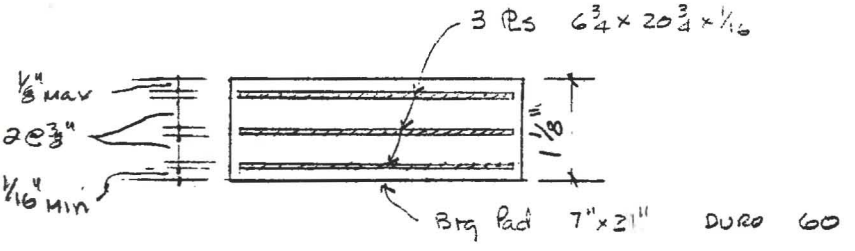

Shear transmitted to Abut. by $\Delta_T = 0.20"$

$F = \frac{160\times147\times.2}{1.125} = 4.2^K$

F_{LL} & Btm = 4.2 × 0.75 = 3.1^K

Elastomeric Pad cont'd

Pier:

$R_{DL} = 81.2^K$

$R_{LL} = 49.4^K$

130.6^K

Note:

No movement at Pier Bearing

$W = 22''$ $L = 8''$ $A = 176^{\square''}$

Comp. DL $\frac{81200}{176} = 461.4 < 500$

Comp. DL+LL $\frac{130600}{176} = 742.0 < 800$ ok

$SF > 5$ try $1/2''$ $SF = \frac{8 \times 22}{2 \times 0.5(8+22)} = 5.87 > 5$ ok

Use Bearing Pad $8'' \times 22'' \times 1/2''$ Duro 50

DIAPHRAGMS

INTERIOR

WIND LOADS: SHT 42

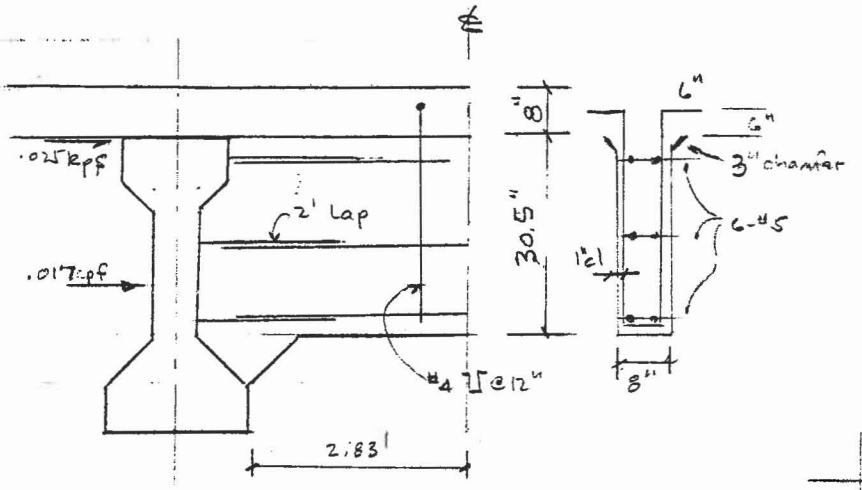

$P = 16/5 \times 1.3 = 4.2^K$

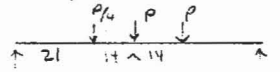

$P_{/DIA.} = 1 + \frac{21}{35} \times 1.25 = 1.75P$

$1.75 \times 4.2 = 7.4^K$

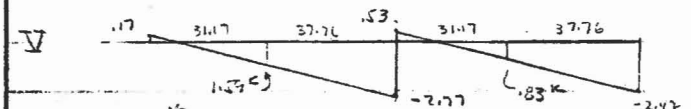

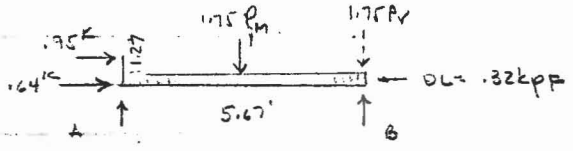

$P_W = .95 \times 1.27 / 5.67 = .21^K$

	M_A	℄	M_B
W = .95 × 1.27	+ 1.20 K'	—	- 1.20 K'
DL = .32 × 5.67²/10	- 1.03	+1.03	- 1.03
LL = 7.4 × 5.67/6	- 7.00	+ 7.00	- 7.00
	- 6.25	+ 8.03	+9.25
	V_A	℄	V_B
W	0.21	→	0.21
DL	0.90	—	0.90
LL	7.4	3.7	7.4

$M_{DL} + M_{LL} = \pm 8.03^{IC}$ ⟸ GRAVS

$(M_{DL} + M_{LL} + M_W)/1.25 = 7.38^K$

$d = 30\frac{1}{2} - 2\frac{1}{2} = 28$ $\quad f'_c = 4500$

$A_s = 8.03/1.44 \times 28 = 0.20^{\square"}$

use 2 - #5 bars top & bot

$V_{U\,(DL+LL)} = 17.2^K$

$V_{U\,(DL+LL+W)} = 17.5^K$

$V_c = .06 \times 4.5 \times 8 \times \frac{7}{8} \times 28 = 52.9^K$

$- 1.50 \times 8 \times \frac{7}{8} \times 28 = 35.3^K$ ⟸ GRAVS

use M_{IN} - 8 - 12" $\quad A_v = \frac{100 \times 8 \times 12}{40000} = 0.24^{\square"}$

2 - #4 STIRRUPS $A_s = .40$

DIAPHRAGMS

ABUTMENT

Torsion — Unprotected Structures Winter, Nilson 14 pg 647

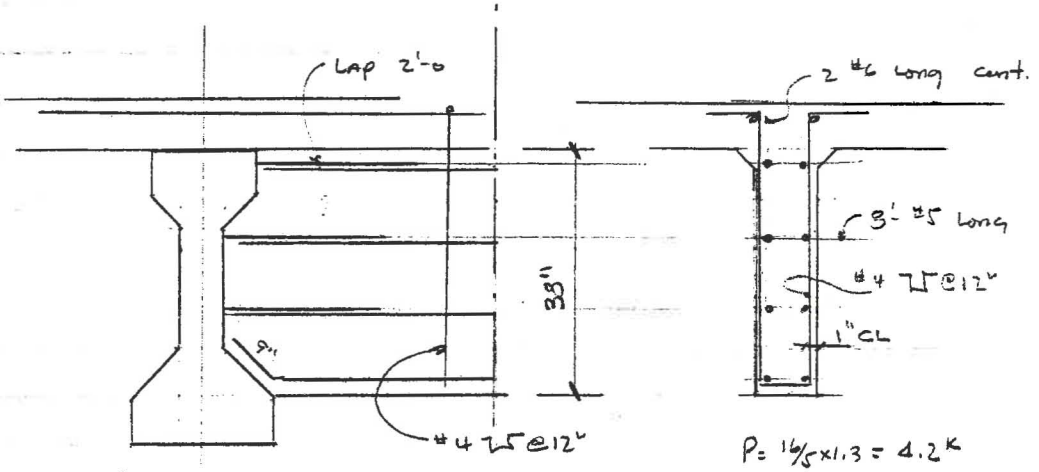

$P = 16/5 \times 1.3 = 4.2^K$

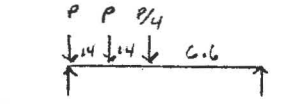

$R = 1 + \frac{20.6}{34.6} + \frac{5.6}{4 \times 34.6} = 1.64\,P$

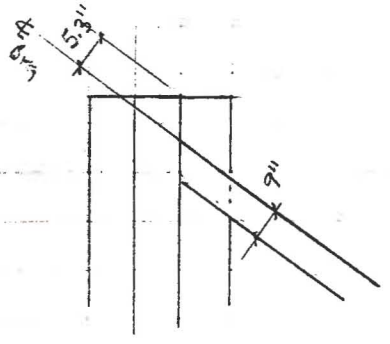

$P_m = P_V = 1.64 \times 4.2 = 6.9^K$

W DL DECK = .66 KPF SHT 14

DL DIAPH = .36 KPF

SHT 14

Torsion: $M_{t\,DL} = .302 \times 12 \times \cos(5K) = 2.9^{11K}$

$M_{t\,(LL+I)} = 5.75 \times 12 \times \cos(5L) = 55.3^{11K}$

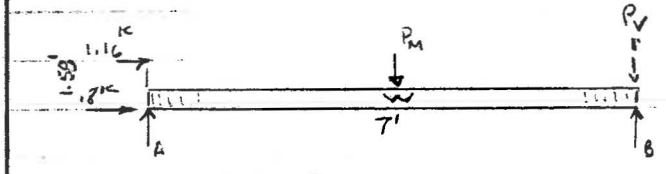

	M_A	℄	M_B
Wind:	+1.83	→	-1.93
DL $1.02 \times 7^2/_{10}$	-5.00	+5.00	-5.00
LL $6.9 \times 7/6$	-8.05	+8.05	-8.05

	V_A	℄	V_B
Wind	.26	—	.26
DL	3.57	—	3.57
LL	6.90	8.45	6.90

$R_{B\,wind} = 1.16 \times 11.5 \times 8/7 = 0.26$

$d = 38 - 2 = 36$

$M_{(DL+LL)} = 13.05^{K'}$ $\quad A_s = 13.05/1.44 \times 36 = 0.25^{\square"}$

$M_t = 58.2^{K"}$

allow $v_{ct} = 1.1\sqrt{4500} = 74\ psi$

$M_{tc} = \frac{v_{ct}}{3b'} \sum b^3 h = \frac{74}{3 \times 9}\left(9^3 \times 38\right) = 75.9^{K"} > 58.2^{K"}$

No additional steel req. for Torsion

USE 2-#5 top & Bot $A_s = .62 > .25$

$V_{u\,(DL+LL)} = 19.6^K$

$V_c = .06 \times 4.5 \times 9 \times \frac{7}{8} \times 36 = 68.0$

$180 \times 9 \times \frac{7}{8} \times 36 = 45.4$ ← GOVS

Min Steel $A_s = .24$ 2-#4

BENSON & GERDIN, INC. CONSULTING ENGINEERS PHONE (602) 264-0138	SHT. NO. 50 OF
	JOB NO. 2327 J
	BY MK DATE 10-3-84
	CHKD. AG DATE 2-14-85
ANCHOR BOLTS	REV.

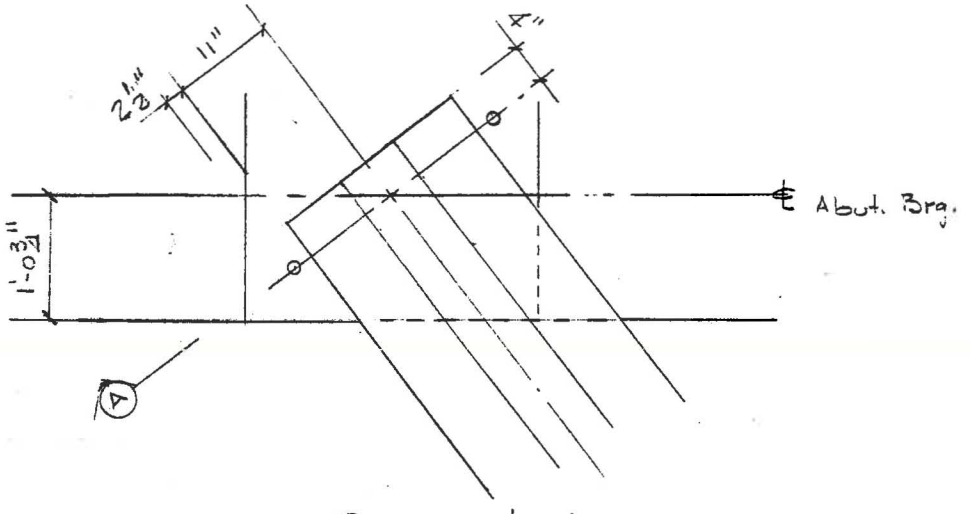

PLAN at ABUT.

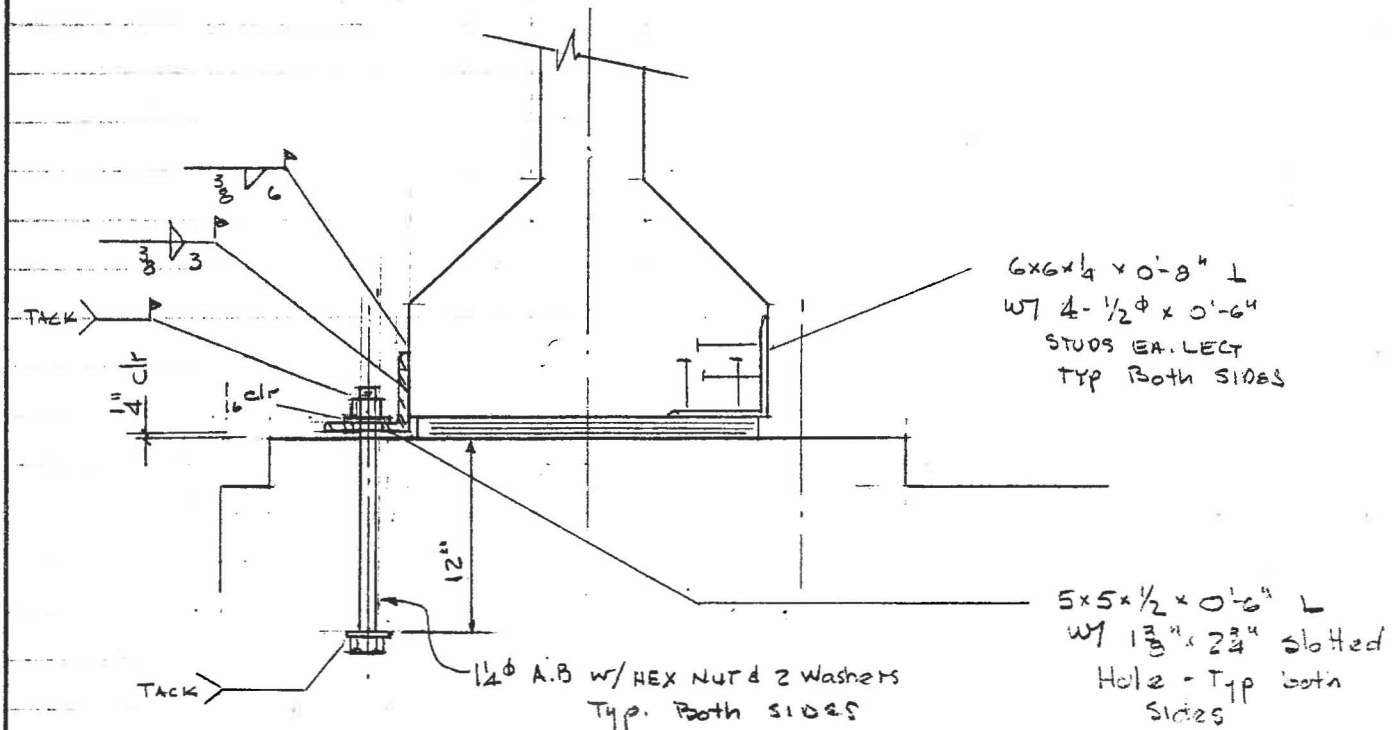

Anchor Bolts

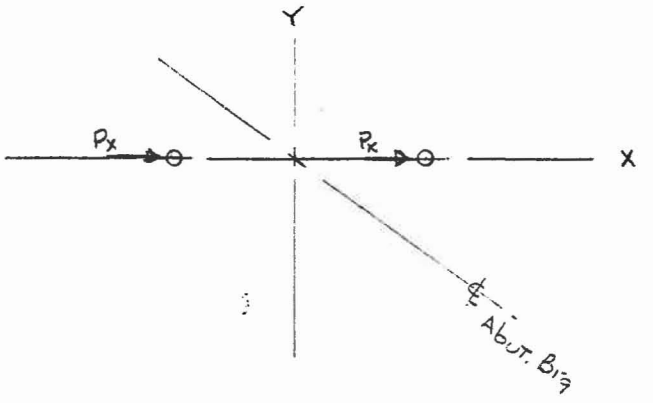

Group II: $(DL + E + B + SF + W)\ 1/1.25$

$W = 1.92/2 = 0.96^K$ (SHT 43) $\quad (0+0+0+0+.96) = .96^K$

Group III: $(DL + (LL+I) + CF + B + SF + .3W + WL + LF)\ 1/1.25$

$WL = .53/2 = .27^K$ (SHT 43) $\quad (0+0+0+0+0+.3(.96)+.27+0)\ 1/1.25 = .56^K$

Group VII: $(DL + E + B + SF + EQ)\ 1/1.33$

DL REACTION: 61.1^K (SHT 42)

$EQ = .2 \times 61.1 \times 1/2 = 6.11$ $\quad (0+0+0+0+6.11)\ 1/1.33 = 4.6^K$ GOVS

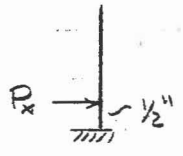

$V = 4.6^K$

$M = 4.6(.50) = 2.3^{K''}$

$S = 2.3/13.5 = 0.17 = \frac{\pi d^3}{32}$ $\quad d = 1.20$

USE $1\frac{1}{4}\phi$

$1\frac{1}{4}\phi - A = 1.23$

$f_v = 4.6/1.23 = 3.74$ ksi

$S = 0.19^{in^3}$ $\quad f_b = 2.3/.19 = 12.1$ ksi

$(3.74^2 + 12.1^2)^{1/2} = 12.7$ ksi

UPLIFT from $LL + W = (5.5 + 3.8) = 9.3^K$ SHT 42, 44

$9.3 < DL_R = 56.7$ OK

Anchor Bolts

Conn. Angle

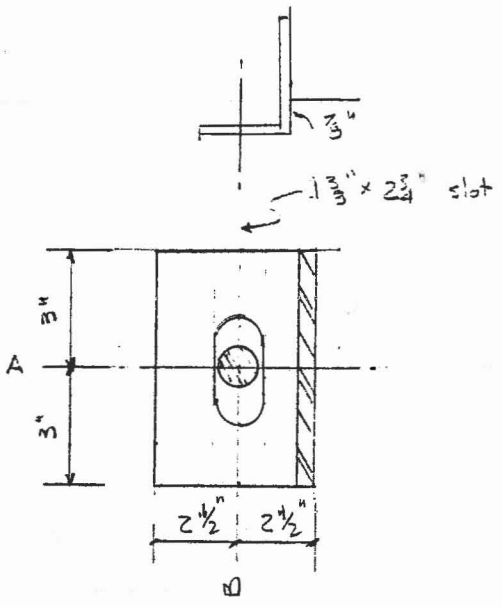

Mom arm = 3 - 1/4 = 5/8"

P = 4.6K M = 4.6 x .625 = 2.88"K

$2.88/20 = \frac{bd^2}{6}$ b = 6"

d = .378 use 1/2 thk ⟸ Govs

T+N @ B Area = (6 - 2 3/4) x 1/2 = 1.625 in²

$f_t = 4.6/1.625 = 2.83$ ksi

$M_A = \frac{4.6 \times 2.75}{6} = 2.11$"K

$2.11/20 = \frac{bd^2}{6}$ b = 2 1/2 - 1/16 = 1.81"

d = .349"

use ∠ 5 x 5 x 1/2" x 0'-6"

Weld

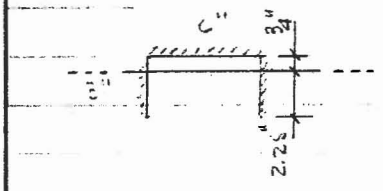

	A	Y	AY	$\bar{y}$	$A\bar{y}^2$	I_o
1 x 6	6	–	–	.75	3.375	0.50
1 x 3 x 2	6	1.5	9	.75	3.375	4.50
	12	0.75	9		6.75	5.0
	y_t	0.75			I_g =	11.75
	y_b	2.25				

M = 4.6K (2.25 + 1/2) = 12.65"K

$f_t = \frac{4.6}{12} - \frac{12.65 \times .75}{11.75} = -.424$ ksi

$f_b = \frac{4.6}{12} + \frac{12.65 \times 2.25}{11.75} = +2.806$ ksi

1/8" Δ = 1 ksi use 3/8 Δ

PIER

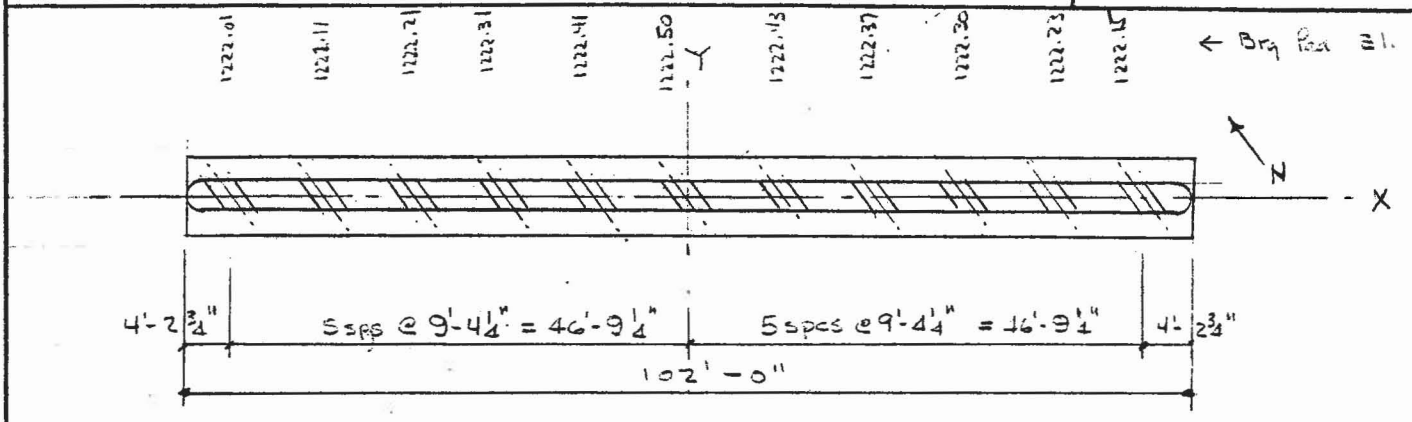

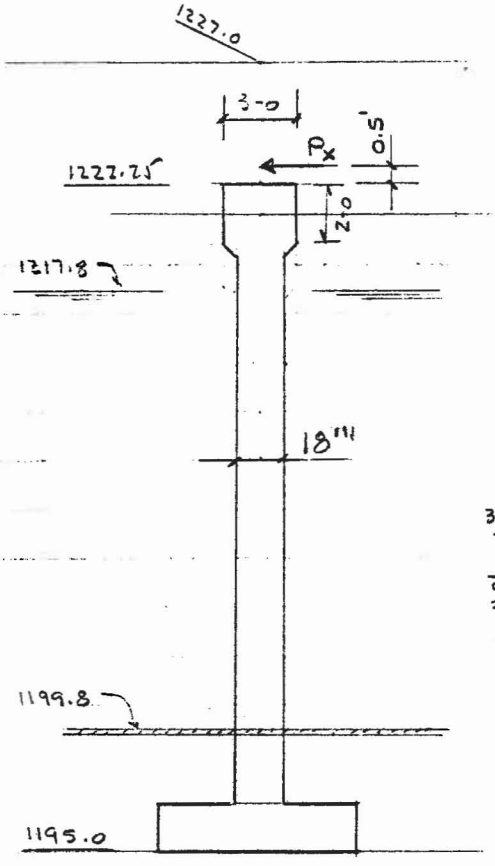

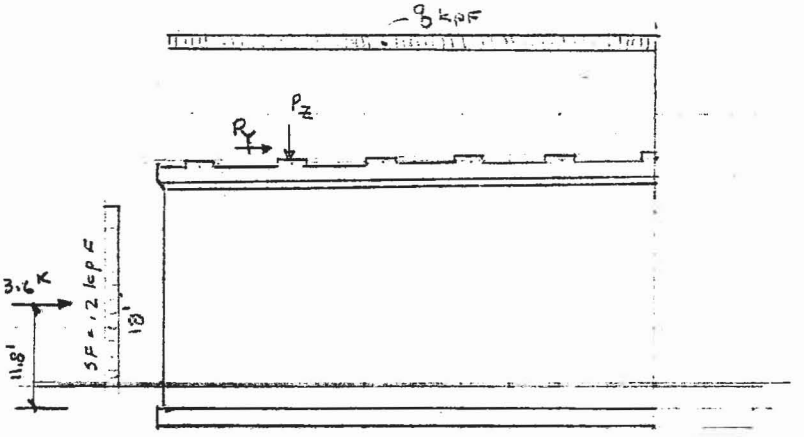

STREAM Flow: $V = 14$ fps

$p = \frac{2}{3} V^2 = 130.7 \text{ psf} \times 1.5 = .20 \text{ kpf}$

g wall $[1.5 \times 25.25 \times 1.0 + .75 \times 4.25 \times 1.0] \times 1.15 = 6.22$ kpf

g FTG $1.5 \times 6 \times 1.0 \times .15 = 1.35$

Boyancy Wall $1.5 \times 20.8 \times .0624 = 1.95$ kpf ↑

Ftg $2 \times 8 \times .0624 = 1.00$ kpf ↑

PIER

LIVE LOAD

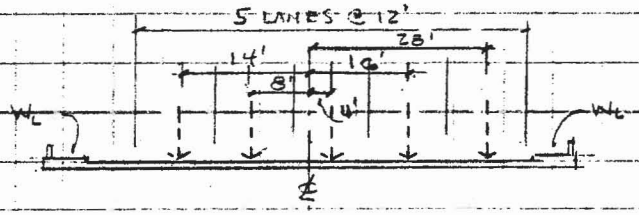

W_L = 60 PSF § 3.14.1.1

TRUCK: No Impact 16^K/WHEEL

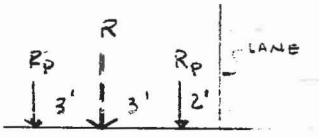

R_p = 2.15 × 16 = 34.4^K

R = 2.15 × 32 = 68.8^K

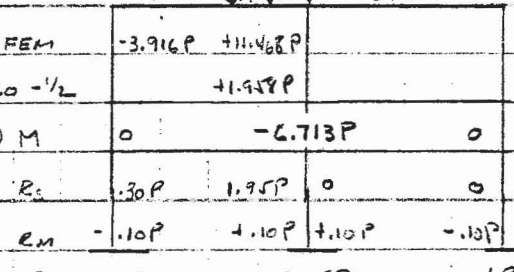

FEM	-3.916P	+11.468P		
Co -½		+1.958P		
(-) M	0	-6.713P		0
R_s	.30P	1.95P	0	0
R_M	-.10P	+.10P	+.10P	-.10P
R	.2P	2.15P		-.1P

FEM	-260.8	+260.8	-260.8	+260.8
Co -½		+130.4	-130.4	
(-) M	0	-391.2$^{K'}$		0
R_s	22.38	48.38	22.38	22.38
R_M	-5.59	5.59	5.59	-5.59
R	16.79	81.94		16.79

LANE: No IMPACT

w = .64 kpf

P = 26^K

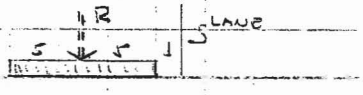

Govs

R = 81.9^K

LANES	1	2	3	4	5
%	100	100	90	75	75
Σ P	81.9	163.8	221.1	245.7	307.1
Σ M	2293.2	3603.6	3538.1	2457.0	1597.1
Σ P/A	0.44	0.88	1.18	1.31	1.64
± Σ M/S	0.79	1.24	1.21	0.84	0.55
Max KSF	1.23	2.12	2.39	2.15	2.19
Min KSF	-.35	-.36	-.03	.47	1.09

Govs Min. Govs Max.

DIAPHRAGM FOOTPRINT

2'W × 93.55'ℓ

A = 187.1 in^2

$I = 2 \times 93.55 \times \frac{8^3}{12} \times 1/2 = 1.364 \times 10^5$

$S = \frac{1.364 \times 10^5 \times 2}{93.55} = 2.917 \times 10^3$

Sidewalk Liveload

R_{SW} =

$\frac{.06}{.64}(81.94 - 26) \times 2 = 10.5^K$

$= 10.5/187.1 = .06$ KSF

PIER

DIAPHRAGM

DECK $f'_c = 4500$

PIER $f'_c = 3000$

Try 2'W × 93.55 L H = 4.75

$q_0 = 4.75 \times .15 = 0.71$ KSF

	Max X KPF	Max Y KPF	Max Z KSF	
DIAP. DL			0.71	
LL			2.39	SHT 54
W	.30	.15	2.54	SHT 43, 44
WL	.08	.02	-	✓ ✓
LF	.12	.41	-	SHT 45
EQ	3.0	3.0		SHT 42 1401.1/93.55 × .2

Group	%	X KPF	Y KPF	Z KSF
I	100	0	0	3.10
II	125	.24	.12	2.60
III	125	.23	.38	3.09
VII	133	2.25	2.25	.53

Allow. Bearing: $f_b = .3 f'_c$

$= .3 \times 3 = .9$ ksi

$= 129.6$ ksf OK

$3.10 < 129.6 \therefore$ 2'W OK

USE SHEAR KEY IN X direction:
use dowels in Y direction

V_X #6 @ 12" $A_s = .44$ $f_{sv} = 13$ ksi

Allow $= .44 \times 13 = 5.7$ kpf > 1.43 OK

V_Y Try 2" × 8" shear key

$f_{cv} = 3\sqrt{f'_c} = 3\sqrt{4500} = .2$ ksi

$12 \times 8 \times .2 = 19.2$ kpf > 1.43 OK

BENSON & GERDIN, INC. CONSULTING ENGINEERS PHONE (602) 264-0138	SHT. NO. 56 OF
	JOB NO. 2327 J
	BY MEK DATE 10-5-84
	CHKD. AG DATE 2-14-85
PIER	REV.

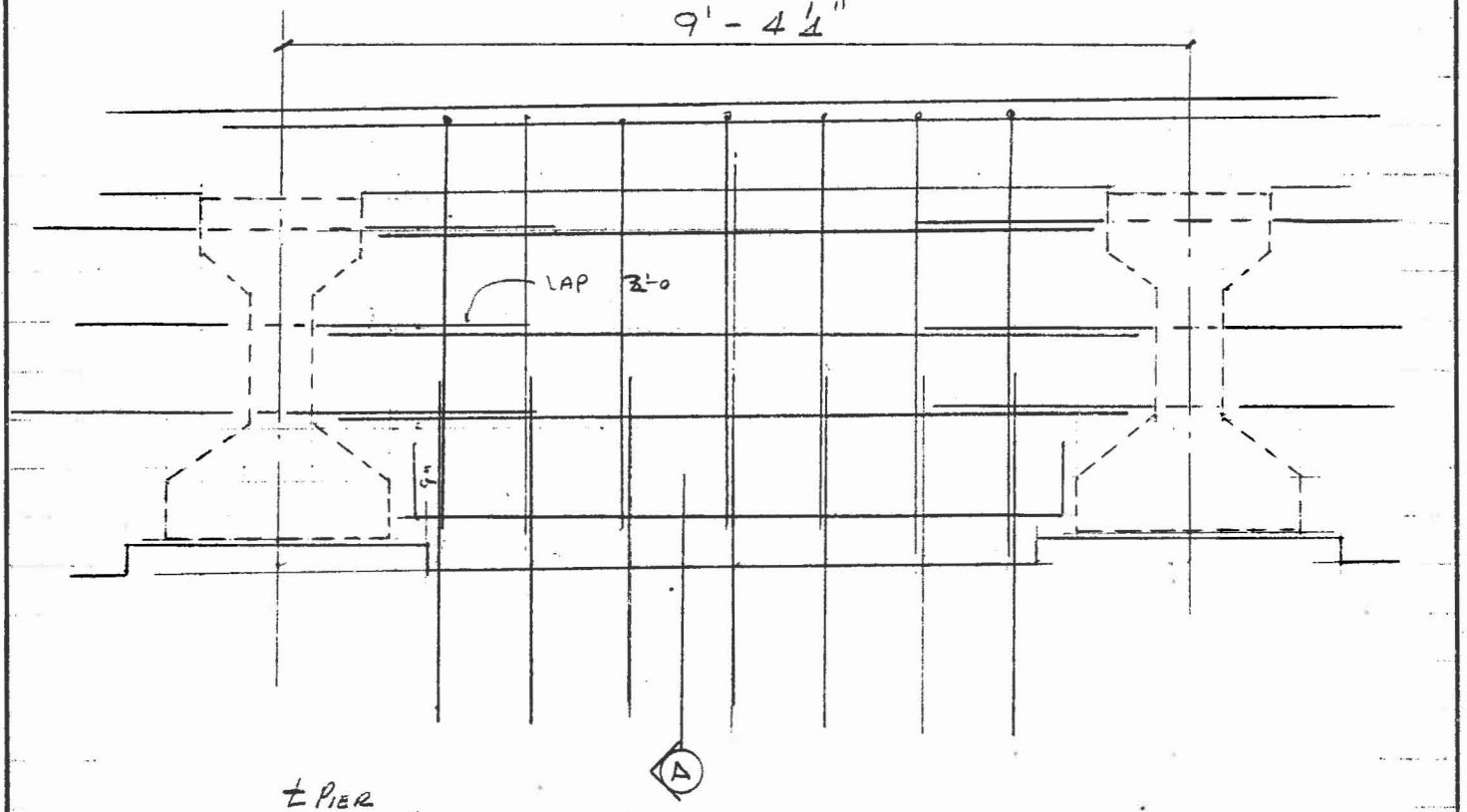

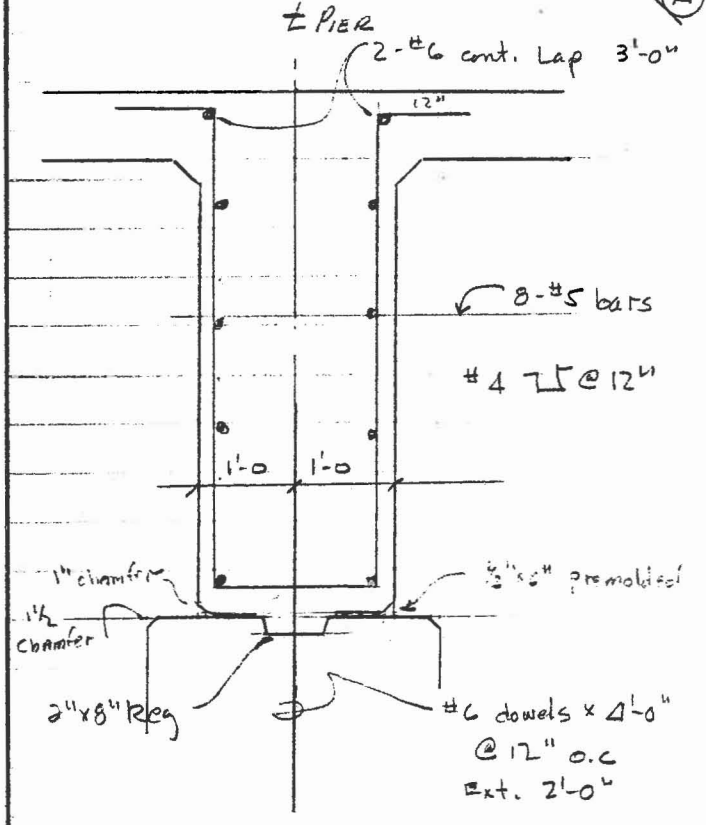

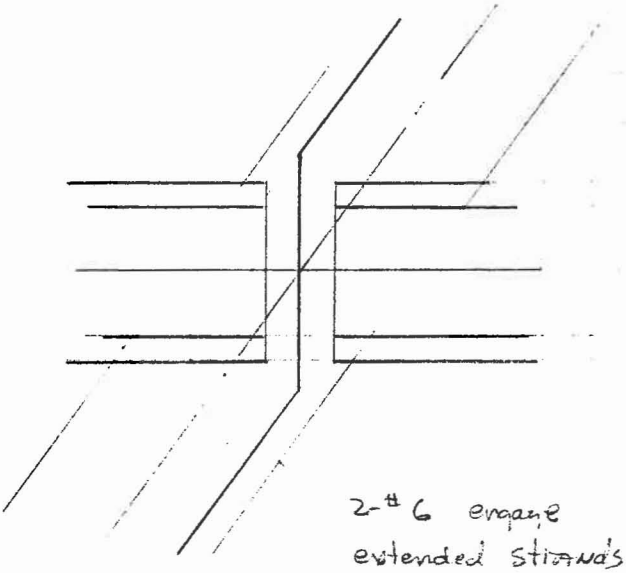

2-#6 engage extended strands each Girder

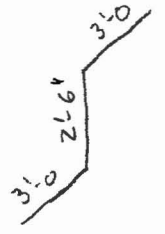

PIER

: Wall Design :

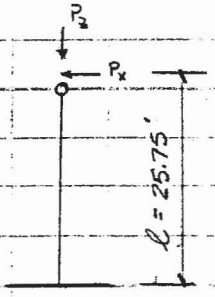

f'_c = 3 ksi

NOTE:

EQ design by 'AASHTO Guide Specifications for Seismic Design ...'

⟹ No design requirement for SPC A § 6.2 & 8.2

(+) ↓

	Px	Py	Pz	Mx-x	My-y	SHT #
	Kips			Kip-Ft.		
DL DECK			1401.1			42
DIAPHRAGM			132.8			55
Wall			634.4			53
Σ DLw			2168.3			*
LL LANE			221.1		3538.1	54
S/W			10.5			54
Σ LLw			231.6		3538.1	*
Bouyancy wall			-196.0			*
SF		3.6			42.5	53 *
W TRANS/LONG	24.7	17.0		636.0	437.8	43
UPLIFT			-105.6		5353.6	44
Σ Ww	24.7	17.0	-105.6	636.0	5791.4	*
WL	6.8	4.7		175.1	121.0	43 *
LF	12.4	9.9		319.3	254.9	45 *

Group	%	Px	Py	Pz	Mx-x	My-y
		GROUP LOADS				
I	100	-0-	3.6^K	2203.9^K	-0-	3580.6$^{K'}$
II	125	24.7^K	16.5^K	1493.4^K	636.0$^{K'}$	4667.1$^{K'}$
III	125	21.3^K	18.6^K	1737.8^K	548.2$^{K'}$	4555.1

BENSON & GERDIN, INC. CONSULTING ENGINEERS PHONE (602) 264-0136

SHT. NO. 58 OF
JOB NO. 2327 J
BY MEK DATE 10-12-84
CHKD. AG DATE 2-14-85
REV.

PIER

Wall Design

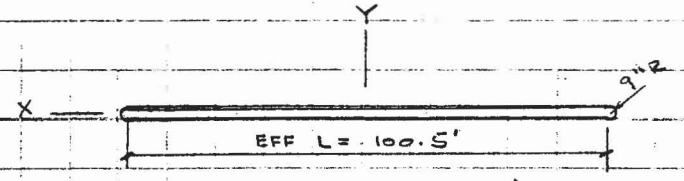

$f'_c = 4$ ksi $n = 8$

$f_y = 40$ ksi

$f_c = .4 f'_c = 1.6$ ksi

$A = 1.5 \times 100.5 = 150.75^{\square'}$

$I_{xx} = 100.5 \times \overline{1.5}^3/12 = 23.266^{F^4}$

$I_{yy} = 1.5 \times \overline{100.5}^3/12 = 1.269 \times 10^5$

GROUP	P_z/A	$\frac{M_x c}{I}$	$\frac{M_y c}{I}$	MAX q KSF	f_c ksi	
I	11.21	-0-	1.42	12.63	.09	
II	7.18	16.88	1.85	25.91	.18	← GOVS
III	8.80	14.54	1.80	25.14	.17	

MIN A_s § 8.17.1

$f_r = 7.5\sqrt{f'_c} = .47$ ksi

$S = 12 \times \overline{15}^2/6 = 450$

$1.2 M_{cr} = 1.2 \times 450 \times .47 \times 1/12 = 21.2^{k'}$

$A_s = 21.2/1.44 \times 15 = .98^{\square''}$

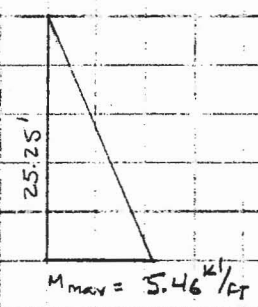

$M_{max} = 636^{k'}/100.5 = 6.33^{k'}/FT$

$t = 18''$ $d = 18 - 2 - 1/2 - \frac{5}{16} \cong 15''$

$A_s = \frac{6.33}{1.44 \times 15} = 0.29^{\square''} \times 4/3 = .39$ § 8.17.1.2

#6 @ 12" = .44

$n_p = \frac{8(A_s)}{12(d)} = .0196$ $\gamma = 2/kj = 11.87$ $j = .94$

$f_c = \frac{M\gamma}{d^2} = .33$ ksi $+ .18$ ksi $= .51$ ksi < 1.6 ok

$f_s = 12M/A_s jd = 12.24$ ksi

#6@12"

FOOTING DESIGN

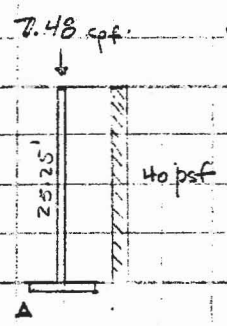

a) SIZE FOOTING for Constr. Wind Load

Try Ftg 1½'d x 8'W

Σ @ A	V	arm	M
DL	7.48^k	8/2	29.92
$-W = .04 \times 25.25 = 1.01^k$		$\frac{25.25}{\Sigma}$	12.75
Σ	7.48	2.30'	17.17

FS OVERTURN $29.92/12.75 = 2.35$ ok

$e = 8/2 - 2.30 = 1.70'' > W/6$ OUTSIDE MIDDLE 1/3

$x = 3(8/2 - 1.70) = 6.90'$

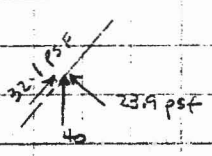

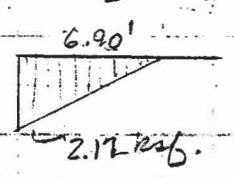

$q_{max} = \frac{2 \times 7.48}{1 \times 6.90} = 2.17$ ksf

BENSON & GERDIN, INC. CONSULTING ENGINEERS PHONE (602) 264-0136	SHT. NO. 59 OF
	JOB NO. 2327 J
	BY MEK DATE 10-12-84
	CHKD. DATE
PIER	REV.

: FOOTING DESIGN:

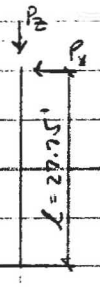

LOADING

FTG WT = 1.5×6×102×.15 = 137.7

EARTH = (9 − 1.5)×2.8×102×.11 = 321.3 K

		(+) ↓ Kips			Kip-Ft		SHT
		P_x	P_Y	P_z	M_{x-x}	M_{Y-Y}	No
	DL			2168.3			57
	Ftg			137.7			
*	ΣDL_F			2306.0			
*	LL			231.6		3538.1	57
*	E			321.3			
	B WALL			-196.0			
	Ftg			-114.6			
*	ΣB_F			-310.6			
*	SF		3.6			49.7	53
	W	24.7	17.0	-105.6	685.4	5353.6	57
x-x 23.9×22.5×102 y-y 32.1×22.5×1.5	W PIER	54.9	1.1		617.6	12.4	53
*	ΣW_F	79.6	18.1	-105.6	1303.0	5366.0	
*	WL	6.8	4.7		188.7	130.4	
*	LF	12.4	9.9		344.1	274.7	

Group No - %		Σ Group Loads				
I	100%	-0-	3.6	2272.0	-0-	3587.8
II	125%	79.6	17.4	1401.7	1303.0	4332.6
III	125%	34.5	18.9	1756.3	739.0	4482.2

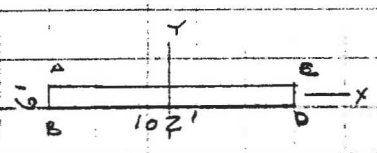

$A_{FTG} = 6 \times 102 = 612^{\square'}$

$S_x = 102 \times \overline{6}^2/6 = 612^{1^3}$

$S_y = 6 \times \overline{102}^2/6 = 10404^{1^3}$

		Group I	Group II	Group III	
P_z/A	ksf	3.64	2.29	2.87	
$\pm M_x/S$	ksf	-0-	2.13	1.21	
$\pm M_y/S$	ksf	0.34	0.42	0.43	
q_A	ksf	3.30	4.60	3.65	
q_B	ksf	3.30	-.26	1.23	
q_C	ksf	3.98	4.84	4.56	< 8 ksf OK
q_D	ksf	3.39	0.58	2.09	

PIER

Footing Design

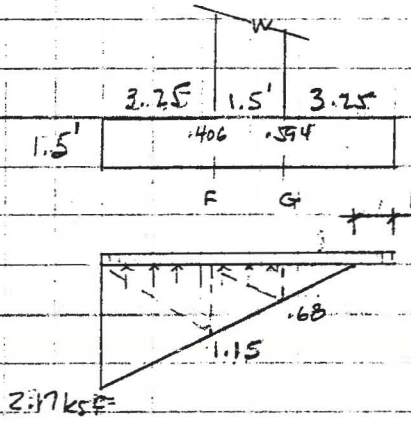

$W_{ftg} = 1.5 \times .15 = .225$ kpf

$W_E = 2.8 \times .11 = .31$ kpf

(-) ↓ CONSTR. WIND LOAD

	@ F V	@ F arm	@ F M	@ G V	@ G arm	@ G M
W	-.73	3.25/2	-1.19	-.73	3.25/2	-1.19
1.15 x 3.25/2	1.87	3.25/3	2.02			
2.17 x 3.25/2	3.53	3.25/1.5	7.64			
	4.67 K		8.48 K'	-1.19 K		-1.19 K'

Group II @ A-B

Neg q_u = Neg Mom @ G

	@ E V	@ E Arm	@ E M
W_{FTG} from above	-.73		-1.19
W_E -.31 x 3.25	-1.01	3.25/2	-1.64
	-1.74 K		-2.83 K' ⟸ Govs (-) M

Group II C-D

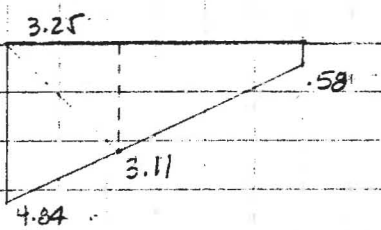

	@ F V	@ F Arm	@ F M
Wt. FTG + E = .535 x 3.25	-1.74	3.25/2	-2.82
3.11 x 3.25 x 1/2	5.05	3.25/3	5.47
4.84 x 3.25 x 1/2	7.86	3.25/1.5	17.04
	11.18 K		19.69 K' ⟸ Govs (+) M

Group III C-D

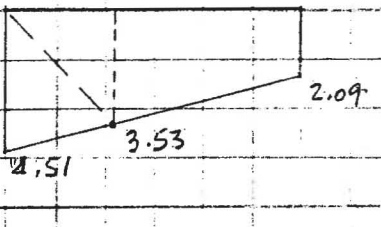

	@ F V	@ F Arm	@ F M
W_{FTG+E}	-1.74		-2.82
3.53 x 3.25 x 1/2	5.74	3.25/3	6.21
4.51 x 3.25 x 1/2	7.33	3.25/1.5	15.88
	11.33		19.27 K'

PIER

FOOTING DESIGN

$d = 18 - 3 - \frac{5}{16} \cong 14.7"$

$f'_c = 4$ ksi $\quad n = 8$

$f_r = .47$ ksi

$S = 12 \times 18^2/6 = 648$

$1.2 M_{cr} = 1.2 \times 648 \times .47 \times 1/12 = 30.5^{K'}$

$M_{in}\ A_s = 30.5/1.44 \times 14.7 = 1.44^{\square"}$

(+) M

$A_s = 19.69'/1.44 \times 14.7 \quad 0.93 \times 4/3 = 1.24$

$A_{s\,min} = 0.93$ (SHT. 58)

Alt. #7 STR + #6 from wall @ 6" $= 1.04^{\square"}$

$\rho = \frac{8(A_s)}{12(d)} = .0472 \qquad \gamma = 2/Rj = 8.32 \qquad J = 0.91$

$f_c = \frac{M\gamma}{d^2} = .74$ ksi $\qquad f_s = 12M/A_s jd = 16.98$ ksi

ALT - #7 @ 12" STR w/ #6 @ 12" from wall

(-) M

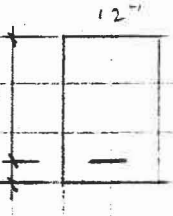

	A	Y	Ay	$\bar{y}$	$A\bar{y}^2$	I_o
CONC.	216	9.	1944	.21	9.32	5832
n As - 8 x 1.04	8.32	3.4	28.29	-5.39	241.92	—
	224.32	8.79	1972.29		251.24	5832

$y_b = 8.79$

$y_t = 9.16$

$I = 6033$

(-) M = $-2.83^{K'}$ (SHT. 60)

$f_{c\,top} = \frac{2.83 \times 12 \times 9.16}{6.083} = .054$ ksi

$f_r = 0.47$ (SHT 58)

allow $f_{ct} = .21 f_r = .21 \times .47 = .099$ ksi

OK - NO REINF REQ'd.

SHEAR

$V_{max} = 11.33$ (SHT 60) @ d from support $= 7.44^K$

$v = \frac{7.44^K}{12 \times 14.6} = .042$ ksi

$v_c = .95\sqrt{f'_c} = .052$ ksi OK

BENSON & GERDIN, INC. CONSULTING ENGINEERS PHONE (602) 264-0136	SHT. NO. 62 OF
	JOB NO. 2327J
	BY MEK DATE 10-12-84
	CHKD. AG DATE 2-14-85
PIER DESIGN	REV.

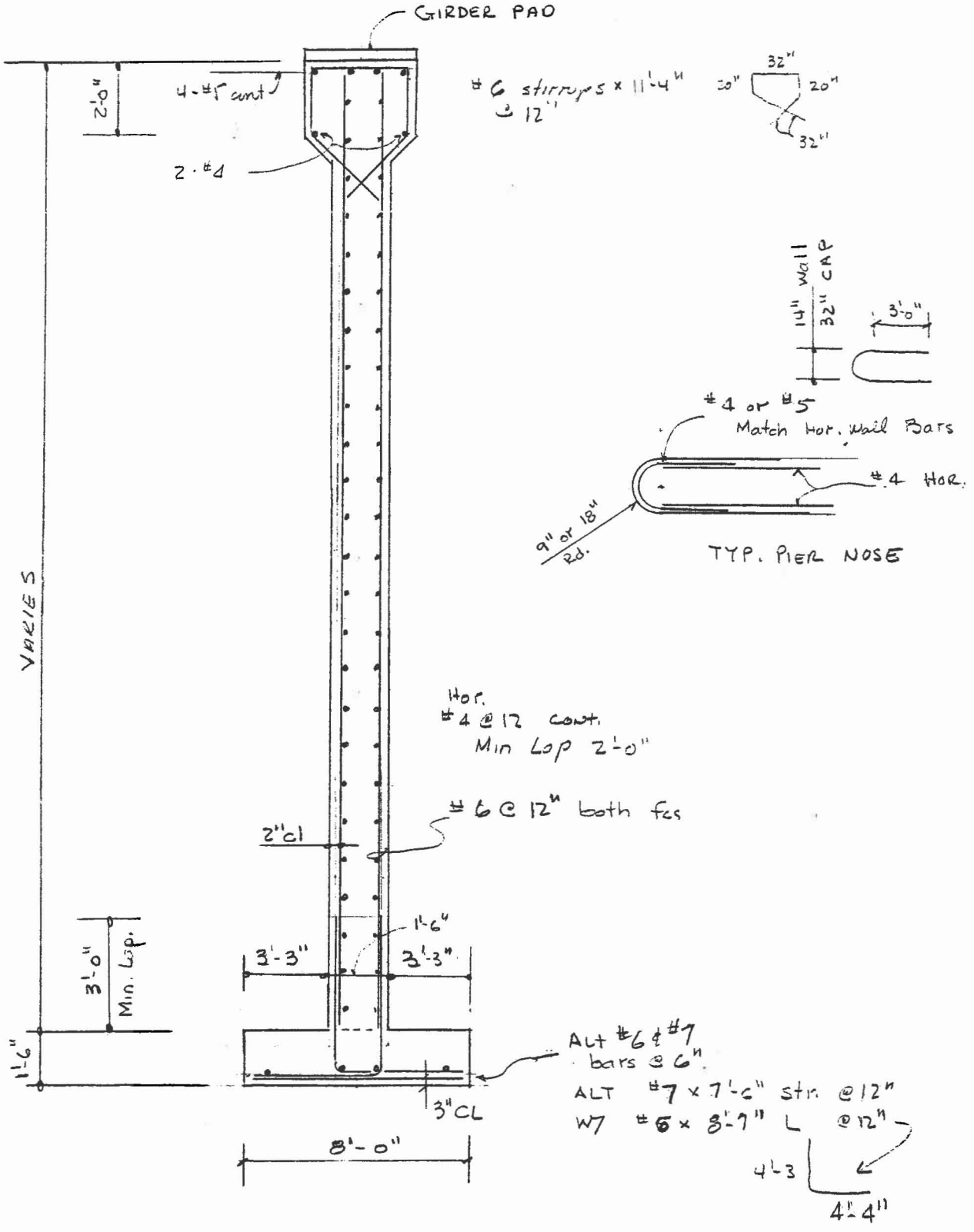

BENSON & GERDIN, INC. CONSULTING ENGINEERS PHONE (602) 264-0136	SHT. NO. 63 OF
	JOB NO. 2327 J
	BY MEK DATE 10-15-84
	CHKD. AG DATE 2-14-85
ABUTMENT	REV.

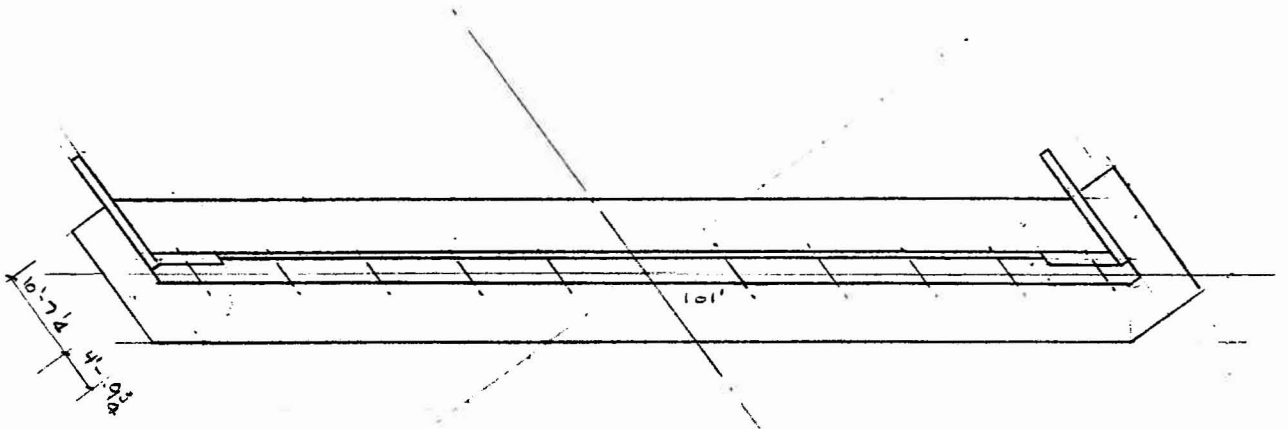

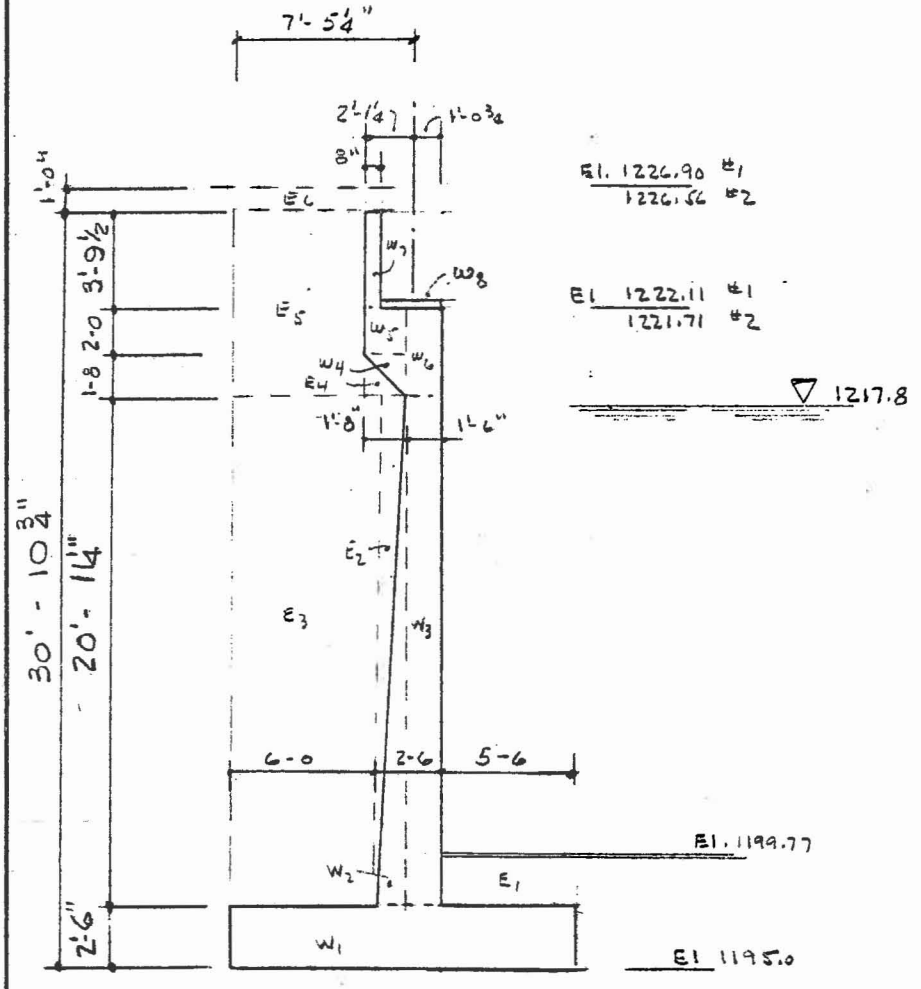

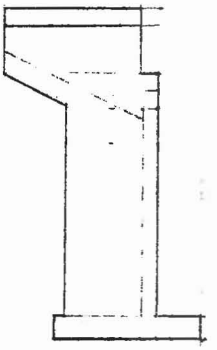

ABUTMENT

: APPROACH SLAB :

$f'_c = 3000$ $n = 9$

$f_r = 7.5\sqrt{f'_c} = .41$ ksi

$d = 12 - 3 - 1/2 = 8\frac{1}{2}$"

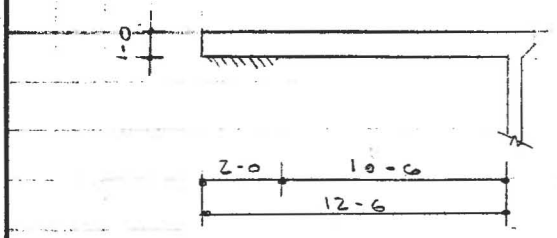

M_{cr}

$M'_{cr} = f_r \cdot S = .41 \times \frac{12 \times d^2}{6} \times 1/12$

$= .0683 d^2$

$1.2 M_{cr} = .082 d^2$

$A_{s\,min} = \frac{.082 \times 8.5^2}{1.44 \times 8.5} = .48$ in²

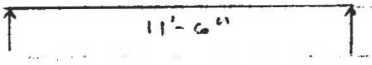

$S = 10\text{-}6 + 1 = 11'\text{-}6"$

$W = 1 \times 1 \times .15 = .15$ ksf

DL

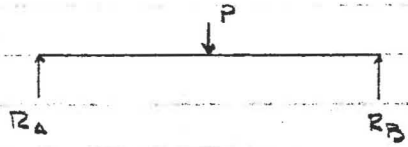

$M_{DL} = .15 \times \frac{11.5^2}{8} = 2.48$ k' ⟸

LL + I

$E = (4 + .05S) = 4.69$ § 3.24.3.2

$P = 16 \times 1.3 / 4.69 = 4.43$ k

$M_{LL+I} = 4.43 \times 11.5/4 = 12.74$ ⟸

	R_A	R_B
DL	.51 ksf	1.03 k
LL	1.11 ksf	2.22 k
Max R_{LL+I}	2.22 ksf	4.43 k
Max R_{LL}	1.71 ksf	3.41 k

$\Sigma M = 15.22$ k'

$A_s = \frac{15.22}{1.44 \times 8\frac{1}{2}} = 1.24 > A_{s\,min}$

#8 @ 7½ $A_s = 1.26$

$n\rho = \frac{9(A_s)}{12d} = .1112$ $k = 2/kj = 6.1$ $j = .88$

$f_c = M k/d^2 = 1.08$ ksi $f_s = \frac{12M}{A_s j d} = 16.22$ ksi

dist. steel $100/\sqrt{S} < 50 = 29\%$ § 3.24.10.2

$A_{s\,D} = .29 \times 1.24 = .36$ #5 @ 10"

Neg Mom @ Top

Assume (-) M = ¼ FEM

(-) $M = \left[\frac{3 \times 4.43 \times 11.5}{16} + \frac{.15 \times 11.5^2}{8}\right] \times \frac{1}{4} = 3.0$ k'

$n\rho = \frac{4.43}{12 \times 8.5^2} = .04$ ksi

$A_s = 3.0/1.44 \times 8.5 = .24 \times 4/3 = .32$ in² § 3.17.1

use #5 @ 12" ≅ .32

dist'r = $.29 \times .32 = .09$ #4 @ 12 min § 8.20.1

ABUTMENT

LIVE LOADS

$P = 16^K$ No Impact

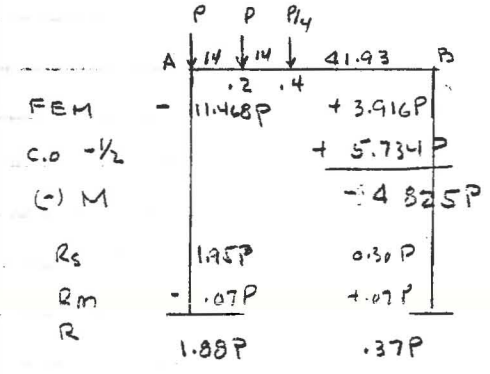

$FEM_A = PL\left(.8^2 \times .2 + .6^2 \times .4 \times 1/4\right) = .164\ PL$

$FEM_B = PL\left(.2^2 \times .8 + .4^2 \times .6 \times 1/4\right) = .056\ PL$

$R_A = 1.88 \times 16 = 30.1^K$ /WHEEL LINE

GOES

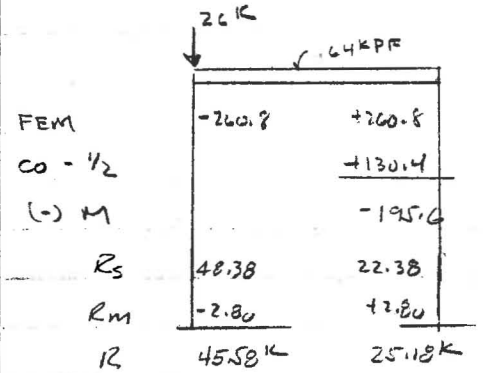

$FEM = wl^2/12 = 260.8$

$R_A = 45.58 \times 1/2 = 22.79^K$ /WHEEL LINE

TABLE, SHEET 54 $\times \frac{60.2}{81.9}$

Lanes →	1	2	3	4	5	
%	100	100	90	75	75	
ΣP KIPS	60.2	120.4	162.5	186.6	225.7	
ΣM KIP-FT	1685.6	2648.8	2600.7	1806.0	1173.9	
P/A	5.47	10.94	14.77	16.42	20.52	
± Mc/I	10.22	16.05	15.76	10.95	7.11	
R_{max}	15.69	26.99	30.53	27.37	27.63	EXT GIRDER
R_{min}	-4.75	-5.11	-0.99	+5.47	13.41	
± Mc/I	8.17	12.84	12.61	8.76	5.69	
R_{max}	13.64	23.78	27.38	25.18	26.21	1ST INT. GIRDER CONTROLS w/ DLR Sht 42
R_{min}	-2.70	-1.90	+2.14	+7.64	14.53	

Area of Girder Pds

$11 \times 1 = 11$

$I = 2\left(\bar{7.5}^2 + \bar{15}^2 + \bar{22.5}^2 + \bar{30}^2 + \bar{37.5}^2\right)$

$= 6187.5^{FT^4}$

$C = 37.5'$ EXT

$= 30.0$ 1ST INTER.

FOUNDATION STIFFNESS

$\alpha = 36°-42'-14''$

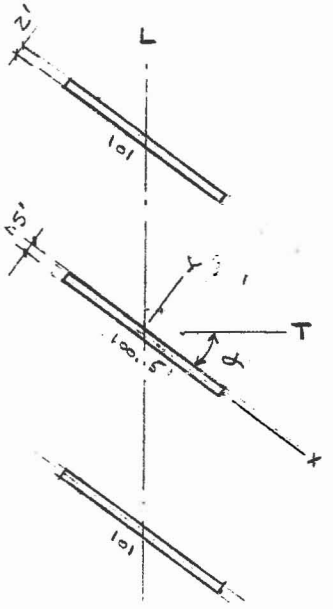

$h_p = 25.75'$ $\quad h_A = 25.44'$

$f'_c = 3$ ksi $\quad E = 3122$ ksi

TRANSFORM COORDINATES

$\Delta_T = \Delta_x \cos\alpha + \Delta_y \sin\alpha$ (1)

$\Delta_L = \Delta_x (-\sin\alpha) + \Delta_y \cos\alpha$ (2)

$A = t\ell \quad I_x = t\ell^3/12 \quad I_y = \ell t^3/12$

STIFFNESS = $1/\Delta$

PIER

$$\Delta_x = \frac{P_x \cdot h^3}{3EI_x} + \frac{1.2P_x h}{.4EA} = 1.4875\times10^{-8} P_x$$

$$\Delta_y = \frac{P_y h^3}{3EI_y} + \frac{1.2P_y h}{.4EA} = 5.3882\times10^{-6} P_y$$

EQ (1) $\quad \Delta_T = 3.2216\times10^{-5} P_T$

EQ (2) $\quad \Delta_L = 4.3190\times10^{-5} P_L$

ABUTMENT

E.M. Pad (SHT 46)

$\Delta_p = \frac{TP}{E_p \cdot A}$

$\Delta_T = 0$

$\Delta_L = \frac{.9375P}{160\times7\times21}$

$\Delta_L = 3.9352\times10^{-5}$

$$\Delta_x = \frac{P_x h^3}{3EI_x} + \frac{1.2P_x h}{.4EA} = 1.1092\times10^{-8} P_x$$

$$\Delta_y = \frac{P_y h^3}{3EI_y} + \frac{1.2P_y h}{.4EA} = 2.2663\times10^{-6} P_y$$

EQ(1) $\quad \Delta_T = 1.3634\times10^{-6} P_T$

EQ (2) $\quad \Delta_L = 1.8103\times10^{-6} P_L$

$\quad + \quad .3986\times10^{-6} P_L$

$\Delta_{L\,TOT} \quad 2.2089\times10^{-6} P_L$

	Transverse			Longitudinal		
	Δ_T	$1/\Delta_T$	%	Δ_L	$1/\Delta_L$	%
Abut #1	1.3634	.7335	.160	2.2089	.4527	.141
Pier	1.3222	3.1037	.680	.4319	2.3154	.718
Abut #2	1.3634	.7335	.160	2.2089	.4527	.141
		4.5706			3.2208	

ABUTMENT

HORIZONTAL LOADS

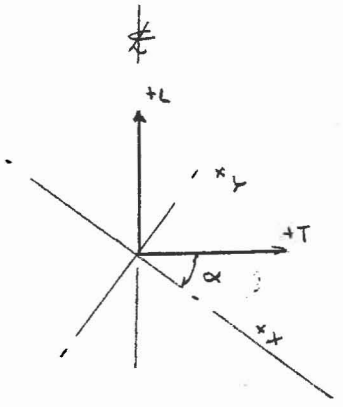

$\alpha = 36° 42' 14''$

$P_X = P_T \cos\alpha - P_L \sin\alpha$

$P_Y = P_T \sin\alpha + P_L \cos\alpha$

		TOTAL FORCE P_T	P_L	P_X	P_Y	SHT NO.
WIND:	$P_T \times 1$; $P_L \times .141$	+21.13	±1.73	+18.0	+14.0	43
		-1.46	±1.73	-2.2	-2.3	
WL:	$P_T \times 1$; $P_L \times .141$	+5.79	± .79	+5.1	+4.1	43
		- .40	± .79	-0.8	-0.3	
LF:	$14.5 \times .141$	-	+2.0	-1.2	+1.6	45
			-2.0	+1.2	-1.6	
T		-	+3.2	-1.9	+2.6	46
		-	-4.2	+2.5	-3.4	⇐ Per Girder

EARTH PRESSURE

SURCHARGE: Appr. Slab - 150 psf

$h' = 150/135 = 1.1$ FT.

GRANULAR BACKFILL - 135 pcf

EFP = 30 psf/FT Normal

EFP = 55 psf/FT AT REST

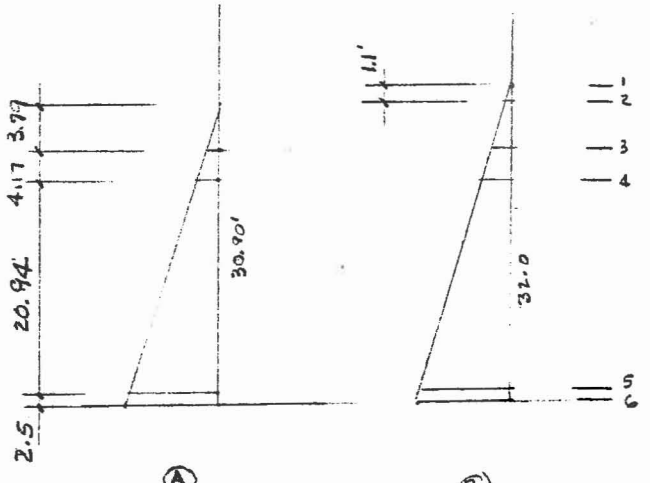

Ⓐ

CONSTR. LOADS

30 psf/FT

Ⓑ

STABILITY

30 psf/FT

SERVICE LOAD

55 psf/FT

PSF

	Ⓐ	Ⓑ	
	q_{30}	q_{30}	q_{55}
1	-	⊖	⊖
2	⊖	33.0	60.5
3	113.7	146.7	269.0
4	238.8	271.5	498.3
5	867	900.0	1650.0
6	927.0	960.0	1760.0

ABUTMENT

- STABILITY -

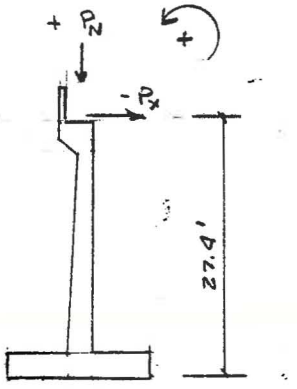

EXTERNAL NORMAL LOADS PER FT.

	P_N	GROUP I 100%	II 125%	III 125%	IV 125%	V 140%	VI 140%	SHT #
DL. Appt. S.	1.0[k]	1.0	0.8	0.8	0.8	0.7	0.7	64
Girder	6.5[k]	6.5	5.2	5.2	5.2	4.6	4.6	42
LL	2.9	2.9	-	2.3	2.3	-	2.1	65
B	-4.8	-4.8	-3.8	-3.8	-3.8	-3.4	-3.4	
W	+1.4		+1.1	+0.3		+1.0	+0.3	44
W ALT	-3.3		-2.6	-0.8		-2.4	-0.7	
ΣP_N (max)		5.6	3.3	4.8	4.5	2.9	4.3	
ΣP_N (min)		5.6	-0.4	3.7	4.5	-0.5	3.3	

EXTERNAL HOR. LOADS P_x

	P_x	GROUP I 100%	II 125%	III 125%	IV 125%	V 140%	VI 140%	SHT No
DL	-							
LL	-							
B	-							
W	+.14		+.11	+.03		+.10	+.03	67
W ALT	-.02		-.02	-		-.01	-	
WL	+.04		+.03	+.01		+.03	+.01	67
LF	+.02			+.02			+.01	67
LF ALT	-.02			-.02			-.01	
T	+2.6				+2.1	+1.9		67
	-3.4				-2.7	-2.4		
ΣP_x (max)			.14	.06	+2.1	+2.0	+.05	
ΣP_x (min.			-.02	-.02	-2.7	-2.4	-.01	

ABUTMENT

- STABILITY -

See SHEET 63 for Area designation

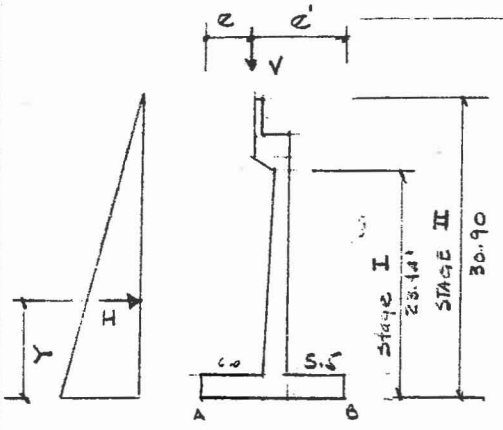

WALL ABOUT A	KIPS V	e	KIP-FT M
W_1: 2.5 × 14.0 × .15	5.25	7.00	36.75
W_2: 1.0 × 20.94 × ½ × .15	1.57	6.67	10.48
W_3: 1.5 × 20.94 × .15	4.71	7.75	36.51
Σ_W STAGE I	11.53	7.26	83.74
W_4: $\overline{1.67}^2$ × ½ × .15	.21	6.44	1.35
W_5: 2.0 × 1.67 × .15	.50	6.17	3.09
W_6: 1.5 × 3.67 × .15	.82	7.75	6.40
W_7: .67 × 3.79 × .15	.38	5.67	2.16
W_8: 2.5 × 3.0 × .15 × 1/9.35	.12	7.25	.87
Σ_W stage II	13.57	7.19	97.61

OVERTURNING	KIPS H	Y	KIP-FT M
STAGE I	8.1	7.81	63.26
STAGE II	14.3	10.3	147.29
SURCHARGE	1.1	16.0	17.60
Σ_{TOT}	15.4		164.89

EARTH ABOUT A	KIPS V	e	KIP-FT M
E_1: 2.27 × 5.50 × .135	1.68	11.75	19.80
E_2: 1.0 × 20.94 × ½ × .135	1.41	6.33	8.95
E_3 6.0 × 20.94 × .135	16.96	3.00	50.88
Σ_E STAGE I	20.06	3.97	79.64
E_4: $\overline{1.67}^2$ × ½ × .135	.19	5.89	1.11
E_5: 5.33 × 7.46 × .135	5.37	2.67	14.33
Σ_E STAGE II	25.62	3.71	95.08
E_6: 1.6 × 5.33 × .15	.80	2.67	2.13
Σ_E SURCHARGE	26.47	3.67	97.21

RESISTING ABOUT B	V	e'	M
Σ_{W_I}	11.53	6.74	77.71
Σ_{E_I}	20.06	10.03	201.20
STAGE I	31.59	8.83	278.91
Σ_W II	13.57	6.81	92.41
Σ_E II	25.67	10.33	265.17
STAGE II	39.24	9.11	357.58

STAGE I $FS_{(OVERTURNING)} = 278.91/63.26 = 4.4$ $FS_{(SLIDING)} = \frac{.4 \times 31.59}{8.1} = 1.56$

STAGE II $FS_{(overturning)} = 357.58/147.29 = 2.4$ $FS_{(SLIDING)} = \frac{.4 \times 39.24}{14.3} = 1.10$

passive $P = .35 \times \frac{\overline{4.77}^2}{2} = 4.0^{k}$ $FS_{(SLIDING)} = \frac{.3 \times 39.24 + 4}{14.3} = 1.10$

ABUTMENT

: FOOTING Design :

$W/6 = 14/6 = 2.33'$

STAGE II: $e = \frac{339.98}{39.24} - \frac{14}{2} = 1.66$

"R" - IN MID 1/3

$q = \frac{\Sigma P_N}{W}\left(1 \pm \frac{6e}{W}\right)$

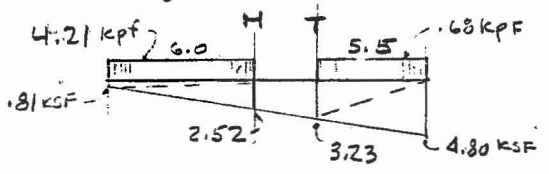

STAGE II	P_x	P_N	e/Y	M
Σ_W II		13.57	7.19	97.61
Σ_E II		25.67	3.71	95.08
Σ_{OT} II	14.30		10.3	147.29
Σ STAGE II	14.30	39.24		339.98
	V_H	M_H	V_T	M_T
	-15.3 K	-50.9	+20.4	+166.7

Group I (No Bouyancy)

$e = \frac{437.09}{50.44} - \frac{14}{2} = 1.74$

"R" in mid 1/3

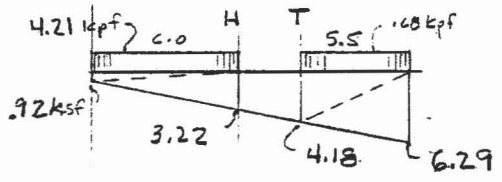

Group I	P_x	P_N	e/Y	M
$\Sigma_{W\text{-}E}$ surcharge	15.40	40.04		359.71
Group I (No B)	-	10.4	7.44	77.38
Σ Group I	15.40	50.44		437.09
	V_H	M_H	V_T	M_T
	-12.8	-45.4	+27.8	+74.2

Group IV (No Bouyancy)

$e = \frac{495.44}{48.34} - \frac{14}{2} = 3.25$

"R" OUT MID 1/3

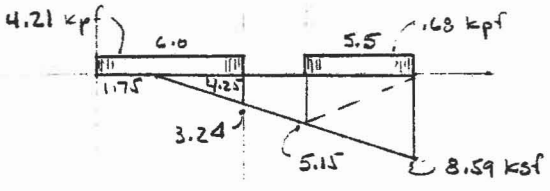

$x = \left(\frac{14.0}{2} - 3.25\right)3 = 11.25'$

$q_{max} = \frac{2 \times 48.34}{11.25} = 8.59 < 10$ ok

Group IV (MIN)	P_x	P_N	e/Y	M
$\Sigma_{W\text{-}E}$ surcharge	15.4	40.04		359.71
Group IV		8.3	7.44	61.75
	(-)2.7		27.4	73.98
Σ Group IV	18.1	48.34		495.44
	V_H	M_H	V_T	M_T
	-18.4	-66.0	+37.5	102.30

Govs ⟸ Toe

V @ 5.5 - 2.2' = 3.3'

$q_{3.3} = 6.0^T$

V = 21.9 KPF

ABUTMENT

: Footing Design :

$f'_c = 4$ ksi $n = 8$

$f_r = 7.5\sqrt{f'_c} = .47$ ksi

$n\sqrt{c} = 0.95\sqrt{f'_c} = .06$ ksi

$K = 272$ Gr 40

246 Gr 60

$1.2 M_{cr} = 1.2 \times .47 \times \frac{12 d^2}{6} \times \frac{1}{12} = .094 d^2$

$A_{s\,min} = \frac{.094 d^2}{ad} = .065 d$ Gr 40

$.053 d$ Gr 60

CK FTG FOR SLIDING

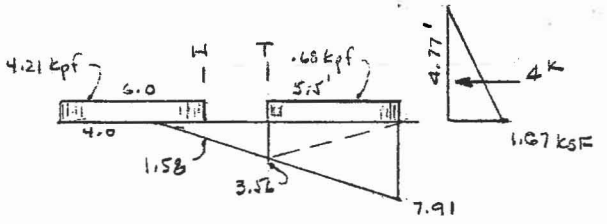

$P_p = .35$ ksf/FT

SLIDING = .3/.4 × R

$P_{n\,(min)}$	P_x	P_M	$e/_f$	M
Σ W.E surcharge	15.4	40.04		359.71
Group V		- .50	7.44	- 3.72
	2.4		27.4	65.76
	17.8	39.54		421.75
	V_H	M_H	V_T	M_T
	-23.7	-74.7	30.67	87.4

$e = \frac{421.75}{39.54} - \frac{14}{2} = 3.67$ OUT MID 1/3

$x = (\frac{14}{2} - 3.67)3 = 10'$

$q_{max} = \frac{2 \times 39.54}{10} = 7.91$ ksf

SLIDING RESISTANCE REQ'd $1.5 \times 17.8 = 26.7^{KPF}$

PROVIDED $.3 \times 39.54 + 4 = 15.9^{KPF}$

Provided by Conc. floor Slab 10.8^{KPF} ACTUAL to FLOOR SLAB = 1.9 kpf

Max heel $V = 4.21 \times 6 = -25.3^{KPF}$ $M = 4.21 \times \frac{6^2}{2} = -75.8^{K'}$

$Ve\ 6 - 2.3 = 3.7' \times .421 = 15.6^{KPF}$

Req'd d

$d_V = \frac{V}{12(.0.6)}$ $d_M = \sqrt{\frac{M^{K/FT}}{.246}}$

		Heel		Toe	
		V	M	V	M
T = 2'-6"	V/M	-15.6	-75.8	21.9	+102.3
	$d_{req'd}$	21.7"	17.6"	30.4"	20.4
T = 2'-9"	V/M	-14.9		20.3	
	$d_{req'd}$	20.7"		28.2"	

use FTG T = 2'-9" > 2'-6" OK

ABUTMENT

- FOOTING DESIGN -

HEEL

$d = 33" - 2.5" = 30.5"$

$M = -75.8^{K'}$

$A_s = \frac{75.8}{1.76 \times 30.5} = 1.41^{\square"}$ # 8 @ 6" = 1.58

$A_{s\,min} = .065 \times 30.5 = 1.98$ Gr 40

$= .053 \times 30.5 = 1.62$ Gr 60

$V_H = 4.21\left(6 - \frac{30.5}{12}\right) = 14.6^{K}$

$np = \frac{8(A_s)}{12(d)} = .0345$ $\quad k = 2/kj = 9.4$ $\quad j = .92$

$f_c = \frac{14.6}{(12 \times 30.5)} = .04$ ksi

$< .06$ OK

$f_c = M k/d^2 = .76$ ksi $\quad f_s = \frac{12M}{A_s j d} = 20.51$ ksi

NOTE: EXTEND # 8 bars 3'-6" min beyond back of wall

Pos. Mom @ Heel

$g = \frac{13.57}{14} - .17 \times 2.5 = .6^{KSF}$

$M = .6 \times 2^2 \times 1/2 = 10.8^{'K}$

$d = 33 - 3.5 = 29.5$

$A_s = \frac{10.8}{1.44 \times 29.5} = .25 \times 1/3 = .34$

$A_{s\,min} = .065 \times 29.5 = 1.92$

5 @ 11"

TOE

$d = 33 - 3.5 = 29.5$

$M = 102.3^{K'}$

$A_s = \frac{102.3}{1.76 \times 29.5} = 1.97$ # 9 @ 6" $2.00^{\square"}$

$A_{s\,min} = .053 \times 30.5 = 1.62$

$V_T = 19.2^{K}$

$f_c = 19.2/(12 \times 32.5) = .05$ OK

$np = \frac{8(A_s)}{12(d)} = .0452$ $\quad k = 2/kj = 9.9$ $\quad j = .93$

$f_c = M k/d^2 = 1.16$ ksi $\quad f_s = \frac{12M}{A_s j d} = 22.37$ ksi

ABUTMENT

- Wall Design -

Hor. Earth

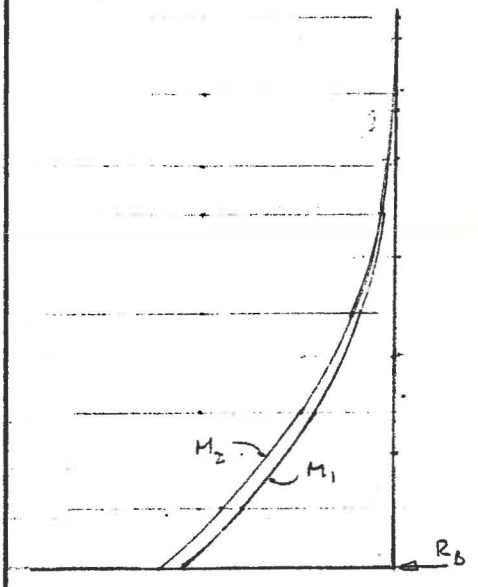

M_1 (BACKFILL ONLY) $= .03\frac{X^3}{6}$

M_2 (BACKFILL + Surch.) $= M_1 + .933\frac{X^2}{2}$

$X_{MAX} = 27.9'$

X	M_1	M_2	V_2
3.79'	0.27	0.51	0.3
7.46'	2.08	2.99	1.1
10.00	5.00	5.41	1.8
15.00	16.88	20.59	3.9
20.00	40.00	46.60	6.7
25.00	78.12	88.44	10.2
27.90	108.59	121.43	12.6

$R_B (M_1) = 11.7^K$

$R_B (M_2) = 12.6^K$

Ext. Loading

	P_N K	e	M K'	P_x K	y	M K'
			M @ x = 27.9			+M ↺
Group I	5.6	-.19	-1.06	-		-
(No B)	10.4	-.19	-2.00	-		-
Group IV (max)	8.3	-.19	-1.58	-2.7	23.4	-63.2
(Min)	4.5	-.19	-.86	+2.1	23.4	+49.1
Group V (Min	-.50	-.19	+.10	+2.0	23.4	+46.8

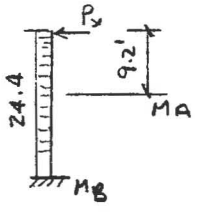

Addt E.P caused by hor. load.

$P_x = \frac{3wl}{8}$ $P_x = 2.1$ $w = .23$ kpf

$R_B = 3.5^K$

$M_A = \frac{9}{128} \cdot .23 \times 24.4^2 = +9.62$

$M_B = .23 \times 24.4^2 \times 1/8 = -17.1^{K'}$

$M_{7.46} = 2.1 \times 3.9 - .23 \times 3.9^2 \times 1/2 = +6.0$

ABUTMENT

- Wall Design -

Δ EP

AT REST = 55 psf/F

EFP = 30 psf/F

Δ_{EP} = 25 psf/F

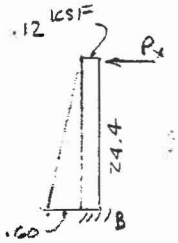

$(-)M_B = .12 \times \frac{24.4^2}{2} \times \frac{1}{3} + .12 \times \frac{24.4^2}{15} = 13.7^{K'}$

$P_x = .12 \times \frac{24.4}{2} + .6 \times 24.4 \times \frac{1}{6} - 13.7/24.4 = 3.34^K \therefore R_B = 6.9^K$

$(+)M_{MAX}$ @ 12.3'

$(+)M = 3.34 \times 12.3 - .12 \times \frac{12.3^2}{2} - .30 \times \frac{12.3^2}{6} = +24.1^{K'}$

$(+)M_{7.46'} = 3.34 \times 7.46 - .12 \times \frac{7.46^2}{2} - .13 \times \frac{7.46^2}{6} = +19.9^{K'}$

Mom @ Base of Corbel

M @ x = 7.46' (+M)

	P_N^K	e	$M^{K'}$	P_x^K	y	$M^{K'}$
Group I (No LL)	2.7	.31	+.84	-		
(No B or LL)	7.5	.31	+2.32	-		
ALT { LL girder	2.9	.31	+.90	-		
ALT { LL App. Slab	3.41	2.08	+7.10	-		
Σ Group I	6.11		+7.94			
(No B)	10.91		+9.42			
Group IV MAX	9.41		+8.96	+2.1	3.9	+8.19
Group V min.	-.5	.31	-.16	-2.4	3.9	-7.8

GOVS

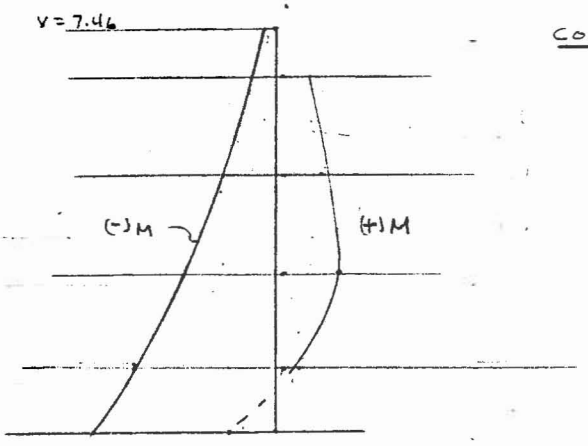

COMBINED V & M wall

WALL T			Backface		Front Face	
	P_N	x	V	M	V	M
18"	4.5	7.46	+3.8K	-10.8	-4.9K	+33.2
19.5"	5.5	10.00	+4.2	-22.7	-3.5K	+34.8
22.4"	7.6	15.00	+6.3	-51.4	+1.7	+36.6
25.4"	9.6	20.00	+9.1	-90.9		+21.6
28.3	11.6	25.00	+12.6	-146.2		-48.3
30"	12.8K	27.90	+15.0	-184.6		

WALL DESIGN

BACK FACE

BASE

$M = -184.6^{K'}$
$V = 15.0^{K}$
$d = 30 - 2.5 = 27.5$

$A_s = \frac{184.6}{1.76 \times 27.5} = 3.81^{\square''}$ #9@3" $A_s = 4.00$
$A_{s\,MIN} = .053 \times 27.5 = 1.46^{\square''}$

$np = \frac{8(Ac)}{12(d)} = .0970$ $\gamma = 2/Rj = 6.4$ $j = .88$
$M_c = 1.6 \times 27.5^2 \times 1/6.4 = 189.1 > 184.6$ OK
$M_s = 24 \times 4.00 \times .88 \times 27.5 \times 1/12 = 193.6$

CUT-OFF ½ - #9's

#9@6" $A_s = 2.00$

Try c.o. 9'-6" above base $x = 18.4$
$T = 24.4$ $d = 24.4 - 2.5 = 21.9"$
$M = -77.0^{K'}$

$np = .0609$ $\gamma = 7.56$ $j = .90$
$M_c = 101.5^{K'}$ $M_s = 78.8 > 77.^{K'}$ OK
∴ CUTOFF ½ #9 @ 9'-6" above footing

CUT-OFF - ¾ - #9

#9@12" $A_s = 1.00$

Try C.O. 16'-3" above base $x = 11.65$
$T = 20.5"$ $d = 20.5 - 2.5 = 18"$
$M = -32.2^{K'}$

$np = .0370$ $\gamma = 9.14$ $j = .92$
$M_c = 56.7^{K'}$ $M_s = 33.1 > 32.2$ OK
∴ CUT-OFF #9 @ 16'-3" above ftg

FRONT FACE

$M_{MAX} = +36.60$
$d = 22.4 - 2.5 = 19.9"$

$A_s = \frac{36.60}{1.76 \times 19.9} = 1.04^{\square''}$
$A_{s\,min} = 19.9 \times .053 = 1.05^{\square''}$ #8@9"

$np = .0352$ $\gamma = 9.33$ $j = .92$

$f_c = M/d^2 = .86$ ksi
$f_s = 12M/A_s jd = 22.85$ ksi

Wall Design.

@ Base of Corbel

(+) $M = +33.2$

$d = 18 - 2\frac{1}{2} = 15.5''$

$A_s = \frac{33.2}{1.72 \times 15.5} = 1.22$ ← GOVS

$A_{s\,min} = .053 \times 15.5 = .82$

7@6" $A_s = 1.20$

$n\rho = \frac{8(A_s)}{12(d)} = .0516$ $\quad k = \frac{2}{kj} = 8.04$ $\quad j = .91$

$f_c = {}^{M}/_{d^2} = 1.11$ ksi

$f_s = 12M/A_s jd = 23.54$

use #7@6"

Parapet Wall

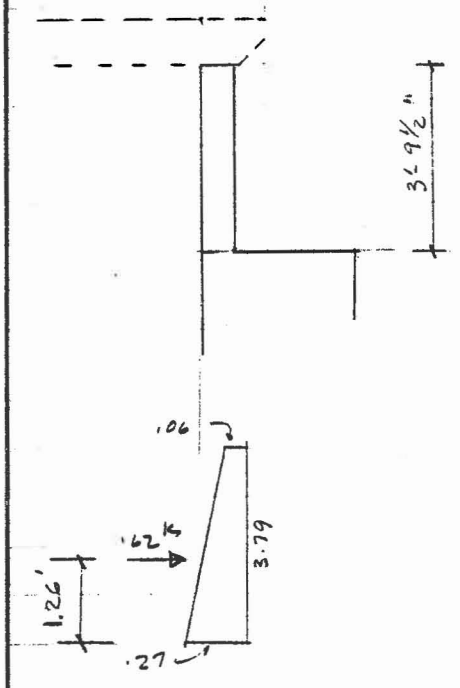

E.P. = 55 psf/FT.

$.06 \times 3.79 + .21 \times 3.79 \times \frac{1}{2} = .62^K$

$M = .62 \times 1.26 = .79^{K'}$

$d = 8'' - 2 - \frac{1}{2} = 5.5''$

$A_s = {}^{.79}/_{1.44 \times 5.5} = .10^{\square''}$

$A_{s\,min} = .065 \times 5.5 = 0.36^{\square''}$

5@10"

BENSON & GERDIN, INC. CONSULTING ENGINEERS PHONE (602) 264-0138	SHT. NO. 77 OF
	JOB NO. 2327 S
	BY MEK DATE 11-5-84
	CHKD. AG DATE 2-14-85
ABUTMENT	REV.

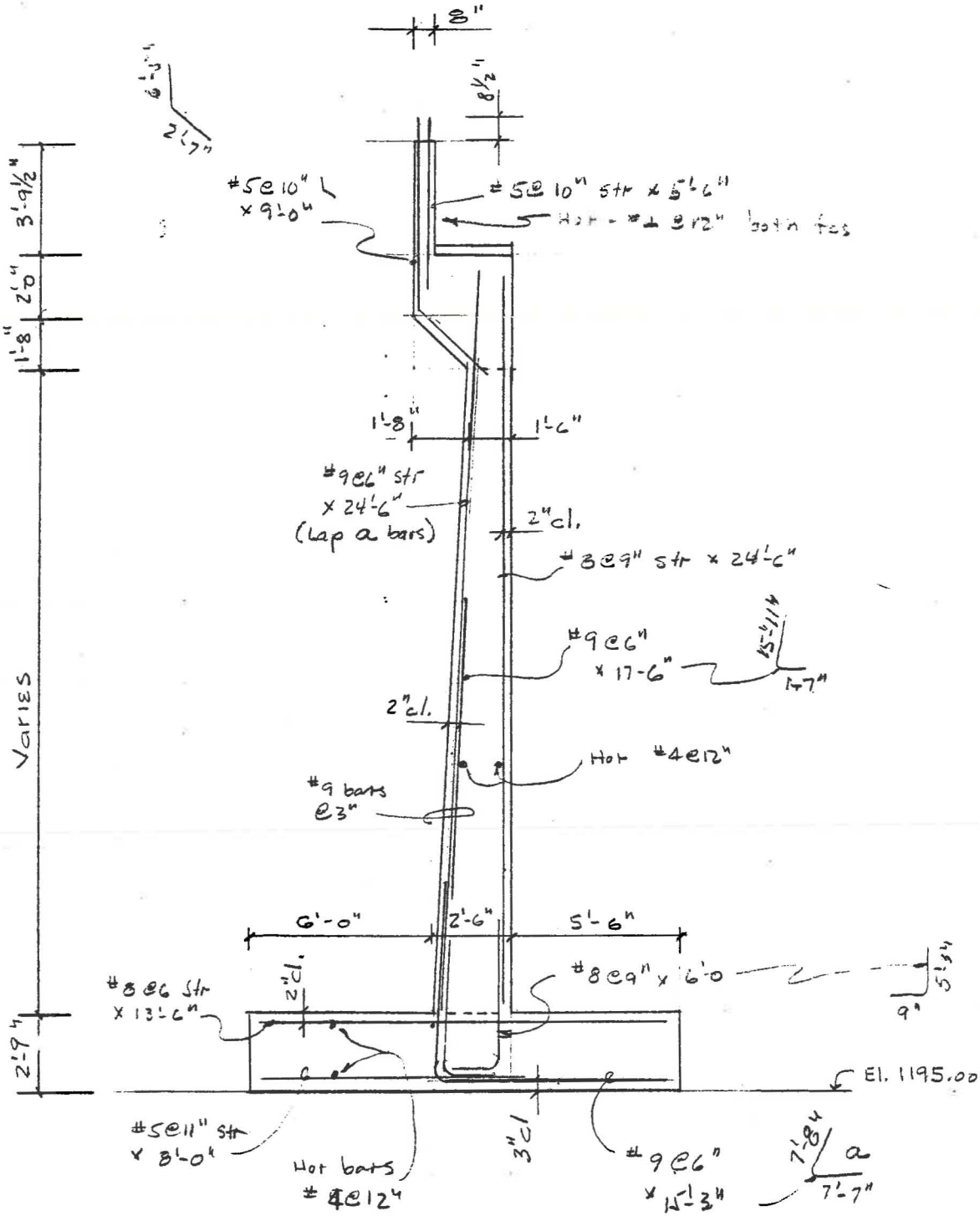

ABUT. RETAINING WALLS

ABUT #1

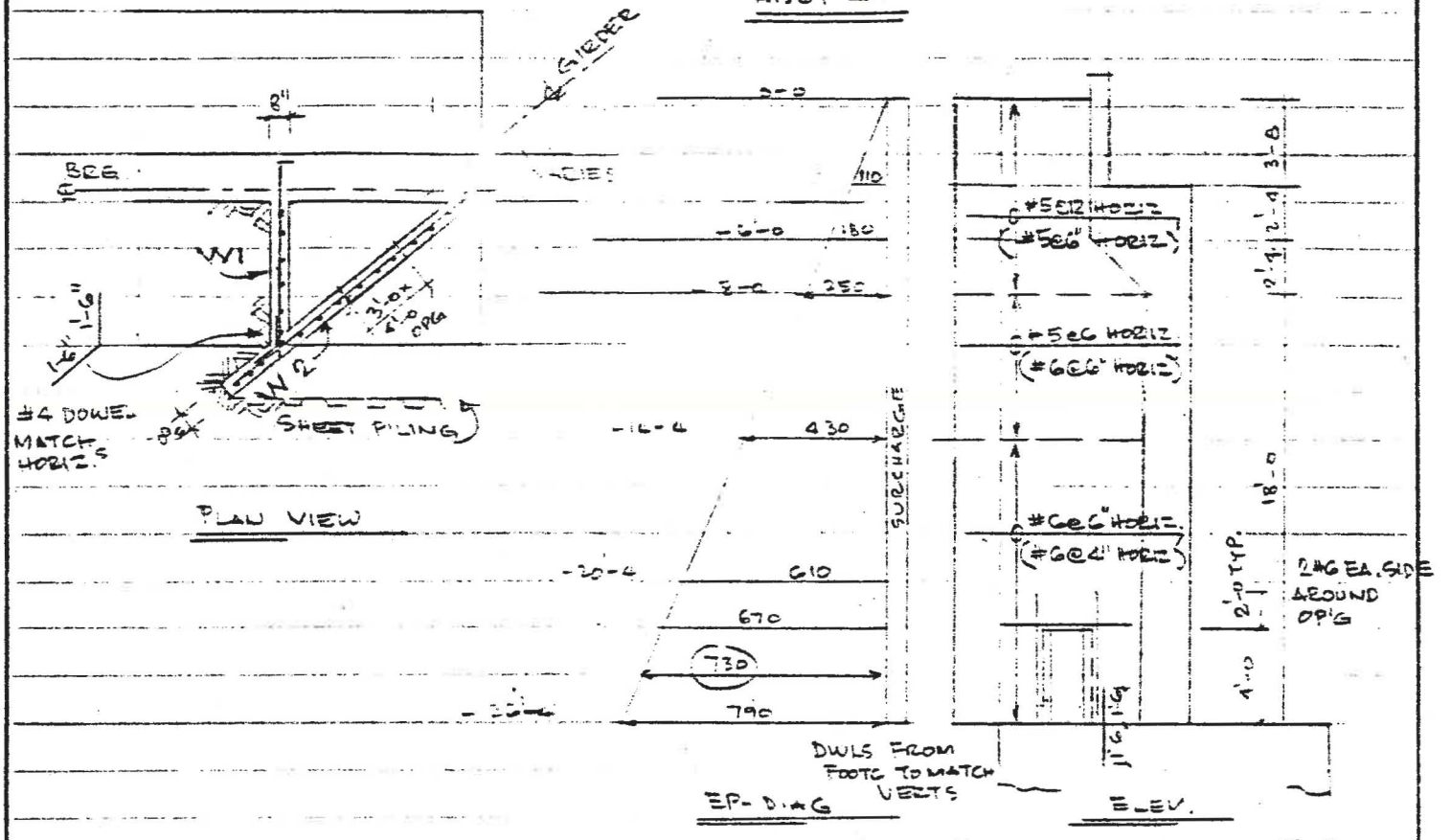

HORIZ. WALL REINF. FOR W1, W2, W3 & W4. (W3 IN PARENTHESIS)

WALL W1

(1) FIRST 6'-0 ABOVE FOOTING

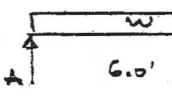

$w_H = 7.90 - 2(.30) + .90 = 8.20^{\#}/_{'}$

$M_B = -wL^2/8 = 3.69^{K'}/_{'}$ $K = .226$ $d_{R'd} = 6"$

$T = 1.42^K + 3.10 = 4.52^K$

$A_s^{R'd} = \frac{M}{1.44d} + T/f_s = .64 + \frac{4.52}{20} = .87\,in^2$

#6@6" $d = 6"$ $n = 8$

RESOLVE REACTION @ A IN COMPONENTS:

$A_s = .88 - .23 = .65\,in^2$

$n\rho = \frac{8(.65)}{12(6)} = .108$ $k = .37$ $j = .877$ $y = 6.17$

$\alpha = 52°31'10"$ $R_A = \frac{3}{8}wL = 1.845^K/_{'}$

$M_C = 1.6\,d^2/y = 4.15 > M$ $M_C = A_s f_s j d/12 = 3.80 > M$

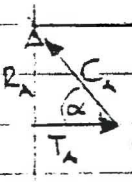

USE 8" WALL

$A_{SH} = .88\,in^2$ #6@6" @ WL. ℄ HORIZONTALLY

$A_{SV} = .31\,in^2$ #5@12" " " VERTICALLY

$T_A = R_A/\tan\alpha = 1.42^K$

$C_A = R_A/\sin\alpha = 2.33^K$

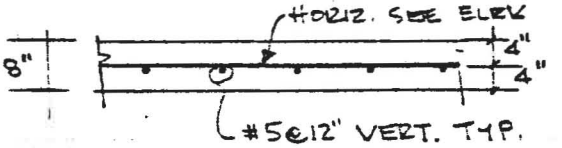

BENSON & GERDIN, INC. CONSULTING ENGINEERS PHONE (602) 264-0138 | SHT NO. 79 OF
JOB NO. [illegible]
BY AG DATE 12-20-84
CHKD. DATE
REV.

ABUT RETAINING WALLS

ABUT. #1

WALL W1 CONT'D

(2) SEC. 6'-0 TO 12'-0 ABOVE FTG

$R_A = 3/8\,wL = 1.58$ $\quad w_H = 610 + 90 = 700 \quad L = 6.0'$

$T_A = 1.21^k/'$ W1 $\quad (-)M = w_H (L)^2/8 = 3.15 \quad a = 1.44 \quad d = 4$

$T_A = 2.65$ W2 $\quad (-)A_s = M/ad = .55\,in^2 + 3.86/20^{.19} = .74\,in^2$

$\Sigma T = 3.86$ $\quad np = 8(.55)/12(4) = .092 \quad j = .88 \quad \gamma = 6.5$

$M_s = .55(20)\,jd/12 = 3.2 > M$

$M_c = 1.6(4)^2/6.5 = 3.9 > M$ o.k. USE #6@6 HORIZ.

(3) SEC. 12'-0 TO 18'-0 ABOVE FTG

W1
$\Sigma T = .90 + 2.0 = 2.90$ $\quad w_H = 430 + 90 = 520 \quad R_A = 1.17 \quad T_A = .90$

$M = w_H L^2/8 = 2.34$

$A_s^{RD} = M/1.44(4) + 2.9/20 = .56\,in^2$ (.41, .15)

#5@6" $\quad L = .62 - .15 = .47\,in^2 > .41$

USE #5@6" HORIZ.

MIN. $A_{s_H} = .0025(12)8 = .24\,in^2$

(4) SEC. 18'-0 TO TOP OF WALL

$w_H = 250 + 90 = 340 \quad L \le 5.0 \quad R_A = .64 \quad T_A = .49$

$\Sigma T = .49 + 1.3 = 2.29$ $\quad M = -w_H L^2/8 = 1.07$

$A_s = M/1.44(4) + 2.29/20 = .18 + .12 = .30\,in^2$

USE #5@12" HORIZ.

WALL W2 (DIVIDE INTO SAME SECTIONS AS W1)

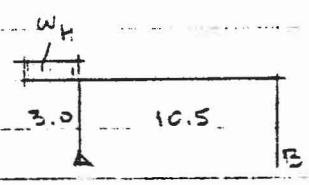

(1) $w_H = 820\,\#/'$

$M_A = w_H (3)^2/2 = 3.70^{k'}$

$R_A = 3(w_H) = 2.46^k$

$T_A = R_A/\sin\alpha = 3.10^k/'$

(2) $w_H = .70 \quad M_A = .7(3)^2/2 = 3.15 \quad R_A = 2.1$

$T_A = R_A/\sin\alpha = 2.65$

ABUT RETAINING WALLS

ABUT #1

WALL W2 (CONT'D)

(3) $w_H = .520$ $M_A = .52(3)^2/2 = 2.34$ $R_A = 3w_H = 1.56$

$T_A = R_A/\sin\alpha = 2.0$

(4) $w_H = .34$ $M_A = 1.53$ $R_A = 1.02$ $T_A = 1.3$

USE SAME REINF AS FOR WALL W1

ABUT. #2

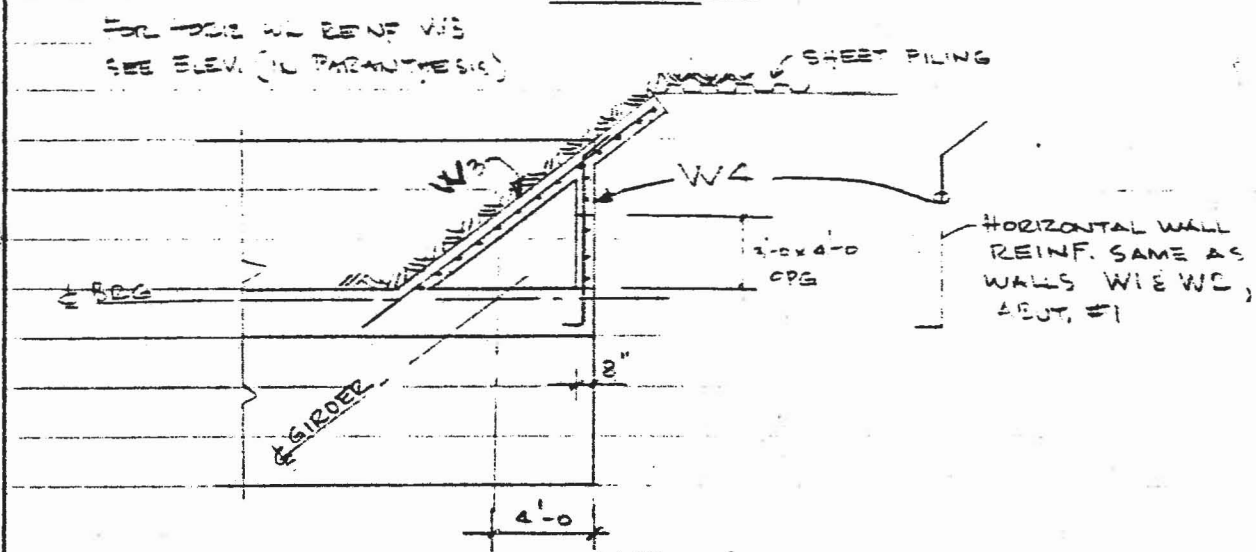

W3: (DIVIDE INTO SAME SECTIONS VERTICALLY AS W1)

(1) T. FTG. TO 6'-0 ABOVE FTG

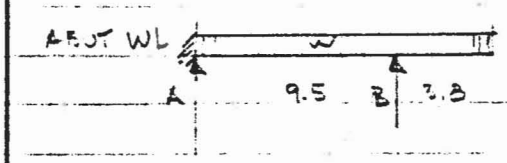

$w_H = 820\#/'$

$M_B = -w(3.8)^2/2 = 5.92^{k'}$ ±

$M_A = +\frac{1}{2} M_B = 2.96$

$R_B = w(13.3)^2/2(9.5) + M_A/9.5 = 7.94^k$

$T_B = R_B/\tan\alpha = 6.1^k$

$A_s^{R'D} = M_B/1.44(4) + T_B/20 = 1.33\ in^2$

6@4" $\Sigma A_s = 1.32\ in^2$ $A_s = 1.32 - .31 = 1.01$

$np = 8(1.01)/12(4) = .168$ $k = .436$ $j = .855$ $\gamma = 5.37$

$f'_c = 4500$ $M_c = 1.8(4)^2/\gamma = 5.36^{k'}$ $M_{FACE} = w3.5^2/2 = 5.0 < M_c$ o.k.

$M_s = 1.01(20)jd/12 = 5.90 > M_{FACE}$ o.k.

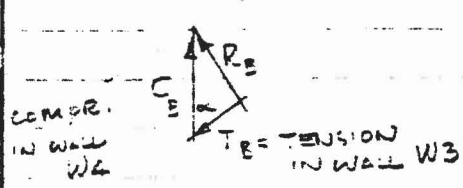

ABUT RETAINING WALLS

ABUT. #2

W3 CONT'D

(2) SEC. 6'-0 TO 12'-0 ABOVE FTG

$w = 700\#/'$

$M_B = -w(3.8)^2/2 = 5.05$

USE SEC. 1 #6 @ 4' HORIZ.

(3) SEC 12'-0 TO 18'-0 ABOVE FTG

$w_H = 520$

$M_B = -w(3.8)^2/2 = -3.75$ $M_{FACE} = w\,3.5^2/2 = 3.2^{k'}$

$M_A = 1.88$

$R_B = w(13.3)^2/19 + M_A/9.5 = 5.04^k$ (4.84, .20)

$T_B = R_B/\tan\alpha = 3.9$

$A_s^{RD} = M_{FACE}/1.44(4) - T_B/20 = .76$ (.56, .20)

USE #6 @ 6" $\Sigma A_s = .88$

$A_s = .88 - .20 = .68 > .56$ OK.

(4) SEC. 18'-0 ABOVE FTG TO TOP OF WL.

$w_H = 340\#/'$

$M_B = -w\,3.8^2/2 = -2.46$ $M_{FACE} = w\,3.5^2/2 = 2.1^{k'}$

$M_A = 1.23$

$R_B = w\,13.3^2/19 + M_A/9.5 = 3.30^k$ (3.17, .13)

$T_B = R_B/\tan\alpha = 2.53^k$

$A_s^{RD} = M_{FACE}/1.44(4) - T_B/20 = .49$ (.36, .13)

USE #5 @ 6" $\Sigma A_s = .62\ in^2$

VERT. WALL REINF. #5 @ 12"

WALL W4

NO EARTH PRESSURE.

USE SAME REINF AS FOR WLS W1 & W2

Post - Tension Girder ALT.

$f'_{ci} = 4.4$ ksi

$f_s' = 270$ ksi $\quad f'_c = 5$ ksi

INIT. $f_t = -3\sqrt{f'_{ci}} \quad f_b = .55 f'_{ci}$

Final $f_t = .4 f'_c \quad f_b = -6\sqrt{f'_c}$

Girder Properties (SHT 19)

Girder Only				Composite			
A	I	y_t	y_b	A	I	y_t	y_b
$560^{\square''}$	$125390^{''4}$	24.73"	-20.27"	$1190^{''2}$	$373461^{''4}$	9.52"	-35.48"
S_t	S_b	$k_T = r^2/y_b$	$k_b = r^2/y_t$	S_t	S_b	$k_t = r^2/y_b$	$k_b = r^2/y_t$
$5070^{''3}$	$-6186^{''3}$	-11.05"	+9.05	$39229^{''3}$	$-10526^{''3}$	-8.84	32.96

Girder Stress (SHT 21)

(-) Tension		1/4 PT		℄	
	M	f_t	f_b	f_t	f_b
M_G	$350^{'K}$	.620	-.508	.828	-.679
$M_{DL\ (NC)}$	$478.2^{'K}$	.835	-.684	1.132	-.923
$M_{DL+LL\ (C)}$	$1068.6^{'K}$	.255	-.950	.327	-1.218
M_{TOT}	$1896.8^{'K}$	1.710	-2.142	2.287	-2.825

Prestressing Force

	f_{si}	f_{se}
.7 x 270	189	189
est. Losses	15	46
Friction Loss	5	5
	169 ksi	138 ksi
Per ½" Strand	25.9 K	21.1 K

$f_{se}/f_{si} = 138/169 = .816$

Post-Tension Girder - ALT

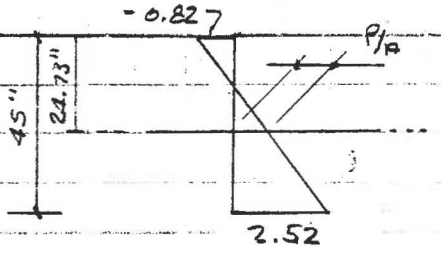

Allowable	Top	Bot
f_{ci}	-.20	2.42
f_c	2.0	-.424

Top Stress: $-.823 + (-.20) = 1.028$ ksi

$1.028 \times .816 = .838$ ⟸

Bot. Stress $2.825 + (-.424) = 2.401$

$(2.42 + .679)\,.816 = 2.528$ ⟸

$P/A = \left[2.52 - (-.82)\right]\frac{24.73}{45} + (-.82) = 1.016$ ksi

$P = 569.0$ $27-\frac{1}{2}\phi$ $\therefore P = 569.7$

$P/A = 1.017$ ksi

$e = \left(\frac{2.52}{1.017} - 1\right)(-11.05) = -16.33"$ N.G.

Try $28-\frac{1}{2}\phi$ $P = 590.8$ $P/A = 1.055$

$e = \left(\frac{2.52}{1.055} - 1\right)(-11.05) = -15.34"$

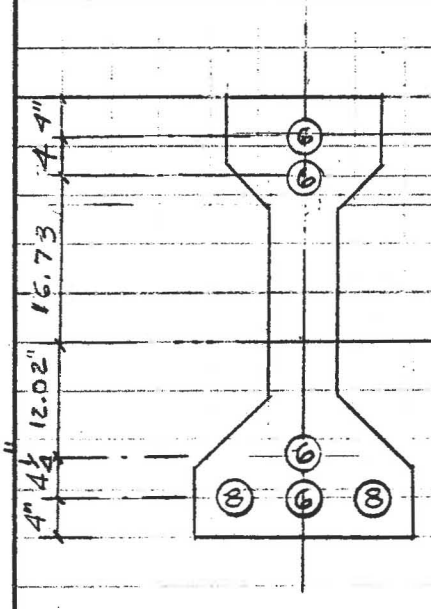

$e_{.5} = \left[22 \times 16.27 + 6 \times 12.02\right] \times 1/28 = -15.36"$

$e_{end} = \left[16 \times -16.27 + 6 \times 20.73 + 6 \times 16.73\right] \times 1/28 = -1.27"$

$e_x = 15.36 - 14.09\left(\frac{x}{L}\right)^2$

X	0	.1	.2	.25	.3	.4	.5
e	-1.27	-6.34	-10.29	-11.84	-13.11	-14.80	-15.36

Friction Losses

$L = 69'-11"$ (839") Galv. Rigid Conduit $k = .0002/FT$ $\mu = .25$

@ $x = 0.5$

$\alpha_{.5} = 4(e_{.5})/L = .0672$ Rads

$Kx + \mu\alpha = .024 < .3$

$\therefore T_o = T_x(1 + .024)$

$T_x = 0.977\,T_o$

Loss = 2.3%

@ $x = 1.00$

$\alpha_{1.0} = 2 \times \alpha_{.5} = .1344$ Rads

$KL + \mu\alpha = .048 < .3$

$\therefore T_o = T_x(1 + .048)$

$T_x = 0.955\,T_o$

Loss = 4.5%

Post-Tension Girder ALT

Anchorage Loss

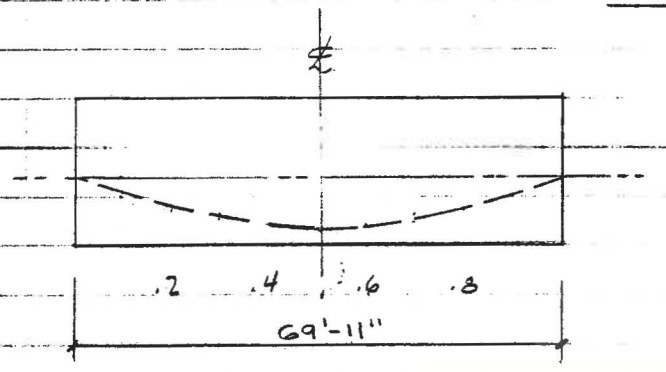

Jacking Force

Stress after set:	$.700 f_s'$
Friction Loss: $.045(.8)$	$.036 f_s'$
Anchor Loss:	$.032 f_s'$
Init. Stress	$.77 f_s'$

$\Delta L = 5/8"$ (manuf.)

$E_s = 28 \times 10^3$ ksi

$d = .023 \times .77 \times 270 = 4.8$ ksi @ $x = .5$

$L' = 34.598'$

$$\Delta f = \left[(E_s \times \Delta L \times d) \div (3 \times L')\right]^{1/2}$$

$= 28.30$ ksi

$x = (L' \times \Delta f) \div (2 \times d) = 103.0'$

$\beta = 28.3/103.0 = .2748$ ksi/Ft.

Losses: Assumed

Init.	15 ksi
Total	46 ksi

Summary Losses

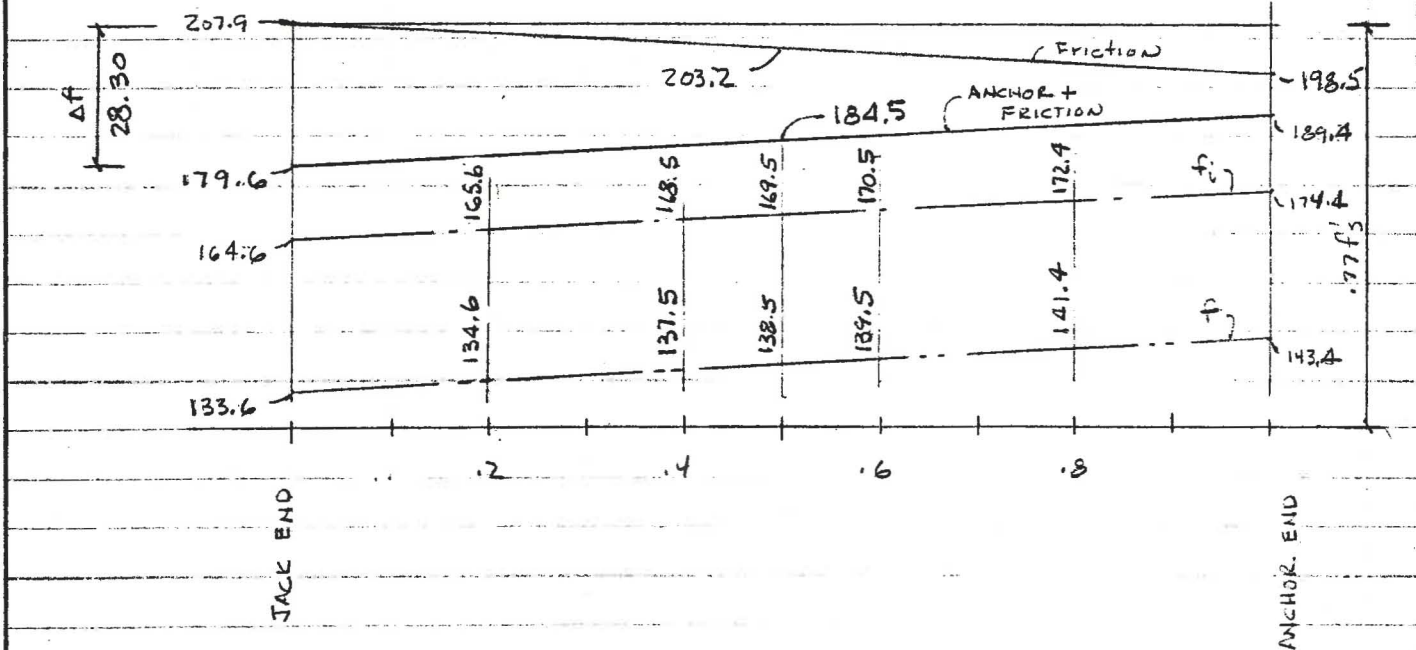

Post-Tension Girder ALT

- Losses -

1) Shrinkage: RH = 40

SH = 0.8(17000 - 40 RH)

SH = 8800

2) Elastic Shortening:

$ES = 0.5 \frac{E_s}{E_c} f_{cir}$

$f_{ci} = 4.4$ ksi

$E_s = 28 \times 10^3$ ksi

$E_c = 3781$ ksi

$f_{cir} = \frac{F}{A} + \frac{Fe^2}{I} - \frac{M_n^{db} e}{I}$

$f_i = 169.5$ ksi

$F = 169.5 \times 28 \times .153 = 726.1$

$M_n^{db} = 350^{k'}$ (SHT 20)

$e = 15.36$ $A = 560$ $I = 125390$

INIT Δf_s (relaxation) $= .035 \times 184.5 = 6.46$

	①	②	③
F_i	726.1	728.4	728.4
F/A	1.30	1.30	
Fe^2/I	1.37	1.37	
$M_N^{db} e/I$	-.51	-.51	
f_{cir}	2.16	2.16	2.16
ES	8.00	8.00	8.00

$\Rightarrow f_i = 170.0 \cong 169.0$ OK

INIT LOSS = $184.5 - 170.0 = 14.5$

ES = 8000

3) Creep of Concrete

$CR_c = 12 f_{cir} - 7 f_{cds}$

$f_{cds} = \frac{M_n^s e}{I} + \frac{M_c^d [e + (\bar{y}' - \bar{y})]}{I'}$

$M_n^s = 478.2^{k'}$ $M_c^d = 232.6^{k'}$ (SHT 20)

$I' = 378461$ $\bar{y}' = 35.48$ $\bar{y} = 20.27$

$f_{cds} = .703 + .228 = .931$

$CR_c = 12 \times 2.16 - 7 \times .931 = 19.403$

CR_c = 19403

POST-TENSION GIRDER ALT

- Losses cont'd -

4) Relaxation of Prestressing Steel:

$$CR_S = 20.0 - .3FR - .4ES - .2(SH+CR_c)$$
$$= 20000 - .3(0) - .4(8000) - .2(3800 + 19403)$$
$$= 11159$$

$CR_s = 11159$

Σ Loss

$\Delta f_s = 8.8 + 8.0 + 19.4 + 11.2 = 47.4$ ksi

$\cong$ 46.0 Assumed. OK

$f_i = .77 f'_s$ - Friction Loss - Anchor Loss - Init. Loss

$f = .77 f'_s$ - Friction Loss - Anchor Loss - Tot. Loss

		Friction Loss	Anchor Loss	@ Release	28 - ½ Φ		28 - ½ Φ	
					f_i	F_i	f	F
$f'_s = 270$	0	0	28.3	179.6	165.1	707.3	132.2	566.3
$.77 f'_s = 207.9$	.2	1.9	24.5	181.5	167.0	715.4	134.1	574.5
$L_i = 14.5$	.4	3.8	20.6	183.5	169.0	724.0	136.1	583.1
$L_T = 47.4$	.5	4.7	18.7	184.5	170.0	728.3	137.1	587.3
	.6	5.6	16.8	185.5	171.0	732.6	138.1	591.6
	.8	7.5	12.9	187.5	173.0	741.1	140.1	600.2
	1.0	9.4	9.1	189.4	174.9	749.3	142.0	608.3

$f_{i\,0.5}$ est. 169 ksi actual 170.0 OK

$f_{0.5}$ est. 138 ksi actual 137.1 OK

$f_{release}$ Max. allow 189 actual 189.4 over 0.2% OK

BENSON & GERDIN, INC. CONSULTING ENGINEERS PHONE (602) 264-0138

SHT. NO. 87 OF
JOB NO. 2297 J
BY MEK DATE 11-8-4
CHKD. AG DATE 2-14-85
REV.

Post-Tension Girder ALT

CHECK STRESSES - Simple Span

	0.2		0.4		0.5		0.6		0.8	
F_i	715.4		724.0		728.3		732.6		741.1	
F	574.5		583.1		587.5		591.6		600.2	
e	-10.29		-14.80		-15.36		-14.80		-10.29	
(-) TENSION	TOP	BOT	TOP	BOT	TOP	BOT	TOP	BOT	TOP	BOT
F_i/A	1.28	1.28	1.29	1.29	1.30	1.30	1.31	1.31	1.32	1.32
F_e/S_G	-1.45	1.19	-2.11	1.73	-2.21	1.81	-2.14	1.75	-1.50	1.23
M_G/S_G	.53	-.43	.79	-.65	.83	-.68	.79	-.65	.53	-.43
@ Release	.36	2.04	-.03	2.37	-.08	2.43 ⇗	-.04	2.41	.35	2.12
F/A	1.03	1.03	1.04	1.04	1.05	1.05	1.06	1.06	1.07	1.07
F_e/S_G	-1.16	.96	-1.70	1.40	-1.78	1.46	-1.73	1.42	-1.22	1.00
M_G/S_G	.53	-.43	.79	-.65	.83	-.68	.79	-.65	.53	-.43
	.40	1.56	.13	1.79	.10	1.83	.12	1.83	.38	1.64
M_{DL}^{NC}/S_G	.71	-.58	1.08	-.89	1.13	-.93	1.08	-.89	.71	-.58
	1.11	.98	1.21	.90	1.23	.90	1.20	.94	1.09	1.06
M_{DL}^{C}/S_C	.05	-.17	.07	-.25	.07	-.27	.07	-.25	.05	-.17
	1.16	.81	1.28	.65	1.30	.63	1.27	.69	1.14	.89
M_{LL+I}^{C}/S_C	.18	-.66	.25	-.92	.26	-.98	.25	-.92	.18	-.66
FINAL	1.34	.15	1.53	-.27	1.56 ⇗	-.35	1.52	-.23	1.32	.23

INITIAL STRESS:

Top -0.08 TEN $f'_{ci} = \left[\frac{80}{3}\right]^2 = .711$

Bot. 2.43 Comp $f_{ci} = 2.43/.55 = 4.42$

use $f'_{ci} = 4450$

Final Stress

Top 1.56 comp. $f'_c = 1.56/.4 = 3.9$

Bot -.35 TEN $f'_c = \left[\frac{350}{6}\right]^2 = 3.4$

use $f'_c = 5000$

POST-TENSION GIRDER - ALT

CHECK STRESSES - CONT. SPAN

	0.2		0.4		0.5		0.6		0.8	
F_i	715.4		724.0		728.3		732.6		741.1	
F	574.5		583.1		587.5		591.6		600.2	
e	-10.29		-14.80		-15.36		-14.80		-10.29	
(-) TENSION	TOP	BOT	TOP	BOT	TOP	BOT	TOP	BOT	TOP	BOT
Release Stress Same as Simple Span	.36	2.04	-.03	2.37	-.08	2.43	-.04	2.41	.35	2.12
F/A	1.03	1.03	1.04	1.04	1.05	1.05	1.06	1.06	1.07	1.07
Fe/S_G	-1.16	.96	-1.70	1.40	-1.78	1.46	-1.73	1.42	-1.22	1.00
M_{CR}/S_G	.53	-.43	.79	-.65	.83	-.68	.79	-.65	.53	-.43
	.40	1.56	.13	1.79	.10	1.83	.12	1.83	.38	1.64
M_{DL}^{NC}/S_G	.71	-.58	1.08	-.89	1.13	-.93	1.08	-.89	.71	-.58
	1.11	.98	1.21	.90	1.23	190	1.20	.94	1.09	1.06
M_{DL}^{C}/S_C	.03	-.12	.04	-.15	.04	-.14	.03	-.10	-.01	.04
	1.14	.86	1.25	.75	1.27	.76	1.23	.84	1.08	1.10
(+) M_{LL+I}^{C}/S_C	.16	-.58	.21	-.77	.20	-.74	.18	-.66	.09	-.32
Final ($+M_{LL}$)	1.30	.28	1.46	-.02	1.47	.02	1.41	.18	1.17	.78

ALL STRESSES Less than Simple Span

USE $f'_{ci} = 4450$

$f'_c = 5000$

POST-TENSION GIRDER ALT

END BLOCK

REF: Libby
§ 6-8 pg 213

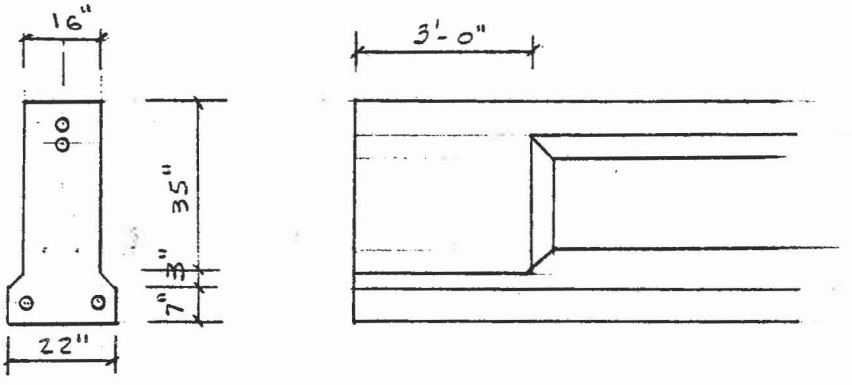

PROPERTIES OF END BLOCK

	A	y	Ay	$\bar{y}$	$A\bar{y}^2$	I_o
16×45	720	22.5	16200	1.20	1044.21	121500
3×7×2	42	3.5	147	-17.80	13300.88	171.5
3×3×½×2	9	8.0	72	-13.30	1590.98	4.5
	771		16419		15936.07	121676
	y_b	-21.296				

y_t 23.704 I_o = 137612

$e = -1.27 + (20.27 - 21.30) = -2.30"$

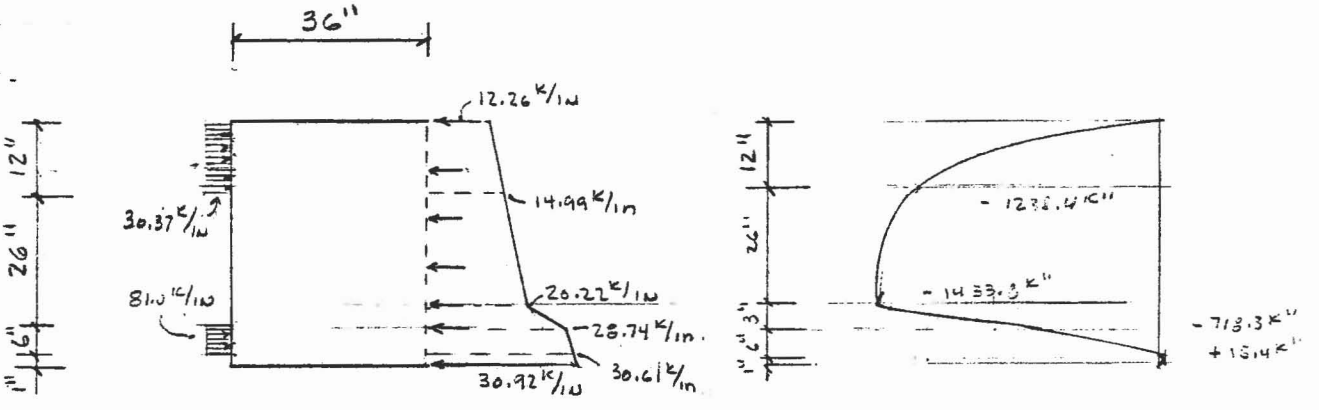

END BLOCK

F_{MAX} @ ANCHOR = 28 × .153 × 198.5 = 850.4 K

Top = 850.4 × 12/28 = 364.4 K

Bot = = 486.0 K

POST-TENSION Girder ALT

END BLOCK cont'd

$$T_{MAX} = \frac{M_{MAX}}{h - z}$$

$M_{max} = 1433.8^{k''}$
$h = 45''$
$z = 45/4 = 11''$

$$T_{max} = \frac{1433.8}{45-11}$$
$$= 42.2^{k}$$

$$f_s = 775 \left(\frac{\sqrt{f'_c}}{A_b} \right)^{1/2}$$

Limit crack to .005"
$f'_c = 5$ ksi
#5 bar $A_b = .31$

$f_s = 11.7$ ksi

$A_s = 42.2/11.7 = 3.60$ distr over $45/2 = 22.5''$
$A_s = .16^{\square''}/in.$

	#4	#5	#6
2 Legs = A_s	.40	.62	.88
spcg $A_s/.16$	2.5	3.9	5.5

use #5 @ 3½"

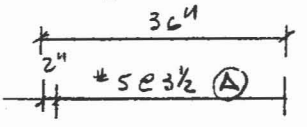

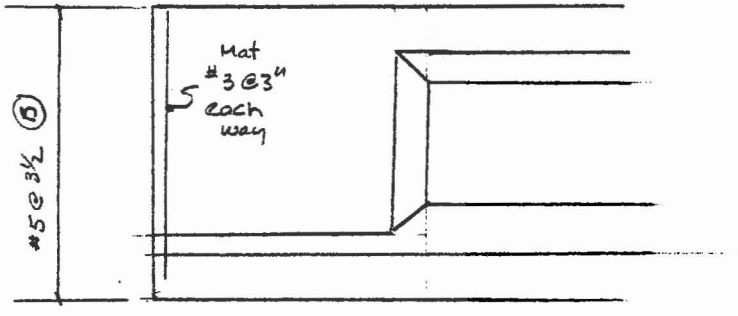

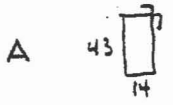

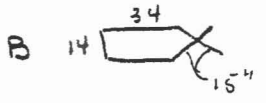

Post-Tension Girder

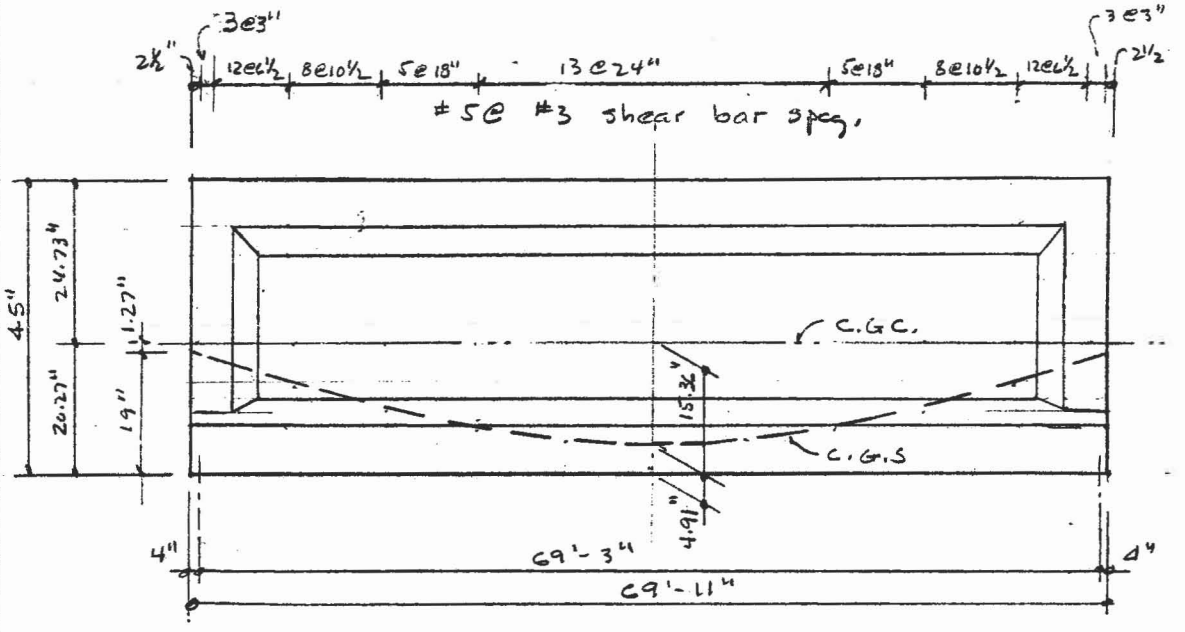

* .

C.G.S = 15.36 - 14.09 $(x/L)^2$

X meas. from ℄ Girder

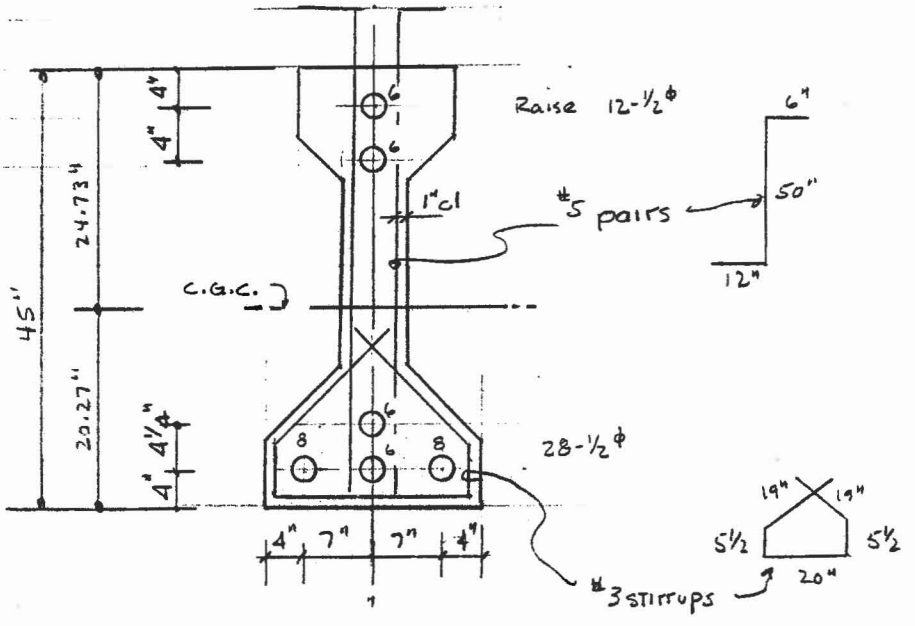

RETAINING WALLS

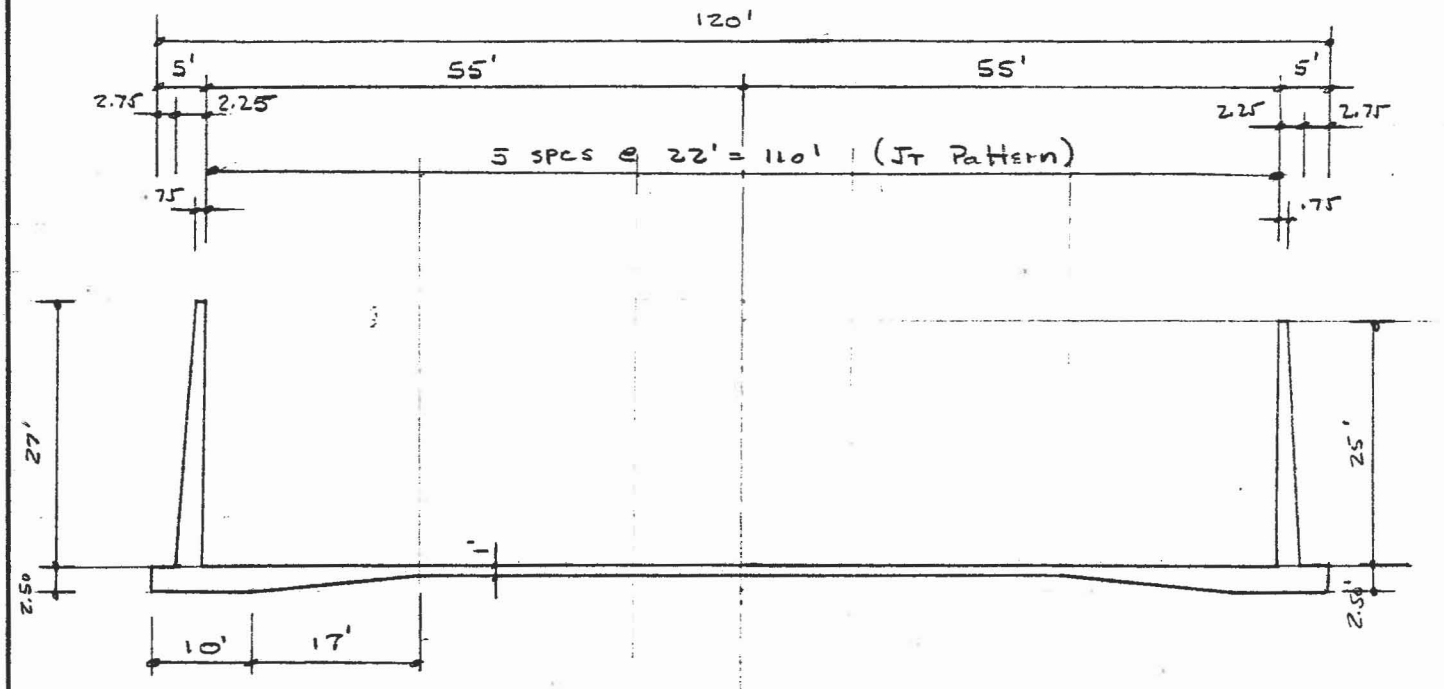

Typical Channel Section @ Bridge

1" = 20'

Lt. Wall Sec.

SOILS: UNIT WT = 110 PCF EFP = 35 PCF/FT

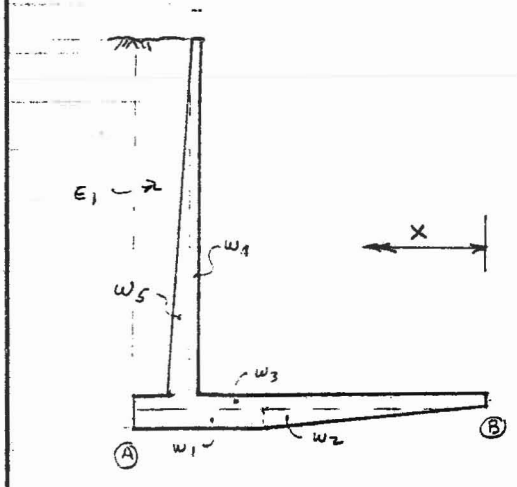

	ΣM_B	V	x	M
W_1	1.50 x 10 x .15	2.25	22.00	49.50
W_2	1.5 x 17 x ½ x .15	1.91	11.33	21.67
W_3	1.0 x 27 x .15	4.05	13.50	54.68
W_4	.75 x 27 x .15	3.04	22.38	67.98
W_5	1.50 x 27 x ½ x .15	3.04	23.25	70.62
	Σ_W	14.29	18.51	264.44
E_1	2.75 x 27 x .11	8.17	25.62	209.25
	$\Sigma_{RESISTING}$	22.46	21.10	473.69
M_o	15.2 x 9.83			-149.42
		22.46	14.44	324.28

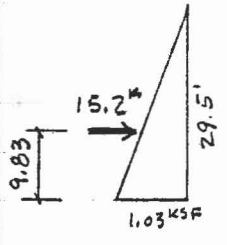

$e = \frac{27}{2} - 14.44 = -0.94$

$\frac{27}{6} = 4.5'$ IN MID 1/3

$q = \frac{\Sigma V}{L}\left(1 \pm \frac{6e}{L}\right)$

GOES HEEL

$q_a = \frac{22.46}{27}\left(1 + \frac{6 \times .94}{27}\right) = 1.01$ KSF

$q_b = \frac{22.46}{27}\left(1 - \frac{6 \times .94}{27}\right) = 0.66$ KSF

GOES TOE

RETAINING WALL

RT. WALL SECTION

	$\Sigma M_{A'}$	V	x'	M
W_1	1.50×10×.15	2.25	22.00	49.50
W_2	1.5×17×½×.15	1.91	11.33	21.67
W_3	1.0×27×.15	4.05	13.50	54.68
W_4	.75×25×.15	2.81	22.38	62.94
W_5	1.50×25×½×.15	2.81	23.25	65.39
	Σ_W	13.84	18.37	254.18
E_1	2.75×25×.11	7.56	25.62	193.75
	$\Sigma_{RESISTING}$	21.40	20.93	447.93
M_o	1.93×13.75			- 26.54
	13.20×9.17			- 121.04
		21.40	14.04	300.35

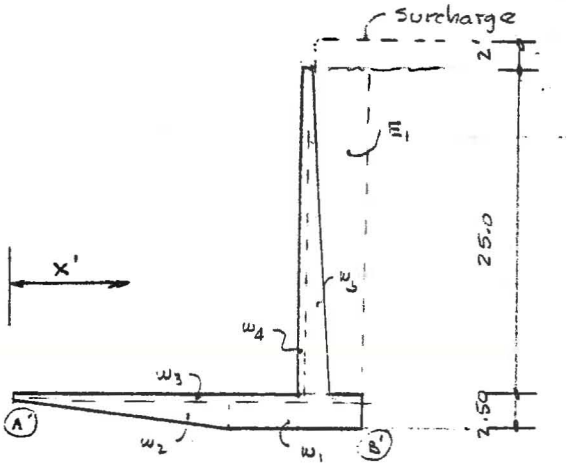

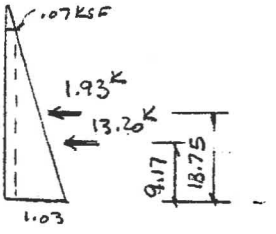

$e = 27/2 - 14.04 = -0.54$ M to 1/3

$q_{a'} = \frac{21.40}{27}\left(1 - \frac{6 \times .54}{27}\right) = 0.70$ KSF

$q_{b'} = \frac{21.40}{27}\left(1 + \frac{6 \times .54}{27}\right) = 0.89$ KSF

WALL DESIGN

$f'_c = 4000$ $f_c = 1600$

*Min ρ = Top .0020 × ⅔ = .0013 | Ea. Way
Bot .0020 × ⅓ = .0007 | Way

* C.O.E - EM 1110-2-2400

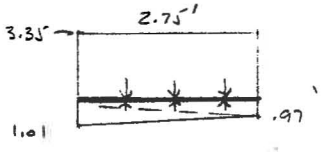

HEEL

-M

	V	a	M
2.75×3.35	9.21	2.75/2	12.67
-1.01×2.75/2	- 1.39	1.83	- 2.54
-.97×2.75/2	- 1.33	.92	- 1.23
	6.49K		8.90K'

$d = 30 - 3 - ½ = 26.5''$

$A_s = M/ad$

$A_{s\,req'd} = \frac{8.90}{1.44 \times 26.5} = .23$

$A_{s\,min} = .0013 \times 12 \times 26.5 = .41$

#5 @ 7" $A_s = .41$

$n\rho = \frac{n(A_s)}{12(d)} = .0103$

$k = .134$ $j = .955$

$\gamma = 2/kj = 15.66$

$f_c = M\gamma/d^2 = .198$ psi

$f_s = 12M/A_s jd = 10.495$ psi

$v_c = 6.49/12 \times 26.5 = .02$ ksi

OK

$v_{ca} = .95N\sqrt{f'_c} = .06$ ksi

BENSON & GERDIN, INC. CONSULTING ENGINEERS PHONE (602) 264-0136	SHT. NO. 94 OF
	JOB NO. 2327 J
	BY MK DATE 1-9-85
	CHKD. AG DATE 2-14-85
RETAINING Wall	REV.

TOE

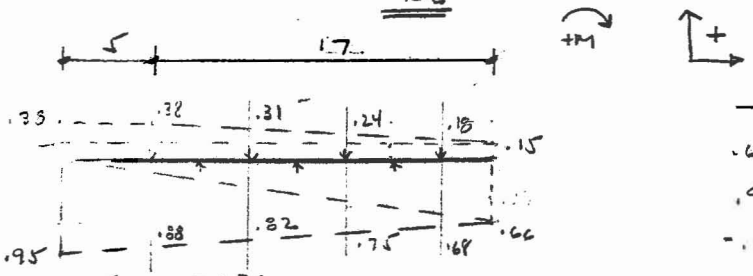

$a_{(60)} = 1.76$

A_s req'd $= M/ad = 2.64^{\square''}$

Try #9 @ 4½" $A_s = 2.67$

$np = n(A_s)/12(d) = .0672$

$k = .305 \quad j = .898$

$\gamma = 2/12j = 7.29$

	V	a'	M
.66 × 22 × ½	7.26	14.67	106.50
.95 × 22 × ½	10.45	7.33	76.60
-.15 × 22	-3.30	11.00	-36.30
-.23 × 17 × ½	-1.96	10.67	-20.86
-.23 × 5	-1.15	2.5	-2.88
	11.30		123.07

$f_c = M\gamma/d^2 = 1.278$ ksi

$f_s = 12M/A_s jd = 23.243$ ksi OK

$v_c = 11.3/12 \times 26.5 = .04$ ksi $< .06$ OK

Bar Cut-off

PT	V^k	M^k'	d"	A_s req'd	bars
0	11.30	123.07	26.5	2.64	#9 @ 4½
5	8.58	73.21	26.5	1.57	#9 @ 4½
10	6.12	36.72	20.2	1.03	#9 @ 9"
15	3.57	12.50	15.9	.45	#9 @ 9"
20	1.01	10.13	10.6	.54	#9 @ 9"

CUT-OFF ½ #9 @ 7' + 2'-6

12" Floor Slab

Min Steel Req'd Top .0013 × 12 × 9.75 = .15 □" each way

Bot .0007 × 12 × 8.75 = .07 □" " "

Top: #4 @ 16" each way 2" clear

Bot: #4 @ 24" each way 3" clear

Retaining Wall

Wall Design

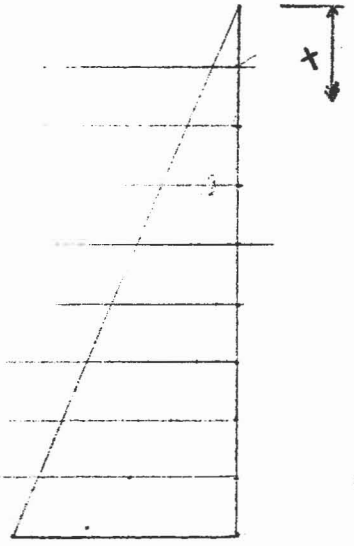

$V = \frac{.035x^2}{2}$ $M = \frac{.035x^3}{6}$

x	V	M	d
3	0.16	.16	8.5"
6	0.63	1.26	10.5"
9	1.42	4.25	12.5"
12	2.52	10.08	14.5"
15	3.94	19.69	16.5"
18	5.67	34.02	18.5"
21	7.72	54.02	20.5"
24	10.08	80.64	22.5"
27	12.76	114.82	24.5"

$d = 27 - 2 - 1/2 =$

@ Base Try #9 @ 4½ from footing:

$A_s = 2.67$ $n(A_s)/12(d) = .07726$

$k = .315$ $j = .895$

$\gamma = 2/kj = 7.09$

$f_c = M\gamma/d^2 = 1.356$ ksi

$f_s = 12M/A_s jd = 23.534$ ksi OK

$v_c = 12.76/12 \times 24.5 = .04$ ksi < 1.06

CUT-OFF ½ #9 #9 @ $A_s = 1.33$

Try: $x = 19.5'$ $M = 43.25^{k'}$ $d = 19.5$

$\frac{n(A_s)}{12(d)} = .0455$ $k = .260$ $j = .913$

$\gamma = 2/kj = 8.44$

$M_c = 1.6 \times \frac{2}{19.5} \times \frac{1}{8.44} = 72.1$

$M_s = 24 \times 1.33 \times .913 \times 19.5 \times 1/2 = 47.36$ ⇐ OK

CUT-OFF ½ #9 @ $7.5 + 2.5 = 10'$ above base

Wall design cont'd

#9 @ 18" $A_s = .67$

Try $x = 14\frac{1}{2}'$ $M = 17.8^{k'}$ $d = 16.2''$

$\frac{n(A_s)}{12(d)} = .0226$ $k = .209$ $j = .930$

$s = 2/kj = 10.30$

$M_c = 1.6 \times \overline{16.2}^2 \times 1/10.30 = 39.2^{k'}$

$M_s = 24 \times .67 \times .93 \times 16.2 \times 1/12 = 20.2^{k'}$ OK

cut-off $\frac{3}{4}$-#9 @ $12.5 + 2.5 = 15'$

BENSON & GERDIN, INC. CONSULTING ENGINEERS PHONE (602) 264-0136	SHT. NO. 97 OF
	JOB NO. 2327 J
	BY MEK DATE 1-10-85
	CHKD. AG DATE 2-14-85
RETAINING WALL DETAILS	REV.

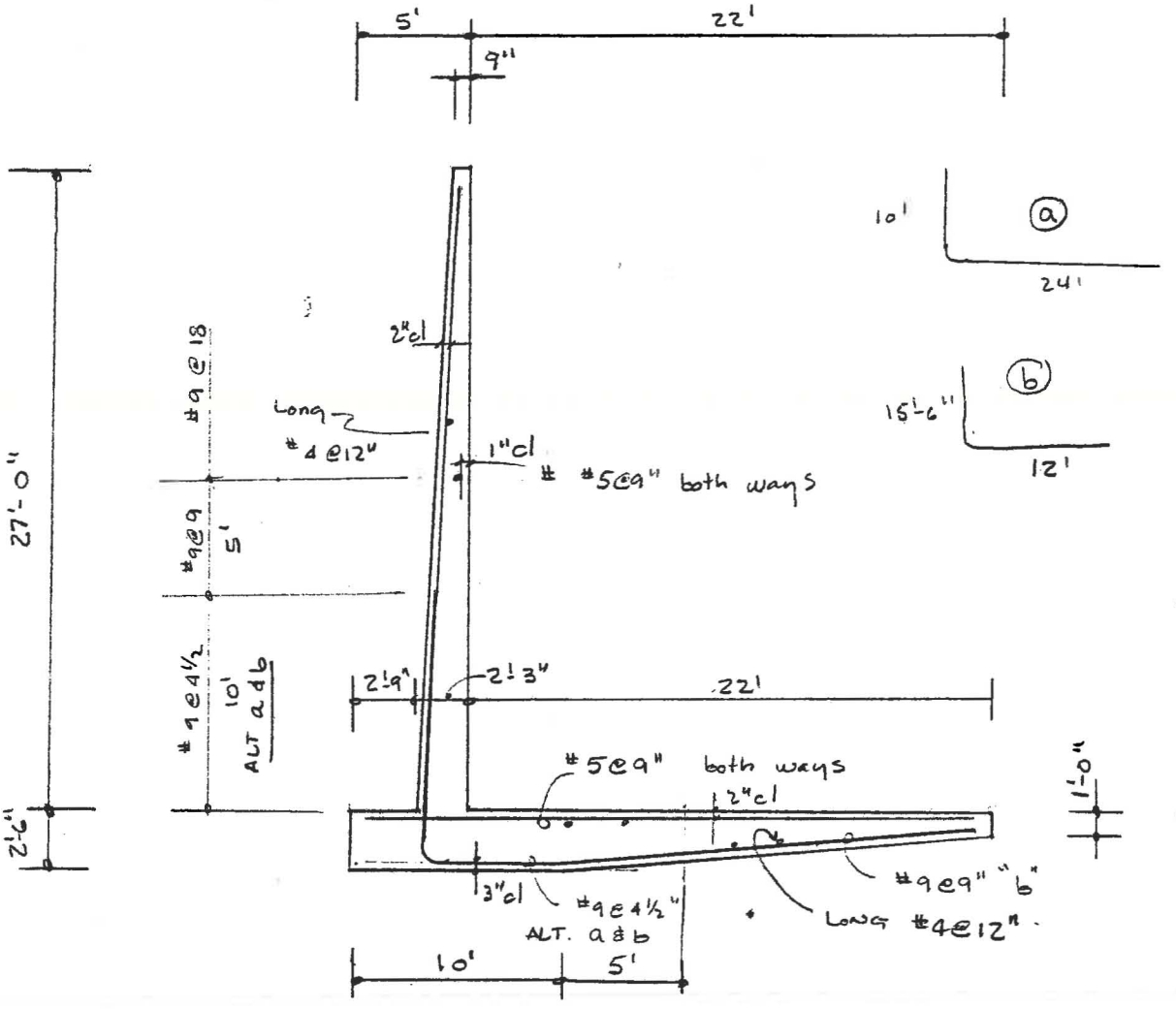

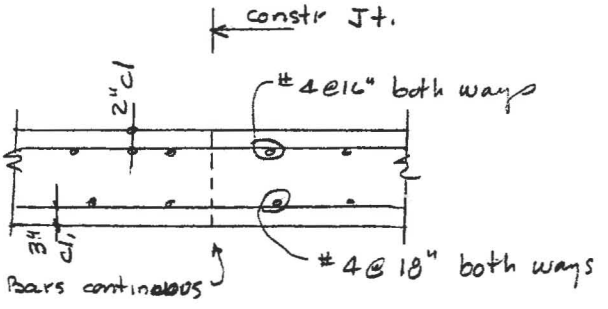

DETAIL OF CONTRACTION JT

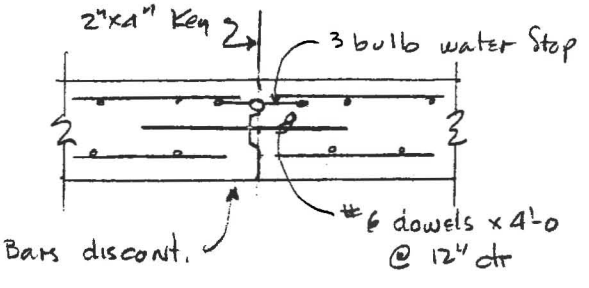

DETAIL OF Keyed Jt.

GIRDER DEFL.

ACI Journal 1968 TITLE N° 65-53 EQ 13

ITEM	DEFL. COEFICIENT EQUATION	DEFL TERM	TIMES COEF;
①	INITIAL CAMBER due to INITIAL P/S FORCE $F_o = F_i = 710.3^K$	$-(\Delta_i)_{F_o}$	$\gamma_1 = 1.0$
②	INITIAL DEAD LOAD DEFL. Precast Beam $f'_{ci} = 4$ ksi $E_{ci} = 3605$ ksi $I_2 = 125390^{in^4}$	$+(\Delta_i)_2$	$\gamma_2 = 1.0$
③	Creep Camber of Girder prior to slab casting $\gamma_3 = \alpha\left[-\frac{\Delta F}{F_o} + \left(1-\frac{\Delta F}{2F_o}\right) k_r C_{t_2}\right]$ $\alpha = 0.35$ $\Delta F = 710.3 - 578.3 = 132.0$ $k_r = 1.0$ (EQ 5) $C_{t_2} = 1.5$ (50% Humidity, 28d) $\gamma_3 = -.35\left[-\frac{132}{710.3} + \left(1-\frac{132}{2\times 710.3}\right) 1.0\times 1.5\right] = -.411$	$-(\Delta_i)_{F_o}$	$\gamma_3 = .411$
④	Creep Camber of Comp. Beam after Slab CASTING $\gamma_4 = \left(\frac{1-\alpha}{\alpha}\right) I_2/I_c (\gamma_3)$ $I_c = 373461$ $\gamma_4 = \left(\frac{1-.35}{.35}\right)\frac{125390}{373461}(-.411) = -.256$	$-(\Delta_i)_{F_o}$	$\gamma_4 = .256$
⑤	Creep DEFL. Precast Beam to slab casting $\gamma_5 = \alpha \cdot k_r \cdot C_{t_2} = .35\times 1.0\times 1.5 = .525$	$+(\Delta_i)_2$	$\gamma_5 = .525$
⑥	CREEP DEFL OF Comp Beam after Slab Casting $\gamma_6 = \left(\frac{1-\alpha}{\alpha}\right) I_2/I_c (\gamma_5) = .327$	$+(\Delta_i)_2$	$\gamma_6 = .327$
⑦	INITIAL DEFL Precast Beam under Slab Dead Load $f'_c = 5$ ksi $E_c = 4031$ ksi	$+(\Delta_i)_1$	$\gamma_7 = 1.0$
⑧	CREEP DEFL Comp. Beam under Slab Dead Load $\gamma_8 = k_r C_{t_2} I_2/I_c = 1.0\times 1.5\times\frac{125390}{373461}$	$+(\Delta_i)_1$	$\gamma_8 = .504$

GIRDER DEFL.

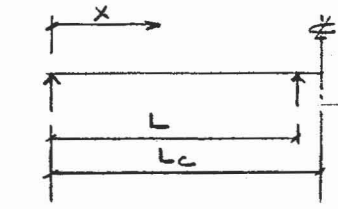

DEFL @ 1/10 Points OF Simple SPAN L

L = 69.25' Lc = 69.93 L/Lc = 0.99

1/10 Pt comp. × .99 = 1/10 simple

$(\Delta_i)_{F_o}$ R/S FORCE

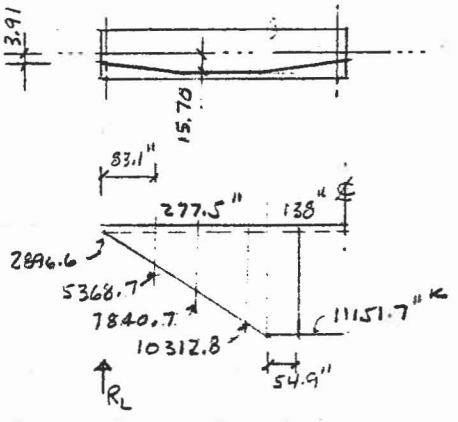

F_o = 710.3 K $e_{brg} = 3.91 + \frac{(15.70 - 3.91)}{281.5}(4) = 4.078$"

M_o = 710.3 × 4.078 = 2896.6 "K

$M_{1/3}$ = 710.3 × 15.70 = 11151.7 "K

$\Delta_x = \frac{M_{OM}\ (\text{or } M_{diag})}{E_{ci} I_2}$

$R_R = R_L = \left(2896.6 \times 415.5 + 8255.1 \left\{\frac{277.5}{2} + 138\right\}\right) = 3.4881 \times 10^6$

	0	.1L	.2L	.3L	.4L	.5L	℄ mm.
$(\Delta_i)_{F_o}$	0	-.653	-1.144	-1.555	-1.801	-1.834"	

$(\Delta_i)_2$ Beam D.L.

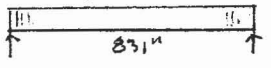

$\Delta_{.5} = \frac{5 w \ell^4}{384 E_{ci} I_2}$

$\Delta_x = \frac{wx}{24 E_{ci} I_2}\left(\ell^3 - 2\ell x^2 + x^3\right)$

	0	.1L	.2L	.3L	.4L	.5L	℄ mm.
$(\Delta_i)_2$	0	+.204	+.387	+.530	+.620	+.651	

$(\Delta_i)^{NC}_{1\omega}$ Deck Slab D.L.

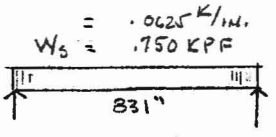

	0	.1L	.2L	.3L	.4L	.5L	℄ mm.
$(\Delta_i)^{NC}_{1\omega}$	0	+.263	+.498	+.681	+.795	+.838	

BENSON & GERDIN, INC. CONSULTING ENGINEERS PHONE (602) 264-0136	SHT. NO. 100 OF
	JOB NO. 2297J
	BY MK DATE 11-84
	CHKD. AG DATE 2-14-85
Girder Defl.	REV.

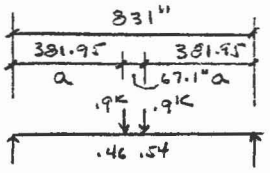

$(\Delta_i)^{NC}_{1P}$

$$\Delta_x(x<a) = \frac{Px}{6EI_2}(3la - 3a^2 - x^2)$$

$$\Delta_x(a<x<(l-a)) = \frac{Pa}{6EI_2}(3lx - 3x^2 - a^2)$$

	0	.1L	.2L	.3L	.4L	.5L	Symm.
$(\Delta_i)^{NC}_{1P}$	0	+.012	+.024	+.033	+.040	+.042	

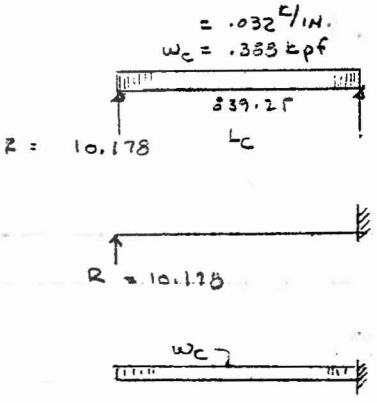

$(\Delta_i)^{C}_{1W}$

$$\Delta_R = \frac{R}{6EI}(2l^3 - 3l^2x + x^3)$$

$$\Delta_{w_c} = \frac{w}{24EI}(x^4 - 4l^3x + 3l^4)$$

$1/10\,L = .099\,L_c$

	.1L	.2L	.3L	.4L	.5L	.6L	.7L	.8L	.9L
Δ_R	-1.135	-.942	-.756	-.582	-.424	-.285	-.169	-.080	-.023
Δ_{w_c}	+1.156	+.981	+.808	+.640	+.479	+.332	+.204	+.100	+.029
$(\Delta_i)^{C}_{1W}$	+.021	+.039	+.052	+.058	+.055	+.047	+.035	+.020	+.006

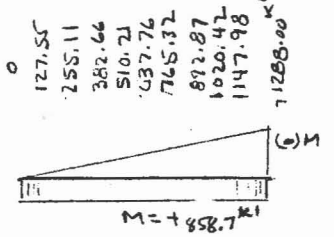

$(\Delta_i)^{C}_{SHR}$

Δ = Mom of M drag. × $1/E_cI_c$

$R(+)M = 858.7 \times 12 \times 839.125 \times 1/2 = +4.3233 \times 10^6$

$R(-)M = 1288.0 \times 12 \times 839.125 \times 1/6 = -2.1616 \times 10^6$

E_c = 4031 ksi I_c = 373.461

$1/10\,L = .099\,L_c$

	.1L	.2L	.3L	.4L	.5L	.6L	.7L	.8L	.9L
(+) M	+.215	+.383	+.503	+.576	+.602	+.581	+.512	+.397	+.234
(-) M	-.118	-.229	-.326	-.402	-.450	-.463	-.434	-.355	-.225
$(\Delta_i)_{SHR}$	+.097	+.154	+.177	+.174	+.152	+.118	+.078	+.042	+.013

BENSON & GERDIN, INC. CONSULTING ENGINEERS PHONE (602) 264-0138

SHT. NO. 101 OF
JOB NO. 2297
BY MK DATE 11-84
CHKD. AG DATE 2-14-85
REV.

43RD Ave

Girder Defl.

L = 69'-3"

	℄ Brg	.1L	.2L	.3L	.4L	.5L	.6L	.7L	.8L	.9L	℄ Brg
$(\Delta_i)_{F_D} \times \gamma_1$	0	-.613	-1.144	-1.555	-1.801	-1.884	-1.801	-1.555	-1.144	-.613	0
$(\Delta_i)_2 \times \gamma_2$	0	+.204	+.387	+.530	+.620	+.651	+.626	+.530	+.387	+.204	0
$(\Delta_i)_{F_D} \times \gamma_3$	0	-.252	-.470	-.639	-.740	-.754	-.740	-.639	-.470	-.252	0
$(\Delta_i)_2 \times \gamma_5$	0	+.107	+.203	+.278	+.326	+.342	+.326	+.278	+.203	+.107	0
Init. Gir. Camber 28d	0	-.554	-1.024	-1.386	-1.595	-1.595	-1.595	-1.386	-1.024	-.554	0
$(\Delta_i)_{F_D} \times \gamma_4$	0	-.157	-.293	-.398	-.461	-.470	-.461	-.398	-.293	-.157	0
$(\Delta_i)_2 \times \gamma_6$	0	+.067	+.126	+.173	+.203	+.213	+.203	+.173	+.126	+.067	0
Final Girder Camber	0	-.644	-1.191	-1.611	-1.853	-1.852	-1.853	-1.611	-1.191	-.644	0
$(\Delta_i)^{NC}_{IW} \times \gamma_7$	0	+.263	+.498	+.681	+.793	+.838	+.793	+.681	+.498	+.263	0
$(\Delta_i)^{NC}_{E} \times \gamma_7$	0	+.012	+.024	+.033	+.040	+.042	+.040	+.033	+.024	+.012	0
$(\Delta_i)^{C}_{IW} \times \gamma_7$	0	+.021	+.039	+.052	+.058	+.055	+.047	+.035	+.020	+.006	0
$(\Delta_i)_{SHR}$	0	+.097	+.154	+.177	+.174	+.152	+.118	+.078	+.042	+.013	0
$\Sigma(\Delta_i) \times \gamma_8$	0	+.198	+.361	+.477	+.541	+.549	+.506	+.417	+.294	+.148	0
Final Deck & Curb Defl.	0	+.591	+1.076	+1.420	+1.611	+1.636	+1.509	+1.244	+.878	+.442	0
Top Defl. Girder	0	-.053	-.115	-.191	-.242	-.216	-.344	-.367	-.313	-.202	0
V.C. Corr.	0	-.276	-.504	-.648	-.744	-.768	-.744	-.648	-.504	-.276	0
Slab B.U.	.500	.723	0.889	0.957	1.002	1.052	0.900	.781	.691	.574	.500
	1/2"	3/4"	7/8"	15/16"	1"	1 1/16"	7/8"	3/4"	11/16"	9/16"	1/2"

V.C. Corr.

	0	.1L	.2L	.3L	.4L	.5L	.6L	.7L	.8L	.9L	L
V.C. Elev.	26.911	26.943	26.970	26.991	27.008	27.019	27.025	27.026	27.022	27.013	26.998
Chord Elev	26.911	26.920	26.928	26.937	26.946	26.955	26.963	26.972	26.981	26.989	26.998
V.C. Corr	0	.023	.042	.054	.062	.064	.062	.054	.042	.023	0

TDG + V.C. Corr + 1/2"

Deck Slab Phase I

NOTE: see SHT 3 for all other dim.

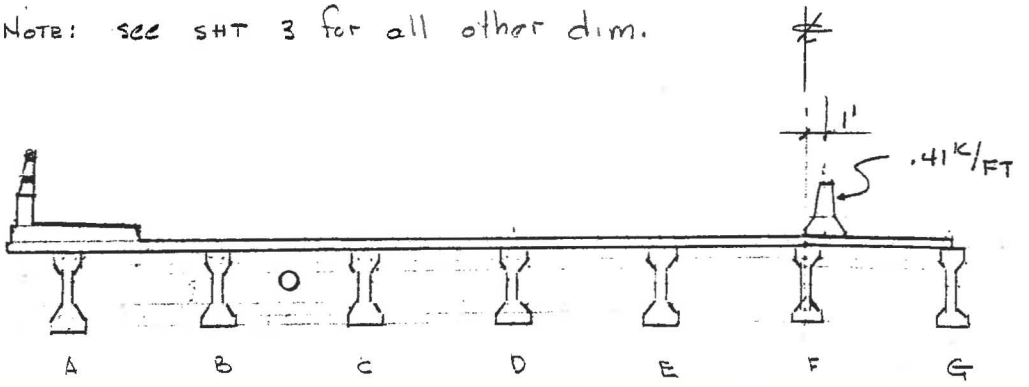

(1) No wearing surface allowance
(2) Curb, parapet & rail placed after forms are stripped

(a) Cont. Mom. .513 K SHT (4)

(b) SPAN A-B

W_2 = .1 ksf ; W_3 = .122 ksf (SHT 1)

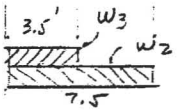

K = .467

FEM_A = .832 K'

FEM_B = .620 K'

(c) SPANS C → F

$FEM \frac{W_2 L^2}{12}$ = .469 K'

(d) SPAN F-G

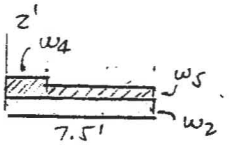

W_4 = .205 PPF ; W_5 = .050 kpf (constr. Load)

K_4 = .267
K_5 = .733

FEM_F = .968 K'

FEM_G = .693 K'

(e) SPAN B-C Water Line P = 0.4 K

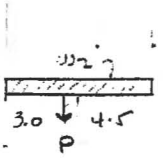

FEM_B = .900 K'

FEM_C = .757 K'

Deck Slab - Phase I

$I = 7.5$

C.O. = -½

	A		B		C		D		E		F		G
		I/L		I/L		I/L		I/L		I/L		I/L	
K		1		1		1		1		1		1	
DF		-.50	-.25	-.25	-.25	-.25	-.25	-.25	-.25	-.25	-.25	-.25	-.50
FEM	1.513	-.232	+.220	-.909	+.757	-.469	+.469	-.469	+.469	-.469	+.469	-.968	+.693
UNBAL	+.681		-.280		+.288		0		0		-.499		+.693
M'		-.449	+.217	+.217	-.140	-.140	+.055	+.055	-.080	-.085	+.249	+.249	-.479
$(M'_b + M'_c)$		-.232	-.232	+.077	+.077	-.085	-.085	-.025	-.025	+.184	+.184	-.215	-.215
(-)M	-1.513		-.605		-.694		+.439		-.365		-.919		0

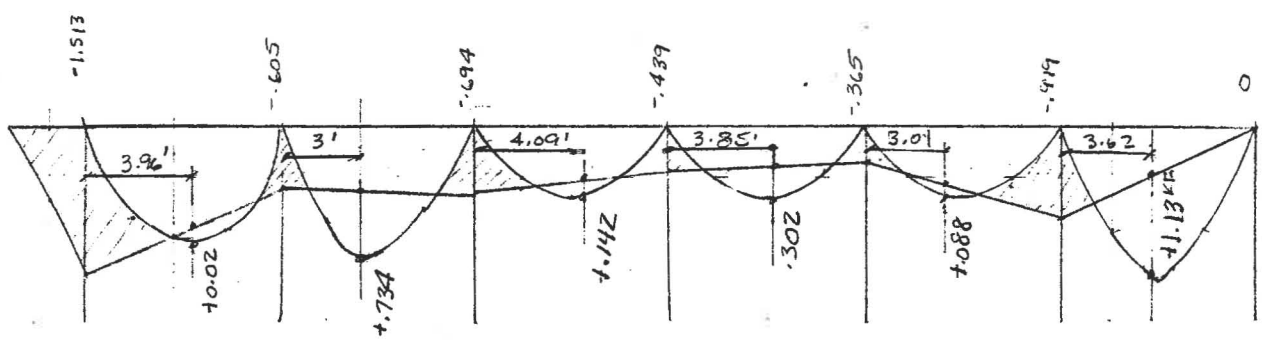

Moments in Slab

Liveload in spans A thru F
No Live load in span F-G Max of 50PSF Constr. Liveload F-G

Phase I

	(+) M	(-) M.	(+) M_{FG}	
DL	+.734 K'	-.919 K'	+1.130	
LL	+1.600	-1.600	-2.380	⇐ $\frac{4.6}{7.5} \times 3.88$
	+5.334	-5.519	-1.250	

Resisting Mom.	f'_c	+7.90	-6.44 K'	SHT. #10
	f'_s	+5.64	-5.65	

Design OK was Section SHT 15