DESIGN CALCULATIONS

FOR

29th AVENUE BRIDGE

A118.813

910

Gary Sutherland

Property of
Flood Control District of MC Library
Please Return to
2801 W. Durango
Phoenix, AZ 85009

DMJM Phillips·Reister·Haley, Inc.

FEB 15 1985

February 14, 1985

ENGINEERING DIVISION
LIBRARY

Mr. Doyle Wiste
DMJM/Adam, Hamlyn, Anderson
415 N. 15th Street
Phoenix, Arizona 85014

Re: 29th Avenue Bridge over A.C.D.C.
DMJM Project No. 4252-01-05

Dear Doyle:

Transmitted herewith are 10 original drawings, 6 special provisions, design notes and cost estimates for the referenced project. These items are transmitted to you for the 90% Submittal to the Flood Control District. In addition, we are returning your notes, the existing bridge plans at 29th Avenue, Standard Specifications, Preliminary Bridge Plan and Sections sepia, temporary detour bridge box beam details, and the Tramway Blvd. Bridge prints.

Some items that you might give some thought to are:

1. The post-tension girder alternate (Alternate 2) is not an efficient design and may be difficult to construct. The design requires that the post-tensioning ducts extend into the slab at the pier. This means that the girders will have to be formed to provide for the ducts coming out of the top of the girder near the piers. The contractor will then need to couple the ducts in the field between the girders in each span before post-tensioning.

   The web thickness on these girders is 6" which means the clear distance between stirrups to provide for the ducts is 3". Most post-tension suppliers request a 1'-0" web to provide for the ducts. End blocks are required on the girders to provide for the anchors. The smallest anchor we could find was 1'-0" wide, which is the width of the end block. This may eliminate some suppliers from bidding on the job.

   Mild steel reinforcing in the girder was required for erection purposes. Once the girder is in place shoring is required for the deck pour then post-tensioning can be done. This will increase construction time.

   I used a program called "Bridge Design System" to design the post-tension alternate and checked the results by hand in accordance with the Scope of Work.

A Subsidiary of
Daniel, Mann, Johnson, & Mendenhall

Suite 700
910 Fifteenth Street
Denver, Colorado 80202
Telephone: 303/892-1300
Cable: DIMJIM Denver

Planning
Architecture
Engineering
Systems
Economics

The only advantages in using this alternate is the girder concrete strength may be 4000 psi instead of 5000 psi as in the pre-tensioned alternate; and the #6 in the top of the slab over the pier may be eliminated.

2. The Scope of Work requires a bidding schedule (Description of Work item D (1)). The first sheet of the plans provides quantities and this should be used for bidding. The Flood Control District may require something else.

3. Construction of the superstructure may be difficult to access because the abutments can not be backfilled until the deck is in place for 7 days.

4. Cost estimates for the temporary detour bridge only reflect the abutments and not the superstructure (box beams and median barrier). We do have lump sum items for these elements on the Summary of Quantities (sheet no. 1).

5. The cost estimates do not reflect any mobilization or contingencies. We used the same unit prices for the final cost estimate as you did for the preliminary cost estimate, except that we came up with unit prices for the structure excavation and backfill. Please make sure the roadway quantities for excavation and backfill do not overlap with the structure quantities.

If you have any questions, please call.

Sincerely,

George I. Skillman

George I. Skillman, P.E.

GIS/djk

enclosures

DMJM
February 14, 1985

COST ESTIMATE

29th AVENUE BRIDGE

ALTERNATE 1 GIRDER

No.	Item	Unit	Quantity	Price	Amount
206	Structure Excavation	cu yds	19,584	3.34	65,410.56
206	Structure Backfill	cu yds	5,654	7.88	44,553.52
350	Removal of Existing Improvements	lump	1	5,000.00	5,000.00
505	Class A Concrete - Bridge	cu yds	537	225.00	120,825.00
505	Class A Concrete - Channel Lining	cu yds	193	220.00	42,460.00
505	Class A Concrete - Approach Slabs	cu yds	118	200.00	23,600.00
505	Class AA Concrete	cu yds	232	270.00	62,640.00
505	Reinforcing Steel	lbs	137,210	0.45	61,744.50
506	Precast Prestress Conc. Unit (Type II)	ea	16	3,500.00	56,000.00
520	Type H-3-1 Bridge Rail	lin ft	226.5	60.00	13,590.00
	TOTAL				$495,823.58

ALTERNATE 2 GIRDER

No.	Item	Unit	Quantity	Price	Amount
206	Structure Excavation	cu yds	19,584	3.34	65,410.56
206	Structure Backfill	cu yds	5,654	7.88	44,553.52
350	Removal of Existing Improvements	lump	1	5,000.00	5,000.00
505	Class A Concrete - Bridge	cu yds	537	225.00	120,825.00
505	Class A Concrete - Channel Lining	cu yds	193	220.00	42,460.00
505	Class A Concrete - Approach Slabs	cu yds	118	200.00	23,600.00
505	Class AA Concrete	cu yds	232	270.00	62,640.00
505	Reinforcing Steel	lbs	131,983	0.45	59,392.35
506	Precast Prestress Conc. Unit (Type II)	ea	16	4,300.00	68,800.00
520	Type H-3-1 Bridge Rail	lin ft	226.5	60.00	13,590.00
	TOTAL				$506,271.43

TEMPORARY DETOUR BRIDGE

No.	Item	Unit	Quantity	Price	Amount
350	Removal of Existing Improvements	lump	1	4,000.00	4,000.00
505	Class A Concrete	cu yds	86	225.00	19,350.00
505	Reinforcing Steel	lbs	9,656	0.45	4,345.20
	TOTAL				$27,695.20

REVISION OF SECTION 515
STEEL STRUCTURES
29th AVENUE OVER A.C.D.C.
AND
TEMPORARY DETOUR BRIDGE

Section 515 of the Uniform Standard Specifications is hereby revised as follows:

Add the following to subsection 515.1:

This work shall consist of fabricating and erecting miscellaneous steel items on the project incuding the pipe hanger assembly, girder bearing assembly and threaded inserts on the 29th Avenue Bridge and the 3/8"x3"x3" angle on the temporary detour bridge.

Delete subsection 515.7 and add the following:

Payment for miscellaneous steel items shall not be paid for separately but will be included in the work.

REVISION OF SECTION 206
STRUCTURE EXCAVATION AND BACKFILL
29th AVENUE BRIDGE OVER A.C.D.C.

Section 506 of the Uniform Standard Specifications is hereby revised as follows:

Add the following to subsection 206.4:

Structure backfill in back of the abutments shall not be placed until the concrete slab has been in place a minimum of seven days. The abutments shall be backfill simultaneously.

Add the following to subsection 206.5:

Structure excavation and backfill shall be paid for at the contract unit price per cu. yds.

REVISION OF SECTION 350
REMOVAL OF EXISTING IMPROVEMENTS
TEMPORARY DETOUR BRIDGE

Section 350 of the Uniform Standard Specifications is hereby revised as follows:

Add the following to subsection 350.1:

This work shall consist of removing the temporary detour bridge at the completion of the project. It shall also include the salvaging of designated materials, including ten precast prestressed box beams and 160 feet of temporary concrete median barriers, and backfilling the resulting trenches, holes, and pits. (Refer to SRP requirements for removing South Abutment cap.)

Add the following to subsection 350.2:

The Contractor shall state, before construction begins, the method of removal and salvaging he intends to furnish.

The Contractor shall remove the temporary detour bridge a minimum of 2 feet below the finished ground line.

All salvable material shown on the plans, shall be stored by the Contractor as directed within the project limits.

Cavities left by structure removal shall be filled to the level of the surrounding ground and shall be compacted as designated. (in accordance w/ SRV WVA requirements.)

Unless otherwise directed, the temporary detour bridge will not be removed until the 29th Avenue Bridge is in place and accommodating traffic.

Add the following to subsection 350.4:

Payment for removal shall be made at the contract unit price per lump sum.

REVISION OF SECTION 350
REMOVAL OF EXISTING IMPROVEMENTS
29th AVENUE OVER A.C.D.C.

Section 350 of the Uniform Standard Specifications is hereby revised as follows:

Add the following to subsection 350.1:

This work shall consist of removing the existing concrete box culvert and wingwalls as shown on the plans. Utilities will be removed and relocated by the utility companies. The Contractor shall coordinate his removal work with the utility companies.

Add the following to subsection 350.2:

The Contractor shall state, before construction begins, the method of removal he intends to furnish.

Unless otherwise directed, the existing concrete box culvert and wingwalls shall not be removed until the detour is in place and accommodating traffic.

The existing concrete box culvert and wingwalls shall be completely removed.

Add the following to subsection 350.4:

Payment for removal will be made at the contract unit price per lump sum.

REVISION OF SECTION 506
PRECAST PRESTRESS CONCRETE MEMBERS
TEMPORARY DETOUR BRIDGE

Section 506 of the Uniform Standard Specifications is hereby revised as follows:

Add the following to subsection 506.1:

The plans provide for the erection of ten precast prestressed box beams on the temporary detour bridge. These beams have already been fabricated and are the property of the Flood Control District of Maricopa County. The Contractor shall be held responsible for the safekeeping of the beams during the period of the contract.

Add the following to subsection 506.10:

Payment for erection of precast prestressed box beams shall be made of the contract unit price per lump sum.

REVISION OF SECTION 506
PRECAST PRESTRESSED CONCRETE MEMBERS
29th AVENUE BRIDGE OVER A.C.D.C.

Section 506 of the Uniform Standard Specifications is hereby revised as follows:

Add the following to subsection 506.1:

The plans provide for alternate prestressed concrete girder designs. Alternate 1 designates a pretensioned concrete girder and Alternate 2 designates a post-tensioned concrete girder. Both alternates are precast prestressed concrete girders and shall be fabricated and installed in accordance with the plans and section 506 of the Uniform Standard Specifications.

Add the following to subsection 506.10:

The Contractor shall bid and use Alternate 1 girders <u>or</u> bid and use Alternate 2 girders.

Payment will be made at the contract unit price per each.

DESIGN CALCULATIONS
FOR
29TH AVENUE BRIDGE
OVER
ARIZONA CANAL DIVERSION CHANNEL

90% SUBMITTAL

FEBRUARY 15, 1985

PREPARED FOR:

MARICOPA COUNTY FLOOD CONTROL DISTRICT
3335 WEST DURANGO STREET
PHOENIX, ARIZONA 85009

PREPARED BY:

DMJM/ADAM, HAMLYN, ANDERSON
4751 NORTH 15TH STREET
PHOENIX, ARIZONA 85014

INDEX

Geometry	1
Slab	2 - 4
Pre-Tension Girder	5 - 22
Post-Tension Girder	23 - 29G
Pier	30 - 47
Abutment	48 - 83
Temporary Bridge	84 - 93
Special Provisions	94 - 99
Quantities	100 - 123

DMJM	PROJECT: 29th Ave	PROJECT NO:	PAGE
		BY: GIS / DATE: 1/31/85	1

SUBJECT: Geometry

Bridge Deck Elevations

cross slope = .015'/'

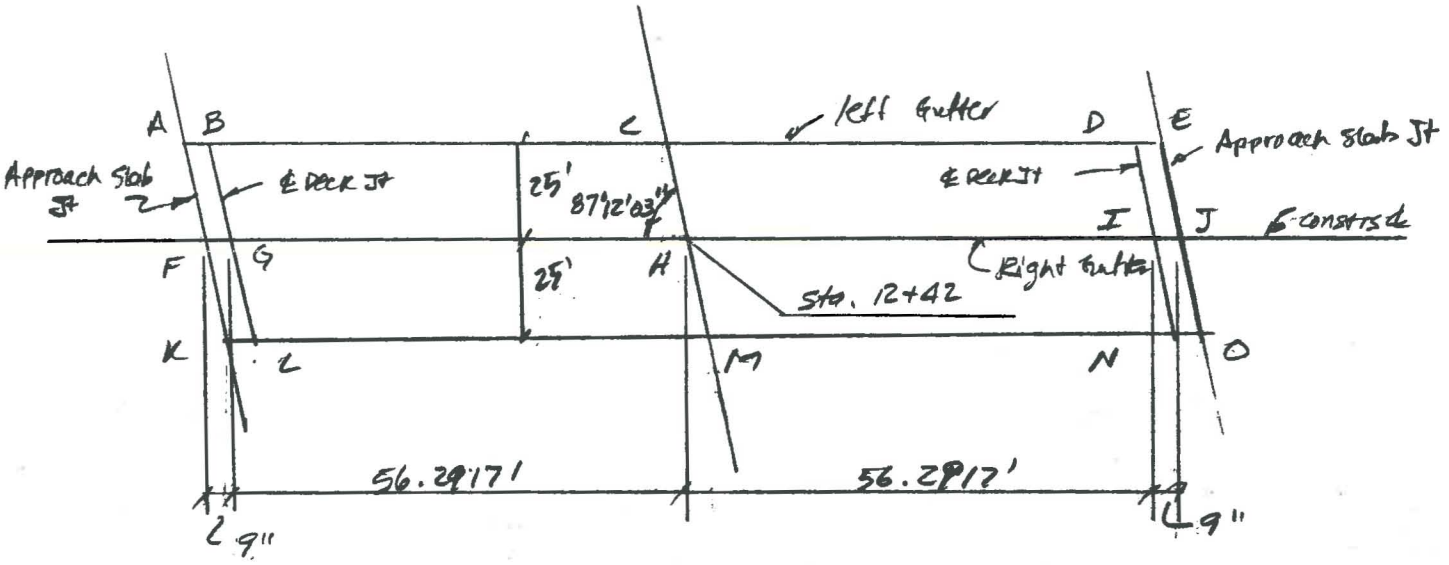

Point	Station	offset	Elevation
A	11+83.7360	25'	35.0065
B	11+84.4660		35.0519
C	12+40.7777		33.8418
D	12+97.0694		32.6303
E	12+97.8194	25	32.6142
F	11+84.9583	0	35.4169
G	11+85.7083		35.4015
H	12+42		34.1904
I	12+98.2917		32.9789
J	12+99.0417	0	32.9628
K	11+86.1806	25	35.0166
L	11+86.9306		35.0006
M	12+43.2223		33.7892
N	12+99.5140		32.5777
O	13+00.2640	25	32.5616

DMJM	PROJECT: 29th Ave	PROJECT NO:		PAGE
		BY: GIS	DATE: 1/28/85	2
SUBJECT: Slab Design				

Girder spacing = 7'-6"

Effective span = 7.5 - 1' = 6.5'

#5 @ 6½"

Dead loads

slab = (8/12)(.15) = .1 k/ft

Asphalt = (2/12)(.144) = .024 k/ft

.124 k/ft

$M_{DL} = (.124)(6.5)^2/10 = .524$ k-ft/ft

Live loads

$M_{LL+I} = \left(\frac{6.5+2}{32}\right) \times 16 \times 1.3 \times .8$ (cont.) = 4.42 k-ft/ft

Total = 4.944 k-ft/ft

Capacity

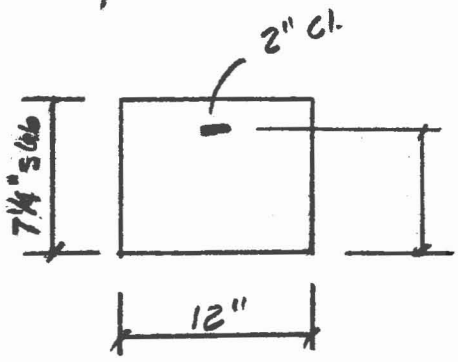

Working stress design:

$f'_c = 4000$ psi ⇒ $f_c = 1600$ psi

$f_y = 60000$ psi ⇒ $f_s = 29000$ psi

$n = 8$

#5 @ 6½" ⇒ $A_s = .57$ in²/ft

use

$M_{cap} = 5.023$ k-ft/ft > 4.944

OK

Distribution steel

$\% = \frac{220}{\sqrt{6.5}} = 86$ ⇒ 67% in middle ½ of slab

.67 × .57 = .38 in²/ft

½ of span = 6.5/2 = 3.25' ⇒ 3.25 × .38 = 1.235 in²

⇒ 4 - #5

2 - #5 in outer quarters

DMJM	PROJECT: 29th Ave	PROJECT NO:	PAGE
		BY: GIS / DATE:	3
SUBJECT: Slab Design			

Negative Moment Reinf. over Pier

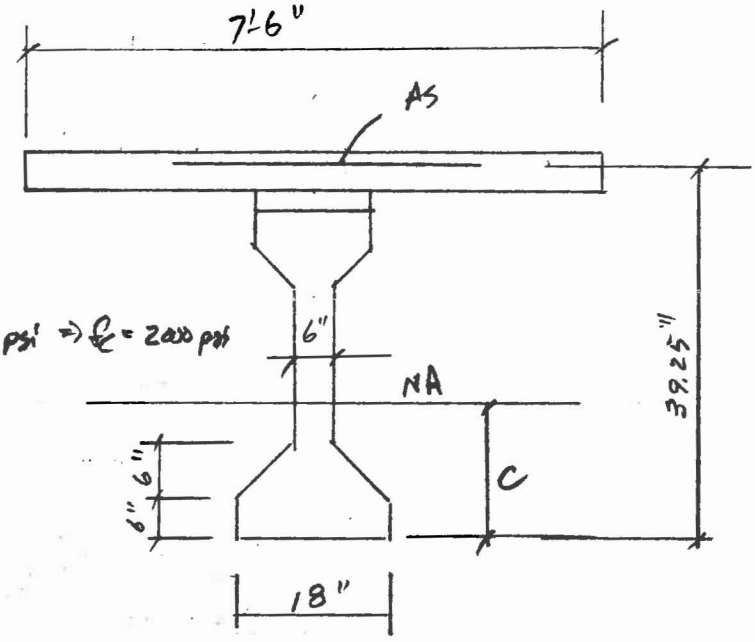

f'_c Girder = 5000 psi ⇒ f_c = 2000 psi

$n = 7$

Spans = 2 @ 55'-9"

Moments

$M_{DL\ Comp} = .313 \times 55.75^2 / 8 = 122.6$ k-ft

Live Load:

$DF = 7.5/5.5 = 1.3636$

$I = \frac{50}{125 + 55.75} = 27.66\%$

$M_{LL+I} = (*442)(1.3636)(1.2766)/2 = 384.7$ k-ft

* 442 from AISC Moments Shears & Reactions for Highway Bridge (Lane Loading)

Total = 506.3 k-ft

DMJM	PROJECT: 29th Ave	PROJECT NO:		PAGE
		BY: GIS	DATE: 1/28/85	4
SUBJECT: Slab Design				

Negative Moment Reinf. over Pier (cont.)

Try 2-#6 inbetween #4 @ 1'-0" ⇒ $A_s = 8 \times .2 + 14 \times .44 = 7.76 \text{ in}^2$

Assume NA fall in web (working stress design)

NA

$$(7)(7.76)(39.25 - c) = (6)(c)(c/2) + (6)(6)(c-6-2) + (2)(6)(6)(c-3)$$

$$3c^2 + 162.32\,c - 2636.06 = 0$$

$$\Rightarrow c = 13.0786'' \quad \text{(Assumption correct)}$$

$$I = (1/12)(6)(13.0786)^3 + (6)(13.0786)(13.0786/2)^2 + 2 \times (1/12)(6)(6)^3$$
$$+ 2 \times (6)(6)(13.0786-3)^2 + (1/36)(6)(6)^3 \times 2 + (1/2)(6)(6)(13.0786-6-2)^2$$
$$+ (7)(7.76)(39.25 - 13.0786)^2 = 49746 \text{ in}^4$$

$$M_{cap\ steel} = (24)(49746)/(39.25 - 13.0786)/7/12 = 543^{k\text{-}ft} > 506.3 \text{ OK}$$

$$M_{cap\ concrete} = (2)(49746)/13.0786/12 = 633^{k\text{-}ft}$$

use 2-#6 inbetween #4 @ 1'-0"

DMJM	PROJECT: 29th Ave	PROJECT NO:		PAGE
		BY: GIS	DATE: 1/28/85	5
SUBJECT: Girder Design				

Interior Girder

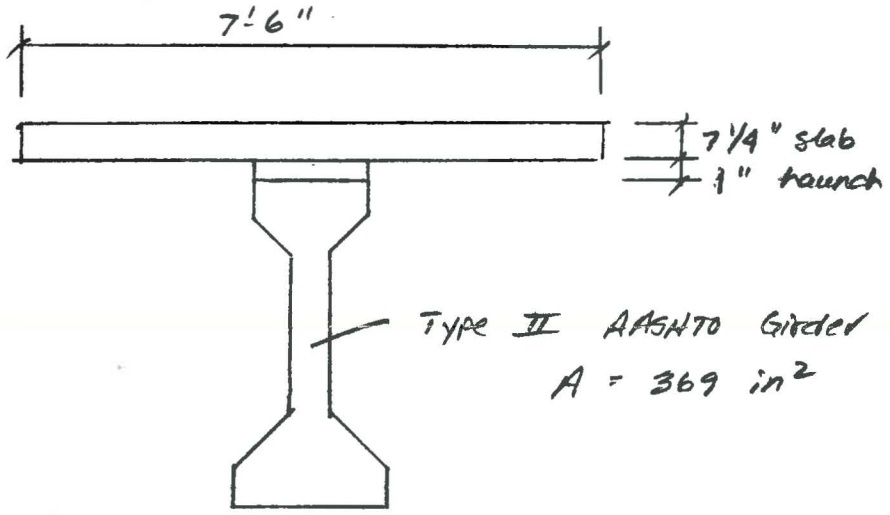

Dead loads

Non-Composite

slab = (7.25/12)(7.5)(.15) = .680 k/ft
haunch = (1/12)(1.0)(.15) = .013 k/ft
Girder = (369/144)(.15) = .384 k/ft

1.077 k/ft

Diaph. = (9/12)(7.5-.5)(3)(.15) = 2.36 k

Composite

Sidewalk = (9.5/12)(6'-6 1/2")(.15) / 8 = .097 k/ft
curb = (13.5/12)(9/12)(.15) / 8 = .016 k/ft
Rail = .06 x 2 / 8 = .015 k/ft
16" water line = .200 / 8 = .025 k/ft
Other utilities = .01 k/ft = .01 k/ft
Asphalt = (2/12)(50)(.144) / 8 = .150 k/ft

.313 k/ft

DMJM	PROJECT: 29th Ave	PROJECT NO:		PAGE
		BY: GLS	DATE: 1/28/85	6
SUBJECT: Girder Design				

Exterior Girder

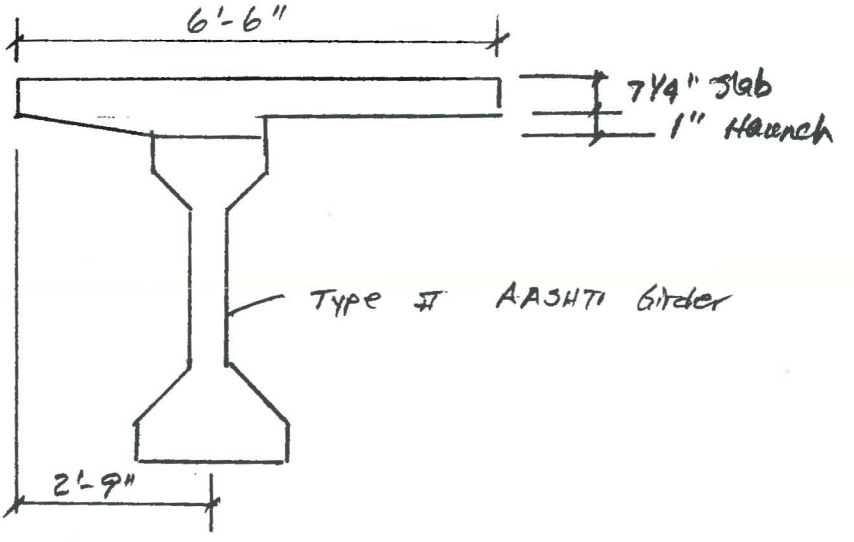

Dead Loads

Non Composite

Slab = (7.25/12)(6.5)(.15) = .589 k/ft

Haunch = (1/12)(1.0)(.15) + (1/2)(2.25)(1/12)(.15) = .027 k/ft

Girder = .384 k/ft

1.00 k/ft

Diaph. = 1/2 × 2.36 = 1.18 k

Composite

- DL = .313 k/ft (same as interior)

DMJM	PROJECT: 29th Ave	PROJECT NO:		PAGE
		BY: GIS	DATE: 1/28/85	7
SUBJECT: Girder Design				

Live Loads

Interior Girder

$DF = 7.5/5.5 = 1.3636$

$I = \frac{50}{125 + 55.75} = 27.66\%$

Exterior Girder

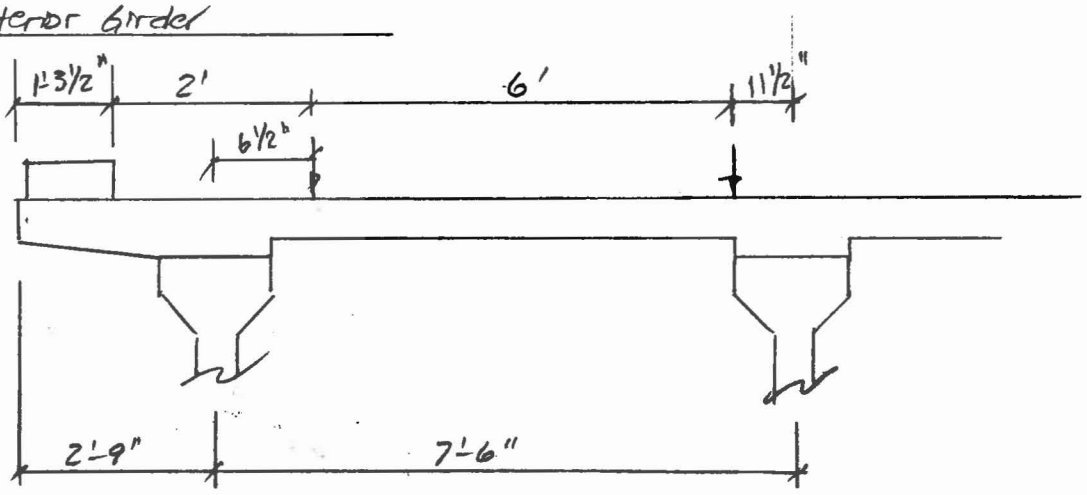

$DF = [(7.5 - 6.5/12) + 11.5/12] \div 7.5 = 1.0556$

DMJM	PROJECT: 29th Ave	PROJECT NO:		PAGE
		BY: GIS	DATE: 1/28/85	8
SUBJECT: Girder Bearing Design				

Reactions - Interior Girder

Pier

DL NC = (1.077)(55.75)/2 + 2.36/2 = 31.20 K

DL C = (.313)(55.75)×5/8 = 10.91 K

LL = (*70.6/2)(1.3636) = 48.14 K

(* From AISC Moments Shears & Reactions for Bridges)

Total = 90.25 K

Abutment

DL NC = 31.20 K

DL C = (.313)(55.75)×3/8 = 6.54 K

LL = (*57.28/2)(1.3636) = 39.05 K

76.80 K

Reactions - Exterior Girder

Pier

DL NC = (1.0)(55.75)/2 + 1.18/2 = 28.47 K

DL C = 10.91 K

LL = (70.6/2)(1.0556) = 37.26 K

76.64 K

Abutment

DL NC = 28.47 K

DL C = 6.54 K

LL = (57.28/2)(1.0556) = 30.23 K

65.24 K

DMJM	PROJECT: 29th Ave	PROJECT NO:		PAGE
		BY: GIS	DATE: 1/28/84	9
SUBJECT: Girder Bearing Design				

Try 8" x 16" pad

Total Movement* = .000006 x 55.75 x 12 x 70 = .28"

* This movement will probably never occur because the Abutments are attached to the slab

Provide 1/2" unlaminated pad (neoprene)

Maximum pressure

@ Pier & interior Girder

$$= \frac{90250}{8 \times 16} = 705 \text{ psi} \approx 800 \text{ psi say OK}$$

Minimum Pressure

@ Abutment & Exterior Girder

$$= \frac{28470 + 6540}{8 \times 16} = 273 \text{ psi} > 200 \text{ psi OK}$$

DMJM	PROJECT: 29th Ave	PROJECT NO:		PAGE
		BY: GIS	DATE: 1/29/84	10
SUBJECT: Girder Design				

Spans

Simple span for Non Composite Loads
Continuous span for Composite Loads

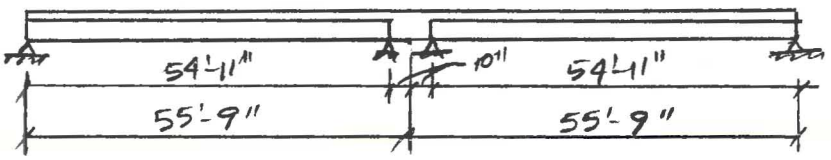

Moments

$M_{Girder} = (.384)(54.92)^2/8 = 144.8$ k-ft

$M_{slab, Haunch, Diaph} = (.680 + .013)(54.92)^2/8 + (2.36)(54.92)/4 = 293.6$ k-ft

$M_{DL\ composite} = (.313)(.0703)(55.75)^2 = 68.4$ k-ft

$M_{LL+I} = 583.79/2 \times 1.3636 \times 1.2766 = 508.1$ k-ft

1014.9

Section Properties

Non Composite : (Girder)

$A = 369\ in^2$ $I_x = 50980\ in^4$ $y_b = 15.83''$

$r^2 = 138.16$

Composite :

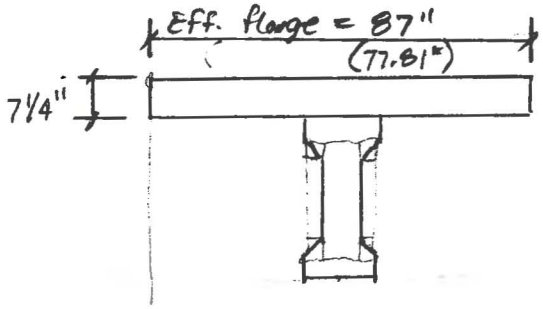

$f'_{c\ slab} = 4000$ psi $\Rightarrow E = 3605$ ksi

$f'_{c\ Girder} = 5000$ psi $\Rightarrow E = 4031$ ksi

$n = .8943$

$\Rightarrow$ Eff. flange $= 87 \times .8943 = 77.81''$

$f_{ci} = 4000$ psi $\Rightarrow E_{ci} = 3605$ ksi

$A_c = 933\ in^2$

$I_c = 179759\ in^4$

$NA_c = 30.22''$

with 87" flange

A = 999.75

NA = 30.8424

I = 185557

DMJM	PROJECT: 29th Ave	PROJECT NO:		PAGE
		BY: GIS	DATE: 1/30/85	11
SUBJECT: Girder Design				

Section Properties (cont.)

Try 16 strands - Jack to .7 f_s' $\quad A_s^* = .153 \times 16 = 2.448 \text{ in}^2$

$$EMS = \frac{8\times2 + 6\times4 + 2\times6}{16} = 3.25''$$

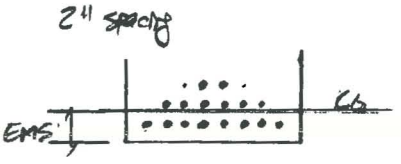

@ Mid span

$e_G = 15.83 - 3.25 = 12.58''$

$e_c = 30.22 - 3.25 = 26.97$

$e_G y_b / r_G^2 = 12.58 \times 15.83 / 138.16 = 1.4414$

$e_G y_t / r_G^2 = 12.58 \times (36 - 15.83) / 138.16 = 1.8366$

Kern Limits

$r^2/y_t = 138.16/15.83 = 8.73''$ above CG

$r^2/y_b = 138.16/(36-15.83) = 6.85''$ below CG

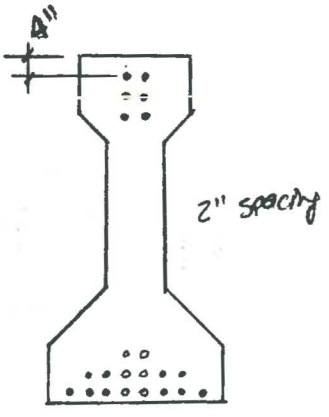

@ End

EE

$$CG \text{ (from bottom)} = \frac{6\times2 + 4\times4 + 2\times30 + 2\times30}{16}$$

$= 13.4''$

(2.83" below CG)

DMJM	PROJECT: 29th Ave	PROJECT NO:		PAGE
		BY: GIS	DATE: 1/30/85	12
SUBJECT: Girder Design				

Stresses without Prestress

Load	Top fiber	Bottom Fiber
Girder	$\frac{144.8 \times 12000 (36-15.83)}{50980}$ = 687 psi	$\frac{144.8 \times 12000 \times 15.83}{50980}$ = 540 psi
Slab, Haunch, Diaph	$\frac{293.6 \times 12000 (36-15.83)}{50980}$ = 1394 psi	$\frac{293.6 \times 12000 \times 15.83}{50980}$ = 1094 psi
DL composite	$\frac{68.4 \times 12000 (36-30.22)}{179759}$ = 26 psi	$\frac{68.4 \times 12000 \times 30.22}{179759}$ = 138 psi
LL + I	$\frac{508.1 \times 12000 (36-30.22)}{179759}$ = 196 psi	$\frac{508.1 \times 12000 \times 30.22}{179759}$ = 1025 psi
Total	2303 psi	2797 psi

DMJM	PROJECT: 29th Ave	PROJECT NO:		PAGE
		BY: GIS	DATE: 1/30/85	13
SUBJECT: Girder Design				

Prestress Losses

Shrinkage

$$SH = 17000 - 150(40) = 11{,}000 \text{ psi}$$

Elastic shortening

$$ES = E_s/E_{ci} \times f_{cir}$$

$$f_{cir} = \frac{m f_s' A_s^*}{A_G} + \frac{m f_s' e_G^2 A_s^*}{I_G} - \frac{M_{DLG}\, e_G}{I_G}$$

$$m = \frac{\% f_s' - REL_1 + \frac{(E_s/E_{ci}) M_{DLG}\, e_G}{I_G}}{f_s' + f_s'(E_s/E_{ci})\left[\frac{A_s^*}{A_G} + \frac{e_G^2 A_s^*}{I_G}\right]}$$

$$REL_1 = \% f_s' \left[\frac{\log t}{10}\left(\frac{\% f_s'}{.85 f_s'} - .55\right)\right]$$

Assume release @ 18 hr.

$$REL_1 = .7 \times 270000 \left[\frac{\log 18}{10}\left(\frac{.7}{.85} - .55\right)\right] = 6489 \text{ psi}$$

$$m = \frac{.7 \times 270000 - 6489 + \frac{(28000/3605)(144.8 \times 12000)(12.58)}{50980}}{270000 + 270000(28000/3605)\left[\frac{2.448}{369} + \frac{12.58^2 \times 2.448}{50980}\right]} = .6198 < .7 \text{ OK}$$

$$f_{cir} = \frac{.6198 \times 270000 \times 2.448}{369} + \frac{.6198 \times 270000 \times 12.58^2 \times 2.448}{50980} - \frac{144.8 \times 12000 \times 12.58}{50980}$$

$$= 1953 \text{ psi}$$

$$ES = (28000/3605)\, 1953 = 15{,}169 \text{ psi}$$

DMJM	PROJECT: 29th Ave	PROJECT NO:		PAGE
		BY: GIS	DATE: 1/30/85	14
SUBJECT				

Prestress Losses (cont.)

Creep

$$CR_c = 12 f_{cir} - 7 f_{cds}$$

$$f_{cds} = \frac{(M_{DL\,SHD})e_G}{I_G} + \frac{(M_{DL\,C})e_C}{I_C}$$

$$= \frac{293.6 \times 12000 \times 12.58}{50980} + \frac{68.4 \times 12000 \times 26.97}{179759} = 993 \text{ psi}$$

$$CR_c = 12 \times 1953 - 7 \times 993 = 16{,}488 \text{ psi}$$

Relaxation

Low lax strands

$$CR_s = 5000 - .1\,ES - .05(SH + CR_c)$$

$$= 5000 - 15169 \times .1 - .05(11000 + 16488) = 2109 \text{ psi}$$

Total Loss = 44766 psi

DMJM	PROJECT: 29th Ave	PROJECT NO:		PAGE
		BY: GIS	DATE: 1/30/85	15
SUBJECT: Girder Design				

Prestress Stresses

Jacking

$f_j = .7 \times 270000 = 189000$ psi

$F_j = 189000 \times 2.448 = 462.672^K$

Transfer

$f_t = 189000 - \overset{ES}{15169} - \overset{REL_1}{6489} = 167342$ psi

$F_t = 167342 \times 2.448 = 409.653^K$

$f_{ai} = \frac{409653}{369} = 1110$ psi

Final

$f_f = 189000 - \overset{LOSS}{44766} = 144234$ psi

$F_f = 144234 \times 2.448 = 353.085^K$

$f_a = \frac{353085}{369} = 957$ psi

Check effective prestress $= \frac{353.085}{270 \times 2.448} = 53\% > 50\%$ OK!

DMJM	PROJECT: 29th Ave	PROJECT NO:		PAGE
		BY: GLS	DATE: 1/30/85	16
SUBJECT: Girder Design				

Combined stresses under loading stages

Tranfer

Top fiber @ .4 pt = 1110 (1 − 1.8366) + .96 × 687 = −269 psi

Bottom fiber @ .4 pt = 1110 (1 + 1.4414) − .96 × 540 = 2192 psi

Allowable compression = .6 × 4000 = 2400 psi OK

Full Design Load

Top fiber @ midspan = 957 (1 − 1.8366) + 2303 = 1502 psi

Bottom fiber @ midspan = 957 (1 + 1.4414) − 2797 = −461 psi

Allowable compression = .4 × 5000 = 2000 psi OK

Allowable tension = $6\sqrt{5000}$ = 424 psi NG

Increase Jacking Force

Jack to .72 fs

Prestress Losses

From personal program

$SH = 11000$ psi

$ES = 15631$ psi

$REL_1 = 7249$ psi

$CR_c = 17203$ psi

$CR_s = 2027$ psi

Total Loss = 45861 psi

Prestress Stresses

Jacking

$f_j = .72 \times 270000 = 194400$ psi

$F_j = 194400 \times 2.448 = 475.891^K$

Transfer

$f_t = 194400 - 15631 - 7249 = 171520$ psi

$F_t = 171520 \times 2.448 = 419.881^K$

$f_{ai} = 419881 / 369 = 1138$ psi

Final

$f_f = 194400 - 45861 = 148539$ psi

$F_f = 148539 \times 2.448 = 363.623^K$

$f_a = 363623 / 369 = 985$ psi

DMJM	PROJECT: 29th Ave	PROJECT NO:		PAGE 18
		BY: GIS	DATE: 1/30/85	
SUBJECT: Girder Design				

Combined stresses under loading stages

Tranfer

Top fiber @ .4 pt = 1138 (1 − 1.8366) + .96 × 687 = −293 psi

Bottom fiber @ .4 pt = 1138 (1 + 1.4414) − .96 × 540 = 2260 psi
< 2400 OK

Full Design Load

Top fiber @ midspan = 985 (1 − 1.8366) + 2303 = 1479 psi < 2000 OK

Bottom fiber @ midspan = 985 (1 + 1.4414) − 2797 = −392 psi ≥ −424 OK

Use 16 strands EMS = 3.25" EE = 13.75"

f'_c = 5000 psi

f'_{ci} = 4000 psi

Jack to 475.89 K total
(29.74 K each strand)

DMJM	PROJECT: 29th Ave	PROJECT NO:		PAGE
		BY: GIS	DATE: 1/30/85	19
SUBJECT: Girder Design				

Flexural Strength

$$\rho^* = \frac{2.448}{(77.81)(36+7.25-3.25)} = .0007865$$

$$M = 1.3\left[144.8 + 293.6 + 68.4 + 5/3 \times 508.1\right] = 1759.7 \text{ k-ft}$$

$$f_{su}^* = 270\left(1 - \frac{.5 \times .0007865 \times 270}{4}\right) = 262.833 \text{ ksi}$$

$$1.4 \times (36+7.25-3.25)(.0007865)(262.833/4) = 2.89' \Rightarrow \text{Rectangular Section}$$

$$M_u = (2.448)(262.833)(36+7.25-3.25)\left(1 - \frac{.6 \times .0007865 \times 262.833}{4}\right)$$

$$= 2078 \text{ k-ft} > 1759.7 \text{ k-ft} \quad \text{OK}$$

1.3×1.67

$1.3(144.8 + 293.6 + 68.4) + (2.17 \times 508.1) =$

659.8 $\quad$ 1102.6

steel percentage

$$\rho_{max} = .0007865 \times 262.833/4 = .0517 < .3 \quad \text{OK}$$

ρ_{min}

$$f_{crack} = 7.5\sqrt{5000} = 530 \text{ psi}$$

$$f_{ps} = 985(1+1.4414) = 2405 \text{ psi}$$

$$M_{cr} = \frac{(2405+530)(179759)}{30.22 \times 12000} = 1455 \text{ k-ft}$$

$$\frac{M_u}{M_{cr}} = \frac{2078}{1455} = 1.43 > 1.2 \quad \text{OK}$$

DMJM	PROJECT: 29th Ave	PROJECT NO:		PAGE 20
		BY: GIS	DATE: 1/30/85	
SUBJECT: Girder Design				

Camber

$$\Delta_p = \frac{L^2}{8E_{ci}I_G}\left(M_1 + M_2 - \frac{M_2}{3}\left(\frac{2a}{L}\right)^2\right]$$

@ Release $M_1 = F_t e_1$; $e_1 = Y_b - EE = 15.83 - 13.\ = 2.83''$

$M_2 = F_t e_2$; $e_2 = Y_b - ETS = 15.83 - 3.25 = 12.58''$

a = point of Hold down (assume .4)

$$\Delta_p = \frac{(54.92 \times 12)^2}{(8)(3605)(50980)}\left[419.881 \times 2.83 + 419.881 \times 12.58 - \frac{419.881 \times 12.58}{3}\left(\frac{2 \times .4 \times 54.92}{54.92}\right)^2\right]$$

$= 1.5785''$

Deflections of Girder

$$\Delta_{Girder}(@\text{Release}) = \frac{5wL^4}{384 E_{ci} I_G} = \frac{(5)(.384/12)(54.92 \times 12)^4}{(384)(3605)(50980)} = .4277''$$

Camber @ Release $= 1.5785 - .4277 = 1.1508''$

Correction in camber @ release for creep and other losses

Assume creep factor $= 1.5 = C_u$

90% of tranfer force

$$\Delta_S = (.9 \times \Delta_p - \Delta_{DLG})C_u = (.9 \times 1.5785 - .4277)1.5 = 1.4890 \uparrow$$

$$\Delta_{Slab\ Haunch} = \frac{(5)(.693)(54.92 \times 12)^4}{384 \times 4031 \times 50980} = .6903'' \downarrow$$

$$\Delta_{Diaph} = \frac{2.36(54.92 \times 12)^3}{(48)(4031)(50980)} = .0685'' \downarrow$$

.7588" (NC)

$$\Delta_{DL\ comp} = \frac{(5)(.313)(55.75 \times 12)^4}{384 \times 4031 \times 179759} = .0939'' \downarrow$$

Slab + Haunch + Diaph Δ @ 1/4 point (NC) =

$$\frac{(.693/12)(164.75)}{(24)(4031)(50980)}\left[659^3 - (2)(659)(164.75)^2 + 164.75^3\right] + \frac{(2.36)(164.75)}{(48)(4031)(50980)}\left[(3)(659)^2 - (4)(164.75)^2\right] = .5388''$$

Final camber $= 1.4890 - .6903 - .0685 - .0939 = .6367''$

1" haunch OK!

DMJM	PROJECT: 29th Ave	PROJECT NO:		PAGE
		BY: GIS	DATE: 1/30/85	21
SUBJECT: Girder Design				

Shear

Investigate shear in middle 1/2 of span

V_{DL} @ 1/4 PT $(55.75/4 = 13.94')$

$V_{nc} = 1.077(54.92/2 - 13.94) + 2.36/2 = 15.74^k$

$V_{comp} = .313(55.75 - 13.94) = 13.09^k$ "

V_{LL+I}

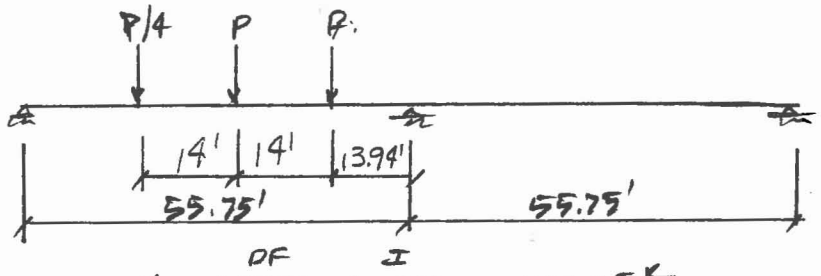

$P = 16 \times 1.3636 \times 1.2766 = 27.85^k$

$$V_{LLI} = \frac{(27.85)(41.81)}{(4)(55.75)^3}\left[4 \times 55.75^2 + 13.94(55.75 + 41.81)\right] +$$

$$\frac{(27.85)(27.81)}{(4)(55.75)^3}\left[4 \times 55.75^2 + 27.94(55.75 + 27.81)\right] +$$

$$\frac{(6.96)(13.81)}{(4)(55.75)^3}\left[4 \times 55.75^2 + 41.94(55.75 + 13.81)\right]$$

$= 41.80^k$

$V_u = (15.74 + 13.09)1.3 + 41.80(5/3)(1.3) = 127.79^k$

$V_c = .06 \times 5 \times 6 \times .9 \times 40 = 64.8^k$ or $(180)(6)(.9 \times 40) = 38.88^k$ ←

#4 stirrups

$$s = \frac{(.4)(2)(40)(.9 \times 40)}{127.79 - 38.88} = 12.95''$$ ←

or $S_{min} = (.4)(40)/(.1 \times 6) = 26.67''$

DMJM	PROJECT: 29th Ave	PROJECT NO:		PAGE
		BY: GIS	DATE: 1/31/85	22
SUBJECT: Girder Design				

Shear (cont)

shear @ distance "d" (3.6') from face of pier cap

$$V_{DLNC} = 1.077(54.92/2 - 4.91) + 2.36/2 = 25.47^k$$

$$V_{DLC} = .313(55.75 - 4.91) = 15.91^k$$

$$V_{LL+I} = \frac{(27.85)(50.84)}{(4)(55.75)^3}\left[4 \times 55.75^2 + 4.91(55.75 + 50.84)\right] +$$

$$\frac{(27.85)(36.84)}{(4)(55.75)^3}\left[4 \times 55.75^2 + 18.91(55.75 + 36.84)\right] +$$

$$\frac{(6.96)(22.84)}{(4)(55.75)^3}\left[4 \times 55.75^2 + 32.91(55.75 + 22.84)\right]$$

$$= 50.91^k$$

$$V_u = (25.47 + 15.91)1.3 + 50.91 \times 5/3 \times 1.3 = 164.1^k$$

#4 stirrups

$$s = \frac{(.4)(2)(40)(.9)(40)}{164.1 - 38.88} = 9.2''$$

DMJM	PROJECT: 29th Ave	PROJECT NO:		PAGE
		BY: GIS	DATE: 2/12/85	23
SUBJECT: Girder Design				

Post Tension Alternate

Section Properties - Use 4000 psi Concrete for girder + slab

@ 1.4

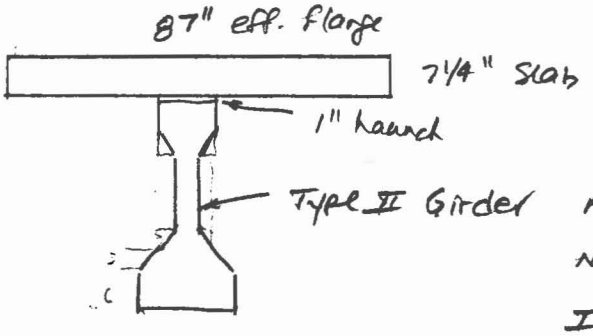

A = 369
NA = 15.83"
I = 50980 in^4

A = 1011.75 in^2 (7.0260 ft^2)
NA = 31.5330" (2.6278')
I = 197170 in^4 (9.5086 ft^4)
D = 44.25" (3.6875')

@ 2.0

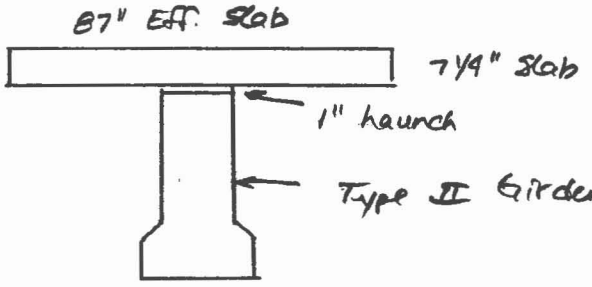

A = 1119.75 in^2 (7.7760 ft^2)
NA = 30.3724" (2.5310')
I = 214296 in^4 (10.3345 ft^4)
D = 44.25" (3.6875')

DMJM	PROJECT: 29th Ave	PROJECT NO:		PAGE
		BY: GIS	DATE: 2/7/85	24
SUBJECT: Girder Design				

Post Tension Alternate

Temporary Erection Design

The girder will be designed for its own dead load

Once the girder is in place it will be shored for all other loads until post tensioning occurs.

Loads & Moments

Girder weight = .384 k/ft

$M_{DL\ Girder} = .384 \times 54.92^2/8 = 144.8$ k-ft

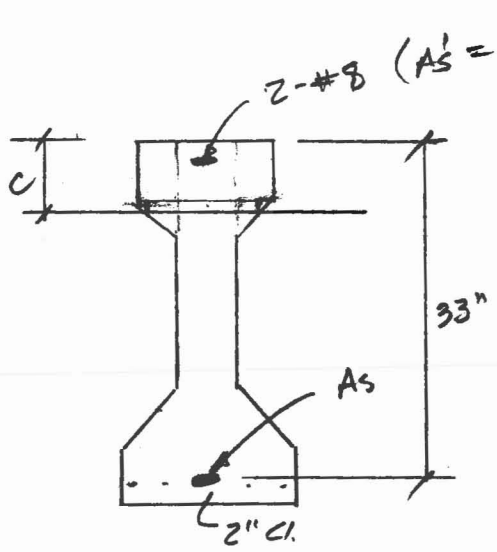

Try $A_s = 3.16$ in^2 (4-#8)

$f_c = 1600$ psi

$f_s = 24000$ psi

$n = 8$

NA: (in fillet)

$$(12)c^2/2 + (c-6)^2\left(\tfrac{2}{3}(c-6)\right)\times 2 + (c-6)\left(12-2(c-6)\right)(c-6)/2 + (16-1)(1.58)(c-3) = (8)(3.16)(33-c)$$

$c = 8.45''$

$$I = (1/12)(12)(6)^3 + (12)(6)(8.45-3)^2 + (1/12)(12-2\times 2.45)(2.45)^3 + (12-2\times 2.45)(2.45)(8.45-2.45/2)^2 + (1/36)(2.45)(2.45)^3\times 2 + (1/2)(2.45)(2.45)(8.45-2.45\times 2/3)^2 + (16-1)(1.58)(8.45-3)^2 + (8)(3.16)(33-8.45)^2 = 19353 \text{ in}^4$$

$M_{cap\ steel} = 24 \times 19353/(33-8.45)/8/12 = 197$ k-ft ← > 144.8 OK

$M_{cap\ conc} = 1.6 \times 19353/8.45/1200 = 305$ k-ft

DMJM	PROJECT: 29th Ave	PROJECT NO:		PAGE
		BY: GIS	DATE: 2/8/85	25
SUBJECT: Girder Design				

Post Tension Alternate

Determine if #4 @ 1'-0" in top of slab and #5 distribution steel will handle Girder weight moment produced @ Pier

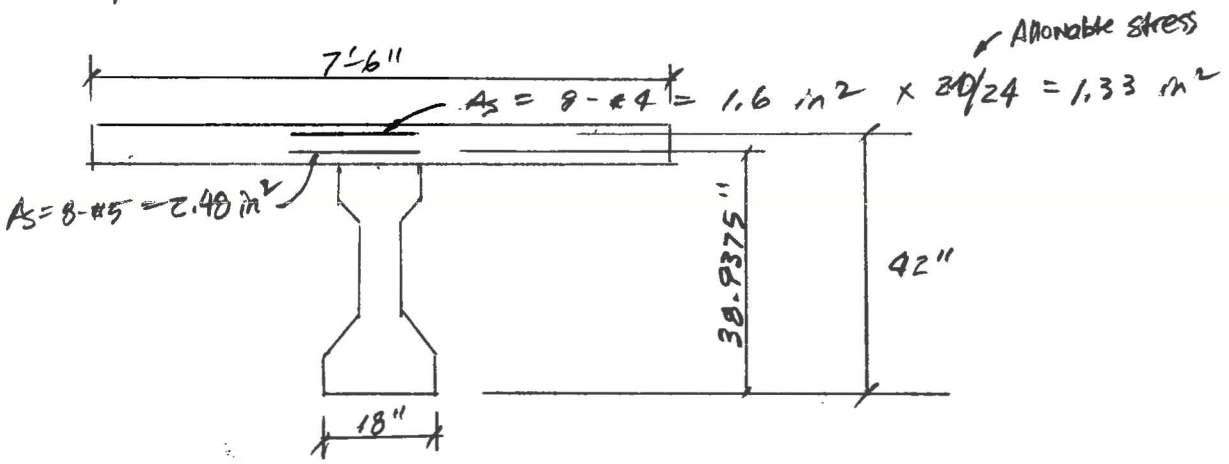

M_{cap} = 200 k-ft < 144.8 k-ft OK!

∴ Design post tension Girder to handle slab + Haunch + Draft + Composite DL + LL + I and assume the DL Girder is handled by the reinforcing steel.

see BDS computer run for Design of prestressing steel

DMJM	PROJECT: 29th Ave	PROJECT NO:		PAGE
		BY: GJS	DATE: 2/11/85	26
SUBJECT: Girder Design - Post Tension Alternate				

Shear — see BDS Run

$V_c = .06 \times 4 \times 6 \times .9 \times 40 = 52^k$ or $180 \times 6 \times .9 \times 40 = \underline{39^k}$

#4 @ 6" $\Rightarrow V_u = \frac{2 \times .4 \times 40 \times .9 \times 40}{6} + 39 = 231^k$

#4 @ 9" $\Rightarrow V_u = \frac{2 \times .4 \times 40 \times .9 \times 40}{9} + 39 = 167^k$

#4 @ 1'-0" $\Rightarrow V_u = \frac{2 \times .4 \times 40 \times .9 \times 40}{12} + 39 = 135^k$

V_u @ Abut. $= (23.3 + 6.5)1.3 + 1.3 \times 5/3 \times 49.9 = 147^k$
$\Rightarrow$ #4 @ 9"

V_u @ .1 $= (17.3 + 4.8)1.3 + 1.3 \times 5/3 \times 42.4 = 121^k$
$\Rightarrow$ #4 @ 1'-0"

V_u @ Pier $= (39.2 + 10.9)1.3 + 1.3 \times 5/3 \times 55.1 = 185^k$
$\Rightarrow$ #4 @ 6"

V_u @ .9 $= (33.2 + 9.2)1.3 + 1.3 \times 5/3 \times 50.3 = 164^k$
$\Rightarrow$ #4 @ 9"

V_u @ .8 $= (27.2 + 7.4)1.3 + 1.3 \times 5/3 \times 44.8 = 142^k$
$\Rightarrow$ #4 @ 9"

V_u @ .7 $= (21.2 + 5.7)1.3 + 1.3 \times 5/3 \times 38.7 = 119^k$
$\Rightarrow$ #4 @ 1'-0"

Anchor used for Design - Prescon Corporation

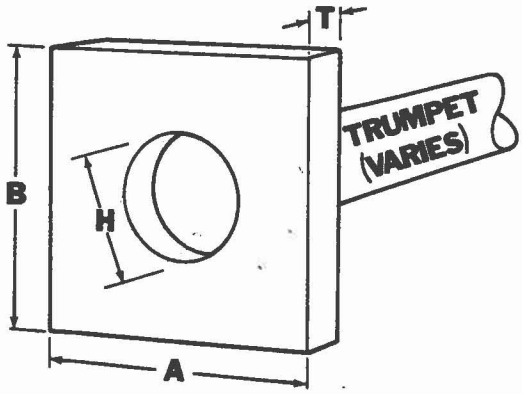

Bearing Plate Assembly

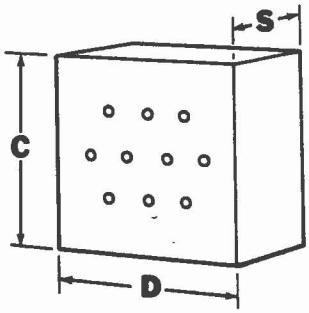

Tapered Hole Anchor Block

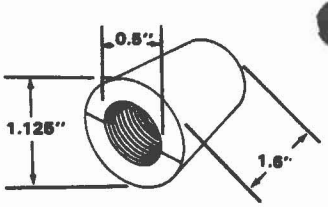

Wedges

STRAND TENDON SIZE CHART

Tendon Size No. - Dia.	Concrete Strength f'c (psi)	Bearing Plate Assembly				Tapered Hole Anchor Block			Effective Force (Kips) 0.60 f's
		A	B	H	T	C	D	S	
12 — ½"	3000	12"	12"	5¾"	1¼"	8"	8"	2½"	298
26 — ½"	3000	16½"	16½"	7¼	1½"	11"	11"	4"	645

Note: All dimensions are inches.
Other tendon sizes available on request.

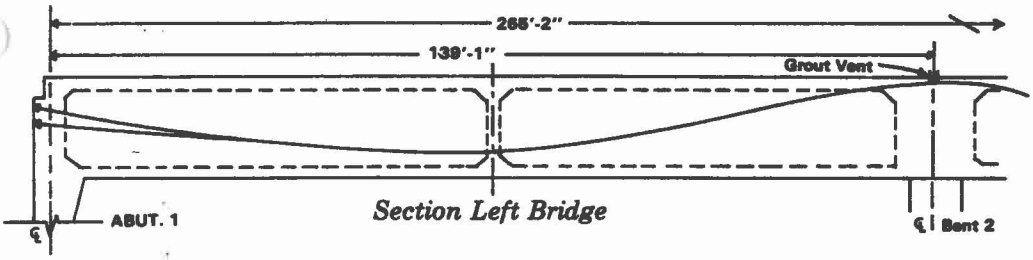

Section Left Bridge

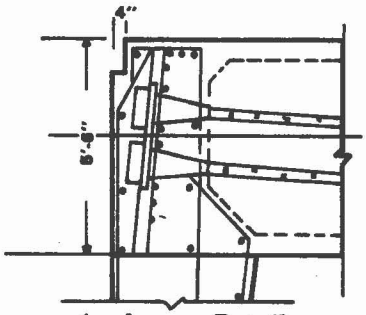

Anchorage Detail

ANCHORAGE FABRICATION

Anchorages for wire tendons are composed of three basic components:

1. Bearing plate assembly
2. Stressing washer
3. Shims

Anchorages for strand tendons are composed of three basic components:

1. Bearing plate assembly
2. Tapered hole anchor block
3. Wedges

The above components are fabricated at a Prescon plant under a rigid quality assurance program, with the latest automatic equipment, and subject to rigorous inspection by the design agency.

Bearing plate assemblies distribute the prestress force to the concrete, and vary in size according to concrete strength and tendon force (see Tendon Size Charts on page 9).

Stressing washers are fabricated from various steels as required, machined to length and then threaded internally or externally. They are drilled to receive individual wires with 30 or more holes formed simultaneously. Precise control of fabrication procedures is required to insure adequate behavior in bearing of the button headed wire and proper transfer of force to the bearing plate assembly. Tapered hole anchor blocks are cut from steel plate of the appropriate thickness. Tapered holes to receive each strand and pair of wedges are accurately machined in the block to insure proper anchoring of the strand tendon.

Provision is made in wire and strand systems for introduction of grout materials for final bonding of tendons after stressing operation is complete.

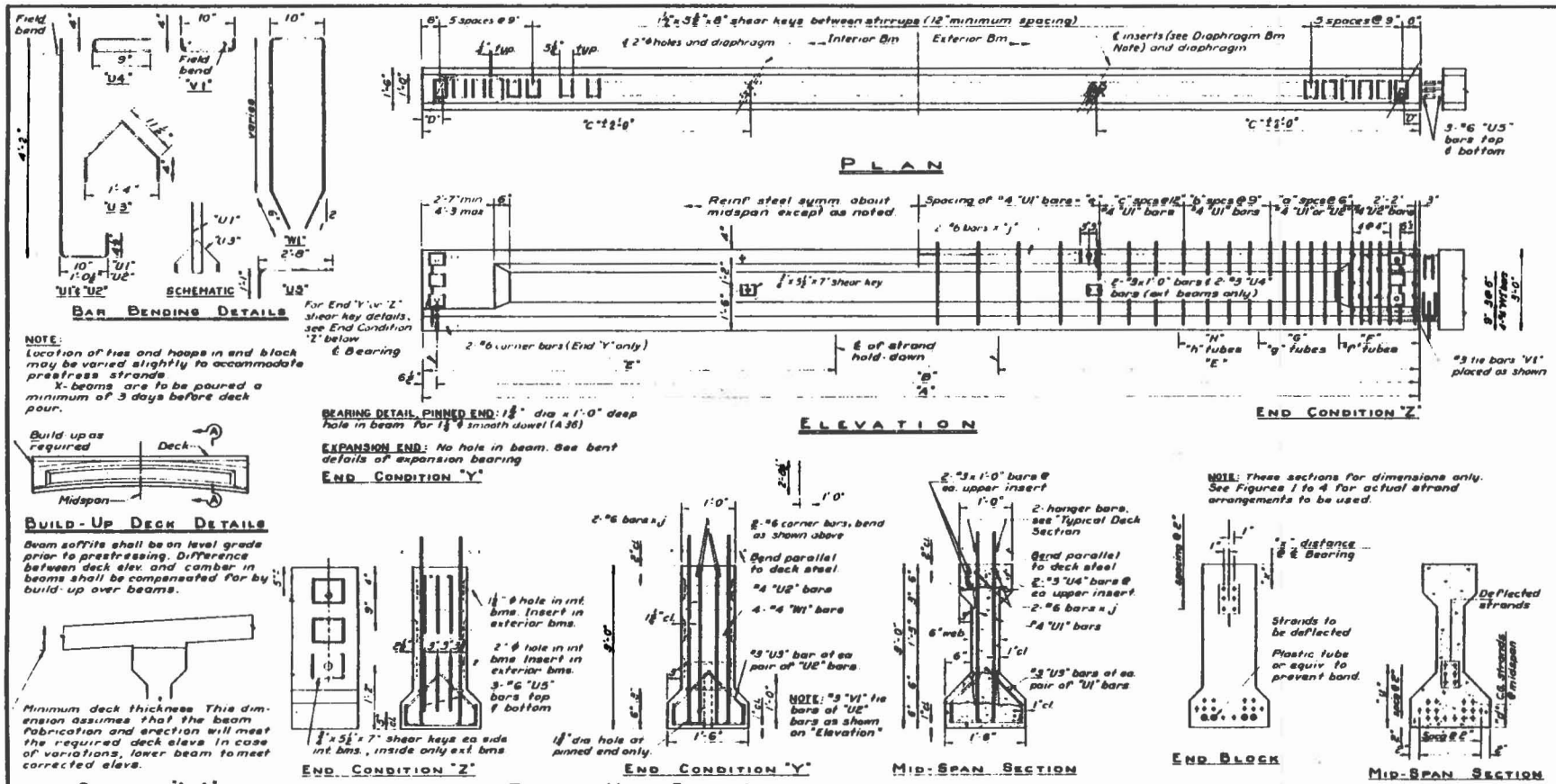

NOTE:
Location of ties and hoops in end block may be varied slightly to accommodate prestress strands
X-beams are to be poured a minimum of 3 days before deck pour.

Minimum deck thickness. This dimension assumes that the beam fabrication and erection will meet the required deck elevs. In case of variations, lower beam to meet corrected elevs.

GENERAL NOTES

SPECIFICATIONS
Design for HS20-44 live loading according to O.S.H.D. Bridge Design and Construction Specifications.

PRECAST PRESTRESSED CONCRETE
All concrete shall be class 5000-1" to 6000-1" shown in table below as (Concrete strength at 28 days). Concrete strength at prestress release varies and is shown in table below as (Concrete strength at transfer)

PRETENSIONING STEEL
All strands shall be ½" dia. 7-wire strands with a minimum ultimate strength of 41,300 lbs. (ASTM A416 Grade 270). Straight strands shall be tensioned initially to 28,910 lbs. unless shown otherwise in the table below. Deflected strands shall have the same tension after deflecting.

MILD STEEL REINFORCEMENT
All reinforcing steel shall conform to ASTM Spec. A615 Grade 60 (f_y=24,000 psi). The following splice lengths shall be used (unless shown otherwise):

Bar Size	Splice Length	Bar Size	Splice Length
3	1'-0"	8	3'-7"
4	1'-4"	9	4'-7"
5	1'-8"	10	5'-9"
6	2'-0"	11	7'-1"
7	2'-9"	14 & 18	Not Permitted

All bars shall be placed 2" clear of the nearest face of concrete (unless shown otherwise).

DIAPHRAGM BEAMS
For beams with total length (dim. "A") equal to or less than 60'-0" use one diaphragm at midspan. For beams with a total length greater than 60'-0" use two diaphragms as shown. See dimension "E" in table below. Place 3 Strad Conc. Insets: Richmond EC-2 or Dayton Sure-Grip F-56 (or F-51) or approved equal, in exterior beams only at each diaphragm. Provide ⅝" dia. x 2'-3" rod (A 36) threaded. Pull length or ⅝" dia. x 2'-3" coil rod (yield & ultimate equal to A36, elongation min 10%) to fit into each insert. Brace prestressed beams to prevent lateral deflection during diaphragm pour.

DIMENSIONS
Dimensions shown in table below are horizontal dimensions. Finished length of beam, ℄ bearing to end of beam (dimension "B") shall be corrected for variation due to grade. Allowance shall be made by fabricator for elastic shortening, creep and shrinkage (dimension "Z").

BEAM END: The designations "BK" and "AHD" refer to back and ahead on station.

HANDLING PRESTRESSED CONCRETE BEAMS: The beams shall be maintained in an upright position at all times. They shall be lifted by means of lifting bars securely anchored in the end block as approved by the engineer.

BEAMS	NUMBER OF BEAMS REQ'D	LOCATION	SPAN LENGTH CENTER TO CENTER OF BEARINGS ALONG ℄ BEAM	TOTAL STRANDS PER BEAM	SEE FIGURE	INITIAL TENSION PER STRAND IN KIPS	CONCRETE STRENGTH AT TRANSFER (KSI)	CONCRETE STRENGTH IN 28 DAYS (KSI)	VARIABLE DIMENSIONS "A"	"B"	"J"	BM END	END CONDITION	"C" ± 2'-0"	"D"	"E"	"F"	"G"	"H"	"a"	"b"	"c"	"e"	"f"	"g"	"h"	WEIGHT OF BEAMS IN KIPS	ESTIMATED DEFLECTION AT MIDSPAN: UPWARD DEFLECT. DUE TO PRESTRESSING AT TRANSFER	DOWNWARD DEFLECT. DUE TO DECK, BEAM LOAD	UPWARD DEFLECTION DUE TO PRESTRESSING 3 MOS. AFT. TRANS.	"Z" DIM. SHORTENING TWO WEEKS AFTER TRANSFER
												BK																			
												AHD																			
												BK																			
												AHD																			
												BK																			
												AHD																			
												BK																			
												AHD																			
												BK																			
												AHD																			

FIGURE	1		2		3		4	
	BK	AHD	BK	AHD	BK	AHD	BK	AHD
TOTAL STRANDS								
"d" DISTANCE								
"H" DISTANCE								
END OF BEAM	BK	AHD	BK	AHD	BK	AHD	BK	AHD
STR. DEFLECTED "X" DISTANCE								

NOTE: Tubes & strands are symmetrical about Bm. ℄'s as shown.

DATE	REVISION
4-5-72	Depth inserts from 10 to 8

APPROVED:
BRIDGE ENGINEER
DESIGNED
CHECKED
DRAWN
CALC. BOOK

OREGON STATE HIGHWAY DIVISION
BRIDGE DEPARTMENT

TYPE II CONTINUOUS PRESTRESSED CONCRETE BEAMS

DATE
SHEET OF
BRIDGE NO
DRAWING NO

10-3-79 Reinf Note Revised 9-30-75 Revised Insert note. 2-14-75 Rev. Diaphragm note 12-2-74 Rev. Reinf. note 8-19-69 Pretensioning steel ASTM 6-12-69 Diaph. Bm note 9-16-68 Rebar spec 6-19-70 End Bm

FILE No 23948

DMJM	PROJECT: 29th Ave.	PROJECT NO:		PAGE 29
		BY: GLS	DATE: 2/14/85	

SUBJECT: Cost Comparison between Pretension & Post Tension Girder

Girder Length = 55.92'

Pretension

cost = $65/ft ≈ $3500 ea.

Quantities / Girder		Unit price	cost
Concrete =	5.31 cu. yds	400.00	2124.00
reinf =	738 #	.45	332.10
Prestressing steel =	479 #	2.00	958.00
			$ 3414.0
			say $3500

Post Tension Quantities / Girder

concrete =	5.75 cu. yds	*440	2530.00
reinf =	1821 #	.45	819.45
Prestressing steel =	447.5 #	2.00	895.00
			$ 4244.45
			say $4300

* since shoring is req'd on Post Tension alternate add 10% to unit price of concrete

DMJM	PROJECT	PROJECT NO: 4252-01-05	PAGE 29A
		BY: / DATE:	

SUBJECT QUANTITIES - GIRDER CONCRETE (PRESTRESSED)

GIRDER

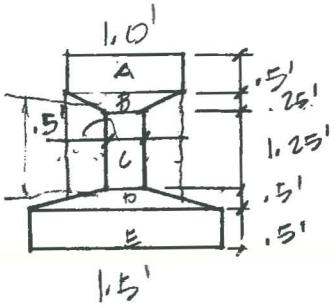

AREAS

A = 1' x .5' = .5 FT.^{2}

B = .25(1' + .5')/2 = .18750 FT.^{2}

C = 1.25 x .5 = .625 FT.^{2}

D = .5(1.5 + .5)/2 = .5 FT.^{2}

E = 1.5 x .5 = .75 FT.^{2}

2.56625 FT.^{2}

x 55.92 LENGTH

143.29 FT.^{3}/27

= 5.31 YD.^{3}

x 16 GIRDERS

TOT => 84.91 YD^3

REINFORCING STEEL BAR LIST .521 #/FT. 29B

GIRDER STRANDS - PRESTRESSED

#4	#5	#6	#7	#8	#9	#10	#11
0.668	1.043	1.502	2.044	2.670	3.400	4.303	5.313

MARK	Size		No. of Bars	Type	Total Weight	Comments
	Bar No.	Length				
		55.92	4		116.54	STRAIGHT
		59.92	6		187.31	STRAIGHT EXTENDED
		56.12	6		175.43	DRAPED
					479.28	LBS PER GIRD. SPAN
					x 16	W/2 SPANS & 8 GIRDERS
					7668.5	=> 7,669 LBS

By:	Date	Job No. 4252-01-05	Sheet 1 of 3
Chk'd:	Date	Structure No.	

REINFORCING STEEL BAR LIST

29c

GIRDER REINF. - PRETERS.

#4	#5	#6	#7	#8	#9	#10	#11
0.668	1.043	1.502	2.044	2.670	3.400	4.303	5.313

MARK	Size: Bar No.	Size: Length	No. of Bars	Type	Total Weight	Comments
	4	4.75'	77	3'-8" 4" 9"	244.32	STIRRUPS
	4	4.75'	77	4" 3'-8" 9"	244.32	
	4	2.58'	77	1 1/2" 1 1/2" 4" 4"	132.70	
	5	55.83'	2		116.46	STRAIGHT BARS
					737.80	LBS. PER GIRD. SPAN
					16	W/ 2 spans & 8 GIRDERS
				Tot:	11,804.8	=> 11,805 LBS. 17.500

By:	Date	Job No.	Sheet 2 of 3
Chk'd:	Date	Structure No.	

REINFORCING STEEL BAR LIST

29D

GIRDER DECK - POST TENSIONED

#4	#5	#6	#7	#8	#9	#10	#11
0.668	1.043	1.502	2.044	2.670	3.400	4.303	5.313

MARK	Size: Bar No.	Size: Length	No. of Bars	Type	Total Weight	Comments
		7.58		4½"		
	4	7'-7"	20	3'-3" 4"	101.27	
		3.17				
	4	3'-2"	40	3'-2"	84.7	
	4	4'-2"	20	4" 1'-4"	55.71	
	4	7'-7"	48		243.05	
		3.25		9"		
	4	3'-3"	48		104.21	
	4	4'-2"	48		133.71	
	4	2'-5"	4		6.47	GRILLAGE
	4	1'-0"	~~8~~ 32		21.38	
	8	57-7"	2		307.48	top CONT. (IN ST. 1,2,2.)
	8	57-7"	4		614.95	BOTT. CONT. (IN STRR.)
	4	55'-5"	4		148.08	CONT. (IN STRR.)
				TOT.	1821.01	2 spans & 8 (2 IRR)
					× 16	
					29,136.16 ⇒	29,136 LBS

By:	Date	Job No. 9252-01-05	Sheet of
Chk'd:	Date	Structure No.	

490 #/FT.3

ANCHOR BOLTS 4.02 LBS PER BOLT
.915 LBS/ANCH. OH END WELDED STUDS

REINFORCING STEEL BAR LIST

GIRDER BEARING REINF. - PRETHS.

29E

#4	#5	#6	#7	#8	#9	#10	#11
0.668	1.043	1.502	2.044	2.670	3.400	4.303	5.313

MARK	Size		No. of Bars	Type	Total Weight	Comments
	Bar No.	Length				
			1632	1'-4" 1" x 3/4" 40.73	1303.36	END PL.
			32 28	T T	117.12	END WELDED STUDS & HUBS
			4	2'-4" 9" x 3/4" 53.52	214.08	SOLE PL.
		1"Ø x 1'-4"	8		32.16	ANCHOR BOLTS & NUTS
					1666.72	LBS

By: Date	Job No.	Sheet 3 of 3
Chk'd: Date	Structure No.	

✓ GIS

DMJM	PROJECT	PROJECT NO:	PAGE
		BY: KH / DATE:	29F
SUBJECT			

END BLKS OF GIRDER

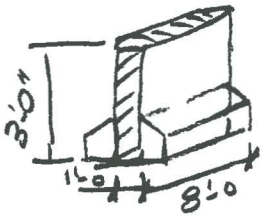

L = 8.0'
W = 1.0'
H = 3.0'

$8 \times 1 \times 3 = \frac{24}{27} =$

.89 CU YDS

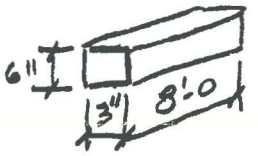

L = 8.0'
W = .25'
H = .5'

$8.0 \times .25 \times .5 =$

$\frac{1}{27} = .04 \times 2 =$

.07 CU YDS

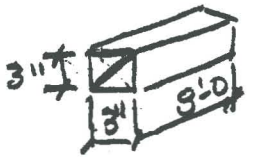

L = 8.0'
W = .25'
H = .25

$8.0' \times .25 \times .25 =$

$\frac{.05}{27} =$

.02 CU. YDS.

$.89 + .07 + .02 = .98 \times$

$2 =$ 1.98 CU YDS

CENTER SECTION OF GIRDER

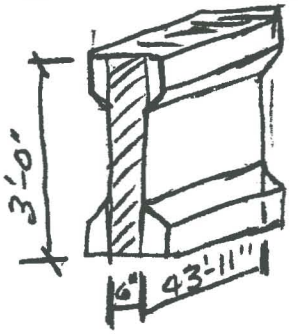

L = 39.9167'
W = .5'
H = 3.0'

$39.9167 \times .5 \times 3.0' = \frac{59.88}{27}$

2.22 CU. YDS

BOT.

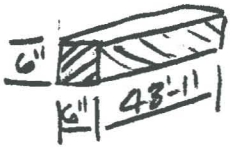

$39.9167' \times .5 \times .5 =$

$\frac{9.98}{27} = .37 \times 2 =$

.74 CU. YDS.

$39.9167 \times .5 \times .5 = \frac{9.98}{27}$

.37 CU. YD.

5.75 ✓ G15

DMJM	PROJECT	PROJECT NO:		PAGE
		BY: KH	DATE:	296
SUBJECT				

TOP

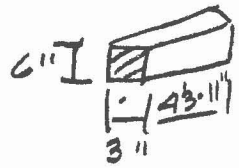

$39.9167 \times .25 \times .5 = \frac{4.99}{27}$

$.18 \times 2 = .37$ CU. YDS.

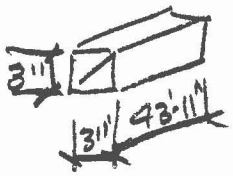

$39.9167 \times .25 \times .25 = \frac{2.99}{27} =$

.09 CU. YDS.

$2.22 + .74 + .37 + .37 + .09 =$

CTR. 3.79 CU YDS.
END BLKS 1.98 CU YDS.
5.75 CU. YDS.

DMJM	PROJECT: 29th AVE	PROJECT NO:	PAGE
		BY: GIS / DATE: 2/2/85	

SUBJECT: Pier Design

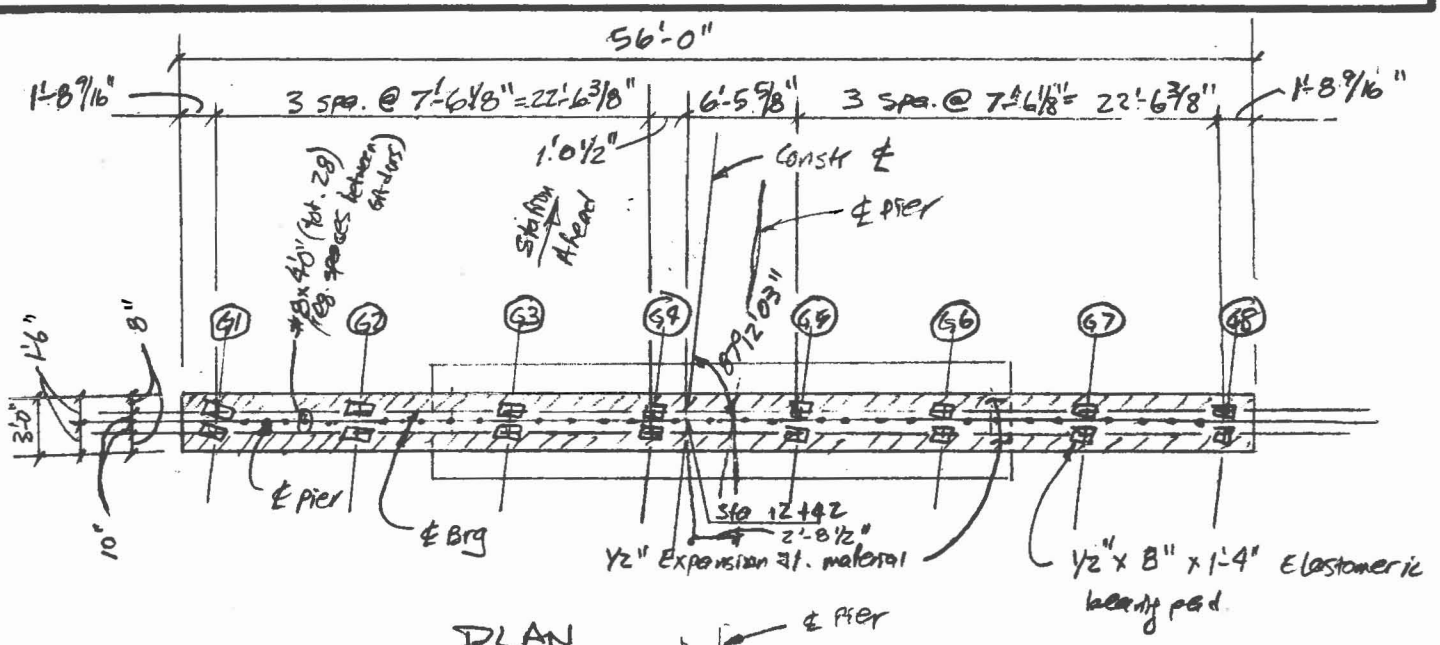

PLAN

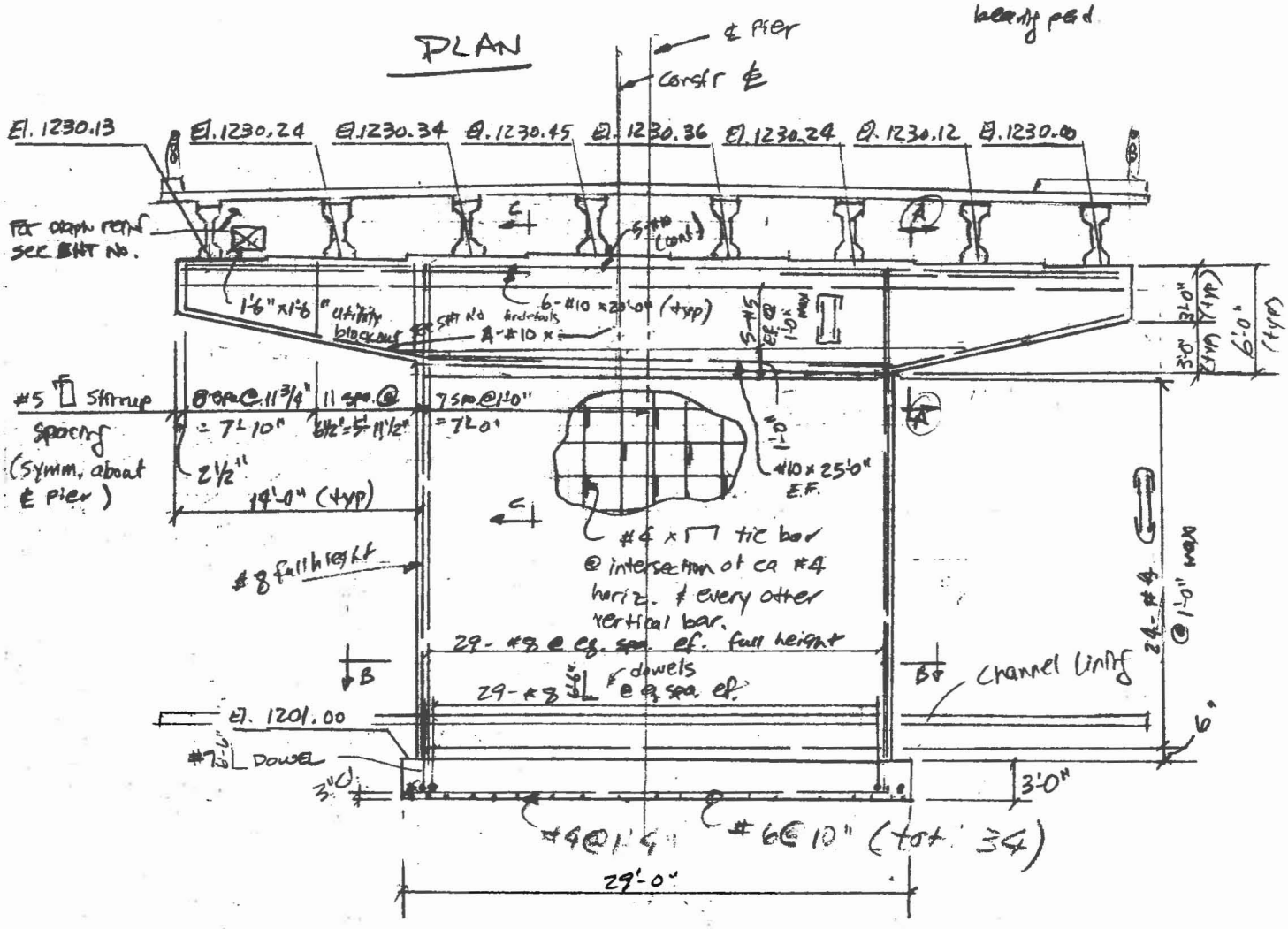

ELEVATION

DMJM	PROJECT: 29th Ave	PROJECT NO:		PAGE
		BY: GLS	DATE: 2/5/85	30
SUBJECT: Pier Design				

Girder Bearing Elevations

Structure Depth = 7¼ (Slab) + 1 (Haunch) + 36 (Girder) + ½ (Bearing) = 44.75"

Girder	Station	offset	Elev.
1	12+40.9822	-23.5417	30.13
2	12+41.3064	-16.0417	30.24
3	12+41.6307	-8.5417	30.34
4	12+41.9550	-1.0417'	30.45
5	12+42.2792	6.4583	30.36
6	12+42.6035	13.9583	30.24
7	12+42.9278	21.4583	30.12
8	12+43.2520	28.9583	30.00

Distance from ℄ structure to constr ℄ along ℄ pier

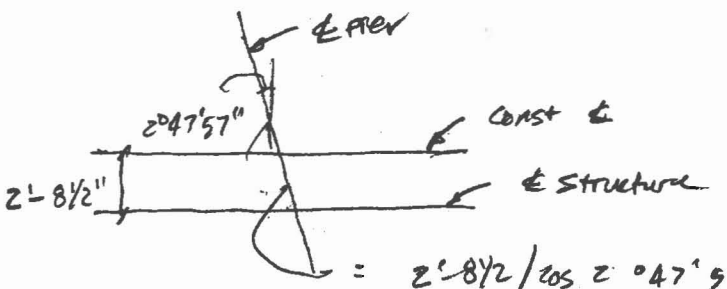

= 2'-8½ / cos 2°47'57" = 2.7116'

DMJM	PROJECT: 29th Ave	PROJECT NO:		PAGE
		BY: GLS	DATE: 2/5/85	31
SUBJECT: Pier Design				

Pier Cap Design

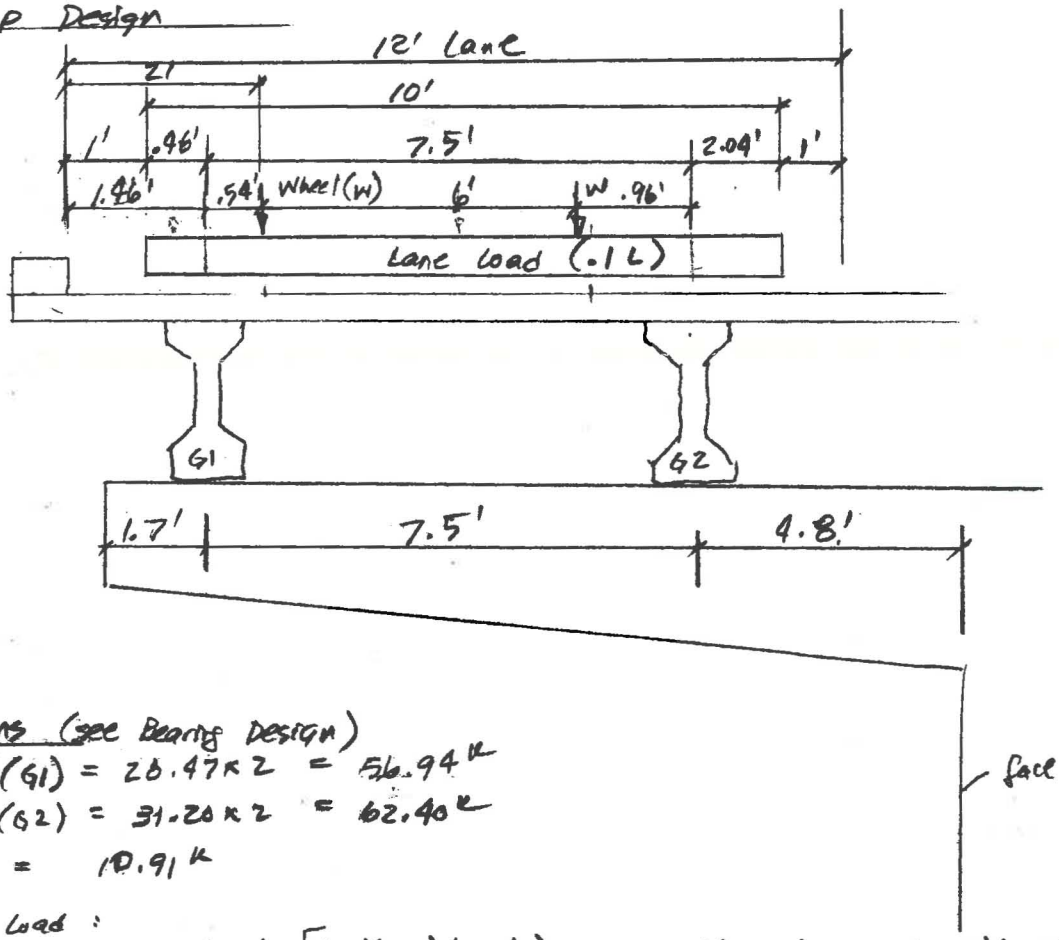

Reactions (see Bearing Design)

DL_{NC} (G1) = 28.47 × 2 = 56.94 K

DL_{NC} (G2) = 31.20 × 2 = 62.40 K

DL_C = 10.91 K

Live Load:

G1: DF (lane) = [(.1)(7.5)(7.5/2) + (.1)(.46)(7.73) − (.1)(2.04)(2.04/2)] ÷ 7.5 = .395L

DF (truck) = [.96 + 6.96] ÷ 7.5 = 1.056 ⇒ .528 lanes

⇒ Reaction = .528 × 70.6 = 37.28 K

G2: DF (lane) = [(.1)(7.5)(7.5/2) − (.1)(.46)(.46/2) + (.1)(2.04)(0.52)] ÷ 7.5 = .605L

DF (truck) = 1 − .528 = .472

Use truck reaction ⇒ Reaction = .472 × 70.6 = 33.32 K

Total G1 = 105.13 K

Total G2 = 106.63 K

Pier Cap Design (cont)

Moment Design (cont)

10% of flexure steel in tension area ⇒ $1.27 \times 11 \times .1 = 1.397\ in^2$

⇒ 10-#5 ($A_s = 3.12$) OK/

Develope #10 past face

$l_d = 55.6''$ top bar $= 1.4 \times 55.6 = 77.84'' = 6.49'$

length req'd $= (14 - 2/12 + 6.49)\ 1805/1820 = 20.16'$ say 20'

Shear Design

Shear @ d from support (include reaction from G2)

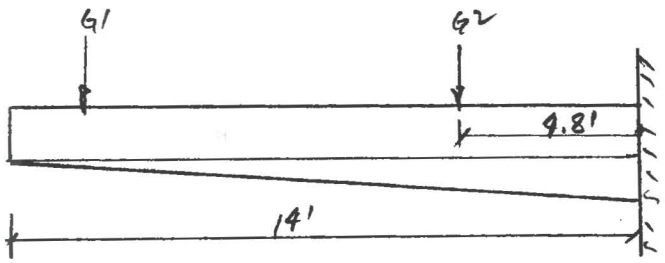

Cap load @ free end $= (3)(3)(.15) = 1.35$ k/ft

@ fixed end $= (6)(3)(.15)$ 2.7 k/ft

Assume $d = 60''$

$$V = \overset{G1}{105.13} + \overset{G2}{106.63} + \underset{12.15}{(1.35)(14-5)} + \underset{3.91}{(1/2)(1.35)(14)\left(\frac{(14-5)^2}{14^2}\right)} = 227.82^k$$

$v = 227820/36/60 = 105$ psi ←

Shear beyond G2 $= 227.82 - 106.63 = 121.19^k$

$v = 121190/36/54 = 62$ psi

Shear @ G1 $= 105.13 + (1.35)(1.7) + (1.35)(1/2)(14)\left(\frac{1.7^2}{14^2}\right) = 107.6^k$

$v = 107600/36/36 = 83$ psi ←

Design shear reinforcing from G1 to G2 for 83 psi

and from G2 to face of support for 105 psi

DMJM	PROJECT: 29th Ave	PROJECT NO:	PAGE
		BY: GLS / DATE: 2/5/85	

SUBJECT: Pier Design

Pier Cap Design (cont.)

Moment Design

Maximum Moment @ face of wall = 105.13 × 12.3' + 106.63 × 4.8 = 1805 k-ft

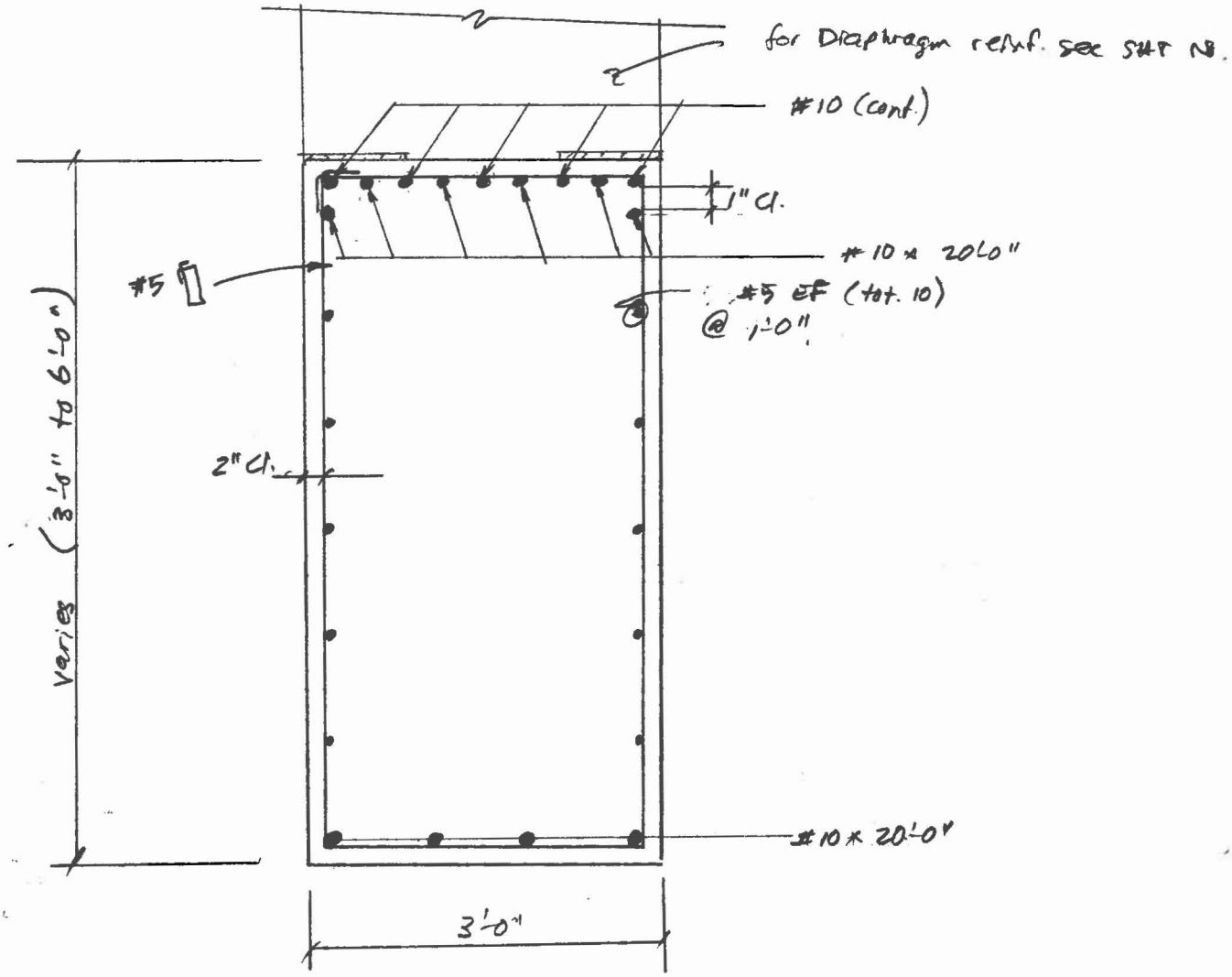

SECTION A

From personal program: $f_c = 1200$ psi $f_s = 24000$ psi $n = 9$

Including all steel shown and performing a stress-strain compatibility

Assuming #5 bars in face spaced 1'-0" down from #10 EF.

$M_{cap} = 1820^{k\text{-}ft} > 1805$ OK

DMJM	PROJECT: 29th Ave	PROJECT NO:		PAGE 33
		BY: BJS	DATE: 2/5/85	
SUBJECT: Pier Design				

Pier Cap Design (cont.)

Shear Design (cont.)

#5 stirrups

$$v_c = .95\sqrt{3000} = 52 \text{ psi}$$

G2 to face of wall:

$$s = \frac{(.62)(20000)}{(36)(105-52)} = 6.5'' \leftarrow$$

G1 to G2

$$s = \frac{(.62)(2000)}{36(83-52)} = 11.11'' \leftarrow$$

$$s_{min} = \frac{(.62)(40000)}{36 \times 50} = 13.78''$$

DMJM	PROJECT: 29th Ave	PROJECT NO:		PAGE
		BY: GIS	DATE: 2/6/85	34
SUBJECT: Pier Design				

Wall Design

Loads -

Ignor loads in the transverse direction because wall is very stiff in that direction

Dead loads (DL)

Total reaction from Girders = $56.94 \times 2 + 62.40 \times 6 + 10.91 \times 8 = 575.56^k$

Pier weight = $\left[\left\{\left[(3+6)/2\right]14 \times 2 + (28)(6)\right\}3 + (20)(23)(28)\right].15 = 325.5^k$

901.06^k

Live loads (LL)

Should control

Case I (2 lanes) Maximum reaction = $70.6 \times 2 = 141.2^k$

→ Case II (3 lanes) " " = $70.6 \times 3 \times .9 = 190.62^k$

→ Case III (4 lanes) " " = $70.6 \times 4 \times .75 = 211.80^k$

Sidewalk live load (SL)

$(.06)(5.4167) \times 5/8 \times 55.75 = 11.32^k$

Wind loads (W)

From the superstructure = $(.012)(3 \times 58 + 114.08 \times .02152 \times 58)$

$= 3.80^k$

on substructure = $(.04)(23 \times 28 + (3+6)/2 \times 14 \times 2 + 28 \times 6)$

$= 37.52^k$ (CG located 16.25' from top of footing)

Wind load on live load (WL)

$(.04)(50) = 2^k$

Stream Flow Force (SF)

$P = (.67)(14)^2 = 131.32\ ^k/ft^2 \times 19 \times 2 = 4.99^k$

DMJM	PROJECT 29th Ave	PROJECT NO:		PAGE
		BY: GIS	DATE: 2/6/85	35
SUBJECT Pier Design				

Wall Design (cont.)

Loads (cont.)

Earthquake (EQ)

At top of pier from super structure = (.09)(1.0)(575.56) = 34.53 K

At cg of pier = (.09)(1.0)(325.5) = 29.30 K

Longitudinal live load (LF)

Case I = .05 × 141.2 = 7.06 K

Case II = .05 × 190.62 = 9.53 K

Case III = .05 × 211.80 = 10.59 K

DMJM	PROJECT 29th Ave	PROJECT NO:		PAGE
		BY: GIS	DATE: 2/6/85	36
SUBJECT Pier Design				

Wall Design (cont.)

Reactions @ Top of Footing - Design Pier Height = 1230.24 - 1201 = 29.24'

Group I

LL Case II :

P = 901.06 + 190.62 + 11.32 = 1103 K

M = 0

LL Case III

P = 901.06 + 211.80 + 11.32 = 1124.18 K

Group II (125% overstress)

P = 901.06 / 1.25 = 720.85 K

M = [(3.80)(29.24) + (37.52)(16.25)] ÷ 1.25 = 576.65 K-ft

Group III (125% overstress)

LL Case II :

P = (901.06 + 190.62 + 11.32) ÷ 1.25 = 882.4 K

M = (3.80 x .3)(29.24) + (37.52 x .3)(16.25) + (2)(29.24) + 9.53 x 29.24

= 553.38 K-ft

LL Case III :

P = 1124.18 / 1.25 = 899.3 K

M = 3.80 x .3 x 29.24 + 37.52 x .3 x 16.25 + 2 x 29.24 + 10.59 x 29.24

= 584.37 K-ft

Group VII (133% overstress)

P = 901.06 ÷ 1.33 = 677.5 K

M = (34.53 x 29.24 + 29.30 x 16.25) ÷ 1.33 = 1117.1 K-ft

DMJM	PROJECT: 29th Ave	PROJECT NO:		PAGE
		BY: GIS	DATE: 2/6/85	37
SUBJECT: Pier Design				

Wall Design (cont.)

By inspection. investigate: Group I Case III

Group III Case III

Group VII

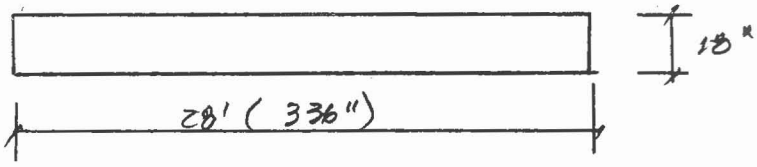

$f_c' = 3000$ psi

Slenderness effects — assume pinned @ top, $l_u = 29.24 - 3^{cap} = 26.24'$

Group I Case III maximum

$$EI = \frac{3122 \times (1/12)(336)(24)^3}{2.5} = 483375514$$

$$P_c = \frac{\pi^2 \times 483375514}{(1.0 \times 26.24 \times 12)^2} = 75182$$

$$\delta = \frac{1}{1 - \frac{2.5 \times 1075.88}{75182}} = 1.0371$$

.06

DMJM	PROJECT: 29th Ave	PROJECT NO:	PAGE 38
		BY: GIS / DATE: 2/6/85	

SUBJECT: Pier Design

Wall Design

% steel (ρ_t) ⇒ $24 \times 336 \times .01 = 80.64\ in^2 \Rightarrow 40.32\ in^2$ each face

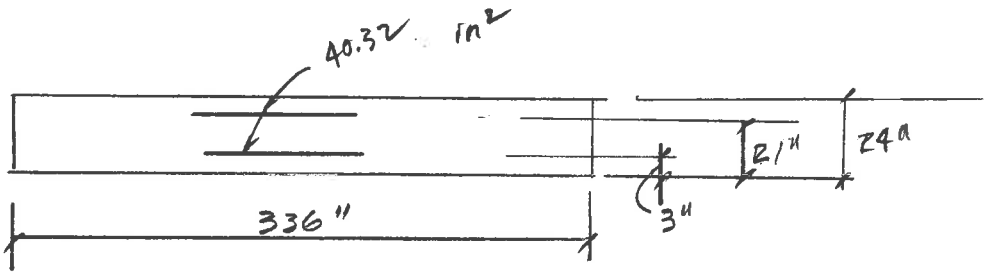

Load	P	M x δ	e
Group I Case III	1124.18	0	
Group II Case III	899.3	584.37 x 1.0371 = 606.05	.6739'
Group VII	677.5	1117.1 x 1.0371 = 1158.5	1.71'

Reduce Group VII P by 25% (Maximum moment minimum axial load)

⇒ P = 508.1 K ; e = 2.28' = 27.4"

DMJM	PROJECT: 29th Ave	PROJECT NO:		PAGE
		BY: GIS	DATE: 2/6/85	39
SUBJECT: Pier Design				

Wall Design

Capacity:

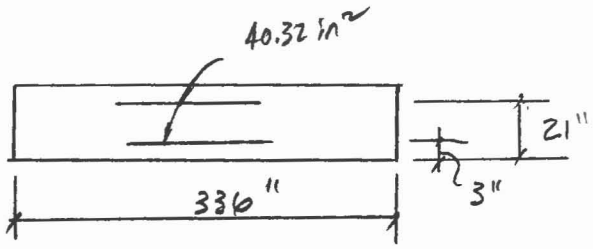

Balanced Conditions

$$C_b = \frac{87}{87+60} \times 21 = 12.43''$$

$$f_{s\,bal} = \frac{12.43-3}{12.43} \times 87 = 66 \Rightarrow 60 \text{ ksi}$$

$$P_{bal} = .85 \times 3 \times 336 \times .85 \times 12.43 + 60 \times 40.32 - 60 \times 4032 = 9053^{k}$$

$$M_{bal} = .85 \times 3 \times 336 \times .85 \times 12.43 (24/2 - .85 \times 12.43/2)$$
$$+ (60)(40.32)(24/2 - 3) + (60)(40.32)(9) = 104354 \text{ k-in}$$

$$e_b = 104354 / 9053 = 11.527''$$

Note: $.35 \times 9053 = 3169^{k} > 899.3^{k}$ (Group III Case III)

Therefore need only consider Group VII loading

At $e = 27.4''$

by trial & error solution $c = 4.7609'' \rightarrow f_s' = \frac{4.7609-3}{4.7609} \times 87$

$= 32.18$ ksi (Assumption correct)

$$P_n = .85 \times 3 \times 336 \times .85 \times 4.7609 + 32.18 \times 40.32 - 60 \times 40.32$$

$$\doteq 2346 \times .35 = 821^{k} > 508.1^{k}$$

Use an effective smaller area of concrete

Put 1% steel in the smaller effective area

Spread steel thru wall

DMJM	PROJECT: 29th Ave	PROJECT NO:	PAGE 40
		BY: GIS / DATE:	
SUBJECT: Pier Design			

Wall Design (cont.)

Reduced effective area: $.01 \times 24 \times 200 = 48 \text{ in}^2 \Rightarrow 24 \text{ in}^2$ EF

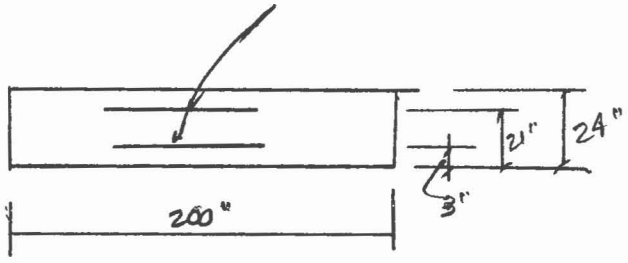

Balanced conditions:

$c_b = 12.43''$ $\quad f_s' \text{ bal} = 60 \text{ ksi}$

$P_{bal} = .85 \times 3 \times 200 \times .85 \times 12.43 + 60 \times 40.32 - 60 \times 40.32 = 5388^k$

$M_{bal} = .85 \times 3 \times 200 \times .85 \times 12.43 (24/2 - .85 \times 12.43/2)$
$+ (60)(24)(24/2 - 3) + (60)(24)(9) = 62115 \text{ k-in}$

$e_b = 11.53''$

$.35 \times 5388 = 1886^k > 1124.18^k$ OK

At $e = 27.4''$

by trial & error $c = 4.9289''$ $\quad f_s' = 34.05$ ksi

$P_n = .85 \times 3 \times 200 \times .85 \times 4.9289 + 34.05 \times 24 - 60 \times 24$

$= 1514^k \times .35 = 529.9^k > 508.1^k$ OK

use 24 in² of steel EF

$\Rightarrow$ 30 - #8

DMJM	PROJECT 29th Ave.	PROJECT NO:		PAGE
		BY: HTS	DATE: 2/11/85	41
SUBJECT Peir design				

Footing design :-

assume a 3' thick, 6' wide, 29' long continous footing

Dead load (DL)

Reaction from Girders = 575.56 K see Wall design

Peir wt. = 325.5 K

footing DL = 3'x6' x 29 x 0.15 K/ft³ = 78.3 K

total DL = 575.56 + 325.5 + 78.3 = 979.36 K

Live Load (LL)

Case I (2 lanes) max. reaction = 141.2 K see Pier design

Case II (3 lanes) " " = 190.62 K " " "

Case III (4 lanes) " " = 211.80 " " "

Sidewalk Live load

(SLL) = 11.32 K

Wind loads (W)

From the superstructure = 30.80 K

on substructure = 37.52 K (C.G located @ 19.25') from bottom of footing

Wind Loads on live load (WL)

WL = 2 K

Earthquake EQ.

@ top of pier from superstructure = 34.53 K

@ c.G. of pier = 29.30 K

DMJM	PROJECT 29th Ave.	PROJECT NO:		PAGE 42
		BY: HTS	DATE: 2/11/85	
SUBJECT Peir design				

Longitudinal live load (LF)

Case I = 7.06 K

Case II = 9.53 K

Case III = 10.59 K

wt. of water above footing

max. water level = 1223.1' elevation

water height above footing = 1223.1' - 1201.0 = 22.1'

wt. of water on one side of footing = 29' x 2' x 22.1' x $\frac{62.4}{1000}$ = 79.98 k

DMJM	PROJECT 29th Ave	PROJECT NO:		PAGE 43
		BY: HTS	DATE: 2/1/85	
SUBJECT Peir design				

evaluate force and over turning moments for load groups:-

note = height from top of peir cap to bottom of footing =
1230.24′ − 1201.0′ + 3′ = 32.24′

Group I

LL Case II

a. w/o water

P = D+L+ sidewalk LL

= 979.36 + 190.62 + 11.32 = 1181.3k

b. with water

P = 1181.3 + 2x 79.98 = 1341.26 k

M = 0

LL case III

a. w/o water

P = 979.36 + 211.80 + 11.32 = 1202.48k

b. w/ water

P = 1202.48 + 2x 79.98 = 1362.44 k

M = 0

Group II (allow for 125% overstress)

a. w/o water

P = 979.36 / 1.25 = 783.5 k

b. w/ water

P = (979.36 + 2x 79.98) / 1.25 = 911.46 k

M = [(3.80)(32.24) + (37.52)(19.25)] / 1.25 = 675.82 k

Group III (125% overstress)

LL Case II :-

a. No water

$P = (979.36 + 190.62 + 11.32)/1.25 = 945.04$ K

b. with water

$P = 945.04 + (2 \times 79.98)/1.25 = 1073.01$ K

$M = (3.80 \times .3)(32.24) + (37.52 \times 0.3)(19.25) + (2)(32.24)$

$+ (9.53)(32.24) = 625.16$ K-ft

LL Case III :

a. No water

$P = (979.36 + 211.80 + 11.32)/1.25 = 961.98$ K

b. with water

$P = 961.98 + (2 \times 79.98)/1.25 = 1089.95$ K

$M = (3.80 \times 0.3)(32.24 + (37.52 \times 0.3 \times 19.25) + (2)(32.24)$

$+ (10.59) \times (32.24) = 659.33$ K-ft.

Group VII (133% overstress)

a. No water

$P = 979.36/1.33 = 736.36$ K

b. With water

$P = (979.36 + 2 \times 79.98)/1.33 = 856.63$ K

$M = (34.53 \times 32.24 + 29.3^{K} \times 19.25) + 0.09 \times 1.0 \times [78.3] \times 1.5$

$= 1687.84$ K-ft.

DMJM	PROJECT: 29th Ave.	PROJECT NO:	PAGE 45
		BY: HTS / DATE: 2/11/85	

SUBJECT: Pier design

Check stress

$A = \overset{L \times b}{29 \times 6} = 174.0$, $I = \frac{1}{12}(29)(6)^3 = 522.0\ ft^3$

by inspection , Group I case III , Group III case III , VIII governs.

GROUP	P	M	$\frac{P}{A} + \frac{MC}{I}$ (ksf)	$\frac{P}{A} - \frac{MC}{I}$ (ksf)
I case III w/water	1362.4	0	7.83	0
III " III w/ water	1089.95	659.33	10.05	-2.47
VIII	856.63	1687.84	14.62	-4.77

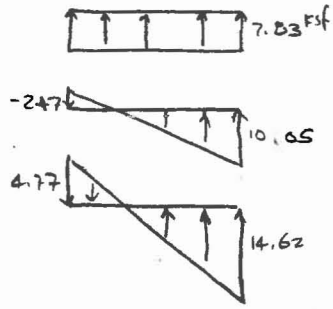

$L = 29'$
$B = 6$ $\Rightarrow$ $\frac{L}{B} = 4.83$ $\Rightarrow$ continous footing

$\sigma_{allw} = 15.0$ ksf. > 14.62 ksf ok

check over turning

The less vertical load $\longrightarrow$ the less the resisting force
hence the lower the F.S. $\Rightarrow$ do not consider water.

GROUP	M (overturning)	M (resisting) $= P \times b/2$	F.S.
II w/o water	675.82	$783.5 \times 1.25 \times 3 = 2938.1$	$\frac{2938.1}{675.82} = 4.4$
VIII	1687.84	$736.36 \times 1.33 \times 3 = 2938.07$	$\frac{2938.1}{1687.84} = 1.7$

ok

DMJM	PROJECT: 29th Ave	PROJECT NO:	PAGE 46
		BY: HTS / DATE: 2/1/85	
SUBJECT: Pier design			

Footing design :- Select a 6' wide x 2' thick footing

Shear :-

1) beam shear :- distance d from the face of the concentrated load or reaction area.

$d = 2' \times 12 - 3'' = 21''$

Consider max. allowable soil press. = 15 ksf

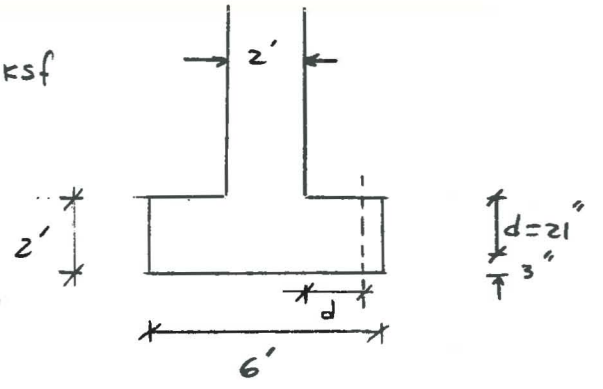

$V = 15 \text{ ksf} \times \frac{3}{12} \times 1'$

$= 3.75 \text{ K}$

$= 3750 \text{ lb}$

$v = \frac{V}{bd} = \frac{3750}{12 \times 21} = 14.88 \text{ psi}$

$v_c = 0.9\sqrt{f'_c} = 0.9\sqrt{3000} = 49.29 \text{ psi} > v$ ok

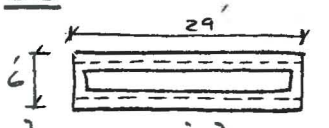

2) Punching shear :- $b_o = 2\left[2' \times 12 + 21 + 29 \times 12\right] = 786 \text{ in}^2$

Total concentrated load ≡ group I case III w/ water

$= 1362.4 \text{ K}$

$v = \frac{V}{b_o d} = \frac{1362.4}{786 \times 21} = 0.0825 \text{ ksi} = 82.5 \text{ psi}$

$v_c = \left(0.8 + \frac{2}{29/6}\right)\sqrt{3000}$

$= 1.214\sqrt{3000} < 1.8\sqrt{f'_c}$

$= 66.48 \text{ psi} < 82.5 \text{ psi}$

choose 3' thick footing

$b_o = 2\left[2' \times 12 + 33 + 29 \times 12\right] = 810.0 \text{ in}^2$

$v = \frac{1362.4}{810 \times 33} = 0.051 \text{ ksi} = 50.97 \text{ psi} < v_c = 66.48 \text{ psi}$

ok

DMJM	PROJECT: 29th Ave.	PROJECT NO:	PAGE
		BY: HTS / DATE: 2/11/85	27
SUBJECT: Pier design			

Footing design (cont.)

Moment :-

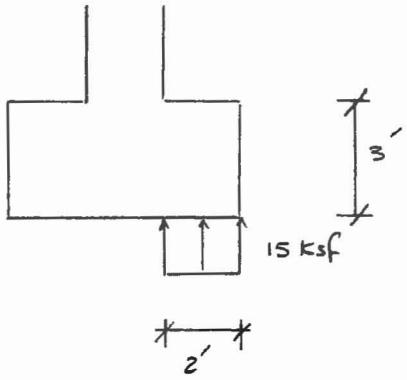

Consider max. allow. soil press.
(for ease of calculations)

moment at face of wall

$M = (15 \times 1') \times 2' \times 1' = 30$ k-ft.

$A_s = \dfrac{M}{f_s j d}$ $\quad j = 0.875$ for balanced conditions with $f'_c = 3000$ psi

$A_s = \dfrac{30 \times 12}{24 \times 0.875 \times 32.5} = 0.53$ in²/ft.

Choose #6 @ 10"

check development length $\quad l_d = \dfrac{0.04\, A_b f_y}{\sqrt{f'_c}}$

$= \dfrac{0.04 \times 0.44 \times 60000}{\sqrt{3000}}$

$= 19.3$ in $\quad$ OK 21' are available.

provide temp. and shrinkage reinforcement in long direction

$A_s = 1/8$ in²/ft. $\Rightarrow$ #4 at 18" max.

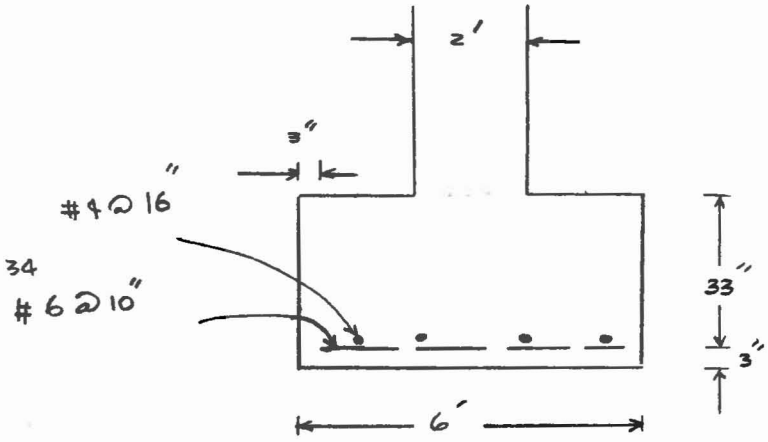

48

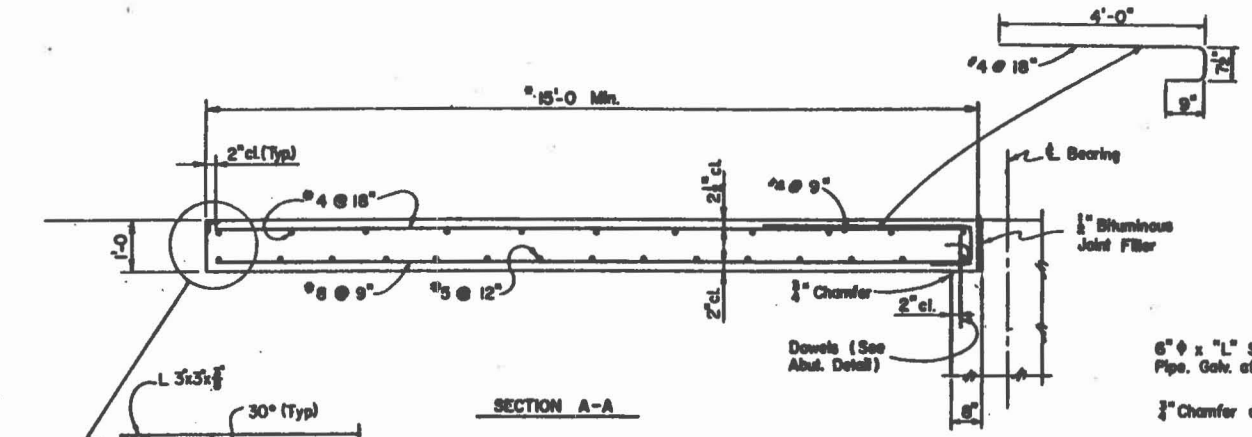

SECTION A-A

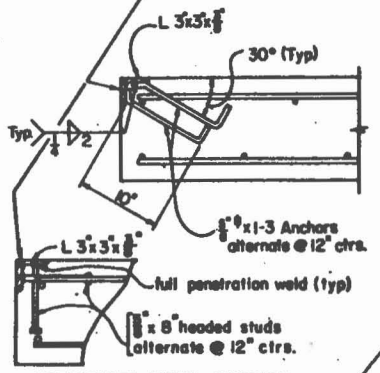

ALTERNATE (STUD ANCHOR)

* Length shall be increased when necessary to eliminate surcharge load.

**For skew angle over 15°.

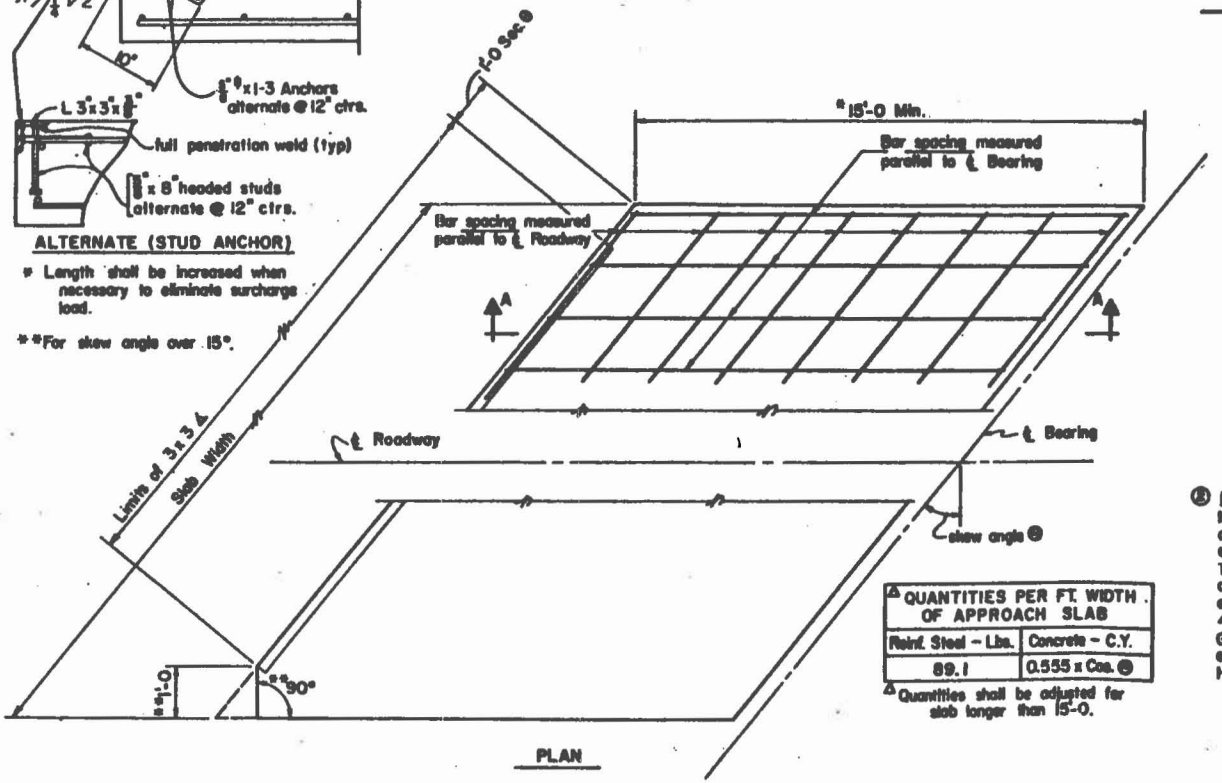

PLAN

APPROACH SLAB

△ QUANTITIES PER FT. WIDTH OF APPROACH SLAB	
Reinf. Steel – Lbs.	Concrete – C.Y.
89.1	0.555 x Cos. ⊗

△ Quantities shall be adjusted for slab longer than 15'-0.

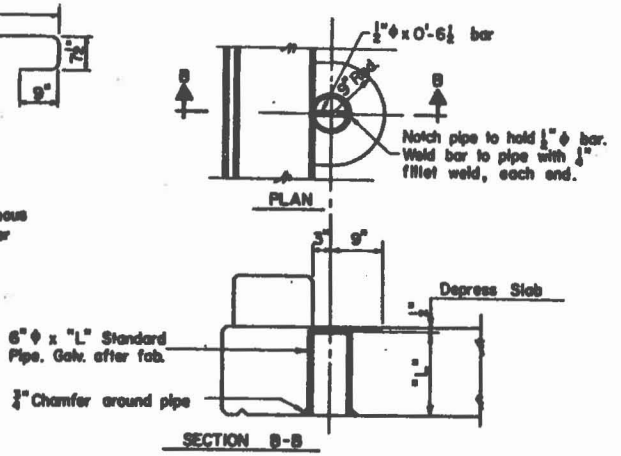

SECTION B-B

ROADWAY DRAIN DETAIL

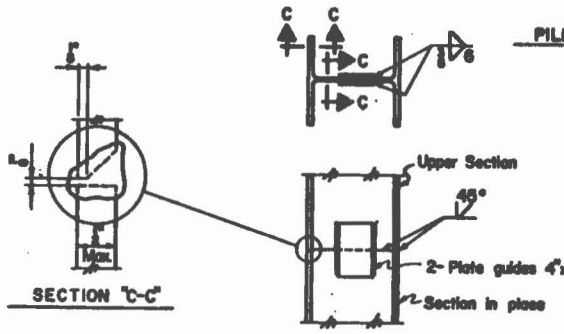

SECTION "C-C"

PILE SPLICE DETAIL

PILE SP
Whe
driv
sec
ham
mac
furt
butt

② PILE POINT NOTE – (only when required).
Manufactured pile points shall be attached by means of a single bevel groove weld across the full width of each exterior face of the flanges of the pile.
The flanges of the pile shall be prepared by flame cutting a 45 degree bevel at the bottom edge of each exterior face of flanges. —
45 degree bevel size shall be ½ the flange thickness.
Groove welds shall be 5/16" for all HP piles 8" thru 14", except HP 13 X 100 and HP 14 X 102 shall be 3/8" and HP 14 X 117 shall be 7/16".

GENERAL NOTES

Concrete shall
Reinforcing st
Bar sizes #
Bar sizes #
Welding shall c
Specifications
Roadway drain
A53, type S,
accordance w

① NOTES

Structural steel shall conform to ASTM Specification A36.
Paint and painting shall conform to Std. Specifications. Contact surfaces shall not be painted. Structural steel - Shop - 1 coat paint #1, #2 and #3. No field paint required.

DESIGN	JRB	5-72	NO.	DESCRIPTION OF REVISIONS	DRAWN BY	DATE
DRAWN	RDD	5-72	⊗	Added Struct. steel & painting note	JTW	7-75
CHECKED	MAS, BWY	5-72	⊗	Added Pile Point Note	WEB	2-81
			⊗	Std. alternate added & dim. chnd.	WEB	2-82

DESIGN APPROVED R.C. Brechler

APPROVED FOR CONSTRUCTION

DEPAR

MI

DMJM	PROJECT: 29th Ave	PROJECT NO:		PAGE
		BY: GIS	DATE: 1/23/85	49
SUBJECT: Girder Design				

Interior Girder

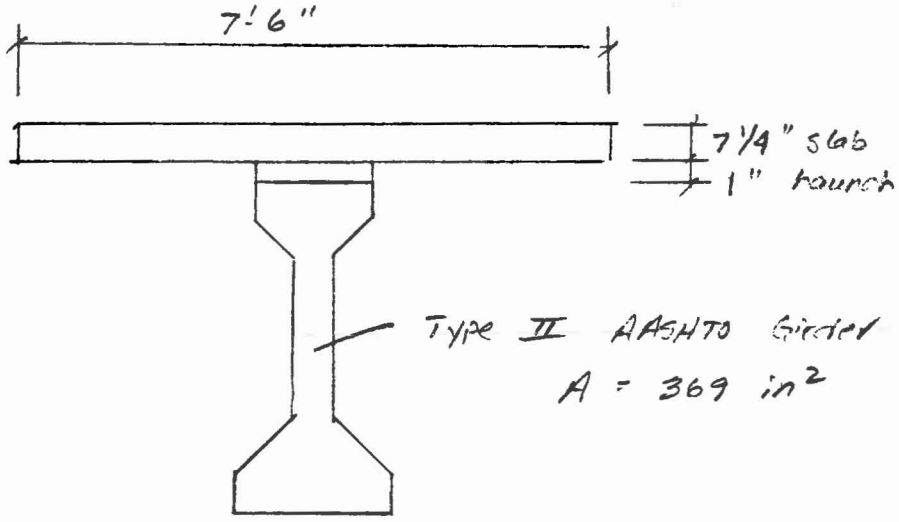

Dead Loads

Non-Composite

slab = (7.25/12)(7.5)(.15) = .680 k/ft
haunch = (1/12)(1.0)(.15) = .013 k/ft
Girder = (369/144)(.15) = .384 k/ft

1.077 k/ft

Diaph. = (9/12)(7.5-.5)(3)(.15) = 2.36 k

Composite

Sidewalk = (9.5/12)(6'-6 1/2")(.15) / 8 = .097 k/ft
Curb = (13.5/12)(9/12)(.15) / 8 = .016 k/ft
Rail = .06 x 2 / 8 = .015 k/ft
16" Water line = .200 / 8 = .025 k/ft
Other utilities = .01 k/ft = .01 k/ft
Asphalt = (2/12)(50)(.144) / 8 = .150 k/ft

.313 k/ft

DMJM	PROJECT: 29th Ave	PROJECT NO:		PAGE 50
		BY: GES	DATE: 1/28/85	
SUBJECT: Girder Design				

Exterior Girder

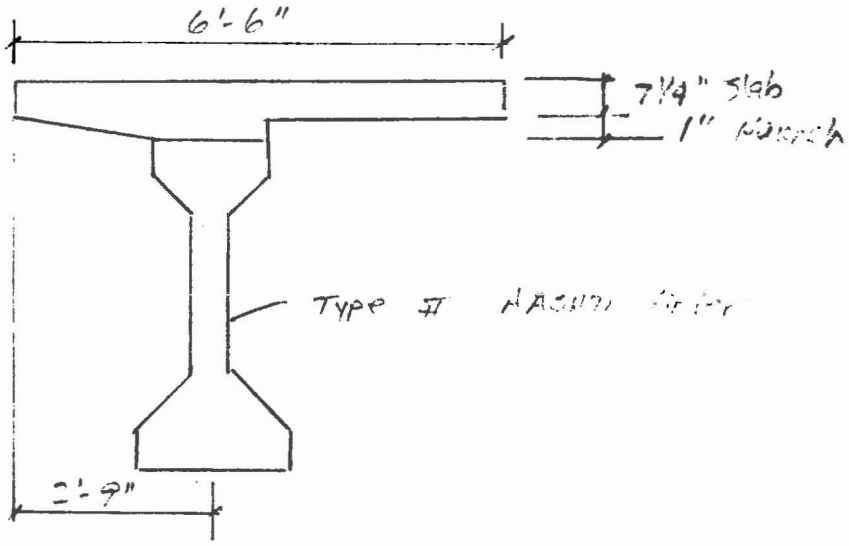

Dead Loads

Non Composite

Slab = (7.25/12)(6.5)(.15) = .589 K/ft

Haunch = (1/12)(1.0)(.15) + (1/2)(2.25)(1/12)(.15) = .027 K/ft

Girder = .384 K/ft

1.00 K/ft

Diaph. = 1/2 × 2.36 = 1.18 K

Composite

DL = .313 K/ft (same as interior)

DMJM	PROJECT: 27th Ave	PROJECT NO:		PAGE
		BY: GIS	DATE: 1/28/85	51
SUBJECT: Slab Design				

Girder spacing = 7'-6"

Effective span = 7.5 - 1' = 6.5'

Dead Loads

slab = (8/12)(.15) = .1 k/ft

Asphalt = (2/12)(.144) = .024 k/ft

.124 k/ft

$M_{DL} = (.124)(6.5)^2/10 = .524$ k-ft/ft

Live Loads

$M_{LL+I} = \left(\frac{6.5+2}{32}\right) \times 16 \times 1.3 \times .9 = 4.42$ k-ft/ft

Total = 4.944 k-ft/ft

Capacity

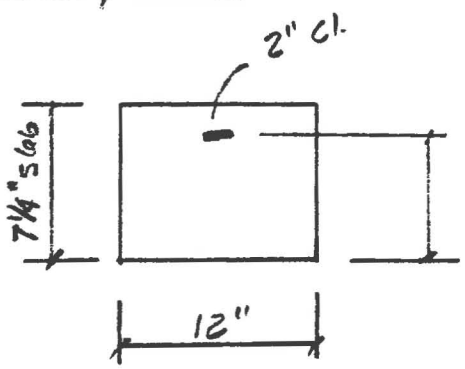

Working stress design:

$f'_c = 4000$ psi ⇒ $f_c = 1600$ psi

$f_y = 60000$ psi ⇒ $f_s = 29000$ psi

$n = 8$

#5 @ 6½" ⇒ $A_s = .57$ in²/ft

use ↗

$M_{cap} = 5.023$ k-ft/ft > 4.944

OK

Distribution steel

$\% = \frac{220}{\sqrt{6.5}} = 86 \Rightarrow 67\%$ in middle 1/2 of slab

$.67 \times .57 = .38$ in²/ft

Uniformly increasing load from 0 at support:

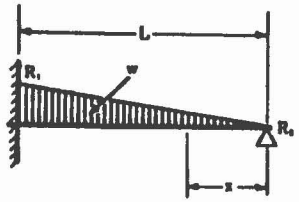

Reactions: $R_1 = \frac{4W}{5}$; $R_2 = \frac{W}{5}$

Bending Moments:

$M_x = Wx\left(\frac{1}{5} - \frac{x^2}{3L^2}\right)$;

$M_{R_1} = M_{max} = \frac{WL}{7.5}$;

$M \approx .06\ WL$ at $x = .447L$

Deflection:

$D_x = \frac{WL^3}{60EI}\left(-\frac{x}{L} + 2\frac{x^3}{L^3} - \frac{x^5}{L^5}\right)$

$D_{max} \approx \frac{WL^3}{210EI}$ at $.447L$

BEAM FIXED AT BOTH ENDS

Concentrated load at center:

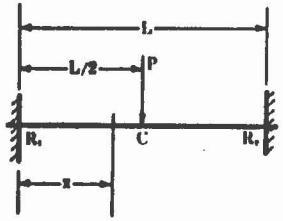

Reaction: $R_1 = R_2 = \frac{P}{2}$

Bending Moments:

$M_x = \frac{PL}{2}\left(\frac{x}{L} - \frac{1}{4}\right)$;

$M_{R_1} = M_{R_2} = -\frac{PL}{8}$;

$M_c = +\frac{PL}{8}$

Deflection: $D_x = \frac{Px^2}{16EI}\left(L - \frac{4x}{3}\right)$;

$D_{max} = \frac{PL^3}{192EI}$

Concentrated load at any point:

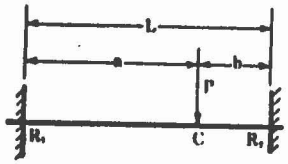

Reactions: $R_1 = \frac{Pb^2}{L^3}(L + 2a)$;

$R_2 = \frac{Pa^2}{L^3}(L + 2b)$

Bending Moments: $M_{R_1} = -\frac{Pab^2}{L^2}$;

$M_{R_2} = -\frac{Pa^2b}{L^3}$; $M_c = \frac{2Pa^2b^2}{L^3}$

Deflection: at point of load $D_P = \frac{Pa^3b^3}{3EIL^3}$

If $a > b$ at $x = \frac{2aL}{L + 2a}$;

$D_{max} = \frac{2\ Pa^3b^2}{3EI\ (L + 2a)^2}$

Uniform load:

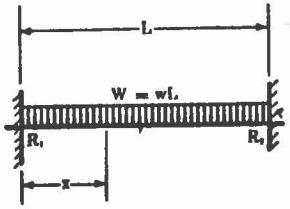

Uniformly increasing load from ends to cent

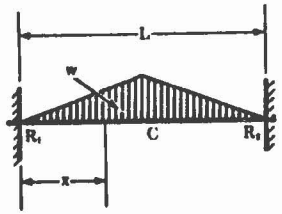

CONTINUOUS BEAMS—SIMPLE SUPPORT

Concentrated load at center of one space:

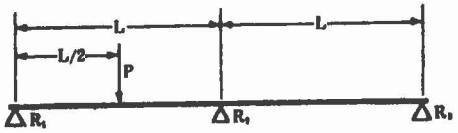

Concentrated load at any point:

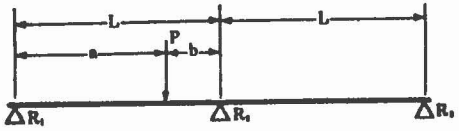

N=1.0

TABLE 2.0

Two-span continuous beam.

Constant moment of inertia.

AASHO HS20-44 loading.

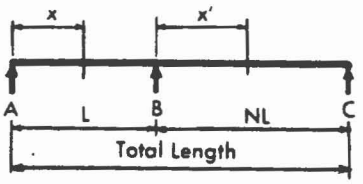

Total Length Ft.	Short Span Length "L"	Max. Reaction Kips.			Max. Shear Kips.		Max. Moment Kip.-ft.			Impact Coefficient				Dist.-Ft.	
		at A	at B	at C	in AB at B	in BC at B	in AB at X	at B	in BC at X'	I	II	III	IV	X	X'
60	30.0	46.4	63.1	46.4	-52.9	52.9	231.4	-193.1	231.4	.300	.300	.300	.270	10.7	19.3
70	35.0	49.5	65.3	49.5	-56.3	56.3	290.9	-229.4	290.9	.300	.300	.300	.256	12.7	22.3
80	40.0	52.0	66.8	52.0	-58.7	58.7	358.2	-266.6	358.2	.300	.300	.300	.244	16.1	23.9
90	45.0	54.1	67.8	54.1	-60.6	60.6	429.1	-317.9	429.1	.294	.294	.294	.233	18.2	26.8
100	50.0	55.7	68.6	55.7	-62.0	62.0	500.7	-373.2	500.7	.286	.286	.286	.222	20.3	29.7
110	55.0	57.1	70.0	57.1	-63.2	63.2	572.9	-432.5	572.9	.278	.278	.278	.213	22.4	32.6
120	60.0	58.3	74.0	58.3	-64.1	64.1	645.5	-495.8	645.5	.270	.270	.270	.204	24.5	35.5
130	65.0	59.3	78.0	59.3	-64.8	64.8	718.5	-563.2	718.5	.263	.263	.263	.196	26.6	38.4
140	70.0	60.2	82.0	60.2	-65.5	65.5	791.6	-634.5	791.6	.256	.256	.256	.189	28.7	41.3
150	75.0	61.0	86.0	61.0	-66.0	66.0	865.0	-709.8	865.0	.250	.250	.250	.182	30.8	44.2
160	80.0	61.6	90.0	61.6	-66.5	66.5	938.6	-789.1	938.6	.244	.244	.244	.175	33.0	47.0
170	85.0	62.2	94.0	62.2	-66.9	66.9	1012.3	-872.4	1012.3	.238	.238	.238	.169	35.1	49.9
180	90.0	62.8	98.0	62.8	-67.2	67.2	1086.0	-959.8	1086.0	.233	.233	.233	.164	37.3	52.7
190	95.0	63.2	102.0	63.2	-67.5	67.5	1159.9	-1051.1	1159.9	.227	.227	.227	.159	39.4	55.6
200	100.0	63.7	106.0	63.7	-67.8	67.8	1233.9	-1146.4	1233.9	.222	.222	.222	.154	41.5	58.5
210	105.0	64.1	110.0	64.1	-68.0	68.0	1307.9	-1245.7	1307.9	.217	.217	.217	.149	43.7	61.3
220	110.0	64.4	114.0	64.4	-70.0	70.0	1382.0	-1349.1	1382.0	.213	.213	.213	.145	45.8	64.2
230	115.0	64.7	118.0	64.7	-72.0	72.0	1456.1	-1456.4	1456.1	.208	.208	.208	.141	48.0	67.0
240	120.0	65.0	122.0	65.0	-74.0	74.0	1530.3	-1567.7	1530.3	.204	.204	.204	.137	50.1	69.9
Impact		I	IV	III	I	III	I	II	III						
Dead Load		.3750 x wL	1.2500 x wL	.3750 x wL	-.6250 x wL	.6250 x wL	.0703 x wL^2	-.1250 x wL^2	.0703 x wL^2					.3750 x L	.6250 x L

DMJM	PROJECT 29TH AVE. BRIDGE	PROJECT NO:	PAGE
		BY: RKS / DATE: 1-28/85	54
SUBJECT FINAL DESIGN - ABUT. @ STA. 11+84.67			

ASSUMPTIONS -

1. DESIGN TALLER OF THE TWO ABUTMENTS AND USE SIMILAR REINFORCING IN THE SHORTER ABUTMENT.

2. ASSUME ABUTMENT WALL TO ACT AS A PINNED (RESTRAINED) WALL, FIG 1. AS OPPOSED TO A CANTILEVER (FLAGPOLE WALL, FIG 2.

FIG. 1

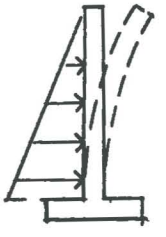

FIG. 2

3. ASSUME LATERAL FORCE ON ONE SIDE ONLY, WORST CASE.
4. SERVICE LOADS - WORKING STRESS
5. DESIGN PARAMETERS
   $f'_c = 3$ KSI
   STIRRUPS/ TIES $f_y = 40$ KSI
   ALL OTHE REINF. $f_y = 60$ KSI
6. ASSUME STIFFNESS IN THE LATERAL DIRECTION IS SO GREAT THAT BENDING NEED NOT BE INVESTIGATED.

DMJM	PROJECT: 29TH AVE BRIDGE	PROJECT NO: 4252-01-05	PAGE 55
		BY: RKS / DATE: 1-28-85	

SUBJECT: FINAL DESIGN, ABUT. #1

LOAD

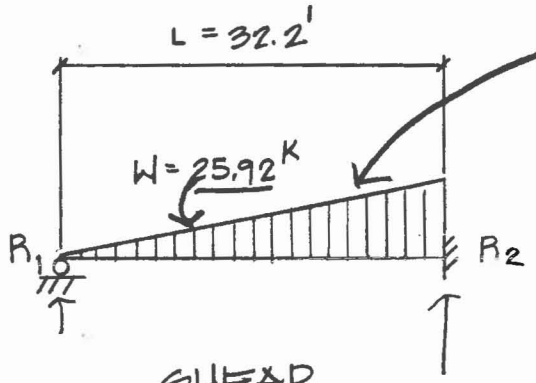

$50 \frac{LB}{FT^2}$ PER FOOT OF DEPTH

$W = \frac{.05(32.2)^2}{2} = 25.92\ K$

$R_1 = \frac{W}{5} = 5.18\ K = V_1$

$R_2 = \frac{4W}{5} = 20.74\ K = V_2$

SHEAR

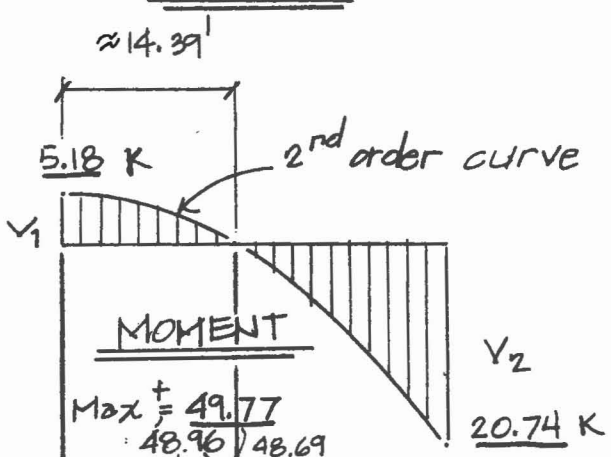

POINT OF ZERO SHEAR:

$5.18 = \frac{.05(x)^2}{2} \quad x = 14.39$

MOMENT

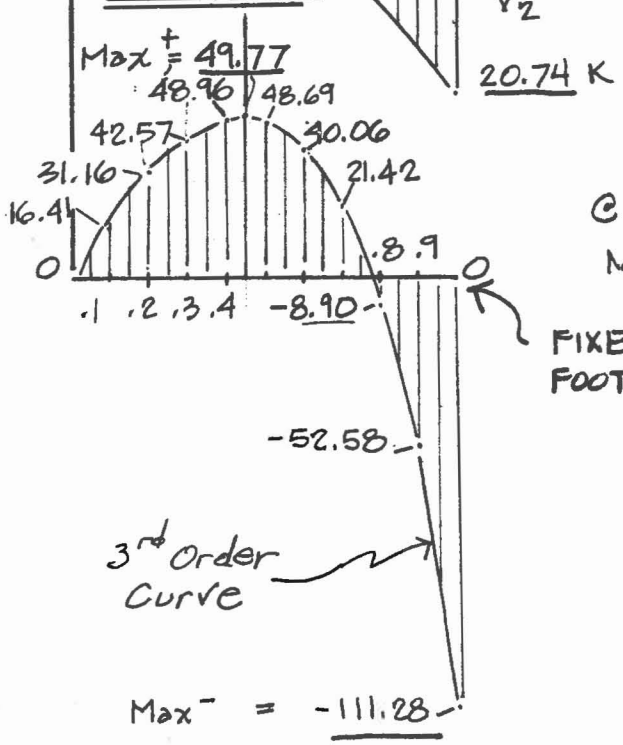

@ 1/10 TH PTS:

$M_x = 25.92(x)\left(\frac{1}{5} - \frac{x^2}{3(32.2)^2}\right)$

FIXED AT FOOTING

$M_{max} = -\frac{wl^3}{15}$

or $\frac{2Pl}{15}$

SHEAR IN FNDT. ABUT WALL NEAR FOOTING @ R2

CHECK AT d FROM TOP OF FOOTING

v_c allow = $.95\sqrt{f'_c} = 52.03$ psi

$V = 16.75^K$ (SEE SHEAR DIAG. P. 2) (SCALED VALUE) (ONLY AN APPROX.)

$$d = \frac{16.75(10^3)}{52.03(12)} = 26.82 \text{ IN}$$

$t = d + 2.5'' = 29.32$ IN

APPROX t_1 AT F.S. WITH 3/8"/12" BATTER ON BACK FACE

$$t = 29.32 + .375\left(\frac{26.82}{12}\right) = 30.15''$$

FIX TOTAL THICKNESS OF ABUT. WALL AT 2'-6" (30") AT TOP OF FOOTING.

DMJM	PROJECT: 29TH AVE BRIDGE	PROJECT NO: 4252-01-05	PAGE 57
		BY: RKS / DATE: 1-28-85	
SUBJECT: ABUT. DESIGN			

SIZE FOOTING: SOIL ON FTG HEEL: (4.75')32.2'(.100)(54.42') = 832.35 K ↓ (WT ≅ 100 LB/CF³)

GIRDERS DL: SEE PG'S P1, P2

22.67(1.077)6 + 22.67(1)2 + 22.67(.313)8 = 248.60 K ↓

DIAPHRAM DL: SEE "P1", "P2"

7(2.36).5 = 8.26 K ↓

ABUT WALL DL: SEE SKETCH P.19

10.73(54.42) = 583.93 K ↓

FOOTING DL: (3'-0" x 12'-0") ASSUME

5.40(54.42) = 293.87 K ↓

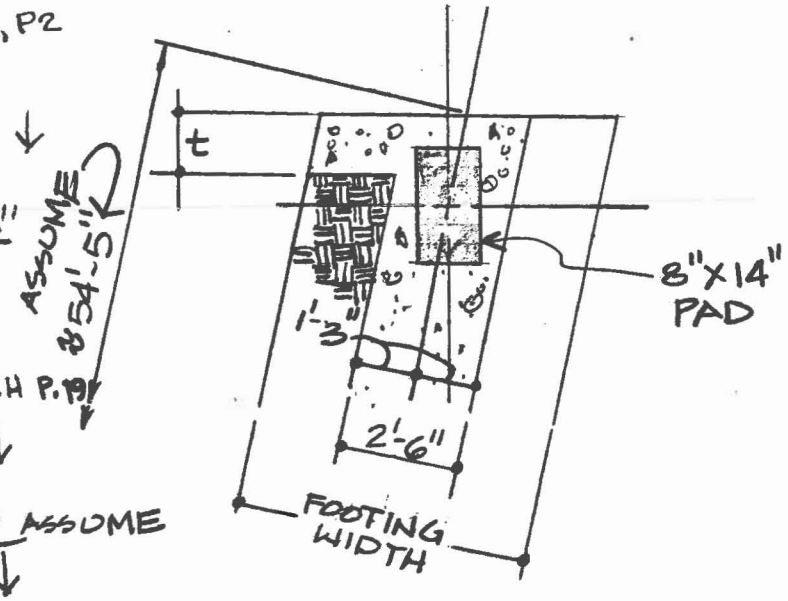

LIVE LOAD: (4 LANES) (FROM TABLE, "P5") SKETCH

4(57.28).75 = 171.84 K ↓ INTERPOLATED

Σ = 2,138.85 K ↓

P = 2,138.85/54.42 = 39.30 K = P ↓

M = 111.28 K' ↻ SEE MOM. DIAG. P. 2.

e = M/P = 2.83' > L/6

q_{max} = 15 - 32.2(.1) = 11.8 KSF (HEIGHT OF OVERBURDEN REDUCES ALLOWABLE)

q_{max} = 11.8 KSF = $\frac{2(39.30)}{3(L/2 - 2.83)}$

L/2 = 5.05' ∴ L = 10.10' SAY 11.0

TRY A 3'-0" DEEP X 11'-0" WIDE X 54'-5" LONG FOOTING.

RECALCULATE P & e WITH NEW FOOTING DL, (3'-0" x 11'-0") AND SOIL WEIGHT ON HEEL OF FOOTING.

Σ = 2026.60 K ↓

P = 2026.60/54.42 = 37.24 K ↓ = P

M = 111.28 K' ↻ e = M/P = 2.99'

DMJM	PROJECT: 29TH AVE BRIDGE	PROJECT NO: 4252-01-05	PAGE 58
		BY: RKG / DATE: 1/28/85	

SUBJECT: ABUT. DESIGN

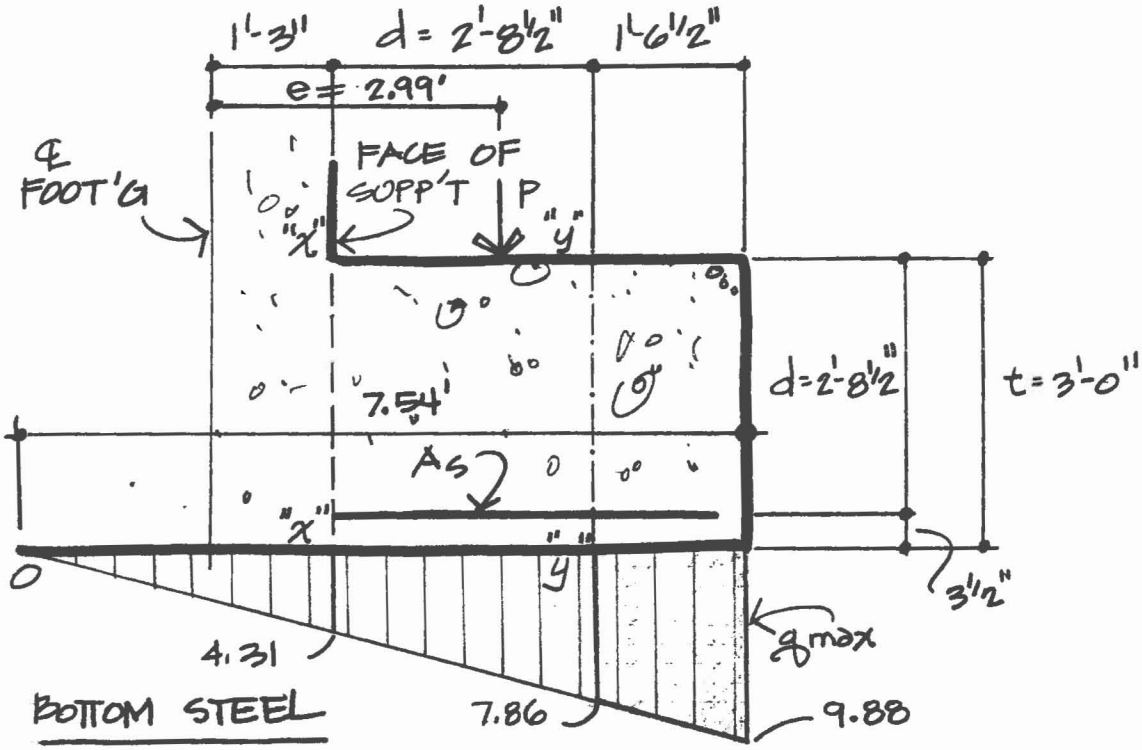

BOTTOM STEEL

$e = 2.99'$ $P = 37.24^K$ $q_{max} = \frac{2(37.24)}{3(5.5-2.99)} = \underline{9.88\ KSF} < q_{allow} = 11.8\ KSF$

$b = 1'$ WIDE STRIP

$9.88\left(\frac{x}{2}\right) = P = 37.24^K$ $x = 7.54' =$ WIDTH OF SOIL PRESSURE DIAG.

$\frac{9.88}{7.54} = \frac{f}{6.00}$ $f = 7.86^{KSF}$ @ y-y

V AT SECT. y-y $= 7.86(1.54) + 2.02\left(\frac{1.54}{2}\right) = 13.66$

$\underline{V = 13.66^K}$

$v = \frac{V}{bd} = \underline{35.03\ psi} < v_c\ allow = 52.03\ psi$ OK FOR SHEAR! DESIGNED FOR SHEAR @ d FROM F.S.

M_d AT x-x

$\frac{9.88}{7.54} = \frac{f}{3.29}$ $f = 4.31^{KSF}$ @ x-x $M_d = 4.31\left(\frac{4.25}{2}\right)^2 + 5.57\left(\frac{4.25}{2}\right)\frac{2}{3}(4.25)$

$\underline{M_d = 72.46^{K\cdot'}}$

$f_c = 1.2$ KSI

$f_s = 24$ KSI

$n = 9.29$

$b = 12"$ (UNIT STRIP)

DMJM	PROJECT: 29TH AVE BRIDGE	PROJECT NO: 4252-01-05	PAGE 59
		BY: RKS / DATE: 1-28-85	
SUBJECT: ABUT. DESIGN			

TRY #8's @ 8" $A_s = 1.18 in^2$ $\rho = .0030$

$kd = 6.8458"$
$k = 0.2106$
$jd = 30.2181"$
$j = 0.9298$

@ $f_s = 24$ KSI $M_a = A_s f_s jd = \underline{71.32}^{K\cdot'}$ APP. 1.5% O.S. OK!

@ $f_c = 1.2$ KSI $M_a = \frac{bkd}{2} f_c jd = 124.10^{K\cdot'}$

@ $M = 71.32$ K·' $f_c = 689$ psi
$f_{cr} = 411$ psi
$1.2 f_{cr} = 493$ psi < 689 psi

#8's @ 8" ADEQUATE

CHECK WITHOUT LL: CAUSES GREATER e WITH LESS P

NEW $P = 1967.01^K / 54.42' = \underline{36.14^K = P}$

$M = 111.28^{K\cdot'}$ $e = M/P = \underline{3.08'}$ $q_{max} = \frac{2(36.14)}{3(5.5-3.08)} = \underline{9.96 \text{ KSF}} < q_{allow.}$

$\frac{9.96(x)}{2} = 36.14$ $x = 7.26'$ = WIDTH OF SOIL PRESSURE DIAG.

$\frac{9.96}{7.26} = \frac{f}{3.01}$ $f = 4.13^{KSF}$ @ x-x $M_d = 4.31\frac{(4.25)^2}{2} + 5.83\left(\frac{4.25}{2}\right)\frac{2}{3}(4.25)$

$\underline{M_d = 74.03 \text{ K}\cdot'}$

#8's @ 8" $M_{allow} = 71.32^{K\cdot'} < M_d$ BY 3%

ALLOWABLE ONLY 3% BELOW REQ'D, USE #8's @ 8" AT BOTTOM

DEVELOPE INTO FTG. & WALL IF NECESSARY

$l_d = 36"$ FOR NO. 8's

$l_e = .04(A_b)f_h / f_c'^{1/2} = 17.0"$ = STD. HOOK LENGTH

$27.5" + 17" = 44.5" > l_d$ OK!

DMJM	PROJECT: 29TH AVE BRIDGE	PROJECT NO: 4252-01-05	PAGE 60
		BY: RKS / DATE: 1-28-85	

SUBJECT: ABUT DESIGN

DESIGN TOP STEEL

$M = 4.5(32.2)(.1)\frac{(4.5)}{2} = \underline{32.60}$ k·' @ Face of Support

BENDING DUE TO SOIL WEIGHT

$f_c = 1200$ psi

$f_s = 24{,}000$ psi

$n = 9.28$

$b = 12''$ UNIT STRIP

$d = 33.5''$ for top steel

$\frac{b}{2}(kd)^2 - nA_s(d-kd) = 0$

TRY #6's @ 7" $A_s = .76 in^2/ft$ $\rho = .0019 = \rho_{min}$

$16(kd)^2 + 7.06(kd) - 236.50 = 0$

$kd = \frac{-7.06 \pm (7.06^2 + 4(6)236.50)}{12} = 5.7174$

$kd = 5.7174''$

$k = .1707$

$jd = d - \frac{kd}{3} = 31.5942''$

$j = .9431$

@ $f_s = 24$ ksi

$M = A_s f_s jd = \frac{.76(24)}{12} 31.5942 = \underline{48.02 \text{ K·FT}} > M$

@ $f_c = 1.2$ ksi

$M = f_c(1/2)bd^2kj = \frac{1200(12)(33.5)^2(.1707)(.9431)}{1000(2)(12)} = 108.40$ k·'

$M_{cr} = 37.11$ k·' $1.2 M_{cr} = 44.53$ k·' $< M_{all} = 48.02$ k·'

USE #6's @ 7" ALONG TOP, DEVELOPE BACK INTO FOOTING.

DMJM	PROJECT 29TH AVE BRIDGE	PROJECT NO: 4252-01-05		PAGE 61
		BY: RKS	DATE: 2-4/85	
SUBJECT ABUT. DESIGN				

CHECK FOOTING DESIGN WITH WATER AT DESIGN LEVEL.

$$P = \frac{2020.60\,K + 4.25(18)(.0624)54.42}{54.42'} = \underline{42.01}\ K$$

$M =$ (SEE P. 22, 23) $= 89.02 - 55.78 = \underline{33.24}\ K\cdot'$

$e = M/P = \underline{0.79'} < L/6 = 1.83$

$$q_{\substack{max\\min}} = \frac{42.01}{(1)11}\left(1 \pm \frac{6(0.79)}{11}\right) = \underline{5.46\ KSF} < q_{max}$$
$$= \underline{2.17\ KSF}$$

BY INSPECTION OF THESE VALUES, CASE WITH NO WATER THUS HIGHER "e" CONTROLS.

DMJM	PROJECT: 29TH AVE BRIDGE	PROJECT NO: 4252-01-05	PAGE 62
		BY: RKS / DATE: 2/1/85	

SUBJECT: ABUT DESIGN

DESIGN SMALL WING-WALLS – 4'-3" CANTILEVER
– DESIGN FOR 40#/FT² PER' DEPTH SOIL PRESSURE

$.04(32.2) = 1.29 \frac{K}{FT^2}(4.25'\times 1') = 5.47K = V$ $\quad v_c = 52.03$ psi

$\frac{5.47(1000)}{52.03(12)} = 8.77'' = d_{min}$ use 12" THICK WINGWALL
$d = 9.50''$

$M = 5.47^K(\frac{4.25'}{2}) = 11.62^{K\cdot'} = M$

$\rho_{min} = 0.0019$
$A_{s\,min} = 0.22 \text{ in}^2/\text{FT}$
TRY No. 6's @ 8" $A_s = 0.66 \frac{\text{IN}^2}{\text{FT}} > A_{s\,min}$

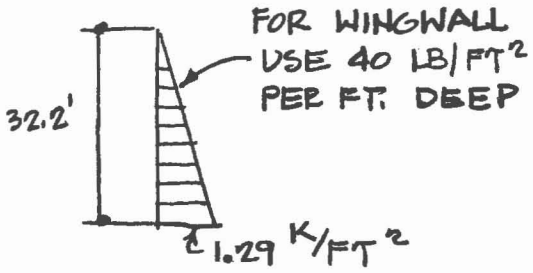

$\frac{b}{2}(kd)^2 - nA_s(d-kd) = 0$

$b = 12''$ $n = 9.29$

$6(kd)^2 + 6.13(kd) - 58.24 = 0$

$kd = \frac{-6.13 \pm (6.13^2 + 4(6)58.24)}{12} = 2.6463$

$k = .2786$
$jd = d - \frac{kd}{3} = 8.6179$
$j = .9071$

$M_{f_s=24} = \frac{0.66(24)}{12} 8.6179 = 11.38 \text{ K}\cdot' < M$

TRY #6's @ 7" $A_s = 0.76 \text{ IN}^2$

$kd = 2.8064$
$k = 0.2954$
$jd = 8.5645$
$j = 0.9015$

$M_{f_s=24} = \frac{0.76(24)}{12} 8.5645 = 13.02 \text{ K}\cdot'$

$M_{f_c=1.2} = \frac{12(.2954)(9.5)(1.2)}{2(12)} 8.5645 = 14.42^{K\cdot'}$

$M_{cr} = 4.94 \text{ K}'$ $\quad 1.2 M_{cr} = 5.92 \text{ K}\cdot'$

DMJM	PROJECT: 29TH AVE BRIDGE	PROJECT NO: 4252-01-05	PAGE 63
		BY: RKS / DATE: 2/1/85	
SUBJECT: ABUT DESIGN			

USE #6's @ 7" UP TO .5(HEIGHT OF WALL)

$$.04\frac{(32.2)}{2} = 0.64\ \frac{K}{FT^2}\ (4.25')(1') = 2.74\ K$$

$$M = 2.74\frac{(4.25)}{2} = 5.82\ K\cdot' < 1.2\ M_{cr}$$

∴ $M = 5.92\ K\cdot'$ CRACKING MOMENT (1.2) CONTROLS

TRY No. 6's @ 12" $A_s = 0.44\ IN^2$ $b = 12\ IN$ $d = 9.5\ IN$ $n = 9.29$

$kd = 2.2260$

$k = 0.2343$

$jd = 8.7580$

$j = 0.9219$

$$M_{f_s=24} = \frac{0.44(24)8.7580}{12} = 7.71\ K\cdot' > M_{cr}(1.2)$$

$$M_{f_c=1.2} = \frac{12(.2343)(9.5)(1.2)}{2\ (12)}\ 8.7580 = 11.70\ K\cdot' > M_{cr}(1.2)$$

USE #6's @ 12" FROM 0.5H TO TOP.

$l_d = 20"$ EXTEND ALL #6's 24" PAST BACK FACE OF WALL

DMJM	PROJECT: 29TH AVE BRIDGE	PROJECT NO: 4252-01-05		PAGE 64
		BY: RKS	DATE: 2-1-85	
SUBJECT: ABUT DESIGN				

SKETCH OF SMALL WINGWALL

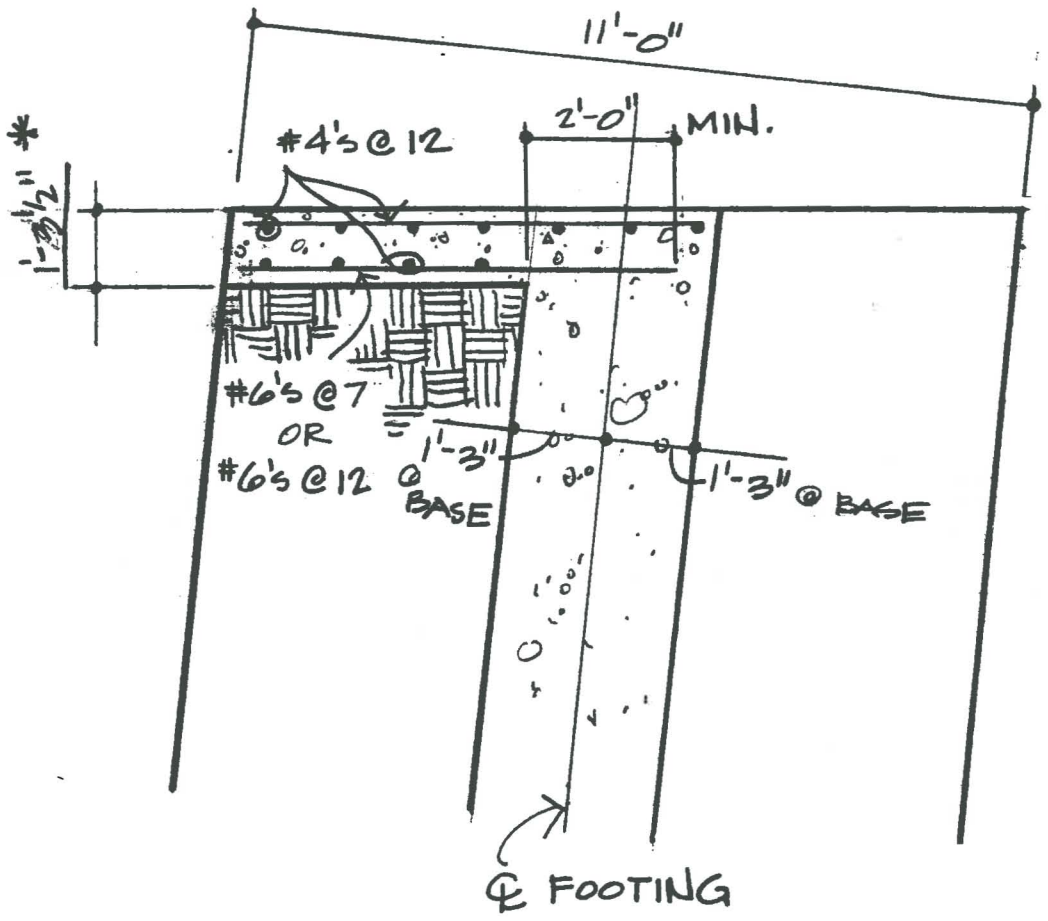

*CHANGE TO 1'-3½" TO ACCOMODATE SETTING OF DADO ON APP. SLAB ON WINGWALL.

DESIGN OF ABUT. WALL

SEE SHEET NO. 2 FOR SHEAR AND MOMENT DIAGRAMS RESULTING FROM LATERAL LOADS, EARTH PRESSURE ONLY.
LATER CHECK EARTH PRESSURE (REDUCED) PLUS EARTHQUAKE.

DESIGN FOR SHEAR:

"d" AWAY FROM FACE OF SUPPORT, (TOP OF FOOTING)

WHERE $d \cong 26.64''$ $b = 12''$

$V \cong 17.29\ K$

$$v = \frac{17.29(10^3)}{(12)(26.64)} = 54.0\ psi \approx 3.9\%\ \text{OVERSTRESS, OK!}$$

NOTE: $50^{LB}/FT^2$ PER FOOT DEPTH IS CONSERVATIVE AND AASHTO ALLOWABLE SHEAR ($0.95\sqrt{f'_c}$) IS AGAIN CONSERVATIVE WHEN COMPARED TO A.C.I. ($1.1\sqrt{f'_c}$)
SO THE ABOVE MINUTE OVERSTRESS IS NOT CONSIDERED SIGNIFICANT.

AT BASE OF WALL, (TOP OF FOOTING,) MAKE WALL 30" THICK.
BATTER BACK FACE OF WALL 3/8" PER 12".

REACTION OF 5.18^K AT PIN END MUST BE ABLE TO TRANSFER ACROSS ABUT. WALL AT TOP AND INTO THE DECK, SEC. x-x OF SKETCH ON P. 11.

DMJM	PROJECT: 29TH AVE BRIDGE	PROJECT NO: 4252-01-05	PAGE 66
		BY: RKS / DATE: 1-28/85	

SUBJECT: FINAL DESIGN, ABUT #1

CHECK EARTHQUAKE

ASSUMPTIONS

1. REDUCE EARTH PRESSURES TO 30 LB/FT² PER FOOT OF DEPTH SINCE AN EARTHQUAKE WILL ACCELERATE THE SOIL AND PRODUCE SOME LATERAL TRANSLATION.

2. APPLY EQ. FORCE FOR ABUT. & FOOTING AT C.G. OF WALL.
3. APPLY EQ. FORCE FOR SUPERSTRUCTURE AT SLAB, PIN-END.

4. 133% OVERSTRESS IS ALLOWED.

5. TOTAL REACTION AT PIN END OF PROPED-CANTILEVER MODEL FOR ABUT. WALL MUST BE TRANSFERRED ACROSS X-X IN SKETCH AT RIGHT.

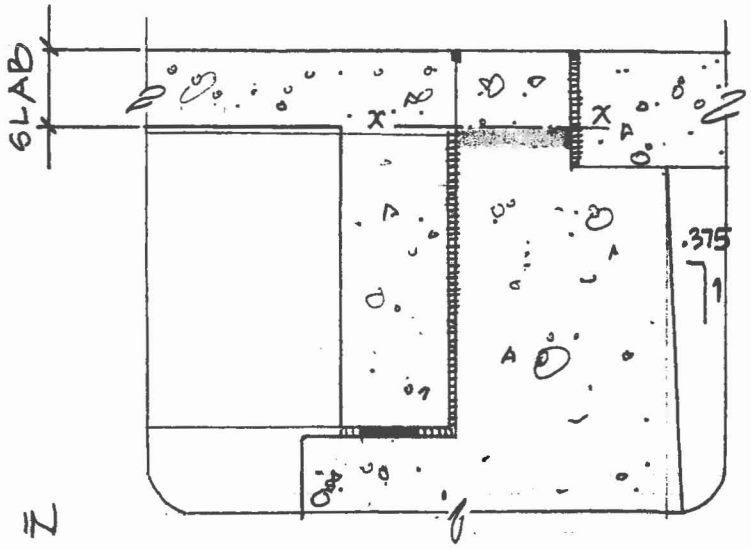

CALCULATE LATERAL EQ FORCE FOR ABUT WALL AND FOOTING.

APPROX DL. = 10.73(54.42) + 4.95(54.42) = 853.31 K

DL/FT = $\frac{853.31}{54.42}$ = 15.68 K

EQ = C·F·W

C = .09 (GIVEN)

F = 1.0 (GIVEN)

EQ = .09(1.0)15.68 = 1.41 K LATERALLY AT 17.10' BELOW PIN END OF PROPED CANTILEVER.

CALCULATE LATERAL EQ FORCE FOR SUPERSTRUCTURE

*CALCULATE WT. FOR 1 GIRDER SPACING AND REDUCE TO A PER FT. WIDTH BASIS.

NC. SLAB/HAUNCH/GIRDER = 1.077 K/FT DIAPH = 2.36 K

22.67(1.077) + .5(2.36) = 25.60 K $\frac{25.60}{7.5}$ = 3.41 K/FT WIDTH

C. .313 K/FT

22.67(.313) = 7.10 K $\frac{7.10}{7.5}$ = 0.95 K/FT WIDTH

(0.95 + 3.41).09(1.0) = 0.39 K APPLIED AT PIN END.

DMJM	PROJECT: 29TH AVE BRIDGE	PROJECT NO: 4252-01-05	BY: RKS	DATE: 1-29/85	PAGE 67

SUBJECT: FINAL DESIGN, ABUT 1

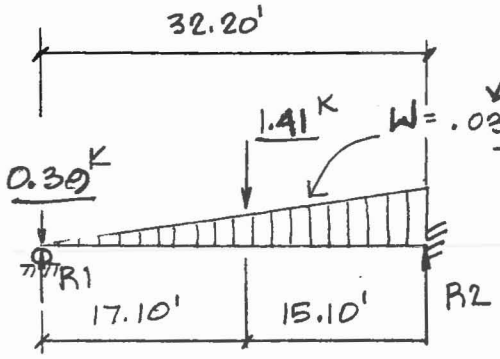

30 LB/FT² PER FOOT DEPTH FOR EQ. SOIL PRESSURE

$$W = \frac{.03(32.2)^2}{2} = 15.55^K$$

$$R1 = 0.39 + \frac{15.55}{5} + \frac{1.41(15.10)^2}{2(32.2)^3}\left(17.10 + 2(32.2)\right)$$

$$R_1 = \underline{3.89\ K}$$

$$R_2 = 4\left(\frac{15.55}{5}\right) + \frac{1.41(17.10)}{2(32.2)^3}\left(3(32.2)^2 - (17.10)^2\right)$$

$$R_2 = \underline{13.46\ K}$$

BY INSPECTION, PREVIOUS CASE CONTROLS ! WITHOUT EQ., EARTH LATERAL LOADS CONTROL.

ASSUMPTIONS,

- 1. FOR LATERAL LOADS, CONSIDER DL ONLY.

- $\frac{5.18\,K(1000)\,LB\ IN^2}{52.03\,LB\,(12\,IN)} = \underline{8.3\ IN}$ SAY 9" = MIN. x-x DIMENSION SEE SKETCH, SHEET 11

8.3" IS THE MINIMUM DIM. NECESSARY TO TRANSFER THE REACTION AT THE PIN END OF THE PROPED CANTILEVER INTO THE DECK.

DMJM	PROJECT: 29TH AVE BRIDGE	PROJECT NO: 4252-01-05	PAGE 68
		BY: RKS / DATE: 1/2/85	

SUBJECT: ABUT DESIGN

DESIGN FOR FLEXURE:

1. AT TOP OF FOOTING:

$M_d = 111.28$ K·FT $b = 12''$ $d = 27.5''$ $n = \frac{E_s}{E_c} = 9.29$

$f_c = 1{,}200$ psi $f_s = 24{,}000$ psi

$\rho_{min} = .0019 = 1.7\left(\frac{30}{27.5}\right)^2 \frac{\sqrt{3{,}000}}{60{,}000}$ ← AASHTO

$A_{s\,min} = \rho bd = 0.63\ in^2$

TRY #8's @ 9" $A_s = 1.05\ in^2$

LOCATE NEUTRAL AXIS (n.a.), SEE SKETCH

$\frac{b(kd)^2}{2} - nA_s(d-kd) = 0$

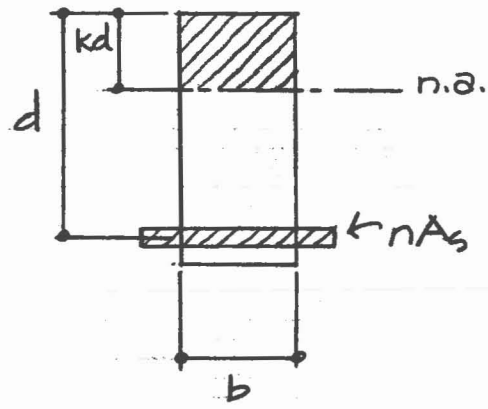

SUBSTITUTE b, n, As, d

$6\,kd^2 + 9.75\,kd - 268.21 = 0$

$kd = \frac{-9.75 \pm (9.75^2 + 4(6)268.21)^{1/2}}{12}$

$= 5.9224''$

$= \cancel{-7.5480}$ N.G.

$K = 0.2154$

$jd = 25.5258$

$j = 0.9282$

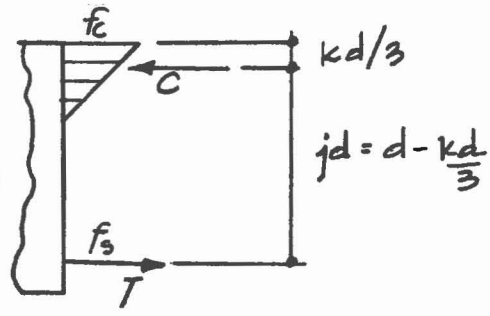

@ $f_s = 24{,}000$ psi

$M_a = A_s f_s\, jd = \frac{1.05(24)(25.5258)}{12} = 53.6^{K\cdot'}$

$M_a = M_{allow} < M_d = M_{design}$ ← N.G.

TRY #8's @ 4" $A_s = 2.36\ in^2$

$kd = 8.3620$

$k = 0.3041$

$jd = 24.7127$

$j = 0.8986$

@ $f_s = 24$ ksi $M_a = 116.6^{K\cdot'}$

@ $f_c = 1.2$ ksi $M_a = \frac{bkd}{2} f_c\, jd = 124.0^{K\cdot'}$

DMJM	PROJECT 29 TH AVE BRIDGE	PROJECT NO: 4252-01-05	PAGE 69
		BY: RKS / DATE:	

SUBJECT ABUT. DESIGN

$f_{cr} = .4108$ ksi

$M_{cr} = 42.4$ k·'

$1.2\ M_{cr} = 50.9$ k·'

#8's @ 4" OK! DEVELOPE INTO FOOTING

$l_d = 36"$

$l_e = \frac{.04(A_b) f_h}{\sqrt{f'_c}}$ $f_h = 29{,}577$ psi $l_e = 17.0"$

$32.5 + 17.0 = 49.5" > l_d$ OK!

MOMENT DIAG. SHOWS M=0 @ APPROX. 7.26' ABOVE BOTTOM OF FOOTING. EXTEND #8's @ 4" 10'-0" ABOVE TOP OF FOOTING, CUT-OFF 100% OF #8's. SPLICE #4's @ 12" TO EVERY THIRD #8 BAR. FOR TEMP & SHRINKAGE.

$\frac{A_s \text{ PROV.} = .20}{A_s \text{ REQ'D} = .125} = 1.6 < 2.0$

% A_s SPLICED = 100%

∴ CLASS C

$l_d = \frac{.04(.20)60{,}000}{(3{,}000)^{1/2}} = 8.76"$

$= .0004(.5)60{,}000 = 12.00"$ CONTROLS

$1.7\ l_d = 20.4"$ SAY 24" (2'-0")

DMJM	PROJECT: 29TH AVE BRIDGE	PROJECT NO: 4252-01-05	PAGE 70
		BY: RKS / DATE:	

SUBJECT: ABUT. DESIGN

2. FLEXURE IN FRONT FACE OF ABUT.

$M_d = 49.77$ K·' AT ≈17.81' FROM TOP OF FOOTING, SEE SHEAR AND MOMENT DIAG. P. 2.

$t = 30 - 3/8(17.81) = 23.32$ IN

$d = t - 2.5$ IN $= 20.82$ IN SAY 20.5 IN

$M_d = 49.77$ K·'
$d = 20.5$ IN
$b = 12$ in
$n = 9.29$
$f_c = 1.2$ ksi
$f_s = 24$ ksi

TRY #6's @ 6" $A_s = 0.88$ IN^2 $\rho = .0036$

$kd = 4.6473$
$K = 0.2267$
$jd = 18.9509$
$j = 0.9244$

@ $f_s = 24$ ksi $M = A_s f_s jd = 33.4$ K·' < M_d N.G.

TRY #8's @ 6" $A_s = 1.57$ IN^2

$kd = 5.9474$
$k = 0.2901$
$jd = 18.5175$
$j = 0.9033$

@ $f_s = 24$ ksi $M = A_s f_s jd = 58.14$ K·'

@ $f_c = 1.2$ ksi $M = \frac{bkd}{2} f_c jd = 66.08$ K·'

$f_c = \frac{M}{\frac{1}{2}bd^2kj}$ $M = 58.14$ $f_c = 1{,}056$ psi > 1.2 fcr

USE #8's @ 6" AT THIS POINT OF MAX. MOMENT.

AASHTO 1.5.13(B) "EXTEND 1/3 INTO SUPPORT"

$\frac{1.57 \text{ IN}^2}{3} = .52$ IN^2, #7's @ 12" OK BUT USE #8's TO AVOID CONFUSION!

DMJM	PROJECT: 29 TH AVE BRIDGE	PROJECT NO: 4252-01-05	PAGE 71
		BY: RKG / DATE:	

SUBJECT: ABUT. DESIGN

DETERMINE CUT-OFF OF MAIN #8's @ 6" AT BOTTOM.

1. TRY 9.66' FROM TOP OF FTG. (.7L ON MOM. DIAG)

$d = 9.66(-.375) + 27.5 = 23.88$ IN

$A_s = 0.78$ IN^2

$b = 12$ IN

$f_s = 24$ KSI $\qquad M_d = 21.42$ K·'

$f_c = 1.2$ KSI

$n = 9.28$

$kd = 4.7997$

$k = 0.2010$

$jd = 22.2776$

$j = 0.9330$

@ $f_s = 24$ KSI $\quad M = A_s f_s jd = 34.75$ K·' $> M_d$

@ $f_c = 1.2$ KSI $\quad M = \frac{bkd}{2} f_c jd = 64.15$ K·' $> M_d$

$f_c = 650.0$ PSI $> 1.2 f_{cr} = 493.0$ PSI

ASSUME AT 11'-0" FROM TOP OF FOOTING $\left(\frac{11}{32.2} = 0.34\right)$

$M_d = 29.2$ K·', #8's @ 12" IS ADEQUATE

$$l_d = 0.8\left[\frac{0.04(.79)\,60{,}000}{\sqrt{3000}}\right] = 27.7 \text{ IN.}$$

A_s REQ'D $\cong .65$ IN^2 $\qquad A_P/A_R = 1.19 < 2$

A_s PROV $\cong .78$ IN^2

% A_s spliced = 100%

∴ CLASS C

$1.7\, l_d = 47.0"$ SAY 48"

* SINCE THIS IS SO CLOSE TO THE TOP OF THE FOOTING, CUTTING OF THE #8's @ 6" WOULD NOT SAVE MUCH. ∴ EXTEND #8's @6" DOWN TO TOP OF FOOTING, DEVELOPE EVERY OTHER ONE INTO THE FOOTING VIA A #8 DOWEL & SPLICE.

DMJM	PROJECT: 29 TH AVE BRIDGE	PROJECT NO: 4252-01-05	PAGE 72
		BY: RKS / DATE:	

SUBJECT: ABUT DESIGN

DETERMINE CUT-OFF OF MAIN #8's @ 6" AT TOP

$\frac{1.57}{3} = 0.52 \text{ in}^2$

#8's @ 12" $A_s = 0.78 \text{ in}^2$

CHECK @ 24.15' FROM TOP OF FOOTING.

$M_d = 36.9$ k·' , SEE MOMENT DIAGR.

$d = 24.15(-.375) + 27.5 = 18.44$ IN

$b = 12"$

@ $f_s = 24$ KSI $M_a \cong 26.6$ k·' $< M_d$

TRY #6's @ 6" $A_s = 0.88$ IN

@ $f_s = 24$ ksi $M_a = 29.8$ k·' $< M_d$

KEEP #8's @ 6" $A_s = 1.57 \text{ in}^2$ TO THE TOP.

@ $f_s = 24$ ksi $M_a = 39.62$ k·'

@ $f_c = 1.2$ ksi $M_a = 50.00$ k·'

#8 DOWELS @ FOOTING (@ 12")

LAP SPLICE ASSUME CLASS A

LAP LENGTH = $0.8\left(\frac{0.04(.79)60{,}000}{\sqrt{3{,}000}}\right) = 27"$ SAY 30"

DMJM	PROJECT: 29TH AVE BRIDGE	PROJECT NO: 4252-01-05	PAGE 73
		BY: RKS / DATE: 1-29/85	

SUBJECT: FINAL DESIGN, ABUT 1

SKETCH:

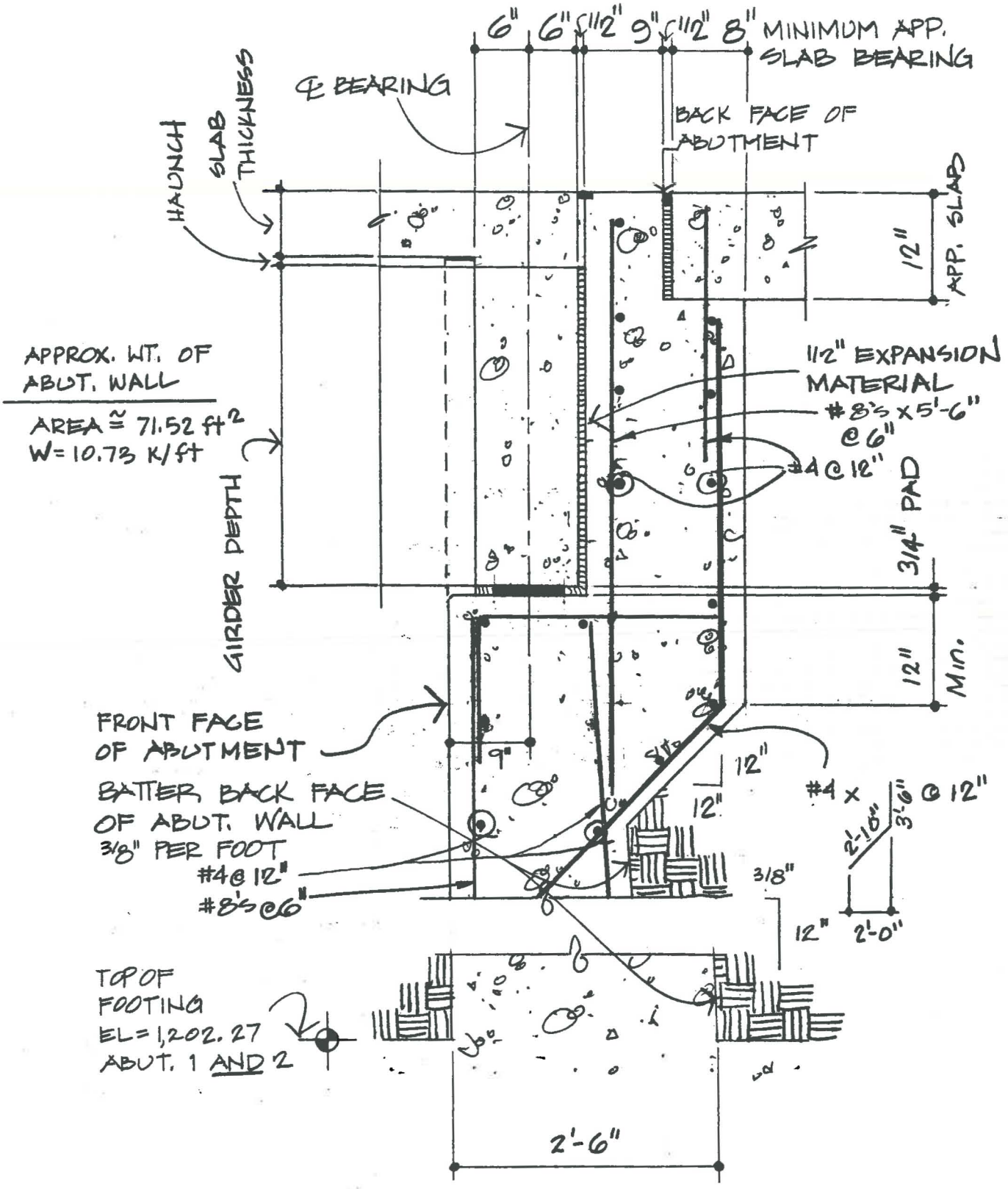

DMJM	PROJECT 29TH AVE BRIDGE	PROJECT NO: 4252-01-05	PAGE 74
		BY: RKS / DATE:	

SUBJECT ABUT. DESIGN

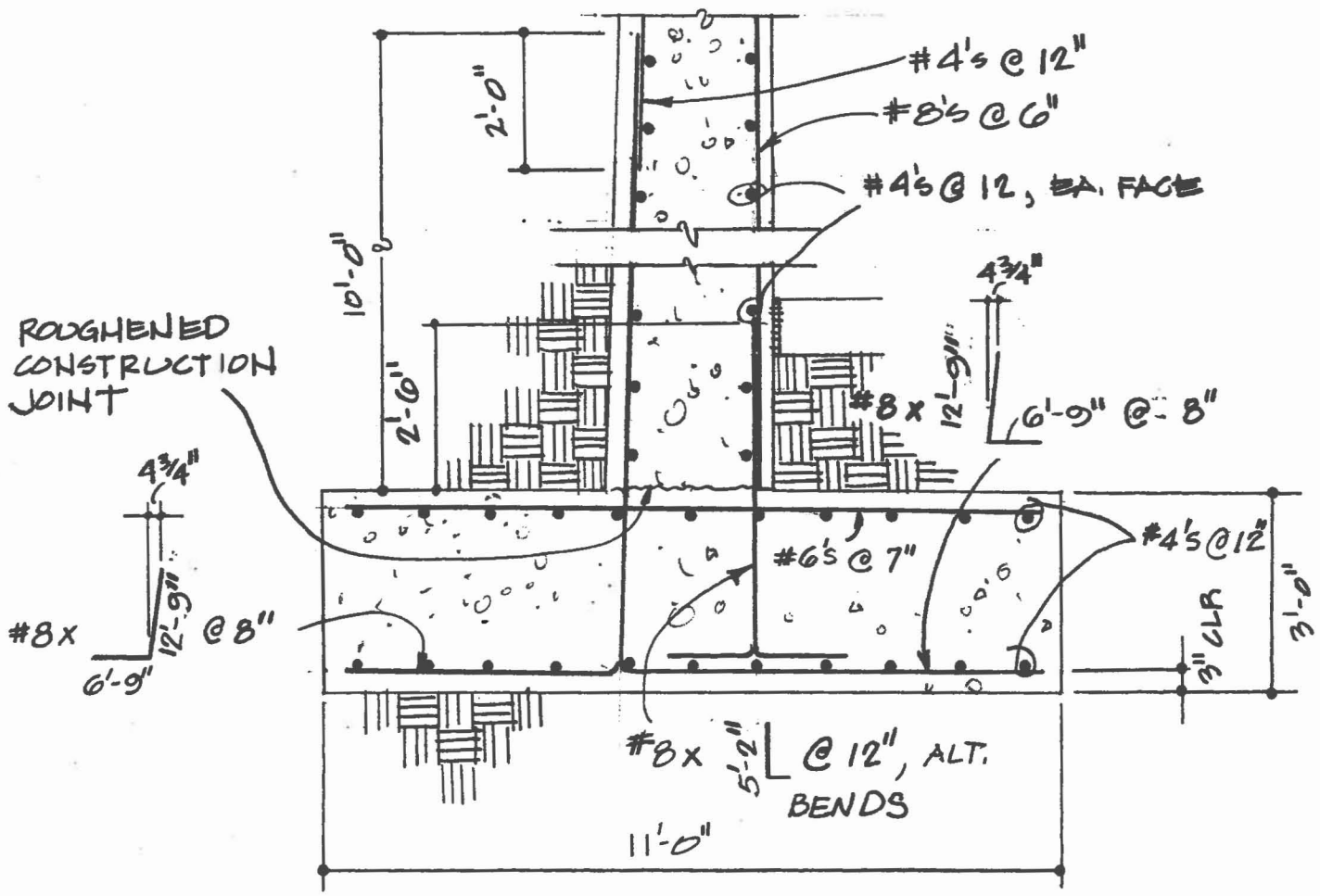

DMJM	PROJECT 29 TH AVE. BRIDGE	PROJECT NO: 4252-01-05	PAGE 75
		BY: RKS / DATE:	

SUBJECT ABUT DESIGN

CHECK WALL DESIGN WITH WATER AT DESIGN LEVEL ON ONE SIDE AND 40 LB/FT^2 PER FOOT DEPTH SOIL PRESSURE ON THE OTHER SIDE

LOAD, SHEAR, MOMENT DIAG. OF SOIL, ADAPTED FROM P. 2.

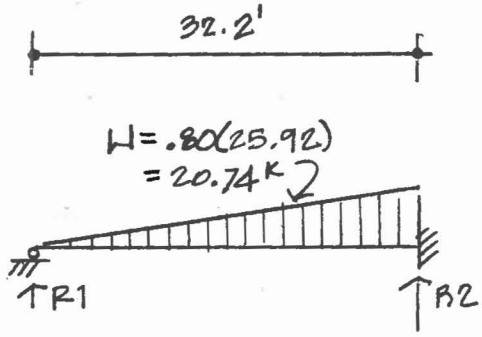

R1 = 0.80(5.18) = 4.14 K

R2 = 0.80(20.74) = 16.59 K

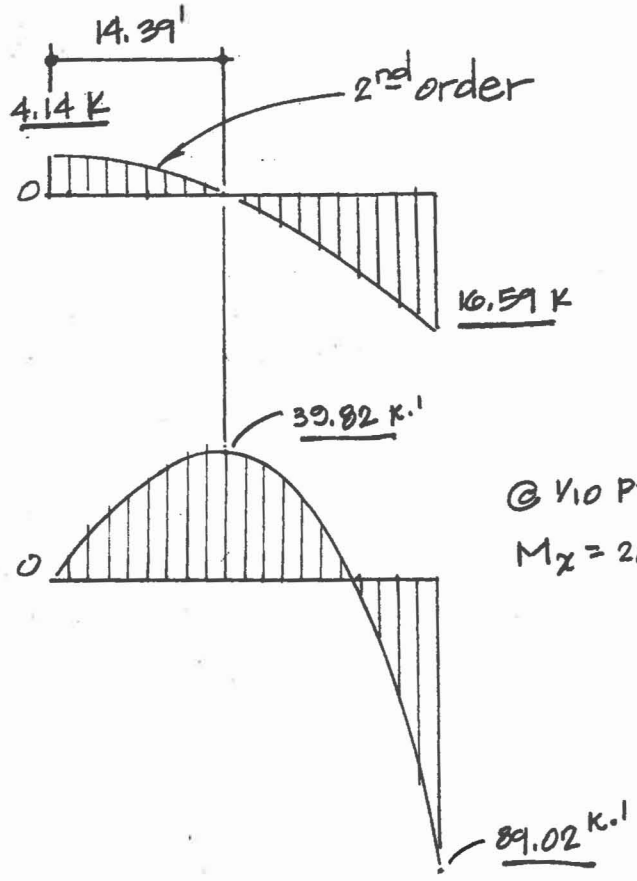

@ 1/10 PTS

$$M_x = 20.74(x)\left(\frac{1}{3} - \frac{x^2}{3(32.2)^2}\right)$$

DMJM	PROJECT: 29TH. AVE BRIDGE	PROJECT NO: 4252-01-05	PAGE 76
		BY: RKS / DATE:	

SUBJECT: ABUT DESIGN

LOAD, SHEAR, MOMENT
DIAG FOR WATER 62 LB/FT^2 PER FOOT DEPTH.
ASSUME 18' HEIGHT.

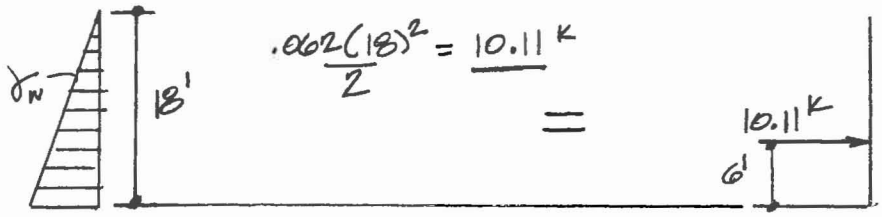

$$\frac{.062(18)^2}{2} = \underline{10.11}^{K}$$

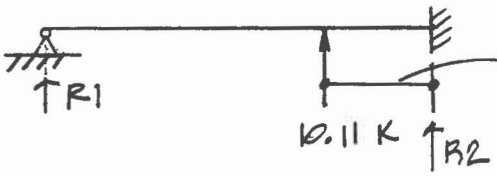

$6' + (2.83') = 8.83'$

$$R1 = \frac{-(10.11)(8.83)^2}{2(32.2)^3}\left(23.37 + 2(32.2)\right)$$

$R1 = \underline{-1.04}$ K

$$R2 = \frac{-(10.11)(23.37)}{2(32.2)^3}\left(3(32.2)^2 - (23.37)^2\right)$$

$R2 = \underline{-9.07}$ K

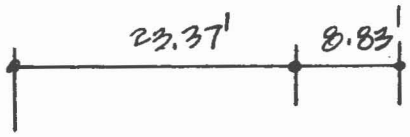

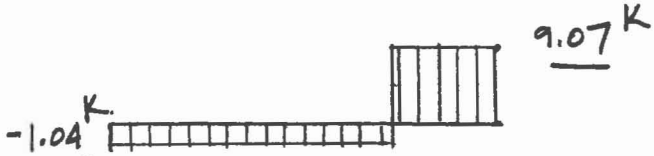

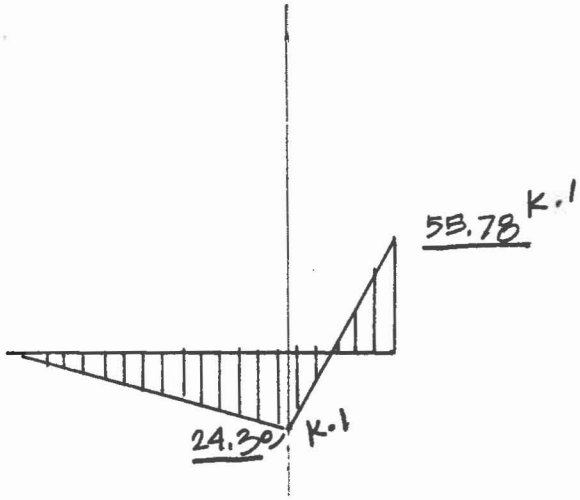

DMJM	PROJECT 29TH AVE BRIDGE	PROJECT NO: 4252-01-05	PAGE 77
		BY: RKS / DATE:	

SUBJECT ABUT. DESIGN

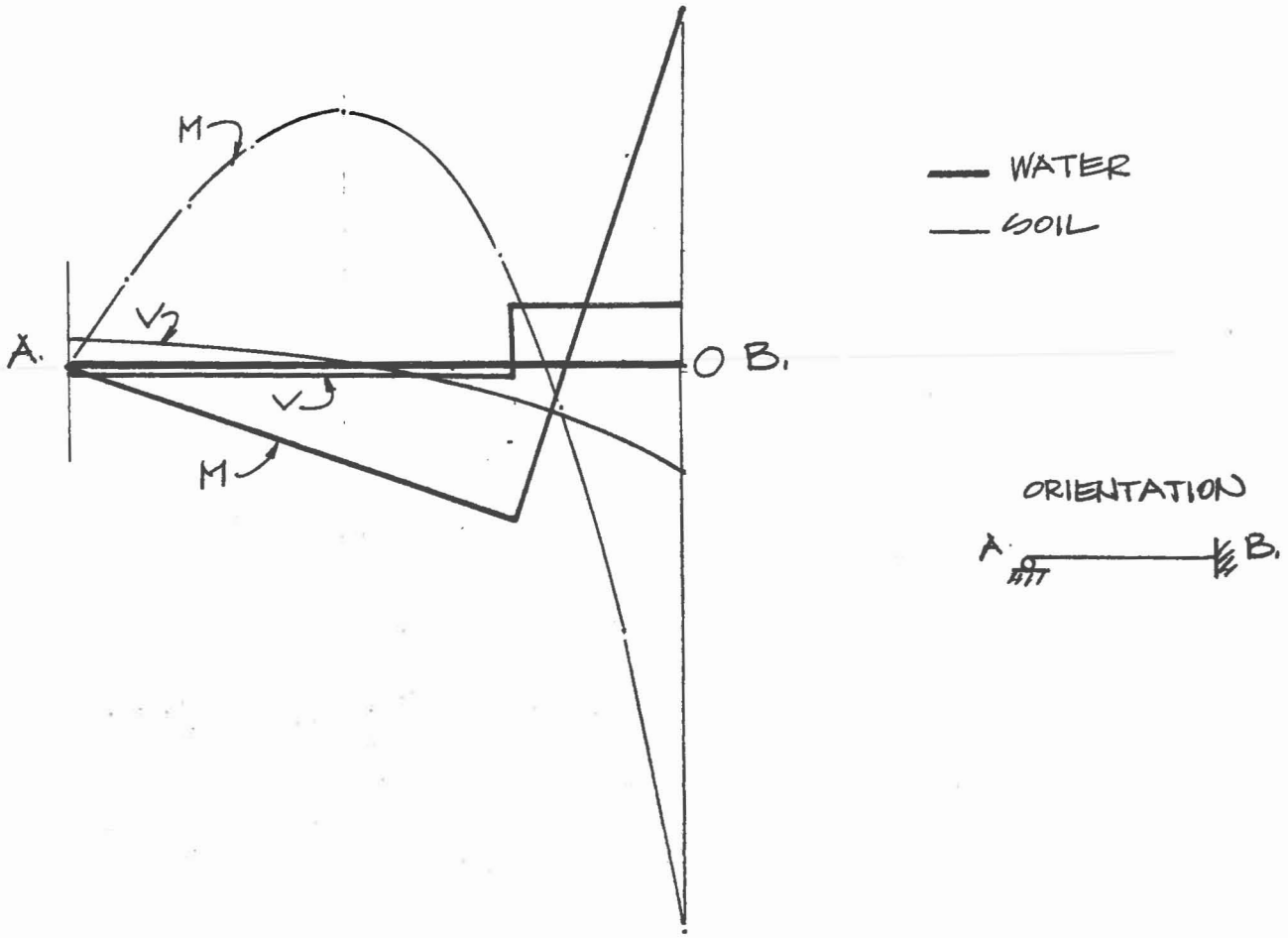

BY INSPECTION OF "TO SCALE" SUPERPOSITION OF SHEAR & MOMENT DIAG'S OF THE TWO LOADING CASES, WALL DESIGN IS CONTROLLED BY SITUATION WITH NO WATER IN CHANNEL.

DMJM	PROJECT: 29TH AVE BRIDGE	PROJECT NO: 4252-01-05	BY: RKS	DATE: 2-1/85	PAGE 78
SUBJECT: ABUT. DESIGN					

GIRDER SEAT ELEVS.

ABUT 1.

VERT CURVE DATA & SKETCH

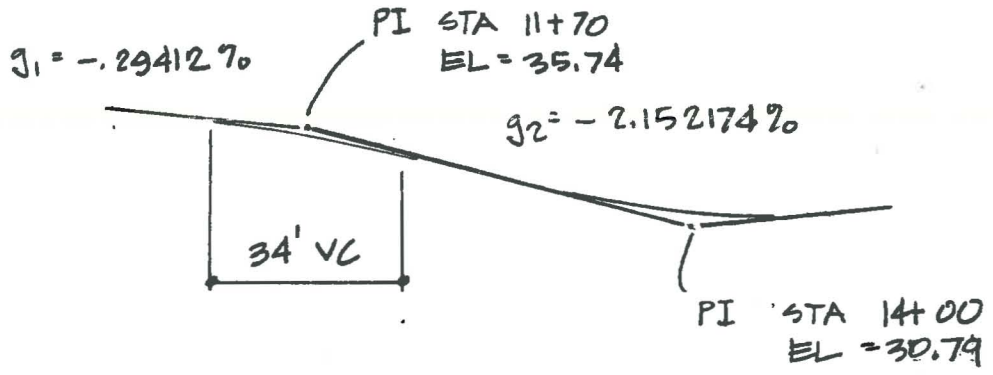

STA. ℄ CONST @ ℄ PIER = 12+42

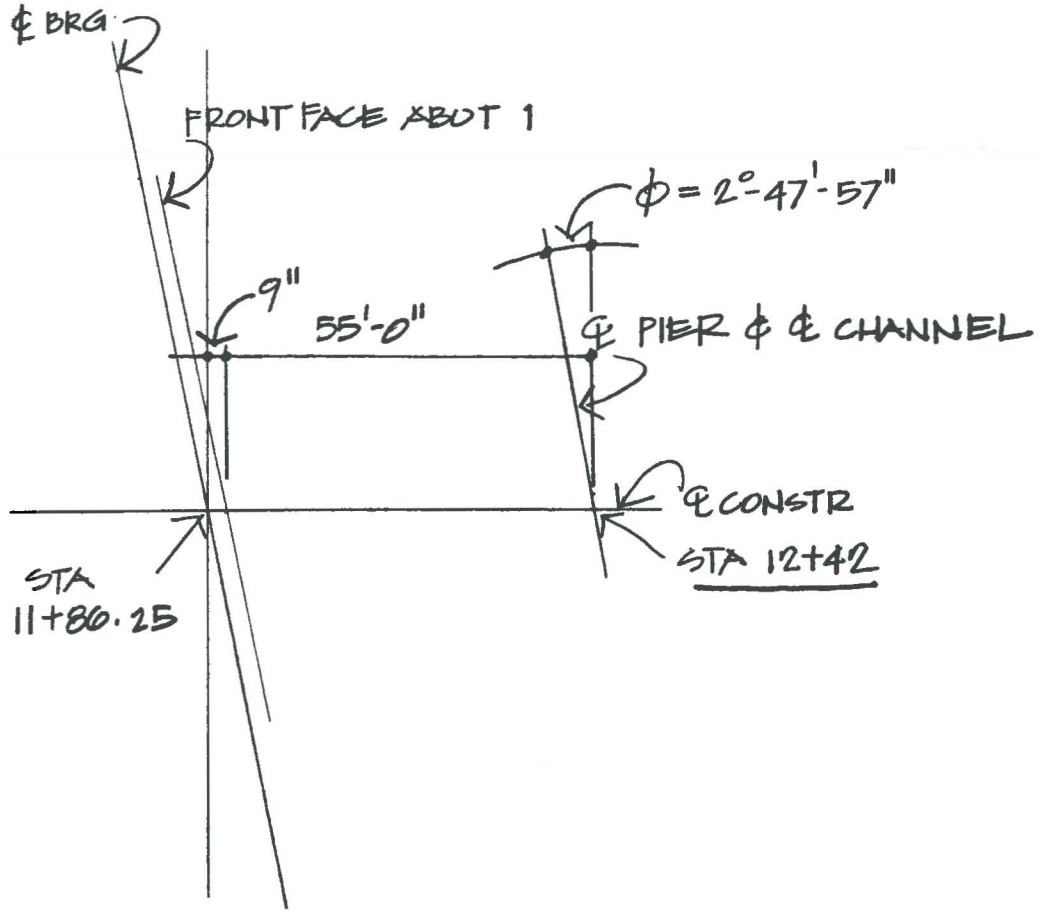

DMJM	PROJECT: 29TH AVE BRIDGE	PROJECT NO: 4252-01-05	PAGE 79
		BY: RKS / DATE: 2-1/85	

SUBJECT: ABUT DESIGN

LOOKING UP-STATION, (SIDEWALK IS ON RT. HAND SIDE)
STARTING AT THE LEFT, NUMBER GIRDERS
G1, G2, G3, . . ., G8.

A. GIRDER	B. OFFSET DIST.	C. OFFSET DIST. X tan ϕ	D. STA. = 1186.25 + C.	E. ELEV. @ ℄ CONST.	F. FINAL ELE = E. − .015|B|
G1	−23'-6½"	−1.1510'	11+85.0990	35.414	35.061
G2	−16'-0½"	−0.7843'	+85.4657	35.407	35.166
G3	−8'-6½"	−0.4176'	+85.8324	35.399	35.271
G4	−1'-0½"	−0.0509	+86.1991	35.391	35.375
G5	6'-5½"	0.3158	+86.5658	35.383	35.286
G6	13'-11½"	0.6825	+86.9325	35.376	35.167
G7	21'-5½"	1.0492	+87.2992*	35.368	35.046
G8**	28'-11½"	1.4159	+87.6659*	35.360	34.926

*NOT WITHIN VC
** BELOW SIDEWALK

FROM ALL ABOVE FINAL ELEV.'s "F" SUBTRACT,
7¼" SLAB
1" HAUNCH
36" GIRDER
¾" PAD ← changed to ½" pad − reduce elev by ¼" GIS 2/13/85

45" ÷ 12 = 3.750' TO ARRIVE AT GIRDER SEAT EL.'s

G1 31.311'
G2 31.416'
G3 31.521'
G4 31.625'
G5 31.536'
G6 31.417'
G7 31.296'
G8 31.176'

DMJM	PROJECT: 29TH AVE BRIDGE	PROJECT NO: 4252-01-05	PAGE 80
		BY: RKS / DATE: 2-1/85	

SUBJECT: ABUT. DESIGN

ABUT 2

A. GIRDER	B. OFFSET DIST. "d"	C. "d" x tan φ	D. STA. = 12+97.75 + C.	E. ELEV. @ CONSTR. ℄	F. FINAL ELEV. E - .015|B|
G1	-23'-6½"	-1.1510	12+96.5990	33.015	32.662
G2	-16'-0½"	-0.7843	+96.9657	33.007	32.766
G3	-8'-6½"	-0.4176	+97.3324	33.000	32.872
G4	-1'-0½"	-0.0509	+97.6991	32.992	32.976
G5	6'-5½"	0.3158	+98.0658	32.984	32.887
G6	13'-11½"	0.6825	+98.4325	32.976	32.767
G7	21'-5½"	1.0492	+98.7992	32.968	32.646
G8*	28'-11½"	1.4159	+99.1659	32.960	32.526

*BELOW SIDEWALK

G1	28.912
G2	29.016
G3	29.122
G4	29.226
G5	29.137
G6	29.017
G7	28.896
G8	28.776

Reduce elev by ¼" for change in pad (½" pad)

GLS 2/13/85

PROJECT	PROJECT NO: 4252-01-05	PAGE 8
DMJM	BY: RKS	DATE:
SUBJECT ABUT DESIGN	29TH AVE BRIDGE	

Reduce elev by 1/4" GIS 2/13/85

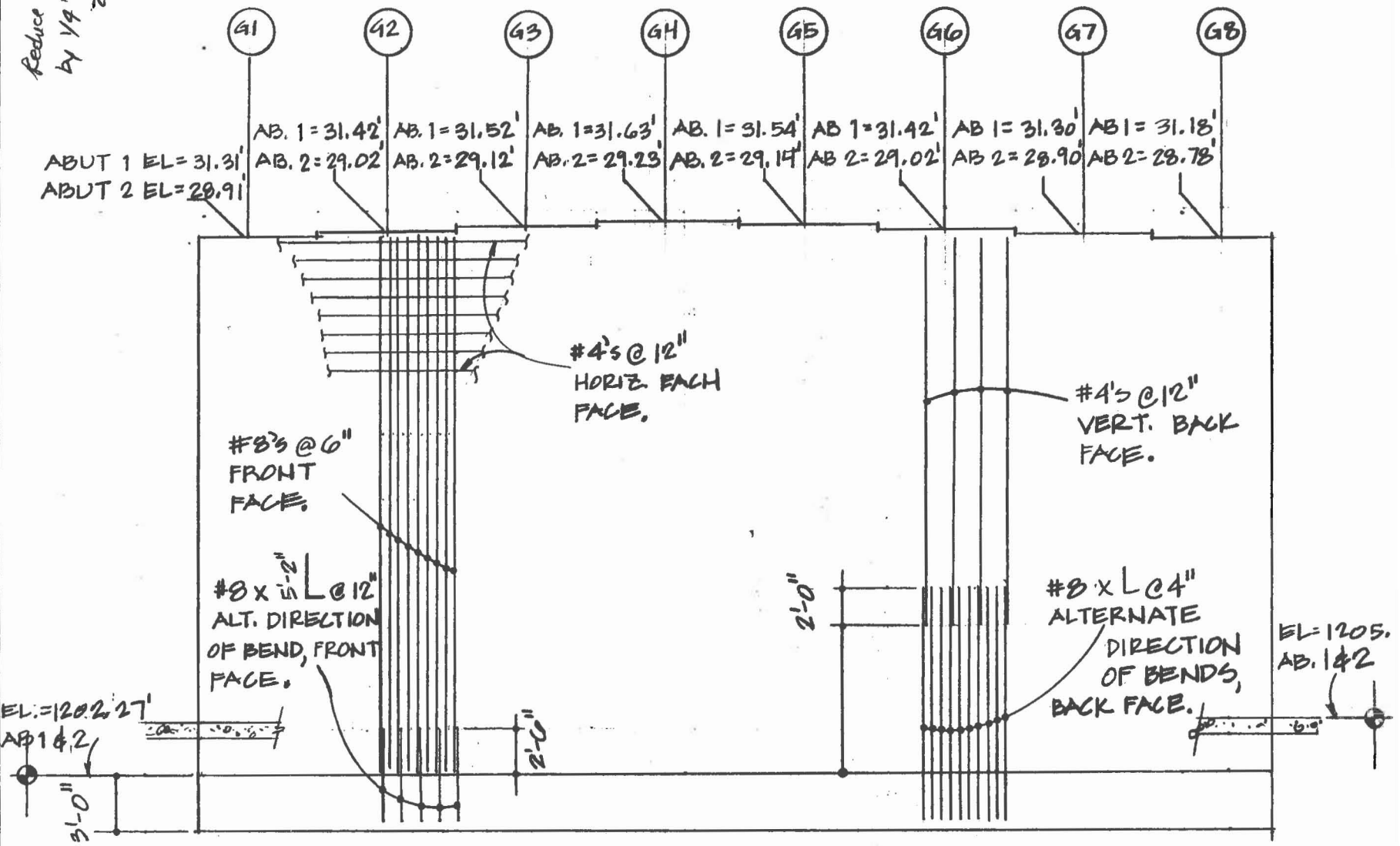

DADO WALL DESIGN

TOTAL HEIGHT ABOVE TOP OF SLAB = 4'-0 5/8"
$H = 4.0' > 2.75'$

$P = 10^K$

$C = 1 + \frac{H-33}{18} \geq 1.0 \qquad C = 1.83$

DISTRIBUTE

$E = 0.8X + 5.0$
$X = 4'-0''$
$E = 8.20'$

$P = 1.83(10) = 18.3^K$

$M = \frac{P}{E}(X) = \frac{18.3}{8.2}(X) \qquad X = 4.0' \qquad M = 8.93^{K\cdot'}$

$V = \frac{P}{E} = \frac{18.13^K}{8.20\ FT} = 2.21\ K/FT$

$v = \frac{2.21(10^3)}{12(13.5)} = 13.65\ psi < v_c\ allow. = 52.03\ psi$ OK IN SHEAR

$\rho_{min} = .0015$
$A_s\ min \cong .26\ in^2/ft$
TRY NO. 5's @ 12 IN $\quad A_s = 0.31\ in^2/ft$

$f_s = 24\ ksi$

$f_c = 1.2\ ksi$

$n = 9.29$

$b = 12\ in \quad d = 11\ in \quad t = 13.5\ in$

$b\frac{(kd)^2}{2} - nA_s(d - kd) = 0$

$kd = 2.0702''$
$k = 0.1882$
$jd = 10.3099''$
$j = 0.9373$

@ $f_s = 24\ ksi \quad M = A_s f_s jd = 6.39^{K\cdot'} < M$

TRY #5's @ 8"

DMJM	PROJECT 29TH AVE BRIDGE	PROJECT NO: 4252-01-05	PAGE
		BY: RKS / DATE:	83

SUBJECT ABUT DESIGN

$A_s = 0.46 \text{ in}^2/\text{ft}$
$kd = 2.4653 \text{ IN}$
$k = 0.2241$
$jd = 10.1782 \text{ IN}$
$j = 0.9253$

@ $f_s = 24$ KSI $\underline{M = 9.36^{K\cdot'} > M = 8.93^{K\cdot'}}$ @ $f_c = 1.2$ KSI $M = 15.05^{K\cdot'}$

DEVELOPEMENT OF #5 BAR

$$l_d = 0.04(.31)\frac{60{,}000}{\sqrt{3{,}000}} = 13.6''$$

$$= .0004(60{,}000).63 = 15.1''$$

$$l_d = (0.8)\left(\frac{.44 = A_{s\,REQ'D}}{.46 = A_{s\,prov}}\right)(15.1) = 11.52'' < 12'' \quad \therefore\ l_d = 12''$$

$M = 8.93^{K\cdot'}$ TRANSFERED INTO APPROACH SLAB

$t = 12''$
$d = 9.1875''$ $b = 12''$
$A_s = \#4$'s @ 18" $= .133 \text{ IN}^2$ ON STD. SKETCH.
TRY #6's @ 9" $A_s = .59 \text{ IN}^2$

$kd = 2.4760 \text{ IN}$
$k = 0.2695$
$jd = 8.3622 \text{ IN}$
$j = 0.9102$

@ $f_s = 24$ KSI $M = A_s f_s jd = \underline{9.87^{K\cdot'}} > M$
@ $f_c = 1.2$ KSI $M = 12.42^{K\cdot'}$

<u>USE #6's @ 9" TOP STEEL IN APP. SLAB.</u>

DMJM	PROJECT TEMP. BRIDGE	PROJECT NO: 4252-01-05	PAGE 84
		BY: RS / DATE: 2-10/85	
SUBJECT	ABUT.		

DEAD LOADS –

- GIRDERS X-SEC. AREA ≅ 7.15 FT^2 WT/FT = 1.07 K/FT
- DIAPHRAMS WT = .717 K EA
- BARRIER (DISTRIBUTE EVENLY) X-SEC AREA = 2.65 FT^2 WT/FT = 0.40 K/FT
- ASPHALT (2/12) 27.63 (.144) 40 = 26.52 K

TOTAL DL = 1.07(40)10 + 2(10).717 + 2(.04)40 + 26.52 = 472.06 K

ASSUME 1.75 K/FT ABUT. WT

$\frac{472.06}{40}$ + 1.75 = 13.55 K/FT UNIF. DL

LIVE LOADS –

- HS20-44 AASHTO APP A, 80' SIMPLE SPAN, TRUCK CONTROLS.

  R^T = 63.6 K PER TRUCK

  APPLY ONLY 2 TRUCKS MAXIMUM.
- SIDEWALK – 60 #/FT^2 SIDEWALK 4' WIDE R^S = 4(40).06 = 9.6 K = R^S

QUICK ESTIMATE OF NO. OF PILES & ABUT SIZE.

q_{allow} = 13.5 KSF END BEARING

q_{bs} = .5 KSF SKIN FRICTION

24" ϕ PILE $Q = \left(\frac{2}{1}\right)^2 \pi(13.5) + .5(2)\pi(28)$ = 130.4 K PER PILE

40(13.55) + 2(9.6) + 2(63.6) = 688.40 K = TL

TL/Q = n = 5.28 TRY 5 - 24" ϕ PILES

NOTES

- ALIGN ℄ PILES WITH ℄ BEARING OF GIRDERS
- PROVIDE 1'-0" BACK WALL FOR GIRDER
- AASHTO DICTATES 6" SIDE CLEARANCE TO PILE CAP EDGE, MIN.
- DESIGN AS A CONTINUOUS BEAM, NOT A FRAME.

DMJM	PROJECT: TEMP BRIDGE	PROJECT NO: 4252-01-05	PAGE 85
		BY: RKS / DATE: 2-10/85	
SUBJECT: ABUT DESIGN			

PILE CAP DESIGN

A. SHEAR

$v_c = .95(f'_c)^{1/2} = 52.03$ PSI

$V_{LL} = 39.41^K$

$V_{DL} = 55.33^K$

$V_{TL} = 94.74^K \times 0.90 = 85.27^K$

REDUCE SINCE THE VALUE ARE TAKEN AT ℄ SUPPORTS

$b = 24'' + 6'' + 12'' = 42''$

$d = 27.5''$ (36" TOTAL DEPTH - 6" - 2.5")

$v = \frac{85.27(10^3)}{42(27.5)} = 73.82$ PSI $> v_c$ allow.

∴ SHEAR STEEL REQ'D. USE #4 STIRRUPS, $A_v = 0.40$ IN^2

AASHTO 8.15.5.3.2. $A_v = \frac{(v - v_c) b_w s}{f_s}$

s MAX = d/2 = 13" $b_w = 42''$

$f_s = 20{,}000$ PSI

$v = 73.82$ PSI

$v_c = 52.03$ PSI

$A_v = 0.59$ IN$^2 > 0.40$ IN^2

∴ REDUCE s TO 8"

$A_v = 0.37$ IN$^2 < 0.40$

CHECK AASHTO 8.19.1.2.

$A_v = \frac{50 b_w s}{f_y}$; $\frac{.40(40{,}000)}{50(42)} = 7.62$ IN $\approx 8''$

USE #4 x □ @ 8" THROUGHOUT

B. BENDING

$b = 42''$
$d = 27.5''$
$h = 36''$
$f_y = 60{,}000$ psi $\quad f_s = 24{,}000$ psi
$f'_c = 3{,}000$ psi $\quad f_c = 1{,}200$ psi $\quad f_{cr} = 411$ psi

$$\rho_{MIN} = 1.7\left(\frac{36}{27.5}\right)^2 \frac{3000^{1/2}}{60{,}000} = .0027$$

+ MOMENT

$M_{DL}^{+} = 40.6$ k·l (.50 SPAN 2)
$M_{LL}^{+} = 19.4$ k·l (.50 SPAN 2)
$M_{TL} = 60.0$ k·l

$M_{DL}^{+} = 22.6$ k·l (.50 SPAN 4)
$M_{LL}^{+} = 44.8$ k·l (.50 SPAN 4)
$M_{TL} = 67.4$ k·l > 60.0 k·l

CHECK CRACKING MOMENT, ASSUME CLOSE TO MIN A_s

A_s MIN $= \rho_{MIN} bd = 3.1$ IN^2
TRY 6-#6's $A_s = 2.65$ IN^2

$$b\frac{(kd)^2}{2} = nA_s(d - kd)$$

$b = 42''$ $\quad n = 9.29$ $\quad A_s = 2.65$ IN^2 $\quad d = 27.5''$

SOLVE FOR kd

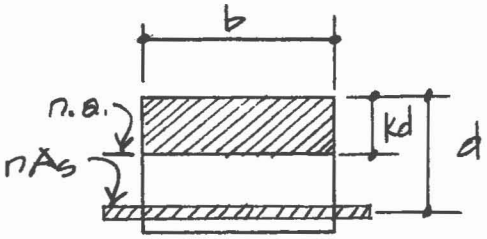

$kd = 8.77''$
$k = 0.32$
$jd = 24.58''$
$j = 0.89$

$$M = \frac{bkd}{2} f_c\, jd$$

$f_c = 1.2$ ksi

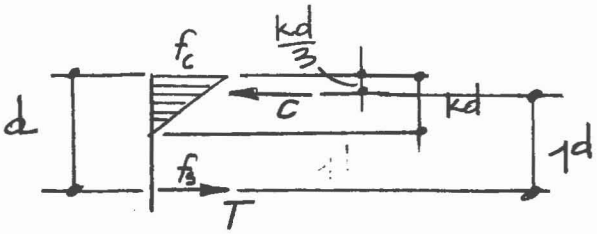

$M_{cr} = 452.65$ k·l

$1.2 M_{cr} = \underline{543.23^{k\cdot l} \ggg 67.4^{k\cdot l}}$

DMJM	PROJECT: TEMP BRIDGE	PROJECT NO: 4252-01-05	PAGE 87
		BY: RKS / DATE: 2-10-86	
SUBJECT: ABUT DESIGN			

@ $f_s = 24$ ksi & $A_s = 2.65$ IN^2 (6-#6's)

$M = A_s f_s jd = 130.3$ K·I

@ $M = 130.3$ K·I

$f_c = \frac{M}{(\frac{1}{2})bd^2kj} = \frac{130.3(10^3)12 \text{ IB}\cdot\text{IN}}{(\frac{1}{2})(42)(27.5)^2 .32(.89) \text{ IN}^{3}} = 345.7$ psi $\ll f_{cr}$

$130.3^{K\cdot I} \gg \frac{4}{3}(67.4) = 89.87^{K\cdot I}$ ∴ 6-#6's ADEQUATE IN +MOMENT

—MOMENT

$M_{DL}^{-} = -108.4^{K\cdot I}$ (JOINT 5)

$M_{LL}^{-} = 4.8(4) = -19.2$ K·I

↑ SIDEWALK LOAD PLACED OUT ON CANTILEVER

$M_{TL}^{-} = -127.60$ K·I $\lll 1.2M_{cr}$

$\frac{4}{3}(127.60) = 170.13^{K\cdot I} > 130.3^{K\cdot I}$

TRY 8-#6's $A_s = 3.53$ IN^2 $d = 27.5$ IN

$kd = 9.83''$

$k = 0.36$

$jd = 24.22''$

$j = 0.88$

@ $f_s = 24$ ksi

$M = 3.53(24)\frac{24.22}{12} = 171.02^{K\cdot I} > 170.13^{K\cdot I}$ 8-#6's ADEQUATE IN -MOMENT

SKETCH

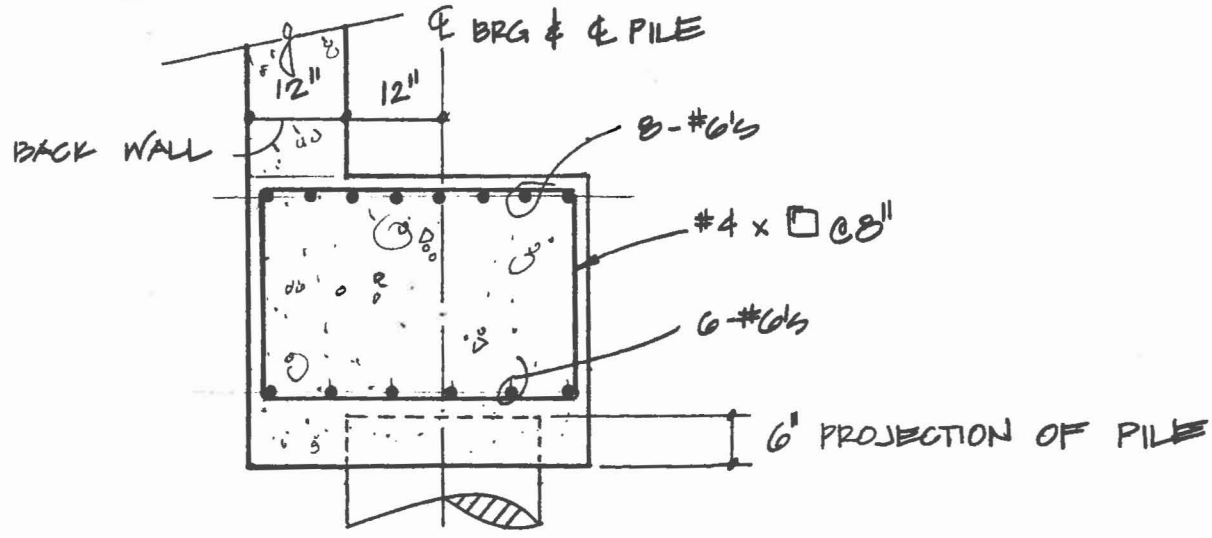

DMJM	PROJECT: TEMP BRIDGE	PROJECT NO: 4252-01-05	PAGE 88
		BY: RKS / DATE: 2-10/85	
SUBJECT: ABUT DESIGN			

CAISSON DESIGN

$R_{MAX} = \underline{156.95^k > 130.4^k}$ (SUPP #3) (20.3% O.S.)

NOTE: R_{MAX} IS CONSERVATIVE SINCE IT WAS ASSUMED HS20-44 LIVE LOADS WERE NOT DISTRIBUTED VERY FAR. ∴ EXTERIOR SUPPORTS 1, 5 WILL ACTUALLY RECIEVE MORE LOAD THAN THIS ANALYSIS SHOWS THUS REDUCING THE LL REACTIONS ON THE INTERIOR PILES SOMEWHAT.

$\frac{63.6(2)}{32} = 3.95^{k/1}$

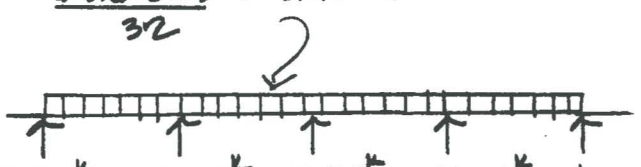

LL	12.42^k	36.12^k	29.32^k	36.12^k	12.42^k
DL	114.05^k	101.62^k	110.66^k	101.62^k	114.05^k

$\underline{TL = 139.9^k \approx Q}$

MINIMUM STEEL CONTROLS REINFORCING OF PILES

$A = \pi(12)^2 = 452.4\ in^2$

$1\% = 4.52\ in^2$, $\underline{6\text{-}\#8\text{'s} = 4.71\ in^2}$

<u>USE #3 TIES @ 12"</u>

DMJM	PROJECT: TEMP BRIDGE	PROJECT NO: 4252-01-05	PAGE 8 of 9
		BY: RKS / DATE: 2-10/85	

SUBJECT: ABUT DESIGN

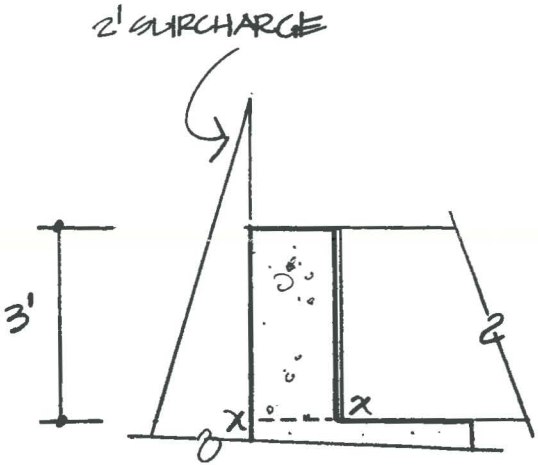

@ $x-x_1$ $\quad V = .03\frac{(5)^2}{2} = 0.38^K$

$v = \frac{V}{(12)9.5} = 3.3$ psi $< v_c$ SECTION OK IN SHEAR

$M = .38\left(\frac{5}{3}\right) = 0.63^{K\cdot'}$

$A_s = \#4$ @ 12" $\therefore A_s = 0.40$ in²/FT

$b = 12''$ $d = 9.5''$

$kd = 2.14''$

$k = 0.22$

$jd = 8.79''$

$j = 0.93$

@ $f_s = 24$ ksi $\quad M = 7.03^{K\cdot'} \gg \frac{4}{3}(0.63) = 0.84$ K·'

SKETCH

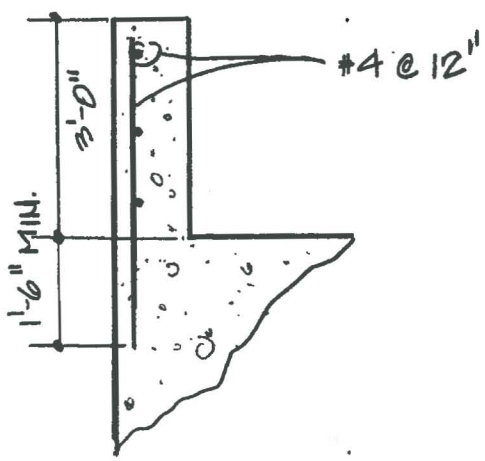

```
100 29TH AVE TEMP ABUT LOAD CASE G DEAD LOAD
110 4 1 1 1 3 0. 2
115 4. .0001 13.55 0. 0 0 0. 0.
120 8. 100. 13.55 0. 0 0 0. 0.
130 8. 100. 13.55 0. 0 0 0. 0.
140 8. 100. 13.55 0. 0 0 0. 0.
155 8. 100. 13.55 0. 0 0 0. 0.
157 4. .0001 13.55 0. 0 0 0. 0.
160 1.0 1.0
170 .0001
180 .0001
190 0.
200 0. 0. 0. 0. 0. 0.
```

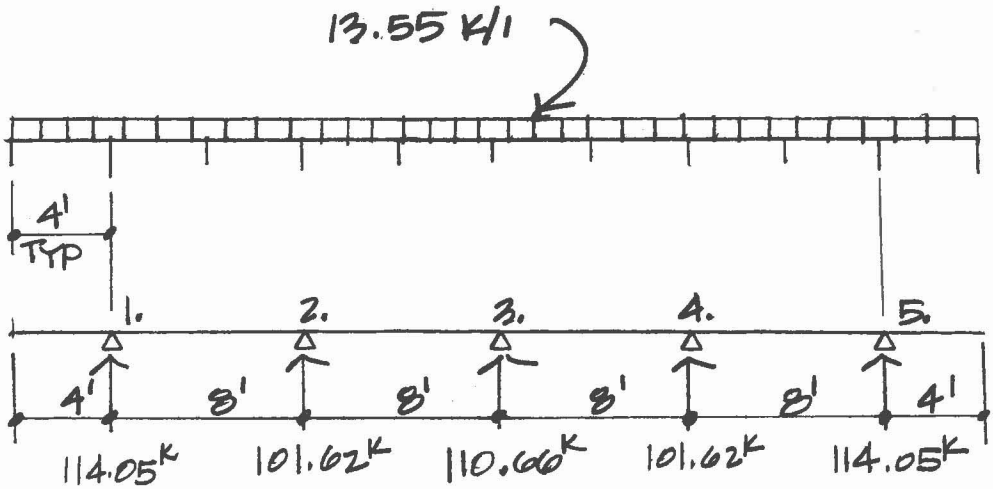

DL

```
100 29TH AVE TEMP ABUT LOAD CASE E LIVE LOAD
110 4 1 1 1 3 0. 2
120 4 .0001 0. 0. 0 0 0. 0.
130 8. 100. 0. 0. 1 0 0. 0.
140 8. 17.4 0.
150 8. 100. 0. 0. 2 0 0. 0.
160 4. 15.9 0. 8. 30.3 0.
170 8. 100. 0. 0. 2 0 0. 0.
180 4. 17.4 0. 8. 15.9 0.
190 8. 100. 0. 0. 1 0 0. 0.
195 4. 30.31 0.
197 4. .0001 0. 0. 0 0 0. 0.
200 1.0 1.0
210 .0001
220 .0001
230 0.
240 0. 0. 0. 0. 0. 0.
```

91

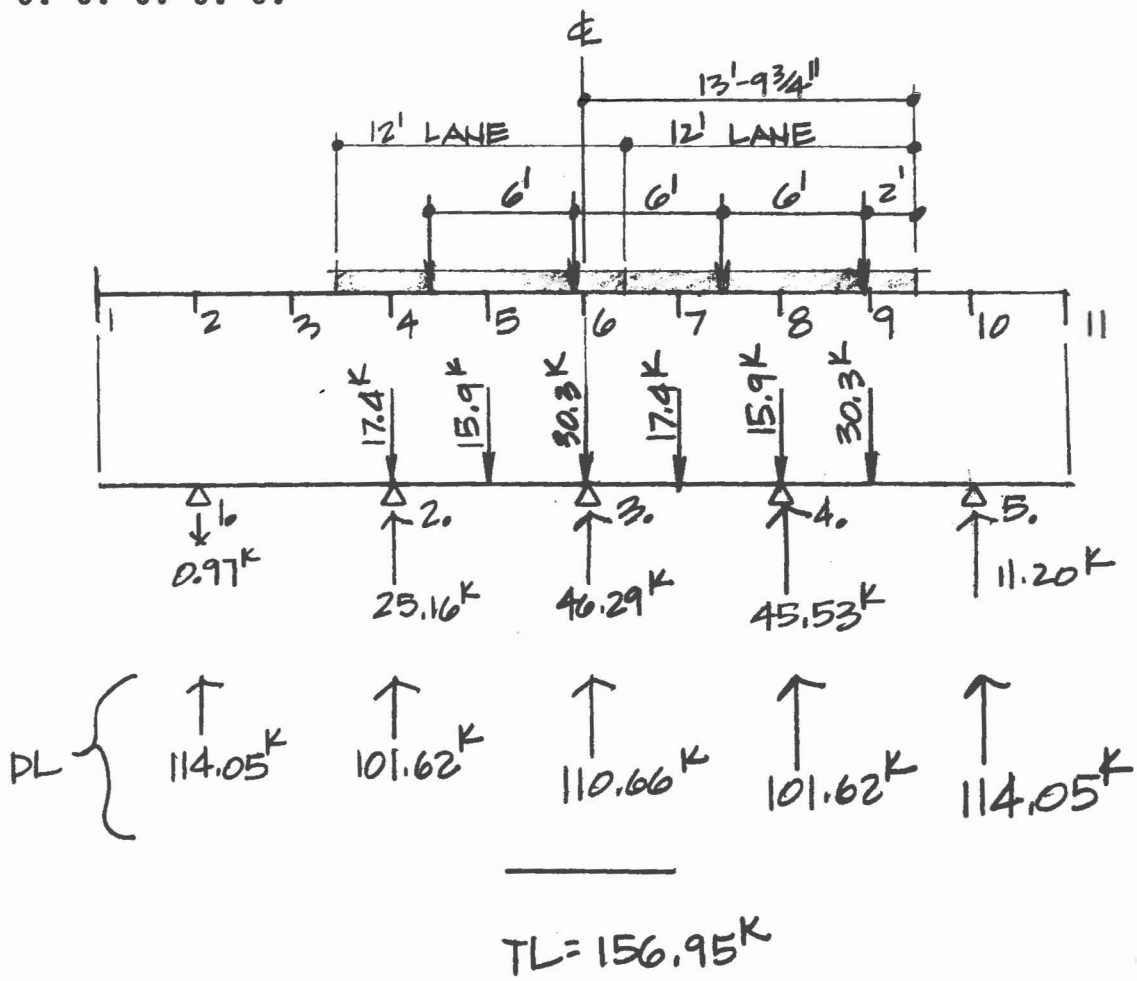

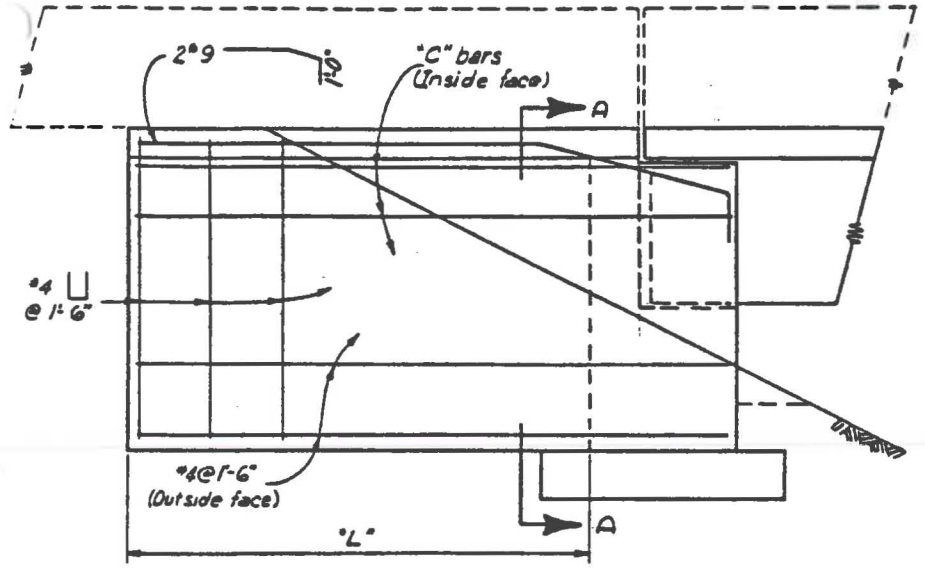

ELEVATION

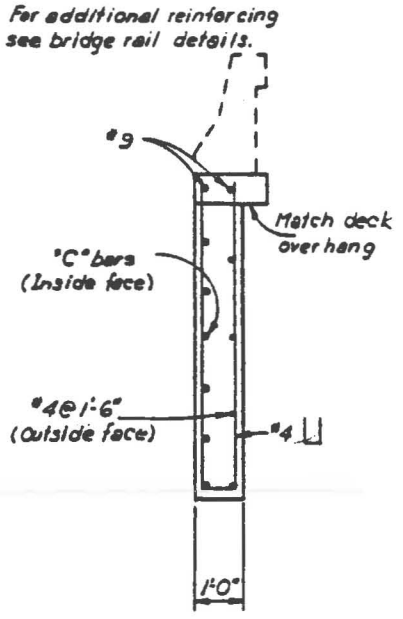

SECTION A-A

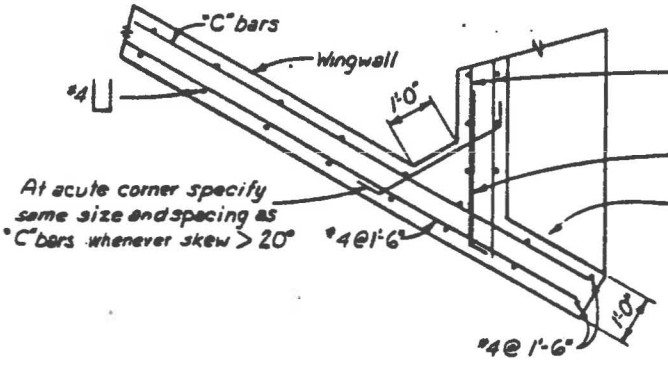

ACUTE CORNER DETAIL

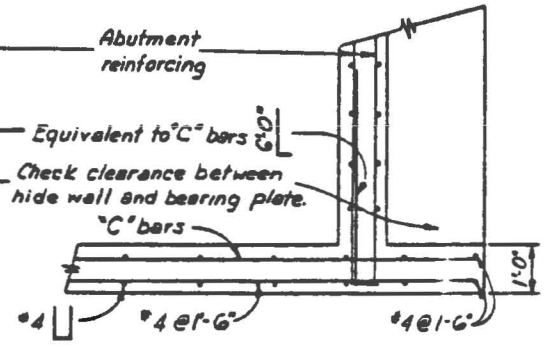

CORNER DETAIL

"L"	"C" bars
10'	#5@1'-0"
12'	#5@ 9"
14'	#6@ 9"
16'	#7@9"

"L" may be exceeded by 1'-0"
before using next longer length.

SLIST MOMDONE
OK, SEG LIBRARY>MOMDIST

INPUT DATA FILE NAME OR STOP
RICK4
29TH AVE TEMP ABUT LOAD CASE G DEAD LOAD
0 COLUMN MOMENTS

JOINT	DEAD LOAD MOMENTS ABOVE	DEAD LOAD MOMENTS BELOW	TOTAL LOAD MOMENTS ABOVE	TOTAL LOAD MOMENTS BELOW
1	0.0	0.0	0.0	0.0
2	-0.0	-0.0	-0.0	-0.0
3	0.0	0.0	0.0	0.0
4	0.0	0.0	0.0	0.0
5	-0.0	-0.0	-0.0	-0.0

1 BEAM MOMENTS AND SHEARS

SPAN	STAT.	FINAL BEAM MOMENTS D.L.	MAX-	MAX++	MIN+	FINAL BEAM SHEARS D.L.	LL(M)	LL(T)
0	1.00	-108.4	-108.4			54.20	0.00	0.00
	JOINT NO. 1							
1	0.00	-108.4	-108.4	-108.4	-108.4	59.85	0.00	0.00
	0.05	-85.5	-85.5	-85.5	-85.5			
	0.10	-64.9	-64.9	-64.9	-64.9			
	0.15	-46.3	-46.3	-46.3	-46.3			
	0.20	-30.0	-30.0	-30.0	-30.0			
	0.25	-15.8	-15.8	-15.8	-15.8			
	0.30	-3.8	-3.8	-3.8	-3.8			
	0.35	6.1	6.1	6.1	6.1			
	0.40	13.7	13.7	13.7	13.7			
	0.45	19.2	19.2	19.2	19.2			
	0.50	22.6	22.6	22.6	22.6			
	0.55	23.8	23.8	23.8	23.8			
	0.60	22.8	22.8	22.8	22.8			
	0.65	19.6	19.6	19.6	19.6			
	0.70	14.3	14.3	14.3	14.3			
	0.75	6.8	6.8	6.8	6.8			
	0.80	-2.9	-2.9	-2.9	-2.9			
	0.85	-14.7	-14.7	-14.7	-14.7			
	0.90	-28.7	-28.7	-28.7	-28.7			
	0.95	-44.9	-44.9	-44.9	-44.9			
1	1.00	-63.2	-63.2	-63.2	-63.2	48.55	0.00	0.00
	JOINT NO. 2							
2	0.00	-63.2	-63.2	-63.2	-63.2	53.07	0.00	0.00
	0.05	-43.1	-43.1	-43.1	-43.1			
	0.10	-25.1	-25.1	-25.1	-25.1			
	0.15	-9.3	-9.3	-9.3	-9.3			
	0.20	4.3	4.3	4.3	4.3			
	0.25	15.8	15.8	15.8	15.8			
	0.30	25.1	25.1	25.1	25.1			
	0.35	32.2	32.2	32.2	32.2			
	0.40	37.2	37.2	37.2	37.2			
	0.45	40.0	40.0	40.0	40.0			
	0.50	40.6	40.6	40.6	40.6			
	0.55	39.1	39.1	39.1	39.1			
	0.60	35.4	35.4	35.4	35.4			
	0.65	29.5	29.5	29.5	29.5			
	0.70	21.5	21.5	21.5	21.5			

	0.80	-1.1	-1.1	-1.1	-1.1			
	0.85	-15.6	-15.6	-15.6	-15.6			
	0.90	-32.3	-32.3	-32.3	-32.3			
	0.95	-51.2	-51.2	-51.2	-51.2			
2	1.00	-72.3	-72.3	-72.3	-72.3	55.33	0.00	0.00
JOINT NO. 3								
3	0.00	-72.3	-72.3	-72.3	-72.3	55.33	0.00	0.00
	0.05	-51.2	-51.2	-51.2	-51.2			
	0.10	-32.3	-32.3	-32.3	-32.3			
	0.15	-15.6	-15.6	-15.6	-15.6			
	0.20	-1.1	-1.1	-1.1	-1.1			
	0.25	11.3	11.3	11.3	11.3			
	0.30	21.5	21.5	21.5	21.5			
	0.35	29.5	29.5	29.5	29.5			
	0.40	35.4	35.4	35.4	35.4			
	0.45	39.1	39.1	39.1	39.1			
	0.50	40.6	40.6	40.6	40.6			
	0.55	40.0	40.0	40.0	40.0			
	0.60	37.2	37.2	37.2	37.2			
	0.65	32.2	32.2	32.2	32.2			
	0.70	25.1	25.1	25.1	25.1			
	0.75	15.8	15.8	15.8	15.8			
	0.80	4.3	4.3	4.3	4.3			
	0.85	-9.3	-9.3	-9.3	-9.3			
	0.90	-25.1	-25.1	-25.1	-25.1			
	0.95	-43.1	-43.1	-43.1	-43.1			
3	1.00	-63.2	-63.2	-63.2	-63.2	53.07	0.00	0.00
JOINT NO. 4								
4	0.00	-63.2	-63.2	-63.2	-63.2	48.55	0.00	0.00
	0.05	-44.9	-44.9	-44.9	-44.9			
	0.10	-28.7	-28.7	-28.7	-28.7			
	0.15	-14.7	-14.7	-14.7	-14.7			
	0.20	-2.9	-2.9	-2.9	-2.9			
	0.25	6.8	6.8	6.8	6.8			
	0.30	14.3	14.3	14.3	14.3			
	0.35	19.6	19.6	19.6	19.6			
	0.40	22.8	22.8	22.8	22.8			
	0.45	23.8	23.8	23.8	23.8			
	0.50	22.6	22.6	22.6	22.6			
	0.55	19.2	19.2	19.2	19.2			
	0.60	13.7	13.7	13.7	13.7			
	0.65	6.1	6.1	6.1	6.1			
	0.70	-3.8	-3.8	-3.8	-3.8			
	0.75	-15.8	-15.8	-15.8	-15.8			
	0.80	-30.0	-30.0	-30.0	-30.0			
	0.85	-46.3	-46.3	-46.3	-46.3			
	0.90	-64.9	-64.9	-64.9	-64.9			
	0.95	-85.5	-85.5	-85.5	-85.5			
4	1.00	-108.4	-108.4	-108.4	-108.4	59.85	0.00	0.00
JOINT NO. 5								
5	0.00	-108.4	-108.4			54.20	0.00	0.00

INPUT DATA FILE NAME OR STOP
RICK6
29TH AVE TEMP ABUT LOAD CASE E LIVE LOAD
0 COLUMN MOMENTS

	DEAD LOAD MOMENTS		TOTAL LOAD MOMENTS	
JOINT	ABOVE	BELOW	ABOVE	BELOW
1	0.0	0.0	0.0	0.0
2	-0.0	-0.0	-0.0	-0.0
3	0.0	0.0	0.0	0.0

4	-0.0	-0.0	-0.0	-0.0
5	0.0	0.0	0.0	0.0

93B

1 BEAM MOMENTS AND SHEARS

		FINAL BEAM MOMENTS				FINAL BEAM SHEARS		
SPAN	STAT.	D.L.	MAX-	MAX++	MIN+	D.L.	LL(M)	LL(T)
0	1.00	0.0	0.0			0.00	0.00	0.00
	JOINT NO.	1						
1	0.00	0.0	0.0	0.0	0.0	-0.97	0.00	0.00
	0.05	-0.4	-0.4	-0.4	-0.4			
	0.10	-0.8	-0.8	-0.8	-0.8			
	0.15	-1.2	-1.2	-1.2	-1.2			
	0.20	-1.6	-1.6	-1.6	-1.6			
	0.25	-1.9	-1.9	-1.9	-1.9			
	0.30	-2.3	-2.3	-2.3	-2.3			
	0.35	-2.7	-2.7	-2.7	-2.7			
	0.40	-3.1	-3.1	-3.1	-3.1			
	0.45	-3.5	-3.5	-3.5	-3.5			
	0.50	-3.9	-3.9	-3.9	-3.9			
	0.55	-4.3	-4.3	-4.3	-4.3			
	0.60	-4.7	-4.7	-4.7	-4.7			
	0.65	-5.0	-5.0	-5.0	-5.0			
	0.70	-5.4	-5.4	-5.4	-5.4			
	0.75	-5.8	-5.8	-5.8	-5.8			
	0.80	-6.2	-6.2	-6.2	-6.2			
	0.85	-6.6	-6.6	-6.6	-6.6			
	0.90	-7.0	-7.0	-7.0	-7.0			
	0.95	-7.4	-7.4	-7.4	-7.4			
1	1.00	-7.8	-7.8	-7.8	-7.8	18.37	0.00	0.00
	JOINT NO.	2						
2	0.00	-7.8	-7.8	-7.8	-7.8	6.79	0.00	0.00
	0.05	-5.0	-5.0	-5.0	-5.0			
	0.10	-2.3	-2.3	-2.3	-2.3			
	0.15	0.4	0.4	0.4	0.4			
	0.20	3.1	3.1	3.1	3.1			
	0.25	5.8	5.8	5.8	5.8			
	0.30	8.5	8.5	8.5	8.5			
	0.35	11.3	11.3	11.3	11.3			
	0.40	14.0	14.0	14.0	14.0			
	0.45	16.7	16.7	16.7	16.7			
	0.50	19.4	19.4	19.4	19.4			
	0.55	15.8	15.8	15.8	15.8			
	0.60	12.1	12.1	12.1	12.1			
	0.65	8.5	8.5	8.5	8.5			
	0.70	4.8	4.8	4.8	4.8			
	0.75	1.2	1.2	1.2	1.2			
	0.80	-2.5	-2.5	-2.5	-2.5			
	0.85	-6.1	-6.1	-6.1	-6.1			
	0.90	-9.7	-9.7	-9.7	-9.7			
	0.95	-13.4	-13.4	-13.4	-13.4			
2	1.00	-17.0	-17.0	-17.0	-17.0	39.41	0.00	0.00
	JOINT NO.	3						
3	0.00	-17.0	-17.0	-17.0	-17.0	6.88	0.00	0.00
	0.05	-14.3	-14.3	-14.3	-14.3			
	0.10	-11.5	-11.5	-11.5	-11.5			
	0.15	-8.8	-8.8	-8.8	-8.8			
	0.20	-6.0	-6.0	-6.0	-6.0			
	0.25	-3.3	-3.3	-3.3	-3.3			
	0.30	-0.5	-0.5	-0.5	-0.5			
	0.35	2.2	2.2	2.2	2.2			
	0.40	5.0	5.0	5.0	5.0			
	0.45	7.7	7.7	7.7	7.7			

93C

	0.55	6.3	6.3	6.3	6.3			
	0.60	2.1	2.1	2.1	2.1			
	0.65	-2.2	-2.2	-2.2	-2.2			
	0.70	-6.4	-6.4	-6.4	-6.4			
	0.75	-10.6	-10.6	-10.6	-10.6			
	0.80	-14.8	-14.8	-14.8	-14.8			
	0.85	-19.0	-19.0	-19.0	-19.0			
	0.90	-23.2	-23.2	-23.2	-23.2			
	0.95	-27.4	-27.4	-27.4	-27.4			
3	1.00	-31.6	-31.6	-31.6	-31.6	26.42	0.00	0.00
JOINT NO.	4							
4	0.00	-31.6	-31.6	-31.6	-31.6	19.11	0.00	0.00
	0.05	-24.0	-24.0	-24.0	-24.0			
	0.10	-16.3	-16.3	-16.3	-16.3			
	0.15	-8.7	-8.7	-8.7	-8.7			
	0.20	-1.0	-1.0	-1.0	-1.0			
	0.25	6.6	6.6	6.6	6.6			
	0.30	14.2	14.2	14.2	14.2			
	0.35	21.9	21.9	21.9	21.9			
	0.40	29.5	29.5	29.5	29.5			
	0.45	37.2	37.2	37.2	37.2			
	0.50	44.8	44.8	44.8	44.8			
	0.55	40.3	40.3	40.3	40.3			
	0.60	35.8	35.8	35.8	35.8			
	0.65	31.4	31.4	31.4	31.4			
	0.70	26.9	26.9	26.9	26.9			
	0.75	22.4	22.4	22.4	22.4			
	0.80	17.9	17.9	17.9	17.9			
	0.85	13.4	13.4	13.4	13.4			
	0.90	9.0	9.0	9.0	9.0			
	0.95	4.5	4.5	4.5	4.5			
4	1.00	-0.0	-0.0	-0.0	-0.0	11.20	0.00	0.00
JOINT NO.	5							
5	0.00	-0.0	-0.0			0.00	0.00	0.00

```
 INPUT DATA FILE NAME OR STOP
STOP
 END OF RUN

**** STOP

OK, SLIST MOMDONE
File in use. MOMDONE (SLIST)
ER! LD

<GROUP4>PHAV0967.02.04 (DALURW), Records= 50, Quota= 50 / 0

Files= 16.

DONE            LOGIN.CPL       MOMDONE         RICK1
RICK2           RICK3           RICK4           RICK5
RICK6           RICK7           RICKOUT         RICKOUT1
RKSOUT4         RKSOUT6         RRRR            USER.AB
OK, SLIST MOMDONE
File in use. MOMDONE (SLIST)
ER!
ED
INPUT
Q

EDIT
Q
FILE MODIFIED, OK TO QUIT? Q
PLEASE FILE
```

930

```
INPUT

EDIT
Q
FILE MODIFIED, OK TO QUIT? OK
OK, C ALL
OK, S LIST MOMDONE
Not found. LIST (OPENR)

Program halt at 2000(3)/1.
ER!
SLIST MOMDONE
File in use. MOMDONE (SLIST)
ER! SLIST MOMDONE
File in use. MOMDONE (SLIST)
ER! C ALL
OK, S
File in use. MOMDONE (SLIST)
ER! LD

<GROUP4>PHAV0967.02.04 (DALURW), Records= 51, Quota= 51 / 0

Files= 16.

DONE            LOGIN.CPL       MOMDONE         RICK1
RICK2           RICK3           RICK4           RICK5
RICK6           RICK7           RICKOUT         RICKOUT1
RKSOUT4         RKSOUT6         RRRR            USER.AB
OK, ED MOMDONE
File in use. MOMDONE (OPENR)
ER! LD

<GROUP4>PHAV0967.02.04 (DALURW), Records= 51, Quota= 51 / 0

Files= 16.

DONE            LOGIN.CPL       MOMDONE         RICK1
RICK2           RICK3           RICK4           RICK5
RICK6           RICK7           RICKOUT         RICKOUT1
RKSOUT4         RKSOUT6         RRRR            USER.AB
OK, COMO -E
OK,
```

REVISION OF SECTION 206
STRUCTURE EXCAVATION AND BACKFILL
29th AVENUE BRIDGE OVER A.C.D.C.

Section 506 of the Uniform Standard Specifications is hereby revised as follows:

Add the following to subsection 206.4:

Structure backfill in back of the abutments shall not be placed until the concrete slab has been in place a minimum of seven days. The abutments shall be backfill simultaneously.

Add the following to subsection 206.5:

Structure excavation and backfill shall be paid for at the contract unit price per cu. yds.

REVISION OF SECTION 350
REMOVAL OF EXISTING IMPROVEMENTS
TEMPORARY DETOUR BRIDGE

Section 350 of the Uniform Standard Specifications is hereby revised as follows:

Add the following to subsection 350.1:

This work shall consist of removing the temporary detour bridge at the completion of the project. It shall also include the salvaging of designated materials, including ten precast prestressed box beams and 160 feet of temporary concrete median barriers, and backfilling the resulting trenches, holes, and pits.

Add the following to subsection 350.2:

The Contractor shall state, before construction begins, the method of removal and salvaging he intends to furnish.

The Contractor shall remove the temporary detour bridge a minimum of 2 feet below the finished ground line.

All salvable material shown on the plans, shall be stored by the Contractor as directed within the project limits.

Cavities left by structure removal shall be filled to the level of the surrounding ground and shall be compacted as designated.

Unless otherwise directed, the temporary detour bridge will not be removed until the 29th Avenue Bridge is in place and accommodating traffic.

Add the following to subsection 350.4:

Payment for removal shall be made at the contract unit price per lump sum.

REVISION OF SECTION 350
REMOVAL OF EXISTING IMPROVEMENTS
29th AVENUE OVER A.C.D.C.

Section 350 of the Uniform Standard Specifications is hereby revised as follows:

Add the following to subsection 350.1:

This work shall consist of removing the existing concrete box culvert and wingwalls as shown on the plans. Utilities will be removed and relocated by the utility companies. The Contractor shall coordinate his removal work with the utility companies.

Add the following to subsection 350.2:

The Contractor shall state, before construction begins, the method of removal he intends to furnish.

Unless otherwise directed, the existing concrete box culvert and wingwalls shall not be removed until the detour is in place and accommodating traffic.

The existing concrete box culvert and wingwalls shall be completely removed.

Add the following to subsection 350.4:

Payment for removal will be made at the contract unit price per lump sum.

REVISION OF SECTION 506
PRECAST PRESTRESS CONCRETE MEMBERS
TEMPORARY DETOUR BRIDGE

Section 506 of the Uniform Standard Specifications is hereby revised as follows:

Add the following to subsection 506.1:

The plans provide for the erection of ten precast prestressed box beams on the temporary detour bridge. These beams have already been fabricated and are the property of the Flood Control District of Maricopa County. The Contractor shall be held responsible for the safekeeping of the beams during the period of the contract.

Add the following to subsection 506.10:

Payment for erection of precast prestressed box beams shall be made of the contract unit price per lump sum.

REVISION OF SECTION 506
PRECAST PRESTRESSED CONCRETE MEMBERS
29th AVENUE BRIDGE OVER A.C.D.C.

Section 506 of the Uniform Standard Specifications is hereby revised as follows:

Add the following to subsection 506.1:

The plans provide for alternate prestressed concrete girder designs. Alternate 1 designates a pretensioned concrete girder and Alternate 2 designates a post-tensioned concrete girder. Both alternates are precast prestressed concrete girders and shall be fabricated and installed in accordance with the plans and section 506 of the Uniform Standard Specifications.

Add the following to subsection 506.10:

The Contractor shall bid and use Alternate 1 girders <u>or</u> bid and use Alternate 2 girders.

Payment will be made at the contract unit price per each.

REVISION OF SECTION 515
STEEL STRUCTURES
29th AVENUE OVER A.C.D.C.
AND
TEMPORARY DETOUR BRIDGE

Section 515 of the Uniform Standard Specifications is hereby revised as follows:

Add the following to subsection 515.1:

> This work shall consist of fabricating and erecting miscellaneous steel items on the project incuding the pipe hanger assembly, girder bearing assembly and threaded inserts on the 29th Avenue Bridge and the 3/8"x3"x3" angle on the temporary detour bridge.

Delete subsection 515.7 and add the following:

> Payment for miscellaneous steel items shall not be paid for separately but will be included in the work.

DMJM
February 14, 1985

COST ESTIMATE

29th AVENUE BRIDGE

ALTERNATE 1 GIRDER

No.	Item	Unit	Quantity	Price	Amount
206	Structure Excavation	cu yds	19,584	3.34	65,410.56
206	Structure Backfill	cu yds	5,654	7.88	44,553.52
350	Removal of Existing Improvements	lump	1	5,000.00	5,000.00
505	Class A Concrete - Bridge	cu yds	537	225.00	120,825.00
505	Class A Concrete - Channel Lining	cu yds	193	220.00	42,460.00
505	Class A Concrete - Approach Slabs	cu yds	118	200.00	23,600.00
505	Class AA Concrete	cu yds	232	270.00	62,640.00
505	Reinforcing Steel	lbs	137,210	0.45	61,744.50
506	Precast Prestress Conc. Unit (Type II)	ea	16	3,500.00	56,000.00
520	Type H-3-1 Bridge Rail	lin ft	226.5	60.00	13,590.00
	TOTAL				$495,823.58

ALTERNATE 2 GIRDER

No.	Item	Unit	Quantity	Price	Amount
206	Structure Excavation	cu yds	19,584	3.34	65,410.56
206	Structure Backfill	cu yds	5,654	7.88	44,553.52
350	Removal of Existing Improvements	lump	1	5,000.00	5,000.00
505	Class A Concrete - Bridge	cu yds	537	225.00	120,825.00
505	Class A Concrete - Channel Lining	cu yds	193	220.00	42,460.00
505	Class A Concrete - Approach Slabs	cu yds	118	200.00	23,600.00
505	Class AA Concrete	cu yds	232	270.00	62,640.00
505	Reinforcing Steel	lbs	131,983	0.45	59,392.35
506	Precast Prestress Conc. Unit (Type II)	ea	16	4,300.00	68,800.00
520	Type H-3-1 Bridge Rail	lin ft	226.5	60.00	13,590.00
	TOTAL				$506,271.43

TEMPORARY DETOUR BRIDGE

No.	Item	Unit	Quantity	Price	Amount
350	Removal of Existing Improvements	lump	1	4,000.00	4,000.00
505	Class A Concrete	cu yds	86	225.00	19,350.00
505	Reinforcing Steel	lbs	9,656	0.45	4,345.20
	TOTAL				$27,695.20

DMJM	PROJECT	PROJECT NO:		PAGE
		BY: AMR	DATE: 2/13/85	101

SUBJECT STRUCTURAL EXCAVATION – ABUTMENT 1

ABUTMENT 1

$V = \frac{1}{3}\pi r^2 h \quad r = 37.0533 \quad h =$

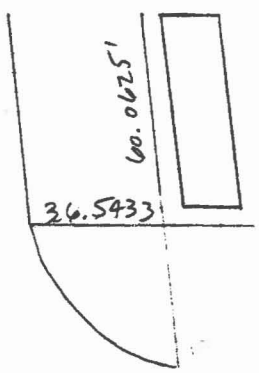

$$V = \frac{\frac{1}{3}\pi (36.5433)^2 (36.5433)}{2}$$

$$= \frac{25,551.8243}{27} = 946.3639 \text{ cy } \tfrac{1}{2} \text{ cone} \quad +$$

$A = \frac{1}{2} b h \quad b = 37.0533 \quad h = 36.5433$

$$= \frac{36.5433}{2} \times 36.5433 \times 60.0625$$

$$= \frac{40,104.1149}{27} = 1485.3376 \text{ cy} \quad +$$

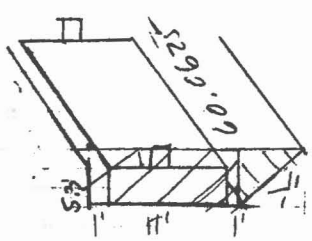

$$\frac{(5.3)(60.0625)(13)}{27} = 153.2706 \text{ cy} \quad +$$

$A = \frac{1}{2} b h \quad b = 5.3' \quad h = 5.3'$

$$\frac{\frac{5.3}{2} \times 5.3' \times 60.0625}{27} = 31.2436 \text{ cy} \quad +$$

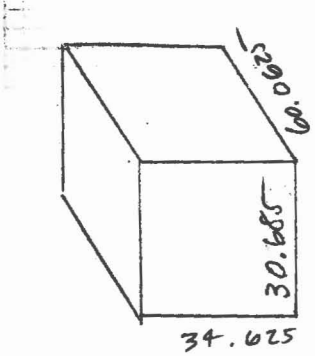

$$\frac{(34.625)(30.6850)(60.0625)}{27} = 2363.4997 \text{ cy} \quad +$$

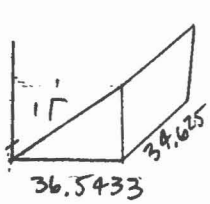

$$\frac{\frac{36.5433}{2} \times 36.5433 \times 34.625}{27} = 856.2716 \times 2$$

$$= 1712.5432 \text{ cy} \quad +$$

ABUTMENT 1 TOTAL 6692.2586 cy

DMJM	PROJECT	PROJECT NO:		PAGE
		BY: AMR	DATE: 2/13/87	102

SUBJECT STRUCTURAL EXCAVATION - PIER 2

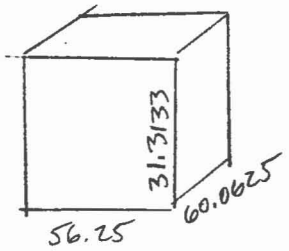

$$\frac{(31.3133)(56.25)(60.0625)}{27} = 3918.2398 \text{ cy} \quad +$$

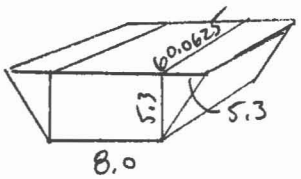

$$\frac{(60.0625)(5.3)(8)}{27} = 94.3204 \text{ cy} \quad +$$

$$\frac{\frac{5.3}{2} \times 5.3 \times 60.0625}{27} = 31.2436 \times 2$$

$$= 62.4872 \text{ cy} \quad +$$

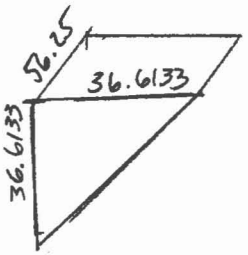

$$\frac{\frac{36.6133}{2} \times 36.6133 \times 56.25}{27} = 1396.3893 \times 2$$

$$= 2792.7786 \text{ cy} \quad +$$

PIER 2 TOTAL 6867.8260 cy

DMJM	PROJECT	PROJECT NO:		PAGE
		BY: AMR	DATE: 2/13/85	103

SUBJECT: STRUCTURAL EXCAVATION – ABUTMENT 3

ABUTMENT 3

$V = \frac{1}{3}\pi r^2 h \quad r = 34.4583 \quad h = 34.4583$

$V = \frac{\frac{1}{3}\pi (34.4583)^2 (34.4583)}{2}$

$= \frac{21,422.9940}{27} = 793.4442$ cy $\frac{1}{2}$ CONE +

$A = \frac{1}{2} bh \quad b = 34.4583 \quad h = 34.4583$

$= \frac{34.4583}{2}(34.4583)(60.0625)$

$= \frac{35,658.3386}{27} = 1320.6792$ cy +

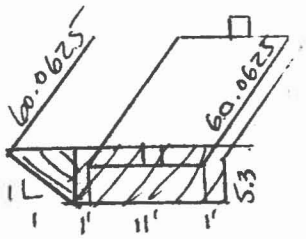

$\frac{(5.3)(60.0625)(13)}{27} = 153.2706$ cy +

$A = \frac{1}{2} bh \quad b = 5.3' \quad h = 5.3'$

$\frac{\frac{5.3}{2} \times 5.3 \times 60.0625}{27} = 31.2436$ cy +

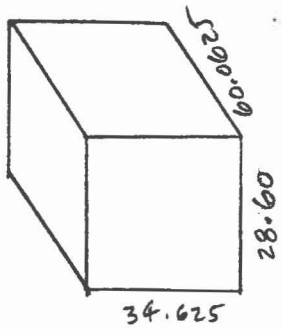

$\frac{(60.0625)(28.60)(34.625)}{27} = 2202.9034$ cy +

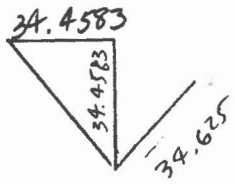

$\frac{\frac{34.4583}{2} \times 34.4583 \times 34.625}{27} = 761.3489 \times 2$
$= 1522.6978$ cy +

ABUTMENT 3 TOTAL 6024.2388 cy

DMJM	PROJECT	PROJECT NO:		PAGE
		BY: AMR	DATE: 2/13/85	104

SUBJECT STRUCTURAL BACKFILL – ABUTMENT 1

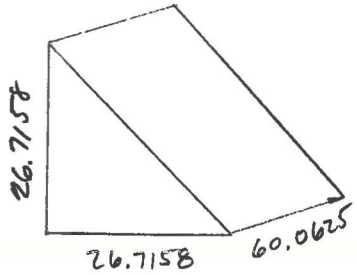

$$\frac{\frac{26.7158}{2} \times 26.7158 \times 60.0625}{27} = 793.8638 \text{ cy} \quad +$$

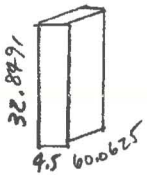

$$\frac{(32.8491)(4.5)(60.0625)}{27} = 328.8335 \text{ cy.} \quad +$$

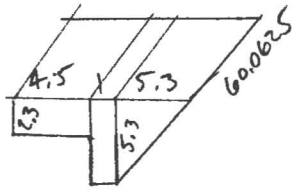

$$\frac{(4.5)(2.3)(60.0625)}{27} = 23.024 \text{ cy} \quad +$$

$$\frac{(1)(5.3)(60.0625)}{27} = 11.79 \text{ cy} \quad +$$

$$\frac{\frac{5.3}{2} \times 5.3 \times 60.0625}{27} = 31.2436 \text{ cy} \quad +$$

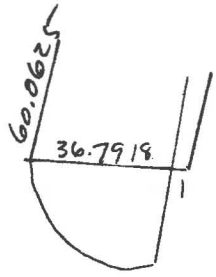

LOWER

$$\frac{(36.4533)(1)(60.0625)}{27} = 81.0917 \text{ cy} \quad +$$

$$\frac{\frac{1}{3}\pi (36.7918)^2 (36.7918)}{2} =$$

$$\frac{26{,}076.6459}{27} = 965.8017 \text{ cy } 1/2 \text{ CONE} \quad +$$

$$\frac{\frac{1}{3}\pi (34.4533)^2 (34.4533)}{2} =$$

$$\frac{21{,}413.6697}{27} = 793.0989 \text{ cy } 1/2 \text{ CONE} \quad +$$

ABUTMENT 1 TOTAL 3028.7472 cy.

DMJM	PROJECT	PROJECT NO :		PAGE
		BY: AMR	DATE: 2/13/85	105

SUBJECT STRUCTURAL BACKFILL - PIER 2

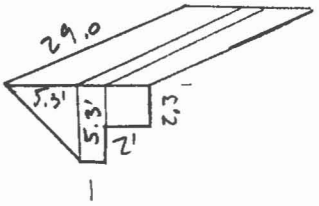

$$\frac{\frac{5.3}{2} \times 5.3 \times 29.0}{27}$$

$= 2 \times 15.0854 = 30.1707$ cy +

$$\frac{(5.3)(1)(29.0)}{27} = 5.6926 \times 2 = 11.3852 \text{ cy}$$ +

$$\frac{(29.0)(2)(2.3)}{27} = 4.9407 \times 2 = 9.8815 \text{ cy}$$ +

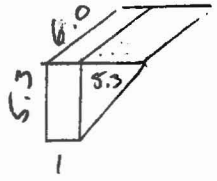

$$\frac{(5.3)(6.0)(1)}{27} = 1.1778 \times 2 = 2.3556 \text{ cy}$$ +

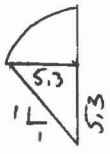

$V = \frac{1}{3} \pi r^2 h \quad r = 3.5 \quad h = 3.5$

$$= \frac{\frac{1}{3} \pi (3.5)^2 (3.5)}{27} = 1.6629 \text{ cy}$$ +

FOUR CORNERS

PIER 2 TOTAL 55.4559 cy

DMJM	PROJECT	PROJECT NO:		PAGE
		BY:	DATE: 2/14/85	106

SUBJECT STRUCTURAL BACKFILL - ABUTMENT 3

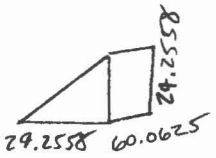

$$\frac{\frac{24.2558}{2}(60.0625)(24.2558)}{27} = 654.3963 \text{ cy} \quad +$$

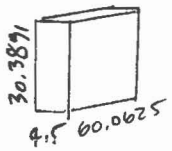

$$\frac{(30.3891)(4.5)(60.0625)}{27} = 304.2076 \text{ cy} \quad +$$

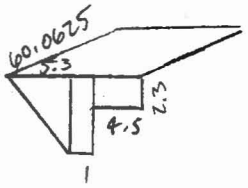

$$\frac{(4.5)(2.3)(60.0625)}{27} = 23.0240 \text{ cy} \quad +$$

$$\frac{(1)(5.3)(60.0625)}{27} = 11.79 \text{ cy} \quad +$$

$$\frac{\frac{5.3}{2} \times 5.3 \times 60.0625}{27} = 31.2436 \text{ cy} \quad +$$

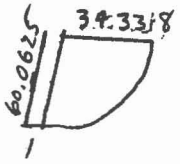

CONE $\frac{(33.3851)(1)(60.0625)}{27} = 74.2664 \text{ cy} \quad +$

$$\frac{\frac{1}{3}\pi(34.3318)^2(34.3318)}{2}$$

$$\frac{20,232.9741}{27} = 749.3694 \text{ cy}, \ \tfrac{1}{2} \text{ CONE} \quad +$$

$$\frac{\frac{1}{3}\pi(33.3851)^2(33.3851)}{2}$$

$$\frac{19,483.0375}{27} = 721.5940 \text{ cy} \quad +$$

ABUTMENT 3 TOTAL 2569.8913 cy

DMJM	PROJECT 29th Ave	PROJECT NO:		PAGE
		BY: GIS	DATE: 2/12/85	107
SUBJECT Quantities				

Channel Lining - Class A Concrete

Volume = (10/12)(58)(54) x 2 / 27 = 193.33 cu. yds

Approach Slabs - Class A Concrete

Slab:

Volume = (1)(24)(58) x 2 / 27 = 103.11 cu. yds

Dado:

Volume = [(1.125)(3.25)(24) + (1.125)(4)(24)] 2/27 = 14.5 cu. yds.

117.61 cu. yds.

Railing

Length = 113' 3" x 2 = 226.5'

Type II Girders

Number = 8 x 2 = 16

✓ GIS

DMJM	PROJECT: 29th Ave	PROJECT NO: 4252-01-05	PAGE 108
		BY: CRK	DATE: 2/13/85

SUBJECT: QUANTITIES - SUPERSTRUCTURE Class AA Concrete

SLAB

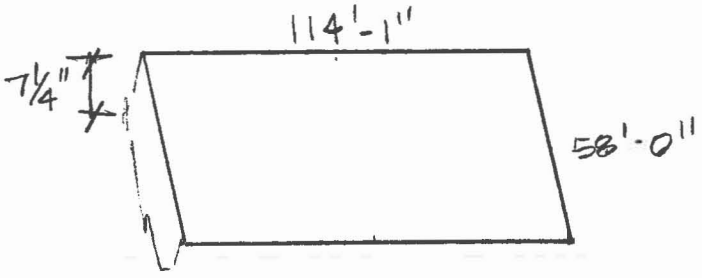

A = 6616.83 FT.²
× .60 THICKNESS
3997.67 FT.³ / 27 = 148.06 YD.³

DIAPHRAGMS

Length = 58 − 2×2.75 − (.5×7) = 49'
(width, overhang, girder webs)

PIER

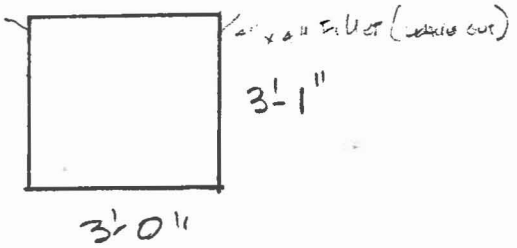

A = 9.24 FT.²
× 49' LENGTH
452.76 / 27 = 16.77 YD.³

(2) ABUTS.

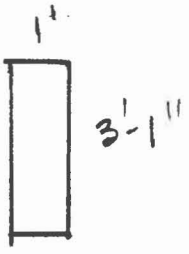

A = 3.08 FT.²
× 49 LENGTH
150.92 / 27 = 5.59 × 2 (ABUTS) = 11.18 YD.³

(2) INTERM.

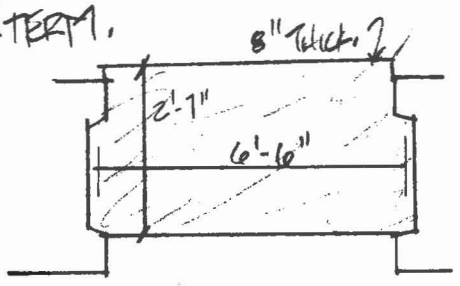

A = 2.58 × 6.5 = 16.77 FT.²
× .668
11.2 FT.³
× 7
78.4 / 27 = 2.90 YD.³
× 2 (INTERM.)
5.8 YD.³

Girder Haunches = (1/12)(1)(114.083)(8)/27
+ (1/12)(2.25)(1/2) × 2 × 114.083/27 = 3.61

✓ 615

QUANT. - SUPERSTR.

CURB

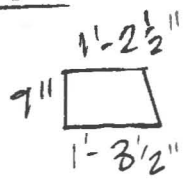

A = 1.25 x .75' = .9375 FT.²

× 114.08 Lineal ft

106.95 FT.³/27 = 3.96 YD.³ ✓

SIDEWALK

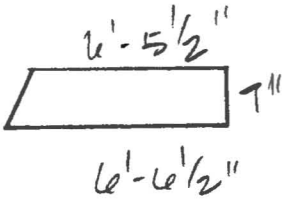

A = 6.6 x .75 = 4.95 FT.²

× 114.08 Lineal ft

564.7 FT.³/27 = 20.91 YD.³

BLOCKOUT (SUBTRACT)

A = 1.5 x 1.5 (8/12 + 3 + 8/12 + 1 x 2)/27 = .53 cu. yds

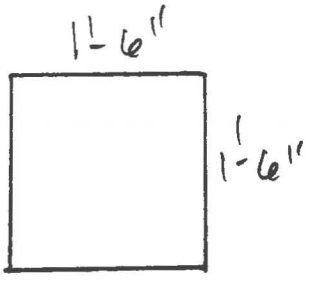

50)

210.30 YD.³

.53 YD.³ (Blockout)

209.77 YD.³

TOT. CONCR. ⇒ 210 cu. yds

DMJM	PROJECT: 29th Ave	PROJECT NO:		PAGE
		BY: GIS	DATE: 2/12/85	110
SUBJECT: Quantities - Abut 1				

Concrete

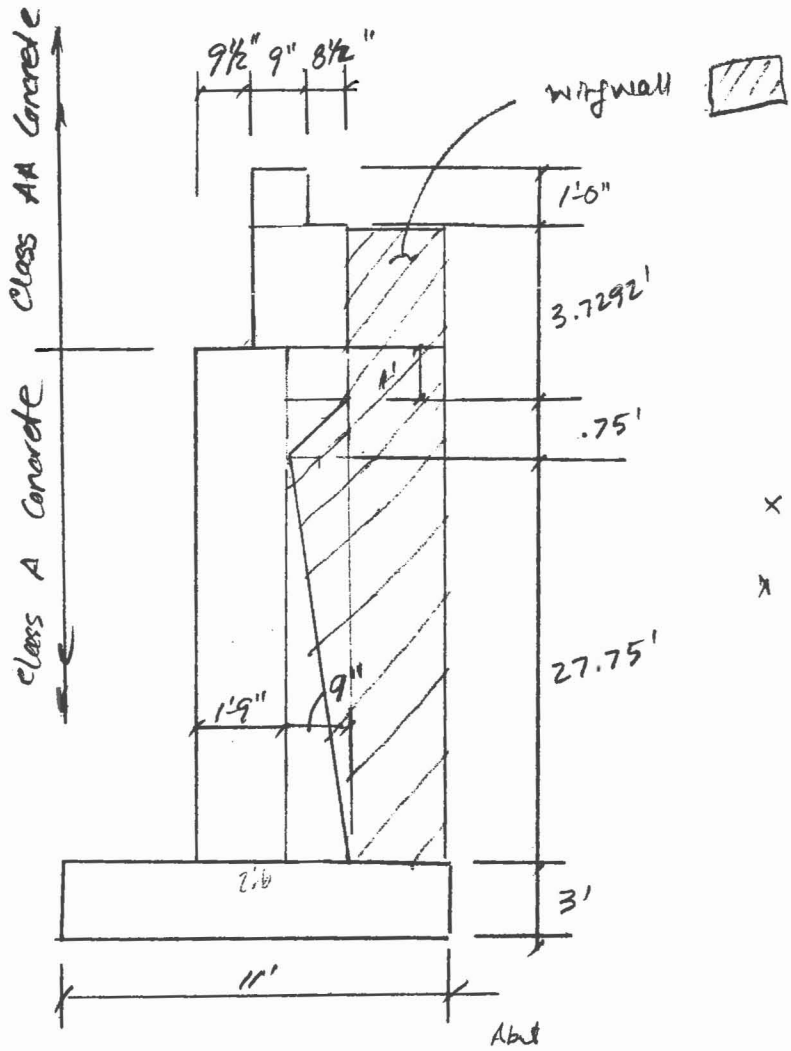

× 58'-07/8" Abut wall

× 1'-3½" wingwall

Class A = $[(11)(3) + (1.75)(29.5) + (1/2)(.75)(27.75) + (1/2)(.75)^2 + (1)(.75)]\,58.0729/27$

$+ [(1/2)(.75)(27.75) + (1/2)(.75)^2 + (4.25)(29.5)]\,1.2917 \times 2/27$

= 219.63 cu. yds

Class A = 11.28 cu. yds (see Abut. 3)

DMJM	PROJECT: 29th Ave	PROJECT NO:		PAGE
		BY: AMR	DATE:	1/1

SUBJECT: PIER 2 Class A Concrete

PIER CAP

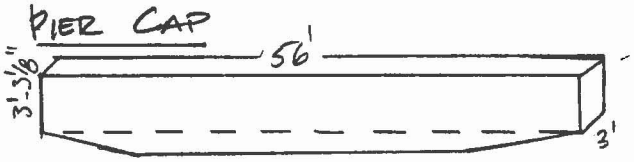

$\frac{(56)(3)(3.2917)}{27} = 20.4817$ cy +

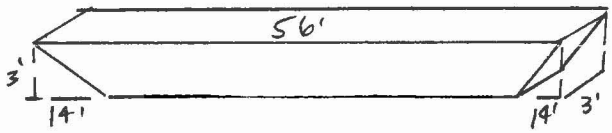

$\frac{(56)(3)(3)}{27} = 18.6667$ cy

$\frac{(7)(3)(3)}{27} = -2.3333$ cy

$= 16.3334$ cy +

PIER CAP $= 36.8151$ cy TOTAL

PIER WALL

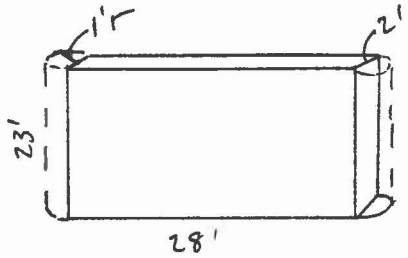

$\frac{(3.1416)(1^2)(29)}{27} = 3.3743$ cy +

$\frac{(23)(2)(28)}{27} = 47.7037$ cy +

$= 51.0780$ cy TOTAL

PIER FOOTER

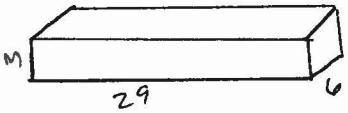

$\frac{(3)(29)(6)}{27} = 19.333$ cy TOTAL

GLS ✓ 107.2264 PIER 2 TOTAL

DMJM	PROJECT: 29th Ave	PROJECT NO:		PAGE
		BY: GIS	DATE: 2/12/85	112
SUBJECT: Quantities - Abut. 3				

Concrete

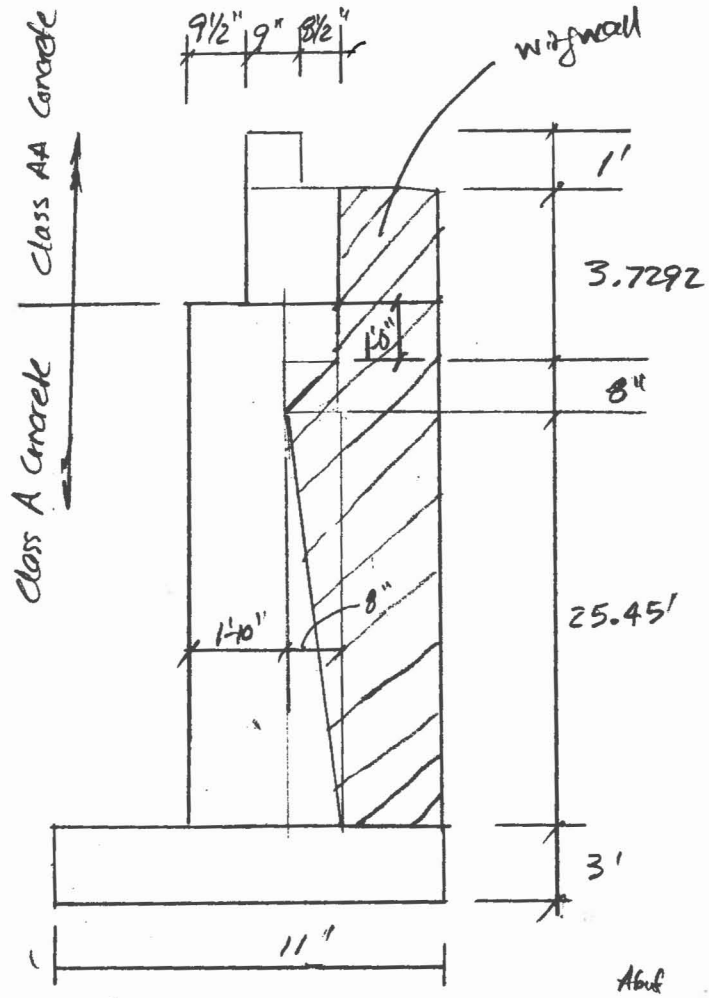

x 58'-0⅞" Abut. wall

x 1'3½" wingwall

$$\text{Class A} = \left[(11)(3) + (1.833)(27.1167) + (1/2)(8/12)(25.45) + (1/2)(8/12)^2 + (1)(8/12)\right] 58.0729/27$$

Abut

$$+ \left[(1/2)(8/12)(25.45) + (1/2)(8/12)^2 + (4.25)(27.1167)\right] 2 \times 1.2917/27$$

wings

$$= 209.92 \text{ cu. yds}$$

$$\text{Class AA} = \left[(1.4583)(2.7292) + (.75)(1)\right] 58.0729/27 + (2.7292)(4.25)(1.2917) \times 2/27$$

$$= 11.28 \text{ cu. yds}$$

DMJM	PROJECT: 29th Ave	PROJECT NO:		PAGE
		BY: GIS	DATE: 2/13/85	113
SUBJECT: Quantities				

1/2" Expansion Jt. Material

Pier 2

Area = (8/12)(56) x 2 = 74.67 sq. ft

Abut 1 & Abut 3

Area = 3 x 58'-0 7/8" (wall) + (1)(58'-0 7/8) (seat) = 232 sq. ft

Approach Slabs

Area = (1)(58) x 2 = 116 sq ft

✓ GIS
SLAB

REINFORCING STEEL BAR LIST SUPERSTRUCTURE

114

#4	#5	#6	#7	#8	#9	#10	#11
0.668	1.043	1.502	2.044	2.670	3.400	4.303	5.313

MARK	Size		No. of Bars	Type	Total Weight	Comments
	Bar No.	Length				
	4	113'-9"	59		4483	TOP LONG.
	6	7'-0"	118	6 7'-0	1241	TOP LONG. HOOK
	6	30'-0"	116		5227	TOP LONG. @ PIERS (HAND PLACED)
	5	113'-9"	62		7356	BOTT. LONG
	5	57'-9"	208		12529.	TOP TRANSV.
	5	57'-9"	208		12529.	BOTT TRANSV.

TOTAL SLAB = 43364 + 2% for splices = 44231

By: CRK Date 2/13/85	Job No. 4252-01-05	Sheet of
Chk'd: GIS Date 2/13/85	Structure No. 29th Ave	Superstructure

REINFORCING STEEL BAR LIST

DIAPHRAGMS

#4 1	#5 2	#6 3	#7 4	#8 5	#9 6	#10	#11
0.668	1.043	1.502	2.044	2.670	3.400	4.303	5.313

MARK	Size: Bar No.	Size: Length	No. of Bars	Type	Total Weight	Comments
	4	9'-9 1/2"	56		571.91	TIES
Rev	8	4'	12		128.16	THRU GIRDERS @ EDGES
	4	6'-8"	42		187.05	INSIDE TIES
	4	57'-8"	1		38.52	CONT.
BUT 1	4	7'-9 1/2"	56		291.41	TIES
Abut 1	8	4'	6		64.08	THRU GIRD. @ EDGES
	4	6'-8"	56		249.40	INSIDE TIES
BUT 3	4	7'-9 1/2"	56		291.41	TIES
Abut 2	8	4'	6		64.08	THRU GIRD. @ EDGES
	4	6'-8"	56		249.40	INSIDE TIES
						643.41
TOTAL	4	6'-8"	~~49~~ 98		436.43	TIES
Intermediate	9	5'-8"	7 14		269.73	BOTT.
	4	6'-8"	~~28~~ 56 42 84		374.10	INSIDE TIES
	8	4'	~~6~~ 12		128.16	THRU GIRDERS
						1098.99

TOTAL DIAPHRAGMS = 3344 #

By: CRK Date 12/13/85	Job No. 4252-01-05	Sheet of
Chk'd: GIS Date 2/13/85	Structure No. 29th Ave	Superstructure

REINFORCING STEEL BAR LIST

SIDEWALK & CURB + BLOCKOUT

#4	#5	#6	#7	#8	#9	#10	#11
0.668	1.043	1.502	2.044	2.670	3.400	4.303	5.313

MARK	Size: Bar No.	Size: Length	No. of Bars	Type	Total Weight	Comments
	5	3'	115		359.84	
SIDEWALK	5	6'-1½"	115		734.66	TRANSV.
	5	113'-9"	7		830.49	LONG.
				TOT. SIDEWALK =		1925
	4	3'-5½"	77		177.88	TIES
	4	113'-9"	2		151.97	INSIDE TIES
				TOT. CURB =		330
CURB	5	4'-8"	4		19.48	PIER (AT)
	5	4'-8"	4		19.48	INTERIM. "
	5	4'-8"	6		29.22	ABUTS "
BLOCKOUT				TOT. BLOCKOUT =		68.

SUPERSTRUCTURE TOTAL = 49,898 LBS.

By: CRK Date 2/13/85	Job No. 4254-01-05	Sheet of
Chk'd: GIS Date 2/13/85	Structure No. 29th Ave	Superstructure

REINFORCING STEEL BAR LIST

#4	#5	#6	#7	#8	#9	#10	#11
0.668	1.043	1.502	2.044	2.670	3.400	4.303	5.313

MARK	Size		No. of Bars	Type	Total Weight	Comments
	Bar No.	Length				
	4	57'-9"	24	—	926	Footing temp bars
	8	6'-5"	59	...L	1011	Front face dowels
	8	20'-0"	87	...L	4646	Back face dowels
	6	10'-8"	99	—	1586	Footing top steel
	4	57'-9"	60	—	2315	Temp wall steel
	8	29'-0"	118	|	9137	FF wall steel
	4	21'-0"	59	|	828	BF wall steel
	8	4'-5"	118	⌐	1392	Seat
	8	5'-6"	118	|	1733	FF parapet
	4	57'-9"	10	—	386	Parapet Temp
	4	6'-4"	59	⌋	250	BF Parapet
	4	2'-0"	59	|	79	Approach Slab Dowels
	4	6'-5"	66	—	283	BF Wingwall
	7	6'-5"	88	|	1154	FF Wingwall
	4	31'-10"	22	|	468	Wingwall vertical Temp EF
	8	57'-9"	2	—	154	Top of Parapet
					26345#	Total

By: GIS Date 2/13/85	Job No. 4252-01-05	Sheet of
Chk'd: Date	Structure No. 29th Ave	Abut. 1

REINFORCING STEEL BAR LIST

#4	#5	#6	#7	#8	#9	#10	#11
0.668	1.043	1.502	2.044	2.670	3.400	4.303	5.313

MARK	Size		No. of Bars	Type	Total Weight	Comments
	Bar No.	Length				
01	8	28'-9"	58	STR.	4452	Wall
02	8	28'-9"	2	STR	154	Wall
03	8	9'-0"	60.	4" 7'-8"	1442	Dowels
04	4	2'-5"	348	4½" 1'-8"	562	Wall ties
05	4	4'-8"	48	1'-0"	150	1' RADIUS Wall ties
06	6	5'-8"	36.	STR	306	Footing
07	4	28'-8"	4.	STR	77	Footing
08	10	20'-0"	8.	14'-2 5'-10"	688	Cap
09	10	20'-0"	12.	STR	1033	Cap
10	10	55'-8"	5.	STR	1198	Cap
11	10	25'-0"	2.	STR	215	Cap
12	8	4'-0"	28.	STR.	299	Dowel to cap
13	5	17'-8"	29.	2'-8" 5'-8" 6"	534	Cap stirrups
14	5	16'-7⅛"	20.	2'-8" 5'-7⅛" 6"	346	" "
15	5	14'-8"	18.	2'-8" 4'-2" 6"	275	" "
16	5	55'-8"	4.	STR.	232	Cap Temp
16	5	42'-6 7/16"	6.	STR	266	" "
17	5	3'-8"	10	2'-8" 6"	38	" "
18	4	27'-8"	48	STR.	887	Wall Temp
					13,154	TOTAL

By: AMR Date 2/12/85	Job No. 4252-01-05	Sheet 1 of 1
Chk'd: GIS Date 2/13/85	Structure No. 29th Ave	Pier 2

REINFORCING STEEL BAR LIST

#4	#5	#6	#7	#8	#9	#10	#11
0.668	1.043	1.502	2.044	2.670	3.400	4.303	5.313

MARK	Size		No. of Bars	Type	Total Weight	Comments
	Bar No.	Length				
	4	57'-9"	24	—	926	Footing Temp Bars
	8	6'-5"	59	...L	1011	FF dowels
	8	20'-0"	87	..L	4646	BF dowels
	6	10'-8"	99	—	1586	Footing Top Steel
	4	57'-9"	56	—	2160	Temp Wall Steel
	8	26'-9"	118	|	8428	FF Wall Steel
	4	18'-9"	59	|	739	BF Wall Steel
	8	4'-5"	118	⌈	1392	Seat
	8	5'-6"	118	|	1733	FF Parapet
	4	57'-9"	10	—	386	Parapet Temp
	4	6'-4"	59	⌋	250	BF Parapet
	4	2'-0"	59	|	79	Approach Slab Dowels
	4	6'-5"	62	—	266	BF Wingwall
	7	6'-5"	82	|	1075	FF Wingwall
	4	29'-6"	22	|	434	Wingwall vertical Temp EF
	8	57'-9"	2	—	154	Top of Parapet
					25,263#	TOTAL

By: GLS Date 2/13/85	Job No. 4252-01-05	Sheet of
Chk'd: Date	Structure No. 29th Ave	Abut 3

REINFORCING STEEL BAR LIST

#4	#5	#6	#7	#8	#9	#10	#11
0.668	1.043	1.502	2.044	2.670	3.400	4.303	5.313

MARK	Size		No. of Bars	Type	Total Weight	Comments
	Bar No.	Length				
	4	23'-8"	40	—	632	Top Long @ 18"
	8	24'-7"	80	⌐	5251	Bottom Long @ 9"
	5	57'-9"	25	—	1506	Trans. Bottom @ 12"
	4	5'-4½"	80	⌐	287	Abut to Long @ 9"
	6	57'-9"	33	—	2862	Trans. Top @ 9"
					10,539	Total one Approach slab
	4	11'-0½"	37	⊔	273	Dado stirrups
	4	23'-8"	6	—	95	Dado Temp.
					368	Total one Dato
		10539 x 2 +	368 x 4	=	22,550#	Total Approach Slab

By: GIS Date 2/13/85	Job No. 4252-01-05	Sheet of
Chk'd: Date	Structure No. 29th Ave	Approach Slabs

✓ GIS

DMJM	PROJECT Temporary Bridge 29th AVE BRIDGE	PROJECT NO: 4252-01-05	PAGE
		BY: KH / DATE: 2/12/85	121
SUBJECT CONCRETE QUANTITIES · Class A Concrete			

PILES @ ABUT 1.

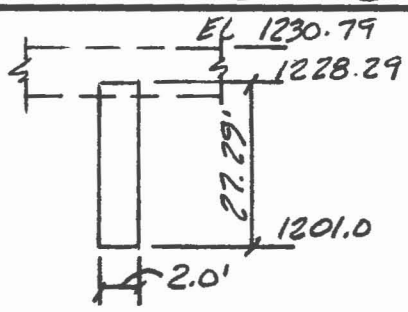

CIRCUM = A × L
A = πR² = 3.1416
3.1416 × 27.29 = 85.73
× 5 = 428.67 / 27 =
✓ 15.88 CU. YDS.

PILE CAP @ ABUT.1

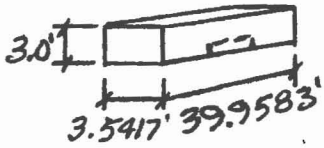

L = 39.9583'
W = 3.5417'
H = 3.0'

39.96 × 3.54 × 3 = 424.56 / 27
= 15.72 CU.YDS.

EMBEDDED PILE

A = πR² = 3.1416
3.1416 × .5 = 1.57 × 5 = 7.85 / 27
= .2907 CU. YDS.
15.72 - .2907
✓ = 15.43 CU.YDS.

BACK WALL @ ABUT. 1

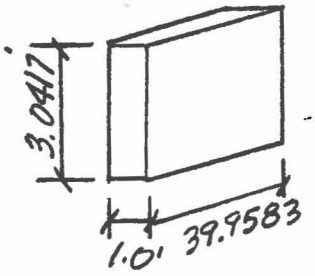

L = 39.9583'
W = 1.0'
H = 3.0417'

39.9583 × 1.0 × 3.0417
= 118.50 / 27 = 4.39 CU. YDS ✓

WING WALLS (2)

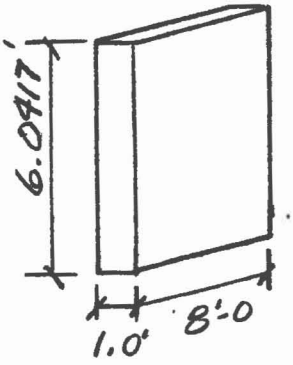

L = 8.0'
W = 1.0'
H = 6.0417'

8.0' × 1.0' × 6.0417 = 48.33 / 27
= 1.790 × 2 ✓
= 3.58 CU. YDS.

ABUT 1 42.86
ABUT 2 42.86
TOTAL 85.72 CU. YDS.

REINFORCING STEEL BAR LIST

122

#4	#5	#6	#7	#8	#9	#10	#11
0.668	1.043	1.502	2.044	2.670	3.400	4.303	5.313

MARK	Size		No. of Bars	Type	Total Weight	Comments
	Bar No.	Length				
1	#4	12'-1"	24	U	193.71	WING WALLS
2	#4	8'-8"	16	—	92.63	" " F.F.
3	#5	9'-6"	24	L	237.80	" " B.F.
4	#4	4'-9½"	80	I	233.80	ABUT. 1 & 2 WALL
5	#4	5'-8½	54	7	205.91	" " " "
6	#4	39'-7½"	12	—	317.63	" " " " F.F. B.F
7	#4	11'-6"	88	⊠	676.02	PILE CAP
8	#6	39'-7½"	16	—	952.27	" " TOP
9	#6	39'-7½"	12	—	714.20	" " BOT.
10	#8	30'-7½"	60	7	4906.13	PILES
11	#4	6'-2⅞	270	O	1125.37	PILES
				TOTAL	9,655.97	LBS / 2 = 4828 # per Abut.

By: KH	Date 2-13-85	Job No. 4252-01-05	Sheet 1 of 1
Chk'd:	Date	Structure No. 29th AVE BRIDGE	✓ GIS

✓ G15

DMJM	PROJECT Temporary Bridge 29th AVE. BRIDGE	PROJECT NO: 4252-01-05	PAGE
		BY: KH / DATE: 1-13-85	123

SUBJECT QUANTITIES – EXP. JNT. MAT'L.

ABUT. 1

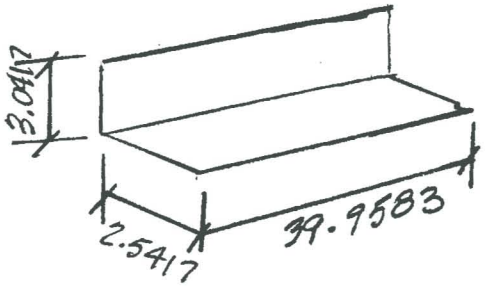

3.0417 + 2.5417 x 39.9583 =

223.10 SQ. FT. ✓

ABUT. 2. 223.10 SQ. FT.

```
1  SORT
2  FILE,INPUT=FILE1,OUTPUT=FILE2.
3  FIELD,ONE(78,2,DISPLAY),TWO(9,7,DISPLAY),THR(80,1,DISPLAY),
4  ,FOUR(72,1,DISPLAY),FIVE(75,3,DISPLAY)
5  KEY,ONE(A,DISPLAY),TWO(A,DISPLAY),THR(A,DISPLAY),FOUR(A,DISPLAY),
6  ,FIVE(A,DISPLAY)
7  END
```

29th AVENUE

BRIDGE DESIGN SYSTEM (BDS) POST TENSION GIRDER ALTERNATE

FRAME DESCRIPTION

MEM NO	JT. LT	JT. RT	END COND LT	END COND RT	DIR	SPAN	I	SUPPORT OR HINGE	E	DEAD LOAD UNI	DEAD LOAD SEC	K LT	K RT	CARRY OVER FACTORS LT	CARRY OVER FACTORS RT	RECALL MEM
1	1	2	R		G	55.8	8.95	0.0	3605.	1.077	0.000	0.00	0.00	0.00	0.00	
2	2	3		R	G	55.8	8.95	0.0	3605.	1.077	0.000	0.00	0.00	0.00	0.00	

SECTION PROPERTIES - INPUT

MEM NO	LOC.	RE CALL	Z	Y	W	D	TOP	BOT	NO	W	T	W	FACT	T	W	FACT	L	EX	IN	L	EX	IN	E	STORE
			+/-	CODE	V/D	H	Z	Y	AREA	IZZ	E	E-STORE	STORE											
1	0.0			26	3.69	0.00	0.00	2.53	7.78	10.33	3605.00	0	01											
1	8.0	01		** RECALL ONLY																				
1	8.3			26	3.69	0.00	0.00	2.63	7.03	9.51	3605.00	0	02											
1	47.5	02		** RECALL ONLY																				
1	47.8	01		** RECALL ONLY																				
1	55.8	01		** RECALL ONLY																				

SECTION PROPERTIES - OUTPUT

MEM NO	LOC.	DEPTH	Z-BAR	Y-BAR	AREA	IZZ	IYY	E
1	0.0	3.69	0.00	2.53	7.78	10.33	0.00	3605.00
1	8.0	3.69	0.00	2.53	7.78	10.33	0.00	3605.00
1	8.3	3.69	0.00	2.63	7.03	9.51	0.00	3605.00
1	47.5	3.69	0.00	2.63	7.03	9.51	0.00	3605.00
1	47.8	3.69	0.00	2.53	7.78	10.33	0.00	3605.00
1	55.8	3.69	0.00	2.53	7.78	10.33	0.00	3605.00

MEMBER 1 PROPERTIES

LENGTH: 55.8 MIN E*I: .343E+05 STIFF: 4.183 LT 4.183 RT C.O.: .511 LT .511 RT

** WARNING - THE MIN I GIVEN ON THE FRAME DESC. IS REPLACED BY THE CALC. VALUE.

SECTION PROPERTIES - INPUT

MEM NO	LOC.	RE CALL	Z	Y	W	D	TOP	BOT	NO	W	T	W	FACT	T	W	FACT	L	EX	IN	L	EX	IN	E	STORE
			+/-	CODE	V/D	H	Z	Y	AREA	IZZ	E	E-STORE	STORE											
2	0.0	01		** RECALL ONLY																				
2	8.0	01		** RECALL ONLY																				
2	8.3	02		** RECALL ONLY																				
2	47.5	02		** RECALL ONLY																				

SECTION PROPERTIES - INPUT

MEM NO	LOC.	RE CALL	Z	Y	W	D	TOP	BOT	NO	W	T	W	FACT	T	W	FACT	L	EX	IN	L	EX	IN	E	STORE
			+/-	CODE	V/D	H	Z	Y	AREA	IZZ	E	E-STORE	STORE											
2	47.8	01		** RECALL ONLY																				
2	55.8	01		** RECALL ONLY																				

SECTION PROPERTIES - OUTPUT

MEM NO	LOC.	DEPTH	Z-BAR	Y-BAR	AREA	IZZ	IYY	E
2	0.0	3.69	0.00	2.53	7.78	10.33	0.00	3605.00
2	8.0	3.69	0.00	2.53	7.78	10.33	0.00	3605.00
2	8.3	3.69	0.00	2.63	7.03	9.51	0.00	3605.00
2	47.5	3.69	0.00	2.63	7.03	9.51	0.00	3605.00
2	47.8	3.69	0.00	2.53	7.78	10.33	0.00	3605.00
2	55.8	3.69	0.00	2.53	7.78	10.33	0.00	3605.00

MEMBER 2 PROPERTIES

LENGTH: 55.8 MIN E*I: .343E+05 STIFF: 4.183 LT 4.183 RT C.O.: .511 LT .511 RT

** WARNING - THE MIN I GIVEN ON THE FRAME DESC. IS REPLACED BY THE CALC. VALUE.

NO ERRORS FOUND

FRAME PROPERTIES

MEM NO	JT LT	JT RT	END COND LT	END COND RT	DIR	SPAN	MIN E*I	SUPPORT OR HINGE	E	CARRY OVER FACTORS LT	CARRY OVER FACTORS RT	DISTRIBUTION FACTORS LT	DISTRIBUTION FACTORS RT
1	1	2	R		6	55.8	.3428E+05	0.0	3605.	.511	0.000	0.000	.500
2	2	3		R	6	55.8	.3428E+05	0.0	3605.	0.000	.511	.500	0.000

***** IF MEMBER IS HORIZONTAL SUPPORT OR HINGE FIELD EQUALS LOCATION OF HINGE FROM LEFT END OF MEMBER *****
***** IF MEMBER IS VERTICAL SUPPORT OR HINGE FIELD EQUALS SUPPORT WIDTH USED FOR MOMENT REDUCTION *****
***** IF SUPERSTRUCTURE SECTIONS OR PARTS CARDS ARE NOT USED MOMENT REDUCTION WILL NOT TAKE PLACE *****

LOAD DATA TRIAL 0

LINE MEM	W OR P	LOAD CODE	A	B	FIXED END MOMENTS LEFT	RIGHT	DEFLT	COMMENTS
1	2.360	P	27.9	0.0	0.	0.		DIAPHRAGMS
2	2.360	P	27.9	0.0	0.	0.		DIAPHRAGMS

FIXED END MOMENTS TRIAL 0

MEM NO	FIXED END MOMENTS LT	RT	MEM NO	FIXED END MOMENTS LT	RT	MEM NO	FIXED END MOMENTS LT	RT
1	0.	-453.	2	-453.	0.			

SIDESWAY DIAGNOSTICS

ERROR - FRAME MEMBER ARE ALL HORIZONT. OR ALL VERTICAL.

*** SIDESWAY NOT CONSIDERED. SIDESWAY DIAGNOSTICS PRESENT. ***

HORIZONTAL MEMBER MOMENTS TRIAL 0

MEM NO	LEFT	.1 PT	.2 PT	.3 PT	.4 PT	.5 PT	.6 PT	.7 PT	.8 PT	.9 PT	RIGHT
1	0.	112.	191.	236.	247.	225.	157.	54.	-81.	-251.	-453.
2	-453.	-251.	-81.	54.	157.	225.	247.	236.	191.	112.	0.

HORIZONTAL MEMBER STRESSES TRIAL 0 BOTTOM FIBRE

1	0.	-191.	-366.	-453.	-475.	-433.	-301.	-104.	156.	426.	771.
2	771.	426.	156.	-104.	-301.	-433.	-475.	-453.	-366.	-191.	0.

HORIZONTAL MEMBER STRESSES TRIAL 0 TOP FIBRE 475x12x31.536/197170 = .475 KSI

1	0.	87.	148.	183.	191.	174.	121.	42.	-63.	-195.	-353.
2	-353.	-195.	-63.	42.	121.	174.	191.	183.	148.	87.	0.

HORIZONTAL MEMBER SHEARS TRIAL 0

1	23.1	17.1	11.1	5.1	-.9	-6.9	-15.3	-21.3	-27.3	-33.3	-39.4
2	39.4	33.3	27.3	21.3	15.3	9.3	.9	-5.1	-11.1	-17.1	-23.1

TRIAL 0

TANGENTIAL ROTATIONS - RADIANS - CLOCKWISE POSITIVE

SPAN	LT. END	RT. END	SPAN	LT. END	RT. END	SPAN	LT. END	RT. END
1	.000811	-.000000	2	-.000000	-.000811			

HORIZONTAL MEMBER DEFLECTIONS IN FEET AT 1/10 POINTS FROM LEFT END - DOWNWARD POSITIVE

MEMBER 1	E= 3605.	0.000	.004	.008	.011	.012	.011
		.010	.007	.004	.001	0.000	
MEMBER 2	E= 3605.	0.000	.001	.004	.007	.010	.011
		.012	.011	.008	.004	0.000	

moore business forms, inc.

LOAD DATA TRIAL 1

LINE	MEM	W OR P	LOAD CODE	A	B	FIXED END MOMENTS LEFT	RIGHT	DEFLT	COMMENTS
	1	.313	U	0.0	55.8	0.	0.		COMPOSITE DL
	2	.313	U	0.0	55.8	0.	0.		COMPOSITE DL

FIXED END MOMENTS TRIAL 1

MEM NO	FIXED END MOMENTS LT	RT	MEM NO	FIXED END MOMENTS LT	RT	MEM NO	FIXED END MOMENTS LT	RT
1	0.	-124.	2	-124.	0.			

*** SIDESWAY NOT CONSIDERED. SIDESWAY DIAGNOSTICS PRESENT. ***

HORIZONTAL MEMBER MOMENTS TRIAL 1

MEM NO	LEFT	.1 PT	.2 PT	.3 PT	.4 PT	.5 PT	.6 PT	.7 PT	.8 PT	.9 PT	RIGHT
1	0.	31.	53.	65.	67.	60.	42.	15.	-22.	-68.	-124.
2	-124.	-68.	-22.	15.	42.	60.	67.	65.	53.	31.	0.

121.6 checks w/ hand calcs (121.6) see slab design

68.4 hand calc. see girder design notes

HORIZONTAL MEMBER STRESSES TRIAL 1 BOTTOM FIBRE

1	0.	-53.	-102.	-125.	-129.	-114.	-81.	-29.	41.	116.	212.
2	212.	116.	41.	-29.	-81.	-114.	-129.	-125.	-102.	-53.	0.

67 x 12 x 31.536/197170 = -129 KSI

HORIZONTAL MEMBER STRESSES TRIAL 1 TOP FIBRE

1	0.	24.	41.	50.	52.	46.	33.	12.	-17.	-53.	-97.
2	-97.	-53.	-17.	12.	33.	46.	52.	50.	41.	24.	0.

HORIZONTAL MEMBER SHEARS TRIAL 1

1	6.5	4.8	3.0	1.3	-.5	-2.2	-4.0	-5.7	-7.5	-9.2	-11.0
2	11.0	9.2	7.5	5.7	4.0	2.2	.5	-1.3	-3.0	-4.8	-6.5

Moore Business Forms, Inc.

TRIAL 1

TANGENTIAL ROTATIONS - RADIANS - CLOCKWISE POSITIVE

SPAN	LT. END	RT. END	SPAN	LT. END	RT. END	SPAN	LT. END	RT. END
1	.000223	-.000000	2	-.000000	-.000223			

HORIZONTAL MEMBER DEFLECTIONS IN FEET AT 1/10 POINTS FROM LEFT END - DOWNWARD POSITIVE

MEMBER 1	E= 3605.	0.000	.001	.002	.003	.003	.003	
		.003	.002	.001	.000	0.000		
MEMBER 2	E= 3605.	0.000	.000	.001	.002	.003	.003	
		.003	.003	.002	.001	0.000		

LIVE LOAD DIAGNOSTICS

NO ERRORS FOUND

SUPERSTRUCTURE LIVE LOAD LIVE LOAD HS20-44

MEM NO.	NUMBER OF LIVE LOAD LANES SUPERSTRUCTURE LT.END	SUPERSTRUCTURE RT.END	SUBSTRUCTURE LT.END	SUBSTRUCTURE RT.END	RESISTING MOMENT OF UNIT STEEL POSITIVE	NEGATIVE	PLOT M ENV.	PLOT S	SCALE	INFLUENCE LINES	GEN
1	.682	.682	1.0	1.0	0.	0.	0	0		NO	NO
2	.682	.682	1.0	1.0	0.	0.					

LIVE LOAD NO.	TRUCK P1	D1	P2	D2	P3	LANE UNIFORM	MOM. RIDER	SHEAR RIDER	IMPACT	NO. LL LNS.	LIVE LOAD SIDESWAY
1.	8.0	14.0	32.0	14.0	32.0	.640	18.0	26.0	YES	0.00	NO

COMMENTS: HS20-44 AASHTO LOADING WITHOUT ALTERNATIVE

LL NO. 1. NEGATIVE LIVE LOAD MOMENT ENVELOPE AND ASSOCIATED SHEARS

MEM NO	LEFT	.1 PT	.2 PT	.3 PT	.4 PT	.5 PT	.6 PT	.7 PT	.8 PT	.9 PT	RIGHT
1	0.	-30.	-61.	-91.	-121.	-152.	-182.	-212.	-243.	-273.	-393.
SHEAR	0.0	-5.4	-5.4	-5.4	-5.4	-5.4	-5.4	-5.4	-5.4	-5.4	-32.0
2	-393.	-273.	-243.	-212.	-182.	-152.	-121.	-91.	-61.	-30.	0.
SHEAR	32.0	5.4	5.4	5.4	5.4	5.4	5.4	5.4	5.4	5.4	0.0

384 hand calcs
see slab design

HORIZONTAL MEMBER STRESSES LL MAX NEG BOTTOM FIBRE

1	0.	52.	116.	175.	233.	291.	349.	407.	466.	464.	669.
2	669.	464.	466.	407.	349.	291.	233.	175.	116.	52.	0.

HORIZONTAL MEMBER STRESSES LL MAX NEG TOP FIBRE

1	0.	-24.	-47.	-70.	-94.	-117.	-141.	-164.	-188.	-212.	-306.
2	-306.	-212.	-188.	-164.	-141.	-117.	-94.	-70.	-47.	-24.	0.

LL NO. 1: DEAD LOAD PLUS NEGATIVE LIVE LOAD MOMENT ENVELOPE

MEM NO	LEFT	.1 PT	.2 PT	.3 PT	.4 PT	.5 PT	.6 PT	.7 PT	.8 PT	.9 PT	RIGHT
1	0.	82.	130.	145.	126.	74.	-25.	-158.	-324.	-524.	-847.
2	-847.	-524.	-324.	-158.	-25.	74.	126.	145.	130.	82.	0.

HORIZONTAL MEMBER STRESSES FOR DL+LL MAX NEG BOTTOM FIBRE

1	0.	-139.	-250.	-278.	-242.	-141.	49.	303.	622.	891.	1440.
2	1440.	891.	622.	303.	49.	-141.	-242.	-278.	-250.	-139.	0.

HORIZONTAL MEMBER STRESSES FOR DL+LL MAX NEG TOP FIBRE

1	0.	64.	101.	112.	98.	57.	-20.	-122.	-251.	-407.	-658.
2	-658.	-407.	-251.	-122.	-20.	57.	98.	112.	101.	64.	0.

Moore Business Forms, Inc.

LL NO. 1. POSITIVE LIVE LOAD MOMENT ENVELOPE AND ASSOCIATED SHEARS

MEM NO	LEFT	.1 PT	.2 PT	.3 PT	.4 PT	.5 PT	.6 PT	.7 PT	.8 PT	.9 PT	RIGHT
1	0.	236.	392.	472.	506.	493.	446.	347.	208.	55.	0.
SHEAR	0.0	42.3	35.1	28.2	20.1	-24.1	-30.7	-38.8	-44.9	-18.9	0.0
2	0.	55.	208.	347.	446.	493.	506.	472.	392.	236.	0.
SHEAR	0.0	18.9	44.9	38.8	30.7	24.1	-20.1	-28.2	-35.1	-42.3	0.0

508.1 hand calcs - see Girder design notes

HORIZONTAL MEMBER STRESSES LL MAX POS BOTTOM FIBRE

1	0.	-402.	-752.	-906.	-971.	-947.	-856.	-665.	-399.	-94.	0.
2	0.	-94.	-399.	-665.	-856.	-947.	-971.	-906.	-752.	-402.	0.

506 x 12 x 31.5360 / 197170 = .971 KSI

HORIZONTAL MEMBER STRESSES LL MAX POS TOP FIBRE

1	0.	184.	303.	365.	392.	382.	345.	268.	161.	43.	0.
2	0.	43.	161.	268.	345.	382.	392.	365.	303.	184.	0.

392 x 12 x 12.7200 / 197170 = .392 KSI

LL NO. 1. DEAD LOAD PLUS POSITIVE LIVE LOAD MOMENT ENVELOPE

MEM NO	LEFT	.1 PT	.2 PT	.3 PT	.4 PT	.5 PT	.6 PT	.7 PT	.8 PT	.9 PT	RIGHT
1	0.	348.	582.	708.	753.	719.	603.	401.	126.	-196.	-453.
2	-453.	-196.	126.	401.	603.	719.	753.	708.	582.	348.	0.
HORIZONTAL MEMBER STRESSES FOR DL+LL MAX POS BOTTOM FIBRE											
1	0.	-592.	-1118.	-1358.	-1446.	-1379.	-1157.	-770.	-243.	333.	771.
2	771.	333.	-243.	-770.	-1157.	-1379.	-1446.	-1358.	-1118.	-592.	0.
HORIZONTAL MEMBER STRESSES FOR DL+LL MAX POS TOP FIBRE											
1	0.	271.	451.	548.	583.	556.	467.	310.	98.	-152.	-353.
2	-353.	-152.	98.	310.	467.	556.	583.	548.	451.	271.	0.

Moore Business Forms, Inc.

LL NO. 1. LIVE LOAD SHEAR ENVELOPES AND ASSOCIATED MOMENTS

MEMBER 1	LEFT	.1 PT	.2 PT	.3 PT	.4 PT	.5 PT	.6 PT	.7 PT	.8 PT	.9 PT	RIGHT
POS. V	49.8	42.3	35.1	28.2	21.8	15.9	10.6	6.0	3.2	1.4	0.0
MOM.	0.	236.	392.	472.	486.	442.	355.	236.	52.	14.	0.
NEG. V	-5.4	-5.4	-8.4	-12.1	-18.7	-25.2	-32.2	-38.8	-44.9	-50.4	-55.2
MOM.	0.	-30.	256.	343.	435.	461.	435.	347.	208.	32.	-168.
RANGE	55.3	47.8	43.5	40.3	40.5	41.1	42.8	44.9	48.1	51.8	55.2

LL NO. 1. LIVE LOAD SHEAR ENVELOPES AND ASSOCIATED MOMENTS

MEMBER 2	LEFT	.1 PT	.2 PT	.3 PT	.4 PT	.5 PT	.6 PT	.7 PT	.8 PT	.9 PT	RIGHT
POS. V	55.2	50.4	44.9	38.8	32.2	25.2	18.7	12.1	8.4	5.4	5.4
MOM.	-168.	32.	208.	347.	435.	461.	435.	343.	256.	-30.	0.
NEG. V	0.0	-1.4	-3.2	-6.0	-10.6	-15.9	-21.8	-28.2	-35.1	-42.3	-49.8
MOM.	0.	69.	144.	236.	355.	442.	486.	472.	392.	236.	0.
RANGE	55.2	51.8	48.1	44.9	42.8	41.1	40.5	40.3	43.5	47.8	55.3

LL NO. 1. DEAD LOAD PLUS LIVE LOAD SHEAR ENVELOPE

MEMBER 1	LEFT	.1 PT	.2 PT	.3 PT	.4 PT	.5 PT	.6 PT	.7 PT	.8 PT	.9 PT	RIGHT
POS. V	72.9	59.4	46.2	33.3	20.8	8.9	-4.7	-15.3	-24.1	-32.0	-39.4
NEG. V	17.7	11.7	2.7	-7.0	-19.7	-32.2	-47.5	-60.1	-72.2	-83.7	-94.5

LL NO. 1. DEAD LOAD PLUS LIVE LOAD SHEAR ENVELOPE

MEMBER 2	LEFT	.1 PT	.2 PT	.3 PT	.4 PT	.5 PT	.6 PT	.7 PT	.8 PT	.9 PT	RIGHT
POS. V	94.5	83.7	72.2	60.1	47.5	34.5	19.7	7.0	-2.7	-11.7	-17.7
NEG. V	39.4	32.0	24.1	15.3	4.7	-6.6	-20.8	-33.3	-46.2	-59.4	-72.9

moore business forms, inc.

LL NO. 1. LIVE LOAD SUPPORT RESULTS

	MAX. AXIAL LOAD	MAX. AXIAL LOAD MOMENT TOP	MAX. AXIAL LOAD MOMENT BOT.	MAX. LONGITUDINAL MOMENT AXIAL LOAD	MAX. LONGITUDINAL MOMENT MOMENT TOP	MAX. LONGITUDINAL MOMENT MOMENT BOT.
SUPPORT JT. 1						
POSITIVE	73.1	0.	0.	0.0	0.	0.
NEGATIVE	-8.0	0.	0.	0.0	0.	0.
SUPPORT JT. 2						
POSITIVE	90.4	0.	0.	0.0	0.	0.
NEGATIVE	0.0	0.	0.	0.0	0.	0.
SUPPORT JT. 3						
POSITIVE	73.1	0.	0.	0.0	0.	0.
NEGATIVE	-8.0	0.	0.	0.0	0.	0.

THE RATIO OF SUBSTRUCTURE / SUPERSTRUCTURE LOADING IS 1.467

INPUT PRESTRESSED DATA

TRIAL 30 FRAME 1 PATH 2A

MEM NO.	LLT/X	LLP/Y	LRT/Z	YLT/TYPE	YLP/SLOPE	YRT	U	K
1	0.00	.40	.10	1.60	3.18	.50	.25	.0002
2	.10	.60	0.00	.50	3.18	1.60	.25	.0002

XLT(FT) = 0.0 XRT(FT) = 0.0 STEEL STRESS(KSI) = 270. JACKING % = .75 JACKING ENDS = L

ANCHOR SET(IN); LEFT = .625 RIGHT = 0.000 CONC. STRENGTH(PSI) = 4000. ALLOW. TENSION(PSI) = -379.

P-JACK(KIPS) = 0. SHORTENING PERCENT= 50 TOTAL LOSSES(KSI) = 28 RELATIVE HUMIDITY % = 40.

CABLE PATH OFFSETS

MEMBER	LEFT	.1 PT	.2 PT	.3 PT	.4 PT	.5 PT	.6 PT	.7 PT	.8 PT	.9 PT	RIGHT
1	1.60	2.29	2.79	3.08	3.18	3.09	2.82	2.38	1.75	.95	.50
2	.50	.95	1.75	2.38	2.82	3.09	3.18	3.08	2.79	2.29	1.60

CABLE PATH ECCENTRICITIES

1	.443	1.134	1.725	2.021	2.120	2.031	1.763	1.316	.691	-.210	-.657
2	-.657	-.210	.691	1.316	1.763	2.031	2.120	2.021	1.725	1.134	.443

FORCE COEFFICIENTS

1	.638	.648	.658	.667	.677	.684	.693	.701	.710	.718	.750
2	.750	.723	.713	.705	.698	.690	.683	.676	.668	.660	.652

THE POINT OF NO MOVEMENT IS IN SPAN 2, 55.80 FEET FROM THE LEFT END OF THE SPAN

THE LEFT ANCHOR SET LENGTH IS 56. THE RIGHT ANCHOR SET LENGTH IS 0.

THE FORCE COEF. AT THE LEFT END IS .638 THE FORCE COEF. AT THE RIGHT END IS .652

SECONDARY MOMENTS

TRIAL 30 FRAME 1 PATH 2A

FEM'S DUE TO SECONDARY EFFECTS BEFORE BALANCING

MEMBER	LEFT END	RIGHT END	MEMBER	LEFT END	RIGHT END	MEMBER	LEFT END	RIGHT END
1	0.000	1.049	2	1.058	0.000			

DEM'S DUE TO SECONDARY EFFECTS

1	0.000	1.054	2	1.054	0.000

P/S MOMENT COEF.

*** SIDESWAY NOT CONSIDERED. SIDESWAY DIAGNOSTICS PRESENT. ***
ADJUSTED FOR LOSSES & SECONDARY MOMENTS BUT NO SHORTENING

MEM NO	LEFT	.1 PT	.2 PT	.3 PT	.4 PT	.5 PT	.6 PT	.7 PT	.8 PT	.9 PT	RIGHT
1	-.2826	-.6294	-.9236	-1.0327	-1.0137	-.8619	-.5885	-.1851	.3528	1.0993	1.5462
2	1.5462	1.1002	.3504	-.1907	-.5976	-.8745	-1.0256	-1.0505	-.9417	-.6433	-.2889

FEMS DELTAS IN COLUMNS DUE TO SHORTENING - PJACK=1

TRIAL =30 FRAME =1 PATH =2A

MEM NO	FEM LT. END	FEM RT. END	DELTA TOP OF COL. (POSITIVE TO RIGHT)

***** ERROR - NO COLUMN @ THE JOINT *****

P/S MOMENT COEF.

ADJUSTED FOR LOSSES & SECONDARY MOMENTS & SHORTENING

MEM NO	LEFT	.1 PT	.2 PT	.3 PT	.4 PT	.5 PT	.6 PT	.7 PT	.8 PT	.9 PT	RIGHT
1	-.2826	-.6294	-.9236	-1.0327	-1.0137	-.8619	-.5885	-.1851	.3528	1.0993	1.5462
2	1.5462	1.1002	.3504	-.1907	-.5976	-.8745	-1.0256	-1.0505	-.9417	-.6433	-.2889

Moore Business Forms, Inc.

TRIAL 30 FRAME 1 PATH 2A

HORIZONTAL MEMBER STRESSES PRESTRESS ONLY BOTTOM FIBRE

MEM NO	LEFT	.1 PT	.2 PT	.3 PT	.4 PT	.5 PT	.6 PT	.7 PT	.8 PT	.9 PT	RIGHT
1	502.	788.	1158.	1263.	1250.	1114.	867.	501.	12.	-587.	-937.
2	-937.	-586.	15.	508.	878.	1129.	1264.	1283.	1180.	805.	513.

HORIZONTAL MEMBER STRESSES PRESTRESS ONLY TOP FIBRE

1	167.	43.	-31.	-67.	-55.	4.	109.	263.	466.	715.	895.
2	895.	717.	467.	263.	108.	2.	-57.	-69.	-33.	43.	171.

TRIAL 30 FRAME 1 PATH 2A

HORIZONTAL MEMBER MOMENTS DUE TO P/S

MEM NO	LEFT	.1 PT	.2 PT	.3 PT	.4 PT	.5 PT	.6 PT	.7 PT	.8 PT	.9 PT	RIGHT
1	-135.	-301.	-442.	-494.	-485.	-412.	-281.	-89.	169.	526.	739.
2	739.	526.	168.	-91.	-286.	-418.	-490.	-502.	-450.	-308.	-138.

TANGENTIAL ROTATIONS - RADIANS - CLOCKWISE POSITIVE

SPAN	LT. END	RT. END	SPAN	LT. END	RT. END	SPAN	LT. END	RT. END
1	-.001778	-.000008	2	-.000008	.001812			

HORIZONTAL MEMBER DEFLECTIONS IN FEET AT 1/10 POINTS FROM LEFT END - DOWNWARD POSITIVE

MEMBER 1	E= 3605.	0.000	-.009	-.017	-.022	-.024	-.022
		-.019	-.013	-.007	-.002	0.000	
MEMBER 2	E= 3605.	0.000	-.002	-.007	-.013	-.019	-.023
		-.024	-.022	-.017	-.010	0.000	

TRIAL 30 FRAME 1

HORIZONTAL MEMBER STRESSES FOR ALL P/S PATHS BOTTOM FIBRE

MEM NO	LEFT	.1 PT	.2 PT	.3 PT	.4 PT	.5 PT	.6 PT	.7 PT	.8 PT	.9 PT	RIGHT
1	502.	788.	1158.	1263.	1250.	1114.	867.	501.	12.	-587.	-937.
2	-937.	-586.	15.	508.	878.	1129.	1264.	1283.	1180.	805.	513.

HORIZONTAL MEMBER STRESSES FOR ALL P/S PATHS TOP FIBRE

1	167.	43.	-31.	-67.	-55.	4.	109.	263.	466.	715.	895.
2	895.	717.	467.	263.	108.	2.	-57.	-69.	-33.	43.	171.

TRIAL 30 FRAME 1

HORIZONTAL MEMBER STRESSES DL + P/S FOR BOTTOM FIBRE

MEM NO	LEFT	.1 PT	.2 PT	.3 PT	.4 PT	.5 PT	.6 PT	.7 PT	.8 PT	.9 PT	RIGHT
1	502.	598.	792.	810.	775.	681.	567.	397.	168.	-161.	-166.
2	-166.	-160.	172.	404.	577.	696.	789.	831.	814.	614.	513.

OK/ Still lower than cracking stress.

HORIZONTAL MEMBER STRESSES DL + P/S FOR TOP FIBRE

1	167.	130.	117.	116.	136.	179.	231.	305.	403.	520.	542.
2	542.	523.	404.	305.	230.	177.	134.	113.	115.	130.	171.

*** THE ALLOWABLE TENSION HAS BEEN EXCEEDED AT TIME OF INITIAL STRESSING ***

HORIZONTAL MEMBER STRESSES DL + ADDED DL + P/S FOR BOTTOM FIBRE

1	502.	544.	690.	686.	646.	567.	485.	368.	209.	-45.	46.
2	46.	-44.	213.	375.	496.	582.	660.	706.	712.	561.	513.

HORIZONTAL MEMBER STRESSES DL + ADDED DL + P/S FOR TOP FIBRE

1	167.	154.	158.	166.	188.	225.	263.	317.	386.	467.	446.
2	446.	470.	387.	317.	262.	223.	186.	164.	156.	154.	171.

TRIAL 30 FRAME 1

HORIZONTAL MEMBER STRESSES DL + ADDED DL + MAX POS LL + I + P/S BOTTOM FIBRE

MEM NO	LEFT	.1 PT	.2 PT	.3 PT	.4 PT	.5 PT	.6 PT	.7 PT	.8 PT	.9 PT	RIGHT
1	502.	142.	-61.	-220.	-325.	-379.	-371.	-298.	-190.	-139.	46.
2	46.	-138.	-186.	-291.	-360.	-365.	-311.	-200.	-40.	159.	513.

HORIZONTAL MEMBER STRESSES DL + ADDED DL + MAX POS LL + I + P/S TOP FIBRE

1	167.	338.	461.	531.	580.	607.	609.	585.	547.	510.	446.
2	446.	512.	548.	585.	608.	605.	578.	529.	459.	338.	171.

HORIZONTAL MEMBER STRESSES DL + ADDED DL + MAX NEG LL + I + P/S BOTTOM FIBRE

1	502.	596.	807.	860.	879.	858.	835.	775.	675.	419.	715.
2	715.	420.	879.	782.	845.	873.	893.	881.	828.	612.	513.

HORIZONTAL MEMBER STRESSES DL + ADDED DL + MAX NEG LL + I + P/S FOR TOP FIBRE

1	167.	131.	111.	96.	94.	107.	123.	152.	198.	255.	140.
2	140.	257.	199.	152.	122.	106.	93.	93.	109.	131.	171.

**** MIN PJACK = 478. KIPS CONC STRENGTH AT 28 DAYS = 2232. PSI AT STRESSING = 1511. PSI **** Based on compression only

- 379 psi tension => 4400 psi concrete

DL$_{NL}$ DL$_{L}$ LL+I PS

-433 -114 -947 + 1114 = -380 ✓

DL$_{NL}$ DL$_{L}$ LL+I PS

-353 -97 -306 +895 = 139 ✓

TOTAL PE MOMENTS FOR ALL MEMBERS.

MEM NO	LEFT	.1 PT	.2 PT	.3 PT	.4 PT	.5 PT	.6 PT	.7 PT	.8 PT	.9 PT	RIGHT
1	-135.	-301.	-442.	-494.	-485.	-412.	-281.	-89.	169.	526.	739.
2	739.	526.	168.	-91.	-266.	-418.	-490.	-502.	-450.	-308.	-138.

TOTAL P/S DEFLECTION FOR TRIAL

TANGENTIAL ROTATIONS - RADIANS - CLOCKWISE POSITIVE

SPAN	LT. END	RT. END	SPAN	LT. END	RT. END	SPAN	LT. END	RT. END
1	-.001778	-.000008	2	-.000008	.001812			

HORIZONTAL MEMBER DEFLECTIONS IN FEET AT 1/10 POINTS FROM LEFT END - DOWNWARD POSITIVE

MEMBER 1	E= 3605.	0.000	-.009	-.017	-.022	-.024	-.022
		-.019	-.013	-.007	-.002	0.000	
MEMBER 2	E= 3605.	0.000	-.002	-.007	-.013	-.019	-.023
		-.024	-.022	-.017	-.010	0.000	

TOTAL TOP PF FOR TRIAL

MEM NO	LEFT	.1 PT	.2 PT	.3 PT	.4 PT	.5 PT	.6 PT	.7 PT	.8 PT	.9 PT	RIGHT
1	0.	0.	0.	0.	0.	0.	0.	0.	0.	343.	358.
2	358.	345.	0.	0.	0.	0.	0.	0.	0.	0.	0.

TOTAL BOTTOM PF FOR TRIAL

1	305.	310.	314.	319.	324.	327.	331.	335.	339.	0.	0.
2	0.	0.	341.	337.	334.	330.	326.	323.	319.	316.	312.

LONG TERM LOSSES
TOTAL LOSS (KSI) = SH + ES + CRC + CRS

MEM NO	LEFT	.1 PT	.2 PT	.3 PT	.4 PT	.5 PT	.6 PT	.7 PT	.8 PT	.9 PT	RIGHT
1	31.3	33.3	37.7	40.0	40.8	39.7	37.4	33.9	30.1	33.9	32.2
2	32.2	30.3	25.4	28.7	31.8	33.7	34.3	33.2	30.4	25.5	22.9

SHEAR DESIGN - AASHTO 1981

	LEFT	.1 PT	.2 PT	.3 PT	.4 PT	.5 PT	.6 PT	.7 PT	.8 PT	.9 PT	RIGHT
MEMBER: 1											
V-CABLE	41.	33.	22.	11.	0.	10.	21.	32.	43.	50.	7.
SECONDARY	9.	9.	9.	9.	9.	9.	9.	9.	9.	9.	9.
VU	155.	129.	103.	78.	54.	58.	86.	110.	134.	155.	176.
VC	256.	140.	87.	76.	76.	76.	76.	94.	93.	98.	154.
REQD WEB	20. *	20. *	20. *	20. *	20. *	20. *	20. *	20. *	20. *	20. *	20. *
AS(IN)/FT	.20 *	.20 *	.20 *	.20 *	.20 *	.20 *	.20 *	.20 *	.32	.42	.24
MEMBER: 2											
V-CABLE	7.	51.	43.	32.	21.	11.	0.	11.	23.	33.	42.
SECONDARY	-9.	-9.	-9.	-9.	-9.	-9.	-9.	-9.	-9.	-9.	-9.
VU	176.	155.	134.	110.	86.	61.	54.	78.	103.	129.	155.
VC	154.	98.	93.	95.	76.	76.	76.	76.	87.	142.	258.
REQD WEB	20. *	20. *	20. *	20. *	20. *	20. *	20. *	20. *	20. *	20. *	20. *
AS(IN)/FT	.24	.42	.31	.20 *	.20 *	.20 *	.20 *	.20 *	.20 *	.20 *	.20 *

NOTE: * AFTER REQD WEB INDICATES ADDITIONAL WEB WIDTH REQD. * AFTER AS(IN)/FT INDICATES MINIMUM REQD.

AASHTO ULTIMATE MOMENT

ULT MOM APPLD (K-FT)	ULT MOM RESIST (K-FT)	AVERAGE FSU (KSI)	NEUTRAL AXIS (IN)	MILD STEEL REQD (SQ.IN)	COMBINED STEEL RATIO

***** ULTIMATE MOMENT NOT CALCULATED BECAUSE USER DID NOT USE SUPERSTRUCTURE SECTIONS. *****

TENDON ELONGATION

PATH NO.	P-JACK (KIPS)	% JACK	FY (KSI)	AS (SQ IN)	AVE STRESS (KSI)	TENDON LENGTH (FT) *	ELONGATION (IN)
2A	478.	75.	270.	2.36	180.52	115.60	8.94

NOTE: TENDON LENGTH INCLUDES 4 FEET FOR JACKS.

MODULUS USED FOR P/S STEEL IS 28000. KSI

See page 23 of calcs for section properties

Check

Stresses @ Pier will control :

Assume losses = 45000 psi

f_{jack} = 478000/2.36 = 202542 psi

f_{final} = 202542 − 45000 = 157542 psi

F_{final} = 157542 × 2.36 = 37138 *

f_a = 371,800 / 1119.75 (A) = 332 psi

r^2 = 214296/1119.75 = 191.3781

e = .657' = 7.884"

y_t = 13.8776"

P/S = 332 (1 + 7.884 × 13.8776 / 191.3781) = 522 psi

Final stress = −353 (DL NC) − 97 (DL C) − 306 (LL+I) + 522 = −234 < −379 OK