STRUCTURAL
CALCULATIONS

SQUAW PEAK
WATER TREATMENT PLANT

INFLUENT BY-PASS

FOR

FLOOD CONTROL DISTRICT
OF
MARICOPA COUNTY

August 6, 1990

Registered Professional Engineer (Structural)
CERTIFICATE NO.
12991
RAYMOND D.
TROYER
Date Signed 8-6-90
ARIZONA, U.S.A.

JOHN CAROLLO
ENGINEERS

ENGINEERING DIVISION
LIBRARY

Property of
Flood Control District of MC Library
Please Return to
2801 W. Durango
Phoenix, AZ 85009

STRUCTURAL CALCULATIONS

SQUAW PEAK WATER TREATMENT PLANT

INFLUENT BY-PASS

FOR

FLOOD CONTROL DISTRICT
OF
MARICOPA COUNTY

August 6, 1990

Registered Professional Engineer (Structural)
CERTIFICATE NO.
12991
RAYMOND D.
TROYER
Date Signed 8-6-90
ARIZONA, U.S.A.

I N D E X

Sheets	Description
A1	Design Criteria
B1 - B3	Infill Wall at Pump Forebay
C1 - C15	Transitions
D1 - D9	Aluminum Framing
E1 - E2	Stop Logs
F1 - F36	Chemical Feed Chamber & Gate Structure
G1 - G9	Quantities
H1 - H12	"Moments and Reactions for Rectangular Plates" Monograph No. 27, U.S. Dept of Interior Bureau of Reclamation
I1	Steel Bulkheads
Appendix	Computer Output for Influent Structure Wall

Registered Professional Engineer (Structural)
CERTIFICATE NO. 12991
RAYMOND D. TROYER
Date Signed 8-6-90
ARIZONA, U.S.A.

project: SQUAW PEAK TREATMENT PLANT BY-PASS job: 3249C.10
client: FCDMC design: RDT date: 7/26/90
subject: DESIGN CRITERIA checked: date:

CODES:

BOX CULVERT - AASHTO "STANDARD SPECIFICATIONS FOR HIGHWAY BRIDGES"

1988 UNIFORM BUILDING CODE

ENVIROMENTAL CONCRETE - ACI 350R-89 & UBC

MATERIALS:

CONCRETE - f'_c = 3000 psi
f_c = 1200 psi (AASHTO)
f_c = 1350 psi (OTHER CONCRETE)

STEEL REINFORCEMENT - f_y = 60 ksi
f_s = 24 ksi (NON-WATER BEARING)
f_s = 22 ksi (WATER BEARING)

ALUMINUM - Alloy 6061-T6, F_{cy} = 35 ksi

TIMBER - California Redwood No. 2, F_b = 1400 psi

LOADS:

WHEEL LOADS - HS20

AT-REST SOIL PRESSURE - 55 psf/ft

SURCHARGE - EQUAL TO TWO FEET OF SOIL AT 120 pcf

HYDROSTATIC - 62.4 pcf

LIVE LOADS - GRATING: 180 psf

SLABS: 200 psf (FOR MECHANICAL EQUIPMENT)

INFILL WALL FOR PUMP FOREBAY

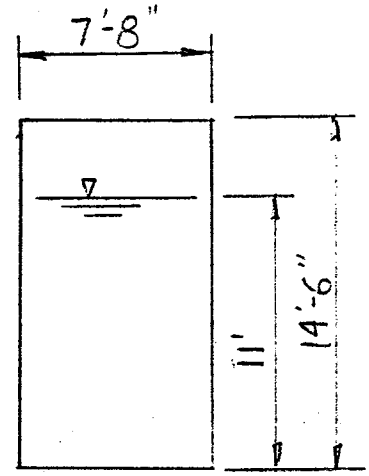

ASSUME SIMPLE SUPPORTS SIDES & BOTTOM
FREE AT TOP
[ROARK, 5TH ed., TBL 26, CASE 2d]

$q = (11)(.0624) = 0.686^{KSF}$

$a/b = 14.5/7.67 = 1.89 \rightarrow$ USE 2.0

$f_b = \frac{M}{S} = \beta q b^2/t^2 \qquad S = bt^2/6$

$\therefore M = \beta q b^3/6 = (.32)(.686)(7.67)^3/6 = 16.5^{K\text{-}FT}$

$16.5/7.67 = 2.15^{K\text{-}FT/FT}$

FOR # 4@ 12", $M_{CAP} = 3.34^{K\text{-}FT}$ (SEE B-2)

STRESS AT $2.15^{K\text{-}FT}$ = 299 PSI CONCRETE
14.18 KSI REINF.

TENSION IN WALL (DUE TO HYDROSTATIC)

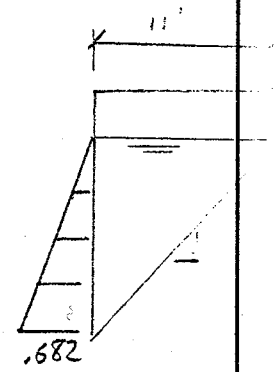

FORCE TO JOINT

$= \int_0^{11} (.0624)(x)(x/2)\,dx = 13.84^K$

AVG $T = 13.84/14.5 = 0.95^{KLF}$

FOR 2 # 4 (1 E.F) $f_t = .95/(2)(.20) = 2.39^{KSI}$

$14.18 + 2.39 = 16.57^{KSI}$

$v\text{-}f = [(.0624)(11)^2/(2)]\,7.67/(2)(14.5) = 1.0^{KLF}$

FOR 2# 4 (1 EF) $f_{vf} = 1.0/(2)(2) = 2.5^{KSI}$ $\quad \Sigma f = 16.57 + 2.5 = 19.07^{KSI}$
(< 22 ✓)

JOHN CAROLLO ENGINEERS

BY RDT DATE 7/25/90 SUBJECT SQUAW PEAK BY-PASS SHEET NO. B-2 OF
CHKD. BY DATE JOB NO. 3249C.10

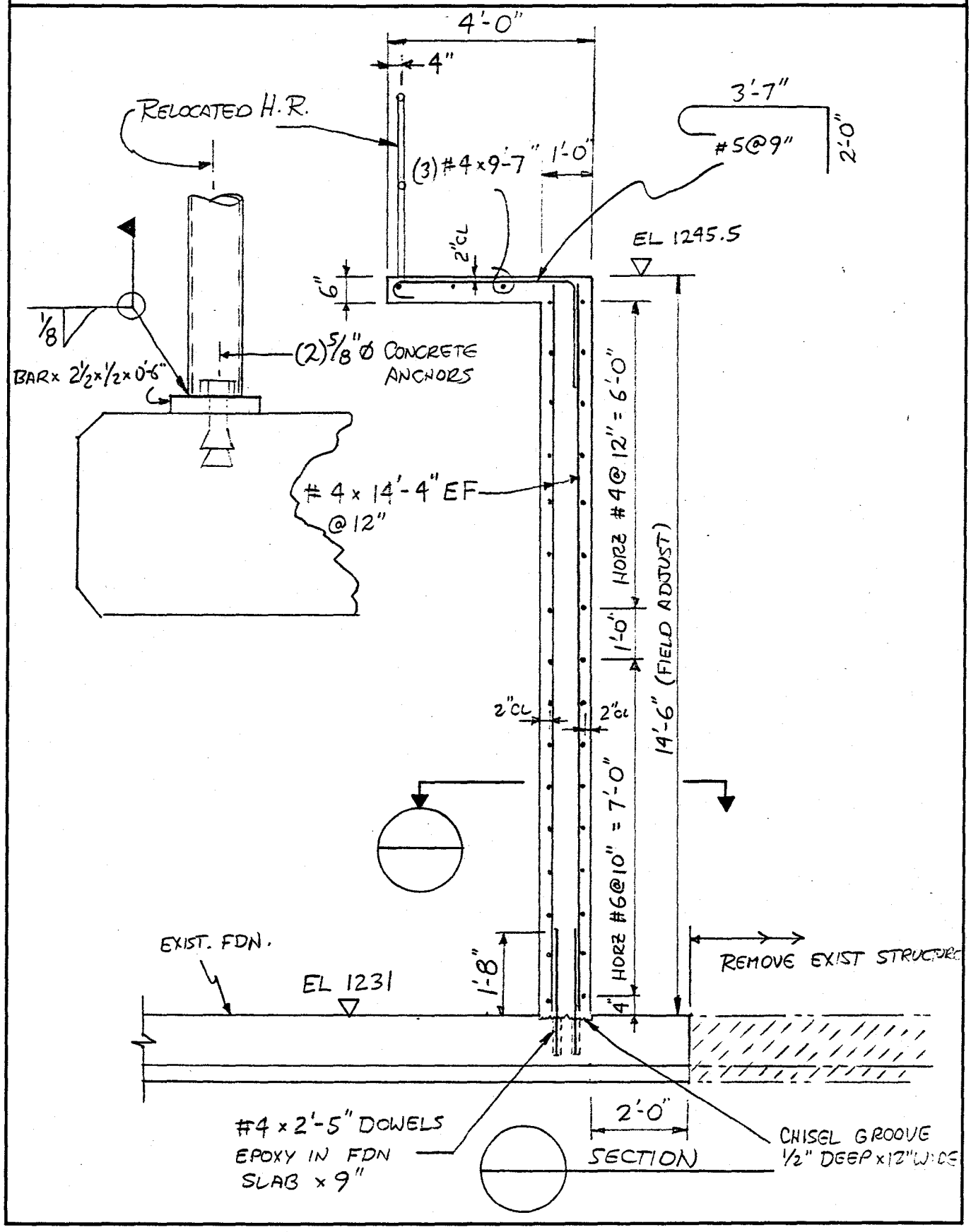

JOHN CAROLLO ENGINEERS

BY RBT DATE 7/25/90 SUBJECT SQUAW PEAK BY-PASS SHEET NO. B-3 OF
CHKD. BY DATE JOB NO. 3249C.10

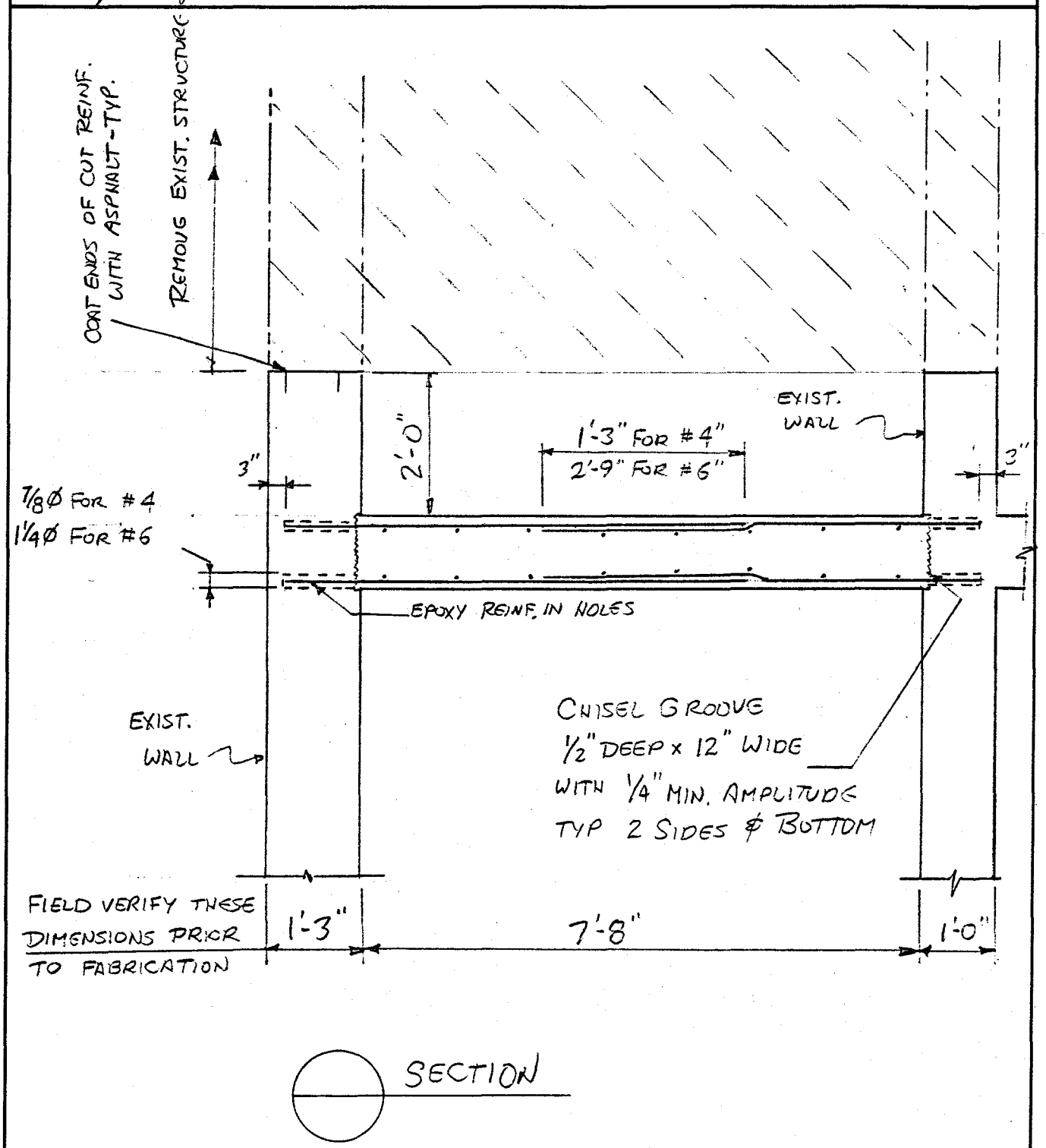

SECTION

JOHN CAROLLO ENGINEERS

BY RDT DATE 7/24/90 SUBJECT SQUAW PEAK BY-PASS SHEET NO. C-1 OF

CHKD BY DATE JOB NO. 3249C.10

TRANSITION & PLUG AT EAST END

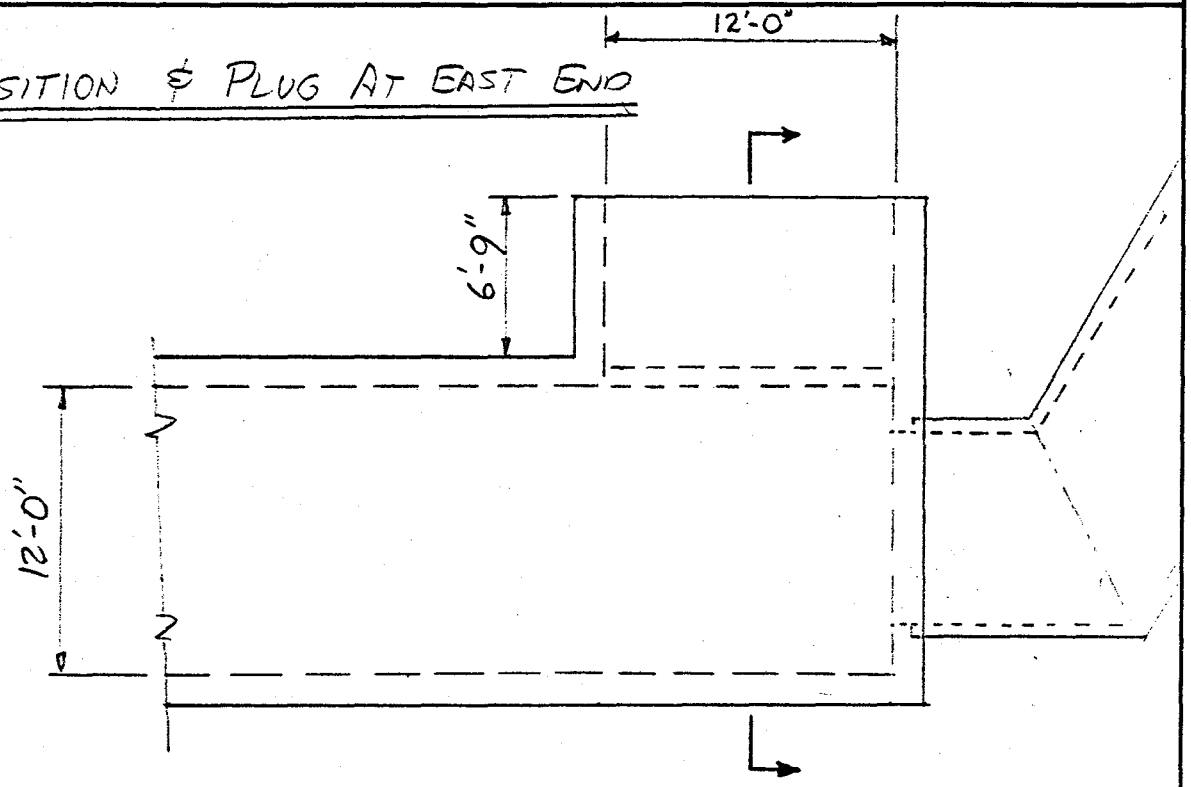

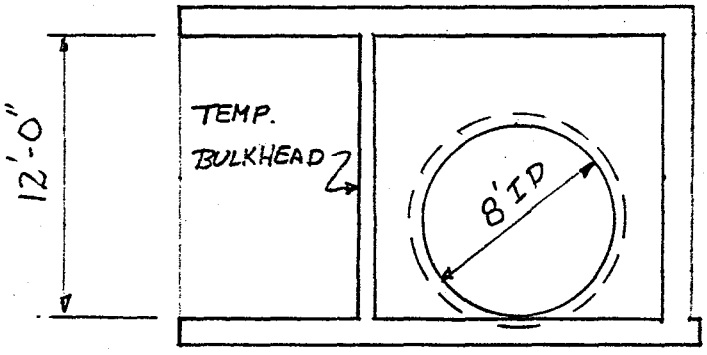

TEMP BULK HEADS

CONCRETE WALL, TO BE REMOVED LATER

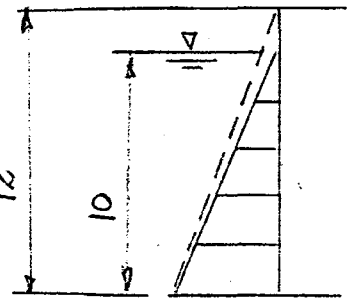

HEAD AT BOTTOM = (10)(.0624) = .624 KSF

USE TRIANGULAR LOADING, .624 @ BOTTOM
BUT 12' HIGH

ROARK, 5TH ed TBL 26, CASE 1d & 1e
PINNED FOR EDGES (CENTRALLY REINFORCED)

$a/b = 1 \qquad \beta = 0.16 \qquad \alpha = .022$

$$\text{MAX } f_b = \frac{6M}{(1)(t^2)} = \beta q b^2/t^2$$

$$M = \beta q b^2/6 = (.16)(.624)(12)^2/6 = 2.40 \text{ K-FT/FT}$$

TRY 8" WALL $\quad d = 4'', \; b = 12''$

$A_s = .37 \text{ in}^2$ (SEE SHT C-3) <u>THIS IS A TEMPORARY WALL</u>

<u>USE # 5 @ 10" EW</u> IN 8" WALL

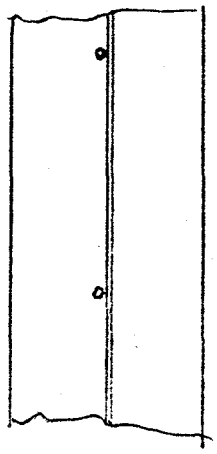

project: BY-PASS CONDUIT AT SQUAW PEAK WTP job: 3249C.10
client: FLOOD CONTROL DISTRICT OF MARICOPA CTY. design: RDT date: 7/24/90
subject: AASHTO SERVICE LOAD DESIGN METHOD checked: date:

*** Temporary Bulkhead MOMENT GIVEN, FIND As

ULTIMATE COMPRESSIVE STRENGTH = 3000. psi
ALLOWABLE CONCRETE FLEXURAL STRESS = 1200. psi
ALLOWABLE STEEL TENSILE STRESS = 22.0 ksi
MODULAR RATIO (Es/Ec) = 9.29

WIDTH OF SECTION = 12.00 in
EFFECTIVE DEPTH OF SECTION = 4.00 in
FULL DEPTH OF SECTION = 8.00 in

APPLIED MOMENT = 2.40 k-ft
CALCULATED STEEL AREA REQUIRED = .37 sq in
1.2 CRACKING MOMENT STEEL AREA = .84 sq in
1-1/3 CALCULATED STEEL AREA = .49 sq in

*** Perimeter Beams "B" MOMENT GIVEN, FIND As

ULTIMATE COMPRESSIVE STRENGTH = 3000. psi
ALLOWABLE CONCRETE FLEXURAL STRESS = 1200. psi
ALLOWABLE STEEL TENSILE STRESS = 24.0 ksi
MODULAR RATIO (Es/Ec) = 9.29

WIDTH OF SECTION = 12.00 in
EFFECTIVE DEPTH OF SECTION = 21.00 in
FULL DEPTH OF SECTION = 24.00 in

APPLIED MOMENT = 59.50 k-ft
CALCULATED STEEL AREA REQUIRED = 1.57 sq in
1.2 CRACKING MOMENT STEEL AREA = 1.23 sq in

*** Top Slab, Bottom Reinforcement MOMENT GIVEN, FIND As

ULTIMATE COMPRESSIVE STRENGTH = 3000. psi
ALLOWABLE CONCRETE FLEXURAL STRESS = 1200. psi
ALLOWABLE STEEL TENSILE STRESS = 24.0 ksi
MODULAR RATIO (Es/Ec) = 9.29

WIDTH OF SECTION = 12.00 in
EFFECTIVE DEPTH OF SECTION = 9.06 in
FULL DEPTH OF SECTION = 12.00 in

APPLIED MOMENT = 10.12 k-ft
CALCULATED STEEL AREA REQUIRED = .61 sq in
1.2 CRACKING MOMENT STEEL AREA = .72 sq in
1-1/3 CALCULATED STEEL AREA = .82 sq in

TOP SLAB OF BOX AT CORNERS

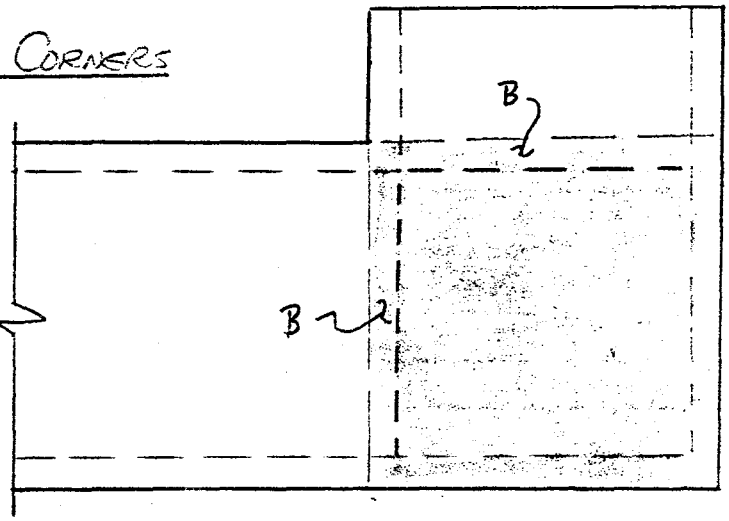

ASSUME PLATE FIXED FOUR EDGES

$w = (1)(.15) + (2)(.12) = 0.39^{KSF}$

WHEEL LOADS (AASHTO 3.8.2.1)

$I = 50/(12+125) = 0.36$
USE 0.30

MOMENTS (AASHTO 3.24.6.1)

DEAD LOAD $M^{\pm} = [12^4/(12^4+12^4)](.39)(12)^2/8 = 3.51^{K\text{-}FT/FT}$

LIVE LOAD $M^{\pm} = [12^3/(12^3+12^3)](1.3)(16)(12)/4 = 31.20^{K\text{-}FT}$

LL DISTRIBUTION, $E = (4 + .06 \times 12) = 4.72'$

$M = 3.51 + 31.20/4.72 = 10.12^{K\text{-}FT/FT}$

$d = 12 - 2 - (.625)(1.5) = 9.06''$ $b = 12''$

$A_s = 0.72 \text{ in}^2/\text{ft}$ **USE #8 @ 12" EL BOTTOM**

PERIMETER BEAMS "B" (MONOGRAPH NO. 27, FIG. 34)

UNIFORM REACTION TO FROM TWO-WAY CORNER SLAB

$w = (.4389)(.39)(12) + (0.5)(1.3)(16)/(2)(4.72) = 3.16^{KLF}$

$M_{\text{℄}} = (3.16 + \underset{\text{BM. WT.}}{1 \times .15})(12)^2/8 = 59.50^{K\text{-}FT}$

$d = 24 - 2 - .5 - .5 = 21''$ $A_s = 1.57 \text{ in}^2$ (SEE C-3)

USE 2#8

JOHN CAROLLO ENGINEERS

BY RDT DATE 7/24/90 SUBJECT SQUAW PEAK BY-PASS SHEET NO. C-5 OF
CHKD. BY DATE JOB NO. 3249 C.10

SHEAR

$V@d = (3.16 + 1 \times .15)(6 - 21/12) = 14.07^{K}$

$v = 14.07/(12)(21) = .056^{KSI}$

$v_A = .95\sqrt{3000} = 0.052^{KSI}$ REINF. REQ'D

$A_V = (.056 - .052)(12)(21/2)/24 = 0.02\ in^2$

$MIN\ A_V = (50)(12)(21.0/2)/60000 = 0.11\ in^2$

USE # 4 ⊓ @ 10½"

JOHN CAROLLO ENGINEERS

BY RDT DATE 7/24/90 SUBJECT SQUAW PEAK BY-PASS SHEET NO. C-6 OF
CHKD BY DATE JOB NO. 3249C.10

① #6@12" EW BOTTOM FOR FLOOR SLAB
② #8@12" EW TOP FOR FLOOR SLAB

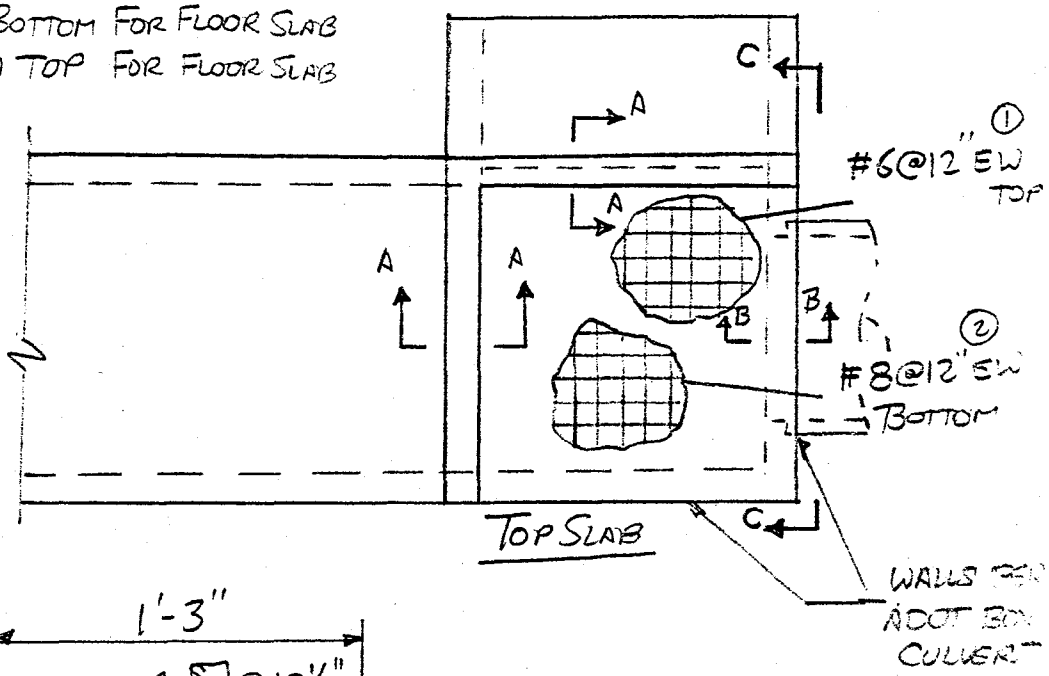

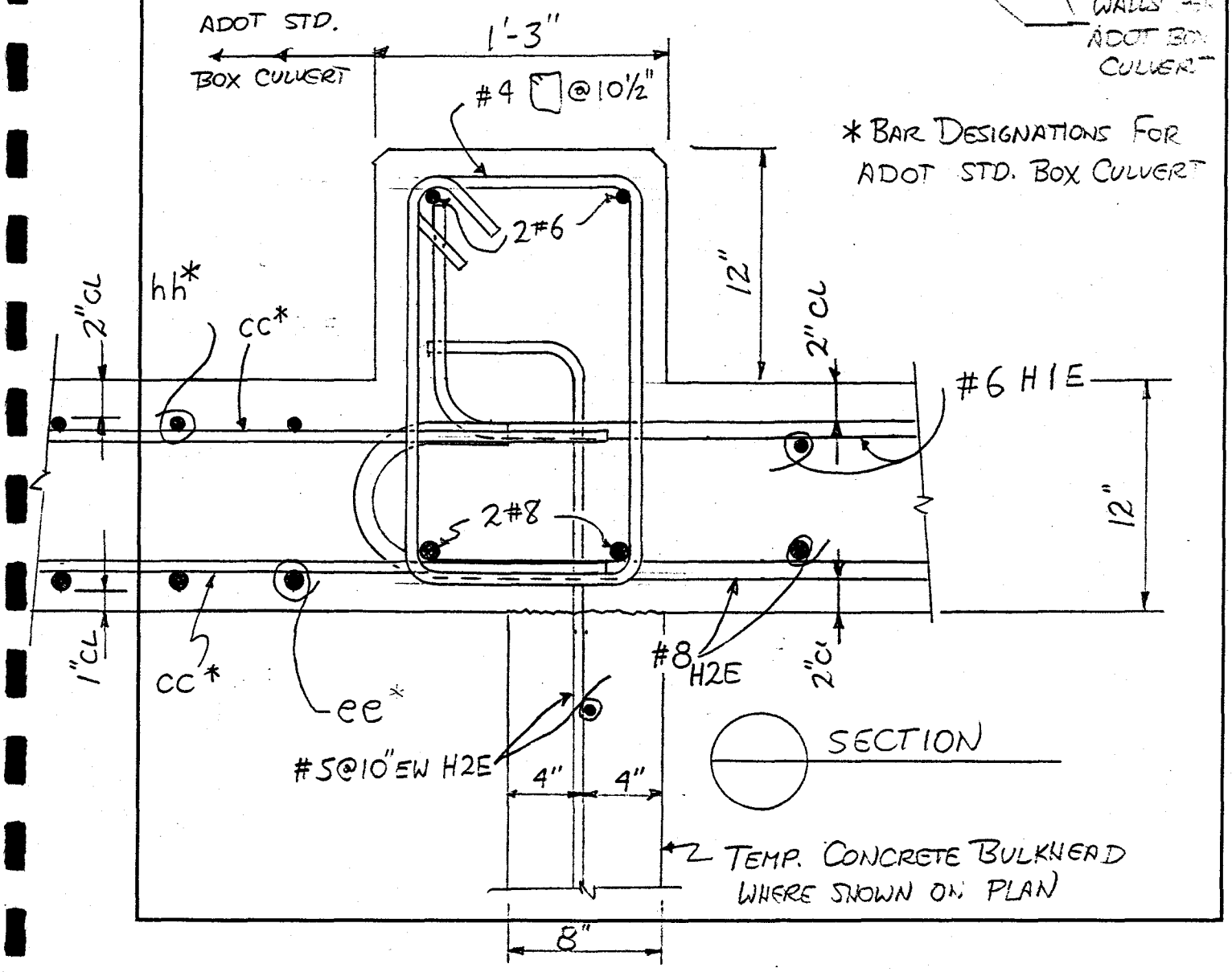

* BAR DESIGNATIONS FOR ADOT STD. BOX CULVERT

JOHN CAROLLO ENGINEERS

BY PDS DATE 7/24/90 SUBJECT SQUAW PEAK BY-PASS SHEET NO. C-7 OF
CHKD BY DATE JOB NO. 3249C.10

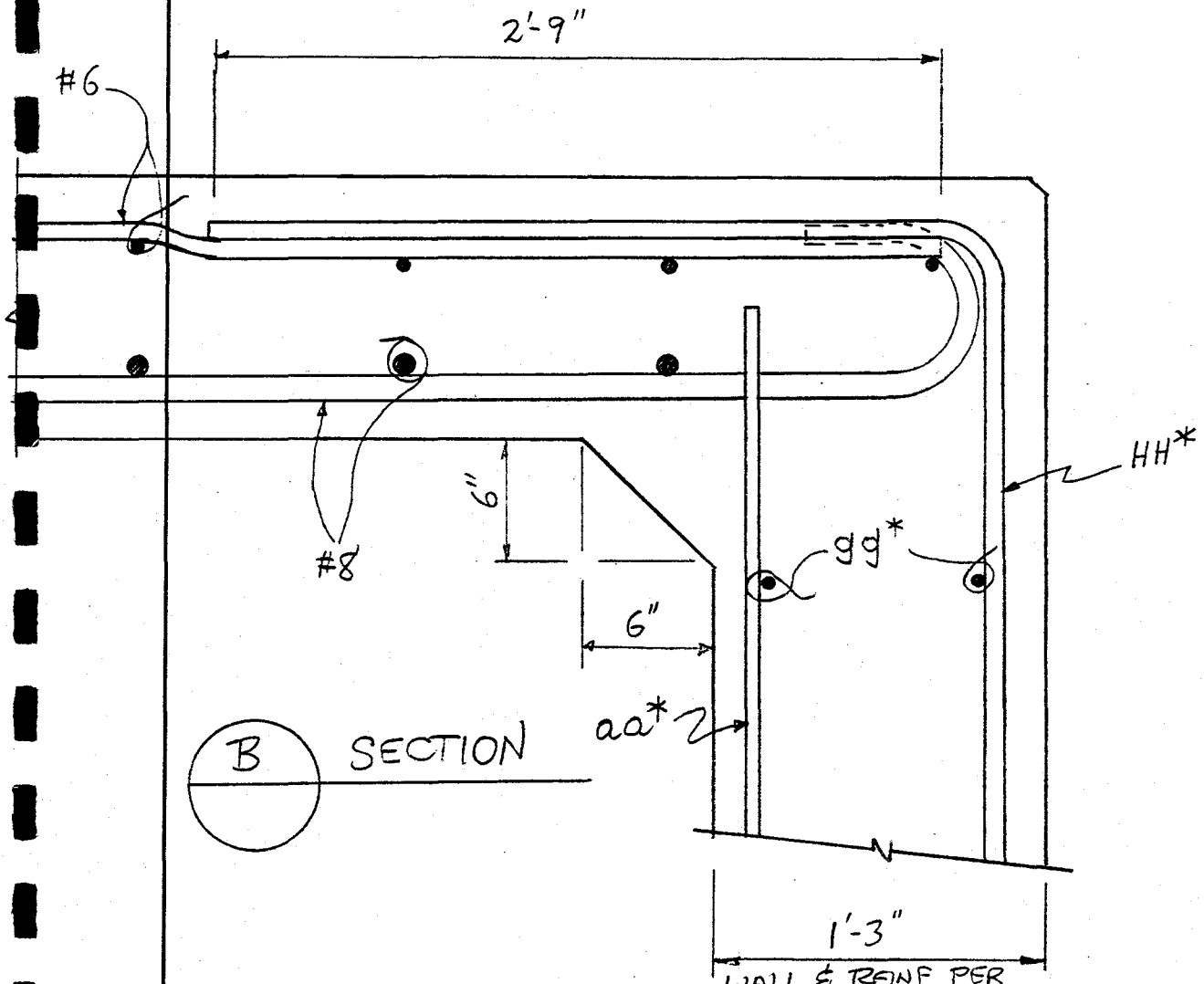

WALL & REINF PER
ADOT STD BOX
CULVERT B-02.10
TABLE 1, 12'x12'

JOHN CAROLLO ENGINEERS

BY RST DATE 7/29/90 SUBJECT SQUAW PEAK BY-PASS SHEET NO. C-8 OF
CHKD. BY DATE JOB NO. 3249C.10

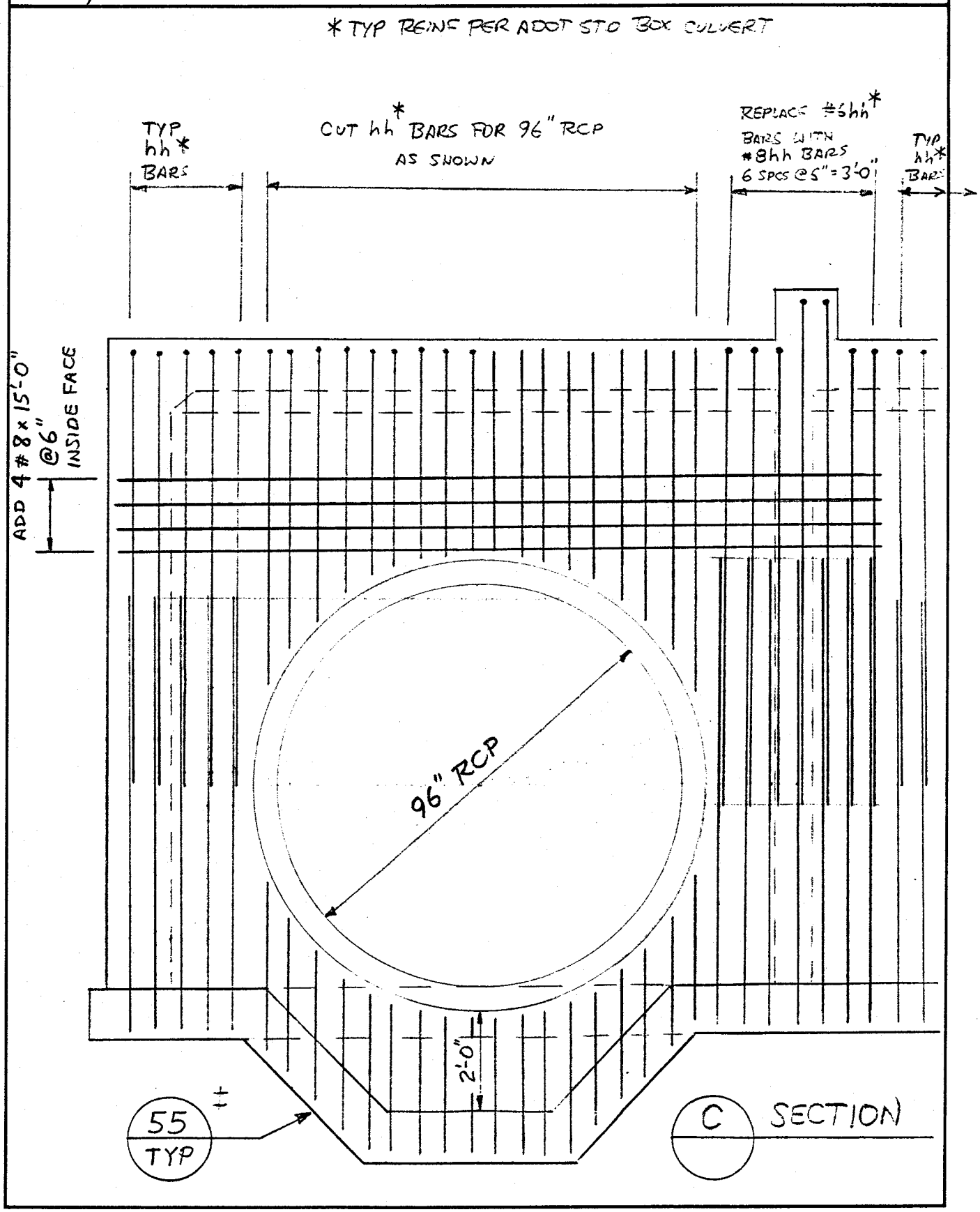

± REFERENCES (25) NEED TO DELETE REFERENCE

JOHN CAROLLO ENGINEERS

BY RDT DATE 7/24/90 SUBJECT SQUAW PEAK BY-PASS SHEET NO. C-9 OF

CHKD. BY MAK DATE JOB NO. 3249C.10

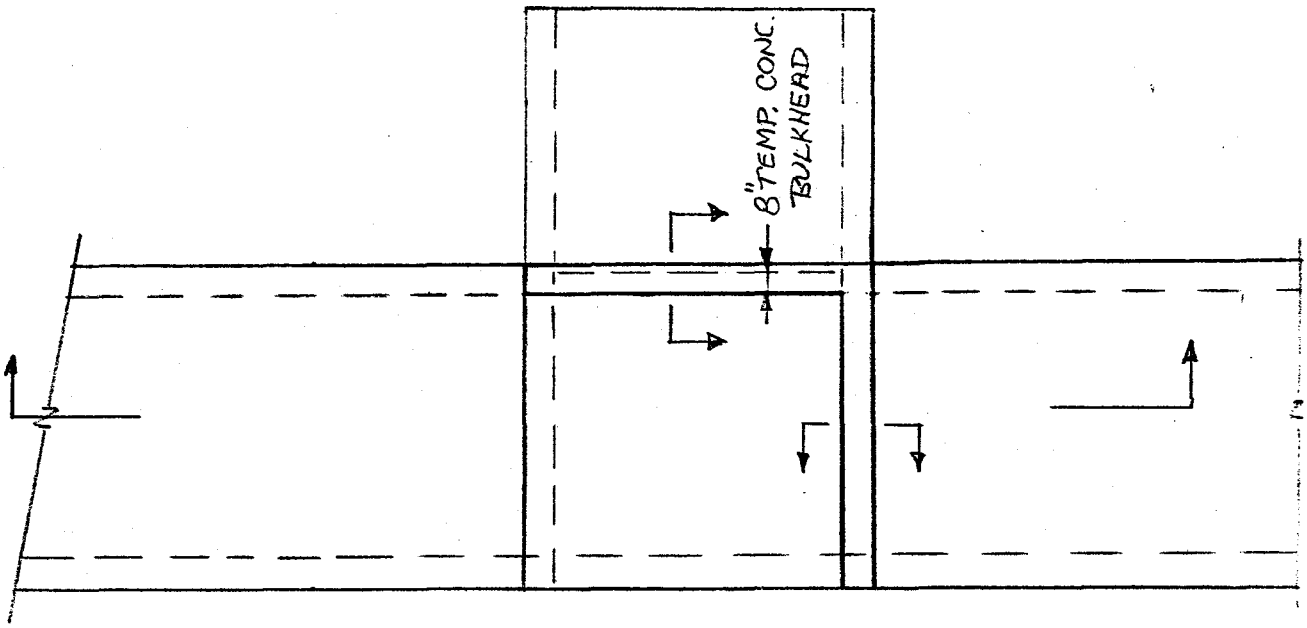

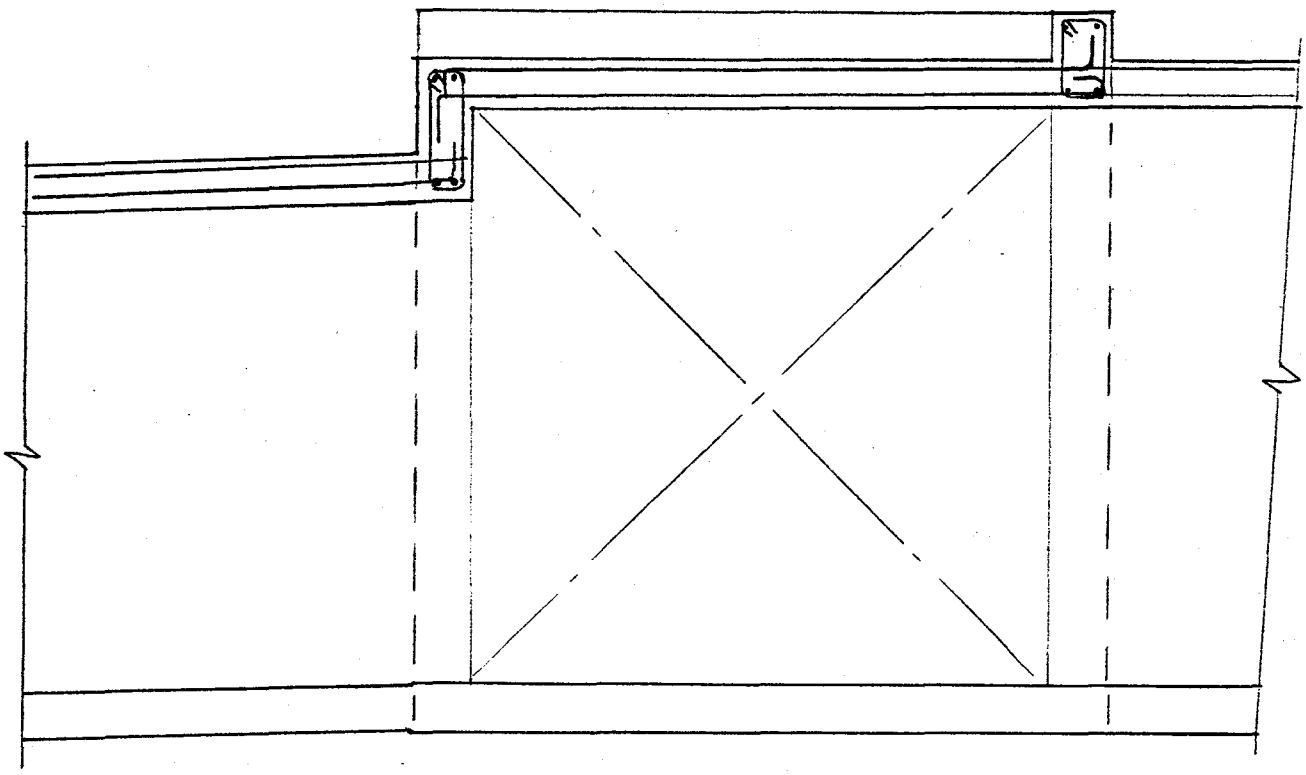

JOHN CAROLLO ENGINEERS

BY RDT DATE 8/1/90 SUBJECT SQUAW PEAK BY-PASS SHEET NO. C-10 OF
CHKD BY DATE JOB NO. 3249C.10

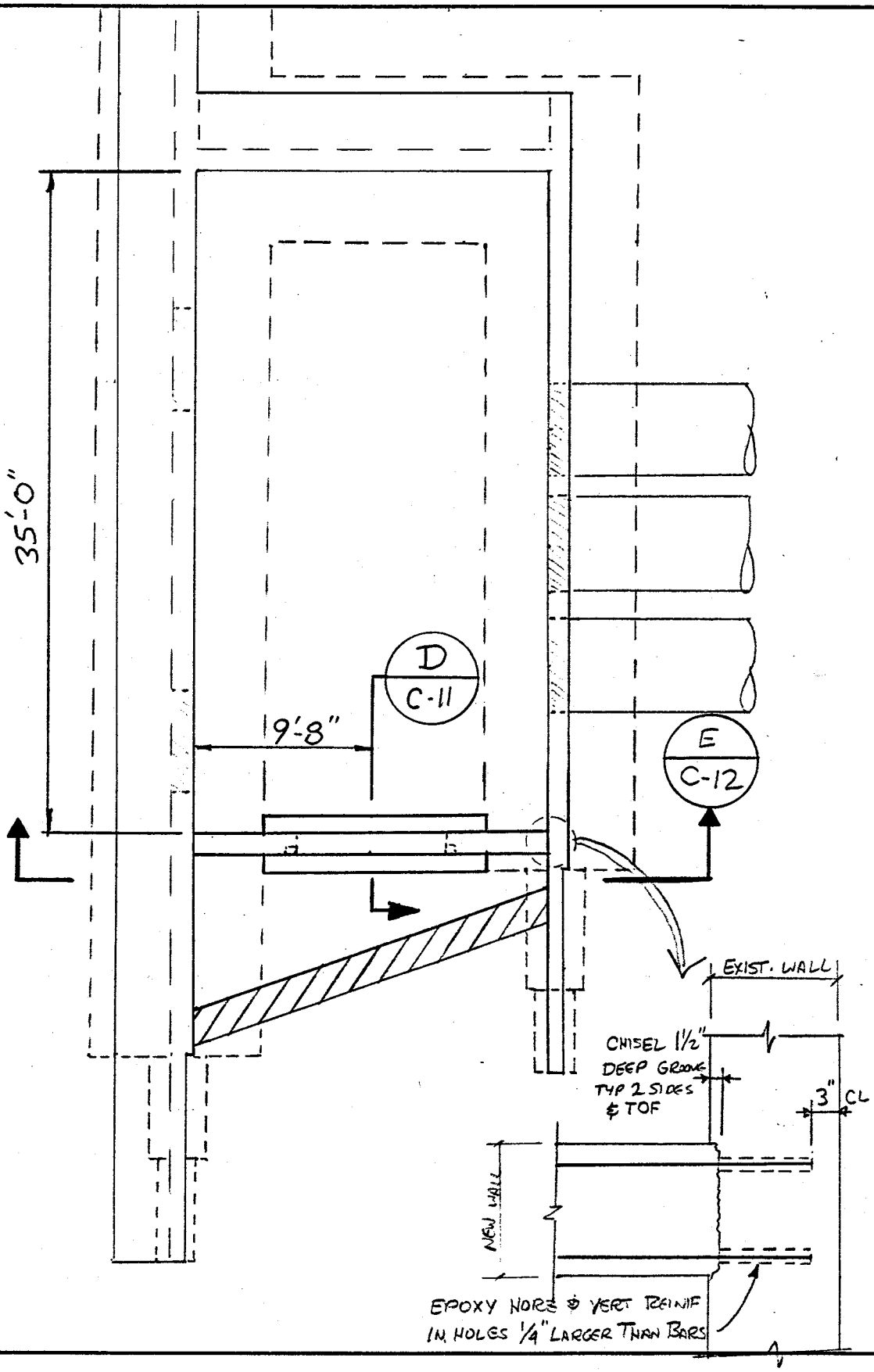

JOHN CAROLLO ENGINEERS

BY RDT DATE 8/1/90 SUBJECT SQUAW PEAK BY-PASS SHEET NO. C-11 OF
CHKD BY DATE JOB NO. 3249 C.10

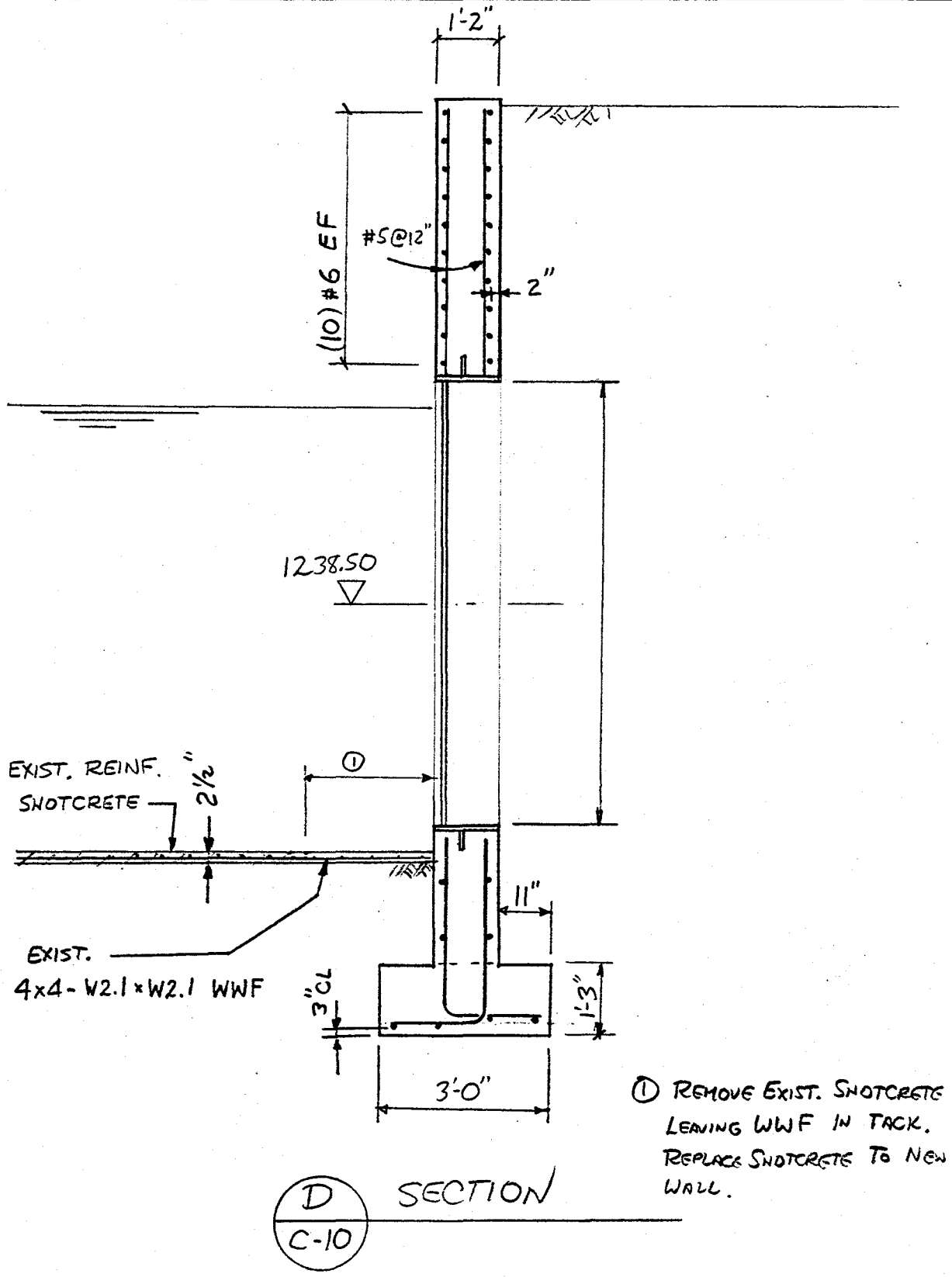

① REMOVE EXIST. SHOTCRETE LEAVING WWF IN TACK. REPLACE SHOTCRETE TO NEW WALL.

D / C-10 SECTION

JOHN CAROLLO ENGINEERS

BY RDS DATE 8/1/90 SUBJECT SOUTH PEAK BY-PASS SHEET NO. C-12 OF

CHKD. BY [illegible] DATE [illegible] JOB NO. 3249C.10

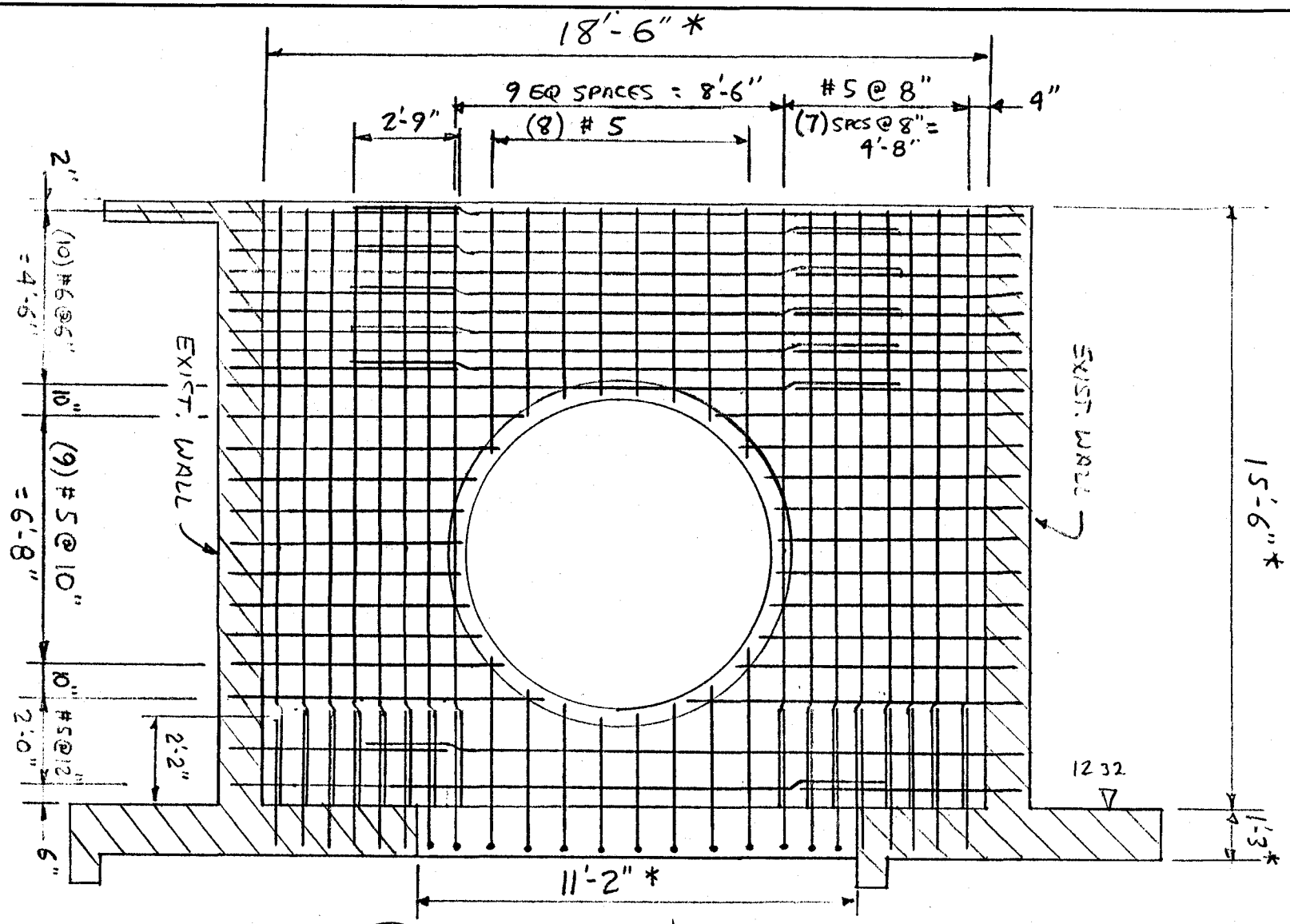

E / C-10 ELEVATION

REINF SHOWN TYP BOTH FACES

* - FIELD VERIFY

JOHN CAROLLO ENGINEERS

BY RSS DATE 8/1/90 SUBJECT SQUAW PEAK BY-PASS SHEET NO. C-13 OF
CHKD. BY DATE JOB NO. 3249C.10

STAAD 3 MODEL

MEMBERS 1 - 34, CONCRETE, 1'-2" THICK, E = 449570 KSI, ν = 0.14
MEMBERS 35-42, STEEL, 0'-½" THICK, E = 4176000 KSI, ν = 0.27

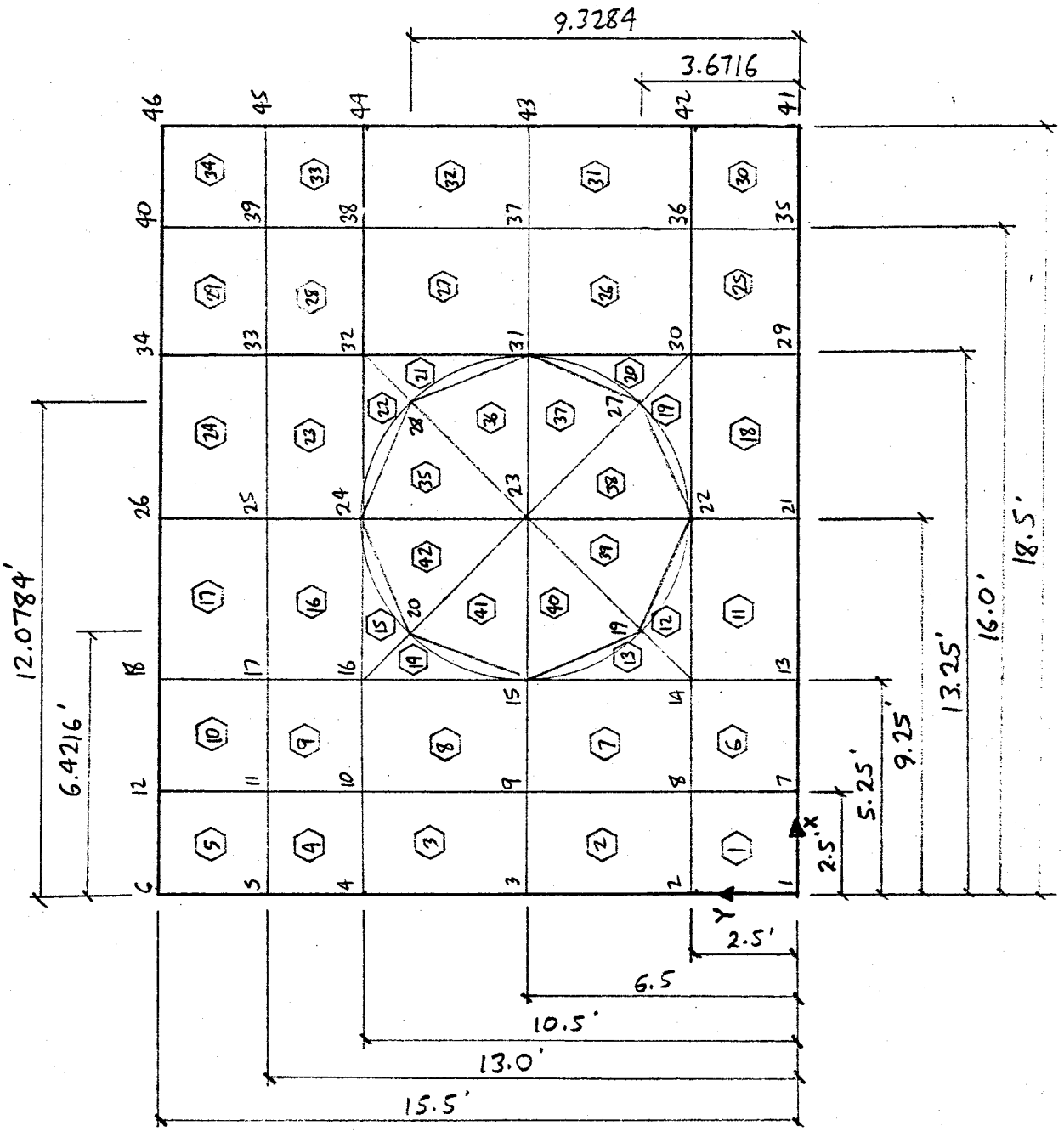

JOHN CAROLLO ENGINEERS

BY RDT DATE 8/1/90 SUBJECT SQUAW PEAK BY-PASS SHEET NO. C-14 OF
CHKD. BY DATE JOB NO. 3249C.10

EQUIVALENT RECTANGULAR SOIL PRESSURE

USE AT REST = .055 KSF/FT

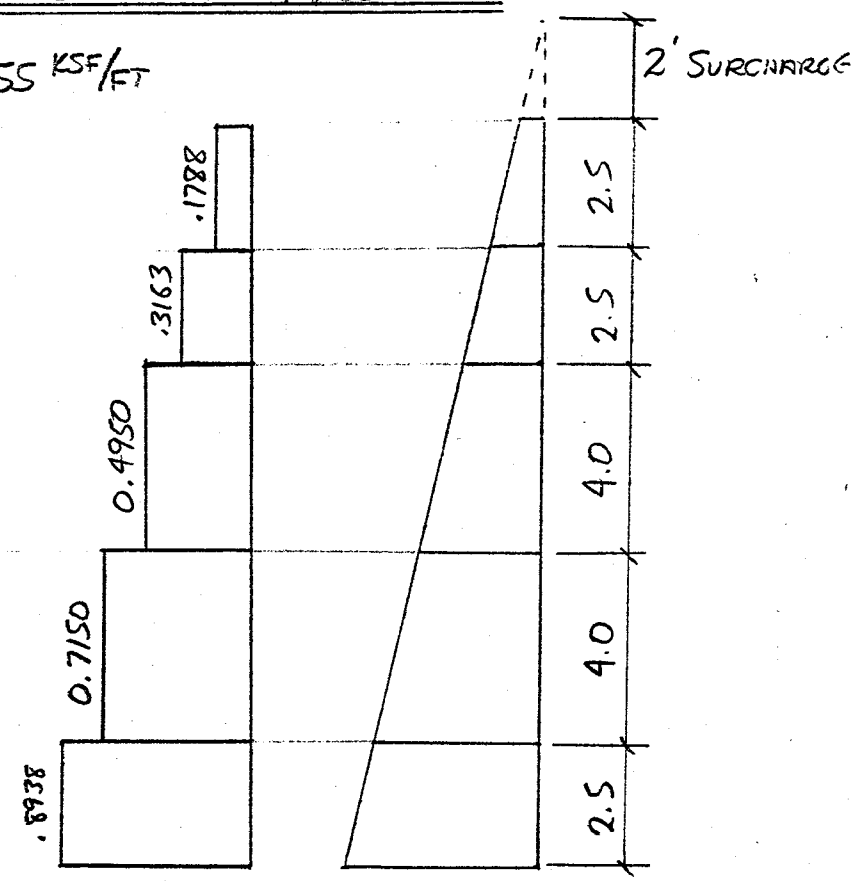

HYDROSTATIC

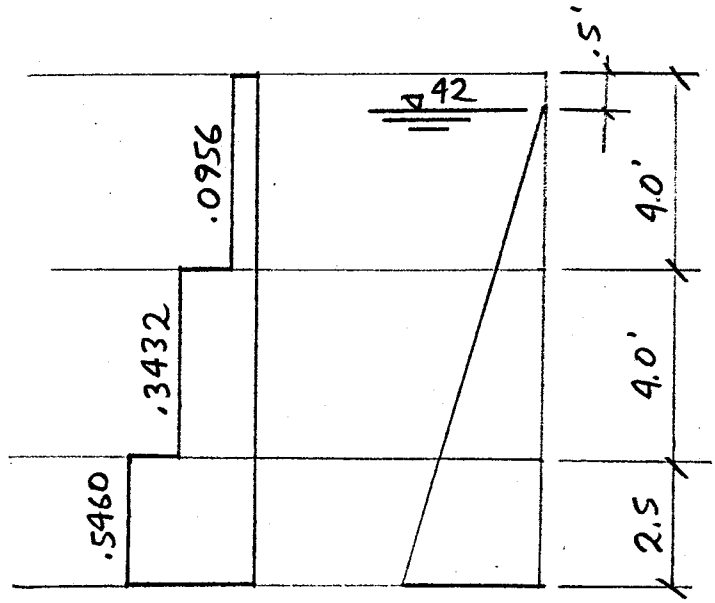

COMPUTER OUTPUT & CONCRETE DESIGN

MOMENT IN WALL ABOVE OPENING (MEMBERS 16, 17, 23, 24)

LOAD CASE 4 : MEMBERS 16 & 23 :

NODE	24	18.28 K-FT/FT
	25	16.07 K-FT/FT

MEMBERS 17 & 24 :

NODE	25	16.37
	26	15.84

$M = 2.5/2\,(18.28 + 16.07 + 16.37 + 15.84) = 83.2$ K-FT IN 5 ft

$b = 60''$ $d = 14 - 2 - .5 = 11.5''$

$A_s = 4.37\ in^2$ USE 10 #6's ($A_p = 4.40\ in^2$)

VERTICAL MOMENT (ABOUT NORZ AXIS) IN MEMBERS 1-10 & 25-34

@ JOINTS 8 $M = (6.69 + 7.82)(2.5)/5 = 7.26$ K-FT/FT

$A_s = 0.44\ in^2/ft$ USE #5 @ 8" ($A_p = 0.47\ in^2/ft$)

project: BY-PASS CONDUIT AT SQUAW PEAK WTP job: 3249C.10
client: FLOOD CONTROL DISTRICT OF MARICOPA CTY. design: RDT date: 8/2/90
subject: CONCRETE STRESS ANALYSIS & DESIGN checked: date:

WORKING STRESS DESIGN
*** HORZ BEAM OVER OPENING
MOMENT GIVEN, FIND As

ALLOWABLE CONCRETE FLEXURAL STRESS = 1350. psi
ALLOWABLE STEEL TENSILE STRESS = 22.0 ksi
STEEL YIELD STRESS = 60. ksi
MODULAR RATIO (Es/Ec) = 9.29

WIDTH OF SECTION = 60.00 in
DEPTH OF SECTION = 11.50 in

APPLIED MOMENT = 83.20 k-ft
CALCULATED STEEL AREA REQUIRED = 4.37 sq in
MINIMUM FLEXURE STEEL AREA = 2.30 sq in

WORKING STRESS DESIGN
*** VERT. REINF. AT EDGES
MOMENT GIVEN, FIND As

ALLOWABLE CONCRETE FLEXURAL STRESS = 1350. psi
ALLOWABLE STEEL TENSILE STRESS = 22.0 ksi
STEEL YIELD STRESS = 60. ksi
MODULAR RATIO (Es/Ec) = 9.29

WIDTH OF SECTION = 12.00 in
DEPTH OF SECTION = 10.94 in

APPLIED MOMENT = 7.26 k-ft
CALCULATED STEEL AREA REQUIRED = .39 sq in
MINIMUM FLEXURE STEEL AREA = .44 sq in
1-1/3 CALCULATED STEEL AREA = .52 sq in

JOHN CAROLLO ENGINEERS

BY RDT DATE 7/18/90 SUBJECT SQUAW PEAK BY-PASS SHEET NO. D-1 OF
CHKD DATE JOB NO. 3249C.10

FRAMING

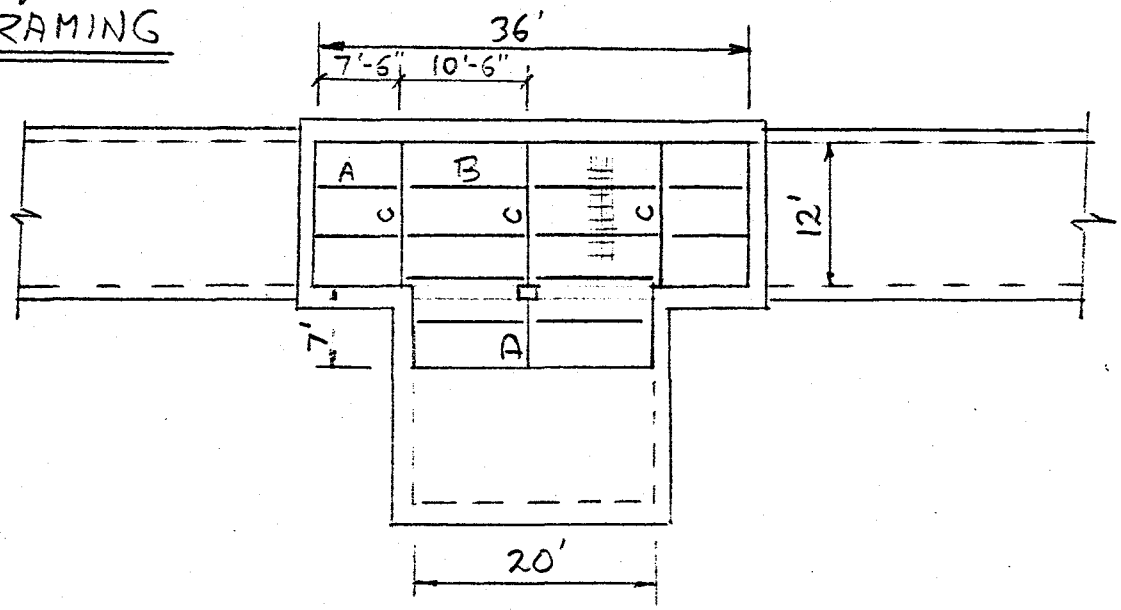

GRATING

MAX SPAN (2SPANS) = 4'-0"

LL = 180 psf @ 18,000 psi (JCE STD. SPEC.)

USE 1¼ x 3/16 BRNG BARS 1 3/16" C. TO C.

GRATING DL = 3.3 psf

BEAM B $w = (.180 + .0033)(4) = 0.733$ KLF

$M = (.733 + .008)(10.5)^2/8 = 10.2$ K-FT

$L_b = 10.5 \times 12 = 126"$ TRY W8x6.181, $r_y = 1.18$

$L_b/r_y = 126/1.18 = 107$ (>79 UBC TBL 28-C & G)

$F_b = 87{,}000/(107)^2 = 7.63$ KSI (UBC TBL 28-C)

$f_b = (12)(10.2)/14.92 = 8.20$ NO GOOD TRY W8x7.023 $r_y = 1.20$

$L_b/r_y = 105$, $F_b = 7.89$, $f_b = (12)(10.2)/16.94 = 7.23$ (< 7.89 ✓)

USE W8x7.023

FRAMING (CONT.)

$$R_B = (.733 + .008)(10.5)/2 = 3.89^K \times 2 = 7.78^K$$

GIRDER "C"

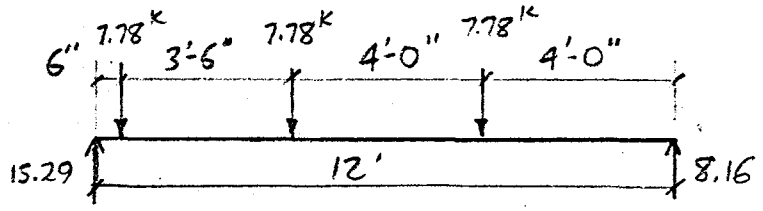

ASSUME W10 × 8.646

$w = .009^{KLF}$

$$M_{MAX} = (15.29)(4) - (7.78)(3.5) - (.009)(4)^2/2 = 33.9^{K\text{-}FT}$$

$$L_b/r_y = 48/1.42 = 34 \ (>23, <79)$$

$$F_b = 22.2 - (0.124)(34) = 18.0^{KSI}$$

$$f_b = (12)(33.9)/26.42 = 15.4^{KSI} \ (< 18.0 \ \checkmark)$$

USE W10 × 8.646

GIRDER "D"

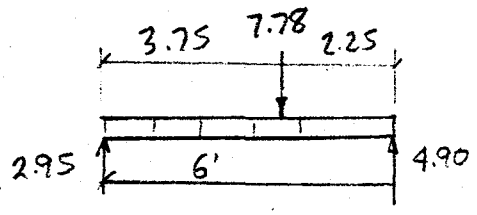

$$M = (2.95)(3.75) - (.012)(3.75)^2/2 = 10.99^{K\text{-}FT}$$

UNSUPPORTED $L_b = 3.75 \times 12 = 45"$

TRY W8 × 7.023 $\quad L_b/r_y = 45/1.20 = 37.5$

$$F_b = 23.9 - (0.124)(37.5) = 19.3^{KSI}$$

$$f_b = (12)(10.99)/16.94 = 7.79^{KSI} \ (< 19.3 \ \checkmark)$$

USE W8 × 7.023

CHECK LL DEFLECTIONS NOTE: $E_{ALUMINUM} = 10{,}000$ KSI

BEAM "B" $(5)(.72)(10.5)^4(1728)/(384)(10{,}000)(67.78) = 0.29''$ $(L/434\ \checkmark)$

W8 × 7.023 OK

GIRDER "C" LIVE LOADS $(4)(.18)(2)(10.5)/2 = 7.56^K$

W10 × 8.646

$I_x = 132.09\ in^4$

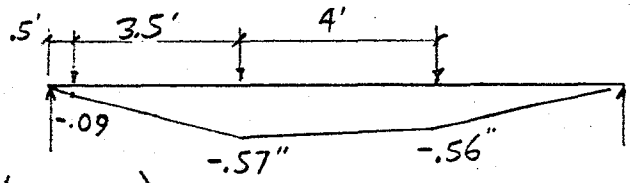

$144/.57 = 252\ (< L/240\ \checkmark)$

USE W10 × 8.646

GIRDER "D"

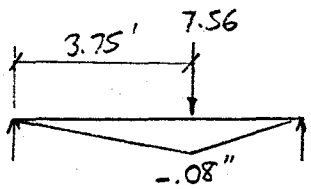

$72/.08 = 945\ \checkmark$

USE W8 × 7.023

CHECK SHEARS

GIRDER "C" W10 × 8.646 $h/t = (10 - 2 \times .41)/.25 = 36.7\ (>36, <65)$

$F_s = 15.6 - (.099)(36.7) = 12.0^{KSI}$

$f_v = 15.29/(10 - 2 \times .41)(.25) = 6.7^{KSI}\ (< 12\ \checkmark)$

BEAM "B" W8 × 7.023, $h/2 = (8 - 2 \times .41)/.25 = 28.7\ (< 36)$

$F_s = 20/1.65 = 12.1^{KSI}$

$f_v = 7.78/(8 - 2 \times .41)(.25) = 4.3^{KSI}\ (< 12.1\ \checkmark)$

CONNECTIONS

$R_{MAX} = 15.29^K$ (SEE D-2)

ASSUME (3) 3/4"Ø BOLTS IN DOUBLE SHEAR ($A_N = .4418 in^2$)

$V = 15.29/3 = 5.10^K$

BOLTS ARE STAINLESS 304 OR 316 $F_y = 30^{KSI}$
$F_u = 70^{KSI}$

$f_v = (0.17)(70) = 11.9^{KSI}$ (AISC, TBL. 1.5.2.1)

$5.10/.4418 = 11.54^{KSI}/2$ (DOUBLE SHEAR) $= 5.77^{KSI}$ (< 11.9 ✓)

CHECK BEARING ON ALUMINUM $F_p = 34^{KSI}$ (ALUM ASSOC SPEC)

$5.10/34 = 0.15 in^2/.75 = 0.20 in$ THICK

WEB OF W10×8.646 IS 0.25in ✓ USE 7/8"Ø BOLTS FOR SLOTTED HOLES

USE 1/4" THICK CLIP ANGLES

CHECK W8×7.023 FOR 2 BOLTS $R = 7.78^K$

$7.78/(2)(.75)(.25) = 20.7^{KSI}$ (< 34 ✓)

USE (2) 3/4"Ø S/S BOLTS

JOHN CAROLLO ENGINEERS

BY RDT DATE 7/24/90 SUBJECT SQUAW PEAK BY-PASS SHEET NO. D-5 OF
CHKD. BY DATE JOB NO. 3249C.10

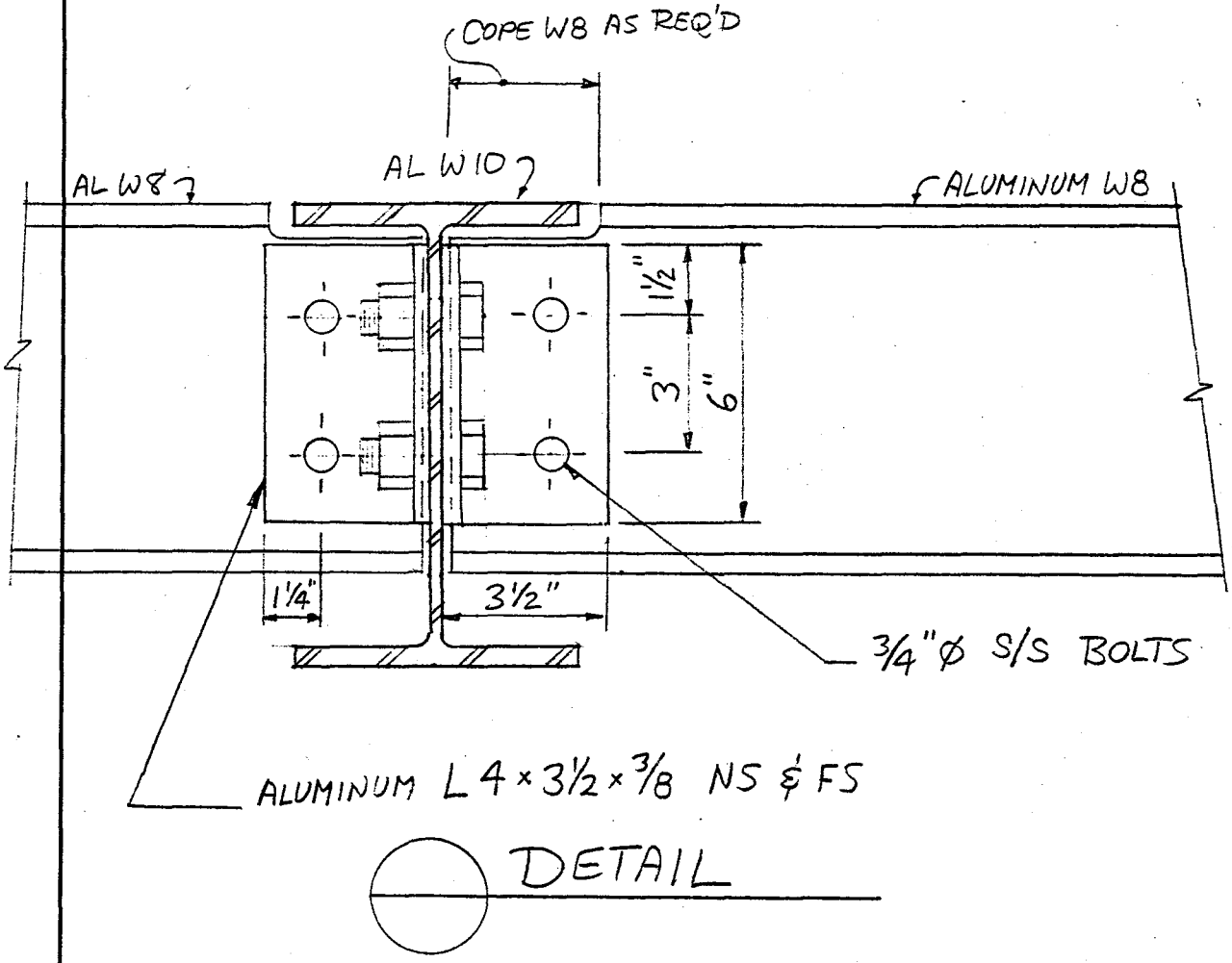

DETAIL

JOHN CAROLLO ENGINEERS

BY RST DATE 7/23/90 SUBJECT SQUAW PEAK BY-PASS SHEET NO. D-6 OF
CHKD. BY DATE JOB NO. 3249C.10

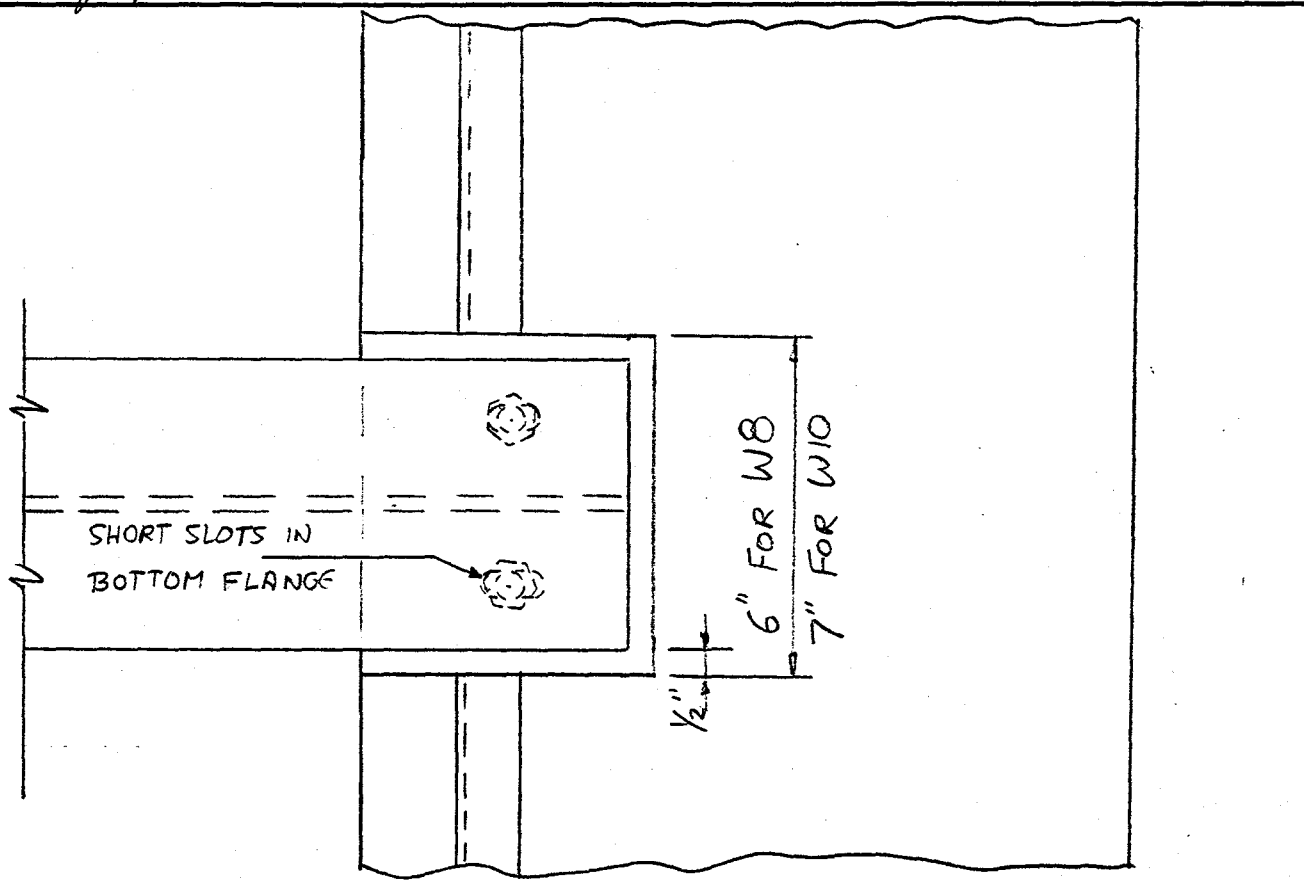

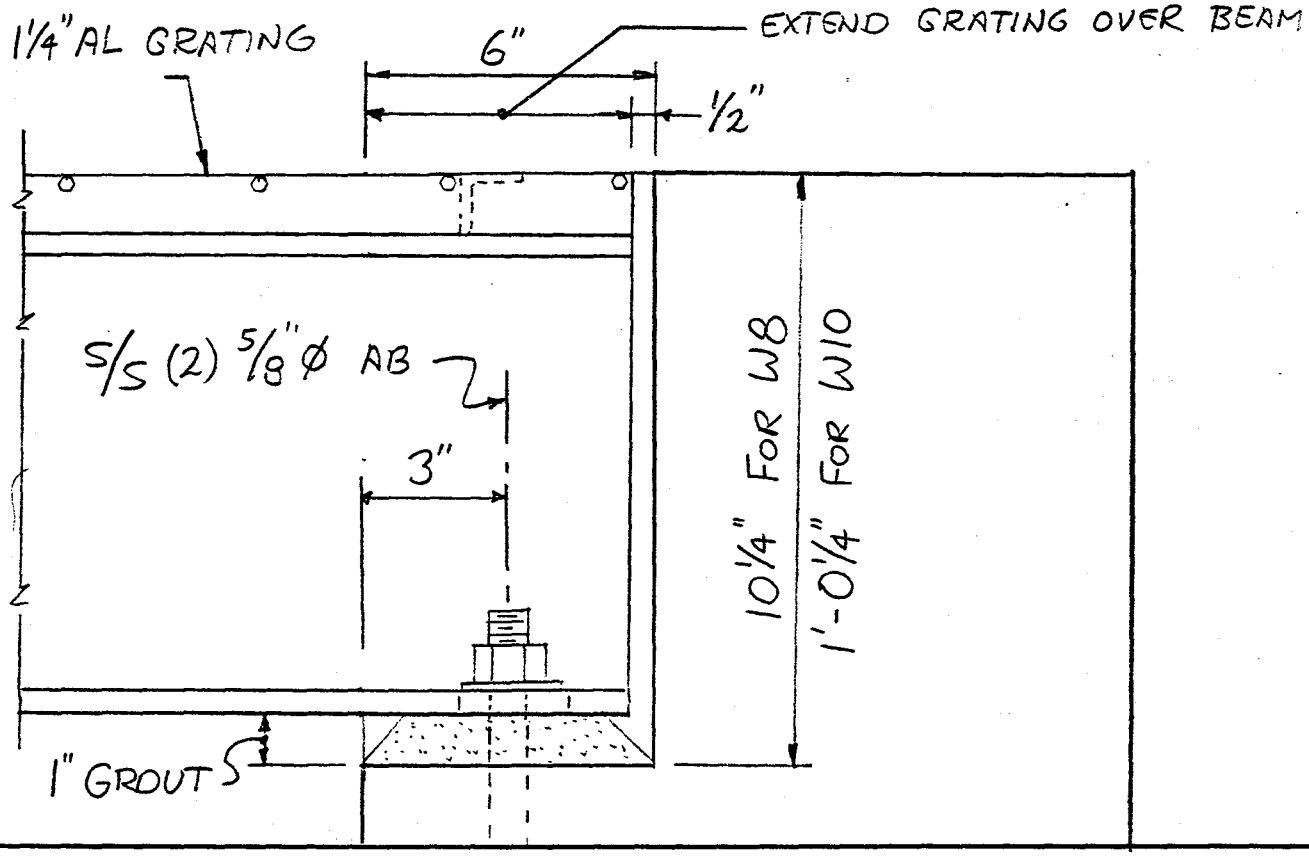

JOHN CAROLLO ENGINEERS

BY RBT DATE 7/23/90 SUBJECT SQUAW PEAK BY-PASS SHEET NO. D-7 OF

CHKD. BY DATE JOB NO. 3249 C.10

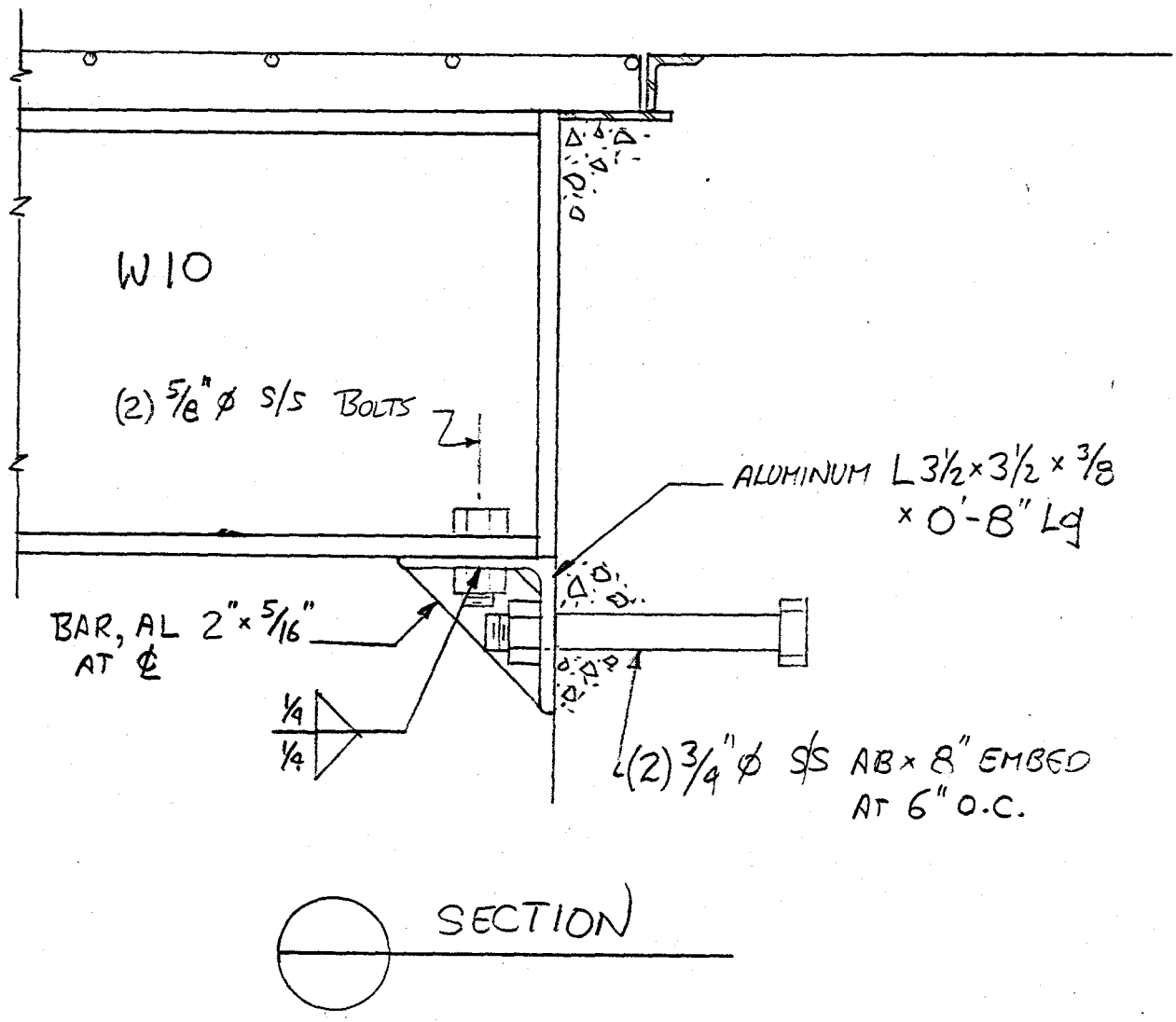

SECTION

TABLE 14A—ALUMINUM ASSOCIATION STANDARD CHANNELS—DIMENSIONS, AREAS, WEIGHTS AND SECTION PROPERTIES

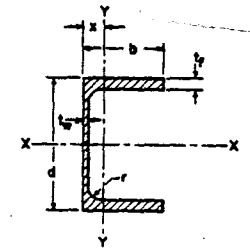

Users are encouraged to ascertain current availability of particular structural shapes through inquiries to their suppliers.

Size							Section Properties ‡ *						
							Axis X-X			Axis Y-Y			
Depth d in.	Width b in.	Area * in.²	Weight † lb/ft	Flange Thickness t_f in.	Web Thickness t_w in.	Fillet Radius R in.	I in.⁴	S in.³	r in.	I in.⁴	S in.³	r in.	x in.
2.00	1.00	0.491	0.577	0.13	0.13	0.10	0.288	0.288	0.766	0.045	0.064	0.303	0.298
2.00	1.25	0.911	1.071	0.26	0.17	0.15	0.546	0.546	0.774	0.139	0.178	0.397	0.471
3.00	1.50	0.965	1.135	0.20	0.13	0.25	1.41	0.94	1.21	0.22	0.22	0.47	0.49
3.00	1.75	1.358	1.597	0.26	0.17	0.25	1.97	1.31	1.20	0.42	0.37	0.55	0.62
4.00	2.00	1.478	1.738	0.23	0.15	0.25	3.91	1.95	1.63	0.60	0.45	0.64	0.65
4.00	2.25	1.982	2.331	0.29	0.19	0.25	5.21	2.60	1.62	1.02	0.69	0.72	0.78
5.00	2.25	1.881	2.212	0.26	0.15	0.30	7.88	3.15	2.05	0.98	0.64	0.72	0.73
5.00	2.75	2.627	3.089	0.32	0.19	0.30	11.14	4.45	2.06	2.05	1.14	0.88	0.95
6.00	2.50	2.410	2.834	0.29	0.17	0.30	14.35	4.78	2.44	1.53	0.90	0.80	0.79
6.00	3.25	3.427	4.030	0.35	0.21	0.30	21.04	7.01	2.48	3.76	1.76	1.05	1.12
7.00	2.75	2.725	3.205	0.29	0.17	0.30	22.09	6.31	2.85	2.10	1.10	0.88	0.84
7.00	3.50	4.009	4.715	0.38	0.21	0.30	33.79	9.65	2.90	5.13	2.23	1.13	1.20
8.00	3.00	3.526	4.147	0.35	0.19	0.30	37.40	9.35	3.26	3.25	1.57	0.96	0.93
8.00	3.75	4.923	5.789	0.41	0.25	0.35	52.69	13.17	3.27	7.13	2.82	1.20	1.22
9.00	3.25	4.237	4.983	0.35	0.23	0.35	54.41	12.09	3.58	4.40	1.89	1.02	0.93
9.00	4.00	5.927	6.970	0.44	0.29	0.35	78.31	17.40	3.63	9.61	3.49	1.27	1.25
10.00	3.50	5.218	6.136	0.41	0.25	0.35	83.22	16.64	3.99	6.33	2.56	1.10	1.02
10.00	4.25	7.109	8.360	0.50	0.31	0.40	116.15	23.23	4.04	13.02	4.47	1.35	1.34
12.00	4.00	7.036	8.274	0.47	0.29	0.40	159.76	26.63	4.77	11.03	3.86	1.25	1.14
12.00	5.00	10.053	11.822	0.62	0.35	0.45	239.69	39.95	4.88	25.74	7.60	1.60	1.61

* Areas and section properties listed are based on nominal dimensions. See "Aluminum Standards and Data" for applicable tolerances.

‡ I = moment of inertia; S = section modulus; r = radius of gyration.
† Weights per foot are based on nominal dimensions and a density of 0.098 pound per cubic inch which is the density of alloy 6061.

TABLE 14B—ALUMINUM ASSOCIATION STANDARD I-BEAMS—DIMENSIONS, AREAS, WEIGHTS AND SECTION PROPERTIES

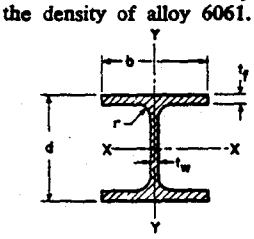

Users are encouraged to ascertain current availability of particular structural shapes through inquiries to their suppliers.

Size							Section Properties ‡ *					
							Axis X-X			Axis Y-Y		
Depth d in.	Width b in.	Area * in.²	Weight † lb/ft	Flange Thickness t_f in.	Web Thickness t_w in.	Fillet Radius R in.	I in.⁴	S in.³	r in.	I in.⁴	S in.³	r in.
3.00	2.50	1.392	1.637	0.20	0.13	0.25	2.24	1.49	1.27	0.52	0.42	0.61
3.00	2.50	1.726	2.030	0.26	0.15	0.25	2.71	1.81	1.25	0.68	0.54	0.63
4.00	3.00	1.965	2.311	0.23	0.15	0.25	5.62	2.81	1.69	1.04	0.69	0.73
4.00	3.00	2.375	2.793	0.29	0.17	0.25	6.71	3.36	1.68	1.31	0.87	0.74
5.00	3.50	3.146	3.700	0.32	0.19	0.30	13.94	5.58	2.11	2.29	1.31	0.85
6.00	4.00	3.427	4.030	0.29	0.19	0.30	21.99	7.33	2.53	3.10	1.55	0.95
6.00	4.00	3.990	4.692	0.35	0.21	0.30	25.50	8.50	2.53	3.74	1.87	0.97
7.00	4.50	4.932	5.800	0.38	0.23	0.30	42.89	12.25	2.95	5.78	2.57	1.08
8.00	5.00	5.256	6.181	0.35	0.23	0.30	59.69	14.92	3.37	7.30	2.92	1.18
8.00	5.00	5.972	7.023	0.41	0.25	0.30	67.78	16.94	3.37	8.55	3.42	1.20
9.00	5.50	7.110	8.361	0.44	0.27	0.30	102.02	22.67	3.79	12.22	4.44	1.31
10.00	6.00	7.352	8.646	0.41	0.25	0.40	132.09	26.42	4.24	14.78	4.93	1.42
10.00	6.00	8.747	10.286	0.50	0.29	0.40	155.79	31.16	4.22	18.03	6.01	1.44
12.00	7.00	9.925	11.672	0.47	0.29	0.40	255.57	42.60	5.07	26.90	7.69	1.65
12.00	7.00	12.153	14.292	0.62	0.31	0.40	317.33	52.89	5.11	35.48	10.14	1.71

* Areas and section properties listed are based on nominal dimensions. See "Aluminum Standards and Data" for applicable tolerances.

‡ I = moment of inertia; S = section modulus; r = radius of gyration.
† Weights per foot are based on nominal dimensions and a density of 0.098 pound per cubic inch which is the density of alloy 6061.

TABLE 3.3.1a (cont'd)

Alloy And Temper	Product*	Thickness Range* in.	TENSION F_{tu}† ksi	TENSION F_{ty}† ksi	COMPRESSION F_{cy} ksi	SHEAR F_{su} ksi	SHEAR F_{sy} ksi	BEARING F_{bu} ksi	BEARING F_{by} ksi	Compressive Modulus of Elasticity‡ E ksi
5050-H32	Sheet	0.017-0.249	22	16	14	14	9	44	27	10,100
-H34	Sheet	0.009-0.249	25	20	18	15	12	50	32	10,100
-H32	Rolled Rod & Bar† Drawn Tube	All	22	16	15	13	9	44	27	10,100
-H34	Rolled Rod & Bar† Drawn Tube	All	25	20	19	15	12	50	32	10,100
5052-H32	Sheet & Plate	All	31	23	21	19	13	60	39	10,200
-H34	Rolled Rod & Bar Drawn Tube	All	34	26	24	20	15	65	44	10,200
-H36	Sheet	0.006-0.162	37	29	26	22	17	70	46	10,200
5083-H111	Extrusions	up thru 0.500	40	24	21	24	14	78	41	10,400
-H111	Extrusions	0.501 and over	40	24	21	23	14	78	38	10,400
-H321, H116	Sheet & Plate	0.188-1.500	44	31	26	26	18	84	53	10,400
-H321, H116	Plate	1.501-3.000	41	29	24	24	17	78	49	10,400
-H323	Sheet	0.051-0.249	45	34	32	26	20	88	58	10,400
-H343	Sheet	0.051-0.249	50	39	37	29	23	95	66	10,400
5086-H111	Extrusions	up thru 0.500	36	21	18	21	12	70	36	10,400
-H111	Extrusions	0.501 and over	36	21	18	21	12	70	34	10,400
-H112	Plate	0.250-0.499	36	18	17	22	10	72	31	10,400
-H112	Plate	0.500-1.000	35	16	16	21	9	70	28	10,400
-H112	Plate	1.001-2.000	35	14	15	21	8	70	28	10,400
-H112	Plate	2.001-3.000	34	14	15	21	8	68	28	10,400
-H116, H32	Sheet & Plate	All	40	28	26	24	16	78	48	10,400
-H34	Drawn Tube	All	44	34	32	26	20	84	58	10,400
5154-H38	Sheet	0.006-0.128	45	35	33	24	20	81	56	10,300
5454-H111	Extrusions	up thru 0.500	33	19	16	20	11	64	32	10,400
-H111	Extrusions	0.501 and over	33	19	16	19	11	64	30	10,400
-H112	Extrusions	up thru 5.000	31	12	13	19	7	62	24	10,400
-H32	Sheet & Plate	0.020-2.000	36	26	24	21	15	70	44	10,400
-H34	Sheet & Plate	0.020-1.000	39	29	27	23	17	74	49	10,400
5456-H111	Extrusions	up thru 0.500	42	26	22	25	15	82	44	10,400
-H111	Extrusions	0.501 and over	42	26	22	24	15	82	42	10,400
-H112	Extrusions	up thru 5.00	41	19	20	24	11	82	38	10,400
-H116, H321	Sheet & Plate	0.188-1.250	46	33	27	27	19	87	56	10,400
-H116, H321	Plate	1.251-1.500	44	31	25	25	18	84	53	10,400
-H116, H321	Plate	1.501-3.000	41	29	25	25	17	82	49	10,400
-H323	Sheet	0.051-0.249	48	36	34	28	21	94	61	10,400
-H343	Sheet	0.051-0.249	53	41	39	31	24	101	70	10,400
6005-T5	Extrusions	up thru 0.500	38	35	35	24	20	80	56	10,100
6061-T6,T651	Sheet & Plate	0.010-4.000	42	35	35	27	20	88	58	10,100
-T6, T6510**	Extrusions	up thru 1.000	38	35	35	24	20	80	56	10,100
-T6,T651	Rolled Rod & Bar	up thru 8.000	42	35	35	27	20	88	56	10,100
-T6	Drawn Tube	0.025-0.500	42	35	35	27	20	88	56	10,100
-T6	Pipe	up thru 0.999	42	35	35	27	20	88	56	10,100
-T6	Pipe	over 0.999	38	35	35	24	20	80	56	10,100
6063-T5	Extrusions	up thru 0.500	22	16	16	13	9	46	26	10,100
-T5	Extrusions	over 0.500	21	15	15	12	8.5	44	24	10,100
-T6	Extrusions & Pipe	All	30	25	25	19	14	63	40	10,100
6351-T5	Extrusions	up thru 1.00	38	35	35	24	20	80	56	10,100

*Most product and thickness ranges are taken from The Aluminum Association's 1984 edition of "Aluminum Standards and Data."

†F_{tu} and F_{ty} are minimum specified values (except F_{ty} for 1100-H12, -H14 Rolled Rod and Bar and Drawn Tube, Alclad 3003-H18 Sheet and 5050-H32, -H34 Rolled Rod and Bar); other strength properties are corresponding minimum expected values.

‡Typical values. For deflection calculations an average modulus of elasticity is used; numerically this is 100 ksi lower than the values in this column.

**Values also apply to -T6511 temper.

JOHN CAROLLO ENGINEERS

BY RDT DATE 7/6/90 SUBJECT SQUAW PEAK WTP FCDMC BY-PASS CONDUIT SHEET NO. E-1 OF
CHKD. BY DATE JOB NO. 3249C.10

STOP LOGS

CALIFORNIA REDWOOD: $F_b = 1400$ psi DRY
NO. 2 CLOSED GRAIN
UBC TBL. 25-A-1 $F_v = 80$ psi DRY
$E = 1{,}250{,}000$ psi DRY

WET SERVICE C_M = .86 FLEXURE
.97 SHEAR
.97 MODULUS

DURATION OF LOAD - USE 90% FOR C_D

ADJUST ALLOWABLES:

$F_b = (.86)(.90)(1400) = 1084$ psi $F_p = 80$ psi

$F_v = (.97)(.90)(80) = 70$ psi

$E = (.97)(.90)(1{,}250{,}000) = 1{,}091{,}000$ psi

HYDROSTATIC LOAD = 10' WATER = (62.4)(10) = 624 plf @ BOTTOM

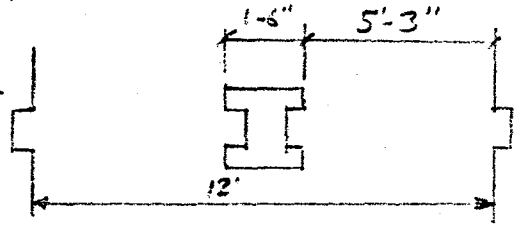

$M = (624)(5.25)^2/8 = 2150$ ft-lbs/FT

$S \geq (2150)(12)/1084 = 24 \text{ in}^3/\text{ft}$

TRY 4 x T&G $S = (12)(3.5)^2/6 = 24.5 \text{ in}^3/\text{ft}$

CHECK V $V = (1.5)(624)(5.25)/2 = 2457$ PLF

$v = 2457/(3.5)(12) = 58.5$ (< 70 ✓)

USE 4 x __ REDWOOD STOP LOGS

BEARING: $f_p = 624/(1.5)(12) = 35$ psi (< 80 psi ✓)

JOHN CAROLLO ENGINEERS

BY RDD DATE 7/12/90 SUBJECT SQUAW PEAK WTP SHEET NO. E-2 OF
CHKD. BY DATE JOB NO. 3249C.10
BY-PASS CONDUIT

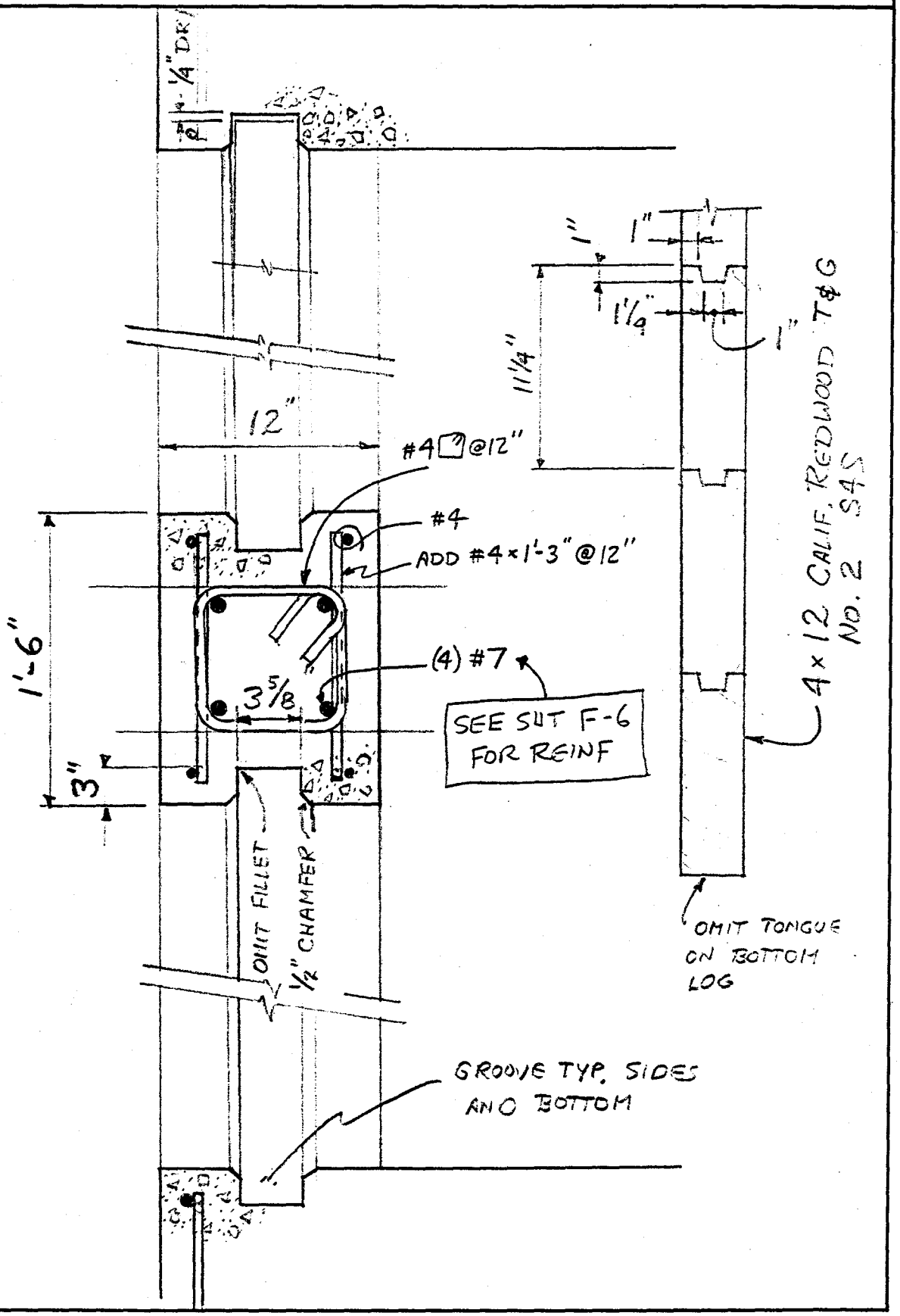

JOHN CAROLLO ENGINEERS

BY RDT DATE 7/5/90 SUBJECT SQUAW PEAK WTP BY-PASS CONDUIT SHEET NO. F-1 OF
CHKD BY DATE JOB NO. 3299C.10

CHEMICAL FEED CHAMBER & GATE STRUCTURE

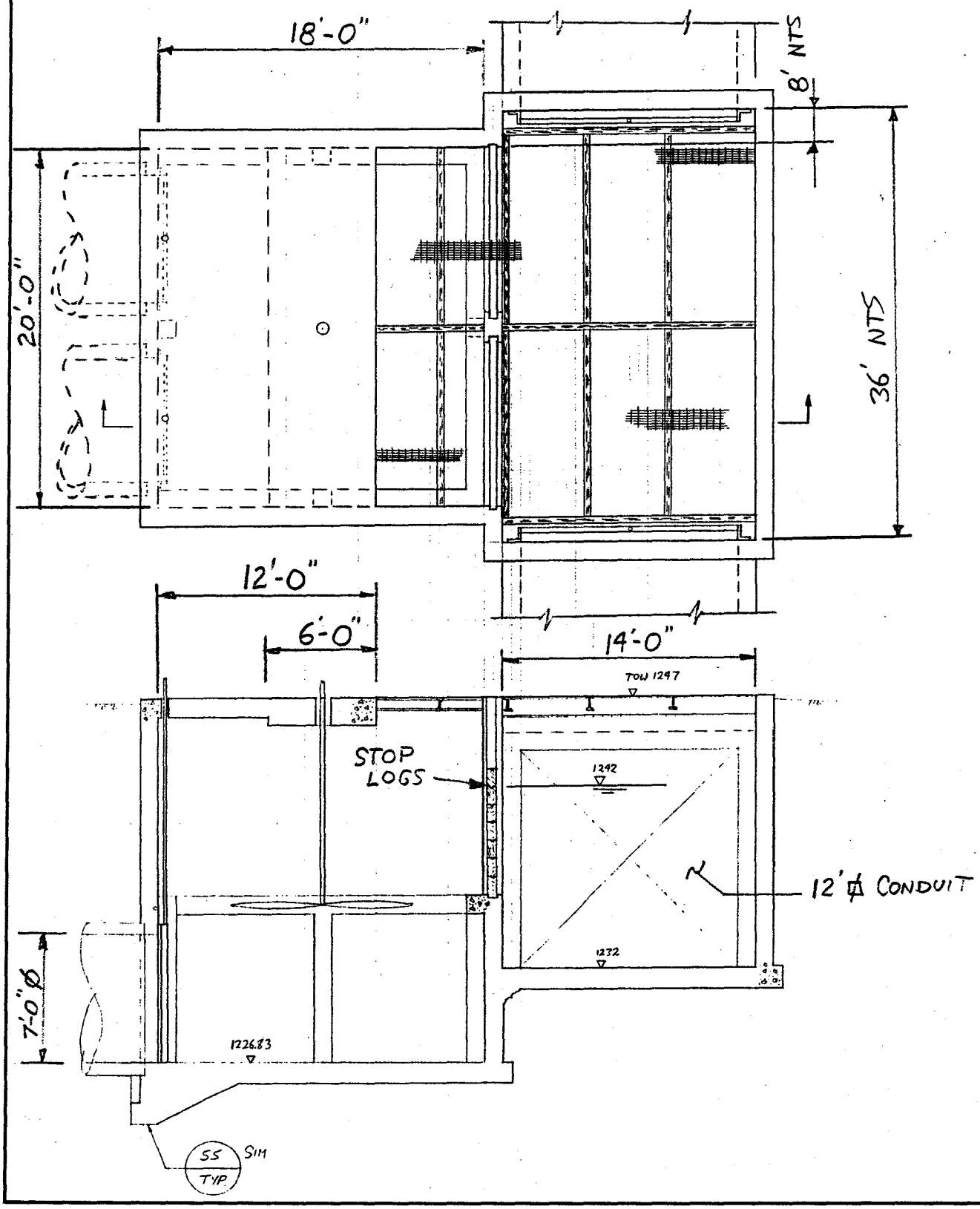

LONG WALL $L = 36'$ $(a = 36/2 = 18')$

$H = 1297 - 1232 = 15' = b$

$a/b = 18/15 = 1.20$

REFERENCE: ENGR MONOGRAPH No. 27 - BUREAU OF RECLAMATION

CASE 1 - NO WATER, AT REST W/ 2' SURCHARGE
- USE FIGURES 18 & 21

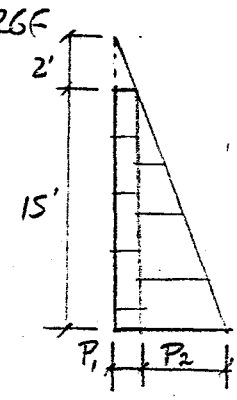

$P_1 = (2)(.055) = 0.11^{KSF}$

$P_2 = (15)(.055) = 0.825^{KSF}$

$f_s = 24^{KSI}$

MAX CANTILEVER MOMENT AT BOTTOM $(a/b = 1.20)$

INTERPOLATE TWIX $a/b = 1$ & $a/b = 3/2$

$M = (.3438)(0.11)(15)^2 + (.1247)(.825)(15)^2 = 31.7$ K-FT/FT

TRY 16" THICK WALL $f_c = (0.45)(3000) = 1350$ psi

$A_s = 1.32$ in²/ft (SEE SHT. F-3) USE #8 & #7 @ 12"

SPLICE #8 TO #5 - CAPACITY OF #7 + #5 $(A = 0.91 in^2)$

$M_{CAP} = 22.21$ K-FT TRY 3.0' ↑, $M = (.1711)(.11)(15)^2 + (.452)(.825)(15)^2 = 12.62$ K-FT (< 22.21 ✓)

CUT-OFF #8 @ 3'-0" + (13.44/12) = 4'-2" ABOVE TOF

CAPACITY OF #5 @ 12" $M_{CAP} = 7.85$ K-FT/FT

CUT-OFF #7 @ 6'-0" + (13.44/12) = 7'-2" ABOVE TOF

project: BY-PASS CONDUIT AT SQUAW PEAK WTP job: 3249C.10
client: FLOOD CONTROL DISTRICT OF MARICOPA CTY. design: RDT date: 7/16/90
subject: CONCRETE STRESS ANALYSIS & DESIGN checked: date:

WORKING STRESS DESIGN
*** Earth Side, Bottom of Wall
MOMENT GIVEN, FIND As

ALLOWABLE CONCRETE FLEXURAL STRESS = 1350. psi
ALLOWABLE STEEL TENSILE STRESS = 24.0 ksi
STEEL YIELD STRESS = 60. ksi
MODULAR RATIO (Es/Ec) = 9.29

WIDTH OF SECTION = 12.00 in
DEPTH OF SECTION = 13.44 in

APPLIED MOMENT = 31.70 k-ft
CALCULATED STEEL AREA REQUIRED = 1.32 sq in
MINIMUM FLEXURE STEEL AREA = .54 sq in

WORKING STRESS DESIGN
*** Capacity of #5 + #7 @ 12"
As GIVEN, FIND MOMENT CAPACITY, STRESSES

ALLOWABLE CONCRETE FLEXURAL STRESS = 1350. psi
ALLOWABLE STEEL TENSILE STRESS = 24.0 ksi
STEEL YIELD STRESS = 60. ksi
MODULAR RATIO (Es/Ec) = 9.29

WIDTH OF SECTION = 12.00 in
DEPTH OF SECTION = 13.44 in

STEEL AREA PROVIDED = .91 sq in
MOMENT CAPACITY = 22.21 k-ft
CONCRETE FLEXURAL STRESS = 983. psi
STEEL TENSILE STRESS = 24.00 ksi

WORKING STRESS DESIGN
*** Capacity of #5 @ 12"
As GIVEN, FIND MOMENT CAPACITY, STRESSES

ALLOWABLE CONCRETE FLEXURAL STRESS = 1350. psi
ALLOWABLE STEEL TENSILE STRESS = 24.0 ksi
STEEL YIELD STRESS = 60. ksi
MODULAR RATIO (Es/Ec) = 9.29

WIDTH OF SECTION = 12.00 in
DEPTH OF SECTION = 13.44 in

STEEL AREA PROVIDED = .31 sq in
MOMENT CAPACITY = 7.85 k-ft
CONCRETE FLEXURAL STRESS = 537. psi
STEEL TENSILE STRESS = 24.00 ksi

SOILS LOAD - HORIZONTAL MOMENT (FIGS 18 & 21)

TOP @ ℄ $M = (.0977)(.11)(15)^2 + (.0269)(.825)(15)^2 = 7.41^{K\text{-}FT}$

$d = 16 - 2 - 1 - .625/2 = 12.69''$

$A_s = 0.45\ in^2/ft$ (SEE SHT F-5) USE #6 @ 12" (WATER FACE)

CHECK NEGATIVE HORZ MOMENT (FIGS 1 & 4)

TOP @ EDGES $M = (.0951)(.11)(15)^2 + (.0261)(.825)(15)^2 = 7.19^{K\text{-}FT}$

$A_s = 0.40\ in^2/ft$ (SEE SHT. F-5) USE # 6@12" (EARTH FACE)

CASE 2 - HYDROSTATIC, NO EARTH BACKFILL

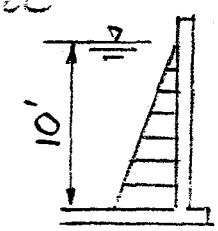

$P = (10)(.0624) = 0.624$

MOMENT AT BOTTOM - (FIGS 18 & 21)

$f_s = 22^{KSI}$ (#3 - #5 @12" OR #6,7,8 @6")

$a/b = 18/10 = 1.80$ (> 3/2 - DESIGN AS CANTILEVER)

$M = (.624)(10)^2/3 = 20.8^{K\text{-}FT}/FT$ $d = 16 - 2 - 1/2 = 13.5''$

$A_s = 0.93\ in^2/ft$ (SEE SHT F-5) USE # 6@12" + #7@12"

SPLICE #5@12" TO #7@12" & CUT-OFF #7

CAPACITY OF #5@12" + #6@12" $= 16.99^{K\text{-}FT}/FT$ (SEE SHT. F-7)

$(.624)(10-Y)^2/3 = 16.99 \Rightarrow Y = .962'$

CUT-OFF #7@12" AT $.962 + 13.5/12 = 2'\text{-}2''$ ABOVE TOF

project: BY-PASS CONDUIT AT SQUAW PEAK WTP job: 3249C.10
client: FLOOD CONTROL DISTRICT OF MARICOPA CTY. design: RDT date: 7/17/90
subject: CONCRETE STRESS ANALYSIS & DESIGN checked: date:

WORKING STRESS DESIGN
*** HORZ MOM, TOP OF WALL, C.L.
MOMENT GIVEN, FIND As

ALLOWABLE CONCRETE FLEXURAL STRESS = 1350. psi
ALLOWABLE STEEL TENSILE STRESS = 22.0 ksi
STEEL YIELD STRESS = 60. ksi
MODULAR RATIO (Es/Ec) = 9.29

WIDTH OF SECTION = 12.00 in
DEPTH OF SECTION = 12.69 in

APPLIED MOMENT = 7.41 k-ft
CALCULATED STEEL AREA REQUIRED = .34 sq in
MINIMUM FLEXURE STEEL AREA = .51 sq in
1-1/3 CALCULATED STEEL AREA = .45 sq in

WORKING STRESS DESIGN
*** HORZ MOMENT, TOP OF WALL, EDGE
MOMENT GIVEN, FIND As

ALLOWABLE CONCRETE FLEXURAL STRESS = 1350. psi
ALLOWABLE STEEL TENSILE STRESS = 24.0 ksi
STEEL YIELD STRESS = 60. ksi
MODULAR RATIO (Es/Ec) = 9.29

WIDTH OF SECTION = 12.00 in
DEPTH OF SECTION = 12.69 in

APPLIED MOMENT = 7.19 k-ft
CALCULATED STEEL AREA REQUIRED = .30 sq in
MINIMUM FLEXURE STEEL AREA = .51 sq in
1-1/3 CALCULATED STEEL AREA = .40 sq in

WORKING STRESS DESIGN
*** HYDROSTATIC CANTILEVER MOMENT
MOMENT GIVEN, FIND As

ALLOWABLE CONCRETE FLEXURAL STRESS = 1350. psi
ALLOWABLE STEEL TENSILE STRESS = 22.0 ksi
STEEL YIELD STRESS = 60. ksi
MODULAR RATIO (Es/Ec) = 9.29

WIDTH OF SECTION = 12.00 in
DEPTH OF SECTION = 13.50 in

APPLIED MOMENT = 20.80 k-ft
CALCULATED STEEL AREA REQUIRED = .93 sq in
MINIMUM FLEXURE STEEL AREA = .54 sq in

CAPACITY OF # 5@ 12" = 7.23 K-FT (SEE SHT. F-7)

$(.624)(10-Y)^2/3 = 7.23 \Rightarrow Y = 4.10'$

CUT-OFF #6@ 12" AT 4.10 + 13.5/12 = 5'-3" ABOVE TOF

HORIZONAL MOMENTS - USE FIGURE 21 @ a/b = 3/2.
FOR POSITIVE MOMENT

$M^+ = (.0229)(.624)(10)^2 = 1.43$ K-FT/FT NEGLIBLE

USE FIGURE 4 @ a/b = 3/2 FOR NEGATIVE MOMENT

$M^- = (.0857)(.624)(10)^2 = 5.35$ K-FT/FT USE # 5@12"

LOW, INTERMEDIATE WALL

COLUMN

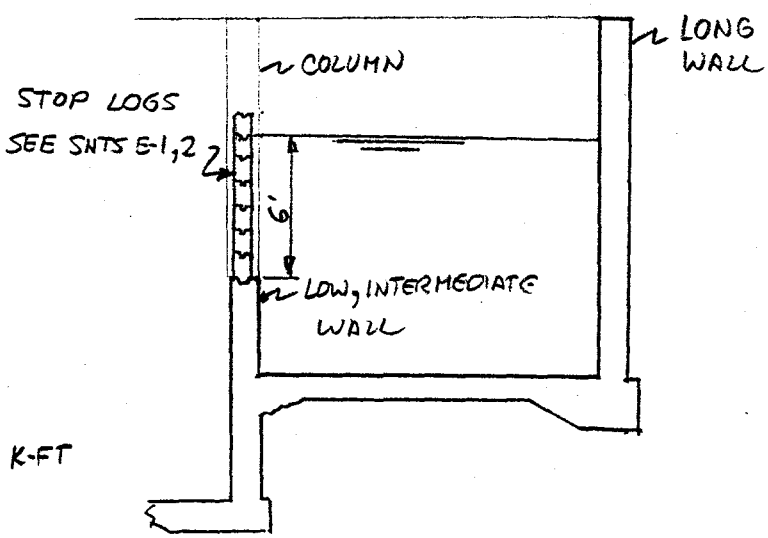

REACTION FROM STOP LOGS

$(6)(.0624)(6)^2/2 = 6.74^K$

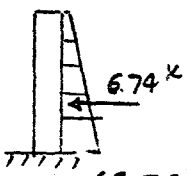

$M_{BASE} = (6.74)(6/3) = 13.48$ K-FT

$d = 12-2-.5-.75/2 \sim 9.13"$

$A_s = 0.90 \text{ in}^2$ USE 4# 7's (2 EF) (SEE SHT F-7)

project: BY-PASS CONDUIT AT SQUAW PEAK WTP job: 3249C.10
client: FLOOD CONTROL DISTRICT OF MARICOPA CTY. design: RDT date: 7/17/90
subject: CONCRETE STRESS ANALYSIS & DESIGN checked: date:

WORKING STRESS DESIGN
*** CAPACITY OF #5 + #6 @ 12"
As GIVEN, FIND MOMENT CAPACITY, STRESSES

ALLOWABLE CONCRETE FLEXURAL STRESS = 1350. psi
ALLOWABLE STEEL TENSILE STRESS = 22.0 ksi
STEEL YIELD STRESS = 60. ksi
MODULAR RATIO (Es/Ec) = 9.29

WIDTH OF SECTION = 12.00 in
DEPTH OF SECTION = 13.50 in

STEEL AREA PROVIDED = .75 sq in
MOMENT CAPACITY = 16.99 k-ft
CONCRETE FLEXURAL STRESS = 804. psi
STEEL TENSILE STRESS = 22.00 ksi

WORKING STRESS DESIGN
*** CAPACITY OF #5 @ 12"
As GIVEN, FIND MOMENT CAPACITY, STRESSES

ALLOWABLE CONCRETE FLEXURAL STRESS = 1350. psi
ALLOWABLE STEEL TENSILE STRESS = 22.0 ksi
STEEL YIELD STRESS = 60. ksi
MODULAR RATIO (Es/Ec) = 9.29

WIDTH OF SECTION = 12.00 in
DEPTH OF SECTION = 13.50 in

STEEL AREA PROVIDED = .31 sq in
MOMENT CAPACITY = 7.23 k-ft
CONCRETE FLEXURAL STRESS = 491. psi
STEEL TENSILE STRESS = 22.00 ksi

WORKING STRESS DESIGN
*** STOP LOG VERTICAL BEAM
MOMENT GIVEN, FIND As

ALLOWABLE CONCRETE FLEXURAL STRESS = 1350. psi
ALLOWABLE STEEL TENSILE STRESS = 22.0 ksi
STEEL YIELD STRESS = 60. ksi
MODULAR RATIO (Es/Ec) = 9.29

WIDTH OF SECTION = 12.00 in
DEPTH OF SECTION = 9.13 in

APPLIED MOMENT = 13.48 k-ft
CALCULATED STEEL AREA REQUIRED = .90 sq in
MINIMUM FLEXURE STEEL AREA = .37 sq in

LOW WALL (Cont.)

STOP LOG REACTION TO TOP OF WALL (FIG. 21)

$a = 3, \quad b = 4 \qquad a/b = 3/4$

$p = (4)(.0624) = 0.25^{KSF}$

MAX REACTION $= (.4816)(.25)(4) = 0.482^{KLF}$

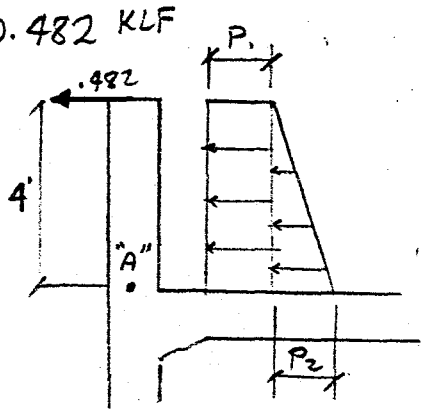

$P_1 = (6)(.0624) = .374$

$P_2 = (4)(.0624) = .250$

$M_A = (.0624)(10)^3/6 = 10.4^{K\text{-}FT/FT}$ (AVG)

$A_s = 0.65^{in^2/ft}$ (SEE SHT F-9)

USE # 6 @ 8"

FLOOR (FIG. 34) $a = 14, \; b = 36 \qquad a/b = 0.39$

EMPTY WEIGHT TRIB TO FLOOR

$[(1.33)(15)(36) + (4)(1)(12) + (15)(1)(24) + (16.83)(38)(1.5)](0.15)$

$= 313^K \qquad P_{EMPTY} = 313/(14)(36) = 0.621^{KSF}$

FULL $= .621 + (10)(.0624) = 1.25^{KSF}$ (< 3 ✓)

TOP REINF, LONG DIR $\quad M_{TL} = (.0123)(.621)(14)^2 = 1.49^{K\text{-}FT/FT}$ NEG.

SHORT DIR $\quad M_{TS} = (.0423)(.621)(14)^2 = 5.14^{K\text{-}FT/FT}$

$d = 12 - 2 - .5 = 9.5''$, $A_s = 0.38^{in^2/ft}$ (SEE SHT F-9)

USE #6 @ 12" TOP N-S

project: BY-PASS CONDUIT AT SQUAW PEAK WTP job: 3249C.10
client: FLOOD CONTROL DISTRICT OF MARICOPA CTY. design: RDT date: 7/17/90
subject: CONCRETE STRESS ANALYSIS & DESIGN checked: date:

WORKING STRESS DESIGN
*** LOW INTERMEDIATE WALL
MOMENT GIVEN, FIND As

ALLOWABLE CONCRETE FLEXURAL STRESS = 1350. psi
ALLOWABLE STEEL TENSILE STRESS = 22.0 ksi
STEEL YIELD STRESS = 60. ksi
MODULAR RATIO (Es/Ec) = 9.29

WIDTH OF SECTION = 12.00 in
DEPTH OF SECTION = 9.63 in

APPLIED MOMENT = 10.40 k-ft
CALCULATED STEEL AREA REQUIRED = .65 sq in
MINIMUM FLEXURE STEEL AREA = .38 sq in

WORKING STRESS DESIGN
*** FLOOR, TOP, SHORT DIRECTION
MOMENT GIVEN, FIND As

ALLOWABLE CONCRETE FLEXURAL STRESS = 1350. psi
ALLOWABLE STEEL TENSILE STRESS = 22.0 ksi
STEEL YIELD STRESS = 60. ksi
MODULAR RATIO (Es/Ec) = 9.29

WIDTH OF SECTION = 12.00 in
DEPTH OF SECTION = 9.50 in

APPLIED MOMENT = 5.14 k-ft
CALCULATED STEEL AREA REQUIRED = .32 sq in
MINIMUM FLEXURE STEEL AREA = .38 sq in
1-1/3 CALCULATED STEEL AREA = .42 sq in

WORKING STRESS DESIGN
*** FLOOR, BOTTOM, LONG DIRECTION
MOMENT GIVEN, FIND As

ALLOWABLE CONCRETE FLEXURAL STRESS = 1350. psi
ALLOWABLE STEEL TENSILE STRESS = 22.0 ksi
STEEL YIELD STRESS = 60. ksi
MODULAR RATIO (Es/Ec) = 9.29

WIDTH OF SECTION = 12.00 in
DEPTH OF SECTION = 8.88 in

APPLIED MOMENT = 6.25 k-ft
CALCULATED STEEL AREA REQUIRED = .42 sq in
MINIMUM FLEXURE STEEL AREA = .35 sq in

MIXING CHAMBER

TOP SLAB

LL = 200 PSF

MIXER:

WEIGHT = 35^{K}

TORQUE = $17.75^{K\text{-}FT}$

MOMENT = $53.25^{K\text{-}FT}$
(ABOUT ANY HORZ. AXIS)

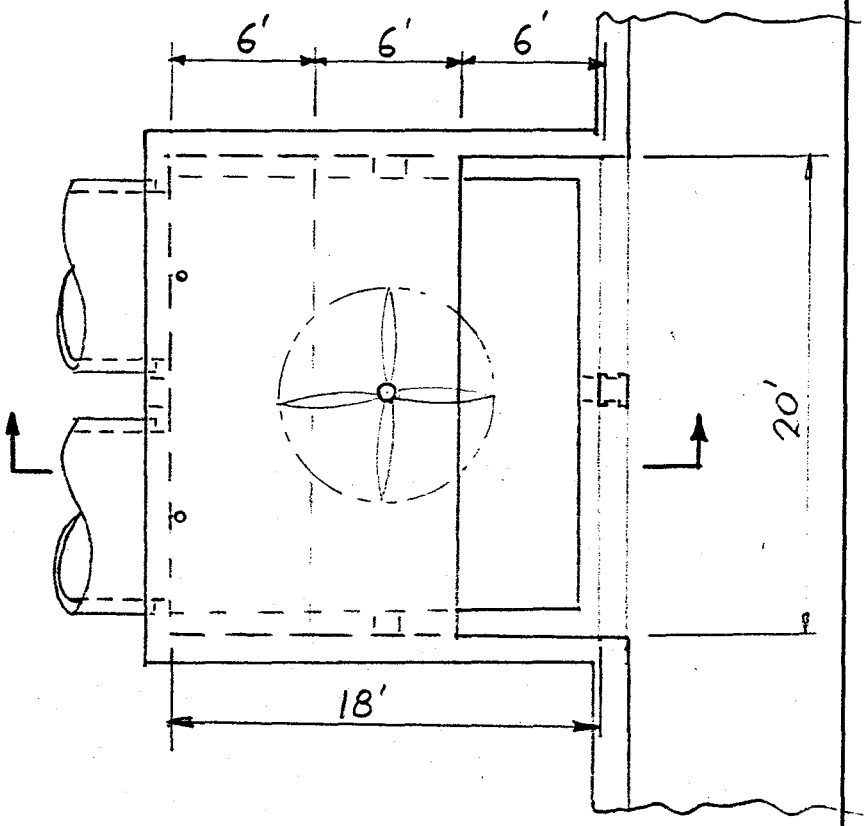

ASSUME 2' DEEP BEAM IS SIMPLE SPAN

$DL = [(6)(2) + (6)(1)/2].15 = 2.25^{KLF}$

$LL = (0.20)(6 + 6/2) = 1.80$

$\omega = 4.05^{KLF}$

$M_{\mathbb{C}} = (35)(20)/4 + (4.05)(20)^2/8 + \ldots$
$53.25/2 = 404^{K\text{-}FT}$

$d = 24 - 2 - .5 - 1.27/2 = 20.87''$

$A_s = 10.77\ in^2$ (SEE F-12)

USE 8 #10's + 2 #7's

($A_p = 11.36\ in^2$)

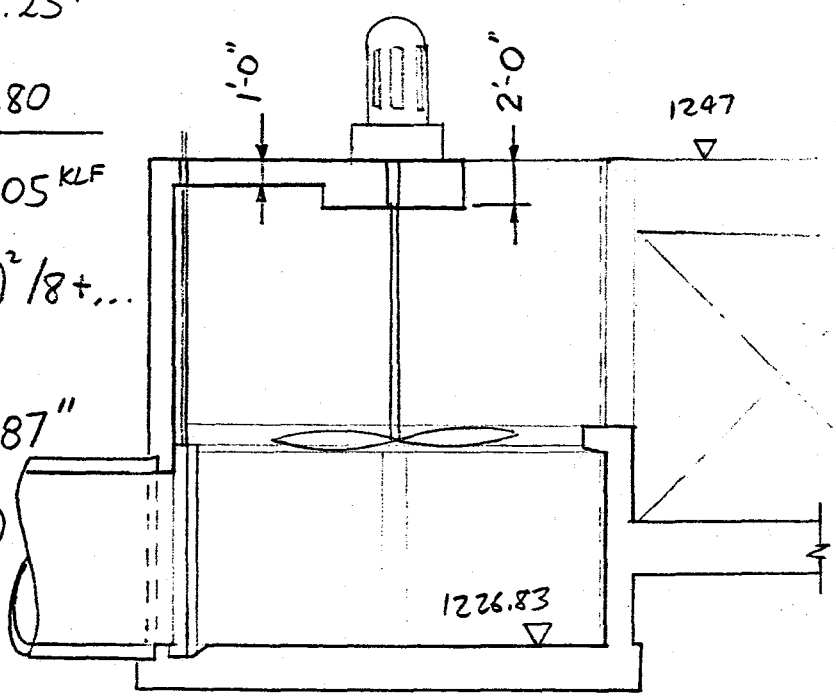

TOP SLAB (CONT.)

DETERMINE CUT-OFF FOR 2#10's & 2#7's (6 #10's REMAINING)

$A_s = (6)(1.27) = 7.62\ in^2$ $M_{CAP} = 290^{K\text{-}FT}$ (SEE F-12)

TRY 5.97' FROM SUPPORT:

$M = (35)(5.97)/2 + (4.05)(5.97)(20-5.97)/2 + (53.25)(5.97)/20 = 290^{K\text{-}FT}$

CUT-OFF 3 #10's @ $5.97 - \frac{20.87}{12} = 4'\text{-}3''$ FROM SUPPORT (11'-6" LONG)

CUT-OFF 2 MORE #10's (4 #10's REMAINING)

$A_s = (4)(1.27) = 5.08^{K\text{-}FT}$ $M_{CAP} = 196^{K\text{-}FT}$ (SEE F-12)

TRY 3.68' FROM SUPPORT:

$M = (35)(3.68)/2 + (4.05)(3.68)(20-3.68)/2 + (53.25)(3.68)/20 = 196^{K\text{-}FT}$

CUT-OFF 2 #10's @ $3.68 - \frac{20.87}{12} = 2'\text{-}0''$ FROM SUPPORT (16' LONG)

DETERMINE CUT-OFF FOR 2#7's (8 #10's REMAINING)

$A_s = (8)(1.27) = 10.16\ in^2$ $M_{CAP} = 382^{K\text{-}FT}$

TRY 9.00' FROM SUPPORT:

$M = (35)(9)/2 + (4.05)(9)(20-9)/2 + (53.25)(9)/20 = 382^{K\text{-}FT}$ ✓

CUT-OFF 2#7's @ $9.00 - \frac{20.87}{12} = 7'\text{-}3''$ FROM SUPPORTS (5'-6' LG)

project: BY-PASS CONDUIT AT SQUAW PEAK WTP job: 3249C.10
client: FLOOD CONTROL DISTRICT OF MARICOPA CTY. design: RDT date: 7/17/90
subject: CONCRETE STRESS ANALYSIS & DESIGN checked: date:

WORKING STRESS DESIGN
*** TOP SLAB, MOMENT @ CENTERLINE
MOMENT GIVEN, FIND As

ALLOWABLE CONCRETE FLEXURAL STRESS = 1350. psi
ALLOWABLE STEEL TENSILE STRESS = 24.0 ksi
STEEL YIELD STRESS = 60. ksi
MODULAR RATIO (Es/Ec) = 9.29

WIDTH OF SECTION = 72.00 in
DEPTH OF SECTION = 20.87 in

APPLIED MOMENT = 404.00 k-ft
CALCULATED STEEL AREA REQUIRED = 10.77 sq in
MINIMUM FLEXURE STEEL AREA = 5.01 sq in

WORKING STRESS DESIGN
*** TOP SLAB, CAPACITY OF 5 #10's
As GIVEN, FIND MOMENT CAPACITY, STRESSES

ALLOWABLE CONCRETE FLEXURAL STRESS = 1350. psi
ALLOWABLE STEEL TENSILE STRESS = 24.0 ksi
STEEL YIELD STRESS = 60. ksi
MODULAR RATIO (Es/Ec) = 9.29

WIDTH OF SECTION = 72.00 in
DEPTH OF SECTION = 20.87 in

STEEL AREA PROVIDED = 5.08 sq in
MOMENT CAPACITY = 196.41 k-ft
CONCRETE FLEXURAL STRESS = 734. psi
STEEL TENSILE STRESS = 24.00 ksi

WORKING STRESS DESIGN
*** TOP SLAB, CAPACITY OF 6 # 10's
As GIVEN, FIND MOMENT CAPACITY, STRESSES

ALLOWABLE CONCRETE FLEXURAL STRESS = 1350. psi
ALLOWABLE STEEL TENSILE STRESS = 24.0 ksi
STEEL YIELD STRESS = 60. ksi
MODULAR RATIO (Es/Ec) = 9.29

WIDTH OF SECTION = 72.00 in
DEPTH OF SECTION = 20.87 in

STEEL AREA PROVIDED = 7.62 sq in
MOMENT CAPACITY = 290.13 k-ft
CONCRETE FLEXURAL STRESS = 924. psi
STEEL TENSILE STRESS = 24.00 ksi

MIXER BEAM SHEAR

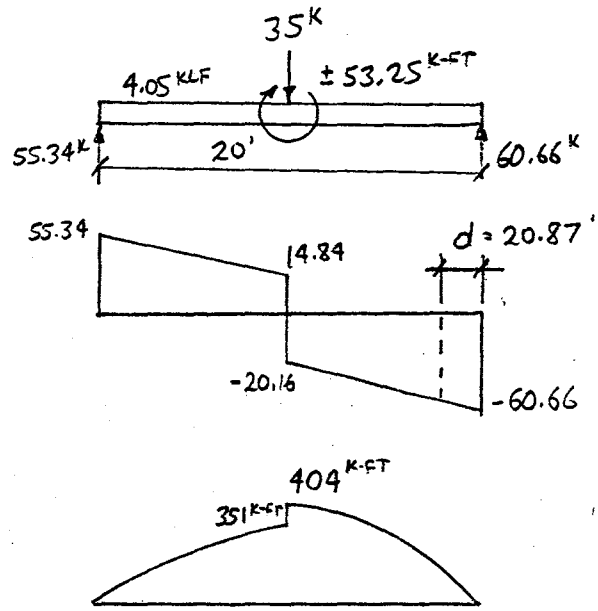

$V_d = 60.66 - 4.05(20.87/12) = 53.6^K$

ALLOWABLE $v_c = 1.1\sqrt{f'_c} = .060$ KSI

$v = 53.6/(72)(20.87) = .036$ KSI
(< .060)

MIN SHEAR REINF. REQ'D

$A_v = (4)(.20) = 0.80 \text{ in}^2$

$s \le (.80)(60)/(72)(.05) = 13.3''$

$d/2 = 20.87/2 = 10.4''$ (< 13.3)

USE #4 STIRPUPS @ 10" O.C. IN OUTER QUARTERS
AND @ 20" O.C. IN MIDDLE HALF

SLAB TWIX WALL & BEAM

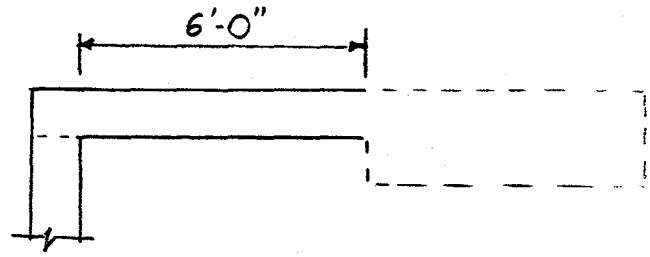

$W = \overset{DL}{.15} + \overset{LL}{.20} = .35$ KSF

ONE WAY SLAB

$M = (.35)(6)^2/8 = 1.58^{K\text{-}FT}/_{FT}$

USE #5@12" EW T & B

INLET BOX WALLS

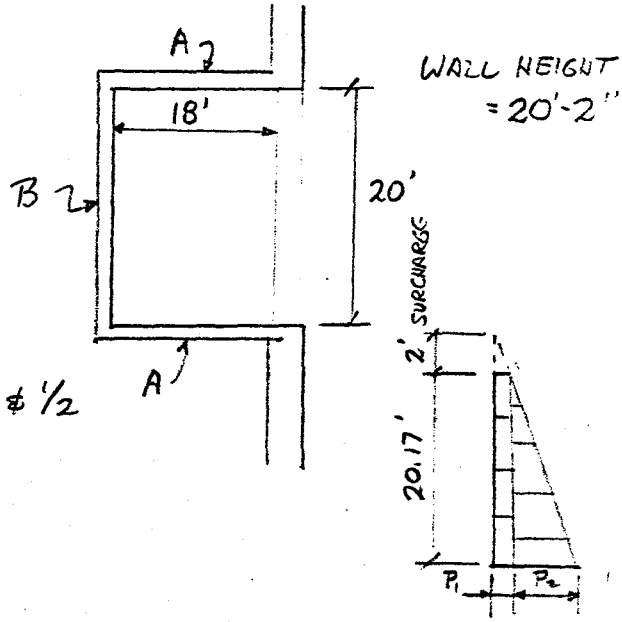

CASE 1 - EARTH PRESSURE ONLY

WALLS "A" $a = 18/2 = 9$

$b = 20.17$

$a/b = 0.45$

USE FIGS. 1 & 4, INTERPOLATE TWIX 3/8 & 1/2

$P_1 = (2)(.055) = 0.11^{KSF}$

$P_2 = (20.17)(.055) = 1.11^{KSF}$

MAX. CANT. MOMENT AT BASE:

$M = (.0428)(.11)(20.17)^2 + (.0271)(1.11)(20.17)^2 = 14.2^{K\text{-}FT}/_{FT}$

$b = 12''$; $d = 12 - 2 - .75/2 = 9.63''$; $A_s = 0.82^{in^2}/_{ft}$ (SEE SHT. F-15)

USE # 6 @ 6"

CAPACITY OF # 6 @ 12" = $7.81^{K\text{-}FT}/_{FT}$ (SEE F-15)

CUT-OFF HALF OF #6's AT $(0.2)(20.17) + 9.62/12 = 4'\text{-}10''$ ABOVE TOF

TOP EDGE

$M = (.0352)(.11)(20.17)^2 + (.0075)(1.11)(20.17)^2 = 4.95^{K\text{-}FT}/_{FT}$

SIDE EDGES

$M_{1.0} = (.0690)(.11)(20.17)^2 + (.0114)(1.11)(20.17)^2 = 8.25^{K\text{-}FT}/_{FT}$

OR

$M_{0.4} = (.0474)(.11)(20.17)^2 + (.0247)(1.11)(20.17)^2 = 13.3^{K\text{-}FT}/_{FT}$ ← GOVERNS

Cont...

project: BY-PASS CONDUIT AT SQUAW PEAK WTP job: 3249C.10
client: FLOOD CONTROL DISTRICT OF MARICOPA CTY. design: RDT date: 7/18/90
subject: CONCRETE STRESS ANALYSIS & DESIGN checked: date:

WORKING STRESS DESIGN
*** INLET BOX, 18' WALL, CANTILEVE
MOMENT GIVEN, FIND As

ALLOWABLE CONCRETE FLEXURAL STRESS = 1350. psi
ALLOWABLE STEEL TENSILE STRESS = 24.0 ksi
STEEL YIELD STRESS = 60. ksi
MODULAR RATIO (Es/Ec) = 9.29

WIDTH OF SECTION = 12.00 in
DEPTH OF SECTION = 9.63 in

APPLIED MOMENT = 14.20 k-ft
CALCULATED STEEL AREA REQUIRED = .82 sq in
MINIMUM FLEXURE STEEL AREA = .38 sq in

WORKING STRESS DESIGN
*** INLET BOX, CAPACITY #6 @ 12"
As GIVEN, FIND MOMENT CAPACITY, STRESSES

ALLOWABLE CONCRETE FLEXURAL STRESS = 1350. psi
ALLOWABLE STEEL TENSILE STRESS = 24.0 ksi
STEEL YIELD STRESS = 60. ksi
MODULAR RATIO (Es/Ec) = 9.29

WIDTH OF SECTION = 12.00 in
DEPTH OF SECTION = 9.63 in

STEEL AREA PROVIDED = .44 sq in
MOMENT CAPACITY = 7.81 k-ft
CONCRETE FLEXURAL STRESS = 785. psi
STEEL TENSILE STRESS = 24.00 ksi

WORKING STRESS DESIGN
*** COUNTERFORT
MOMENT GIVEN, FIND As

ALLOWABLE CONCRETE FLEXURAL STRESS = 1350. psi
ALLOWABLE STEEL TENSILE STRESS = 24.0 ksi
STEEL YIELD STRESS = 60. ksi
MODULAR RATIO (Es/Ec) = 9.29

WIDTH OF SECTION = 24.00 in
DEPTH OF SECTION = 21.00 in

APPLIED MOMENT = 115.50 k-ft
CALCULATED STEEL AREA REQUIRED = 3.04 sq in
MINIMUM FLEXURE STEEL AREA = 1.68 sq in

WALLS (Cont.)

WALL B HAS TWO LARGE HOLES

WALL "B"
HINGED AT TOP
USE FIGS 10 & 13

$a = 20/2 = 10$
$b = 20.17$
$a/b = 0.50$

AT BASE: $M_1 = (.0512)(.11)(20.17)^2 + (.0320)(1.11)(20.17)^2 = 16.74^{K\text{-}FT/FT}$

SIMILARLY:

$M_{0.8} = 15.78^{K\text{-}FT/FT}$
$M_{0.6} = 13.02^{K\text{-}FT/FT}$
$M_{0.4} = 8.65^{K\text{-}FT/FT}$
$M_{0.2} = 3.49^{K\text{-}FT/FT}$

TOTAL APPROXIMATE MOMENT ALONG BASE (TRIB WIDTH = 2 × (.2)(10) = 4')

$M_T = (16.74 + 15.78 + 13.02 + 8.65 + 3.49)(4) = 231^{K\text{-}FT}$

INSUFFIENT WALL TO DEVELOP MOMENT BELOW TOP OF PIPE
PROVIDE COUNTERFORT AT CENTERLINE TO TAKE HALF OF MOMENT – EACH SIDE WALL WILL TAKE ONE QUARTER

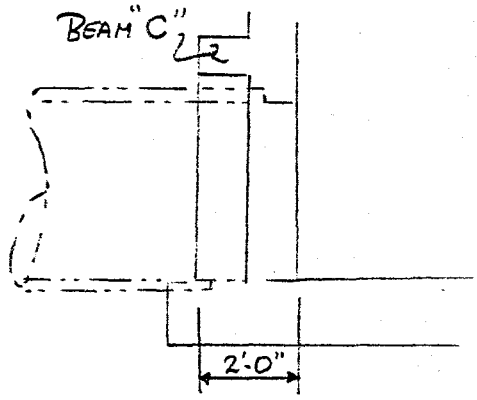

$M = 231/2 = 115.5^{K\text{-}FT}$

$b = 24''$, $d = 24 - 2 - .5 - 1/2 = 21.0''$

$A_s = 3.04\ in^2$ (SEE F-15)

USE 4 #8 ($A_p = 3.16\ in^2$)

~~WALL ABOVE BEAM "C"~~ $a = 10'$, $b = 20.17 - 9.17 = 11'$
$a/b = 0.91$ – USE 1.0 (FIGS 11 & 13)

$M_{MAX} = (.1093)(.11)(11)^2 + (.0543)(1.11)(11)^2 = 9.42^{K\text{-}FT}$

$A_s = 0.57\ in^2/ft$ (SEE SHT F-18) USE #5 @ 6" VERT

BEAM "C" (CONT)

REACTION FROM WALL ABOVE - R_A

$P_1 = (2)(.055) = .11^{KSF}$

$P_2 = (11)(.055) = .61^{KSF}$

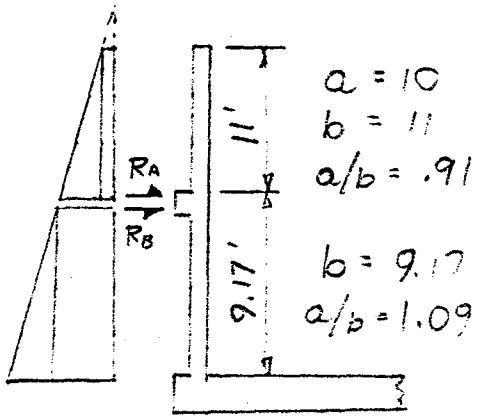

REACTION FROM WALL/PIPES BELOW - R_B

$P_1 = (13)(.055) = .72^{KSF}$

$P_2 = (9.17)(.055) = .50^{KSF}$

USE a/b = 1 FOR BOTH UPPER & LOWER

$$R_A = (4)(11)\left[(.11)(.2379+.4659+.5707+.6115+.6218)+\ldots (.61)(.2009+.3255+.3761+.3944+.3988)\right] = 57.65^{K}$$

$$R_B = (4)(9.17)\left[(.72)(.1304+.3059+.3709+.3922+.3969)+\ldots (.50)(.0024+.0716+.0989+.1081+.1102)\right] = 49.31^{K}$$

APPROX UNIFORM REACTION $= (57.65+49.31)/20 = 5.35^{KLF}$

SEE SHT F-17a

$b = 12''$, $d = 24-2-.5-.5 = 21''$

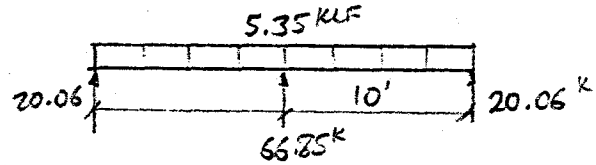

FOR $M = +37.61$, $A_s = .97\,in^2$ (SEE F-18)

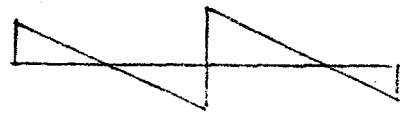

USE 3 #5 (WATER SIDE)

FOR $M = -66.90^{K\text{-}FT}$, $A_s = 1.77\,in^2$ (SEE F-18)

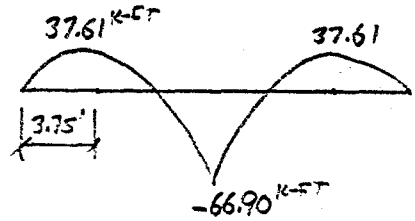

USE 3 #7 (EARTH SIDE)

project: SQUAW PEAK WTP BY-PASS CONDUIT job: 3249C.10
client: FCDMC design: RDT date: 7/18/90
subject: ANALYSIS OF CONTINUOUS BEAM checked: date:

BEAM "C" FOR EARTH PRESSURE ONLY

NUMBER OF SPANS = 2 MODULUS OF ELASTICITY = 3122. ksi
LEFT SUPPORT IS PINNED RIGHT SUPPORT IS PINNED

SPAN # 1 L = 10.00 ft I = 13824.0000 in**4 # LOADS = 1
DISTRIBUTED Wa = 5.350 Wb = 5.350 a = .000 b = 10.000
FEMl = -44.5833 FEMr = -44.5833

SPAN # 2 L = 10.00 ft I = 13824.0000 in**4 # LOADS = 1
DISTRIBUTED Wa = 5.350 Wb = 5.350 a = .000 b = 10.000
FEMl = -44.5833 FEMr = -44.5833

SPAN	DISTANCE feet	SHEAR kips	MOMENT k-ft	DEFLECTION inches	REACTION kips	ROTATION radians
					20.06	-.3719E-03
1	.00	20.06	.00	.00000		
	3.75	.00	37.62*	-.01144		
	4.22	-2.49	37.04	-.01160*		
	10.00	-33.43	-66.81	.00000		
					66.88	-.9239E-11
2	.00	33.44	-66.87	.00000		
	5.79	2.49	37.04	-.01160*		
	6.25	.00	37.62*	-.01144		
	10.00	-20.05	.04	-.00001		
					20.06	.3719E-03

BIDDING SCHEDULE

Project: Squaw Peak Water Treatment Plant
Bypass Line

Contract: FCD 90-31

Item No.	Approximate Quantity	Unit	Description	Unit Cost (in writing) and /100 Dollars	Unit Cost	Extended Amount
206-1	1	LS	Structural Excavation and Backfill			
211-1	1	LS	Fill Construction			
505-1	1348	CY	Structural Concrete			
505-2	1	LS	Demolition and Removals at Existing Pump Station No. 2 Forebay			
505-3	244,000	LS	Reinforcing Steel			
515-1	1	LS	Miscellaneous Steel			
520-1	1	LS	Miscellaneous Aluminum			
1500-1	70	LF	96" R.G.R.C.P. Class II, With Fittings and Bulkhead			
1500-2	1	LS	Relocate Existing 4" PVC Waterline, 6" and 8" Sludge Lines			
1500-3	1	LS	Connection of 96" R.G.R.C.P. at Existing Junction Structure			
1600-1	1	LS	Relocate Existing Electric			
1600-2	380	LF	Concrete Duct Bank			
1600-3	6	EA	Electrical Manholes/Pull Boxes			

TOTAL BID AMOUNT: _____

The Bidder hereby acknowledges receipt of and agrees his proposal is based on the following addenda.

project: BY-PASS CONDUIT AT SQUAW PEAK WTP job: 3249C.10
client: FLOOD CONTROL DISTRICT OF MARICOPA CTY. design: RDT date: 7/18/90
subject: CONCRETE STRESS ANALYSIS & DESIGN checked: date:

WORKING STRESS DESIGN
*** BEAM "C", POSITIVE MOMENT
MOMENT GIVEN, FIND As

ALLOWABLE CONCRETE FLEXURAL STRESS = 1350. psi
ALLOWABLE STEEL TENSILE STRESS = 24.0 ksi
STEEL YIELD STRESS = 60. ksi
MODULAR RATIO (Es/Ec) = 9.29

WIDTH OF SECTION = 12.00 in
DEPTH OF SECTION = 21.00 in

APPLIED MOMENT = 37.61 k-ft
CALCULATED STEEL AREA REQUIRED = .97 sq in
MINIMUM FLEXURE STEEL AREA = .84 sq in

WORKING STRESS DESIGN
*** BEAM "C", NEGATIVE MOMENT
MOMENT GIVEN, FIND As

ALLOWABLE CONCRETE FLEXURAL STRESS = 1350. psi
ALLOWABLE STEEL TENSILE STRESS = 24.0 ksi
STEEL YIELD STRESS = 60. ksi
MODULAR RATIO (Es/Ec) = 9.29

WIDTH OF SECTION = 12.00 in
DEPTH OF SECTION = 21.00 in

APPLIED MOMENT = 66.90 k-ft
CALCULATED STEEL AREA REQUIRED = 1.77 sq in
MINIMUM FLEXURE STEEL AREA = .84 sq in

WORKING STRESS DESIGN
*** WALL ABOVE BEAM "C"
MOMENT GIVEN, FIND As

ALLOWABLE CONCRETE FLEXURAL STRESS = 1350. psi
ALLOWABLE STEEL TENSILE STRESS = 24.0 ksi
STEEL YIELD STRESS = 60. ksi
MODULAR RATIO (Es/Ec) = 9.29

WIDTH OF SECTION = 12.00 in
DEPTH OF SECTION = 9.06 in

APPLIED MOMENT = 5.83 k-ft
CALCULATED STEEL AREA REQUIRED = .35 sq in
MINIMUM FLEXURE STEEL AREA = .36 sq in
1-1/3 CALCULATED STEEL AREA = .46 sq in

WALL MOMENT ABOVE BEAM "C" (SEE F-17) (FIGS 10 & 13)

$M_{BASE} = (.1093)(.11)(11)^2 + (.0593)(.61)(11)^2 = 5.83^{K\text{-}FT}/_{FT}$

$A_S =$ .46 in²/ft - USE #5@6" CUT-OFF HALF of BARS AT (.2)(11) + 9.062/12 = 3'-0" ABOVE T.O. BEAM

HORZ MOMENTS (ABOUT VERT AXIS)

$M^{+}_{MAX} = (.0227)(.11)(11)^2 + (.0098)(.61)(11)^2 = 1.03^{K\text{-}FT}$ (NEGLIBLE)

$M^{-}_{MAX} = (.0662)(.11)(11)^2 + (.0289)(.61)(11)^2 = 3.02^{K\text{-}FT}$ (NEGLIBLE)

DIST HORZ MOMENTS (SEE SHT. F-14)

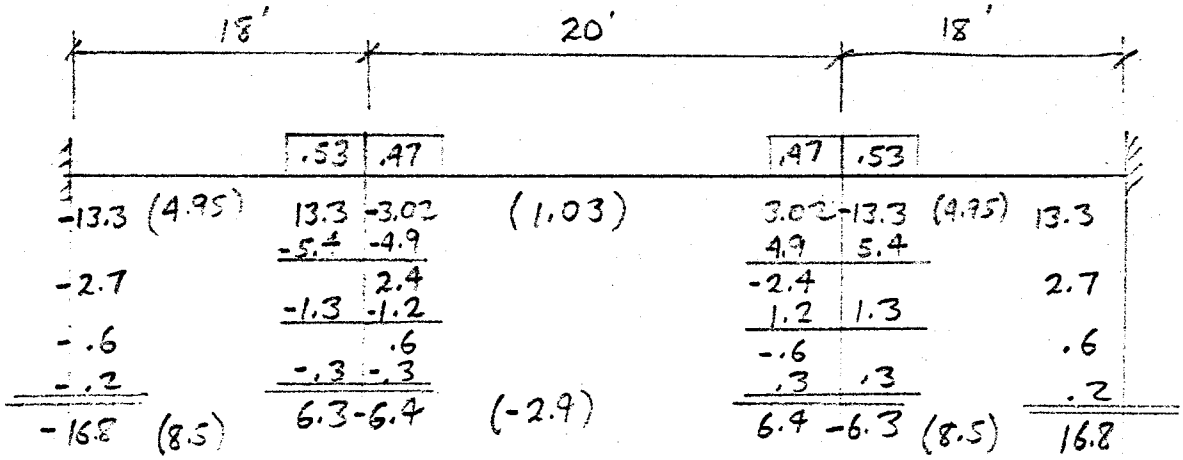

$M_{POS} = 8.5 \Rightarrow A_S = 0.51$ in²/ft (F-20) #5 @ 6"

$M_{NEG} = -6.4 \Rightarrow A_S = 0.38$ in²/ft (F-20) #4@12" + #5@12"

$M_{NEG} = -16.8 \Rightarrow A_S = 1.05$ in²/ft (F-20) #5@12" + #6@6"

project: BY-PASS CONDUIT AT SQUAW PEAK WTP job: 3249C.10
client: FLOOD CONTROL DISTRICT OF MARICOPA CTY. design: RDT date: 7/18/90
subject: CONCRETE STRESS ANALYSIS & DESIGN checked: date:

WORKING STRESS DESIGN
*** HORZ POSITIVE WALL MOMENT
MOMENT GIVEN, FIND As

ALLOWABLE CONCRETE FLEXURAL STRESS = 1350. psi
ALLOWABLE STEEL TENSILE STRESS = 24.0 ksi
STEEL YIELD STRESS = 60. ksi
MODULAR RATIO (Es/Ec) = 9.29

WIDTH OF SECTION = 12.00 in
DEPTH OF SECTION = 9.06 in

APPLIED MOMENT = 8.50 k-ft
CALCULATED STEEL AREA REQUIRED = .51 sq in
MINIMUM FLEXURE STEEL AREA = .36 sq in

WORKING STRESS DESIGN
*** HORZ NEGATIVE WALL MOMENT
MOMENT GIVEN, FIND As

ALLOWABLE CONCRETE FLEXURAL STRESS = 1350. psi
ALLOWABLE STEEL TENSILE STRESS = 24.0 ksi
STEEL YIELD STRESS = 60. ksi
MODULAR RATIO (Es/Ec) = 9.29

WIDTH OF SECTION = 12.00 in
DEPTH OF SECTION = 9.06 in

APPLIED MOMENT = 6.40 k-ft
CALCULATED STEEL AREA REQUIRED = .38 sq in
MINIMUM FLEXURE STEEL AREA = .36 sq in

WORKING STRESS DESIGN
*** HORZ NEG WALL MOM AT CHANNEL
MOMENT GIVEN, FIND As

ALLOWABLE CONCRETE FLEXURAL STRESS = 1350. psi
ALLOWABLE STEEL TENSILE STRESS = 24.0 ksi
STEEL YIELD STRESS = 60. ksi
MODULAR RATIO (Es/Ec) = 9.29

WIDTH OF SECTION = 12.00 in
DEPTH OF SECTION = 9.06 in

APPLIED MOMENT = 16.80 k-ft
CALCULATED STEEL AREA REQUIRED = 1.05 sq in
MINIMUM FLEXURE STEEL AREA = .36 sq in

CASE 2 - HYDROSTATIC - NO EARTH PRESSURE

$a = 18/2 = 9'$

$a/b = 0.59 \Rightarrow$ INTERP. TWIX ½ & ¾

WALLS "A" - SEE SHT. F-14

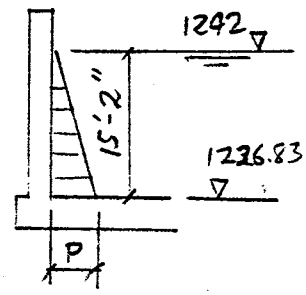

$P = (.0624)(15.17) = 0.946$

MAX CANT MOMENT AT BASE (FIG 4)

$M = (.0422)(.946)(15.17)^2 = 9.18^{K\text{-}FT}/_{FT}$

$d = 9.625"$, $A_s = 0.52\ in^2/ft$ (SHT. F-22) USE #5 @ 6"

CUT-OFF HALF AT $(0.2)(15.17) + 9.625/12 =$ 3'-10" ABOVE TOF

HORZ MAX POS MOM IN WALL (AT $x/a = 1$, $y/b = 0.6$)

$M = (.0153)(.946)(15.17)^2 = 3.34^{K\text{-}FT}/_{FT}$

HORZ MAX NEG MOM IN WALL (AT $x/a = 0$, $y/b = 0.6$)

$M = (.0330)(.946)(15.17)^2 = 7.19^{K\text{-}FT}/_{FT}$

WALL B ABOVE BEAM "C" $a = 10'$, $b = 6'$ $a/b = 1.67$ CANTILEVER

$R_A = (20)(.0624)(6)^2/2 = 22.46^K$

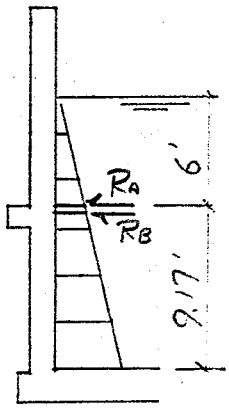

BELOW BEAM "C" $b = 9.17$ $a/b = 1.1$ - USE $a/b = 1$

$P_1 = (6)(.0624) = .374$

$P_2 = (9.17)(.0624) = .572$

$R_B = (4)(9.17)[(.374)(\text{SEE F-17}) + (.572)(\text{SEE F-17})] = 30.1^K$

$w = (22.46 + 30.1)/20 = 2.63^{KLF}$

project: BY-PASS CONDUIT AT SQUAW PEAK WTP job: 3249C.10
client: FLOOD CONTROL DISTRICT OF MARICOPA CTY. design: RDT date: 7/18/90
subject: CONCRETE STRESS ANALYSIS & DESIGN checked: date:

WORKING STRESS DESIGN
*** HYDRO CASE, WALL "A" BOTTOM
MOMENT GIVEN, FIND As

ALLOWABLE CONCRETE FLEXURAL STRESS = 1350. psi
ALLOWABLE STEEL TENSILE STRESS = 24.0 ksi
STEEL YIELD STRESS = 60. ksi
MODULAR RATIO (Es/Ec) = 9.29

WIDTH OF SECTION = 12.00 in
DEPTH OF SECTION = 9.63 in

APPLIED MOMENT = 9.18 k-ft
CALCULATED STEEL AREA REQUIRED = .52 sq in
MINIMUM FLEXURE STEEL AREA = .38 sq in

WORKING STRESS DESIGN
*** BEAM "C", Mpos, HYDROSTATIC
MOMENT GIVEN, FIND As

ALLOWABLE CONCRETE FLEXURAL STRESS = 1350. psi
ALLOWABLE STEEL TENSILE STRESS = 24.0 ksi
STEEL YIELD STRESS = 60. ksi
MODULAR RATIO (Es/Ec) = 9.29

WIDTH OF SECTION = 12.00 in
DEPTH OF SECTION = 21.00 in

APPLIED MOMENT = 18.49 k-ft
CALCULATED STEEL AREA REQUIRED = .47 sq in
MINIMUM FLEXURE STEEL AREA = .84 sq in
1-1/3 CALCULATED STEEL AREA = .62 sq in

WORKING STRESS DESIGN
*** BEAM "C", Mneg, HYDROSTATIC
MOMENT GIVEN, FIND As

ALLOWABLE CONCRETE FLEXURAL STRESS = 1350. psi
ALLOWABLE STEEL TENSILE STRESS = 24.0 ksi
STEEL YIELD STRESS = 60. ksi
MODULAR RATIO (Es/Ec) = 9.29

WIDTH OF SECTION = 12.00 in
DEPTH OF SECTION = 21.00 in

APPLIED MOMENT = 32.84 k-ft
CALCULATED STEEL AREA REQUIRED = .84 sq in
MINIMUM FLEXURE STEEL AREA = .84 sq in

project: SQUAW PEAK WTP BY-PASS CONDUIT job: 3249C.10
client: FCDMC design: RDT date: 7/18/90
subject: ANALYSIS OF CONTINUOUS BEAM checked: date:

BEAM "C"

NUMBER OF SPANS = 2 MODULUS OF ELASTICITY = 3122. ksi
LEFT SUPPORT IS PINNED RIGHT SUPPORT IS PINNED

SPAN # 1 L = 10.00 ft I = 13824.0000 in**4 # LOADS = 1
DISTRIBUTED Wa = 2.630 Wb = 2.630 a = .000 b = 10.000
FEM1 = -21.9167 FEMr = -21.9167

SPAN # 2 L = 10.00 ft I = 13824.0000 in**4 # LOADS = 1
DISTRIBUTED Wa = 2.630 Wb = 2.630 a = .000 b = 10.000
FEM1 = -21.9167 FEMr = -21.9167

SPAN	DISTANCE feet	SHEAR kips	MOMENT k-ft	DEFLECTION inches	REACTION kips	ROTATION radians
					9.86	-.1828E-03
1	.00	9.86	.00	.00000		
	3.75	.00	18.49*	-.00562		
	4.22	-1.22	18.21	-.00570*		
	10.00	-16.43	-32.84	.00000		
					32.88	-.4620E-11
2	.00	16.44	-32.88	.00000		
	5.79	1.22	18.21	-.00570*		
	6.25	.00	18.49*	-.00562		
	10.00	-9.86	.02	.00000		
					9.86	.1828E-03

BEAM "C" SEE SHT. F-23

$d = 21''$ $b = 12''$

$M^{+}_{MAX} = 18.49^{K\text{-}FT}$ $A_s = .62\ in^2$ (SEE F-22) (3#7's OK ✓)

$M^{-}_{MAX} = -32.84^{K\text{-}FT}$ $A_s = .84\ in^2$ (SEE F-22) (3#5's OK ✓)

WALL MOMENT ABOVE BEAM "C" $b = 11'$ $a/b = 10/11 = .91$-SAY 1
USE FIG 14

$M^{+}_{MAX} = (.0052)(.374)(11)^2 = .24^{K\text{-}FT/FT}$

$M^{-}_{MAX} = (.0161)(.374)(11)^2 = .73^{K\text{-}FT/FT}$

DISTRIBUTE HORZ MOMENTS

		.53	.47		.47	.53		
-7.19	(3.34)	7.19	-.73	(.24)	.73	-7.19	(3.34)	7.19
		-3.42	-3.06		3.06	3.42		
-1.71			1.53		-1.53			1.71
		-.81	-.72		.72	.81		
-.41			.36		-.36			.41
		-.19	-.17		.17	.19		
-9.31	(4.49)	2.77	-2.79	(-1.82)	2.79	-2.77	(4.49)	9.31

FOR $M = 9.31^{K\text{-}FT/FT}$ $A_s = 0.56\ in^2/ft$ (SEE F-25)

ADD #5@12"

project: BY-PASS CONDUIT AT SQUAW PEAK WTP job: 3249C.10
client: FLOOD CONTROL DISTRICT OF MARICOPA CTY. design: RDT date: 7/18/90
subject: CONCRETE STRESS ANALYSIS & DESIGN checked: date:

WORKING STRESS DESIGN
*** WALL "A" AT CONDUIT
MOMENT GIVEN, FIND As

ALLOWABLE CONCRETE FLEXURAL STRESS = 1350. psi
ALLOWABLE STEEL TENSILE STRESS = 24.0 ksi
STEEL YIELD STRESS = 60. ksi
MODULAR RATIO (Es/Ec) = 9.29

WIDTH OF SECTION = 12.00 in
DEPTH OF SECTION = 9.06 in

APPLIED MOMENT = 9.31 k-ft
CALCULATED STEEL AREA REQUIRED = .56 sq in
MINIMUM FLEXURE STEEL AREA = .36 sq in

WORKING STRESS DESIGN
*** FLOOR SLAB, CAPACITY #5 @ 12"
As GIVEN, FIND MOMENT CAPACITY, STRESSES

ALLOWABLE CONCRETE FLEXURAL STRESS = 1350. psi
ALLOWABLE STEEL TENSILE STRESS = 24.0 ksi
STEEL YIELD STRESS = 60. ksi
MODULAR RATIO (Es/Ec) = 9.29

WIDTH OF SECTION = 12.00 in
DEPTH OF SECTION = 16.06 in

STEEL AREA PROVIDED = .31 sq in
MOMENT CAPACITY = 9.43 k-ft
CONCRETE FLEXURAL STRESS = 487. psi
STEEL TENSILE STRESS = 24.00 ksi

WORKING STRESS DESIGN
*** FLOOR SLAB, CAPACITY #5 @ 12"
As GIVEN, FIND MOMENT CAPACITY, STRESSES

ALLOWABLE CONCRETE FLEXURAL STRESS = 1350. psi
ALLOWABLE STEEL TENSILE STRESS = 22.0 ksi
STEEL YIELD STRESS = 60. ksi
MODULAR RATIO (Es/Ec) = 9.29

WIDTH OF SECTION = 12.00 in
DEPTH OF SECTION = 16.06 in

STEEL AREA PROVIDED = .31 sq in
MOMENT CAPACITY = 8.65 k-ft
CONCRETE FLEXURAL STRESS = 446. psi
STEEL TENSILE STRESS = 22.00 ksi

FLOOR $a = 18, \quad b = 20 \quad a/b = 0.90$

INTERPOLATE TWIX 7/8 & 1 ON FIG. 34

STRUCTURE WEIGHT (TRIB. TO FLOOR)

$$\{(20.17)(1)[21 + 2 \times 19.5] + (9.17)(1)(20) + (1)(20)(6) + (2)(20)(6) + \ldots$$
$$+ (19 + 18 + 18)(1)(1) + (4)(1)(1)(9.17) + (2)(1)(9.17) + (1)(1)(22)\} \cdot .15$$
$$= 286^K$$

SOIL ON LIP $= [(2)(19) + 18](.5)(20.17)(0.12) = 68^K$

LIVE LOAD ON SLAB $= (22)(13)(0.200) = 57^K$

$P_T = 286 + 68 + 57 + \overset{\text{MIXER}}{35} + \overset{\text{GATES}}{14} = 460^K$ EMPTY, LESS FLOOR SLAB

NET SOIL PRESSURE $= 460/(23)(21) = 0.952^{KSF}$

POSITIVE MOMENTS (TENSION IN TOP OF SLAB)

REINF IN SHORT DIR, $M^+ = (.0256)(.952)(18)^2 = 7.90^{K\text{-}FT/FT}$

REINF IN LONG DIR, $M^+ = (.0210)(.952)(18)^2 = 6.48^{K\text{-}FT/FT}$

FOR $d = 20 - 3 - 1.5(.625) = 16.06''$ & #5@12"

$M_{CAP} = 8.65^{K\text{-}FT/FT}$

NEGATIVE MOMENTS $d = 20 - 3 - .75/2 = 16.63''$

REINF IN SHORT DIR. $M^- = (.0574)(.952)(18)^2 = 17.69^{K\text{-}FT/FT}$

REINF IN LONG DIR $M^- = (.0524)(.952)(18)^2 = 16.16^{K\text{-}FT/FT}$

$A_S = 0.67 in^2/ft$ (SEE F-27) USE #5@12" + ≈ 6@12"

project: BY-PASS CONDUIT AT SQUAW PEAK WTP job: 3249C.10
client: FLOOD CONTROL DISTRICT OF MARICOPA CTY. design: RDT date: 7/18/90
subject: CONCRETE STRESS ANALYSIS & DESIGN checked: date:

WORKING STRESS DESIGN
*** FLOOR SLAB, BOTTOM REINF.
MOMENT GIVEN, FIND As

ALLOWABLE CONCRETE FLEXURAL STRESS = 1350. psi
ALLOWABLE STEEL TENSILE STRESS = 22.0 ksi
STEEL YIELD STRESS = 60. ksi
MODULAR RATIO (Es/Ec) = 9.29

WIDTH OF SECTION = 12.00 in
DEPTH OF SECTION = 16.63 in

APPLIED MOMENT = 17.69 k-ft
CALCULATED STEEL AREA REQUIRED = .62 sq in
MINIMUM FLEXURE STEEL AREA = .67 sq in
1-1/3 CALCULATED STEEL AREA = .83 sq in

JOHN CAROLLO ENGINEERS

BY RCA DATE 7/18/90 SUBJECT SQUAW PEAK BY-PASS SHEET NO. F-28 OF

CHKD. BY MGM DATE JOB NO. 3249C.10

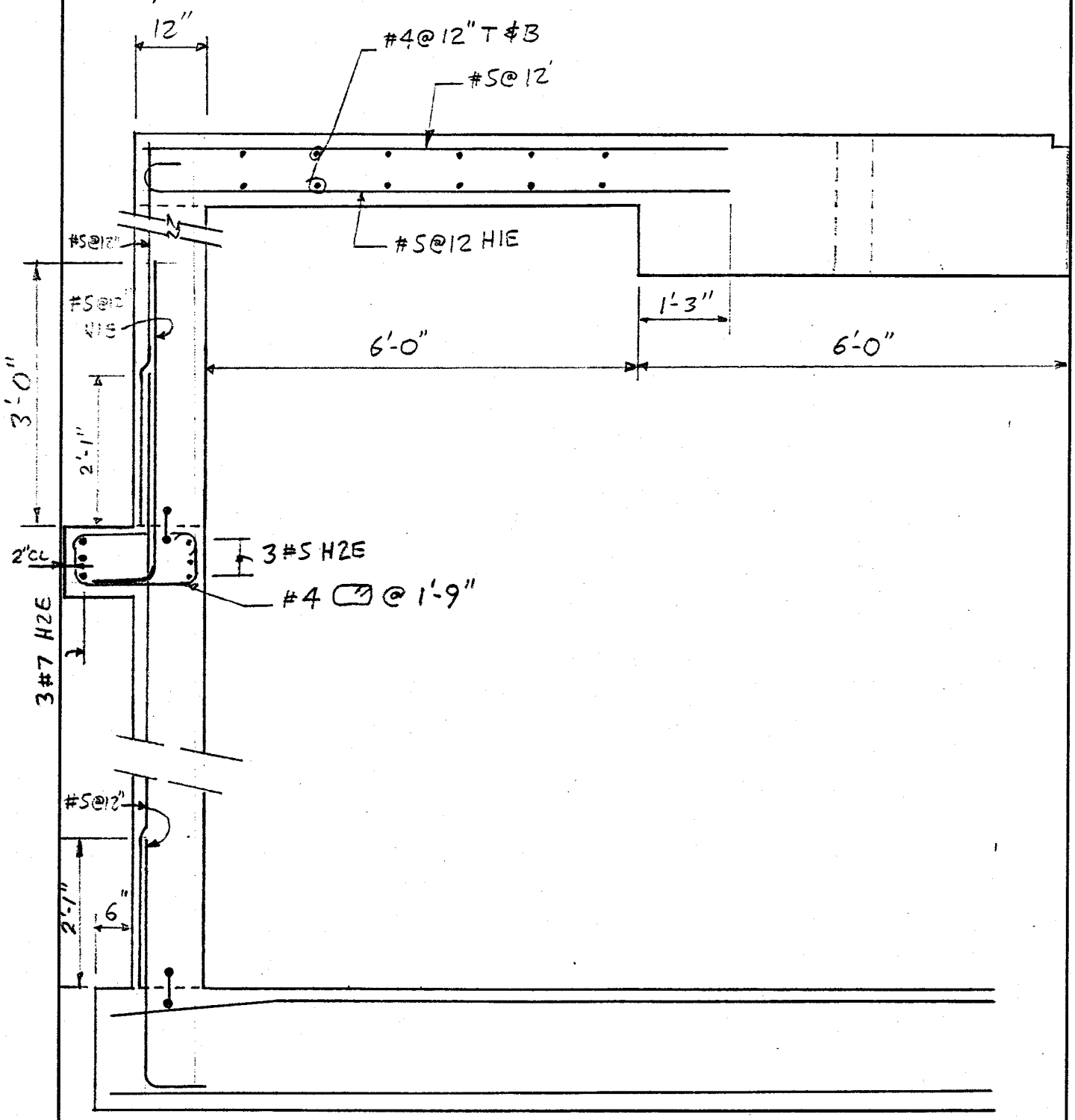

JOHN CAROLLO ENGINEERS

BY RDT DATE ..... SUBJECT SQUAW PEAK BY-PASS SHEET NO. F-29 OF .....
CHKD. BY DATE ..... JOB NO. 324C.10

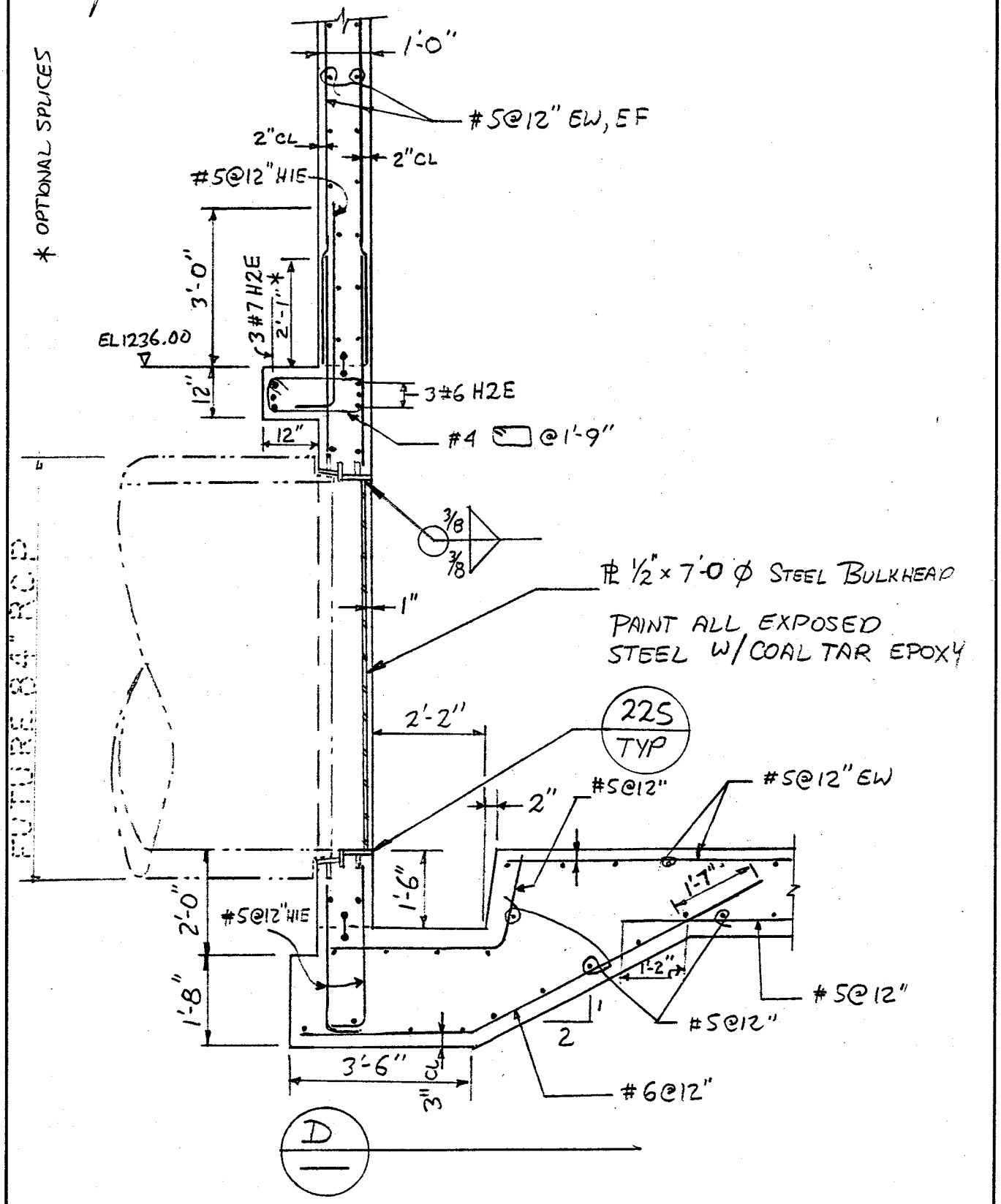

JOHN CAROLLO ENGINEERS

BY RDT DATE ..... SUBJECT SQUAW PEAK BY-PASS SHEET NO. F-30 OF .....
CHKD. BY DATE ..... JOB NO. 3249C.10

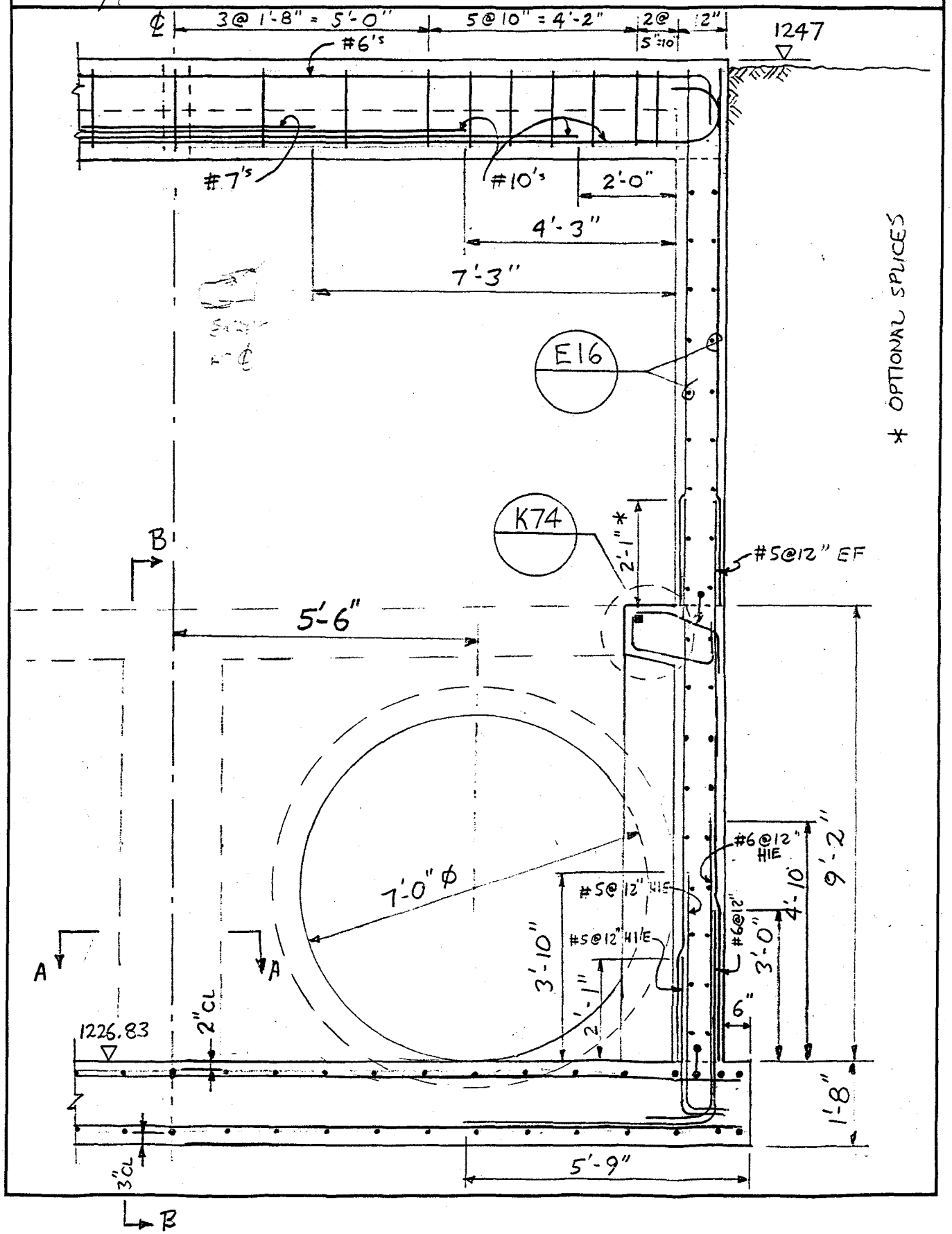

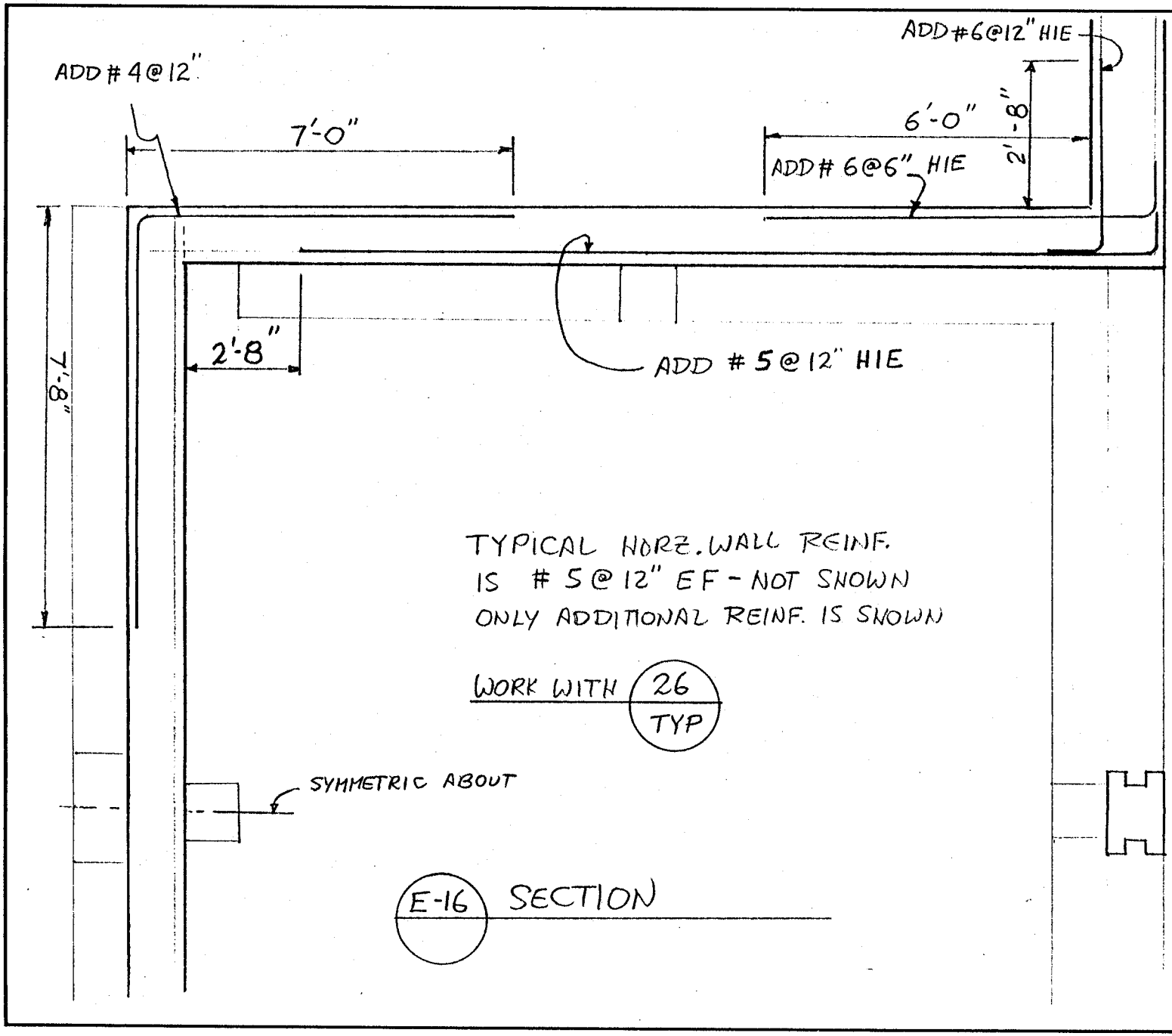

JOHN CAROLLO ENGINEERS

BY RDD DATE ..... SUBJECT SQUAW PEAK BY-PASS SHEET NO. F-31 OF .....

CHKD. BY DATE ..... JOB NO. 3249C.10

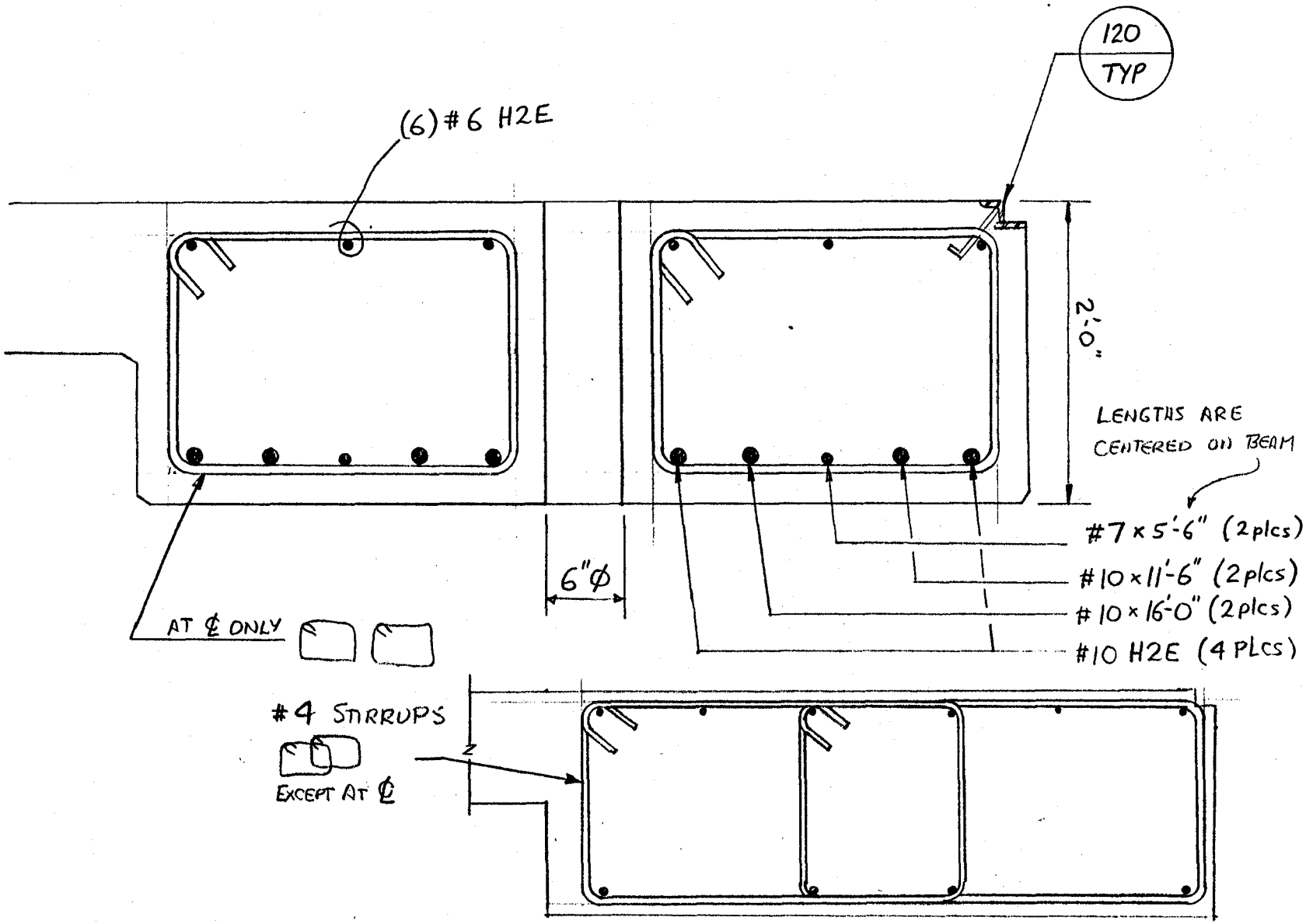

JOHN CAROLLO ENGINEERS

BY RBA DATE 7/17/90 SUBJECT SQUAW PEAK BY-PASS SHEET NO. F-32 OF

CHKD. BY MC DATE JOB NO. 3249C.10

JOHN CAROLLO ENGINEERS

BY RSJ DATE ..... SUBJECT SQUAW PEAK BY-PASS SHEET NO. F-33 OF .....
CHKD. BY MHB DATE ..... JOB NO. 3249C.10

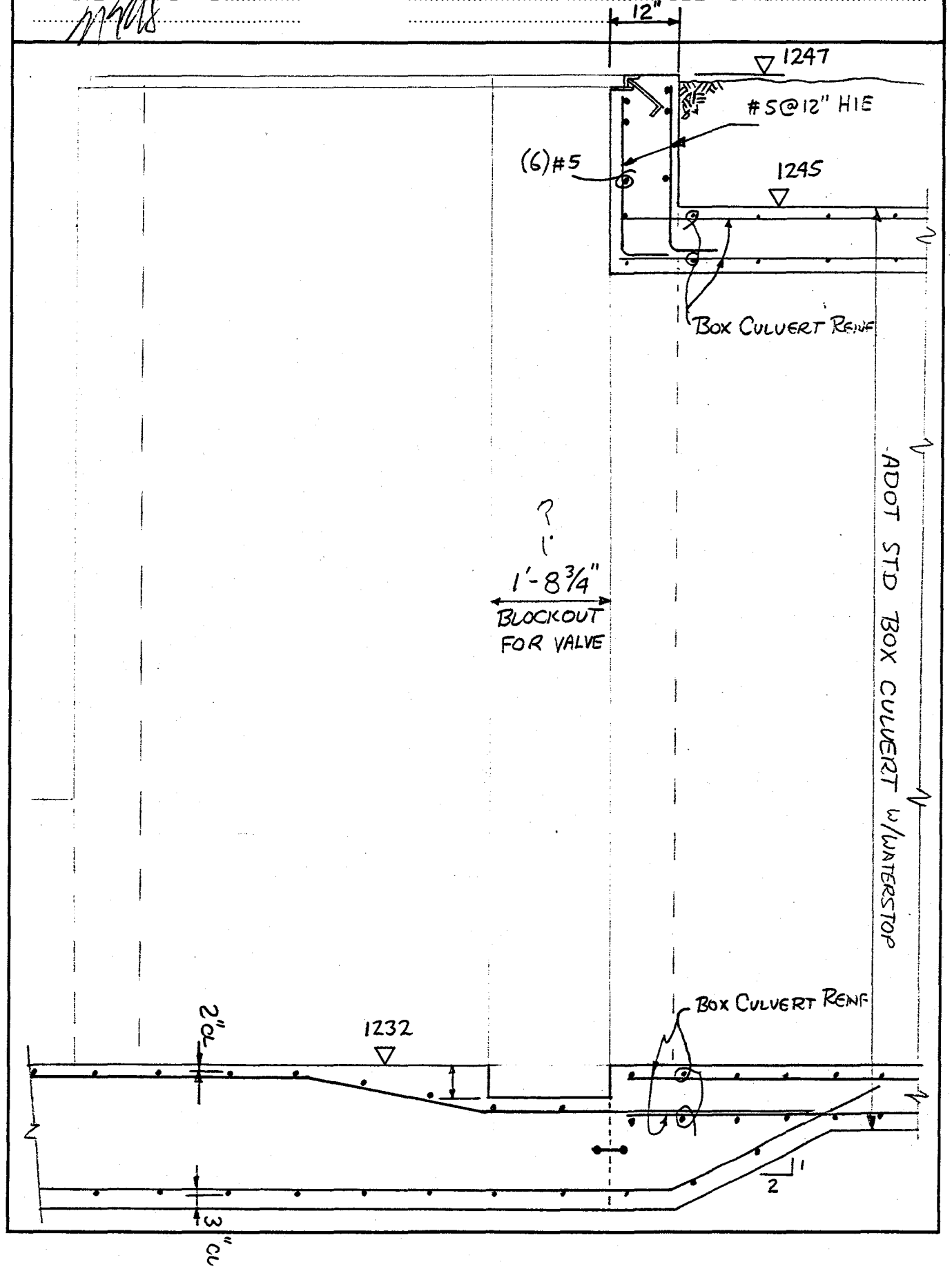

JOHN CAROLLO ENGINEERS

BY ..... DATE ..... SUBJECT ..... SHEET NO. F-34 OF .....
CHKD. BY ..... DATE ..... JOB NO. 3299C.10

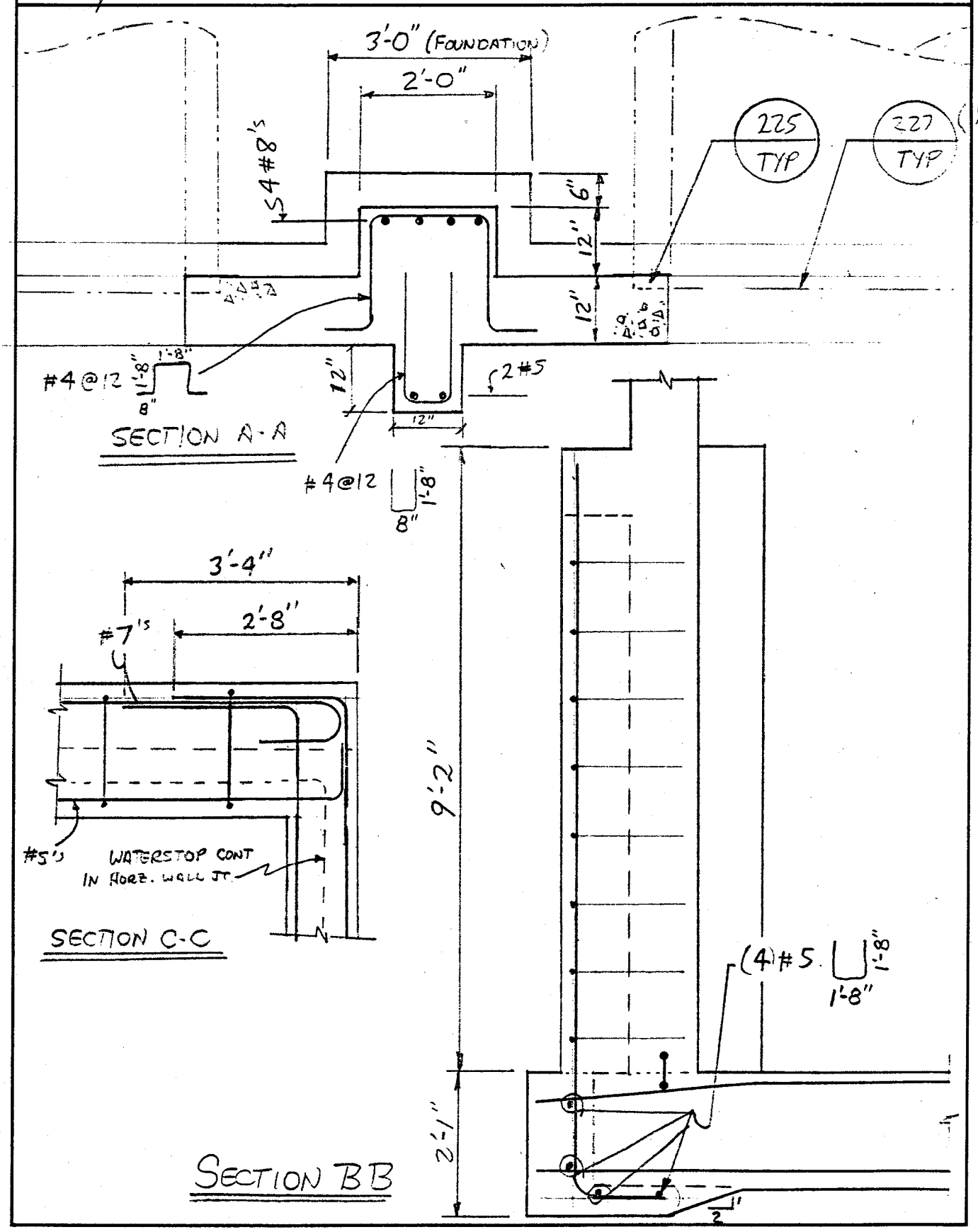

JOHN CAROLLO ENGINEERS

BY RDT DATE 7/17/90 SUBJECT ..... SHEET NO. F-35 OF .....
CHKD. BY ..... DATE ..... JOB NO. 3249C.10

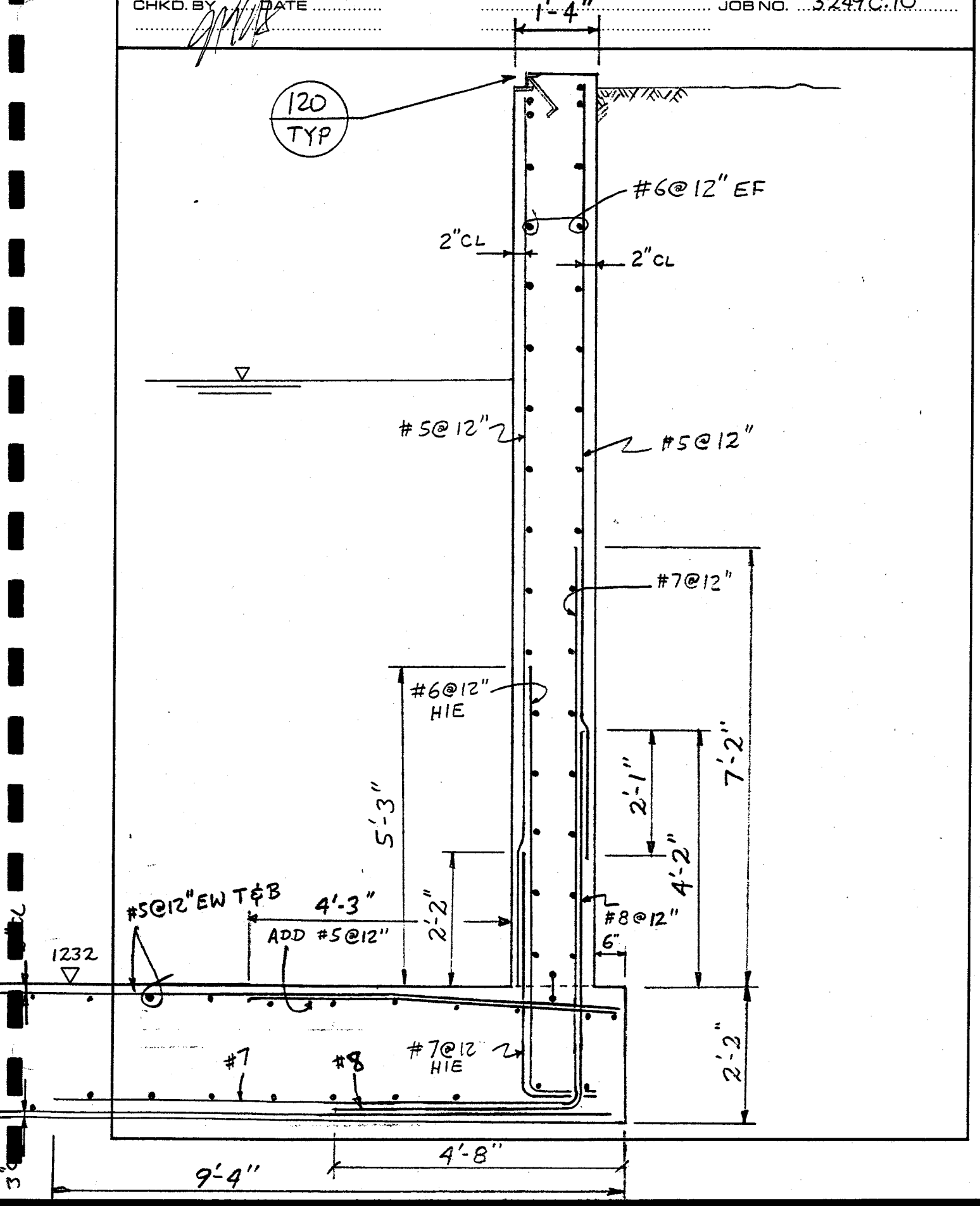

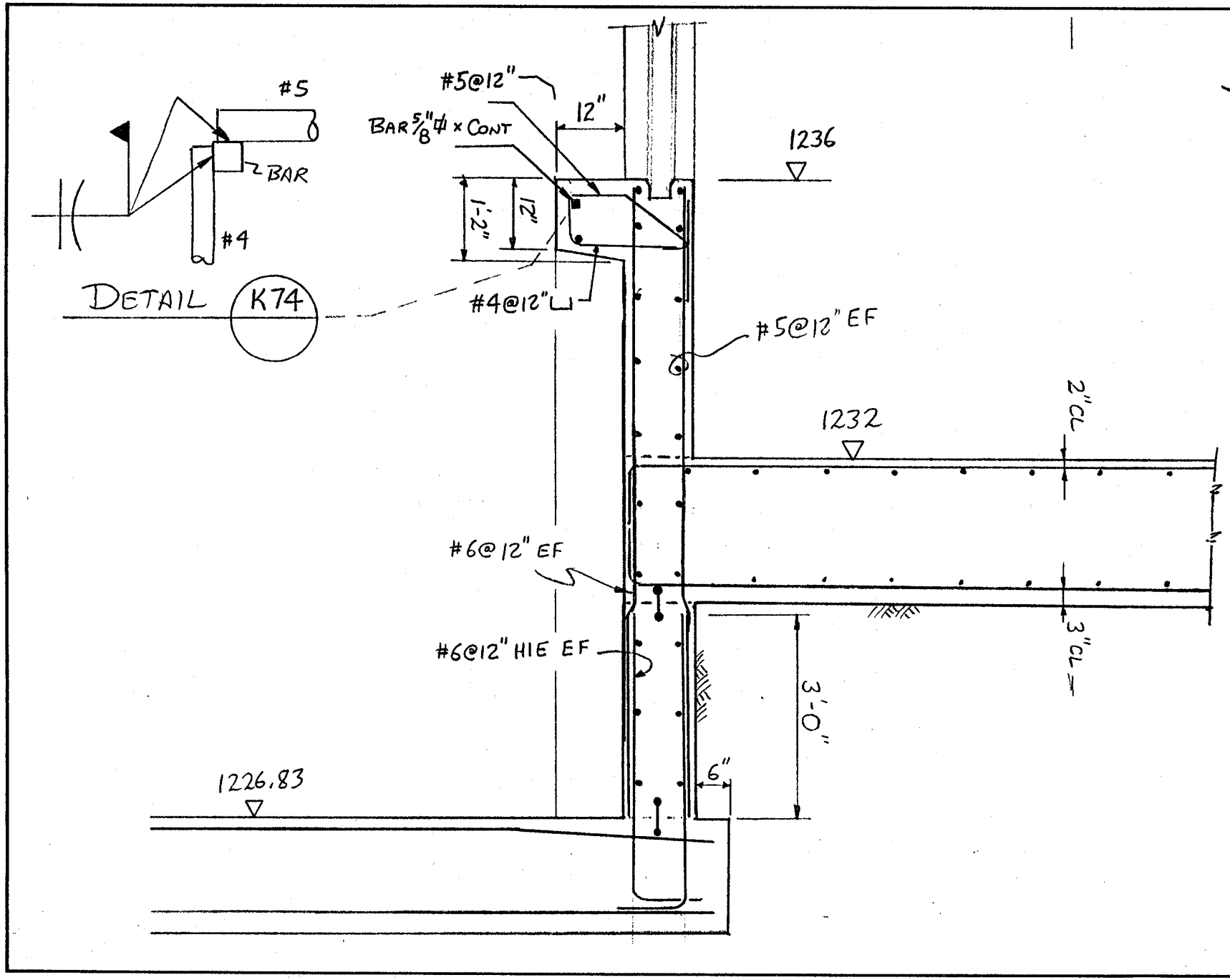

JOHN CAROLLO ENGINEERS

BY RBS DATE 7/17/20 SUBJECT SHEET NO. F-36 OF

CHKD. BY DATE JOB NO. 3249C.10

JOHN CAROLLO ENGINEERS

BY RDT DATE 7/26/90 SUBJECT SQUAW PEAK WTP SHEET NO. G-1 OF
CHKD BY DATE JOB NO. 3249 C.10
BY-PASS

QUANTITIES

ADOT STD BOX CULVERTS

12'Φ - 458.67' 10'×12' 103.72'
4' RETURNS 8
466.67' - 36 = 430.67

CONCRETE (430.67)(2.219) + (103.72)(1.988) = **1162 CY**

REINF (430.67)(414.3) + (103.72)(353.4) = **215,100 LBS**

EXCAVATION

ADOT STD C-13.35

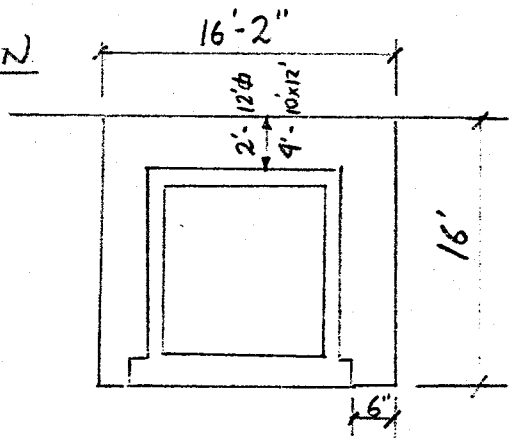

$A = (16.17)(16)/27 = 9.58$ CY/FT

$V_E = (430.67 + 103.72)(9.58) =$ **5119 CY**

BACKFILL

ADOT STD C-13.50

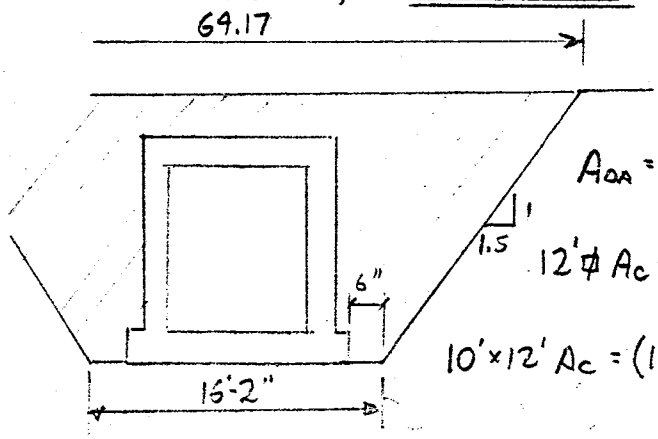

$A_{OA} = (64.17 + 16.17)(16)/2 = 642.67$ SF

12'Φ $A_C = (13)(15.17) + (1)(16.17) = 213.33$

10'×12' $A_C = (11)(15.17) + (1)(16.17) = 183$

$V_B = [(430.67)(642.67 - 213.33) + (103.72)(642.67 - 183)]/27 = 8614$ CY

JOHN CAROLLO ENGINEERS

BY RBT DATE 7/26/90 SUBJECT SQUAW PEAK WTP SHEET NO. G-2 OF
CHKD. BY DATE JOB NO. 3249C.10
BY-PASS

96" RCP

L = 63 LF

ADOT STD C-13.15

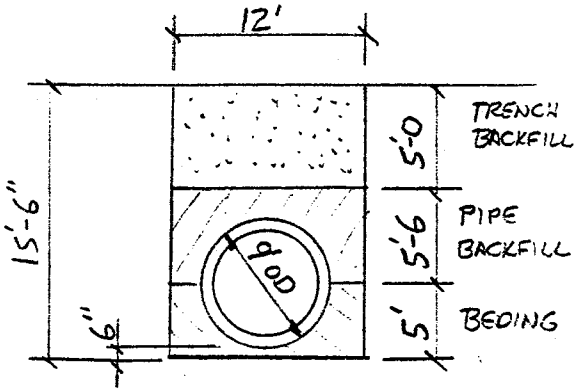

TRENCH BKFL = (12)(5)(63)/27 = 140 CY

PIPE BKFL = [(12)(5.5) - π(9)²/8](63)/27 = 80 CY

BEDDING = [(12)(5) - π(9)²/8](63)/27 = 66 CY

BULKHEAD IN FOREBAY

[(14.5)(1) + (3)(.5)](7.67)/27 = 5 CY

REINF:

#4: (8)(2)(14.33) = 229
(14+3)(9.42) = 160
(8)(2)(2.42) = 39
428' x .668 = 286 LBS

#5 (11)(6) = 66' x 1.043 = 69

#6: (2)(9)(9.42) = 170' x 1.502 = 255

610 LBS

JOHN CAROLLO ENGINEERS

BY RDT DATE 7/26/90 SUBJECT SQUAW PEAK BY-PASS QUANTITIES SHEET NO. G-3 OF
CHKD. BY DATE JOB NO. 3249C.10

DEMOLITION

$$[(35.65)(23') + (7.67)(14.5)(1.0)]/27 = 35 CY$$

SAY 100 TONS

CHEMICAL FEED CHAMBER

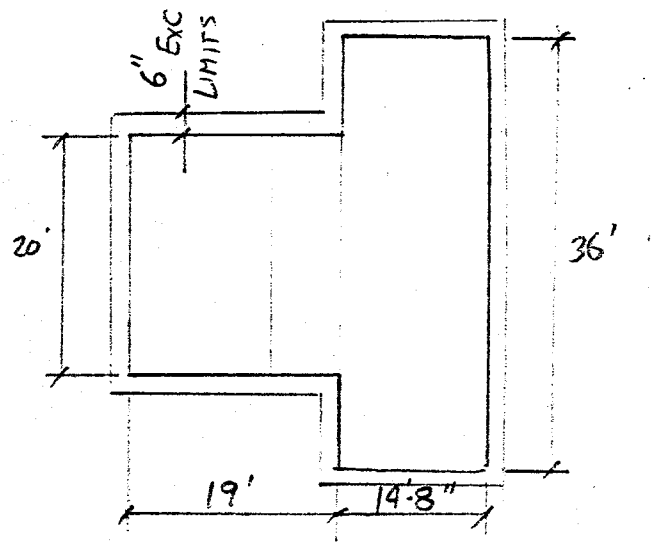

EXCAVATION (ADOT STD. C-13.35)

$$[(21)(19.5)(23) + (15.67)(16)(16.17) + (20)(15.17)(16.17)]/27 = \underline{681 CY}$$

BACKFILL (ADOT STD C-13.50)

USE 1½H:1V SIDESLOPES

ASSUME TRUNCATED PYRAMID WITH
BOTTOM AREA = $(36)^2$ = 1296 ft^2
SURFACE AREA = 8622
AVG DEPTH = 19'

$$V = \frac{19}{3}\left(1296 + 8622 + \sqrt{(1296)(8622)}\right) =$$

83,970 ft^3

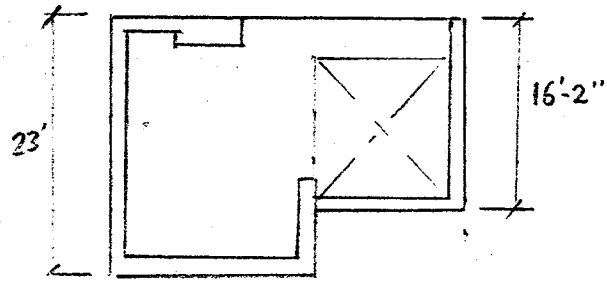

STRUCTURE

$$(19)(22)(23) + (16)(16.17)(36) = 18,926$$

$$BKFL = (83,970 - 18,926)/27 = 2409 CY$$

JOHN CAROLLO ENGINEERS

BY RDT DATE 7/26/90 SUBJECT SQUAW PEAK SHEET NO. G-4 OF
CHKD. BY DATE JOB NO. 3249C.10
BY-PASS

CHEM. FEED CHAMBER

CONCRETE:

NORTH WALL: (36)(1.33)(15)	=	720 ft³
EAST & WEST CURBS: 2(2)(1)(14.67)	=	59
UPPER FLOOR (36)(12)(2.17) + (36+16)(1.83)(2.17)	=	1,143
STOP LOG WALL (9.17)(20)(1)	=	183
EAST & WEST WALLS: (20.17)(1)(18)(2)	=	726
SOUTH WALL (20.17)(22)(1) - 2π(8)²/4	=	393
LOWER FLOOR (21)(23)(1.67)	=	805
TOP SLAB (6)(1)(20) + (6)(2)(20)	=	360
STOP LOG COLUMN (1)²(10)	=	10
MIXER BAFFLES (1)²(36+40+ 4×8.17)	=	109
SOUTH MONOLITHIC BEAM & COL (22)(1)² + (2)(1)(8.17)	=	38
		4546 ft³

$V = 4546/27 = 169$ CY

JOHN CAROLLO ENGINEERS

BY RBT DATE 7/26/90 SUBJECT SQUAW PEAK BY-PASS QUANTITIES SHEET NO. G-5 OF
CHKD. BY DATE JOB NO. 3249C.10

CHEM FEED CHAMBER

REINF.

N. WALL & 2 STUBS	#5:	(37+18)(12.75 + 14.83)	=	1517 × 1.043	= 1582 LBS
	#6:	(32)(36+16)+(37+18)(8.33)	=	2122 × 1.502	= 3188
	#7	(37+18)(5.25+10.25)	=	853 × 2.044	1743
	#8	(37+18)(7.42)	=	408 × 2.67	= 1089
HIGH FLOOR:	#5	(2)[(37)(14.50+5.92)+(16)(35.67)]	=	2652 × 1.043	= 2766
	#7	(37)(7.5)	=	278 × 2.044	= 567
	#8	(37)(2.67)		99 × 2.67	= 263
STOP LOG WALL:	#5	(17)(22.50) + (21)(2.83)	=	442 × 1.043	= 461
	#4	(21)(3.17)	=	67 × 0.668	= 44
	#6	(2)(21)(9+5.42)	=	606 × 1.502	= 909
COLUMN	#4	(22)(1.17+3.17)	=	95 × 0.668	64
	#7	(4)(11.98)	=	48 × 2.044	= 98
EAST & WEST CURBS	#5	(6)(15.95) + (2)(13)(3.5)	=	187 × 1.043	= 195
EAST & WEST WALLS	#5:	2[(2)(19)(20') + (19)(8.17) + (2)(2.08)(19) + ... (42)(21.67)]	=	3809 × 1.043	= 3972
	#6:	2[(19)(12.67)]	=	481 × 1.502	= 723
SOUTH WALL	#5:	(2)(20)(7) + (2)(15)(16) + (2)(22)(2.08) + ... +(2)(2.25)(22)	=	951 × 1.043	= 992
		NORTH (13)(23.33)(2) + (9)(15.33)(2)	=	883 × 1.043	= 921
LOW FLOOR	#5	(2)(23)(20.67) + (2)(22)(22.67)	=	1948 × 1.043	= 2032
	#6	(23)(9.39)	=	216 × 1.502	= 324

TOTAL THIS SHEET = 21,933 LBS

JOHN CAROLLO ENGINEERS

BY RDT DATE 7/26/90 SUBJECT SQUAW PEAK BY-PASS QUANTITIES SHEET NO. G-6 OF
CHKD. BY MKH DATE JOB NO. 3249C.10

REINF. Cont.

ADDITIONAL HORZ REINF	#4	(21)(14.67)(2)	= 616	× 0.668	= 411 lbs.
	#5	(21)(17.0)(2)	= 714	× 1.043	= 745
	#6	(21)(9.17)(2)	= 385	× 1.502	= 578
SOUTH WALL HORZ BM	#4	(12)(6.0)	= 72	× 0.668	= 48
	#6	(3)(23.67)	= 71	× 1.502	= 107
	#7	(3)(24)	= 72	× 2.044	= 147
VERT BM SOUTH WALL	#4	(8)(6.33)	= 51	× .668	= 34
	#8	(4)(13.75)	= 55	× 2.67	= 147
3 VERT. VANES	#4	(8)(2.33)(3)	= 56	× .668	= 37
	#5	(2)(10.25)(3)	= 62	× 1.043	= 64
HORZ VANE (2 WALLS EQUIV Φ BAR	#4	(33)(3.17)	= 105	× 0.668	= 70
	#5	(44)(2.83)	= 125	× 1.043	= 130
	#9	(50)	= 50	× 3.40	= 170
ELEV. SLAB	#4	(2)(6)(21.67)	= 260	× .668	= 174
	#5	(20)(8.08 + 8.45)	= 331	× 1.043	= 345
ELEV MIXER BEAM	#4	(19)(2)(10.98)	= 417	× 0.668	= 279
	#6	(6)(23.67)	= 142	× 1.502	= 213
	#7	2(5.5)	= 11	× 2.044	= 22
	#10	2(11.5 + 16 + 25.33)	= 106	× 4.303	= 455

TOTAL THIS SHEET 4,176
SHEET G-5 21,933

TOTAL 26,109

JOHN CAROLLO ENGINEERS

BY RST DATE 7/27/90 SUBJECT SQUAW PEAK BY-PASS QUANTITIES SHEET NO. G-7 OF
CHKD. BY DATE JOB NO. 3249C.10

STRUCTURAL ALUMINUM

W 10 × 8.646 [3 × 12'-11" + 6'-5½"](8.646) = 391 LBS

W 8 × 7.023 [4 × (7'-11½") + (6)(10'-6") + 2(10'-11½")](7.023) = 820

1211 LBS

ALUMINUM REBATE (114'-4")(1.641 PLF) = 188

ALUMINUM GRATING 587 SF (3.3 PSF) = 1935

3334

15% FOR CLIPS, BANDING & MISC = 500

TOTAL 3834

MISC STEEL

BELL RING INSERTS + TEMPORARY BULKHEADS

7' RINGS $[(1)(\pi)(7) + \pi(8^2 - 7^2)4]\left(\frac{.375}{12}\right)(490)(2) =$ 1034 LBS

7' BULKHEADS (½" THK)

$\pi(7)^2(.5/12)(490)(2)/4$ = 1571

8' BULKHEAD (⅝" THK)

$\pi(8)^2(.625/12)(490)/4$ = 1283

3888 LBS

8' RING 1182

5070 LBS

JOHN CAROLLO ENGINEERS

BY RET DATE 7/26/90 SUBJECT SQUAW PEAK 13A-PASS QUANTITIES SHEET NO. G-8 OF
CHKD. BY MKM DATE JOB NO. 3249C.10

WALL AT INFLUENT STRUCTURE (SHTS. C-10 TO C-16)

CONCRETE: $\left[(18.5)(15.5) - \pi(8)^2/4\right](1.17) + (11.17)(1.25)(3) = 318\ CF$
$= 12\ CY$

REINFORCEMENT:

#6's: $(10)(18.5 + 1.5 + 2.75) = 227.5' \times 1.502 = 342$ lbs.

#5's: HORZ: $(10)(14.5 + 1.5) = 160$
$(2)(18.5 + 1.5 + 2.17) = 44$
VERT: $(16)(15.33 + 1 + 2.17) = 296$
$(8)(15.33 + 1 - 4) = 99$

$599 \times 1.043 = 625$

967
TWO FACES ×2
1934

JOHN CAROLLO ENGINEERS

PHOENIX, AZ • WALNUT CREEK, CA
FOUNTAIN VALLEY, CA • VISALIA, CA
TUCSON, AZ • SAN DIEGO, CA

PROJECT SOURN PEAK
JOB NO. 3249C.10
STRUCTURE BY-PASS

COST ESTIMATE

ESTIMATOR RCT
DATE 7/27/90
SHEET NO. G-9 OF

ITEM

ITEM NO.	DESCRIPTION	QUANTITY & UNIT	UNIT PRICE	ADJUSTMENT	TOTAL
1.	STRUCTURAL EXCAVATION	5800CY	2.25		13,100
2.	STRUCTURAL BACKFILL	11,023CY	15.50		170,900
3.	STRUCTURAL CONCRETE	1348.CY	300.00		404,400
4.	STEEL REINFORCEMENT	243,753 LBS	.56		136,500
5.	96" RCP	70 LF	300		21,000
6.	STRUCTURAL DEMOLITION	133 TON	25.00		3,300
7.	STRUCTURAL ALUMINUM	3840 LBS	7.70		29,600
8	MISC STEEL (WELDMENTS)	5070 LBS	7.00		35,500
9	RELOCATE ELECTRICAL	1 LS			8,[illegible]
10	ELECTRICAL DUCT ENCASEMENT				
TOTAL					

H-1

A WATER RESOURCES TECHNICAL PUBLICATION

Engineering Monograph No. 27

Moments and Reactions for Rectangular Plates

By W. T. MOODY

Division of Design

Denver, Colorado

REGISTERED PROFESSIONAL ENGINEER
RAYMOND D. TROYER
No. C. E. 25106
CIVIL
STATE OF CALIFORNIA

United States Department of the Interior

BUREAU OF RECLAMATION

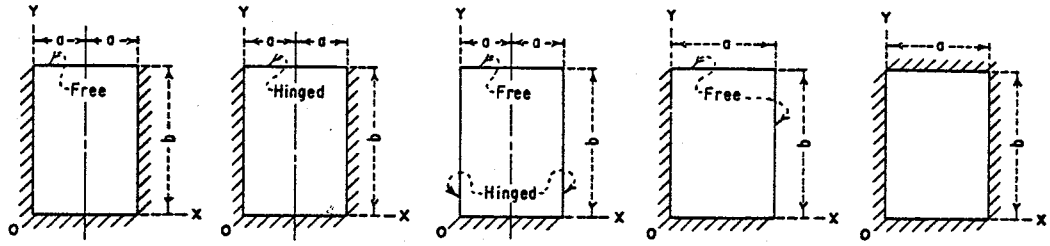

CASE 1
PLATE FIXED ALONG THREE EDGES AND FREE ALONG THE FOURTH EDGE

CASE 2
PLATE FIXED ALONG THREE EDGES AND HINGED ALONG THE FOURTH EDGE

CASE 3
PLATE FIXED ALONG ONE EDGE, FREE ALONG THE OPPOSITE EDGE, AND HINGED ALONG THE OTHER TWO EDGES

CASE 4
PLATE FIXED ALONG TWO ADJACENT EDGES AND FREE ALONG THE OTHER TWO EDGES

CASE 5
PLATE FIXED ALONG FOUR EDGES

BOUNDARY CONDITIONS

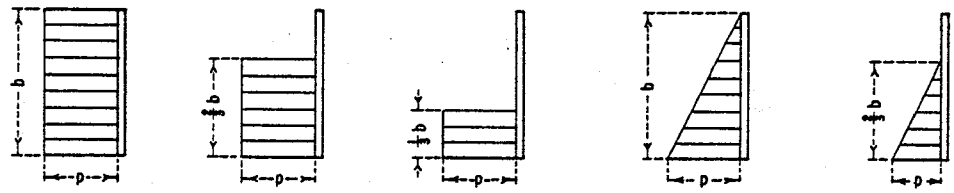

LOAD I
UNIFORM LOAD OVER THE FULL HEIGHT OF THE PLATE

LOAD II
UNIFORM LOAD OVER 2/3 THE HEIGHT OF THE PLATE

LOAD III
UNIFORM LOAD OVER 1/3 THE HEIGHT OF THE PLATE

LOAD IV
UNIFORMLY VARYING LOAD OVER THE FULL HEIGHT OF THE PLATE

LOAD V
UNIFORMLY VARYING LOAD OVER 2/3 THE HEIGHT OF THE PLATE

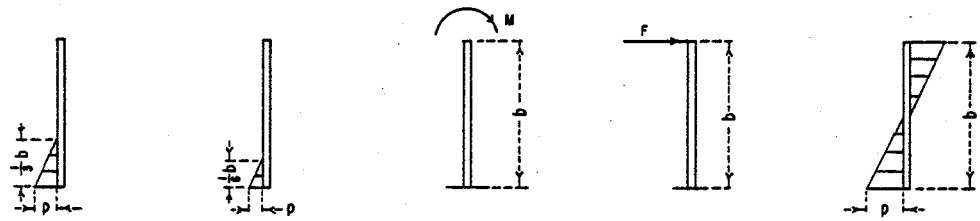

LOAD VI
UNIFORMLY VARYING LOAD OVER 1/3 THE HEIGHT OF THE PLATE

LOAD VII
UNIFORMLY VARYING LOAD OVER 1/6 THE HEIGHT OF THE PLATE

LOAD VIII
UNIFORM MOMENT ALONG THE EDGE $y = b$ FOR CASES 1, 2, AND 3

LOAD IX
UNIFORM LINE LOAD ALONG THE FREE EDGE FOR CASES 1 AND 3

LOAD X
UNIFORMLY VARYING LOAD $p = 0$ ALONG $y = b/2$

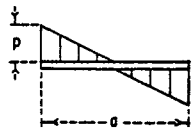

LOAD XI
UNIFORMLY VARYING LOAD $p = 0$ ALONG $x = a/2$

LOADING CONDITIONS

NOTES

The various cases are analyzed for the indicated ratios of a/b.

Cases 1, 2, and 3 : 1/8, 1/4, 3/8, 1/2, 3/4, 1, and 3/2.
Case 4 : 1/8, 1/4, 3/8, 1/2, 3/4, and 1.
Case 5 : 3/8, 1/2, 5/8, 3/4, 7/8, and 1.
All results are based on a Poisson's ratio of 0.2.

INDEX OF BOUNDARY AND LOADING CONDITIONS

—FRONTISPIECE

Method of Analysis

THE FINITE difference method is based on the usual approximate theory for the bending of thin plates subjected to lateral loads.[1]* The customary assumptions are made, therefore, with regard to homogeneity, isotropy, conformance with Hooke's law, and relative magnitudes of deflections, thickness, and lateral dimensions. (See Appendix II.)

Solution by finite differences provides a means of determining a set of deflections for discrete points of a plate subjected to given loading and edge conditions. The deflections are determined in such a manner that the deflection of any point, together with those of certain nearby points, satisfy finite difference relations which correspond to the differential expressions of the usual plate theory. These expressions relate coordinates and deflections to load and edge conditions.

*Numbers in superscript refer to publications in List of References on page 89.

In this study, for each load and ratio of lateral dimensions, deflections were determined at 30 or more grid points by solution of an equal number of simultaneous equations. A relatively closer spacing of points was used in some instances near fixed boundaries to attain the desired accuracy in this region of high curvature. For the a/b ratios 1/4 and 1/8, one and two additional sets, respectively, of five deflections were determined in the vicinity of the x axis. Owing to the limitations on computer capacity, these deflections were computed by solutions of supplementary sets of 20 equations whose right-hand members were functions of certain of the initially computed deflections as well as of the loads. In each case, the solution of the equations was made through the use of an electronic calculator.

Computations of moments and reactions were made using desk calculators and the appropriate finite difference relations. The finite difference relations used are discussed in Appendix II.

Results

FIGURES 1 through 36 present the results of these studies as tables of dimensionless coefficients for the rectangular components of bending moment and for reactions at the supports. The studies were carried out for the following edge, or boundary, conditions:

Case 1: Plate fixed along three edges and free along the fourth edge.

Case 2: Plate fixed along three edges and hinged along the fourth edge.

Case 3: Plate fixed along one edge, free along the opposite edge, and hinged along the other two edges.

Case 4: Plate fixed along two adjacent edges and free along the other two edges.

Case 5: Plate fixed along four edges.

The loads, selected because they are representative of conditions frequently encountered in structures, are:

Load I: Uniform load over the full height of the plate.

Load II: Uniform load over 2/3 the height of the plate.

Load III: Uniform load over 1/3 the height of the plate.

Load IV: Uniformly varying load over the full height of the plate.

Load V: Uniformly varying load over 2/3 the height of the plate.

Load VI: Uniformly varying load over 1/3 the height of the plate.

Load VII: Uniformly varying load over 1/6 the height of the plate.

Load VIII: Uniform moment along the edge $y=b$ of the plate for Cases 1, 2, and 3.

Load IX: Uniform line load along the free edge of the plate for Cases 1 and 3.

Load X: Uniformly varying load, $p=0$ along $y=b/2$.

Load XI: Uniformly varying load, $p=0$ along $x=a/2$.

Plates with the following ratios of lateral dimensions, a, to height b, were studied for the first four cases: 1/8, 1/4, 3/8, 1/2, 3/4, 1, 3/2. The analysis was carried out for these cases using Loads I through IX and all dimension ratios, except that Load IX was omitted from Case 2 for obvious reasons, and Loads VIII and IX and the ratio $a/b=3/2$ were omitted from Case 4. It will be noted that for the first three cases, which have symmetry about a vertical axis, the dimension a denotes one-half of the plate width, and for the fourth, unsymmetrical case, a denotes the full width. For Case 5, lateral

dimension ratios of 3/8, 1/2, 5/8, 3/4, 7/8 and 1 were studied, subjected to Loads I, X, and XI. For this case, a and b denote the full lateral dimensions. All numerical results are based on a value of Poisson's ratio of 0.2.

The arrangement of the tables is such that each coefficient, both for reaction and moment, appears in the tables at a point which corresponds geometrically to its location in the plate as shown in each accompanying sketch.

Effect of Poisson's Ratio

A question which frequently arises is: What effect does Poisson's ratio have on the bending moments in a plate? For the plate fixed along four sides, a clear understanding of this effect can be determined easily, since the deflections computed from finite difference theory are independent of Poisson's ratio. Futhermore, the bending moments at, and normal to, the fixed edges are unaffected by this factor. It is reasonable then to conclude that insofar as the moments which are most important in design are concerned, the maximum effect for this case will occur at the center of the slab.

Table 1 shows a comparison of maximum bending moment coefficients at the center of a uniformly loaded plate for several values of μ and for each ratio of a/b for which Case 5 was computed. For a change in Poisson's ratio from 0.2 to 0.3 it is noted that the maximum effect on the bending moment coefficient occurs at a/b=1, where the change in the coefficient is less than 8 percent.

TABLE 1.—*Effect of Poisson's Ratio (μ) on Coefficients of Maximum Bending Moment at the Center of a Uniformly Loaded Rectangular Plate Fixed Along Four Edges*

Values of M_x/pa^2				
a/b \ μ	0	0.1	0.2	0.3
0. 375	−0. 0423	−0. 0424	−0. 0424	−0. 0425
0. 5	−0. 0403	−0. 0407	−0. 0411	−0. 0415
0. 625	−0. 0358	−0. 0367	−0. 0376	−0. 0384
0. 75	−0. 0298	−0. 0311	−0. 0324	−0. 0337
0. 875	−0. 0235	−0. 0251	−0. 0267	−0. 0283
1. 0	−0. 0177	−0. 0195	−0. 0213	−0. 0230

			M_x						M_y					
	y/b	R_x \ x/a	0	0.2	0.4	0.6	0.8	1.0	0	0.2	0.4	0.6	0.8	1.0
a/b = 1/8	1.0	+.1249	+.0052	+.0024	+.0002	−.0014	−.0024	−.0027	0	0	0	0	0	0
	0.8	+.1248	+.0051	+.0023	+.0002	−.0014	−.0023	−.0026	+.0010	+.0005	+.0000	−.0003	−.0005	−.0005
	0.6	+.1247	+.0052	+.0023	+.0002	−.0014	−.0023	−.0027	+.0010	+.0005	+.0000	−.0003	−.0005	−.0005
	0.4	+.1250	+.0051	+.0023	+.0001	−.0014	−.0023	−.0027	+.0010	+.0005	+.0000	−.0003	−.0005	−.0006
	0.2	+.1185	+.0048	+.0021	+.0001	−.0013	−.0021	−.0024	+.0010	+.0004	−.0001	−.0004	−.0006	−.0007
	0	+.0504	0	+.0001	+.0003	+.0005	+.0006	+.0007	0	+.0006	+.0016	+.0025	+.0031	+.0033
		R_x \ R_y	+.0504	+.0116	+.0568	+.0893	+.1084	+.1141						
a/b = 1/4	1.0	+.2483	+.0209	+.0096	+.0007	−.0057	−.0096	−.0109	0	0	0	0	0	0
	0.8	+.2523	+.0206	+.0093	+.0006	−.0056	−.0093	−.0105	+.0041	+.0019	+.0002	−.0009	−.0016	−.0019
	0.6	+.2513	+.0205	+.0093	+.0006	−.0056	−.0093	−.0105	+.0041	+.0018	+.0000	−.0013	−.0021	−.0023
	0.4	+.2512	+.0196	+.0085	+.0003	−.0054	−.0088	−.0099	+.0039	+.0016	−.0004	−.0018	−.0027	−.0030
	0.2	+.1905	+.0137	+.0053	−.0003	−.0039	−.0059	−.0065	+.0027	+.0007	−.0011	−.0024	−.0032	−.0034
	0	+.0295	0	+.0005	+.0013	+.0020	+.0025	+.0027	0	+.0023	+.0063	+.0101	+.0126	+.0135
		R_x \ R_y	+.0295	+.0236	+.1131	+.1786	+.2174	+.2301						
a/b = 3/8	1.0	+.3711	+.0476	+.0219	+.0016	−.0130	−.0218	−.0247	0	0	0	0	0	0
	0.8	+.3896	+.0466	+.0208	+.0012	−.0126	−.0208	−.0235	+.0093	+.0042	+.0004	−.0022	−.0038	−.0043
	0.6	+.3757	+.0442	+.0193	+.0007	−.0122	−.0198	−.0223	+.0088	+.0036	−.0007	−.0039	−.0059	−.0065
	0.4	+.3541	+.0379	+.0155	−.0003	−.0107	−.0167	−.0186	+.0076	+.0024	−.0021	−.0054	−.0075	−.0082
	0.2	+.2133	+.0210	+.0075	−.0009	−.0059	−.0085	−.0093	+.0042	+.0009	−.0017	−.0034	−.0044	−.0047
	0	−.0015	0	+.0010	+.0027	+.0043	+.0054	+.0058	0	+.0050	+.0135	+.0215	+.0269	+.0288
		R_x \ R_y	−.0015	+.0303	+.1666	+.2644	+.3220	+.3410						
a/b = 1/2	1.0	+.5101	+.0852	+.0384	+.0022	−.0233	−.0383	−.0432	0	0	0	0	0	0
	0.8	+.5331	+.0807	+.0349	+.0013	−.0218	−.0353	−.0397	+.0161	+.0068	−.0001	−.0049	−.0077	−.0086
	0.6	+.4805	+.0712	+.0298	−.0000	−.0199	−.0313	−.0350	+.0142	+.0051	−.0026	−.0084	−.0120	−.0132
	0.4	+.4148	+.0545	+.0209	−.0014	−.0156	−.0233	−.0258	+.0109	+.0026	−.0043	−.0094	−.0125	−.0135
	0.2	+.1928	+.0250	+.0087	−.0009	−.0063	−.0089	−.0096	+.0050	+.0015	−.0003	−.0008	−.0008	−.0007
	0	−.0294	0	+.0019	+.0050	+.0080	+.0100	+.0107	0	+.0094	+.0252	+.0399	+.0499	+.0534
		R_x \ R_y	−.0294	+.0482	+.2263	+.3559	+.4322	+.4572						
a/b = 3/4	1.0	+.8592	+.1788	+.0716	−.0010	−.0471	−.0726	−.0807	0	0	0	0	0	0
	0.8	+.7864	+.1552	+.0607	−.0020	−.0414	−.0630	−.0698	+.0310	+.0112	−.0027	−.0119	−.0172	−.0190
	0.6	+.5989	+.1207	+.0460	−.0033	−.0336	−.0498	−.0549	+.0241	+.0071	−.0067	−.0166	−.0225	−.0245
	0.4	+.4378	+.0786	+.0280	−.0033	−.0214	−.0306	−.0333	+.0157	+.0036	−.0049	−.0100	−.0127	−.0135
	0.2	+.1185	+.0289	+.0109	+.0009	−.0034	−.0049	−.0053	+.0058	+.0060	+.0115	+.0186	+.0241	+.0262
	0	−.0694	0	+.0042	+.0115	+.0182	+.0227	+.0242	0	+.0212	+.0576	+.0911	+.1135	+.1212
		R_x \ R_y	−.0694	+.0806	+.3383	+.5271	+.6368	+.6725						
a/b = 1	1.0	+1.2115	+.2613	+.0883	−.0105	−.0654	−.0927	−.1008	0	0	0	0	0	0
	0.8	+.9558	+.2146	+.0727	−.0097	−.0551	−.0774	−.0840	+.0429	+.0134	−.0051	−.0164	−.0224	−.0243
	0.6	+.6250	+.1547	+.0525	−.0083	−.0411	−.0566	−.0611	+.0309	+.0090	−.0069	−.0169	−.0222	−.0238
	0.4	+.3984	+.0916	+.0305	−.0043	−.0216	−.0290	−.0310	+.0183	+.0069	+.0029	+.0030	+.0045	+.0053
	0.2	+.0434	+.0303	+.0127	+.0047	+.0033	+.0042	+.0048	+.0061	+.0149	+.0339	+.0542	+.0689	+.0742
	0	−.0939	0	+.0074	+.0199	+.0311	+.0384	+.0409	0	+.0369	+.0996	+.1556	+.1919	+.2043
		R_x \ R_y	−.0939	+.1167	+.4453	+.6760	+.8043	+.8450						
a/b = 3/2	1.0	+1.6267	+.3304	+.0700	−.0345	−.0730	−.0844	−.0865	0	0	0	0	0	0
	0.8	+1.0875	+.2609	+.0565	−.0286	−.0589	−.0670	−.0683	+.0522	+.0116	−.0069	−.0143	−.0165	−.0169
	0.6	+.5876	+.1778	+.0399	−.0195	−.0385	−.0422	−.0422	+.0356	+.0115	+.0017	+.0011	+.0035	+.0049
	0.4	+.3166	+.0981	+.0239	−.0056	−.0116	−.0101	−.0090	+.0196	+.0177	+.0315	+.0495	+.0634	+.0685
	0.2	−.0540	+.0302	+.0140	+.0140	+.0211	+.0273	+.0296	+.0060	+.0389	+.0912	+.1388	+.1699	+.1805
	0	−.1168	0	+.0159	+.0388	+.0565	+.0668	+.0702	0	+.0796	+.1939	+.2823	+.3340	+.3508
		R_y	−.1168	+.2429	+.6510	+.8793	+.9832	+1.0123						

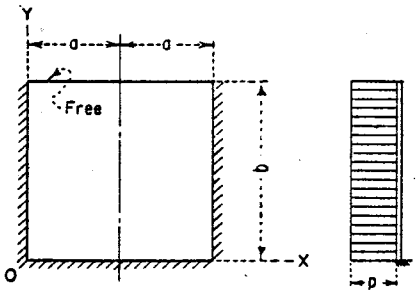

Moment = (Coefficient) (pb^2)

Reaction = (Coefficient) (pb)

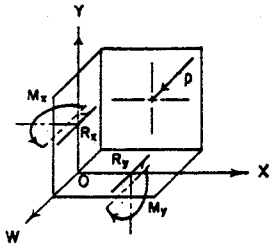

POSITIVE SIGN CONVENTION

FIGURE 1.—*Plate fixed along three edges, moment and reaction coefficients, Load I, uniform load.*

			M_x						M_y					
	y/b	R_x \ x/a	0	0.2	0.4	0.6	0.8	1.0	0	0.2	0.4	0.6	0.8	1.0
a/b = 1/8	1.0	+.0082	+.0004	+.0002	+.0000	−.0001	−.0002	−.0002	0	0	0	0	0	0
	0.8	+.0251	+.0011	+.0005	+.0000	−.0003	−.0005	−.0005	+.0002	+.0001	+.0000	−.0000	−.0001	−.0001
	0.6	+.0496	+.0021	+.0009	+.0001	−.0006	−.0009	−.0011	+.0004	+.0002	+.0000	−.0001	−.0002	−.0002
	0.4	+.0751	+.0031	+.0014	+.0001	−.0008	−.0014	−.0016	+.0006	+.0003	+.0000	−.0002	−.0003	−.0003
	0.2	+.0942	+.0038	+.0016	+.0000	−.0010	−.0017	−.0019	+.0008	+.0003	−.0000	−.0003	−.0005	−.0005
	0	+.0460	0	+.0001	+.0003	+.0005	+.0006	+.0006	0	+.0005	+.0014	+.0023	+.0028	+.0030
		R_x \ R_y	+.0460	+.0136	+.0543	+.0839	+.1004	+.1056						
a/b = 1/4	1.0	+.0147	+.0022	+.0012	+.0002	−.0006	−.0012	−.0014	0	0	0	0	0	0
	0.8	+.0523	+.0046	+.0022	+.0002	−.0012	−.0021	−.0024	+.0009	+.0005	+.0002	−.0000	−.0002	−.0002
	0.6	+.1015	+.0083	+.0037	+.0002	−.0023	−.0038	−.0042	+.0017	+.0007	−.0000	−.0005	−.0009	−.0010
	0.4	+.1514	+.0114	+.0049	+.0001	−.0032	−.0051	−.0057	+.0023	+.0008	−.0004	−.0013	−.0019	−.0021
	0.2	+.1494	+.0102	+.0037	−.0004	−.0030	−.0043	−.0047	+.0020	+.0004	−.0011	−.0022	−.0029	−.0031
	0	+.0304	0	+.0004	+.0010	+.0016	+.0020	+.0021	0	+.0020	+.0052	+.0081	+.0100	+.0107
		R_x \ R_y	+.0304	+.0309	+.1052	+.1563	+.1856	+.1950						
a/b = 3/8	1.0	+.0189	+.0066	+.0040	+.0008	−.0020	−.0039	−.0045	0	0	0	0	0	0
	0.8	+.0885	+.0117	+.0056	+.0006	−.0031	−.0054	−.0062	+.0023	+.0012	+.0004	−.0002	−.0005	−.0007
	0.6	+.1541	+.0176	+.0075	+.0001	−.0049	−.0079	−.0088	+.0035	+.0013	−.0006	−.0020	−.0029	−.0032
	0.4	+.2107	+.0208	+.0079	−.0007	−.0061	−.0090	−.0099	+.0042	+.0009	−.0019	−.0042	−.0056	−.0061
	0.2	+.1691	+.0145	+.0045	−.0012	−.0042	−.0057	−.0061	+.0029	+.0001	−.0022	−.0039	−.0048	−.0051
	0	+.0102	0	+.0008	+.0020	+.0030	+.0038	+.0040	0	+.0039	+.0099	+.0152	+.0188	+.0200
		R_x \ R_y	+.0102	+.0474	+.1488	+.2154	+.2526	+.2645						
a/b = 1/2	1.0	+.0326	+.0151	+.0088	+.0015	−.0046	−.0084	−.0097	0	0	0	0	0	0
	0.8	+.1315	+.0216	+.0099	+.0007	−.0059	−.0099	−.0112	+.0043	+.0020	+.0002	−.0011	−.0019	−.0022
	0.6	+.1972	+.0273	+.0108	−.0005	−.0079	−.0119	−.0132	+.0055	+.0015	−.0020	−.0047	−.0064	−.0070
	0.4	+.2421	+.0277	+.0092	−.0019	−.0082	−.0115	−.0125	+.0055	+.0004	−.0042	−.0076	−.0097	−.0104
	0.2	+.1607	+.0160	+.0041	−.0017	−.0044	−.0055	−.0058	+.0032	−.0002	−.0026	−.0039	−.0044	−.0046
	0	−.0045	0	+.0014	+.0033	+.0050	+.0061	+.0065	0	+.0068	+.0167	+.0252	+.0307	+.0325
		R_x \ R_y	−.0045	+.0744	+.1942	+.2699	+.3108	+.3236						
a/b = 3/4	1.0	+.1061	+.0406	+.0196	+.0013	−.0115	−.0190	−.0214	0	0	0	0	0	0
	0.8	+.2077	+.0433	+.0177	−.0003	−.0119	−.0184	−.0205	+.0087	+.0031	−.0012	−.0042	−.0061	−.0067
	0.6	+.2408	+.0426	+.0145	−.0026	−.0124	−.0174	−.0189	+.0085	+.0010	−.0055	−.0102	−.0130	−.0139
	0.4	+.2542	+.0349	+.0091	−.0039	−.0102	−.0130	−.0138	+.0070	−.0011	−.0075	−.0115	−.0137	−.0143
	0.2	+.1337	+.0163	+.0031	−.0017	−.0031	−.0033	−.0033	+.0033	+.0001	−.0000	+.0014	+.0029	+.0035
	0	−.0196	0	+.0028	+.0064	+.0093	+.0111	+.0117	0	+.0139	+.0320	+.0465	+.0554	+.0584
		R_x \ R_y	−.0196	+.1256	+.2666	+.3496	+.3923	+.4055						
a/b = 1	1.0	+.1985	+.0644	+.0253	−.0013	−.0172	−.0252	−.0276	0	0	0	0	0	0
	0.8	+.2564	+.0601	+.0210	−.0028	−.0161	−.0226	−.0245	+.0120	+.0034	−.0026	−.0065	−.0088	−.0095
	0.6	+.2485	+.0515	+.0149	−.0047	−.0145	−.0189	−.0201	+.0103	+.0003	−.0075	−.0125	−.0151	−.0159
	0.4	+.2411	+.0372	+.0078	−.0049	−.0100	−.0118	−.0122	+.0074	−.0021	−.0076	−.0099	−.0106	−.0107
	0.2	+.1108	+.0154	+.0025	−.0006	−.0006	−.0000	+.0003	+.0031	+.0018	+.0060	+.0116	+.0160	+.0175
	0	−.0241	0	+.0044	+.0096	+.0137	+.0161	+.0169	0	+.0220	+.0482	+.0683	+.0804	+.0845
		R_x \ R_y	−.0241	+.1691	+.3199	+.4038	+.4457	+.4584						
a/b = 3/2	1.0	+.3127	+.0857	+.0207	−.0087	−.0199	−.0232	−.0238	0	0	0	0	0	0
	0.8	+.2929	+.0730	+.0158	−.0086	−.0172	−.0194	−.0198	+.0146	+.0023	−.0042	−.0072	−.0082	−.0085
	0.6	+.2352	+.0560	+.0094	−.0083	−.0134	−.0142	−.0141	+.0112	−.0013	−.0077	−.0096	−.0096	−.0094
	0.4	+.2148	+.0359	+.0038	−.0053	−.0065	−.0057	−.0053	+.0072	−.0021	−.0023	+.0012	+.0046	+.0059
	0.2	+.0897	+.0132	+.0021	+.0025	+.0050	+.0069	+.0076	+.0026	+.0077	+.0220	+.0356	+.0444	+.0474
	0	−.0204	0	+.0079	+.0158	+.0212	+.0243	+.0252	0	+.0396	+.0791	+.1062	+.1214	+.1262
		R_y	−.0204	+.2452	+.3964	+.4668	+.4966	+.5047						

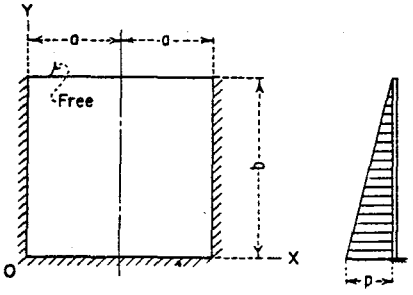

Moment = (Coefficient)(pb^2)

Reaction = (Coefficient)(pb)

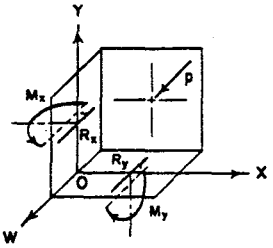

POSITIVE SIGN CONVENTION

FIGURE 4.—*Plate fixed along three edges, moment and reaction coefficients, Load IV, uniformly varying load.*

			M_x						M_y					
	y/b	x/a →	0	0.2	0.4	0.6	0.8	1.0	0	0.2	0.4	0.6	0.8	1.0
a/b = 1/8		R_x \ R_y	+.0063	+.0809	+.0996	+.1127	+.1204	+.1229						
	1.0	+.0063	0	0	0	0	0	0	0	0	0	0	0	0
	0.8	+.1242	+.0049	+.0021	+.0001	−.0013	−.0022	−.0025	+.0010	+.0004	−.0001	−.0004	−.0006	−.0007
	0.6	+.1254	+.0052	+.0023	+.0002	−.0014	−.0023	−.0027	+.0010	+.0005	+.0000	−.0003	−.0005	−.0006
	0.4	+.1253	+.0051	+.0023	+.0002	−.0014	−.0023	−.0027	+.0010	+.0005	+.0000	−.0003	−.0005	−.0006
	0.2	+.1185	+.0048	+.0021	+.0001	−.0013	−.0021	−.0025	+.0010	+.0004	−.0001	−.0004	−.0006	−.0007
	0	+.0504	0	+.0001	+.0003	+.0005	+.0006	+.0007	0	+.0006	+.0016	+.0025	+.0031	+.0033
		R_y →	+.0504	+.0120	+.0565	+.0891	+.1082	+.1146						
a/b = 1/4		R_x \ R_y	−.0097	+.0412	+.1053	+.1482	+.1728	+.1808						
	1.0	−.0097	0	0	0	0	0	0	0	0	0	0	0	0
	0.8	+.2366	+.0165	+.0067	−.0002	−.0047	−.0073	−.0081	+.0033	+.0009	−.0011	−.0026	−.0036	−.0039
	0.6	+.2557	+.0201	+.0088	+.0003	−.0056	−.0091	−.0102	+.0040	+.0016	−.0003	−.0018	−.0027	−.0030
	0.4	+.2530	+.0196	+.0085	+.0002	−.0055	−.0088	−.0099	+.0039	+.0015	−.0004	−.0019	−.0029	−.0032
	0.2	+.1908	+.0138	+.0053	−.0003	−.0039	−.0059	−.0066	+.0028	+.0007	−.0011	−.0024	−.0032	−.0035
	0	+.0295	0	+.0005	+.0013	+.0020	+.0025	+.0027	0	+.0024	+.0063	+.0101	+.0126	+.0135
		R_y →	+.0295	+.0235	+.1131	+.1788	+.2176	+.2304						
a/b = 3/8		R_x \ R_y	−.0466	+.0061	+.1237	+.1983	+.2397	+.2530						
	1.0	−.0466	0	0	0	0	0	0	0	0	0	0	0	0
	0.8	+.3265	+.0301	+.0109	−.0013	−.0089	−.0130	−.0143	+.0060	+.0008	−.0038	−.0073	−.0095	−.0102
	0.6	+.3819	+.0403	+.0161	−.0007	−.0116	−.0177	−.0197	+.0081	+.0023	−.0028	−.0068	−.0094	−.0103
	0.4	+.3624	+.0374	+.0148	−.0008	−.0108	−.0163	−.0181	+.0075	+.0020	−.0028	−.0065	−.0089	−.0097
	0.2	+.2164	+.0211	+.0075	−.0010	−.0059	−.0085	−.0092	+.0042	+.0008	−.0019	−.0038	−.0048	−.0052
	0	−.0013	0	+.0010	+.0027	+.0043	+.0054	+.0058	0	+.0051	+.0135	+.0215	+.0269	+.0288
		R_y →	−.0013	+.0310	+.1684	+.2663	+.3238	+.3427						
a/b = 1/2		R_x \ R_y	−.0902	−.0050	+.1570	+.2529	+.3034	+.3192						
	1.0	−.0902	0	0	0	0	0	0	0	0	0	0	0	0
	0.8	+.3904	+.0412	+.0128	−.0035	−.0126	−.0172	−.0186	+.0082	−.0005	−.0083	−.0143	−.0180	−.0192
	0.6	+.4751	+.0572	+.0197	−.0036	−.0172	−.0242	−.0263	+.0114	+.0013	−.0083	−.0159	−.0207	−.0224
	0.4	+.4302	+.0508	+.0173	−.0033	−.0152	−.0212	−.0230	+.0102	+.0011	−.0072	−.0137	−.0177	−.0191
	0.2	+.2047	+.0246	+.0078	−.0017	−.0065	−.0086	−.0092	+.0049	+.0009	−.0017	−.0030	−.0036	−.0037
	0	−.0270	0	+.0019	+.0050	+.0078	+.0096	+.0102	0	+.0094	+.0248	+.0388	+.0480	+.0512
		R_y →	−.0270	+.0571	+.2350	+.3590	+.4297	+.4525						
a/b = 3/4		R_x \ R_y	−.1465	+.0482	+.2410	+.3343	+.3758	+.3874						
	1.0	−.1465	0	0	0	0	0	0	0	0	0	0	0	0
	0.8	+.4416	+.0490	+.0086	−.0090	−.0163	−.0189	−.0196	+.0098	−.0060	−.0197	−.0296	−.0354	−.0373
	0.6	+.5465	+.0695	+.0142	−.0116	−.0225	−.0265	−.0274	+.0139	−.0054	−.0233	−.0366	−.0447	−.0473
	0.4	+.4698	+.0594	+.0121	−.0097	−.0185	−.0214	−.0221	+.0119	−.0039	−.0177	−.0277	−.0334	−.0353
	0.2	+.1759	+.0257	+.0053	−.0029	−.0051	−.0052	−.0050	+.0051	+.0013	+.0009	+.0021	+.0034	+.0040
	0	−.0530	0	+.0041	+.0098	+.0144	+.0171	+.0180	0	+.0207	+.0492	+.0719	+.0854	+.0898
		R_y →	−.0530	+.1403	+.3658	+.4989	+.5644	+.5837						
a/b = 1		R_x \ R_y	−.1593	+.1304	+.3059	+.3709	+.3922	+.3969						
	1.0	−.1593	0	0	0	0	0	0	0	0	0	0	0	0
	0.8	+.4456	+.0465	+.0014	−.0129	−.0164	−.0166	−.0164	+.0093	−.0125	−.0294	−.0403	−.0461	−.0479
	0.6	+.5491	+.0664	+.0037	−.0174	−.0225	−.0227	−.0224	+.0133	−.0137	−.0363	−.0512	−.0592	−.0617
	0.4	+.4658	+.0562	+.0031	−.0142	−.0176	−.0172	−.0168	+.0112	−.0101	−.0265	−.0367	−.0418	−.0434
	0.2	+.1622	+.0237	+.0018	−.0033	−.0027	−.0014	−.0008	+.0047	+.0015	+.0035	+.0069	+.0095	+.0104
	0	−.0584	0	+.0067	+.0139	+.0187	+.0211	+.0219	0	+.0334	+.0697	+.0934	+.1056	+.1093
		R_y →	−.0584	+.2379	+.4659	+.5707	+.6115	+.6218						
a/b = 3/2		R_x \ R_y	−.1387	+.2509	+.3666	+.3870	+.3870	+.3859						
	1.0	−.1387	0	0	0	0	0	0	0	0	0	0	0	0
	0.8	+.4395	+.0368	−.0086	−.0152	−.0143	−.0129	−.0124	+.0074	−.0238	−.0420	−.0505	−.0538	−.0547
	0.6	+.5302	+.0531	−.0110	−.0207	−.0191	−.0169	−.0162	+.0106	−.0289	−.0533	−.0648	−.0693	−.0704
	0.4	+.4497	+.0447	−.0090	−.0160	−.0139	−.0118	−.0111	+.0089	−.0211	−.0376	−.0445	−.0468	−.0474
	0.2	+.1588	+.0184	−.0020	−.0018	+.0007	+.0021	+.0026	+.0037	+.0028	+.0082	+.0125	+.0147	+.0153
	0	−.0456	0	+.0115	+.0192	+.0225	+.0236	+.0239	0	+.0576	+.0959	+.1123	+.1180	+.1194
		R_y →	−.0456	+.3937	+.5702	+.6160	+.6244	+.6252						

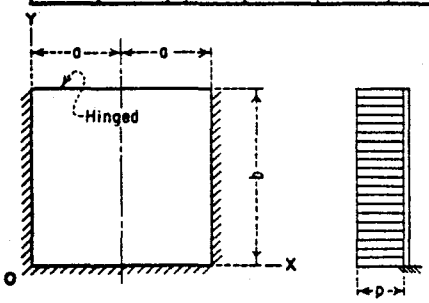

Moment = (Coefficient)(pb^2)

Reaction = (Coefficient)(pb)

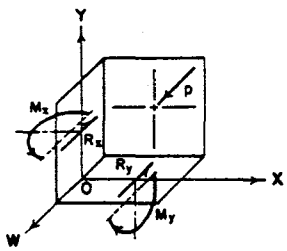

POSITIVE SIGN CONVENTION

Figure 10.—*Plate fixed along three edges—Hinged along one edge, moment and reaction coefficients, Load I, uniform load.*

			M_x						M_y					
	y/b	$x/a \rightarrow$	0	0.2	0.4	0.6	0.8	1.0	0	0.2	0.4	0.6	0.8	1.0
$a/b = 1/8$		R_x \ R_y	−.0003	+.0024	+.0064	+.0092	+.0109	+.0114						
	1.0	−.0003	0	0	0	0	0	0	0	0	0	0	0	0
	0.8	+.0250	+.0010	+.0005	+.0000	−.0003	−.0005	−.0005	+.0002	+.0001	+.0000	−.0001	−.0001	−.0001
	0.6	+.0500	+.0021	+.0009	+.0001	−.0006	−.0009	−.0011	+.0004	+.0002	+.0000	−.0001	−.0002	−.0002
	0.4	+.0752	+.0031	+.0014	+.0001	−.0008	−.0014	−.0016	+.0006	+.0003	+.0000	−.0002	−.0003	−.0003
	0.2	+.0941	+.0038	+.0016	+.0000	−.0010	−.0017	−.0019	+.0008	+.0003	−.0001	−.0003	−.0005	−.0006
	0	+.0459	0	+.0001	+.0003	+.0005	+.0006	+.0006	0	+.0005	+.0014	+.0023	+.0028	+.0030
		$R_y \rightarrow$	+.0459	+.0139	+.0546	+.0835	+.1003	+.1058						
$a/b = 1/4$		R_x \ R_y	−.0061	−.0102	+.0056	+.0169	+.0237	+.0260						
	1.0	−.0061	0	0	0	0	0	0	0	0	0	0	0	0
	0.8	+.0505	+.0042	+.0019	+.0001	−.0011	−.0018	−.0021	+.0008	+.0004	+.0000	−.0002	−.0004	−.0005
	0.6	+.1020	+.0082	+.0037	+.0002	−.0023	−.0037	−.0042	+.0016	+.0007	−.0000	−.0006	−.0010	−.0011
	0.4	+.1517	+.0114	+.0049	+.0000	−.0032	−.0051	−.0057	+.0023	+.0009	−.0004	−.0013	−.0019	−.0021
	0.2	+.1495	+.0102	+.0037	−.0004	−.0030	−.0043	−.0047	+.0020	+.0004	−.0011	−.0022	−.0029	−.0031
	0	+.0304	0	+.0004	+.0010	+.0016	+.0020	+.0021	0	+.0020	+.0052	+.0081	+.0100	+.0107
		$R_y \rightarrow$	+.0304	+.0309	+.1052	+.1563	+.1856	+.1950						
$a/b = 3/8$		R_x \ R_y	−.0205	−.0283	+.0070	+.0313	+.0455	+.0502						
	1.0	−.0205	0	0	0	0	0	0	0	0	0	0	0	0
	0.8	+.0788	+.0091	+.0039	+.0001	−.0026	−.0041	−.0046	+.0018	+.0007	−.0003	−.0010	−.0015	−.0016
	0.6	+.1550	+.0170	+.0070	−.0001	−.0048	−.0075	−.0084	+.0034	+.0011	−.0009	−.0025	−.0035	−.0038
	0.4	+.2120	+.0207	+.0078	−.0008	−.0061	−.0089	−.0098	+.0041	+.0009	−.0021	−.0044	−.0058	−.0063
	0.2	+.1696	+.0145	+.0045	−.0012	−.0042	−.0057	−.0061	+.0029	+.0001	−.0023	−.0039	−.0049	−.0052
	0	+.0102	0	+.0008	+.0020	+.0030	+.0038	+.0040	0	+.0039	+.0099	+.0153	+.0188	+.0200
		$R_y \rightarrow$	+.0102	+.0475	+.1490	+.2157	+.2528	+.2647						
$a/b = 1/2$		R_x \ R_y	−.0396	−.0396	+.0153	+.0508	+.0704	+.0767						
	1.0	−.0396	0	0	0	0	0	0	0	0	0	0	0	0
	0.8	+.1042	+.0139	+.0053	−.0005	−.0041	−.0060	−.0067	+.0028	+.0006	−.0014	−.0030	−.0040	−.0044
	0.6	+.1956	+.0245	+.0087	−.0013	−.0073	−.0104	−.0114	+.0049	+.0008	−.0031	−.0062	−.0082	−.0089
	0.4	+.2450	+.0269	+.0085	−.0023	−.0081	−.0110	−.0119	+.0054	+.0001	−.0048	−.0085	−.0108	−.0116
	0.2	+.1632	+.0159	+.0039	−.0019	−.0044	−.0054	−.0057	+.0032	−.0003	−.0029	−.0043	−.0050	−.0052
	0	−.0040	0	+.0014	+.0033	+.0050	+.0060	+.0064	0	+.0068	+.0167	+.0250	+.0302	+.0320
		$R_y \rightarrow$	−.0040	+.0762	+.1959	+.2705	+.3102	+.3225						
$a/b = 3/4$		R_x \ R_y	−.0671	−.0273	+.0454	+.0834	+.1010	+.1061						
	1.0	−.0671	0	0	0	0	0	0	0	0	0	0	0	0
	0.8	+.1275	+.0181	+.0044	−.0026	−.0058	−.0071	−.0074	+.0036	−.0008	−.0051	−.0085	−.0106	−.0113
	0.6	+.2274	+.0301	+.0065	−.0048	−.0097	−.0115	−.0119	+.0060	−.0019	−.0094	−.0150	−.0185	−.0196
	0.4	+.2616	+.0302	+.0051	−.0055	−.0095	−.0107	−.0109	+.0060	−.0030	−.0106	−.0158	−.0188	−.0196
	0.2	+.1479	+.0155	+.0017	−.0027	−.0035	−.0033	−.0032	+.0031	−.0011	−.0027	−.0027	−.0023	−.0021
	0	−.0155	0	+.0028	+.0060	+.0083	+.0097	+.0101	0	+.0138	+.0299	+.0417	+.0484	+.0505
		$R_y \rightarrow$	−.0155	+.1405	+.2734	+.3424	+.3739	+.3828						
$a/b = 1$		R_x \ R_y	−.0764	+.0024	+.0716	+.0989	+.1081	+.1102						
	1.0	−.0764	0	0	0	0	0	0	0	0	0	0	0	0
	0.8	+.1300	+.0177	+.0016	−.0043	−.0060	−.0062	−.0061	+.0035	−.0028	−.0086	−.0127	−.0150	−.0158
	0.6	+.2289	+.0289	+.0019	−.0074	−.0097	−.0098	−.0096	+.0058	−.0054	−.0149	−.0213	−.0248	−.0259
	0.4	+.2583	+.0280	+.0006	−.0076	−.0089	−.0086	−.0084	+.0056	−.0064	−.0152	−.0203	−.0228	−.0235
	0.2	+.1417	+.0137	−.0003	−.0027	−.0022	−.0015	−.0012	+.0027	−.0016	−.0019	−.0008	+.0003	+.0007
	0	−.0149	0	+.0042	+.0081	+.0104	+.0115	+.0119	0	+.0211	+.0403	+.0519	+.0576	+.0593
		$R_y \rightarrow$	−.0149	+.2009	+.3255	+.3761	+.3944	+.3988						
$a/b = 3/2$		R_x \ R_y	−.0743	+.0499	+.0971	+.1058	+.1058	+.1053						
	1.0	−.0743	0	0	0	0	0	0	0	0	0	0	0	0
	0.8	+.1257	+.0145	−.0025	−.0055	−.0052	−.0046	−.0044	+.0029	−.0067	−.0134	−.0169	−.0183	−.0187
	0.6	+.2208	+.0232	−.0046	−.0089	−.0081	−.0072	−.0069	+.0046	−.0118	−.0223	−.0273	−.0292	−.0297
	0.4	+.2503	+.0219	−.0052	−.0082	−.0071	−.0061	−.0058	+.0044	−.0123	−.0207	−.0240	−.0251	−.0253
	0.2	+.1461	+.0101	−.0022	−.0018	−.0005	+.0002	+.0004	+.0020	−.0019	−.0002	+.0017	+.0026	+.0029
	0	−.0018	0	+.0068	+.0106	+.0121	+.0126	+.0127	0	+.0339	+.0530	+.0606	+.0631	+.0637
		$R_y \rightarrow$	−.0018	+.2862	+.3754	+.3960	+.3994	+.3997						

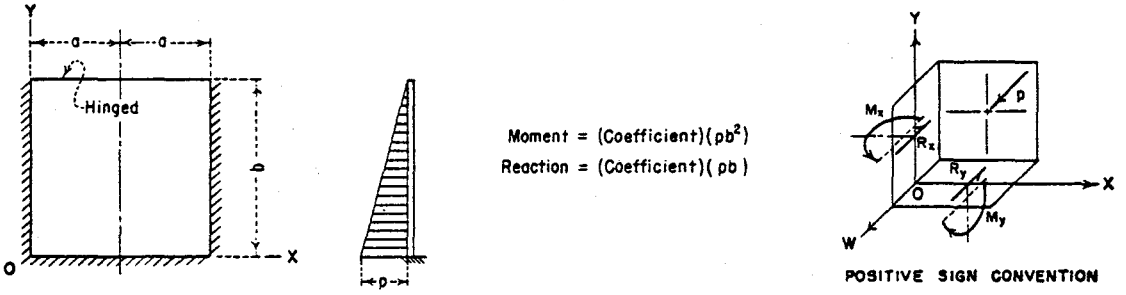

FIGURE 13.—*Plate fixed along three edges—Hinged along one edge, moment and reaction coefficients, Load IV, uniformly varying load.*

			M_x						M_y					
	y/b	R_x \ x/a	0	0.2	0.4	0.6	0.8	1.0	0	0.2	0.4	0.6	0.8	1.0
a/b = 1/8	1.0	+.1309	0	−.0029	−.0051	−.0067	−.0077	−.0080	0	0	0	0	0	0
	0.8	+.1222	0	−.0028	−.0050	−.0065	−.0074	−.0077	0	−.0005	−.0009	−.0012	−.0014	−.0015
	0.6	+.1250	0	−.0028	−.0050	−.0065	−.0074	−.0077	0	−.0006	−.0010	−.0013	−.0015	−.0016
	0.4	+.1260	0	−.0027	−.0048	−.0063	−.0072	−.0075	0	−.0006	−.0011	−.0015	−.0017	−.0017
	0.2	+.1057	0	−.0021	−.0037	−.0048	−.0055	−.0057	0	−.0007	−.0012	−.0016	−.0018	−.0019
	0	−.0003	0	+.0005	+.0009	+.0012	+.0014	+.0015	0	+.0025	+.0046	+.0061	+.0070	+.0073
		R_x \ R_y	−.0003	+.0869	+.1326	+.1619	+.1783	+.1831						
a/b = 1/4	1.0	+.2949	0	−.0114	−.0203	−.0266	−.0304	−.0317	0	0	0	0	0	0
	0.8	+.2347	0	−.0108	−.0191	−.0250	−.0285	−.0297	0	−.0020	−.0035	−.0046	−.0052	−.0054
	0.6	+.2476	0	−.0102	−.0180	−.0235	−.0267	−.0278	0	−.0026	−.0047	−.0062	−.0071	−.0074
	0.4	+.2347	0	−.0086	−.0150	−.0194	−.0219	−.0228	0	−.0028	−.0051	−.0068	−.0078	−.0082
	0.2	+.1211	0	−.0050	−.0081	−.0101	−.0011	−.0115	0	−.0019	−.0033	−.0043	−.0048	−.0050
	0	−.0971	0	+.0020	+.0037	+.0049	+.0056	+.0059	0	+.0101	+.0185	+.0245	+.0282	+.0294
		R_x \ R_y	−.0971	+.1737	+.2670	+.3251	+.3574	+.3677						
a/b = 3/8	1.0	+.5262	0	−.0236	−.0416	−.0543	−.0619	−.0644	0	0	0	0	0	0
	0.8	+.3276	0	−.0215	−.0378	−.0492	−.0560	−.0582	0	−.0044	−.0079	−.0103	−.0117	−.0122
	0.6	+.3389	0	−.0190	−.0330	−.0426	−.0482	−.0500	0	−.0060	−.0107	−.0142	−.0162	−.0169
	0.4	+.2910	0	−.0145	−.0245	−.0310	−.0346	−.0358	0	−.0056	−.0100	−.0131	−.0150	−.0156
	0.2	+.0752	0	−.0069	−.0105	−.0123	−.0130	−.0133	0	−.0009	−.0009	−.0006	−.0002	−.0001
	0	−.2069	0	+.0043	+.0079	+.0105	+.0121	+.0127	0	+.0215	+.0395	+.0527	+.0607	+.0634
		R_x \ R_y	−.2069	+.2568	+.3921	+.4779	+.5256	+.5410						
a/b = 1/2	1.0	+.8321	0	−.0356	−.0620	−.0801	−.0906	−.0941	0	0	0	0	0	0
	0.8	+.3840	0	−.0317	−.0548	−.0704	−.0794	−.0824	0	−.0073	−.0129	−.0169	−.0192	−.0200
	0.6	+.3852	0	−.0267	−.0452	−.0573	−.0641	−.0663	0	−.0094	−.0168	−.0220	−.0252	−.0262
	0.4	+.2928	0	−.0189	−.0307	−.0377	−.0413	−.0424	0	−.0070	−.0121	−.0154	−.0173	−.0179
	0.2	−.0161	0	−.0074	−.0099	−.0105	−.0105	−.0105	0	+.0036	+.0081	+.0124	+.0154	+.0165
	0	−.2870	0	+.0077	+.0140	+.0185	+.0213	+.0222	0	+.0385	+.0700	+.0927	+.1063	+.1108
		R_x \ R_y	−.2870	+.3368	+.5139	+.6225	+.6818	+.7007						
a/b = 3/4	1.0	+1.4911	0	−.0521	−.0863	−.1072	−.1182	−.1217	0	0	0	0	0	0
	0.8	+.4033	0	−.0451	−.0736	−.0904	−.0991	−.1017	0	−.0115	−.0196	−.0250	−.0281	−.0291
	0.6	+.3753	0	−.0359	−.0566	−.0677	−.0730	−.0745	0	−.0127	−.0213	−.0267	−.0295	−.0304
	0.4	+.2190	0	−.0230	−.0333	−.0375	−.0388	−.0391	0	−.0038	−.0041	−.0027	−.0011	−.0005
	0.2	−.1892	0	−.0054	−.0037	−.0007	+.0016	+.0024	0	+.0200	+.0405	+.0576	+.0687	+.0726
	0	−.3645	0	+.0155	+.0276	+.0361	+.0411	+.0427	0	+.0776	+.1382	+.1805	+.2054	+.2136
		R_x \ R_y	−.3645	+.4687	+.6982	+.8289	+.8973	+.9187						
a/b = 1	1.0	+1.9792	0	−.0600	−.0919	−.1070	−.1131	−.1146	0	0	0	0	0	0
	0.8	+.3776	0	−.0512	−.0768	−.0879	−.0918	−.0927	0	−.0128	−.0205	−.0246	−.0265	−.0271
	0.6	+.3266	0	−.0396	−.0562	−.0617	−.0627	−.0627	0	−.0114	−.0164	−.0177	−.0174	−.0171
	0.4	+.1419	0	−.0234	−.0288	−.0279	−.0259	−.0250	0	+.0043	+.0137	+.0237	+.0310	+.0337
	0.2	−.2923	0	−.0018	+.0049	+.0117	+.0161	+.0177	0	+.0397	+.0783	+.1089	+.1280	+.1345
	0	−.3642	0	+.0230	+.0401	+.0515	+.0580	+.0601	0	+.1150	+.2003	+.2574	+.2901	+.3007
		R_x \ R_y	−.3642	+.5636	+.8099	+.9373	+.9994	+1.0180						
a/b = 3/2	1.0	+2.4011	0	−.0670	−.0841	−.0814	−.0751	−.0723	0	0	0	0	0	0
	0.8	+.3458	0	−.0565	−.0685	−.0642	−.0578	−.0551	0	−.0126	−.0157	−.0142	−.0120	−.0111
	0.6	+.2741	0	−.0419	−.0460	−.0391	−.0323	−.0297	0	−.0056	+.0005	+.0103	+.0180	+.0208
	0.4	+.0773	0	−.0213	−.0161	−.0066	+.0003	+.0028	0	+.0216	+.0507	+.0763	+.0928	+.0985
	0.2	−.3443	0	+.0055	+.0202	+.0316	+.0384	+.0406	0	+.0754	+.1423	+.1898	+.2171	+.2260
	0	−.2922	0	+.0353	+.0583	+.0722	+.0794	+.0817	0	+.1765	+.2917	+.3608	+.3972	+.4084
		R_y	−.2922	+.6928	+.9244	+1.0146	+1.0474	+1.0554						

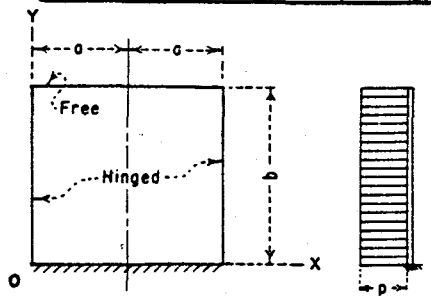

Moment = (Coefficient) (pb^2)

Reaction = (Coefficient) (pb)

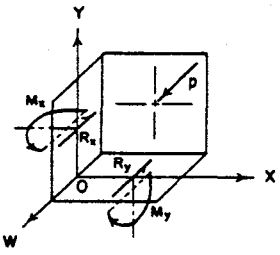

POSITIVE SIGN CONVENTION

FIGURE 18.—*Plate fixed along one edge—Hinged along two opposite edges, moment and reaction coefficients, Load I, uniform load.*

			M_x						M_y					
	y/b	R_x \ x/a	0	0.2	0.4	0.6	0.8	1.0	0	0.2	0.4	0.6	0.8	1.0
a/b = 1/8	1.0	+.0094	0	−.0003	−.0006	−.0008	−.0010	−.0010	0	0	0	0	0	0
	0.8	+.0253	0	−.0006	−.0011	−.0015	−.0017	−.0017	0	−.0001	−.0002	−.0002	−.0002	−.0003
	0.6	+.0500	0	−.0011	−.0020	−.0026	−.0030	−.0031	0	−.0002	−.0004	−.0005	−.0006	−.0006
	0.4	+.0758	0	−.0016	−.0028	−.0037	−.0042	−.0044	0	−.0004	−.0007	−.0009	−.0011	−.0011
	0.2	+.0833	0	−.0015	−.0028	−.0036	−.0041	−.0042	0	−.0006	−.0010	−.0013	−.0015	−.0016
	0	+.0043	0	+.0004	+.0008	+.0010	+.0012	+.0012	0	+.0021	+.0039	+.0051	+.0058	+.0061
		R_x \ R_y	+.0043	+.0775	+.1180	+.1417	+.1551	+.1591						
a/b = 1/4	1.0	+.0249	0	−.0022	−.0040	−.0054	−.0062	−.0065	0	0	0	0	0	0
	0.8	+.0548	0	−.0028	−.0051	−.0067	−.0077	−.0081	0	−.0004	−.0006	−.0008	−.0010	−.0010
	0.6	+.1014	0	−.0040	−.0070	−.0091	−.0104	−.0108	0	−.0012	−.0021	−.0028	−.0032	−.0033
	0.4	+.1388	0	−.0046	−.0078	−.0100	−.0113	−.0117	0	−.0019	−.0034	−.0046	−.0052	−.0055
	0.2	+.1003	0	−.0033	−.0053	−.0065	−.0071	−.0072	0	−.0018	−.0031	−.0041	−.0046	−.0048
	0	−.0513	0	+.0014	+.0025	+.0033	+.0038	+.0040	0	+.0071	+.0127	+.0167	+.0191	+.0199
		R_x \ R_y	−.0513	+.1404	+.2080	+.2476	+.2688	+.2754						
a/b = 3/8	1.0	+.0631	0	−.0054	−.0099	−.0133	−.0154	−.0160	0	0	0	0	0	0
	0.8	+.0852	0	−.0060	−.0108	−.0142	−.0163	−.0170	0	−.0011	−.0020	−.0026	−.0030	−.0031
	0.6	+.1388	0	−.0071	−.0122	−.0156	−.0176	−.0183	0	−.0027	−.0050	−.0066	−.0076	−.0079
	0.4	+.1701	0	−.0070	−.0116	−.0143	−.0158	−.0162	0	−.0038	−.0069	−.0091	−.0104	−.0108
	0.2	+.0890	0	−.0044	−.0064	−.0071	−.0074	−.0074	0	−.0021	−.0033	−.0040	−.0043	−.0044
	0	−.0960	0	+.0025	+.0045	+.0059	+.0068	+.0071	0	+.0124	+.0225	+.0296	+.0339	+.0353
		R_x \ R_y	−.0960	+.1886	+.2717	+.3203	+.3458	+.3538						
a/b = 1/2	1.0	+.1322	0	−.0087	−.0159	−.0210	−.0241	−.0252	0	0	0	0	0	0
	0.8	+.1049	0	−.0090	−.0159	−.0207	−.0235	−.0244	0	−.0021	−.0038	−.0050	−.0058	−.0061
	0.6	+.1584	0	−.0096	−.0161	−.0201	−.0224	−.0231	0	−.0045	−.0080	−.0106	−.0121	−.0127
	0.4	+.1757	0	−.0087	−.0136	−.0161	−.0173	−.0176	0	−.0053	−.0092	−.0119	−.0134	−.0139
	0.2	+.0595	0	−.0047	−.0060	−.0060	−.0058	−.0057	0	−.0011	−.0010	−.0004	+.0002	+.0005
	0	−.1169	0	+.0040	+.0070	+.0091	+.0103	+.0107	0	+.0198	+.0351	+.0455	+.0515	+.0535
		R_x \ R_y	−.1169	+.2296	+.3261	+.3786	+.4050	+.4130						
a/b = 3/4	1.0	+.3017	0	−.0132	−.0230	−.0292	−.0326	−.0337	0	0	0	0	0	0
	0.8	+.1125	0	−.0129	−.0214	−.0265	−.0291	−.0299	0	−.0036	−.0065	−.0086	−.0098	−.0102
	0.6	+.1595	0	−.0126	−.0194	−.0227	−.0242	−.0246	0	−.0066	−.0114	−.0145	−.0162	−.0168
	0.4	+.1576	0	−.0104	−.0142	−.0151	−.0152	−.0152	0	−.0060	−.0093	−.0109	−.0114	−.0115
	0.2	+.0115	0	−.0043	−.0036	−.0021	−.0011	−.0007	0	+.0030	+.0080	+.0128	+.0161	+.0172
	0	−.1259	0	+.0070	+.0119	+.0151	+.0168	+.0174	0	+.0348	+.0594	+.0753	+.0842	+.0871
		R_x \ R_y	−.1259	+.2925	+.3991	+.4504	+.4744	+.4816						
a/b = 1	1.0	+.4312	0	−.0154	−.0247	−.0293	−.0312	−.0317	0	0	0	0	0	0
	0.8	+.1046	0	−.0147	−.0224	−.0256	−.0268	−.0270	0	−.0043	−.0073	−.0093	−.0103	−.0106
	0.6	+.1468	0	−.0139	−.0191	−.0205	−.0205	−.0204	0	−.0073	−.0115	−.0135	−.0143	−.0145
	0.4	+.1380	0	−.0109	−.0125	−.0117	−.0107	−.0103	0	−.0050	−.0059	−.0048	−.0035	−.0029
	0.2	−.0109	0	−.0032	−.0006	+.0020	+.0036	+.0041	0	+.0082	+.0186	+.0275	+.0331	+.0350
	0	−.1123	0	+.0096	+.0159	+.0198	+.0219	+.0226	0	+.0482	+.0797	+.0990	+.1094	+.1128
		R_x \ R_y	−.1123	+.3359	+.4399	+.4841	+.5035	+.5090						
a/b = 3/2	1.0	+.5418	0	−.0175	−.0229	−.0223	−.0205	−.0197	0	0	0	0	0	0
	0.8	+.0931	0	−.0164	−.0201	−.0188	−.0168	−.0160	0	−.0048	−.0069	−.0073	−.0070	−.0069
	0.6	+.1335	0	−.0149	−.0160	−.0135	−.0113	−.0105	0	−.0073	−.0086	−.0073	−.0056	−.0050
	0.4	+.1257	0	−.0104	−.0083	−.0050	−.0027	−.0019	0	−.0023	+.0026	+.0086	+.0129	+.0144
	0.2	−.0072	0	−.0008	+.0043	+.0080	+.0101	+.0108	0	+.0178	+.0365	+.0501	+.0579	+.0604
	0	−.0724	0	+.0139	+.0216	+.0258	+.0279	+.0285	0	+.0694	+.1079	+.1289	+.1394	+.1426
		R_y	−.0724	+.3914	+.4785	+.5060	+.5149	+.5169						

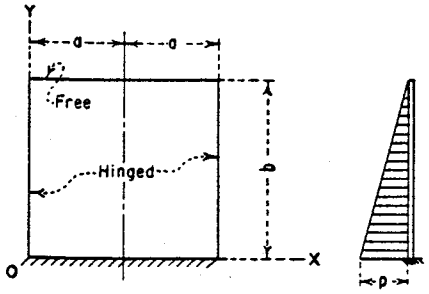

Moment = (Coefficient) (pb^2)

Reaction = (Coefficient) (pb)

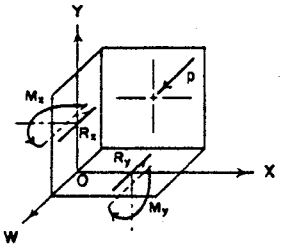

POSITIVE SIGN CONVENTION

FIGURE 21.—*Plate fixed along one edge—Hinged along two opposite edges, moment and reaction coefficients, Load IV, uniformly varying load.*

			M_x							M_y						
	y/b	R_x \ x/a	0	0.05	0.1	0.2	0.3	0.4	0.5	0	0.05	0.1	0.2	0.3	0.4	0.5
$a/b = 3/8$	0.5	+.5055	+.0830	+.0590	+.0376	+.0024	−.0226	−.0375	−.0424	+.0166	+.0113	+.0074	+.0002	−.0050	−.0082	−.0093
	0.4	+.5068	+.0825	+.0585	+.0371	+.0022	−.0225	−.0372	−.0420	+.0165	+.0117	+.0073	−.0001	−.0055	−.0088	−.0099
	0.3	+.5060	+.0796	+.0558	+.0348	+.0013	−.0219	−.0355	−.0400	+.0159	+.0110	+.0065	−.0013	−.0071	−.0108	−.0120
	0.2	+.4778	+.0690	+.0470	+.0282	−.0004	−.0192	−.0299	−.0334	+.0138	+.0091	+.0046	−.0034	−.0095	−.0132	−.0145
	0.1	+.3316	+.0400	+.0254	+.0139	−.0017	−.0108	−.0155	−.0170	+.0080	+.0047	+.0017	−.0033	−.0066	−.0084	−.0090
	0.05	+.1331	+.0170	+.0108	+.0060	+.0001	−.0026	−.0037	−.0039	+.0034	+.0026	+.0026	+.0044	+.0071	+.0094	+.0102
	0	−.0513	0	+.0005	+.0016	+.0047	+.0076	+.0096	+.0103	0	+.0024	+.0078	+.0234	+.0381	+.0481	+.0516
		R_x \ R_y	−.0513	−.0797	+.0291	+.2203	+.3559	+.4352	+.4612							
$a/b = 1/2$	0.5	+.5142	+.0815	+.0573	+.0359	+.0015	−.0224	−.0365	−.0411	+.0163	+.0113	+.0068	−.0012	−.0071	−.0108	−.0121
	0.4	+.5111	+.0797	+.0557	+.0346	+.0011	−.0220	−.0355	−.0399	+.0159	+.0110	+.0064	−.0017	−.0078	−.0116	−.0129
	0.3	+.4928	+.0728	+.0499	+.0303	−.0000	−.0203	−.0319	−.0356	+.0146	+.0097	+.0051	−.0031	−.0093	−.0132	−.0145
	0.2	+.4260	+.0568	+.0375	+.0217	−.0014	−.0159	−.0238	−.0263	+.0114	+.0071	+.0030	−.0042	−.0096	−.0128	−.0139
	0.1	+.2350	+.0270	+.0168	+.0090	−.0011	−.0066	−.0092	−.0100	+.0054	+.0032	+.0014	−.0006	−.0013	−.0013	−.0012
	0.05	+.0591	+.0099	+.0066	+.0039	+.0011	+.0003	+.0003	+.0003	+.0020	+.0022	+.0034	+.0082	+.0135	+.0174	+.0188
	0	−.0496	0	+.0005	+.0016	+.0049	+.0080	+.0100	+.0108	0	+.0025	+.0082	+.0247	+.0399	+.0502	+.0538
		R_x \ R_y	−.0496	−.0631	+.0371	+.2253	+.3598	+.4382	+.4638							
$a/b = 5/8$	0.5	+.5143	+.0765	+.0526	+.0319	−.0001	−.0214	−.0336	−.0376	+.0153	+.0102	+.0054	−.0033	−.0101	−.0144	−.0159
	0.4	+.5045	+.0736	+.0502	+.0302	−.0004	−.0207	−.0321	−.0358	+.0147	+.0097	+.0050	−.0037	−.0104	−.0147	−.0161
	0.3	+.4660	+.0642	+.0429	+.0251	−.0012	−.0181	−.0274	−.0304	+.0128	+.0082	+.0037	−.0045	−.0107	−.0146	−.0159
	0.2	+.3697	+.0462	+.0297	+.0166	−.0017	−.0127	−.0186	−.0204	+.0092	+.0055	+.0020	−.0039	−.0082	−.0106	−.0114
	0.1	+.1635	+.0191	+.0119	+.0065	−.0004	−.0037	−.0052	−.0056	+.0038	+.0025	+.0018	+.0022	+.0036	+.0050	+.0056
	0.05	+.0150	+.0063	+.0046	+.0030	+.0018	+.0020	+.0025	+.0028	+.0013	+.0021	+.0042	+.0110	+.0180	+.0231	+.0249
	0	−.0454	0	+.0005	+.0017	+.0050	+.0082	+.0102	+.0109	0	+.0025	+.0083	+.0252	+.0408	+.0511	+.0547
		R_x \ R_y	−.0454	−.0527	+.0410	+.2277	+.3616	+.4394	+.4648							
$a/b = 3/4$	0.5	+.4999	+.0686	+.0457	+.0265	−.0017	−.0196	−.0293	−.0324	+.0137	+.0087	+.0037	−.0055	−.0128	−.0175	−.0191
	0.4	+.4845	+.0653	+.0432	+.0248	−.0019	−.0186	−.0277	−.0306	+.0131	+.0082	+.0034	−.0056	−.0126	−.0171	−.0186
	0.3	+.4311	+.0550	+.0357	+.0200	−.0022	−.0156	−.0227	−.0249	+.0110	+.0066	+.0024	−.0054	−.0113	−.0150	−.0162
	0.2	+.3179	+.0374	+.0235	+.0126	−.0019	−.0101	−.0142	−.0155	+.0075	+.0043	+.0014	−.0033	−.0064	−.0081	−.0086
	0.1	+.1133	+.0140	+.0089	+.0049	+.0001	−.0018	−.0025	−.0026	+.0028	+.0021	+.0023	+.0045	+.0074	+.0098	+.0107
	0.05	−.0109	+.0043	+.0034	+.0024	+.0022	+.0031	+.0039	+.0043	+.0009	+.0021	+.0048	+.0129	+.0210	+.0268	+.0288
	0	−.0412	0	+.0005	+.0017	+.0051	+.0082	+.0102	+.0109	0	+.0024	+.0083	+.0254	+.0409	+.0511	+.0546
		R_x \ R_y	−.0412	−.0457	+.0445	+.2305	+.3626	+.4384	+.4629							
$a/b = 7/8$	0.5	+.4730	+.0592	+.0380	+.0208	−.0031	−.0172	−.0245	−.0267	+.0118	+.0070	+.0021	−.0072	−.0146	−.0193	−.0209
	0.4	+.4542	+.0560	+.0356	+.0193	−.0031	−.0162	−.0229	−.0250	+.0112	+.0065	+.0018	−.0070	−.0139	−.0183	−.0198
	0.3	+.3928	+.0462	+.0288	+.0153	−.0029	−.0131	−.0183	−.0198	+.0092	+.0052	+.0012	−.0059	−.0113	−.0146	−.0157
	0.2	+.2736	+.0302	+.0184	+.0094	−.0020	−.0079	−.0107	−.0114	+.0060	+.0033	+.0010	−.0026	−.0047	−.0057	−.0061
	0.1	+.0798	+.0106	+.0068	+.0037	+.0005	−.0005	−.0006	−.0006	+.0021	+.0019	+.0027	+.0060	+.0099	+.0129	+.0139
	0.05	−.0250	+.0031	+.0026	+.0021	+.0025	+.0037	+.0047	+.0051	+.0006	+.0021	+.0051	+.0140	+.0226	+.0285	+.0306
	0	−.0377	0	+.0005	+.0017	+.0050	+.0080	+.0099	+.0106	0	+.0024	+.0083	+.0251	+.0400	+.0497	+.0530
		R_x \ R_y	−.0377	−.0391	+.0503	+.2341	+.3608	+.4319	+.4546							
$a/b = 1$	0.5	+.4389	+.0500	+.0306	+.0156	−.0040	−.0147	−.0198	−.0213	+.0100	+.0054	+.0007	−.0082	−.0153	−.0197	−.0213
	0.4	+.4189	+.0470	+.0286	+.0144	−.0039	−.0137	−.0184	−.0197	+.0094	+.0050	+.0006	−.0078	−.0143	−.0184	−.0198
	0.3	+.3551	+.0382	+.0229	+.0112	−.0033	−.0109	−.0143	−.0153	+.0076	+.0040	+.0003	−.0061	−.0109	−.0137	−.0147
	0.2	+.2373	+.0244	+.0143	+.0068	−.0020	−.0061	−.0078	−.0082	+.0049	+.0026	+.0007	−.0020	−.0033	−.0039	−.0040
	0.1	+.0585	+.0082	+.0052	+.0028	+.0007	+.0003	+.0006	+.0007	+.0016	+.0018	+.0028	+.0068	+.0112	+.0144	+.0156
	0.05	−.0316	+.0024	+.0021	+.0018	+.0026	+.0040	+.0050	+.0054	+.0005	+.0021	+.0052	+.0143	+.0229	+.0286	+.0306
	0	−.0351	0	+.0005	+.0016	+.0049	+.0076	+.0094	+.0100	0	+.0024	+.0082	+.0244	+.0382	+.0470	+.0500
		R_y	−.0351	−.0316	+.0585	+.2373	+.3551	+.4189	+.4389							

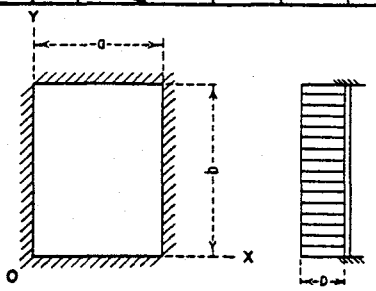

Moment = (Coefficient)(pa^2)

Reaction = (Coefficient)(pa)

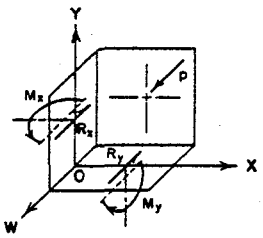

POSITIVE SIGN CONVENTION

FIGURE 34.—*Plate fixed along four edges, moment and reaction coefficients, Load I, uniform load.*

STEEL BULKHEADS

EARTH PRESSURE
$A_{T\text{-}REST} = .055^{KSF/FT}$

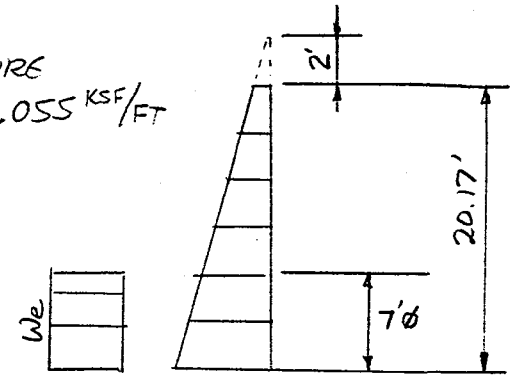

7'ø AT CHEM. MIXER

$We = [(.055)(15.17+22.17)]/2 = 1.027^{KSF}$

SEE ROARK 5th ed. TBL. 24, CASE 10
ASSUME PERIMETER IS FIXED, $r_o = 0$

$M_{\mathbb{C}} = (1.027/144)(42)^2(1+.27)/16 = 0.998^{K\text{-}IN/IN}$

$M_r = -(1.027/144)(42)^2/8 = 1.57^{K\text{-}IN/IN}$

$\Delta_c = (1.027/144)(42)^4/64[(29000)(.5)^3/(12)(1-.27^2)] = 1.06''$

$S = (1)(.5)^2/6 = .042^{in^3/in}$

$f_b = (1.57)/.042 = 37^{KSI}$ NO GOOD, LIMIT TO 27^{KSI}

TRY 5/8" PL

$D = (29000)(.625)^3/(12)(1-.27^2) = 636$
$S = (1)(.625)^2/6 = .065\ in^3/in$
$f_b = 1.57/.065 = 24^{KSI}$

USE 5/8" PL

8'ø AT INFLUENT STRUCTURE (SEE SNT. C-11)

$We = [(.055)(15+7)]/2 = 0.605^{KSF}$

$M_r = -(.605/144)(48)^2/8 = 1.21$

TRY 5/8" PL

$f_b = 1.21/.065 = 18.6^{KSI}$ (< 27 ✓)

$\Delta = (.605/144)(48)^4/(64)(636) = 0.55''$

APPENDIX

```
**************************************************
*                                                *
*            S T A A D - III                     *
*            REVISION 12.1 (VERSION 12 LEVEL 1)  *
*            PROPRIETARY PROGRAM OF              *
*            RESEARCH ENGINEERS, INC.            *
*            DATE=    AUG  2, 1990               *
*            TIME=     8: 7:31                   *
*                                                *
**************************************************
```

```
  1. STAAD SPACE  -  SOUTH WALL OF EXISTING INFLUENT STRUCTURE
  2. GRAPHICS PRINTER IBM PIN 9
  3. INPUT NODESIGN

*** THIS RUN WILL ALLOW ANALYSIS ONLY AND NO DESIGN ***
  4. UNITS FT KIP
  5. JOINT COORDINATES NOREDUCE BAND
  6.   1  0.0      0.0
  7.   2  0.0      2.5
  8.   3  0.0      6.5
  9.   4  0.0     10.5
 10.   5  0.0     13.0
 11.   6  0.0     15.5
 12.   7  2.5      0.0
 13.   8  2.5      2.5
 14.   9  2.5      6.5
 15.  10  2.5     10.5
 16.  11  2.5     13.0
 17.  12  2.5     15.5
 18.  13  5.25     0.0
 19.  14  5.25     2.5
 20.  15  5.25     6.5
 21.  16  5.25    10.5
 22.  17  5.25    13.0
 23.  18  5.25    15.5
 24.  19  6.4216   3.6716
 25.  20  6.4216   9.3284
 26.  21  9.25     0.0
 27.  22  9.25     2.5
 28.  23  9.25     6.5
 29.  24  9.25    10.5
 30.  25  9.25    13.0
 31.  26  9.25    15.5
 32.  27 12.0784   3.6716
 33.  28 12.0784   9.3284
 34.  29 13.25     0.0
 35.  30 13.25     2.5
 36.  31 13.25     6.5
 37.  32 13.25    10.5
 38.  33 13.25    13.0
 39.  34 13.25    15.5
 40.  35 16.0      0.0
 41.  36 16.0      2.5
 42.  37 16.0      6.5
 43.  38 16.0     10.5
 44.  39 16.0     13.0
 45.  40 16.0     15.5
 46.  41 18.5      0.0
```

```
47. 42 18.5     2.5
48. 43 18.5     6.5
49. 44 18.5    10.5
50. 45 18.5    13.0
51. 46 18.5    15.5
52. ELEMENT INCIDENCES
53.  1  1  2  8  7 TO 5
54.  6  7  8 14 13 TO 10
55. 11 13 14 22 21
56. 12 22 14 19
57. 13 14 15 19
58. 14 15 16 20
59. 15 16 24 20
60. 16 16 17 25 24 TO 17
61. 18 21 22 30 29
62. 19 30 22 27
63. 20 31 30 27
64. 21 32 31 28
65. 22 24 32 28
66. 23 24 25 33 32 TO 24
67. 25 29 30 36 35 TO 29
68. 30 35 36 42 41 TO 34
69. 35 23 24 28
70. 36 31 23 28
71. 37 23 31 27
72. 38 22 23 27
73. 39 23 22 19
74. 40 15 23 19
75. 41 23 15 20
76. 42 24 23 20
77. ELEMENT PROPERTIES
78.  1 TO 34 THICKNESS 1.1667
79. 35 TO 42 THICKNESS 0.0417
80. SUPPORTS
81. 1 TO 6 7 13 29 35 41 TO 46 PINNED
82. 21 FIXED BUT MX MY
83. CONSTANTS
84. E  449571.  1 TO 34
85. E 4176000. 35 TO 42
86. POISSON 0.14  1 TO 34
87. POISSON 0.27 35 TO 42
88. DENSITY 0.15  1 TO 34
89. DENSITY 0.49 35 TO 42
90. DRAW ALL
```

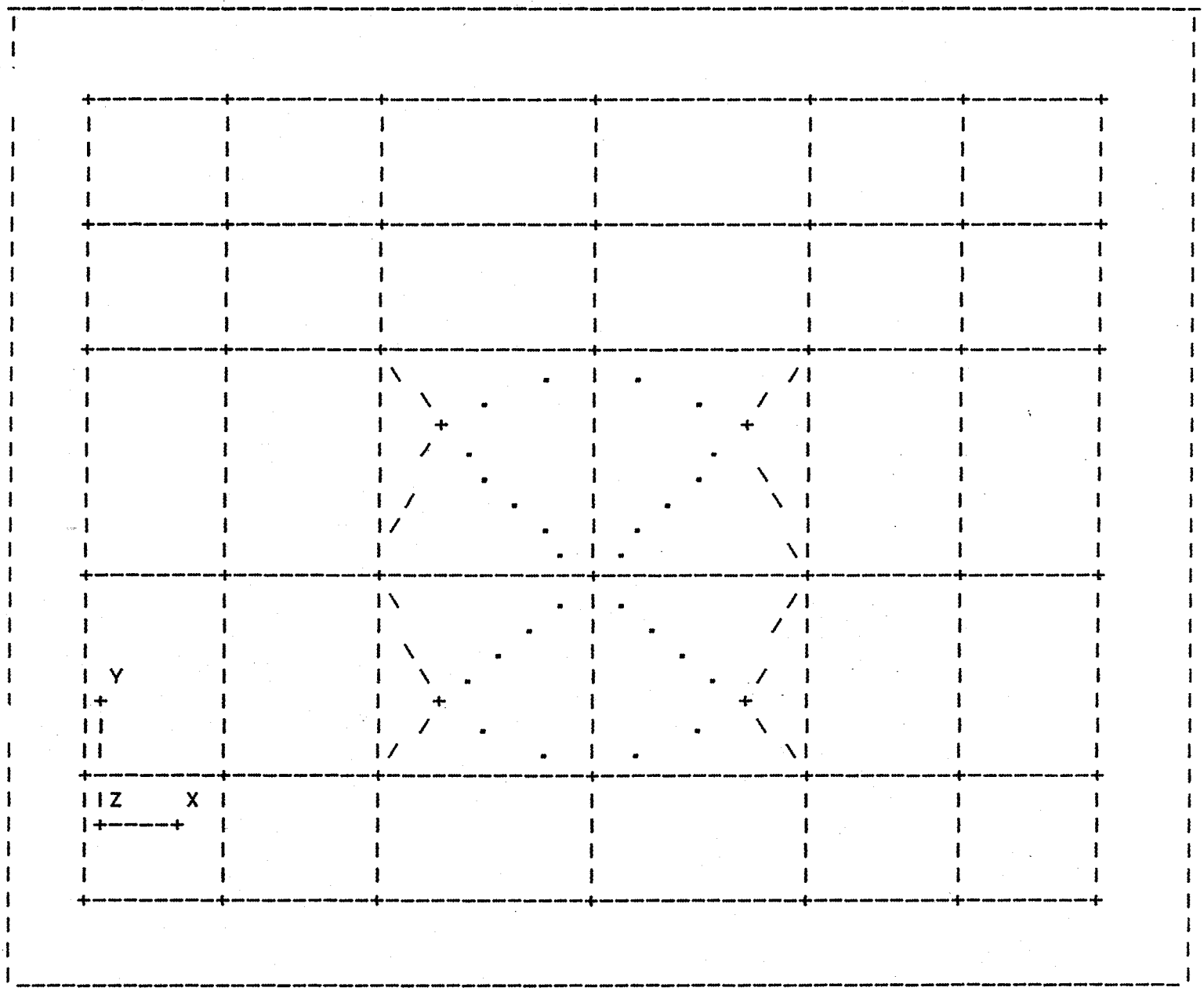
Y
Z
X

```
 91. LOADING 1  DEAD LOAD
 92. SELFWEIGHT
 93. LOADING 2  EARTH PRESSURE
 94. ELEMENT LOAD
 95.  1  6 11 18 25 30 PRESSURE 0.8938
 96.  2  7 12 13 37 TO 40 19 20 26 31 PRESSURE 0.7150
 97.  3  8 14 15 41 42 35 36 21 22 27 32 PRESSURE 0.4950
 98.  4  9 16 23 28 33 PRESSURE 0.3163
 99.  5 10 17 24 29 34 PRESSURE 0.1788
100. LOADING 3  HYDROSTATIC PRESSURE
101. ELEMENT LOAD
102.  1  6 11 18 25 30 PRESSURE -0.5460
103.  2  7 12 13 37 TO 40 19 20 26 31 PRESSURE -.3432
104.  3  8 14 15 41 42 35 36 21 22 27 32 PRESSURE -0.0956
105. LOAD COMBINATION 4  DEAD + EARTHPRESSURE
106. 1 1. 2 1.
107. LOAD COMBINATION 5  DEAD + HYDROSTATIC
108. 1 1. 3 1.
109. PERFORM ANALYSIS


        P R O B L E M   S T A T I S T I C S
        -----------------------------------

  NUMBER OF JOINTS/MEMBER+ELEMENTS/SUPPORTS =    46/   42/   17
  ORGINAL/FINAL BAND-WIDTH =    0/    0
  TOTAL PRIMARY LOAD CASES =    3, TOTAL DEGREES OF FREEDOM =   276
  SIZE OF STIFFNESS MATRIX =   16560 DOUBLE PREC. WORDS
  TOTAL REQUIRED DISK SPACE =    0.51 MEGA-BYTES


++ PROCESSING ELEMENT STIFFNESS MATRIX.                 8: 9: 3
++ PROCESSING GLOBAL STIFFNESS MATRIX.                  8:11:24
++ PROCESSING TRIANGULAR FACTORIZATION.                 8:12: 3
++ CALCULATING JOINT DISPLACEMENTS.                     8:13:40
++ CALCULATING ELEMENT FORCES.                          8:14:20

110. OUTPUT WIDTH 118
111. LOAD LIST 4 TO 5
112. PLOT BENDING
113. PLOT STRESS
114. PRINT JOINT DISPLACEMENTS
```

JOINT DISPLACEMENT (INCH RADIANS) STRUCTURE TYPE = SPACE

JOINT	LOAD	X-TRANS	Y-TRANS	Z-TRANS	X-ROTAN	Y-ROTAN	Z-ROTAN
1	4	0.00000	0.00000	0.00000	-0.00008	0.00010	0.00000
	5	0.00000	0.00000	0.00000	0.00003	-0.00004	0.00000
2	4	0.00000	0.00000	0.00000	-0.00025	0.00059	0.00000
	5	0.00000	0.00000	0.00000	0.00008	-0.00020	0.00000
3	4	0.00000	0.00000	0.00000	-0.00009	0.00130	0.00000
	5	0.00000	0.00000	0.00000	0.00001	-0.00039	0.00000
4	4	0.00000	0.00000	0.00000	0.00000	0.00154	0.00000
	5	0.00000	0.00000	0.00000	-0.00001	-0.00039	0.00000
5	4	0.00000	0.00000	0.00000	-0.00002	0.00159	0.00000
	5	0.00000	0.00000	0.00000	-0.00001	-0.00037	0.00000
6	4	0.00000	0.00000	0.00000	0.00003	0.00160	0.00001
	5	0.00000	0.00000	0.00000	-0.00001	-0.00034	0.00001
7	4	0.00000	0.00000	0.00000	-0.00058	0.00021	0.00000
	5	0.00000	0.00000	0.00000	0.00020	-0.00007	0.00000
8	4	-0.00002	-0.00005	-0.01778	-0.00051	0.00055	0.00000
	5	-0.00002	-0.00005	0.00594	0.00016	-0.00018	0.00000
9	4	-0.00002	-0.00010	-0.03772	-0.00025	0.00119	0.00000
	5	-0.00002	-0.00010	0.01121	0.00004	-0.00035	0.00000
10	4	-0.00001	-0.00012	-0.04497	-0.00007	0.00142	0.00000
	5	-0.00001	-0.00012	0.01146	-0.00002	-0.00036	0.00000
11	4	0.00001	-0.00012	-0.04613	-0.00003	0.00144	0.00000
	5	0.00001	-0.00012	0.01071	-0.00002	-0.00034	0.00000
12	4	0.00009	-0.00014	-0.04746	-0.00006	0.00146	0.00000
	5	0.00009	-0.00014	0.01010	-0.00002	-0.00032	0.00000
13	4	0.00000	0.00000	0.00000	-0.00122	0.00016	0.00000
	5	0.00000	0.00000	0.00000	0.00041	-0.00005	0.00000
14	4	-0.00001	-0.00006	-0.03445	-0.00105	0.00040	0.00000
	5	-0.00001	-0.00006	0.01137	0.00033	-0.00014	0.00000
15	4	-0.00003	-0.00014	-0.07421	-0.00050	0.00112	0.00000
	5	-0.00003	-0.00014	0.02198	0.00009	-0.00034	0.00000
16	4	-0.00001	-0.00022	-0.08670	-0.00004	0.00111	0.00000
	5	-0.00001	-0.00022	0.02208	-0.00006	-0.00028	0.00000
17	4	0.00002	-0.00025	-0.08770	-0.00003	0.00102	0.00000
	5	0.00002	-0.00025	0.02050	-0.00005	-0.00024	0.00000
18	4	0.00007	-0.00025	-0.08933	-0.00009	0.00101	0.00000
	5	0.00007	-0.00025	0.01926	-0.00003	-0.00023	0.00000
19	4	-0.00001	-0.00008	-0.05646	-0.00110	0.00048	0.00000
	5	-0.00001	-0.00008	0.01831	0.00034	-0.00017	0.00000
20	4	-0.00002	-0.00022	-0.09987	0.00000	0.00103	0.00000
	5	-0.00002	-0.00022	0.02649	-0.00007	-0.00026	0.00000
21	4	0.00000	0.00000	0.00000	-0.00158	0.00000	0.00000
	5	0.00000	0.00000	0.00000	0.00053	0.00000	0.00000
22	4	0.00000	-0.00005	-0.04692	-0.00157	0.00000	0.00000
	5	0.00000	-0.00005	0.01555	0.00051	0.00000	0.00000
23	4	0.00000	-0.00017	-2.13964	-0.00076	0.00000	0.00000
	5	0.00000	-0.00017	0.76911	0.00013	0.00000	0.00000
24	4	0.00000	-0.00029	-0.11467	0.00010	0.00000	0.00000
	5	0.00000	-0.00029	0.02910	-0.00011	0.00000	0.00000

JOINT DISPLACEMENT (INCH RADIANS) STRUCTURE TYPE = SPACE

JOINT	LOAD	X-TRANS	Y-TRANS	Z-TRANS	X-ROTAN	Y-ROTAN	Z-ROTAN
25	4	0.00000	-0.00031	-0.11312	0.00001	0.00000	0.00000
	5	0.00000	-0.00031	0.02648	-0.00007	0.00000	0.00000
26	4	0.00000	-0.00031	-0.11439	-0.00010	0.00000	0.00000
	5	0.00000	-0.00031	0.02474	-0.00005	0.00000	0.00000
27	4	0.00001	-0.00008	-0.05640	-0.00110	-0.00048	0.00000
	5	0.00001	-0.00008	0.01824	0.00034	0.00017	0.00000
28	4	0.00002	-0.00022	-0.09981	0.00000	-0.00103	0.00000
	5	0.00002	-0.00022	0.02642	-0.00007	0.00026	0.00000
29	4	0.00000	0.00000	0.00000	-0.00122	-0.00016	0.00000
	5	0.00000	0.00000	0.00000	0.00041	0.00005	0.00000
30	4	0.00001	-0.00006	-0.03441	-0.00105	-0.00040	0.00000
	5	0.00001	-0.00006	0.01132	0.00033	0.00014	0.00000
31	4	0.00003	-0.00014	-0.07411	-0.00050	-0.00112	0.00000
	5	0.00003	-0.00014	0.02187	0.00009	0.00033	0.00000
32	4	0.00001	-0.00022	-0.08665	-0.00004	-0.00111	0.00000
	5	0.00001	-0.00022	0.02202	-0.00006	0.00028	0.00000
33	4	-0.00002	-0.00025	-0.08767	-0.00003	-0.00102	0.00000
	5	-0.00002	-0.00025	0.02047	-0.00005	0.00024	0.00000
34	4	-0.00007	-0.00025	-0.08932	-0.00009	-0.00101	0.00000
	5	-0.00007	-0.00025	0.01924	-0.00003	0.00023	0.00000
35	4	0.00000	0.00000	0.00000	-0.00058	-0.00021	0.00000
	5	0.00000	0.00000	0.00000	0.00020	0.00007	0.00000
36	4	0.00002	-0.00005	-0.01775	-0.00051	-0.00055	0.00000
	5	0.00002	-0.00005	0.00590	0.00016	0.00018	0.00000
37	4	0.00002	-0.00010	-0.03767	-0.00025	-0.00119	0.00000
	5	0.00002	-0.00010	0.01115	0.00004	0.00035	0.00000
38	4	0.00001	-0.00012	-0.04493	-0.00007	-0.00142	0.00000
	5	0.00001	-0.00012	0.01142	-0.00002	0.00036	0.00000
39	4	-0.00001	-0.00012	-0.04610	-0.00003	-0.00144	0.00000
	5	-0.00001	-0.00012	0.01069	-0.00002	0.00034	0.00000
40	4	-0.00009	-0.00014	-0.04745	-0.00006	-0.00146	0.00000
	5	-0.00009	-0.00014	0.01008	-0.00002	0.00032	0.00000
41	4	0.00000	0.00000	0.00000	-0.00008	-0.00010	0.00000
	5	0.00000	0.00000	0.00000	0.00003	0.00004	0.00000
42	4	0.00000	0.00000	0.00000	-0.00025	-0.00058	0.00000
	5	0.00000	0.00000	0.00000	0.00008	0.00020	0.00000
43	4	0.00000	0.00000	0.00000	-0.00009	-0.00130	0.00000
	5	0.00000	0.00000	0.00000	0.00001	0.00039	0.00000
44	4	0.00000	0.00000	0.00000	0.00000	-0.00153	0.00000
	5	0.00000	0.00000	0.00000	-0.00001	0.00039	0.00000
45	4	0.00000	0.00000	0.00000	-0.00002	-0.00159	0.00000
	5	0.00000	0.00000	0.00000	-0.00001	0.00036	0.00000
46	4	0.00000	0.00000	0.00000	0.00003	-0.00160	-0.00001
	5	0.00000	0.00000	0.00000	-0.00001	0.00034	-0.00001

********** END OF LATEST ANALYSIS RESULT **********

115. PRINT SUPPORT REACTIONS

SUPPORT REACTIONS -UNIT KIP FEET STRUCTURE TYPE = SPACE

JOINT	LOAD	FORCE-X	FORCE-Y	FORCE-Z	MOM-X	MOM-Y	MOM Z
1	4	0.48	0.83	-14.93	0.00	0.00	0.00
	5	0.48	0.83	4.36	0.00	0.00	0.00
2	4	1.24	2.22	10.11	0.00	0.00	0.00
	5	1.24	2.22	-4.90	0.00	0.00	0.00
3	4	1.37	3.53	18.22	0.00	0.00	0.00
	5	1.37	3.53	-6.56	0.00	0.00	0.00
4	4	0.59	3.12	12.34	0.00	0.00	0.00
	5	0.59	3.12	-3.29	0.00	0.00	0.00
5	4	-0.77	1.90	8.15	0.00	0.00	0.00
	5	-0.77	1.90	-1.16	0.00	0.00	0.00
6	4	-1.86	1.68	4.31	0.00	0.00	0.00
	5	-1.86	1.68	0.05	0.00	0.00	0.00
7	4	0.51	2.59	4.32	0.00	0.00	0.00
	5	0.51	2.59	-2.81	0.00	0.00	0.00
13	4	0.42	3.76	22.68	0.00	0.00	0.00
	5	0.42	3.76	-9.54	0.00	0.00	0.00
29	4	-0.42	3.76	22.65	0.00	0.00	0.00
	5	-0.42	3.76	-9.50	0.00	0.00	0.00
35	4	-0.51	2.59	4.32	0.00	0.00	0.00
	5	-0.51	2.59	-2.80	0.00	0.00	0.00
41	4	-0.48	0.83	-14.91	0.00	0.00	0.00
	5	-0.48	0.83	4.33	0.00	0.00	0.00
42	4	-1.24	2.22	10.09	0.00	0.00	0.00
	5	-1.24	2.22	-4.88	0.00	0.00	0.00
43	4	-1.37	3.53	18.18	0.00	0.00	0.00
	5	-1.37	3.53	-6.51	0.00	0.00	0.00
44	4	-0.59	3.12	12.32	0.00	0.00	0.00
	5	-0.59	3.12	-3.26	0.00	0.00	0.00
45	4	0.77	1.90	8.15	0.00	0.00	0.00
	5	0.77	1.90	-1.15	0.00	0.00	0.00
46	4	1.86	1.68	4.31	0.00	0.00	0.00
	5	1.86	1.68	0.04	0.00	0.00	0.00
21	4	0.00	3.92	23.47	0.00	0.00	0.00
	5	0.00	3.92	-10.14	0.00	0.00	0.00

********** END OF LATEST ANALYSIS RESULT **********

116. PRINT ELEMENT FORCES

BIDDING SCHEDULE

Project: Squaw Peak Water Treatment Plant
Bypass Line

Contract: FCD 90-31

Item No.	Approximate Quantity	Unit	Description	Unit Cost (in writing) and /100 Dollars	Unit Cost	Extended Amount
206-1	1	LS	Structural Excavation and Backfill			
211-1	1	LS	Fill Construction			
505-1			CLASS A			
505-~~1~~2	1348	CY	Structural Concrete Class AA			
505-~~2~~3	1	LS	Demolition and Removals at Existing Pump Station No. 2 Forebay			
505-~~3~~4	244,000	LS	Reinforcing Steel			
515-1	1	LS	Miscellaneous Steel			
520-1	1	LS	Miscellaneous Aluminum			
1500-1	70	LF	96" R.G.R.C.P. Class II, With Fittings and Bulkhead			
1500-2	1	LS	Relocate Existing 4" PVC Waterline, 6" and 8" Sludge Lines			
1500-3	1	LS	Connection of 96" R.G.R.C.P. at Existing Junction Structure			
1600-1	1	LS	Relocate Existing Electric			
1600-2	380	LF	Concrete Duct Bank			
1600-3	6	EA	Electrical Manholes/Pull Boxes			

TOTAL BID AMOUNT: _____

The Bidder hereby acknowledges receipt of and agrees his proposal is based on the following addenda.

ELEMENT FORCES FORCE,LENGTH UNITS= KIP FEET

FORCE OR STRESS = FORCE/WIDTH/THICK, MOMENT = FORCE-LENGTH/WIDTH

ELEMENT	LOAD	QX	QY FX	MX FY	MY FXY	MXY
1	4	-3.48	-3.03	-1.30	-0.99	-8.30
			-0.39	-0.19	-0.22	
TOP :	SMAX=	31.48	SMIN= -42.17	TMAX=	36.82	ANGLE= 44.4
BOTT:	SMAX=	41.15	SMIN= -31.62	TMAX=	36.39	ANGLE= 44.5
	5	0.99	0.92	0.24	0.22	2.69
			-0.39	-0.19	-0.22	
TOP :	SMAX=	12.35	SMIN= -10.91	TMAX=	11.63	ANGLE= 90.0
BOTT:	SMAX=	10.77	SMIN= -13.36	TMAX=	12.07	ANGLE= 44.7
2	4	-3.58	2.67	3.41	2.20	-6.64
			-0.29	-0.21	-0.50	
TOP :	SMAX=	41.97	SMIN= -17.74	TMAX=	29.86	ANGLE= -42.5
BOTT:	SMAX=	16.26	SMIN= -41.50	TMAX=	28.88	ANGLE= -42.3
	5	0.99	-1.04	-1.54	-0.85	1.78
			-0.29	-0.21	-0.50	
TOP :	SMAX=	2.02	SMIN= -13.03	TMAX=	7.52	ANGLE= -39.0
BOTT:	SMAX=	13.48	SMIN= -3.48	TMAX=	8.48	ANGLE= -40.0
3	4	-1.58	2.20	2.43	3.00	-2.69
			-0.17	-0.20	-0.68	
TOP :	SMAX=	24.37	SMIN= -0.80	TMAX=	12.58	ANGLE= 42.2
BOTT:	SMAX=	-0.91	SMIN= -23.39	TMAX=	11.24	ANGLE= 41.8
	5	0.21	-0.66	-0.73	-0.86	0.20
			-0.17	-0.20	-0.68	
TOP :	SMAX=	-3.32	SMIN= -4.05	TMAX=	0.37	ANGLE= 16.1
BOTT:	SMAX=	4.90	SMIN= 1.75	TMAX=	1.57	ANGLE= 39.8
4	4	-0.71	2.37	0.69	3.20	-0.86
			-0.02	-0.01	-0.72	
TOP :	SMAX=	15.69	SMIN= 1.42	TMAX=	7.13	ANGLE= 19.6
BOTT:	SMAX=	-2.27	SMIN= -14.91	TMAX=	6.32	ANGLE= 14.6
	5	-0.17	-0.53	-0.08	-0.70	-0.37
			-0.02	-0.01	-0.72	
TOP :	SMAX=	0.98	SMIN= -4.46	TMAX=	2.72	ANGLE= -30.1
BOTT:	SMAX=	3.35	SMIN= 0.05	TMAX=	1.65	ANGLE= -17.1
5	4	-0.11	2.40	0.64	3.38	-0.71
			0.31	0.50	-0.59	
TOP :	SMAX=	16.42	SMIN= 2.10	TMAX=	7.16	ANGLE= 15.6
BOTT:	SMAX=	-2.01	SMIN= -14.90	TMAX=	6.45	ANGLE= 11.6
	5	-0.17	-0.28	-0.05	-0.58	-0.30
			0.31	0.50	-0.59	
TOP :	SMAX=	1.20	SMIN= -3.16	TMAX=	2.18	ANGLE= -30.1
BOTT:	SMAX=	3.26	SMIN= 0.32	TMAX=	1.47	ANGLE= -14.7
6	4	3.24	-4.97	3.21	2.56	-8.61
			-0.88	-0.08	-0.13	
TOP :	SMAX=	50.34	SMIN= -25.85	TMAX=	38.10	ANGLE= -44.2
BOTT:	SMAX=	24.67	SMIN= -51.06	TMAX=	37.87	ANGLE= -43.6

ELEMENT FORCES FORCE,LENGTH UNITS= KIP FEET

FORCE OR STRESS = FORCE/WIDTH/THICK, MOMENT = FORCE-LENGTH/WIDTH

ELEMENT	LOAD	QX	QY FX	MX FY	MY FXY	MXY
	5	-1.30	1.73	-1.43	-0.85	2.83
			-0.88	-0.08	-0.13	
TOP :	SMAX=	6.96	SMIN= -17.96	TMAX=	12.46	ANGLE= -41.1
BOTT:	SMAX=	17.19	SMIN= -8.09	TMAX=	12.64	ANGLE= -43.0
7	4	1.95	2.27	6.54	3.33	-8.21
			-0.59	-0.10	-0.24	
TOP :	SMAX=	58.48	SMIN= -15.68	TMAX=	37.08	ANGLE= -39.7
BOTT:	SMAX=	14.61	SMIN= -58.80	TMAX=	36.71	ANGLE= -39.2
	5	-0.39	-0.93	-2.87	-1.06	2.26
			-0.59	-0.10	-0.24	
TOP :	SMAX=	1.58	SMIN= -19.60	TMAX=	10.59	ANGLE= -33.2
BOTT:	SMAX=	19.17	SMIN= -2.53	TMAX=	10.85	ANGLE= -34.9
8	4	0.69	1.20	5.43	4.94	-1.73
			-0.45	-0.13	-0.38	
TOP :	SMAX=	30.63	SMIN= 14.48	TMAX=	8.08	ANGLE= -41.7
BOTT:	SMAX=	-15.77	SMIN= -30.51	TMAX=	7.37	ANGLE= -40.1
	5	0.22	-0.29	-1.69	-1.36	-0.13
			-0.45	-0.13	-0.38	
TOP :	SMAX=	-5.69	SMIN= -8.35	TMAX=	1.33	ANGLE= 23.5
BOTT:	SMAX=	7.05	SMIN= 5.82	TMAX=	0.62	ANGLE= 9.9
9	4	0.49	0.97	1.72	8.20	0.50
			-0.25	0.00	-0.48	
TOP :	SMAX=	36.26	SMIN= 7.24	TMAX=	14.51	ANGLE= -3.4
BOTT:	SMAX=	-7.59	SMIN= -36.42	TMAX=	14.42	ANGLE= -5.4
	5	0.07	-0.26	-0.27	-2.01	-0.67
			-0.25	0.00	-0.48	
TOP :	SMAX=	-0.09	SMIN= -10.22	TMAX=	5.06	ANGLE= -21.5
BOTT:	SMAX=	9.57	SMIN= 0.24	TMAX=	4.67	ANGLE= -16.1
10	4	-0.12	2.00	0.26	9.50	-0.18
			-0.17	-0.08	-0.23	
TOP :	SMAX=	41.81	SMIN= 0.93	TMAX=	20.44	ANGLE= 1.4
BOTT:	SMAX=	-1.29	SMIN= -41.96	TMAX=	20.34	ANGLE= 0.8
	5	0.04	-0.30	-0.01	-2.09	-0.35
			-0.17	-0.08	-0.23	
TOP :	SMAX=	0.12	SMIN= -9.65	TMAX=	4.88	ANGLE= -10.6
BOTT:	SMAX=	9.32	SMIN= -0.30	TMAX=	4.81	ANGLE= -7.8
11	4	2.84	-1.37	2.81	4.56	-4.06
			-0.68	-0.13	-0.01	
TOP :	SMAX=	34.25	SMIN= -2.55	TMAX=	18.40	ANGLE= 38.5
BOTT:	SMAX=	1.61	SMIN= -34.91	TMAX=	18.26	ANGLE= 39.4
	5	-1.17	0.51	-1.27	-1.59	1.40
			-0.68	-0.13	-0.01	
TOP :	SMAX=	-0.55	SMIN= -12.86	TMAX=	6.16	ANGLE= 43.0
BOTT:	SMAX=	12.14	SMIN= -0.35	TMAX=	6.24	ANGLE= 40.5

ELEMENT FORCES FORCE,LENGTH UNITS= KIP FEET

FORCE OR STRESS = FORCE/WIDTH/THICK, MOMENT = FORCE-LENGTH/WIDTH

ELEMENT	LOAD	QX	QY FX	MX FY	MY FXY	MXY
12	4	-1.42	2.68	6.76	5.95	7.87
			0.03	0.00	-0.01	
TOP :	SMAX=	62.74	SMIN= -6.69	TMAX=	34.71	ANGLE= 43.5
BOTT:	SMAX=	6.75	SMIN= -62.74	TMAX=	34.74	ANGLE= 43.5
	5	0.44	-0.06	-2.42	-2.77	-2.83
			0.03	0.00	-0.01	
TOP :	SMAX=	1.09	SMIN= -23.93	TMAX=	12.51	ANGLE= -43.2
BOTT:	SMAX=	23.93	SMIN= -1.03	TMAX=	12.48	ANGLE= -43.2
13	4	1.42	-0.59	9.30	7.64	-9.46
			-0.76	0.00	0.03	
TOP :	SMAX=	78.75	SMIN= -4.86	TMAX=	41.81	ANGLE= -42.8
BOTT:	SMAX=	4.23	SMIN= -79.63	TMAX=	41.93	ANGLE= -42.2
	5	-0.20	-0.84	-3.93	-1.75	3.01
			-0.76	0.00	0.03	
TOP :	SMAX=	1.38	SMIN= -27.19	TMAX=	14.29	ANGLE= -34.4
BOTT:	SMAX=	26.12	SMIN= -1.83	TMAX=	13.98	ANGLE= -35.8
14	4	0.54	0.64	7.58	5.20	3.99
			-0.72	0.00	-0.29	
TOP :	SMAX=	45.75	SMIN= 9.83	TMAX=	17.96	ANGLE= 37.1
BOTT:	SMAX=	-9.80	SMIN= -47.22	TMAX=	18.71	ANGLE= 36.3
	5	0.17	0.46	-2.42	-1.99	-1.69
			-0.72	0.00	-0.29	
TOP :	SMAX=	-2.21	SMIN= -17.94	TMAX=	7.86	ANGLE= 40.2
BOTT:	SMAX=	16.57	SMIN= 2.15	TMAX=	7.21	ANGLE= 42.7
15	4	-0.13	1.06	16.81	2.43	-6.43
			0.06	0.00	0.19	
TOP :	SMAX=	84.84	SMIN= 0.03	TMAX=	42.40	ANGLE= -20.8
BOTT:	SMAX=	0.23	SMIN= -84.98	TMAX=	42.61	ANGLE= -21.0
	5	0.03	-0.93	-4.21	-0.45	1.79
			0.06	0.00	0.19	
TOP :	SMAX=	1.31	SMIN= -21.81	TMAX=	11.56	ANGLE= -22.2
BOTT:	SMAX=	21.65	SMIN= -1.04	TMAX=	11.35	ANGLE= -21.4
16	4	-0.89	0.91	1.24	15.99	1.05
			-0.35	-0.09	-0.19	
TOP :	SMAX=	70.69	SMIN= 4.81	TMAX=	32.94	ANGLE= -3.9
BOTT:	SMAX=	-5.45	SMIN= -70.93	TMAX=	32.74	ANGLE= -4.2
	5	0.30	-0.23	-0.07	-3.87	-0.43
			-0.35	-0.09	-0.19	
TOP :	SMAX=	-0.41	SMIN= -17.42	TMAX=	8.51	ANGLE= -7.2
BOTT:	SMAX=	17.15	SMIN= -0.19	TMAX=	8.67	ANGLE= -5.7
17	4	-0.33	0.81	0.12	15.14	0.13
			-0.15	-0.41	-0.09	
TOP :	SMAX=	66.31	SMIN= 0.38	TMAX=	32.96	ANGLE= -0.4
BOTT:	SMAX=	-0.68	SMIN= -67.13	TMAX=	33.23	ANGLE= -0.6

ELEMENT FORCES FORCE,LENGTH UNITS= KIP FEET

FORCE OR STRESS = FORCE/WIDTH/THICK, MOMENT = FORCE-LENGTH/WIDTH

ELEMENT	LOAD	QX	QY FX	MX FY	MY FXY	MXY
	5	0.06	-0.12	0.05	-3.47	-0.18
			-0.15	-0.41	-0.09	
TOP :	SMAX=	0.13	SMIN= -15.77	TMAX=	7.95	ANGLE= -3.2
BOTT:	SMAX=	14.94	SMIN= -0.41	TMAX=	7.67	ANGLE= -2.6
18	4	2.83	1.37	2.81	4.55	4.08
			-0.68	-0.13	0.01	
TOP :	SMAX=	34.26	SMIN= -2.62	TMAX=	18.44	ANGLE= -38.6
BOTT:	SMAX=	1.68	SMIN= -34.93	TMAX=	18.30	ANGLE= -39.4
	5	-1.17	-0.51	-1.27	-1.57	-1.41
			-0.68	-0.13	0.01	
TOP :	SMAX=	-0.46	SMIN= -12.88	TMAX=	6.21	ANGLE= -43.2
BOTT:	SMAX=	12.16	SMIN= -0.43	TMAX=	6.29	ANGLE= -40.7
19	4	1.43	2.63	6.75	5.98	-7.88
			0.03	0.00	0.01	
TOP :	SMAX=	62.82	SMIN= -6.69	TMAX=	34.76	ANGLE= -43.6
BOTT:	SMAX=	6.75	SMIN= -62.82	TMAX=	34.78	ANGLE= -43.6
	5	-0.45	-0.01	-2.40	-2.81	2.84
			0.03	0.00	0.01	
TOP :	SMAX=	1.11	SMIN= -24.04	TMAX=	12.57	ANGLE= 42.9
BOTT:	SMAX=	24.04	SMIN= -1.04	TMAX=	12.54	ANGLE= 43.0
20	4	-1.41	-0.54	9.27	7.60	9.44
			-0.76	0.00	-0.03	
TOP :	SMAX=	78.51	SMIN= -4.92	TMAX=	41.72	ANGLE= 42.7
BOTT:	SMAX=	4.28	SMIN= -79.39	TMAX=	41.84	ANGLE= 42.2
	5	0.19	-0.89	-3.90	-1.71	-2.99
			-0.76	0.00	-0.03	
TOP :	SMAX=	1.46	SMIN= -26.94	TMAX=	14.20	ANGLE= 34.2
BOTT:	SMAX=	25.87	SMIN= -1.91	TMAX=	13.89	ANGLE= 35.7
21	4	-0.55	0.69	7.55	5.15	-3.96
			-0.72	0.00	0.28	
TOP :	SMAX=	45.52	SMIN= 9.77	TMAX=	17.88	ANGLE= -37.0
BOTT:	SMAX=	-9.73	SMIN= -46.99	TMAX=	18.63	ANGLE= -36.2
	5	-0.15	0.41	-2.39	-1.94	1.67
			-0.72	0.00	0.28	
TOP :	SMAX=	-2.15	SMIN= -17.67	TMAX=	7.76	ANGLE= -40.0
BOTT:	SMAX=	16.30	SMIN= 2.09	TMAX=	7.10	ANGLE= -42.4
22	4	0.12	1.01	16.79	2.46	6.43
			0.06	0.00	-0.19	
TOP :	SMAX=	84.80	SMIN= 0.11	TMAX=	42.34	ANGLE= 20.8
BOTT:	SMAX=	0.15	SMIN= -84.94	TMAX=	42.55	ANGLE= 21.1
	5	-0.02	-0.88	-4.19	-0.48	-1.80
			0.06	0.00	-0.19	
TOP :	SMAX=	1.23	SMIN= -21.77	TMAX=	11.50	ANGLE= 22.4
BOTT:	SMAX=	21.61	SMIN= -0.95	TMAX=	11.28	ANGLE= 21.6

ELEMENT FORCES FORCE,LENGTH UNITS= KIP FEET

FORCE OR STRESS = FORCE/WIDTH/THICK, MOMENT = FORCE-LENGTH/WIDTH

ELEMENT	LOAD	QX	QY FX	MX FY	MY FXY	MXY
23	4	-0.89	-0.92	1.24	15.97	-1.05
			-0.35	-0.09	0.19	
TOP :	SMAX=	70.62	SMIN= 4.82	TMAX=	32.90	ANGLE= 3.9
BOTT:	SMAX=	-5.46	SMIN= -70.86	TMAX=	32.70	ANGLE= 4.3
	5	0.30	0.24	-0.08	-3.85	0.44
			-0.35	-0.09	0.19	
TOP :	SMAX=	-0.42	SMIN= -17.35	TMAX=	8.47	ANGLE= 7.3
BOTT:	SMAX=	17.08	SMIN= -0.18	TMAX=	8.63	ANGLE= 5.9
24	4	-0.33	-0.81	0.12	15.13	-0.13
			-0.15	-0.41	0.09	
TOP :	SMAX=	66.27	SMIN= 0.39	TMAX=	32.94	ANGLE= 0.4
BOTT:	SMAX=	-0.68	SMIN= -67.09	TMAX=	33.20	ANGLE= 0.6
	5	0.06	0.12	0.05	-3.46	0.18
			-0.15	-0.41	0.09	
TOP :	SMAX=	0.12	SMIN= -15.72	TMAX=	7.92	ANGLE= 3.3
BOTT:	SMAX=	14.89	SMIN= -0.41	TMAX=	7.65	ANGLE= 2.7
25	4	3.23	4.96	3.21	2.55	8.60
			-0.88	-0.08	0.13	
TOP :	SMAX=	50.28	SMIN= -25.84	TMAX=	38.06	ANGLE= 44.2
BOTT:	SMAX=	24.66	SMIN= -51.00	TMAX=	37.83	ANGLE= 43.6
	5	-1.29	-1.73	-1.43	-0.83	-2.82
			-0.88	-0.08	0.13	
TOP :	SMAX=	6.95	SMIN= -17.89	TMAX=	12.42	ANGLE= 41.0
BOTT:	SMAX=	17.11	SMIN= -8.08	TMAX=	12.60	ANGLE= 42.9
26	4	1.94	-2.26	6.52	3.31	8.20
			-0.59	-0.10	0.24	
TOP :	SMAX=	58.37	SMIN= -15.71	TMAX=	37.04	ANGLE= 39.7
BOTT:	SMAX=	14.64	SMIN= -58.69	TMAX=	36.66	ANGLE= 39.2
	5	-0.38	0.91	-2.85	-1.04	-2.25
			-0.59	-0.10	0.24	
TOP :	SMAX=	1.61	SMIN= -19.48	TMAX=	10.54	ANGLE= 33.2
BOTT:	SMAX=	19.05	SMIN= -2.57	TMAX=	10.81	ANGLE= 34.9
27	4	0.71	-1.19	5.42	4.92	1.74
			-0.45	-0.13	0.38	
TOP :	SMAX=	30.59	SMIN= 14.37	TMAX=	8.11	ANGLE= 41.7
BOTT:	SMAX=	-15.66	SMIN= -30.47	TMAX=	7.41	ANGLE= 40.1
	5	0.21	0.28	-1.68	-1.34	0.12
			-0.45	-0.13	0.38	
TOP :	SMAX=	-5.63	SMIN= -8.24	TMAX=	1.30	ANGLE= -22.8
BOTT:	SMAX=	6.96	SMIN= 5.74	TMAX=	0.61	ANGLE= -8.1
28	4	0.49	-0.97	1.73	8.18	-0.50
			-0.25	0.00	0.48	
TOP :	SMAX=	36.17	SMIN= 7.27	TMAX=	14.45	ANGLE= 3.4
BOTT:	SMAX=	-7.62	SMIN= -36.33	TMAX=	14.36	ANGLE= 5.4

ELEMENT FORCES FORCE,LENGTH UNITS= KIP FEET

FORCE OR STRESS = FORCE/WIDTH/THICK, MOMENT = FORCE-LENGTH/WIDTH

ELEMENT	LOAD	QX	QY FX	MX FY	MY FXY	MXY
	5	0.06	0.27	-0.28	-1.99	0.67
			-0.25	0.00	0.48	
TOP :	SMAX=	-0.13	SMIN= -10.12	TMAX=	5.00	ANGLE= 21.6
BOTT:	SMAX=	9.47	SMIN= 0.27	TMAX=	4.60	ANGLE= 16.1
29	4	-0.12	-1.99	0.26	9.49	0.18
			-0.17	-0.08	0.23	
TOP :	SMAX=	41.76	SMIN= 0.94	TMAX=	20.41	ANGLE= -1.4
BOTT:	SMAX=	-1.30	SMIN= -41.91	TMAX=	20.31	ANGLE= -0.8
	5	0.04	0.29	-0.01	-2.08	0.35
			-0.17	-0.08	0.23	
TOP :	SMAX=	0.11	SMIN= -9.58	TMAX=	4.85	ANGLE= 10.6
BOTT:	SMAX=	9.26	SMIN= -0.29	TMAX=	4.78	ANGLE= 7.9
30	4	-3.47	3.03	-1.30	-0.99	8.29
			-0.39	-0.19	0.22	
TOP :	SMAX=	31.43	SMIN= -42.11	TMAX=	36.77	ANGLE= -44.4
BOTT:	SMAX=	41.09	SMIN= -31.57	TMAX=	36.33	ANGLE= -44.5
	5	0.99	-0.92	0.24	0.22	-2.67
			-0.39	-0.19	0.22	
TOP :	SMAX=	12.28	SMIN= -10.85	TMAX=	11.57	ANGLE= 44.9
BOTT:	SMAX=	10.71	SMIN= -13.29	TMAX=	12.00	ANGLE= -44.7
31	4	-3.57	-2.66	3.40	2.20	6.63
			-0.29	-0.21	0.50	
TOP :	SMAX=	41.90	SMIN= -17.74	TMAX=	29.82	ANGLE= 42.5
BOTT:	SMAX=	16.26	SMIN= -41.43	TMAX=	28.85	ANGLE= 42.3
	5	0.99	1.03	-1.52	-0.84	-1.77
			-0.29	-0.21	0.50	
TOP :	SMAX=	2.02	SMIN= -12.95	TMAX=	7.48	ANGLE= 39.0
BOTT:	SMAX=	13.40	SMIN= -3.48	TMAX=	8.44	ANGLE= 40.0
32	4	-1.58	-2.19	2.42	2.99	2.69
			-0.17	-0.20	0.68	
TOP :	SMAX=	24.36	SMIN= -0.85	TMAX=	12.60	ANGLE= -42.2
BOTT:	SMAX=	-0.86	SMIN= -23.38	TMAX=	11.26	ANGLE= -41.8
	5	0.21	0.65	-0.72	-0.85	-0.20
			-0.17	-0.20	0.68	
TOP :	SMAX=	-3.27	SMIN= -4.03	TMAX=	0.38	ANGLE= -17.6
BOTT:	SMAX=	4.89	SMIN= 1.69	TMAX=	1.60	ANGLE= -39.9
33	4	-0.72	-2.37	0.70	3.19	0.87
			-0.02	-0.01	0.72	
TOP :	SMAX=	15.69	SMIN= 1.41	TMAX=	7.14	ANGLE= -19.8
BOTT:	SMAX=	-2.27	SMIN= -14.90	TMAX=	6.32	ANGLE= -14.8
	5	-0.17	0.53	-0.09	-0.69	0.36
			-0.02	-0.01	0.72	
TOP :	SMAX=	0.94	SMIN= -4.40	TMAX=	2.67	ANGLE= 30.1
BOTT:	SMAX=	3.31	SMIN= 0.09	TMAX=	1.61	ANGLE= 16.7

ELEMENT FORCES FORCE,LENGTH UNITS= KIP FEET

FORCE OR STRESS = FORCE/WIDTH/THICK, MOMENT = FORCE-LENGTH/WIDTH

ELEMENT	LOAD	QX	QY FX	MX FY	MY FXY	MXY
34	4	-0.11	-2.40	0.64	3.37	0.71
			0.31	0.50	0.59	
TOP :	SMAX=	16.41	SMIN= 2.10	TMAX=	7.16	ANGLE= -15.7
BOTT:	SMAX=	-2.00	SMIN= -14.90	TMAX=	6.45	ANGLE= -11.7
	5	-0.16	0.28	-0.05	-0.58	0.29
			0.31	0.50	0.59	
TOP :	SMAX=	1.18	SMIN= -3.14	TMAX=	2.16	ANGLE= 30.1
BOTT:	SMAX=	3.23	SMIN= 0.34	TMAX=	1.45	ANGLE= 14.4
35	4	-16.81	-11.92	0.01	0.01	0.00
			-10.52	0.00	1.18	
TOP :	SMAX=	40.05	SMIN= 18.61	TMAX=	10.72	ANGLE= -8.1
BOTT:	SMAX=	-39.19	SMIN= -40.52	TMAX=	0.66	ANGLE= 35.1
	5	6.10	4.33	0.00	0.00	0.00
			-10.52	0.00	1.18	
TOP :	SMAX=	-10.14	SMIN= -18.54	TMAX=	4.20	ANGLE= -5.1
BOTT:	SMAX=	10.41	SMIN= -2.77	TMAX=	6.59	ANGLE= -7.1
36	4	16.79	-11.92	0.01	0.01	0.00
			0.12	0.00	-1.25	
TOP :	SMAX=	35.77	SMIN= 21.94	TMAX=	6.91	ANGLE= -33.8
BOTT:	SMAX=	-24.10	SMIN= -33.36	TMAX=	4.63	ANGLE= -28.5
	5	-6.09	4.34	0.00	0.00	0.00
			0.12	0.00	-1.25	
TOP :	SMAX=	-7.66	SMIN= -9.41	TMAX=	0.88	ANGLE= 19.0
BOTT:	SMAX=	10.78	SMIN= 6.53	TMAX=	2.12	ANGLE= -33.8
37	4	-16.81	-12.02	0.01	0.01	0.00
			-0.08	0.00	-0.89	
TOP :	SMAX=	35.24	SMIN= 20.16	TMAX=	7.54	ANGLE= -32.7
BOTT:	SMAX=	-21.77	SMIN= -33.78	TMAX=	6.01	ANGLE= -28.8
	5	6.09	4.35	0.00	0.00	0.00
			-0.08	0.00	-0.89	
TOP :	SMAX=	-9.69	SMIN= -10.28	TMAX=	0.29	ANGLE= 90.0
BOTT:	SMAX=	11.99	SMIN= 7.83	TMAX=	2.08	ANGLE= 44.1
38	4	16.80	-12.02	0.01	0.01	0.00
			-10.51	0.00	0.86	
TOP :	SMAX=	22.50	SMIN= 11.36	TMAX=	5.57	ANGLE= -20.3
BOTT:	SMAX=	-20.88	SMIN= -33.99	TMAX=	6.55	ANGLE= 8.4
	5	-6.09	4.35	0.00	0.00	0.00
			-10.51	0.00	0.86	
TOP :	SMAX=	-8.06	SMIN= -20.97	TMAX=	6.46	ANGLE= -0.3
BOTT:	SMAX=	8.38	SMIN= -0.36	TMAX=	4.37	ANGLE= -11.1
39	4	-16.80	-12.02	0.01	0.01	0.00
			-10.51	0.00	-0.87	
TOP :	SMAX=	22.52	SMIN= 11.39	TMAX=	5.56	ANGLE= 20.1
BOTT:	SMAX=	-20.93	SMIN= -33.99	TMAX=	6.53	ANGLE= -8.3

ELEMENT FORCES FORCE,LENGTH UNITS= KIP FEET

FORCE OR STRESS = FORCE/WIDTH/THICK, MOMENT = FORCE-LENGTH/WIDTH

ELEMENT	LOAD	QX	QY FX	MX FY	MY FXY	MXY
	5	6.09	4.35	0.00	0.00	0.00
			-10.51	0.00	-0.87	
TOP :	SMAX=	-8.11	SMIN= -20.99	TMAX=	6.44	ANGLE= 0.5
BOTT:	SMAX=	8.42	SMIN= -0.33	TMAX=	4.38	ANGLE= 10.9
40	4	16.81	-12.03	0.01	0.01	0.00
			-0.08	0.00	0.89	
TOP :	SMAX=	35.34	SMIN= 20.25	TMAX=	7.54	ANGLE= 32.6
BOTT:	SMAX=	-21.85	SMIN= -33.90	TMAX=	6.02	ANGLE= 28.7
	5	-6.09	4.35	0.00	0.00	0.00
			-0.08	0.00	0.89	
TOP :	SMAX=	-9.79	SMIN= -10.40	TMAX=	0.31	ANGLE= 90.0
BOTT:	SMAX=	12.09	SMIN= 7.94	TMAX=	2.08	ANGLE= 90.0
41	4	-16.79	-11.92	0.01	0.01	0.00
			0.12	0.00	1.26	
TOP :	SMAX=	35.87	SMIN= 22.02	TMAX=	6.93	ANGLE= 33.7
BOTT:	SMAX=	-24.20	SMIN= -33.45	TMAX=	4.63	ANGLE= 28.4
	5	6.09	4.34	0.00	0.00	0.00
			0.12	0.00	1.26	
TOP :	SMAX=	-7.73	SMIN= -9.55	TMAX=	0.91	ANGLE= -19.1
BOTT:	SMAX=	10.90	SMIN= 6.62	TMAX=	2.14	ANGLE= 33.6
42	4	16.81	-11.92	0.01	0.01	0.00
			-10.52	0.00	-1.18	
TOP :	SMAX=	40.11	SMIN= 18.62	TMAX=	10.75	ANGLE= 8.1
BOTT:	SMAX=	-39.20	SMIN= -40.57	TMAX=	0.68	ANGLE= -36.2
	5	-6.10	4.33	0.00	0.00	0.00
			-10.52	0.00	-1.18	
TOP :	SMAX=	-10.20	SMIN= -18.55	TMAX=	4.18	ANGLE= 5.0
BOTT:	SMAX=	10.47	SMIN= -2.76	TMAX=	6.62	ANGLE= 7.2

**********END OF ELEMENT FORCES**********

117. PRINT ELEMENT JOINT FORCES ALL

ELEMENT FORCES FORCE,LENGTH UNITS= KIP FEET

FORCE OR STRESS = FORCE/WIDTH/THICK, MOMENT = FORCE-LENGTH/WIDTH

ELEMENT	LOAD	QX	QY FX	MX FY	MY FXY	MXY
1	4	-3.48	-3.03	-1.30	-0.99	-8.30
			-0.39	-0.19	-0.22	
TOP :	SMAX=	31.48	SMIN= -42.17	TMAX=	36.82	ANGLE= 44.4
BOTT:	SMAX=	41.15	SMIN= -31.62	TMAX=	36.39	ANGLE= 44.5
JOINT		-10.92	-9.65	11.28	11.33	-6.65
1			-0.20	-0.43	0.27	
TOP :	SMAX=	78.55	SMIN= 20.49	TMAX=	29.03	ANGLE= 90.0
BOTT:	SMAX=	-20.59	SMIN= -79.72	TMAX=	29.56	ANGLE= 44.8
JOINT		-10.92	3.60	-18.43	-5.65	-7.82
2			0.08	-0.63	-0.41	
TOP :	SMAX=	-8.75	SMIN= -97.96	TMAX=	44.61	ANGLE= 25.7
BOTT:	SMAX=	97.23	SMIN= 8.39	TMAX=	44.42	ANGLE= 25.0
JOINT		3.96	3.60	7.82	6.01	-9.96
8			-0.57	0.05	-0.70	
TOP :	SMAX=	74.97	SMIN= -14.54	TMAX=	44.75	ANGLE= -42.6
BOTT:	SMAX=	12.67	SMIN= -74.15	TMAX=	43.41	ANGLE= -42.2
JOINT		3.96	-9.65	-5.87	-15.66	-8.78
7			-0.86	0.25	-0.02	
TOP :	SMAX=	-3.68	SMIN= -91.83	TMAX=	44.07	ANGLE= -30.8
BOTT:	SMAX=	91.72	SMIN= 2.57	TMAX=	44.57	ANGLE= -30.1
5		0.99	0.92	0.24	0.22	2.69
			-0.39	-0.19	-0.22	
TOP :	SMAX=	12.35	SMIN= -10.91	TMAX=	11.63	ANGLE= 90.0
BOTT:	SMAX=	10.77	SMIN= -13.36	TMAX=	12.07	ANGLE= 44.7
JOINT		-10.92	-9.65	11.28	11.33	-6.65
1			-0.20	-0.43	0.27	
TOP :	SMAX=	78.55	SMIN= 20.49	TMAX=	29.03	ANGLE= 90.0
BOTT:	SMAX=	-20.59	SMIN= -79.72	TMAX=	29.56	ANGLE= 44.8
JOINT		-10.92	3.60	-18.43	-5.65	-7.82
2			0.08	-0.63	-0.41	
TOP :	SMAX=	-8.75	SMIN= -97.96	TMAX=	44.61	ANGLE= 25.7
BOTT:	SMAX=	97.23	SMIN= 8.39	TMAX=	44.42	ANGLE= 25.0
JOINT		3.96	3.60	7.82	6.01	-9.96
8			-0.57	0.05	-0.70	
TOP :	SMAX=	74.97	SMIN= -14.54	TMAX=	44.75	ANGLE= -42.6
BOTT:	SMAX=	12.67	SMIN= -74.15	TMAX=	43.41	ANGLE= -42.2
JOINT		3.96	-9.65	-5.87	-15.66	-8.78
7			-0.86	0.25	-0.02	
TOP :	SMAX=	-3.68	SMIN= -91.83	TMAX=	44.07	ANGLE= -30.8
BOTT:	SMAX=	91.72	SMIN= 2.57	TMAX=	44.57	ANGLE= -30.1
2	4	-3.58	2.67	3.41	2.20	-6.64
			-0.29	-0.21	-0.50	
TOP :	SMAX=	41.97	SMIN= -17.74	TMAX=	29.86	ANGLE= -42.5
BOTT:	SMAX=	16.26	SMIN= -41.50	TMAX=	28.88	ANGLE= -42.3
JOINT		-6.86	2.68	13.89	-1.09	-5.33
2			-0.15	-0.20	-0.39	
TOP :	SMAX=	68.81	SMIN= -12.75	TMAX=	40.78	ANGLE= -17.9
BOTT:	SMAX=	11.90	SMIN= -68.66	TMAX=	40.28	ANGLE= -17.5

ELEMENT FORCES FORCE,LENGTH UNITS= KIP FEET

FORCE OR STRESS = FORCE/WIDTH/THICK, MOMENT = FORCE-LENGTH/WIDTH

ELEMENT	LOAD	QX	QY FX	MX FY	MY FXY	MXY
	JOINT	-6.86	2.66	-9.57	-0.59	-2.61
	3		-0.02	-0.30	-0.52	
	TOP : SMAX=	0.49	SMIN= -45.59	TMAX= 23.04	ANGLE= 15.7	
	BOTT: SMAX=	44.98	SMIN= -0.53	TMAX= 22.76	ANGLE= 14.4	
	JOINT	-0.30	2.66	8.22	5.46	-7.94
	9		-0.44	-0.22	-0.60	
	TOP : SMAX=	65.92	SMIN= -6.26	TMAX= 36.09	ANGLE= -40.2	
	BOTT: SMAX=	4.46	SMIN= -65.44	TMAX= 34.95	ANGLE= -39.9	
	JOINT	-0.30	2.68	1.09	5.03	-10.67
	8		-0.56	-0.12	-0.47	
	TOP : SMAX=	61.46	SMIN= -35.17	TMAX= 48.31	ANGLE= 39.7	
	BOTT: SMAX=	33.47	SMIN= -61.14	TMAX= 47.31	ANGLE= 39.8	
	5	0.99	-1.04	-1.54	-0.85	1.78
			-0.29	-0.21	-0.50	
	TOP : SMAX=	2.02	SMIN= -13.03	TMAX= 7.52	ANGLE= -39.0	
	BOTT: SMAX=	13.48	SMIN= -3.48	TMAX= 8.48	ANGLE= -40.0	
	JOINT	-6.86	2.68	13.89	-1.09	-5.33
	2		-0.15	-0.20	-0.39	
	TOP : SMAX=	68.81	SMIN= -12.75	TMAX= 40.78	ANGLE= -17.9	
	BOTT: SMAX=	11.90	SMIN= -68.66	TMAX= 40.28	ANGLE= -17.5	
	JOINT	-6.86	2.66	-9.57	-0.59	-2.61
	3		-0.02	-0.30	-0.52	
	TOP : SMAX=	0.49	SMIN= -45.59	TMAX= 23.04	ANGLE= 15.7	
	BOTT: SMAX=	44.98	SMIN= -0.53	TMAX= 22.76	ANGLE= 14.4	
	JOINT	-0.30	2.66	8.22	5.46	-7.94
	9		-0.44	-0.22	-0.60	
	TOP : SMAX=	65.92	SMIN= -6.26	TMAX= 36.09	ANGLE= -40.2	
	BOTT: SMAX=	4.46	SMIN= -65.44	TMAX= 34.95	ANGLE= -39.9	
	JOINT	-0.30	2.68	1.09	5.03	-10.67
	8		-0.56	-0.12	-0.47	
	TOP : SMAX=	61.46	SMIN= -35.17	TMAX= 48.31	ANGLE= 39.7	
	BOTT: SMAX=	33.47	SMIN= -61.14	TMAX= 47.31	ANGLE= 39.8	
3	4	-1.58	2.20	2.43	3.00	-2.69
			-0.17	-0.20	-0.68	
	TOP : SMAX=	24.37	SMIN= -0.80	TMAX= 12.58	ANGLE= 42.2	
	BOTT: SMAX=	-0.91	SMIN= -23.39	TMAX= 11.24	ANGLE= 41.8	
	JOINT	-2.22	1.74	4.71	1.26	-2.59
	3		0.04	-0.27	-0.75	
	TOP : SMAX=	27.45	SMIN= -1.37	TMAX= 14.41	ANGLE= -28.7	
	BOTT: SMAX=	-0.28	SMIN= -26.27	TMAX= 13.00	ANGLE= -27.5	
	JOINT	-2.22	2.66	-1.81	-0.31	-0.40
	4		-0.16	-0.11	-0.72	
	TOP : SMAX=	-0.65	SMIN= -8.95	TMAX= 4.15	ANGLE= 18.4	
	BOTT: SMAX=	7.97	SMIN= 1.10	TMAX= 3.43	ANGLE= 8.8	
	JOINT	-0.94	2.66	3.13	6.07	-2.79
	10		-0.37	-0.12	-0.60	
	TOP : SMAX=	34.52	SMIN= 5.54	TMAX= 14.49	ANGLE= 31.4	
	BOTT: SMAX=	-7.22	SMIN= -33.83	TMAX= 13.30	ANGLE= 30.7	

ELEMENT FORCES FORCE,LENGTH UNITS= KIP FEET

FORCE OR STRESS = FORCE/WIDTH/THICK, MOMENT = FORCE-LENGTH/WIDTH

ELEMENT	LOAD	QX	QY FX	MX FY	MY FXY	MXY
	JOINT	-0.94	1.74	3.69	4.98	-4.97
	9		-0.18	-0.29	-0.63	
	TOP : SMAX=	41.60	SMIN= -3.86	TMAX=	22.73	ANGLE= 41.5
	BOTT: SMAX=	2.16	SMIN= -40.83	TMAX=	21.50	ANGLE= 41.1
	5	0.21	-0.66	-0.73	-0.86	0.20
			-0.17	-0.20	-0.68	
	TOP : SMAX=	-3.32	SMIN= -4.05	TMAX=	0.37	ANGLE= 16.1
	BOTT: SMAX=	4.90	SMIN= 1.75	TMAX=	1.57	ANGLE= 39.8
	JOINT	-2.22	1.74	4.71	1.26	-2.59
	3		0.04	-0.27	-0.75	
	TOP : SMAX=	27.45	SMIN= -1.37	TMAX=	14.41	ANGLE= -28.7
	BOTT: SMAX=	-0.28	SMIN= -26.27	TMAX=	13.00	ANGLE= -27.5
	JOINT	-2.22	2.66	-1.81	-0.31	-0.40
	4		-0.16	-0.11	-0.72	
	TOP : SMAX=	-0.65	SMIN= -8.95	TMAX=	4.15	ANGLE= 18.4
	BOTT: SMAX=	7.97	SMIN= 1.10	TMAX=	3.43	ANGLE= 8.8
	JOINT	-0.94	2.66	3.13	6.07	-2.79
	10		-0.37	-0.12	-0.60	
	TOP : SMAX=	34.52	SMIN= 5.54	TMAX=	14.49	ANGLE= 31.4
	BOTT: SMAX=	-7.22	SMIN= -33.83	TMAX=	13.30	ANGLE= 30.7
	JOINT	-0.94	1.74	3.69	4.98	-4.97
	9		-0.18	-0.29	-0.63	
	TOP : SMAX=	41.60	SMIN= -3.86	TMAX=	22.73	ANGLE= 41.5
	BOTT: SMAX=	2.16	SMIN= -40.83	TMAX=	21.50	ANGLE= 41.1
4	4	-0.71	2.37	0.69	3.20	-0.86
			-0.02	-0.01	-0.72	
	TOP : SMAX=	15.69	SMIN= 1.42	TMAX=	7.13	ANGLE= 19.6
	BOTT: SMAX=	-2.27	SMIN= -14.91	TMAX=	6.32	ANGLE= 14.6
	JOINT	-0.53	2.38	0.28	0.74	-1.84
	4		0.17	-0.23	-0.81	
	TOP : SMAX=	11.17	SMIN= -6.76	TMAX=	8.96	ANGLE= 42.4
	BOTT: SMAX=	5.14	SMIN= -9.67	TMAX=	7.40	ANGLE= 40.3
	JOINT	-0.53	2.37	-0.81	1.15	0.58
	5		-0.16	0.08	-0.94	
	TOP : SMAX=	5.45	SMIN= -4.01	TMAX=	4.73	ANGLE= -10.0
	BOTT: SMAX=	4.68	SMIN= -6.28	TMAX=	5.48	ANGLE= -19.9
	JOINT	-0.90	2.37	0.57	5.64	0.12
	11		-0.21	0.21	-0.62	
	TOP : SMAX=	25.08	SMIN= 2.31	TMAX=	11.39	ANGLE= 0.2
	BOTT: SMAX=	-2.67	SMIN= -24.72	TMAX=	11.03	ANGLE= -3.0
	JOINT	-0.90	2.38	2.73	5.26	-2.30
	10		0.11	-0.10	-0.49	
	TOP : SMAX=	29.57	SMIN= 5.66	TMAX=	11.96	ANGLE= 31.4
	BOTT: SMAX=	-6.40	SMIN= -28.80	TMAX=	11.20	ANGLE= 29.8
	5	-0.17	-0.53	-0.08	-0.70	-0.37
			-0.02	-0.01	-0.72	
	TOP : SMAX=	0.98	SMIN= -4.46	TMAX=	2.72	ANGLE= -30.1
	BOTT: SMAX=	3.35	SMIN= 0.05	TMAX=	1.65	ANGLE= -17.1

ELEMENT FORCES FORCE,LENGTH UNITS= KIP FEET

FORCE OR STRESS = FORCE/WIDTH/THICK, MOMENT = FORCE-LENGTH/WIDTH

ELEMENT	LOAD	QX	QY / FX	MX / FY	MY / FXY	MXY
	JOINT	-0.53	2.38	0.28	0.74	-1.84
	4		0.17	-0.23	-0.81	
	TOP : SMAX=	11.17	SMIN= -6.76	TMAX= 8.96	ANGLE= 42.4	
	BOTT: SMAX=	5.14	SMIN= -9.67	TMAX= 7.40	ANGLE= 40.3	
	JOINT	-0.53	2.37	-0.81	1.15	0.58
	5		-0.16	0.08	-0.94	
	TOP : SMAX=	5.45	SMIN= -4.01	TMAX= 4.73	ANGLE= -10.0	
	BOTT: SMAX=	4.68	SMIN= -6.28	TMAX= 5.48	ANGLE= -19.9	
	JOINT	-0.90	2.37	0.57	5.64	0.12
	11		-0.21	0.21	-0.62	
	TOP : SMAX=	25.08	SMIN= 2.31	TMAX= 11.39	ANGLE= 0.2	
	BOTT: SMAX=	-2.67	SMIN= -24.72	TMAX= 11.03	ANGLE= -3.0	
	JOINT	-0.90	2.38	2.73	5.26	-2.30
	10		0.11	-0.10	-0.49	
	TOP : SMAX=	29.57	SMIN= 5.66	TMAX= 11.96	ANGLE= 31.4	
	BOTT: SMAX=	-6.40	SMIN= -28.80	TMAX= 11.20	ANGLE= 29.8	
5	4	-0.11	2.40	0.64	3.38	-0.71
			0.31	0.50	-0.59	
	TOP : SMAX=	16.42	SMIN= 2.10	TMAX= 7.16	ANGLE= 15.6	
	BOTT: SMAX=	-2.01	SMIN= -14.90	TMAX= 6.45	ANGLE= 11.6	
	JOINT	0.08	1.45	0.92	2.23	-1.45
	5		0.34	-0.26	-0.39	
	TOP : SMAX=	14.24	SMIN= -0.29	TMAX= 7.27	ANGLE= 34.6	
	BOTT: SMAX=	-0.10	SMIN= -13.70	TMAX= 6.80	ANGLE= 31.1	
	JOINT	0.08	3.34	1.32	-0.81	0.20
	6		0.45	0.98	-0.67	
	TOP : SMAX=	6.27	SMIN= -2.61	TMAX= 4.44	ANGLE= 1.4	
	BOTT: SMAX=	4.81	SMIN= -5.61	TMAX= 5.21	ANGLE= 8.7	
	JOINT	-0.30	3.34	-0.19	7.29	0.04
	12		0.27	1.26	-0.78	
	TOP : SMAX=	33.39	SMIN= -0.59	TMAX= 16.99	ANGLE= 1.1	
	BOTT: SMAX=	1.15	SMIN= -30.88	TMAX= 16.02	ANGLE= -1.7	
	JOINT	-0.30	1.45	0.52	4.81	-1.62
	11		0.17	0.01	-0.50	
	TOP : SMAX=	23.91	SMIN= -0.25	TMAX= 12.08	ANGLE= 19.6	
	BOTT: SMAX=	-0.06	SMIN= -23.25	TMAX= 11.60	ANGLE= 17.4	
	5	-0.17	-0.28	-0.05	-0.58	-0.30
			0.31	0.50	-0.59	
	TOP : SMAX=	1.20	SMIN= -3.16	TMAX= 2.18	ANGLE= -30.1	
	BOTT: SMAX=	3.26	SMIN= 0.32	TMAX= 1.47	ANGLE= -14.7	
	JOINT	0.08	1.45	0.92	2.23	-1.45
	5		0.34	-0.26	-0.39	
	TOP : SMAX=	14.24	SMIN= -0.29	TMAX= 7.27	ANGLE= 34.6	
	BOTT: SMAX=	-0.10	SMIN= -13.70	TMAX= 6.80	ANGLE= 31.1	
	JOINT	0.08	3.34	1.32	-0.81	0.20
	6		0.45	0.98	-0.67	
	TOP : SMAX=	6.27	SMIN= -2.61	TMAX= 4.44	ANGLE= 1.4	
	BOTT: SMAX=	4.81	SMIN= -5.61	TMAX= 5.21	ANGLE= 8.7	

ELEMENT FORCES FORCE,LENGTH UNITS= KIP FEET

FORCE OR STRESS = FORCE/WIDTH/THICK, MOMENT = FORCE-LENGTH/WIDTH

ELEMENT	LOAD	QX	QY FX	MX FY	MY FXY	MXY
	JOINT	-0.30	3.34	-0.19	7.29	0.04
	12		0.27	1.26	-0.78	
	TOP : SMAX=	33.39	SMIN= -0.59	TMAX=	16.99	ANGLE= 1.1
	BOTT: SMAX=	1.15	SMIN= -30.88	TMAX=	16.02	ANGLE= -1.7
	JOINT	-0.30	1.45	0.52	4.81	-1.62
	11		0.17	0.01	-0.50	
	TOP : SMAX=	23.91	SMIN= -0.25	TMAX=	12.08	ANGLE= 19.6
	BOTT: SMAX=	-0.06	SMIN= -23.25	TMAX=	11.60	ANGLE= 17.4
6	4	3.24	-4.97	3.21	2.56	-8.61
			-0.88	-0.08	-0.13	
	TOP : SMAX=	50.34	SMIN= -25.85	TMAX=	38.10	ANGLE= -44.2
	BOTT: SMAX=	24.67	SMIN= -51.06	TMAX=	37.87	ANGLE= -43.6
	JOINT	3.75	-11.16	-1.13	16.49	-8.10
	7		-0.78	-0.38	0.08	
	TOP : SMAX=	86.12	SMIN= -19.58	TMAX=	52.85	ANGLE= 21.2
	BOTT: SMAX=	18.23	SMIN= -87.10	TMAX=	52.66	ANGLE= 21.4
	JOINT	3.75	1.23	6.69	-0.30	-12.54
	8		-0.84	-0.31	-0.41	
	TOP : SMAX=	71.19	SMIN= -44.19	TMAX=	57.69	ANGLE= -37.4
	BOTT: SMAX=	42.39	SMIN= -71.70	TMAX=	57.04	ANGLE= -37.0
	JOINT	2.73	1.23	6.06	8.52	-9.12
	14		-0.98	0.23	-0.34	
	TOP : SMAX=	72.75	SMIN= -9.22	TMAX=	40.98	ANGLE= 40.8
	BOTT: SMAX=	7.63	SMIN= -72.66	TMAX=	40.14	ANGLE= 41.5
	JOINT	2.73	-11.16	1.21	-14.45	-4.68
	13		-0.92	0.16	0.15	
	TOP : SMAX=	10.13	SMIN= -69.25	TMAX=	39.69	ANGLE= -15.5
	BOTT: SMAX=	69.57	SMIN= -11.96	TMAX=	40.76	ANGLE= -15.3
	5	-1.30	1.73	-1.43	-0.85	2.83
			-0.88	-0.08	-0.13	
	TOP : SMAX=	6.96	SMIN= -17.96	TMAX=	12.46	ANGLE= -41.1
	BOTT: SMAX=	17.19	SMIN= -8.09	TMAX=	12.64	ANGLE= -43.0
	JOINT	3.75	-11.16	-1.13	16.49	-8.10
	7		-0.78	-0.38	0.08	
	TOP : SMAX=	86.12	SMIN= -19.58	TMAX=	52.85	ANGLE= 21.2
	BOTT: SMAX=	18.23	SMIN= -87.10	TMAX=	52.66	ANGLE= 21.4
	JOINT	3.75	1.23	6.69	-0.30	-12.54
	8		-0.84	-0.31	-0.41	
	TOP : SMAX=	71.19	SMIN= -44.19	TMAX=	57.69	ANGLE= -37.4
	BOTT: SMAX=	42.39	SMIN= -71.70	TMAX=	57.04	ANGLE= -37.0
	JOINT	2.73	1.23	6.06	8.52	-9.12
	14		-0.98	0.23	-0.34	
	TOP : SMAX=	72.75	SMIN= -9.22	TMAX=	40.98	ANGLE= 40.8
	BOTT: SMAX=	7.63	SMIN= -72.66	TMAX=	40.14	ANGLE= 41.5
	JOINT	2.73	-11.16	1.21	-14.45	-4.68
	13		-0.92	0.16	0.15	
	TOP : SMAX=	10.13	SMIN= -69.25	TMAX=	39.69	ANGLE= -15.5
	BOTT: SMAX=	69.57	SMIN= -11.96	TMAX=	40.76	ANGLE= -15.3

ELEMENT FORCES FORCE,LENGTH UNITS= KIP FEET

FORCE OR STRESS = FORCE/WIDTH/THICK, MOMENT = FORCE-LENGTH/WIDTH

ELEMENT	LOAD	QX	QY FX	MX FY	MY FXY	MXY
7	4	1.95	2.27	6.54	3.33	-8.21
			-0.59	-0.10	-0.24	
TOP :	SMAX=	58.48	SMIN= -15.68	TMAX=	37.08	ANGLE= -39.7
BOTT:	SMAX=	14.61	SMIN= -58.80	TMAX=	36.71	ANGLE= -39.2
JOINT		1.87	4.64	1.74	-2.31	-11.58
8			-0.43	-0.09	-0.15	
TOP :	SMAX=	50.39	SMIN= -53.44	TMAX=	51.92	ANGLE= -40.1
BOTT:	SMAX=	52.68	SMIN= -50.68	TMAX=	51.68	ANGLE= -39.9
JOINT		1.87	-0.11	6.40	4.39	-7.66
9			-0.45	-0.24	-0.34	
TOP :	SMAX=	57.79	SMIN= -10.95	TMAX=	34.37	ANGLE= -41.4
BOTT:	SMAX=	9.60	SMIN= -57.83	TMAX=	33.72	ANGLE= -41.1
JOINT		2.03	-0.11	11.72	1.36	-4.85
15			-0.75	-0.11	-0.33	
TOP :	SMAX=	59.67	SMIN= -2.90	TMAX=	31.28	ANGLE= -22.0
BOTT:	SMAX=	2.06	SMIN= -60.55	TMAX=	31.30	ANGLE= -21.1
JOINT		2.03	4.64	6.31	9.87	-8.77
14			-0.73	0.04	-0.14	
TOP :	SMAX=	74.98	SMIN= -4.34	TMAX=	39.66	ANGLE= 39.0
BOTT:	SMAX=	3.23	SMIN= -75.25	TMAX=	39.24	ANGLE= 39.5
5		-0.39	-0.93	-2.87	-1.06	2.26
			-0.59	-0.10	-0.24	
TOP :	SMAX=	1.58	SMIN= -19.60	TMAX=	10.59	ANGLE= -33.2
BOTT:	SMAX=	19.17	SMIN= -2.53	TMAX=	10.85	ANGLE= -34.9
JOINT		1.87	4.64	1.74	-2.31	-11.58
8			-0.43	-0.09	-0.15	
TOP :	SMAX=	50.39	SMIN= -53.44	TMAX=	51.92	ANGLE= -40.1
BOTT:	SMAX=	52.68	SMIN= -50.68	TMAX=	51.68	ANGLE= -39.9
JOINT		1.87	-0.11	6.40	4.39	-7.66
9			-0.45	-0.24	-0.34	
TOP :	SMAX=	57.79	SMIN= -10.95	TMAX=	34.37	ANGLE= -41.4
BOTT:	SMAX=	9.60	SMIN= -57.83	TMAX=	33.72	ANGLE= -41.1
JOINT		2.03	-0.11	11.72	1.36	-4.85
15			-0.75	-0.11	-0.33	
TOP :	SMAX=	59.67	SMIN= -2.90	TMAX=	31.28	ANGLE= -22.0
BOTT:	SMAX=	2.06	SMIN= -60.55	TMAX=	31.30	ANGLE= -21.1
JOINT		2.03	4.64	6.31	9.87	-8.77
14			-0.73	0.04	-0.14	
TOP :	SMAX=	74.98	SMIN= -4.34	TMAX=	39.66	ANGLE= 39.0
BOTT:	SMAX=	3.23	SMIN= -75.25	TMAX=	39.24	ANGLE= 39.5
8	4	0.69	1.20	5.43	4.94	-1.73
			-0.45	-0.13	-0.38	
TOP :	SMAX=	30.63	SMIN= 14.48	TMAX=	8.08	ANGLE= -41.7
BOTT:	SMAX=	-15.77	SMIN= -30.51	TMAX=	7.37	ANGLE= -40.1
JOINT		0.57	-0.33	3.05	3.87	-4.06
9			-0.23	-0.22	-0.29	
TOP :	SMAX=	33.32	SMIN= -3.26	TMAX=	18.29	ANGLE= 42.2
BOTT:	SMAX=	2.24	SMIN= -33.20	TMAX=	17.72	ANGLE= 42.1

ELEMENT FORCES FORCE,LENGTH UNITS= KIP FEET

FORCE OR STRESS = FORCE/WIDTH/THICK, MOMENT = FORCE-LENGTH/WIDTH

ELEMENT	LOAD	QX	QY FX	MX FY	MY FXY	MXY
	JOINT	0.57	2.72	3.35	4.24	-1.03
	10		-0.22	-0.17	-0.47	
	TOP : SMAX=	21.95	SMIN= 11.14	TMAX=	5.40	ANGLE= 34.3
	BOTT: SMAX=	-12.41	SMIN= -21.46	TMAX=	4.52	ANGLE= 32.4
	JOINT	0.81	2.72	8.37	10.89	0.60
	16		-0.68	-0.04	-0.48	
	TOP : SMAX=	48.35	SMIN= 35.85	TMAX=	6.25	ANGLE= -10.1
	BOTT: SMAX=	-36.74	SMIN= -48.90	TMAX=	6.08	ANGLE= -15.3
	JOINT	0.81	-0.33	6.95	0.74	-2.43
	15		-0.69	-0.09	-0.29	
	TOP : SMAX=	33.89	SMIN= -0.79	TMAX=	17.34	ANGLE= -19.7
	BOTT: SMAX=	0.11	SMIN= -34.78	TMAX=	17.45	ANGLE= -18.4
	5	0.22	-0.29	-1.69	-1.36	-0.13
			-0.45	-0.13	-0.38	
	TOP : SMAX=	-5.69	SMIN= -8.35	TMAX=	1.33	ANGLE= 23.5
	BOTT: SMAX=	7.05	SMIN= 5.82	TMAX=	0.62	ANGLE= 9.9
	JOINT	0.57	-0.33	3.05	3.87	-4.06
	9		-0.23	-0.22	-0.29	
	TOP : SMAX=	33.32	SMIN= -3.26	TMAX=	18.29	ANGLE= 42.2
	BOTT: SMAX=	2.24	SMIN= -33.20	TMAX=	17.72	ANGLE= 42.1
	JOINT	0.57	2.72	3.35	4.24	-1.03
	10		-0.22	-0.17	-0.47	
	TOP : SMAX=	21.95	SMIN= 11.14	TMAX=	5.40	ANGLE= 34.3
	BOTT: SMAX=	-12.41	SMIN= -21.46	TMAX=	4.52	ANGLE= 32.4
	JOINT	0.81	2.72	8.37	10.89	0.60
	16		-0.68	-0.04	-0.48	
	TOP : SMAX=	48.35	SMIN= 35.85	TMAX=	6.25	ANGLE= -10.1
	BOTT: SMAX=	-36.74	SMIN= -48.90	TMAX=	6.08	ANGLE= -15.3
	JOINT	0.81	-0.33	6.95	0.74	-2.43
	15		-0.69	-0.09	-0.29	
	TOP : SMAX=	33.89	SMIN= -0.79	TMAX=	17.34	ANGLE= -19.7
	BOTT: SMAX=	0.11	SMIN= -34.78	TMAX=	17.45	ANGLE= -18.4
9	4	0.49	0.97	1.72	8.20	0.50
			-0.25	0.00	-0.48	
	TOP : SMAX=	36.26	SMIN= 7.24	TMAX=	14.51	ANGLE= -3.4
	BOTT: SMAX=	-7.59	SMIN= -36.42	TMAX=	14.42	ANGLE= -5.4
	JOINT	-0.03	0.17	2.47	7.15	-0.50
	10		-0.10	-0.14	-0.40	
	TOP : SMAX=	31.70	SMIN= 10.45	TMAX=	10.62	ANGLE= 7.1
	BOTT: SMAX=	-10.81	SMIN= -31.81	TMAX=	10.50	ANGLE= 4.9
	JOINT	-0.03	1.77	1.30	7.07	0.33
	11		-0.09	-0.04	-0.56	
	TOP : SMAX=	31.14	SMIN= 5.62	TMAX=	12.76	ANGLE= -2.0
	BOTT: SMAX=	-5.66	SMIN= -31.35	TMAX=	12.84	ANGLE= -4.5
	JOINT	1.01	1.77	2.50	11.82	1.51
	17		-0.41	0.13	-0.57	
	TOP : SMAX=	53.11	SMIN= 9.76	TMAX=	21.68	ANGLE= -8.1
	BOTT: SMAX=	-10.19	SMIN= -53.22	TMAX=	21.52	ANGLE= -9.8

ELEMENT FORCES FORCE,LENGTH UNITS= KIP FEET

FORCE OR STRESS = FORCE/WIDTH/THICK, MOMENT = FORCE-LENGTH/WIDTH

ELEMENT	LOAD	QX	QY FX	MX FY	MY FXY	MXY
	JOINT	1.01	0.17	0.62	6.77	0.68
	16		-0.42	0.04	-0.41	
	TOP : SMAX=	30.13	SMIN= 2.07	TMAX=	14.03	ANGLE= -5.3
	BOTT: SMAX=	-2.72	SMIN= -30.24	TMAX=	13.76	ANGLE= -7.2
	5	0.07	-0.26	-0.27	-2.01	-0.67
			-0.25	0.00	-0.48	
	TOP : SMAX=	-0.09	SMIN= -10.22	TMAX=	5.06	ANGLE= -21.5
	BOTT: SMAX=	9.57	SMIN= 0.24	TMAX=	4.67	ANGLE= -16.1
	JOINT	-0.03	0.17	2.47	7.15	-0.50
	10		-0.10	-0.14	-0.40	
	TOP : SMAX=	31.70	SMIN= 10.45	TMAX=	10.62	ANGLE= 7.1
	BOTT: SMAX=	-10.81	SMIN= -31.81	TMAX=	10.50	ANGLE= 4.9
	JOINT	-0.03	1.77	1.30	7.07	0.33
	11		-0.09	-0.04	-0.56	
	TOP : SMAX=	31.14	SMIN= 5.62	TMAX=	12.76	ANGLE= -2.0
	BOTT: SMAX=	-5.66	SMIN= -31.35	TMAX=	12.84	ANGLE= -4.5
	JOINT	1.01	1.77	2.50	11.82	1.51
	17		-0.41	0.13	-0.57	
	TOP : SMAX=	53.11	SMIN= 9.76	TMAX=	21.68	ANGLE= -8.1
	BOTT: SMAX=	-10.19	SMIN= -53.22	TMAX=	21.52	ANGLE= -9.8
	JOINT	1.01	0.17	0.62	6.77	0.68
	16		-0.42	0.04	-0.41	
	TOP : SMAX=	30.13	SMIN= 2.07	TMAX=	14.03	ANGLE= -5.3
	BOTT: SMAX=	-2.72	SMIN= -30.24	TMAX=	13.76	ANGLE= -7.2
10	4	-0.12	2.00	0.26	9.50	-0.18
			-0.17	-0.08	-0.23	
	TOP : SMAX=	41.81	SMIN= 0.93	TMAX=	20.44	ANGLE= 1.4
	BOTT: SMAX=	-1.29	SMIN= -41.96	TMAX=	20.34	ANGLE= 0.8
	JOINT	-0.10	1.94	0.52	7.14	-1.13
	11		-0.27	0.28	-0.38	
	TOP : SMAX=	32.67	SMIN= 1.09	TMAX=	15.79	ANGLE= 9.9
	BOTT: SMAX=	-1.86	SMIN= -31.89	TMAX=	15.02	ANGLE= 8.9
	JOINT	-0.10	2.05	0.16	7.46	0.69
	12		-0.21	-0.06	-0.02	
	TOP : SMAX=	33.12	SMIN= 0.20	TMAX=	16.46	ANGLE= -5.3
	BOTT: SMAX=	-0.62	SMIN= -33.25	TMAX=	16.31	ANGLE= -5.4
	JOINT	-0.13	2.05	-0.06	12.05	0.77
	18		-0.06	-0.45	-0.09	
	TOP : SMAX=	52.86	SMIN= -0.53	TMAX=	26.69	ANGLE= -3.6
	BOTT: SMAX=	0.42	SMIN= -53.78	TMAX=	27.10	ANGLE= -3.7
	JOINT	-0.13	1.94	0.40	11.35	-1.05
	17		-0.12	-0.11	-0.45	
	TOP : SMAX=	50.44	SMIN= 1.12	TMAX=	24.66	ANGLE= 5.9
	BOTT: SMAX=	-1.53	SMIN= -50.50	TMAX=	24.49	ANGLE= 4.9
	5	0.04	-0.30	-0.01	-2.09	-0.35
			-0.17	-0.08	-0.23	
	TOP : SMAX=	0.12	SMIN= -9.65	TMAX=	4.88	ANGLE= -10.6
	BOTT: SMAX=	9.32	SMIN= -0.30	TMAX=	4.81	ANGLE= -7.8

ELEMENT FORCES FORCE,LENGTH UNITS= KIP FEET

FORCE OR STRESS = FORCE/WIDTH/THICK, MOMENT = FORCE-LENGTH/WIDTH

ELEMENT	LOAD	QX	QY FX	MX FY	MY FXY	MXY
	JOINT	-0.10	1.94	0.52	7.14	-1.13
	11		-0.27	0.28	-0.38	
	TOP : SMAX=	32.67	SMIN= 1.09	TMAX=	15.79	ANGLE= 9.9
	BOTT: SMAX=	-1.86	SMIN= -31.89	TMAX=	15.02	ANGLE= 8.9
	JOINT	-0.10	2.05	0.16	7.46	0.69
	12		-0.21	-0.06	-0.02	
	TOP : SMAX=	33.12	SMIN= 0.20	TMAX=	16.46	ANGLE= -5.3
	BOTT: SMAX=	-0.62	SMIN= -33.25	TMAX=	16.31	ANGLE= -5.4
	JOINT	-0.13	2.05	-0.06	12.05	0.77
	18		-0.06	-0.45	-0.09	
	TOP : SMAX=	52.86	SMIN= -0.53	TMAX=	26.69	ANGLE= -3.6
	BOTT: SMAX=	0.42	SMIN= -53.78	TMAX=	27.10	ANGLE= -3.7
	JOINT	-0.13	1.94	0.40	11.35	-1.05
	17		-0.12	-0.11	-0.45	
	TOP : SMAX=	50.44	SMIN= 1.12	TMAX=	24.66	ANGLE= 5.9
	BOTT: SMAX=	-1.53	SMIN= -50.50	TMAX=	24.49	ANGLE= 4.9
11	4	2.84	-1.37	2.81	4.56	-4.06
			-0.68	-0.13	-0.01	
	TOP : SMAX=	34.25	SMIN= -2.55	TMAX=	18.40	ANGLE= 38.5
	BOTT: SMAX=	1.61	SMIN= -34.91	TMAX=	18.26	ANGLE= 39.4
	JOINT	3.10	-3.62	1.57	8.90	-4.81
	13		-0.68	-0.29	-0.10	
	TOP : SMAX=	49.47	SMIN= -4.27	TMAX=	26.87	ANGLE= 26.2
	BOTT: SMAX=	2.91	SMIN= -50.04	TMAX=	26.48	ANGLE= 26.5
	JOINT	3.10	0.88	8.16	2.76	-7.22
	14		-0.88	-0.22	-0.25	
	TOP : SMAX=	57.63	SMIN= -10.59	TMAX=	34.11	ANGLE= -35.1
	BOTT: SMAX=	9.25	SMIN= -58.50	TMAX=	33.87	ANGLE= -34.4
	JOINT	2.57	0.88	3.29	10.70	-3.32
	22		-0.68	0.03	0.08	
	TOP : SMAX=	52.66	SMIN= 8.38	TMAX=	22.14	ANGLE= 20.5
	BOTT: SMAX=	-9.46	SMIN= -52.88	TMAX=	21.71	ANGLE= 21.3
	JOINT	2.57	-3.62	-1.77	-4.12	-0.91
	21		-0.47	-0.04	0.23	
	TOP : SMAX=	-7.02	SMIN= -19.49	TMAX=	6.24	ANGLE= -18.6
	BOTT: SMAX=	19.60	SMIN= 5.88	TMAX=	6.86	ANGLE= -19.1
	5	-1.17	0.51	-1.27	-1.59	1.40
			-0.68	-0.13	-0.01	
	TOP : SMAX=	-0.55	SMIN= -12.86	TMAX=	6.16	ANGLE= 43.0
	BOTT: SMAX=	12.14	SMIN= -0.35	TMAX=	6.24	ANGLE= 40.5
	JOINT	3.10	-3.62	1.57	8.90	-4.81
	13		-0.68	-0.29	-0.10	
	TOP : SMAX=	49.47	SMIN= -4.27	TMAX=	26.87	ANGLE= 26.2
	BOTT: SMAX=	2.91	SMIN= -50.04	TMAX=	26.48	ANGLE= 26.5
	JOINT	3.10	0.88	8.16	2.76	-7.22
	14		-0.88	-0.22	-0.25	
	TOP : SMAX=	57.63	SMIN= -10.59	TMAX=	34.11	ANGLE= -35.1
	BOTT: SMAX=	9.25	SMIN= -58.50	TMAX=	33.87	ANGLE= -34.4

ELEMENT FORCES FORCE,LENGTH UNITS= KIP FEET

FORCE OR STRESS = FORCE/WIDTH/THICK, MOMENT = FORCE-LENGTH/WIDTH

ELEMENT	LOAD	QX	QY FX	MX FY	MY FXY	MXY
	JOINT	2.57	0.88	3.29	10.70	-3.32
	22		-0.68	0.03	0.08	
	TOP : SMAX=	52.66	SMIN= 8.38	TMAX=	22.14	ANGLE= 20.5
	BOTT: SMAX=	-9.46	SMIN= -52.88	TMAX=	21.71	ANGLE= 21.3
	JOINT	2.57	-3.62	-1.77	-4.12	-0.91
	21		-0.47	-0.04	0.23	
	TOP : SMAX=	-7.02	SMIN= -19.49	TMAX=	6.24	ANGLE= -18.6
	BOTT: SMAX=	19.60	SMIN= 5.88	TMAX=	6.86	ANGLE= -19.1
12	4	-1.42	2.68	6.76	5.95	7.87
			0.03	0.00	-0.01	
	TOP : SMAX=	62.74	SMIN= -6.69	TMAX=	34.71	ANGLE= 43.5
	BOTT: SMAX=	6.75	SMIN= -62.74	TMAX=	34.74	ANGLE= 43.5
	JOINT	-1.42	2.68	10.53	4.73	7.87
	22		13.73	0.02	-0.01	
	TOP : SMAX=	80.34	SMIN= 0.66	TMAX=	39.84	ANGLE= 30.2
	BOTT: SMAX=	8.45	SMIN= -61.95	TMAX=	35.20	ANGLE= 40.2
	JOINT	-1.42	2.68	3.91	4.73	7.87
	14		-10.34	0.02	-0.01	
	TOP : SMAX=	49.24	SMIN= -21.49	TMAX=	35.36	ANGLE= -39.3
	BOTT: SMAX=	10.66	SMIN= -59.06	TMAX=	34.86	ANGLE= 42.2
	JOINT	-1.42	2.68	5.85	8.39	7.87
	19		-3.29	-0.04	-0.01	
	TOP : SMAX=	65.12	SMIN= -5.70	TMAX=	35.41	ANGLE= -39.1
	BOTT: SMAX=	1.89	SMIN= -67.96	TMAX=	34.92	ANGLE= -41.7
	5	0.44	-0.06	-2.42	-2.77	-2.83
			0.03	0.00	-0.01	
	TOP : SMAX=	1.09	SMIN= -23.93	TMAX=	12.51	ANGLE= -43.2
	BOTT: SMAX=	23.93	SMIN= -1.03	TMAX=	12.48	ANGLE= -43.2
	JOINT	-1.42	2.68	10.53	4.73	7.87
	22		13.73	0.02	-0.01	
	TOP : SMAX=	80.34	SMIN= 0.66	TMAX=	39.84	ANGLE= 30.2
	BOTT: SMAX=	8.45	SMIN= -61.95	TMAX=	35.20	ANGLE= 40.2
	JOINT	-1.42	2.68	3.91	4.73	7.87
	14		-10.34	0.02	-0.01	
	TOP : SMAX=	49.24	SMIN= -21.49	TMAX=	35.36	ANGLE= -39.3
	BOTT: SMAX=	10.66	SMIN= -59.06	TMAX=	34.86	ANGLE= 42.2
	JOINT	-1.42	2.68	5.85	8.39	7.87
	19		-3.29	-0.04	-0.01	
	TOP : SMAX=	65.12	SMIN= -5.70	TMAX=	35.41	ANGLE= -39.1
	BOTT: SMAX=	1.89	SMIN= -67.96	TMAX=	34.92	ANGLE= -41.7
13	4	1.42	-0.59	9.30	7.64	-9.46
			-0.76	0.00	0.03	
	TOP : SMAX=	78.75	SMIN= -4.86	TMAX=	41.81	ANGLE= -42.8
	BOTT: SMAX=	4.23	SMIN= -79.63	TMAX=	41.93	ANGLE= -42.2
	JOINT	1.42	-0.59	6.44	7.91	-9.46
	14		0.87	0.02	0.03	
	TOP : SMAX=	73.84	SMIN= -9.70	TMAX=	41.77	ANGLE= 43.1
	BOTT: SMAX=	10.71	SMIN= -73.08	TMAX=	41.89	ANGLE= 42.5

ELEMENT FORCES FORCE,LENGTH UNITS= KIP FEET

FORCE OR STRESS = FORCE/WIDTH/THICK, MOMENT = FORCE-LENGTH/WIDTH

ELEMENT	LOAD	QX	QY FX	MX FY	MY FXY	MXY
	JOINT	1.42	-0.59	13.06	7.91	-9.46
	15		-2.91	0.02	0.03	
	TOP : SMAX=	87.61	SMIN= 1.94	TMAX=	42.84	ANGLE= -38.3
	BOTT: SMAX=	-4.00	SMIN= -91.33	TMAX=	43.66	ANGLE= -36.5
	JOINT	1.42	-0.59	8.38	7.10	-9.46
	19		-0.24	-0.04	0.03	
	TOP : SMAX=	75.75	SMIN= -7.78	TMAX=	41.77	ANGLE= -43.1
	BOTT: SMAX=	7.58	SMIN= -76.09	TMAX=	41.84	ANGLE= -43.0
	5	-0.20	-0.84	-3.93	-1.75	3.01
			-0.76	0.00	0.03	
	TOP : SMAX=	1.38	SMIN= -27.19	TMAX=	14.29	ANGLE= -34.4
	BOTT: SMAX=	26.12	SMIN= -1.83	TMAX=	13.98	ANGLE= -35.8
	JOINT	1.42	-0.59	6.44	7.91	-9.46
	14		0.87	0.02	0.03	
	TOP : SMAX=	73.84	SMIN= -9.70	TMAX=	41.77	ANGLE= 43.1
	BOTT: SMAX=	10.71	SMIN= -73.08	TMAX=	41.89	ANGLE= 42.5
	JOINT	1.42	-0.59	13.06	7.91	-9.46
	15		-2.91	0.02	0.03	
	TOP : SMAX=	87.61	SMIN= 1.94	TMAX=	42.84	ANGLE= -38.3
	BOTT: SMAX=	-4.00	SMIN= -91.33	TMAX=	43.66	ANGLE= -36.5
	JOINT	1.42	-0.59	8.38	7.10	-9.46
	19		-0.24	-0.04	0.03	
	TOP : SMAX=	75.75	SMIN= -7.78	TMAX=	41.77	ANGLE= -43.1
	BOTT: SMAX=	7.58	SMIN= -76.09	TMAX=	41.84	ANGLE= -43.0
14	4	0.54	0.64	7.58	5.20	3.99
			-0.72	0.00	-0.29	
	TOP : SMAX=	45.75	SMIN= 9.83	TMAX=	17.96	ANGLE= 37.1
	BOTT: SMAX=	-9.80	SMIN= -47.22	TMAX=	18.71	ANGLE= 36.3
	JOINT	0.54	0.64	6.15	4.90	3.99
	15		3.26	-0.02	-0.29	
	TOP : SMAX=	43.83	SMIN= 8.16	TMAX=	17.83	ANGLE= 37.9
	BOTT: SMAX=	-4.86	SMIN= -40.64	TMAX=	17.89	ANGLE= 43.2
	JOINT	0.54	0.64	8.65	4.90	3.99
	16		-3.73	-0.02	-0.29	
	TOP : SMAX=	46.44	SMIN= 9.57	TMAX=	18.43	ANGLE= 34.8
	BOTT: SMAX=	-11.23	SMIN= -52.27	TMAX=	20.52	ANGLE= 30.2
	JOINT	0.54	0.64	7.92	5.78	3.99
	20		-1.68	0.03	-0.29	
	TOP : SMAX=	47.09	SMIN= 11.67	TMAX=	17.71	ANGLE= 38.7
	BOTT: SMAX=	-12.33	SMIN= -49.73	TMAX=	18.70	ANGLE= 36.3
	5	0.17	0.46	-2.42	-1.99	-1.69
			-0.72	0.00	-0.29	
	TOP : SMAX=	-2.21	SMIN= -17.94	TMAX=	7.86	ANGLE= 40.2
	BOTT: SMAX=	16.57	SMIN= 2.15	TMAX=	7.21	ANGLE= 42.7
	JOINT	0.54	0.64	6.15	4.90	3.99
	15		3.26	-0.02	-0.29	
	TOP : SMAX=	43.83	SMIN= 8.16	TMAX=	17.83	ANGLE= 37.9
	BOTT: SMAX=	-4.86	SMIN= -40.64	TMAX=	17.89	ANGLE= 43.2

ELEMENT FORCES FORCE,LENGTH UNITS= KIP FEET

FORCE OR STRESS = FORCE/WIDTH/THICK, MOMENT = FORCE-LENGTH/WIDTH

ELEMENT	LOAD	QX	QY FX	MX FY	MY FXY	MXY
	JOINT	0.54	0.64	8.65	4.90	3.99
	16		-3.73	-0.02	-0.29	
	TOP : SMAX=	46.44	SMIN= 9.57	TMAX=	18.43	ANGLE= 34.8
	BOTT: SMAX=	-11.23	SMIN= -52.27	TMAX=	20.52	ANGLE= 30.2
	JOINT	0.54	0.64	7.92	5.78	3.99
	20		-1.68	0.03	-0.29	
	TOP : SMAX=	47.09	SMIN= 11.67	TMAX=	17.71	ANGLE= 38.7
	BOTT: SMAX=	-12.33	SMIN= -49.73	TMAX=	18.70	ANGLE= 36.3
15	4	-0.13	1.06	16.81	2.43	-6.43
			0.06	0.00	0.19	
	TOP : SMAX=	84.84	SMIN= 0.03	TMAX=	42.40	ANGLE= -20.8
	BOTT: SMAX=	0.23	SMIN= -84.98	TMAX=	42.61	ANGLE= -21.0
	JOINT	-0.13	1.06	17.06	1.95	-6.43
	16		9.64	-0.01	0.19	
	TOP : SMAX=	94.11	SMIN= -0.68	TMAX=	47.39	ANGLE= -18.2
	BOTT: SMAX=	3.21	SMIN= -77.38	TMAX=	40.30	ANGLE= -22.5
	JOINT	-0.13	1.06	16.48	1.95	-6.43
	24		-12.59	-0.01	0.19	
	TOP : SMAX=	72.44	SMIN= -3.82	TMAX=	38.13	ANGLE= -23.8
	BOTT: SMAX=	0.84	SMIN= -94.67	TMAX=	47.75	ANGLE= -18.3
	JOINT	-0.13	1.06	16.89	3.39	-6.43
	20		3.13	0.03	0.19	
	TOP : SMAX=	88.37	SMIN= 4.20	TMAX=	42.09	ANGLE= -21.0
	BOTT: SMAX=	-3.03	SMIN= -83.23	TMAX=	40.10	ANGLE= -22.7
	5	0.03	-0.93	-4.21	-0.45	1.79
			0.06	0.00	0.19	
	TOP : SMAX=	1.31	SMIN= -21.81	TMAX=	11.56	ANGLE= -22.2
	BOTT: SMAX=	21.65	SMIN= -1.04	TMAX=	11.35	ANGLE= -21.4
	JOINT	-0.13	1.06	17.06	1.95	-6.43
	16		9.64	-0.01	0.19	
	TOP : SMAX=	94.11	SMIN= -0.68	TMAX=	47.39	ANGLE= -18.2
	BOTT: SMAX=	3.21	SMIN= -77.38	TMAX=	40.30	ANGLE= -22.5
	JOINT	-0.13	1.06	16.48	1.95	-6.43
	24		-12.59	-0.01	0.19	
	TOP : SMAX=	72.44	SMIN= -3.82	TMAX=	38.13	ANGLE= -23.8
	BOTT: SMAX=	0.84	SMIN= -94.67	TMAX=	47.75	ANGLE= -18.3
	JOINT	-0.13	1.06	16.89	3.39	-6.43
	20		3.13	0.03	0.19	
	TOP : SMAX=	88.37	SMIN= 4.20	TMAX=	42.09	ANGLE= -21.0
	BOTT: SMAX=	-3.03	SMIN= -83.23	TMAX=	40.10	ANGLE= -22.7
16	4	-0.89	0.91	1.24	15.99	1.05
			-0.35	-0.09	-0.19	
	TOP : SMAX=	70.69	SMIN= 4.81	TMAX=	32.94	ANGLE= -3.9
	BOTT: SMAX=	-5.45	SMIN= -70.93	TMAX=	32.74	ANGLE= -4.2
	JOINT	-1.06	1.05	3.45	15.25	1.12
	16		-0.44	0.02	-0.09	
	TOP : SMAX=	67.71	SMIN= 14.33	TMAX=	26.69	ANGLE= -5.2
	BOTT: SMAX=	-15.17	SMIN= -67.70	TMAX=	26.26	ANGLE= -5.5

ELEMENT FORCES FORCE,LENGTH UNITS= KIP FEET

FORCE OR STRESS = FORCE/WIDTH/THICK, MOMENT = FORCE-LENGTH/WIDTH

ELEMENT	LOAD	QX	QY FX	MX FY	MY FXY	MXY
	JOINT	-1.06	0.77	1.21	14.36	2.31
	17		-0.34	-0.25	-0.12	
	TOP : SMAX=	64.75	SMIN= 3.31	TMAX=	30.72	ANGLE= -9.6
	BOTT: SMAX=	-3.91	SMIN= -65.32	TMAX=	30.71	ANGLE= -9.8
	JOINT	-0.73	0.77	-0.50	16.07	0.97
	25		-0.25	-0.20	-0.29	
	TOP : SMAX=	70.83	SMIN= -2.68	TMAX=	36.76	ANGLE= -3.1
	BOTT: SMAX=	2.25	SMIN= -71.31	TMAX=	36.78	ANGLE= -3.6
	JOINT	-0.73	1.05	0.79	18.28	-0.22
	24		-0.35	0.07	-0.26	
	TOP : SMAX=	80.66	SMIN= 3.10	TMAX=	38.78	ANGLE= 0.9
	BOTT: SMAX=	-3.82	SMIN= -80.51	TMAX=	38.34	ANGLE= 0.5
	5	0.30	-0.23	-0.07	-3.87	-0.43
			-0.35	-0.09	-0.19	
	TOP : SMAX=	-0.41	SMIN= -17.42	TMAX=	8.51	ANGLE= -7.2
	BOTT: SMAX=	17.15	SMIN= -0.19	TMAX=	8.67	ANGLE= -5.7
	JOINT	-1.06	1.05	3.45	15.25	1.12
	16		-0.44	0.02	-0.09	
	TOP : SMAX=	67.71	SMIN= 14.33	TMAX=	26.69	ANGLE= -5.2
	BOTT: SMAX=	-15.17	SMIN= -67.70	TMAX=	26.26	ANGLE= -5.5
	JOINT	-1.06	0.77	1.21	14.36	2.31
	17		-0.34	-0.25	-0.12	
	TOP : SMAX=	64.75	SMIN= 3.31	TMAX=	30.72	ANGLE= -9.6
	BOTT: SMAX=	-3.91	SMIN= -65.32	TMAX=	30.71	ANGLE= -9.8
	JOINT	-0.73	0.77	-0.50	16.07	0.97
	25		-0.25	-0.20	-0.29	
	TOP : SMAX=	70.83	SMIN= -2.68	TMAX=	36.76	ANGLE= -3.1
	BOTT: SMAX=	2.25	SMIN= -71.31	TMAX=	36.78	ANGLE= -3.6
	JOINT	-0.73	1.05	0.79	18.28	-0.22
	24		-0.35	0.07	-0.26	
	TOP : SMAX=	80.66	SMIN= 3.10	TMAX=	38.78	ANGLE= 0.9
	BOTT: SMAX=	-3.82	SMIN= -80.51	TMAX=	38.34	ANGLE= 0.5
17	4	-0.33	0.81	0.12	15.14	0.13
			-0.15	-0.41	-0.09	
	TOP : SMAX=	66.31	SMIN= 0.38	TMAX=	32.96	ANGLE= -0.4
	BOTT: SMAX=	-0.68	SMIN= -67.13	TMAX=	33.23	ANGLE= -0.6
	JOINT	-0.42	0.88	1.04	14.10	-0.31
	17		-0.23	-0.08	-0.03	
	TOP : SMAX=	62.11	SMIN= 4.32	TMAX=	28.90	ANGLE= 1.4
	BOTT: SMAX=	-4.78	SMIN= -62.27	TMAX=	28.74	ANGLE= 1.3
	JOINT	-0.42	0.74	-0.01	14.22	0.84
	18		-0.10	-0.59	0.06	
	TOP : SMAX=	62.34	SMIN= -0.37	TMAX=	31.35	ANGLE= -3.5
	BOTT: SMAX=	0.14	SMIN= -63.50	TMAX=	31.82	ANGLE= -3.3
	JOINT	-0.24	0.74	-0.54	15.84	0.57
	26		-0.07	-0.74	-0.14	
	TOP : SMAX=	69.18	SMIN= -2.54	TMAX=	35.86	ANGLE= -1.9
	BOTT: SMAX=	2.43	SMIN= -70.68	TMAX=	36.55	ANGLE= -2.1

ELEMENT FORCES FORCE,LENGTH UNITS= KIP FEET

FORCE OR STRESS = FORCE/WIDTH/THICK, MOMENT = FORCE-LENGTH/WIDTH

ELEMENT	LOAD	QX	QY FX	MX FY	MY FXY	MXY
	JOINT	-0.24	0.88	0.00	16.37	-0.58
	25		-0.20	-0.23	-0.24	
	TOP : SMAX=	72.05	SMIN= -0.32	TMAX=	36.18	ANGLE= 2.2
	BOTT: SMAX=	-0.11	SMIN= -72.47	TMAX=	36.18	ANGLE= 1.8
	5	0.06	-0.12	0.05	-3.47	-0.18
			-0.15	-0.41	-0.09	
	TOP : SMAX=	0.13	SMIN= -15.77	TMAX=	7.95	ANGLE= -3.2
	BOTT: SMAX=	14.94	SMIN= -0.41	TMAX=	7.67	ANGLE= -2.6
	JOINT	-0.42	0.88	1.04	14.10	-0.31
	17		-0.23	-0.08	-0.03	
	TOP : SMAX=	62.11	SMIN= 4.32	TMAX=	28.90	ANGLE= 1.4
	BOTT: SMAX=	-4.78	SMIN= -62.27	TMAX=	28.74	ANGLE= 1.3
	JOINT	-0.42	0.74	-0.01	14.22	0.84
	18		-0.10	-0.59	0.06	
	TOP : SMAX=	62.34	SMIN= -0.37	TMAX=	31.35	ANGLE= -3.5
	BOTT: SMAX=	0.14	SMIN= -63.50	TMAX=	31.82	ANGLE= -3.3
	JOINT	-0.24	0.74	-0.54	15.84	0.57
	26		-0.07	-0.74	-0.14	
	TOP : SMAX=	69.18	SMIN= -2.54	TMAX=	35.86	ANGLE= -1.9
	BOTT: SMAX=	2.43	SMIN= -70.68	TMAX=	36.55	ANGLE= -2.1
	JOINT	-0.24	0.88	0.00	16.37	-0.58
	25		-0.20	-0.23	-0.24	
	TOP : SMAX=	72.05	SMIN= -0.32	TMAX=	36.18	ANGLE= 2.2
	BOTT: SMAX=	-0.11	SMIN= -72.47	TMAX=	36.18	ANGLE= 1.8
18	4	2.83	1.37	2.81	4.55	4.08
			-0.68	-0.13	0.01	
	TOP : SMAX=	34.26	SMIN= -2.62	TMAX=	18.44	ANGLE= -38.6
	BOTT: SMAX=	1.68	SMIN= -34.93	TMAX=	18.30	ANGLE= -39.4
	JOINT	2.57	3.63	-1.77	-4.16	0.92
	21		-0.47	-0.04	-0.23	
	TOP : SMAX=	-6.98	SMIN= -19.66	TMAX=	6.34	ANGLE= 18.6
	BOTT: SMAX=	19.77	SMIN= 5.85	TMAX=	6.96	ANGLE= 19.0
	JOINT	2.57	-0.88	3.28	10.71	3.33
	22		-0.68	0.03	-0.08	
	TOP : SMAX=	52.71	SMIN= 8.30	TMAX=	22.20	ANGLE= -20.6
	BOTT: SMAX=	-9.38	SMIN= -52.94	TMAX=	21.78	ANGLE= -21.4
	JOINT	3.09	-0.88	8.16	2.72	7.23
	30		-0.88	-0.22	0.25	
	TOP : SMAX=	57.61	SMIN= -10.74	TMAX=	34.18	ANGLE= 35.0
	BOTT: SMAX=	9.40	SMIN= -58.47	TMAX=	33.94	ANGLE= 34.3
	JOINT	3.09	3.63	1.57	8.92	4.82
	29		-0.68	-0.29	0.10	
	TOP : SMAX=	49.55	SMIN= -4.26	TMAX=	26.91	ANGLE= -26.2
	BOTT: SMAX=	2.90	SMIN= -50.13	TMAX=	26.51	ANGLE= -26.4
	5	-1.17	-0.51	-1.27	-1.57	-1.41
			-0.68	-0.13	0.01	
	TOP : SMAX=	-0.46	SMIN= -12.88	TMAX=	6.21	ANGLE= -43.2
	BOTT: SMAX=	12.16	SMIN= -0.43	TMAX=	6.29	ANGLE= -40.7

ELEMENT FORCES FORCE,LENGTH UNITS= KIP FEET

FORCE OR STRESS = FORCE/WIDTH/THICK, MOMENT = FORCE-LENGTH/WIDTH

ELEMENT	LOAD	QX	QY FX	MX FY	MY FXY	MXY
	JOINT	2.57	3.63	-1.77	-4.16	0.92
	21		-0.47	-0.04	-0.23	
	TOP : SMAX=	-6.98	SMIN= -19.66	TMAX=	6.34	ANGLE= 18.6
	BOTT: SMAX=	19.77	SMIN= 5.85	TMAX=	6.96	ANGLE= 19.0
	JOINT	2.57	-0.88	3.28	10.71	3.33
	22		-0.68	0.03	-0.08	
	TOP : SMAX=	52.71	SMIN= 8.30	TMAX=	22.20	ANGLE= -20.6
	BOTT: SMAX=	-9.38	SMIN= -52.94	TMAX=	21.78	ANGLE= -21.4
	JOINT	3.09	-0.88	8.16	2.72	7.23
	30		-0.88	-0.22	0.25	
	TOP : SMAX=	57.61	SMIN= -10.74	TMAX=	34.18	ANGLE= 35.0
	BOTT: SMAX=	9.40	SMIN= -58.47	TMAX=	33.94	ANGLE= 34.3
	JOINT	3.09	3.63	1.57	8.92	4.82
	29		-0.68	-0.29	0.10	
	TOP : SMAX=	49.55	SMIN= -4.26	TMAX=	26.91	ANGLE= -26.2
	BOTT: SMAX=	2.90	SMIN= -50.13	TMAX=	26.51	ANGLE= -26.4
19	4	1.43	2.63	6.75	5.98	-7.88
			0.03	0.00	0.01	
	TOP : SMAX=	62.82	SMIN= -6.69	TMAX=	34.76	ANGLE= -43.6
	BOTT: SMAX=	6.75	SMIN= -62.82	TMAX=	34.78	ANGLE= -43.6
	JOINT	1.43	2.63	3.88	4.78	-7.88
	30		10.41	-0.02	0.01	
	TOP : SMAX=	59.14	SMIN= -10.59	TMAX=	34.86	ANGLE= -42.3
	BOTT: SMAX=	21.60	SMIN= -49.37	TMAX=	35.48	ANGLE= 39.1
	JOINT	1.43	2.63	10.54	4.78	-7.88
	22		-13.66	-0.02	0.01	
	TOP : SMAX=	62.14	SMIN= -8.28	TMAX=	35.21	ANGLE= -40.2
	BOTT: SMAX=	-0.76	SMIN= -80.46	TMAX=	39.85	ANGLE= -30.3
	JOINT	1.43	2.63	5.83	8.37	-7.88
	27		3.36	0.04	0.01	
	TOP : SMAX=	67.94	SMIN= -1.94	TMAX=	34.94	ANGLE= 41.8
	BOTT: SMAX=	5.90	SMIN= -65.09	TMAX=	35.49	ANGLE= 39.1
	5	-0.45	-0.01	-2.40	-2.81	2.84
			0.03	0.00	0.01	
	TOP : SMAX=	1.11	SMIN= -24.04	TMAX=	12.57	ANGLE= 42.9
	BOTT: SMAX=	24.04	SMIN= -1.04	TMAX=	12.54	ANGLE= 43.0
	JOINT	1.43	2.63	3.88	4.78	-7.88
	30		10.41	-0.02	0.01	
	TOP : SMAX=	59.14	SMIN= -10.59	TMAX=	34.86	ANGLE= -42.3
	BOTT: SMAX=	21.60	SMIN= -49.37	TMAX=	35.48	ANGLE= 39.1
	JOINT	1.43	2.63	10.54	4.78	-7.88
	22		-13.66	-0.02	0.01	
	TOP : SMAX=	62.14	SMIN= -8.28	TMAX=	35.21	ANGLE= -40.2
	BOTT: SMAX=	-0.76	SMIN= -80.46	TMAX=	39.85	ANGLE= -30.3
	JOINT	1.43	2.63	5.83	8.37	-7.88
	27		3.36	0.04	0.01	
	TOP : SMAX=	67.94	SMIN= -1.94	TMAX=	34.94	ANGLE= 41.8
	BOTT: SMAX=	5.90	SMIN= -65.09	TMAX=	35.49	ANGLE= 39.1

ELEMENT FORCES FORCE,LENGTH UNITS= KIP FEET

FORCE OR STRESS = FORCE/WIDTH/THICK, MOMENT = FORCE-LENGTH/WIDTH

ELEMENT	LOAD	QX	QY FX	MX FY	MY FXY	MXY
20	4	-1.41	-0.54	9.27	7.60	9.44
			-0.76	0.00	-0.03	
TOP :	SMAX=	78.51	SMIN= -4.92	TMAX=	41.72	ANGLE= 42.7
BOTT:	SMAX=	4.28	SMIN= -79.39	TMAX=	41.84	ANGLE= 42.2
JOINT		-1.41	-0.54	13.01	7.84	9.44
31			1.39	-0.02	-0.03	
TOP :	SMAX=	89.95	SMIN= 3.33	TMAX=	43.31	ANGLE= 36.9
BOTT:	SMAX=	-2.28	SMIN= -88.26	TMAX=	42.99	ANGLE= 37.8
JOINT		-1.41	-0.54	6.44	7.84	9.44
30			-2.39	-0.02	-0.03	
TOP :	SMAX=	72.09	SMIN= -11.52	TMAX=	41.81	ANGLE= -42.1
BOTT:	SMAX=	9.00	SMIN= -74.37	TMAX=	41.68	ANGLE= -43.7
JOINT		-1.41	-0.54	8.36	7.10	9.44
27			-1.28	0.04	-0.03	
TOP :	SMAX=	75.11	SMIN= -8.17	TMAX=	41.64	ANGLE= 43.5
BOTT:	SMAX=	7.07	SMIN= -76.49	TMAX=	41.78	ANGLE= 42.6
	5	0.19	-0.89	-3.90	-1.71	-2.99
			-0.76	0.00	-0.03	
TOP :	SMAX=	1.46	SMIN= -26.94	TMAX=	14.20	ANGLE= 34.2
BOTT:	SMAX=	25.87	SMIN= -1.91	TMAX=	13.89	ANGLE= 35.7
JOINT		-1.41	-0.54	13.01	7.84	9.44
31			1.39	-0.02	-0.03	
TOP :	SMAX=	89.95	SMIN= 3.33	TMAX=	43.31	ANGLE= 36.9
BOTT:	SMAX=	-2.28	SMIN= -88.26	TMAX=	42.99	ANGLE= 37.8
JOINT		-1.41	-0.54	6.44	7.84	9.44
30			-2.39	-0.02	-0.03	
TOP :	SMAX=	72.09	SMIN= -11.52	TMAX=	41.81	ANGLE= -42.1
BOTT:	SMAX=	9.00	SMIN= -74.37	TMAX=	41.68	ANGLE= -43.7
JOINT		-1.41	-0.54	8.36	7.10	9.44
27			-1.28	0.04	-0.03	
TOP :	SMAX=	75.11	SMIN= -8.17	TMAX=	41.64	ANGLE= 43.5
BOTT:	SMAX=	7.07	SMIN= -76.49	TMAX=	41.78	ANGLE= 42.6
21	4	-0.55	0.69	7.55	5.15	-3.96
			-0.72	0.00	0.28	
TOP :	SMAX=	45.52	SMIN= 9.77	TMAX=	17.88	ANGLE= -37.0
BOTT:	SMAX=	-9.73	SMIN= -46.99	TMAX=	18.63	ANGLE= -36.2
JOINT		-0.55	0.69	8.66	4.84	-3.96
32			2.30	0.02	0.28	
TOP :	SMAX=	50.57	SMIN= 11.24	TMAX=	19.66	ANGLE= -30.5
BOTT:	SMAX=	-9.40	SMIN= -47.78	TMAX=	19.19	ANGLE= -33.9
JOINT		-0.55	0.69	6.09	4.84	-3.96
31			-4.69	0.02	0.28	
TOP :	SMAX=	38.95	SMIN= 4.56	TMAX=	17.19	ANGLE= -44.3
BOTT:	SMAX=	-7.95	SMIN= -44.91	TMAX=	18.48	ANGLE= -37.0
JOINT		-0.55	0.69	7.91	5.78	-3.96
28			0.25	-0.03	0.28	
TOP :	SMAX=	48.13	SMIN= 12.43	TMAX=	17.85	ANGLE= -37.2
BOTT:	SMAX=	-11.74	SMIN= -48.39	TMAX=	18.33	ANGLE= -37.8

ELEMENT FORCES FORCE,LENGTH UNITS= KIP FEET

FORCE OR STRESS = FORCE/WIDTH/THICK, MOMENT = FORCE-LENGTH/WIDTH

ELEMENT	LOAD	QX	QY FX	MX FY	MY FXY	MXY
	5	-0.15	0.41	-2.39	-1.94	1.67
			-0.72	0.00	0.28	
	TOP : SMAX=	-2.15	SMIN= -17.67	TMAX= 7.76	ANGLE= -40.0	
	BOTT: SMAX=	16.30	SMIN= 2.09	TMAX= 7.10	ANGLE= -42.4	
	JOINT	-0.55	0.69	8.66	4.84	-3.96
	32		2.30	0.02	0.28	
	TOP : SMAX=	50.57	SMIN= 11.24	TMAX= 19.66	ANGLE= -30.5	
	BOTT: SMAX=	-9.40	SMIN= -47.78	TMAX= 19.19	ANGLE= -33.9	
	JOINT	-0.55	0.69	6.09	4.84	-3.96
	31		-4.69	0.02	0.28	
	TOP : SMAX=	38.95	SMIN= 4.56	TMAX= 17.19	ANGLE= -44.3	
	BOTT: SMAX=	-7.95	SMIN= -44.91	TMAX= 18.48	ANGLE= -37.0	
	JOINT	-0.55	0.69	7.91	5.78	-3.96
	28		0.25	-0.03	0.28	
	TOP : SMAX=	48.13	SMIN= 12.43	TMAX= 17.85	ANGLE= -37.2	
	BOTT: SMAX=	-11.74	SMIN= -48.39	TMAX= 18.33	ANGLE= -37.8	
22	4	0.12	1.01	16.79	2.46	6.43
			0.06	0.00	-0.19	
	TOP : SMAX=	84.80	SMIN= 0.11	TMAX= 42.34	ANGLE= 20.8	
	BOTT: SMAX=	0.15	SMIN= -84.94	TMAX= 42.55	ANGLE= 21.1	
	JOINT	0.12	1.01	16.48	2.00	6.43
	24		12.71	0.01	-0.19	
	TOP : SMAX=	94.59	SMIN= -0.42	TMAX= 47.51	ANGLE= 18.2	
	BOTT: SMAX=	3.95	SMIN= -72.67	TMAX= 38.31	ANGLE= 24.1	
	JOINT	0.12	1.01	17.03	2.00	6.43
	32		-9.52	0.01	-0.19	
	TOP : SMAX=	77.15	SMIN= -2.79	TMAX= 39.97	ANGLE= 22.4	
	BOTT: SMAX=	0.75	SMIN= -94.13	TMAX= 47.44	ANGLE= 18.5	
	JOINT	0.12	1.01	16.87	3.38	6.43
	28		-3.01	-0.03	-0.19	
	TOP : SMAX=	82.98	SMIN= 3.22	TMAX= 39.88	ANGLE= 22.5	
	BOTT: SMAX=	-3.84	SMIN= -88.44	TMAX= 42.30	ANGLE= 21.2	
	5	-0.02	-0.88	-4.19	-0.48	-1.80
			0.06	0.00	-0.19	
	TOP : SMAX=	1.23	SMIN= -21.77	TMAX= 11.50	ANGLE= 22.4	
	BOTT: SMAX=	21.61	SMIN= -0.95	TMAX= 11.28	ANGLE= 21.6	
	JOINT	0.12	1.01	16.48	2.00	6.43
	24		12.71	0.01	-0.19	
	TOP : SMAX=	94.59	SMIN= -0.42	TMAX= 47.51	ANGLE= 18.2	
	BOTT: SMAX=	3.95	SMIN= -72.67	TMAX= 38.31	ANGLE= 24.1	
	JOINT	0.12	1.01	17.03	2.00	6.43
	32		-9.52	0.01	-0.19	
	TOP : SMAX=	77.15	SMIN= -2.79	TMAX= 39.97	ANGLE= 22.4	
	BOTT: SMAX=	0.75	SMIN= -94.13	TMAX= 47.44	ANGLE= 18.5	
	JOINT	0.12	1.01	16.87	3.38	6.43
	28		-3.01	-0.03	-0.19	
	TOP : SMAX=	82.98	SMIN= 3.22	TMAX= 39.88	ANGLE= 22.5	
	BOTT: SMAX=	-3.84	SMIN= -88.44	TMAX= 42.30	ANGLE= 21.2	

ELEMENT FORCES FORCE,LENGTH UNITS= KIP FEET

FORCE OR STRESS = FORCE/WIDTH/THICK, MOMENT = FORCE-LENGTH/WIDTH

ELEMENT	LOAD	QX	QY FX	MX FY	MY FXY	MXY
23	4	-0.89	-0.92	1.24	15.97	-1.05
			-0.35	-0.09	0.19	
TOP :	SMAX=	70.62	SMIN= 4.82	TMAX=	32.90	ANGLE= 3.9
BOTT:	SMAX=	-5.46	SMIN= -70.86	TMAX=	32.70	ANGLE= 4.3
JOINT		-0.72	-1.06	0.78	18.27	0.21
24			-0.35	0.07	0.26	
TOP :	SMAX=	80.60	SMIN= 3.06	TMAX=	38.77	ANGLE= -0.9
BOTT:	SMAX=	-3.78	SMIN= -80.45	TMAX=	38.34	ANGLE= -0.5
JOINT		-0.72	-0.77	-0.50	16.06	-0.98
25			-0.25	-0.20	0.29	
TOP :	SMAX=	70.81	SMIN= -2.66	TMAX=	36.73	ANGLE= 3.2
BOTT:	SMAX=	2.23	SMIN= -71.28	TMAX=	36.76	ANGLE= 3.6
JOINT		-1.05	-0.77	1.22	14.35	-2.31
33			-0.34	-0.25	0.12	
TOP :	SMAX=	64.70	SMIN= 3.34	TMAX=	30.68	ANGLE= 9.6
BOTT:	SMAX=	-3.93	SMIN= -65.28	TMAX=	30.67	ANGLE= 9.8
JOINT		-1.05	-1.06	3.46	15.22	-1.12
32			-0.44	0.02	0.09	
TOP :	SMAX=	67.57	SMIN= 14.37	TMAX=	26.60	ANGLE= 5.3
BOTT:	SMAX=	-15.22	SMIN= -67.56	TMAX=	26.17	ANGLE= 5.6
	5	0.30	0.24	-0.08	-3.85	0.44
			-0.35	-0.09	0.19	
TOP :	SMAX=	-0.42	SMIN= -17.35	TMAX=	8.47	ANGLE= 7.3
BOTT:	SMAX=	17.08	SMIN= -0.18	TMAX=	8.63	ANGLE= 5.9
JOINT		-0.72	-1.06	0.78	18.27	0.21
24			-0.35	0.07	0.26	
TOP :	SMAX=	80.60	SMIN= 3.06	TMAX=	38.77	ANGLE= -0.9
BOTT:	SMAX=	-3.78	SMIN= -80.45	TMAX=	38.34	ANGLE= -0.5
JOINT		-0.72	-0.77	-0.50	16.06	-0.98
25			-0.25	-0.20	0.29	
TOP :	SMAX=	70.81	SMIN= -2.66	TMAX=	36.73	ANGLE= 3.2
BOTT:	SMAX=	2.23	SMIN= -71.28	TMAX=	36.76	ANGLE= 3.6
JOINT		-1.05	-0.77	1.22	14.35	-2.31
33			-0.34	-0.25	0.12	
TOP :	SMAX=	64.70	SMIN= 3.34	TMAX=	30.68	ANGLE= 9.6
BOTT:	SMAX=	-3.93	SMIN= -65.28	TMAX=	30.67	ANGLE= 9.8
JOINT		-1.05	-1.06	3.46	15.22	-1.12
32			-0.44	0.02	0.09	
TOP :	SMAX=	67.57	SMIN= 14.37	TMAX=	26.60	ANGLE= 5.3
BOTT:	SMAX=	-15.22	SMIN= -67.56	TMAX=	26.17	ANGLE= 5.6
24	4	-0.33	-0.81	0.12	15.13	-0.13
			-0.15	-0.41	0.09	
TOP :	SMAX=	66.27	SMIN= 0.39	TMAX=	32.94	ANGLE= 0.4
BOTT:	SMAX=	-0.68	SMIN= -67.09	TMAX=	33.20	ANGLE= 0.6
JOINT		-0.24	-0.88	-0.01	16.36	0.58
25			-0.20	-0.23	0.24	
TOP :	SMAX=	72.01	SMIN= -0.33	TMAX=	36.17	ANGLE= -2.2
BOTT:	SMAX=	-0.09	SMIN= -72.44	TMAX=	36.17	ANGLE= -1.8

ELEMENT FORCES FORCE,LENGTH UNITS= KIP FEET

FORCE OR STRESS = FORCE/WIDTH/THICK, MOMENT = FORCE-LENGTH/WIDTH

ELEMENT	LOAD	QX	QY FX	MX FY	MY FXY	MXY
	JOINT	-0.24	-0.74	-0.54	15.83	-0.58
	26		-0.07	-0.74	0.14	
	TOP : SMAX=	69.14	SMIN= -2.54	TMAX=	35.84	ANGLE= 1.9
	BOTT: SMAX=	2.43	SMIN= -70.63	TMAX=	36.53	ANGLE= 2.1
	JOINT	-0.42	-0.74	-0.01	14.22	-0.85
	34		-0.10	-0.59	-0.06	
	TOP : SMAX=	62.31	SMIN= -0.36	TMAX=	31.34	ANGLE= 3.5
	BOTT: SMAX=	0.13	SMIN= -63.47	TMAX=	31.80	ANGLE= 3.3
	JOINT	-0.42	-0.88	1.04	14.09	0.31
	33		-0.23	-0.08	0.03	
	TOP : SMAX=	62.04	SMIN= 4.34	TMAX=	28.85	ANGLE= -1.4
	BOTT: SMAX=	-4.81	SMIN= -62.20	TMAX=	28.70	ANGLE= -1.3
	5	0.06	0.12	0.05	-3.46	0.18
			-0.15	-0.41	0.09	
	TOP : SMAX=	0.12	SMIN= -15.72	TMAX=	7.92	ANGLE= 3.3
	BOTT: SMAX=	14.89	SMIN= -0.41	TMAX=	7.65	ANGLE= 2.7
	JOINT	-0.24	-0.88	-0.01	16.36	0.58
	25		-0.20	-0.23	0.24	
	TOP : SMAX=	72.01	SMIN= -0.33	TMAX=	36.17	ANGLE= -2.2
	BOTT: SMAX=	-0.09	SMIN= -72.44	TMAX=	36.17	ANGLE= -1.8
	JOINT	-0.24	-0.74	-0.54	15.83	-0.58
	26		-0.07	-0.74	0.14	
	TOP : SMAX=	69.14	SMIN= -2.54	TMAX=	35.84	ANGLE= 1.9
	BOTT: SMAX=	2.43	SMIN= -70.63	TMAX=	36.53	ANGLE= 2.1
	JOINT	-0.42	-0.74	-0.01	14.22	-0.85
	34		-0.10	-0.59	-0.06	
	TOP : SMAX=	62.31	SMIN= -0.36	TMAX=	31.34	ANGLE= 3.5
	BOTT: SMAX=	0.13	SMIN= -63.47	TMAX=	31.80	ANGLE= 3.3
	JOINT	-0.42	-0.88	1.04	14.09	0.31
	33		-0.23	-0.08	0.03	
	TOP : SMAX=	62.04	SMIN= 4.34	TMAX=	28.85	ANGLE= -1.4
	BOTT: SMAX=	-4.81	SMIN= -62.20	TMAX=	28.70	ANGLE= -1.3
25	4	3.23	4.96	3.21	2.55	8.60
			-0.88	-0.08	0.13	
	TOP : SMAX=	50.28	SMIN= -25.84	TMAX=	38.06	ANGLE= 44.2
	BOTT: SMAX=	24.66	SMIN= -51.00	TMAX=	37.83	ANGLE= 43.6
	JOINT	2.73	11.16	1.21	-14.45	4.68
	29		-0.92	0.16	-0.15	
	TOP : SMAX=	10.11	SMIN= -69.24	TMAX=	39.68	ANGLE= 15.5
	BOTT: SMAX=	69.56	SMIN= -11.94	TMAX=	40.75	ANGLE= 15.3
	JOINT	2.73	-1.23	6.07	8.51	9.11
	30		-0.98	0.23	0.34	
	TOP : SMAX=	72.69	SMIN= -9.19	TMAX=	40.94	ANGLE= -40.8
	BOTT: SMAX=	7.60	SMIN= -72.60	TMAX=	40.10	ANGLE= -41.6
	JOINT	3.74	-1.23	6.68	-0.32	12.52
	36		-0.84	-0.31	0.41	
	TOP : SMAX=	71.06	SMIN= -44.21	TMAX=	57.63	ANGLE= 37.4
	BOTT: SMAX=	42.40	SMIN= -71.57	TMAX=	56.99	ANGLE= 37.0

ELEMENT FORCES FORCE,LENGTH UNITS= KIP FEET

FORCE OR STRESS = FORCE/WIDTH/THICK, MOMENT = FORCE-LENGTH/WIDTH

ELEMENT	LOAD	QX	QY FX	MX FY	MY FXY	MXY
	JOINT	3.74	11.16	-1.12	16.48	8.09
	35		-0.78	-0.38	-0.08	
	TOP : SMAX=	86.05	SMIN= -19.54	TMAX=	52.79	ANGLE= -21.2
	BOTT: SMAX=	18.19	SMIN= -87.02	TMAX=	52.61	ANGLE= -21.4
	5	-1.29	-1.73	-1.43	-0.83	-2.82
			-0.88	-0.08	0.13	
	TOP : SMAX=	6.95	SMIN= -17.89	TMAX=	12.42	ANGLE= 41.0
	BOTT: SMAX=	17.11	SMIN= -8.08	TMAX=	12.60	ANGLE= 42.9
	JOINT	2.73	11.16	1.21	-14.45	4.68
	29		-0.92	0.16	-0.15	
	TOP : SMAX=	10.11	SMIN= -69.24	TMAX=	39.68	ANGLE= 15.5
	BOTT: SMAX=	69.56	SMIN= -11.94	TMAX=	40.75	ANGLE= 15.3
	JOINT	2.73	-1.23	6.07	8.51	9.11
	30		-0.98	0.23	0.34	
	TOP : SMAX=	72.69	SMIN= -9.19	TMAX=	40.94	ANGLE= -40.8
	BOTT: SMAX=	7.60	SMIN= -72.60	TMAX=	40.10	ANGLE= -41.6
	JOINT	3.74	-1.23	6.68	-0.32	12.52
	36		-0.84	-0.31	0.41	
	TOP : SMAX=	71.06	SMIN= -44.21	TMAX=	57.63	ANGLE= 37.4
	BOTT: SMAX=	42.40	SMIN= -71.57	TMAX=	56.99	ANGLE= 37.0
	JOINT	3.74	11.16	-1.12	16.48	8.09
	35		-0.78	-0.38	-0.08	
	TOP : SMAX=	86.05	SMIN= -19.54	TMAX=	52.79	ANGLE= -21.2
	BOTT: SMAX=	18.19	SMIN= -87.02	TMAX=	52.61	ANGLE= -21.4
26	4	1.94	-2.26	6.52	3.31	8.20
			-0.59	-0.10	0.24	
	TOP : SMAX=	58.37	SMIN= -15.71	TMAX=	37.04	ANGLE= 39.7
	BOTT: SMAX=	14.64	SMIN= -58.69	TMAX=	36.66	ANGLE= 39.2
	JOINT	2.01	-4.63	6.32	9.86	8.76
	30		-0.73	0.04	0.14	
	TOP : SMAX=	74.92	SMIN= -4.32	TMAX=	39.62	ANGLE= -39.0
	BOTT: SMAX=	3.21	SMIN= -75.19	TMAX=	39.20	ANGLE= -39.6
	JOINT	2.01	0.12	11.66	1.32	4.86
	31		-0.75	-0.11	0.33	
	TOP : SMAX=	59.45	SMIN= -3.08	TMAX=	31.26	ANGLE= 22.0
	BOTT: SMAX=	2.23	SMIN= -60.33	TMAX=	31.28	ANGLE= 21.2
	JOINT	1.87	0.12	6.39	4.40	7.65
	37		-0.45	-0.24	0.34	
	TOP : SMAX=	57.73	SMIN= -10.90	TMAX=	34.31	ANGLE= 41.4
	BOTT: SMAX=	9.55	SMIN= -57.76	TMAX=	33.66	ANGLE= 41.2
	JOINT	1.87	-4.63	1.73	-2.33	11.55
	36		-0.43	-0.09	0.15	
	TOP : SMAX=	50.23	SMIN= -53.40	TMAX=	51.81	ANGLE= 40.1
	BOTT: SMAX=	52.64	SMIN= -50.52	TMAX=	51.58	ANGLE= 39.9
	5	-0.38	0.91	-2.85	-1.04	-2.25
			-0.59	-0.10	0.24	
	TOP : SMAX=	1.61	SMIN= -19.48	TMAX=	10.54	ANGLE= 33.2
	BOTT: SMAX=	19.05	SMIN= -2.57	TMAX=	10.81	ANGLE= 34.9

ELEMENT FORCES FORCE,LENGTH UNITS= KIP FEET

FORCE OR STRESS = FORCE/WIDTH/THICK, MOMENT = FORCE-LENGTH/WIDTH

ELEMENT	LOAD	QX	QY FX	MX FY	MY FXY	MXY
	JOINT	2.01	-4.63	6.32	9.86	8.76
	30		-0.73	0.04	0.14	
	TOP : SMAX=	74.92	SMIN= -4.32	TMAX= 39.62	ANGLE= -39.0	
	BOTT: SMAX=	3.21	SMIN= -75.19	TMAX= 39.20	ANGLE= -39.6	
	JOINT	2.01	0.12	11.66	1.32	4.86
	31		-0.75	-0.11	0.33	
	TOP : SMAX=	59.45	SMIN= -3.08	TMAX= 31.26	ANGLE= 22.0	
	BOTT: SMAX=	2.23	SMIN= -60.33	TMAX= 31.28	ANGLE= 21.2	
	JOINT	1.87	0.12	6.39	4.40	7.65
	37		-0.45	-0.24	0.34	
	TOP : SMAX=	57.73	SMIN= -10.90	TMAX= 34.31	ANGLE= 41.4	
	BOTT: SMAX=	9.55	SMIN= -57.76	TMAX= 33.66	ANGLE= 41.2	
	JOINT	1.87	-4.63	1.73	-2.33	11.55
	36		-0.43	-0.09	0.15	
	TOP : SMAX=	50.23	SMIN= -53.40	TMAX= 51.81	ANGLE= 40.1	
	BOTT: SMAX=	52.64	SMIN= -50.52	TMAX= 51.58	ANGLE= 39.9	
27	4	0.71	-1.19	5.42	4.92	1.74
			-0.45	-0.13	0.38	
	TOP : SMAX=	30.59	SMIN= 14.37	TMAX= 8.11	ANGLE= 41.7	
	BOTT: SMAX=	-15.66	SMIN= -30.47	TMAX= 7.41	ANGLE= 40.1	
	JOINT	0.83	0.34	6.89	0.70	2.43
	31		-0.69	-0.09	0.29	
	TOP : SMAX=	33.64	SMIN= -0.93	TMAX= 17.29	ANGLE= 19.7	
	BOTT: SMAX=	0.26	SMIN= -34.52	TMAX= 17.39	ANGLE= 18.4	
	JOINT	0.83	-2.72	8.39	10.87	-0.59
	32		-0.68	-0.04	0.48	
	TOP : SMAX=	48.24	SMIN= 35.92	TMAX= 6.16	ANGLE= 10.1	
	BOTT: SMAX=	-36.80	SMIN= -48.79	TMAX= 6.00	ANGLE= 15.5	
	JOINT	0.58	-2.72	3.34	4.22	1.06
	38		-0.22	-0.17	0.47	
	TOP : SMAX=	21.94	SMIN= 10.97	TMAX= 5.49	ANGLE= -34.5	
	BOTT: SMAX=	-12.25	SMIN= -21.45	TMAX= 4.60	ANGLE= -32.8	
	JOINT	0.58	0.34	3.05	3.88	4.07
	37		-0.23	-0.22	0.29	
	TOP : SMAX=	33.37	SMIN= -3.30	TMAX= 18.34	ANGLE= -42.1	
	BOTT: SMAX=	2.28	SMIN= -33.26	TMAX= 17.77	ANGLE= -42.0	
	5	0.21	0.28	-1.68	-1.34	0.12
			-0.45	-0.13	0.38	
	TOP : SMAX=	-5.63	SMIN= -8.24	TMAX= 1.30	ANGLE= -22.8	
	BOTT: SMAX=	6.96	SMIN= 5.74	TMAX= 0.61	ANGLE= -8.1	
	JOINT	0.83	0.34	6.89	0.70	2.43
	31		-0.69	-0.09	0.29	
	TOP : SMAX=	33.64	SMIN= -0.93	TMAX= 17.29	ANGLE= 19.7	
	BOTT: SMAX=	0.26	SMIN= -34.52	TMAX= 17.39	ANGLE= 18.4	
	JOINT	0.83	-2.72	8.39	10.87	-0.59
	32		-0.68	-0.04	0.48	
	TOP : SMAX=	48.24	SMIN= 35.92	TMAX= 6.16	ANGLE= 10.1	
	BOTT: SMAX=	-36.80	SMIN= -48.79	TMAX= 6.00	ANGLE= 15.5	

ELEMENT FORCES FORCE,LENGTH UNITS= KIP FEET

FORCE OR STRESS = FORCE/WIDTH/THICK, MOMENT = FORCE-LENGTH/WIDTH

ELEMENT	LOAD	QX	QY FX	MX FY	MY FXY	MXY
	JOINT	0.58	-2.72	3.34	4.22	1.06
	38		-0.22	-0.17	0.47	
	TOP : SMAX=	21.94	SMIN= 10.97	TMAX=	5.49	ANGLE= -34.5
	BOTT: SMAX=	-12.25	SMIN= -21.45	TMAX=	4.60	ANGLE= -32.8
	JOINT	0.58	0.34	3.05	3.88	4.07
	37		-0.23	-0.22	0.29	
	TOP : SMAX=	33.37	SMIN= -3.30	TMAX=	18.34	ANGLE= -42.1
	BOTT: SMAX=	2.28	SMIN= -33.26	TMAX=	17.77	ANGLE= -42.0
28	4	0.49	-0.97	1.73	8.18	-0.50
			-0.25	0.00	0.48	
	TOP : SMAX=	36.17	SMIN= 7.27	TMAX=	14.45	ANGLE= 3.4
	BOTT: SMAX=	-7.62	SMIN= -36.33	TMAX=	14.36	ANGLE= 5.4
	JOINT	1.01	-0.17	0.64	6.76	-0.67
	32		-0.42	0.04	0.41	
	TOP : SMAX=	30.05	SMIN= 2.15	TMAX=	13.95	ANGLE= 5.3
	BOTT: SMAX=	-2.80	SMIN= -30.16	TMAX=	13.68	ANGLE= 7.2
	JOINT	1.01	-1.76	2.51	11.80	-1.51
	33		-0.41	0.13	0.57	
	TOP : SMAX=	53.03	SMIN= 9.77	TMAX=	21.63	ANGLE= 8.1
	BOTT: SMAX=	-10.20	SMIN= -53.14	TMAX=	21.47	ANGLE= 9.8
	JOINT	-0.02	-1.76	1.31	7.06	-0.32
	39		-0.09	-0.04	0.56	
	TOP : SMAX=	31.09	SMIN= 5.67	TMAX=	12.71	ANGLE= 1.9
	BOTT: SMAX=	-5.72	SMIN= -31.30	TMAX=	12.79	ANGLE= 4.4
	JOINT	-0.02	-0.17	2.46	7.12	0.51
	38		-0.10	-0.14	0.40	
	TOP : SMAX=	31.58	SMIN= 10.41	TMAX=	10.58	ANGLE= -7.2
	BOTT: SMAX=	-10.77	SMIN= -31.68	TMAX=	10.46	ANGLE= -5.1
	5	0.06	0.27	-0.28	-1.99	0.67
			-0.25	0.00	0.48	
	TOP : SMAX=	-0.13	SMIN= -10.12	TMAX=	5.00	ANGLE= 21.6
	BOTT: SMAX=	9.47	SMIN= 0.27	TMAX=	4.60	ANGLE= 16.1
	JOINT	1.01	-0.17	0.64	6.76	-0.67
	32		-0.42	0.04	0.41	
	TOP : SMAX=	30.05	SMIN= 2.15	TMAX=	13.95	ANGLE= 5.3
	BOTT: SMAX=	-2.80	SMIN= -30.16	TMAX=	13.68	ANGLE= 7.2
	JOINT	1.01	-1.76	2.51	11.80	-1.51
	33		-0.41	0.13	0.57	
	TOP : SMAX=	53.03	SMIN= 9.77	TMAX=	21.63	ANGLE= 8.1
	BOTT: SMAX=	-10.20	SMIN= -53.14	TMAX=	21.47	ANGLE= 9.8
	JOINT	-0.02	-1.76	1.31	7.06	-0.32
	39		-0.09	-0.04	0.56	
	TOP : SMAX=	31.09	SMIN= 5.67	TMAX=	12.71	ANGLE= 1.9
	BOTT: SMAX=	-5.72	SMIN= -31.30	TMAX=	12.79	ANGLE= 4.4
	JOINT	-0.02	-0.17	2.46	7.12	0.51
	38		-0.10	-0.14	0.40	
	TOP : SMAX=	31.58	SMIN= 10.41	TMAX=	10.58	ANGLE= -7.2
	BOTT: SMAX=	-10.77	SMIN= -31.68	TMAX=	10.46	ANGLE= -5.1

ELEMENT FORCES FORCE,LENGTH UNITS= KIP FEET

FORCE OR STRESS = FORCE/WIDTH/THICK, MOMENT = FORCE-LENGTH/WIDTH

ELEMENT	LOAD	QX	QY FX	MX FY	MY FXY	MXY
29	4	-0.12	-1.99	0.26	9.49	0.18
			-0.17	-0.08	0.23	
TOP :	SMAX=	41.76	SMIN= 0.94	TMAX=	20.41	ANGLE= -1.4
BOTT:	SMAX=	-1.30	SMIN= -41.91	TMAX=	20.31	ANGLE= -0.8
JOINT		-0.13	-1.93	0.41	11.33	1.05
33			-0.12	-0.11	0.45	
TOP :	SMAX=	50.36	SMIN= 1.14	TMAX=	24.61	ANGLE= -5.9
BOTT:	SMAX=	-1.55	SMIN= -50.42	TMAX=	24.43	ANGLE= -4.9
JOINT		-0.13	-2.05	-0.06	12.04	-0.77
34			-0.06	-0.45	0.09	
TOP :	SMAX=	52.81	SMIN= -0.52	TMAX=	26.67	ANGLE= 3.6
BOTT:	SMAX=	0.42	SMIN= -53.74	TMAX=	27.08	ANGLE= 3.7
JOINT		-0.10	-2.05	0.16	7.45	-0.69
40			-0.21	-0.06	0.02	
TOP :	SMAX=	33.07	SMIN= 0.21	TMAX=	16.43	ANGLE= 5.3
BOTT:	SMAX=	-0.63	SMIN= -33.19	TMAX=	16.28	ANGLE= 5.4
JOINT		-0.10	-1.93	0.52	7.13	1.13
39			-0.27	0.28	0.38	
TOP :	SMAX=	32.63	SMIN= 1.09	TMAX=	15.77	ANGLE= -9.9
BOTT:	SMAX=	-1.85	SMIN= -31.85	TMAX=	15.00	ANGLE= -8.9
	5	0.04	0.29	-0.01	-2.08	0.35
			-0.17	-0.08	0.23	
TOP :	SMAX=	0.11	SMIN= -9.58	TMAX=	4.85	ANGLE= 10.6
BOTT:	SMAX=	9.26	SMIN= -0.29	TMAX=	4.78	ANGLE= 7.9
JOINT		-0.13	-1.93	0.41	11.33	1.05
33			-0.12	-0.11	0.45	
TOP :	SMAX=	50.36	SMIN= 1.14	TMAX=	24.61	ANGLE= -5.9
BOTT:	SMAX=	-1.55	SMIN= -50.42	TMAX=	24.43	ANGLE= -4.9
JOINT		-0.13	-2.05	-0.06	12.04	-0.77
34			-0.06	-0.45	0.09	
TOP :	SMAX=	52.81	SMIN= -0.52	TMAX=	26.67	ANGLE= 3.6
BOTT:	SMAX=	0.42	SMIN= -53.74	TMAX=	27.08	ANGLE= 3.7
JOINT		-0.10	-2.05	0.16	7.45	-0.69
40			-0.21	-0.06	0.02	
TOP :	SMAX=	33.07	SMIN= 0.21	TMAX=	16.43	ANGLE= 5.3
BOTT:	SMAX=	-0.63	SMIN= -33.19	TMAX=	16.28	ANGLE= 5.4
JOINT		-0.10	-1.93	0.52	7.13	1.13
39			-0.27	0.28	0.38	
TOP :	SMAX=	32.63	SMIN= 1.09	TMAX=	15.77	ANGLE= -9.9
BOTT:	SMAX=	-1.85	SMIN= -31.85	TMAX=	15.00	ANGLE= -8.9
30	4	-3.47	3.03	-1.30	-0.99	8.29
			-0.39	-0.19	0.22	
TOP :	SMAX=	31.43	SMIN= -42.11	TMAX=	36.77	ANGLE= -44.4
BOTT:	SMAX=	41.09	SMIN= -31.57	TMAX=	36.33	ANGLE= -44.5
JOINT		3.96	9.64	-5.86	-15.64	8.77
35			-0.86	0.25	0.02	
TOP :	SMAX=	-3.68	SMIN= -91.70	TMAX=	44.01	ANGLE= 30.8
BOTT:	SMAX=	91.59	SMIN= 2.57	TMAX=	44.51	ANGLE= 30.1

ELEMENT FORCES FORCE,LENGTH UNITS= KIP FEET

FORCE OR STRESS = FORCE/WIDTH/THICK, MOMENT = FORCE-LENGTH/WIDTH

ELEMENT	LOAD	QX	QY FX	MX FY	MY FXY	MXY
	JOINT	3.96	-3.59	7.81	6.00	9.94
	36		-0.57	0.05	0.70	
	TOP : SMAX=	74.85	SMIN= -14.52	TMAX=	44.69	ANGLE= 42.6
	BOTT: SMAX=	12.65	SMIN= -74.04	TMAX=	43.35	ANGLE= 42.2
	JOINT	-10.90	-3.59	-18.40	-5.65	7.81
	42		0.08	-0.63	0.41	
	TOP : SMAX=	-8.74	SMIN= -97.82	TMAX=	44.54	ANGLE= -25.7
	BOTT: SMAX=	97.08	SMIN= 8.38	TMAX=	44.35	ANGLE= -25.0
	JOINT	-10.90	9.64	11.27	11.31	6.64
	41		-0.20	-0.43	-0.27	
	TOP : SMAX=	78.43	SMIN= 20.46	TMAX=	28.98	ANGLE= 90.0
	BOTT: SMAX=	-20.56	SMIN= -79.59	TMAX=	29.52	ANGLE= -44.8
	5	0.99	-0.92	0.24	0.22	-2.67
			-0.39	-0.19	0.22	
	TOP : SMAX=	12.28	SMIN= -10.85	TMAX=	11.57	ANGLE= 44.9
	BOTT: SMAX=	10.71	SMIN= -13.29	TMAX=	12.00	ANGLE= -44.7
	JOINT	3.96	9.64	-5.86	-15.64	8.77
	35		-0.86	0.25	0.02	
	TOP : SMAX=	-3.68	SMIN= -91.70	TMAX=	44.01	ANGLE= 30.8
	BOTT: SMAX=	91.59	SMIN= 2.57	TMAX=	44.51	ANGLE= 30.1
	JOINT	3.96	-3.59	7.81	6.00	9.94
	36		-0.57	0.05	0.70	
	TOP : SMAX=	74.85	SMIN= -14.52	TMAX=	44.69	ANGLE= 42.6
	BOTT: SMAX=	12.65	SMIN= -74.04	TMAX=	43.35	ANGLE= 42.2
	JOINT	-10.90	-3.59	-18.40	-5.65	7.81
	42		0.08	-0.63	0.41	
	TOP : SMAX=	-8.74	SMIN= -97.82	TMAX=	44.54	ANGLE= -25.7
	BOTT: SMAX=	97.08	SMIN= 8.38	TMAX=	44.35	ANGLE= -25.0
	JOINT	-10.90	9.64	11.27	11.31	6.64
	41		-0.20	-0.43	-0.27	
	TOP : SMAX=	78.43	SMIN= 20.46	TMAX=	28.98	ANGLE= 90.0
	BOTT: SMAX=	-20.56	SMIN= -79.59	TMAX=	29.52	ANGLE= -44.8
31	4	-3.57	-2.66	3.40	2.20	6.63
			-0.29	-0.21	0.50	
	TOP : SMAX=	41.90	SMIN= -17.74	TMAX=	29.82	ANGLE= 42.5
	BOTT: SMAX=	16.26	SMIN= -41.43	TMAX=	28.85	ANGLE= 42.3
	JOINT	-0.30	-2.68	1.08	5.02	10.65
	36		-0.56	-0.12	0.47	
	TOP : SMAX=	61.34	SMIN= -35.15	TMAX=	48.25	ANGLE= -39.7
	BOTT: SMAX=	33.46	SMIN= -61.02	TMAX=	47.24	ANGLE= -39.8
	JOINT	-0.30	-2.65	8.21	5.45	7.93
	37		-0.44	-0.22	0.60	
	TOP : SMAX=	65.82	SMIN= -6.29	TMAX=	36.06	ANGLE= 40.2
	BOTT: SMAX=	4.49	SMIN= -65.34	TMAX=	34.92	ANGLE= 39.9
	JOINT	-6.85	-2.65	-9.56	-0.59	2.60
	43		-0.02	-0.30	0.52	
	TOP : SMAX=	0.49	SMIN= -45.55	TMAX=	23.02	ANGLE= -15.7
	BOTT: SMAX=	44.95	SMIN= -0.53	TMAX=	22.74	ANGLE= -14.4

ELEMENT FORCES FORCE,LENGTH UNITS= KIP FEET

FORCE OR STRESS = FORCE/WIDTH/THICK, MOMENT = FORCE-LENGTH/WIDTH

ELEMENT	LOAD	QX	QY FX	MX FY	MY FXY	MXY
	JOINT	-6.85	-2.68	13.87	-1.09	5.32
	42		-0.15	-0.20	0.39	
	TOP : SMAX=	68.71	SMIN= -12.73	TMAX=	40.72	ANGLE= 17.9
	BOTT: SMAX=	11.88	SMIN= -68.56	TMAX=	40.22	ANGLE= 17.5
	5	0.99	1.03	-1.52	-0.84	-1.77
			-0.29	-0.21	0.50	
	TOP : SMAX=	2.02	SMIN= -12.95	TMAX=	7.48	ANGLE= 39.0
	BOTT: SMAX=	13.40	SMIN= -3.48	TMAX=	8.44	ANGLE= 40.0
	JOINT	-0.30	-2.68	1.08	5.02	10.65
	36		-0.56	-0.12	0.47	
	TOP : SMAX=	61.34	SMIN= -35.15	TMAX=	48.25	ANGLE= -39.7
	BOTT: SMAX=	33.46	SMIN= -61.02	TMAX=	47.24	ANGLE= -39.8
	JOINT	-0.30	-2.65	8.21	5.45	7.93
	37		-0.44	-0.22	0.60	
	TOP : SMAX=	65.82	SMIN= -6.29	TMAX=	36.06	ANGLE= 40.2
	BOTT: SMAX=	4.49	SMIN= -65.34	TMAX=	34.92	ANGLE= 39.9
	JOINT	-6.85	-2.65	-9.56	-0.59	2.60
	43		-0.02	-0.30	0.52	
	TOP : SMAX=	0.49	SMIN= -45.55	TMAX=	23.02	ANGLE= -15.7
	BOTT: SMAX=	44.95	SMIN= -0.53	TMAX=	22.74	ANGLE= -14.4
	JOINT	-6.85	-2.68	13.87	-1.09	5.32
	42		-0.15	-0.20	0.39	
	TOP : SMAX=	68.71	SMIN= -12.73	TMAX=	40.72	ANGLE= 17.9
	BOTT: SMAX=	11.88	SMIN= -68.56	TMAX=	40.22	ANGLE= 17.5
32	4	-1.58	-2.19	2.42	2.99	2.69
			-0.17	-0.20	0.68	
	TOP : SMAX=	24.36	SMIN= -0.85	TMAX=	12.60	ANGLE= -42.2
	BOTT: SMAX=	-0.86	SMIN= -23.38	TMAX=	11.26	ANGLE= -41.8
	JOINT	-0.94	-1.74	3.67	4.97	4.98
	37		-0.18	-0.29	0.63	
	TOP : SMAX=	41.55	SMIN= -3.93	TMAX=	22.74	ANGLE= -41.5
	BOTT: SMAX=	2.23	SMIN= -40.78	TMAX=	21.51	ANGLE= -41.1
	JOINT	-0.94	-2.65	3.12	6.05	2.80
	38		-0.37	-0.12	0.60	
	TOP : SMAX=	34.50	SMIN= 5.46	TMAX=	14.52	ANGLE= -31.5
	BOTT: SMAX=	-7.13	SMIN= -33.80	TMAX=	13.34	ANGLE= -30.8
	JOINT	-2.22	-2.65	-1.82	-0.31	0.41
	44		-0.16	-0.11	0.72	
	TOP : SMAX=	-0.63	SMIN= -9.01	TMAX=	4.19	ANGLE= -18.5
	BOTT: SMAX=	8.02	SMIN= 1.09	TMAX=	3.46	ANGLE= -9.0
	JOINT	-2.22	-1.74	4.71	1.26	2.59
	43		0.04	-0.27	0.75	
	TOP : SMAX=	27.46	SMIN= -1.37	TMAX=	14.42	ANGLE= 28.7
	BOTT: SMAX=	-0.28	SMIN= -26.28	TMAX=	13.00	ANGLE= 27.5
	5	0.21	0.65	-0.72	-0.85	-0.20
			-0.17	-0.20	0.68	
	TOP : SMAX=	-3.27	SMIN= -4.03	TMAX=	0.38	ANGLE= -17.6
	BOTT: SMAX=	4.89	SMIN= 1.69	TMAX=	1.60	ANGLE= -39.9

ELEMENT FORCES FORCE,LENGTH UNITS= KIP FEET

FORCE OR STRESS = FORCE/WIDTH/THICK, MOMENT = FORCE-LENGTH/WIDTH

ELEMENT	LOAD	QX	QY FX	MX FY	MY FXY	MXY
	JOINT	-0.94	-1.74	3.67	4.97	4.98
	37		-0.18	-0.29	0.63	
	TOP : SMAX=	41.55	SMIN= -3.93	TMAX=	22.74	ANGLE= -41.5
	BOTT: SMAX=	2.23	SMIN= -40.78	TMAX=	21.51	ANGLE= -41.1
	JOINT	-0.94	-2.65	3.12	6.05	2.80
	38		-0.37	-0.12	0.60	
	TOP : SMAX=	34.50	SMIN= 5.46	TMAX=	14.52	ANGLE= -31.5
	BOTT: SMAX=	-7.13	SMIN= -33.80	TMAX=	13.34	ANGLE= -30.8
	JOINT	-2.22	-2.65	-1.82	-0.31	0.41
	44		-0.16	-0.11	0.72	
	TOP : SMAX=	-0.63	SMIN= -9.01	TMAX=	4.19	ANGLE= -18.5
	BOTT: SMAX=	8.02	SMIN= 1.09	TMAX=	3.46	ANGLE= -9.0
	JOINT	-2.22	-1.74	4.71	1.26	2.59
	43		0.04	-0.27	0.75	
	TOP : SMAX=	27.46	SMIN= -1.37	TMAX=	14.42	ANGLE= 28.7
	BOTT: SMAX=	-0.28	SMIN= -26.28	TMAX=	13.00	ANGLE= 27.5
33	4	-0.72	-2.37	0.70	3.19	0.87
			-0.02	-0.01	0.72	
	TOP : SMAX=	15.69	SMIN= 1.41	TMAX=	7.14	ANGLE= -19.8
	BOTT: SMAX=	-2.27	SMIN= -14.90	TMAX=	6.32	ANGLE= -14.8
	JOINT	-0.90	-2.38	2.73	5.25	2.31
	38		0.11	-0.10	0.49	
	TOP : SMAX=	29.58	SMIN= 5.60	TMAX=	11.99	ANGLE= -31.5
	BOTT: SMAX=	-6.35	SMIN= -28.81	TMAX=	11.23	ANGLE= -29.9
	JOINT	-0.90	-2.37	0.58	5.63	-0.11
	39		-0.21	0.21	0.62	
	TOP : SMAX=	25.04	SMIN= 2.35	TMAX=	11.35	ANGLE= -0.4
	BOTT: SMAX=	-2.72	SMIN= -24.68	TMAX=	10.98	ANGLE= 2.9
	JOINT	-0.54	-2.37	-0.82	1.15	-0.57
	45		-0.16	0.08	0.94	
	TOP : SMAX=	5.42	SMIN= -4.06	TMAX=	4.74	ANGLE= 9.8
	BOTT: SMAX=	4.71	SMIN= -6.24	TMAX=	5.48	ANGLE= 19.7
	JOINT	-0.54	-2.38	0.29	0.74	1.85
	44		0.17	-0.23	0.81	
	TOP : SMAX=	11.22	SMIN= -6.75	TMAX=	8.98	ANGLE= -42.5
	BOTT: SMAX=	5.12	SMIN= -9.73	TMAX=	7.42	ANGLE= -40.4
	5	-0.17	0.53	-0.09	-0.69	0.36
			-0.02	-0.01	0.72	
	TOP : SMAX=	0.94	SMIN= -4.40	TMAX=	2.67	ANGLE= 30.1
	BOTT: SMAX=	3.31	SMIN= 0.09	TMAX=	1.61	ANGLE= 16.7
	JOINT	-0.90	-2.38	2.73	5.25	2.31
	38		0.11	-0.10	0.49	
	TOP : SMAX=	29.58	SMIN= 5.60	TMAX=	11.99	ANGLE= -31.5
	BOTT: SMAX=	-6.35	SMIN= -28.81	TMAX=	11.23	ANGLE= -29.9
	JOINT	-0.90	-2.37	0.58	5.63	-0.11
	39		-0.21	0.21	0.62	
	TOP : SMAX=	25.04	SMIN= 2.35	TMAX=	11.35	ANGLE= -0.4
	BOTT: SMAX=	-2.72	SMIN= -24.68	TMAX=	10.98	ANGLE= 2.9

ELEMENT FORCES FORCE,LENGTH UNITS= KIP FEET

FORCE OR STRESS = FORCE/WIDTH/THICK, MOMENT = FORCE-LENGTH/WIDTH

ELEMENT	LOAD	QX	QY FX	MX FY	MY FXY	MXY
	JOINT	-0.54	-2.37	-0.82	1.15	-0.57
	45		-0.16	0.08	0.94	
	TOP : SMAX=	5.42	SMIN= -4.06	TMAX=	4.74	ANGLE= 9.8
	BOTT: SMAX=	4.71	SMIN= -6.24	TMAX=	5.48	ANGLE= 19.7
	JOINT	-0.54	-2.38	0.29	0.74	1.85
	44		0.17	-0.23	0.81	
	TOP : SMAX=	11.22	SMIN= -6.75	TMAX=	8.98	ANGLE= -42.5
	BOTT: SMAX=	5.12	SMIN= -9.73	TMAX=	7.42	ANGLE= -40.4
34	4	-0.11	-2.40	0.64	3.37	0.71
			0.31	0.50	0.59	
	TOP : SMAX=	16.41	SMIN= 2.10	TMAX=	7.16	ANGLE= -15.7
	BOTT: SMAX=	-2.00	SMIN= -14.90	TMAX=	6.45	ANGLE= -11.7
	JOINT	-0.30	-1.45	0.52	4.80	1.62
	39		0.17	0.01	0.50	
	TOP : SMAX=	23.89	SMIN= -0.26	TMAX=	12.08	ANGLE= -19.7
	BOTT: SMAX=	-0.04	SMIN= -23.22	TMAX=	11.59	ANGLE= -17.5
	JOINT	-0.30	-3.35	-0.19	7.29	-0.03
	40		0.27	1.26	0.78	
	TOP : SMAX=	33.39	SMIN= -0.58	TMAX=	16.98	ANGLE= -1.1
	BOTT: SMAX=	1.13	SMIN= -30.89	TMAX=	16.01	ANGLE= 1.6
	JOINT	0.07	-3.35	1.31	-0.82	-0.20
	46		0.45	0.98	0.67	
	TOP : SMAX=	6.23	SMIN= -2.63	TMAX=	4.43	ANGLE= -1.3
	BOTT: SMAX=	4.82	SMIN= -5.57	TMAX=	5.19	ANGLE= -8.6
	JOINT	0.07	-1.45	0.93	2.23	1.46
	45		0.34	-0.26	0.39	
	TOP : SMAX=	14.27	SMIN= -0.28	TMAX=	7.27	ANGLE= -34.7
	BOTT: SMAX=	-0.12	SMIN= -13.72	TMAX=	6.80	ANGLE= -31.2
	5	-0.16	0.28	-0.05	-0.58	0.29
			0.31	0.50	0.59	
	TOP : SMAX=	1.18	SMIN= -3.14	TMAX=	2.16	ANGLE= 30.1
	BOTT: SMAX=	3.23	SMIN= 0.34	TMAX=	1.45	ANGLE= 14.4
	JOINT	-0.30	-1.45	0.52	4.80	1.62
	39		0.17	0.01	0.50	
	TOP : SMAX=	23.89	SMIN= -0.26	TMAX=	12.08	ANGLE= -19.7
	BOTT: SMAX=	-0.04	SMIN= -23.22	TMAX=	11.59	ANGLE= -17.5
	JOINT	-0.30	-3.35	-0.19	7.29	-0.03
	40		0.27	1.26	0.78	
	TOP : SMAX=	33.39	SMIN= -0.58	TMAX=	16.98	ANGLE= -1.1
	BOTT: SMAX=	1.13	SMIN= -30.89	TMAX=	16.01	ANGLE= 1.6
	JOINT	0.07	-3.35	1.31	-0.82	-0.20
	46		0.45	0.98	0.67	
	TOP : SMAX=	6.23	SMIN= -2.63	TMAX=	4.43	ANGLE= -1.3
	BOTT: SMAX=	4.82	SMIN= -5.57	TMAX=	5.19	ANGLE= -8.6
	JOINT	0.07	-1.45	0.93	2.23	1.46
	45		0.34	-0.26	0.39	
	TOP : SMAX=	14.27	SMIN= -0.28	TMAX=	7.27	ANGLE= -34.7
	BOTT: SMAX=	-0.12	SMIN= -13.72	TMAX=	6.80	ANGLE= -31.2

ELEMENT FORCES FORCE,LENGTH UNITS= KIP FEET

FORCE OR STRESS = FORCE/WIDTH/THICK, MOMENT = FORCE-LENGTH/WIDTH

ELEMENT	LOAD	QX	QY FX	MX FY	MY FXY	MXY
35	4	-16.81	-11.92	0.01	0.01	0.00
			-10.52	0.00	1.18	
TOP :	SMAX=	40.05	SMIN= 18.61	TMAX=	10.72	ANGLE= -8.1
BOTT:	SMAX=	-39.19	SMIN= -40.52	TMAX=	0.66	ANGLE= 35.1
JOINT		-16.81	-11.92	1.60	0.48	0.00
23			-6.75	0.20	1.18	
TOP :	SMAX=	5526.51	SMIN= 1656.92	TMAX=	1934.79	ANGLE= 0.0
BOTT:	SMAX=	-1656.53	SMIN= -5540.01	TMAX=	1941.74	ANGLE= 0.0
JOINT		-16.81	-11.92	-1.20	0.48	0.00
24			-13.38	0.20	1.18	
TOP :	SMAX=	1656.93	SMIN= -4152.14	TMAX=	2904.53	ANGLE= 0.0
BOTT:	SMAX=	4125.39	SMIN= -1656.53	TMAX=	2890.96	ANGLE= 0.0
JOINT		-16.81	-11.92	-0.38	-0.93	0.00
28			-11.44	-0.40	1.18	
TOP :	SMAX=	-1317.26	SMIN= -3194.97	TMAX=	938.86	ANGLE= 0.1
BOTT:	SMAX=	3194.18	SMIN= 1294.39	TMAX=	949.89	ANGLE= 0.0
	5	6.10	4.33	0.00	0.00	0.00
			-10.52	0.00	1.18	
TOP :	SMAX=	-10.14	SMIN= -18.54	TMAX=	4.20	ANGLE= -5.1
BOTT:	SMAX=	10.41	SMIN= -2.77	TMAX=	6.59	ANGLE= -7.1
JOINT		-16.81	-11.92	1.60	0.48	0.00
23			-6.75	0.20	1.18	
TOP :	SMAX=	5526.51	SMIN= 1656.92	TMAX=	1934.79	ANGLE= 0.0
BOTT:	SMAX=	-1656.53	SMIN= -5540.01	TMAX=	1941.74	ANGLE= 0.0
JOINT		-16.81	-11.92	-1.20	0.48	0.00
24			-13.38	0.20	1.18	
TOP :	SMAX=	1656.93	SMIN= -4152.14	TMAX=	2904.53	ANGLE= 0.0
BOTT:	SMAX=	4125.39	SMIN= -1656.53	TMAX=	2890.96	ANGLE= 0.0
JOINT		-16.81	-11.92	-0.38	-0.93	0.00
28			-11.44	-0.40	1.18	
TOP :	SMAX=	-1317.26	SMIN= -3194.97	TMAX=	938.86	ANGLE= 0.1
BOTT:	SMAX=	3194.18	SMIN= 1294.39	TMAX=	949.89	ANGLE= 0.0
36	4	16.79	-11.92	0.01	0.01	0.00
			0.12	0.00	-1.25	
TOP :	SMAX=	35.77	SMIN= 21.94	TMAX=	6.91	ANGLE= -33.8
BOTT:	SMAX=	-24.10	SMIN= -33.36	TMAX=	4.63	ANGLE= -28.5
JOINT		16.79	-11.92	-1.20	0.48	0.00
31			193.11	0.25	-1.25	
TOP :	SMAX=	1643.84	SMIN= -3941.27	TMAX=	2792.55	ANGLE= 0.1
BOTT:	SMAX=	4327.48	SMIN= -1643.33	TMAX=	2985.41	ANGLE= 0.0
JOINT		16.79	-11.92	1.60	0.48	0.00
23			-254.70	0.25	-1.25	
TOP :	SMAX=	5276.99	SMIN= 1643.82	TMAX=	1816.59	ANGLE= -0.1
BOTT:	SMAX=	-1643.33	SMIN= -5786.37	TMAX=	2071.52	ANGLE= -0.1
JOINT		16.79	-11.92	-0.38	-0.93	0.00
28			61.95	-0.50	-1.25	
TOP :	SMAX=	-1241.22	SMIN= -3209.05	TMAX=	983.91	ANGLE= -0.2
BOTT:	SMAX=	3208.03	SMIN= 1365.12	TMAX=	921.45	ANGLE= -0.1

ELEMENT FORCES FORCE,LENGTH UNITS= KIP FEET

FORCE OR STRESS = FORCE/WIDTH/THICK, MOMENT = FORCE-LENGTH/WIDTH

```
ELEMENT  LOAD        QX          QY          MX          MY          MXY
                                 FX          FY          FXY

          5        -6.09        4.34        0.00        0.00        0.00
                                0.12        0.00       -1.25
     TOP :  SMAX=    -7.66  SMIN=    -9.41  TMAX=     0.88  ANGLE=  19.0
     BOTT:  SMAX=    10.78  SMIN=     6.53  TMAX=     2.12  ANGLE= -33.8
       JOINT        16.79      -11.92      -1.20        0.48        0.00
        31                     193.11       0.25       -1.25
     TOP :  SMAX=  1643.84  SMIN= -3941.27  TMAX=  2792.55  ANGLE=   0.1
     BOTT:  SMAX=  4327.48  SMIN= -1643.33  TMAX=  2985.41  ANGLE=   0.0
       JOINT        16.79      -11.92       1.60        0.48        0.00
        23                    -254.70       0.25       -1.25
     TOP :  SMAX=  5276.99  SMIN=  1643.82  TMAX=  1816.59  ANGLE=  -0.1
     BOTT:  SMAX= -1643.33  SMIN= -5786.37  TMAX=  2071.52  ANGLE=  -0.1
       JOINT        16.79      -11.92      -0.38       -0.93        0.00
        28                      61.95      -0.50       -1.25
     TOP :  SMAX= -1241.22  SMIN= -3209.05  TMAX=   983.91  ANGLE=  -0.2
     BOTT:  SMAX=  3208.03  SMIN=  1365.12  TMAX=   921.45  ANGLE=  -0.1

  37       4       -16.81      -12.02       0.01        0.01        0.00
                                -0.08       0.00       -0.89
     TOP :  SMAX=    35.24  SMIN=    20.16  TMAX=     7.54  ANGLE= -32.7
     BOTT:  SMAX=   -21.77  SMIN=   -33.78  TMAX=     6.01  ANGLE= -28.8
       JOINT       -16.81      -12.02       1.60        0.48        0.00
        23                     252.25      -0.18       -0.89
     TOP :  SMAX=  5788.76  SMIN=  1655.61  TMAX=  2066.58  ANGLE=  -0.1
     BOTT:  SMAX= -1655.97  SMIN= -5284.26  TMAX=  1814.14  ANGLE=  -0.1
       JOINT       -16.81      -12.02      -1.20        0.48        0.00
        31                    -191.18      -0.18       -0.89
     TOP :  SMAX=  1655.63  SMIN= -4330.01  TMAX=  2992.82  ANGLE=   0.1
     BOTT:  SMAX=  3947.63  SMIN= -1655.98  TMAX=  2801.81  ANGLE=   0.1
       JOINT       -16.81      -12.02      -0.38       -0.94        0.00
        27                     -61.30       0.36       -0.89
     TOP :  SMAX= -1366.19  SMIN= -3237.61  TMAX=   935.71  ANGLE=  -0.2
     BOTT:  SMAX=  3238.31  SMIN=  1243.60  TMAX=   997.36  ANGLE=  -0.1
          5         6.09        4.35        0.00        0.00        0.00
                                -0.08       0.00       -0.89
     TOP :  SMAX=    -9.69  SMIN=   -10.28  TMAX=     0.29  ANGLE=  90.0
     BOTT:  SMAX=    11.99  SMIN=     7.83  TMAX=     2.08  ANGLE=  44.1
       JOINT       -16.81      -12.02       1.60        0.48        0.00
        23                     252.25      -0.18       -0.89
     TOP :  SMAX=  5788.76  SMIN=  1655.61  TMAX=  2066.58  ANGLE=  -0.1
     BOTT:  SMAX= -1655.97  SMIN= -5284.26  TMAX=  1814.14  ANGLE=  -0.1
       JOINT       -16.81      -12.02      -1.20        0.48        0.00
        31                    -191.18      -0.18       -0.89
     TOP :  SMAX=  1655.63  SMIN= -4330.01  TMAX=  2992.82  ANGLE=   0.1
     BOTT:  SMAX=  3947.63  SMIN= -1655.98  TMAX=  2801.81  ANGLE=   0.1
       JOINT       -16.81      -12.02      -0.38       -0.94        0.00
        27                     -61.30       0.36       -0.89
     TOP :  SMAX= -1366.19  SMIN= -3237.61  TMAX=   935.71  ANGLE=  -0.2
     BOTT:  SMAX=  3238.31  SMIN=  1243.60  TMAX=   997.36  ANGLE=  -0.1
```

ELEMENT FORCES FORCE,LENGTH UNITS= KIP FEET

FORCE OR STRESS = FORCE/WIDTH/THICK, MOMENT = FORCE-LENGTH/WIDTH

ELEMENT	LOAD	QX	QY / FX	MX / FY	MY / FXY	MXY
38	4	16.80	-12.02	0.01	0.01	0.00
			-10.51	0.00	0.86	
TOP :	SMAX=	22.50	SMIN= 11.36	TMAX=	5.57	ANGLE= -20.3
BOTT:	SMAX=	-20.88	SMIN= -33.99	TMAX=	6.55	ANGLE= 8.4
JOINT		16.80	-12.02	-1.20	0.48	0.00
22			8.31	-0.23	0.86	
TOP :	SMAX=	1651.72	SMIN= -4136.24	TMAX=	2893.98	ANGLE= 0.0
BOTT:	SMAX=	4152.86	SMIN= -1652.18	TMAX=	2902.52	ANGLE= 0.0
JOINT		16.80	-12.02	1.60	0.48	0.00
23			-35.35	-0.23	0.86	
TOP :	SMAX=	5490.81	SMIN= 1651.71	TMAX=	1919.55	ANGLE= 0.1
BOTT:	SMAX=	-1652.18	SMIN= -5561.51	TMAX=	1954.66	ANGLE= 0.0
JOINT		16.80	-12.02	-0.38	-0.94	0.00
27			-4.48	0.46	0.86	
TOP :	SMAX=	-1316.47	SMIN= -3239.96	TMAX=	961.75	ANGLE= 0.1
BOTT:	SMAX=	3240.88	SMIN= 1307.52	TMAX=	966.68	ANGLE= 0.1
	5	-6.09	4.35	0.00	0.00	0.00
			-10.51	0.00	0.86	
TOP :	SMAX=	-8.06	SMIN= -20.97	TMAX=	6.46	ANGLE= -0.3
BOTT:	SMAX=	8.38	SMIN= -0.36	TMAX=	4.37	ANGLE= -11.1
JOINT		16.80	-12.02	-1.20	0.48	0.00
22			8.31	-0.23	0.86	
TOP :	SMAX=	1651.72	SMIN= -4136.24	TMAX=	2893.98	ANGLE= 0.0
BOTT:	SMAX=	4152.86	SMIN= -1652.18	TMAX=	2902.52	ANGLE= 0.0
JOINT		16.80	-12.02	1.60	0.48	0.00
23			-35.35	-0.23	0.86	
TOP :	SMAX=	5490.81	SMIN= 1651.71	TMAX=	1919.55	ANGLE= 0.1
BOTT:	SMAX=	-1652.18	SMIN= -5561.51	TMAX=	1954.66	ANGLE= 0.0
JOINT		16.80	-12.02	-0.38	-0.94	0.00
27			-4.48	0.46	0.86	
TOP :	SMAX=	-1316.47	SMIN= -3239.96	TMAX=	961.75	ANGLE= 0.1
BOTT:	SMAX=	3240.88	SMIN= 1307.52	TMAX=	966.68	ANGLE= 0.1
39	4	-16.80	-12.02	0.01	0.01	0.00
			-10.51	0.00	-0.87	
TOP :	SMAX=	22.52	SMIN= 11.39	TMAX=	5.56	ANGLE= 20.1
BOTT:	SMAX=	-20.93	SMIN= -33.99	TMAX=	6.53	ANGLE= -8.3
JOINT		-16.80	-12.02	1.60	0.48	0.00
23			14.34	0.23	-0.87	
TOP :	SMAX=	5540.50	SMIN= 1652.16	TMAX=	1944.17	ANGLE= -0.1
BOTT:	SMAX=	-1651.70	SMIN= -5511.81	TMAX=	1930.05	ANGLE= 0.0
JOINT		-16.80	-12.02	-1.20	0.48	0.00
22			-29.32	0.23	-0.87	
TOP :	SMAX=	1652.17	SMIN= -4173.85	TMAX=	2913.01	ANGLE= 0.0
BOTT:	SMAX=	4115.20	SMIN= -1651.70	TMAX=	2883.45	ANGLE= 0.0
JOINT		-16.80	-12.02	-0.38	-0.94	0.00
19			-16.53	-0.46	-0.87	
TOP :	SMAX=	-1328.51	SMIN= -3240.72	TMAX=	956.11	ANGLE= -0.1
BOTT:	SMAX=	3239.79	SMIN= 1295.45	TMAX=	972.17	ANGLE= -0.1

ELEMENT FORCES FORCE,LENGTH UNITS= KIP FEET

FORCE OR STRESS = FORCE/WIDTH/THICK, MOMENT = FORCE-LENGTH/WIDTH

ELEMENT	LOAD	QX	QY FX	MX FY	MY FXY	MXY
	5	6.09	4.35	0.00	0.00	0.00
			-10.51	0.00	-0.87	
	TOP : SMAX=	-8.11	SMIN= -20.99	TMAX=	6.44	ANGLE= 0.5
	BOTT: SMAX=	8.42	SMIN= -0.33	TMAX=	4.38	ANGLE= 10.9
	JOINT	-16.80	-12.02	1.60	0.48	0.00
	23		14.34	0.23	-0.87	
	TOP : SMAX=	5540.50	SMIN= 1652.16	TMAX=	1944.17	ANGLE= -0.1
	BOTT: SMAX=	-1651.70	SMIN= -5511.81	TMAX=	1930.05	ANGLE= 0.0
	JOINT	-16.80	-12.02	-1.20	0.48	0.00
	22		-29.32	0.23	-0.87	
	TOP : SMAX=	1652.17	SMIN= -4173.85	TMAX=	2913.01	ANGLE= 0.0
	BOTT: SMAX=	4115.20	SMIN= -1651.70	TMAX=	2883.45	ANGLE= 0.0
	JOINT	-16.80	-12.02	-0.38	-0.94	0.00
	19		-16.53	-0.46	-0.87	
	TOP : SMAX=	-1328.51	SMIN= -3240.72	TMAX=	956.11	ANGLE= -0.1
	BOTT: SMAX=	3239.79	SMIN= 1295.45	TMAX=	972.17	ANGLE= -0.1
40	4	16.81	-12.03	0.01	0.01	0.00
			-0.08	0.00	0.89	
	TOP : SMAX=	35.34	SMIN= 20.25	TMAX=	7.54	ANGLE= 32.6
	BOTT: SMAX=	-21.85	SMIN= -33.90	TMAX=	6.02	ANGLE= 28.7
	JOINT	16.81	-12.03	-1.20	0.48	0.00
	15		191.03	0.18	0.89	
	TOP : SMAX=	1656.07	SMIN= -3947.58	TMAX=	2801.83	ANGLE= -0.1
	BOTT: SMAX=	4329.63	SMIN= -1655.71	TMAX=	2992.67	ANGLE= 0.0
	JOINT	16.81	-12.03	1.60	0.48	0.00
	23		-252.41	0.18	0.89	
	TOP : SMAX=	5284.08	SMIN= 1656.05	TMAX=	1814.01	ANGLE= 0.1
	BOTT: SMAX=	-1655.70	SMIN= -5788.89	TMAX=	2066.59	ANGLE= 0.1
	JOINT	16.81	-12.03	-0.38	-0.94	0.00
	19		61.14	-0.36	0.89	
	TOP : SMAX=	-1243.60	SMIN= -3238.26	TMAX=	997.33	ANGLE= 0.2
	BOTT: SMAX=	3237.53	SMIN= 1365.90	TMAX=	935.82	ANGLE= 0.2
	5	-6.09	4.35	0.00	0.00	0.00
			-0.08	0.00	0.89	
	TOP : SMAX=	-9.79	SMIN= -10.40	TMAX=	0.31	ANGLE= 90.0
	BOTT: SMAX=	12.09	SMIN= 7.94	TMAX=	2.08	ANGLE= 90.0
	JOINT	16.81	-12.03	-1.20	0.48	0.00
	15		191.03	0.18	0.89	
	TOP : SMAX=	1656.07	SMIN= -3947.58	TMAX=	2801.83	ANGLE= -0.1
	BOTT: SMAX=	4329.63	SMIN= -1655.71	TMAX=	2992.67	ANGLE= 0.0
	JOINT	16.81	-12.03	1.60	0.48	0.00
	23		-252.41	0.18	0.89	
	TOP : SMAX=	5284.08	SMIN= 1656.05	TMAX=	1814.01	ANGLE= 0.1
	BOTT: SMAX=	-1655.70	SMIN= -5788.89	TMAX=	2066.59	ANGLE= 0.1
	JOINT	16.81	-12.03	-0.38	-0.94	0.00
	19		61.14	-0.36	0.89	
	TOP : SMAX=	-1243.60	SMIN= -3238.26	TMAX=	997.33	ANGLE= 0.2
	BOTT: SMAX=	3237.53	SMIN= 1365.90	TMAX=	935.82	ANGLE= 0.2

ELEMENT FORCES FORCE,LENGTH UNITS= KIP FEET

FORCE OR STRESS = FORCE/WIDTH/THICK, MOMENT = FORCE-LENGTH/WIDTH

ELEMENT	LOAD	QX	QY / FX	MX / FY	MY / FXY	MXY
41	4	-16.79	-11.92	0.01	0.01	0.00
			0.12	0.00	1.26	
TOP :	SMAX=	35.87	SMIN= 22.02	TMAX=	6.93	ANGLE= 33.7
BOTT:	SMAX=	-24.20	SMIN= -33.45	TMAX=	4.63	ANGLE= 28.4
JOINT		-16.79	-11.92	1.60	0.48	0.00
23			254.94	-0.25	1.26	
TOP :	SMAX=	5786.59	SMIN= 1643.41	TMAX=	2071.59	ANGLE= 0.1
BOTT:	SMAX=	-1643.91	SMIN= -5276.71	TMAX=	1816.40	ANGLE= 0.1
JOINT		-16.79	-11.92	-1.20	0.48	0.00
15			-192.87	-0.25	1.26	
TOP :	SMAX=	1643.42	SMIN= -4327.03	TMAX=	2985.23	ANGLE= -0.1
BOTT:	SMAX=	3941.29	SMIN= -1643.92	TMAX=	2792.60	ANGLE= 0.0
JOINT		-16.79	-11.92	-0.38	-0.93	0.00
20			-61.71	0.50	1.26	
TOP :	SMAX=	-1364.73	SMIN= -3208.00	TMAX=	921.64	ANGLE= 0.2
BOTT:	SMAX=	3208.98	SMIN= 1241.33	TMAX=	983.83	ANGLE= 0.1
	5	6.09	4.34	0.00	0.00	0.00
			0.12	0.00	1.26	
TOP :	SMAX=	-7.73	SMIN= -9.55	TMAX=	0.91	ANGLE= -19.1
BOTT:	SMAX=	10.90	SMIN= 6.62	TMAX=	2.14	ANGLE= 33.6
JOINT		-16.79	-11.92	1.60	0.48	0.00
23			254.94	-0.25	1.26	
TOP :	SMAX=	5786.59	SMIN= 1643.41	TMAX=	2071.59	ANGLE= 0.1
BOTT:	SMAX=	-1643.91	SMIN= -5276.71	TMAX=	1816.40	ANGLE= 0.1
JOINT		-16.79	-11.92	-1.20	0.48	0.00
15			-192.87	-0.25	1.26	
TOP :	SMAX=	1643.42	SMIN= -4327.03	TMAX=	2985.23	ANGLE= -0.1
BOTT:	SMAX=	3941.29	SMIN= -1643.92	TMAX=	2792.60	ANGLE= 0.0
JOINT		-16.79	-11.92	-0.38	-0.93	0.00
20			-61.71	0.50	1.26	
TOP :	SMAX=	-1364.73	SMIN= -3208.00	TMAX=	921.64	ANGLE= 0.2
BOTT:	SMAX=	3208.98	SMIN= 1241.33	TMAX=	983.83	ANGLE= 0.1
42	4	16.81	-11.92	0.01	0.01	0.00
			-10.52	0.00	-1.18	
TOP :	SMAX=	40.11	SMIN= 18.62	TMAX=	10.75	ANGLE= 8.1
BOTT:	SMAX=	-39.20	SMIN= -40.57	TMAX=	0.68	ANGLE= -36.2
JOINT		16.81	-11.92	-1.20	0.48	0.00
24			-7.67	-0.20	-1.18	
TOP :	SMAX=	1656.53	SMIN= -4146.41	TMAX=	2901.47	ANGLE= 0.0
BOTT:	SMAX=	4131.07	SMIN= -1656.92	TMAX=	2894.00	ANGLE= 0.0
JOINT		16.81	-11.92	1.60	0.48	0.00
23			-14.29	-0.20	-1.18	
TOP :	SMAX=	5518.97	SMIN= 1656.53	TMAX=	1931.22	ANGLE= 0.0
BOTT:	SMAX=	-1656.92	SMIN= -5547.55	TMAX=	1945.31	ANGLE= 0.0
JOINT		16.81	-11.92	-0.38	-0.93	0.00
20			-9.61	0.40	-1.18	
TOP :	SMAX=	-1315.41	SMIN= -3194.03	TMAX=	939.31	ANGLE= -0.1
BOTT:	SMAX=	3194.81	SMIN= 1296.20	TMAX=	949.31	ANGLE= 0.0

ELEMENT FORCES FORCE,LENGTH UNITS= KIP FEET

FORCE OR STRESS = FORCE/WIDTH/THICK, MOMENT = FORCE-LENGTH/WIDTH

ELEMENT	LOAD	QX	QY FX	MX FY	MY FXY	MXY
5		-6.10	4.33	0.00	0.00	0.00
			-10.52	0.00	-1.18	
TOP :	SMAX=	-10.20	SMIN= -18.55	TMAX=	4.18	ANGLE= 5.0
BOTT:	SMAX=	10.47	SMIN= -2.76	TMAX=	6.62	ANGLE= 7.2
JOINT		16.81	-11.92	-1.20	0.48	0.00
24			-7.67	-0.20	-1.18	
TOP :	SMAX=	1656.53	SMIN= -4146.41	TMAX=	2901.47	ANGLE= 0.0
BOTT:	SMAX=	4131.07	SMIN= -1656.92	TMAX=	2894.00	ANGLE= 0.0
JOINT		16.81	-11.92	1.60	0.48	0.00
23			-14.29	-0.20	-1.18	
TOP :	SMAX=	5518.97	SMIN= 1656.53	TMAX=	1931.22	ANGLE= 0.0
BOTT:	SMAX=	-1656.92	SMIN= -5547.55	TMAX=	1945.31	ANGLE= 0.0
JOINT		16.81	-11.92	-0.38	-0.93	0.00
20			-9.61	0.40	-1.18	
TOP :	SMAX=	-1315.41	SMIN= -3194.03	TMAX=	939.31	ANGLE= -0.1
BOTT:	SMAX=	3194.81	SMIN= 1296.20	TMAX=	949.31	ANGLE= 0.0

**********END OF ELEMENT FORCES**********

118. FINISH

SECTION VIII