FLOOD CONTROL DISTRICT OF MARICOPA COUNTY

10TH STREET WASH DETENTION BASIN NO. 1 (FCD 95-10)

90% SUPPLEMENTAL DESIGN CALCULATIONS

PREPARED FOR

FLOOD CONTROL DISTRICT OF MARICOPA COUNTY
2801 West Durango Street
Phoenix, Arizona 85009

PREPARED BY

STANLEY CONSULTANTS, INC.
2929 E. Camelback Road, Suite 130
Phoenix, Arizona 85016
912-6500

PREPARED JUNE 1995
SCI #12183

FLOOD CONTROL DISTRICT OF MARICOPA COUNTY

FLOOD CONTROL DISTRICT
RECEIVED
JUN 14 1995
CHENG | P&PM
DEP | REG
ADMIN | MAST
FINANCE | FILE
O&M
ENGR
REMARKS

10TH STREET WASH DETENTION BASIN NO. 1 (FCD 95-10)

90% SUPPLEMENTAL DESIGN CALCULATIONS

PREPARED FOR

FLOOD CONTROL DISTRICT OF MARICOPA COUNTY
2801 West Durango Street
Phoenix, Arizona 85009

PREPARED BY

STANLEY CONSULTANTS, INC.
2929 E. Camelback Road, Suite 130
Phoenix, Arizona 85016
912-6500

Registered Professional Engineer (Civil)
CERTIFICATE NO.
26837
G. SCOTT
BUCHANAN
Date Signed 6/14/95
ARIZONA, U.S.A.

PREPARED JUNE 1995
SCI #12183

STANLEY CONSULTANTS, INC.

2929 East Camelback Road, Suite 130 • Phoenix, AZ 85016-4425 Tel: 602/912-6500 • Fax: 602/912-6599

June 14, 1995

Mr. Don Rerick
FLOOD CONTROL DISTRICT OF MARICOPA COUNTY
2801 West Durango Street
Phoenix, Arizona 85009

RE: 10th Street Wash Detention Basin No. 1
(FCD 95-10)
90% Supplemental Design Calculations

Dear Mr. Rerick:

The enclosed supporting calculations document the 90% submittal of the design for 10th Street Wash Detention Basin No. 1. The various sections pertain to individual components of the project. The inside pocket contains a diskette with HEC-1 and HEC-2 computer model files. (Microstation 5.0 CADD files will be included under separate cover with the final deliverables.)

This report is intended to supplement the "Preliminary Calculations for Final Design" submitted for 60%. The final deliverables will consolidate the information into a final, bound, sealed report. Please refer to the original report for any design calculations not included herein.

Please review the enclosed calculations and contact me if you have any questions or comments.

Sincerely,

STANLEY CONSULTANTS, INC.

Scott Buchanan

Scott Buchanan, P.E.
Project Manager

gsb/klk:JUN018:12183

```
1*******************************************
 *  HEC-2 WATER SURFACE PROFILES           *
 *                                         *
 *  Version   4.6.2;  May 1991             *
 *                                         *
 *  RUN DATE    13JUN95    TIME   19:23:13 *
 *******************************************
```

```
*************************************
*  U.S. ARMY CORPS OF ENGINEERS
*  HYDROLOGIC ENGINEERING CENTER
*  609 SECOND STREET, SUITE D
*  DAVIS, CALIFORNIA 95616-4687
*          (916) 756-1104
*************************************
```

```
X     X  XXXXXXX   XXXXX              XXXXX
X     X  X        X     X            X     X
X     X  X        X                        X
XXXXXXX  XXXX     X          XXXXX    XXXXX
X     X  X        X                  X
X     X  X        X     X            X
X     X  XXXXXXX   XXXXX             XXXXXXX
```

```
1
   13JUN95       19:23:13                                                                    PAGE    1
```

```
                                                                THIS RUN EXECUTED 13JUN95    19:23:13
 *************************************
  HEC-2 WATER SURFACE PROFILES

  Version   4.6.2;  May 1991
 *************************************


 SPLIT FLOW BEING PERFORMED


 SF  SPLIT FLOW ROUTINE


 TW  RIGHT BANK WEIR FLOW FIRST UPSTREAM SECTION
 WS     2   20.98   21.18      -1     3.0
 WC     0 1319.00    16.5 1319.00

 TW  LEFT BANK WEIR FLOW FIRST UPSTREAM SECTION
 WS     2   20.98   21.18      -1     3.0
 WC     0 1319.00    16.5 1319.00

 TW  RIGHT BANK WEIR FLOW MIDDLE SECTION
 WS     2   20.78   20.98      -1     3.0
 WC     0 1319.00    16.5 1319.00

 TW  LEFT BANK WEIR FLOW MIDDLE SECTION
 WS     2   20.78   20.98      -1     3.0
 WC     0 1319.00    16.5 1319.00

 TW  RIGHT BANK WEIR FLOW LAST DOWNSTREAM SECTION
 WS     2   20.58   20.78      -1     3.0
 WC     0 1319.00    16.5 1319.00

 TW  LEFT BANK WEIR FLOW LAST DOWNSTREAM SECTION
 WS     2   20.58   20.78      -1     3.0
 WC     0 1319.00    16.5 1319.00
1
   13JUN95       19:23:13                                                                    PAGE    2

 T1      10TH STREET WASH                    STANLEY CONSULTANTS PROJECT # 12183
 T2      BASIN NO. 1                                          FILENAME: 12183H2C
 T3      MAIN STREAM SUBCRITICAL FLOW                         PROPOSED CONDITION
 T4
 T4      ************************************************************************
 T4      THIS MODEL IS INTENDED FOR USE IN ESTIMATING THE WATER SURFACE ELEVATION
 T4      ALONG THE 10TH WASH AND THE WEST TRIBUTARY FOR PROPOSED CONDITIONS.
 T4      REFER TO THE EXISTING CONDITION HEC-2 EXHIBIT AND THE WEST TRIBUTARY
 T4      STATIONING ON THE DESIGN PLANS FOR THE LOCATION OF IMPROVED XSECTS.
 T4      THE FLOWS USED IN THIS MODEL WERE TAKEN FROM THE HEC-1 MODEL DONE BY
 T4      KAMINSKI-HUBBARD (ADMS) AND MODIFIED BY SCI USING THE 14"x14" STEEL
 T4      PLATE ORIFICE OPENING FOR THE PRINCIPAL SPILLWAY OUTLET PIPE OF THE
 T4      EXISTING CITY OF PHOENIX DETENTION DAM NO. 3.
 T4      ************************************************************************
 T4
 T4      ************************************************************************
 T4      THIS MODEL IS ESSENTIALLY THE SAME AS MODEL 12183H2B EXCEPT FOR THE
 T4      ADDITIONAL AND MODIFIED CROSS SECTIONS USED TO BETTER ESTIMATE FLOW
 T4      CONDITIONS TO REFLECT THE FOLLOWING PROPOSED CHANNEL IMPROVEMENTS:
 T4
 T4  1.  THIS MODEL REFLECTS THE PROPOSED IMPROVEMENTS REQUIRED FOR THE INLET
 T4      LOCATED ON THE WEST TRIBUTARY.  THE CHANNEL IMPROVEMENT CONSISTS OF
 T4      CONCRETE LINED REACH INCLUDING A TRANSITION SECTION FROM A TRAPEZOIDAL
 T4      SECTION TO A RECTANGULAR SECTION UPSTREAM OF THE WEIR INLET, A
 T4      RECTANGULAR REACH JUST UPSTREAM FROM THE WEIR AND THROUGHOUT THE WEIR
 T4      LENGTH, AND A TRANSITION FROM A RECTANGULAR SECTION TO A TRAPEZOIDAL
 T4      SECTION DOWNSTREAM OF THE WEIR.  ADDITIONAL TRANSITION LENGTHS ARE USED
 T4      TO MATCH EXISTING CHANNEL GEOMETRY BOTH UPSTREAM AND DOWNSTREAM OF THE
 T4      CONCRETE LINED REACH.  THESE ADDITIONAL TRANSITIONS ARE RIPRAP LINED TO
 T4      TO PROVIDE SCOUR PROTECTION AND BANK STABILITY.  THE PROPOSED WEIR REACH
```

```
T4      HAS A 12' BOTTOM WIDTH AT THE UPSTREAM END AND A 9' BOTTOM WIDTH AT THE
T4      DOWNSTREAM END.  THE TAPERED WEIR ALLOWS THE CONTROL SECTION TO BE
T4      LOCATED AT THE DOWNSTREAM END OF THE WEIR AND PROVIDES GREATER HEAD
T4      THROUGHOUT THE WIER LENGTH.  PROPOSED CONDITION WATER SURFACE ELEVATIONS
T4      ARE NOT ABOVE THE EXISTING WATER SURFACE ELEVATIONS UPSTREAM OF THE
T4      PROJECT.  THE MANNING'S ROUGHNESS COEFICIENT "n" = 0.016 FOR THE
T4      CONCRETE LINED REACH AND "n" = 0.035 FOR THE RIPRAP LINED REACHES.
T4
T4  2.  CROSS SECTIONS 15.77, 16.77, AND 17.77 WERE MODIFIED TO REFLECT THE
T4      DESIGN CHANNEL CONDITIONS FOR THE PROJECT.  THE CHANNEL BOTTOM WIDTH
T4      WAS WIDENED TO 15 ft ADJACENT TO THE DETENTION BASIN AND 4:1 SLOPES
T4      (H:V) CONSTRUCTED ALONG THE DETENTION BASIN RETAINING WALL.  THE
T4      BANK SLOPES ALONG THE EAST SIDE OF THE WASH ARE GRADED TO A 4:1 (H:V)
T4      TO TIE INTO EXISTING GROUND.  THE CHANNEL PROFILE WAS NOT MODIFIED
T4      AND MATCHES THE EXISTING INVERT FROM FIELD SURVEYS.
T4
T4      THIS RUN WILL BE USED TO ESTIMATE THE PROPOSED WATER SURFACE PROFILE
T4      UPSTREAM OF THE WEIR AND DOWNSTREAM OF THE CONCRETE LINED SECTION.  THE
T4      WATER SURFACE ELEVATIONS WITHIN THE WEIR SECTION AND IN THE EXPANSION
T4      TRANSITION DOWNSTREAM OF THE WIER SECTION MAY NOT BE ACCURATE DUE TO
T4      SUPERCRITICAL FLOW EXPERIENCED IN THE SPLIT FLOW WEIR PERFORMANCE.  THE
T4      SPLIT FLOW GENERATED BY THIS MODEL IS USED FOR THE HEC-1 WEST TRIBUTARY
T4      WEIR INFLOW RATING CURVE.
T4      ************************************************************************
1
   13JUN95      19:23:13                                                    PAGE    3

T4
T4      1. CROSS SECTION DATA DEVELOPED FROM ONE-FOOT CONTOUR AERIAL TOPOGRAPHIC
T4         MAPS (DMJM ENGINEERING/KENNEY AERIAL MAPPING) AND SUPPLEMENTAL SURVEY
T4         CONDUCTED BY SCI.  DATUM IS CITY OF PHOENIX.
T4
T4      2. CROSS SECTIONS ORIENTED LEFT TO RIGHT LOOKING DOWNSTREAM.
T4
T4      3. CROSS SECTION GR STATION 1000 CORRESPONDS TO CENTERLINE OF THE WASH.
T4
T4      4. THE ROUGHNESS COEFFICIENTS USED RANGE FROM "n"=0.020 TO "n"=0.100 FOR
T4         EXISTING CONDITIONS AND "n"=0.018 TO "n"=0.100 FOR PROPOSED
T4         CONDITIONS.
T4
T4      5. STARTING WATER SURFACE ELEVATION IS CALCULATED USING SLOPE AREA.
T4
T4      6. PROFILE 1: 10YR
T4         PROFILE 2: 100YR
T4         PROFILE 3: EMERGENCY (100YR 2HR FLOWS USED AS WORST CASE)
T4
T4

J1  ICHECK    INQ      NINV     IDIR     STRT     METRIC   HVINS    Q        WSEL     FQ

                2                        0.001                              1306.5

J2  NPROF     IPLOT    PRFVS    XSECV    XSECH    FN       ALLDC    IBW      CHNIM    ITRACE

     1                -1                                     -1

J3  VARIABLE CODES FOR SUMMARY PRINTOUT

     38       43        1        2       13       55       16       14       26       17
     15       56       18                38       43        1       25       42        8
     39       27       53       54       28        4       37                38       43
      1       68       50        3       61       27       21       23       24       22
     28

J5  LPRNT    NUMSEC                 ********REQUESTED SECTION NUMBERS********

    -10      -10
1
   13JUN95      19:23:13                                                    PAGE    4


NC    0.100    0.045    0.025      0.2      0.4
QT        3      404      764     1694
X1     8.97        9      992   1007.5
X2                                                                                15
X3                                                   1042
GR     1310      797     1309      938     1308      992     1305      997     1304     1000
GR     1305     1002     1308   1007.5     1309     1028     1310     1042

X1     9.35        9      992     1011       38       38       38
X2                                                                                15
X3                                                   1042
GR     1310      816     1309      926     1308      992     1305      998     1304     1000
GR     1305     1002     1308     1009     1309     1011     1310     1043

NC    0.020    0.020    0.020      0.1      0.3
X1    10.00       16      807     1080       55       55       60
GR   1311.0      673   1310.0      807   1309.0      877   1308.0      898   1307.0      924
GR   1306.0      950   1305.0      980   1305.0     1000   1305.0     1010   1306.0     1026
GR   1307.0     1040   1308.0     1052   1309.0     1065   1310.0     1080   1311.0     1100
GR   1312.0     1127

NC    0.045    0.045    0.045      0.1      0.3
X1    10.32       16      890     1064       25       36       32
GR   1311.0      849   1310.0      890   1309.0      900   1308.0      930   1307.0      949
GR   1306.0      978   1305.0      996   1305.0     1000   1305.0     1002   1306.0     1011
GR   1307.0     1019   1308.0     1032   1309.0     1047   1310.0     1064   1311.0     1079
```

```
GR    1312.0       1111

X1     11.42         18        968       1042         90        115        110
GR    1313.0        965     1312.0        968     1311.0        971     1310.0        974     1309.0        977
GR    1308.0        982     1307.0        986     1306.0        989     1305.0        993     1304.0       1000
GR    1305.0       1007     1306.0       1015     1307.0       1021     1308.0       1027     1309.0       1033
GR    1310.0       1036     1311.0       1039     1312.0       1042

NC     0.020      0.020      0.020        0.1        0.3
X1     11.62         12        952       1080         20         20         20
GR    1313.0        941     1312.0        952     1311.0        958     1310.0        963     1309.0        970
GR    1308.0        977     1307.5       1000     1308.0       1014     1309.0       1026     1310.0       1034
GR    1311.0       1041     1312.0       1080

NC     0.045      0.045      0.045        0.1        0.3
X1     11.82         14        966       1071         20         20         20
GR    1313.0        963     1312.0        966     1311.0        969     1310.0        972     1309.0        977
GR    1308.0        983     1307.0        989     1307.0       1000     1307.0       1005     1308.0       1018
GR    1309.0       1025     1310.0       1033     1311.0       1049     1312.0       1071

X1     13.77         21        959       1033        185        205        195
GR    1315.0        956     1314.0        959     1313.0        962     1312.0        965     1311.0        968
GR    1310.0        971     1309.0        976     1308.0        980     1307.0        985     1306.0        993
GR    1306.0       1000     1306.0       1005     1307.0       1009     1308.0       1013     1309.0       1016
GR    1310.0       1020     1311.0       1023     1312.0       1026     1313.0       1029     1314.0       1033
GR    1315.0       1036
1
    13JUN95      19:23:13                                                                                  PAGE    5

QT        3        382        697       1400
X1     15.77         13        968       1060        195        205        200
GR    1312.7        963     1312.6        968     1307.8        989     1307.8       1004     1310.8     1016.4
GR    1311.0       1017     1312.0       1023     1313.0       1035     1314.0       1040     1315.0       1047
GR    1316.0       1054     1317.0       1060     1318.0       1063

X1     16.77         15        969       1053         92        115        100
GR    1313.3        964     1313.2        969     1308.9        988     1308.9       1003     1309.6       1005
GR    1310.0       1008     1311.0       1012     1312.0       1016     1313.0       1020     1314.0       1024
GR    1315.0       1029     1316.0       1033     1317.0       1037     1318.0       1053     1319.0       1069

QT        3        382        697       1170
X1     17.77         14        969       1051        100        105        100
GR    1314.7        964     1314.6        969     1310.7        991     1310.7     1006.6     1311.9       1012
GR    1313.0       1018     1314.0       1023     1315.0       1028     1316.0       1032     1317.0       1037
GR    1318.0       1041     1319.0       1045     1320.0       1048     1321.0       1051

QT        3        360        672       1111
X1     18.61         17        915       1066        110         60         84
GR    1320.0        874     1319.0        915     1318.0        936     1317.0        951     1316.0        963
GR    1315.0        985     1314.0        992     1313.1        998     1313.1       1000     1313.1       1001
GR    1314.0       1011     1315.0       1018     1316.0       1027     1317.0       1038     1318.0       1051
GR    1319.0       1066     1320.0       1081

NC     0.020      0.020      0.020        0.1        0.3
X1     18.87         13        900       1073         30         20         26
GR    1320.0        840     1319.0        900     1318.0        933     1317.0        947     1316.0        957
GR    1315.0        974     1314.2       1000     1315.0       1022     1316.0       1036     1317.0       1047
GR    1318.0       1060     1319.0       1073     1320.0       1093

NC     0.045      0.045      0.045        0.1        0.3
X1     18.99         13        900       1055         12         12         12
GR    1320.0        900     1319.0        924     1317.5        950     1316.0        963     1315.0        980
GR    1314.8        993     1314.3       1000     1314.8       1003     1315.0       1009     1316.0       1020
GR    1317.0       1033     1318.0       1045     1319.0       1055

X1     19.57         11        954       1019         58         58         58
X3        10                            980                   1019
GR    1319.0        954     1318.0        958     1317.0        963     1316.0        968     1315.0        980
GR    1314.8       1000     1315.0       1005     1316.0       1008     1317.0       1011     1318.0       1014
GR    1319.0       1019

NC     0.035      0.035      0.035
X1     19.68          4      978.0     1015.2         11         11         11
GR    1316.2      978.0     1315.1      983.0     1315.1     1004.5     1318.7     1015.2

X1     19.78          4      976.5     1016.0         10         10         10
GR    1317.5      976.5     1315.2      985.5     1315.2     1004.5     1319.1     1016.0
1
    13JUN95      19:23:13                                                                                  PAGE    6

X1     19.88          4      975.0     1016.5         10         10         10
GR    1318.8      975.0     1315.3      988.0     1315.3     1004.5     1319.3     1016.5

X1     19.98          4      974.0     1016.8         10         10         10
GR    1319.5      974.0     1315.4      990.5     1315.4     1004.5     1319.5     1016.8

X1     20.08          4      978.2     1017.3         10         10         10
GR    1319.5      978.2     1315.5      993.0     1315.5     1004.5     1319.5     1017.3

NC     0.018      0.018      0.018         .3         .5
X1     20.18          4      982.3     1017.7         10         10         10
GR    1320.0      982.3     1315.6      995.5     1315.6     1004.5     1320.0     1017.7

X1     20.28          8      983.6     1016.4         10         10         10
GR    1320.3      983.6     1316.5      994.5     1316.5      995.4    1315.62      995.5    1315.62     1004.5
GR    1316.5     1004.6     1316.5     1005.5     1320.3     1016.4
```

```
X1    20.38        8     985.7    1014.3        10        10        10
GR   1320.5    985.7    1317.3     994.5    1317.3     995.4   1315.63     995.5   1315.63    1004.5
GR   1317.3   1004.6    1317.3    1005.5    1320.5    1014.3

X1    20.48        8     987.7    1012.3        10        10        10
GR   1320.8    987.7    1318.2     994.5    1318.2     995.4   1315.65     995.5   1315.65    1004.5
GR   1318.2   1004.6    1318.2    1005.5    1320.8    1012.3

NC    0.018    0.018     0.018        .1        .3
X1    20.58        4     995.4    1004.6        10        10        10
GR   1321.0    995.4   1315.66     995.5   1315.66    1004.5    1321.0    1004.6

X1    20.78        4     994.9    1005.1        20        20        20
GR   1322.0    994.9   1315.69     995.0   1315.69    1005.0    1322.0    1005.1

X1    20.98        4     994.4    1005.6        20        20        20
GR   1322.0    994.4   1315.72     994.5   1315.72    1005.5    1322.0    1005.6

X1    21.18        4     993.9    1006.1        20        20        20
GR   1323.0    993.9   1315.75     994.0   1315.75    1006.0    1323.0    1006.1

NC    0.018    0.018     0.018        .3        .5
X1    21.38        4     993.9    1006.1        20        20        20
GR   1323.0    993.9   1315.78     994.0   1315.78    1006.0    1323.0    1006.1

X1    21.48        6     989.9    1010.1        10        10        10
GR   1324.0    989.9   1317.42     990.0   1316.10       994   1316.10      1006   1317.42      1010
GR   1324.0   1010.1

X1    21.58        6     985.4    1014.6        10        10        10
GR   1324.0    985.4   1319.07     985.5   1316.40       994   1316.40      1006   1319.07    1014.5
GR   1324.0   1014.6
1
   13JUN95      19:23:13                                                                          PAGE    7

X1    21.68        6     981.4    1018.6        10        10        10
GR   1324.0    981.4   1320.71     981.5   1316.70       994   1316.70      1006   1320.71    1018.5
GR   1324.0   1018.6

X1    21.78        6     976.9    1023.1        10        10        10
GR   1324.0    976.9   1322.36     977.0   1317.00       994   1317.00      1006   1322.36       1023
GR   1324.0   1023.1

NC    0.035    0.035     0.035        .1        .3
X1    21.88        4       973     1027        10        10        10
GR   1324.0      973   1317.30     994.0   1317.30    1006.0    1324.0    1027.0

NC    0.065    0.065     0.065
X1    22.22        4       979     1018        15        50        34
GR   1324.0      979   1317.45     995.5   1317.45    1004.5    1324.0      1018

X1    22.80        6       960     1025        58        58        58
GR   1326.0      960   1324.7       967   1317.3       997    1317.3      1003    1320.7      1014
GR   1326.6     1025

X1    24.05       15       990     1018       125       125       125
GR   1324.0      990   1323.0       991   1322.0       993    1321.0       994    1320.0       996
GR   1319.0      997   1318.0       999   1317.2      1000    1318.0      1002    1319.0      1004
GR   1320.0     1007   1321.0      1009   1322.0      1012    1323.0      1015    1324.0      1018

X1    25.37       19       981     1018       132       132       132
GR   1327.0      978   1326.0       981   1325.0       983    1324.0       986    1323.0       988
GR   1322.0      991   1321.0       993   1320.0       996    1319.0       998    1318.7      1000
GR   1319.0     1002   1320.0      1005   1321.0      1007    1322.0      1009    1323.0      1011
GR   1324.0     1013   1325.0      1016   1326.0      1018    1327.0      1020
1
   13JUN95      19:23:13                                                                          PAGE    8

   SECNO     DEPTH     CWSEL     CRIWS     WSELK        EG        HV        HL     OLOSS   L-BANK ELEV
   Q         QLOB      QCH       QROB      ALOB       ACH      AROB       VOL       TWA   R-BANK ELEV
   TIME      VLOB      VCH       VROB       XNL      XNCH       XNR       WTN    ELMIN     SSTA
   SLOPE     XLOBL     XLCH      XLOBR    ITRIAL       IDC     ICONT     CORAR   TOPWID     ENDST

FLOW DISTRIBUTION FOR SECNO=      8.97          CWSEL=   1309.64

STA=     847.     938.     992.    1008.    1028.    1037.
  PER Q=      2.0     10.1     78.9      8.5       .5
   AREA=     29.1     61.7     58.7     23.4      2.9
    VEL=       .2       .5      4.2      1.1       .5
  DEPTH=       .3      1.1      3.8      1.1       .3

FLOW DISTRIBUTION FOR SECNO=      9.35          CWSEL=   1309.69

STA=     851.     926.     992.    1011.    1033.
  PER Q=      1.9     13.4     83.4      1.3
   AREA=     25.8     78.2     64.5      7.5
    VEL=       .2       .5      4.1       .5
  DEPTH=       .3      1.2      3.4       .3
1
   13JUN95      19:23:13                                                                          PAGE    9

T1      10TH STREET WASH              STANLEY CONSULTANTS PROJECT # 12183
```

```
J1  ICHECK    INQ       NINV      IDIR      STRT      METRIC    HVINS     Q         WSEL      FQ

                3                           .001                                    1307.1

J2  NPROF     IPLOT     PRFVS     XSECV     XSECH     FN        ALLDC     IBW       CHNIM     ITRACE

      2                 -1                                        -1

FLOW DISTRIBUTION FOR SECNO=      8.97          CWSEL=   1310.30

STA=     797.      938.      992.     1008.     1028.     1042.
  PER Q=      9.0      13.4      64.3      11.3       2.0
   AREA=    112.1      96.9      68.8      36.8      11.1
    VEL=       .4        .7       4.7       1.5        .9
  DEPTH=       .8       1.8       4.4       1.8        .8

FLOW DISTRIBUTION FOR SECNO=      9.35          CWSEL=   1310.33

STA=     816.      926.      992.     1011.     1042.
  PER Q=      7.8      17.4      69.9       5.0
   AREA=     91.5     120.9      76.8      26.3
    VEL=       .4        .7       4.6       1.0
  DEPTH=       .8       1.8       4.0        .8

1
   13JUN95      19:23:13                                                                                    PAGE   10

T1      10TH STREET WASH              STANLEY CONSULTANTS PROJECT # 12183

J1  ICHECK    INQ       NINV      IDIR      STRT      METRIC    HVINS     Q         WSEL      FQ

                4                           .001                                    1309.0

J2  NPROF     IPLOT     PRFVS     XSECV     XSECH     FN        ALLDC     IBW       CHNIM     ITRACE

      3                 -1                                        -1

FLOW DISTRIBUTION FOR SECNO=      8.97          CWSEL=   1311.48

STA=     797.      938.      992.     1008.     1028.     1042.
  PER Q=     20.2      15.4      47.1      13.0       4.2
   AREA=    279.2     160.9      87.2      61.1      27.7
    VEL=       .7       1.0       5.5       2.2       1.6
  DEPTH=      2.0       3.0       5.6       3.0       2.0

FLOW DISTRIBUTION FOR SECNO=      9.35          CWSEL=   1311.51

STA=     816.      926.      992.     1011.     1042.
  PER Q=     16.6      19.8      53.3      10.3
   AREA=    220.8     198.5      99.1      62.7
    VEL=       .8       1.0       5.5       1.7
  DEPTH=      2.0       3.0       5.2       2.0

1
   13JUN95      19:23:13                                                                                    PAGE   11


                                                                                THIS RUN EXECUTED 13JUN95     19:23:58
*************************************
 HEC-2 WATER SURFACE PROFILES

 Version   4.6.2;  May 1991
*************************************


NOTE- ASTERISK (*) AT LEFT OF CROSS-SECTION NUMBER INDICATES MESSAGE IN SUMMARY OF ERRORS LIST


MAIN STREAM SUBCRITICAL

SUMMARY PRINTOUT

      SECNO       Q      CWSEL     CRIWS      QLOB      VLOB    K*XNL       QCH       VCH   K*XNCH      QROB      VROB     K*XN

      8.970  314.91   1309.64   1308.29     38.24       .42   100.00    248.44      4.23    25.00     28.23      1.07     45.0
      8.970  501.95   1310.30   1309.40    112.57       .54   100.00    322.76      4.69    25.00     66.62      1.39     45.0
      8.970 1024.67   1311.48   1310.39    365.54       .83   100.00    482.80      5.54    25.00    176.32      1.99     45.0

      9.350  314.91   1309.69   1308.31     48.32       .46   100.00    262.66      4.07    25.00      3.94       .52     45.0
      9.350  501.95   1310.33   1309.33    126.08       .59   100.00    350.89      4.57    25.00     24.98       .95     45.0
      9.350 1024.67   1311.51   1310.48    373.02       .89   100.00    545.99      5.51    25.00    105.66      1.68     45.0

*    10.000  314.91   1309.92   1306.12       .00       .00      .00    314.91       .47    20.00       .00       .00       .0
*    10.000  501.95   1310.58   1306.43      2.75       .12    20.00    498.79       .59    20.00       .41       .12     20.0
*    10.000 1024.67   1311.79   1307.06     62.35       .36    20.00    951.61       .81    20.00     10.71       .31     20.0

*    10.320  314.91   1309.92   1306.79       .00       .00      .00    314.91       .73    45.00       .00       .00       .0
*    10.320  501.95   1310.58   1307.17      1.31       .19    45.00    500.17       .92    45.00       .48       .19     45.0
*    10.320 1024.67   1311.78   1307.89     30.24       .57    45.00    980.63      1.30    45.00     13.80       .47     45.0

*    11.420  314.91   1309.93   1306.65       .00       .00      .00    314.91      1.55    45.00       .00       .00       .0
*    11.420  501.95   1310.57   1307.25       .00       .00      .00    501.95      2.06    45.00       .00       .00       .0
*    11.420 1024.67   1311.73   1308.40       .00       .00      .00   1024.67      3.17    45.00       .00       .00       .0

     11.620  314.91   1309.88   1309.00       .00       .00      .00    314.91      2.84    20.00       .00       .00       .0
     11.620  501.95   1310.52   1309.38       .00       .00      .00    501.95      3.17    20.00       .00       .00       .0
```

	11.620	1024.67	1311.70	1310.19	.00	.00	.00	1024.67	3.85	20.00	.00	.00	.0
*	11.820	314.91	1309.92	1308.65	.00	.00	.00	314.91	2.69	45.00	.00	.00	.0
*	11.820	501.95	1310.55	1309.11	.00	.00	.00	501.95	3.18	45.00	.00	.00	.0
*	11.820	1024.67	1311.72	1310.08	.00	.00	.00	1024.67	4.00	45.00	.00	.00	.0
*	13.770	314.91	1310.29	1308.00	.00	.00	.00	314.91	2.22	45.00	.00	.00	.0
*	13.770	501.95	1311.01	1308.55	.00	.00	.00	501.95	2.79	45.00	.00	.00	.0
	13.770	1024.67	1312.31	1309.72	.00	.00	.00	1024.67	3.99	45.00	.00	.00	.0

	SECNO	Q	CWSEL	CRIWS	QLOB	VLOB	K*XNL	QCH	VCH	K*XNCH	QROB	VROB	K*XN
*	15.770	292.91	1310.62	1309.69	.00	.00	.00	292.91	3.85	45.00	.00	.00	.0
*	15.770	434.95	1311.39	1310.15	.00	.00	.00	434.95	4.00	45.00	.00	.00	.0
*	15.770	730.67	1312.87	1310.89	.75	.68	45.00	729.92	3.83	45.00	.00	.00	.0
	16.770	292.91	1311.29	1310.79	.00	.00	.00	292.91	4.85	45.00	.00	.00	.0
	16.770	434.95	1311.93	1311.25	.00	.00	.00	434.95	5.11	45.00	.00	.00	.0
	16.770	730.67	1313.19	1312.00	.00	.00	.00	730.67	5.08	45.00	.00	.00	.0
	17.770	292.91	1312.65	1312.51	.00	.00	.00	292.91	5.91	45.00	.00	.00	.0
*	17.770	434.95	1313.08	1312.95	.00	.00	.00	434.95	6.53	45.00	.00	.00	.0
*	17.770	500.67	1313.93	1313.12	.00	.00	.00	500.67	4.77	45.00	.00	.00	.0
*	18.610	270.91	1315.25	1315.25	.00	.00	.00	270.91	6.01	45.00	.00	.00	.0
*	18.610	409.95	1315.67	1315.67	.00	.00	.00	409.95	6.31	45.00	.00	.00	.0
*	18.610	441.67	1315.75	1315.75	.00	.00	.00	441.67	6.38	45.00	.00	.00	.0
*	18.870	270.91	1315.78	1315.59	.00	.00	.00	270.91	4.11	20.00	.00	.00	.0
*	18.870	409.95	1316.21	1315.87	.00	.00	.00	409.95	4.10	20.00	.00	.00	.0
*	18.870	441.67	1316.30	1315.93	.00	.00	.00	441.67	4.12	20.00	.00	.00	.0
*	18.990	270.91	1316.02	1316.02	.00	.00	.00	270.91	5.38	45.00	.00	.00	.0
*	18.990	409.95	1316.33	1316.33	.00	.00	.00	409.95	5.93	45.00	.00	.00	.0
*	18.990	441.67	1316.38	1316.38	.00	.00	.00	441.67	6.08	45.00	.00	.00	.0
*	19.570	270.91	1317.03	1316.40	.00	.00	.00	270.91	4.55	45.00	.00	.00	.0
*	19.570	409.95	1317.39	1316.86	.00	.00	.00	409.95	5.79	45.00	.00	.00	.0
*	19.570	441.67	1317.46	1316.95	.00	.00	.00	441.67	6.06	45.00	.00	.00	.0
	19.680	270.91	1317.08	1316.63	.00	.00	.00	270.91	4.89	35.00	.00	.00	.0
	19.680	409.95	1317.47	1317.06	.00	.00	.00	409.95	6.00	35.00	.00	.00	.0
	19.680	441.67	1317.56	1317.16	.00	.00	.00	441.67	6.19	35.00	.00	.00	.0
	19.780	270.91	1317.08	1316.86	.00	.00	.00	270.91	5.65	35.00	.00	.00	.0
	19.780	409.95	1317.47	1317.32	.00	.00	.00	409.95	6.73	35.00	.00	.00	.0
	19.780	441.67	1317.56	1317.42	.00	.00	.00	441.67	6.91	35.00	.00	.00	.0
*	19.880	270.91	1317.08	1317.08	.00	.00	.00	270.91	6.77	35.00	.00	.00	.0
*	19.880	409.95	1317.57	1317.57	.00	.00	.00	409.95	7.49	35.00	.00	.00	.0
*	19.880	441.67	1317.67	1317.67	.00	.00	.00	441.67	7.62	35.00	.00	.00	.0
*	19.980	270.91	1317.31	1317.31	.00	.00	.00	270.91	6.86	35.00	.00	.00	.0
*	19.980	409.95	1317.81	1317.81	.00	.00	.00	409.95	7.57	35.00	.00	.00	.0
*	19.980	441.67	1317.91	1317.91	.00	.00	.00	441.67	7.70	35.00	.00	.00	.0
*	20.080	270.91	1317.58	1317.58	.00	.00	.00	270.91	6.99	35.00	.00	.00	.0
*	20.080	409.95	1318.10	1318.10	.00	.00	.00	409.95	7.69	35.00	.00	.00	.0
*	20.080	441.67	1318.21	1318.21	.00	.00	.00	441.67	7.82	35.00	.00	.00	.0
*	20.180	270.91	1317.93	1317.93	.00	.00	.00	270.91	7.26	18.00	.00	.00	.0
*	20.180	409.95	1318.51	1318.51	.00	.00	.00	409.95	7.95	18.00	.00	.00	.0
*	20.180	441.67	1318.62	1318.62	.00	.00	.00	441.67	8.09	18.00	.00	.00	.0

	SECNO	Q	CWSEL	CRIWS	QLOB	VLOB	K*XNL	QCH	VCH	K*XNCH	QROB	VROB	K*XN
*	20.280	270.91	1318.26	1318.26	.00	.00	.00	270.91	7.46	18.00	.00	.00	.0
*	20.280	409.95	1318.88	1318.88	.00	.00	.00	409.95	8.15	18.00	.00	.00	.0
*	20.280	441.67	1319.00	1319.00	.00	.00	.00	441.67	8.28	18.00	.00	.00	.0
*	20.380	270.91	1318.63	1318.63	.00	.00	.00	270.91	7.83	18.00	.00	.00	.0
*	20.380	409.95	1319.32	1319.32	.00	.00	.00	409.95	8.44	18.00	.00	.00	.0
*	20.380	441.67	1319.45	1319.45	.00	.00	.00	441.67	8.56	18.00	.00	.00	.0
*	20.480	270.91	1318.89	1318.89	.00	.00	.00	270.91	8.44	18.00	.00	.00	.0
*	20.480	409.95	1319.73	1319.73	.00	.00	.00	409.95	8.89	18.00	.00	.00	.0
*	20.480	441.67	1319.88	1319.88	.00	.00	.00	441.67	8.99	18.00	.00	.00	.0
*	20.580	270.91	1318.68	1318.68	.00	.00	.00	270.91	9.89	18.00	.00	.00	.0
*	20.580	409.95	1319.65	1319.65	.00	.00	.00	409.95	11.32	18.00	.00	.00	.0
*	20.580	441.67	1319.84	1319.84	.00	.00	.00	441.67	11.64	18.00	.00	.00	.0
*	20.780	280.70	1319.54	1318.59	.00	.00	.00	280.70	7.25	18.00	.00	.00	.0
*	20.780	469.88	1319.77	1319.77	.00	.00	.00	469.88	11.43	18.00	.00	.00	.0
*	20.780	540.99	1320.16	1320.16	.00	.00	.00	540.98	12.02	18.00	.00	.00	.0
	20.980	319.84	1319.54	1318.68	.00	.00	.00	319.84	7.57	18.00	.00	.00	.0
*	20.980	550.24	1319.96	1319.96	.00	.00	.00	550.24	11.72	18.00	.00	.00	.0
*	20.980	721.45	1320.81	1320.81	.00	.00	.00	721.45	12.78	18.00	.00	.00	.0
	21.180	360.00	1319.55	1318.77	.00	.00	.00	360.00	7.83	18.00	.00	.00	.0
*	21.180	672.00	1320.33	1320.33	.00	.00	.00	672.00	12.16	18.00	.00	.00	.0

*	21.180	1111.00	1322.14	1322.14	.00	.00	.00	1111.00	14.38	18.00	.00	.00	.0
	21.380	360.00	1319.63	1318.80	.00	.00	.00	360.00	7.77	18.00	.00	.00	.0
	21.380	672.00	1321.48	1320.36	.00	.00	.00	672.00	9.77	18.00	.00	.00	.0
	21.380	1111.00	1323.71	1322.18	.00	.00	.00	1111.00	11.58	18.00	.00	.00	.0
*	21.480	360.00	1320.48	1318.51	.00	.00	.00	360.00	4.37	18.00	.00	.00	.0
*	21.480	672.00	1322.88	1319.62	.00	.00	.00	672.00	5.14	18.00	.00	.00	.0
*	21.480	1111.00	1325.72	1320.92	.00	.00	.00	1111.00	5.91	18.00	.00	.00	.0
	21.580	360.00	1320.60	1318.82	.00	.00	.00	360.00	3.63	18.00	.00	.00	.0
	21.580	672.00	1323.11	1319.73	.00	.00	.00	672.00	3.90	18.00	.00	.00	.0
*	21.580	1111.00	1326.06	1320.74	.00	.00	.00	1111.00	4.30	18.00	.00	.00	.0
	21.680	360.00	1320.59	1319.14	.00	.00	.00	360.00	3.83	18.00	.00	.00	.0
	21.680	672.00	1323.17	1320.12	.00	.00	.00	672.00	3.55	18.00	.00	.00	.0
	21.680	1111.00	1326.16	1321.07	.00	.00	.00	1111.00	3.70	18.00	.00	.00	.0
	21.780	360.00	1320.57	1319.42	.00	.00	.00	360.00	4.32	18.00	.00	.00	.0
	21.780	672.00	1323.18	1320.40	.00	.00	.00	672.00	3.48	18.00	.00	.00	.0
	21.780	1111.00	1326.21	1321.41	.00	.00	.00	1111.00	3.34	18.00	.00	.00	.0
*	21.880	360.00	1320.51	1319.73	.00	.00	.00	360.00	5.06	35.00	.00	.00	.0
*	21.880	672.00	1323.16	1320.71	.00	.00	.00	672.00	3.77	35.00	.00	.00	.0
*	21.880	1111.00	1326.22	1321.74	.00	.00	.00	1111.00	3.26	35.00	.00	.00	.0

	SECNO	Q	CWSEL	CRIWS	QLOB	VLOB	K*XNL	QCH	VCH	K*XNCH	QROB	VROB	K*XN
*	22.220	360.00	1320.63	1320.31	.00	.00	.00	360.00	6.95	65.00	.00	.00	.0
*	22.220	672.00	1323.11	1321.44	.00	.00	.00	672.00	5.41	65.00	.00	.00	.0
*	22.220	1111.00	1326.15	1322.62	.00	.00	.00	1111.00	4.61	65.00	.00	.00	.0
*	22.800	360.00	1321.95	1320.18	.00	.00	.00	360.00	3.41	65.00	.00	.00	.0
*	22.800	672.00	1323.78	1321.15	.00	.00	.00	672.00	3.63	65.00	.00	.00	.0
	22.800	1111.00	1326.51	1322.18	.00	.00	.00	1111.00	3.24	65.00	.00	.00	.0
*	24.050	360.00	1322.94	1321.79	.00	.00	.00	360.00	5.52	65.00	.00	.00	.0
*	24.050	672.00	1324.44	1323.10	.00	.00	.00	672.00	6.40	65.00	.00	.00	.0
*	24.050	1111.00	1326.70	1324.29	.00	.00	.00	1111.00	6.60	65.00	.00	.00	.0
*	25.370	360.00	1324.54	1322.44	.00	.00	.00	360.00	3.76	65.00	.00	.00	.0
*	25.370	672.00	1326.11	1323.63	.00	.02	65.00	672.00	4.50	65.00	.00	.02	65.0
*	25.370	1111.00	1327.97	1324.90	7.47	1.70	65.00	1099.03	5.05	65.00	4.50	1.54	65.0

MAIN STREAM SUBCRITICAL

SUMMARY PRINTOUT

	SECNO	Q	CWSEL	AREA	ELMIN	DEPTH	XLCH	STENCL	SSTA	ENDST	STENCR	TOPWID	TWA
	8.970	314.91	1309.64	175.76	1304.00	5.64	.00	.00	847.45	1036.99	1042.00	189.54	.0
	8.970	501.95	1310.30	325.84	1304.00	6.30	.00	.00	797.00	1042.00	1042.00	245.00	.0
	8.970	1024.67	1311.48	616.18	1304.00	7.48	.00	.00	797.00	1042.00	1042.00	245.00	.0
	9.350	314.91	1309.69	176.07	1304.00	5.69	38.00	.00	850.63	1032.93	1042.00	182.29	.1
	9.350	501.95	1310.33	315.50	1304.00	6.33	38.00	.00	816.00	1042.00	1042.00	226.00	.2
	9.350	1024.67	1311.51	581.14	1304.00	7.51	38.00	.00	816.00	1042.00	1042.00	226.00	.2
*	10.000	314.91	1309.92	665.02	1305.00	4.92	60.00	.00	812.31	1078.86	.00	266.55	.4
*	10.000	501.95	1310.58	869.82	1305.00	5.58	60.00	.00	729.25	1091.60	.00	362.35	.5
*	10.000	1024.67	1311.79	1379.58	1305.00	6.79	60.00	.00	673.00	1121.23	.00	448.23	.6
*	10.320	314.91	1309.92	428.85	1305.00	4.92	32.00	.00	890.76	1062.71	.00	171.95	.6
*	10.320	501.95	1310.58	552.38	1305.00	5.58	32.00	.00	866.21	1072.70	.00	206.49	.8
*	10.320	1024.67	1311.78	834.67	1305.00	6.78	32.00	.00	849.00	1104.15	.00	255.15	.9
*	11.420	314.91	1309.93	202.88	1304.00	5.93	110.00	.00	974.20	1035.80	.00	61.60	.9
*	11.420	501.95	1310.57	243.97	1304.00	6.57	110.00	.00	972.26	1037.74	.00	65.48	1.1
*	11.420	1024.67	1311.73	323.50	1304.00	7.73	110.00	.00	968.80	1041.20	.00	72.40	1.3
	11.620	314.91	1309.88	110.91	1307.50	2.38	20.00	.00	963.83	1033.05	.00	69.22	.9
	11.620	501.95	1310.52	158.28	1307.50	3.02	20.00	.00	960.37	1037.68	.00	77.31	1.1
	11.620	1024.67	1311.70	266.29	1307.50	4.20	20.00	.00	953.75	1068.61	.00	114.86	1.3
*	11.820	314.91	1309.92	117.18	1307.00	2.92	20.00	.00	972.36	1032.43	.00	60.07	.9
*	11.820	501.95	1310.55	157.87	1307.00	3.55	20.00	.00	970.35	1041.79	.00	71.43	1.2
*	11.820	1024.67	1311.72	256.36	1307.00	4.72	20.00	.00	966.83	1064.90	.00	98.07	1.3
*	13.770	314.91	1310.29	142.08	1306.00	4.29	195.00	.00	970.12	1020.88	.00	50.75	1.2
*	13.770	501.95	1311.01	179.82	1306.00	5.01	195.00	.00	967.98	1023.02	.00	55.03	1.4
	13.770	1024.67	1312.31	256.57	1306.00	6.31	195.00	.00	964.08	1026.92	.00	62.85	1.7
*	15.770	292.91	1310.62	76.03	1307.80	2.82	200.00	.00	976.67	1015.65	.00	38.97	1.4
*	15.770	434.95	1311.39	108.80	1307.80	3.59	200.00	.00	973.28	1019.35	.00	46.07	1.7
*	15.770	730.67	1312.87	191.45	1307.80	5.07	200.00	.00	963.00	1033.44	.00	70.44	2.0
	16.770	292.91	1311.29	60.45	1308.90	2.39	100.00	.00	977.43	1013.17	.00	35.75	1.5
	16.770	434.95	1311.93	85.19	1308.90	3.03	100.00	.00	974.58	1015.75	.00	41.16	1.8
	16.770	730.67	1313.19	143.90	1308.90	4.29	100.00	.00	969.00	1020.80	.00	51.80	2.2
	17.770	292.91	1312.65	49.54	1310.70	1.95	100.00	.00	980.07	1016.03	.00	35.96	1.6

*	17.770	434.95	1313.08	66.62	1310.70	2.38	100.00	.00	977.56	1018.41	.00	40.85	1.9
*	17.770	500.67	1313.93	104.90	1310.70	3.23	100.00	.00	972.80	1022.63	.00	49.84	2.3
*	18.610	270.91	1315.25	45.07	1313.10	2.15	84.00	.00	979.52	1020.24	.00	40.72	1.6
*	18.610	409.95	1315.67	64.95	1313.10	2.57	84.00	.00	970.27	1024.03	.00	53.76	2.0
*	18.610	441.67	1315.75	69.21	1313.10	2.65	84.00	.00	968.56	1024.72	.00	56.16	2.4

1

	SECNO	Q	CWSEL	AREA	ELMIN	DEPTH	XLCH	STENCL	SSTA	ENDST	STENCR	TOPWID	TWA
*	18.870	270.91	1315.78	65.87	1314.20	1.58	26.00	.00	960.79	1032.88	.00	72.09	1.7
*	18.870	409.95	1316.21	100.09	1314.20	2.01	26.00	.00	954.86	1038.35	.00	83.49	2.0
*	18.870	441.67	1316.30	107.10	1314.20	2.10	26.00	.00	954.03	1039.27	.00	85.24	2.4
*	18.990	270.91	1316.02	50.31	1314.30	1.72	12.00	.00	962.86	1020.21	.00	57.35	1.7
*	18.990	409.95	1316.33	69.10	1314.30	2.03	12.00	.00	960.18	1024.23	.00	64.05	2.0
*	18.990	441.67	1316.38	72.67	1314.30	2.08	12.00	.00	959.70	1024.95	.00	65.25	2.4
*	19.570	270.91	1317.03	59.56	1314.80	2.23	58.00	980.00	980.00	1011.10	1019.00	31.10	1.7
*	19.570	409.95	1317.39	70.74	1314.80	2.59	58.00	980.00	980.00	1012.16	1019.00	32.16	2.1
*	19.570	441.67	1317.46	72.85	1314.80	2.66	58.00	980.00	980.00	1012.36	1019.00	32.36	2.5
	19.680	270.91	1317.08	55.39	1315.10	1.98	11.00	.00	978.00	1010.37	.00	32.37	1.7
	19.680	409.95	1317.47	68.30	1315.10	2.37	11.00	.00	978.00	1011.54	.00	33.54	2.1
	19.680	441.67	1317.56	71.31	1315.10	2.46	11.00	.00	978.00	1011.80	.00	33.80	2.5
	19.780	270.91	1317.08	47.95	1315.20	1.88	10.00	.00	978.13	1010.05	.00	31.92	1.8
	19.780	409.95	1317.47	60.91	1315.20	2.27	10.00	.00	976.61	1011.20	.00	34.60	2.1
	19.780	441.67	1317.56	63.89	1315.20	2.36	10.00	.00	976.50	1011.45	.00	34.95	2.5
*	19.880	270.91	1317.08	40.01	1315.30	1.78	10.00	.00	981.39	1009.84	.00	28.45	1.8
*	19.880	409.95	1317.57	54.73	1315.30	2.27	10.00	.00	979.57	1011.31	.00	31.74	2.1
*	19.880	441.67	1317.67	57.99	1315.30	2.37	10.00	.00	979.19	1011.61	.00	32.42	2.5
*	19.980	270.91	1317.31	39.50	1315.40	1.91	10.00	.00	982.82	1010.22	.00	27.40	1.8
*	19.980	409.95	1317.81	54.15	1315.40	2.41	10.00	.00	980.80	1011.73	.00	30.93	2.1
*	19.980	441.67	1317.91	57.38	1315.40	2.51	10.00	.00	980.38	1012.04	.00	31.66	2.5
*	20.080	270.91	1317.58	38.73	1315.50	2.08	10.00	.00	985.32	1011.14	.00	25.82	1.8
*	20.080	409.95	1318.10	53.33	1315.50	2.60	10.00	.00	983.37	1012.83	.00	29.47	2.1
*	20.080	441.67	1318.21	56.47	1315.50	2.71	10.00	.00	982.98	1013.17	.00	30.19	2.5
*	20.180	270.91	1317.93	37.30	1315.60	2.33	10.00	.00	988.50	1011.50	.00	22.99	1.8
*	20.180	409.95	1318.51	51.54	1315.60	2.91	10.00	.00	986.78	1013.22	.00	26.45	2.1
*	20.180	441.67	1318.62	54.61	1315.60	3.02	10.00	.00	986.43	1013.57	.00	27.14	2.5
*	20.280	270.91	1318.26	36.32	1315.62	2.64	10.00	.00	989.44	1010.56	.00	21.11	1.8
*	20.280	409.95	1318.88	50.31	1315.62	3.26	10.00	.00	987.69	1012.31	.00	24.62	2.1
*	20.280	441.67	1319.00	53.37	1315.62	3.38	10.00	.00	987.34	1012.66	.00	25.33	2.6
*	20.380	270.91	1318.63	34.60	1315.63	3.00	10.00	.00	990.86	1009.14	.00	18.29	1.8
*	20.380	409.95	1319.32	48.56	1315.63	3.69	10.00	.00	988.95	1011.05	.00	22.09	2.1
*	20.380	441.67	1319.45	51.58	1315.63	3.82	10.00	.00	988.58	1011.42	.00	22.83	2.6
*	20.480	270.91	1318.89	32.08	1315.65	3.24	10.00	.00	992.69	1007.31	.00	14.62	1.8
*	20.480	409.95	1319.73	46.10	1315.65	4.08	10.00	.00	990.51	1009.49	.00	18.99	2.1
*	20.480	441.67	1319.88	49.14	1315.65	4.23	10.00	.00	990.10	1009.90	.00	19.81	2.6
*	20.580	270.91	1318.68	27.39	1315.66	3.02	10.00	.00	995.44	1004.56	.00	9.11	1.8
*	20.580	409.95	1319.65	36.21	1315.66	3.99	10.00	.00	995.43	1004.57	.00	9.15	2.1
*	20.580	441.67	1319.84	37.93	1315.66	4.18	10.00	.00	995.42	1004.58	.00	9.16	2.6

1

	SECNO	Q	CWSEL	AREA	ELMIN	DEPTH	XLCH	STENCL	SSTA	ENDST	STENCR	TOPWID	TWA
*	20.780	280.70	1319.54	38.72	1315.69	3.85	20.00	.00	994.94	1005.06	.00	10.12	1.8
*	20.780	469.88	1319.77	41.11	1315.69	4.08	20.00	.00	994.94	1005.06	.00	10.13	2.1
*	20.780	540.99	1320.16	45.01	1315.69	4.47	20.00	.00	994.93	1005.07	.00	10.14	2.6
	20.980	319.84	1319.54	42.27	1315.72	3.82	20.00	.00	994.44	1005.56	.00	11.12	1.8
*	20.980	550.24	1319.96	46.96	1315.72	4.24	20.00	.00	994.43	1005.57	.00	11.14	2.2
*	20.980	721.45	1320.81	56.43	1315.72	5.09	20.00	.00	994.42	1005.58	.00	11.16	2.6
	21.180	360.00	1319.55	45.97	1315.75	3.80	20.00	.00	993.95	1006.05	.00	12.11	1.8
*	21.180	672.00	1320.33	55.24	1315.75	4.58	20.00	.00	993.94	1006.06	.00	12.13	2.2
*	21.180	1111.00	1322.14	77.28	1315.75	6.39	20.00	.00	993.91	1006.09	.00	12.18	2.6
	21.380	360.00	1319.63	46.31	1315.78	3.85	20.00	.00	993.95	1006.05	.00	12.11	1.8
	21.380	672.00	1321.48	68.80	1315.78	5.70	20.00	.00	993.92	1006.08	.00	12.16	2.2
	21.380	1111.00	1323.71	95.95	1315.78	7.93	20.00	.00	993.90	1006.10	.00	12.20	2.6
*	21.480	360.00	1320.48	82.36	1316.10	4.38	10.00	.00	989.95	1010.05	.00	20.09	1.8
*	21.480	672.00	1322.88	130.80	1316.10	6.78	10.00	.00	989.92	1010.08	.00	20.17	2.2
*	21.480	1111.00	1325.72	188.10	1316.10	9.62	10.00	.00	989.90	1010.10	.00	20.20	2.6
	21.580	360.00	1320.60	99.20	1316.40	4.20	10.00	.00	985.47	1014.53	.00	29.06	1.8
	21.580	672.00	1323.11	172.30	1316.40	6.71	10.00	.00	985.42	1014.58	.00	29.16	2.2
*	21.580	1111.00	1326.06	258.22	1316.40	9.66	10.00	.00	985.40	1014.60	.00	29.20	2.6
	21.680	360.00	1320.59	94.01	1316.70	3.89	10.00	.00	981.86	1018.14	.00	36.28	1.8
	21.680	672.00	1323.17	189.42	1316.70	6.47	10.00	.00	981.43	1018.57	.00	37.15	2.2
	21.680	1111.00	1326.16	300.50	1316.70	9.46	10.00	.00	981.40	1018.60	.00	37.20	2.6
	21.780	360.00	1320.57	83.24	1317.00	3.57	10.00	.00	982.68	1017.32	.00	34.64	1.8

	21.780	672.00	1323.18	193.34	1317.00	6.18	10.00	.00	976.95	1023.05	.00	46.10	2.2
	21.780	1111.00	1326.21	333.10	1317.00	9.21	10.00	.00	976.90	1023.10	.00	46.20	2.6
*	21.880	360.00	1320.51	71.18	1317.30	3.21	10.00	.00	983.90	1016.10	.00	32.19	1.8
*	21.880	672.00	1323.16	178.16	1317.30	5.86	10.00	.00	975.62	1024.38	.00	48.76	2.2
*	21.880	1111.00	1326.22	340.99	1317.30	8.92	10.00	.00	973.00	1027.00	.00	54.00	2.6
*	22.220	360.00	1320.63	51.81	1317.45	3.18	34.00	.00	987.49	1011.06	.00	23.57	1.9
*	22.220	672.00	1323.11	124.30	1317.45	5.66	34.00	.00	981.24	1016.17	.00	34.92	2.2
*	22.220	1111.00	1326.15	240.94	1317.45	8.70	34.00	.00	979.00	1018.00	.00	39.00	2.7
*	22.800	360.00	1321.95	105.64	1317.30	4.65	58.00	.00	978.15	1016.33	.00	38.18	1.9
*	22.800	672.00	1323.78	185.38	1317.30	6.48	58.00	.00	970.73	1019.74	.00	49.01	2.3
	22.800	1111.00	1326.51	343.09	1317.30	9.21	58.00	.00	960.00	1024.84	.00	64.84	2.7
*	24.050	360.00	1322.94	65.22	1317.20	5.74	125.00	.00	991.12	1014.81	.00	23.69	2.0
*	24.050	672.00	1324.44	105.02	1317.20	7.24	125.00	.00	990.00	1018.00	.00	28.00	2.4
*	24.050	1111.00	1326.70	168.39	1317.20	9.50	125.00	.00	990.00	1018.00	.00	28.00	2.9
*	25.370	360.00	1324.54	95.68	1318.70	5.84	132.00	.00	984.37	1014.63	.00	30.27	2.1
*	25.370	672.00	1326.11	149.23	1318.70	7.41	132.00	.00	980.67	1018.22	.00	37.55	2.5
*	25.370	1111.00	1327.97	225.14	1318.70	9.27	132.00	.00	978.00	1020.00	.00	42.00	3.0

MAIN STREAM SUBCRITICAL

SUMMARY PRINTOUT

	SECNO	Q	CWSEL	FRCH	DIFWSP	EG	DIFEG	STENCL	STCHL	XLBEL	RBEL	STCHR	STENC
	8.970	314.91	1309.64	.38	.00	1309.86	.00	.00	992.00	1308.00	1308.00	1007.50	1042.0
	8.970	501.95	1310.30	.39	.65	1310.52	.66	.00	992.00	1308.00	1308.00	1007.50	1042.0
	8.970	1024.67	1311.48	.41	1.19	1311.72	1.86	.00	992.00	1308.00	1308.00	1007.50	1042.0
	9.350	314.91	1309.69	.39	.00	1309.90	.00	.00	992.00	1308.00	1309.00	1011.00	1042.0
	9.350	501.95	1310.33	.40	.64	1310.56	.66	.00	992.00	1308.00	1309.00	1011.00	1042.0
	9.350	1024.67	1311.51	.42	1.18	1311.77	1.86	.00	992.00	1308.00	1309.00	1011.00	1042.0
*	10.000	314.91	1309.92	.05	.00	1309.93	.00	.00	807.00	1310.00	1310.00	1080.00	.0
*	10.000	501.95	1310.58	.06	.66	1310.59	.66	.00	807.00	1310.00	1310.00	1080.00	.0
*	10.000	1024.67	1311.79	.07	1.21	1311.80	1.87	.00	807.00	1310.00	1310.00	1080.00	.0
*	10.320	314.91	1309.92	.08	.00	1309.93	.00	.00	890.00	1310.00	1310.00	1064.00	.0
*	10.320	501.95	1310.58	.09	.65	1310.59	.66	.00	890.00	1310.00	1310.00	1064.00	.0
*	10.320	1024.67	1311.78	.11	1.20	1311.80	1.87	.00	890.00	1310.00	1310.00	1064.00	.0
*	11.420	314.91	1309.93	.15	.00	1309.97	.00	.00	968.00	1312.00	1312.00	1042.00	.0
*	11.420	501.95	1310.57	.19	.64	1310.64	.67	.00	968.00	1312.00	1312.00	1042.00	.0
*	11.420	1024.67	1311.73	.26	1.16	1311.89	1.92	.00	968.00	1312.00	1312.00	1042.00	.0
	11.620	314.91	1309.88	.40	.00	1310.00	.00	.00	952.00	1312.00	1312.00	1080.00	.0
	11.620	501.95	1310.52	.39	.65	1310.68	.68	.00	952.00	1312.00	1312.00	1080.00	.0
	11.620	1024.67	1311.70	.45	1.18	1311.93	1.93	.00	952.00	1312.00	1312.00	1080.00	.0
*	11.820	314.91	1309.92	.34	.00	1310.03	.00	.00	966.00	1312.00	1312.00	1071.00	.0
*	11.820	501.95	1310.55	.38	.63	1310.71	.67	.00	966.00	1312.00	1312.00	1071.00	.0
*	11.820	1024.67	1311.72	.44	1.17	1311.97	1.94	.00	966.00	1312.00	1312.00	1071.00	.0
*	13.770	314.91	1310.29	.23	.00	1310.37	.00	.00	959.00	1314.00	1314.00	1033.00	.0
*	13.770	501.95	1311.01	.27	.71	1311.13	.76	.00	959.00	1314.00	1314.00	1033.00	.0
	13.770	1024.67	1312.31	.35	1.31	1312.56	2.19	.00	959.00	1314.00	1314.00	1033.00	.0
*	15.770	292.91	1310.62	.49	.00	1310.85	.00	.00	968.00	1312.60	1317.00	1060.00	.0
*	15.770	434.95	1311.39	.46	.78	1311.64	.80	.00	968.00	1312.60	1317.00	1060.00	.0
*	15.770	730.67	1312.87	.40	1.47	1313.10	2.25	.00	968.00	1312.60	1317.00	1060.00	.0
	16.770	292.91	1311.29	.66	.00	1311.66	.00	.00	969.00	1313.20	1318.00	1053.00	.0
	16.770	434.95	1311.93	.63	.64	1312.34	.68	.00	969.00	1313.20	1318.00	1053.00	.0
	16.770	730.67	1313.19	.54	1.26	1313.59	1.94	.00	969.00	1313.20	1318.00	1053.00	.0
	17.770	292.91	1312.65	.89	.00	1313.19	.00	.00	969.00	1314.60	1321.00	1051.00	.0
*	17.770	434.95	1313.08	.90	.44	1313.74	.55	.00	969.00	1314.60	1321.00	1051.00	.0
*	17.770	500.67	1313.93	.58	.84	1314.28	1.09	.00	969.00	1314.60	1321.00	1051.00	.0
*	18.610	270.91	1315.25	1.01	.00	1315.81	.00	.00	915.00	1319.00	1319.00	1066.00	.0
*	18.610	409.95	1315.67	1.01	.42	1316.29	.48	.00	915.00	1319.00	1319.00	1066.00	.0
*	18.610	441.67	1315.75	1.01	.08	1316.38	.57	.00	915.00	1319.00	1319.00	1066.00	.0

	SECNO	Q	CWSEL	FRCH	DIFWSP	EG	DIFEG	STENCL	STCHL	XLBEL	RBEL	STCHR	STENC
*	18.870	270.91	1315.78	.76	.00	1316.04	.00	.00	900.00	1319.00	1319.00	1073.00	.0
*	18.870	409.95	1316.21	.66	.44	1316.47	.43	.00	900.00	1319.00	1319.00	1073.00	.0
*	18.870	441.67	1316.30	.65	.08	1316.56	.52	.00	900.00	1319.00	1319.00	1073.00	.0
*	18.990	270.91	1316.02	1.01	.00	1316.47	.00	.00	900.00	1320.00	1319.00	1055.00	.0
*	18.990	409.95	1316.33	1.01	.31	1316.87	.41	.00	900.00	1320.00	1319.00	1055.00	.0
*	18.990	441.67	1316.38	1.01	.06	1316.95	.49	.00	900.00	1320.00	1319.00	1055.00	.0
*	19.570	270.91	1317.03	.58	.00	1317.36	.00	980.00	954.00	100000.00	100000.00	1019.00	1019.0
*	19.570	409.95	1317.39	.69	.35	1317.91	.56	980.00	954.00	100000.00	100000.00	1019.00	1019.0
*	19.570	441.67	1317.46	.71	.07	1318.03	.68	980.00	954.00	100000.00	100000.00	1019.00	1019.0

	19.680	270.91	1317.08	.66	.00	1317.46	.00	.00	978.00	1316.20	1318.70	1015.20	.0
	19.680	409.95	1317.47	.74	.39	1318.03	.58	.00	978.00	1316.20	1318.70	1015.20	.0
	19.680	441.67	1317.56	.75	.09	1318.15	.70	.00	978.00	1316.20	1318.70	1015.20	.0
	19.780	270.91	1317.08	.81	.00	1317.58	.00	.00	976.50	1317.50	1319.10	1016.00	.0
	19.780	409.95	1317.47	.89	.39	1318.17	.60	.00	976.50	1317.50	1319.10	1016.00	.0
	19.780	441.67	1317.56	.90	.09	1318.30	.72	.00	976.50	1317.50	1319.10	1016.00	.0
*	19.880	270.91	1317.08	1.01	.00	1317.79	.00	.00	975.00	1318.80	1319.30	1016.50	.0
*	19.880	409.95	1317.57	1.01	.49	1318.44	.65	.00	975.00	1318.80	1319.30	1016.50	.0
*	19.880	441.67	1317.67	1.00	.10	1318.57	.78	.00	975.00	1318.80	1319.30	1016.50	.0
*	19.980	270.91	1317.31	1.01	.00	1318.04	.00	.00	974.00	1319.50	1319.50	1016.80	.0
*	19.980	409.95	1317.81	1.01	.50	1318.70	.66	.00	974.00	1319.50	1319.50	1016.80	.0
*	19.980	441.67	1317.91	1.01	.10	1318.83	.80	.00	974.00	1319.50	1319.50	1016.80	.0
*	20.080	270.91	1317.58	1.01	.00	1318.34	.00	.00	978.20	1319.50	1319.50	1017.30	.0
*	20.080	409.95	1318.10	1.01	.53	1319.02	.69	.00	978.20	1319.50	1319.50	1017.30	.0
*	20.080	441.67	1318.21	1.01	.11	1319.16	.82	.00	978.20	1319.50	1319.50	1017.30	.0
*	20.180	270.91	1317.93	1.00	.00	1318.75	.00	.00	982.30	1320.00	1320.00	1017.70	.0
*	20.180	409.95	1318.51	1.00	.58	1319.49	.74	.00	982.30	1320.00	1320.00	1017.70	.0
*	20.180	441.67	1318.62	1.00	.11	1319.64	.89	.00	982.30	1320.00	1320.00	1017.70	.0
*	20.280	270.91	1318.26	1.00	.00	1319.13	.00	.00	983.60	1320.30	1320.30	1016.40	.0
*	20.280	409.95	1318.88	1.00	.61	1319.91	.78	.00	983.60	1320.30	1320.30	1016.40	.0
*	20.280	441.67	1319.00	1.00	.12	1320.06	.93	.00	983.60	1320.30	1320.30	1016.40	.0
*	20.380	270.91	1318.63	1.00	.00	1319.58	.00	.00	985.70	1320.50	1320.50	1014.30	.0
*	20.380	409.95	1319.32	1.00	.69	1320.42	.85	.00	985.70	1320.50	1320.50	1014.30	.0
*	20.380	441.67	1319.45	1.00	.13	1320.59	1.01	.00	985.70	1320.50	1320.50	1014.30	.0
*	20.480	270.91	1318.89	1.00	.00	1320.00	.00	.00	987.70	1320.80	1320.80	1012.30	.0
*	20.480	409.95	1319.73	1.01	.83	1320.95	.95	.00	987.70	1320.80	1320.80	1012.30	.0
*	20.480	441.67	1319.88	1.01	.16	1321.14	1.14	.00	987.70	1320.80	1320.80	1012.30	.0
*	20.580	270.91	1318.68	1.01	.00	1320.20	.00	.00	995.40	1321.00	1321.00	1004.60	.0
*	20.580	409.95	1319.65	1.00	.97	1321.64	1.44	.00	995.40	1321.00	1321.00	1004.60	.0
*	20.580	441.67	1319.84	1.01	.19	1321.94	1.74	.00	995.40	1321.00	1321.00	1004.60	.0

	SECNO	Q	CWSEL	FRCH	DIFWSP	EG	DIFEG	STENCL	STCHL	XLBEL	RBEL	STCHR	STENC
*	20.780	280.70	1319.54	.65	.00	1320.35	.00	.00	994.90	1322.00	1322.00	1005.10	.0
*	20.780	469.88	1319.77	1.00	.24	1321.80	1.45	.00	994.90	1322.00	1322.00	1005.10	.0
*	20.780	540.99	1320.16	1.01	.39	1322.40	2.05	.00	994.90	1322.00	1322.00	1005.10	.0
	20.980	319.84	1319.54	.68	.00	1320.43	.00	.00	994.40	1322.00	1322.00	1005.60	.0
*	20.980	550.24	1319.96	1.01	.42	1322.09	1.66	.00	994.40	1322.00	1322.00	1005.60	.0
*	20.980	721.45	1320.81	1.00	.85	1323.35	2.92	.00	994.40	1322.00	1322.00	1005.60	.0
	21.180	360.00	1319.55	.71	.00	1320.51	.00	.00	993.90	1323.00	1323.00	1006.10	.0
*	21.180	672.00	1320.33	1.00	.78	1322.63	2.12	.00	993.90	1323.00	1323.00	1006.10	.0
*	21.180	1111.00	1322.14	1.01	1.81	1325.35	4.85	.00	993.90	1323.00	1323.00	1006.10	.0
	21.380	360.00	1319.63	.70	.00	1320.57	.00	.00	993.90	1323.00	1323.00	1006.10	.0
	21.380	672.00	1321.48	.72	1.85	1322.96	2.39	.00	993.90	1323.00	1323.00	1006.10	.0
	21.380	1111.00	1323.71	.73	2.23	1325.79	5.22	.00	993.90	1323.00	1323.00	1006.10	.0
*	21.480	360.00	1320.48	.38	.00	1320.77	.00	.00	989.90	1324.00	1324.00	1010.10	.0
*	21.480	672.00	1322.88	.36	2.41	1323.29	2.52	.00	989.90	1324.00	1324.00	1010.10	.0
*	21.480	1111.00	1325.72	.34	2.84	1326.26	5.49	.00	989.90	1324.00	1324.00	1010.10	.0
	21.580	360.00	1320.60	.35	.00	1320.81	.00	.00	985.40	1324.00	1324.00	1014.60	.0
	21.580	672.00	1323.11	.28	2.51	1323.35	2.54	.00	985.40	1324.00	1324.00	1014.60	.0
*	21.580	1111.00	1326.06	.25	2.94	1326.34	5.54	.00	985.40	1324.00	1324.00	1014.60	.0
	21.680	360.00	1320.59	.42	.00	1320.82	.00	.00	981.40	1324.00	1324.00	1018.60	.0
	21.680	672.00	1323.17	.28	2.57	1323.36	2.54	.00	981.40	1324.00	1324.00	1018.60	.0
	21.680	1111.00	1326.16	.23	2.99	1326.37	5.55	.00	981.40	1324.00	1324.00	1018.60	.0
	21.780	360.00	1320.57	.49	.00	1320.86	.00	.00	976.90	1324.00	1324.00	1023.10	.0
	21.780	672.00	1323.18	.30	2.61	1323.37	2.51	.00	976.90	1324.00	1324.00	1023.10	.0
	21.780	1111.00	1326.21	.22	3.03	1326.38	5.52	.00	976.90	1324.00	1324.00	1023.10	.0
*	21.880	360.00	1320.51	.60	.00	1320.91	.00	.00	973.00	1324.00	1324.00	1027.00	.0
*	21.880	672.00	1323.16	.35	2.65	1323.38	2.47	.00	973.00	1324.00	1324.00	1027.00	.0
*	21.880	1111.00	1326.22	.23	3.06	1326.38	5.47	.00	973.00	1324.00	1324.00	1027.00	.0
*	22.220	360.00	1320.63	.83	.00	1321.38	.00	.00	979.00	1324.00	1324.00	1018.00	.0
*	22.220	672.00	1323.11	.51	2.48	1323.56	2.18	.00	979.00	1324.00	1324.00	1018.00	.0
*	22.220	1111.00	1326.15	.33	3.04	1326.48	5.10	.00	979.00	1324.00	1324.00	1018.00	.0
*	22.800	360.00	1321.95	.36	.00	1322.13	.00	.00	960.00	1326.00	1326.60	1025.00	.0
*	22.800	672.00	1323.78	.33	1.82	1323.98	1.85	.00	960.00	1326.00	1326.60	1025.00	.0
	22.800	1111.00	1326.51	.25	2.74	1326.68	4.54	.00	960.00	1326.00	1326.60	1025.00	.0
*	24.050	360.00	1322.94	.59	.00	1323.42	.00	.00	990.00	1324.00	1324.00	1018.00	.0
*	24.050	672.00	1324.44	.58	1.50	1325.08	1.66	.00	990.00	1324.00	1324.00	1018.00	.0
*	24.050	1111.00	1326.70	.47	2.26	1327.38	3.96	.00	990.00	1324.00	1324.00	1018.00	.0
*	25.370	360.00	1324.54	.37	.00	1324.76	.00	.00	981.00	1326.00	1326.00	1018.00	.0
*	25.370	672.00	1326.11	.40	1.56	1326.42	1.66	.00	981.00	1326.00	1326.00	1018.00	.0
*	25.370	1111.00	1327.97	.37	1.86	1328.36	3.59	.00	981.00	1326.00	1326.00	1018.00	.0

SUMMARY OF ERRORS AND SPECIAL NOTES

```
WARNING SECNO=     10.000  PROFILE=  1  CONVEYANCE CHANGE OUTSIDE ACCEPTABLE RANGE
WARNING SECNO=     10.000  PROFILE=  2  CONVEYANCE CHANGE OUTSIDE ACCEPTABLE RANGE
WARNING SECNO=     10.000  PROFILE=  3  CONVEYANCE CHANGE OUTSIDE ACCEPTABLE RANGE

WARNING SECNO=     10.320  PROFILE=  1  CONVEYANCE CHANGE OUTSIDE ACCEPTABLE RANGE
WARNING SECNO=     10.320  PROFILE=  2  CONVEYANCE CHANGE OUTSIDE ACCEPTABLE RANGE
WARNING SECNO=     10.320  PROFILE=  3  CONVEYANCE CHANGE OUTSIDE ACCEPTABLE RANGE

WARNING SECNO=     11.420  PROFILE=  1  CONVEYANCE CHANGE OUTSIDE ACCEPTABLE RANGE
WARNING SECNO=     11.420  PROFILE=  2  CONVEYANCE CHANGE OUTSIDE ACCEPTABLE RANGE
WARNING SECNO=     11.420  PROFILE=  3  CONVEYANCE CHANGE OUTSIDE ACCEPTABLE RANGE

WARNING SECNO=     11.820  PROFILE=  1  CONVEYANCE CHANGE OUTSIDE ACCEPTABLE RANGE
WARNING SECNO=     11.820  PROFILE=  2  CONVEYANCE CHANGE OUTSIDE ACCEPTABLE RANGE
WARNING SECNO=     11.820  PROFILE=  3  CONVEYANCE CHANGE OUTSIDE ACCEPTABLE RANGE

WARNING SECNO=     13.770  PROFILE=  1  CONVEYANCE CHANGE OUTSIDE ACCEPTABLE RANGE
WARNING SECNO=     13.770  PROFILE=  2  CONVEYANCE CHANGE OUTSIDE ACCEPTABLE RANGE

WARNING SECNO=     15.770  PROFILE=  1  CONVEYANCE CHANGE OUTSIDE ACCEPTABLE RANGE
WARNING SECNO=     15.770  PROFILE=  2  CONVEYANCE CHANGE OUTSIDE ACCEPTABLE RANGE
WARNING SECNO=     15.770  PROFILE=  3  CONVEYANCE CHANGE OUTSIDE ACCEPTABLE RANGE

WARNING SECNO=     17.770  PROFILE=  2  CONVEYANCE CHANGE OUTSIDE ACCEPTABLE RANGE
WARNING SECNO=     17.770  PROFILE=  3  CONVEYANCE CHANGE OUTSIDE ACCEPTABLE RANGE

CAUTION SECNO=     18.610  PROFILE=  1  CRITICAL DEPTH ASSUMED
CAUTION SECNO=     18.610  PROFILE=  1  MINIMUM SPECIFIC ENERGY
CAUTION SECNO=     18.610  PROFILE=  2  CRITICAL DEPTH ASSUMED
CAUTION SECNO=     18.610  PROFILE=  2  MINIMUM SPECIFIC ENERGY
CAUTION SECNO=     18.610  PROFILE=  3  CRITICAL DEPTH ASSUMED
CAUTION SECNO=     18.610  PROFILE=  3  MINIMUM SPECIFIC ENERGY

WARNING SECNO=     18.870  PROFILE=  1  CONVEYANCE CHANGE OUTSIDE ACCEPTABLE RANGE
WARNING SECNO=     18.870  PROFILE=  2  CONVEYANCE CHANGE OUTSIDE ACCEPTABLE RANGE
WARNING SECNO=     18.870  PROFILE=  3  CONVEYANCE CHANGE OUTSIDE ACCEPTABLE RANGE

CAUTION SECNO=     18.990  PROFILE=  1  CRITICAL DEPTH ASSUMED
CAUTION SECNO=     18.990  PROFILE=  1  MINIMUM SPECIFIC ENERGY
CAUTION SECNO=     18.990  PROFILE=  2  CRITICAL DEPTH ASSUMED
CAUTION SECNO=     18.990  PROFILE=  2  MINIMUM SPECIFIC ENERGY
CAUTION SECNO=     18.990  PROFILE=  3  CRITICAL DEPTH ASSUMED
CAUTION SECNO=     18.990  PROFILE=  3  MINIMUM SPECIFIC ENERGY

WARNING SECNO=     19.570  PROFILE=  1  CONVEYANCE CHANGE OUTSIDE ACCEPTABLE RANGE
WARNING SECNO=     19.570  PROFILE=  2  CONVEYANCE CHANGE OUTSIDE ACCEPTABLE RANGE
WARNING SECNO=     19.570  PROFILE=  3  CONVEYANCE CHANGE OUTSIDE ACCEPTABLE RANGE

CAUTION SECNO=     19.880  PROFILE=  1  CRITICAL DEPTH ASSUMED
CAUTION SECNO=     19.880  PROFILE=  1  MINIMUM SPECIFIC ENERGY
CAUTION SECNO=     19.880  PROFILE=  2  CRITICAL DEPTH ASSUMED
1
```



```
CAUTION SECNO=     19.880  PROFILE=  2  MINIMUM SPECIFIC ENERGY
CAUTION SECNO=     19.880  PROFILE=  3  CRITICAL DEPTH ASSUMED
CAUTION SECNO=     19.880  PROFILE=  3  MINIMUM SPECIFIC ENERGY

CAUTION SECNO=     19.980  PROFILE=  1  CRITICAL DEPTH ASSUMED
CAUTION SECNO=     19.980  PROFILE=  1  MINIMUM SPECIFIC ENERGY
CAUTION SECNO=     19.980  PROFILE=  2  CRITICAL DEPTH ASSUMED
CAUTION SECNO=     19.980  PROFILE=  2  MINIMUM SPECIFIC ENERGY
CAUTION SECNO=     19.980  PROFILE=  3  CRITICAL DEPTH ASSUMED
CAUTION SECNO=     19.980  PROFILE=  3  MINIMUM SPECIFIC ENERGY

CAUTION SECNO=     20.080  PROFILE=  1  CRITICAL DEPTH ASSUMED
CAUTION SECNO=     20.080  PROFILE=  1  MINIMUM SPECIFIC ENERGY
CAUTION SECNO=     20.080  PROFILE=  2  CRITICAL DEPTH ASSUMED
CAUTION SECNO=     20.080  PROFILE=  2  MINIMUM SPECIFIC ENERGY
CAUTION SECNO=     20.080  PROFILE=  3  CRITICAL DEPTH ASSUMED
CAUTION SECNO=     20.080  PROFILE=  3  MINIMUM SPECIFIC ENERGY

CAUTION SECNO=     20.180  PROFILE=  1  CRITICAL DEPTH ASSUMED
CAUTION SECNO=     20.180  PROFILE=  1  MINIMUM SPECIFIC ENERGY
CAUTION SECNO=     20.180  PROFILE=  2  CRITICAL DEPTH ASSUMED
CAUTION SECNO=     20.180  PROFILE=  2  MINIMUM SPECIFIC ENERGY
CAUTION SECNO=     20.180  PROFILE=  3  CRITICAL DEPTH ASSUMED
CAUTION SECNO=     20.180  PROFILE=  3  MINIMUM SPECIFIC ENERGY

CAUTION SECNO=     20.280  PROFILE=  1  CRITICAL DEPTH ASSUMED
CAUTION SECNO=     20.280  PROFILE=  1  MINIMUM SPECIFIC ENERGY
CAUTION SECNO=     20.280  PROFILE=  2  CRITICAL DEPTH ASSUMED
CAUTION SECNO=     20.280  PROFILE=  2  MINIMUM SPECIFIC ENERGY
CAUTION SECNO=     20.280  PROFILE=  3  CRITICAL DEPTH ASSUMED
CAUTION SECNO=     20.280  PROFILE=  3  MINIMUM SPECIFIC ENERGY

CAUTION SECNO=     20.380  PROFILE=  1  CRITICAL DEPTH ASSUMED
CAUTION SECNO=     20.380  PROFILE=  1  MINIMUM SPECIFIC ENERGY
CAUTION SECNO=     20.380  PROFILE=  2  CRITICAL DEPTH ASSUMED
CAUTION SECNO=     20.380  PROFILE=  2  MINIMUM SPECIFIC ENERGY
CAUTION SECNO=     20.380  PROFILE=  3  CRITICAL DEPTH ASSUMED
CAUTION SECNO=     20.380  PROFILE=  3  MINIMUM SPECIFIC ENERGY
```

```
CAUTION SECNO=     20.480  PROFILE=  1  CRITICAL DEPTH ASSUMED
CAUTION SECNO=     20.480  PROFILE=  1  MINIMUM SPECIFIC ENERGY
CAUTION SECNO=     20.480  PROFILE=  2  CRITICAL DEPTH ASSUMED
CAUTION SECNO=     20.480  PROFILE=  2  MINIMUM SPECIFIC ENERGY
CAUTION SECNO=     20.480  PROFILE=  3  CRITICAL DEPTH ASSUMED
CAUTION SECNO=     20.480  PROFILE=  3  MINIMUM SPECIFIC ENERGY

CAUTION SECNO=     20.580  PROFILE=  1  CRITICAL DEPTH ASSUMED
CAUTION SECNO=     20.580  PROFILE=  1  MINIMUM SPECIFIC ENERGY
CAUTION SECNO=     20.580  PROFILE=  2  CRITICAL DEPTH ASSUMED
CAUTION SECNO=     20.580  PROFILE=  2  MINIMUM SPECIFIC ENERGY
CAUTION SECNO=     20.580  PROFILE=  3  CRITICAL DEPTH ASSUMED
CAUTION SECNO=     20.580  PROFILE=  3  MINIMUM SPECIFIC ENERGY

WARNING SECNO=     20.780  PROFILE=  1  CONVEYANCE CHANGE OUTSIDE ACCEPTABLE RANGE
1
   13JUN95       19:23:13                                                          PAGE   23

CAUTION SECNO=     20.780  PROFILE=  2  CRITICAL DEPTH ASSUMED
CAUTION SECNO=     20.780  PROFILE=  2  MINIMUM SPECIFIC ENERGY
CAUTION SECNO=     20.780  PROFILE=  3  CRITICAL DEPTH ASSUMED
CAUTION SECNO=     20.780  PROFILE=  3  MINIMUM SPECIFIC ENERGY

CAUTION SECNO=     20.980  PROFILE=  2  CRITICAL DEPTH ASSUMED
CAUTION SECNO=     20.980  PROFILE=  2  MINIMUM SPECIFIC ENERGY
CAUTION SECNO=     20.980  PROFILE=  3  CRITICAL DEPTH ASSUMED
CAUTION SECNO=     20.980  PROFILE=  3  MINIMUM SPECIFIC ENERGY

CAUTION SECNO=     21.180  PROFILE=  2  CRITICAL DEPTH ASSUMED
CAUTION SECNO=     21.180  PROFILE=  2  MINIMUM SPECIFIC ENERGY
CAUTION SECNO=     21.180  PROFILE=  3  CRITICAL DEPTH ASSUMED
CAUTION SECNO=     21.180  PROFILE=  3  MINIMUM SPECIFIC ENERGY

WARNING SECNO=     21.480  PROFILE=  1  CONVEYANCE CHANGE OUTSIDE ACCEPTABLE RANGE
WARNING SECNO=     21.480  PROFILE=  2  CONVEYANCE CHANGE OUTSIDE ACCEPTABLE RANGE
WARNING SECNO=     21.480  PROFILE=  3  CONVEYANCE CHANGE OUTSIDE ACCEPTABLE RANGE

WARNING SECNO=     21.580  PROFILE=  3  CONVEYANCE CHANGE OUTSIDE ACCEPTABLE RANGE

WARNING SECNO=     21.880  PROFILE=  1  CONVEYANCE CHANGE OUTSIDE ACCEPTABLE RANGE
WARNING SECNO=     21.880  PROFILE=  2  CONVEYANCE CHANGE OUTSIDE ACCEPTABLE RANGE
WARNING SECNO=     21.880  PROFILE=  3  CONVEYANCE CHANGE OUTSIDE ACCEPTABLE RANGE

WARNING SECNO=     22.220  PROFILE=  1  CONVEYANCE CHANGE OUTSIDE ACCEPTABLE RANGE
WARNING SECNO=     22.220  PROFILE=  2  CONVEYANCE CHANGE OUTSIDE ACCEPTABLE RANGE
WARNING SECNO=     22.220  PROFILE=  3  CONVEYANCE CHANGE OUTSIDE ACCEPTABLE RANGE

WARNING SECNO=     22.800  PROFILE=  1  CONVEYANCE CHANGE OUTSIDE ACCEPTABLE RANGE
WARNING SECNO=     22.800  PROFILE=  2  CONVEYANCE CHANGE OUTSIDE ACCEPTABLE RANGE

WARNING SECNO=     24.050  PROFILE=  1  CONVEYANCE CHANGE OUTSIDE ACCEPTABLE RANGE
WARNING SECNO=     24.050  PROFILE=  2  CONVEYANCE CHANGE OUTSIDE ACCEPTABLE RANGE
WARNING SECNO=     24.050  PROFILE=  3  CONVEYANCE CHANGE OUTSIDE ACCEPTABLE RANGE

WARNING SECNO=     25.370  PROFILE=  1  CONVEYANCE CHANGE OUTSIDE ACCEPTABLE RANGE
WARNING SECNO=     25.370  PROFILE=  2  CONVEYANCE CHANGE OUTSIDE ACCEPTABLE RANGE
WARNING SECNO=     25.370  PROFILE=  3  CONVEYANCE CHANGE OUTSIDE ACCEPTABLE RANGE
```

```
1*********************************************
 *  HEC-2 WATER SURFACE PROFILES             *
 *                                           *
 *  Version   4.6.2;  May 1991               *
 *                                           *
 *  RUN DATE    13JUN95    TIME   19:24:14   *
 *********************************************
```

```
**************************************
*  U.S. ARMY CORPS OF ENGINEERS
*  HYDROLOGIC ENGINEERING CENTER
*  609 SECOND STREET, SUITE D
*  DAVIS, CALIFORNIA 95616-4687
*          (916) 756-1104
**************************************
```

```
X     X  XXXXXXX   XXXXX              XXXXX
X     X  X        X     X            X     X
X     X  X        X                        X
XXXXXXX  XXXX     X          XXXXX    XXXXX
X     X  X        X                  X
X     X  X        X     X            X
X     X  XXXXXXX   XXXXX             XXXXXXX
```

```
1
   13JUN95       19:24:14                                                                    PAGE     1
```

```
                                                                THIS RUN EXECUTED 13JUN95     19:24:14
 **************************************
  HEC-2 WATER SURFACE PROFILES

  Version   4.6.2;  May 1991
 **************************************
```

```
T1      10TH STREET WASH                    STANLEY CONSULTANTS PROJECT # 12183
T2      BASIN NO. 1                                   FILENAME: 12183H2C.SUP
T3      MAIN STREAM SUPERCRITICAL FLOW                    PROPOSED CONDITION
T4
T4

J1  ICHECK    INQ       NINV      IDIR      STRT      METRIC    HVINS     Q         WSEL      FQ

                2                   1     0.001                                   1319.5

J2  NPROF     IPLOT     PRFVS     XSECV     XSECH     FN        ALLDC     IBW       CHNIM     ITRACE

     1                  -1                                      -1

J3  VARIABLE CODES FOR SUMMARY PRINTOUT

     38        43         1         2        13        55        16        14        26        17
     15        56        18                  38        43         1        25        42         8
     39        27        53        54        28         4        37                  38        43
      1        68        50         3        61        27        21        23        24        22
     28

J5  LPRNT     NUMSEC                    ********REQUESTED SECTION NUMBERS********

    -10       -10

QT        1       410
NC    0.018     0.018     0.018        .3        .5
X1    20.58         4     995.4    1004.6        10        10        10
GR    1321.0    995.4   1315.66     995.5   1315.66    1004.5    1321.0    1004.6

X1    20.48         8     987.7    1012.3        10        10        10
GR    1320.8    987.7    1318.2     994.5    1318.2     995.4   1315.65     995.5   1315.65    1004.5
GR    1318.2   1004.6    1318.2    1005.5    1320.8    1012.3
1
   13JUN95       19:24:14                                                                    PAGE     2
```

```
X1    20.38         8     985.7    1014.3        10        10        10
GR    1320.5    985.7    1317.3     994.5    1317.3     995.4   1315.63     995.5   1315.63    1004.5
GR    1317.3   1004.6    1317.3    1005.5    1320.5    1014.3

X1    20.28         8     983.6    1016.4        10        10        10
GR    1320.3    983.6    1316.5     994.5    1316.5     995.4   1315.62     995.5   1315.62    1004.5
GR    1316.5   1004.6    1316.5    1005.5    1320.3    1016.4

NC    0.035     0.035     0.035        .1        .3
X1    20.18         4     982.3    1017.7        10        10        10
GR    1320.0    982.3    1315.6     995.5    1315.6    1004.5    1320.0    1017.7

X1    20.08         4     978.2    1017.3        10        10        10
GR    1319.5    978.2    1315.5     993.0    1315.5    1004.5    1319.5    1017.3

X1    19.98         4     974.0    1016.8        10        10        10
GR    1319.5    974.0    1315.4     990.5    1315.4    1004.5    1319.5    1016.8

X1    19.88         4     975.0    1016.5        10        10        10
GR    1318.8    975.0    1315.3     988.0    1315.3    1004.5    1319.3    1016.5

X1    19.78         4     976.5    1016.0        10        10        10
GR    1317.5    976.5    1315.2     985.5    1315.2    1004.5    1319.1    1016.0

NC    0.045     0.045     0.045
```

X1	19.68	4	978.0	1015.2	11	11	11			
GR	1316.2	978.0	1315.1	983.0	1315.1	1004.5	1318.7	1015.2		
X1	19.57	11	954	1019	58	58	58			
X3	10			980		1019				
GR	1319.0	954	1318.0	958	1317.0	963	1316.0	968	1315.0	980
GR	1314.8	1000	1315.0	1005	1316.0	1008	1317.0	1011	1318.0	1014
GR	1319.0	1019								
X1	18.99	13	900	1055	12	12	12			
GR	1320.0	900	1319.0	924	1317.5	950	1316.0	963	1315.0	980
GR	1314.8	993	1314.3	1000	1314.8	1003	1315.0	1009	1316.0	1020
GR	1317.0	1033	1318.0	1045	1319.0	1055				
NC	0.020	0.020	0.020	0.1	0.3					
X1	18.87	13	900	1073	30	20	26			
GR	1320.0	840	1319.0	900	1318.0	933	1317.0	947	1316.0	957
GR	1315.0	974	1314.2	1000	1315.0	1022	1316.0	1036	1317.0	1047
GR	1318.0	1060	1319.0	1073	1320.0	1093				
X1	18.61	17	915	1066						
GR	1320.0	874	1319.0	915	1318.0	936	1317.0	951	1316.0	963
GR	1315.0	985	1314.0	992	1313.1	998	1313.1	1000	1313.1	1001
GR	1314.0	1011	1315.0	1018	1316.0	1027	1317.0	1038	1318.0	1051
GR	1319.0	1066	1320.0	1081						

THIS RUN EXECUTED 13JUN95 19:24:15

```
**************************************
 HEC-2 WATER SURFACE PROFILES

 Version   4.6.2;  May 1991
**************************************
```

NOTE- ASTERISK (*) AT LEFT OF CROSS-SECTION NUMBER INDICATES MESSAGE IN SUMMARY OF ERRORS LIST

MAIN STREAM SUPERCRITICA

SUMMARY PRINTOUT

	SECNO	Q	CWSEL	CRIWS	QLOB	VLOB	K*XNL	QCH	VCH	K*XNCH	QROB	VROB	K*XN
*	20.580	410.00	1319.64	1319.64	.00	.00	.00	410.00	11.34	18.00	.00	.00	.0
*	20.480	410.00	1318.91	1319.72	.00	.00	.00	410.00	12.68	18.00	.00	.00	.0
*	20.380	410.00	1319.28	1319.32	.00	.00	.00	410.00	8.58	18.00	.00	.00	.0
	20.280	410.00	1318.35	1318.87	.00	.00	.00	410.00	10.80	18.00	.00	.00	.0
*	20.180	410.00	1317.83	1318.50	.00	.00	.00	410.00	11.70	35.00	.00	.00	.0
	20.080	410.00	1317.46	1318.11	.00	.00	.00	410.00	11.40	35.00	.00	.00	.0
	19.980	410.00	1317.32	1317.81	.00	.00	.00	410.00	10.27	35.00	.00	.00	.0
	19.880	410.00	1317.25	1317.57	.00	.00	.00	410.00	9.09	35.00	.00	.00	.0
	19.780	410.00	1317.02	1317.32	.00	.00	.00	410.00	8.90	35.00	.00	.00	.0
*	19.680	410.00	1317.06	1317.06	.00	.00	.00	410.00	7.45	45.00	.00	.00	.0
*	19.570	410.00	1316.85	1316.85	.00	.00	.00	410.00	7.59	45.00	.00	.00	.0
*	18.990	410.00	1316.31	1316.31	.00	.00	.00	410.00	6.01	45.00	.00	.00	.0
	18.870	410.00	1315.56	1315.87	.00	.00	.00	410.00	8.05	20.00	.00	.00	.0
*	18.610	410.00	1315.67	1315.67	.00	.00	.00	410.00	6.32	20.00	.00	.00	.0

MAIN STREAM SUPERCRITICA

SUMMARY PRINTOUT

	SECNO	Q	CWSEL	AREA	ELMIN	DEPTH	XLCH	STENCL	SSTA	ENDST	STENCR	TOPWID	TWA
*	20.580	410.00	1319.64	36.15	1315.66	3.98	.00	.00	995.43	1004.57	.00	9.15	.0
*	20.480	410.00	1318.91	32.34	1315.65	3.26	10.00	.00	992.64	1007.36	.00	14.72	.0
*	20.380	410.00	1319.28	47.76	1315.63	3.65	10.00	.00	989.05	1010.95	.00	21.89	.0
	20.280	410.00	1318.35	37.95	1315.62	2.73	10.00	.00	989.22	1010.78	.00	21.55	.0
*	20.180	410.00	1317.83	35.06	1315.60	2.23	10.00	.00	988.80	1011.20	.00	22.40	.0
	20.080	410.00	1317.46	35.97	1315.50	1.96	10.00	.00	985.72	1010.79	.00	25.07	.0

	19.980	410.00	1317.32	39.91	1315.40	1.92	10.00	.00	982.76	1010.27	.00	27.51	.0
	19.880	410.00	1317.25	45.11	1315.30	1.95	10.00	.00	980.74	1010.37	.00	29.63	.0
	19.780	410.00	1317.02	46.06	1315.20	1.82	10.00	.00	978.36	1009.88	.00	31.51	.0
*	19.680	410.00	1317.06	55.05	1315.10	1.96	10.00	.00	978.00	1010.34	.00	32.34	.0
*	19.570	410.00	1316.85	54.00	1314.80	2.05	11.00	980.00	980.00	1010.56	1019.00	30.56	.0
*	18.990	410.00	1316.31	68.18	1314.30	2.01	58.00	.00	960.30	1024.04	.00	63.74	.1
	18.870	410.00	1315.56	50.91	1314.20	1.36	12.00	.00	964.49	1029.83	.00	65.34	.1
*	18.610	410.00	1315.67	64.90	1313.10	2.57	26.00	.00	970.29	1024.02	.00	53.73	.1

MAIN STREAM SUPERCRITICA

SUMMARY PRINTOUT

	SECNO	Q	CWSEL	FRCH	DIFWSP	EG	DIFEG	STENCL	STCHL	XLBEL	RBEL	STCHR	STENC
*	20.580	410.00	1319.64	1.01	.00	1321.64	.00	.00	995.40	1321.00	1321.00	1004.60	.0
*	20.480	410.00	1318.91	1.51	.00	1321.40	.00	.00	987.70	1320.80	1320.80	1012.30	.0
*	20.380	410.00	1319.28	1.02	.00	1320.42	.00	.00	985.70	1320.50	1320.50	1014.30	.0
	20.280	410.00	1318.35	1.44	.00	1320.16	.00	.00	983.60	1320.30	1320.30	1016.40	.0
*	20.180	410.00	1317.83	1.65	.00	1319.96	.00	.00	982.30	1320.00	1320.00	1017.70	.0
	20.080	410.00	1317.46	1.68	.00	1319.48	.00	.00	978.20	1319.50	1319.50	1017.30	.0
	19.980	410.00	1317.32	1.50	.00	1318.96	.00	.00	974.00	1319.50	1319.50	1016.80	.0
	19.880	410.00	1317.25	1.30	.00	1318.54	.00	.00	975.00	1318.80	1319.30	1016.50	.0
	19.780	410.00	1317.02	1.30	.00	1318.25	.00	.00	976.50	1317.50	1319.10	1016.00	.0
*	19.680	410.00	1317.06	1.01	.00	1317.93	.00	.00	978.00	1316.20	1318.70	1015.20	.0
*	19.570	410.00	1316.85	1.01	.00	1317.75	.00	980.00	954.00	100000.00	100000.00	1019.00	1019.0
*	18.990	410.00	1316.31	1.02	.00	1316.87	.00	.00	900.00	1320.00	1319.00	1055.00	.0
	18.870	410.00	1315.56	1.61	.00	1316.57	.00	.00	900.00	1319.00	1319.00	1073.00	.0
*	18.610	410.00	1315.67	1.01	.00	1316.29	.00	.00	915.00	1319.00	1319.00	1066.00	.0

SUMMARY OF ERRORS AND SPECIAL NOTES

```
CAUTION SECNO=     20.580  PROFILE=  1  CRITICAL DEPTH ASSUMED

CAUTION SECNO=     20.480  PROFILE=  1  20 TRIALS ATTEMPTED TO BALANCE WSEL

CAUTION SECNO=     20.380  PROFILE=  1  WSEL ASSUMED BASED ON MIN DIFF
CAUTION SECNO=     20.380  PROFILE=  1  20 TRIALS ATTEMPTED TO BALANCE WSEL

WARNING SECNO=     20.180  PROFILE=  1  CONVEYANCE CHANGE OUTSIDE ACCEPTABLE RANGE

CAUTION SECNO=     19.680  PROFILE=  1  CRITICAL DEPTH ASSUMED
CAUTION SECNO=     19.680  PROFILE=  1  PROBABLE MINIMUM SPECIFIC ENERGY
CAUTION SECNO=     19.680  PROFILE=  1  20 TRIALS ATTEMPTED TO BALANCE WSEL

CAUTION SECNO=     19.570  PROFILE=  1  CRITICAL DEPTH ASSUMED
CAUTION SECNO=     19.570  PROFILE=  1  PROBABLE MINIMUM SPECIFIC ENERGY
CAUTION SECNO=     19.570  PROFILE=  1  20 TRIALS ATTEMPTED TO BALANCE WSEL

CAUTION SECNO=     18.990  PROFILE=  1  CRITICAL DEPTH ASSUMED
CAUTION SECNO=     18.990  PROFILE=  1  PROBABLE MINIMUM SPECIFIC ENERGY
CAUTION SECNO=     18.990  PROFILE=  1  20 TRIALS ATTEMPTED TO BALANCE WSEL

CAUTION SECNO=     18.610  PROFILE=  1  CRITICAL DEPTH ASSUMED
CAUTION SECNO=     18.610  PROFILE=  1  PROBABLE MINIMUM SPECIFIC ENERGY
CAUTION SECNO=     18.610  PROFILE=  1  20 TRIALS ATTEMPTED TO BALANCE WSEL
```

DESIGNED BY SW	DATE 5/12/95	SHEET NO. 1	PAGE NO.
CHECKED BY GSB	DATE 6-13-95	OF 8	JOB NO. 12193
REVIEWED BY	DATE	SUBJECT:	
APPROVED BY	DATE		

EAST TRIBUTARY INLET:

ENERGY DISSIPATION STRUCTURE

OUTLET HYDRAULICS:

THE OUTLET OF THE EAST TRIBUTARY CONSISTS OF THE 2-60" PIPES AT A 16% SLOPE. SUPERCRITICAL, NORMAL DEPTH FLOW WILL OCCUR THROUGHOUT THE ENTIRE RANGE OF FLOWS. THE FLOW RATE THAT IS DESIGNED FOR IS DETERMINED AS THE GREATEST INFLOW FLOW RATE WHILE THE OUTLET END OF THE PIPES AND THE BASIN LOW FLOW CHANNEL ARE UNSUBMERGED. MAX INFLOW IS APPROX 123 cfs.

THE PIPE INVERT AND CHANNEL BOTTOM ELEVATION ARE 1308.1. AT A CORRESPONDING BASIN STAGE OF 1309.1 APPROXIMATELY 72 cfs IS PREDICTED TO BE ENTERING THE BASIN (36 cfs PER PIPE)

THE NEXT SHEETS CONTAIN THE NORMAL DEPTH HYDRAULICS FOR THE PIPES AT 36 cfs AND 123 cfs EACH

SHEET 4 CONTAINS THE NORMAL DEPTH HYDRAULICS FOR THE LOW FLOW CHANNEL AT 72 cfs.

THE FOLLOWING REFERENCES HAVE BEEN USED TO INVESTIGATE POTENTIAL ALTERNATIVES FOR THE EAST TRIBUTARY OUTLET.

"HYDRAULIC DESIGN OF ENERGY DISSIPATORS FOR CULVERTS AND CHANNELS", HYDRAULIC ENGINEERING CIRCULAR NO. 14 (HEC14), SEPT 1983.

"HYDRAULIC DESIGN OF STILLING BASINS AND ENERGY DISSIPATORS" EM NO. 25 US DEPARTMENT OF INT. BUREAU OF REC, MAY 1984

SUMMARY:

RATHER THAN ALLOWING HIGH SUPERCRITICAL VELOCITIES TO OCCUR THEN FORCING THE FLOW BACK TO SUBCRITICAL WITH AN ENERGY DISSIPATION STRUCTURE, ROUGNESS ELEMENTS PLACED WITHIN THE CULVERT BARRELS WILL MAIN FLOW VELOCITIES NEAR CRITICAL PROVIDING APPROXIMATELY A 70% REDUCTION IN OUTLET VELOCITY. THE VELOCITIES EXPERIENCED NEAR CRITICAL ARE MANAGEABLE WITH IN THE CURRENT DESIGN LIMITS.

2/8

Circular Channel Analysis & Design
Solved with Manning's Equation

Open Channel - Uniform flow SW 5/19/95

Worksheet Name: 10TH STREET WASH

Comment: EAST TRIB. INLET HYDRAULICS

Solve For Actual Depth

Given Input Data:

Diameter.....	5.00 ft
Slope.....	0.1600 ft/ft
Manning's n.....	0.012
Discharge.....	36.00 cfs

Computed Results:

Depth.....	0.61 ft
Velocity.....	26.19 fps
Flow Area.....	1.37 sf
Critical Depth....	1.67 ft
Critical Slope....	0.0028 ft/ft
Percent Full.....	12.24 %
Full Capacity.....	1128.58 cfs
QMAX @.94D.....	1214.03 cfs
Froude Number.....	7.13 (flow is Supercritical)

Open Channel Flow Module, Version 3.21 (c) 1990
Haestad Methods, Inc. * 37 Brookside Rd * Waterbury, Ct 06708

3/8

Circular Channel Analysis & Design
Solved with Manning's Equation

Open Channel - Uniform flow SW 5/19/95

Worksheet Name: 10TH STREET WASH

Comment: EAST TRIB. INLET HYDRAULICS

Solve For Actual Depth

Given Input Data:

Diameter.....	5.00 ft
Slope.....	0.1600 ft/ft
Manning's n.....	0.012
Discharge.....	123.00 cfs

Computed Results:

Depth.....	1.11 ft
Velocity.....	37.69 fps
Flow Area.....	3.26 sf
Critical Depth....	3.17 ft
Critical Slope....	0.0036 ft/ft
Percent Full.....	22.29 %
Full Capacity.....	1128.58 cfs
QMAX @.94D.....	1214.03 cfs
Froude Number.....	7.50 (flow is Supercritical)

Open Channel Flow Module, Version 3.21 (c) 1990
Haestad Methods, Inc. * 37 Brookside Rd * Waterbury, Ct 06708

4/8

Trapezoidal Channel Analysis & Design
Open Channel - Uniform flow

Worksheet Name: 10TH STREET WASH

SW 5/19/95

Comment: BASIN LOW FLOW CHANNEL

Solve For Depth

Given Input Data:

Bottom Width.....	10.00 ft
Left Side Slope..	3.00:1 (H:V)
Right Side Slope.	3.00:1 (H:V)
Manning's n.....	0.018
Channel Slope....	0.0025 ft/ft
Discharge.....	72.00 cfs

Computed Results:

Depth.....	1.28 ft
Velocity.....	4.07 fps
Flow Area.....	17.70 sf
Flow Top Width...	17.67 ft
Wetted Perimeter.	18.09 ft
Critical Depth...	1.05 ft
Critical Slope...	0.0051 ft/ft
Froude Number....	0.72 (flow is Subcritical)

Open Channel Flow Module, Version 3.21 (c) 1990
Haestad Methods, Inc. * 37 Brookside Rd * Waterbury, Ct 06708

DESIGNED BY SW DATE 5/22/95 SHEET NO. 5 PAGE NO.
CHECKED BY GSB DATE 6-14-95 OF 8 JOB NO. 12123
REVIEWED BY DATE SUBJECT:
APPROVED BY DATE

EAST TRIBUTARY ENERGY DISSIPATORS:

HEC 14

TUMBLING FLOW IN CIRCULAR CULVERTS p. VII - B - 7

CASE 1: Q = 36 cfs (PER PIPE) MAX Q w/o TAILWATER.
CASE 2: Q = 123 cfs (PER PIPE) MAX Q POSSIBLE.

CASE 1: $D_1 = 5'$

$h/D_1 = 0.125 \Rightarrow h = 0.625' = 7.5'' \pm 20\%$

SAY $\underline{\underline{h = 6''}}$

$L/D_1 = 2.0 \Rightarrow \underline{\underline{L = 10'}}$ ok

$D_i = D_1 - 2(h) \Rightarrow D_i = 4'$

$Q = 36$ cfs

$d_c = 1.67'$

$\frac{y_c}{D_i} = \frac{1.67'}{4'} = .4175$

$A_c = 4.97$

$V_0 = V_c = Q/A_c = 36/4.97 = \underline{\underline{7.24 \text{ ft/s}}}$

BASIN LOW FLOW CHANNEL VELOCITY @ 2(36 cfs) IS:

$V = 4.1$ ft/s

SO, FROM THE OUTLET OF THE CULVERT TO THE LOW FLOW CHANNEL, THE VELOCITY NEEDS TO DROP FROM 7.24 ft/s TO 4.1 ft/s WHICH IS POSSIBLE

DESIGNED BY SW DATE 5/22/95 SHEET NO. 6 PAGE NO.
CHECKED BY GSB DATE 6-14-95 OF 8 JOB NO. 12103
REVIEWED BY DATE SUBJECT:
APPROVED BY DATE

EAST TRIBUTARY ENERGY DISSIPATORS: (CONTINUED)

HEC 14

TUMBLING FLOW IN CIRCULAR CULVERTS p. VII-B-7

CASE 2: $Q = 123$ cfs (per pipe)

$D_1 = 5'$ WHICH IS SLIGHTY SMALLER THAN THE RECOMMENDED SIZE ACCORDING TO VII-B-12 BUT SHOULD MAINTAIN SUFFICIENT CAPACITY TO PASS THE DESIGN PEAK FLOW AT THE 16% GRADE. NORMAL DEPTH CALCULATIONS INDICATE ADEQUATE CAPACITY.

$h_1/D_1 = 0.125 \Rightarrow \underline{h = 6''}$ (SEE PREVIOUS PAGE)

$L/D_1 = 2.0 \Rightarrow \underline{L = 10'}$

$D_i = 4'$

$Q = 123$ cfs

$d_c = 3.2'$

$\frac{Y_c}{D_i} = \frac{3.2'}{4'} = 0.80$

$A_c = 10.78$

$U_o = U_c = Q/A_c = 123/10.78 = \underline{11.4 \text{ ft/s}}$

COMPARE TO BASIN LOW FLOW CHANNEL VELOCITY (@ MAX $Q = 100$ cfs)

$V = 4.5$ ft/s

NOTE: AT ANY FLOWS ABOVE 36 cfs PER PIPE THE HEC-1 MODEL INDICATES THAT TAILWATER CONDITIONS WILL EXIST AT THE CULVERT OUTLET. IE, AT PEAK INFLOW OF 123 cfs PER PIPE THE BASIN STAGE IS ESTIMATED TO BE 1313.5 ±.

STANLEY CONSULTANTS

Job No. 12183 Page No. 7

Computed by DRS Date 22 MAY 95 Subject

Checked by SW Date 5/22/95

Reviewed by Date

Approved by Date Sheet No. 7 of 8

ENERGY DISSIPATOR BAFFLES

6x6 C-1-P OR PRECAST CONCRETE BAFFLE

WT 6x13.5 GALVANIZED

4 PAIRS – 1/2"Φ STAINLESS STEEL CHEMICAL ADHESIVE ANCHORS @ 12"

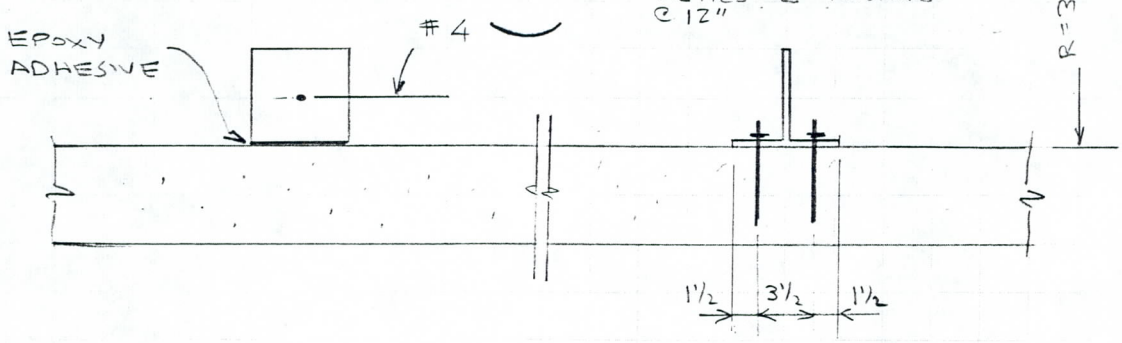

CONCRETE ALTERNATE

STEEL ALTERNATE

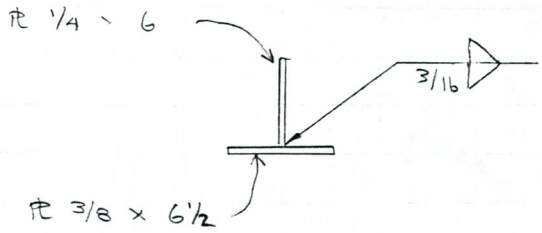

DESIGNED BY SW DATE 5/22/95 SHEET NO. 8 PAGE NO.
CHECKED BY GSB DATE 6-14-95 OF 8 JOB NO. 12183
REVIEWED BY DATE SUBJECT:
APPROVED BY DATE

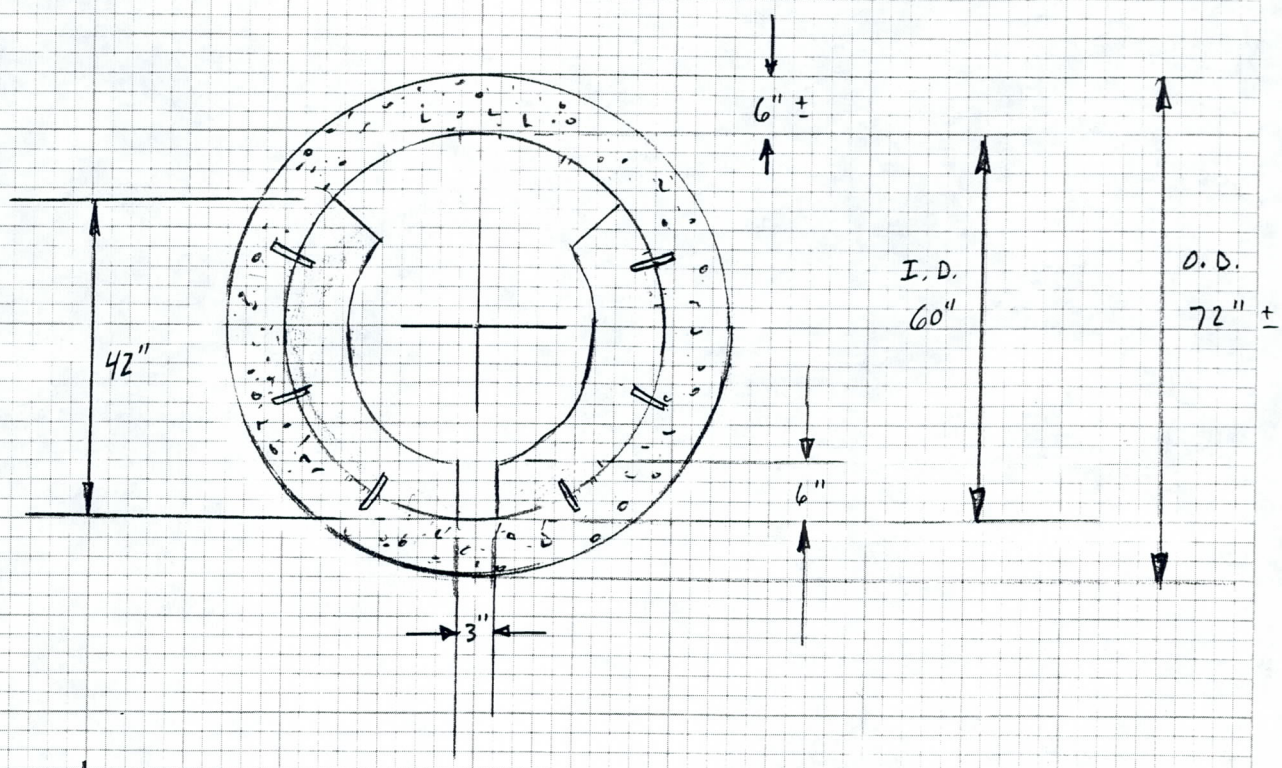

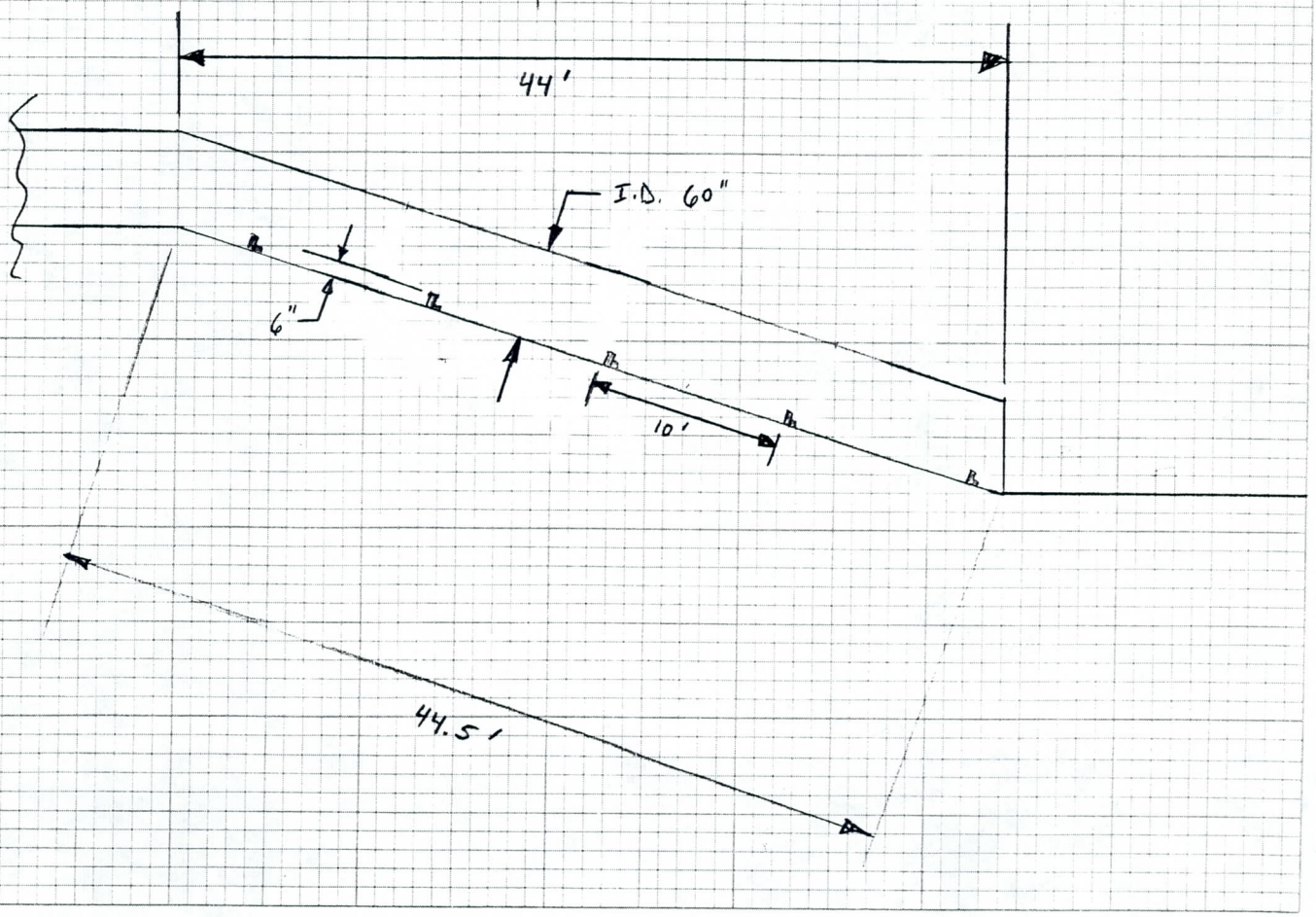

SC 3020

DESIGNED BY SW DATE 6/13/95 SHEET NO. 1 PAGE NO.
CHECKED BY GTB DATE 6-14-95 OF 1 JOB NO. 12183
REVIEWED BY DATE SUBJECT:
APPROVED BY DATE

WEST TRIBUTARY DOWNSTREAM FROM INLET WEIR

DOWNSTREAM OF THE INLET WEIR, SUPERCRITICAL FLOWS OCCUR WITH MAX. VELOCITY AND FROUDE NUMBER OF 13 ft/s AND 1.68 RESPECTIVELY. THE PROPOSED METHOD OF RE-ESTABLISHING SUBCRITICAL FLOW WITH MANAGEABLE VELOCITIES IS TO EXTEND RIPRAP PROTECTION DOWNSTREAM 50' TO PROTECT THE CHANNEL FROM POTENTIAL SCOUR AND TO TRANSITION THE FLOW BACK TO EXISTING CHANNEL CONDITIONS.

THE DESIGN AND MODELS REFLECT THE 100YR 6 HOUR EVENT. HOWEVER, DUE TO MAINTANENCE AND AESTHETIC REASONS, THE RIPRAP WILL BE BURIED BY APPROX. 1.0' OF NATIVE SOIL. THE MODEL REFLECTS THE ROUGHNESS OF THE RIPRAP DUE TO THE POTENTIAL FOR THE COVER TO BE ERODED AWAY. FOR LOWER FREQUENCY EVENTS, THE NATIVE SOIL, ONCE VEGETATION IS ESTABLISHED, SHOULD BE STABLE AND THE RESULTING EFFECT OF TRANSITIONING FLOW SHOULD BE THE SAME AS THE RIPRAP (COMPARING THE ROUGHNESS "n" = 0.045 FOR RE-ESTABLISHED CHANNEL AND "n" = 0.035 FOR EXPOSED RIPRAP).

TWO HEC-2 MODELS INDICATE THE FLOW CONDITIONS FOR THE 100YR 6HR:

1.) 12183H2C - SUBCRITICAL RUN FOR FULL LENGTH OF PROJECT FOR 10YR AND 100YR 6HOUR, AND THE 100YR 2HR USED FOR EMERGENCY SPILLWAY DESIGN.

2.) 12183H2C.SUP - SUPERCRITICAL RUN STARTING AT THE DOWNSTREAM END OF THE WEIR AND CONTINUING DOWNSTREAM TO THE PRIVATE DRIVEWAY.

THE SUPERCRITICAL MODEL SHOWS THE WORST CASE FLOW VELOCITY OF 7.45 ft/s AT THE END OF THE RIPRAP SECTION. THE DEPTH OF FLOW IS APPROX 1.96'. THESE TWO VALUES INDICATE MINOR SCOUR POTENTIAL.

DESIGNED BY SW DATE 5/9/95 SHEET NO. 1 PAGE NO.
CHECKED BY GSB DATE 6-14-95 OF 2 JOB NO. 12193
REVIEWED BY DATE SUBJECT:
APPROVED BY DATE

RIPRAP DESIGN: GROUTED RIPRAP

GROUTED RIPRAP FOR WEST TRIBUTARY CHANNEL LINING AND TOP OF BANK ALONG RETAINING WALL (EAST BANK 10TH STREET WASH CHANNEL).

THE FCDMC "DRAINAGE DESIGN MANUAL FOR MARICOPA COUNTY, VOLUME II HYDRAULICS" PROVIDES MINIMAL DESIGN GUIDELINES FOR GROUTED RIPRAP. THEREFORE, THE DESIGN PROCEDURES PRESENTED IN THE U.S. DEPARTMENT OF TRANSPORTATION FEDERAL HIGHWAY ADMINISTRATION HYDRAULIC ENGINEERING CIRCULAR NO. 11 "DESIGN OF RIPRAP REVETMENT" IS USED TO SIZE THE GROUTED RIPRAP SECTIONS.

p. 99 – 104

FIGURE 57: THE MAXIMUM VELOCITY EXPERIENCED IN THE RIPRAP SECTIONS IS APPROXIMATELY 10 ft/s.

THE CORRESPONDING RIPRAP THICKNESS IS 14".

ROCK SIZE WILL BE DETERMINED BY THE RECOMMENDATIONS SET FORTH IN HEC NO. 11.

MEDIAN ROCK SIZE, D_{50} = 0.67 (14") = 9.38

SAY D_{50} = 9"

MAXIMUM ROCK SIZE = 14" (BLANKET THICKNESS)

AND

MINIMUM ROCK SIZE = 6"

MINIMUM GROUT PENETRATION = 10" (ALLOW 1/4 TO 1/3 OF FACE STONE TO BE EXPOSED)

SC 3020

DESIGNED BY SW DATE 5/15/95 SHEET NO. 2 PAGE NO.
CHECKED BY GSB DATE 6-14-95 OF 2 JOB NO. 12183
REVIEWED BY DATE SUBJECT:
APPROVED BY DATE

RIPRAP DESIGN: GROUTED RIPRAP

THE DESIGN SCOUR DEPTH IS BASED ON THE DESIGN SCOUR DEPTH ESTIMATED FOR THE LOOSE RIPRAP. THE SAME CHANNEL FLOW CHARACTERISTICS ARE ASSUMED TO BE ADEQUATE. THE MAXIMUM SCOUR DEPTH D_s FOR CHANNEL FLOW IS 2.29'. USING A SAFETY FACTOR OF 1.5, THE DESIGN SCOUR DEPTH IS 3.44'.

THE RIPRAP TURNDOWN DEPTH WILL BE 5.0' FROM FINISHED GRADE. THE UPSTREAM AND DOWNSTREAM RIPRAP TURNDOWNS WILL BE THE SAME.

THE THICKNESS WILL BE 14" AS PREVIOUSLY ESTIMATED FOR THE GROUTED RIPRAP.

THE TURNDOWN WILL BE SLOPED AT A MAXIMUM OF 2:1.

SEE DETAIL IN PLANS

DESIGNED BY SW DATE 6/12/95 SHEET NO. 1 PAGE NO.
CHECKED BY CSB DATE 6-13-95 OF 1 JOB NO. 12183
REVIEWED BY DATE SUBJECT:
APPROVED BY DATE

BASIN LOW FLOW CHANNEL : UPLIFT PRESSURES

TYPICAL DITCH SECTION

TRAPEZOID : 10' BOTTOM
3:1 SIDES
1.5' DEPTH
2.0' TURNDOWNS

(OMIT TURNDOWNS FROM CALCULATIONS)

AREA OF WATER DISPLACED = $2(10) + 2(4.75)(.5) + 1.5(4.5)$
$= 31.5\ ft^2$

WEIGHT OF WATER DISPLACED : $(31.5\ ft^2)(62.4\ lbs/ft^3)$
$= 1965.6$ lbs per L.F.

WEIGHT OF CHANNEL = $[2(4.75) + 10]\ 150\ lbs/ft^3$:
$= 2925$ lbs per L.F.

$2925 > 1965.6$ ok

DESIGNED BY SW DATE 6/12/95 SHEET NO. 1 PAGE NO.
CHECKED BY GSB DATE 6-13-95 OF 3 JOB NO. 12193
REVIEWED BY DATE SUBJECT:
APPROVED BY DATE

CONCRETE PIPES FLOTATION:

3 THINGS TO CONSIDER:

1.) WEIGHT OF PIPE

2.) WEIGHT OF VOLUME OF WATER DISPLACED

3.) WEIGHT OF BACKFILL

1.)

(EQN 5.14) $W_p = \pi/4 \left(B_c^2 - D^2\right) 150$; UNIT WEIGHT OF CONCRETE $= 150$ lb/ft³

$B_c = 5' + 2(6") = 6'$

$D = 5'$

$W_p = \pi/4 (6^2 - 5^2) 150$

$W_p = 1300$ lb per L.F.

2.)

(EQN 5.15) $W_w = \pi/4 \left(B_c^2\right) 62.4$

$W_w = \pi/4 (6^2) 62.4$

$W_w = 1765$ lb per L.F.

DIFFERENCE IS THE WEIGHT OF BACKFILL REQUIRED:

$1765 - 1300 = 465$ lb per L.F.

3.)

(EQN 5.16) $w_I = w - \left(\frac{w}{SG \times 62.4} \times 62.4\right)$

OR

(EQN: 5.17) $w_I = w\left(1 - \frac{1}{SG}\right)$; w_I = ave. unit wt. of inundated backfill

w = ave. unit wt. of dry backfill

SG = Specific Gravity of backfill.

(EQN: 5.18) $W_I = w_I \left(0.1073 B_c^2 + H_I B_c\right)$

; $H_I = 1'$ (MIN.)

SC 3020

DESIGNED BY SW DATE 6/12/95 SHEET NO. 2 PAGE NO.
CHECKED BY GSB DATE 6-14-95 OF 3 JOB NO. 12183
REVIEWED BY DATE SUBJECT:
APPROVED BY DATE

CONCRETE PIPES FLOTATION: (CONTINUED)

3.) CONTINUED

$$w_I = w\left(1 - \frac{1}{SG}\right) \quad ; \quad w \approx 110 \text{ pcf}$$
$$S.G. = 2.40$$

$$w_I = 110\left(1 - \frac{1}{2.40}\right)$$

$$w_I = 64.17 \text{ lbs/ft}^3$$

$$W_I = 64.17\left[0.1072(6)^2 + (1)(6)\right]$$

$$W_I = 630 \text{ lbs per L.F.}$$

* SINCE THE BACKFILL IS SUBJECT TO WASH FLOWS THE CONTRIBUTING WEIGHT WILL BE 0.0 ASSUMING THAT THE PIPE COVER IS ERODED DURING PEAK EVENT.

THEREFORE, THE REQUIRED WEIGHT WILL BE MADE UP FOR BY PLACING NON-REINFORCED CONCRETE AT AND AROUND PIPE JOINTS. THIS CONCRETE IS ASSUMED TO BE RIGID AND PERMANENT SO THAT THE ENIRE WIDTH (BEYOND THE OUTSIDE DIAMETER OF PIPE) WITHIN THE TRENCH LINES WILL BE USED TO COMPUTE THE WEIGHT ADDED. REFER TO PIPE TRENCH DETAIL FOR AREA CALCULATIONS. BASICALLY THE AREA INDICATED BY PIPE BACKFILL WILL BE REPLACED WITH DUMPED CONCRETE UP TO 6" ABOVE TOP OF PIPE.

REQUIRED WEIGHT = 465 lb per L.F. OR
5580 lbs per 12' SECTION OF PIPE.

$$\text{AREA} = (3.5)(18) - \frac{\pi(6)^2}{4} = 34.73 \text{ ft}^2$$

$$\text{REQ'D WIDTH} = 5580 \text{ lbs} / (87.6 \text{ lb/ft}^3)(34.73 \text{ ft}^2) = 1.83 \text{ L.F.}$$

SAY 2 L.F. OF CONCRETE CAP FOR EACH JOINT.

* APPLICABLE TO WEST TRIB. INLET PIPES, STA 11+30 TO 12+50

L = 120 × 2 = 240 L.F. ⇒ SAY 20 JOINTS

DESIGNED BY SW DATE 6/12/95 SHEET NO. 3 PAGE NO.
CHECKED BY [illegible] DATE 6-14-95 OF 3 JOB NO. 12183
REVIEWED BY DATE SUBJECT:
APPROVED BY DATE

CONCRETE PIPE FLOTATION: (CONTINUED)

20 JOINTS @ 2' EA

VOLUME = (20)(2)(34.73)/27 = 52 C.Y.

THE CONCRETE JOINTS WILL ALSO SERVE TO REDUCE SCOUR POTENTIAL BY PROVIDING SMALL CUT OFF WALLS ALONG THE LENGTH OF THE PIPES.

SC 3020

CONCRETE PIPE HANDBOOK

Published by
AMERICAN CONCRETE PIPE ASSOCIATION
8320 Old Courthouse Road
Vienna, Virginia 22180

$27.50

Technical programs of the American Concrete Pipe Association, since its founding in 1907, have been designed to compile engineering data on the hydraulics, loads and supporting strengths and design of concrete pipe. Information obtained is disseminated to producers and consumers of concrete pipe through technical literature and promotional handbooks. Other important activities of the Association include development of product specifications, government relations, participation in related trade and professional societies, advertising and promotion, an industry safety program and educational training. These services are made possible by the financial support of member companies located throughout the United States, Canada, and in almost 40 foreign countries. A directory of member companies is available on request from the American Concrete Pipe Association, 8320 Old Courthouse Road, Vienna, Virginia 22180 (703) 821-1990.

Copyright 1981
AMERICAN CONCRETE PIPE ASSOCIATION

All rights reserved.
This book or any part thereof must not be reproduced in any form without the written permission of the American Concrete Pipe Association.

Library of Congress catalog number 80-65386
Printed in the United States of America

First printing January, 1980
20,000 copies
Second printing April, 1981
10,000 copies

ISBN 0-960-38681-5

portation Officials, American Society of Civil Engineers, U.S. Army Corps of Engineers, American Society for Testing and Materials, U.S. Bureau of Reclamation, U.S. Environmental Protection Agency, U.S. Soil Conservation Service, and many others. Credit for much of the data in this Handbook goes to the engineers of these organizations and agencies. Every effort has been made to assure accuracy and technical data presented are considered reliable, but no guarantee is made nor liability assumed.

The Handbook was a time consuming and dedicated effort by the following staff of the American Concrete Pipe Association:

Mike Bealey	Vice President of Technical Services
John J. Duffy	Vice President of Marketing Services
Russell B. Preuit	Director of Engineering Services
Robert E. Stuckey	Director of Publications

We are greatly indebted to the expert advice, encouragement, editing and deadline awareness provided by Robert F. Baker, Consulting Engineer, and to the technical review and assistance of the following representatives of the member companies of the American Concrete Pipe Association who served as a review committee:

J. Stuart Boldry	Field Concrete Pipe Co., Inc.
Charles L. Brown	Faulkner Concrete Pipe Company
Robert R. Chisholm	Supercrete Incorporated
Jessie R. Collier	Wilson Concrete Company
Robert A. Parry	Associated Sand & Gravel Company, Inc.
Harry T. Peck	Gifford-Hill & Company, Inc.
Lee E. Stockton	Price Brothers Company

Aside from the immediate use of the Handbook as an educational tool, it is also intended to serve as a basis for continuing growth in the use of precast concrete pipe. The state of the art is presented, not only to assist current practice, but as a point of departure for research and development to produce further economies and continued excellence in performance. Concrete pipe has enjoyed a long and successful history of serving the public interest by transporting sewage and other wastes, and through drainage and flood protection for highways, railroads, airports, and agricultural purposes. To continue to meet the public need, the orderly introduction of new technology is considered vital to the engineering profession and the concrete pipe industry.

Richard E. Barnes, President
American Concrete Pipe Association

LIST OF CONTENTS

Preface

List of Contents

Chapter 1. Development of Technology

Chapter 2. Materials and Manufacture

Chapter 3. Hydraulic Design

Chapter 4. Loads and Supporting Strengths

Chapter 5. Supplemental Design Considerations and Procedures

Chapter 6. Durability Considerations

Chapter 7. Design for Sulfide Control

Chapter 8. Product Standards and Testing

Chapter 9. Installation, Inspection and Construction Testing

Chapter 10. Soil - Structure Interaction

List of Equations

Glossary of Terms

Index

EXAMPLE

Given: A 42-inch diameter concrete pipe storm sewer is to be installed on curved alignment corresponding to the roadway curvature. The pipe will be manufactured in 7.5-foot lengths with a 4.5-inch wall thickness. The curve data for the pipe centerline is:

P.I. = 50 + 00
P.C. = 49 + 29.6
P.T. = 50 + 63.1
Δ = 45 degrees
R = 170 feet

Find: The required pull per joint for deflected straight pipe and the required drop for radius pipe.

Solution: The required pull per joint can be determined by solving *Equation 5.7* to obtain a value for 1/2 (Δ/N):

$$R = 2\,\frac{L}{\left(\tan\frac{1}{2}\frac{\Delta}{N}\right)}$$

$$\frac{1}{2}\frac{\Delta}{N} = \tan^{-1}\frac{L}{2R}$$

$$= \tan^{-1}\frac{7.5}{2(170)}$$

$$= 1.2636 \text{ degrees}$$

Substituting in Equation 5.8:

$$\frac{1}{2}\frac{\Delta}{N} = \sin^{-1}\frac{Pull}{2(D + 2t)}$$

$$1.2636 = \sin^{-1}\frac{Pull}{2[42 + (2 \times 4.5)]}$$

$$Pull = 2.25 \text{ inches}$$

The required drop per joint for radius pipe can be determined by solving *Equation 5.13* for *drop*:

$$Drop = \frac{2B_cL}{2R + B_c}$$

$$= \frac{2(51)(7.5 \times 12)}{2(170 \times 12) + 51}$$

$$= 2.22 \text{ inches}$$

The required drop can also be determined by use of *Figure 5.21*:

$$\frac{R}{B_c} = 40.0$$

Enter *Figure 5.21* on the vertical scale at an R/B_c value of 40.0, project horizontally to the right until the diagonal line representing a pipe length of 7.5 feet is intersected, from this point project vertically down to the horizontal scale and read a value of 2.22 inches for the required drop.

Answer: The required pull for deflected straight pipe is 2.25 inches. The required drop for radius pipe is 2.22 inches.

It is important to determine if local concrete pipe manufacturers have the capability to manufacture pipe with the required pull or drop.

BUOYANCY OF CONCRETE PIPE

The density of concrete is approximately 2.4 times that of water, but there are several installation conditions where the possibility of pipe flotation exists. Some of these conditions are: flooding to consolidate backfill; pipelines in areas which will be inundated, such as a flood plain or under a future man-made lake; subaqueous pipelines; and pipelines in areas with a high groundwater table. When such conditions exist, flotation probability should be determined.

The buoyancy of a concrete pipeline depends upon the weight of the pipe, the weight of the volume of water displaced by the pipe, the weight of the liquid load carried by the pipe, and the weight of the backfill. As a conservative analytical practice, the line can be considered empty so the weight of any future liquid load is then an additional safety factor.

PIPE WEIGHTS

The average density of concrete is 150 pounds per cubic foot, and the approximate weight per linear foot of circular concrete pipe may be calculated by the following equation:

$$W_p = \frac{\pi}{4}(B_c^2 - D^2)150 \qquad (5.14)$$

Where: B_c = outside pipe diameter, feet
D = inside pipe diameter, feet
W_p = weight of pipe, pounds per linear foot

Average weights for nonreinforced and reinforced concrete sewer, storm drain and culvert pipe are listed in *Tables 5.2* and *5.3*. Most pipe manufacturers publish product data giving actual dimensions, weight per linear foot, etc. Data from these publications should be used when available.

Table 5.2. Dimensions and Approximate Weights of Circular Concrete Pipe, Bell and Spigot Joint.

ASTM C14—Nonreinforced Sewer and Culvert Pipe, Bell and Spigot Joint

Internal Diameter, inches	Class 1		Class 2		Class 3	
	Minimum Wall Thickness, inches	Average Weight, pounds per foot	Minimum Wall Thickness, inches	Average Weight, pounds per foot	Minimum Wall Thickness, inches	Average Weight, pounds per foot
4	5/8	9.5	3/4	13	3/4	13
6	5/8	17	3/4	20	7/8	21
8	3/4	27	7/8	31	1-1/8	36
10	7/8	37	1	42	1-1/4	50
12	1	50	1-3/8	68	1-3/4	90
15	1-1/4	78	1-5/8	100	1-7/8	120
18	1-1/2	105	2	155	2-1/4	165
21	1-3/4	159	2-1/4	205	2-3/4	260
24	2-1/8	200	3	315	3-3/4	350
27	3-1/4	390	4	450	4-7/8	450
30	3-1/2	450	4-1/4	540	4-1/4	540
33	3-3/4	520	4-1/2	620	4-1/2	620
36	4	580	4-3/4	700	4-3/4	700

ASTM C76—Reinforced Concrete Culvert, Storm Drain and Sewer Pipe, Bell and Spigot Joint.

Internal Diameter, inches	Wall A		Wall B	
	Minimum Wall Thickness, inches	Average Weight, pounds per foot	Minimum Wall Thickness, inches	Average Weight, pounds per foot
12	1-3/4	90	2	106
15	1-7/8	120	2-1/4	148
18	2	155	2-1/2	200
21	2-1/4	205	2-3/4	260
24	2-1/2	265	3	325
27	2-5/8	310	3-1/4	388
30	2-3/4	363	3-1/2	459

These tables are based on concrete weighing 150 pounds per cubic foot and will vary with heavier or lighter weight concrete.

Table 5.3. Dimensions and Approximate Weights of Circular Concrete Pipe, Tongue and Groove Joint.

ASTM C76 – Reinforced Concrete Culvert, Storm Drain and Sewer Pipe, Tongue and Groove Joints

Internal Diameter, inches	Wall A		Wall B		Wall C	
	Minimum Wall Thickness, inches	Average Weight, pounds per foot	Minimum Wall Thickness, inches	Average Weight, pounds per foot	Minimum Wall Thickness, inches	Average Weight, pounds per foot
12	1-3/4	79	2	93	–	–
15	1-7/8	103	2-1/4	127	–	–
18	2	131	2-1/2	168	–	–
21	2-1/4	171	2-3/4	214	–	–
24	2-1/2	217	3	264	3-3/4	366
27	2-5/8	255	3-1/4	322	4	420
30	2-3/4	295	3-1/2	384	4-1/4	476
33	2-7/8	336	3-3/4	451	4-1/2	552
36	3	383	4	524	4-3/4	654
42	3-1/2	520	4-1/2	686	5-1/4	811
48	4	683	5	867	5-3/4	1011
54	4-1/2	864	5-1/2	1068	6-1/4	1208
60	5	1064	6	1295	6-3/4	1473
66	5-1/2	1287	6-1/2	1542	7-1/4	1735
72	6	1532	7	1811	7-3/4	2015
78	6-1/2	1797	7-1/2	2100	8-1/4	2410
84	7	2085	8	2409	8-3/4	2660
90	7-1/2	2395	8-1/2	2740	9-1/4	3020
96	8	2710	9	3090	9-3/4	3355
102	8-1/2	3078	9-1/2	3480	10-1/4	3760
108	9	3446	10	3865	10-3/4	4160
114	9-1/2	3840	10-1/2	4278	11-1/4	4611
120	10	4263	11	4716	11-3/4	5066
126	10-1/2	4690	11-1/2	5175	12-1/4	5542
132	11	5148	12	5655	12-3/4	6040
138	11-1/2	5627	12-1/2	6156	13-1/4	6558
144	12	6126	13	6679	13-3/4	7098
150	12-1/2	6647	13-1/2	7223	14-1/4	7659
156	13	7190	14	7789	14-3/4	8242
162	13-1/2	7754	14-1/2	8375	15-1/4	8846
168	14	8339	15	8983	15-3/4	9471
174	14-1/2	8945	15-1/2	9612	16-1/4	10,117
180	15	9572	16	10,263	16-3/4	10,785

• These tables are based on concrete weighing 150 pounds per cubic foot and will vary with heavier or lighter weight concrete.

WATER DENSITY

The density of fresh water is 62.4 pounds per cubic foot and the average density of seawater is 64.0 pounds per cubic foot. The density of brackish water will be between that of fresh water and seawater depending upon the degree of salinity. Local conditions should be investigated for specific projects.

DISPLACED WATER WEIGHT

When water is displaced, a buoyant or upward force exists, and, if the buoyant force is greater than the weight of the object displacing the water, flotation will occur. The weight of fresh water displaced per linear foot of circular pipe can be calculated by the equation:

$$W_w = \frac{\pi}{4}(B_c^2)62.4 \qquad (5.15)$$

Where: W_w = weight of displaced water, pounds per linear foot

The approximate weights of the volume of fresh water displaced per linear foot of pipe are presented in *Tables 5.4* and *5.5*.

Table 5.4. Approximate Weight of Water Displaced by Circular Concrete Pipe, Bell and Spigot Joint.

ASTM C 14 – Nonreinforced Concrete Pipe, Bell and Spigot Joint			
Internal Diameter, inches	Weight of Water Displaced, pounds per linear foot		
	Class 1	Class 2	Class 3
4	9.3	10.7	10.7
6	19.3	20.6	21.0
8	33	35	37
10	49	51	55
12	70	77	86
15	109	118	127
18	154	174	179
21	216	235	258
24	281	327	342

ASTM C 76 – Reinforced Pipe, Bell and Spigot Joint		
Internal Diameter, inches	Weight of Water Displaced, pounds per linear foot	
	Wall A	Wall B
12	86	93
15	127	138
18	174	194
21	235	258
24	306	331
27	377	410
30	457	497

Table 5.5. Approximate Weight of Water Displaced by Circular Concrete Pipe, Tongue and Groove Joint.

ASTM C 76 – Reinforced Concrete Pipe, Tongue and Groove Joint			
Internal Diameter, inches	Weight of Water Displaced, pounds per linear foot		
	Wall A	Wall B	Wall C
12	82	87	–
15	119	130	–
18	164	181	–
21	222	239	–
24	287	306	339
27	355	381	418
30	429	465	505
33	511	560	600
36	600	660	704
42	816	885	940
48	1069	1143	1206
54	1351	1440	1504
60	1666	1764	1842
66	2020	2122	2207
72	2401	2519	2605
78	2786	2944	3043
84	3271	3401	3508
90	3752	3899	4005
96	4266	4423	4545
102	4823	4980	5109
108	5403	5580	5706
114	6017	6203	6341
120	6674	6863	7008
126	7354	7556	7709
132	8067	8282	8443
138	8826	9042	9210
144	9606	9836	10,010
150	10,418	10,662	10,844
156	11,278	11,523	11,711
162	12,157	12,416	12,612
168	13,069	13,343	13,546
174	14,031	14,303	14,513
180	15,009	15,296	15,513

BACKFILL WEIGHT

The weight of the backfill directly over the pipe assists in resisting buoyant forces. The unit weight of compacted backfill material varies with the type of material, grain size, degree of compaction, etc. For preliminary computations, however, the average values for specific gravity and unit weight of backfill materials provide sufficient accuracy.

The unit weight of inundated backfill is equal to the dry density of the backfill minus the weight of water displaced by the solid particles and can be calculated as follows:

$$w_I = w - \left(\frac{w}{SG \times 62.4} \times 62.4\right) \tag{5.16}$$

Which reduces to:

$$w_I = w\left(1 - \frac{1}{SG}\right) \tag{5.17}$$

Where: w_I = average unit weight of inundated backfill, pounds per cubic foot
w = average unit weight of dry backfill, pounds per cubic foot
SG = specific gravity of backfill material

The different volumes of the backfill over the pipe to be considered are illustrated in *Figure 5.23*. The volume of backfill over the haunches from the springline to the top of the pipe is equal to 0.1073 B_c^2 cubic feet per linear foot of pipe. The volume of backfill from the top of the pipe to the level of inundation equals $H_I B_c$ cubic feet per linear foot of pipe. Therefore, the weight of inundated backfill, acting downward per linear foot of pipe can be calculated by:

$$W_I = w_I(0.1073B_c^2 + H_I B_c) \tag{5.18}$$

Where: H_I = depth of inundated backfill above top of pipe, feet
W_I = weight of inundated backfill directly over the pipe, pounds per linear foot

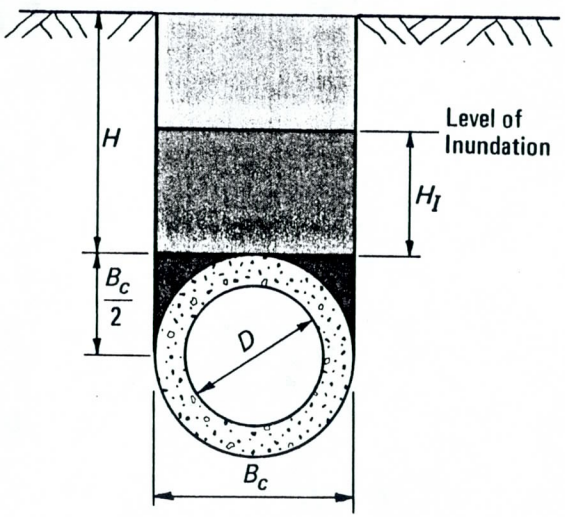

Figure 5.23. Backfill Volumes Over Pipe.

The weight of the backfill above the water level, if any, acting downward per linear foot of pipe can be calculated by the equation:

$$W_D = w(H - H_I)B_c \tag{5.19}$$

Where: H = depth from top of pipe to surface of backfill, feet
W_D = weight of the backfill directly over the pipe, pounds per linear foot

Therefore the total weight of backfill acting downward on the pipe is the algebraic sum of *Equations 5.18* and *5.19:*

$$W_B = W_I + W_D \tag{5.20}$$

Where: W_B = total weight of backfill directly over the pipe, pounds per linear foot

FACTOR OF SAFETY

A factor of safety ranging between 1.0 and 1.5 should be applied, based on the extent of knowledge of the proposed backfill material and site conditions. This factor of safety is applied to decrease the calculated downward force of the backfill acting on the pipe.

PREVENTIVE PROCEDURES

If the total weight of the pipe and backfill is not adequate to prevent flotation of the pipe, preventive procedures will be required. Some of the commonly used methods are:

- Increased wall thickness
- Precast or cast-in-place concrete collars
- Precast or cast-in-place concrete blocks
- Pipe strapped to piles or concrete anchor slab
- Additional backfill

When computing the volume of concrete required per linear foot for pipe anchorage, the submerged weight of concrete is used, since concrete which weighs 150 pounds per cubic foot in air weighs only 87.6 pounds per cubic foot under water.

DESIGN PROCEDURE

Following is a suggested procedure for determining the buoyancy of concrete pipe and possible measures to prevent flotation. Downward forces are considered positive and upward forces negative.

1. Determine the downward force of the pipe weight in pounds per linear foot of pipe.
2. Determine the buoyant upward force of the weight of the displaced water in pounds per linear foot of pipe.
3. Find the algebraic sum of the forces determined in Steps 1 and 2. If the resultant force is positive, the pipe will not float. If the resultant force is negative, proceed with Step 4.

4. Determine the downward force of the total weight of backfill in pounds per linear foot pipe.
5. Apply a factor of safety to determine the decreased total weight of backfill.
6. Find the algebraic sum of the downward force determined in Step 5 and the excess upward force determined in Step 3. If the resultant force is positive, the pipe will not float. If the resultant force is negative, proceed with Step 7.
7. Select and analyze the procedures required to prevent flotation.

EXAMPLE

Given: A 72-inch diameter, Wall B, ASTM C 76 reinforced concrete pipe is to be installed in a trench in a sandy coastal area with 8 feet of backfill over the top of the pipe. The groundwater table is near the surface in this area, and the natural soil is primarily sand. The sandy soil is assumed to have an in-place surface dry density of 110 pounds per cubic foot with a specific gravity of 2.65.

Find: Will the empty pipe float in the fully backfilled condition? What is the minimum depth of inundated backfill required to prevent flotation?

Solution: 1. Weight of pipe

$W_p = +1811$ pounds per linear foot (downward force), *Table 5.3*.

2. Weight of displaced water

$W_w = -2519$ pounds per linear foot of pipe (upward force), *Table 5.5*.

3. Summation of forces

$W_p + W_w = 1811 + (-2519) = -708$ pounds per linear foot of pipe (upward force).

Since the resultant force is negative, proceed to Step 4.

4. Total weight of backfill

Weight of inundated backfill

The in-place surface dry density of sand is 110 pounds per cubic foot with a specific gravity of 2.65. The unit weight of inundated backfill, *Equation 5.17*, equals:

$$w_I = 110\left(1 - \frac{1}{2.65}\right) = 68 \text{ pounds per cubic foot.}$$

The weight of inundated backfill, *Equation 5.18*, is:

$W_I = 68\,[0.1037\,(7.17)^2 + (8 \times 7.17)] = +4276$ pounds per linear foot of pipe (downward force).

Weight of dry backfill

Since the groundwater table was assumed to be at the surface, the weight of dry backfill, *Equation 5.19*, equals:

$W_D = (110)\,(8\text{-}8)\,(7.17) = 0.$

Total weight of backfill

The total weight of backfill, per linear foot of pipe, *Equation 5.20*, equals:

$W_B = 4267 + 0 = +4267$ pounds per linear foot of pipe (downward force).

5. Factor of safety:

Since precise information is not available on the density and specific gravity of the sandy backfill, a factor of safety of 1.25 will be used to reduce the assumed total weight of the backfill.

$$\frac{W_B}{F.S.} = \frac{+4276}{1.25} = +3421 \text{ pounds per linear foot of pipe (downward force)}$$

6. Summation of forces:

From Step 3 the resultant upward force is −708 and from Step 5 the downward force is +3421, producing a resultant downward force of +2713 pounds per linear foot of pipe. Therefore, the empty pipe will not float in the fully backfilled condition and Step 7 is not required.

To find the minimum height of inundated backfill necessary to prevent flotation during construction, the force exerted by the inundated backfill, *Equation 5.18*, must be equal and opposite in direction to the buoyant force of the submerged pipe, −708 pounds per linear foot.

Solve for H_I

$$W_I = \frac{w_I(0.1073B_c^2 + H_I B_C)}{1.25}$$

$$H_I = \frac{1.25W_I}{w_I B_c} - 0.1073B_c$$

$$= \frac{1.25(708)}{68(7.17)} - 0.1073(7.17)$$

$$= 1.05 \text{ feet}$$

Answer: Therefore a minimum depth of slightly more than one foot of inundated backfill above the top of the pipe is required to prevent flotation.

DUCTILE IRON PIPE RESEARCH ASSOCIATION

THRUST RESTRAINT ANALYSIS FOR DUCTILE IRON PIPE

DK/GSD/6-14-95
SW 6/14/95

Type of Fitting : BEND

Angle of Bend : 45.00 degrees
Diameter of Bend : 6 inches
Orientation of Bend : VERTICAL DOWN

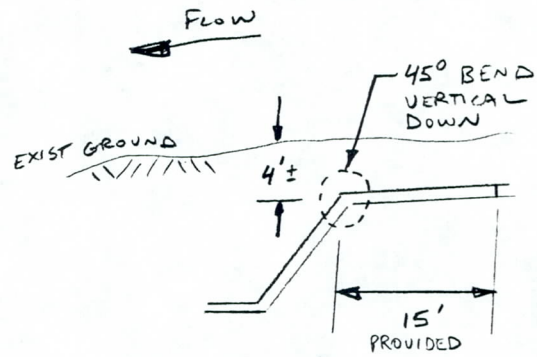

SCHEMATIC

Laying Condition : Type 3
Soil Designation : COH-GRAN
Depth of Cover : 4 feet
Design Pressure : 125 psi
Safety Factor : 1.25

The Length of Restrained Joint Piping for each side of the Bend is:

14 feet (bare pipe)
20 feet (polywrapped pipe)

TYPE 3 LAYING CONDITION: PIPE BEDDED IN 4" MINIMUM LOOSE SOIL FREE OF ROCKS, FOREIGN MATERIAL, AND FROZEN EARTH

SOIL DESIGNATION: COHESIVE GRANULAR SOILS > 50% COARSE PARTICLES
CLAYEY GRAVELS, GRAVEL-SAND-CLAY MIXTURES, CLAYEY SANDS, SAND CLAY MIXTURES

SAFETY FACTOR RANGES FROM 1.0 TO 1.5 TYPICAL. WE USED 1.25 FOR AVERAGE.

MAG DETAILS DESIGN THRUST BLOCKS FOR DESIGN PRESSURE OF 125psi. REFER TO MAG STD DETAIL 381

$L_{REQUIRED} = 14'$

$L_{PROVIDED} = 15'$ LENGTH MAY BE ADJUSTED BUT MUST BE GREATER THAN 15'.