Property of
Flood Control District of MC Library
Please Return to
2801 W. Durango
Phoenix, AZ 85009

CONCEPT

HYDRAULIC ANALYSIS

FOR

TUNNEL STUDY
BILTMORE AREA
ARIZONA CANAL DIVERSION CHANNEL

January, 1989

Reno/Sparks, Nevada
Las Vegas, Nevada
Phoenix, Arizona

sea incorporated
CONSULTING ENGINEERS

CONCEPT

HYDRAULIC ANALYSIS

FOR

TUNNEL STUDY

BILTMORE AREA

ARIZONA CANAL DIVERSION CHANNEL

January, 1989

FLOOD CONTROL DISTRICT
RECEIVED
JAN 25 1989

	CH ENG		P & PM
	DEP		HYDRO
	ADMIN		LMGT
	FINANCE		FILE
	C & O		
	ENGR		

REMARKS

CONCEPT HYDRAULIC ANALYSIS
FOR
TUNNEL STUDY
BILTMORE AREA
ARIZONA CANAL DIVERSION CHANNEL

TABLE OF CONTENTS

PAGE

EXECUTIVE SUMMARY----------1

1 INTRODUCTION----------3

2 METHODOLOGY----------7

2.1 Literature Review----------7
2.2 Hydraulic Design of Tunnel----------8
2.3 Inlet and Outlet Hydraulics----------10

3 DISCUSSION OF ALTERNATIVES----------12

3.1 Single vs. Double Tunnel----------12
3.2 Pumped Dry vs. Charged Condition----------13
3.3 Single vs. Double Inlet----------17
3.4 Excess Head Losses----------18

4 DETAILED DISCUSSION OF SELECTED ALTERNATES----------20

4.1 Sedimentation Basin----------20
4.2 Vortex Drop Inlet----------24
4.3 Charged Condition----------25
4.4 Tabulated Head Losses----------25
4.5 Upstream Improvements----------26
4.6 Local Surface Drainage----------27

5 RECOMMENDATIONS----------28

REFERENCES----------33

LIST OF FIGURES

Figure A1- Schematic Drawing of Vortex Drop Inlet-------14

Figure A2- Schematic Diagram Showing Tunnel Flow System----------21

Figure A3- Schematic Drawing of Recommended Alternate----------29

Figure A4- Recommended Tunnel Cross-Section----------30

Figure A5- Proposed Storm Drain for Local Runoff--------32

LISTING OF APPENDICES

A. SIPHON USE

B. SEDIMENTATION STUDY

C. TUNNEL HYDRAULICS

EXECUTIVE SUMMARY

In March of 1987 CRS Sirrine was commissioned to analyze several alternatives to the Arizona Canal Diversion Channel design proposed by the Corps of the Engineers in the Biltmore area of Reach 4 of the project. In May of 1987 SEA, Inc. was commissioned to perform an independent hydrologic study in the Cudia City Wash area contributing to the flow in Reach 4 (the headwater Reach) of the ACDC project. CRS's study revealed the need for further concept design study for a deep tunnel alternative to the project in the Biltmore area. SEA's hydrologic study substantiated the Corps of Engineers design flow of 8300 cfs in this area. The study presented herewith is the hydraulic investigation performed by SEA as part of the concept design commissioned by Maricopa County Flood Control District for the Biltmore area.

Several alternatives were investigated for the tunnel configuration, inlet/outlet structures and other physical engineering parameters involved in the hydraulics of producing a siphon tunnel 100 ft. below the surface in the Biltmore area for approximately 7400 linear feet.

The basic recommendation of this analysis is to operate the siphon in a charged condition, namely filled in an orderly fashion and operated full. In order to accomplish this a chlorination system is recommended to keep the water in the siphon from becoming septic. A pumping system is recommended for evacuating the siphon, for maintenance and other reasons. The tunnel itself should be located approximately 100 ft. below the surface of the ground in order to minimize the probability of constructibility problems given the geology in the area. Bored twin tunnels of 24 ft. inside diameter with approximately a 1-foot concrete lining are recommended. Approximate dimensions for a sedimentation basin are included.

The need for an elaborate inlet structure to dissipate energy is not necessary because of the method of filling and maintaining charge through the siphon. Several inlet structures were investigated for the option of operating the siphon dry. Economics of the situation warrant a charged operational condition. The only modification to the channel design as proposed by the Corps of Engineers would be a slight increase in the side walls of the channel for approximately 2900 ft. upstream. Trash racks would be required at the inlet control structure. All of these characteristics would be further investigated in a model study which we strongly recommend in conjunction with the preliminary design, which should follow this concept study.

1 INTRODUCTION

The Arizona Canal Diversion Channel is a project conceived and developed by the Corps of Engineers, Department of the Army. The concept of the ACDC is to capture excess stormwater from the mountains north of the City of Phoenix and divert them in a primarily westerly direction to the major river systems of the valley, via New River. The main ACDC channel originates at the base of the Camelback Mountains, flows westerly to where it converges with a waterway called Skunk Creek in Peoria, Arizona, which in turn continues its westerly direction to merge with the New River and ultimately the Aqua Fria River.

The channel is composed of several reaches, each varying in physical characteristics. As might be expected, the channel increases in capacity and therefore size as it flows westerly. Our project is in Reach 4, which constitutes the headwaters of the channel. In this Reach the overland characteristics are primarily highly urbanized, high density residential developments. Our study area constitutes approximately STA 896+00 to 947+00 and is referred to as the Biltmore area.

There are several governmental entities involved in the ACDC project development. These are primarily the Corps of Engineers, Maricopa County Flood Control District, and in this Reach the City of Phoenix. Other municipal entities involved downstream are the City of Glendale, the City of Peoria and the City of Surprise, Arizona. As might be expected the Arizona Department of Water Resources is also greatly interested in the development of this project.

The purpose of this study is to develop a conceptual design and cost estimate for providing a deep tunnel alternative to the open channel design proposed by the Corps of Engineers for the above mentioned Reach. The alignment of the tunnel concept will approximate the alignment of the current Arizona Canal in the area and lie immediately north of that structure.

In March of 1987 CRS Sirrine was commissioned to perform a study entitled "Arizona Canal Diversion Channel Tunnel Alternative Feasibility Study" for this section of the Reach. In this study gravity flow tunnel alternatives to the covered channel were analyzed. During the course of this investigation another tunnel alternative was defined that offered potential cost effective savings. The study recommended the performance of a conceptual design study to further define the costs and technical feasibility of that alternative. The alternative CRS Sirrine identified was the deep tunnel alternative, which is the subject of this report.

In August of 1988, SEA was commissioned to perform a hydraulic concept study on this deep tunnel alternative in conjunction with CRS Sirrine concept report on the project. The following report represents that study.

The area of investigation in this concept hydraulic analysis lies primarily in developing the physical parameters, i.e. size and geometry of the structures involved in getting the flow from the ACDC, underground to the deep tunnels and through the Biltmore area. SEA's study included hydraulic calculations involving design discharge, analysis of inlet and outlet structures, hydraulic calculations of flows, flow quantity, discharge, velocity, energy dissipation and sediment transport. The primary characteristics to be investigated

included tunnel diameter and configuration, vertical fall, energy dissipation, head loss, excess head loss, trash racks, safety, and operational characteristics, all in coordination with the Maricopa County Flood Control District.

During the course of the study several alternatives were analyzed from an engineering standpoint to determine feasibility. A thorough literature search was performed to develop basic concepts and approaches. One of the first questions that arose was the actual tunnel configuration. Several alternatives were investigated including a single tunnel, a double tunnel, and the traditional horseshoe shaped tunnel. The conventional blasted tunnel option would produce a horseshoe shaped tunnel nominally 25 by 40 feet. The boring machine option would involve twin tunnels of approximately 25 ft. diameter each.

After observing the geological configuration in the area, it was determined that a depth of approximately 100 ft. would be optimal from a constructibility standpoint. The operation of the tunnel siphon itself was also investigated. Two options existed; operating the tunnel in a pumped dry condition, and operating in a charged full condition. Several options were also investigated for the inlet works primarily single versus double inlet, as well as several type of inlet structures; vortex, helical, drop, etc. The need for a sedimentation basin and trash racks was also investigated.

In looking at the option of operating in a dry condition, the problem of the inlet structure was heavily investigated. Several alternatives were examined. The vortex drop inlet configuration was determined to be most feasible for operation in this condition. All of these hydraulic considerations were developed based on studies performed by the Corps of Engineers

for design flow of 8300 cfs and in conjunction with ongoing investigations on concept design by CRS Sirrine.

2 METHODOLOGY

2.1 Literature Review

The subject of inverted siphon design has not been extensively considered in the engineering literature. Short references that describe the general theory can usually be found in hydraulic text books, although they are not usually accompanied by detailed design information. Much of the available literature is historical.

Hinds (1928) provides a very complete discussion of inlet and outlet transitions for siphons and flumes. This discussion is very design-oriented, containing worked examples and performance information. Hinds relates results for inverted siphons with flow rates in the range of a few hundred cubic feet per second, and is generally concerned with shallow undercrossings. The gradual transitions and relatively low slopes required for these applications are not directly applicable to the current study.

Other design information is contained in the publications of the Bureau of Reclamation. For example, the 1967 Design Standards Number 3, Canals and Related Structures, contains design information and worked examples for inverted siphons and tunnels. Flows in this document range from 25 to 925 cfs. As in the Hinds report, the information is more suited to gradual transitions and shallow undercrossings.

Basic information on air entrainment in inverted siphons is provided by Kalinske and Robertson (1943). This document includes the results of laboratory and field studies regarding the formation of hydraulic jumps in closed conduits, together with a physical discussion. Consideration of the hydraulic

jump is of obvious importance in the design of an inverted siphon.

A number of tunneling applications have been made in Europe. An important recent contribution to tunnel flow literature comes from Sweden's Royal Institute of Technology (Czarnota, 1986). Using model studies, field instrumentation, and theoretical analysis, hydraulic losses in tunnels were evaluated. Czarnota found that bored tunnels typically experience head losses similar to pipe conduit losses, while tunnels constructed using conventional blasting methods typically experience considerably higher losses. The difference results from the variation in cross-section usually present in blasted tunnels. This variation results in alternating acceleration and deceleration of the flow through the tunnel, and can create head losses as high as 20% of the total losses.

It may, on first consideration, seem somewhat odd that the literature on the subject of inverted siphon design is so scarce. It is important to remember, however, that applications of inverted siphons are generally quite different. Each application has to be designed within particular constraints that make it unique. Often, a model study is made as a part of the design process to test theoretical design. Such a design process does not lend itself to handbook or chart design.

2.2 Hydraulic Design of Tunnel

At concept level, hydraulic design of the tunnel had to be completed at a very general level. The literature search provided some guidance on design procedures through worked examples. Further input was provided through telephone and

personal interviews with hydraulic engineers with extensive experience in tunnel applications. From the accumulation of these ideas and opinions, design concepts were formulated for several options.

Once the concepts were available, head losses were estimated. Head loss estimates for tunnel flow were made using procedures outlined in the Bureau of Reclamation Design Standards Number 3 (1967). Frictional losses within the tunnel were evaluated using friction slopes developed using the Manning Equation. The Darcy Weisbach equation is generally used for closed conduit flow, as it allows for frictional resistance to change with the fluid viscosity, density, or velocity. In this application, temperature changes should not be extreme, and the Reynold's Number of the flow places it in the range where friction factor becomes insensitive to changes in Reynold's Number. A comparison was made between the two equations, and the resulting head losses were very similar. Because of ease of application, precedent in design literature, and similarity to Darcy-Weisbach results, the Manning Equation was used for friction calculations.

So-called minor losses, that is the losses occurring due to bends, expansions, contractions, etc., were evaluated using standard minor loss coefficients which are applied to the velocity head of the flow. Coefficients were obtained from the Bureau of Reclamation manual and from Morris and Wiggert (1972). There is some question of the applicability of such coefficients, which generally have been developed in very small pipe conduits, to a 24 foot diameter tunnel. It can be argued that the very large flows in the tunnels will react differently than smaller flows in a small pipe just as a result of scale differences. It can also be argued, however,

that boundary layer thicknesses in the larger tunnel would encompass a smaller percentage of the total flow area in the larger tunnel than in the smaller pipe. Since losses are largely a result of boundary layer activity, the losses in the tunnel would probably be less than in the small pipes; application of standard head loss coefficients would therefore be conservative.

In either case, for this concept level design, use of standard coefficients for evaluating minor losses was judged a reasonable method for estimating the magnitude of these losses and comparing different options for tunnel design. Certainly in final design of the tunnel, model studies would be utilized to more definitely determine the head losses. Such studies were neither economically feasible nor prudent for concept design.

2.3 Inlet and Outlet Hydraulics

Estimation of inlet and outlet losses is even more difficult than estimation of losses in the tunnel. The flow system at these locations is extremely complex. The water carried by the ACDC must undergo transitions from open channel flow to pressure flow, from a rectangular channel to a circular tunnel, and must complete a sharp turn to effect the approximately 100 foot drop to the tunnel body. At the outlet, the water carried by the tunnel must reverse this process.

Since the situation is so complex, no definitive answer can be given to the question of the attendant head losses. The only reasonable way to give such an answer would involve model studies. Therefore, the challenge is to estimate the

losses in some meaningful fashion so that different alternatives can be evaluated.

The method for making this estimate followed the Bureau of Reclamation examples as a guide. Frictional losses through the transitions were estimated using average friction slopes developed from the Manning Equation. Other losses were evaluated using head loss coefficients. These coefficients were obtained from the Bureau of Reclamation Manual and from estimates made by experienced researchers in tunnel inlet design.

The total losses for each alternate considered were computed as the sum of the tunnel losses and the inlet and outlet losses. This value could be compared to the difference between the invert elevations of the proposed ACDC to estimate the improvements required to accommodate the headwater requirements of the inverted siphon.

Provisions for combining the surface runoff in the Reach with the tunnel will have to be provided also. This could most easily be accomplished by a network of storm drains to pass this flow to the outlet end of the tunnel. The exact configuration of such a system would appropriately be developed as a part of the final design for the tunnel.

3 DISCUSSION OF ALTERNATIVES

Alternative design concepts were compared based upon the criteria of economy, hydraulic performance, and constructibility. The purpose of these evaluations was to identify, as well as analyze the most promising alternatives at concept level. These most promising alternatives provide a starting place for final design activities. In this section of the report, the alternatives will be discussed in a general way, and the factors which led to the elimination of concepts will be discussed. The recommended alternative will be explained in more detail in the next section.

3.1 Single vs. Double Tunnel

There were two possible configurations for the tunnel conduit identified in the tunnel feasibility investigation. These are a single, conventional blasted tunnel and a pair of bored tunnels. The conventional blasted tunnel option would produce a horseshoe shaped tunnel, nominally 25' x 40'. The tunnel boring machine option would produce two parallel circular tunnels, each nominally 26' in diameter.

A preliminary evaluation of the single tunnel option was performed at the beginning of this study. From the standpoint of hydraulic head, the preliminary evaluation indicated that the single tunnel option could be sized such that head losses were comparable to the double tunnel option, including allowances for variability in cross section in the blasted tunnel. However, the constructibility of a blasted tunnel in this urban environment is highly questionable. Therefore, no in-depth analysis was completed on the single tunnel option.

3.2 Pumped Dry vs. Charged Condition

The inlet design for the tunnel presented very unique challenges. The tunnel basically operates in two drastically different modes during a storm event. In the early part of the storm, as the rising limb of the hydrograph reaches the tunnel, allowances must be made to dissipate the energy released as the water falls the 100 feet to the main tunnel shaft. Once the tunnel is full, energy takes on a different importance; every effort must be made to minimize hydraulic losses in order to reduce upstream improvements to accommodate required headwater.

Understandably, it was very difficult to identify a design concept which was sensitive to these two contradictory purposes. The design would have to be capable of creating head losses until the tunnel fills, after which time it would have to produce minimal head losses.

The most promising idea was proposed by Dr. S.C. Jain, from the Iowa Institute of Hydraulics. Dr. Jain has extensive experience with modeling of inlet structures for tunnel applications. He suggested the use of a vortex drop inlet structure. The vortex drop inlet structure (Figure A1) is a simple system consisting of a vertical drop shaft with tangential input. The tangential input flow forces the water to swirl around the outside of the drop shaft, dissipating energy through side friction all the way down. At the bottom, a deaeration chamber is provided before the entrance flow actually reaches the tunnel.

This design has been used successfully in other applications around the country. Dr. Jain felt that it was workable in this application also, and provided estimates of

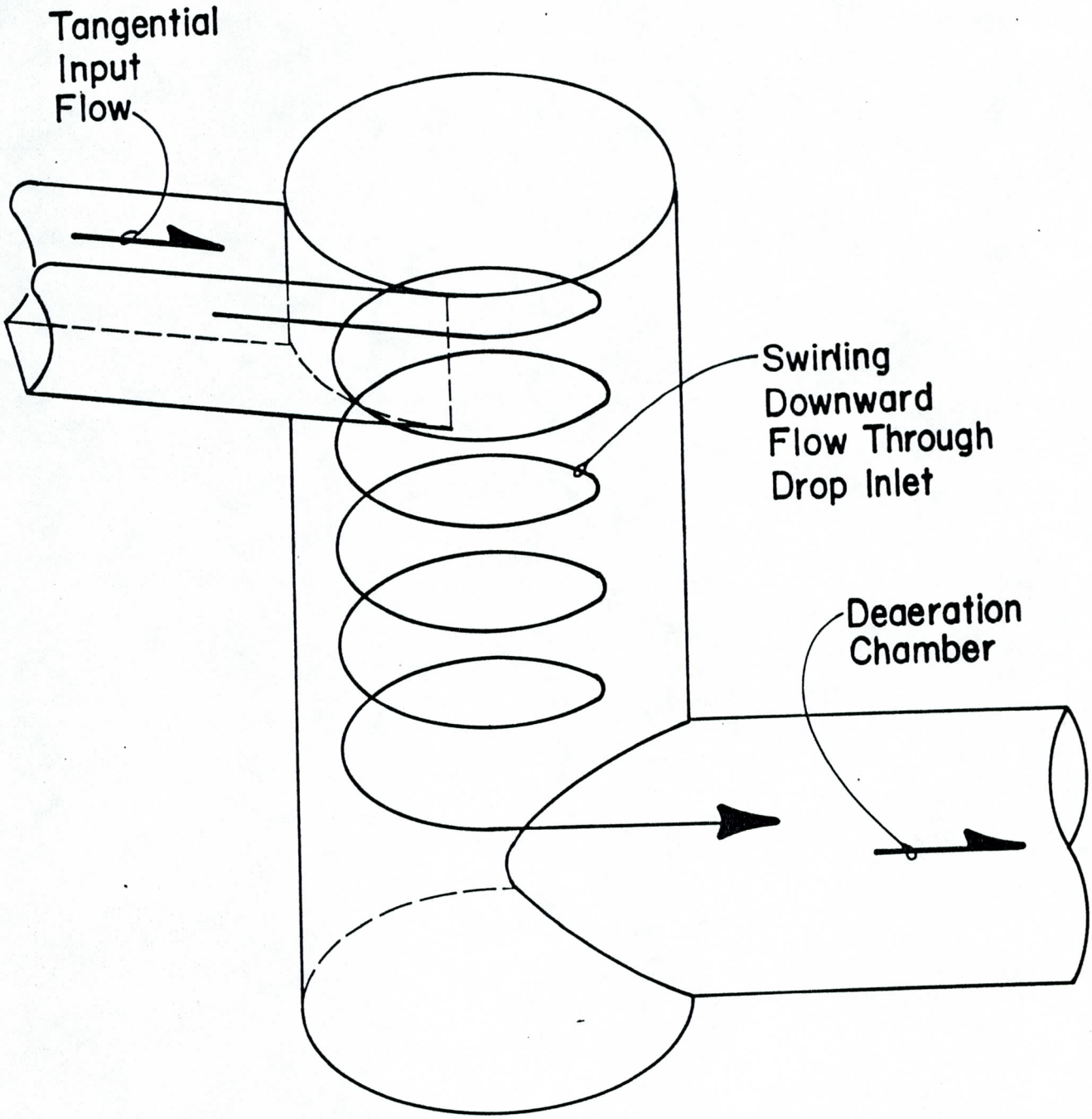

Schematic Drawing
of Vortex Drop Inlet

FIGURE A1

sea

factors to use in evaluating the head losses. The drop inlet structure would operate as an energy dissipator while the tunnel was filling. Once the system became charged, the inlet and deaeration chamber would act as expansions and contractions in a pipe.

The most severe design condition is the pressurized portion of the tunnel operation. This condition will have been achieved by the time the design flow rate, which is the peak flow rate for the storm event, reaches the tunnel. The vortex drop inlet system was therefore evaluated for this condition.

Many other drop structures might possibly serve for the inlet structure of the siphon spillway. Some examples of other possibilities are drop structures with bars to break up the flow, sloping inlets with dentations to dissipate energy, helical inlets, as well as conventional dissipation schemes and such as steps, blocks, etc. Only the vortex drop structure was considered in concept design because it was felt to be the best in the full flow condition and because considerable information was available to analyze it.

Another option which was considered was to remove half of the operating cycle by keeping the tunnel full at all times. This eliminates the need for energy dissipation structures, such as a vortex drop structure, necessary for filling the tunnel, because the tunnel could be filled in a controlled fashion immediately after construction. Maintaining a charged condition for the tunnel at all times greatly simplifies the inlet transition because the tunnel operates as an inverted siphon at all times; velocities are therefore kept low and the tunnel acts as a pipe. Dr. Jain's experience leads him to conclude that a deaeration chamber

would not be required for the charged condition. The design can be completed in a way which is sensitive to the most critical peak flow condition and which holds down upstream improvement requirements.

When comparing the two options, one must consider the ramifications for tunnel operation. If an energy dissipating inlet were to be provided, the system would be pumped dry after each storm event from which it receives water. This was estimated to occur approximately 16 times each year. If the system is to be maintained in a charged condition, the water standing in the tunnel would require chlorination to prevent biological activity and the problems associated with it. These include odor and health problems associated with the septic conditions which would exist when water becomes anaerobic. Both of these requirements were considered in this study.

If the system is to be pumped dry after each storm event, the number of pumps and subsequent costs would be determined by the time interval selected for removal of the water. The City of Phoenix requires that retention areas be drained in thirty-six (36) hours following a storm event. Utilizing this time interval, and a pumping facility consisting of 150 horsepower pumps operating at 4,000 gpm, it was determined that six (6) pumps would be required. These pumps are a standard type for which parts are readily available. The design and selection of the pumps should be considered very important due to the high lift situation and the potential for cavitation which may exist. The installation cost for the pumping facility is estimated at $160,000 with an annual operation cost of $40,000 based on sixteen (16) evacuation events. The pump system cost could be reduced if the time interval for evacuation is lengthened, however, too long a

period could create a septic condition. This detail would be further evaluated during preliminary design. Negotiations with agencies involved would be conducted.

If the system is maintained in a charged condition a chlorination system for the treatment of the water is necessary. The facility would consist of a building with the chlorination equipment, handling equipment and a pipe distribution system to the tunnels. The installation cost for this chlorination facility is estimated at $100,000.00 with an annual operation cost of $25,000.00 based on continual chlorination between storm events and complete re-chlorination for sixteen (16) evacuation events. A minimal pumpout facility would be included with the chlorination facility to provide for removing the water for tunnel maintenance purposes.

3.3 Single vs. Double Inlet and Outlet

If there are to be two tunnel shafts, the ACDC flow must be divided to enter them. This division can occur either above ground or below ground. The above ground option would require the construction of two inlet structures. The below ground option would require only one inlet structure, but would require a division chamber below ground. Both of these possibilities have been considered. The same alternatives occur at the outlet end of the tunnel.

It appears that the single inlet system would cause slightly higher head losses than the double inlet system. In the double inlet system, an inlet transition could be designed so that only one tunnel is used for low flows, which will have beneficial impact on operational costs. Perhaps the biggest advantage of the double inlet system is it allows the use of

one tunnel for storm flows while the other tunnel undergoes maintenance activities. Excavation for dual inlets will be provided in the tunnel construction. Therefore, for these reasons, the double inlet system received greater study than the single inlet system.

Based on the result of the inlet analyses, serious consideration was given only to a dual outlet system. This avoids providing a design for an underground transition with its anticipated potential for turbulance and difficulty of construction. Recombination above ground appears at this time to be a better alternative.

3.4 Excess Head Losses

The tunnel system will undoubtably create head losses which are more extreme than the proposed channel. This is fairly easy to see if one imagines that the open channel flow generates no friction across the free surface, while the tunnel flow experiences frictional losses around its entire perimeter. The magnitude of these losses will be discussed in the next section.

There are two options for handling the losses over and above the losses expected for the proposed ACDC Channel. The upstream end can be improved, with berms or increased wall height for example, to accommodate the extra headwater requirements of the tunnel. Alternatively, the invert elevation of the outlet end of the ACDC could be lowered, and then the ACDC could be graded at a shallower slope than is currently proposed out to some distance to match the proposed grades.

Because the bottom slope of the ACDC is much steeper on the inlet end (0.0008 ft/ft)than the outlet end (0.0003 ft/ft), the inlet end is the better place to handle the headwater improvements. Inlet improvements would not have to be carried as far upstream as outlet improvements would downstream, lessening the impact on the proposed construction plans.

4 DETAILED DISCUSSION OF SELECTED ALTERNATES

The preceding sections have been very qualitative in their descriptions of the alternatives studied. The following section contains more detailed information about preliminary sizes and flows. Each component of the system shown schematically in Figure A2, will be discussed in sequence. Both the pumped and charged systems were considered for head losses in depth, because non-economic considerations could result in one of these options being preferred over the other. Both options are described in detail.

4.1 Sedimentation Basin

The Cudia City Wash Sedimentation Basin, as described in the Corps of Engineers Design Memorandum Number 12, is designed to remove all of the gravel and most of the sand from the Cudia City Wash drainage flow. Between Cudia City Wash and the proposed tunnel inlet, there are two additional sediment sources from small side inflows. These are described as Subbasins 2 and 3 in the Corps of Engineers studies on the Sedimentation Analysis. The accumulated sediment load of the ACDC flow at the tunnel inlet for the design storm was developed from these documents and is tabulated below.

Size	Cudia City Wash Inflow (AF)	S.B. #2 Inflow (AF)	S.B. #3 Inflow (AF)	Total (AF)
Silt and Clay	5.60	2.00	1.95	9.55
Very Fine Sand	0.22	0.60	0.57	1.39
Fine Sand	0.04	0.24	0.23	0.51
Medium Sand	0.01	0.07	0.07	0.15
Coarse Sand	0.00	0.00	0.00	0.00

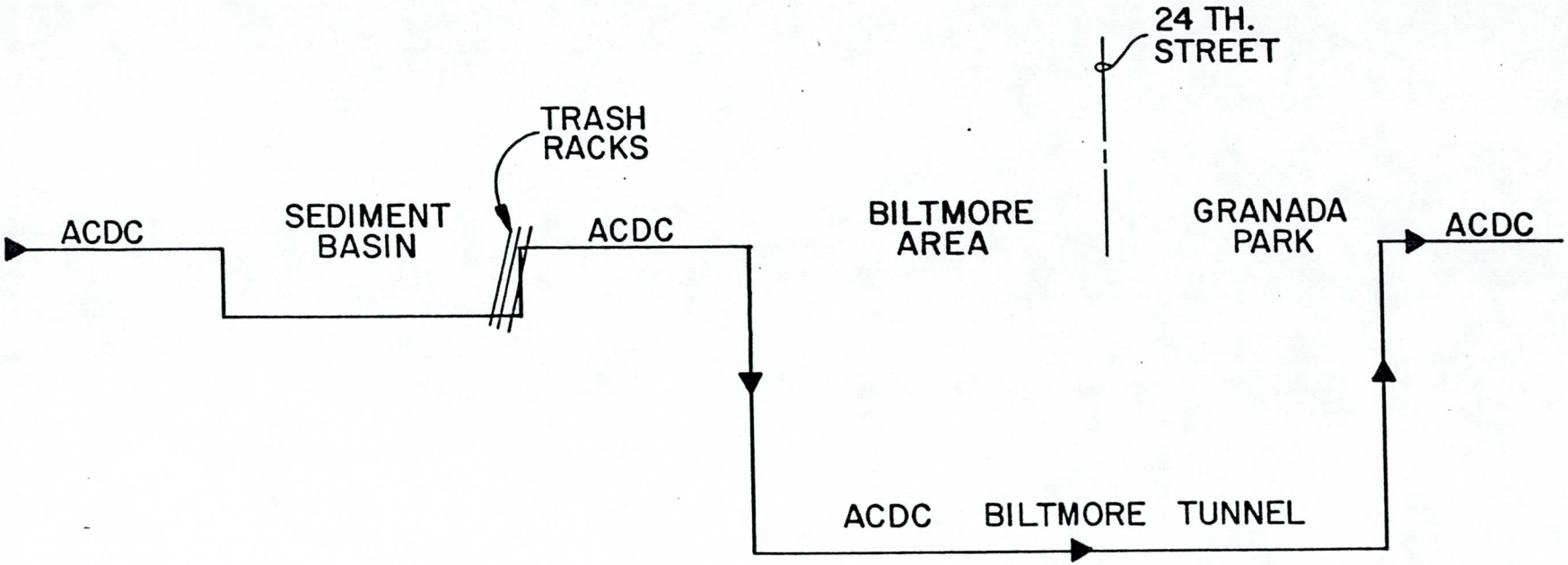

Schematic Diagram Showing Tunnel Flow System

FIGURE A2

sea

The fine sand, very fine sand, silt, and clay is all considered wash load in the ACDC, and should remain in suspension throughout the length of the ACDC. In the tunnel, this material might be deposited at the end of a storm event, but will be re-suspended and removed by the next flow event. However, the medium sand is considered bed load in the ACDC, and it would be disadvantageous in terms of maintenance requirements to allow this material into the tunnel.

The resuspension of the wash load material, and the ability of the flow to carry suspended sediment up the outlet end of the tunnel are problems which do not lend themselves to analytical predictions. Transport of cohesive sediments and vertical sediment transport are, at present, poorly understood because of their complexity. At this stage, all that can be done is to point out these limitations. It is recommended that a more detailed analysis of these problems be included early in the preliminary design phase. Also, a slightly exaggerated maintenance schedule should be used at this time for estimation purposes.

A preliminary investigation of the size requirements for such a sediment basin was made. This analysis was based on ideal settling velocity, short circuiting, length to width ratio, and permissible flow through velocity. The trap efficiency and sediment outflow was not evaluated because it was not possible to develop the necessary information for such a study at this level of the design. The results obtained in the analysis are therefore estimates only.

The sediment basin would require approximately 3.5 acres, being no closer to square than 550' long X 275' wide. At least 1 acre-foot of storage below the spillway elevation must

be provided. The depth of flow in the basin should be about 15 feet.

Trash racks could be provided at the outlet end of the sedimentation basin. The advantage over placing trash racks immediately at the opening of the tunnel is that velocities will be lower in the sedimentation basin, so that head losses through the racks will be lower. Also note that it is not necessary to place the sedimentation basin in immediate proximity to the tunnel, just as long as it is between the entrance and the next upstream sediment source.

An alternative to placement of a single sediment basin in-line on the ACDC alignment is the placement of a decentralized sediment trapping system. This system would consist of the following elements:

1) Improved efficiency of the Cudia City Wash Sediment Basin to trap all (100%) of the bed load. Modifications to the design of the basin to trap this additional volume are not expected to be extreme. The additional volume would be approximately 8 cubic yards. Additional costs for this volume are considered insignificant for this part of the system.

2) Add a sediment basin for the 32nd Street inflow to trap all the bed load. This would handle all of sub-basin 2 as referenced in the Corps of Engineers report. The approximate size of the basin required would be 65' wide x 125' long x 8' deep.

3) For Sub-basin 3 of the Corps of Engineers report, the conveyance system should be designed to trap all

the medium sand prior to inflow to the tunnel. Alternatively some flows could be routed to the outlet end of the tunnel to join the open channel section.

4.2 Vortex Drop Inlet

Both single inlet and double inlet structure systems were considered. However, for reasons described previously, the single inlet system was eliminated for in-depth scrutiny. The double inlet system would consist of two 15' diameter drop shafts. The tangential input channel at the ground surface will be approximately 4' wide. The channel sides can transition from the ACDC channel section at approximately 17 degrees. A velocity of roughly 20 feet per second will be created in the inflow channel. The inflow channel will have a bottom slope of roughly 27.5 degrees.

The drop inlets will enter deaeration chambers at the elevation of the main tunnel. The deaeration chambers will be roughly 26 feet in diameter and 250 feet long. A 7 foot diameter air vent will be provided about 70 feet from the drop inlet shaft. At the end of the deaeration chamber, a transition to the main tunnel shaft would be provided. This transition could be rounded to avoid extreme head losses. The tunnel shafts would then run to a vertical riser shaft of the same diameter, where the flow would rise to the ACDC invert. An elbow would be provided at the outlet to direct the flow down the ACDC alignment.

A range of tunnel diameters was considered in head loss computations. Tabulated results are included in section 4.4.

4.3 Charged Condition

The charged condition system is considerably less complicated than the pumped system with its energy dissipating inlet. The inlet transition must effect a transition from a rectangular channel to the circular conduits of the inverted siphon, divide the flow, and complete a 90 degree direction change as the water flows vertically down the tunnel. Divergence angles of the channel walls in the flow division would be maintained at about 17 degrees. Adequate allowances for the headwater requirements to overcome the frictional losses of the tunnel must be made.

The tunnels would drop vertically down the 100 feet to the elevation of the main tunnel shafts. The tunnels would then turn 90 degrees and run approximately 7400 feet horizontally to the outlet station. Another 90 degree turn would bring the flow vertically upward to the ACDC. Again, elbows could be provided to direct the flow when it re-enters the ACDC. The entire tunnel system would consist of circular conduits of a single diameter.

The tunnel system could be filled initially and following periodic maintenance by a water pipeline from a source such as the local treatment plant or adjacent irrigation canal.

A range of tunnel diameters was considered for this system. Tabulated head losses are included in section 4.4.

4.4 Tabulated Head Losses

The results of the analyses of the options described above are tabulated below. The proposed ACDC invert elevations at the approximate inlet and outlet stations of

the tunnel are 1221.76 and 1216.09 feet, respectively. Thus, the current fall is 5.67 feet. The excess head losses shown below are the head losses over and above this fall. The calculated head losses for each alternate include a 10% increase to allow for the estimations that were made.

Tunnel Dia. (ft)	Vortex Drop Structure		Charged Condition	
	Head Loss (ft)	Excess Head Loss (ft)	Head Loss (ft)	Excess Head Loss (ft)
23.0	10.91	5.24	8.35	2.68
23.5	10.01	4.34	7.38	1.71
24.0	9.31	3.64	6.62	0.95
24.5	8.71	3.04	5.97	0.30
26.0	7.40	1.73	NE	

NE = Not Evaluated

The head losses for the vortex drop structure inlet are considerably more extreme than for the maintained charge system. This is especially significant given that the operational costs for pumping the vortex inlet system are higher than for the maintained charge system. Based upon this information, the maintained charge system is recommended.

4.5 Upstream Improvements

The head losses computed above are in excess of the available fall for the proposed ACDC. The berms or wall height must be increased at the end to contain the extra headwater requirements within the channel of the ACDC. The crest elevation of the berm is set by the headwater requirement, and the berm can run back to the end of the backwater profile. For estimating purposes for the concept

design, the backwater profile was calculated using the direct step method. Freeboard has already been included in the ACDC. Only the maintained charge system has been considered following.

Tunnel Dia. (ft)	Berm Length (ft)
23.0	7060
23.5	4820
24.0	2860
24.5	970

4.6 Local Surface Drainage

Local surface drainage will be collected in a proposed storm drain system. Figure 5A indicates a proposed storm drain system design. The proposed system would consist of storm drain pipe, catch basins, and manholes along the present Arizona canal alignment. Storm drain sizes are based on various point inflows along the Canal alignment. The storm drains will direct the local runoff to outfall at both the tunnel inlet and outlet ends and a drop shaft to the tunnel located at approximately Sta. 920+00. It is important that the medium sand be trapped at retarding structures to prevent entrance to the proposed storm drain system and tunnel.

5 RECOMMENDATIONS

The following are recommendations based upon of the hydraulic analysis performed in this concept design study.

Basic configuration of the tunnels should be dual bored circular tunnels, concrete lined with an inside diameter of 24 ft. and a minimum 0.5 ft. of lining. The depth of the tunnel should be approximately 100 ft. below surface to minimize difficulties during construction and take into consideration geologic formations in the area. The recommended alternate is shown on Figures A-3 and A-4.

The operation of the tunnel should be a charged full condition. The siphon should be filled in an orderly fashion alleviating the need for a very extensive inlet structure. In order to accomplish this, we have included a chlorination system which would keep the water in the siphon from becoming septic. We have also included pumping facilities to discharge the siphon water and evacuate the siphon for maintenance and other reasons.

In analyzing the head losses in these tunnels 24 ft. diameter and 7400 feet in length, and assuming grades outlined by the Corps of Engineers design for Reach 4 in this area, we have determined an excess head water requirement exists of approximately 0.95 feet. In order to account for this, the channel walls upstream of the siphon structure would have to be increased slightly. This would be accomplished by increasing the channel wall by approximately one foot upstream of the siphon and tapering down at slope to where it would meet current design grade approximately 2,860 ft. upstream of the inlet to the siphon. We also feel that this produces

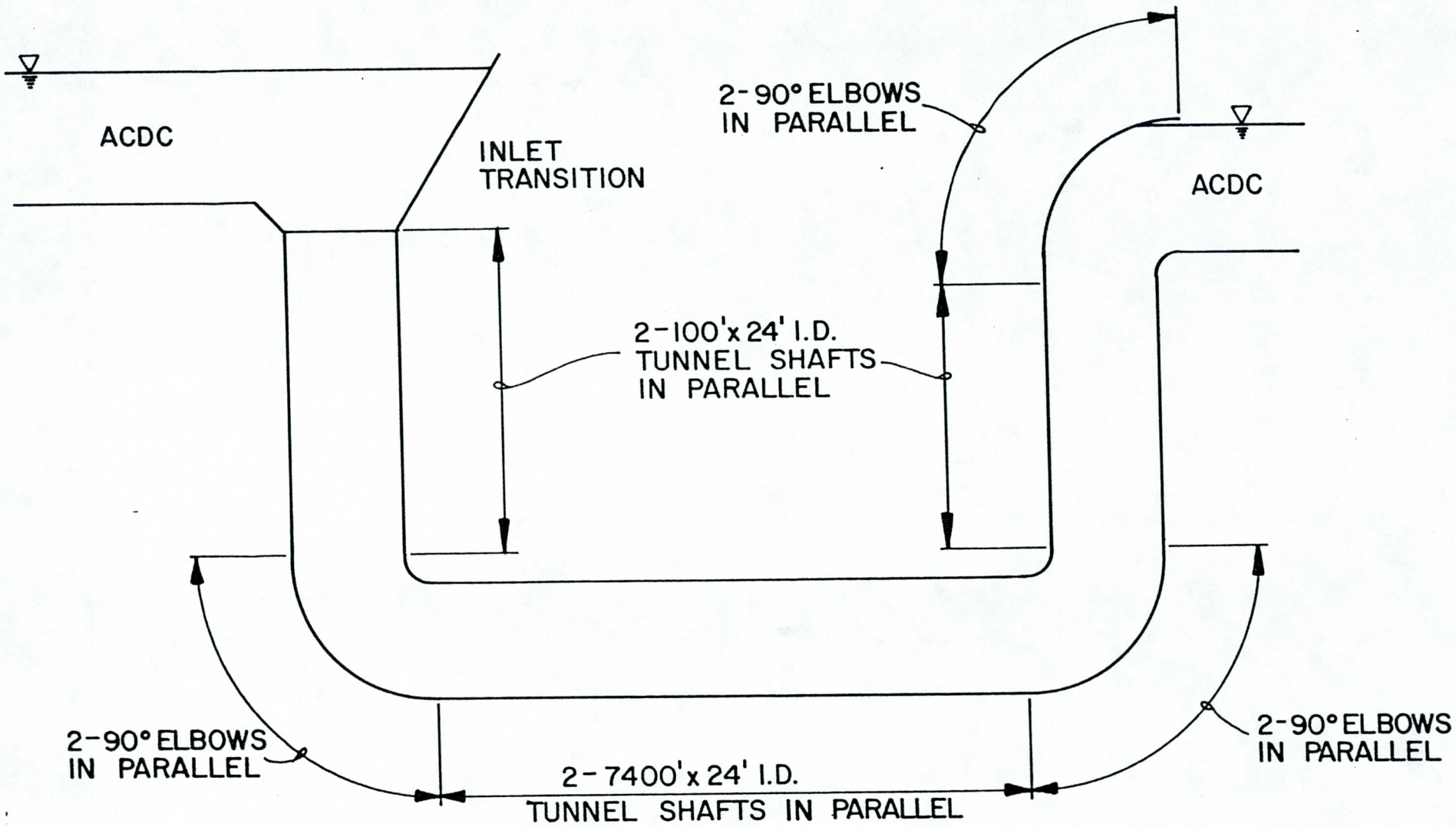

Schematic Drawing of Recommended Alternate

FIGURE A3

sea

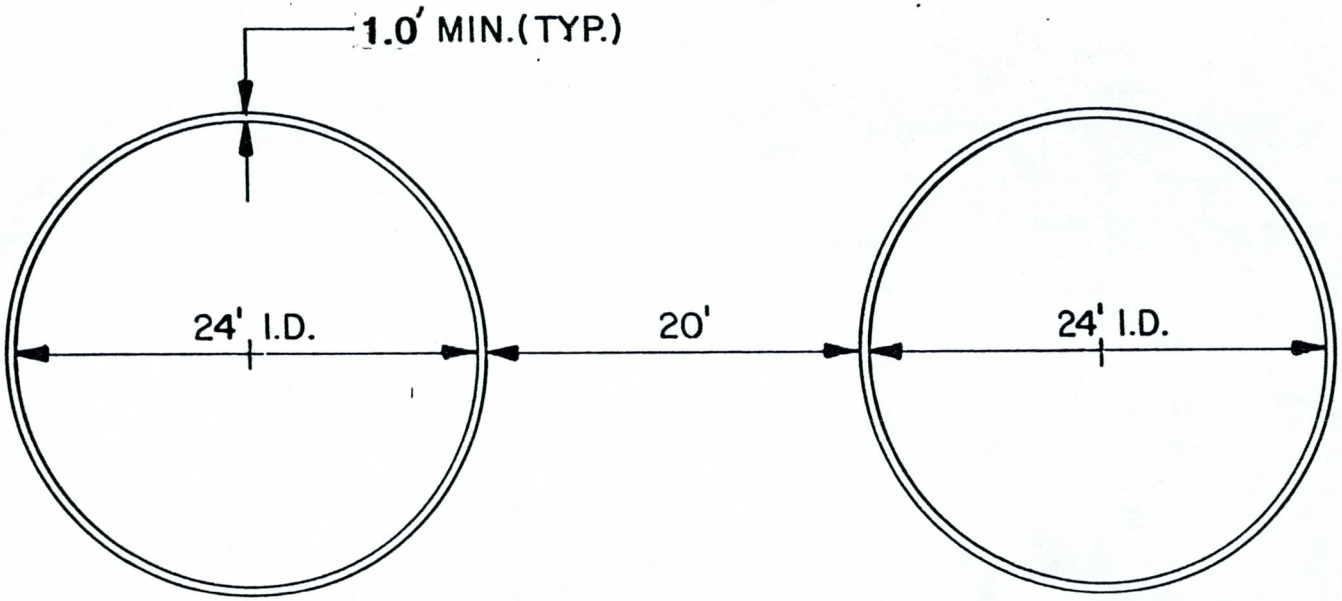

Recommended Tunnel Cross-Section

FIGURE A4

sea

the most economical option for technically producing a siphon tunnel in the area.

A sediment trapping system is required. The system could be a single basin or a decentralized basin at sediment source points depending on the real estate economics.

A storm drain system is recommended to handle the local surface runoff in the tunnel area. Fig A.5

The safety of the tunnel structure must be considered in the final design. The inlet and outlet shafts would be fenced and protected to prevent public access.

The recommendations presented in this report are based upon concept design and assumptions only. It is anticipated that preliminary design be preceded by a model study to further refine design parameters. This would assure verification of these assumptions.

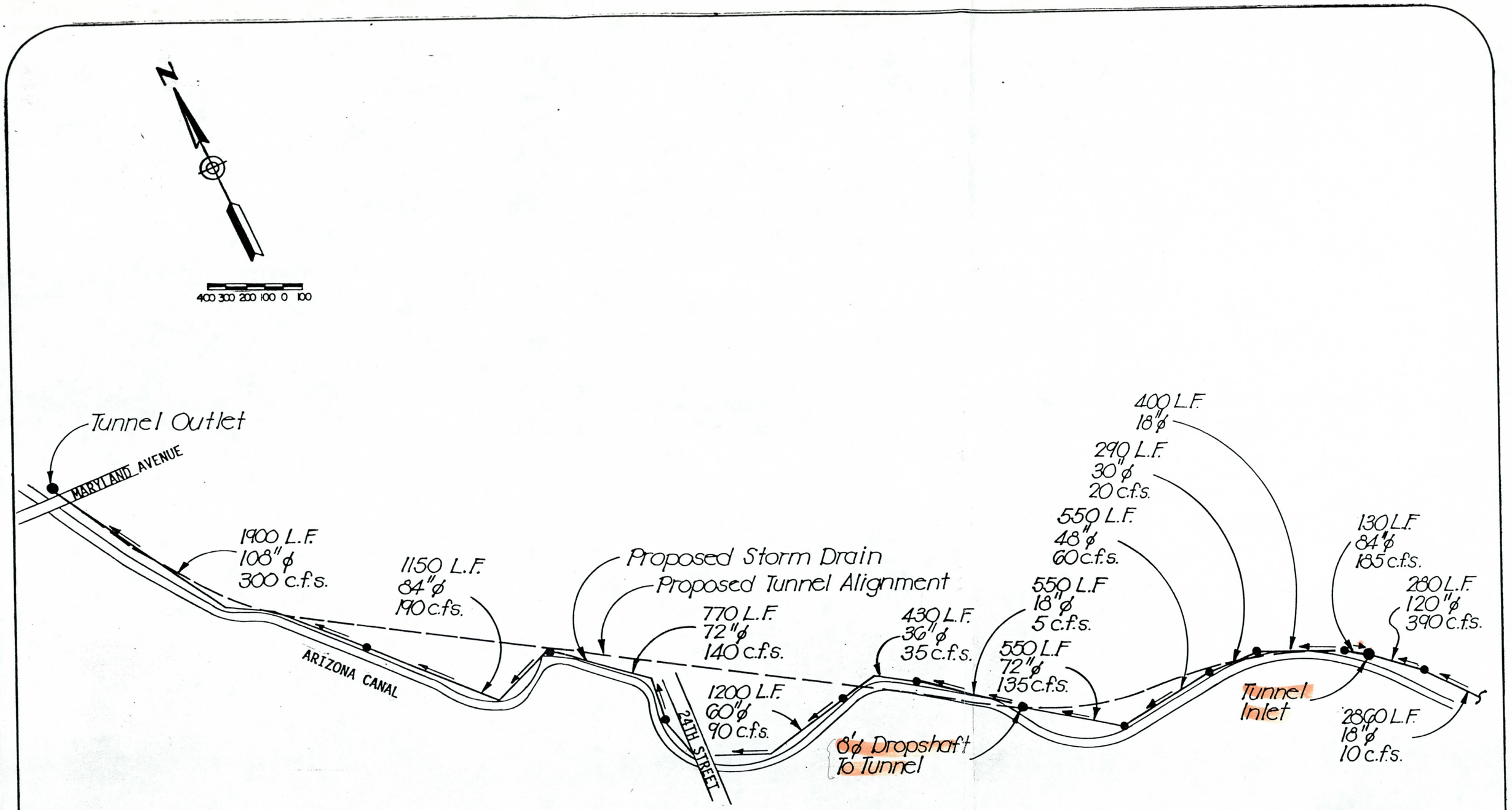

FIGURE A5

PROPOSED STORM DRAIN
FOR LOCAL RUNOFF

sea

References

Czarnota, Z. (1986). "Hydraulics of Rock Tunnels". Bulletin Number TRITA- VBI-129, Royal Institute of Technology, Stockholm, Sweden.

Hinds, J.W. (1928). "The Hydraulic Design of Flume and Siphon Transitions." Transactions of the American Society of Civil Engineers, 92, 1423 - 1459.

Kalinske and Robertson. (1943). "Air Entrainment: Closed Conduit Flow." Transactions of the American Society of Civil Engineers, 108, 1435-1447.

Morris and Wiggert (1972). Applied Hydraulics in Engineering. New York: John Wiley & Sons, Inc.

Sellers, et al. (1985) "Arizona Climate: The First Hundred Years". Tucson, AZ: University of Arizona Press.

United States Corps of Engineers Design Memorandum Number 12, Arizona Canal Diversion Channel.

USDI, Bureau of Reclamation. (1967). Design Standards Number 3: Canals and Related Structures.

APPENDIX

A. SIPHON USE

Estimate Number of Fills per Year

Following these computations are copies of two tables from the U of A publication Arizona Climate, the First 100 years. These tabulate the average number of days with precipitation higher than a threshold value. The first table has a threshold of 0.01", the second has a threshold of 0.25".

For purposes of estimating the number of fills per year, the second table will be used. The first table would be overconservative because first, the rainfall is likely too small to produce significant runoff and second, the table doubtless contains storm events which occur on consecutive days. The tunnel will be either emptied or chlorinated only after the end of a storm event, so rainfall events on consecutive days only count as one filling.

The 0.25" table is likely conservative enough. A more detailed hydrology study would be required to accurately assess the proper threshold than is warranted for a concept level study. The highest average per year for area stations will be used.

PROJECT Biltmore Tunnel DATE 9/26/88

SUBJECT Tunnel Operation DESIGNED KDW CHECKED TL

Average # of Days With Precipitation >0.25" in a Year

Station	Years in Record	Average Days Per Year w/ Precipitation >0.25"
Bartlett Dam	43	16
Buckeye	80	10
Carefree	13	15
Chandler	29	10
Chandler Heights	32	11
Deer Valley	32	11
Granite Reef Dam	75	13
Laveen 3SSE	34	10
Mesa Experiment Farm	80	11
Paradise Valley	14	11
Paradise Valley 2	3	9
Phoenix City	30	10
Phoenix Indian School	26	9
Phoenix South Mountain	7	11
Phoenix WSFO Airport	34	9
South Phoenix	21	11
Tempe Veg. Res. Farm	57	11
Tempe	47	12
Tempe ASU	29	11

To be conservative, use maximum from table of 16 days per year.

∴ Take tunnel filling on average of <u>16 times per year.</u>

FORM 230

sea incorporated
CONSULTING ENGINEERS

CONSULTING ENGINEERS

☐ Reno/Sparks
950 Industrial Way
Sparks, NV 89431-6092
(702) 358-6931

☐ Las Vegas
1405 Arville Street
Las Vegas, NV 89102
(702) 877-3000

☑ Phoenix
2920 N. 24th Ave., #6
Phoenix, AZ 85015-5948
(602) 257-4699

JOB NO. 6-0297-001-871

SHEET 3 OF

PROJECT Biltmore Tunnel DATE 9/26/88

SUBJECT Tunnel Operation DESIGNED KDW CHECKED TL

Compare Average Operation Costs

Use 16 fill events / year.

Pumping

a) 2-pump system

Operation = (16)(2106) = 33696 ≈ $33700 / year

FORM 230

from: Arizona Climate: the 1st 100 Years, eds. Sellers, Hill, and Sanderson-Rae, 1985

TABLE 14. AVERAGE NUMBER OF DAYS WITH PRECIPITATION GREATER THAN OR EQUAL TO 0.01 INCH

STATION	N	JAN	FEB	MAR	APR	MAY	JUN	JUL	AUG	SEP	OCT	NOV	DEC	YEAR
AGUILA	51	4	3	3	2	1	1	4	4	2	2	2	3	30
AJO	68	3	3	3	1	1	1	5	7	3	2	2	3	35
AJO WELL	26	3	2	2	1	0	1	4	5	2	2	2	3	27
ALAMO 8 SW	3	2	3	3	1	1	0	2	5	1	1	2	4	24
ALAMO DAM 6 ESE	12	2	2	3	1	0	1	2	4	2	2	3	3	24
ALAMO DAM	7	7	5	5	2	2	0	4	4	3	2	3	4	40
ALHAMBRA 2 NE	28	3	3	3	2	1	1	4	4	2	3	2	4	31
ALPINE	67	5	6	6	4	3	4	15	14	8	5	4	5	78
AMADO	25	2	2	2	1	0	1	9	7	3	2	1	2	35
ANVIL RANCH	33	3	3	3	1	1	1	9	8	4	3	2	3	42
APACHE 6 WNW	14	3	3	3	1	1	2	11	8	4	3	2	4	45
APACHE JUNCTION	13	4	3	4	1	1	1	3	4	3	3	3	3	32
APACHE JCT 4 NNW	3	4	5	3	2	1	2	5	6	2	2	3	7	41
APACHE POWDER CO	59	4	4	3	2	1	2	12	10	5	3	3	4	54
ARIVACA 1 E	26	4	3	4	2	1	2	12	11	6	3	3	5	58
ARIZ FALLS 1 WNW	4	2	2	3	2	1	1	3	4	3	1	3	5	30
AZ SONORA DES MUS	9	2	2	3	1	1	2	3	7	2	4	3	3	32
ASH FORK	64	5	5	5	4	2	2	8	8	4	3	3	5	53
ASH FORK NO. 2	3	5	7	3	4	2	4	9	8	4	5	1	3	57
ASH FORK 5 N	6	10	6	9	4	6	2	10	10	6	3	4	5	73
ASHURST HAYDEN DAM	26	4	3	4	2	1	1	4	4	2	3	2	4	34
BAGDAD 2	4	10	6	9	3	4	1	6	5	4	3	5	4	59
BAGDAD	52	4	5	4	3	1	1	5	7	4	3	3	4	45
BAGDAD 8 NE	25	4	4	5	3	2	1	6	8	3	3	3	4	47
BAR T BAR RANCH	22	3	3	4	2	1	1	6	8	3	3	2	3	37
BARTLETT DAM	43	5	4	5	3	1	1	4	6	4	3	3	5	45
BEACH RANCH	7	5	3	3	2	1	1	10	7	3	2	1	3	41
BEARDSLEY	28	3	3	3	2	1	1	3	4	2	2	2	3	27
BEAR VALLEY	8	4	2	2	2	1	1	12	9	4	1	1	3	42
BEAVER CREEK RS	25	4	4	6	3	3	1	5	7	4	3	3	4	47
BEAVER DAM	19	5	4	6	3	3	1	2	3	2	3	3	3	39
BEAVERHEAD LODGE	20	4	4	4	2	2	3	8	7	4	3	2	3	45
BENSON	71	3	3	3	1	1	2	9	9	4	2	2	3	43
BENSON 23 NNW	3	4	4	4	3	1	3	11	9	4	1	2	7	52
BETATAKIN	34	5	5	6	4	3	3	7	8	5	4	4	5	58
BISBEE	60	4	4	4	2	2	3	13	13	6	3	3	4	61
BISBEE 2	18	4	4	3	2	1	3	13	10	6	3	2	4	55
BLACK MNT MISSION	7	2	2	3	3	2	2	6	8	4	3	3	3	41
BLACK RIVER PUMPS	34	6	6	6	3	2	3	11	11	6	4	4	5	68
BLUE	48	4	5	5	3	2	3	12	12	7	4	3	5	64
BLUE RIDGE RS	15	6	6	7	4	5	2	11	10	6	4	4	4	70
BOSLEY RANCH	17	4	3	3	2	1	2	9	8	4	3	2	4	44
BOUSE	30	3	2	3	1	1	0	3	3	2	2	2	3	25
BOWIE	75	3	3	3	2	1	2	7	7	4	3	2	3	40
BOWIE JCT R15-W5	3	5	3	2	1	0	1	7	6	3	3	1	4	35
BRIGHT ANGEL RS	27	10	6	7	4	4	3	9	9	6	4	4	5	71
BUCKEYE	80	3	3	3	1	1	0	3	4	2	2	2	3	27
BULLHEAD CITY	5	6	4	7	1	2	0	2	2	2	2	2	3	35
BUMBLE BEE	26	4	4	4	2	2	1	7	8	3	3	4	4	47
BURRUS RANCH	20	6	5	6	5	3	3	11	11	6	4	4	6	70
CAMELBACK	14	4	3	3	1	1	1	4	4	2	3	2	3	28
CAMERON 1 NNE	20	3	3	4	2	3	2	4	5	3	3	3	3	39
CAMP WOOD	28	3	3	3	2	2	2	8	7	3	3	3	3	42
CANELO 1 NW	70	5	4	4	2	1	3	13	12	6	3	3	5	61
CANYON DE CHELLY	12	6	5	6	3	5	2	7	7	6	6	3	4	60
CAREFREE	13	3	3	4	2	1	1	4	5	5	3	3	5	40
CARL PLEASANT RES	9	5	3	4	3	2	1	5	5	2	2	2	2	35
CASA GRANDE	74	3	3	3	2	1	1	4	4	2	2	2	3	30
CASA GRANDE RUINS	59	4	4	3	2	1	1	4	5	3	3	3	4	36
CASCABEL	13	6	4	5	2	2	2	12	8	6	4	3	4	58
CASTLE HOT SPRINGS	23	4	3	4	2	1	1	4	5	2	2	2	4	34
CASTLE HOT SPGS 4N	9	4	3	4	3	2	1	6	6	2	2	2	2	37
CAVE CREEK	11	4	3	4	3	1	1	5	6	2	3	2	3	38
CAVE CREEK DAM	19	4	3	3	2	1	1	4	4	2	2	2	3	30
CEDAR GLADE	38	4	4	4	3	2	1	7	7	4	2	2	4	46
CEDAR RIDGE TP	4	2	1	2	2	1	2	4	5	4	2	2	1	27
CHANDLER	29	4	3	3	1	1	1	3	3	2	2	2	3	27
CHANDLER HEIGHTS	32	4	3	4	1	1	1	4	4	3	3	2	4	33
CHEVELON RS	22	5	5	7	4	4	2	12	12	7	4	4	5	72
CHILDS	66	5	5	5	4	2	2	7	9	5	4	4	5	57
CHINLE	53	4	4	5	4	3	2	8	8	5	4	3	4	54
CHINO VALLEY	33	5	4	5	3	2	2	8	8	4	4	3	4	51
CHIRICAHUA NM	44	6	4	5	2	2	3	14	12	6	4	3	5	65
CIBECUE	44	6	5	5	4	2	2	8	10	5	4	3	5	60
CLAY SPRINGS	10	8	5	9	4	5	2	9	10	6	4	5	5	71
CLIFTON	82	4	3	3	2	2	2	7	8	4	3	2	3	43
COCHISE POWER HS	36	3	3	3	2	1	1	9	7	3	2	2	3	40
COCHISE STRONGHOLD	17	4	3	3	3	2	2	10	11	6	3	3	4	56
COLORADO CITY	17	6	5	7	3	4	2	6	7	4	4	4	5	58
CONGRESS	10	5	5	5	2	2	1	3	6	2	4	2	4	40
COPPER MINE TP	26	3	2	3	2	2	2	5	5	3	3	2	2	32
CORDES	34	5	4	5	3	2	1	7	7	4	3	3	4	49
CORONADO NATL MEM	4	5	4	5	3	1	5	18	18	4	6	3	4	74
CORONADO NM HDQRS	22	6	5	4	2	1	4	16	13	8	4	4	6	71
CORTARO 3 SW	27	3	3	3	2	1	1	7	7	3	3	2	4	38
COTTONWOOD	28	5	5	5	4	2	2	8	9	5	4	4	4	56
COVERED WELLS	6	3	2	1	1	0	1	6	7	2	3	1	2	29
COW SPRINGS TP	4	2	2	2	1	1	2	6	4	3	2	2	6	31
CROWN KING	66	5	5	4	3	2	2	9	9	4	3	3	4	53
DATELAND	15	1	2	1	1	0	0	1	2	1	1	1	2	14
DATELAND WHITEWING	10	4	3	4	1	0	0	1	2	1	1	2	2	20
DAVIS DAM 2	19	2	3	3	2	1	1	2	2	2	2	2	3	24
DAVIS DAM	9	4	2	2	2	1	0	2	2	1	1	2	2	21
DEER VALLEY	32	4	3	3	1	1	1	3	4	2	3	3	3	31
DIAMOND BAR RANCH	4	5	2	2	2	1	1	7	6	1	1	2	3	30
DINNEHOTSO	15	4	3	3	2	3	2	4	5	2	4	4	4	39
DOS CABEZAS 1 SE	23	3	3	4	2	1	2	11	11	5	3	3	4	53
DOUGLAS	21	5	4	3	2	2	3	14	10	6	4	3	4	59
DOUGLAS FAA APT	34	4	3	3	1	1	3	14	11	5	3	3	4	56
DOUGLAS SMELTER	69	4	4	3	2	1	2	13	11	5	3	2	4	54
DRAKE RANGER STN	8	5	4	4	3	3	2	7	9	3	4	3	3	49
DRAGOON	24	6	6	5	3	2	2	11	11	5	3	4	5	64
DUGAS 2 SE	12	3	3	4	3	2	2	7	8	4	3	3	5	47
DUNCAN	47	4	4	4	1	2	2	8	8	4	3	3	4	46
EAGLE CREEK	44	3	4	4	2	2	2	10	10	6	3	3	4	52
EAGLE CREEK 2	9	6	5	6	2	3	2	10	9	6	3	3	4	60
EHRENBERG	27	2	1	2	1	0	0	1	2	1	1	1	2	15
EHRENBERG 2 E	5	5	4	4	1	2	0	0	3	1	1	2	2	23
ELGIN 5 N	56	3	3	3	2	1	2	11	10	5	2	2	3	48
ELOY	28	3	3	3	1	1	1	4	5	2	2	2	3	32

TABLE 14. AVERAGE NUMBER OF DAYS WITH PRECIPITATION GREATER THAN OR EQUAL TO 0.01 INCH (CONT)

STATION	N	JAN	FEB	MAR	APR	MAY	JUN	JUL	AUG	SEP	OCT	NOV	DEC	YEAR
FAIRBANK 1 S	59	3	3	2	1	1	2	10	9	4	2	2	3	41
FALCON FIELD	28	4	3	3	2	1	1	3	3	2	3	2	3	30
FLAGSTAFF WSO APT	33	8	6	8	6	4	3	12	11	6	5	5	6	79
FLORENCE	69	4	4	4	2	1	1	4	5	3	2	3	4	37
FLYING H RANCH	9	6	3	5	3	1	3	15	14	5	4	2	3	63
FORESTDALE	20	5	4	5	3	1	3	11	13	6	4	3	5	64
FORT DEFIANCE	14	4	5	4	3	3	2	7	8	5	3	2	3	50
FORT GRANT	53	3	3	4	2	1	2	9	9	5	3	2	3	45
FORT HUACHUCA	47	4	4	3	1	1	3	13	11	6	3	3	4	56
FORT THOMAS	7	3	3	2	1	0	2	7	5	5	3	3	5	38
FORT THOMAS 2 SW	16	4	4	4	2	2	2	6	4	3	3	2	4	38
FORT VALLEY	73	7	7	7	5	4	3	12	13	7	5	4	6	80
FOSSIL SPRINGS	19	6	5	5	5	3	2	9	11	5	4	5	5	64
FOUNTAIN HILLS	3	8	5	9	2	4	0	5	5	3	2	4	4	49
FREDONIA	27	5	3	4	3	3	2	4	5	3	3	3	4	42
FRITZ RANCH	29	4	3	3	2	1	2	9	8	4	3	2	3	44
GANADO	34	5	5	5	4	3	2	8	8	5	4	4	5	58
GILA BEND	77	2	2	2	1	1	0	3	3	1	1	1	2	21
GILA BEND AVIATION	18	4	2	3	1	1	1	4	5	2	2	2	3	29
GISELA	61	5	5	5	3	2	1	7	8	5	3	3	5	52
GLOBE	71	5	5	5	3	1	2	9	9	5	4	4	5	57
GLOBE 2	5	10	6	6	3	5	1	9	7	6	4	3	5	65
GOULD'S RANCH	43	3	3	2	1	1	0	3	3	2	1	1	2	22
GRAND CANYON	3	13	7	5	3	3	4	7	8	4	5	1	5	63
GRAND CANYON AWY	18	6	6	6	4	4	3	8	10	5	4	4	6	65
GRAND CANYON HDQRS	51	6	6	6	5	4	2	9	10	5	4	4	6	66
GRAND CANYON NF	19	4	5	6	5	3	3	8	9	5	5	4	5	61
GRAND CANYON NP 2	6	11	7	10	5	5	2	9	9	7	4	5	5	78
GRANITE REEF DAM	75	4	4	3	2	1	1	3	4	2	2	2	3	32
GRANVILLE	20	3	3	4	2	2	2	11	10	5	4	2	3	52
GRAY MOUNTAIN TP	5	3	2	3	1	3	1	4	5	3	5	3	3	36
GREER	31	7	7	8	5	4	4	17	16	9	6	5	6	93
GREY PEAK	3	3	5	5	5	1	1	10	10	4	1	3	4	51
GREYS PEAK MNTC YD	6	6	6	6	2	3	4	11	8	5	3	2	3	60
GRIGGS 3 W	32	3	3	3	1	1	0	2	3	2	2	2	3	25
GROOM CREEK	27	5	5	5	4	3	3	12	13	5	4	3	4	66
HACKBERRY	3	4	5	3	3	2	0	8	5	4	4	1	4	40
HAPPY JACK RS	13	7	6	9	5	5	3	11	10	7	4	4	5	76
HARQUAHALA PLNS 1	24	2	2	2	1	1	0	2	3	2	2	2	2	21
HAWLEY LAKE	15	8	7	10	5	4	4	16	16	10	6	5	7	98
HEBER RANGER STN	32	6	6	6	4	3	3	12	13	8	5	4	5	75
HELMET PEAK	3	2	3	2	2	1	2	10	9	3	1	2	5	42
HELV SANTA RITA ES	31	4	4	3	2	1	2	12	11	6	3	3	4	55
HILLSIDE	4	4	3	3	3	1	1	3	5	3	2	2	3	32
HILLSIDE 4 NNE	27	5	4	5	2	2	1	5	6	3	3	3	4	43
HOLBROOK	77	3	4	4	3	2	2	7	7	4	3	3	3	44
HORSESHOE DAM	34	5	4	5	3	2	1	6	7	4	4	3	4	48
HOUSE ROCK	4	6	3	4	2	2	2	6	5	2	1	1	1	35
INDIAN WELLS TP	4	6	4	3	4	4	2	6	8	2	5	3	3	49
INNER CANYON USGS	16	4	3	4	3	2	2	5	6	3	3	2	3	41
INTAKE	44	4	4	4	2	1	1	6	6	4	3	3	4	41
IRVING	32	6	5	7	5	3	2	8	9	5	4	4	5	63
JACOB LAKE	16	4	4	6	5	5	3	9	9	4	4	4	6	63
JEDDITO	7	4	4	4	3	3	1	7	6	3	3	2	4	43
JEROME	81	6	6	6	4	3	2	9	10	4	4	3	4	59
JUNIPINE	33	6	5	7	5	3	2	10	9	5	5	4	4	66
KAIBITO	10	3	3	3	3	2	1	4	4	2	3	2	2	31
KAYENTA	56	3	4	4	3	2	2	6	7	4	4	3	4	44
KEAMS CANYON	32	5	4	5	3	3	2	6	7	4	3	4	4	50
KELVIN	33	4	3	4	2	1	1	4	5	3	2	3	3	37
KINGMAN	64	4	4	4	3	1	1	4	5	3	2	2	4	36
KINGMAN 2	15	5	4	5	2	1	1	5	4	3	3	2	3	40
KITT PEAK	22	5	4	5	2	1	1	12	10	6	3	3	5	57
KLAGETOH	7	4	2	4	3	2	2	7	7	3	1	3	3	41
KLAGETOH 12 WNW	22	4	4	4	2	2	2	5	6	4	4	3	4	45
KLONDYKE 3 SE	22	3	3	3	1	1	1	6	6	3	3	2	3	36
KOFA MINE	26	3	2	2	1	1	0	3	3	2	1	2	2	22
LAKE HAVASU	14	3	2	4	1	1	1	1	2	1	2	2	2	22
LAKE PLEASANT	18	3	4	3	1	1	1	3	4	3	3	3	4	33
LAKESIDE RS	26	7	6	7	5	3	3	14	15	8	6	5	6	84
LAVEEN 3 SSE	34	4	3	3	2	1	1	4	4	2	2	2	3	31
LEES FERRY	59	3	3	3	3	2	1	4	5	3	3	2	3	36
LESLIE CANYON	43	3	3	3	2	1	2	9	8	3	2	2	3	41
LEUPP	32	3	3	4	2	2	2	6	6	5	3	2	3	40
LITCHFIELD PARK	65	3	3	3	2	1	1	3	4	2	2	2	3	30
LITTLEFIELD	5	3	1	4	2	0	1	2	3	1	1	2	3	24
LOOKOUT RANCH	6	4	2	3	2	1	1	6	6	1	2	2	2	33
LUKACHUKAI	27	4	3	5	2	2	1	5	6	3	3	4	3	42
MANY FARMS	23	2	3	3	2	2	2	5	6	3	3	3	3	36
MARICOPA 4 N	22	4	3	3	1	1	1	3	4	3	2	2	4	31
MARICOPA 8 SSE	51	3	3	2	1	1	1	4	4	2	1	2	3	25
MARINETTE	39	3	3	2	2	1	1	3	3	2	1	2	3	25
MAVERICK	19	7	6	7	4	2	4	17	16	8	5	4	6	85
MCNARY	48	7	7	8	5	3	3	13	15	8	5	5	6	84
MCNEAL	22	3	2	2	0	1	1	9	6	4	2	2	3	34
MESA EXPERI FARM	80	4	4	3	2	1	1	4	5	3	2	2	4	34
METEOR CRATER	3	5	3	4	6	2	3	9	5	7	3	3	4	53
MIAMI	68	6	5	5	3	2	2	9	9	5	4	4	5	58
MOHAWK	48	1	2	1	1	0	0	1	2	1	1	1	2	13
MONTEZUMA	3	2	1	1	0	0	0	2	3	2	2	1	3	16
MONTEZUMA CASTLE	44	5	5	5	3	2	2	7	8	4	4	4	5	53
MORMON FLAT	57	4	5	4	2	1	1	4	6	3	3	3	4	41
MORMON LAKE RS	10		7	5	4	4	2	10	11	6	4	5	2	
MOUNT FAGAN RANCH	6	4	2	3	1	1	2	7	9	3	2	2	3	38
MOUNT LEMMON	5	5	2	3	1	1	1	8	10	4	3	2	3	42
MT LEMMON INN	5	3	2	4	3	1	3	14	12	3	2	2	3	52
MOUNT TRUMBULL	53	4	4	4	3	2	2	5	6	3	3	2	4	41
MUMMY MOUNTAIN	3	1	2	1	0	0	2	3	4	3	6	2	5	29
NATURAL BRIDGE	70	5	5	5	4	2	2	9	9	5	4	4	5	59
NAVAJO	13	2	2	3	2	1	1	6	5	4	3	2	3	35
N LAZY H RANCH	34	5	4	4	2	1	2	9	9	4	3	2	4	48
NOGALES (6/48 ON)	34	5	4	4	2	1	2	15	12	6	3	2	5	60
NOGALES (TO 6/48)	39	4	4	3	2	1	2	13	13	6	3	2	4	57
NOGALES 6 N	30	5	4	4	1	1	2	14	12	6	3	3	4	59
ORACLE	41	4	5	5	3	1	2	8	10	5	3	4	5	55
ORACLE 2 SE	32	6	5	6	3	2	2	11	10	5	3	3	5	60
ORAIBI	9	3	3	3	4	2	1	5	8	5	3	3	5	44
ORGAN PIPE CACTUS	34	4	3	3	1	1	0	5	5	3	2	2	3	33
PAGE	25	3	4	5	3	3	2	4	5	4	3	3	4	42
PAINTED CANYON	13	5	3	5	2	2	3	16	15	7	5	3	5	71

TABLE 14. AVERAGE NUMBER OF DAYS WITH PRECIPITATION GREATER THAN OR EQUAL TO 0.01 INCH (CONT)

STATION	N	JAN	FEB	MAR	APR	MAY	JUN	JUL	AUG	SEP	OCT	NOV	DEC	YEAR
PAINTED DESERT NM	9	6	5	7	4	4	2	7	7	6	3	4	3	57
PALISADE RS	15	6	4	6	3	2	3	13	11	7	4	4	6	68
PARADISE	30	3	4	3	3	2	3	11	10	6	3	3	4	54
PARADISE VALLEY	14	4	4	3	2	1	1	4	5	3	3	3	4	35
PARADISE VALLEY 2	3	2	3	5	3	2	0	4	2	3	3	3	3	32
PARKER	81	3	3	2	1	0	0	1	2	1	1	2	2	20
PATAGONIA	55	4	3	3	2	1	2	13	12	5	3	3	4	56
PATAGONIA 2	4	8	6	5	1	2	3	11	8	4	2	3	3	56
PAYSON 12 NNE	24	6	5	7	5	3	3	13	14	7	5	5	6	77
PAYSON RS	62	5	5	5	4	2	2	9	10	5	4	4	5	61
PAYSON	34	6	5	6	4	3	2	10	10	6	4	4	6	67
PEACH SPRINGS	34	5	4	5	3	3	2	6	6	3	3	3	4	46
PEARCE	30	4	3	3	1	1	2	10	9	5	3	2	4	48
PERKINSVILLE	10	4	4	4	4	2	3	8	10	6	3	3	6	56
PETRIFIED FRST NP	34	4	4	5	3	3	2	8	9	5	4	3	4	54
PHANTOM RANCH	13	6	4	6	3	3	2	6	4	4	4	4	4	49
PHX INDIAN SCHOOL	26	4	3	3	2	1	1	3	4	2	3	2	3	29
PHOENIX SOUTH MTN	7	6	4	6	2	2	0	4	3	2	2	2	3	36
PHOENIX WSFO APT	34	4	4	4	2	1	1	4	5	3	3	2	3	35
PHOENIX CITY	30	4	3	3	2	1	1	3	4	2	2	2	3	32
PICACHO RESERVOIR	26	4	4	4	2	1	1	4	5	3	3	3	4	38
PIERCE FERRY	3	5	2	3	3	2	1	3	3	2	1	1	4	29
PIERCE FERRY 176SW	19	4	4	6	3	2	1	4	5	3	3	3	3	42
PIMA R4 ON W2	3	5	3	2	3	0	1	6	6	2	2	1	4	35
PINAL RANCH	73	5	6	5	3	1	2	8	9	5	3	4	5	56
PINEDALE	54	4	5	4	4	2	2	10	9	5	4	3	5	57
PINETOP	3	10	7	13	5	7	3	14	16	10	4	7	4	100
PINETOP FISH HATCH	34	6	5	6	4	2	3	12	12	6	4	4	4	67
PINON	11	3	3	4	3	1	2	4	4	4	4	3	3	38
PINTA	4	4	4	3	2	3	3	5	7	3	4	3	3	43
PIPE SPRINGS NM	19	5	5	6	4	4	2	6	7	4	4	4	5	56
PISINEMO	7	5	2	3	2	0	1	5	5	2	1	1	2	29
PLEASANT VALLEY RS	18	7	5	8	3	4	2	11	10	6	4	4	6	69
POLAND JUNCTION	3	6	5	2	4	2	2	7	7	4	4	1	4	46
PORTAL	38	4	4	4	3	2	3	10	10	6	4	3	4	55
PORTAL 4 SW	17	7	6	6	3	3	4	16	13	9	5	4	6	81
PRESCOTT	81	5	6	6	4	3	2	10	11	5	4	4	5	64
PRESCOTT FAA AP	20	5	4	4	4	3	2	11	10	5	3	4	5	59
PUNKIN CENTER	9	8	5	7	3	3	1	6	5	3	3	3	3	50
QUARTZSITE	15	2	2	2	1	0	0	2	3	1	1	2	2	17
REDINGTON	34	4	3	4	1	1	1	8	7	3	3	3	4	44
RED ROCK 6 SSW	44	3	3	3	2	1	1	5	5	3	2	2	3	33
RENO RANGER STN	51	5	5	5	3	1	1	6	7	4	3	3	5	49
RIMROCK	13	5	4	4	3	2	2	6	7	3	4	3	3	44
ROOSEVELT 1 WNW	76	5	5	5	3	2	1	6	7	4	3	3	5	50
ROUGH ROCK SCHOOL	3	3	3	3	2	2	3	4	8	4	2	4	4	42
RUBY 4 NW	28	4	4	3	2	1	2	13	13	5	3	2	4	56
RUBY STAR RANCH	30	4	3	3	1	0	1	9	7	4	3	2	3	39
RUCKER CANYON	64	4	3	3	2	1	3	11	10	5	3	2	4	51
SABINO CANYON	34	5	4	5	3	2	2	11	10	5	4	3	5	57
SACATON	72	4	4	3	2	1	1	4	5	2	2	2	4	34
SAFFORD	45	3	3	3	2	1	1	7	7	4	3	2	4	39
SAFFORD EXP FARM	34	5	4	4	2	2	2	8	8	5	4	3	5	51
SAHUARITA	16	2	2	3	1	0	1	8	7	4	2	2	3	35
SAINT JOHNS	73	4	4	5	3	3	3	10	11	6	4	3	4	60
SAINT MICHAELS	20	4	4	4	3	2	2	9	9	5	3	3	4	50
SALA RANCH	29	5	4	5	2	1	3	15	14	7	5	3	5	67
SALOME	13	2	3	2	1	1	1	3	5	2	2	2	4	26
SALOME 6 SE	48	3	3	3	2	1	1	5	5	2	2	2	3	31
SALT RIVER	15	3	3	3	2	1	2	6	6	3	2	3	3	36
SAN CARLOS	27	5	3	3	2	1	1	6	6	4	3	2	4	40
SAN CARLOS RESER	34	5	4	5	3	2	2	8	8	4	4	3	5	52
SANDERS	23	6	5	6	4	3	2	8	8	5	3	4	4	58
SANDERS 11 ESE	21	5	5	5	3	2	1	6	5	4	3	3	4	46
SAN MANUEL	28	6	4	5	2	1	2	10	9	5	4	3	5	56
SAN RAFAEL RANCH	43	3	3	3	2	1	2	15	14	5	3	2	4	57
SAN SIMON	50	3	3	3	2	1	2	7	7	3	2	2	3	37
SAN SIMON 9 ESE	20	4	3	3	1	1	2	8	7	5	3	3	4	45
SANTA MARGARITA	33	3	3	3	1	1	1	9	9	4	1	2	2	40
SANTA RITA EXP RGE	32	4	3	4	2	1	3	13	11	5	3	3	4	57
SANTA ROSA SCHOOL	16	2	1	2	1	0	1	5	5	2	1	2	3	24
SASABE	23	4	4	4	1	1	1	10	10	5	3	3	5	49
SASABE 7 NW	31	3	2	3	1	1	1	9	8	4	2	2	3	39
SCOTTSDALE	13	4	4	5	1	1	1	4	4	3	3	3	3	37
SEBA DALKAI SCHOOL	7	2	3	3	2	2	1	3	6	4	2	3	5	34
SEDONA RS	33	6	5	6	4	3	2	8	9	5	4	4	5	62
SELIGMAN	71	4	4	4	3	2	1	7	7	3	2	2	4	42
SELIGMAN 13 SSW	18	4	4	5	3	2	2	7	7	4	3	2	3	46
SELLS	26	3	2	3	1	1	1	9	8	3	3	2	4	39
SENECA CREEK	3	8	4		3	3	2	8	5	6	3	1	2	
SENTINEL	26	2	2	1	1	0	0	3	3	1	1	1	1	16
SHORT CREEK	11	5	3	4	4	3	2	5	5	1	2	3	4	41
SHOW LOW	12	5	5	5	3	1	2	11	11	3	4	4	5	59
SHOW LOW AIRPORT	16	6	5	7	3	3	2	12	10	6	5	4	5	67
SIERRA ANCHA	47	7	6	6	3	2	2	9	10	6	4	4	6	64
SIGNAL 13 SW	7	5	3	3	2	0	0	5	5	2	2	2	2	31
SILVER BELL	34	4	4	3	1	1	1	8	8	4	3	3	4	42
SILVER CREEK RANCH	18	5	4	4	3	2	2	10	10	6	4	3	4	57
SKULL VALLEY	7	7	7	9	4	3	1	8	6	5	4	3	3	61
SLATE MOUNTAIN	3	2	1	2	1	2	0	6	4	3	4	2	2	29
SNOWFLAKE	75	4	4	4	3	2	2	8	9	5	3	3	3	52
SNOWFLAKE 15 W	17	5	4	6	4	4	2	9	9	5	4	3	4	60
SOUTH PHOENIX	21	4	3	4	2	1	1	3	4	2	2	3	3	33
SPRINGERVILLE	71	4	3	4	3	3	3	12	13	7	4	3	3	61
STANTON	21	5	3	4	2	1	1	6	8	3	3	3	4	42
STEPHENS RANCH	52	3	3	2	1	1	2	9	8	4	2	2	3	39
STEWART MOUNTAIN	34	5	4	4	2	1	1	5	5	3	3	3	4	40
SUNFLOWER 3 NNW	29	5	4	5	2	2	1	5	6	3	3	3	4	44
SUNRISE MOUNTAIN	9	9	8	11	6	4	5	15	15	10	7	6	6	102
SUNSET CRATER NM	13	6	5	7	4	5	3	11	11	7	6	4	5	74
SUPAI	26	4	4	5	3	3	1	5	6	3	3	3	4	44
SUPERIOR	62	5	5	5	3	2	2	7	8	5	3	4	5	54
SUPERIOR 2 ENE	8	8	5	6	3	3	1	7	6	5	3	3	5	56
SUPERIOR SMELTER	5	5	3	5	5	1	1	8	5	3	2	3	4	45
SUPERSTITION MTN	13	5	3	3	2	1	1	5	4	2	2	2	4	34
SYCAMORE RS	38	3	5	4	3	1	2	7	8	4	3	3	4	45
TACNA 3 NE	13	3	3	3	1	1	0	2	3	2	2	2	3	23
TANQUE R9 ON W4	3	4	3	2	1	0	1	6	5	2	3	1	4	31
TEEC NOS POS	19	5	4	5	3	3	2	4	5	3	3	4	4	46
TEES TO	4	1	0	1	0	1	0	2	2	0	1	3	0	11

TABLE 14. AVERAGE NUMBER OF DAYS WITH PRECIPITATION GREATER THAN OR EQUAL TO 0.01 INCH (CONT)

STATION	N	JAN	FEB	MAR	APR	MAY	JUN	JUL	AUG	SEP	OCT	NOV	DEC	YEAR
TEMPE VEG RES FARM	57	4	4	4	2	1	1	4	5	3	3	3	4	36
TEMPE	47	4	4	3	3	1	1	5	5	3	2	2	4	37
TEMPE ASU	29	4	3	4	2	1	1	4	5	3	3	3	4	38
THORNBURG RANCHES	8	3	2	2	2	1	1	3	4	1	2	2	2	24
TOLLESON 1 E	29	4	3	4	2	1	0	3	3	2	2	3	3	28
TOMBSTONE	79	4	4	3	2	1	2	11	11	5	3	3	3	51
TONOPAH 2 S	10	2	2	3	2	1	1	2	4	2	2	3	3	25
TONTO CREEK FH	26	5	5	6	4	2	2	11	12	6	4	4	5	66
TONTO CREEK FH 2	7	10	7	11	5	6	2	13	9	8	4	4	5	82
TONTO SPRGS RS 4 W	15	5	4	5	3	2	2	8	9	4	3	4	3	52
TOPOCK	12	3	2	2	1	1	0	2	2	2	2	1	2	19
TRUXTON CANYON	31	5	4	5	3	2	1	5	7	3	3	3	4	45
TUBA CITY	70	3	3	3	3	2	1	5	5	3	3	2	3	37
TUCSON CAMPBELL FM	32	4	3	4	2	1	1	8	7	4	2	2	4	43
TUCSON MAGNET OBSY	33	6	4	5	2	2	2	10	8	5	4	3	5	54
TUCSON MNT PARK	5	4	2	4	3	1	1	10	5	3	2	2	3	40
TUCSON NURSERY	3	6	3	2	3	0	1	8	6	2	2	0	4	37
TUCSON UNIV OF AZ	82	4	4	4	2	1	2	9	9	5	3	3	4	50
TUCSON WSO AIRPORT	34	5	3	4	2	1	2	11	9	4	3	3	4	51
TUMACACORI NM	34	4	3	4	1	1	2	13	11	6	3	2	4	56
TUWEEP	33	4	3	4	2	2	1	5	6	3	2	2	3	37
TUZIGOOT NM	5	9	8	10	4	4	1	8	9	4	3	3	5	67
UPPER PARKER CREEK	3	9	6	5	4	1	1	8	8	5	5	1	5	57
VALLE AIRPORT	7	4	3	3	2	2	1	7	8	3	1	3	3	39
VALLEY CITRUS FARM	4	6	3	4	4	1	0	6	4	3	2	2	4	37
WAHAK HOTRONTK	3	2	3	1	1	0	0	3	4	3	2	3	4	27
WAHWEAP	21	3	4	4	2	2	2	3	4	3	3	3	3	37
WALLACE RS	32	4	4	5	4	2	2	9	10	5	3	3	4	55
WALNUT CANYON NM	32	6	5	7	4	4	2	11	10	6	5	4	5	70
WALNUT CREEK	66	5	5	5	3	2	2	8	8	4	3	3	4	53
WALNUT GROVE	81	3	4	3	2	1	1	6	7	3	2	3	3	39
WELLTON	55	2	2	2	1	0	0	2	3	1	2	1	2	19
WHITE HILLS 5 WSW	3	0	2	2	3	1	1	0	1	1	1	3	5	20
WHITERIVER	73	6	6	6	4	3	2	12	12	6	4	4	5	71
WHITLOCK VLY R2-W1	3	4	3	2	2	0	1	5	3	3	3	1	3	28
WICKENBURG	71	4	3	3	2	1	1	4	5	3	2	2	4	34
WIKIEUP	28	5	3	4	2	1	1	3	4	2	2	2	3	32
WILLCOX	79	4	4	3	2	1	2	10	8	5	3	3	4	48
WILLIAMS	77	6	6	6	5	3	2	10	11	5	4	4	6	68
WILLIAMS CREEK FH	13	5	4	6	3	2	2	12	13	7	4	4	5	67
WILLOW BEACH	14	4	3	5	1	2	1	2	3	2	2	3	3	30
WILLOW SPRINGS RCH	26	4	4	3	2	1	1	7	8	4	3	3	4	44
WINDOW ROCK 4 SW	43	7	7	7	5	4	3	10	11	7	5	5	6	76
WINKELMAN 6 S	27	5	3	4	2	1	1	6	7	3	3	2	4	43
WINSLOW WSO APT	72	3	4	4	3	3	2	7	9	5	3	3	4	51
WITTMANN	38	3	4	3	2	1	0	3	4	2	2	2	3	29
WORKMAN CREEK 1	3	12	5	6	4	2	2	9	8	4	3	2	5	60
WUPATKI NM	34	3	3	4	2	3	2	9	9	5	4	3	3	49
Y LIGHTNING RANCH	41	3	2	2	1	1	2	10	8	4	2	2	2	38
YAEGER CANYON	28	3	4	4	3	2	2	8	8	3	3	2	3	44
YAVA 6 ESE	26	4	3	4	2	1	1	5	7	3	3	2	3	38
YOUNG	48	5	6	5	4	2	2	9	9	5	3	3	4	57
YOUNG 12 N	4	4	3	4	6	3	2	15	13	2	2	3	3	59
YOUNGTOWN	18	4	4	4	2	1	1	4	4	3	2	3	4	36
YUCCA 1 NNE	29	4	3	4	2	1	1	3	3	2	2	2	3	30
YUMA CITRUS STN	62	2	2	2	1	0	0	1	2	1	1	1	2	15
YUMA DATE ORCHARD	23	2	2	2	1	0	0	1	2	1	1	1	2	14
YUMA PROVING GRND	24	2	2	2	1	1	0	1	2	2	1	1	2	19
YUMA VALLEY	48	2	2	2	1	0	0	1	1	1	1	1	2	15
YUMA WSO AIRPORT	33	3	2	2	1	0	0	1	2	1	1	1	2	16
YUMA	73	2	2	2	1	0	0	1	2	1	1	1	2	16

TABLE 15. AVERAGE NUMBER OF DAYS WITH PRECIPITATION GREATER THAN OR EQUAL TO 0.25 INCH

STATION	N	JAN	FEB	MAR	APR	MAY	JUN	JUL	AUG	SEP	OCT	NOV	DEC	YEAR
AGUILA	51	1	2	1	1	0	0	1	2	1	1	1	1	11
AJO	68	1	1	1	0	0	0	2	2	1	1	1	1	11
AJO WELL	26	1	0	1	0	0	0	1	2	1	1	1	1	10
ALAMO 8 SW	3	0	1	1	1	0	0	1	2	1	0	1	1	10
ALAMO DAM 6 ESE	12	1	1	1	1	0	0	1	2	1	1	1	1	10
ALAMO DAM	7	1	2	2	0	1	0	1	2	1	1	1	1	13
ALHAMBRA 2 NE	28	1	1	1	0	0	1	1	2	1	1	1	2	28
ALPINE	67	2	2	2	1	1	1	5	5	3	2	1	1	17
AMADO	25	1	1	1	0	0	0	5	4	2	1	1	1	15
ANVIL RANCH	33	1	1	1	0	0	0	3	3	2	1	1	2	23
APACHE 6 WNW	14	2	2	1	0	0	1	5	4	2	2	1	1	12
APACHE JUNCTION	13	2	1	2	1	0	0	1	1	1	1	3	5	17
APACHE JCT 4 NNW	3	1	2	2	1	1	0	1	2	1	1	1	1	17
APACHE POWDER CO	59	1	1	1	0	0	1	4	4	2	1	1	2	22
ARIVACA 1 E	26	2	1	1	0	0	1	6	4	2	1	2	2	12
ARIZ FALLS 1 WNW	4	1	1	1	1	0	1	1	2	1	2	1	1	14
AZ SONORA DES MUS	9	1	1	1	0	0	0	2	4	2	1	1	2	17
ASH FORK	64	1	1	1	1	1	1	3	3	1	1	1	1	15
ASH FORK NO. 2	3	2	2	1	1	1	0	2	2	1	2	0	1	21
ASH FORK 5 N	6	3	2	4	1	1	0	3	2	2	1	2	1	14
ASHURST HAYDEN DAM	26	1	1	2	1	0	0	1	2	1	1	1	2	22
BAGDAD 2	4	4	3	5	1	1	0	2	1	1	1	1	2	17
BAGDAD	52	2	2	2	1	0	0	2	2	1	1	1	2	20
BAGDAD 8 NE	25	2	2	2	1	0	1	2	3	1	2	2	2	20
BAR T BAR RANCH	22	2	2	2	1	0	1	3	4	1	1	1	2	16
BARTLETT DAM	43	2	2	2	1	0	0	1	2	1	1	1	1	19
BEACH RANCH	7	2	1	2	1	0	1	6	3	1	1	1	1	10
BEARDSLEY	28	1	1	1	0	0	0	1	1	1	1	1	2	24
BEAR VALLEY	8	3	1	2	1	0	1	7	5	2	1	2	2	20
BEAVER CREEK RS	25	2	2	3	1	1	0	2	2	2	2	2	2	20
BEAVER DAM	19	1	1	2	1	1	0	0	1	1	1	1	1	10
BEAVERHEAD LODGE	20	3	2	2	1	1	1	4	4	2	2	1	2	25
BENSON	71	1	1	1	0	0	0	4	4	2	1	1	1	16
BENSON 23 NNW	3	1	2	1	1	0	1	4	4	2	2	1	5	21
BETATAKIN	34	1	1	1	1	1	1	2	2	1	1	1	1	15
BISBEE	60	2	2	1	1	0	1	5	5	2	1	1	2	23
BISBEE 2	18	1	1	1	0	0	1	5	4	2	1	1	2	19
BLACK MNT MISSION	7	1	1	0	1	0	1	2	3	1	2	1	1	12
BLACK RIVER PUMPS	34	2	2	2	1	1	1	4	5	2	2	1	2	25
BLUE	48	2	2	2	1	1	1	5	5	3	2	1	2	27
BLUE RIDGE RS	15	2	2	3	2	1	1	4	4	2	2	2	2	25
BOSLEY RANCH	17	2	1	1	1	0	0	5	3	2	1	1	2	21
BOUSE	30	1	1	1	0	0	0	1	1	1	0	1	1	7
BOWIE	75	1	1	1	0	0	1	3	3	2	1	1	1	14
BOWIE JCT R15-W5	3	2	2	0	1	0	1	3	3	1	1	0	2	15
BRIGHT ANGEL RS	27	5	3	4	2	1	1	2	3	2	2	2	3	31
BUCKEYE	80	1	1	1	0	0	0	1	1	1	1	1	1	10
BULLHEAD CITY	5	2	2	3	0	0	0	1	1	0	0	1	1	12
BUMBLE BEE	26	2	2	2	1	0	0	2	1	1	1	1	2	19
BURRUS RANCH	20	2	2	2	1	1	1	4	3	2	2	2	3	24
CAMELBACK	14	1	1	1	0	0	0	1	2	1	1	1	1	10
CAMERON 1 NNE	20	1	0	1	0	0	0	1	1	1	1	0	1	6
CAMP WOOD	28	2	2	2	0	1	1	4	4	1	2	2	2	23
CANELO 1 NW	70	2	2	1	1	0	0	6	5	2	1	1	2	23
CANYON DE CHELLY	12	1	1	0	0	1	0	1	2	1	2	1	1	10
CAREFREE	13	1	1	2	0	0	0	2	2	1	1	1	2	15
CARL PLEASANT RES	9	2	1	2	1	0	0	2	1	1	1	1	1	13
CASA GRANDE	74	1	1	1	0	0	0	1	2	1	1	1	1	11
CASA GRANDE RUINS	59	1	1	1	0	0	0	1	1	1	1	1	2	11
CASCABEL	13	1	1	1	0	1	1	3	3	2	1	1	1	17
CASTLE HOT SPRINGS	23	2	2	3	1	0	0	1	3	1	1	2	2	18
CASTLE HOT SPGS 4N	9	2	2	2	1	1	1	3	3	1	1	1	1	18
CAVE CREEK	11	2	1	2	1	0	0	1	2	1	1	1	1	15
CAVE CREEK DAM	19	1	1	1	1	0	0	1	2	1	1	1	2	12
CEDAR GLADE	38	2	2	1	1	1	0	2	3	2	2	2	2	18
CEDAR RIDGE TP	4	1	1	1	1	0	0	1	2	1	1	1	1	8
CHANDLER	29	1	1	1	0	0	0	1	1	1	1	1	1	10
CHANDLER HEIGHTS	32	1	1	2	0	0	0	1	1	1	1	1	1	11
CHEVELON RS	22	2	2	2	1	1	0	4	4	2	2	2	2	25
CHILDS	66	2	2	2	1	1	0	3	3	2	1	2	2	22
CHINLE	53	1	1	1	1	1	0	2	2	1	1	1	1	12
CHINO VALLEY	33	1	1	1	1	0	0	3	3	2	1	1	1	18
CHIRICAHUA NM	44	2	2	2	1	1	1	5	5	2	2	2	2	24
CIBECUE	44	2	2	4	1	2	1	3	4	2	2	2	2	25
CLAY SPRINGS	10	2	2	1	1	0	1	3	3	2	1	1	2	27
CLIFTON	82	2	1	1	1	0	0	3	3	1	1	1	1	18
COCHISE POWER HS	36	1	1	1	0	1	0	4	5	2	1	2	2	14
COCHISE STRONGHOLD	17	1	2	1	1	1	1	1	2	1	1	1	1	22
COLORADO CITY	17	2	2	2	1	1	0	1	1	2	2	1	1	18
CONGRESS	10	2	2	3	1	1	0	2	2	1	1	1	2	16
COPPER MINE TP	26	1	1	1	0	1	0	2	3	2	1	1	1	10
CORDES	34	2	2	2	1	0	0	2	6	1	2	1	1	18
CORONADO NATL MEM	4	2	2	1	0	0	2	7	5	2	2	1	1	26
CORONADO NM HDQRS	22	2	2	1	1	0	1	6	3	1	1	1	3	25
CORTARO 3 SW	27	1	1	1	0	0	0	3	3	1	1	1	1	15
COTTONWOOD	28	1	1	1	1	0	1	2	4	1	1	1	1	15
COVERED WELLS	6	2	1	1	0	0	0	3	1	1	1	1	2	14
COW SPRINGS TP	4	0	0	1	1	0	0	2	5	2	0	4	4	10
CROWN KING	66	3	3	3	2	1	1	4	1	0	2	0	3	28
DATELAND	15	1	0	0	0	0	0	0	0	0	0	2	1	4
DATELAND WHITEWING	10	1	1	2	0	0	0	0	1	1	1	1	1	7
DAVIS DAM 2	19	1	1	0	0	0	0	0	0	0	0	0	1	5
DAVIS DAM	9	1	0	1	0	0	0	0	1	1	1	1	1	5
DEER VALLEY	32	1	1	2	0	0	0	0	2	2	1	1	2	11
DIAMOND BAR RANCH	4	2	1	1	1	0	0	0	1	1	0	1	1	13
DINNEHOTSO	15	1	0	0	0	0	0	0	4	1	1	1	1	7
DOS CABEZAS 1 SE	23	1	1	1	0	0	1	4	5	4	2	1	1	18
DOUGLAS	21	1	1	1	0	0	0	1	4	3	2	1	1	18
DOUGLAS FAA APT	34	1	1	1	0	0	1	1	4	4	2	1	1	16
DOUGLAS SMELTER	69	1	1	1	0	0	0	1	4	4	2	1	1	16
DRAKE RANGER STN	8	2	2	1	0	1	1	2	3	2	2	0	1	17
DRAGOON	24	2	3	2	1	0	0	4	3	2	1	1	2	21
DUGAS 2 SE	12	1	2	2	1	0	0	3	3	2	2	1	2	21
DUNCAN	47	1	1	1	0	0	1	2	3	2	1	1	1	13
EAGLE CREEK	44	2	2	1	1	0	0	4	5	2	2	1	2	22
EAGLE CREEK 2	9	3	2	2	1	1	1	4	3	2	2	1	1	24
EHRENBERG	27	1	0	1	0	0	0	0	1	0	0	0	0	4
EHRENBERG 2 E	5	1	1	1	0	0	0	0	2	0	0	1	1	7
ELGIN 5 N	56	1	1	2	0	0	0	5	5	2	1	1	2	20
ELOY	28	1	1	1	0	0	0	1	2	1	1	1	1	12

TABLE 15. AVERAGE NUMBER OF DAYS WITH PRECIPITATION GREATER THAN OR EQUAL TO 0.25 INCH (CONT)

STATION	N	JAN	FEB	MAR	APR	MAY	JUN	JUL	AUG	SEP	OCT	NOV	DEC	YEAR
FAIRBANK 1 S	59	1	1	0	0	0	1	5	4	2	1	1	1	16
FALCON FIELD	28	1	1	1	1	0	0	1	1	1	1	1	1	11
FLAGSTAFF WSO APT	33	3	3	3	2	1	1	3	3	2	2	2	3	28
FLORENCE	69	2	1	1	1	0	0	2	2	1	1	1	2	13
FLYING H RANCH	9	3	1	2	1	0	1	6	5	2	1	1	1	25
FORESTDALE	20	2	2	2	1	1	1	4	5	2	2	2	2	26
FORT DEFIANCE	14	1	2	1	2	1	1	2	4	2	1	1	1	18
FORT GRANT	53	1	1	1	1	0	1	3	3	2	1	1	2	18
FORT HUACHUCA	47	2	1	1	0	0	1	5	4	2	1	1	1	19
FORT THOMAS	7	1	1	0	0	0	0	2	2	2	2	1	3	13
FORT THOMAS 2 SW	16	1	1	1	0	0	0	2	1	1	1	1	1	12
FORT VALLEY	73	3	3	3	2	1	1	4	5	2	2	2	3	31
FOSSIL SPRINGS	19	3	2	3	2	1	1	4	4	3	2	2	3	29
FOUNTAIN HILLS	3	3	3	3	1	1	0	1	2	1	1	2	1	18
FREDONIA	27	2	1	1	1	1	1	1	1	1	1	1	1	13
FRITZ RANCH	29	2	1	1	0	0	1	4	4	2	2	1	1	20
GANADO	34	1	1	1	1	1	0	2	2	1	2	1	1	14
GILA BEND	77	1	1	1	0	0	0	1	1	1	1	1	1	8
GILA BEND AVIATION	18	1	1	1	0	0	0	1	2	0	1	1	1	8
GISELA	61	2	2	2	1	1	0	3	3	2	2	2	2	23
GLOBE	71	2	2	2	1	0	1	3	4	2	1	1	2	21
GLOBE 2	5	4	3	3	1	2	0	4	3	2	1	2	1	24
GOULD'S RANCH	43	1	1	1	1	0	0	1	1	1	1	1	1	11
GRAND CANYON	3	5	3	2	1	1	1	1	2	2	2	0	2	21
GRAND CANYON AWY	18	2	2	2	1	1	1	2	3	2	1	1	2	18
GRAND CANYON HDQRS	51	2	2	2	1	1	1	2	3	2	1	1	2	21
GRAND CANYON NP	19	2	2	2	2	1	1	2	3	2	2	1	2	21
GRAND CANYON NP 2	6	4	4	4	1	1	1	2	2	2	1	2	2	26
GRANITE REEF DAM	75	2	1	1	1	0	0	1	2	1	1	1	2	13
GRANVILLE	20	2	2	2	1	0	1	4	4	2	3	1	2	24
GRAY MOUNTAIN TP	5	1	1	1	0	0	0	1	1	1	2	0	0	8
GREER	31	3	2	3	1	1	1	6	6	3	2	2	3	32
GREY PEAK	3	2	2	2	3	1	0	6	4	3	1	2	2	27
GREYS PEAK MNTC YD	6	3	3	3	1	1	1	4	4	2	2	2	1	25
GRIGGS 3 W	32	1	1	1	0	0	0	1	1	1	1	1	1	10
GROOM CREEK	27	2	2	2	2	1	1	5	5	2	2	2	2	29
HACKBERRY	3	1	1	1	1	1	0	3	2	1	1	0	1	11
HAPPY JACK RS	13	4	3	5	3	2	0	3	3	3	2	2	2	31
HARQUAHALA PLNS 1	24	1	1	1	0	0	0	1	1	1	1	1	1	8
HAWLEY LAKE	15	4	4	6	3	2	1	7	7	3	3	3	3	47
HEBER RANGER STN	32	2	2	2	1	1	1	4	3	3	2	2	2	24
HELMET PEAK	3	1	1	1	0	1	1	5	4	1	0	1	2	17
HELV SANTA RITA ES	31	2	2	1	1	0	1	5	5	3	1	2	2	25
HILLSIDE	4	4	2	1	1	1	0	3	3	1	1	1	1	18
HILLSIDE 4 NNE	27	2	2	2	1	1	0	2	3	2	1	2	2	19
HOLBROOK	77	1	1	1	1	0	0	2	2	1	1	1	1	11
HORSESHOE DAM	34	2	2	2	1	0	0	2	3	1	1	1	2	18
HOUSE ROCK	4	2	0	1	0	1	1	2	2	1	1	0	1	9
INDIAN WELLS TP	4	1	1	1	0	1	0	1	2	0	2	1	1	12
INNER CANYON USGS	16	1	1	1	1	1	0	1	2	1	1	1	1	11
INTAKE	44	2	2	2	1	0	0	2	3	1	1	1	2	18
IRVING	32	3	2	3	2	1	1	3	4	2	2	2	3	26
JACOB LAKE	16	3	2	3	3	2	1	3	3	2	2	2	2	28
JEDDITO	7	1	1	1	0	1	1	3	2	1	1	1	1	12
JEROME	81	2	3	2	1	1	0	3	4	2	2	2	2	24
JUNIPINE	33	3	3	4	2	1	1	3	3	2	2	2	3	30
KAIBITO	10	2	1	1	1	1	1	2	2	1	1	1	1	12
KAYENTA	56	1	1	1	0	1	0	2	2	1	1	1	1	10
KEAMS CANYON	32	1	1	1	1	1	1	2	2	1	1	1	2	14
KELVIN	33	2	2	2	1	0	0	2	2	1	1	1	2	18
KINGMAN	64	1	2	1	1	0	0	1	2	1	1	1	2	14
KINGMAN 2	15	2	1	2	1	0	0	2	1	1	1	1	1	14
KITT PEAK	22	2	2	2	1	1	1	5	5	3	2	2	3	28
KLAGETOH	7	2	1	1	1	1	1	3	3	1	1	1	1	16
KLAGETOH 12 WNW	22	1	1	1	0	1	0	1	2	1	2	1	1	13
KLONDYKE 3 SE	22	2	2	2	1	0	1	3	3	2	1	1	2	20
KOFA MINE	26	1	1	1	0	0	0	1	1	1	0	1	1	8
LAKE HAVASU	14	1	1	1	0	0	0	1	1	0	1	0	0	6
LAKE PLEASANT	18	1	1	1	0	0	0	1	2	1	1	1	2	12
LAKESIDE RS	26	2	2	3	1	1	1	4	5	3	3	2	2	27
LAVEEN 3 SSE	34	1	1	1	0	0	0	1	2	1	1	1	1	10
LEES FERRY	59	0	1	1	0	0	0	1	1	1	1	1	1	8
LESLIE CANYON	43	1	1	1	0	0	1	4	4	2	1	1	1	16
LEUPP	32	0	0	1	0	0	0	1	1	1	1	0	1	8
LITCHFIELD PARK	65	1	1	1	0	0	0	1	1	1	1	1	1	10
LITTLEFIELD	5	1	0	1	1	0	0	1	1	0	1	1	2	10
LOOKOUT RANCH	6	2	1	2	1	0	1	4	4	1	1	1	1	18
LUKACHUKAI	27	1	1	2	1	0	0	2	2	1	2	1	1	15
MANY FARMS	23	0	0	1	0	0	0	1	2	1	1	1	1	9
MARICOPA 4 N	22	1	1	1	0	0	0	1	2	1	1	1	1	9
MARICOPA 8 SSE	51	1	1	1	0	0	0	1	2	1	1	1	1	10
MARINETTE	39	1	1	1	1	0	0	1	1	1	1	1	2	11
MAVERICK	19	4	3	3	2	1	1	8	7	3	3	2	3	39
MCNARY	48	3	3	4	2	1	1	5	5	3	3	2	3	35
MCNEAL	22	1	1	1	0	0	0	4	3	2	1	1	1	15
MESA EXPERI FARM	80	1	1	1	1	0	0	1	1	1	1	1	1	11
METEOR CRATER	3	1	0	1	1	0	0	1	1	2	1	1	1	11
MIAMI	68	3	2	2	1	1	1	3	4	2	1	2	3	24
MOHAWK	48	1	1	1	0	0	0	3	3	2	0	0	1	6
MONTEZUMA	3	0	0	0	0	0	0	0	1	0	0	0	1	3
MONTEZUMA CASTLE	44	1	1	2	1	0	0	2	2	2	1	1	2	16
MORMON FLAT	57	2	2	2	1	0	0	2	2	1	1	1	2	17
MORMON LAKE RS	10	1	4	3	2	1	1	3	4	3	2	3	1	1
MOUNT FAGAN RANCH	6	1	1	1	0	0	1	3	4	1	2	0	1	16
MOUNT LEMMON	5	4	2	2	0	1	1	5	7	3	2	1	2	28
MT LEMMON INN	5	2	2	3	3	1	2	8	8	2	1	2	2	33
MOUNT TRUMBULL	53	1	1	1	1	1	1	2	3	1	1	1	2	16
MUMMY MOUNTAIN	3	0	0	1	0	0	1	1	2	1	2	1	2	10
NATURAL BRIDGE	70	3	3	3	2	1	1	4	4	3	2	2	3	30
NAVAJO	13	1	1	1	1	0	0	2	1	2	2	1	2	14
N LAZY H RANCH	34	2	1	1	0	0	0	3	3	2	1	1	1	16
NOGALES (6/48 ON)	34	1	1	1	0	0	1	6	4	2	1	1	2	21
NOGALES (TO 6/48)	39	1	1	1	1	0	1	5	5	2	1	1	1	21
NOGALES 6 N	30	2	1	1	0	0	1	6	4	2	1	1	1	21
ORACLE	41	2	3	2	1	0	0	3	4	2	1	2	3	26
ORACLE 2 SE	32	3	2	3	1	0	1	4	4	2	2	2	3	27
ORAIBI	9	1	1	1	1	1	0	1	3	1	1	1	1	12
ORGAN PIPE CACTUS	34	1	1	1	0	0	0	2	2	1	1	1	1	11
PAGE	25	1	1	1	0	1	0	1	1	1	1	1	1	7
PAINTED CANYON	13	2	1	2	1	0	1	6	5	2	1	1	2	24

TABLE 15. AVERAGE NUMBER OF DAYS WITH PRECIPITATION GREATER THAN OR EQUAL TO 0.25 INCH (CONT)

STATION	N	JAN	FEB	MAR	APR	MAY	JUN	JUL	AUG	SEP	OCT	NOV	DEC	YEAR
PAINTED DESERT NM	9	2	1	1	0	1	0	2	1	1	1	1	1	14
PALISADE RS	15	3	3	3	1	1	1	6	5	4	2	2	4	35
PARADISE	30	2	2	2	1	1	1	6	5	2	1	2	2	26
PARADISE VALLEY	14	1	1	1	0	0	0	1	2	1	1	1	2	11
PARADISE VALLEY 2	3	1	1	1	1	1	0	1	0	1	1	1	1	9
PARKER	81	1	1	1	0	0	0	0	1	1	0	1	1	6
PATAGONIA	55	2	1	1	1	0	1	6	5	2	1	1	2	24
PATAGONIA 2	4	2	2	2	0	0	0	4	4	2	1	1	2	22
PAYSON 12 NNE	24	3	3	3	2	1	1	4	6	2	2	3	3	33
PAYSON RS	62	2	3	3	1	1	1	3	4	2	2	2	3	26
PAYSON	34	3	3	3	1	1	1	3	4	2	2	2	3	27
PEACH SPRINGS	34	1	1	2	1	1	0	2	2	1	1	1	1	15
PEARCE	30	1	1	1	0	0	0	4	4	2	1	1	1	15
PERKINSVILLE	10	1	1	1	1	0	0	3	3	2	0	1	1	14
PETRIFIED FRST NP	34	1	1	1	0	0	0	1	2	1	1	1	1	11
PHANTOM RANCH	13	2	1	1	0	0	0	1	1	1	1	1	1	12
PHX INDIAN SCHOOL	26	1	1	1	0	0	0	1	2	1	1	1	1	9
PHOENIX SOUTH MTN	7	2	1	2	0	1	0	1	1	1	1	1	1	11
PHOENIX WSFO APT	34	1	1	1	0	0	0	1	1	1	1	1	1	9
PHOENIX CITY	30	1	1	2	0	0	0	1	1	1	1	1	1	10
PICACHO RESERVOIR	26	1	1	1	0	0	0	1	2	1	1	1	2	12
PIERCE FERRY	3	2	1	2	1	0	0	1	2	1	1	0	2	12
PIERCE FERRY 17SSW	19	1	1	2	1	1	0	1	2	1	1	2	1	14
PIMA R4 ON W2	3	2	0	1	2	0	1	3	3	2	1	0	2	15
PINAL RANCH	73	3	3	3	1	0	1	3	4	2	2	2	3	28
PINEDALE	54	2	2	2	1	1	1	4	4	2	2	2	2	24
PINETOP	3	4	3	4	0	1	1	3	4	3	1	2	2	29
PINETOP FISH HATCH	34	3	2	3	2	1	1	5	4	3	2	2	2	31
PINON	11	1	1	1	1	0	0	2	1	1	2	1	2	13
PINTA	4	1	1	0	1	0	1	1	1	1	1	0	1	8
PIPE SPRINGS NM	19	2	2	2	1	1	0	1	2	1	1	2	1	15
PISINEMO	7	2	1	1	0	0	0	2	3	1	1	1	1	12
PLEASANT VALLEY RS	18	3	3	3	1	1	1	3	3	2	2	2	3	27
POLAND JUNCTION	3	3	1	0	1	1	0	3	3	2	1	0	2	17
PORTAL	38	2	2	1	1	0	1	4	5	3	1	1	2	23
PORTAL 4 SW	17	2	2	1	1	0	1	7	4	3	2	1	2	25
PRESCOTT	81	2	2	2	1	1	1	4	4	2	1	2	2	25
PRESCOTT FAA AP	20	1	1	1	1	0	1	3	4	1	1	1	1	17
PUNKIN CENTER	9	4	2	3	1	0	0	3	2	2	1	2	2	23
QUARTZSITE	15	1	0	0	0	0	0	1	1	0	0	1	1	5
REDINGTON	34	2	1	2	0	0	0	4	3	1	1	1	2	19
RED ROCK 6 SSW	44	1	1	1	0	0	0	2	2	1	1	1	2	13
RENO RANGER STN	51	2	2	2	0	0	0	2	3	2	2	2	3	22
RIMROCK	13	2	1	2	1	0	1	2	3	1	2	1	2	17
ROOSEVELT 1 WNW	76	2	2	2	1	0	0	2	3	2	1	2	2	20
ROUGH ROCK SCHOOL	3	1	0	1	1	1	1	1	6	2	1	1	1	15
RUBY 4 NW	28	2	2	1	1	0	1	6	5	3	1	1	2	24
RUBY STAR RANCH	30	1	1	1	0	0	1	5	3	2	1	1	1	19
RUCKER CANYON	64	2	2	2	1	0	1	6	5	3	2	1	2	26
SABINO CANYON	34	2	1	2	1	0	0	3	3	1	1	1	2	17
SACATON	72	1	1	1	1	0	0	1	2	1	1	1	1	11
SAFFORD	45	1	1	1	0	0	0	3	2	1	1	1	1	12
SAFFORD EXP FARM	34	1	1	1	0	0	0	2	2	1	1	1	1	11
SAHUARITA	16	1	1	1	0	0	0	3	3	2	1	1	2	13
SAINT JOHNS	73	1	1	1	1	1	1	3	3	2	1	1	1	15
SAINT MICHAELS	20	1	1	1	1	1	1	4	3	2	2	1	2	20
SALA RANCH	29	2	1	1	0	0	1	5	4	2	2	1	1	21
SALOME	13	1	1	1	1	0	0	1	2	1	1	1	1	10
SALOME 6 SE	48	1	1	1	0	0	0	1	2	1	1	1	1	10
SALT RIVER	15	2	2	2	1	1	1	2	4	1	2	1	2	21
SAN CARLOS	27	2	1	2	0	0	0	2	2	1	1	1	2	15
SAN CARLOS RESER	34	2	2	2	1	0	0	3	3	1	1	1	2	19
SANDERS	23	1	1	2	1	1	0	2	2	1	1	1	1	15
SANDERS 11 ESE	21	2	2	2	1	1	0	2	2	2	2	2	2	18
SAN MANUEL	28	2	1	2	1	0	0	3	3	2	1	1	2	18
SAN RAFAEL RANCH	43	1	1	1	1	0	1	6	6	2	1	1	2	23
SAN SIMON	50	1	1	1	0	0	0	2	3	1	1	1	1	13
SAN SIMON 9 ESE	20	1	1	1	0	0	0	3	2	2	1	1	1	13
SANTA MARGARITA	33	2	2	1	1	0	1	5	5	2	1	1	2	22
SANTA RITA EXP RGE	32	2	2	2	1	0	1	6	5	3	2	1	2	26
SANTA ROSA SCHOOL	16	0	1	1	0	0	0	2	3	1	1	1	2	11
SASABE	23	2	1	1	0	1	0	4	4	2	1	1	2	21
SASABE 7 NW	31	2	1	2	1	0	0	5	4	2	1	1	2	22
SCOTTSDALE	13	1	1	2	0	0	0	1	1	1	1	1	1	12
SEBA DALKAI SCHOOL	7	1	1	1	0	0	0	2	2	2	1	1	2	10
SEDONA RS	33	3	2	3	2	1	1	2	3	2	2	2	2	23
SELIGMAN	71	1	1	1	1	1	0	2	3	1	1	1	1	16
SELIGMAN 13 SSW	18	2	2	2	1	1	1	3	3	2	1	1	2	19
SELLS	26	1	1	1	0	0	0	3	3	1	1	1	1	15
SENECA CREEK	3	4	2		2	1	1	3	1	3	1	0	2	
SENTINEL	26	1	1	1	0	0	0	1	1	1	0	0	1	7
SHORT CREEK	11	2	1	1	1	0	1	2	2	0	1	1	1	14
SHOW LOW	12	2	1	1	1	0	1	3	3	1	2	1	2	19
SHOW LOW AIRPORT	16	2	2	3	1	1	1	4	4	2	2	2	3	24
SIERRA ANCHA	47	3	3	3	2	1	1	4	4	2	2	2	3	30
SIGNAL 13 SW	7	3	1	1	1	0	0	2	2	1	1	1	1	14
SILVER BELL	34	1	1	1	0	0	0	3	3	1	1	1	2	17
SILVER CREEK RANCH	18	2	1	1	1	0	1	3	3	2	2	1	1	17
SKULL VALLEY	7	3	4	3	1	1	0	2	2	2	2	2	1	24
SLATE MOUNTAIN	3	0	1	2	1	1	0	2	2	1	2	1	1	10
SNOWFLAKE	75	1	1	1	1	1	1	3	3	2	2	1	1	17
SNOWFLAKE 15 W	17	1	1	1	0	1	1	3	3	1	1	1	1	15
SOUTH PHOENIX	21	1	1	2	0	0	0	1	2	1	1	1	1	11
SPRINGERVILLE	71	1	1	1	0	1	1	4	4	2	1	1	1	16
STANTON	21	2	2	2	1	0	0	3	3	2	1	2	2	19
STEPHENS RANCH	52	1	1	1	0	0	1	4	4	2	1	1	2	19
STEWART MOUNTAIN	34	2	2	2	1	0	0	1	2	1	1	2	2	15
SUNFLOWER 3 NNW	29	3	3	3	1	1	1	3	3	2	2	3	3	25
SUNRISE MOUNTAIN	9	5	3	7	3	2	1	6	6	4	3	3	3	45
SUNSET CRATER NM	13	1	2	2	1	1	1	4	3	2	2	2	2	21
SUPAI	26	1	1	1	0	1	0	1	2	1	1	1	1	11
SUPERIOR	62	3	2	2	1	0	0	2	3	2	1	2	3	22
SUPERIOR 2 ENE	8	6	3	4	2	1	0	3	3	2	2	2	2	29
SUPERIOR SMELTER	5	3	1	2	3	0	0	2	1	1	1	1	3	18
SUPERSTITION MTN	13	2	1	2	1	0	1	2	2	1	1	1	1	14
SYCAMORE RS	38	2	2	2	1	0	1	3	4	2	1	1	2	21
TACNA 3 NE	13	1	0	1	0	0	0	0	1	0	0	1	1	5
TANQUE R9 ON W4	3	2	0	0	0	0	1	3	2	1	1	0	1	10
TEEC NOS POS	19	1	1	1	0	1	0	1	1	1	1	1	1	10
TEES TO	4	1	0	0	0	0	0	1	1	0	1	1	0	5

TABLE 15. AVERAGE NUMBER OF DAYS WITH PRECIPITATION GREATER THAN OR EQUAL TO 0.25 INCH (CONT)

STATION	N	JAN	FEB	MAR	APR	MAY	JUN	JUL	AUG	SEP	OCT	NOV	DEC	YEAR
TEMPE VEG RES FARM	57	1	1	1	0	0	0	1	1	1	1	1	1	11
TEMPE	47	1	1	1	1	0	0	1	2	1	1	1	1	12
TEMPE ASU	29	1	1	1	0	0	0	1	2	1	1	1	1	11
THORNBURG RANCHES	8	1	1	1	0	0	0	1	1	0	1	1	1	8
TOLLESON 1 E	29	1	1	1	0	0	0	1	1	1	0	1	1	9
TOMBSTONE	79	1	1	1	0	0	1	5	4	2	1	1	1	19
TONOPAH 2 S	10	1	1	1	1	0	0	1	1	1	1	1	1	9
TONTO CREEK FH	26	4	3	4	2	1	1	5	6	3	3	2	4	37
TONTO CREEK FH 2	7	7	5	7	2	2	0	5	4	4	2	3	3	45
TONTO SPRGS RS 4 W	15	3	2	2	1	1	1	3	4	2	1	2	2	21
TOPOCK	12	1	0	0	0	0	0	1	1	0	1	0	0	5
TRUXTON CANYON	31	2	1	2	1	0	0	2	2	1	1	1	1	15
TUBA CITY	70	1	1	1	1	0	0	1	1	1	1	1	1	9
TUCSON CAMPBELL FM	32	2	1	1	0	0	0	3	3	1	1	1	2	15
TUCSON MAGNET OBSY	33	2	1	2	0	0	0	3	3	1	1	1	1	16
TUCSON MNT PARK	5	1	0	1	1	0	1	4	2	1	0	1	1	11
TUCSON NURSERY	3	1	1	0	1	0	0	3	1	1	1	0	1	10
TUCSON UNIV OF AZ	82	1	1	1	1	0	0	2	3	1	1	1	1	14
TUCSON WSO AIRPORT	34	1	1	1	0	0	0	3	2	2	1	1	1	14
TUMACACORI NM	34	1	1	1	0	0	1	5	4	2	1	1	2	19
TUWEEP	33	2	1	2	1	1	1	2	2	1	1	1	2	17
TUZIGOOT NM	5	3	3	2	1	1	0	3	3	2	1	1	2	21
UPPER PARKER CREEK	3	4	3	3	3	1	1	3	3	2	2	1	2	27
VALLE AIRPORT	7	1	1	1	0	1	1	2	3	2	1	1	1	13
VALLEY CITRUS FARM	4	3	0	1	1	0	0	1	2	0	0	1	1	10
WAHAK HOTRONTK	3	1	2	1	1	0	0	2	3	1	1	1	3	15
WAHWEAP	21	1	1	1	0	0	0	1	1	1	1	1	0	7
WALLACE RS	32	2	2	2	1	1	1	4	4	2	2	1	2	23
WALNUT CANYON NM	32	2	2	3	2	1	0	3	3	2	2	2	2	23
WALNUT CREEK	66	2	2	2	1	1	1	3	4	2	1	1	2	21
WALNUT GROVE	81	2	2	2	1	0	0	3	4	2	1	2	2	21
WELLTON	55	1	0	1	0	0	0	0	1	1	0	0	1	5
WHITE HILLS 5 WSW	3	0	1	0	2	0	0	0	0	1	1	2	3	10
WHITERIVER	73	2	2	2	1	1	1	4	4	2	2	2	2	25
WHITLOCK VLY R2-W1	3	2	0	1	1	0	0	3	2	0	2	0	1	11
WICKENBURG	71	2	2	1	1	0	0	2	2	1	1	1	2	14
WIKIEUP	28	2	1	2	1	0	0	1	2	1	1	1	1	13
WILLCOX	79	1	1	1	0	0	0	3	3	2	1	1	1	16
WILLIAMS	77	3	3	3	2	1	1	4	4	2	2	2	3	28
WILLIAMS CREEK FH	13	3	2	3	2	1	1	6	5	3	2	2	3	33
WILLOW BEACH	14	1	1	1	0	0	0	1	1	1	1	1	0	7
WILLOW SPRINGS RCH	26	2	1	2	1	0	0	3	3	2	2	1	2	20
WINDOW ROCK 4 SW	43	1	1	1	1	1	1	2	3	2	2	1	1	15
WINKELMAN 6 S	27	2	2	2	1	0	1	3	3	2	2	1	2	19
WINSLOW WSO APT	72	1	0	1	1	0	0	2	2	1	1	1	1	10
WITTMANN	38	1	1	1	1	0	0	1	2	1	1	1	2	12
WORKMAN CREEK 1	3	7	4	3	3	1	1	4	4	2	2	1	3	34
WUPATKI NM	34	0	1	1	0	1	0	2	2	1	1	1	1	10
Y LIGHTNING RANCH	41	1	1	1	0	0	1	5	4	2	1	1	1	18
YAEGER CANYON	28	2	2	2	1	1	1	4	4	2	1	1	2	21
YAVA 6 ESE	26	2	2	2	1	0	1	3	4	1	2	1	2	20
YOUNG	48	3	3	3	1	1	1	4	5	3	2	2	2	28
YOUNG 12 N	4	3	3	3	2	0	1	6	6	1	1	2	2	28
YOUNGTOWN	18	1	2	2	0	0	0	1	1	1	1	1	2	11
YUCCA 1 NNE	29	1	1	1	0	0	0	1	1	1	1	1	1	10
YUMA CITRUS STN	62	1	0	0	0	0	0	0	1	0	0	0	1	4
YUMA DATE ORCHARD	23	1	0	0	0	0	0	1	1	0	0	0	1	4
YUMA PROVING GRND	24	1	0	0	0	0	0	0	1	1	0	0	1	4
YUMA VALLEY	48	1	0	0	0	0	0	0	0	0	0	0	1	3
YUMA WSO AIRPORT	33	0	0	0	0	0	0	0	1	0	0	0	0	3
YUMA	73	0	0	0	0	0	0	0	1	0	0	0	1	4

B. SEDIMENTATION STUDY

From:
Exhibit B to Appendix 1
Sedimentation Analysis
Obtained from Ed Rayleigh

> The report does not directly list design wash- or bed-loads by station in the ACDC. Such loads will be developed by inference.

1. Wash load

Defined: pA1-18 "For Cave Creek and Cudia City Wash, wash load was found to include silt and clay, very fine sand, and fine sand."

Routed: pA1-18 "It was assumed that the entire wash load from upslope areas would be transported without deposition through each tributary downstream to the ACDC.

Method: p A1-18 "The wash load from Cave Creek and Cudia City Wash includes two sources: (1) erosion of upland areas and (2) erosion of the streambed and banks. The wash load from upland erosion was estimated with the MUSLE .... The wash load produced from creek erosion was estimated from Arizona Canal sediment-removal data"

Design Treatment: p A1-iv "Most of the wash load (fine sands and fines) would be carried through the ACDC without deposition"

2. Bed Load

Bed load was analyzed and routed with HEC-6. Sediment basins were designed to trap bed load from Cudia City Wash & Cave Creek. Quantities described following.

FORM 230

PROJECT Biltmore Tunnel DATE 8/23/88

SUBJECT Sedimentation Study DESIGNED KDW CHECKED TC

Quantities

Cudia City Wash TOTAL SEDIMENT YIELD

Size	Sediment Yield (Gross) (ac-ft)	Removed by Basin (ac-ft)	Net Sediment Yield to ACDC (ac-ft)	
Silt & Clay	5.60	0	5.60	5.600
VFS	2.50	2.12	0.38	0.220
FS	1.07	0.95	0.12	0.037
MS	0.95	0.92	0.03	0.005
CS	0.66	0.65	0.01	0
VCS	0.49	0.49	0	0
VFG	0.41	0.41	0	0
FG	0.33	0.33	0	0
MG	0.22	0.22	0	0
CG	0.13	0.13	0	0
VCG	0.10	0.10	0	0

Revised in final design, as stated in ACDC DM-12 April 1986 Appendix 2

Gross Yield from p. A1-27, Table 9
Removed by Basin from p. A1-61, Table 20. That all of the gravel would be removed from A1-59, sec. 6.7. That silt and clay would pass through from A1-59, sec. 6.9.

∴ Total wash load entering = 5.60 + 0.38 + 0.12 = 6.10 ac-ft

Total bed load entering = 0.03 + 0.01 = 0.04 ac-ft

Bed load routing is summarized in Table 22 (pp. A1-65-69) Note that no deposition occurs between Cudia City Wash (bottom of table) and the approximate beginning of the tunnel (sta 940+00). This implies bed load is not deposited in this reach.

FORM 230

It is likely that some stilling will be designed for the tunnel entrance, and so the small quantity of bed-load can be considered removed from the ACDC flow for tunnel design.

Wash load, however, must still be considered. Wash load was not considered in the routing for table 22, as wash load "would be transported through the project [ie the ACDC] without deposition."

∴ The design wash load for the tunnel will be composed of the input wash load of 6.10 ac-ft from Cudia City Wash plus whatever additional wash load is contributed by tributary inflows between Cudia City Wash and the tunnel inlet. No wash load will be contributed by the ACDC itself because it will be concrete-lined in this reach.

These side inflows are from the areas which are described on page A1-26. They "have no defined channels and runoff is characterized by sheet flow; thus, sediment-yield estimates would be the same as those estimated by the MUSLE."

MUSLE estimates are listed on page A1-17 for the 100-Year Design Storm. A design grain-size distribution for these sediments is given as "clay and silt, 62 percent; very fine sand, 25 percent; fine sand, 10 percent; coarser than fine sand, 3 percent."

Additional sediment before the tunnel entrance would be provided by subbasins 2 and 3 (NOTE: It is conservative to include all of 3 for input flow to the tunnel; some of this flow will no doubt be diverted to enter the ACDC downstream from the tunnel outlet).

PROJECT Biltmore Tunnel DATE 8/23/88

SUBJECT Sedimentation Study DESIGNED KDW CHECKED TL

Subbasin 2 TOTAL SEDIMENT YIELD

Total sediment = 4670 tons

Size	%	Sediment Yield (tons)	Sediment Yield (ac-ft)
Silt & Clay [a]	62	2890	2.00
VFS [b]	25	1170	0.60
FS [b]	10	470	0.24
MS & coarser [b]	3	140	0.07

a assumes 65 $\frac{lb}{ft^3}$ silt & clay
b assumes 90 $\frac{lb}{ft^3}$ sand & gravel

Total Wash Load = 2.00 + 0.60 + 0.24 = 2.84 acre-feet

Subbasin 3 TOTAL SEDIMENT YIELD

Total sediment = 4450 tons

Size	%	Sediment Yield (tons)	Sediment Yield (ac-ft)
Silt & Clay [a]	62	2760	1.95
VFS [b]	25	1110	0.57
FS [b]	10	450	0.23
MS & Coarser [b]	3	130	0.07

a assumes 65 $\frac{lb}{ft^3}$ silt & clay
b assumes 90 $\frac{lb}{ft^3}$ sand & gravel

Total Wash Load = 1.95 + 0.57 + 0.23 = 2.75 acre-feet

PROJECT Biltmore Tunnel DATE 8/23/88

SUBJECT Sedimentation Study DESIGNED KDW CHECKED TL

Design Sediment Loads

1.) Wash Load

Total Wash Load = 6.10 + 2.84 + 2.75 = 11.69 acre-feet

Total Wash Load = 11.7 acre-feet

Composition:

Size	Cudia City Wash Inflow (ac-ft)	S.B. 2 Inflow (ac-ft)	S.B. 3 Inflow (ac-ft)	Total (ac-ft)
Silt & Clay	5.60 5.600	2.00	1.95	9.55 9.55
VFS	0.38 0.220	0.60	0.57	1.55 1.390
FS	0.12 0.037	0.24	0.23	0.59 0.507

↑ DM-12 Revised in Final Design

2.) Bed Load

From Table 22, not deposited thru Sta 940+00

Total Bed Load = 0.04 + 0.07 + 0.07 = 0.18 acre-feet

For design of a sedimentation basin to prevent bed load from entering tunnel, it is conservative to consider "MS & Coarser" from S.B. 2 & S.B. 3 to be MS entirely.

Composition

Size	Cudia City Wash Inflow (ac-ft)	S.B. 2 Inflow (ac-ft)	S.B. 3 Inflow (ac-ft)	Total (ac-ft)
MS	0.03 0.005	0.07	0.07	0.17 .145
CS	0.01 0	0	0	0.01 0
VCS	0 0	0	0	0 0
etc.	0 0	0	0	0 0

↑ DM-12 Revised in Final Design

PROJECT Biltmore Tunnel DATE 9/22/88

SUBJECT Sedimentation Study DESIGNED KDW CHECKED TL

Conceptual Sediment Basin

Design Criteria
- Ideal Settling Velocity
- Short Circuiting
- Length-to-Width Ratio
- Permissible Flow-Through Velocity
- Trap Efficiency and Sediment Outflow

Ideal Settling

Size	Settling Velocity (ft/sec)
VFS	0.020
FS	0.066
MS	0.15
CS	0.35
VCS	0.75
VFG	1.00
FG	1.70

from ACDC DM-12, April 1986 Table 5

Short Circuiting

$$A = \left(FSC \times \frac{Q_o}{V_s}\right)$$

A = surface area at spillway crest
FSC = short-circuiting factor (generally 1.2)
Q_o = outflow rate
V_s = design particle setting velocity.

use: FSC = 1.2
Q_o = 8300 cfs (assume no detention storage)
V_s = 0.15 ft/sec (MS is design particle)

$$A = 1.2 \times \frac{8300}{0.15} = 66400\ ft^2 = 1.52 \text{ acres}$$

Increase by 25% $A = 83000\ ft^2 = 1.91$ acres

PROJECT Biltmore Tunnel DATE 9/22/88

SUBJECT Sedimentation Study DESIGNED KDW CHECKED TL

Length - To - Width Ratio

2:1 is minimum

for estimating purposes, use 2:1

$l = 2w \qquad A = w \times l = w \times 2w = 2w^2$

$w = \left(\frac{83000}{2}\right)^{1/2} = 203.7 \approx 205'$

$l = 2 \times 205 = 410'$

Basin is roughly 205' wide x 410' long

Permissible Flow Through Velocity

MS Geometric Mean size = 0.354 mm

From DM-12, April 1986 Table 2, by interpolation

Size = 0.354 mm Scour Velocity = 0.69 ft/sec

Depth to maintain v < Scour Velocity

$d = \frac{8300}{(205)(.69)} = 59'$ Too deep

Width if depth held at 15':

$w = \frac{8300}{(15)(.69)} = 800'$

$l = 2 \times 800 = 1600'$

$A = (1600)(800) = 29$ acres.

Note, however, that Cudia City Wash Basin achieves 99% trap efficiency on MS with a velocity of about 2 ft/sec. So, in final design, it ought to be possible to acheive similar results with similar velocities.

FORM 230

PROJECT Biltmore Tunnel DATE 9/22/88

SUBJECT Sedimentation Study DESIGNED KDW CHECKED TL

Assuming that effective trapping can still be achieved, assume that V = 2 fps is OK for estimating purposes.

$$d = \frac{8300}{(205)(2)} = 20.2 \text{ ft}$$

Width if d = 15 ft max

$$w = \frac{8300}{15(2)} = 275'$$

$$l = 2(275) = 550'$$

$$A = (550)(275) = 151{,}250 \text{ ft}^2 = 3.5 \text{ acres}$$

Trap Efficiency & Sediment Outflow

To compute trap efficiencies, an in-depth analysis including basin cross sections is required. Such information is not available at this time, and such an analysis is beyond the scope of a concept level study.

Basin Volume

Given that MS of approximately .15 ac-ft is all that is necessary to catch in the basin, a volume of 1 ac-ft below the spillway should be easily sufficient. Since the basin will be 3.5 acres at spillway elevation and roughly 15 ft deep, such a volume should easily be attained in final design.

∴ For estimating purposes, sedimentation basin will be 3.5 acres (No closer to square than 550' long by 275' wide) and should flow roughly 15' deep for the Design Storm

FORM 230

C. TUNNEL HYDRAULICS

PROJECT Biltmore Tunnel DATE 9/15/88
SUBJECT Canal - Inlet & Outlet DESIGNED KDW CHECKED JL

Canal Flow:

Tunnel begins at station 945+00, BOTTOM ELEV = 1221.76

from COE Hydraulic Plan and Profile, Plate 7.

Hydraulic Elements
from station 945+45 to 925+00

Section: Rectangular, b = 36'
Slope 0.0008 ft/ft

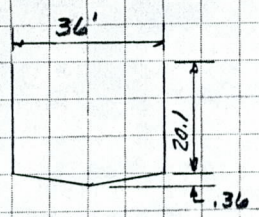

$Q = 8300$ cfs
$n = 0.014$
$D = 20.1$
$A = (20.1)(36) + \frac{1}{2}(.36)(36) = 730.08\ ft^2$
$P = 2(20.1) + 2(\sqrt{18^2 + .36^2}) = 76.21\ ft$
$V = \frac{8300}{730.1} = 11.3$ fps

$h_v = \frac{(11.3)^2}{2(32.2)} = 1.98$ ft

Tunnel ends at station 865+00, BOTTOM ELEV = 1216.09

from COE Hydraulic Plan and Profile, Plate 9

Hydraulic Elements
from Station 879+50 to 855+00

Section: Rectangular, b = 40'
Slope = 0.0003 ft/ft

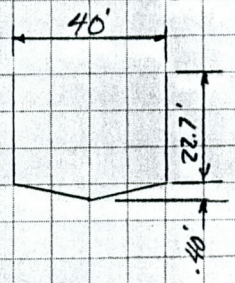

$Q = 8300$ cfs
$n = 0.014$
$D = 22.7$
$A = (22.7)(40) + \frac{1}{2}(.40)(40) = 916.00\ ft^2$
$P = 2(22.7) + 2(\sqrt{20^2 + .40^2}) = 85.41\ ft$
$V = \frac{8300}{916} = 9.0$ fps

$h_v = \frac{(9.0)^2}{2(32.2)} = 1.258$ ft

FORM 230

OPTION 1 : CONCEPTUAL PROFILE

1" = 1000' HORZ
1" = 50' VERT

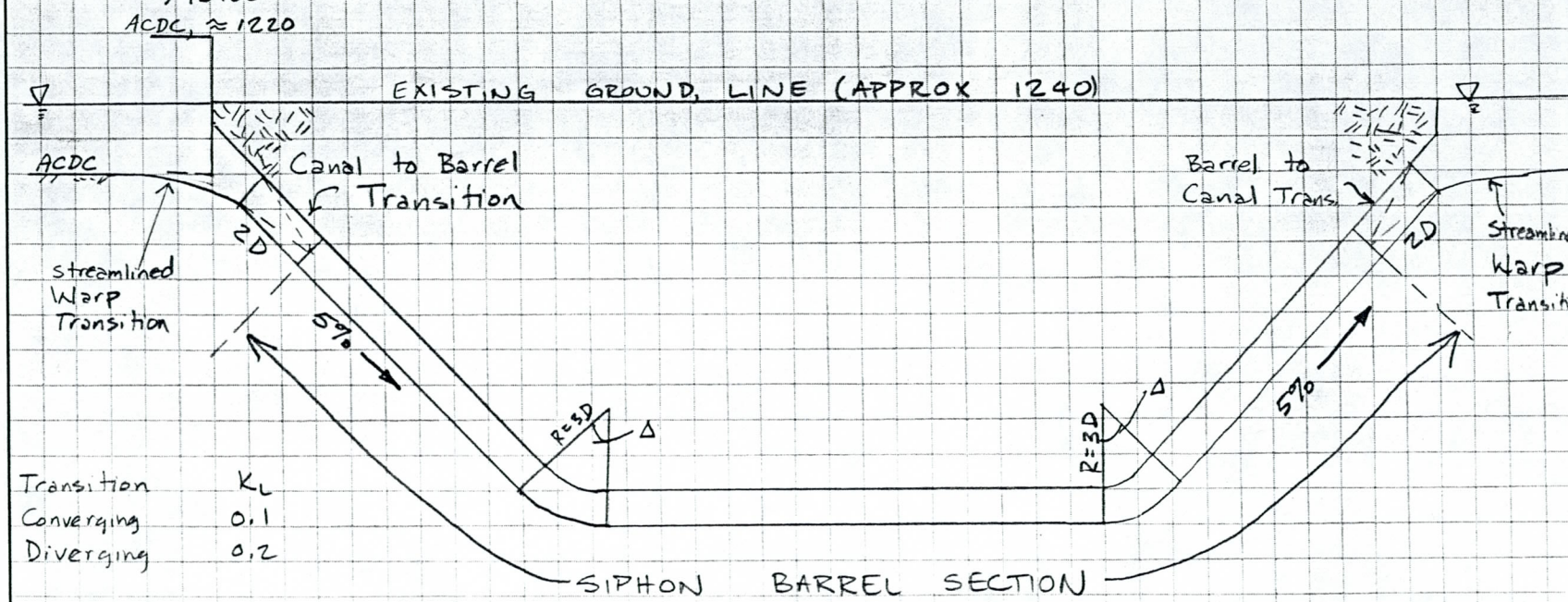

Transition	K_L
Converging	0.1
Diverging	0.2

Siphon diameter in concept only - NTS
Transitions are shown in concept only.
Bends are shown in concept only.
Purpose is to obtain a rough headloss figure to roughly assess feasibility, mining method, and sizes.
K_L's from USBR, 1968, 2.25B

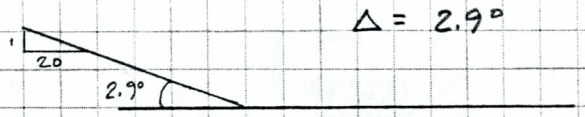

$\Delta = 2.9°$

Approx. Length $= 2 \cdot \sqrt{2000^2 + 100^2} + 3400 - 4D = 7405 - 4D$

PROJECT Biltmore Tunnel
SUBJECT Preliminary Study - Blasted Tunnel
DESIGNED KDW DATE 9/15/88
CHECKED TL

SBI CONSULTING ENGINEERS incorporated
CONSULTING ENGINEERS
☐ Reno/Sparks 950 Industrial Way Sparks, NV 89431-6092 (702) 358-6931
☐ Las Vegas 1405 Arville Street Las Vegas, NV 89102 (702) 877-3000
☑ Phoenix 2920 N. 24th Ave., #6 Phoenix, AZ 85015-5948 (602) 257-4699

JOB NO. 6-0297-001-811
SHEET 2 OF

PROJECT Biltmore Tunnel DATE 9/15/88

SUBJECT Preliminary Study- Blasted Tunnel DESIGNED KDW CHECKED TL

Approximate Finished Section:
Cross-section provided 8/8/88 Mtg w/CRSS

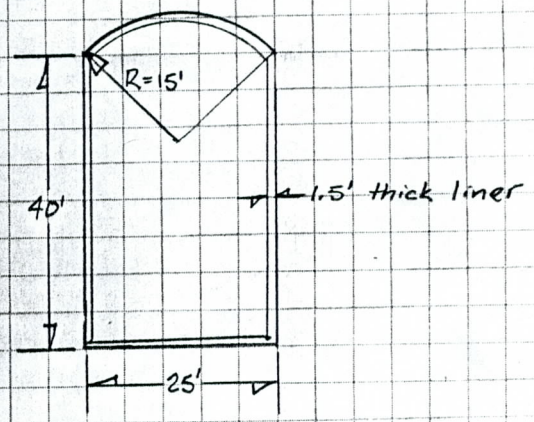

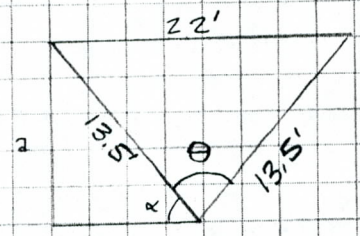

$\theta = 2\sin^{-1}\left(\frac{11}{13.5}\right) = 109.1°$

$\alpha = \frac{1}{2}(180 - 109.1) = 35.43°$

$a = 13.5 \sin 35.43 = 7.83'$

Inside area: $A = (22)(38.5) + \frac{13.5^2}{2}\left(\frac{\pi(109.1)}{180} - \sin(109.1)\right)$

$A = 934 \text{ ft}^2$

Inside perimeter

$P = 2(38.5) + 22 + \frac{\pi(13.5)(109.1)}{180} = 125'$

Hydraulic Radius

$R = \frac{A}{P} = \frac{934}{125} = 7.49 \text{ ft}$ $\quad D_{EQUIV} = 4(7.49) = 30 \text{ ft}$

Full-flow Velocity:

$V = \frac{Q}{A} = \frac{8300}{934} = 8.89 \text{ ft/sec} < 10$ OK

(10 MAX FROM USBR, 1968, 5.4, FS in wash load)

$h_v = \frac{8.9^2}{2(32.2)} = 1.23 \text{ ft}$

Length $\approx 7405 - 4(30) = 7285$ ft

FORM 230

PROJECT Biltmore Tunnel DATE 9/15/88

SUBJECT Preliminary Study - Blasted Tunnel DESIGNED KDW CHECKED TL

Length of transition to 22 width.

Use 12.5° convergence/divergence angle (from Hinds, 1928, p. 1435)

Inlet:

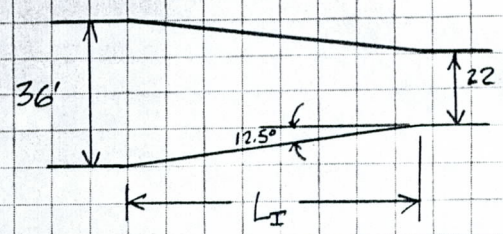

$$L_I = \frac{18-11}{\tan(12.5)} = 31.6' \quad \text{USE} \quad \underline{\underline{35'}}$$

Outlet

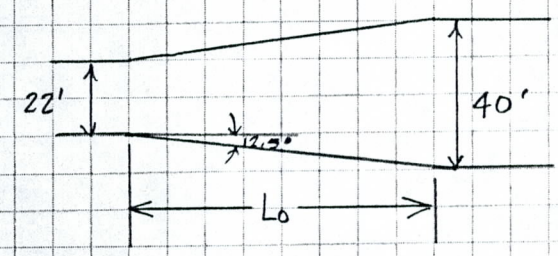

$$L_O = \frac{20-11}{\tan(12.5)} = 40.6' \quad \text{USE} \quad \underline{\underline{40'}}$$

Rectangular opening of horseshoe transition

Size = 22' × (38.5 − 7.8 + 13.5) = 22' × 44.2

$A = 22 \cdot 44.2 = 972 \text{ ft}^2 \qquad P = 2(22) + 2(44.2) = 132.4$

$V = \frac{8300}{972} = 8.5 \text{ fps}$

$h_v = \frac{8.5^2}{2(32.2)} = 1.13 \text{ ft}$

FORM 230

PROJECT Biltmore Tunnel DATE 9/15/88

SUBJECT Preliminary study - Blasted Tunnel DESIGNED KDW CHECKED TL

Use Manning Equation to Find S_f for each section

1.) Canal end, Inlet Transition

$A = 730.1\ ft^2$

$R = \frac{730.1}{76.2} = 9.58\ ft$

$V = 11.3\ fps$

$n = 0.014$

$V = \frac{1.49}{n} R^{2/3} S_f^{1/2}$

$$S_f = \left[\frac{Vn}{1.49\ R^{2/3}}\right]^2 = \left[\frac{(11.3)(.014)}{1.49(9.58)^{2/3}}\right]^2 = 0.00055$$

2.) Rectangular end, Closed Transition

$A = 972\ ft^2$

$R = \frac{972}{132.4} = 7.34\ ft$

$V = 8.5\ fps$

$n = 0.014$

$$S_f = \left[\frac{Vn}{1.49\ R^{2/3}}\right]^2 = \left[\frac{(8.5)(.014)}{1.49(7.34)^{2/3}}\right]^2 = 0.00045$$

3.) Horshoe siphon barrel

NOTE on n: Recent research on tunnel hydraulics by Czarnota (1986) broke head loss in a conventionally excavated tunnel into 2 parts. The first, termed "micro-roughness" is the conventionally considered roughness due to material type. The second, termed "macro-roughness", relates to resistance resulting from the turbulence created by variability in cross-section in conventionally excavated tunnels. This component was found to comprise fully 20% of total head loss in such a tunnel. To account for this factor, S_f determined by material type alone will be divided by 0.80.

PROJECT Biltmore Tunnel DATE 9/15/88
SUBJECT Preliminary Study - Blasted Tunnel DESIGNED KDW CHECKED TL

$A = 934 \ ft^2$
$R = 7.49 \ ft$
$V = 8.89 \ fps$
$n = 0.019$ (Gunite, Chow, p. 11)

$$S_{f\,MICRO\,ROUGH.} = \left[\frac{8.89(.019)}{1.49(7.49)^{2/3}}\right]^2 = 0.00088$$

$$S_{f\,TOTAL} = \frac{0.00088}{.80} = 0.00110$$

4.) Canal end, Outlet Transition

$A = 916 \ ft^2$
$R = \frac{916}{85.41} = 10.72 \ ft$
$V = 9.0 \ fps$
$n = 0.014$

$$S_f = \left[\frac{(9.0)(.014)}{1.49(10.72)^{2/3}}\right]^2 = 0.00030$$

COMPUTATION OF HEAD LOSSES

Inlet Open Transition (Friction) = $35'\left(\frac{.00055+.00045}{2}\right)$	= 0.02'
Inlet Open Transition (Divergence) = 0.2 [1.98 - 1.13]	= 0.17'
Inlet Closed Transition (Convergence) = 0.1 [1.23 - 1.13]	= 0.01'
Closed Transitions (Friction) = $2(30)\left(\frac{.00045+.00110}{2}\right) \times 2$	= 0.09'
Siphon Barrel (Friction) = 7285 (.00110)	= 8.01'
Barrel Bends, $\Delta = 3°$ = .01 (1.23)(2)	= 0.02'
Barrel Curve 1, $\Delta = 40°$ = .07 (1.23)	= 0.09'
Barrel Curve 2, $\Delta = 30°$ = .055 (1.23)	= 0.07'
Barrel Curve 3, $\Delta = 30°$ = .055 (1.23)	= 0.07'
Outlet Closed Transition (Divergence) = 0.2 [1.23 - 1.13]	= 0.02'
Outlet Open Transition (Convergence) = 0.1 [1.26 - 1.13]	= 0.01'
Outlet Open Transition (Friction) = $40'\left(\frac{.00045+.00030}{2}\right)$	= 0.02'
Total Loss (Energy Gradient)	= 8.60
Add 10% for excess capacity	= .86
TOTAL HEAD REQ'D	= 9.46'

FORM 230

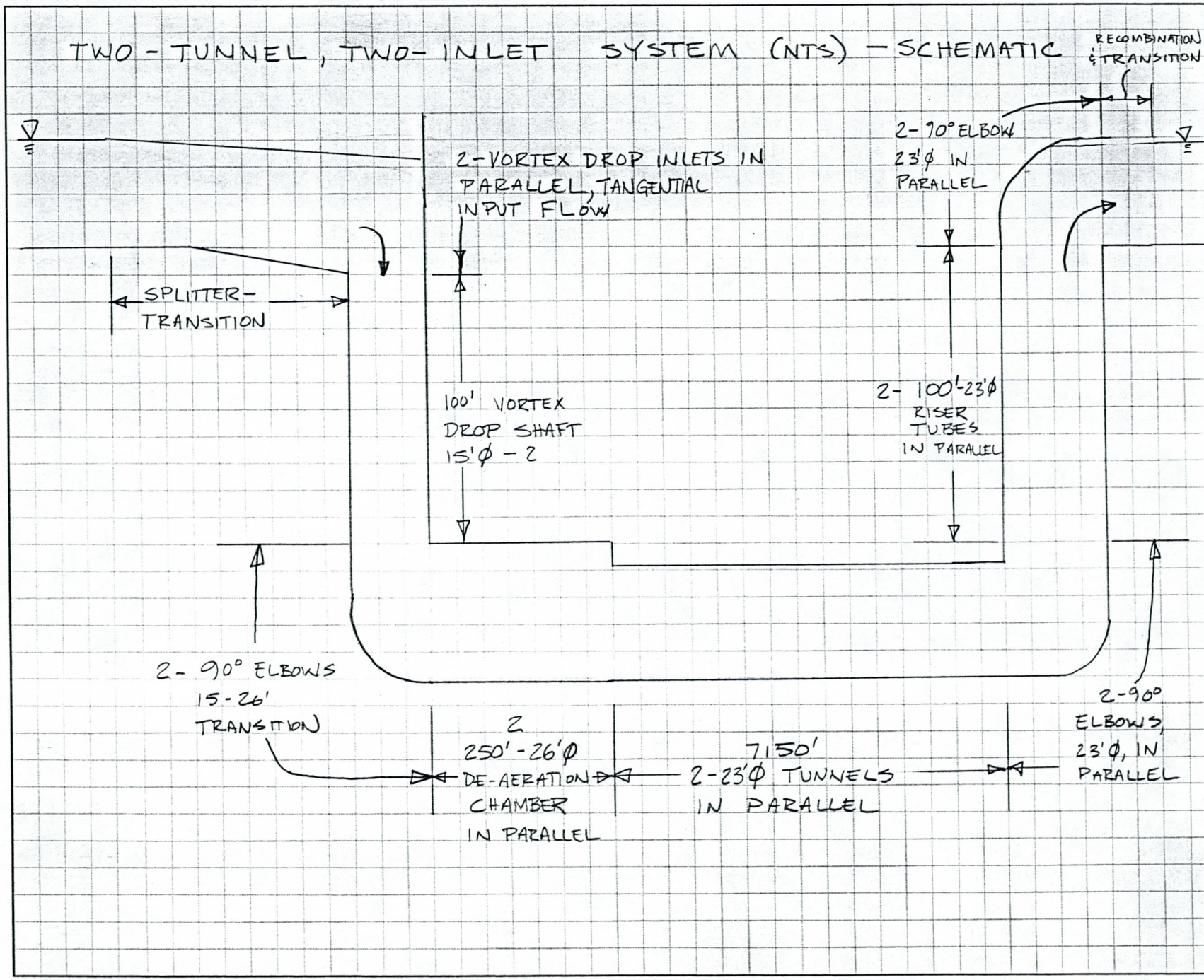

PROJECT Biltmore Tunnel

SUBJECT Vortex Drop Inlet

DESIGNED KDW CHECKED TL

DATE 9/26/88

SHEET 20 OF

JOB NO. 6-0297-001-871

CONSULTING ENGINEERS

☐ Reno/Sparks
950 Industrial Way
Sparks, NV 89431-6092
(702) 358-6931

☐ Las Vegas
1405 Arville Street
Las Vegas, NV 89102
(702) 877-3000

☒ Phoenix
2920 N. 24th Ave., #6
Phoenix, AZ 85015-5948
(602) 257-4699

PROJECT Biltmore Tunnel DATE 9/26/88

SUBJECT Vortex Drop Inlet DESIGNED KDW CHECKED TL

Develop Loss Coefficients

1.) Friction Slope in Tunnels:

$Q/\text{tunnel} = 8300 \text{ cfs}/2 = 4150 \text{ cfs}$

$A = \frac{\pi}{4}(23)^2 = 415.5 \text{ ft}^2$

$P = \pi(23) = 72.26'$

$R = \frac{415.5}{72.26} = 5.75'$

$n = 0.014$ (smooth concrete lining)

$V = \frac{4150}{415.5} = 9.99 \text{ fps}$ $\quad h_v = \frac{9.99^2}{2(32.2)} = 1.55'$

$S_f = \left[\frac{9.99(0.014)}{1.49(5.75)^{2/3}}\right]^2 = 0.00086 \text{ ft/ft}$

2.) 26' to 23' contraction:

Assume rounded entrance, with radius of rounding roughly $\frac{23}{7} = 3.7'$. The contraction losses will be greatly reduced by this rounding; Morris & Wiggert suggest 5% of the velocity head as a reasonable number. Applies to velocity after contraction.

3.) 15' to 26' expansion:

Assume final design of expansion will produce a minimum coefficient.

$K_L = \frac{1}{8}\left(\left(\frac{26}{15}\right)^2 - 1\right)^2 = 0.50$ (Morris & Wiggert p. 110)

applied to velocity after expansion

FORM 230

PROJECT Biltmore Tunnel DATE 9/30/88

SUBJECT Vortex Drop Inlet DESIGNED KDW CHECKED TL

4.) 90° bends:

assume $\frac{R}{D} \approx 2$

from USBR Canals & Related Structures, 1967, Fig 13, Par. 2.25C

$K_L = 0.14$

5.) Inlet transition:

Per telephone conversation w/ Dr. S.C. Jain, inlet transition loss is approximately

$K_L = 0.10$

applied to difference in velocity heads

6.) Outlet transition:

from USBR Canals & Related structures, 1967, Par. 2.25C has several closed conduit to open channel coefficients listed. Assume final design will produce a best-case outlet loss of 0.2 x diff. in velocity heads.

$\therefore K_L = 0.20$

applied to difference in velocity heads.

CONSULTING ENGINEERS

☐ Reno/Sparks
950 Industrial Way
Sparks, NV 89431-6092
(702) 358-6931

☐ Las Vegas
1405 Arville Street
Las Vegas, NV 89102
(702) 877-3000

☑ Phoenix
2920 N. 24th Ave., #6
Phoenix, AZ 85015-5948
(602) 257-4699

JOB NO. 6-0297-001-871

SHEET 29 OF

PROJECT Biltmore Tunnel

DATE 9/30/88

SUBJECT Vortex Drop Inlet

DESIGNED KDW CHECKED TL

2-tunnel inlet transition

PLAN VIEW (NTS)

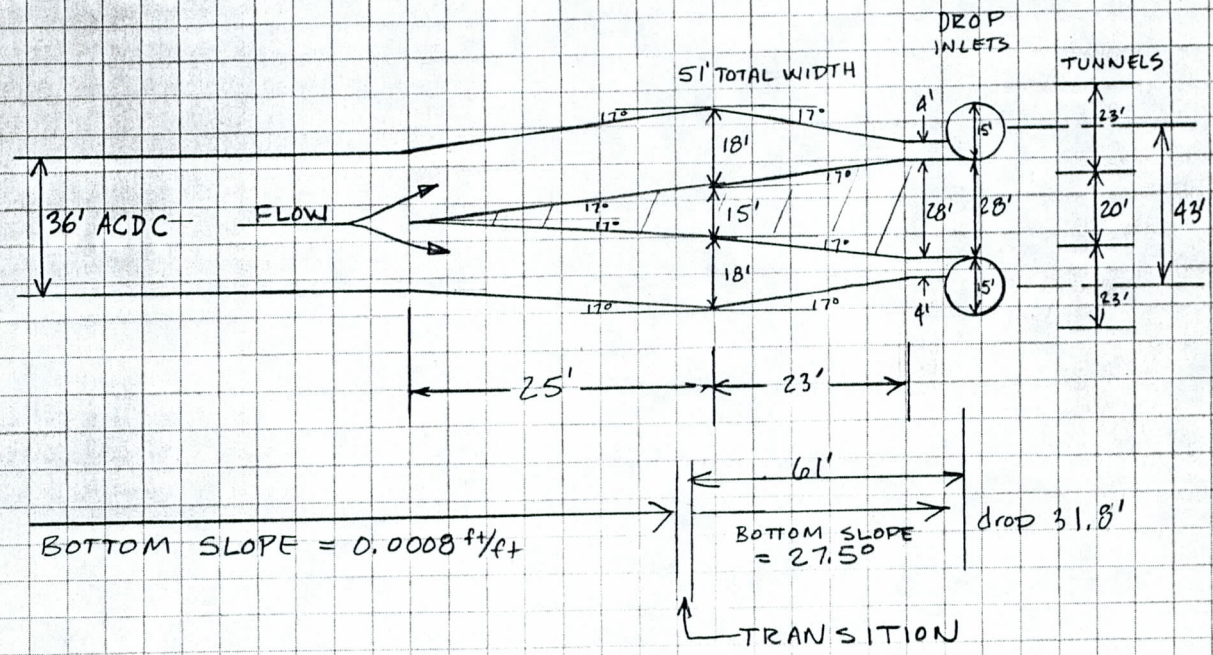

OUTLET

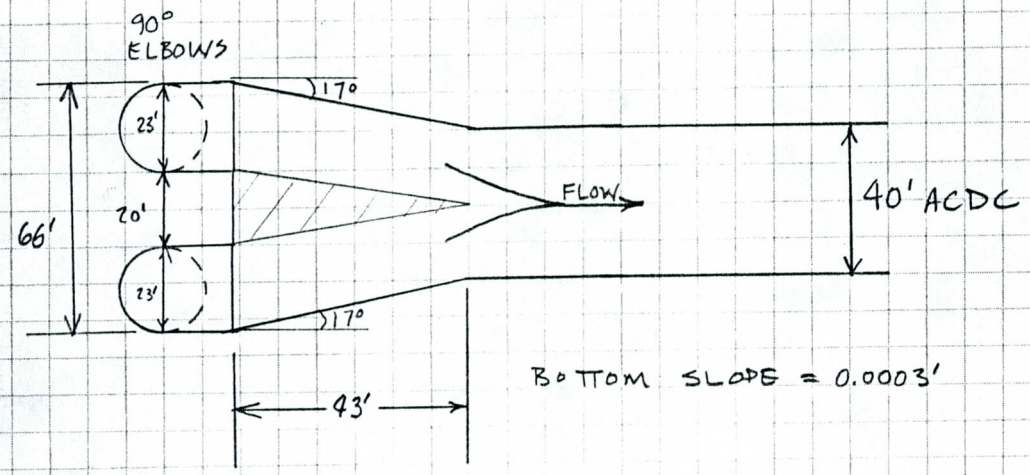

FORM 230

PROJECT Biltmore Tunnel DATE 9/30/88

SUBJECT Vortex Drop Inlet DESIGNED KDW CHECKED TL

Losses for Dual Drop System

1.) Friction slope in drop shaft – increase losses 10% per Dr. Jain's recommendation to account for swirl

$Q = 4150$ cfs

$A = \frac{\pi}{4}(15)^2 = 176.7 \text{ ft}^2$

$V = \frac{4150}{176.7} = 23.5$ fps $\quad h_v = \frac{23.5^2}{2(32.2)} = 8.56$ ft

$P = \pi D = \pi(15) = 47.12$ ft

$R = \frac{A}{P} = \frac{176.7}{47.12} = 3.75$ ft

$S_f = \left[\frac{23.5\,(0.014)}{1.49\,(3.75)^{2/3}}\right]^2 * 1.10 = 0.00921$ ft/ft

2.) Friction slope in deaeration chamber:

$A = \frac{\pi}{4}(26)^2 = 530.9 \text{ ft}^2$

$V = \frac{4150}{530.9} = 7.82$ fps $\quad h_v = \frac{7.82^2}{2(32.2)} = 0.949$ ft

$P = \pi(26) = 81.68$ ft

$R = \frac{530.9}{81.68} = 6.50$

$S_f = \left[\frac{7.82\,(0.014)}{1.49\,(6.50)^{2/3}}\right]^2 = 0.00045$ ft/ft

3.) Friction slope in ACDC canal: $V = 11.3$ fps

Assume flow is uniform, $\therefore S_f = S_b = 0.0008$ ft/ft

$h_v = \frac{11.3^2}{2(32.2)} = 1.98$ ft

4.) Friction slope in inlet chute

Dr. Jain (Memo dtd 9/16/88) indicates velocity @ bottom of chute of about 20 fps. At 5' width

$d = \frac{4150}{20(4)} = 51.9'$

$A = 51.9(4) = 207.5 \text{ ft}^2$

$P = 4 + 2(51.9) = 107.8'$

$R = 207.5/107.8 = 1.92'$

$\therefore S_f = \left[\frac{20\,(.014)}{1.49\,(1.92)^{2/3}}\right]^2 = 0.0148$ ft/ft

$h_v = \frac{20^2}{2(32.2)} = 6.21$ ft

FORM 230

PROJECT Biltmore Tunnel DATE 9/30/88

SUBJECT Vortex Drop Inlet DESIGNED KDW CHECKED TL

2-DROP SYSTEM

COMPUTATION OF HEAD LOSSES

head losses over proposed tunnel; i.e. from chute transition to outlet.

Inlet Transition (Friction) = 61' $\left(\frac{.0008+.0198}{2}\right)$	= 0.48'
Inlet Transition (Convergence) = 0.10 (6.21 - 1.98)	= 0.42'
Drop Inlet (Friction + Swirl) = .00921 (100)	= 0.92'
15' to 26' expansion = 0.50 (.949)	= 0.47
90° bend = .14 $\left(\frac{8.56+.949}{2}\right)$	= 0.67'
De-aeration chamber (friction) = .00045 (250)	= 0.11'
26' to 23' contraction = 0.05 (1.55)	= 0.08'
Tunnel (friction) = 0.00086 (7150)	= 6.15'
90° bend = .14 (1.55)	= 0.22'
Riser Tube (friction) = 0.00086 (100)	= 0.09'
90° bend = .14 (1.55)	= 0.22'
Outlet Transition (Divergence) = 0.2 (1.55 - 1.26)	= 0.06'
Outlet Transition (friction) = 43' $\left(\frac{.00086+.0003}{2}\right)$	= 0.03'
Total Loss (Energy Gradient)	= 9.92'
Add 10% for excess capacity	= 0.99'
TOTAL HEAD REQ'D	= 10.91'

FORM 230

PROJECT Biltmore Tunnel DATE 9/30/88
SUBJECT Vortex Drop Inlet DESIGNED KDW CHECKED TL

Consider reduction in head loss for 23.5' dia. tunnels

Friction slope:

$Q = 4150$ cfs

$A = \frac{\pi}{4}(23.5)^2 = 433.7 \text{ ft}^2$

$P = \pi(23.5) = 73.83$ ft

$R = \frac{433.7}{73.83} = 5.875$ ft

$n = 0.014$

$V = \frac{4150}{433.7} = 9.57$ fps $\qquad h_v = \frac{9.57^2}{2(32.2)} = 1.42'$

$$S_f = \left[\frac{9.57(0.014)}{1.49(5.875)^{2/3}}\right]^2 = 0.00076 \text{ ft/ft}$$

COMPUTATION OF HEAD LOSSES

Inlet Transition (Friction) = 61' $\left(\frac{.0008+.0148}{2}\right)$	= 0.48'
Inlet Transition (Convergence) = 0.10 (6.21 − 1.98)	= 0.42'
Drop Inlet (Friction + Swirl) = 0.00921 (100)	= 0.92'
15' to 26' expansion = 0.50 (.949)	= 0.47
90° bend = .14 $\left(\frac{.856+.949}{2}\right)$	= 0.67'
De-aeration Chamber (friction) = .00045 (250)	= 0.11'
26' to 23.5' contraction = 0.05 (1.42)	= 0.07'
Tunnel (friction) = 0.00076 (7150)	= 5.43'
90° bend = .14 (1.42)	= 0.20'
Riser Tube (friction) = 0.00076 (100)	= 0.08'
90° bend = .14 (1.42)	= 0.20'
Outlet Transition (Divergence) = 0.2 (1.42 − 1.26)	= 0.03'
Outlet Transition (Friction) = 43 $\left(\frac{.00076+.0003}{2}\right)$	= 0.02'
Total Loss (Energy Gradient)	= 9.10
Add 10% for excess capacity	= 0.91
TOTAL HEAD REQ'D	= 10.01'

FORM 230

PROJECT Biltmore Tunnel DATE 9/30/88

SUBJECT Vortex Drop Inlet DESIGNED KDW CHECKED TL

Consider Reduction In Head Loss for 24' dia. tunnels.

Friction Slope:

$Q = 4150$ cfs

$A = \frac{\pi}{4}(24)^2 = 452.4 \text{ ft}^2$

$R = \frac{D}{4} = \frac{24}{4} = 6.0$ ft

$V = \frac{4150}{452.4} = 9.17$ fps $\quad h_v = \frac{9.17^2}{2(32.2)} = 1.31'$

$S_f = \left[\frac{9.17(0.014)}{1.49(6)^{2/3}}\right]^2 = 0.00068$ ft/ft

COMPUTATION OF HEAD LOSSES

Inlet Transition (Friction) through De-aeration Chamber (Friction) Unchanged = 0.48 + 0.42 + 0.92 + 0.47 + 0.67 + 0.11	= 3.07'
26' to 24' Contraction = 0.05 (1.31)	= 0.07'
Tunnel (friction) = .00068 (7150)	= 4.86'
90° bend = .14 (1.31)	= 0.18'
Riser Tube (friction) = .00068 (100)	= 0.07'
90° bend = .14 (1.31)	= 0.18'
Outlet Transition (Divergence) = 0.2 (1.31 - 1.26)	= 0.01'
Outlet Transition (Friction) = $43\left(\frac{.00068 + .0005}{2}\right)$	= 0.02'
Total Loss (Energy Gradient)	= 8.46
Add 10% for excess capacity	= 0.85
TOTAL HEAD REQUIRED	= 9.31'

PROJECT Biltmore Tunnel DATE 9/30/88

SUBJECT Vortex Drop Inlet DESIGNED KDW CHECKED TL

Consider Reduction in Head Loss for 24.5' dia tunnels

Friction Slope:

$A = \frac{\pi}{4}(24.5)^2 = 471.4 \text{ ft}^2$

$R = \frac{D}{4} = \frac{24.5}{4} = 6.125 \text{ ft}$

$V = \frac{4150}{471.4} = 8.80 \text{ fps}$ $\quad h_v = \frac{8.80^2}{2(32.2)} = 1.20 \text{ ft}$

$S_f = \left[\frac{8.80\,(0.014)}{1.49\,(6.125)^{2/3}}\right]^2 = 0.00061 \text{ ft/ft}$

COMPUTATION OF HEAD LOSSES

Inlet Structure	= 3.07'
26' to 24.5' contraction = 0.05 (1.20)	= 0.06'
Tunnel (friction) = 0.00061 (7150)	= 4.36'
90° bend = .14 (1.20)	= 0.17'
Riser Tube (friction) = 0.00061 (100)	= 0.06'
90° bend = .14 (1.20)	= 0.17'
Outlet Transition (Convergence) = 0.1 (1.26 - 1.20)	= 0.01'
Outlet Transition (Friction) = $43\left(\frac{.00061 + .0003}{2}\right)$	= 0.02'
Total Loss (Energy Gradient)	= 7.92'
Add 10% for excess capacity	= 0.79'
TOTAL HEAD REQUIRED	= 8.71'

PROJECT Biltmore Tunnel DATE 10/3/88

SUBJECT Vortex Drop Inlet DESIGNED KDW CHECKED TL

Consider Reduction in Head Loss for 26' dia tunnels

$A = \frac{\pi}{4}(26)^2 = 530.9\ ft^2$

$R = \frac{26}{4} = 6.50\ ft$

$V = \frac{4150}{530.9} = 7.82\ fps$ $\quad h_v = \frac{7.82^2}{2(32.2)} = 0.95\ ft$

$S_f = \left[\frac{7.82\,(0.014)}{1.49(6.50)^{2/3}}\right]^2 = 0.00045$

Also de-aeration chamber would have to be bigger
For estimate try 28'

$A = \frac{\pi}{4}(28)^2 = 615.8\ ft^2$

$R = \frac{28}{4} = 7\ ft$

$V = \frac{4150}{615.8} = 6.74\ fps$ $\quad h_v = \frac{6.74^2}{2(32.2)} = 0.71\ ft$

$S_f = \left[\frac{6.74(0.014)}{1.49(7)^{2/3}}\right]^2 = 0.00030$

COMPUTATION OF HEAD LOSSES

Inlet Transition (Friction) through Drop (Friction + Swirl) = 0.48 + 0.42 + 0.92	= 1.82'
15' to 28' expansion $= \frac{1}{8}\left(\left(\frac{28}{15}\right)^2 - 1\right)^2 (0.71)$	= 0.55'
90° bend = .14 $\left(\frac{8.56 + .71}{2}\right)$	= 0.65
De-aeration Chamber (friction) = .00030(250)	= 0.08'
28' to 26' contraction = 0.05 (0.95)	= 0.05'
Tunnel (friction) = 0.00045 (7150)	= 3.22'
90° bend = .14(.95)	= 0.13'
Riser Tube (friction) = 0.00045(100)	= 0.05'
90° bend = .14(.95)	= 0.13'
Outlet Transition (Convergence) = 0.1(1.26 - .95)	= 0.03'
Outlet Transition (Friction) = 43 $\left(\frac{.00645 + .0003}{2}\right)$	= 0.02'
Total Loss (Energy Gradient)	= 6.73'
Add 10% for excess capacity	= 0.67'
TOTAL HEAD REQUIRED	= 7.40'

FORM 230

TWO-TUNNEL, ONE-INLET SYSTEM (NTS) — SCHEMATIC

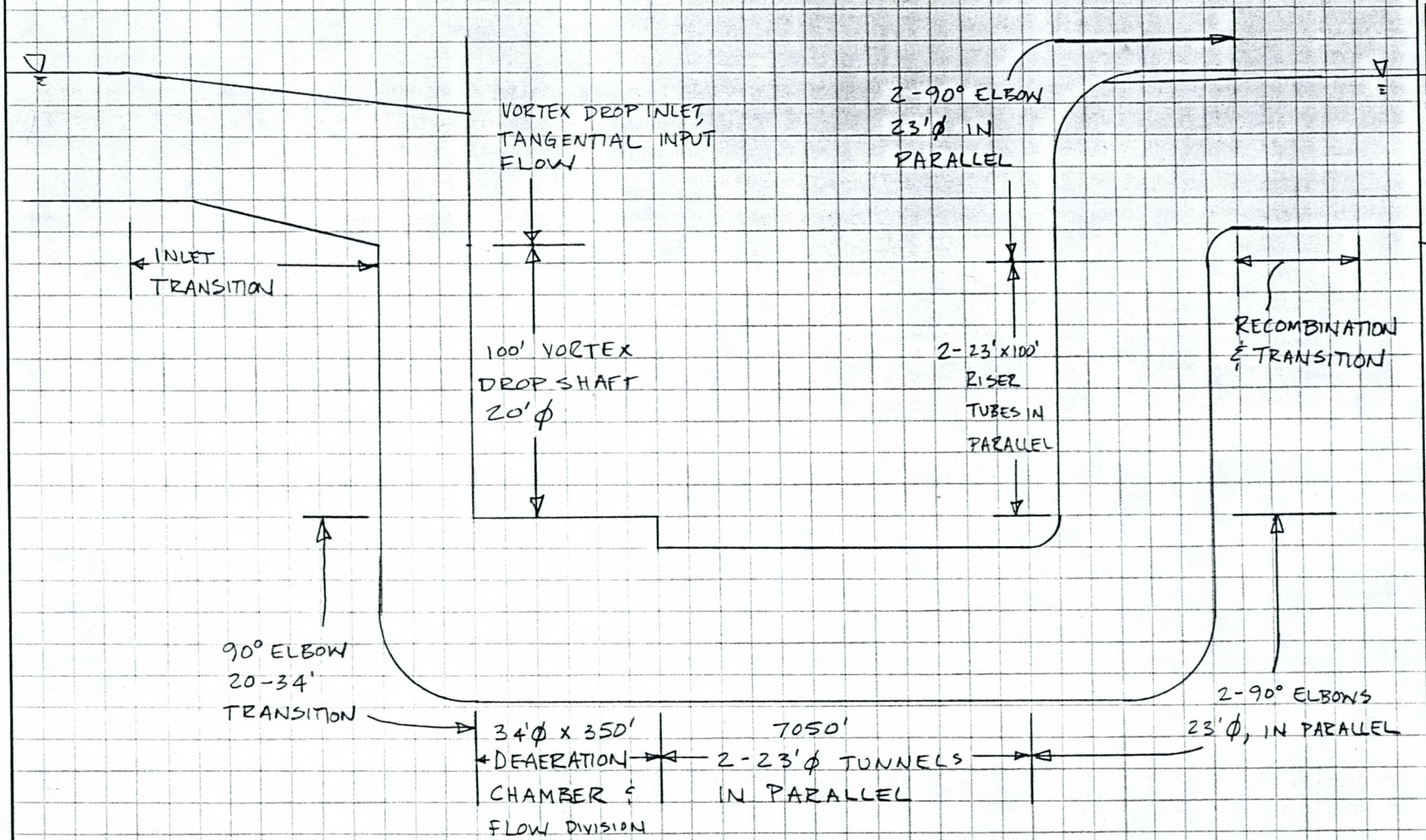

PROJECT Biltmore Tunnel

SUBJECT Vortex Drop Inlet

DESIGNED KDW CHECKED TK

DATE 9/30/88

SHEET 36 OF

JOB NO. 6-0297-001-871

CONSULTING ENGINEERS incorporated

☐ Reno/Sparks
950 Industrial Way
Sparks, NV 89431-6092
(702) 358-6931

☐ Las Vegas
1405 Arville Street
Las Vegas, NV 89102
(702) 877-3000

☑ Phoenix
2920 N. 24th Ave., #6
Phoenix, AZ 85015-5948
(602) 257-4699

sea incorporated
CONSULTING ENGINEERS

CONSULTING ENGINEERS

☐ Reno/Sparks
950 Industrial Way
Sparks, NV 89431-6092
(702) 358-6931

☐ Las Vegas
1405 Arville Street
Las Vegas, NV 89102
(702) 877-3000

☑ Phoenix
2920 N. 24th Ave., #6
Phoenix, AZ 85015-5948
(602) 257-4699

JOB NO. 6-0297-001-871

PROJECT Biltmore Tunnel DATE 10/3/88

SUBJECT Vortex Drop Inlet DESIGNED KDW CHECKED TL

1- Tunnel inlet transition

PLAN VIEW (NTS)

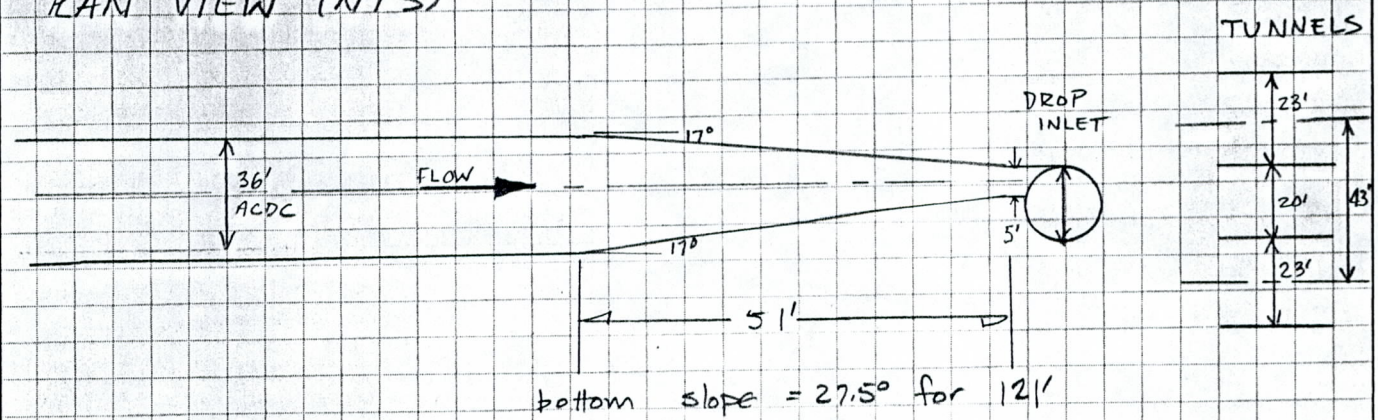

bottom slope = 27.5° for 121'

De-aeration chamber & flow division

PLAN VIEW (NTS)

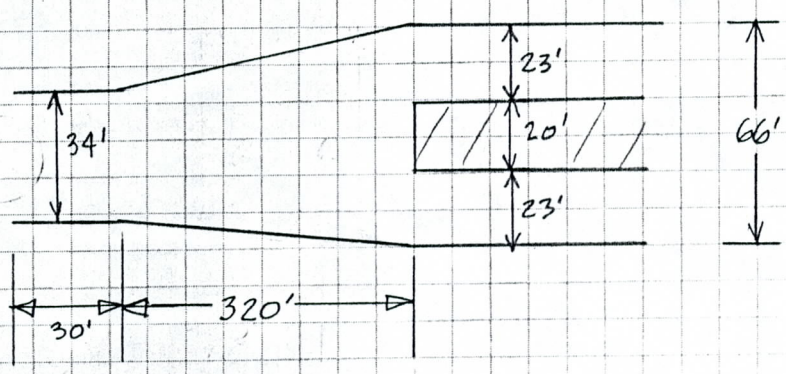

FORM 230

PROJECT Biltmore Tunnel DATE 10/3/88

SUBJECT Vortex Drop Inlet DESIGNED KDW CHECKED TL

Develop Comparative Head Losses

From the end of the de-aeration chamber to the outlet to ACDC, this alternate is identical to the previous option. The basis for comparison will therefore occur in the inlet appurtenance. Losses will be computed for this structure only to compare.

1.) Friction slope in inlet chute

$d = \frac{8300}{20(5)} = 83.0'$

$A = 83(5) = 415\ ft^2$

$P = 5 + 2(83) = 171\ ft$

$R = 415/171 = 2.43\ ft$

$\therefore S_f = \left[\frac{20(0.014)}{1.49(2.43)^{2/3}}\right]^2 = 0.0108\ ft/ft$

$h_v = \frac{20^2}{2(32.2)} = 6.21\ ft$

2.) Friction slope in drop shaft

$Q = 8300\ cfs$

$A = \frac{\pi}{4}(20)^2 = 314.2\ ft^2$

$R = \frac{20}{4} = 5\ ft$

$V = \frac{8300}{314.2} = 26.4\ fps$

$h_v = \frac{26.4^2}{2(32.2)} = 10.8\ ft$

$S_f = \left[\frac{26.4(0.014)}{1.49(5)^{2/3}}\right]^2 * 1.10 = 0.00720\ ft/ft$

3.) 90° bend → $K_L = 0.14$

4.) 20' to 34' expansion

$K_L = \frac{1}{8}\left[\left(\frac{34}{20}\right)^2 - 1\right]^2 = 0.45$

5.) 34' to 66' expansion

$K_L = \frac{1}{8}\left[\left(\frac{66}{34}\right)^2 - 1\right]^2 = 0.96$

PROJECT Biltmore Tunnel DATE 10/3/88

SUBJECT Vortex Drop Inlet DESIGNED KDW CHECKED TL

6.) 66' to (2 x 23') contraction

a). Contraction – use 0.05

b). Flow division
assume a transition of similar loss characteristics to the above ground division can be developed. Use 0.1 for the division.

7.) Frictional losses in de-aeration chamber

34'

$A = \frac{\pi}{4}(34)^2 = 907.9\ ft^2$

$R = \frac{34}{4} = 8.5$

$V = \frac{8300}{907.9} = 9.14\ fps$

$h_v = \frac{9.14^2}{2(32.2)} = 1.30\ ft$

$S_f = \left[\frac{9.14\ (0.014)}{(1.49)(8.5)^{2/3}}\right]^2 = 0.00043\ ft/ft$

66'

$A = \frac{\pi}{4}(66)^2 = 3421\ ft^2$

$R = \frac{66}{4} = 16.5$

$V = \frac{8300}{3421} = 2.43\ fps$

$h_v = \frac{2.43^2}{2(32.2)} = 0.092\ ft$

$S_f = \left[\frac{2.43\ (0.014)}{1.49\ (16.5)^{2/3}}\right]^2 = 0.00001\ ft/ft$

COMPUTATION OF HEAD LOSSES – INLET STRUCTURE

Inlet Transition (Friction) = $121\left(\frac{0.0108+0.0008}{2}\right)$	= 0.70'
Inlet Transition (Convergence) = 0.1 (6.21 – 1.98)	= 0.42'
Drop Inlet (Friction & Swirl) = 0.0072 (100)	= 0.72'
20' to 34' expansion = 0.45 (1.30)	= 0.59'
90° bend = $0.14\left(\frac{10.6+1.30}{2}\right)$	= 0.85'
34' section (Friction) = 0.00043 (30)	= 0.01'
34' to 66' expansion = 0.96 (0.092)	= 0.09'
De-aeration Chamber (friction) = $320\left(\frac{0.00043+0.00001}{2}\right)$	= 0.07'
66' to 2 x 23' (Contraction) = 0.05 (1.55)	= 0.08'
66' to 2 x 23' (Division) = 0.1 (1.55 – 0.092)	= 0.15'
TOTAL INLET LOSSES	= 3.68'

FORM 230

PROJECT Biltmore Tunnel DATE 10/3/88

SUBJECT Vortex Drop Inlet DESIGNED KDW CHECKED TL

Head required thru 26' to 23' contraction for dual drop structure

$= 0.48 + 0.42 + 0.92 + 0.47 + 0.67 + 0.11 + 0.08 = \underline{3.15'}$

Compared to 3.68' for the single drop structure. This comparison is well in favor of the dual drop system, especially given the uncertainty in the loss coefficients for the flow division in the de-aeration chamber. The value of 0.1 chosen is probably very liberal, although that could only be tested through model studies.

At this stage, however, the single drop system can be said to create more severe head losses than the dual drop system.

The dual drop system also has the advantages of providing a low flow tunnel to reduce O&M costs & the availability of a passageway for storm flows during maintenance operations on one tunnel.

∴ Single drop system will receive no further consideration in this study.

FORM 230

FORM 230

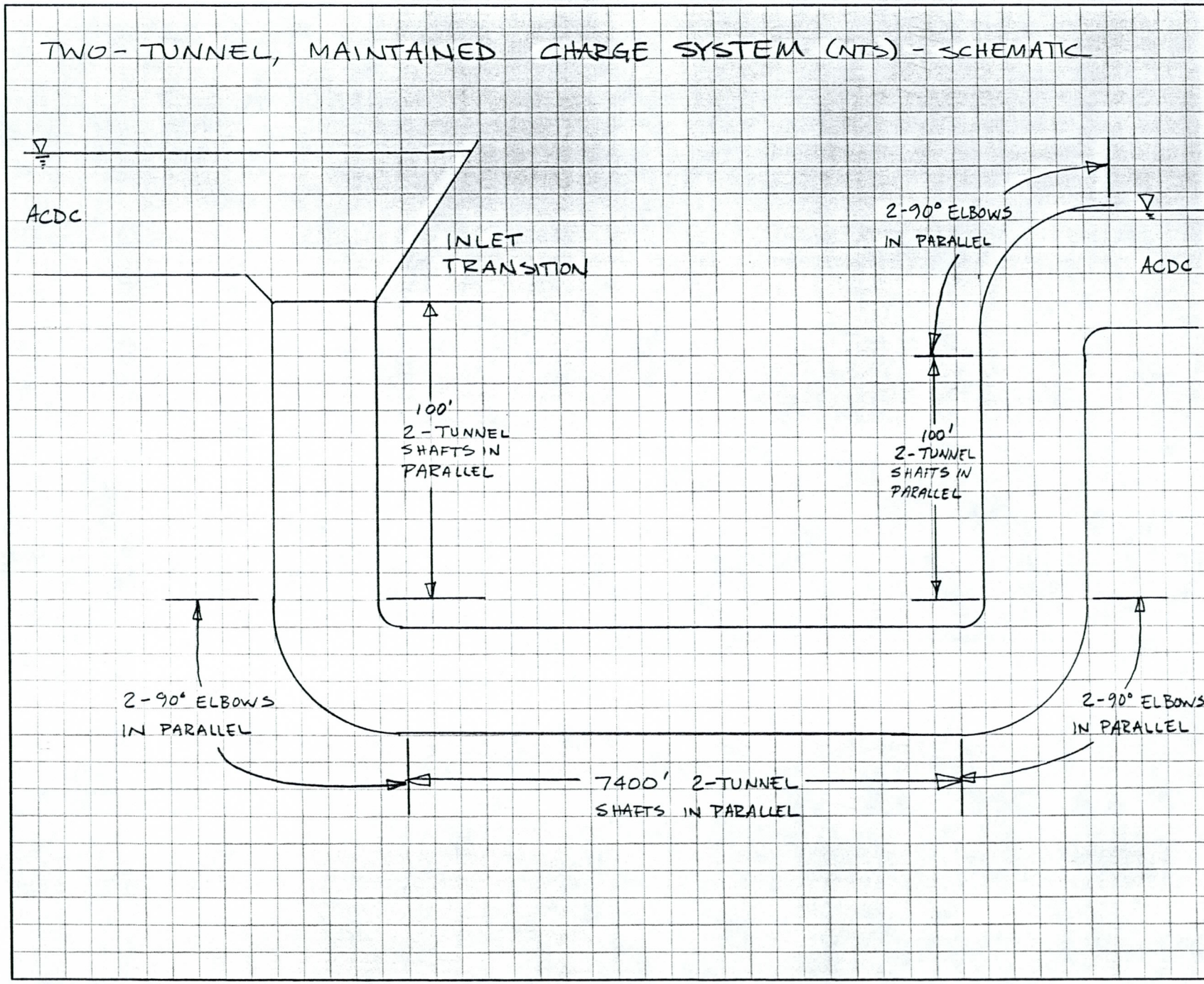

PROJECT Biltmore Tunnel

SUBJECT Maintained Charge System

DESIGNED KDW CHECKED TL

DATE 10/4/88

SCI incorporated CONSULTING ENGINEERS

☐ Reno/Sparks 950 Industrial Way Sparks, NV 89431-6092 (702) 358-6931

☐ Las Vegas 1405 Arville Street Las Vegas, NV 89102 (702) 877-3000

☑ Phoenix 2920 N. 24th Ave., #6 Phoenix, AZ 85015-5948 (602) 257-4699

CONSULTING ENGINEERS

JOB NO. 6-0297-001-871

SHEET 4 OF

PROJECT Biltmore Tunnel DATE 10/4/88
SUBJECT Maintained Charge System DESIGNED KDW CHECKED TL

Inlet Transition
Concept

PLAN VIEW - NTS

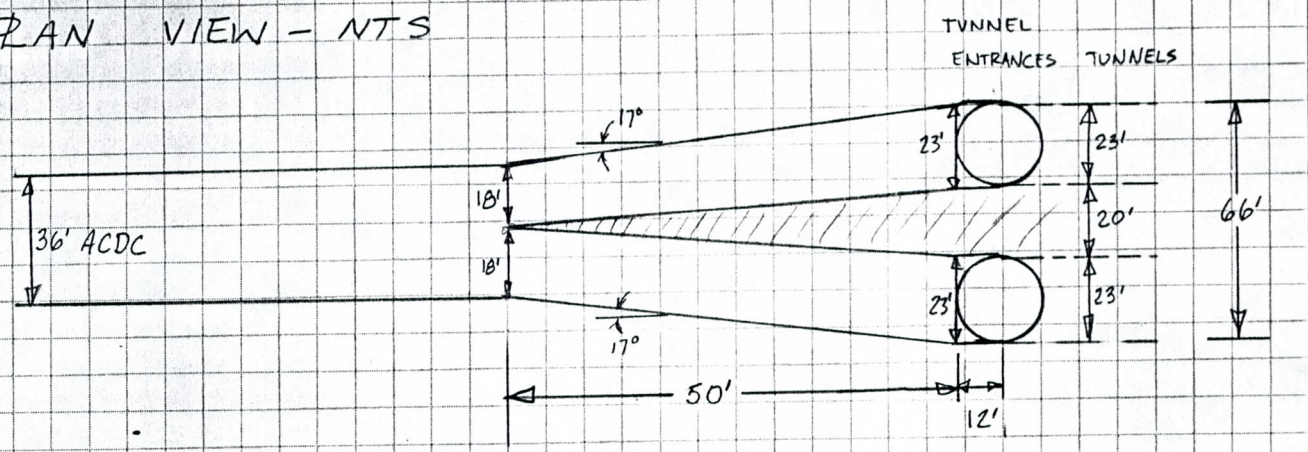

For conceptual estimates of head losses:

Use same slope throughout transition (i.e. ACDC depth = 20.1 ft)

Treat tunnel entrance as 90° bend for assigning head loss coefficients.

Assume 0.1 coefficient applied to transition for vortex inlet, suggested by Dr. Jain, can also be applied to this transition. Note that the transitions accomplish roughly the same task, although this transition is geometrically much less severe. ∴, if 0.1 is applicable for the vortex inlet transition, it should be conservative for this application.

FORM 230

PROJECT Biltmore Tunnel DATE 10/4/88

SUBJECT Maintained Charge System DESIGNED KDW/ CHECKED TG

Develop Friction Slopes, Velocity Heads, & Loss Coefficients

1.) ACDC

Use $S_f = S_b = 0.0008$

$h_v = 1.98$ ft

2.) 23' end of transition

For estimating purposes, assume flow will reach uniform flow condition of normal depth at 23' end of transition.

$Q = \frac{1.49}{n} A R^{2/3} S^{1/2}$ $A = by$

$R = by/(2y+b)$

Use trial & error solution for y

$Q = 4150$ cfs $n = 0.014$ $b = 23$ ft $S = 0.0008$

y (ft)	A (ft²)	R (ft)	Q (cfs)	Remarks
18	414	7.02	4569	TOO HIGH
17	391	6.86	4249	TOO HIGH
16	368	6.69	3933	TOO LOW
16.5	379.5	6.78	4091	TOO LOW
16.6	381.8	6.79	4122	OK

$V = \frac{4150}{381.8} = 10.87$ fps

$h_v = \frac{10.87^2}{2(32.2)} = 1.83$ ft

3.) 90° bends use 0.14 used for Vortex Inlet

4.) Outlet transition: use 0.2 as for Vortex Inlet
Outlet end is identical to vortex inlet
system outlet.

FORM 230

PROJECT Biltmore Tunnel DATE 10/4/88
SUBJECT Maintained Charge System DESIGNED KDW CHECKED TL

5.) Tunnels

from vortex drop inlet calculations

$S_f = 0.00086$ ft/ft

$h_v = 1.55'$

Calculate Head Losses → inlet transition to outlet transition.

Inlet Transition (Friction) = 50 (.0008)	= 0.04'
Inlet Transition = 0.1 (1.98 − 1.83)	= 0.02'
Inlet (90° bend) = 0.14 $\left(\frac{1.83+1.55}{2}\right)$	= 0.24'
Tunnel (friction) = 0.00086 (100)	= 0.09'
90° bend = 0.14 (1.55)	= 0.22' (0.61')
Tunnel (friction) = 0.00086 (7400)	= 6.36'
90° bend = 0.14 (1.55)	= 0.22'
Tunnel (friction) = 0.00086 (100)	= 0.09'
90° bend = 0.14 (1.55)	= 0.22'
Outlet Transition (Divergence) = 0.2 (1.55 − 1.26)	= 0.06'
Outlet Transition (friction) = 43 $\left(\frac{.00086+.0003}{2}\right)$	= 0.03'
Total Loss (Energy Gradient)	= 7.59'
Add 10% for conservancy	= 0.76'
TOTAL HEAD REQ'D	= 8.35'

FORM 230

PROJECT Biltmore Tunnel DATE 10/4/88

SUBJECT Maintained Charge System DESIGNED KDW CHECKED TL

Consider reduction in head loss for 23.5' dia. tunnel

Required Changes:

1.) 23.5' end of transition (length = $\frac{(67-36)/2}{\tan 17}$ = 51')

$Q = 4150$ cfs $n = 0.014$ $b = 23.5$ ft $S = 0.0008$

y (ft)	A (ft²)	R (ft)	Q (cfs)	Rmks
16	376	6.77	4053	TOO LOW
16.2	380.7	6.81	4118	OK

$V = \frac{4150}{380.7} = 10.90$ fps

$h_v = \frac{(10.90)^2}{2(32.2)} = 1.85$ ft

2.) Tunnels: from Vortex Drop inlet calculations

$h_v = 1.42'$
$S_f = 0.00076$ ft/ft

COMPUTATION OF HEAD LOSSES

Inlet Transition (friction) = 51(0.0008)	= 0.04'
Inlet Transition = 0.1 (1.98 - 1.85)	= 0.01'
Inlet (90° bend) = 0.14 ($\frac{1.85+1.42}{2}$)	= 0.23'
Tunnel (friction) = 0.00076 (100)	= 0.08'
90° bend = 0.14 (1.42)	= 0.20'
Tunnel (friction) = 0.00076 (7400)	= 5.62'
90° bend = 0.14 (1.42)	= 0.20'
Tunnel (friction) = 0.00076 (100)	= 0.08'
90° bend = 0.14 (1.42)	= 0.20'
Outlet Transition (Divergence) = 0.2 (1.42 - 1.26)	= 0.03'
Outlet Transition (friction) = 43 ($\frac{.00076+.0003}{2}$)	= 0.02'
Total Loss (Energy Gradient)	= 6.71'
Add 10% for conservancy	= 0.67'
TOTAL HEAD REQ'D	= 7.38

FORM 230

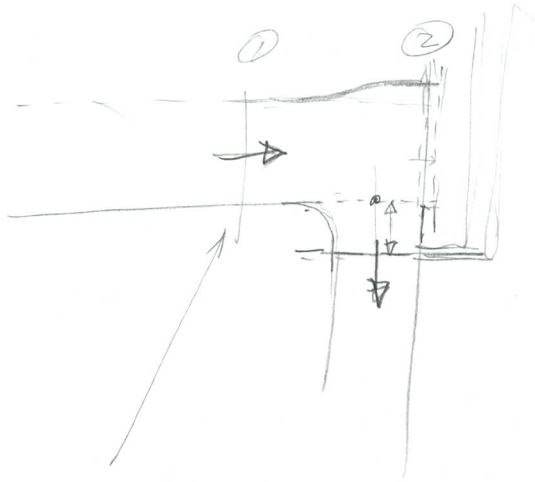

Assume uniform

$v = 10.8$ fps

$y = \cancel{17.8'}\ 16'$

$E = y + \frac{v^2}{2g} = 17.8'$

need extra water rise.

① $\phi = 24' \rightarrow v = 9.8$ fps

$y \rightarrow 16.48'$

$\boxed{\Delta y = 0.5'}$

② Δz $E_1 = E_2$

where, $v_2 = 0$

$\rightarrow \Delta y = \frac{v^2}{2g} = \boxed{1.8'}$

sea incorporated CONSULTING ENGINEERS

CONSULTING ENGINEERS

☐ Reno/Sparks
950 Industrial Way
Sparks, NV 89431-6092
(702) 358-6931

☐ Las Vegas
1405 Arville Street
Las Vegas, NV 89102
(702) 877-3000

☑ Phoenix
2920 N. 24th Ave., #6
Phoenix, AZ 85015-5948
(602) 257-4699

JOB NO. 6-0297-001-871

SHEET _____ OF _____

PROJECT Biltmore Tunnel DATE 10/4/88

SUBJECT Maintained Charge System DESIGNED KDW CHECKED TL

Consider Reduction in head loss for 24' dia. tunnel

Required Changes:

1.) 24' end of transition (length = $\frac{(68-36)/2}{\tan 17}$ = 52')

Q = 4150 cfs n = 0.014 b = 24 ft S = 0.0008

y (ft)	A (ft²)	R (ft)	Q (cfs)	Rmks
16	384	6.86	4172	OK

$V = \frac{4150}{384} = 10.8$ fps $h_v = \frac{10.8^2}{2(32.2)} = 1.81$ ft $15.97 + \frac{10.83^2}{2g} =$ 17.79'

2.) Tunnels: from Vortex Drop Inlet calculations

$h_v = 1.31'$
$S_f = 0.00068$ ft/ft

$V_{fun} = 9.18$ fps
$V_e / 6.48 = 19.51'$

COMPUTATION OF HEAD LOSSES

Inlet Transition (friction) = 52(0.0008)	= 0.04'
Inlet Transition = 0.1 (1.98 - 1.81)	= 0.02'
Inlet (90° bend) = 0.14 ($\frac{1.81+1.31}{2}$)	= 0.22'
Tunnel (friction) = 0.00068 (100)	= 0.07'
90° bend = 0.14 (1.31)	= 0.18'
Tunnel (friction) = 0.00068 (7400)	= 5.03' (5.53)
90° bend = 0.14 (1.31)	= 0.18'
Tunnel (friction) = 0.00068 (100)	= 0.07'
90° bend = 0.14 (1.31)	= 0.18'
Outlet Transition (Divergence) = 0.2 (1.31 - 1.26)	= 0.01'
Outlet Transition (friction) = 43 ($\frac{.00068+.0003}{2}$)	= 0.02'
Total Loss (Energy Gradient)	= 6.02'
Add 10% for Conservancy	= 0.60
TOTAL HEAD REQ'D	= 6.62'

FORM 230

PROJECT Biltmore Tunnel DATE 10/4/88
SUBJECT Maintained Charge System DESIGNED KDW CHECKED TL

Consider reduction in head loss for 24.5' dia tunnel

Required Changes:

1.) 24.5' end of transition (length = $\frac{(69-36)/2}{\tan 17}$ = 54')

$Q = 4150$ cfs $n = 0.014$ $b = 24.5$ ft $S = 0.0008$

y (ft)	A (ft²)	R (ft)	Q (cfs)	Rmks
15.8	387.1	6.90	4223	TOO HIGH
15.7	384.7	6.88	4190	TOO HIGH
15.6	382.2	6.86	4155	OK

$V = \frac{4150}{382.2} = 10.9$ fps $h_v = \frac{10.9^2}{2(32.2)} = 1.84$ ft

2.) Tunnels: from Vortex Drop Inlet calculations

$h_v = 1.20$ ft
$S_f = 0.00061$ ft/ft

COMPUTATION OF HEAD LOSSES

Inlet Transition (friction) = 54 (0.0008)	= 0.04'
Inlet Transition = 0.1 (1.98 − 1.84)	= 0.01'
Inlet (90° bend) = 0.14 ($\frac{1.84+1.20}{2}$)	= 0.21'
Tunnel (friction) = 0.00061 (100)	= 0.06'
90° bend = 0.14 (1.20)	= 0.17'
Tunnel (friction) = 0.00061 (7400)	= 4.51'
90° bend = 0.14 (1.20)	= 0.17'
Tunnel (friction) = 0.00061 (100)	= 0.06'
90° bend = 0.14 (1.20)	= 0.17'
Outlet Transition (Convergence) = 0.1 (1.26 − 1.20)	= 0.01'
Outlet Transition (friction) = 43 ($\frac{.00061+.0003}{2}$)	= 0.02'
Total Loss (Energy Gradient)	= 5.43
Add 10% for conservancy	= 0.54

TOTAL HEAD REQ'D = 5.97

FORM 230

PROJECT Biltmore Tunnel DATE 10/10/88

SUBJECT Manning Vs. Darcy-Weisbach Equation DESIGNED KDW CHECKED TL

Compare Equations

Manning $h_L = S_f L$ $\quad S_f = \left[\frac{Vn}{1.49 R^{2/3}}\right]^{1/2}$

For 23' diameter tunnel $S_f = 0.00086$ ft/ft

$h_L = (0.00086)(7400) = 6.36'$

Darcy-Weisbach $h_L = f \frac{L}{D} \frac{V^2}{2g}$

$V = 9.99$ ft/sec

$f \Rightarrow$ need $\mathbb{R} = \frac{VD}{\nu}$ $\quad \nu \cong 1 \times 10^{-5} \frac{ft^2}{sec}$

$\mathbb{R} = \frac{9.99(23)}{1 \times 10^{-5}} = 23{,}000{,}000$

Take $\epsilon = 0.001$ (concrete, finished surface)

$\therefore \frac{\epsilon}{D} = \frac{0.001}{23} = 0.00004$

From Darcy-Weisbach diagram (Morris & Wiggert p 70)

$f \approx 0.011$

$h_L = (0.011)\left(\frac{7400}{23}\right)\left(\frac{9.99^2}{2(32.2)}\right) = 5.58$

% Difference $= \frac{6.36 - 5.58}{6.36} \times 100\% = 12\%$

results are very similar - within probable error of estimation range of losses. Also, Manning result is more conservative

$\therefore$ Manning Equation OK

FORM 230

PROJECT Biltmore Tunnel DATE 1/6/89

SUBJECT Darcy Weisbach comparison DESIGNED KDW CHECKED TL

Using, ε values of 0.002 & 0.007 - [illegible]

Compare with Manning Equation $h_L = 6.36$

1.) $\epsilon = 0.002$ $\quad \frac{\epsilon}{D} = \frac{0.002}{23} = 0.00009$

$\therefore \quad f = 0.0125$

$$h_L = 0.0125\left(\frac{7400}{23}\right)\left(\frac{9.99^2}{2(32.2)}\right) = 6.23'$$

$$\% \text{ Diff} = \frac{6.36 - 6.23}{6.36} = 2.04\%$$

2.) $\epsilon = 0.007$ $\quad \frac{\epsilon}{D} = \frac{0.007}{23} = 0.0003$

$\therefore \quad f = .016$

$$h_L = 0.016\left(\frac{7400}{23}\right)\left(\frac{9.99^2}{2(32.2)}\right) = 7.98'$$

$$\% \text{ Diff} = \frac{|6.36 - 7.98|}{6.36} = 25\% \quad \text{(D-W losses are lower)}$$

Darcy-Weisbach losses still bracket the Manning Equation losses, though the Manning losses are closer to $\epsilon = 0.002$.

Brierly & Lyman design engineers indicated at meetings that smoothness of concrete finish would be a very high priority for design of the tunnel, so the low end (0.002) value is probably reasonable.

$\therefore$ Conclusion in original report is unchanged, and Manning Equation use for concept level design is acceptable.

FORM 230

Alternative to placement of a single sediment basin in-line on the ACDC alignment is the placement of a "decentralized sediment trapping system." The system would consist of the following elements:

(1) Improved efficiency of the Cudia City Wash Sediment Basin to trap all (100%) of the Bed load – Remaining 0.005 A-F of MS.

(2) Add sediment basin for ~32nd st Inflow to trap all of the bed load – 0.07 A-F of MS. (This would handle Subbasin 2) approximate size = 65 wide x 125 long x 8 deep.

(3) For Subbasin 3, design conveyance system to ACDC tunnel to trap all MS in inflows to join ACDC flow before tunnel; alternatively, route all of these Biltmore area inflows to the outlet end of the tunnel to join the open channel section.

(1) Improve Cudia City Wash Basin

Current design reduces 0.92 A-F input MS to 0.005 A-F at the output.

Efficiency for MS = $\frac{0.92 - 0.005}{0.92}$ = 99.5%

Additional volume to be trapped = 0.005 AF
= 8.1 cu. yd = 218 cu ft.

Modifications to the design of the basin to trap this additional volume are not expected to be extreme. The additional volume shown above is insignificant.

Additional costs are considered insignificant for this part of the system.

PROJECT Biltmore Tunnel DATE 1/5/89

SUBJECT Alternative Sediment Basin DESIGNED KDW CHECKED TL

(2) Basin for Inflow Near 32nd St (SB 2)

Inflow = 0.07 acre-feet MS

Input flow = 975 cfs

Consider Sediment Basin

Short Circuiting

$$A = FSC \frac{Q_o}{V_s} = (1.2)\frac{975}{0.15} = 7800\ ft^2$$

Increase by 25% $A = 9750\ ft^2 = 0.22$ acres

Length to Width Ratio

Use 2:1 minimum for estimating

$$w = \left(\frac{7800}{2}\right)^{1/2} = 62.5\ ft$$

$$l = 2\ (62.5) = 125\ ft$$

Roughly 65 x 125 ft

Permissible Flow-Thru Velocity

Use Cudia City Wash velocity of 2 fps for estimating

$$d = \frac{975}{(65)(2)} = 7.5'\ deep$$

USE roughly d = 8', width = 65', length = 125'

FORM 230

KDW 1/5/89

Direct Step Method for Berm Length

Sheet 51

Q= 8300.00 cfs
n= 0.0140
So= 0.000800
Alpha= 1.00

Left Side Slope = 0.00 ft/ft
Right Side Slope = 0.00 ft/ft
Extra Area = 6.48 ft^2
Base Width = 36.00 ft

y (ft)	A (sq ft)	R (ft)	R^4/3	V	V-hd (ft)	E (ft)	E ch	Sf	Sf mean	So-Sf	x	Total x
20.40	740.88	9.65	20.54	11.20	1.95	22.35		0.000540				
20.37	739.68	9.64	20.52	11.22	1.96	22.32	0.02700	0.000542	0.000541	0.000259	104.15	104.15
20.33	738.48	9.63	20.49	11.24	1.96	22.29	0.02697	0.000544	0.000543	0.000257	104.97	209.12
20.30	737.28	9.63	20.47	11.26	1.97	22.27	0.02694	0.000546	0.000545	0.000255	105.80	314.92
20.27	736.08	9.62	20.45	11.28	1.97	22.24	0.02691	0.000549	0.000548	0.000252	106.65	421.57
20.23	734.88	9.61	20.43	11.29	1.98	22.21	0.02688	0.000551	0.000550	0.000250	107.53	529.10
20.20	733.68	9.60	20.41	11.31	1.99	22.19	0.02685	0.000554	0.000552	0.000248	108.42	637.52
20.17	732.48	9.60	20.39	11.33	1.99	22.16	0.02682	0.000556	0.000555	0.000245	109.34	746.86
20.13	731.28	9.59	20.37	11.35	2.00	22.13	0.02678	0.000558	0.000557	0.000243	110.29	857.15
20.10	730.08	9.58	20.35	11.37	2.01	22.11	0.02675	0.000561	0.000560	0.000240	111.25	968.40

Excess = 0.30

KDW 1/5/89

Direct Step Method for Berm Length

Sheet 52

Q= 8300.00 cfs Left Side Slope = 0.00 ft/ft
n= 0.0140 Right Side Slope = 0.00 ft/ft
So= 0.000800 Extra Area = 6.48 ft^2
Alpha= 1.00 Base Width = 36.00 ft

y (ft)	A (sq ft)	R (ft)	R^4/3	V	V-hd (ft)	E (ft)	E ch	Sf	Sf mean	So-Sf	x	Total x
21.05	764.28	9.79	20.93	10.86	1.83	22.88		0.000497				
20.94	760.48	9.76	20.87	10.91	1.85	22.79	0.08721	0.000504	0.000501	0.000299	291.38	291.38
20.84	756.68	9.74	20.80	10.97	1.87	22.71	0.08693	0.000511	0.000507	0.000293	296.98	588.36
20.73	752.88	9.72	20.74	11.02	1.89	22.62	0.08665	0.000517	0.000514	0.000286	302.95	891.31
20.63	749.08	9.70	20.68	11.08	1.91	22.53	0.08636	0.000524	0.000521	0.000279	309.32	1200.62
20.52	745.28	9.67	20.61	11.14	1.93	22.45	0.08607	0.000531	0.000528	0.000272	316.14	1516.76
20.42	741.48	9.65	20.55	11.19	1.95	22.36	0.08577	0.000538	0.000535	0.000265	323.46	1840.22
20.31	737.68	9.63	20.48	11.25	1.97	22.28	0.08546	0.000546	0.000542	0.000258	331.33	2171.55
20.21	733.88	9.60	20.42	11.31	1.99	22.19	0.08515	0.000553	0.000549	0.000251	339.82	2511.38
20.10	730.08	9.58	20.35	11.37	2.01	22.11	0.08483	0.000561	0.000557	0.000243	349.01	2860.38

Excess = 0.95

KDW 1/5/89

Direct Step Method for Berm Length

Sheet 53

Q=	8300.00 cfs	Left Side Slope =	0.00 ft/ft
n=	0.0140	Right Side Slope =	0.00 ft/ft
So=	0.000800	Extra Area =	6.48 ft^2
Alpha=	1.00	Base Width =	36.00 ft

y (ft)	A (sq ft)	R (ft)	R^4/3	V	V-hd (ft)	E (ft)	E ch	Sf	Sf mean	So-Sf	x	Total x
21.81	791.64	9.94	21.38	10.48	1.71	23.52		0.000454				
21.62	784.80	9.90	21.27	10.58	1.74	23.36	0.16012	0.000464	0.000459	0.000341	469.71	469.71
21.43	777.96	9.87	21.16	10.67	1.77	23.20	0.15932	0.000475	0.000470	0.000330	482.27	951.98
21.24	771.12	9.83	21.05	10.76	1.80	23.04	0.15850	0.000486	0.000481	0.000319	496.11	1448.09
21.05	764.28	9.79	20.93	10.86	1.83	22.88	0.15766	0.000497	0.000492	0.000308	511.44	1959.53
20.86	757.44	9.75	20.82	10.96	1.86	22.72	0.15678	0.000509	0.000503	0.000297	528.50	2488.03
20.67	750.60	9.71	20.70	11.06	1.90	22.57	0.15586	0.000521	0.000515	0.000285	547.60	3035.63
20.48	743.76	9.66	20.59	11.16	1.93	22.41	0.15492	0.000534	0.000528	0.000272	569.12	3604.76
20.29	736.92	9.62	20.47	11.26	1.97	22.26	0.15394	0.000547	0.000541	0.000259	593.56	4198.32
20.10	730.08	9.58	20.35	11.37	2.01	22.11	0.15292	0.000561	0.000554	0.000246	621.54	4819.86

Excess = 1.71

KDW 1/5/89

Direct Step Method for Berm Length

Sheet 54

Q= 8300.00 cfs
n= 0.0140
So= 0.000800
Alpha= 1.00

Left Side Slope = 0.00 ft/ft
Right Side Slope = 0.00 ft/ft
Extra Area = 6.48 ft^2
Base Width = 36.00 ft

y (ft)	A (sq ft)	R (ft)	R^4/3	V	V-hd (ft)	E (ft)	E ch	Sf	Sf mean	So-Sf	x	Total x
22.78	826.56	10.13	21.93	10.04	1.57	24.35		0.000406				
22.48	815.84	10.08	21.76	10.17	1.61	24.09	0.25636	0.000420	0.000413	0.000387	662.24	662.24
22.18	805.12	10.02	21.60	10.31	1.65	23.83	0.25469	0.000434	0.000427	0.000373	683.14	1345.39
21.89	794.40	9.96	21.42	10.45	1.70	23.58	0.25294	0.000450	0.000442	0.000358	706.87	2052.25
21.59	783.68	9.90	21.25	10.59	1.74	23.33	0.25109	0.000466	0.000458	0.000342	734.03	2786.29
21.29	772.96	9.84	21.08	10.74	1.79	23.08	0.24913	0.000483	0.000475	0.000325	765.42	3551.71
20.99	762.24	9.77	20.90	10.89	1.84	22.83	0.24706	0.000501	0.000492	0.000308	802.10	4353.81
20.70	751.52	9.71	20.72	11.04	1.89	22.59	0.24488	0.000520	0.000510	0.000290	845.49	5199.30
20.40	740.80	9.65	20.53	11.20	1.95	22.35	0.24256	0.000540	0.000530	0.000270	897.61	6096.91
20.10	730.08	9.58	20.35	11.37	2.01	22.11	0.24011	0.000561	0.000550	0.000250	961.35	7058.27

Excess = 2.68