Levee Slope Stability Evaluation Mondrain Tempe Town Lake
East of Southeast Corner of Rural Road & Red Mt. Frwy (Loop 202)

2004P090

Foree & Vann, Inc.

Geotechnical Engineering • Environmental Consulting • Construction Testing & Inspection

October 8, 2004

Project 13666

Mr. Jeff Ericson
PARADY GRAY ARCHITECTS, LLC
2555 East Camelback Road
Suite 1050
Phoenix, Arizona 85016

RE: LEVEE SLOPE STABILITY EVALUATION
MONDRIAN TEMPE TOWN LAKE
EAST OF THE SOUTHEAST CORNER OF RURAL ROAD
AND THE RED MOUNTAIN FREEWAY (LOOP 202)
TEMPE, ARIZONA

Dear Jeff,

Transmitted herewith is a copy of the slope stability evaluation report on the project listed above. The services performed provide an evaluation at selected locations of the subsurface conditions.

Should any questions arise concerning the content of this report, please contact this office at your earliest convenience.

Respectfully submitted,

FOREE & VANN, INC.

Registered Professional Engineer (Geological)
CERTIFICATE NO.
15206
JEFFRY D.
VANN
Date Signed 10/8/04
ARIZONA, U.S.A.

J. Zachary Wright, G.I.T.
Staff Geologist

Jeffry D. Vann, P.E.
Principal Engineer

cc: Addressee (3)

9013 North 24th Avenue, Suite 7, Phoenix, Arizona 85021-2851
602.943.6997 • *fax:* 602.943.7179 • www.foreeandvann.com

Table of Contents

1 REPORT

2 EXISTING EMBANKMENT GEOMETRY

3 SITE PLAN, TEST BORING LOGS, AND FIELD PERMEABILITY TESTING

4 SLOPE STABILITY ANALYSIS #1 – PRE-CONSTRUCTION

5 SLOPE STABILITY ANALYSIS #2 – FOLLOWING MASS EXCAVATION

6 SLOPE STABILITY ANALYSIS #3 – STABILIZATION OF MASS EXCAVATION

7 SLOPE STABILITY ANALYSIS #4 – AFTER STAGE 1 OF THE BACKFILL

8 SLOPE STABILITY ANALYSIS #5 – AFTER STAGE 2 OF THE BACKFILL

AVERY READY INDEX® INDEXING SYSTEM 600014

Scope of Work

This firm has been contracted to provide slope stability analyses for the north levee of Tempe Town Lake during the construction for the proposed Mondrian project. The north levee is situated along the south property boundary. As part of the earthwork phase of construction for the tower structure, a portion of the north slope of the levee will be removed. Because of this material removal, to allow for a deep zone of controlled compacted fill to support the tower structure, the embankment stability may be compromised. The earthwork phase of construction is estimated to last for a period of six weeks. To verify stability of the embankment prior to, during, and following the proposed construction efforts, several slope stability analyses were needed to evaluate the factor of safety against slope failure. Additionally, the slope stability analyses were modeled with the water level of Tempe Town Lake at the crest of the levee. Prior to the completion of the slope stability analyses, additional field work was needed to obtain specific geometric and soil parameters associated with the existing embankment.

The scope of work for the investigation of this site involved the following:

- Two site visits (mobilization and demobilization) to the project site to gather the appropriate geometric and soils data.

- Two exploratory test borings, TB-16 and TB-17 (4.5-inch continuous flight auger), were advanced to a depth of 12.0 feet at the crest of the levee. The test borings provided the engineering properties of the soils that comprise the levee. The soils encountered were examined, visually classified and wherever applicable, sampled. Please refer to the boring logs in Section 3 for a detailed description of the subsurface soil conditions at the specified locations.

- Two exploratory test borings, P-1 and P-2 (15.0-inch diameter), were advanced to depths of 3.0 and 4.0 feet, respectively. These test borings evaluated the permeability characteristics of the levee. Each test hole was lined and presoaked, and then refilled at periodic intervals. After each refilling, the rate of water level decline was recorded until a stabilized rate had been achieved. The stabilized infiltration rate attained because of the third test interval was recorded as the stabilized infiltration rate of the entire test. The results of the infiltration tests are presented in Section 3.

Please refer to the Site Plan Section 3 for the specific locations of the TB-16, TB-17, P-1, and P-2 locations.

- Slope stability analyses were performed for the following five slope conditions:

    1. Pre-construction – stability analysis of the existing slope with the water level positioned at the crest
    2. After the slope has been removed – stability analysis of the mass excavation with the water level being at the crest
    3. After application of the 4 inch layer of shotcrete – stability analysis after 1:1 slope treatment with shotcrete (remedial action)
    4. Following first stage of the backfilling efforts – stability analysis of the first stage of backfill with the water level at the crest – The first stage will constitute roughly 1/3 of the final backfill or thickness of controlled compacted fill

5. Following the second stage of the backfilling efforts – stability analysis of the second stage of the backfill effort – with a total height of controlled compacted fill equal to 2/3 of the final thickness

In general, a factor of safety greater than or equal to 1.5 is needed for a permanent slope, whereas 1.3 is needed for a temporary slope. Temporary slopes are defined as slopes that exist for duration of construction only. The factor of safety is the ratio of the forces resisting slope movement to the forces causing slope movement.

Pre-Construction Embankment Geometry

The average lateral extent of the existing levee, from north to south, is approximately 75 feet. The north slope of the levee has been placed at an average slope angle of 32 degrees. The average lateral extent of the north slope, measured from the crest to the toe, is 20 feet. The south slope of the levee has been placed at an average slope angle of 20 degrees. The average lateral extent of the south slope, measured from crest to toe, is 37 feet. The top of the levee is an access road approximately 18 feet wide to accommodate utilities and vehicles. The height of the levee differs by approximately 2 feet from the north to the south side. The average height of the levee on the north side, as measured from the existing site surface, is approximately 10 feet. The average height of the levee on the south side, as measured from the existing site surface, is approximately 12 feet. Please refer to the diagram in Section 2 for the actual measurements obtained during the field investigation.

Subsurface Conditions

At the locations of TB-16 and TB-17, the fill soils that constitute the levee are comprised of cobbly, sandy gravel with boulders, some fines. The layer is dense with no calcium carbonate cementation. The levee is approximately 12 feet high. According to APS, gabion structures exist within the south side of the levee for erosion control. Based on the previous investigation efforts, approximately 10 feet of uncontrolled older fill soils is believed to exist below the levee. Below 10 feet of uncontrolled older fill soils, the SGC layer exists. The test boring data, from this investigation as well as the previous investigation efforts, yielded the following soil parameters utilized in the slope stability analyses:

Soil Type	Unit Weight Above Water Table (pcf)	Unit Weight Below Water Table (pcf)	Cohesion (psf)	Angle of Internal Friction (degrees)
CCF	120	125	200	36
Embankment Fill	120	125	200	36
Older Fill (uncontrolled)	120	125	150	34
SGC	-	130	250	40

The unit weight for freshwater is 62.4 pcf.

Infiltration Rates

The infiltration characteristics of the soils that comprise the levee were evaluated through the advancement of two test borings, P-1 and P-2, to depths of 3.0 and 4.0 feet, respectively. The test holes were lined, pre-soaked, and re-filled at periodic intervals. The rate of water level decline was measured and recorded until a stabilized infiltration rate had been achieved. The stabilized infiltration rate attained because of the third test interval was recorded as the stabilized infiltration rate of the entire test.

The infiltration rates for the P-1 and P-2 test locations are 0.02 cm/s and 0.007 cm/s, respectively. Please refer to the TB-16 and TB-17 boring logs for the corresponding subsurface soil conditions at the P-1 and P-2 test locations, respectively. The results of the infiltration tests are presented in Section 3.

Factors of Safety

Slope/W by Geo-Slope International, Inc. is a software program that utilizes limit equilibrium theory to solve for the factors of safety for soil and rock slopes against failure. The factor of safety is defined as that factor by which the shear strength of the soil must be reduced in order to bring the mass of soil into a state of limiting equilibrium along a selected slip surface. The stability analysis creates a slip surface through the slope, and then divides this portion of the slope into a series of vertical slices. A free body diagram and force polygon is generated for each slice.

The following are general assumptions made by limit equilibrium theory:

1. The soil behaves as a Mohr-Coulomb material
2. The factor of safety of the cohesive component of strength and the frictional component of strength are equal for all soils involved
3. The factor of safety is the same for all slices

Janbu's Simplified Method was utilized to evaluate the slope stability for the five conditions during the earthwork phase of construction. The following table summarizes the five conditions with the corresponding factors of safety:

Slope Condition	Factor of Safety
1. Pre-construction	2.716
2. Slope removal	1.122
3. Slope removal with shotcrete re-inforcement	1.305
4. First stage of backfilling efforts – 1/3 of final backfill thickness	1.553
5. Second stage of backfilling efforts – 2/3 of final backfill thickness	3.308

The finish site grade will be equal in elevation to the crest of the existing levee. The backfill will buttress the north side of the levee, which will prevent a slope failure. Therefore a stability analysis was not performed for this condition.

The stability analyses including the free body diagrams and force polygons for Conditions 1, 2, 3, 4, and 5 can be found in Sections 4, 5, 6, 7, and 8, respectively.

Conclusions

Generally, the factor of safety for temporary and permanent cut slopes is 1.3 and 1.5, respectively. Based on the slope stability analyses, the mass excavation cut slope must be reinforced with a minimum 4.0-inch layer of 4000-psi shotecrete. By reinforcing the surface of the cut slope with shotecrete the factor of safety is increased from 1.122 to 1.305, which satisfies the minimum requirement for the factor of safety for temporary cut slopes. All other conditions evaluated meet the minimum requirements for temporary cut slopes. Since the factor of safety for Condition 5 (2/3 backfill thickness) of 3.308 exceeds the minimum 1.5 factor of safety for permanent cut slopes, the additional fill required to bring the site up to final elevation can only result in a higher factor of safety. Please note that all the factors of safety for every condition evaluated take into account the worst-case scenario of water positioned at the crest of the existing levee.

Because the foundations for the adjacent structure will bear on controlled compacted fill that is prepared to a minimum of 95 percent of the ASTM D1157 maximum density (modified Proctor), the resultant fill will be substantially more stable than the existing embankment. Load transmission of the footings through and below the zone of controlled compacted fill will result in a zone influence that is held within the confines of the zone of controlled compacted fill (because of the vertical and horizontal extent of the compacted fill). Further, the settlement constraints associated with the proposed structure are relatively small in magnitude, implying a near-zero deformation of the controlled compacted fill or adjacent embankment. As such, the zone of newly placed controlled compacted fill and associated foundation stresses will actually serve as a support buttress to the embankment and will not compromise the integrity of the embankment. Therefore, the foundation loads from the proposed structure will not adversely impact the embankment or result in settlement of the levee crest.

As determined, shotecrete reinforcement will be necessary to increase the factor of safety to an acceptable level for a temporary slope. The shotecrete should be designed with weep holes to account for the worst-case scenario involving hydrostatic build-up behind the shortcrete (in actuality, we know that this will not occur). The weep holes should be a minimum of 4.0 inches in diameter, positioned 5.0 feet upward from the toes of the mass excavation cut slope and spaced 8.0 feet on center. Options should be considered for screening the back of the weep holes to prevent material loss from the embankment. Other consideration should be given to manifolding the weep holes together behind the shotecrete face with perforated pipe or slotted pipe with slots that are a maximum of 0.01 inches in width. Non-slotted pipe must be wrapped with filter fabric to prevent fines migration. The contractor must be responsible for submitting his own design for hydrostatic pressure relief, which should be submitted to this office for final review and approval.

MONDRIAN

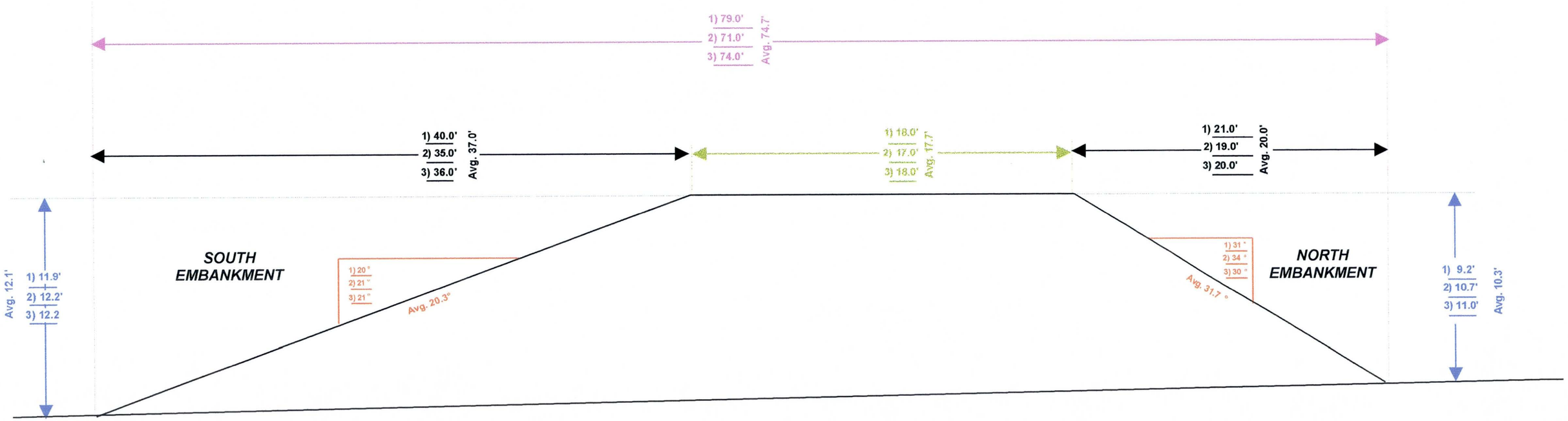

Embankment and Dike Measurements

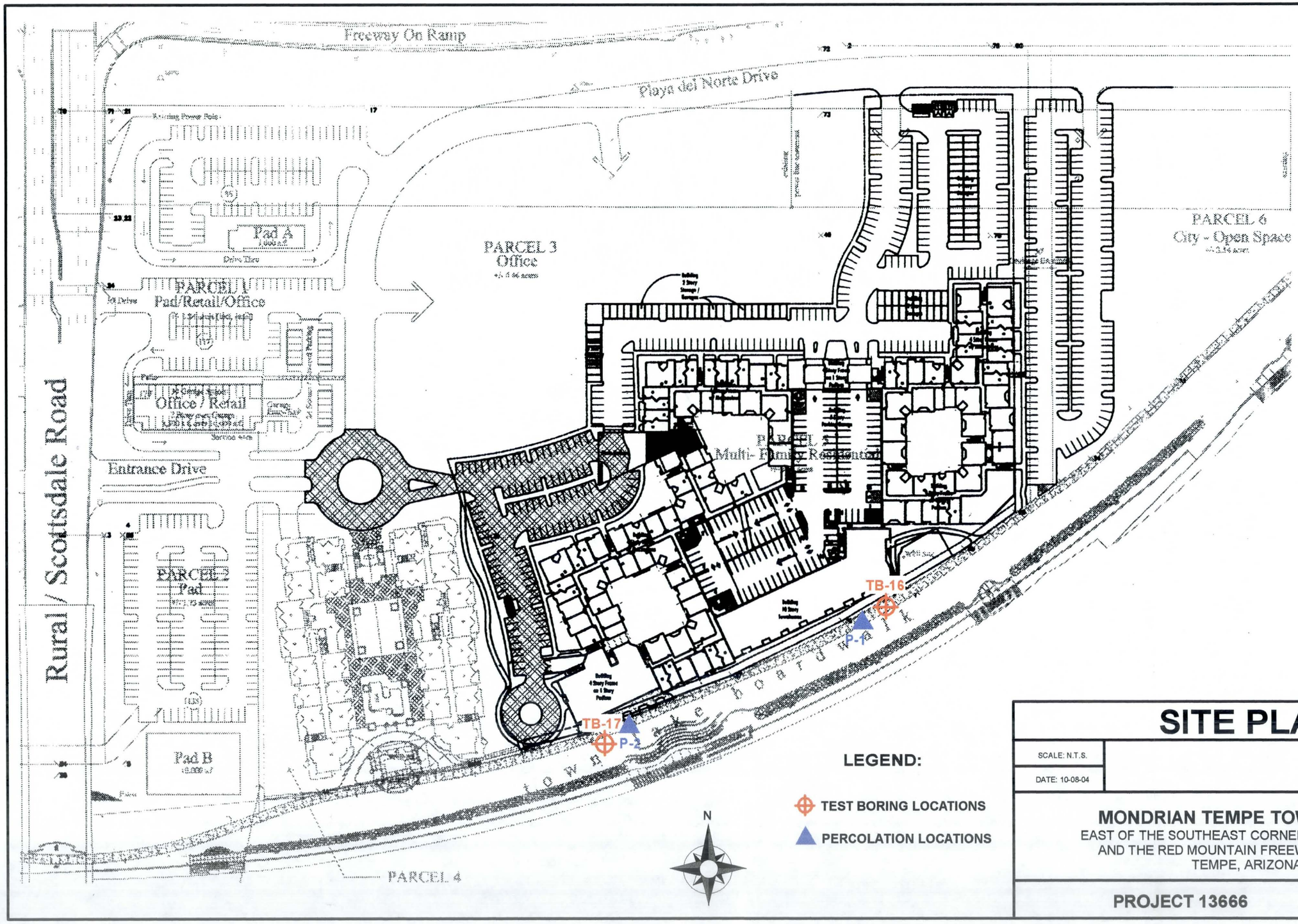

SITE PLAN

SCALE: N.T.S.		PREPARED BY: YL
DATE: 10-08-04		

MONDRIAN TEMPE TOWN LAKE
EAST OF THE SOUTHEAST CORNER OF RURAL ROAD
AND THE RED MOUNTAIN FREEWAY (LOOP 202)
TEMPE, ARIZONA

PROJECT 13666

Foree&Vann, Inc.

TB-16

Boring Location:
Boring Date: 10/1/04
Hole Diameter: 4.5 inches
Logged By: Z. Wright

Depth	Remarks	Moisture (%)	Dry Density	Blow Counts	Sample Type	Water Table		
0						GWT not encountered	FL	COBBLEY SANDY GRAVEL - with boulders, some fines, slightly damp, 15% boulders, 20% cobbles, 35% gravel, 20% sand, 10% fines, poorly graded, subangular to rounded coarse-grained particles, dense, NP, non cemented
5								
10								
15								
20								
25								
30								
35								

DISCONTINUED TEST BORING AT 12.0 FEET

SuperLog V3.0A CivilTech Software, USA www.civiltech.com File: C:\superlog3\p foreeandvann\13666-1.log Date: 10/8/04

LOG OF BORING

Foree & Vann, Inc.	Modrian Tempe Town Lake Project No. 13666	Plate 1

TB-17

Boring Location:
Boring Date: 10/1/04
Hole Diameter: 4.5 inches
Logged By: Z. Wright

Depth	Remarks	Moisture (%)	Dry Density	Blow Counts	Sample Type	Water Table		
0						GWT not encountered	FL	COBBLEY SANDY GRAVEL - with boulders, some fines, slightly damp, 15% boulders, 20% cobbles, 35% gravel, 20% sand, 10% fines, poorly graded, subangular to rounded coarse-grained particles, dense, NP, non cemented
5								
10								
15								
20								
25								
30								
35								

DISCONTINUED TEST BORING AT 12.0 FEET

SuperLog V3.0A CivilTech Software, USA www.civiltech.com File: C:\superlog3\p foreeandvann\13666-1.log Date: 10/8/04

LOG OF BORING

INFILTRATION RATE RESULTS

MONDRIAN TEMPE TOWN LAKE
EAST OF THE SOUTHEAST CORNER OF RURAL ROAD
AND THE RED MOUNTAIN FREEWAY (LOOP 202)
TEMPE, ARIZONA

Test Location	*Test Interval (feet)*	*Stabilized Infiltration Rate*
P-1	2.0-3.0	0.02 *centimeters/second*
P-2	3.0-4.0	0.007 *centimeters/second*

Description: Pre-Construction Geometry
File Name: 13666 Mondrian Pre.slp
Last Saved Date: 10/7/2004
Last Saved Time: 3:13:44 PM
Analysis Method: Janbu
Direction of Slip Movement: Left to Right
Slip Surface Option: Grid and Radius
P.W.P. Option: Piezometric lines with Ru

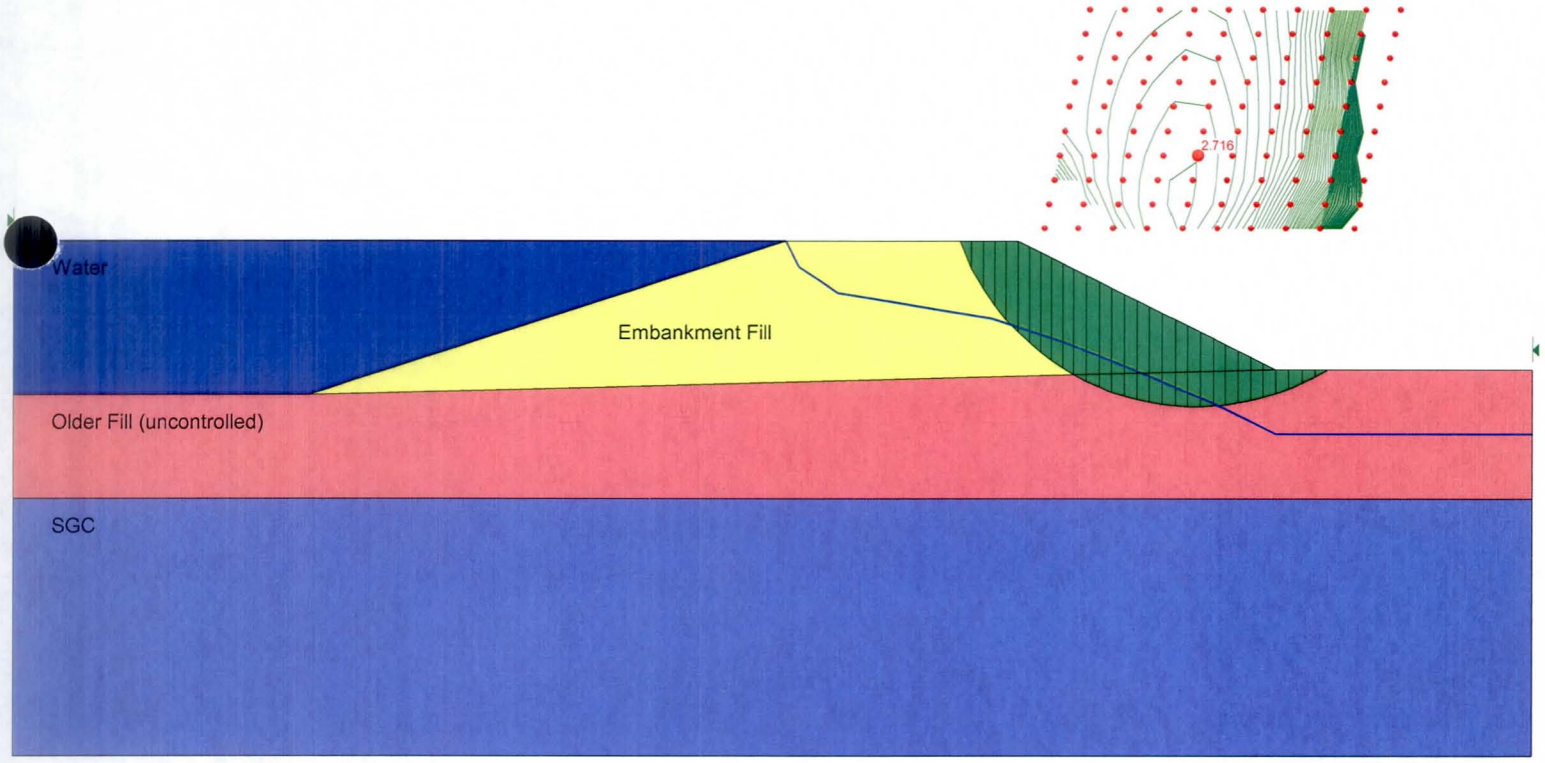

Slice 1 - Janbu Method

Factor of Safety	2.7161
Phi Angle	36
C (Strength)	200
C (Force)	454.47
Pore Water Pressure	0
Pore Water Force	0
Pore Air Pressure	0
Pore Air Force	0
Slice Width	0.89664
Mid-Height	1.1275
Base Length	2.2723
Base Angle	66.76
Polygon Closure	2.3088
Anisotropic Strength Modifier	1
Weight	121.31
Base Shear Force	153.92
Base Normal Force	50.471
Right Side Normal Force	107.98

Slice 1 - Janbu Method

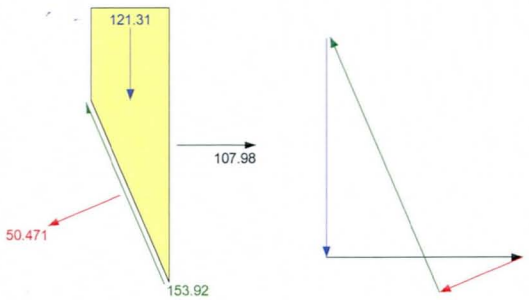

Slice 2 - Janbu Method

Factor of Safety	2.7161
Phi Angle	36
C (Strength)	200
C (Force)	366.77
Pore Water Pressure	0
Pore Water Force	0
Pore Air Pressure	0
Pore Air Force	0
Slice Width	0.89665
Mid-Height	2.9318
Base Length	1.8338
Base Angle	60.728
Polygon Closure	1.5773
Anisotropic Strength Modifier	1
Weight	315.45
Base Shear Force	208.36
Base Normal Force	273.95
Left Side Normal Force	107.98
Right Side Normal Force	28.27

Slice 2 - Janbu Method

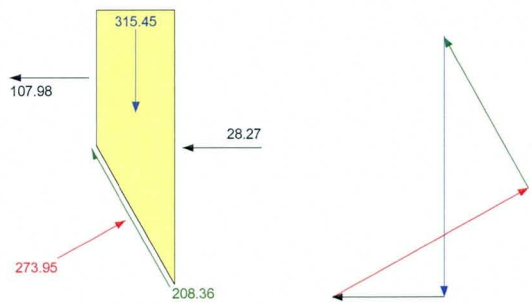

Slice 3 - Janbu Method

Factor of Safety	2.7161
Phi Angle	36
C (Strength)	200
C (Force)	318.22
Pore Water Pressure	0
Pore Water Force	0
Pore Air Pressure	0
Pore Air Force	0
Slice Width	0.89664
Mid-Height	4.3736
Base Length	1.5911
Base Angle	55.699
Polygon Closure	2.384
Anisotropic Strength Modifier	1
Weight	470.58
Base Shear Force	244.73
Base Normal Force	476.8
Left Side Normal Force	28.27
Right Side Normal Force	283.5

Slice 3 - Janbu Method

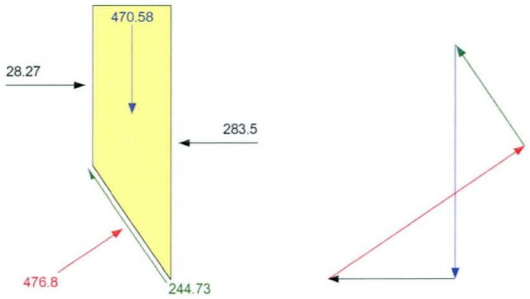

Slice 4 - Janbu Method

Factor of Safety	2.7161
Phi Angle	36
C (Strength)	200
C (Force)	286.56
Pore Water Pressure	0
Pore Water Force	0
Pore Air Pressure	0
Pore Air Force	0
Slice Width	0.89664
Mid-Height	5.5818
Base Length	1.4328
Base Angle	51.259
Polygon Closure	3.1073
Anisotropic Strength Modifier	1
Weight	600.58
Base Shear Force	271.76
Base Normal Force	621.46
Left Side Normal Force	283.5
Right Side Normal Force	597.58

Slice 4 - Janbu Method

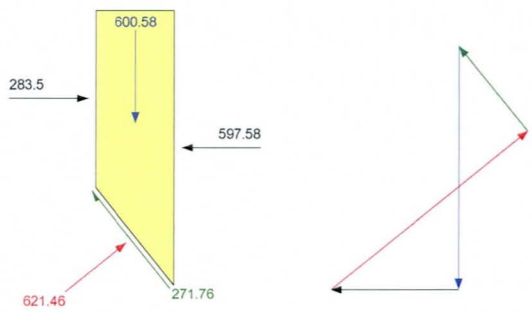

Slice 5 - Janbu Method

Factor of Safety	2.7161
Phi Angle	36
C (Strength)	200
C (Force)	264.02
Pore Water Pressure	6.4413
Pore Water Force	8.5031
Pore Air Pressure	0
Pore Air Force	0
Slice Width	0.89664
Mid-Height	6.6204
Base Length	1.3201
Base Angle	47.217
Polygon Closure	3.6743
Anisotropic Strength Modifier	1
Weight	712.8
Base Shear Force	291.52
Base Normal Force	734.87
Left Side Normal Force	597.58
Right Side Normal Force	938.47

Slice 5 - Janbu Method

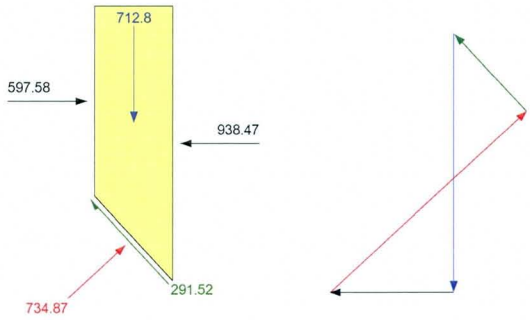

Slice 6 - Janbu Method

Factor of Safety	2.7161
Phi Angle	36
C (Strength)	200
C (Force)	242.08
Pore Water Pressure	43.998
Pore Water Force	53.255
Pore Air Pressure	0
Pore Air Force	0
Slice Width	0.87797
Mid-Height	7.2985
Base Length	1.2104
Base Angle	43.502
Polygon Closure	0
Anisotropic Strength Modifier	1
Weight	772.04
Base Shear Force	286.88
Base Normal Force	792.48
Left Side Normal Force	938.47
Right Side Normal Force	1275.6

Slice 6 - Janbu Method

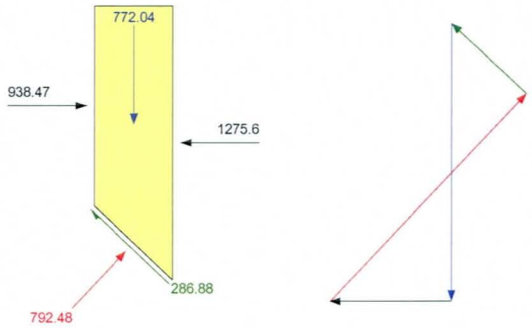

Slice 7 - Janbu Method

Factor of Safety	2.7161
Phi Angle	36
C (Strength)	200
C (Force)	229.36
Pore Water Pressure	74.633
Pore Water Force	85.589
Pore Air Pressure	0
Pore Air Force	0
Slice Width	0.87798
Mid-Height	7.643
Base Length	1.1468
Base Angle	40.04
Polygon Closure	4.112
Anisotropic Strength Modifier	1
Weight	810.5
Base Shear Force	281.55
Base Normal Force	822.4
Left Side Normal Force	1275.6
Right Side Normal Force	1589

Slice 7 - Janbu Method

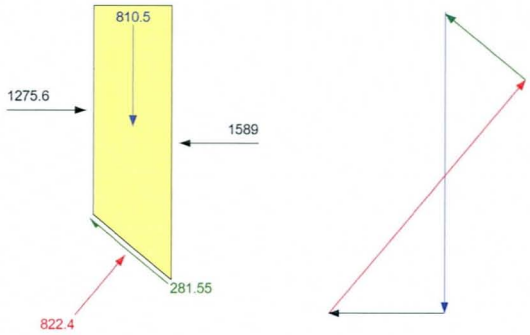

Slice 8 - Janbu Method

Factor of Safety	2.7161
Phi Angle	36
C (Strength)	200
C (Force)	219.14
Pore Water Pressure	99.762
Pore Water Force	109.31
Pore Air Pressure	0
Pore Air Force	0
Slice Width	0.87797
Mid-Height	7.8993
Base Length	1.0957
Base Angle	36.748
Polygon Closure	4.2062
Anisotropic Strength Modifier	1
Weight	839.26
Base Shear Force	276.48
Base Normal Force	841.25
Left Side Normal Force	1589
Right Side Normal Force	1870.7

Slice 8 - Janbu Method

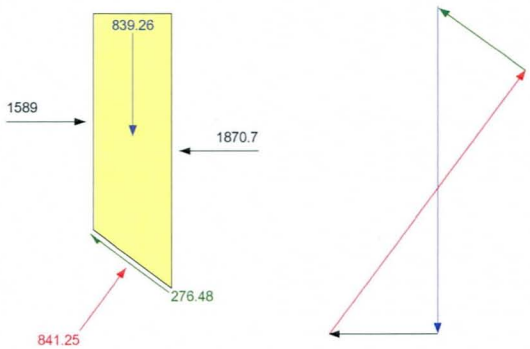

Slice 9 - Janbu Method

Factor of Safety	2.7161
Phi Angle	36
C (Strength)	200
C (Force)	210.8
Pore Water Pressure	120.08
Pore Water Force	126.56
Pore Air Pressure	0
Pore Air Force	0
Slice Width	0.87797
Mid-Height	8.0786
Base Length	1.054
Base Angle	33.592
Polygon Closure	8.5959
Anisotropic Strength Modifier	1
Weight	859.59
Base Shear Force	271.61
Base Normal Force	851.77
Left Side Normal Force	1870.7
Right Side Normal Force	2115.8

Slice 9 - Janbu Method

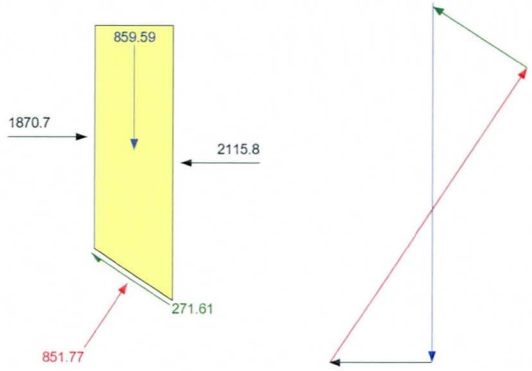

Slice 10 - Janbu Method

Factor of Safety	2.7161
Phi Angle	36
C (Strength)	200
C (Force)	203.89
Pore Water Pressure	136.13
Pore Water Force	138.78
Pore Air Pressure	0
Pore Air Force	0
Slice Width	0.87798
Mid-Height	8.1895
Base Length	1.0195
Base Angle	30.548
Polygon Closure	4.3619
Anisotropic Strength Modifier	1
Weight	872.39
Base Shear Force	266.85
Base Normal Force	855.72
Left Side Normal Force	2115.8
Right Side Normal Force	2321

Slice 10 - Janbu Method

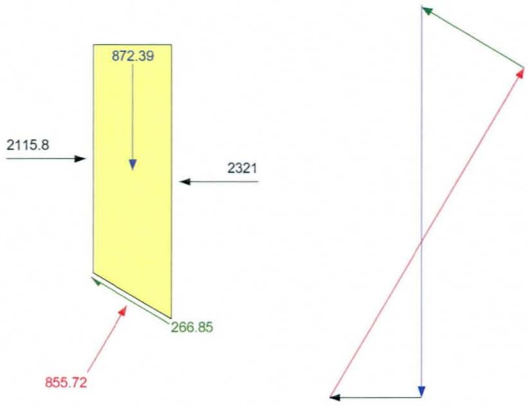

Slice 11 - Janbu Method

Factor of Safety	2.7161
Phi Angle	34
C (Strength)	150
C (Force)	164.89
Pore Water Pressure	145.23
Pore Water Force	159.65
Pore Air Pressure	0
Pore Air Force	0
Slice Width	0.97564
Mid-Height	8.2394
Base Length	1.0993
Base Angle	27.437
Polygon Closure	9.7599
Anisotropic Strength Modifier	1
Weight	975.99
Base Shear Force	260.61
Base Normal Force	964.57
Left Side Normal Force	2321
Right Side Normal Force	2534.4

Slice 11 - Janbu Method

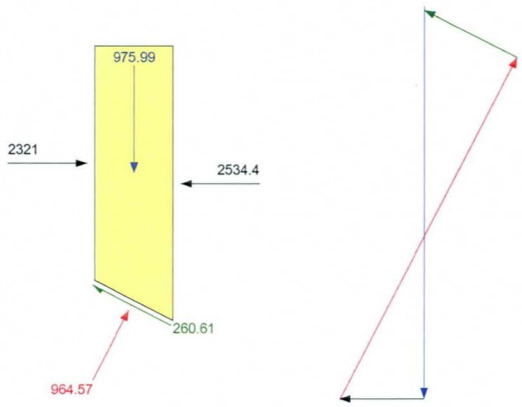

Slice 12 - Janbu Method

Factor of Safety	2.7161
Phi Angle	34
C (Strength)	150
C (Force)	160.51
Pore Water Pressure	150.36
Pore Water Force	160.89
Pore Air Pressure	0
Pore Air Force	0
Slice Width	0.97563
Mid-Height	8.2239
Base Length	1.0701
Base Angle	24.252
Polygon Closure	9.7458
Anisotropic Strength Modifier	1
Weight	974.58
Base Shear Force	256
Base Normal Force	953.75
Left Side Normal Force	2534.4
Right Side Normal Force	2692.9

Slice 12 - Janbu Method

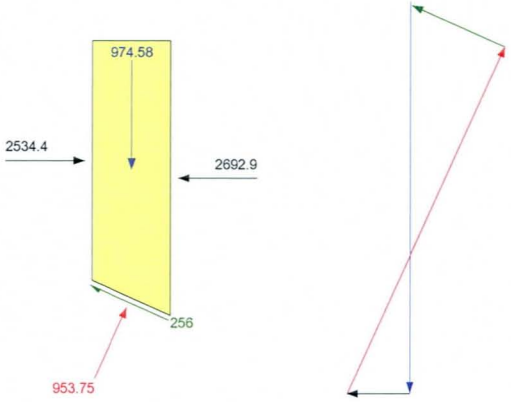

Slice 13 - Janbu Method

Factor of Safety	2.7161
Phi Angle	34
C (Strength)	150
C (Force)	156.91
Pore Water Pressure	151.46
Pore Water Force	158.44
Pore Air Pressure	0
Pore Air Force	0
Slice Width	0.97562
Mid-Height	8.144
Base Length	1.0461
Base Angle	21.145
Polygon Closure	9.6531
Anisotropic Strength Modifier	1
Weight	965.31
Base Shear Force	251.35
Base Normal Force	937.92
Left Side Normal Force	2692.9
Right Side Normal Force	2797.1

Slice 13 - Janbu Method

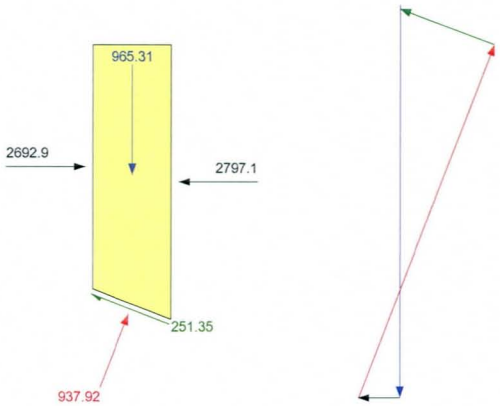

Slice 14 - Janbu Method

Factor of Safety	2.7161
Phi Angle	34
C (Strength)	150
C (Force)	153.97
Pore Water Pressure	148.81
Pore Water Force	152.74
Pore Air Pressure	0
Pore Air Force	0
Slice Width	0.97564
Mid-Height	8.0039
Base Length	1.0264
Base Angle	18.102
Polygon Closure	9.487
Anisotropic Strength Modifier	1
Weight	948.7
Base Shear Force	246.63
Base Normal Force	917.59
Left Side Normal Force	2797.1
Right Side Normal Force	2848.1

Slice 14 - Janbu Method

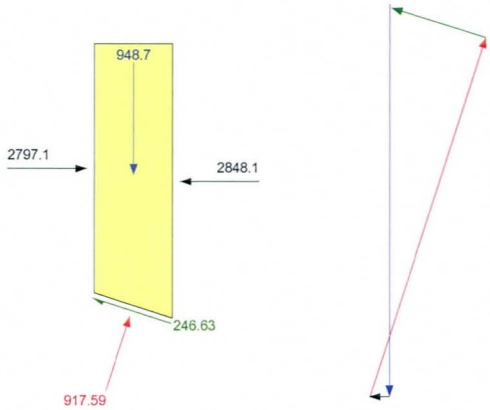

Slice 15 - Janbu Method

Factor of Safety	2.7161
Phi Angle	34
C (Strength)	150
C (Force)	151.59
Pore Water Pressure	142.6
Pore Water Force	144.11
Pore Air Pressure	0
Pore Air Force	0
Slice Width	0.97563
Mid-Height	7.807
Base Length	1.0106
Base Angle	15.112
Polygon Closure	4.6258
Anisotropic Strength Modifier	1
Weight	925.16
Base Shear Force	241.81
Base Normal Force	893.09
Left Side Normal Force	2848.1
Right Side Normal Force	2847.8

Slice 15 - Janbu Method

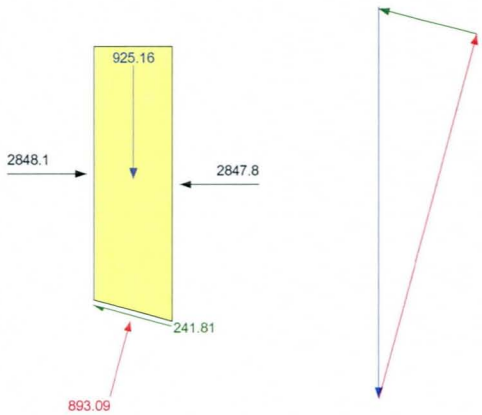

Slice 16 - Janbu Method

Factor of Safety	2.7161
Phi Angle	34
C (Strength)	150
C (Force)	149.71
Pore Water Pressure	131.67
Pore Water Force	131.41
Pore Air Pressure	0
Pore Air Force	0
Slice Width	0.97563
Mid-Height	7.5558
Base Length	0.99803
Base Angle	12.163
Polygon Closure	4.4745
Anisotropic Strength Modifier	1
Weight	894.89
Base Shear Force	237.15
Base Normal Force	864.4
Left Side Normal Force	2847.8
Right Side Normal Force	2798.4

Slice 16 - Janbu Method

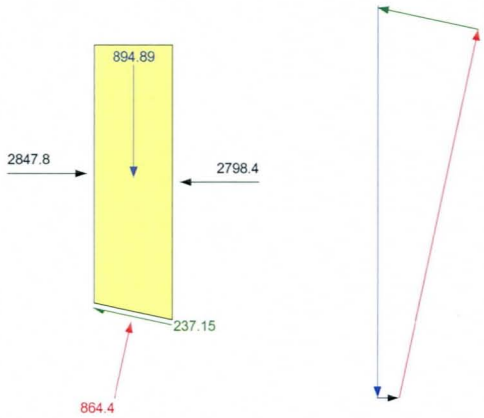

Slice 17 - Janbu Method

Factor of Safety	2.7161
Phi Angle	34
C (Strength)	150
C (Force)	148.27
Pore Water Pressure	117.08
Pore Water Force	115.73
Pore Air Pressure	0
Pore Air Force	0
Slice Width	0.97564
Mid-Height	7.2523
Base Length	0.98848
Base Angle	9.2459
Polygon Closure	8.5823
Anisotropic Strength Modifier	1
Weight	858.23
Base Shear Force	232.41
Base Normal Force	831.74
Left Side Normal Force	2798.4
Right Side Normal Force	2703

Slice 17 - Janbu Method

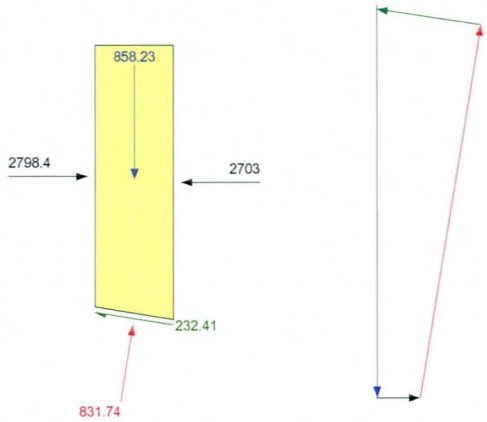

Slice 18 - Janbu Method

Factor of Safety	2.7161
Phi Angle	34
C (Strength)	150
C (Force)	147.25
Pore Water Pressure	99.319
Pore Water Force	97.498
Pore Air Pressure	0
Pore Air Force	0
Slice Width	0.97563
Mid-Height	6.8981
Base Length	0.98166
Base Angle	6.3536
Polygon Closure	4.0768
Anisotropic Strength Modifier	1
Weight	815.37
Base Shear Force	227.46
Base Normal Force	795.12
Left Side Normal Force	2703
Right Side Normal Force	2565.3

Slice 18 - Janbu Method

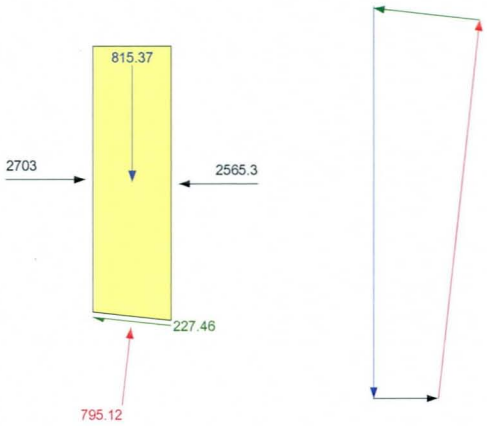

Slice 19 - Janbu Method

Factor of Safety	2.7161
Phi Angle	34
C (Strength)	150
C (Force)	146.61
Pore Water Pressure	78.46
Pore Water Force	76.689
Pore Air Pressure	0
Pore Air Force	0
Slice Width	0.97563
Mid-Height	6.4942
Base Length	0.97743
Base Angle	3.4773
Polygon Closure	7.6645
Anisotropic Strength Modifier	1
Weight	766.45
Base Shear Force	222.28
Base Normal Force	754.37
Left Side Normal Force	2565.3
Right Side Normal Force	2389.5

Slice 19 - Janbu Method

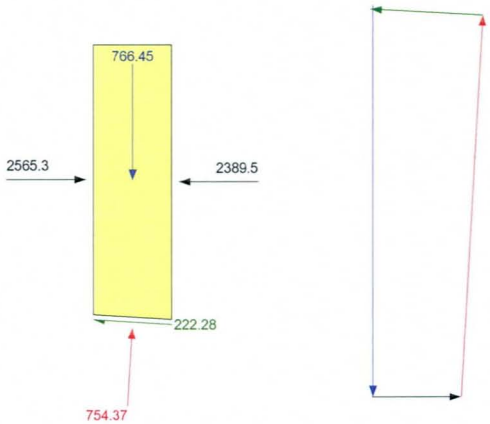

Slice 20 - Janbu Method

Factor of Safety	2.7161
Phi Angle	34
C (Strength)	150
C (Force)	146.35
Pore Water Pressure	54.538
Pore Water Force	53.212
Pore Air Pressure	0
Pore Air Force	0
Slice Width	0.97564
Mid-Height	6.0412
Base Length	0.97569
Base Angle	0.60977
Polygon Closure	7.1154
Anisotropic Strength Modifier	1
Weight	711.54
Base Shear Force	216.81
Base Normal Force	709.27
Left Side Normal Force	2389.5
Right Side Normal Force	2180.5

Slice 20 - Janbu Method

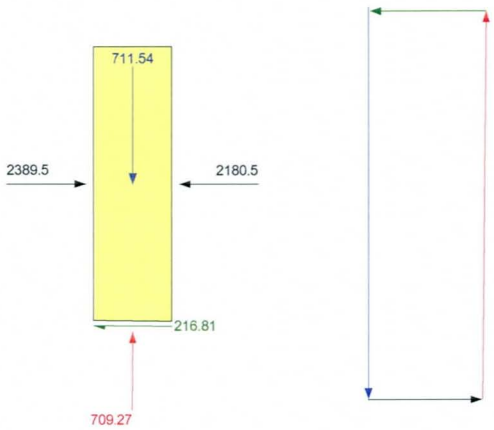

Slice 21 - Janbu Method

Factor of Safety	2.7161
Phi Angle	34
C (Strength)	150
C (Force)	146.46
Pore Water Pressure	27.569
Pore Water Force	26.918
Pore Air Pressure	0
Pore Air Force	0
Slice Width	0.97563
Mid-Height	5.5393
Base Length	0.97639
Base Angle	2.2562
Polygon Closure	6.5949
Anisotropic Strength Modifier	1
Weight	650.68
Base Shear Force	211.02
Base Normal Force	659.49
Left Side Normal Force	2180.5
Right Side Normal Force	1944

Slice 21 - Janbu Method

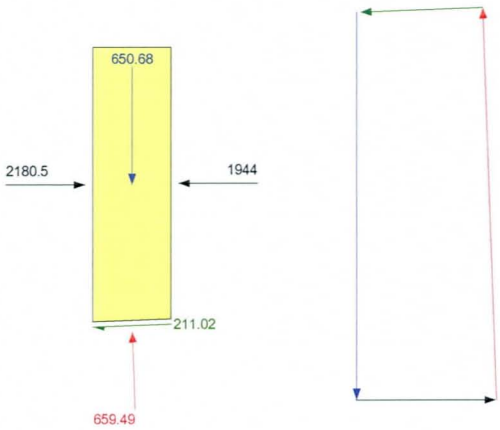

Slice 22 - Janbu Method

Factor of Safety	2.7161
Phi Angle	34
C (Strength)	150
C (Force)	146.93
Pore Water Pressure	0
Pore Water Force	0
Pore Air Pressure	0
Pore Air Force	0
Slice Width	0.97564
Mid-Height	4.9886
Base Length	0.97956
Base Angle	5.1278
Polygon Closure	6.047
Anisotropic Strength Modifier	1
Weight	584.04
Base Shear Force	204.27
Base Normal Force	604.7
Left Side Normal Force	1944
Right Side Normal Force	1686.7

Slice 22 - Janbu Method

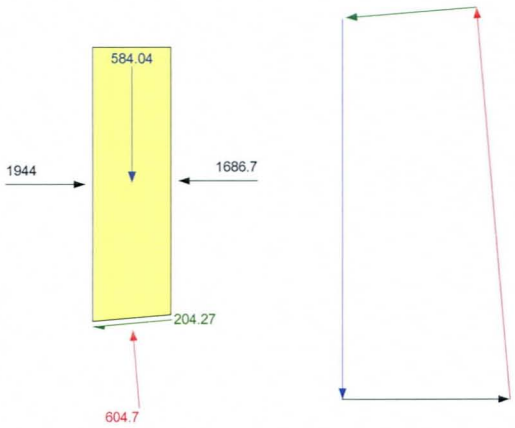

Slice 23 - Janbu Method

Factor of Safety	2.7161
Phi Angle	34
C (Strength)	150
C (Force)	147.79
Pore Water Pressure	0
Pore Water Force	0
Pore Air Pressure	0
Pore Air Force	0
Slice Width	0.97562
Mid-Height	4.3884
Base Length	0.98524
Base Angle	8.0126
Polygon Closure	2.7277
Anisotropic Strength Modifier	1
Weight	513.78
Base Shear Force	189.89
Base Normal Force	545.54
Left Side Normal Force	1686.7
Right Side Normal Force	1422.9

Slice 23 - Janbu Method

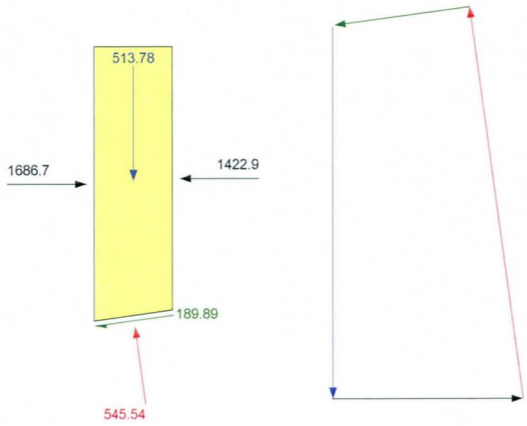

Slice 24 - Janbu Method

Factor of Safety	2.7161
Phi Angle	34
C (Strength)	150
C (Force)	149.04
Pore Water Pressure	0
Pore Water Force	0
Pore Air Pressure	0
Pore Air Force	0
Slice Width	0.97563
Mid-Height	3.738
Base Length	0.99362
Base Angle	10.918
Polygon Closure	4.7919
Anisotropic Strength Modifier	1
Weight	437.63
Base Shear Force	173.88
Base Normal Force	479.19
Left Side Normal Force	1422.9
Right Side Normal Force	1161.5

Slice 24 - Janbu Method

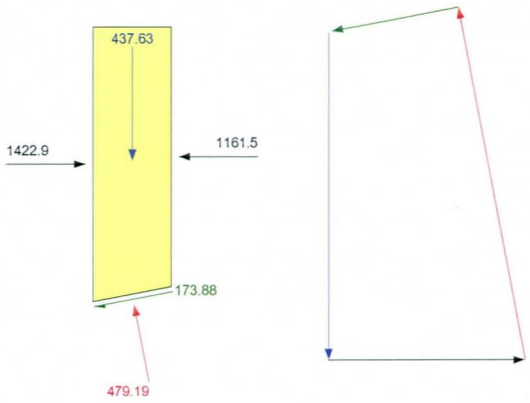

Slice 25 - Janbu Method

Factor of Safety	2.7161
Phi Angle	34
C (Strength)	150
C (Force)	150.73
Pore Water Pressure	0
Pore Water Force	0
Pore Air Pressure	0
Pore Air Force	0
Slice Width	0.97564
Mid-Height	3.036
Base Length	1.0049
Base Angle	13.852
Polygon Closure	2.0225
Anisotropic Strength Modifier	1
Weight	355.45
Base Shear Force	155.95
Base Normal Force	404.5
Left Side Normal Force	1161.5
Right Side Normal Force	913.38

Slice 25 - Janbu Method

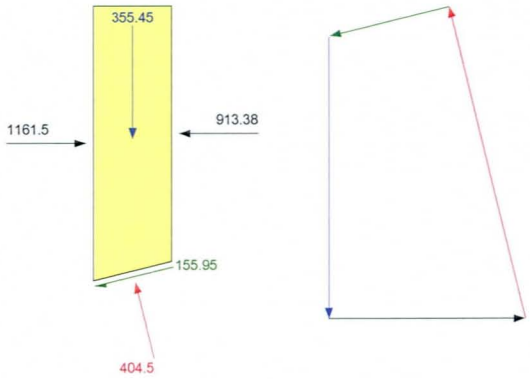

Slice 26 - Janbu Method

Factor of Safety	2.7161
Phi Angle	34
C (Strength)	150
C (Force)	152.89
Pore Water Pressure	0
Pore Water Force	0
Pore Air Pressure	0
Pore Air Force	0
Slice Width	0.97563
Mid-Height	2.2807
Base Length	1.0193
Base Angle	16.824
Polygon Closure	3.1995
Anisotropic Strength Modifier	1
Weight	267.02
Base Shear Force	135.75
Base Normal Force	319.95
Left Side Normal Force	913.38
Right Side Normal Force	690.9

Slice 26 - Janbu Method

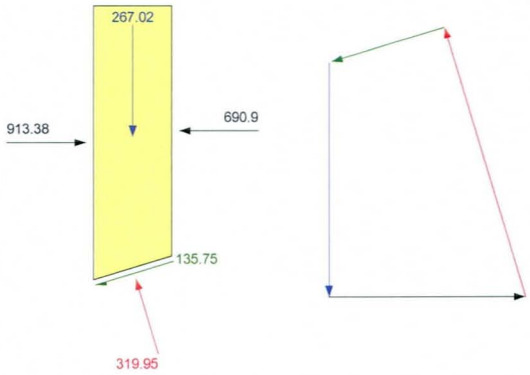

Slice 27 - Janbu Method

Factor of Safety	2.7161
Phi Angle	34
C (Strength)	150
C (Force)	161.74
Pore Water Pressure	0
Pore Water Force	0
Pore Air Pressure	0
Pore Air Force	0
Slice Width	1.0139
Mid-Height	1.7067
Base Length	1.0783
Base Angle	19.904
Polygon Closure	1.3314
Anisotropic Strength Modifier	1
Weight	207.65
Base Shear Force	125.69
Base Normal Force	266.29
Left Side Normal Force	690.9
Right Side Normal Force	482.08

Slice 27 - Janbu Method

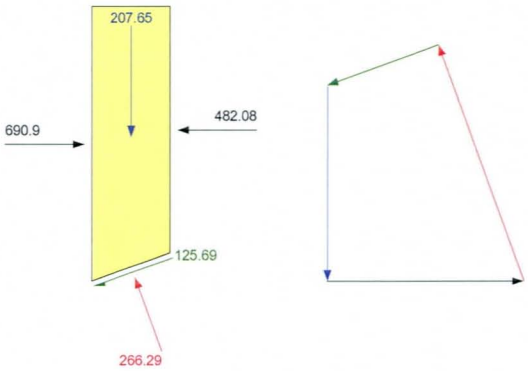

Slice 28 - Janbu Method

Factor of Safety	2.7161
Phi Angle	34
C (Strength)	150
C (Force)	165.35
Pore Water Pressure	0
Pore Water Force	0
Pore Air Pressure	0
Pore Air Force	0
Slice Width	1.0139
Mid-Height	1.3075
Base Length	1.1023
Base Angle	23.105
Polygon Closure	1.1121
Anisotropic Strength Modifier	1
Weight	159.07
Base Shear Force	116.12
Base Normal Force	222.42
Left Side Normal Force	482.08
Right Side Normal Force	287.97

Slice 28 - Janbu Method

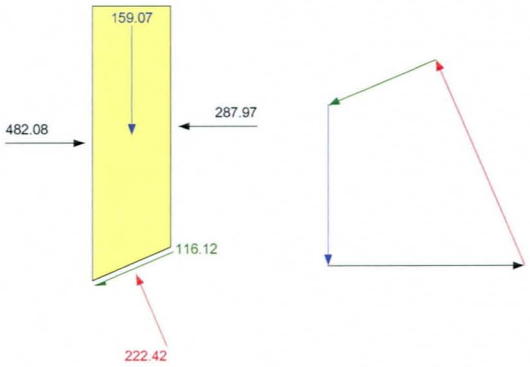

Slice 29 - Janbu Method

Factor of Safety	2.7161
Phi Angle	34
C (Strength)	150
C (Force)	169.77
Pore Water Pressure	0
Pore Water Force	0
Pore Air Pressure	0
Pore Air Force	0
Slice Width	1.0139
Mid-Height	0.84039
Base Length	1.1318
Base Angle	26.385
Polygon Closure	1.6642
Anisotropic Strength Modifier	1
Weight	102.25
Base Shear Force	103.6
Base Normal Force	165.46
Left Side Normal Force	287.97
Right Side Normal Force	121.55

Slice 29 - Janbu Method

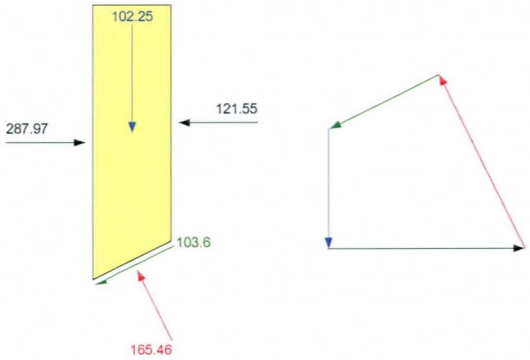

Slice 30 - Janbu Method

Factor of Safety	2.7161
Phi Angle	34
C (Strength)	150
C (Force)	175.19
Pore Water Pressure	0
Pore Water Force	0
Pore Air Pressure	0
Pore Air Force	0
Slice Width	1.0139
Mid-Height	0.29994
Base Length	1.1679
Base Angle	29.761
Polygon Closure	1.2155
Anisotropic Strength Modifier	1
Weight	36.493
Base Shear Force	87.334
Base Normal Force	91.906
Left Side Normal Force	121.55

Slice 30 - Janbu Method

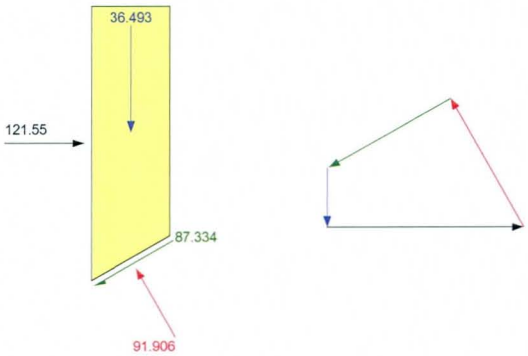

Description: Post Cut Geometry
File Name: 13666 Mondrian Cut.slp
Last Saved Date: 10/7/2004
Last Saved Time: 3:22:52 PM
Analysis Method: Janbu
Direction of Slip Movement: Left to Right
Slip Surface Option: Grid and Radius
P.W.P. Option: Piezometric lines with Ru

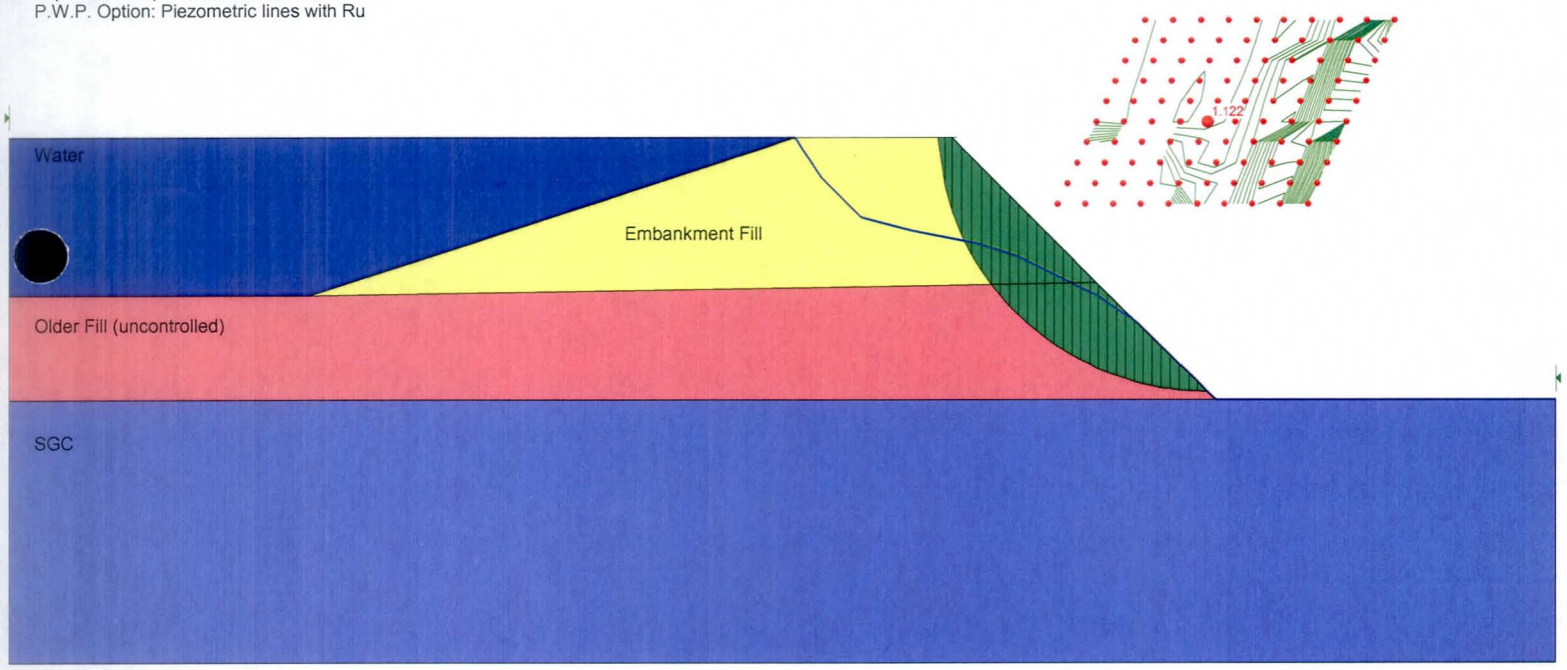

Slice 1 - Janbu Method

Factor of Safety	1.1216
Phi Angle	36
C (Strength)	200
C (Force)	739.36
Pore Water Pressure	0
Pore Water Force	0
Pore Air Pressure	0
Pore Air Force	0
Slice Width	0.54856
Mid-Height	2.3466
Base Length	3.6968
Base Angle	81.466
Polygon Closure	3.2973
Anisotropic Strength Modifier	1
Weight	154.47
Base Shear Force	250.22
Base Normal Force	632.75
Right Side Normal Force	659.47

Slice 1 - Janbu Method

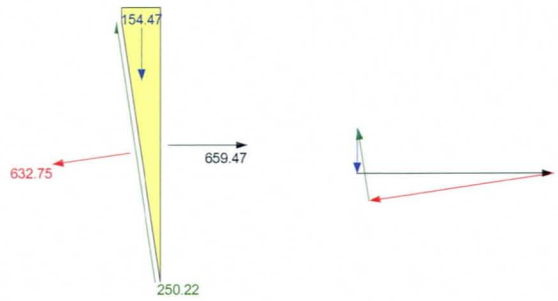

Slice 2 - Janbu Method

Factor of Safety	1.1216
Phi Angle	36
C (Strength)	200
C (Force)	388.35
Pore Water Pressure	0
Pore Water Force	0
Pore Air Pressure	0
Pore Air Force	0
Slice Width	0.54857
Mid-Height	4.668
Base Length	1.9417
Base Angle	73.59
Polygon Closure	1.6382
Anisotropic Strength Modifier	1
Weight	307.28
Base Shear Force	327.64
Base Normal Force	28.937
Left Side Normal Force	659.47
Right Side Normal Force	776.72

Slice 2 - Janbu Method

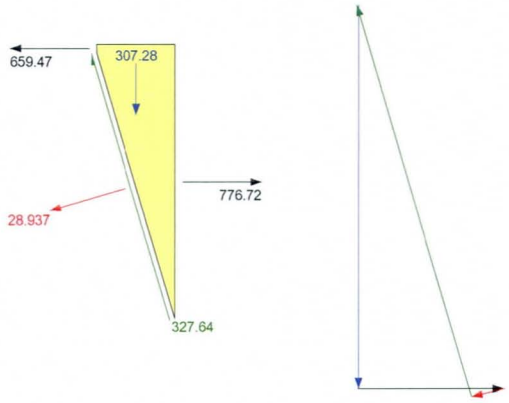

Slice 3 - Janbu Method

Factor of Safety	1.1216
Phi Angle	36
C (Strength)	200
C (Force)	400.5
Pore Water Pressure	0
Pore Water Force	0
Pore Air Pressure	0
Pore Air Force	0
Slice Width	0.74745
Mid-Height	6.1389
Base Length	2.0025
Base Angle	68.083
Polygon Closure	5.5062
Anisotropic Strength Modifier	1
Weight	550.62
Base Shear Force	501.83
Base Normal Force	223.23
Left Side Normal Force	776.72
Right Side Normal Force	753.49

Slice 3 - Janbu Method

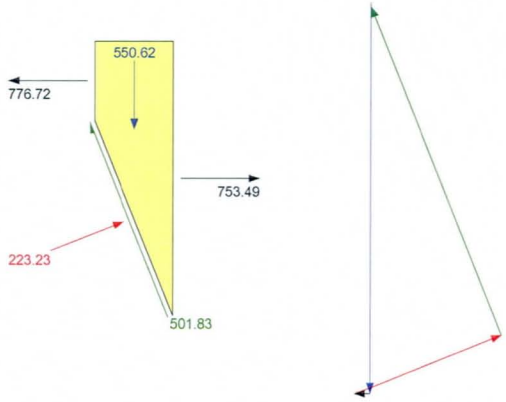

Slice 4 - Janbu Method

Factor of Safety	1.1216
Phi Angle	36
C (Strength)	200
C (Force)	329.17
Pore Water Pressure	20.07
Pore Water Force	33.032
Pore Air Pressure	0
Pore Air Force	0
Slice Width	0.74744
Mid-Height	7.0246
Base Length	1.6459
Base Angle	62.991
Polygon Closure	6.3126
Anisotropic Strength Modifier	1
Weight	631.26
Base Shear Force	515.31
Base Normal Force	375.34
Left Side Normal Force	753.49
Right Side Normal Force	650.63

Slice 4 - Janbu Method

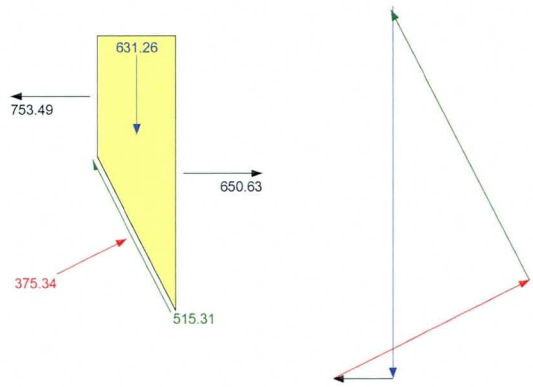

Slice 5 - Janbu Method

Factor of Safety	1.1216
Phi Angle	36
C (Strength)	200
C (Force)	287.63
Pore Water Pressure	94.086
Pore Water Force	135.31
Pore Air Pressure	0
Pore Air Force	0
Slice Width	0.74745
Mid-Height	7.6126
Base Length	1.4382
Base Angle	58.686
Polygon Closure	6.8844
Anisotropic Strength Modifier	1
Weight	688.44
Base Shear Force	496.38
Base Normal Force	505.62
Left Side Normal Force	650.63
Right Side Normal Force	475.03

Slice 5 - Janbu Method

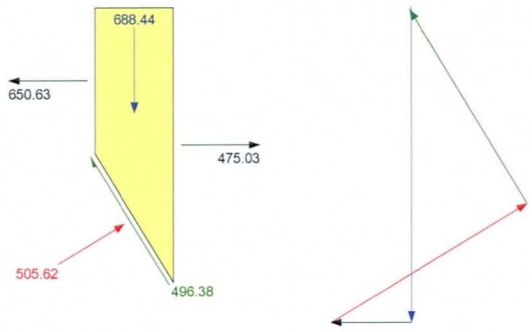

Slice 6 - Janbu Method

Factor of Safety	1.1216
Phi Angle	36
C (Strength)	200
C (Force)	259.76
Pore Water Pressure	150.72
Pore Water Force	195.75
Pore Air Pressure	0
Pore Air Force	0
Slice Width	0.74744
Mid-Height	8.0042
Base Length	1.2988
Base Angle	54.866
Polygon Closure	7.2695
Anisotropic Strength Modifier	1
Weight	726.95
Base Shear Force	479.79
Base Normal Force	578.83
Left Side Normal Force	475.03
Right Side Normal Force	276.81

Slice 6 - Janbu Method

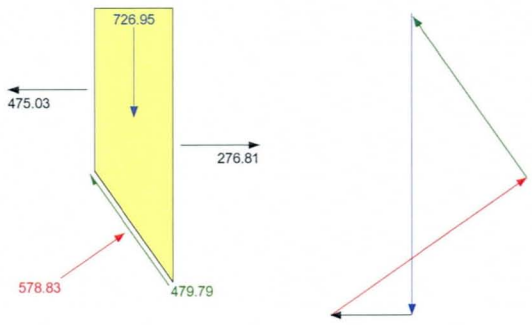

Slice 7 - Janbu Method

Factor of Safety	1.1216
Phi Angle	34
C (Strength)	150
C (Force)	164.08
Pore Water Pressure	195.33
Pore Water Force	213.67
Pore Air Pressure	0
Pore Air Force	0
Slice Width	0.68055
Mid-Height	8.2433
Base Length	1.0939
Base Angle	51.527
Polygon Closure	10.258
Anisotropic Strength Modifier	1
Weight	683.85
Base Shear Force	385.8
Base Normal Force	611.9
Left Side Normal Force	276.81
Right Side Normal Force	37.259

Slice 7 - Janbu Method

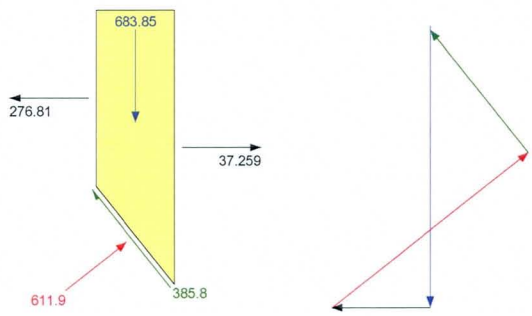

Slice 8 - Janbu Method

Factor of Safety	1.1216
Phi Angle	34
C (Strength)	150
C (Force)	154.26
P[illegible] Water Pressure	231.83
P[illegible] Water Force	238.41
Pore Air Pressure	0
Pore Air Force	0
Slice Width	0.68055
Mid-Height	8.3745
Base Length	1.0284
Base Angle	48.565
Polygon Closure	6.9655
Anisotropic Strength Modifier	1
Weight	696.55
Base Shear Force	372.46
Base Normal Force	629.03
Left Side Normal Force	37.259
Right Side Normal Force	188.04

Slice 8 - Janbu Method

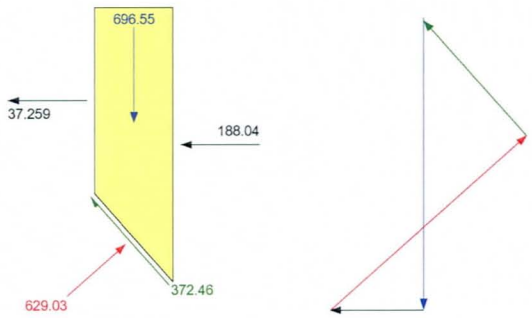

Slice 9 - Janbu Method

Factor of Safety	1.1216
Phi Angle	34
C (Strength)	150
C (Force)	146.34
P[illegible] Water Pressure	263.46
P[illegible] Water Force	257.03
Pore Air Pressure	0
Pore Air Force	0
Slice Width	0.68055
Mid-Height	8.4275
Base Length	0.97561
Base Angle	45.768
Polygon Closure	3.513
Anisotropic Strength Modifier	1
Weight	702.61
Base Shear Force	359.04
Base Normal Force	637.06
Left Side Normal Force	188.04
Right Side Normal Force	393.97

Slice 9 - Janbu Method

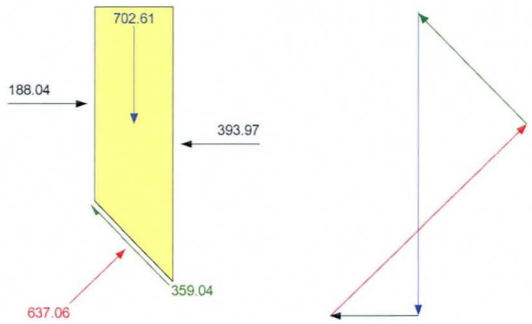

Slice 10 - Janbu Method

Factor of Safety	1.1216
Phi Angle	34
C (Strength)	150
C (Force)	139.82
Pore Water Pressure	287.05
Pore Water Force	267.57
Pore Air Pressure	0
Pore Air Force	0
Slice Width	0.68056
Mid-Height	8.4139
Base Length	0.93214
Base Angle	43.105
Polygon Closure	7.0279
Anisotropic Strength Modifier	1
Weight	702.79
Base Shear Force	346.75
Base Normal Force	636.84
Left Side Normal Force	393.97
Right Side Normal Force	575.69

Slice 10 - Janbu Method

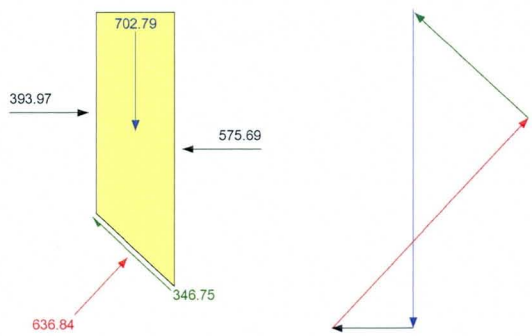

Slice 11 - Janbu Method

Factor of Safety	1.1216
Phi Angle	34
C (Strength)	150
C (Force)	134.36
Pore Water Pressure	303.81
Pore Water Force	272.13
Pore Air Pressure	0
Pore Air Force	0
Slice Width	0.68055
Mid-Height	8.3422
Base Length	0.89571
Base Angle	40.555
Polygon Closure	6.9784
Anisotropic Strength Modifier	1
Weight	697.84
Base Shear Force	335.31
Base Normal Force	630.47
Left Side Normal Force	575.69
Right Side Normal Force	730.35

Slice 11 - Janbu Method

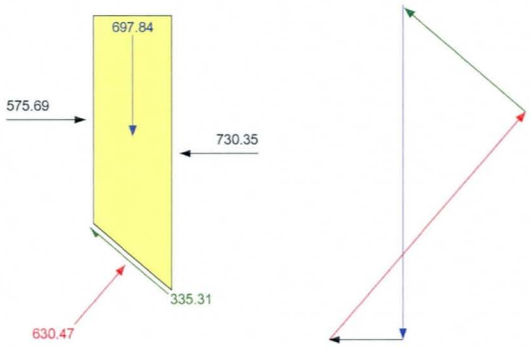

Slice 12 - Janbu Method

Factor of Safety	1.1216
Phi Angle	34
C (Strength)	150
C (Force)	129.72
Pore Water Pressure	317.35
Pore Water Force	274.44
Pore Air Pressure	0
Pore Air Force	0
Slice Width	0.68055
Mid-Height	8.219
Base Length	0.86478
Base Angle	38.098
Polygon Closure	6.8852
Anisotropic Strength Modifier	1
Weight	688.52
Base Shear Force	323.62
Base Normal Force	620.24
Left Side Normal Force	730.35
Right Side Normal Force	857.72

Slice 12 - Janbu Method

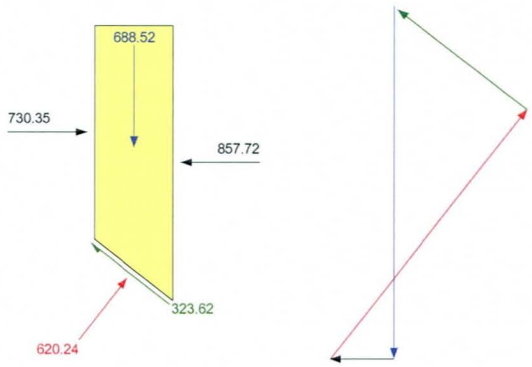

Slice 13 - Janbu Method

Factor of Safety	1.1216
Phi Angle	34
C (Strength)	150
C (Force)	125.74
Pore Water Pressure	328
Pore Water Force	274.95
Pore Air Pressure	0
Pore Air Force	0
Slice Width	0.68055
Mid-Height	8.0494
Base Length	0.83825
Base Angle	35.721
Polygon Closure	6.7525
Anisotropic Strength Modifier	1
Weight	675.25
Base Shear Force	311.66
Base Normal Force	606.76
Left Side Normal Force	857.72
Right Side Normal Force	958.19

Slice 13 - Janbu Method

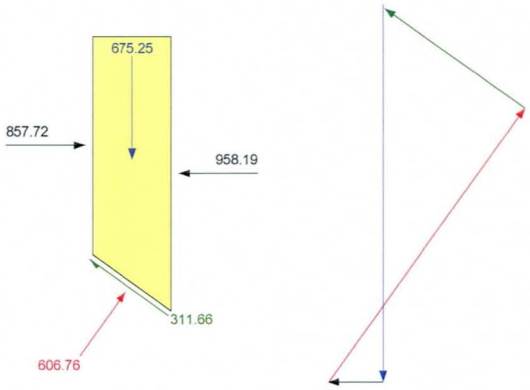

Slice 14 - Janbu Method

Factor of Safety	1.1216
Phi Angle	34
C (Strength)	150
C (Force)	122.3
P[illegible] Water Pressure	336.02
P[illegible] Water Force	273.96
Pore Air Pressure	0
Pore Air Force	0
Slice Width	0.68055
Mid-Height	7.8376
Base Length	0.8153
Base Angle	33.413
Polygon Closure	6.5839
Anisotropic Strength Modifier	1
Weight	658.39
Base Shear Force	299.41
Base Normal Force	590.5
Left Side Normal Force	958.19
Right Side Normal Force	1032.6

Slice 14 - Janbu Method

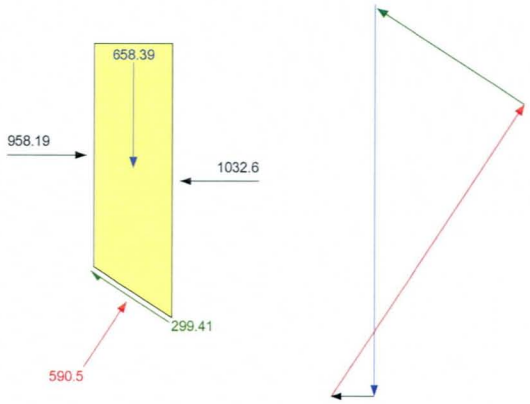

Slice 15 - Janbu Method

Factor of Safety	1.1216
Phi Angle	34
C (Strength)	150
C (Force)	119.3
Pore Water Pressure	341.62
Pore Water Force	271.7
Pore Air Pressure	0
Pore Air Force	0
Slice Width	0.68055
Mid-Height	7.587
Base Length	0.79534
Base Angle	31.166
Polygon Closure	3.1911
Anisotropic Strength Modifier	1
Weight	638.23
Base Shear Force	286.83
Base Normal Force	571.76
Left Side Normal Force	1032.6
Right Side Normal Force	1082.1

Slice 15 - Janbu Method

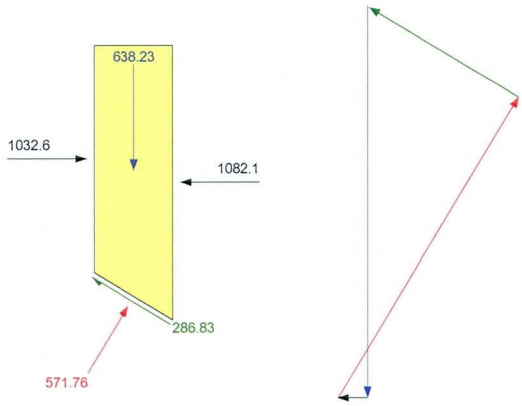

Slice 16 - Janbu Method

Factor of Safety	1.1216
Phi Angle	34
C (Strength)	150
C (Force)	116.68
Pore Water Pressure	344.96
Pore Water Force	268.34
Pore Air Pressure	0
Pore Air Force	0
Slice Width	0.68055
Mid-Height	7.3004
Base Length	0.77788
Base Angle	28.97
Polygon Closure	3.075
Anisotropic Strength Modifier	1
Weight	615
Base Shear Force	273.89
Base Normal Force	550.77
Left Side Normal Force	1082.1
Right Side Normal Force	1108.3

Slice 16 - Janbu Method

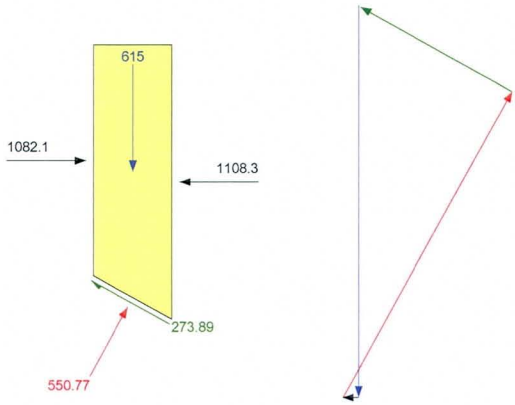

Slice 17 - Janbu Method

Factor of Safety	1.1216
Phi Angle	34
C (Strength)	150
C (Force)	114.39
Pore Water Pressure	346.2
Pore Water Force	264.01
Pore Air Pressure	0
Pore Air Force	0
Slice Width	0.68055
Mid-Height	6.98
Base Length	0.76258
Base Angle	26.82
Polygon Closure	5.8891
Anisotropic Strength Modifier	1
Weight	588.91
Base Shear Force	260.56
Base Normal Force	527.67
Left Side Normal Force	1108.3
Right Side Normal Force	1112.9

Slice 17 - Janbu Method

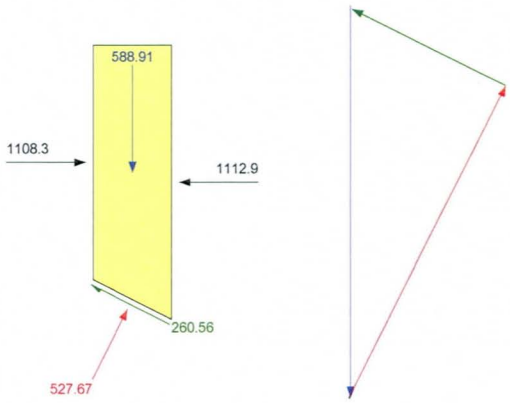

Slice 18 - Janbu Method

Factor of Safety	1.1216
Phi Angle	34
C (Strength)	150
C (Force)	112.37
Pore Water Pressure	345.46
Pore Water Force	258.8
Pore Air Pressure	0
Pore Air Force	0
Slice Width	0.68055
Mid-Height	6.6279
Base Length	0.74915
Base Angle	24.711
Polygon Closure	5.6011
Anisotropic Strength Modifier	1
Weight	560.11
Base Shear Force	246.8
Base Normal Force	502.58
Left Side Normal Force	1112.9
Right Side Normal Force	1097.8

Slice 18 - Janbu Method

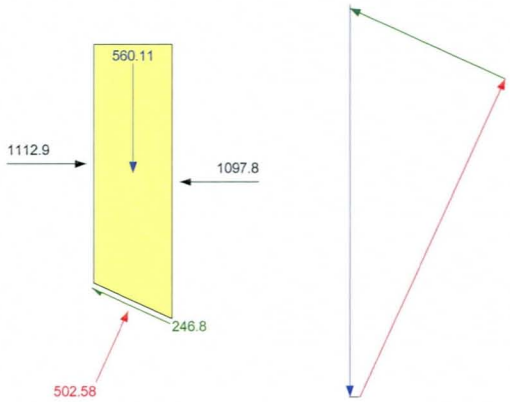

Slice 19 - Janbu Method

Factor of Safety	1.1216
Phi Angle	34
C (Strength)	150
C (Force)	110.6
Pore Water Pressure	337.66
Pore Water Force	248.98
Pore Air Pressure	0
Pore Air Force	0
Slice Width	0.68056
Mid-Height	6.2456
Base Length	0.73736
Base Angle	22.636
Polygon Closure	5.2847
Anisotropic Strength Modifier	1
Weight	528.47
Base Shear Force	234.26
Base Normal Force	474.53
Left Side Normal Force	1097.8
Right Side Normal Force	1063.3

Slice 19 - Janbu Method

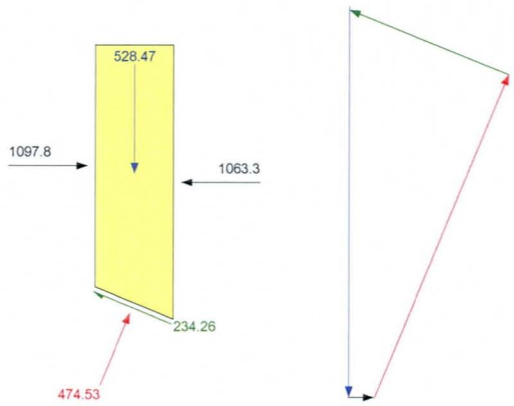

Slice 20 - Janbu Method

Factor of Safety	1.1216
Phi Angle	34
C (Strength)	150
C (Force)	109.05
Pore Water Pressure	326.19
Pore Water Force	237.14
Pore Air Pressure	0
Pore Air Force	0
Slice Width	0.68055
Mid-Height	5.8347
Base Length	0.727
Base Angle	20.592
Polygon Closure	4.9428
Anisotropic Strength Modifier	1
Weight	494.28
Base Shear Force	221.85
Base Normal Force	444.35
Left Side Normal Force	1063.3
Right Side Normal Force	1010.9

Slice 20 - Janbu Method

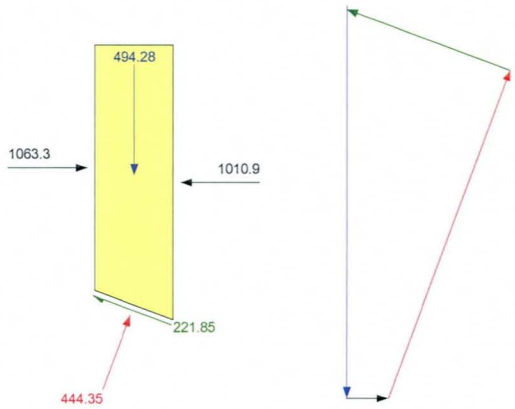

Slice 21 - Janbu Method

Factor of Safety	1.1216
Phi Angle	34
C (Strength)	150
C (Force)	107.69
Pore Water Pressure	312.99
Pore Water Force	224.71
Pore Air Pressure	0
Pore Air Force	0
Slice Width	0.68055
Mid-Height	5.3962
Base Length	0.71795
Base Angle	18.576
Polygon Closure	4.5775
Anisotropic Strength Modifier	1
Weight	457.75
Base Shear Force	208.92
Base Normal Force	412.44
Left Side Normal Force	1010.9
Right Side Normal Force	943.36

Slice 21 - Janbu Method

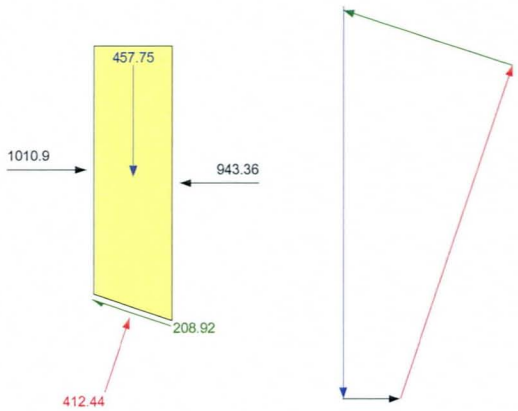

Slice 22 - Janbu Method

Factor of Safety	1.1216
Phi Angle	34
C (Strength)	150
C (Force)	106.51
Pore Water Pressure	298.12
Pore Water Force	211.69
Pore Air Pressure	0
Pore Air Force	0
Slice Width	0.68055
Mid-Height	4.9312
Base Length	0.71008
Base Angle	16.583
Polygon Closure	4.1897
Anisotropic Strength Modifier	1
Weight	418.97
Base Shear Force	195.43
Base Normal Force	378.74
Left Side Normal Force	943.36
Right Side Normal Force	863.27

Slice 22 - Janbu Method

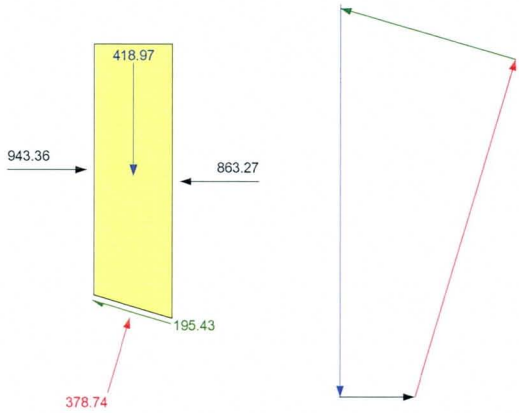

Slice 23 - Janbu Method

Factor of Safety	1.1216
Phi Angle	34
C (Strength)	150
C (Force)	105.49
Pore Water Pressure	277.11
Pore Water Force	194.89
Pore Air Pressure	0
Pore Air Force	0
Slice Width	0.68055
Mid-Height	4.4406
Base Length	0.70329
Base Angle	14.611
Polygon Closure	1.8888
Anisotropic Strength Modifier	1
Weight	377.76
Base Shear Force	182.86
Base Normal Force	342.54
Left Side Normal Force	863.27
Right Side Normal Force	771.9

Slice 23 - Janbu Method

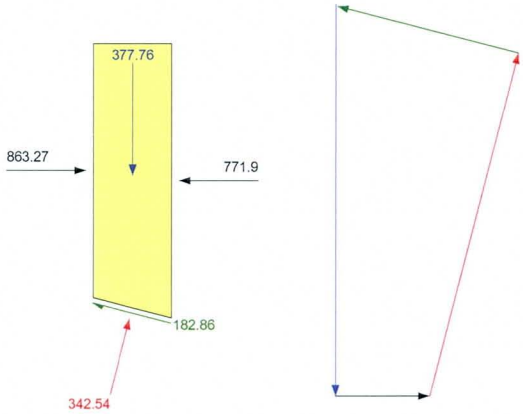

Slice 24 - Janbu Method

Factor of Safety	1.1216
Phi Angle	34
C (Strength)	150
C (Force)	104.62
Pore Water Pressure	244.93
Pore Water Force	170.84
Pore Air Pressure	0
Pore Air Force	0
Slice Width	0.68055
Mid-Height	3.9251
Base Length	0.6975
Base Angle	12.656
Polygon Closure	3.339
Anisotropic Strength Modifier	1
Weight	333.9
Base Shear Force	172.91
Base Normal Force	303.25
Left Side Normal Force	771.9
Right Side Normal Force	668.84

Slice 24 - Janbu Method

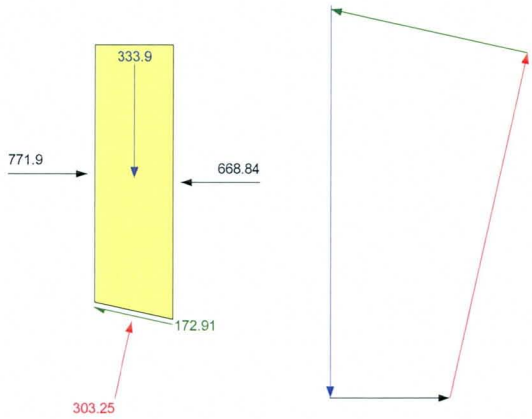

Slice 25 - Janbu Method

Factor of Safety	1.1216
Phi Angle	34
C (Strength)	150
C (Force)	103.89
Pore Water Pressure	211.25
Pore Water Force	146.32
Pore Air Pressure	0
Pore Air Force	0
Slice Width	0.68055
Mid-Height	3.3853
Base Length	0.69263
Base Angle	10.716
Polygon Closure	2.8798
Anisotropic Strength Modifier	1
Weight	287.98
Base Shear Force	162.36
Base Normal Force	262.25
Left Side Normal Force	668.84
Right Side Normal Force	557.34

Slice 25 - Janbu Method

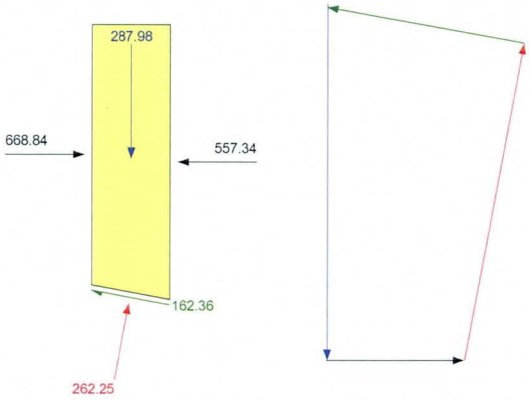

Slice 26 - Janbu Method

Factor of Safety	1.1216
Phi Angle	34
C (Strength)	150
C (Force)	103.3
Pore Water Pressure	176.09
Pore Water Force	121.26
Pore Air Pressure	0
Pore Air Force	0
Slice Width	0.68055
Mid-Height	2.8217
Base Length	0.68863
Base Angle	8.7882
Polygon Closure	2.4004
Anisotropic Strength Modifier	1
Weight	240.04
Base Shear Force	151.15
Base Normal Force	219.43
Left Side Normal Force	557.34
Right Side Normal Force	440.82

Slice 26 - Janbu Method

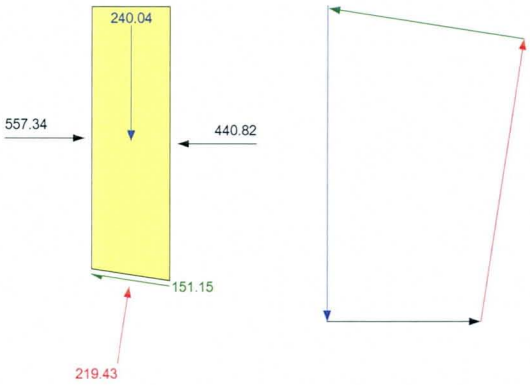

Slice 27 - Janbu Method

Factor of Safety	1.1216
Phi Angle	34
C (Strength)	150
C (Force)	102.82
Pore Water Pressure	139.45
Pore Water Force	95.59
Pore Air Pressure	0
Pore Air Force	0
Slice Width	0.68055
Mid-Height	2.2347
Base Length	0.68547
Base Angle	6.8705
Polygon Closure	1.901
Anisotropic Strength Modifier	1
Weight	190.1
Base Shear Force	139.22
Base Normal Force	174.64
Left Side Normal Force	440.82
Right Side Normal Force	322.89

Slice 27 - Janbu Method

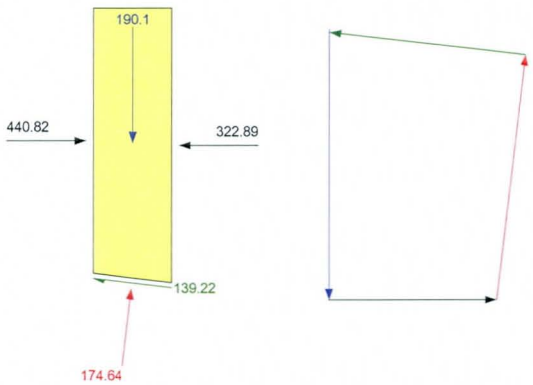

Slice 28 - Janbu Method

Factor of Safety	1.1216
Phi Angle	34
C (Strength)	150
C (Force)	102.47
Pore Water Pressure	101.38
Pore Water Force	69.255
Pore Air Pressure	0
Pore Air Force	0
Slice Width	0.68056
Mid-Height	1.6246
Base Length	0.68312
Base Angle	4.9605
Polygon Closure	1.3821
Anisotropic Strength Modifier	1
Weight	138.21
Base Shear Force	126.51
Base Normal Force	127.7
Left Side Normal Force	322.89
Right Side Normal Force	207.35

Slice 28 - Janbu Method

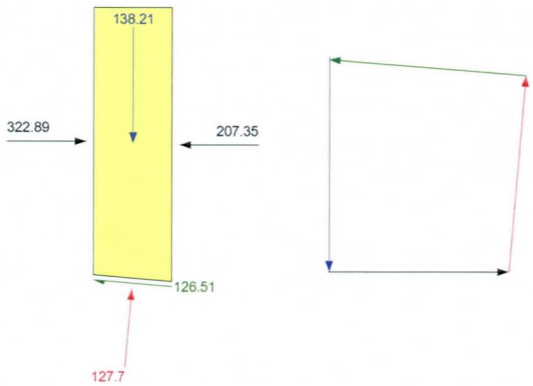

Slice 29 - Janbu Method

Factor of Safety	1.1216
Phi Angle	34
C (Strength)	150
C (Force)	102.23
Pore Water Pressure	61.889
Pore Water Force	42.179
Pore Air Pressure	0
Pore Air Force	0
Slice Width	0.68056
Mid-Height	0.99177
Base Length	0.68153
Base Angle	3.0562
Polygon Closure	1.1295
Anisotropic Strength Modifier	1
Weight	84.369
Base Shear Force	112.95
Base Normal Force	78.436
Left Side Normal Force	207.35
Right Side Normal Force	98.28

Slice 29 - Janbu Method

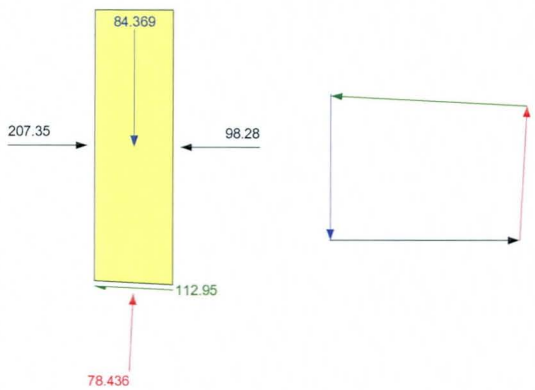

Slice 30 - Janbu Method

Factor of Safety	1.1216
Phi Angle	34
C (Strength)	150
C (Force)	102.1
Pore Water Pressure	20.982
Pore Water Force	14.282
Pore Air Pressure	0
Pore Air Force	0
Slice Width	0.68055
Mid-Height	0.33624
Base Length	0.68069
Base Angle	1.1552
Polygon Closure	0.49228
Anisotropic Strength Modifier	1
Weight	28.603
Base Shear Force	98.456
Base Normal Force	26.616
Left Side Normal Force	98.28

Slice 30 - Janbu Method

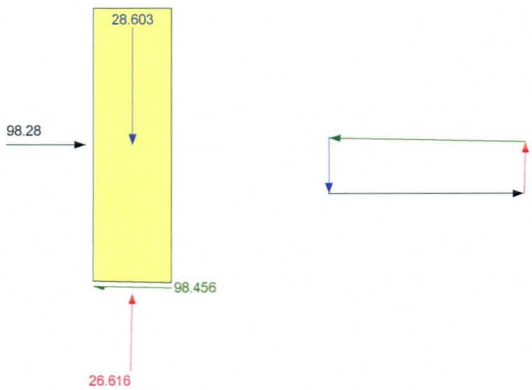

Description: Post Cut Geometry with Re-inforcement
File Name: 13666 Mondrian Cut with wall.slp
Last Saved Date: 10/7/2004
Last Saved Time: 5:42:04 PM
Analysis Method: Janbu
Direction of Slip Movement: Left to Right
Slip Surface Option: Grid and Radius
P.W.P. Option: Piezometric lines with Ru

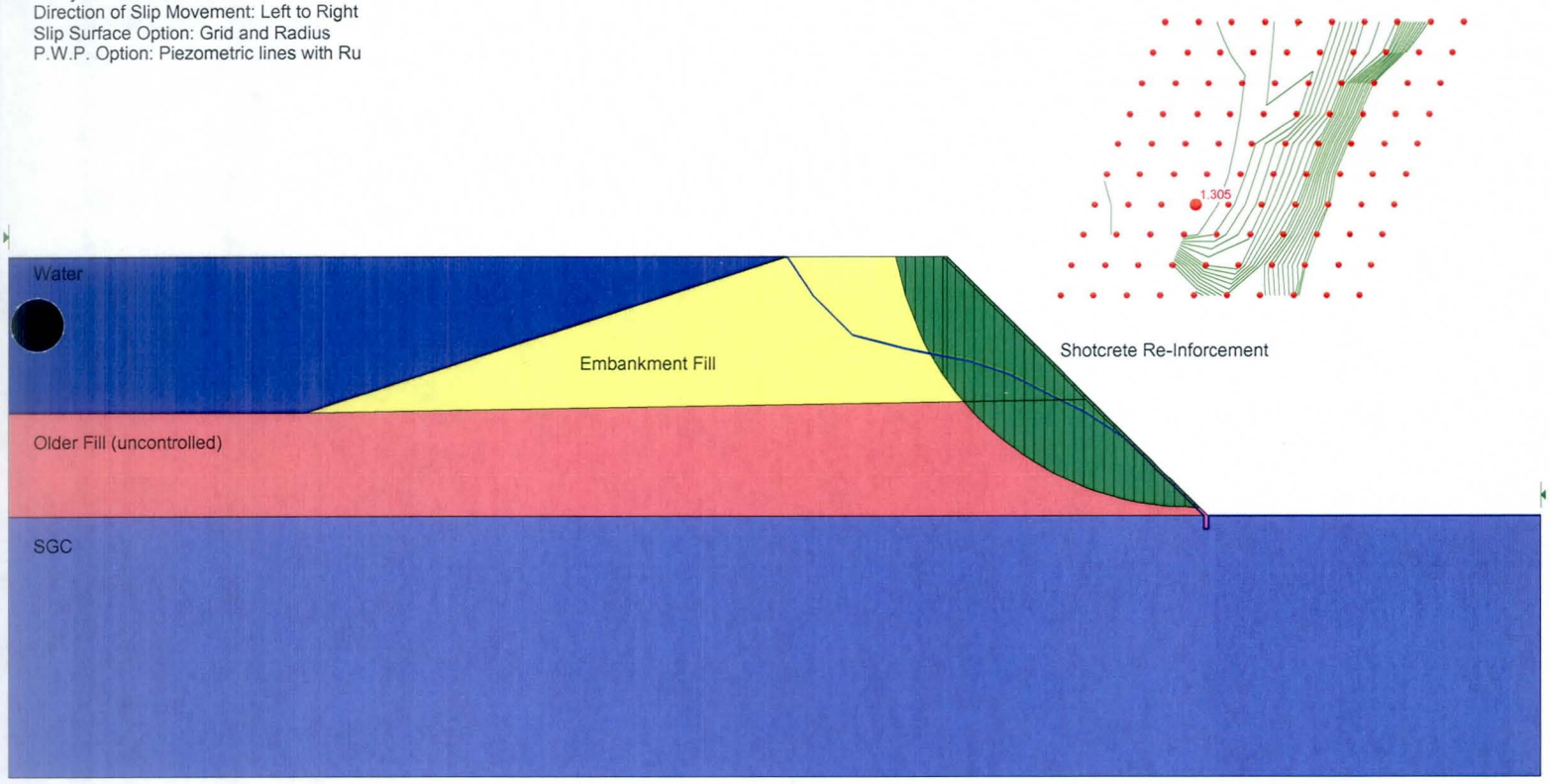

Slice 1 - Janbu Method

Factor of Safety	1.305
Phi Angle	36
C (Strength)	200
C (Force)	615.09
Pore Water Pressure	0
Pore Water Force	0
Pore Air Pressure	0
Pore Air Force	0
Slice Width	0.72569
Mid-Height	1.7056
Base Length	3.0754
Base Angle	76.352
Polygon Closure	0
Anisotropic Strength Modifier	1
Weight	148.52
Base Shear Force	249.1
Base Normal Force	399.8
Right Side Normal Force	443.9

Slice 1 - Janbu Method

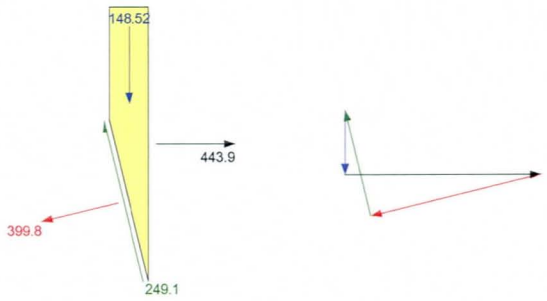

Slice 2 - Janbu Method

Factor of Safety	1.305
Phi Angle	36
C (Strength)	200
C (Force)	423.69
P[illegible] Water Pressure	0
P[illegible] Water Force	0
Pore Air Pressure	0
Pore Air Force	0
Slice Width	0.72569
Mid-Height	4.0537
Base Length	2.1185
Base Angle	69.967
Polygon Closure	5.3231
Anisotropic Strength Modifier	1
Weight	353.01
Base Shear Force	354.87
Base Normal Force	54.03
Left Side Normal Force	443.9
Right Side Normal Force	511.16

Slice 2 - Janbu Method

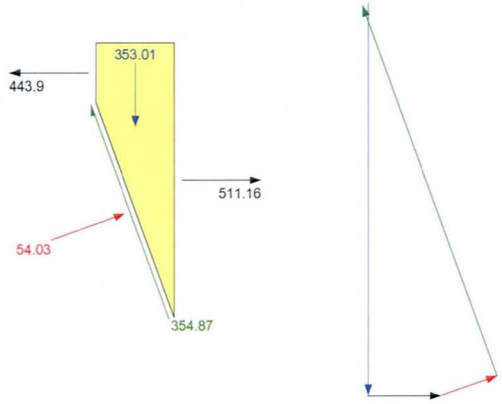

Slice 3 - Janbu Method

Factor of Safety	1.305
Phi Angle	36
C (Strength)	200
C (Force)	346.48
Pore Water Pressure	0
Pore Water Force	0
Pore Air Pressure	0
Pore Air Force	0
Slice Width	0.72568
Mid-Height	5.8038
Base Length	1.7324
Base Angle	65.236
Polygon Closure	7.5812
Anisotropic Strength Modifier	1
Weight	505.41
Base Shear Force	423.96
Base Normal Force	284.48
Left Side Normal Force	511.16
Right Side Normal Force	427.18

Slice 3 - Janbu Method

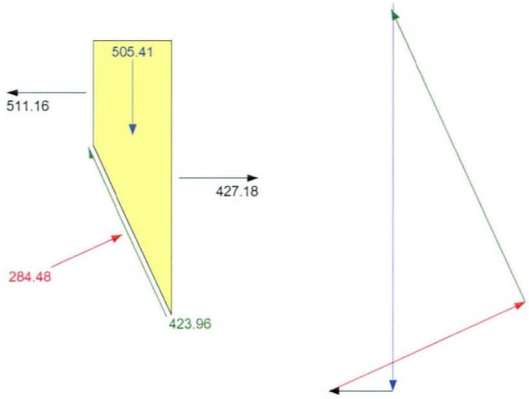

Slice 4 - Janbu Method

Factor of Safety	1.305
Phi Angle	36
C (Strength)	200
C (Force)	301.77
Pore Water Pressure	0
Pore Water Force	0
Pore Air Pressure	0
Pore Air Force	0
Slice Width	0.72569
Mid-Height	7.2388
Base Length	1.5089
Base Angle	61.253
Polygon Closure	6.3037
Anisotropic Strength Modifier	1
Weight	630.37
Base Shear Force	476.16
Base Normal Force	439.81
Left Side Normal Force	427.18
Right Side Normal Force	267.76

Slice 4 - Janbu Method

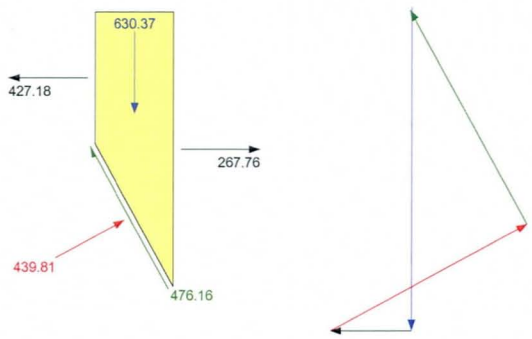

Slice 5 - Janbu Method

Factor of Safety	1.305
Phi Angle	36
C (Strength)	200
C (Force)	271.83
Pore Water Pressure	58.699
Pore Water Force	79.781
Pore Air Pressure	0
Pore Air Force	0
Slice Width	0.72569
Mid-Height	8.468
Base Length	1.3591
Base Angle	57.729
Polygon Closure	7.4083
Anisotropic Strength Modifier	1
Weight	740.83
Base Shear Force	496.88
Base Normal Force	598.05
Left Side Normal Force	267.76
Right Side Normal Force	25.139

Slice 5 - Janbu Method

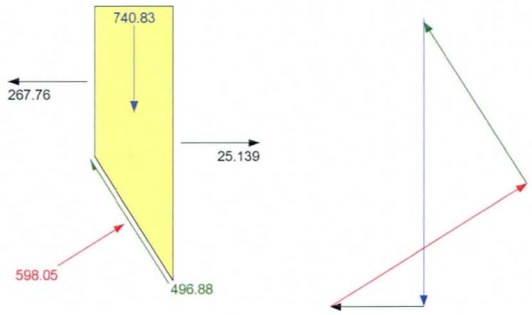

Slice 6 - Janbu Method

Factor of Safety	1.305
Phi Angle	36
C (Strength)	200
C (Force)	117.11
P[illegible] Water Pressure	102.01
P[illegible] Water Force	59.732
Pore Air Pressure	0
Pore Air Force	0
Slice Width	0.333
Mid-Height	9.2681
Base Length	0.58553
Base Angle	55.339
Polygon Closure	5.6127
Anisotropic Strength Modifier	1
Weight	374.18
Base Shear Force	233.86
Base Normal Force	318.59
Left Side Normal Force	25.139
Right Side Normal Force	104.77

Slice 6 - Janbu Method

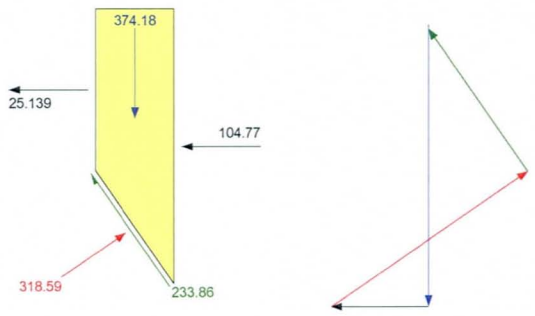

Slice 7 - Janbu Method

Factor of Safety	1.305
Phi Angle	36
C (Strength)	200
C (Force)	215.41
P[illegible] Water Pressure	138.34
P[illegible] Water Force	149
Pore Air Pressure	0
Pore Air Force	0
Slice Width	0.64371
Mid-Height	9.626
Base Length	1.077
Base Angle	53.297
Polygon Closure	11.325
Anisotropic Strength Modifier	1
Weight	754.98
Base Shear Force	448.99
Base Normal Force	658.93
Left Side Normal Force	104.77
Right Side Normal Force	366.03

Slice 7 - Janbu Method

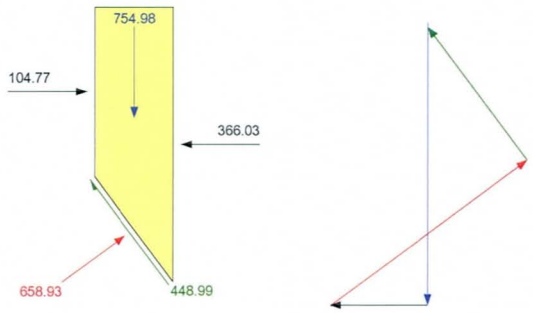

Slice 8 - Janbu Method

Factor of Safety	1.305
Phi Angle	36
C (Strength)	200
C (Force)	203.37
P[illegible] Water Pressure	181.71
P[illegible] Water Force	184.77
Pore Air Pressure	0
Pore Air Force	0
Slice Width	0.64371
Mid-Height	9.8059
Base Length	1.0168
Base Angle	50.725
Polygon Closure	7.7112
Anisotropic Strength Modifier	1
Weight	771.12
Base Shear Force	434.43
Base Normal Force	685.12
Left Side Normal Force	366.03
Right Side Normal Force	622.29

Slice 8 - Janbu Method

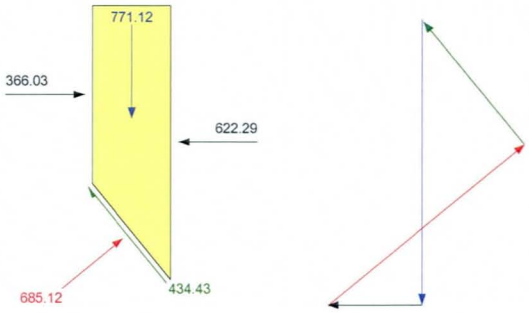

Slice 9 - Janbu Method

Factor of Safety	1.305
Phi Angle	34
C (Strength)	150
C (Force)	172.75
Pore Water Pressure	224.25
Pore Water Force	258.26
Pore Air Pressure	0
Pore Air Force	0
Slice Width	0.7697
Mid-Height	9.923
Base Length	1.1516
Base Angle	48.06
Polygon Closure	9.3548
Anisotropic Strength Modifier	1
Weight	935.48
Base Shear Force	458.02
Base Normal Force	888.25
Left Side Normal Force	622.29
Right Side Normal Force	977.64

Slice 9 - Janbu Method

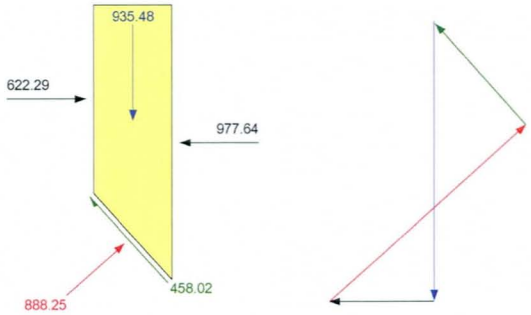

Slice 10 - Janbu Method

Factor of Safety	1.305
Phi Angle	34
C (Strength)	150
C (Force)	164.14
Pore Water Pressure	259.15
Pore Water Force	283.58
Pore Air Pressure	0
Pore Air Force	0
Slice Width	0.76969
Mid-Height	9.969
Base Length	1.0943
Base Angle	45.301
Polygon Closure	9.4188
Anisotropic Strength Modifier	1
Weight	941.88
Base Shear Force	440.51
Base Normal Force	892.45
Left Side Normal Force	977.64
Right Side Normal Force	1302.5

Slice 10 - Janbu Method

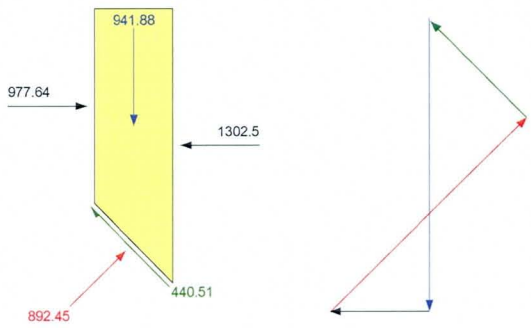

Slice 11 - Janbu Method

Factor of Safety	1.305
Phi Angle	34
C (Strength)	150
C (Force)	157.02
P[illegible] Water Pressure	289.47
P[illegible] Water Force	303.03
Pore Air Pressure	0
Pore Air Force	0
Slice Width	0.7697
Mid-Height	9.9419
Base Length	1.0468
Base Angle	42.67
Polygon Closure	9.4124
Anisotropic Strength Modifier	1
Weight	941.24
Base Shear Force	423.12
Base Normal Force	888.82
Left Side Normal Force	1302.5
Right Side Normal Force	1593.9

Slice 11 - Janbu Method

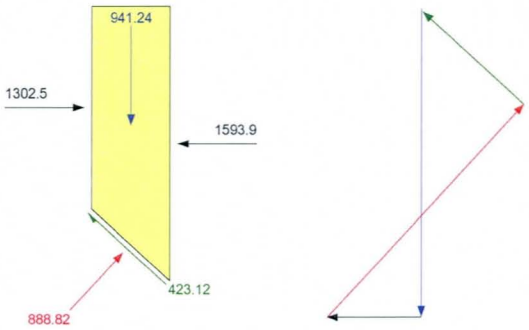

Slice 12 - Janbu Method

Factor of Safety	1.305
Phi Angle	34
C (Strength)	150
C (Force)	151.04
P[illegible] Water Pressure	315.81
P[illegible] Water Force	318
Pore Air Pressure	0
Pore Air Force	0
Slice Width	0.76969
Mid-Height	9.8507
Base Length	1.0069
Base Angle	40.147
Polygon Closure	9.3444
Anisotropic Strength Modifier	1
Weight	934.44
Base Shear Force	405.77
Base Normal Force	879.08
Left Side Normal Force	1593.9
Right Side Normal Force	1850.3

Slice 12 - Janbu Method

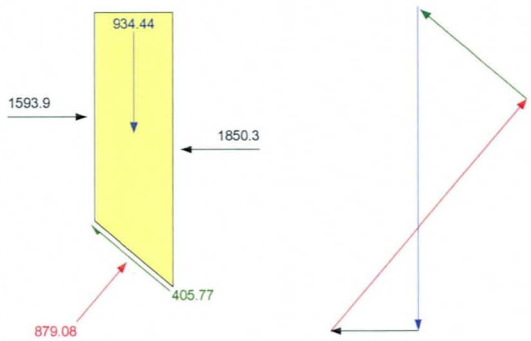

Slice 12 - Janbu Method

Factor of Safety	1.305
Phi Angle	34
C (Strength)	150
C (Force)	151.04
Pore Water Pressure	315.81
Pore Water Force	318
Pore Air Pressure	0
Pore Air Force	0
Slice Width	0.76969
Mid-Height	9.8507
Base Length	1.0069
Base Angle	40.147
Polygon Closure	9.3444
Anisotropic Strength Modifier	1
Weight	934.44
Base Shear Force	405.77
Base Normal Force	879.08
Left Side Normal Force	1593.9
Right Side Normal Force	1850.3

Slice 12 - Janbu Method

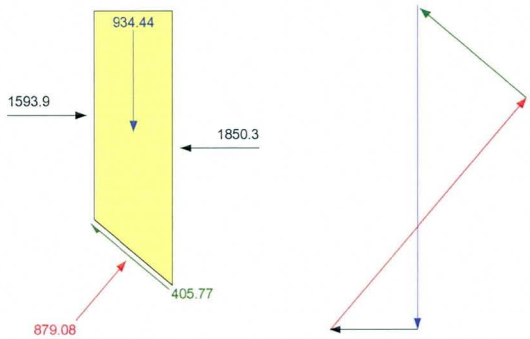

Slice 13 - Janbu Method

Factor of Safety	1.305
Phi Angle	34
C (Strength)	150
C (Force)	145.95
Pore Water Pressure	337.7
Pore Water Force	328.58
Pore Air Pressure	0
Pore Air Force	0
Slice Width	0.7697
Mid-Height	9.7025
Base Length	0.97299
Base Angle	37.714
Polygon Closure	9.2211
Anisotropic Strength Modifier	1
Weight	922.11
Base Shear Force	388.66
Base Normal Force	864.11
Left Side Normal Force	1850.3
Right Side Normal Force	2071

Slice 13 - Janbu Method

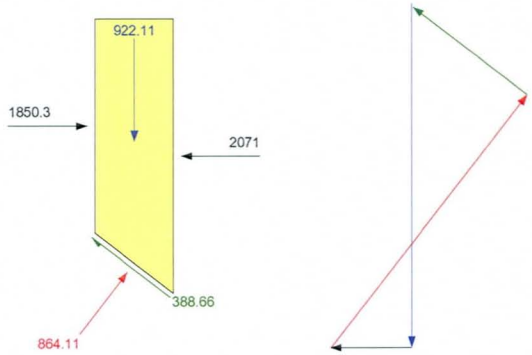

Slice 14 - Janbu Method

Factor of Safety	1.305
Phi Angle	34
C (Strength)	150
C (Force)	141.57
Pore Water Pressure	349.26
Pore Water Force	329.63
Pore Air Pressure	0
Pore Air Force	0
Slice Width	0.76968
Mid-Height	9.5029
Base Length	0.94378
Base Angle	35.36
Polygon Closure	9.0439
Anisotropic Strength Modifier	1
Weight	904.39
Base Shear Force	373.77
Base Normal Force	842.85
Left Side Normal Force	2071
Right Side Normal Force	2253.4

Slice 14 - Janbu Method

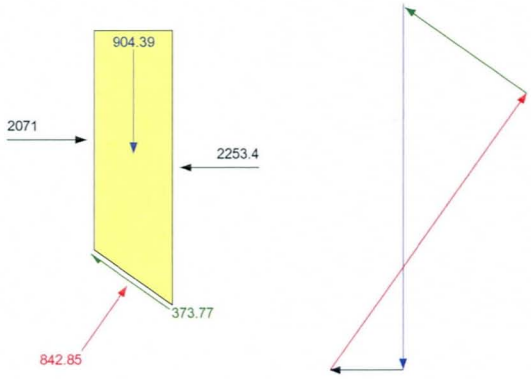

Slice 15 - Janbu Method

Factor of Safety	1.305
Phi Angle	34
C (Strength)	150
C (Force)	137.78
Pore Water Pressure	357.89
Pore Water Force	328.73
Pore Air Pressure	0
Pore Air Force	0
Slice Width	0.76971
Mid-Height	9.2565
Base Length	0.91851
Base Angle	33.071
Polygon Closure	4.4108
Anisotropic Strength Modifier	1
Weight	882.16
Base Shear Force	358.67
Base Normal Force	818.38
Left Side Normal Force	2253.4
Right Side Normal Force	2398.7

Slice 15 - Janbu Method

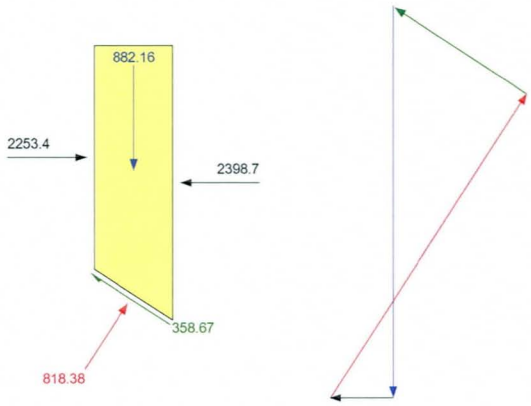

Slice 16 - Janbu Method

Factor of Safety	1.305
Phi Angle	34
C (Strength)	150
C (Force)	134.47
P[illegible] Water Pressure	363.84
P[illegible] Water Force	326.17
Pore Air Pressure	0
Pore Air Force	0
Slice Width	0.76968
Mid-Height	8.9668
Base Length	0.89646
Base Angle	30.842
Polygon Closure	8.5577
Anisotropic Strength Modifier	1
Weight	855.77
Base Shear Force	343.33
Base Normal Force	791.04
Left Side Normal Force	2398.7
Right Side Normal Force	2508.6

Slice 16 - Janbu Method

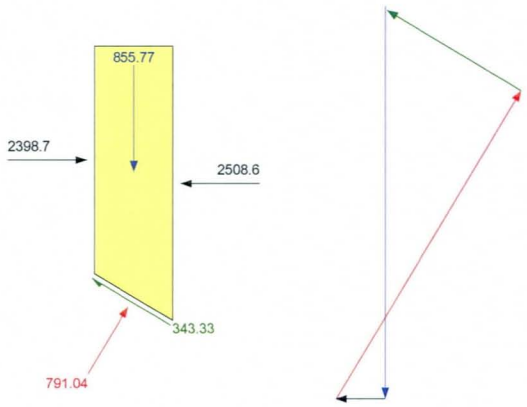

Slice 17 - Janbu Method

Factor of Safety	1.305
Phi Angle	34
C (Strength)	150
C (Force)	131.58
P[illegible] Water Pressure	367.27
P[illegible] Water Force	322.17
Pore Air Pressure	0
Pore Air Force	0
Slice Width	0.76971
Mid-Height	8.637
Base Length	0.8772
Base Angle	28.663
Polygon Closure	8.2552
Anisotropic Strength Modifier	1
Weight	825.52
Base Shear Force	327.7
Base Normal Force	761.08
Left Side Normal Force	2508.6
Right Side Normal Force	2585.2

Slice 17 - Janbu Method

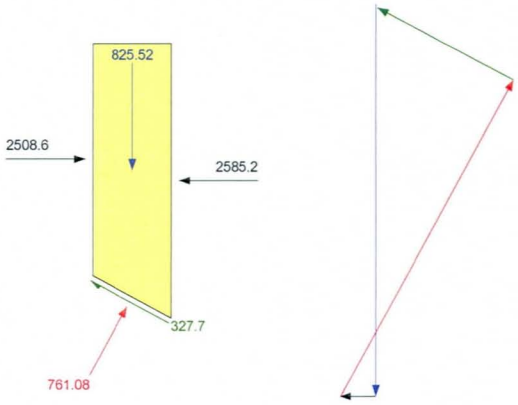

Slice 18 - Janbu Method

Factor of Safety	1.305
Phi Angle	34
C (Strength)	150
C (Force)	129.04
P[illegible] Water Pressure	368.35
P[illegible] Water Force	316.88
Pore Air Pressure	0
Pore Air Force	0
Slice Width	0.76968
Mid-Height	8.2695
Base Length	0.86026
Base Angle	26.529
Polygon Closure	7.9164
Anisotropic Strength Modifier	1
Weight	791.64
Base Shear Force	311.74
Base Normal Force	728.67
Left Side Normal Force	2585.2
Right Side Normal Force	2630.8

Slice 18 - Janbu Method

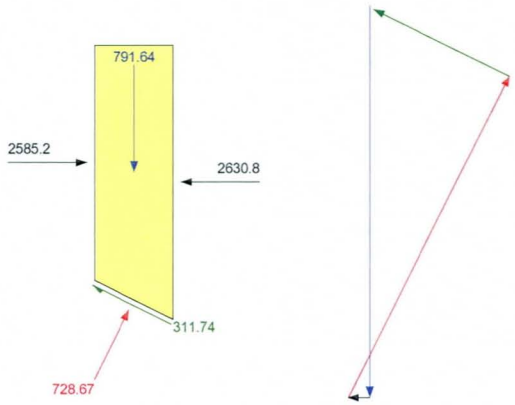

Slice 19 - Janbu Method

Factor of Safety	1.305
Phi Angle	34
C (Strength)	150
C (Force)	126.81
P[illegible] Water Pressure	367.22
P[illegible] Water Force	310.45
Pore Air Pressure	0
Pore Air Force	0
Slice Width	0.7697
Mid-Height	7.8665
Base Length	0.84541
Base Angle	24.433
Polygon Closure	7.5435
Anisotropic Strength Modifier	1
Weight	754.35
Base Shear Force	295.39
Base Normal Force	693.91
Left Side Normal Force	2630.8
Right Side Normal Force	2647.9

Slice 19 - Janbu Method

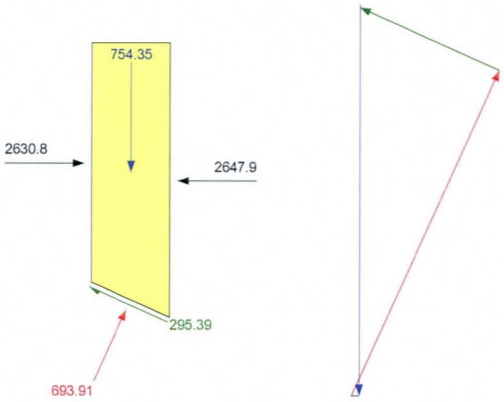

Slice 20 - Janbu Method

Factor of Safety	1.305
Phi Angle	34
C (Strength)	150
C (Force)	124.85
Pore Water Pressure	363.99
Pore Water Force	302.96
Pore Air Pressure	0
Pore Air Force	0
Slice Width	0.76969
Mid-Height	7.4299
Base Length	0.83234
Base Angle	22.372
Polygon Closure	3.5691
Anisotropic Strength Modifier	1
Weight	713.82
Base Shear Force	278.61
Base Normal Force	656.87
Left Side Normal Force	2647.9
Right Side Normal Force	2639.3

Slice 20 - Janbu Method

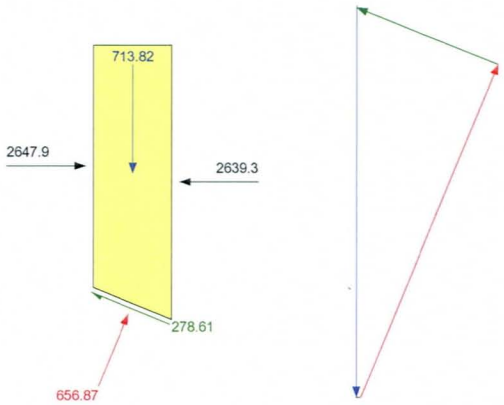

Slice 21 - Janbu Method

Factor of Safety	1.305
Phi Angle	34
C (Strength)	150
C (Force)	123.13
Pore Water Pressure	356.24
Pore Water Force	292.43
Pore Air Pressure	0
Pore Air Force	0
Slice Width	0.7697
Mid-Height	6.9611
Base Length	0.82089
Base Angle	20.341
Polygon Closure	3.3502
Anisotropic Strength Modifier	1
Weight	670.05
Base Shear Force	262.18
Base Normal Force	617.1
Left Side Normal Force	2639.3
Right Side Normal Force	2607

Slice 21 - Janbu Method

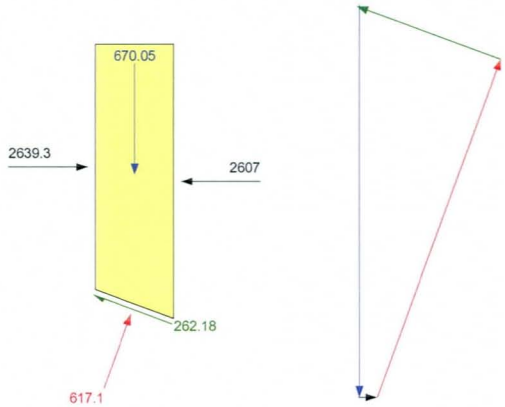

Slice 22 - Janbu Method

Factor of Safety	1.305
Phi Angle	34
C (Strength)	150
C (Force)	121.63
P[illegible] Water Pressure	341.07
P[illegible] Water Force	276.56
Pore Air Pressure	0
Pore Air Force	0
Slice Width	0.76969
Mid-Height	6.4615
Base Length	0.81086
Base Angle	18.336
Polygon Closure	6.2297
Anisotropic Strength Modifier	1
Weight	622.97
Base Shear Force	247.03
Base Normal Force	574.15
Left Side Normal Force	2607
Right Side Normal Force	2552.2

Slice 22 - Janbu Method

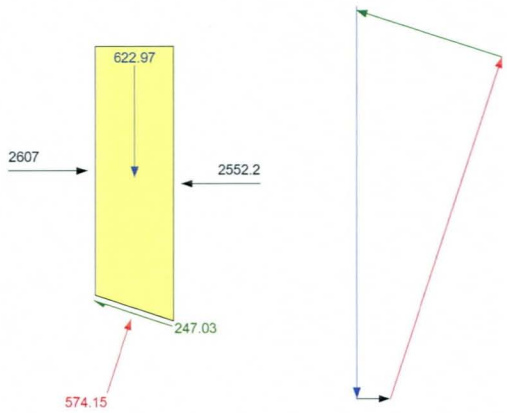

Slice 23 - Janbu Method

Factor of Safety	1.305
Phi Angle	34
C (Strength)	150
C (Force)	120.32
P[illegible] Water Pressure	324.05
P[illegible] Water Force	259.94
Pore Air Pressure	0
Pore Air Force	0
Slice Width	0.7697
Mid-Height	5.9322
Base Length	0.80215
Base Angle	16.354
Polygon Closure	5.7302
Anisotropic Strength Modifier	1
Weight	573.02
Base Shear Force	231.33
Base Normal Force	529.08
Left Side Normal Force	2552.2
Right Side Normal Force	2478.3

Slice 23 - Janbu Method

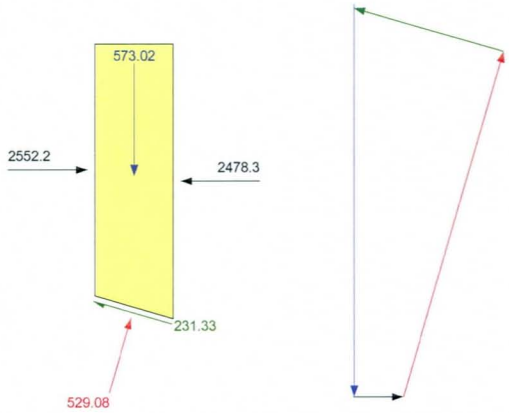

Slice 24 - Janbu Method

Factor of Safety	1.305
Phi Angle	34
C (Strength)	150
C (Force)	119.19
Pore Water Pressure	305.24
Pore Water Force	242.55
Pore Air Pressure	0
Pore Air Force	0
Slice Width	0.76969
Mid-Height	5.3741
Base Length	0.79463
Base Angle	14.393
Polygon Closure	2.6016
Anisotropic Strength Modifier	1
Weight	520.32
Base Shear Force	215.02
Base Normal Force	481.82
Left Side Normal Force	2478.3
Right Side Normal Force	2389

Slice 24 - Janbu Method

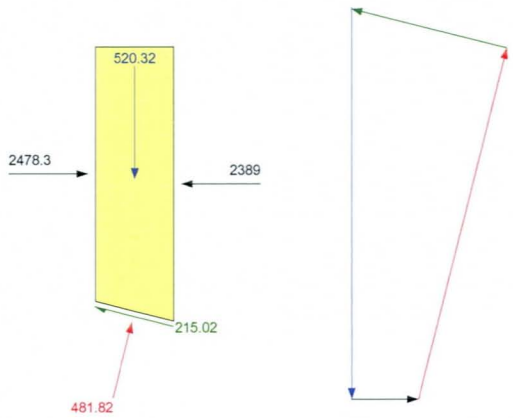

Slice 25 - Janbu Method

Factor of Safety	1.305
Phi Angle	34
C (Strength)	150
C (Force)	118.23
Pore Water Pressure	278
Pore Water Force	219.13
Pore Air Pressure	0
Pore Air Force	0
Slice Width	0.7697
Mid-Height	4.788
Base Length	0.78823
Base Angle	12.448
Polygon Closure	4.6451
Anisotropic Strength Modifier	1
Weight	464.51
Base Shear Force	200.29
Base Normal Force	431.33
Left Side Normal Force	2389
Right Side Normal Force	2285.5

Slice 25 - Janbu Method

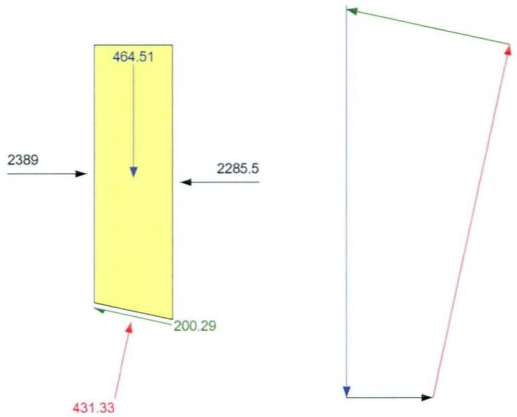

Slice 26 - Janbu Method

Factor of Safety	1.305
Phi Angle	34
C (Strength)	150
C (Force)	117.43
Pore Water Pressure	239.73
Pore Water Force	187.67
Pore Air Pressure	0
Pore Air Force	0
Slice Width	0.76969
Mid-Height	4.1746
Base Length	0.78284
Base Angle	10.518
Polygon Closure	4.0549
Anisotropic Strength Modifier	1
Weight	405.49
Base Shear Force	188.05
Base Normal Force	377.39
Left Side Normal Force	2285.5
Right Side Normal Force	2168.8

Slice 26 - Janbu Method

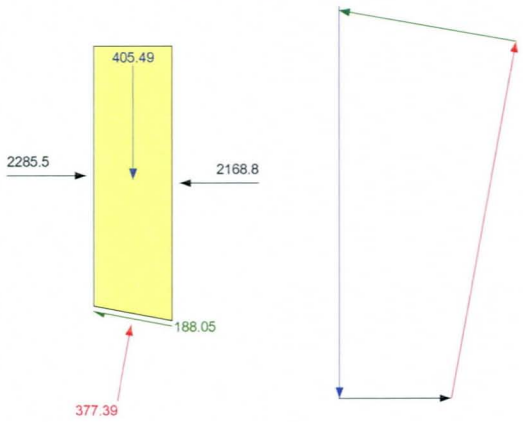

Slice 27 - Janbu Method

Factor of Safety	1.305
Phi Angle	34
C (Strength)	150
C (Force)	116.77
Pore Water Pressure	199.78
Pore Water Force	155.52
Pore Air Pressure	0
Pore Air Force	0
Slice Width	0.7697
Mid-Height	3.5345
Base Length	0.77845
Base Angle	8.5997
Polygon Closure	3.4391
Anisotropic Strength Modifier	1
Weight	343.91
Base Shear Force	175.14
Base Normal Force	321.24
Left Side Normal Force	2168.8
Right Side Normal Force	2043

Slice 27 - Janbu Method

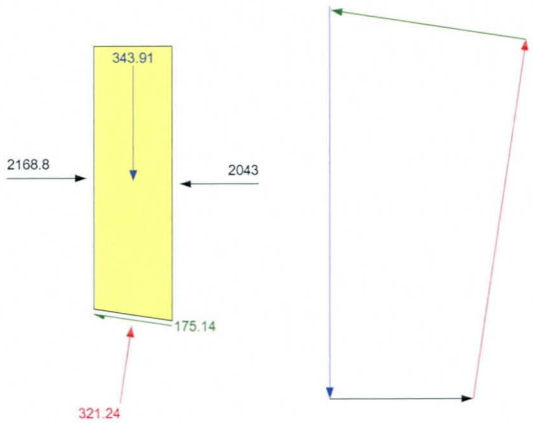

Slice 28 - Janbu Method

Factor of Safety	1.305
Phi Angle	34
C (Strength)	150
C (Force)	116.25
Pore Water Pressure	158.2
Pore Water Force	122.6
Pore Air Pressure	0
Pore Air Force	0
Slice Width	0.7697
Mid-Height	2.8681
Base Length	0.77498
Base Angle	6.6913
Polygon Closure	2.7979
Anisotropic Strength Modifier	1
Weight	279.79
Base Shear Force	161.5
Base Normal Force	262.7
Left Side Normal Force	2043
Right Side Normal Force	1912.5

Slice 28 - Janbu Method

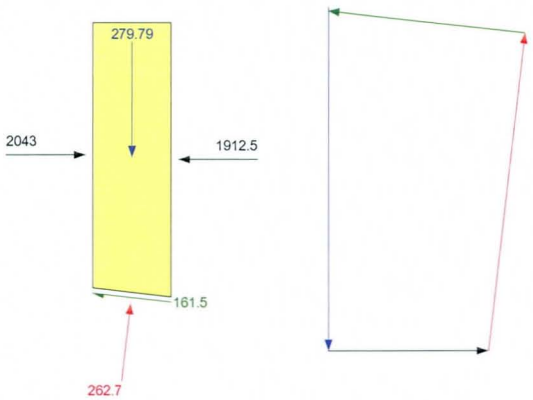

Slice 29 - Janbu Method

Factor of Safety	1.305
Phi Angle	34
C (Strength)	150
C (Force)	115.86
P[illegible] Water Pressure	115
P[illegible] Water Force	88.823
Pore Air Pressure	0
Pore Air Force	0
Slice Width	0.76969
Mid-Height	2.1758
Base Length	0.77239
Base Angle	4.7904
Polygon Closure	1.0659
Anisotropic Strength Modifier	1
Weight	213.18
Base Shear Force	147.06
Base Normal Force	201.57
Left Side Normal Force	1912.5
Right Side Normal Force	1782.3

Slice 29 - Janbu Method

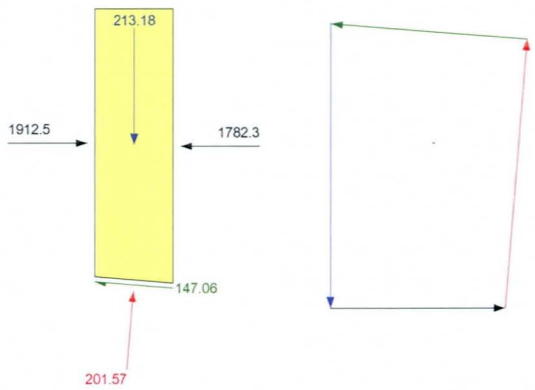

Slice 30 - Janbu Method

Factor of Safety	1.305
Phi Angle	34
C (Strength)	150
C (Force)	115.6
P[illegible] Water Pressure	70.191
P[illegible] Water Force	54.095
Pore Air Pressure	0
Pore Air Force	0
Slice Width	0.7697
Mid-Height	1.4578
Base Length	0.77068
Base Angle	2.8946
Polygon Closure	1.441
Anisotropic Strength Modifier	1
Weight	144.1
Base Shear Force	131.75
Base Normal Force	137.6
Left Side Normal Force	1782.3
Right Side Normal Force	1657.2

Slice 30 - Janbu Method

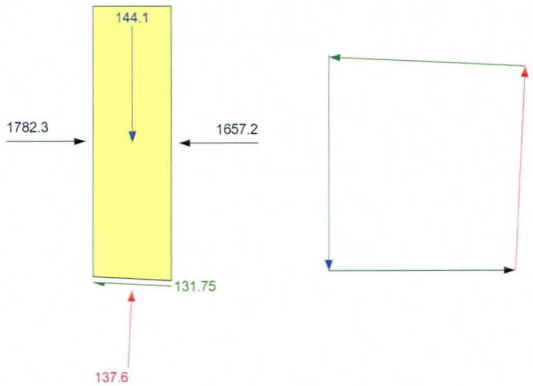

Slice 31 - Janbu Method

Factor of Safety	1.305
Phi Angle	34
C (Strength)	150
C (Force)	115.47
P[illegible] Water Pressure	23.794
P[illegible] Water Force	18.317
Pore Air Pressure	0
Pore Air Force	0
Slice Width	0.76969
Mid-Height	0.71429
Base Length	0.76981
Base Angle	1.0021
Polygon Closure	0.57745
Anisotropic Strength Modifier	1
Weight	72.568
Base Shear Force	115.49
Base Normal Force	70.553
Left Side Normal Force	1657.2
Right Side Normal Force	1542.5

Slice 31 - Janbu Method

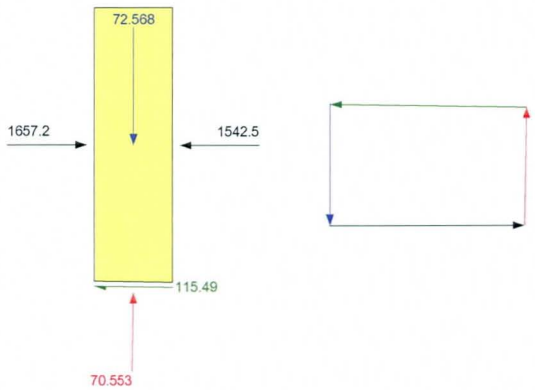

Description: Stage 1 Backfill Geometry
File Name: 13666 Mondrian Staged third.slp
Last Saved Date: 10/7/2004
Last Saved Time: 5:53:46 PM
Analysis Method: Janbu
Direction of Slip Movement: Left to Right
Slip Surface Option: Grid and Radius
P.W.P. Option: Piezometric lines with Ru

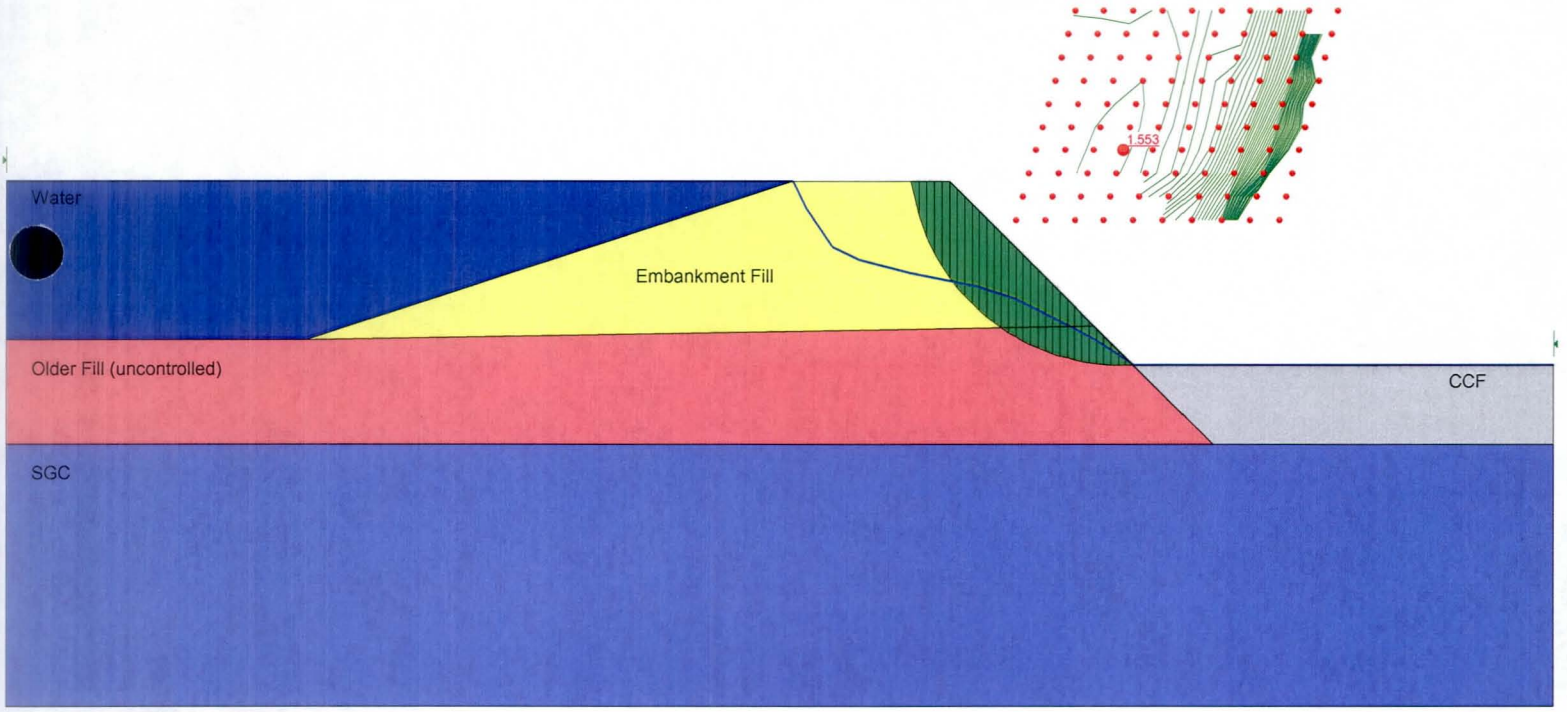

Slice 1 - Janbu Method

Factor of Safety	1.553
Phi Angle	36
C (Strength)	200
C (Force)	536.8
P[illegible] Water Pressure	0
P[illegible] Water Force	0
Pore Air Pressure	0
Pore Air Force	0
Slice Width	0.60076
Mid-Height	1.5474
Base Length	2.684
Base Angle	77.066
Polygon Closure	3.675
Anisotropic Strength Modifier	1
Weight	111.55
Base Shear Force	191.09
Base Normal Force	331.21
Right Side Normal Force	367.5

Slice 1 - Janbu Method

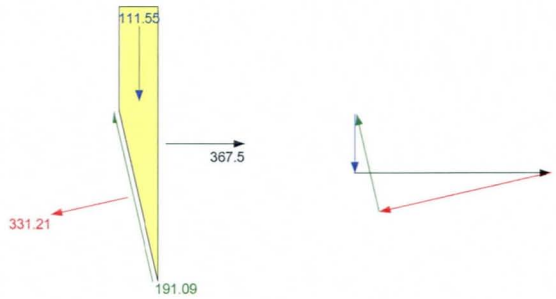

Slice 2 - Janbu Method

Factor of Safety	1.553
Phi Angle	36
C (Strength)	200
C (Force)	340.83
Pore Water Pressure	0
Pore Water Force	0
Pore Air Pressure	0
Pore Air Force	0
Slice Width	0.60076
Mid-Height	3.4761
Base Length	1.7041
Base Angle	69.358
Polygon Closure	1.253
Anisotropic Strength Modifier	1
Weight	250.6
Base Shear Force	246.69
Base Normal Force	57.977
Left Side Normal Force	367.5
Right Side Normal Force	401.88

Slice 2 - Janbu Method

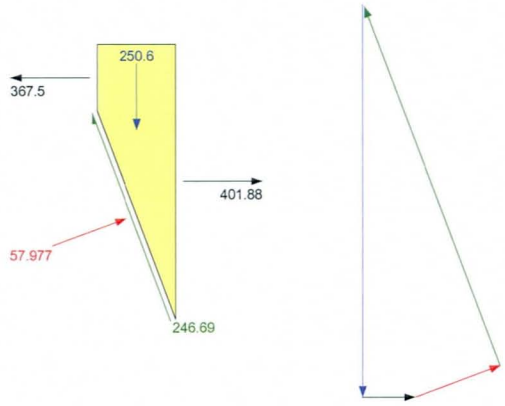

Slice 3 - Janbu Method

Factor of Safety	1.553
Phi Angle	36
C (Strength)	200
C (Force)	273.73
P[illegible] Water Pressure	0
P[illegible] Water Force	0
Pore Air Pressure	0
Pore Air Force	0
Slice Width	0.60076
Mid-Height	4.8582
Base Length	1.3686
Base Angle	63.963
Polygon Closure	3.5023
Anisotropic Strength Modifier	1
Weight	350.23
Base Shear Force	281.15
Base Normal Force	224.11
Left Side Normal Force	401.88
Right Side Normal Force	325.31

Slice 3 - Janbu Method

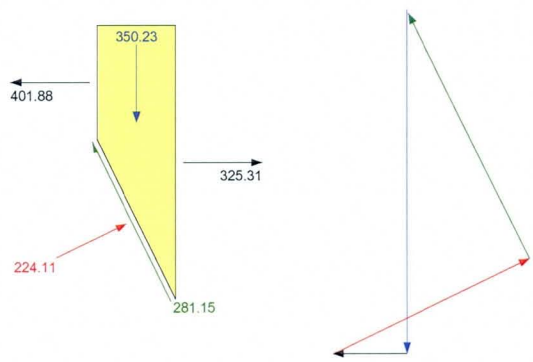

Slice 4 - Janbu Method

Factor of Safety	1.553
Phi Angle	36
C (Strength)	200
C (Force)	236.62
P[illegible] Water Pressure	0
P[illegible] Water Force	0
Pore Air Pressure	0
Pore Air Force	0
Slice Width	0.60076
Mid-Height	5.9711
Base Length	1.1831
Base Angle	59.484
Polygon Closure	2.1523
Anisotropic Strength Modifier	1
Weight	430.46
Base Shear Force	306.47
Base Normal Force	329.34
Left Side Normal Force	325.31
Right Side Normal Force	198.3

Slice 4 - Janbu Method

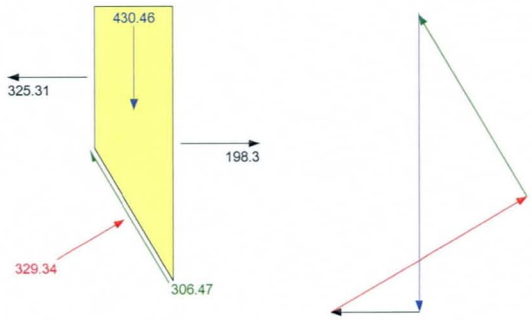

Slice 5 - Janbu Method

Factor of Safety	1.553
Phi Angle	36
C (Strength)	200
C (Force)	212.36
Pore Water Pressure	0
Pore Water Force	0
Pore Air Pressure	0
Pore Air Force	0
Slice Width	0.60076
Mid-Height	6.9126
Base Length	1.0618
Base Angle	55.543
Polygon Closure	2.4917
Anisotropic Strength Modifier	1
Weight	498.34
Base Shear Force	326.73
Base Normal Force	406.06
Left Side Normal Force	198.3
Right Side Normal Force	49.155

Slice 5 - Janbu Method

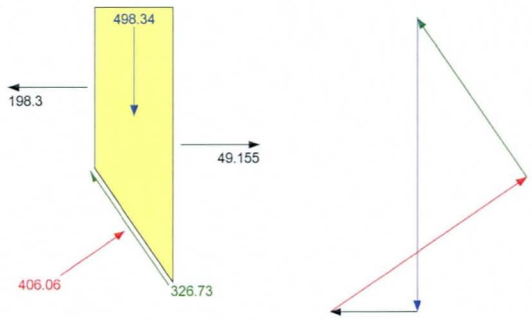

Slice 6 - Janbu Method

Factor of Safety	1.553
Phi Angle	36
C (Strength)	200
C (Force)	181.56
P[illegible] Water Pressure	2.9787
P[illegible] Water Force	2.7041
Pore Air Pressure	0
Pore Air Force	0
Slice Width	0.55784
Mid-Height	7.4246
Base Length	0.90782
Base Angle	52.086
Polygon Closure	2.4857
Anisotropic Strength Modifier	1
Weight	497.14
Base Shear Force	309.07
Base Normal Force	413.42
Left Side Normal Force	49.155
Right Side Normal Force	86.583

Slice 6 - Janbu Method

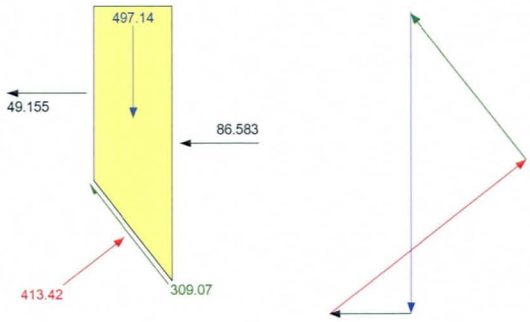

Slice 7 - Janbu Method

Factor of Safety	1.553
Phi Angle	36
C (Strength)	200
C (Force)	170.06
Pore Water Pressure	38.274
Pore Water Force	32.544
Pore Air Pressure	0
Pore Air Force	0
Slice Width	0.55784
Mid-Height	7.5439
Base Length	0.85028
Base Angle	48.999
Polygon Closure	2.5335
Anisotropic Strength Modifier	1
Weight	506.7
Base Shear Force	296.51
Base Normal Force	432.26
Left Side Normal Force	86.583
Right Side Normal Force	218.01

Slice 7 - Janbu Method

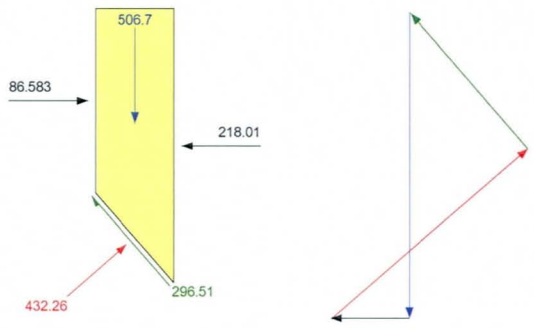

Slice 8 - Janbu Method

Factor of Safety	1.553
Phi Angle	36
C (Strength)	200
C (Force)	160.89
Pore Water Pressure	69.339
Pore Water Force	55.778
Pore Air Pressure	0
Pore Air Force	0
Slice Width	0.55784
Mid-Height	7.5954
Base Length	0.80443
Base Angle	46.096
Polygon Closure	5.1154
Anisotropic Strength Modifier	1
Weight	511.54
Base Shear Force	284.66
Base Normal Force	442.79
Left Side Normal Force	218.01
Right Side Normal Force	339.55

Slice 8 - Janbu Method

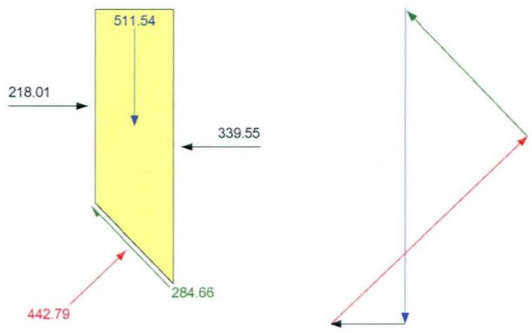

Slice 9 - Janbu Method

Factor of Safety	1.553
Phi Angle	36
C (Strength)	200
C (Force)	153.4
Pore Water Pressure	96.824
Pore Water Force	74.262
Pore Air Pressure	0
Pore Air Force	0
Slice Width	0.55784
Mid-Height	7.5896
Base Length	0.76698
Base Angle	43.337
Polygon Closure	5.1238
Anisotropic Strength Modifier	1
Weight	512.38
Base Shear Force	273.32
Base Normal Force	447.34
Left Side Normal Force	339.55
Right Side Normal Force	447.83

Slice 9 - Janbu Method

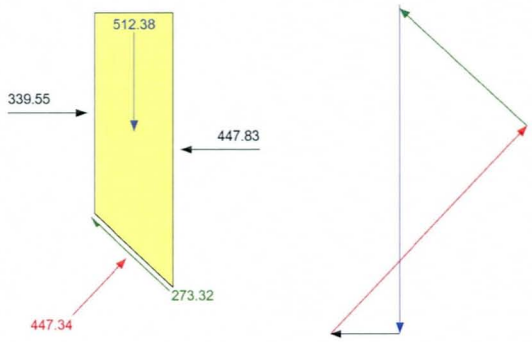

Slice 10 - Janbu Method

Factor of Safety	1.553
Phi Angle	36
C (Strength)	200
C (Force)	147.16
Pore Water Pressure	116.97
Pore Water Force	86.064
Pore Air Pressure	0
Pore Air Force	0
Slice Width	0.55784
Mid-Height	7.5341
Base Length	0.7358
Base Angle	40.7
Polygon Closure	2.5478
Anisotropic Strength Modifier	1
Weight	509.57
Base Shear Force	263.31
Base Normal Force	446.33
Left Side Normal Force	447.83
Right Side Normal Force	539.44

Slice 10 - Janbu Method

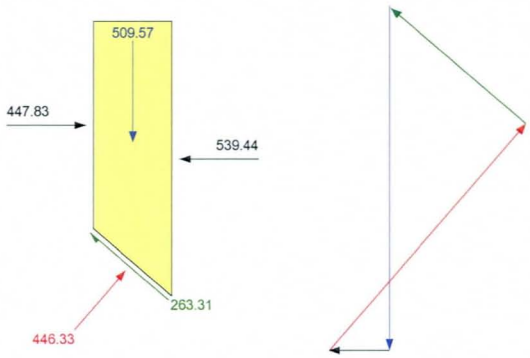

Slice 11 - Janbu Method

Factor of Safety	1.553
Phi Angle	36
C (Strength)	200
C (Force)	141.9
Pore Water Pressure	133.98
Pore Water Force	95.055
Pore Air Pressure	0
Pore Air Force	0
Slice Width	0.55784
Mid-Height	7.4348
Base Length	0.70949
Base Angle	38.163
Polygon Closure	5.0368
Anisotropic Strength Modifier	1
Weight	503.68
Base Shear Force	253.63
Base Normal Force	441.88
Left Side Normal Force	539.44
Right Side Normal Force	613.34

Slice 11 - Janbu Method

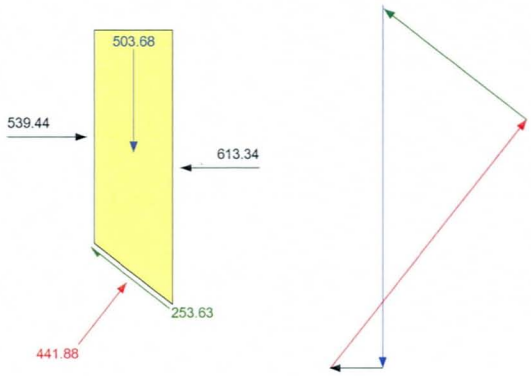

Slice 12 - Janbu Method

Factor of Safety	1.553
Phi Angle	36
C (Strength)	200
C (Force)	137.4
Pore Water Pressure	148.54
Pore Water Force	102.05
Pore Air Pressure	0
Pore Air Force	0
Slice Width	0.55783
Mid-Height	7.2962
Base Length	0.68702
Base Angle	35.712
Polygon Closure	2.4752
Anisotropic Strength Modifier	1
Weight	495.05
Base Shear Force	244.12
Base Normal Force	434.73
Left Side Normal Force	613.34
Right Side Normal Force	669.24

Slice 12 - Janbu Method

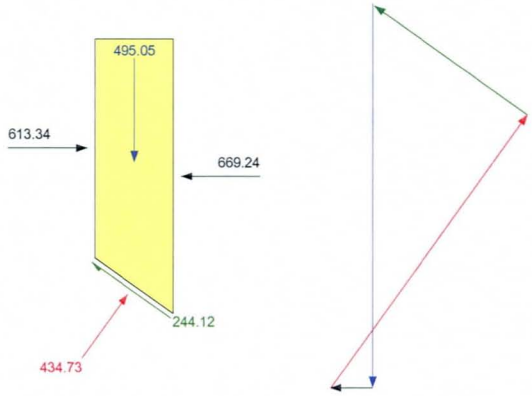

Slice 13 - Janbu Method

Factor of Safety	1.553
Phi Angle	34
C (Strength)	150
C (Force)	100.39
Pore Water Pressure	160.88
Pore Water Force	107.67
Pore Air Pressure	0
Pore Air Force	0
Slice Width	0.55916
Mid-Height	7.1218
Base Length	0.66925
Base Angle	33.331
Polygon Closure	2.4253
Anisotropic Strength Modifier	1
Weight	485.07
Base Shear Force	210.18
Base Normal Force	442.75
Left Side Normal Force	669.24
Right Side Normal Force	737.27

Slice 13 - Janbu Method

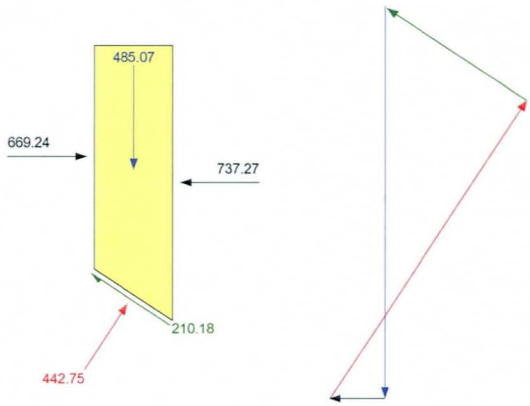

Slice 14 - Janbu Method

Factor of Safety	1.553
Phi Angle	34
C (Strength)	150
C (Force)	97.86
Pore Water Pressure	171.2
Pore Water Force	111.69
Pore Air Pressure	0
Pore Air Force	0
Slice Width	0.55915
Mid-Height	6.9143
Base Length	0.6524
Base Angle	31.012
Polygon Closure	4.716
Anisotropic Strength Modifier	1
Weight	471.6
Base Shear Force	201.14
Base Normal Force	429.71
Left Side Normal Force	737.27
Right Side Normal Force	786.67

Slice 14 - Janbu Method

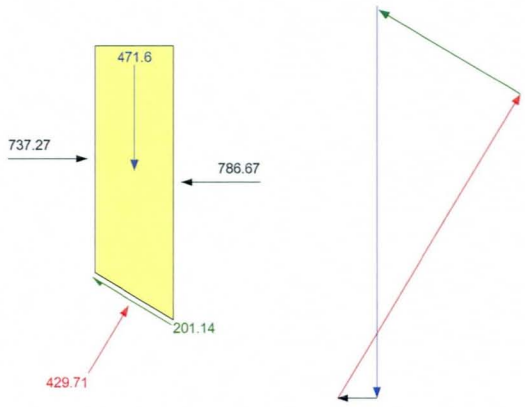

Slice 15 - Janbu Method

Factor of Safety	1.553
Phi Angle	34
C (Strength)	150
C (Force)	95.663
Pore Water Pressure	176.46
Pore Water Force	112.54
Pore Air Pressure	0
Pore Air Force	0
Slice Width	0.55915
Mid-Height	6.6763
Base Length	0.63775
Base Angle	28.747
Polygon Closure	4.5587
Anisotropic Strength Modifier	1
Weight	455.87
Base Shear Force	192.77
Base Normal Force	414.53
Left Side Normal Force	786.67
Right Side Normal Force	817.46

Slice 15 - Janbu Method

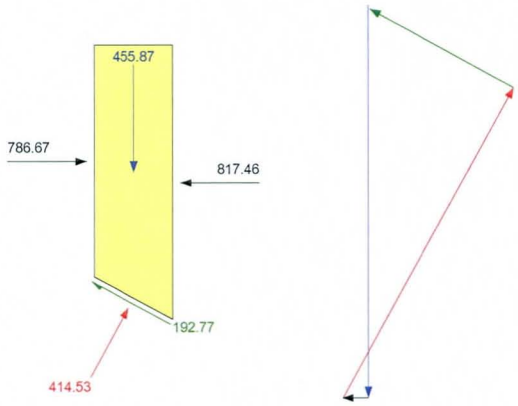

Slice 16 - Janbu Method

Factor of Safety	1.553
Phi Angle	34
C (Strength)	150
C (Force)	93.745
Pore Water Pressure	177.27
Pore Water Force	110.79
Pore Air Pressure	0
Pore Air Force	0
Slice Width	0.55915
Mid-Height	6.4099
Base Length	0.62496
Base Angle	26.531
Polygon Closure	4.3803
Anisotropic Strength Modifier	1
Weight	438.03
Base Shear Force	184.91
Base Normal Force	397.55
Left Side Normal Force	817.46
Right Side Normal Force	830.06

Slice 16 - Janbu Method

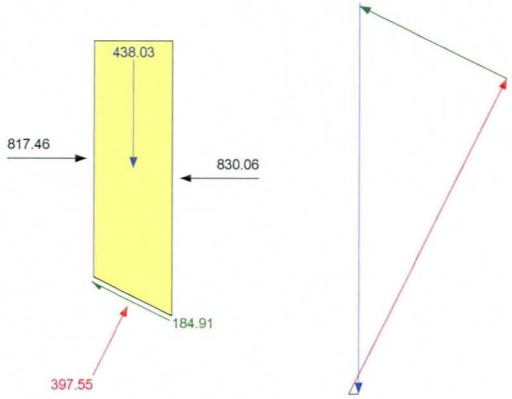

Slice 17 - Janbu Method

Factor of Safety	1.553
Phi Angle	34
C (Strength)	150
C (Force)	92.067
Pore Water Pressure	176.43
Pore Water Force	108.29
Pore Air Pressure	0
Pore Air Force	0
Slice Width	0.55915
Mid-Height	6.1167
Base Length	0.61378
Base Angle	24.357
Polygon Closure	4.1832
Anisotropic Strength Modifier	1
Weight	418.32
Base Shear Force	177
Base Normal Force	379.31
Left Side Normal Force	830.06
Right Side Normal Force	825.72

Slice 17 - Janbu Method

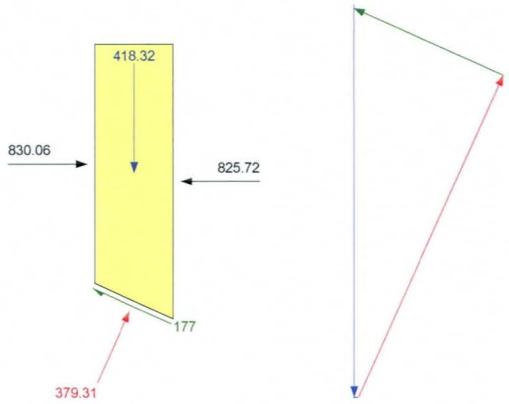

Slice 18 - Janbu Method

Factor of Safety	1.553
Phi Angle	34
C (Strength)	150
C (Force)	90.602
Pore Water Pressure	174
Pore Water Force	105.1
Pore Air Pressure	0
Pore Air Force	0
Slice Width	0.55916
Mid-Height	5.7982
Base Length	0.60401
Base Angle	22.219
Polygon Closure	1.9842
Anisotropic Strength Modifier	1
Weight	396.84
Base Shear Force	168.99
Base Normal Force	359.85
Left Side Normal Force	825.72
Right Side Normal Force	805.84

Slice 18 - Janbu Method

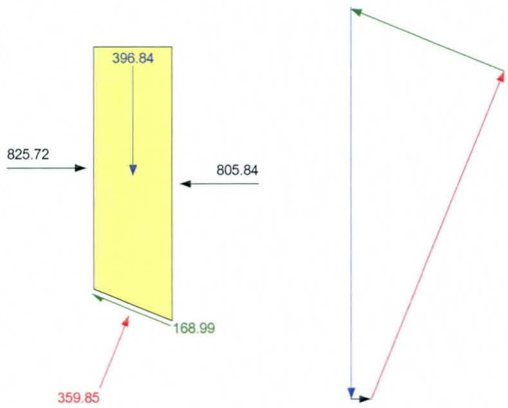

Slice 19 - Janbu Method

Factor of Safety	1.553
Phi Angle	34
C (Strength)	150
C (Force)	89.32
P[illegible] Water Pressure	170.07
P[illegible] Water Force	101.27
Pore Air Pressure	0
Pore Air Force	0
Slice Width	0.55915
Mid-Height	5.4555
Base Length	0.59547
Base Angle	20.114
Polygon Closure	3.7367
Anisotropic Strength Modifier	1
Weight	373.67
Base Shear Force	160.86
Base Normal Force	339.21
Left Side Normal Force	805.84
Right Side Normal Force	771.92

Slice 19 - Janbu Method

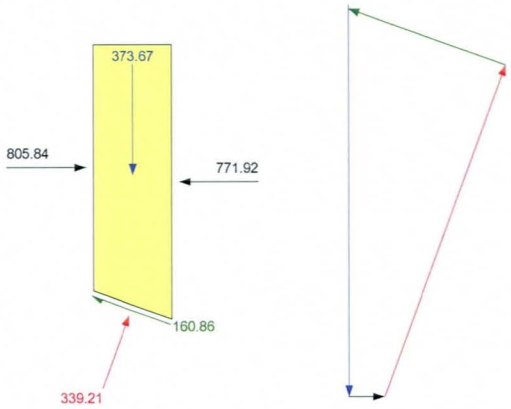

Slice 20 - Janbu Method

Factor of Safety	1.553
Phi Angle	34
C (Strength)	150
C (Force)	88.208
Pore Water Pressure	164.68
Pore Water Force	96.838
Pore Air Pressure	0
Pore Air Force	0
Slice Width	0.55915
Mid-Height	5.0896
Base Length	0.58805
Base Angle	18.037
Polygon Closure	3.4888
Anisotropic Strength Modifier	1
Weight	348.88
Base Shear Force	152.59
Base Normal Force	317.38
Left Side Normal Force	771.92
Right Side Normal Force	725.58

Slice 20 - Janbu Method

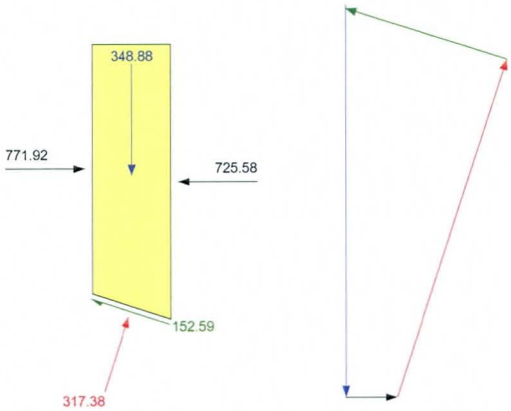

Slice 21 - Janbu Method

Factor of Safety	1.553
Phi Angle	34
C (Strength)	150
C (Force)	87.246
Pore Water Pressure	157.9
Pore Water Force	91.843
Pore Air Pressure	0
Pore Air Force	0
Slice Width	0.55915
Mid-Height	4.7015
Base Length	0.58164
Base Angle	15.984
Polygon Closure	3.2254
Anisotropic Strength Modifier	1
Weight	322.54
Base Shear Force	144.13
Base Normal Force	294.35
Left Side Normal Force	725.58
Right Side Normal Force	668.53

Slice 21 - Janbu Method

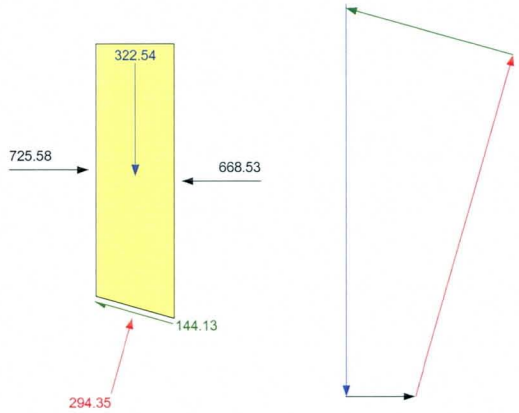

Slice 22 - Janbu Method

Factor of Safety	1.553
Phi Angle	34
C (Strength)	150
C (Force)	86.422
Pore Water Pressure	149.78
Pore Water Force	86.298
Pore Air Pressure	0
Pore Air Force	0
Slice Width	0.55915
Mid-Height	4.2918
Base Length	0.57615
Base Angle	13.952
Polygon Closure	2.9469
Anisotropic Strength Modifier	1
Weight	294.69
Base Shear Force	135.48
Base Normal Force	270.09
Left Side Normal Force	668.53
Right Side Normal Force	602.62

Slice 22 - Janbu Method

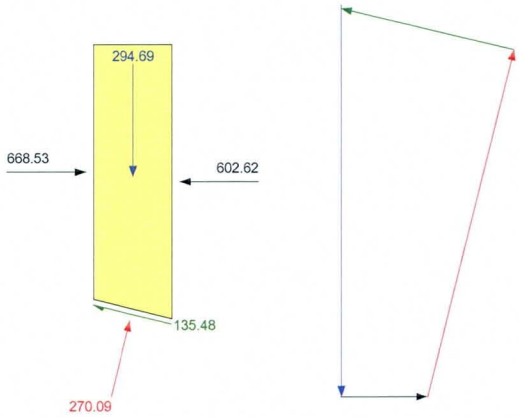

Slice 23 - Janbu Method

Factor of Safety	1.553
Phi Angle	34
C (Strength)	150
C (Force)	85.728
Pore Water Pressure	140.35
Pore Water Force	80.215
Pore Air Pressure	0
Pore Air Force	0
Slice Width	0.55916
Mid-Height	3.8612
Base Length	0.57152
Base Angle	11.938
Polygon Closure	1.3268
Anisotropic Strength Modifier	1
Weight	265.37
Base Shear Force	126.58
Base Normal Force	244.55
Left Side Normal Force	602.62
Right Side Normal Force	529.78

Slice 23 - Janbu Method

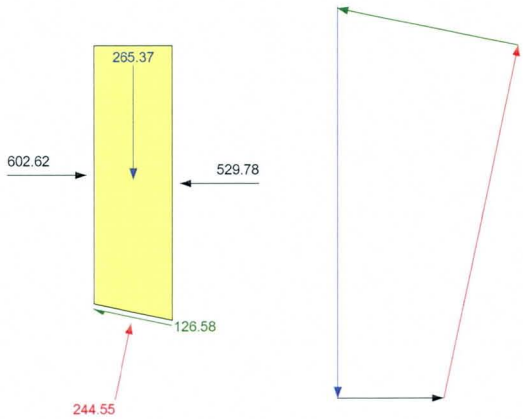

Slice 24 - Janbu Method

Factor of Safety	1.553
Phi Angle	34
C (Strength)	150
C (Force)	85.15
Pore Water Pressure	129.65
Pore Water Force	73.6
Pore Air Pressure	0
Pore Air Force	0
Slice Width	0.55915
Mid-Height	3.4101
Base Length	0.56767
Base Angle	9.9386
Polygon Closure	1.1731
Anisotropic Strength Modifier	1
Weight	234.62
Base Shear Force	117.41
Base Normal Force	217.68
Left Side Normal Force	529.78
Right Side Normal Force	452.09

Slice 24 - Janbu Method

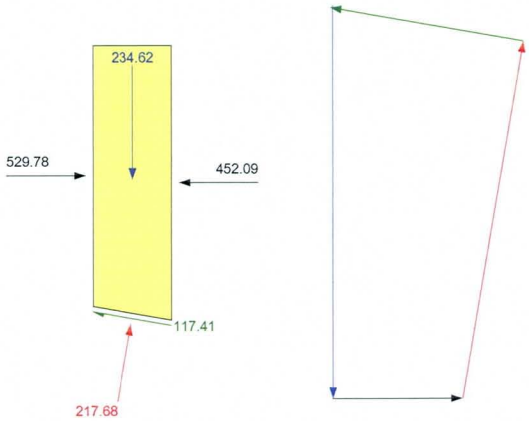

Slice 25 - Janbu Method

Factor of Safety	1.553
Phi Angle	34
C (Strength)	150
C (Force)	84.687
Pore Water Pressure	117.7
Pore Water Force	66.449
Pore Air Pressure	0
Pore Air Force	0
Slice Width	0.55915
Mid-Height	2.9389
Base Length	0.56458
Base Angle	7.9514
Polygon Closure	1.0123
Anisotropic Strength Modifier	1
Weight	202.47
Base Shear Force	107.94
Base Normal Force	189.41
Left Side Normal Force	452.09
Right Side Normal Force	371.75

Slice 25 - Janbu Method

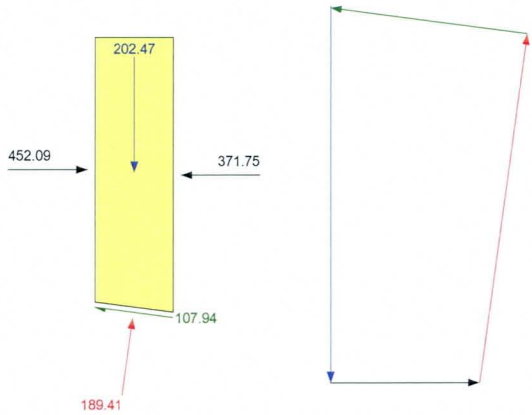

Slice 26 - Janbu Method

Factor of Safety	1.553
Phi Angle	34
C (Strength)	150
C (Force)	84.331
Pore Water Pressure	99.795
Pore Water Force	56.105
Pore Air Pressure	0
Pore Air Force	0
Slice Width	0.55915
Mid-Height	2.4481
Base Length	0.5622
Base Angle	5.9737
Polygon Closure	1.6873
Anisotropic Strength Modifier	1
Weight	168.73
Base Shear Force	99.129
Base Normal Force	159.31
Left Side Normal Force	371.75
Right Side Normal Force	290.06

Slice 26 - Janbu Method

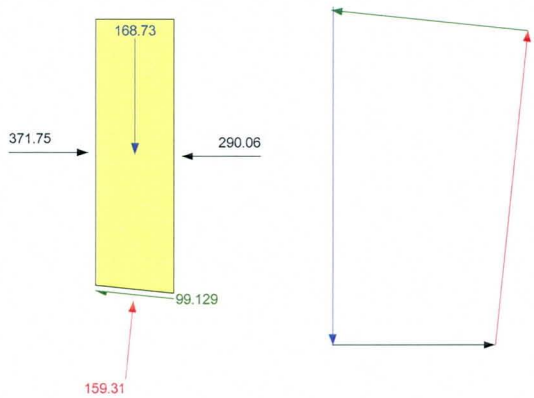

Slice 27 - Janbu Method

Factor of Safety	1.553
Phi Angle	34
C (Strength)	150
C (Force)	84.078
Pore Water Pressure	79.578
Pore Water Force	44.605
Pore Air Pressure	0
Pore Air Force	0
Slice Width	0.55915
Mid-Height	1.9377
Base Length	0.56052
Base Angle	4.0033
Polygon Closure	0.6679
Anisotropic Strength Modifier	1
Weight	133.58
Base Shear Force	90.194
Base Normal Force	127.62
Left Side Normal Force	290.06
Right Side Normal Force	209.28

Slice 27 - Janbu Method

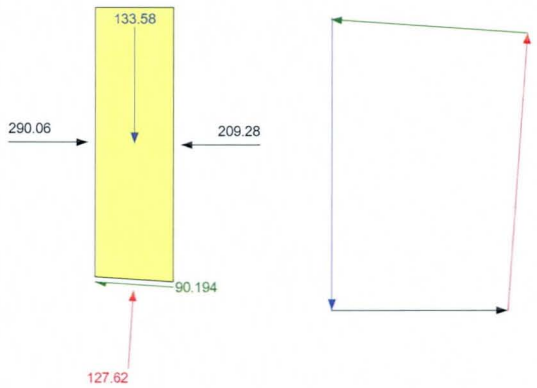

Slice 28 - Janbu Method

Factor of Safety	1.553
Phi Angle	34
C (Strength)	150
C (Force)	83.927
Pore Water Pressure	58.156
Pore Water Force	32.539
Pore Air Pressure	0
Pore Air Force	0
Slice Width	0.55916
Mid-Height	1.4081
Base Length	0.55951
Base Angle	2.0375
Polygon Closure	0.97083
Anisotropic Strength Modifier	1
Weight	97.083
Base Shear Force	80.857
Base Normal Force	94.277
Left Side Normal Force	209.28
Right Side Normal Force	132.08

Slice 28 - Janbu Method

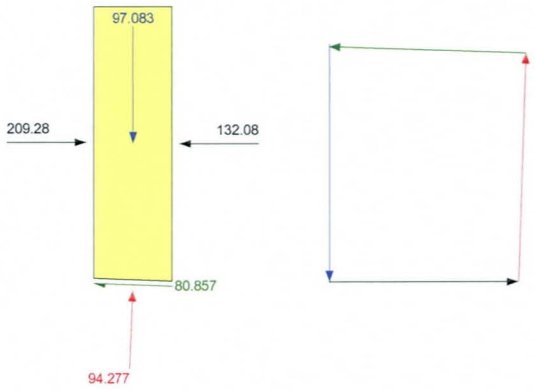

Slice 29 - Janbu Method

Factor of Safety	1.553
Phi Angle	34
C (Strength)	150
C (Force)	83.873
Pore Water Pressure	35.538
Pore Water Force	19.871
Pore Air Pressure	0
Pore Air Force	0
Slice Width	0.55915
Mid-Height	0.8592
Base Length	0.55915
Base Angle	0.074158
Polygon Closure	0.35535
Anisotropic Strength Modifier	1
Weight	59.243
Base Shear Force	71.07
Base Normal Force	59.152
Left Side Normal Force	132.08
Right Side Normal Force	61.298

Slice 29 - Janbu Method

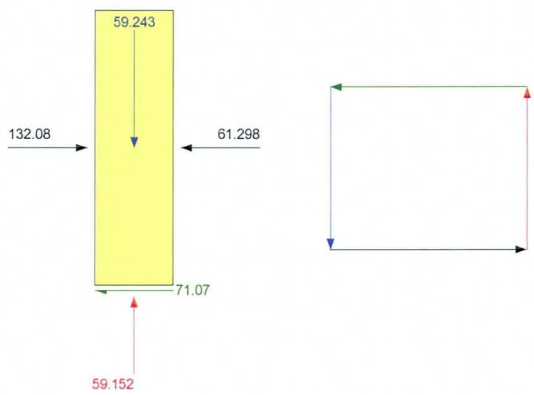

Slice 30 - Janbu Method

Factor of Safety	1.553
Phi Angle	34
C (Strength)	150
C (Force)	83.918
Pore Water Pressure	11.724
Pore Water Force	6.559
Pore Air Pressure	0
Pore Air Force	0
Slice Width	0.55915
Mid-Height	0.2912
Base Length	0.55945
Base Angle	1.8892
Polygon Closure	0.30649
Anisotropic Strength Modifier	1
Weight	20.064
Base Shear Force	60.777
Base Normal Force	22.074
Left Side Normal Force	61.298

Slice 30 - Janbu Method

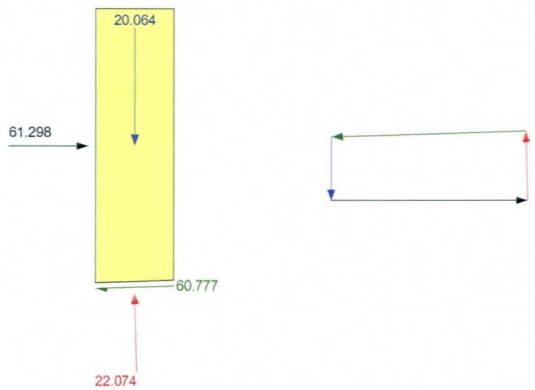

Description: Stage 2 Backfill
File Name: 13666 Mondrian Staged two third.slp
Last Saved Date: 10/7/2004
Last Saved Time: 5:53:01 PM
Analysis Method: Janbu
Direction of Slip Movement: Left to Right
Slip Surface Option: Grid and Radius
P.W.P. Option: Piezometric lines with Ru

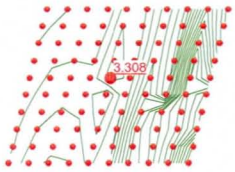

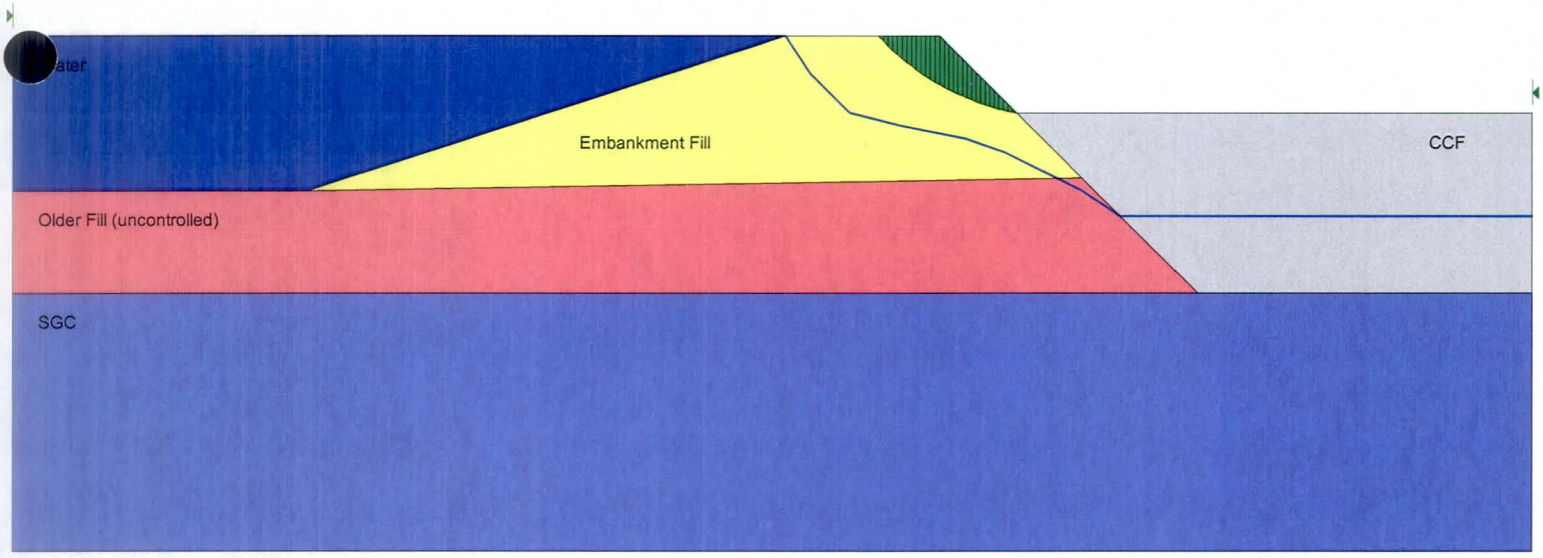

Slice 1 - Janbu Method

Factor of Safety	3.3075
Phi Angle	36
C (Strength)	200
C (Force)	106.22
Pore Water Pressure	0
Pore Water Force	0
Pore Air Pressure	0
Pore Air Force	0
Slice Width	0.36724
Mid-Height	0.19439
Base Length	0.53112
Base Angle	46.255
Polygon Closure	0.15991
Anisotropic Strength Modifier	1
Weight	8.5663
Base Shear Force	28.328
Base Normal Force	17.245
Right Side Normal Force	31.982

Slice 1 - Janbu Method

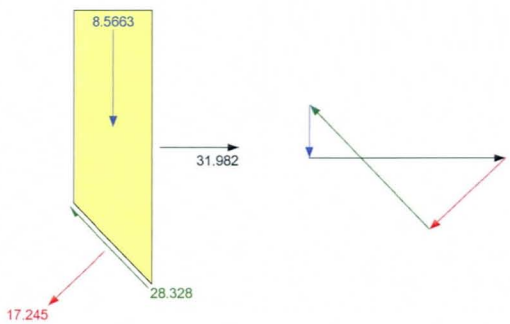

Slice 2 - Janbu Method

Factor of Safety	3.3075
Phi Angle	36
C (Strength)	200
C (Force)	103.43
Pore Water Pressure	0
Pore Water Force	0
Pore Air Pressure	0
Pore Air Force	0
Slice Width	0.36723
Mid-Height	0.5681
Base Length	0.51715
Base Angle	44.757
Polygon Closure	0.32032
Anisotropic Strength Modifier	1
Weight	25.035
Base Shear Force	32.032
Base Normal Force	3.4561
Left Side Normal Force	31.982
Right Side Normal Force	52.232

Slice 2 - Janbu Method

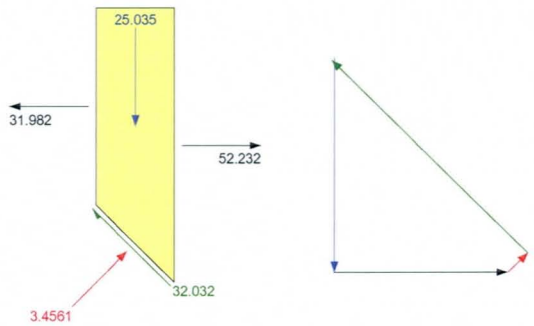

Slice 3 - Janbu Method

Factor of Safety	3.3075
Phi Angle	36
C (Strength)	200
C (Force)	100.91
Pore Water Pressure	0
Pore Water Force	0
Pore Air Pressure	0
Pore Air Force	0
Slice Width	0.36724
Mid-Height	0.92301
Base Length	0.50457
Base Angle	43.296
Polygon Closure	0.20338
Anisotropic Strength Modifier	1
Weight	40.676
Base Shear Force	35.443
Base Normal Force	22.451
Left Side Normal Force	52.232
Right Side Normal Force	62.571

Slice 3 - Janbu Method

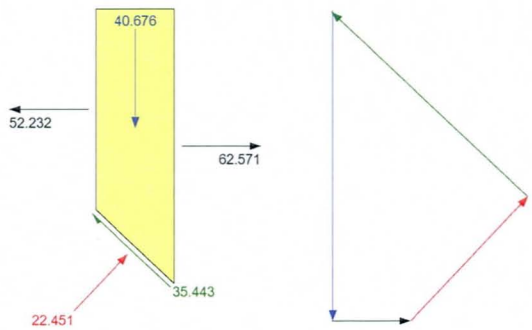

Slice 4 - Janbu Method

Factor of Safety	3.3075
Phi Angle	36
C (Strength)	200
C (Force)	98.631
Pore Water Pressure	0
Pore Water Force	0
Pore Air Pressure	0
Pore Air Force	0
Slice Width	0.36723
Mid-Height	1.2605
Base Length	0.49316
Base Angle	41.871
Polygon Closure	0.55546
Anisotropic Strength Modifier	1
Weight	55.546
Base Shear Force	38.598
Base Normal Force	39.955
Left Side Normal Force	62.571
Right Side Normal Force	64.588

Slice 4 - Janbu Method

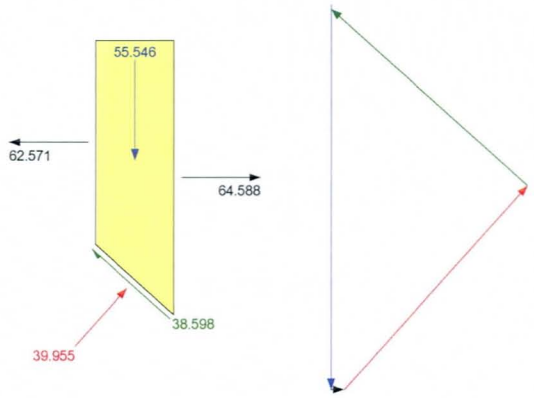

Slice 5 - Janbu Method

Factor of Safety	3.3075
Phi Angle	36
C (Strength)	200
C (Force)	96.555
Pore Water Pressure	0
Pore Water Force	0
Pore Air Pressure	0
Pore Air Force	0
Slice Width	0.36724
Mid-Height	1.5816
Base Length	0.48278
Base Angle	40.475
Polygon Closure	0.34849
Anisotropic Strength Modifier	1
Weight	69.699
Base Shear Force	41.526
Base Normal Force	56.147
Left Side Normal Force	64.588
Right Side Normal Force	59.678

Slice 5 - Janbu Method

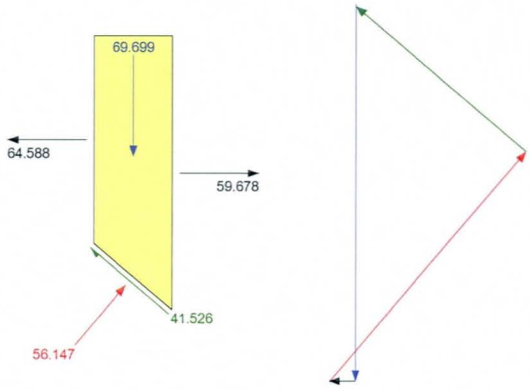

Slice 6 - Janbu Method

Factor of Safety	3.3075
Phi Angle	36
C (Strength)	200
C (Force)	94.656
Pore Water Pressure	0
Pore Water Force	0
Pore Air Pressure	0
Pore Air Force	0
Slice Width	0.36724
Mid-Height	1.8875
Base Length	0.47328
Base Angle	39.109
Polygon Closure	0.83177
Anisotropic Strength Modifier	1
Weight	83.177
Base Shear Force	44.253
Base Normal Force	71.175
Left Side Normal Force	59.678
Right Side Normal Force	49.072

Slice 6 - Janbu Method

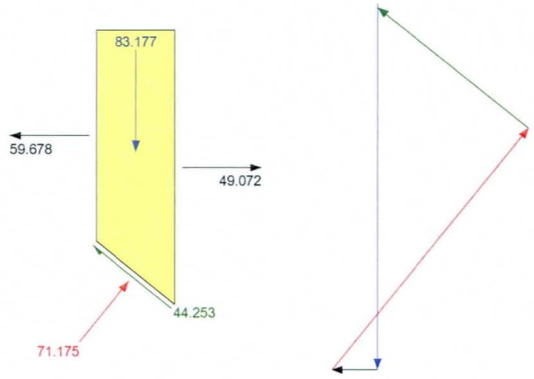

Slice 7 - Janbu Method

Factor of Safety	3.3075
Phi Angle	36
C (Strength)	200
C (Force)	92.913
Pore Water Pressure	0
Pore Water Force	0
Pore Air Pressure	0
Pore Air Force	0
Slice Width	0.36723
Mid-Height	2.1789
Base Length	0.46456
Base Angle	37.77
Polygon Closure	0.9602
Anisotropic Strength Modifier	1
Weight	96.02
Base Shear Force	46.8
Base Normal Force	85.164
Left Side Normal Force	49.072
Right Side Normal Force	33.864

Slice 7 - Janbu Method

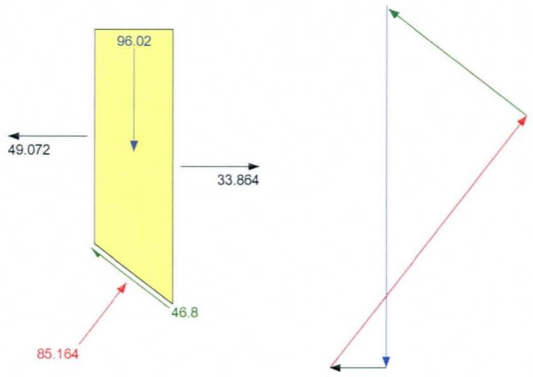

Slice 8 - Janbu Method

Factor of Safety	3.3075
Phi Angle	36
C (Strength)	200
C (Force)	91.313
Pore Water Pressure	0
Pore Water Force	0
Pore Air Pressure	0
Pore Air Force	0
Slice Width	0.36724
Mid-Height	2.4567
Base Length	0.45656
Base Angle	36.453
Polygon Closure	1.0826
Anisotropic Strength Modifier	1
Weight	108.26
Base Shear Force	49.184
Base Normal Force	98.222
Left Side Normal Force	33.864
Right Side Normal Force	15.032

Slice 8 - Janbu Method

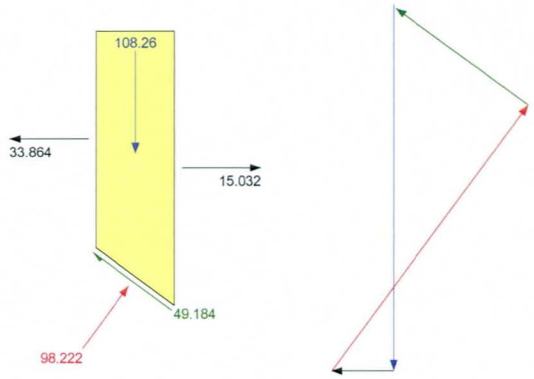

Slice 9 - Janbu Method

Factor of Safety	3.3075
Phi Angle	36
C (Strength)	200
C (Force)	89.837
Pore Water Pressure	0
Pore Water Force	0
Pore Air Pressure	0
Pore Air Force	0
Slice Width	0.36724
Mid-Height	2.7216
Base Length	0.44918
Base Angle	35.157
Polygon Closure	1.1994
Anisotropic Strength Modifier	1
Weight	119.94
Base Shear Force	51.421
Base Normal Force	110.44
Left Side Normal Force	15.032
Right Side Normal Force	6.5482

Slice 9 - Janbu Method

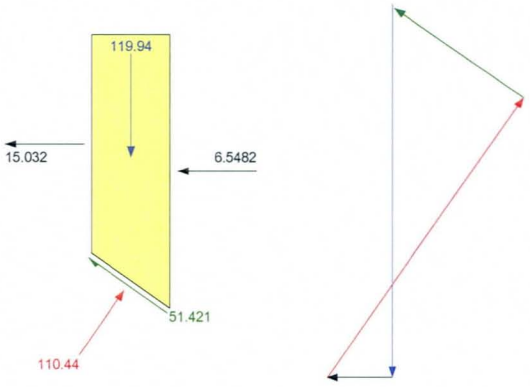

Slice 10 - Janbu Method

Factor of Safety	3.3075
Phi Angle	36
C (Strength)	200
C (Force)	88.471
Pore Water Pressure	0
Pore Water Force	0
Pore Air Pressure	0
Pore Air Force	0
Slice Width	0.36723
Mid-Height	2.9742
Base Length	0.44236
Base Angle	33.884
Polygon Closure	1.3107
Anisotropic Strength Modifier	1
Weight	131.07
Base Shear Force	53.524
Base Normal Force	121.89
Left Side Normal Force	6.5482
Right Side Normal Force	30.088

Slice 10 - Janbu Method

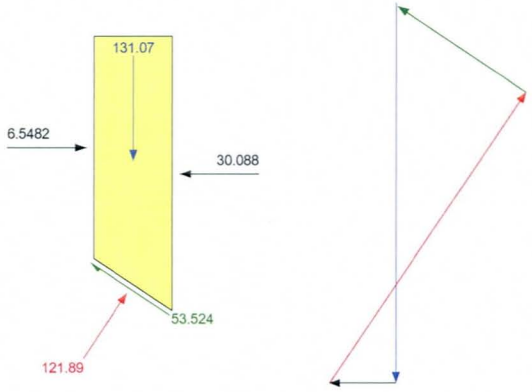

Slice 11 - Janbu Method

Factor of Safety	3.3075
Phi Angle	36
C (Strength)	200
C (Force)	87.211
Pore Water Pressure	0
Pore Water Force	0
Pore Air Pressure	0
Pore Air Force	0
Slice Width	0.36724
Mid-Height	3.215
Base Length	0.43605
Base Angle	32.628
Polygon Closure	0.7084
Anisotropic Strength Modifier	1
Weight	141.68
Base Shear Force	55.505
Base Normal Force	132.65
Left Side Normal Force	30.088
Right Side Normal Force	54.876

Slice 11 - Janbu Method

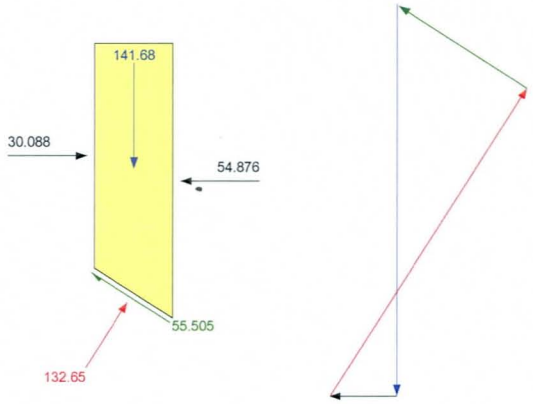

Slice 12 - Janbu Method

Factor of Safety	3.3075
Phi Angle	36
C (Strength)	200
C (Force)	86.038
Pore Water Pressure	0
Pore Water Force	0
Pore Air Pressure	0
Pore Air Force	0
Slice Width	0.36723
Mid-Height	3.4445
Base Length	0.43019
Base Angle	31.39
Polygon Closure	0.75895
Anisotropic Strength Modifier	1
Weight	151.79
Base Shear Force	57.375
Base Normal Force	142.77
Left Side Normal Force	54.876
Right Side Normal Force	80.266

Slice 12 - Janbu Method

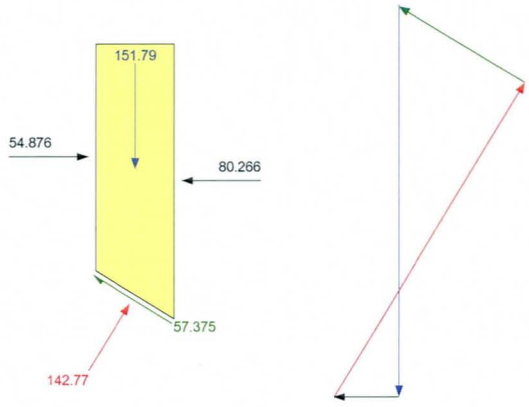

Slice 13 - Janbu Method

Factor of Safety	3.3075
Phi Angle	36
C (Strength)	200
C (Force)	84.954
Pore Water Pressure	0
Pore Water Force	0
Pore Air Pressure	0
Pore Air Force	0
Slice Width	0.36724
Mid-Height	3.6632
Base Length	0.42477
Base Angle	30.168
Polygon Closure	1.6143
Anisotropic Strength Modifier	1
Weight	161.43
Base Shear Force	59.141
Base Normal Force	152.3
Left Side Normal Force	80.266
Right Side Normal Force	105.67

Slice 13 - Janbu Method

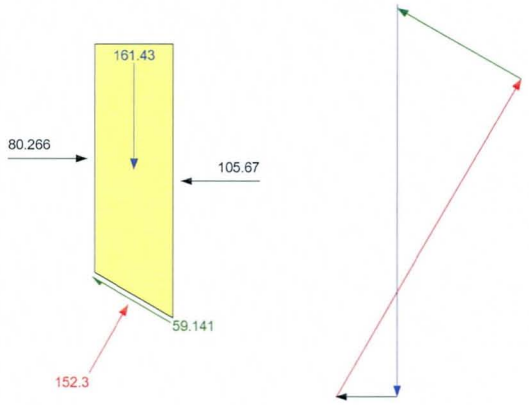

Slice 14 - Janbu Method

Factor of Safety	3.3075
Phi Angle	36
C (Strength)	200
C (Force)	80.644
P[illegible] Water Pressure	0
P[illegible] Water Force	0
Pore Air Pressure	0
Pore Air Force	0
Slice Width	0.35272
Mid-Height	3.6911
Base Length	0.40322
Base Angle	28.984
Polygon Closure	1.5623
Anisotropic Strength Modifier	1
Weight	156.23
Base Shear Force	56.706
Base Normal Force	147.15
Left Side Normal Force	105.67
Right Side Normal Force	127.36

Slice 14 - Janbu Method

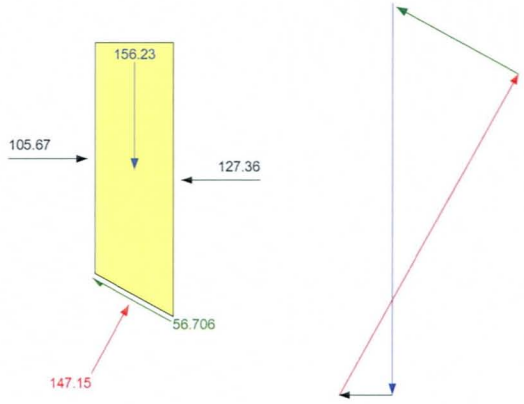

Slice 15 - Janbu Method

Factor of Safety	3.3075
Phi Angle	36
C (Strength)	200
C (Force)	79.775
Pore Water Pressure	0
Pore Water Force	0
Pore Air Pressure	0
Pore Air Force	0
Slice Width	0.35271
Mid-Height	3.5292
Base Length	0.39888
Base Angle	27.839
Polygon Closure	0.7469
Anisotropic Strength Modifier	1
Weight	149.38
Base Shear Force	54.856
Base Normal Force	139.92
Left Side Normal Force	127.36
Right Side Normal Force	144.18

Slice 15 - Janbu Method

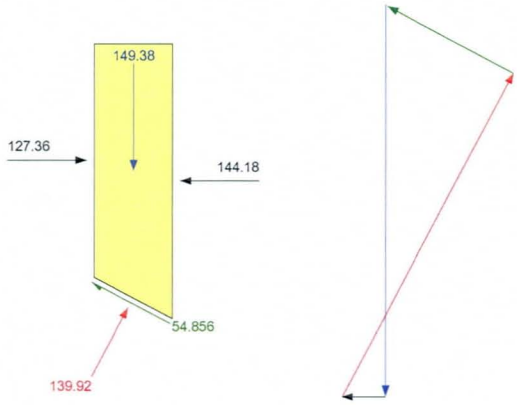

Slice 16 - Janbu Method

Factor of Safety	3.3075
Phi Angle	36
C (Strength)	200
C (Force)	78.966
Pore Water Pressure	0
Pore Water Force	0
Pore Air Pressure	0
Pore Air Force	0
Slice Width	0.35272
Mid-Height	3.3583
Base Length	0.39483
Base Angle	26.703
Polygon Closure	0.7107
Anisotropic Strength Modifier	1
Weight	142.14
Base Shear Force	52.967
Base Normal Force	132.44
Left Side Normal Force	144.18
Right Side Normal Force	156.36

Slice 16 - Janbu Method

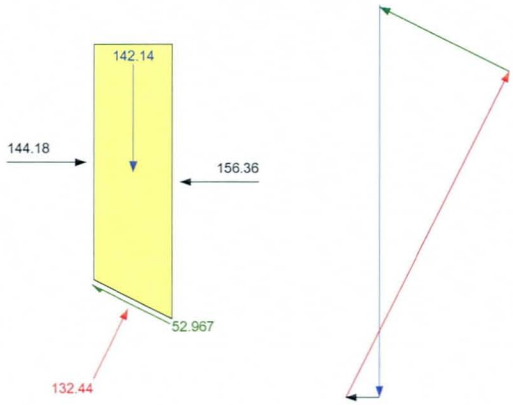

Slice 17 - Janbu Method

Factor of Safety	3.3075
Phi Angle	36
C (Strength)	200
C (Force)	78.208
Pore Water Pressure	0
Pore Water Force	0
Pore Air Pressure	0
Pore Air Force	0
Slice Width	0.35271
Mid-Height	3.1787
Base Length	0.39104
Base Angle	25.582
Polygon Closure	1.3454
Anisotropic Strength Modifier	1
Weight	134.54
Base Shear Force	51.038
Base Normal Force	124.7
Left Side Normal Force	156.36
Right Side Normal Force	164.14

Slice 17 - Janbu Method

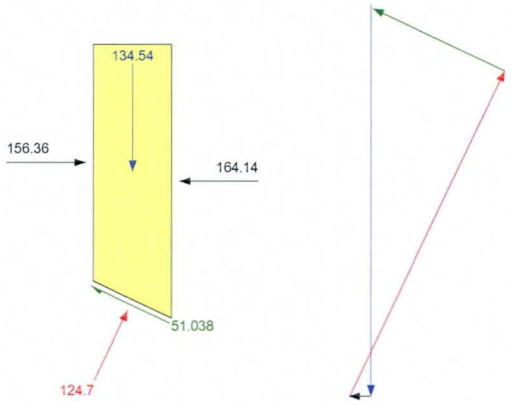

Slice 18 - Janbu Method

Factor of Safety	3.3075
Phi Angle	36
C (Strength)	200
C (Force)	77.504
Pore Water Pressure	0
Pore Water Force	0
Pore Air Pressure	0
Pore Air Force	0
Slice Width	0.35272
Mid-Height	2.9906
Base Length	0.38752
Base Angle	24.467
Polygon Closure	1.2658
Anisotropic Strength Modifier	1
Weight	126.58
Base Shear Force	49.071
Base Normal Force	116.71
Left Side Normal Force	164.14
Right Side Normal Force	167.79

Slice 18 - Janbu Method

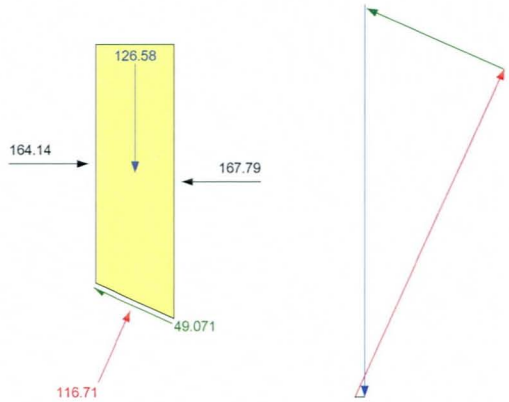

Slice 19 - Janbu Method

Factor of Safety	3.3075
Phi Angle	36
C (Strength)	200
C (Force)	76.844
Pore Water Pressure	0
Pore Water Force	0
Pore Air Pressure	0
Pore Air Force	0
Slice Width	0.35271
Mid-Height	2.7943
Base Length	0.38422
Base Angle	23.366
Polygon Closure	1.1827
Anisotropic Strength Modifier	1
Weight	118.27
Base Shear Force	47.063
Base Normal Force	108.48
Left Side Normal Force	167.79
Right Side Normal Force	167.58

Slice 19 - Janbu Method

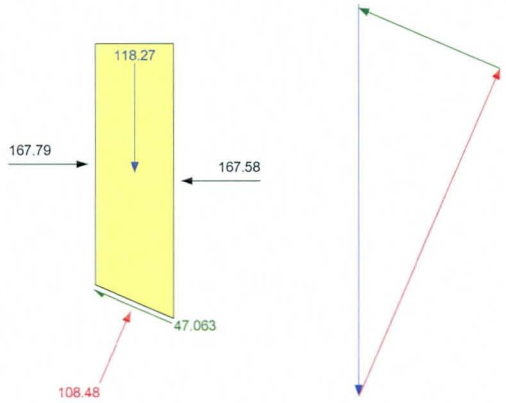

Slice 20 - Janbu Method

Factor of Safety	3.3075
Phi Angle	36
C (Strength)	200
C (Force)	76.23
Pore Water Pressure	0
Pore Water Force	0
Pore Air Pressure	0
Pore Air Force	0
Slice Width	0.35272
Mid-Height	2.59
Base Length	0.38115
Base Angle	22.271
Polygon Closure	0.5481
Anisotropic Strength Modifier	1
Weight	109.62
Base Shear Force	45.015
Base Normal Force	100
Left Side Normal Force	167.58
Right Side Normal Force	163.79

Slice 20 - Janbu Method

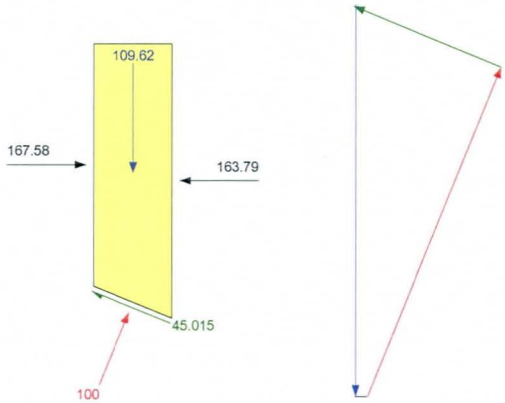

Slice 21 - Janbu Method

Factor of Safety	3.3075
Phi Angle	36
C (Strength)	200
C (Force)	75.656
Pore Water Pressure	0
Pore Water Force	0
Pore Air Pressure	0
Pore Air Force	0
Slice Width	0.35271
Mid-Height	2.3778
Base Length	0.37828
Base Angle	21.186
Polygon Closure	1.0064
Anisotropic Strength Modifier	1
Weight	100.64
Base Shear Force	42.926
Base Normal Force	91.282
Left Side Normal Force	163.79
Right Side Normal Force	156.72

Slice 21 - Janbu Method

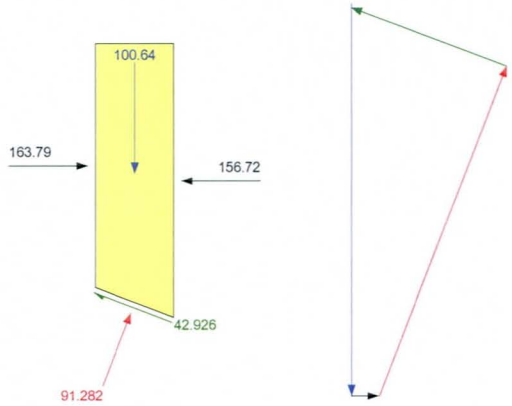

Slice 22 - Janbu Method

Factor of Safety	3.3075
Phi Angle	36
C (Strength)	200
C (Force)	75.122
Pore Water Pressure	0
Pore Water Force	0
Pore Air Pressure	0
Pore Air Force	0
Slice Width	0.35272
Mid-Height	2.158
Base Length	0.37561
Base Angle	20.108
Polygon Closure	0.4567
Anisotropic Strength Modifier	1
Weight	91.34
Base Shear Force	40.795
Base Normal Force	82.316
Left Side Normal Force	156.72
Right Side Normal Force	146.68

Slice 22 - Janbu Method

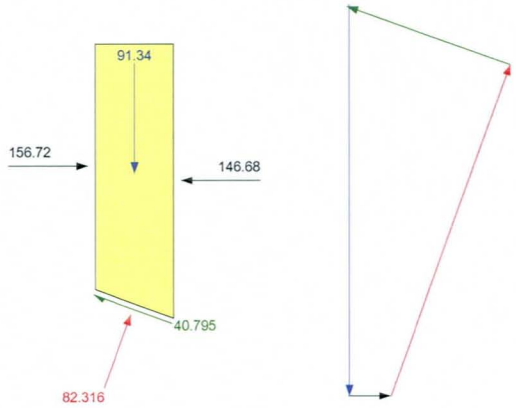

Slice 23 - Janbu Method

Factor of Safety	3.3075
Phi Angle	36
C (Strength)	200
C (Force)	74.624
Pore Water Pressure	0
Pore Water Force	0
Pore Air Pressure	0
Pore Air Force	0
Slice Width	0.35271
Mid-Height	1.9307
Base Length	0.37312
Base Angle	19.038
Polygon Closure	0.81719
Anisotropic Strength Modifier	1
Weight	81.719
Base Shear Force	38.621
Base Normal Force	73.104
Left Side Normal Force	146.68
Right Side Normal Force	133.98

Slice 23 - Janbu Method

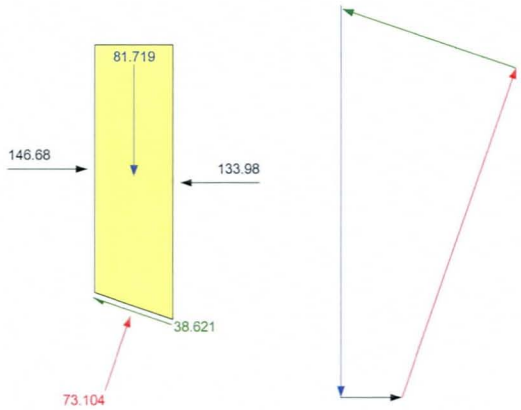

Slice 24 - Janbu Method

Factor of Safety	3.3075
Phi Angle	36
C (Strength)	200
C (Force)	74.164
Pore Water Pressure	0
Pore Water Force	0
Pore Air Pressure	0
Pore Air Force	0
Slice Width	0.35272
Mid-Height	1.6961
Base Length	0.37082
Base Angle	17.974
Polygon Closure	0.35893
Anisotropic Strength Modifier	1
Weight	71.787
Base Shear Force	36.403
Base Normal Force	63.646
Left Side Normal Force	133.98
Right Side Normal Force	118.96

Slice 24 - Janbu Method

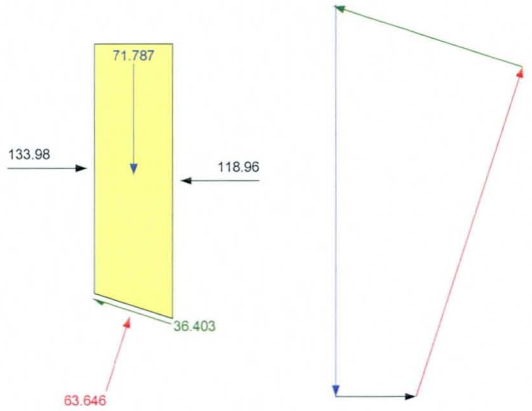

Slice 25 - Janbu Method

Factor of Safety	3.3075
Phi Angle	36
C (Strength)	200
C (Force)	73.732
Pore Water Pressure	0
Pore Water Force	0
Pore Air Pressure	0
Pore Air Force	0
Slice Width	0.35271
Mid-Height	1.4542
Base Length	0.36866
Base Angle	16.918
Polygon Closure	0.30774
Anisotropic Strength Modifier	1
Weight	61.549
Base Shear Force	34.141
Base Normal Force	53.936
Left Side Normal Force	118.96
Right Side Normal Force	101.96

Slice 25 - Janbu Method

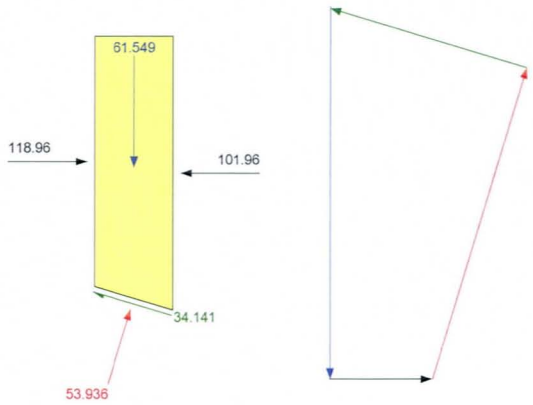

Slice 26 - Janbu Method

Factor of Safety	3.3075
Phi Angle	36
C (Strength)	200
C (Force)	73.339
Pore Water Pressure	0
Pore Water Force	0
Pore Air Pressure	0
Pore Air Force	0
Slice Width	0.35272
Mid-Height	1.2052
Base Length	0.36669
Base Angle	15.868
Polygon Closure	0.51012
Anisotropic Strength Modifier	1
Weight	51.012
Base Shear Force	31.833
Base Normal Force	43.974
Left Side Normal Force	101.96
Right Side Normal Force	83.327

Slice 26 - Janbu Method

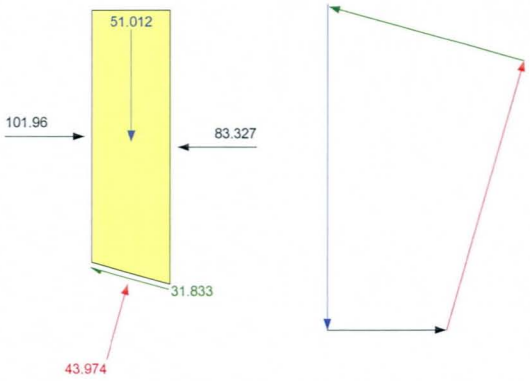

Slice 27 - Janbu Method

Factor of Safety	3.3075
Phi Angle	36
C (Strength)	200
C (Force)	72.971
Pore Water Pressure	0
Pore Water Force	0
Pore Air Pressure	0
Pore Air Force	0
Slice Width	0.35272
Mid-Height	0.94928
Base Length	0.36486
Base Angle	14.821
Polygon Closure	0.20089
Anisotropic Strength Modifier	1
Weight	40.179
Base Shear Force	29.477
Base Normal Force	33.753
Left Side Normal Force	83.327
Right Side Normal Force	63.432

Slice 27 - Janbu Method

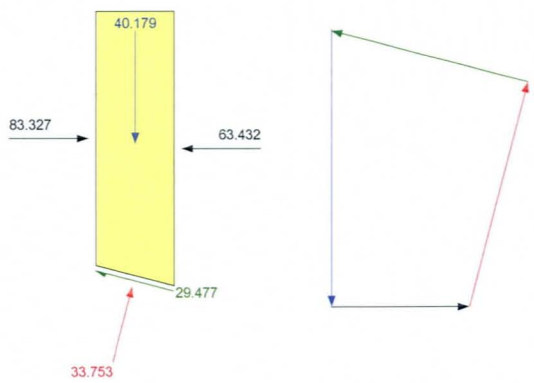

Slice 28 - Janbu Method

Factor of Safety	3.3075
Phi Angle	36
C (Strength)	200
C (Force)	72.634
Pore Water Pressure	0
Pore Water Force	0
Pore Air Pressure	0
Pore Air Force	0
Slice Width	0.35271
Mid-Height	0.68648
Base Length	0.36317
Base Angle	13.781
Polygon Closure	0.14528
Anisotropic Strength Modifier	1
Weight	29.056
Base Shear Force	27.072
Base Normal Force	23.269
Left Side Normal Force	63.432
Right Side Normal Force	42.651

Slice 28 - Janbu Method

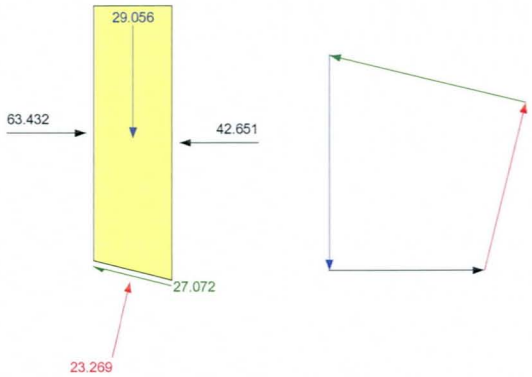

Slice 29 - Janbu Method

Factor of Safety	3.3075
Phi Angle	36
C (Strength)	200
C (Force)	72.325
Pore Water Pressure	0
Pore Water Force	0
Pore Air Pressure	0
Pore Air Force	0
Slice Width	0.35271
Mid-Height	0.41689
Base Length	0.36162
Base Angle	12.744
Polygon Closure	0.12308
Anisotropic Strength Modifier	1
Weight	17.645
Base Shear Force	24.617
Base Normal Force	12.516
Left Side Normal Force	42.651
Right Side Normal Force	21.373

Slice 29 - Janbu Method

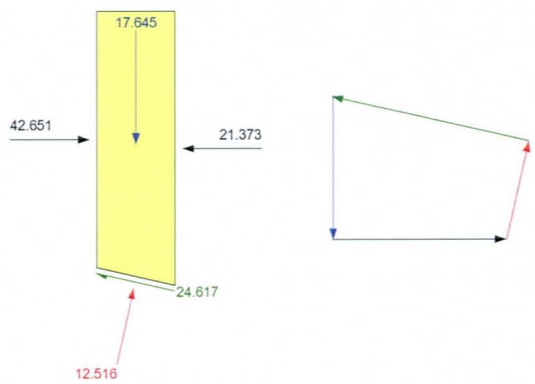

Slice 30 - Janbu Method

Factor of Safety	3.3075
Phi Angle	36
C (Strength)	200
C (Force)	72.043
Pore Water Pressure	0
Pore Water Force	0
Pore Air Pressure	0
Pore Air Force	0
Slice Width	0.35271
Mid-Height	0.14062
Base Length	0.36022
Base Angle	11.713
Polygon Closure	0.11054
Anisotropic Strength Modifier	1
Weight	5.9519
Base Shear Force	22.109
Base Normal Force	1.489
Left Side Normal Force	21.373
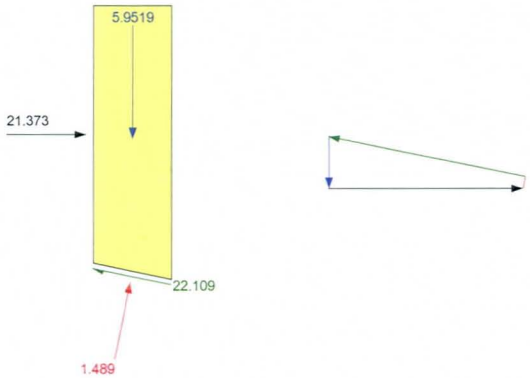
Slice 30 - Janbu Method