CRSS

Preliminary Technical Data Notebook (TDN)

Salt River Channelization
Floodplain Delineation Study
48th Street to Southern Pacific Railroad Salt River Bridge

Project No. 906345B
Salt River Flood Plain Revisions

Property of
Flood Control District of MC Library
Please Return to
2801 W. Durango
Phoenix, AZ 85009

Prepared for

Rio Salado Task Force
City of Tempe
Tempe, Arizona

by

CRSS Civil Engineers, Inc.
4041 North Central Avenue, Suite 650
Phoenix, Arizona 85012

March 1992

Project No. 906345B
Salt River Flood Plain Revisions

Preliminary Technical Data Notebook (TDN)

Salt River Channelization
Floodplain Delineation Study
48th Street to
Southern Pacific Railroad
Salt River Bridge

Registered Professional Engineer (Civil)
CERTIFICATE NO.
20207
GEORGE K.
COTTON
Date Signed 4/6/92
ARIZONA, U.S.A.

DOCUMENTATION ABSTRACTS

SECTION 1: GENERAL INFORMATION

SECTION 2: MAPPING INFORMATION

SECTION 3: HYDROLOGY

SECTION 4: HYDRAULICS

STUDY DOCUMENTATION ABSTRACT	INITIAL STUDY		RESTUDY		LOMR		OTHER		Page 1

SECTION 1: GENERAL INFORMATION		
1A	COMMUNITY	City of Tempe
1B	COMMUNITY NUMBER	040054
1C	COUNTY	Maricopa
1D	STATE	Arizona
1E	DATE STUDY ACCEPTED	
1F	STUDY CONTRACTOR CONTACT(S) ADDRESS PHONE INTERNAL REF #	CRSS Civil Engineers, Inc. George K. Cotton, Project Manager 4041 N. Central Ave., Suite 650 Phoenix, Arizona 85012 (602) 263-5309
1G	TECH. REVIEWER (FEMA) PHONE	
1H	FEMA REGIONAL REVIEWER PHONE	
1I	STATE REVIEWER PHONE	
1J	LOCAL REVIEWER PHONE	James E. Bond, Senior Civil Engineer City of Tempe 602/350-8897
1K	RIVER OR STREAM NAME	Salt River
1L	REACH DESCRIPTION (FIRM PANEL & EPA REACH #)	Firm Panel Nos. 2155 & 2165 of 4350
1M	STUDY TYPE (Riverine, Alluvial Fan, etc)	Riverine
SECTION 2: MAPPING INFORMATION		
2A	USGS QUAD SHEET(S)	Tempe
2B	MAPPING FOR HYDROLOGIC STUDY TYPE/SOURCE SCALE DATE	Hydrologic Study by Others, Reference: Corps of Engineers, Los Angeles District, "Study for Flood Control Alternatives to Cliff Dam," October 1988 N/A N/A
2C	MAPPING FOR HYDRAULIC STUDY TYPE/SOURCE SCALE DATE SUBCONTRACTOR (AERIAL) DATE OF AERIAL MAPPING	Digital Elevation/ Planimetric; Aerial Survey 1:600 Horizontal ±0.25'Vertical December 15, 1988 McLain Harbers Co., Inc. Tucson, Arizona

STUDY DOCUMENTATION ABSTRACT		Page 2
SECTION 3: HYDROLOGY		
3A	MODEL OR METHOD USED (including vendor and version description)	COE Study for Flood Control Alternatives to Cliff Dam.
3B	STORM DURATION	n/a
3C	HYETOGRAPH TYPE	n/a
3D	FREQUENCIES DETERMINED	5, 10, 25, 50, 100, SPF, 500
3E	LIST OF GAGES USED IN FREQUENCY ANALYSIS OR CALIBRATION (Location, Years of Record, Gage Ownership)	n/a
3F	RAINFALL AMOUNTS AND REFERENCE	n/a
3G	UNIQUE CONDITIONS AND PROBLEMS	Peak flows at eastern Tempe as described by the COE study were not attenuated through downstream reaches.
3H	COORDINATION OF Q'S (agency, date, comments)	by Flood Control District of Maricopa County
SECTION 4: HYDRAULICS		
4A	MODEL OR METHOD USED (including vendor and version description)	HEC-2 : Boss version 2.0
4B	REGIME	Subcritical
4C	FREQUENCIES FOR WHICH PROFILES WERE COMPUTED	5, 10, 25, 50, 100, SPF
4D	METHOD OF FLOODWAY CALCULATION	Channelized river is considered to be the floodway.
4E	UNIQUE CONDITIONS AND PROBLEMS	

STUDY DOCUMENTATION ABSTRACT	Page 3

ADDITIONAL STUDY INFORMATION

ITEM	DESCRIPTION/DISCUSSION

Table of Contents

Page

Documentation Abstract i

SECTION I - Introduction 1

1.1 Purpose 1
1.2 Background 2

SECTION II - General Documentation & Correspondence 5

SECTION III - Mapping and Survey Information 7

SECTION IV - Hydrologic Analysis 8

SECTION V - Hydraulic Analysis 10

5.1 Description of Changed Hydraulic Conditions 10
5.2 Hydaulic Analysis 14
5.3 Data on Design for River Structures 14
5.3.1 Bank Protection 14
5.3.2 Grade Control Structures 17
5.3.3 Bridges 17
5.3.4 Maintenance Considerations 17
5.4 Data on Design for Levee System 18
5.4.1 Freeboard 18
5.4.2 Closures 18
5.4.3 Embankment Protection 23
5.4.4 Stability 23
5.4.5 Settlement 23
5.4.6 Interior Damage 23
5.4.7 Operations 24
5.4.8 Maintenance 24

SECTION VI - Erosion/Sediment Transport 25

6.1 Scour Methodology 25
6.2 Sediment Data 26

SECTION VII - Reference Materials 28

APPENDIX A - Documentation and Correspondence

APPENDIX B - Calculations

APPENDIX C - Key to Cross Section (XS) Labeling

List of Figures

Page

Figure 1 Project Vicinity Map 3
Figure 2 Project Location Map 4
Figure 3 Project Features Map 11
Figure 4 Channel Section 12
Figure 5 Bank Protection 16
Figure 6 Levee Penetration 19
Figure 7 Bed Material Gradation Samples 27

List of Tables

Page

Table 1 Discharge/Frequency Salt River at Mill Ave Bridge 8
Table 2 Revised Dowstream Stage/Discharge Rating Station 100+35 13
Table 3 Levee Penetration Design in Formation 22

I. INTRODUCTION

1.1 Purpose

The purpose of this report is to document the changes in the Salt River channel alignment, profile and section which have been constructed and are planned through the community of Tempe, Arizona (Corporate limit map) (see Figure 1). This report covers the first phase of river channel improvements which were constructed by the Arizona Department of Transportation (ADOT) in conjunction with the construction of the East Papago Freeway (Loop 202), Hohokam Expressway (State Route 143), and State Route 153. The ADOT segment of construction begins 1.06 miles west of the jurisdictional boundary between the communities of Tempe and Phoenix and terminates 1500 feet west of the Southern Pacific Railroad Salt River Bridge. The portion of the ADOT river channel improvements that are constructed within the jurisdictional limits of the City of Tempe have been incorporated by Tempe into the general plan for river corridor improvements, known as Tempe Rio Salado, which covers the entire reach of the Salt River through Tempe. Tempe subsequently retained CRSS Civil Engineers, Inc., to complete the channelization of the Salt River to the McClintock Drive bridge, which is located one-quarter mile west of the eastern City limit.

Separate letters of map revision are being submitted for two distinct reaches of the Salt River through Tempe. The two reaches are distinguished by a bedrock outcrop and the approach embankments for the Southern Pacific bridge and the Mill Avenue bridge, both of which are located on that outcrop. This report includes technical data for the reach from the beginning of the ADOT channelization project to the Southern Pacific Railroad bridge. As-built information for the ADOT project is provided and design plans for the intervening reach between the termination of the ADOT project and the Southern Pacific bridge are provided. The river reach upstream of the Southern Pacific Railroad bridge is presented as unchanged. Construction of additional channel improvements has begun for this reach; however, for the purposes of this report, the pre-construction channel condition provides the most conservative analysis of the 100-year water surface in this reach.

At least three phases of construction are currently planned for the Tempe Reach (Southern Pacific Railroad bridge to one-quarter mile east of McClintock Drive). The first phase of channel construction began January 1991 and is scheduled to be completed in July 1992. This phase includes levee and grade control construction, utility relocations, and partial channel excavation. Phase 2 is scheduled to begin July 1992 and includes levee

construction, the Indian Bend Wash confluence drop structure, and the remaining channel excavation. Phase 3 is located upstream of the McClintock Drive bridge and involves several jurisdictions in addition to Tempe. Phase 3 is in the planning stages and involves the upstream guide banks and water control features for the upstream channel reach.

1.2 Background

The planning for freeway corridors in eastern Phoenix for the East Papago Freeway evaluated several alternatives that were within the Salt River floodplain (see location map, Figure 2). Studies were prepared (SLA, 1987a: SLA, 1987b; JCE, 1987;) which evaluated the impacts of river mechanics, floodplain management and environmental conditions on the river environment. Public hearings were conducted to solicit public comment on corridor alternatives, and regular coordination meetings were conducted with affected municipal and state agencies. The preferred corridor and general plan for the highway alignment (ADOT, 1987c) included channelization of the Salt River. Channelization had the advantage of significantly reducing the length of two new Salt River bridges planned as part of the East Papago Freeway (State Route 153 and State Route 143) and a new county road bridge at Priest Drive. The lowered cost for bridge construction more than offset the estimated cost of channel construction and environmental mitigation.

The overall purpose of the channelization was to reclaim land from the Salt River floodplain and floodway for the East Papago Freeway. The operational objectives for the channel design became flood protection and channel stabilization, including erosion control. Secondary uses for the channel were also incorporated by Tempe to meet the objectives of the Rio Salado Masterplan, which included recreational use and improved aesthetics. Issues related to wildlife habitat were addressed in the 404 Permit and included replacement in-kind of lost habitat to areas adjacent to the new channel boundary.

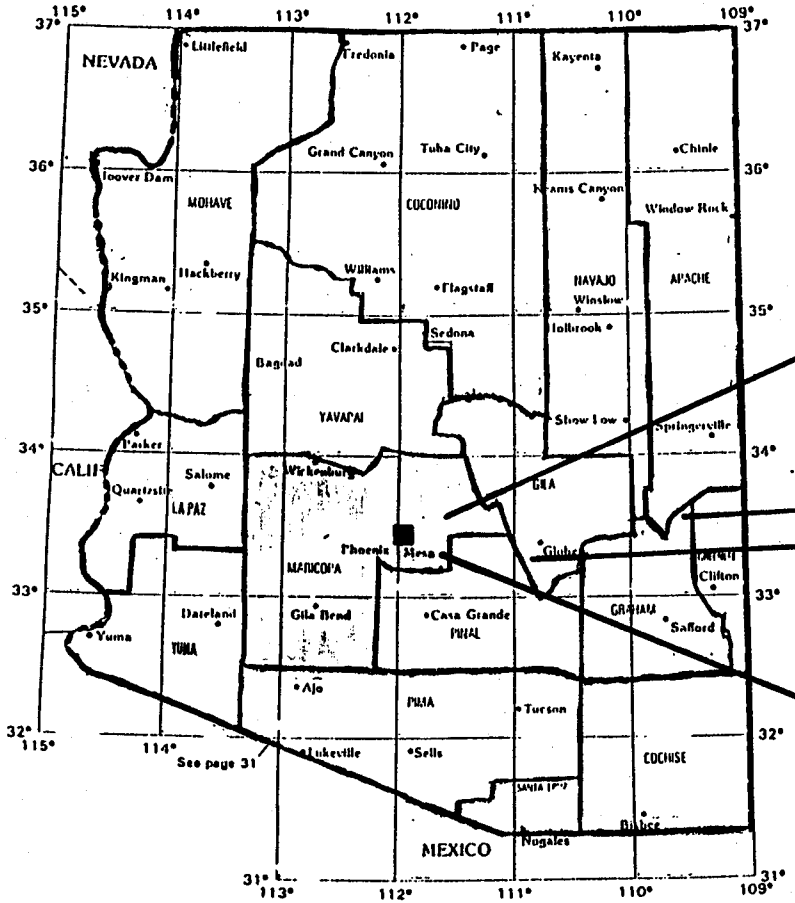

ARIZONA

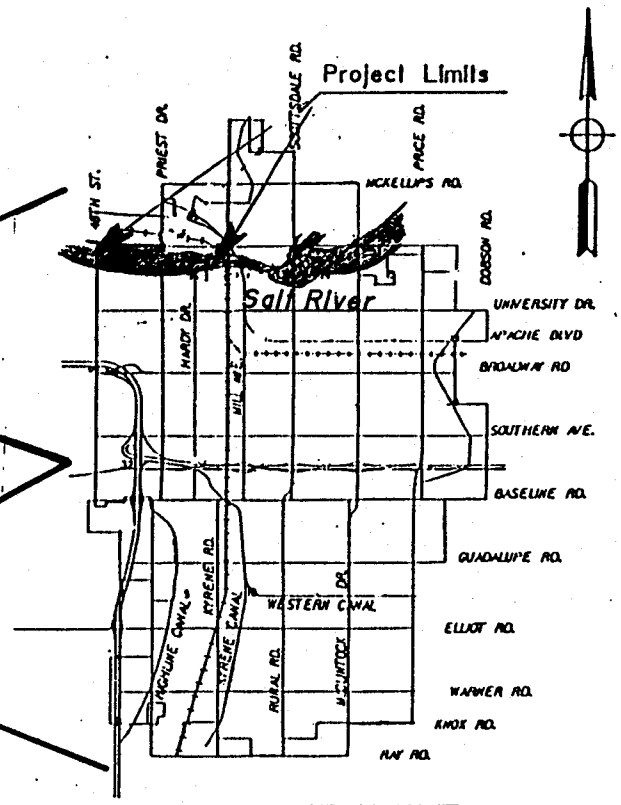

TEMPE

CRSS Civil Engineers Inc.
Phoenix , Arizona

PROJECT VICINITY MAP
FIGURE I

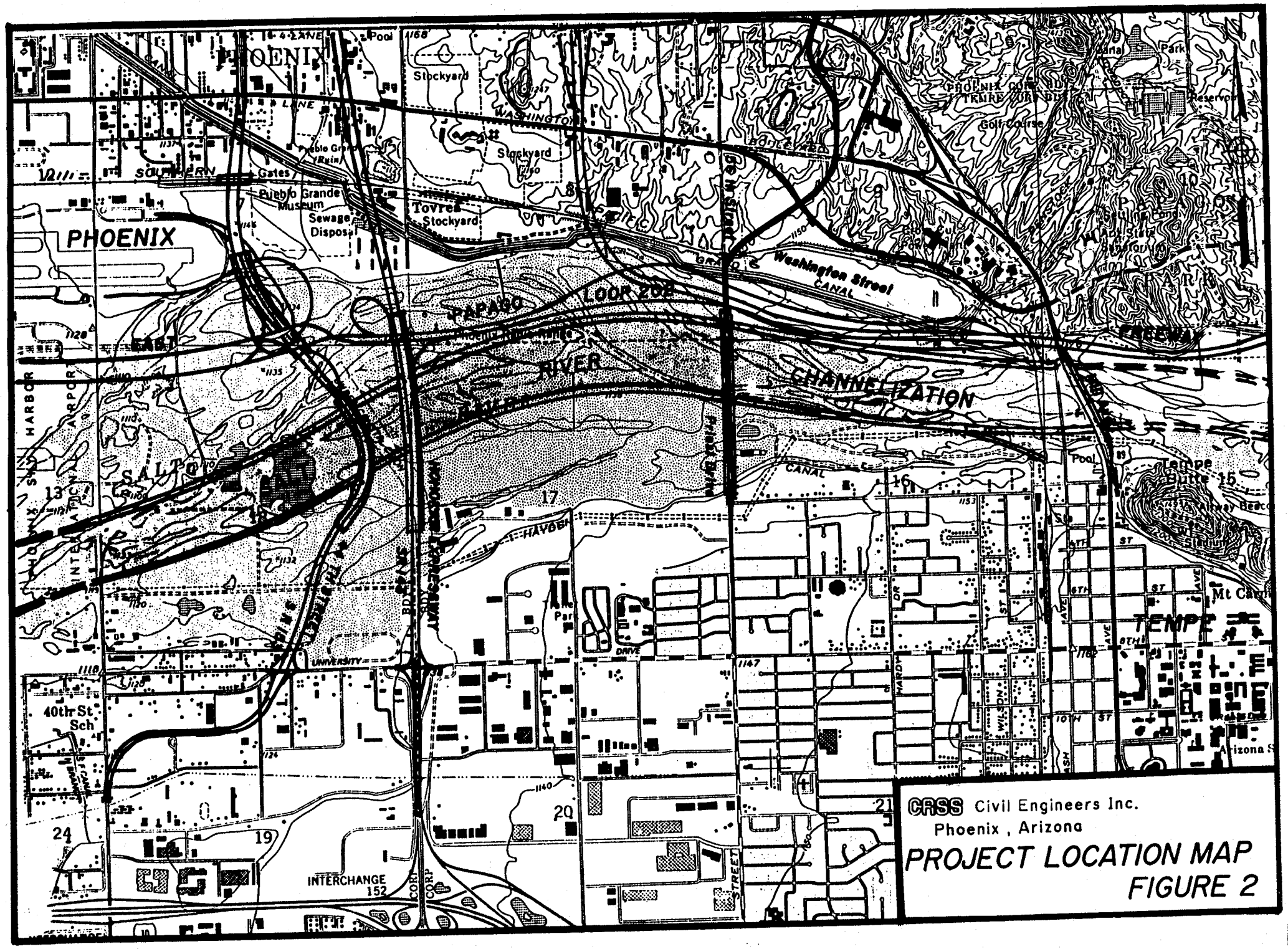

CRSS Civil Engineers Inc.
Phoenix, Arizona

PROJECT LOCATION MAP
FIGURE 2

II. GENERAL DOCUMENTATION AND CORRESPONDENCE

The following documentation is submitted (see Appendix A) for the change in base flood elevation:

(a) Public notice of intent to revise the floodway and notification of affected property owners and jurisdictions.

(b) Letter notifying the Arizona Department of Water Resources of the floodway revision.

(c) Letter notifying the Flood Control District of Maricopa County of floodway/floodplain revision.

(d) Letter notifying the City of Phoenix, Floodplain Manager (Mr. Paul Kienow) of floodway/floodplain revision.

(e) Tempe City Council approval of revisions to Salt River Floodway/Floodplain.

(f) Backup documentation by Tempe City Engineer (Mr. Lee Quaas) on Salt River floodway/floodplain revisions.

g) Intergovernmental Agreement between the State of Arizona, the Flood Control District of Maricopa County, and the City of Tempe, October 1989.

(h) Correspondence:

i) Quaas to Lenaburg, 8/21/91
Letter of Map Revision for Salt River

ii) Locke to Bond, 9/13/91
FEMA Reply to (h.i)

iii) Rerick to Bond, 9/12/91
Flood Control District of Maricopa County Review comments on Preliminary Technical Data Notebook.

iv) Miller to Bond, 10/4/91
Arizona Department of Water Resources Review comments on Preliminary Technical Data Notebook

v) Johnson to Bond, received by Tempe 12/2/91
Information regarding Salt River 100-year Flood peak discharges

(h) Project Plans:

i) As-built project plans, certified by a registered professional engineer in the State of Arizona for the ADOT reach (ending 1500 feet west of the Southern Pacific Railroad Salt River Bridge).

ii) A portion of project plans, certified by a registered engineer in the State of Arizona, for the Tempe reach (beginning at the termination of the ADOT project and continuing to the Southern Pacific Railroad bridge).

iii) Flood Insurance Rate Maps (Map Number 04013 C 2165D, Panels 2165 of 4350, and 2155 of 4350), Effective date, April 15, 1988.

III. MAPPING AND SURVEY INFORMATION

The project is located in the Tempe 7.5 minute quadrangle. Aerial mapping of topographic and planimetric features for the Salt River floodplain was conducted by McLain Harbers Co., Inc. for the City of Tempe in December of 1988. Topographic mapping consists of a digital elevation model and a series of digital planimetric models. The topographic information shown on the ADOT channel plans is based on aerial mappings conducted by Kenney Aerial Mapping, Inc., dated March thru April 1987. The Tempe survey used vertical and horizontal control established by ADOT for the East Papago Freeway corridor. The control is based on the 1929 vertical datum.

The floodplain delineation for the Salt River (FEMA 1984) is based on mapping conducted by the Corps of Engineers in 1983. At the time of the Corps aerial survey, the flood control channel to the west of Tempe and south of the Sky Harbor International Airport was under construction. The floodplain delineation was therefore based on design plans for that channelization. In 1987, Maricopa County compiled more recent mapping (including the ADOT aerial survey) and conducted an updated delineation of the Salt River floodplain (Burgess & Niple, 1987). For this study the ADOT maps were also used to provide topographic information on the final configuration of the Sky Harbor Salt River channelization. The tie to the established FIS water surface elevation was made 800 feet downstream of the 1-10 Salt River bridge (COE Cross-section 16.733).

The accuracy of the digital models is such that at least 90 percent of all well-defined planimetric features are within 1/100 inch of true horizontal position (±5.0 feet). Vertical accuracy is such that 90 percent of the points are within 0.5 feet. This accuracy was sufficient to produce flood plain contour maps at the scale of 1"=200' with 2-foot contour intervals.

IV. HYDROLOGIC ANALYSIS

The basis for the current hydrology on the Salt River is the report of May 1982, "Gila River and Tributaries, Central Arizona Water Control Study, Hydrology" by the Los Angeles District, U.S. Army Corps of Engineers. That report (referred to herein as the "CAWCS Hydrology") provides the hydrology (discharge/frequency) for the existing conditions on the Salt River. This hydrology was adopted for the Flood Insurance Study and is the hydrology used for all channel improvements to the Salt River in the City of Tempe. For the Tempe reach of the Salt River, the CAWCS study provides the following discharge/frequency relationship at the Mill Avenue bridge:

TABLE 1
Discharge/Frequency Salt River at Mill Avenue Bridge*

Frequency	Discharge
5	40,000
10	93,000
20	135,000
50	160,000
100	215,000
200	275,000
500	330,000

*from Table 1, LA ACE (1988)

289K??

The Corps of Engineers has set a Standard Project Flood discharge of 296,000 cfs for the Salt River at Mill Avenue. This flood, together with the 100-year flood, provided design discharges for the channelization for the ADOT reach of the Salt River.

The CAWCS hydrology routed Granite Reef hydrographs through the downstream reaches of the Salt River. Tributary inflows are not included in the reach from Granite Reef Dam to the I-10 Salt River bridge, and the hydrograph peak gradually attenuates as it moves through this reach. The hydrology for the channelization maintains the corresponding pattern of hydrograph peak attenuation in the channel reach from Mill Avenue to I-10. The downstream boundary conditions for the watersurface profile analysis are also unchanged.

To complete the discussion of available hydrology on the Salt River, the following facts should also be noted:

1. Operationally, nearly all low flows on the Salt River are diverted or stored when possible. For the period between 1941 and 1966, there was zero discharge to the Salt River channel below Granite Reef Dam. According to the CAWCS hydrology, such a period of zero flow should be extremely rare. However, low periods or no-flow are common, indicating that flood discharges for more frequent floods (25 years and less) are overestimated.

2. CAWCS hydrology was revised (LACOE, 1988) following the rejection of Plan 6 of the Central Arizona Project. This plan called for the construction of an additional dam on the Verde River called Cliff Dam. The subsequent hydrology is based on Plan 9, which provides for the modification of Roosevelt Dam on the Salt River for dam safety and flood control. This plan will not be operational until 1995, therefore this revised hydrology was not incorporated into the channel improvements for the Salt River in Tempe.

3. For channel design, the unattenuated peak flows were used for determination of hydraulic conditions and for computation of freeboard. For this letter of map revision, the current FIS flood hydrology is used (see Appendix A, Correspondence: Johnson to Bond, 12/19/91)

V. HYDRAULIC ANALYSIS

5.1 Description of Changed Hydraulic Conditions

The Salt River channelization for the East Papago Freeway (Phase I of the Tempe Rio Salado Salt River Channelization) changes the alignment, profile and typical cross section shape for the Salt River for a 3.0 mile reach from 40th Street to the Southern Pacific Railroad Salt River bridge (see Figure 2). The design features of the channel include levee embankments, bank protection, grade control structures, penetrations for tributary drainage, and bridges.

The revised alignment for Salt River channel bypasses a long, existing channel bend between 48th Street and 52nd Street, and shifts the floodway about 0.4 miles to the south. The new alignment provides a gradual change in channel direction along a 1-degree curve (about a 5000 ft radius) from Priest Drive to 48th Street and then ties to existing levees at Sky Harbor Airport. Due to the elimination of the channel bend, the overall length of the Salt River is decreased by 1600 feet for this reach.

The reduced length of the channel increases the grade of the river slightly. To stabilize the channel invert, three new grade control structures were incorporated into the channel bed at approximately one-mile intervals (see Figure 3) and a natural bedrock outcrop. An existing grade control structure is located immediately downstream of the I-10 bridge at the downstream limit of the design reach. The first grade control structure was constructed off site at the Sky Harbor ILS encroachment to control excessive scour at this location. The second constructed grade control structure is located immediately downstream of the new bridge for the Hohokam Expressway (SR 143) and serves to maintain river bed elevations near that bridge foundation. The third grade control structure utilizes a natural outcropping of bedrock which occurs near the Priest Drive bridge. The fourth grade control structure is located near the upstream limit of the Phase I Channelization, about 1500 feet downstream of the Southern Pacific Railroad Salt River bridge.

The new channel section has a composite trapezoidal shape that includes a main channel and a low-flow channel (see Figure 4). The main channel banks are at a slope of 3 horizontal to 1 vertical and are protected with a composite system of cemented alluvial material and gabion slope mattress. The bottom width of the channel varies from 960 to

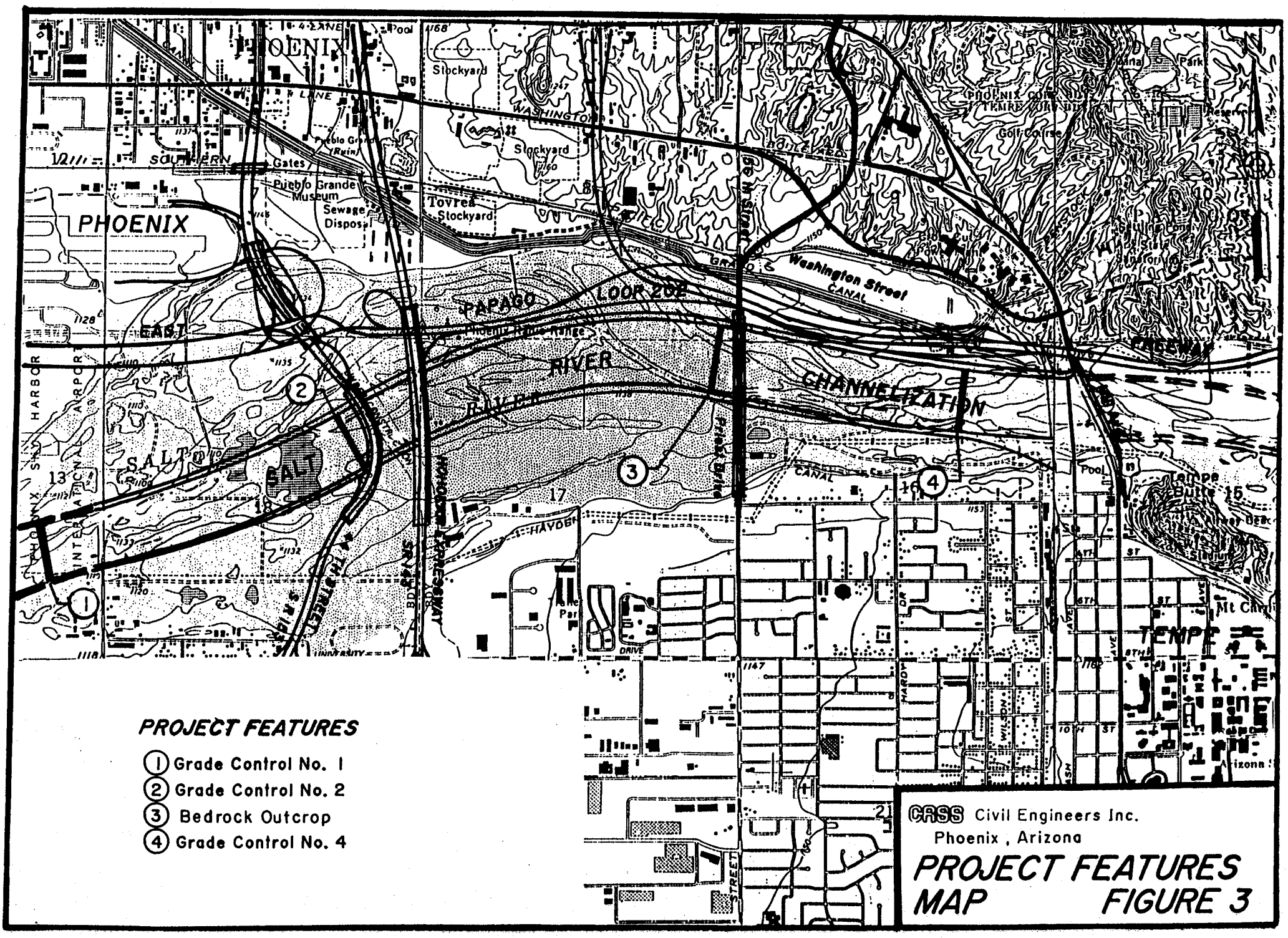

PROJECT FEATURES

1. Grade Control No. 1
2. Grade Control No. 2
3. Bedrock Outcrop
4. Grade Control No. 4

CRSS Civil Engineers Inc.
Phoenix, Arizona

PROJECT FEATURES MAP

FIGURE 3

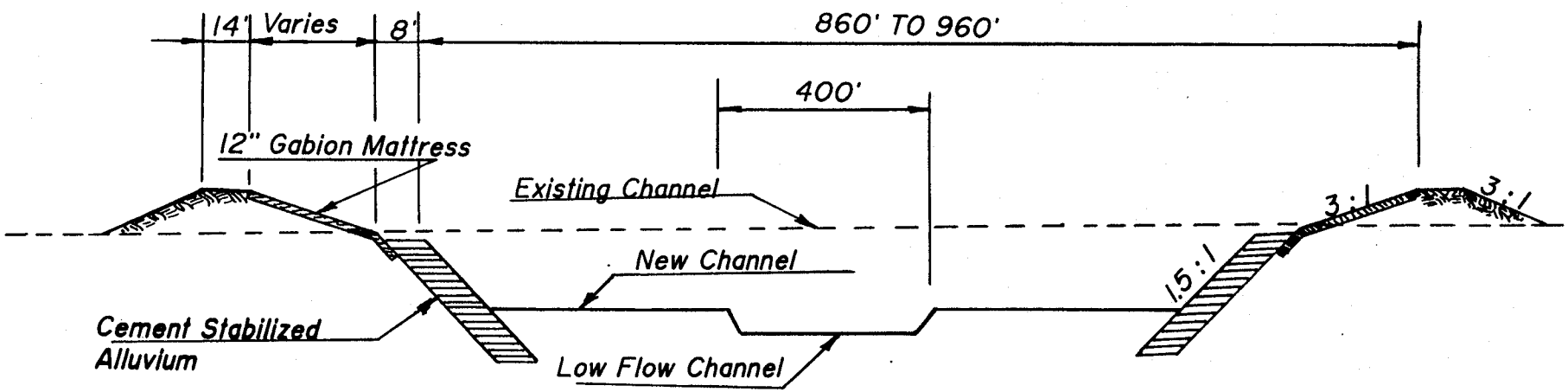

TYPICAL CHANNEL SECTION

CASS Civil Engineers Inc.
Phoenix, Arizona

CHANNEL SECTION
FIGURE 4

860. The channel is generally narrower in the upper reach east of Priest Drive, where existing landfills (on the south bank) and freeway alignment (on the north bank) constrain the channel section. The channel section also includes an unstabilized, meandering lowflow channel which is 400 feet wide and 3.0 feet deep.

Several design conditions were imposed on the floodplain hydrology of the Salt River channel design. First, an assumption of no peak flow attenuation in the Salt River channel reach from Mill Avenue to I-10 was made. This increased peak discharge in the Phase I Channel Reach and the downstream Sky Harbor Reach. Second, the hydraulic analysis used updated topographic data (ADOT, March-April, 1987) for the Sky Harbor reach which shows the as-built channel conditions. Third, the main channel and overbank roughness was increased from 0.030 and 0.040 to 0.035 and 0.050, respectively, to account for an observed increase in riparian vegetation. Next, downstream boundary conditions for the Tempe reach of the Salt River were established based on the first two conditions. A comparison between the original COE 100-year water surface profile and the revised 100-year water surface profile found that, at the downstream limit of the East Papago channelization, the difference in the two models was 0.81 feet at the discharge of 215,000 cfs. For design purposes, a new rating relationship was developed for the East Papago channel based on these channel design conditions. The resulting design rating for station 100+35 (COE Section 18.417) is provided in Table 2.

TABLE 2

Downstream Stage/Discharge Rating Station 100+35 (COE Section 18.417)

Discharge	Design Stage	COE Stage
40,000	1108.54	1108.20
93,000	1112.91	1112.41
135,000	1115.69	1115.08
160,000	1118.90	1116.52
215,000	1120.22	1119.41
296,000	1124.22	1123.23

In addition to the channel improvements west of the SPRR Salt River Bridge, the abandoned Tempe Ash Avenue bridge across the Salt River was demolished. This bridge was taken out of service over 50 years ago due to the partial structural failure at a pier and several arch spans. The bridge substructure consisted of eleven massive piers which

obstructed over ten percent of the waterway. The removal of the bridge locally improved flow conditions upstream of that bridge.

For the floodplain analysis, the design hydrology was not used. The baseline water surface profile computations which are presented in Appendix B1 are based on existing floodplain studies. The water surface profile analysis which is presented in Appendix B2 for the channelized reach uses attenuated peak flows and uses the channel topography downstream and upstream of the channelization project from the existing floodplain analysis. The roughness coefficients are those of the existing analysis. The Ash Avenue Bridge is included in the baseline analysis but is not included in the channelized analysis.

5.2 Hydraulic Analysis

Hydraulic Analysis for the Salt River channelization was conducted using the Corps of Engineers program HEC-2. Water surface elevations and hydraulic conditions were computed for the 10-, 50-, 100-year, and the Standard Project Flood. Computer printouts for these flood events are given in Appendix B-2.

5.3 Data on Design for River Structures

The channelization includes bank protection and grade control structures for the purpose of stabilizing the channelized reach of the Salt River. The new channel is also crossed at three locations by new bridges.

5.3.1 Bank Protection

The bank protection used for the channelization is a composite system of cement stabilized alluvium (CSA) and gabion slope mattress (see Figure 5). The composite system was chosen because it provided a combination of performance capabilities that were needed to meet design objectives for the project. These objectives included: channel stability during extreme flood events, the re-establishment of types of vegetation native to this riparian environment, and an acceptable aesthetic quality. Regarding the first objective, soil cement bank stabilization has achieved a very good performance record for protecting river banks in Arizona during severe floods. The successful performance has been attributed to the large mass of the protection which is stable even if overtopped.

The Salt River channel bed provides a much coarser gradation of material than is required for soil cement. To take advantage of this material, the standard soil cement mix design was modified to accommodate gravel sizes and a reduced-fraction of fine material. The mix design was closer to that of roller-compacted concrete but without a strict control on the gradation of the aggregates in the mix. The resulting mix design was termed "cement stabilized alluvium" (CSA) to set the material apart from more commonly used soil-cement-based designs. The CSA protection extends from mid-bank to the depth of the toedown. The toedown elevations were computed based on scour calculations which considered potential erosion due to local scour and sediment transport (see Chapter VI).

While CSA provides a very durable form of bank protection, it is relatively impermeable and can limit the re-establishment of vegetation on the banks of the channel. To compensate for this condition, the CSA protection was covered with native alluvial material on a 3:1 slope. The upper portion of the bank was then stabilized with gabion slope mattress placed on a 3:1 slope. The gabion slope mattress was also covered with a 1.0 foot thickness of alluvial material. This will permit selective revegetation of the channel banks consistent with the requirements for wildlife and habitat mitigation. The alluvial cover over the CSA and gabion slope mattress bank protection is considered to be sacrificial, but is included in the channel section for hydraulic calculations of the water surface profile.

During the design, the composite system allowed a variety of channel bank sections to be developed for the project. The channel section typically incorporates a small terrace at the elevation of the top of the CSA for use as a path or terrace area. Plans for landscaping of the channel call for an increased density of planting on the terrace and upper portion of the channel bank. The ability to revegetate and landscape the channel banks allowed various aesthetic criteria to be achieved.

The design criteria for the bank protection system requires a toedown depth for the CSA portion of the bank below the maximum scour depth, with an adequate factor of safety against shear force. The slope mattress design was based on the more severe of conditions of either a factor of safety of 1.5 for the 100-year flood, or a factor of safety of 1.3 for the Standard Project Flood. In general, the 100-year flood conditions controlled the design. Computations which check the adequacy of the gabion mattress stability are provided in appendix B-3.

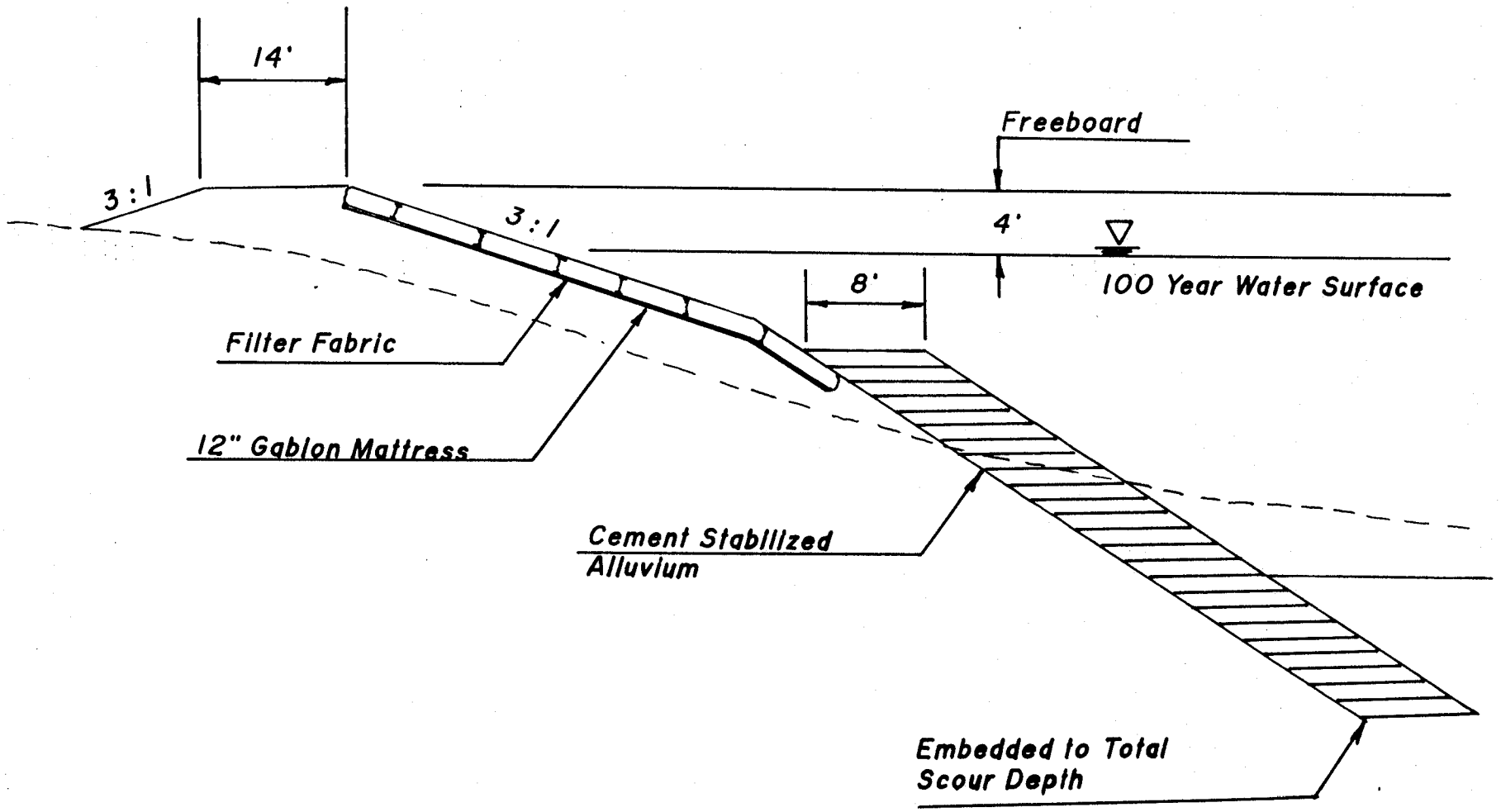

CHANNEL BANK PROTECTION SYSTEM

CASS Civil Engineers Inc.
Phoenix, Arizona

BANK PROTECTION
FIGURE 5

5.3.2 Grade Control Structures

Grade control structures are provided in the channel profile at approximately one-mile intervals along the channel. These structures are designed to retain the channel profile immediately upstream of the control over the life of the channel. It is anticipated that, due to a general deficit of sediment supplied to this reach of the Salt River, the channel will gradually scour to a flatter profile. The resulting displacement in the channel profile at each grade control structure will then create a drop below each structure. The drop, in turn, will create a local scour at the base of the drop. The foundation of the grade control structure is set below the anticipated depth of scour. The design of the grade control structure was based on the anticipated depth of total scour due to the combination of drop scour and the long-term scour in the channel. The stability of the structure was then evaluated to ensure that it had an adequate factor of safety against sliding and overturning. Computations which check the adequacy of the grade control scour stability are found in Appendix B-3 and local scour computations are found in Appendix B-4.

5.3.3 Bridges

The foundations for the two new bridge crossings of the Salt River at the Hohokam Expressway (SR 153) and Priest Drive consist of a series of bents with circular piers. Hydraulic losses for these bridges were modeled using the Special Bridge routines provided in HEC-2. Embedment of the pier caisons was based on the estimated total scour (local pier scour, estimated event scour, and long-term scour). Because of the proximity of the bridge piers to the channel banks, embedment of the CSA bank protection was increased in the vicinity of each bridge bent to ensure that the toe of the CSA would not be undercut by pier scour. Pier scour computations are provided in Appendix B-3.

5.3.4 Maintenance Considerations

A continuous maintenance road is located at the top of the channel bank which can be accessed from existing major streets in the river corridor. Access to the channel bed from the top of the channel banks is provided on both the south and the north side of the channel at roughly one-half mile intervals. By intergovernmental agreement the Flood Control District of Maricopa County will inspect channel structures (bank protection and grade control structures) at regular intervals. The FCD will also remove excess vegetation and

debris from the channel as necessary. The bridge structures are maintained by the Arizona Department of Transportation (SR 143 and SR 153) and the City of Tempe (Priest Drive).

5.4 Data on Design for Levee System

The channelization provides a channel section that is generally narrower than the existing banks of the Salt River. Therefore the new bank alignments are within the old channel and are constructed as levees. The area outside the channel limits generally consists of remnant portions of the Salt River channel. The top-of-levee is located at an elevation similar to the elevation of the previous Salt River banks. Plans by the jurisdictions of both Phoenix and Tempe call for the eventual infilling of the Salt River channel that is outside the new channel limits. Until such time as the infilling is accomplished, no development is planned within the remnant channel areas behind the north and south channel levees other than the freeway construction, these roadway profiles have been set at or above the levee profile. Criteria for the levee design were developed based on the assumption that the levees would need to function as such for an indefinite period and that these embankments should remain stable without additional infilling behind the levee embankment.

5.4.1 Freeboard

The channel section provides at least 4.0 feet of freeboard above the profile of the design 100-year flood and at least 1.0 feet of freeboard above the Standard Project Flood.

5.4.2 Closures

The channel levees are penetrated at ten locations for storm drainage outfalls to the Salt River (see Figure 6) and at one location for a roadway.

The closures are broken into four groups: 1) box culverts, 2) large diameter (48-inch pipe or larger) pipe outfalls, 3) small diameter pipe outfalls, and 4) roadways. Operational apsects for each group is described briefly and hydraulic conditions in the Salt River at each outfall are summarized in Table 3.

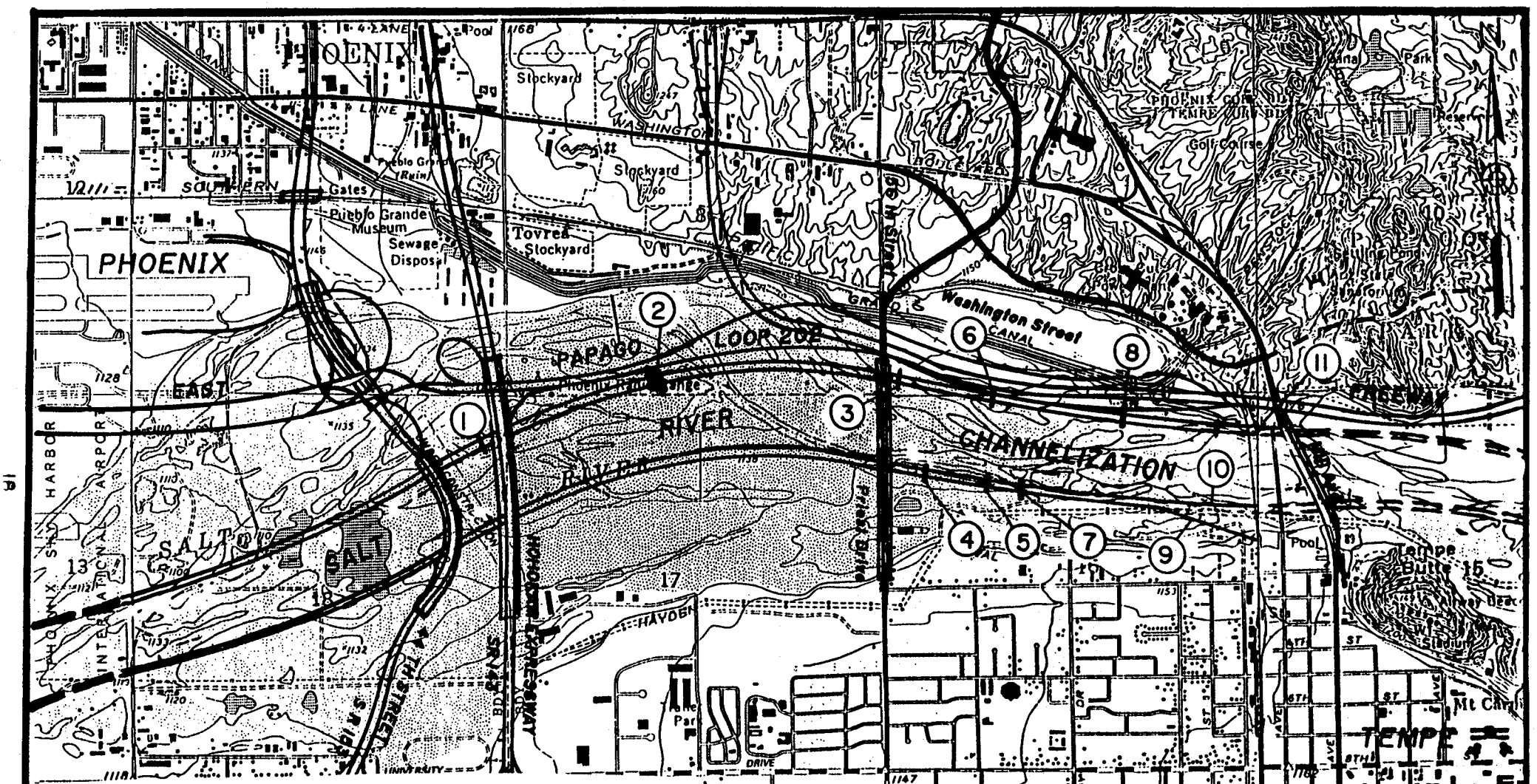

LEVEE PENETRATION LOCATIONS

NO.	LOCATION		TYPE	SIZE
1	148+89±	(NB)	RCP	78"
2	174+39 ±	(NB)	RCBC	3-16'X14'
3	208+70±	(NB)	RCP	96"
4	210+30+	(SB)	RCP	36"
5	218+16+	(SB)	RCP	24"
6	221+00+	(NB)	RCP	36"
7	222+12+	(SB)	RCP	36"
8	238+80+	(NB)	RCP	102"
9	410+00	(SB)	RDWY	
10	411+50	(SB)	RCP	72"
11	14+00	(NB)	RCP	66"

CRSS Civil Engineers Inc.
Phoenix, Arizona

LEVEE PENETRATION MAP

FIGURE 6

Box Culverts:

- Station 174+39, north bank, a three-cell 16' x 14' (span vs. rise) reinforced concrete box culvert.

This penetration is for the relocated Old Cross-Cut Canal, which is a major drainageway from north-central Phoenix to the Salt River. The relocated Old Cross-Cut Canal discharges to the remnant Salt River channel at elevation 1120.6 and is directed to the box culvert under Sky Harbor Blvd which outlets directly to the Salt River. During flood stage on the Salt River, the Cross-Cut Canal will backflow to flood the remnant channel area north of Sky Harbor Blvd and south of the Grand Canal. No flood gates are provided at this location since all roadways are constructed above the 100-year flood elevation. The City of Phoenix has indicated that land adjacent to Sky Harbor Blvd., all of which is owned by Phoenix, will be infilled to above the 100-year flood elevation. The pilot channel which has been provided for the Old Cross-Cut canal in this area will then be replaced either by an open channel or a culvert.

Large Diameter Pipe:

- Station 160+00+ north bank, a 78-inch outlet for the SR 153 pump station;
- Station 208+70+ north bank, a 96-inch outlet for an existing storm drain at Priest Drive; and
- Station 238+80+ north bank, a 102-inch outlet for an existing storm drain near Center Parkway.
- Station 14+00 north bank, 66-inch outlet for Papago Center storm drainage channel.
- Station 411+50 south bank, 72-inch outlet for the Farmer Avenue storm drain.

The first north bank culvert is a 78-inch, City of Phoenix storm drain outfall to the Salt River. The SR-153 pump station discharge line connects to the Phoenix outfall at elevation 1128.0. Flap gates on the discharge line prevent backflow into the pump station sump. The manhole elevation for the Phoenix line at the pump station is 1135.0, which is above the levee elevation. Therefore, the storm drain outfall will not backflow during high stage on the Salt River.

The next three large-diameter storm water outfalls to the Salt River are from the Salt River Project, Papago Park Center development. These storm water drains cross beneath the

Grand Canal and, in so doing, have a relatively flat profile as they approach the north levee. The inlet elevation for the 96-inch line is at elevation 1150, which is above the elevation of the top of levee. The inlet elevation for the 102-inch line is at elevation 1154, which is slightly below the top of levee elevation but above the 100-year flood elevation. The inlet for the 66-inch line is a drainage channel at elevation 1149.7 with the top of bank at elevation 1157.0, which is one foot below the top of levee at this location.

The last large-diameter storm water outfall is the outfall for the Farmer Avenue storm drain. Since the inlet to this storm drain is below the elevation of the 100-year flood, this outfall is equipped with a flap gate.

Small Diameter Outfalls:

- Station 210+30 south bank, a 36-inch outfall for the Priest Drive bridge and roadway;
- Station 218+16 south bank, a 24-inch outfall from a Rio Salado Parkway storm drainage collector system;
- Station 221+00 north bank, a 36-inch outfall from an East Papago storm drainage collection system; and
- Station 222+12 south bank, a 36-inch outfall from a Rio Salado Parkway storm drainage collector system.

All south bank penetrations of the levee for small-diameter culverts have inlet elevations that are near or above the elevation for the top of levee. The 100-year flood profile is about four feet below the top of levee; this means that backflow will not occur up these drainage outfalls, and the drainage systems will be operational during flood stages on the Salt River.

The situation is similar for the north levee penetration for the small culvert draining the East Papago Freeway. The inlets for these culverts are at the elevation of the freeway profile grade, which is above the elevation of the channel levee.

Roadways:

The Rio Salado Parkway will cross the south overbank levee at two locations: one at Station 611+50, just west of the Southern Pacific Railroad Bridge; and at Station 713-50, east of the Mill Avenue Bridge. The roadway crossing of the levee at Station 611+50 penetrates the upper portion of the levee, while the eastern crossing has a roadway profile above the elevation of the levee.

The profile of the roadway for the western levee penetration is set above the elevation of 100-year water surface elevation so that flood water is contained by the levee and roadway embankments. Between the levee penetrations, Rio Salado Parkway is located on a terraced area of channel which is set at the elevation of the 10-year flood stage.

The following tabulation summarizes design information for each of the levee penetrations.

Table 3
Levee Penetration Design Information

Location	Type	Size	Invert Elevation	Top of Levee Elevation	Rim Elev at Inlet
148+89±(NB)	RCP	78"	1111.6	1134.5	1135.0
174+39±(NB)	RCBC	3-16'x14'	1117.7	1140.6	1145.0*
208+70±(NB)	RCP	96"	1127.0	1147.9	1150.0
210+30±(SB)	RCP	36"	1128.8	1148.3	1149.8
218+16±(SB)	RCP	24"	1131.8	1150.5	1149.9
221+00±(NB)	RCP	36"	1140.1	1151.2	1149.3
222+12±(SB)	RCP	36"	1133.3	1151.4	1153.0
238+80±(NB)	RCP	102"	1132.9	1155.4	1154.0
410+00 (SB)	RDWY	--	1154.2**	1157.0	--
411+50 (SB)	RCP	72"	1135.0	1156.4	1154.0
14+00 (NB)	RCP	66"	1138.0	1158.1	1157.0

* ground elevation north of Grand Canal
** gutter flowline elevation

Levee Termination:

The project levees terminate at the abutment of the Southern Pacific Railroad bridge. At the south levee termination, the levee embankment ties directly to the existing approach embankment for the railroad bridge. At the north levee termination, the levee embankment is offset 120 feet from the railroad abutment. A supplemental embankment, constructed perpendicular to the levee (Station 14+00 NB), provides closure at the north levee termination.

5.4.3 Embankment Protection

The levee embankments are protected by a combination of cement stabilized alluvium, CSA, (a type of soil cement for coarse graded alluvial material) and gabion slope mattress. As shown in the typical section for the levee (see Figure 4), the gabion slope mattress is placed behind the CSA protection. Gabion buttresses are provided at 300-foot intervals to ensure overall stability should a portion of the slope mattress be eroded. The CSA protection is toed down to below the estimated cumulative scour depth. Computations that check the bank protection size are provided in Appendix B3.

5.4.4 Stability

The levees for the Salt River channelization are formed from non-cohesive, coarse alluvial sediments found in the bed of the river channel. Angle of repose for this material is approximately 40 degrees. The slope of the levee embankment is 18.4-degrees (3:1 channel side slope), which provides a factor of safety for slope stability. The relatively impermeable zone created by the CSA protection will retard drawdown in the otherwise very permeable material which composes the levee embankment. The CSA embedment likewise creates a relatively long flow path for water draining from the saturated embankment. The stability of the embankment was checked based on drawdown during the recession period of the 100-year flood hydrograph (see Appendix B4). This computation showed an acceptable factor of safety against sliding and overturning of the embankment.

5.4.5 Settlement

The levee embankment foundation is the sediments of the Salt River, compacted to 95-percent of maximum density. The Salt River sediments consist of coarse sand, gravel and cobbles. Compression of this underlying material will be due to the weight of the levee embankment. Computation of levee settlement is given in Appendix B5.

5.4.6 Interior Drainage

As presented in the discussion of levee closures, areas adjacent to the levee are for the most part at or above the elevation of the 100-year flood elevation. These areas are therefore able to drain during periods of flood stage in the Salt River. The exception is land adjacent to

the north levee and south of the East Papago Freeway which is a remnant portion of the wider Salt River channel. ADOT retained this area as detention basins for freeway drainage; the basins outlet to the relocated Old Cross-Cut Canal before the canal reaches the Salt River.

The remnant channel area north of Sky Harbor Blvd and south of the Grand Canal is subject to flooding from backflow from the Salt River. All roadways have been constructed above the 100-year flood elevation and it is anticipated that, since there is no flood gate planned, land development adjacent to Sky Harbor Blvd will eventually infill the remnant channel area, leaving an open channel for the Old Cross-Cut Canal from the Grand Canal to the Salt River.

5.4.7 Operations

There are no active operations planned for the levees or at levee penetrations during flood events.

5.4.8 Maintenance

The Flood Control District of Maricopa County has agreed to provide maintenance of channel levees for this reach of the Salt River within the jurisdiction of the Cities of Tempe and Phoenix. Any supplemental structures or landscaping of the channel will be maintained by each respective jurisdiction. Maintenance activities are expected to include the removal of debris and excess vegetation from the channel, and the inspection of embankments and embankment protection. Each jurisdiction will be responsible for maintenance of its own drainage system which outfalls to the Salt River.

VI. EROSION/SEDIMENT TRANSPORT

A river mechanics analysis was conducted by CRSS to check the size and type of stabilization specified by the ADOT designer for the levee and banks of the channelized Salt River, and to verify local scour at bridge piers and grade control structures. The analysis considers the cumulative effect of long-term adjustment of the Salt River profile and local scour conditions. The channel design criteria for scour were checked for the 100-year Flood and the Standard Project Flood.

6.1 Scour Methodology

The original sediment transport analysis was conducted using a movable bed model to evaluate the general scour in the channelized reach (SLA, 1988). Additional analysis was conducted to determine the local scour conditions at the grade control structures, at channel bends, and near bridge piers. The toe-down elevation for channel bank protection was set at or below the elevation of sum of general and local scour depths.

To check the toe-down profile, the following simplified methodology was used. First, a long-term profile was estimated using hydraulic conditions for a discharge of 160,000 cfs. Average, maximum, and minimum reach hydraulic conditions were then determined and reach sediment transport conditions computed. The sediment supply was estimated assuming that the supply reach would be composed of bed material. This gave the minimum sediment supply to the lower channel reaches. The hydraulic conditions in the downstream reaches was adjusted until the sediment transport matched the upstream sediment supply. For the downstream reaches, the transport was based on a finer gradation of bed material. Using the revised hydraulic conditions, an equilibrium profile was computed for the channel reaches. The channel bed was then adjusted to reflect this scoured profile and hydraulic conditions were recomputed. The profile of scour adjacent to the channel.banks was then estimated using the Bureau of Reclamation procedure for determination of depth required to produce an armored channel bed. The effect of channel bends was accounted for in the analysis by using the appropriate factor to increase the boundary shear stress at the channel bend. Finally, local scour at each grade control structure and bridge was determined and added to the depth of scour at each channel bank.

6.2 Sediment Data

Sediments of the Salt River were sampled as part of the preliminary geotechnical investigation (SHB, 1988). Thirty bed-material samples were collected, classified, and the gradations determined (see Figure 7). The sample population was separated into two groups: the first group characterizing the bed materials on or near the bed of the channel, referred to as the surface layer; and the second group which characterized sediments deposited in dunes and bars, referred to as the underlying parent layer. The SLA simulation of sediment transport for the Salt River distinguished between the surface layer of the channel bed and the underlying or parent material. The surface layer was characterized as the mean of the sampled population of the surface layer. The subsurface layer was characterized by a lower envelope of the dune and bar sample. The design gradations are provided in Appendix B-6.

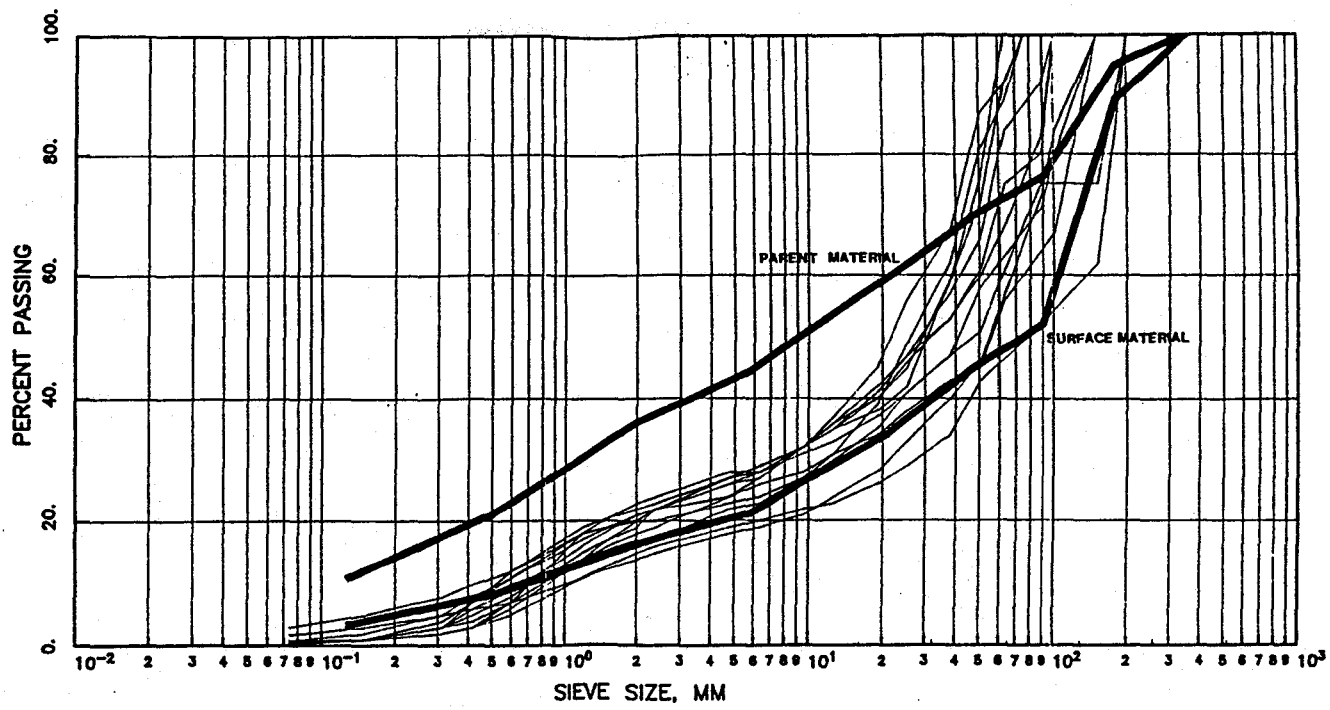

Surface-Layer Gradation Samples

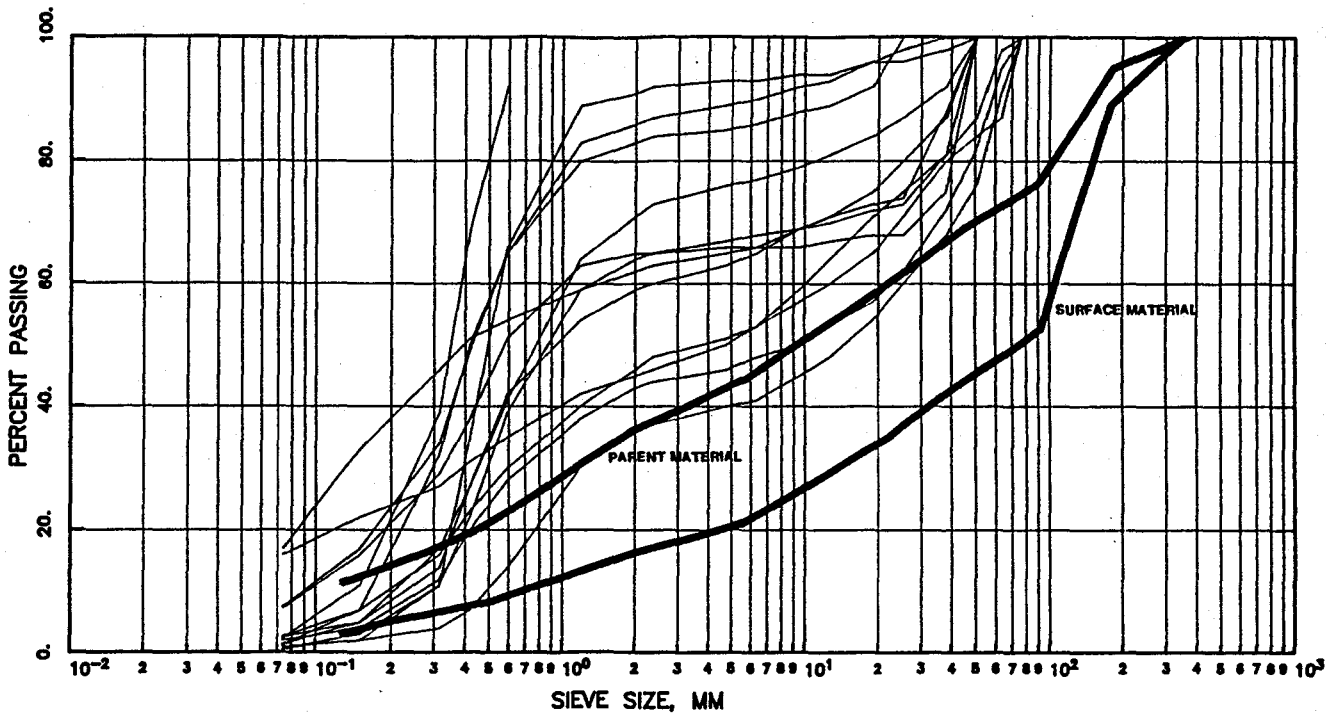

Bar and Dune Gradation Samples

FIGURE 7

VII. REFERENCE MATERIALS

Burgess & Niple, "Salt River Flood Delineation Study", 1987.

Corps of Engineers, "Study for Flood Control Alternatives to Cliff Dam", Los Angeles District, October 1988.

Federal Emergency Management Agency, "Flood Insurance Study of Maricopa County Streams", 1984.

John Carollo Engineers, "Draft Environmental Assessment for State Route 202, East Papago Freeway", for Arizona Department of Transportation, 1987.

Simons, Li & Associates, Inc., "Concept Hydraulic Design Salt River Channelization, East Papago Freeway," prepared for Daniel, Mann, Johnson & Mendenhall, May 1988.

Simons, Li & Associates, Inc., "Design Manual for Engineering Analysis of Fluvial Systems," prepared for Arizona Department of Water Resources, March 1985.

Simons, Li & Associates, Inc., "East Papago and Hohokam Freeway Location Study and Preliminary Design Technical Series, Technical Memorandum No. 14: Off Site Hydrology, and Technical Memorandum No. 15: Off Site Drainage Design", June 1987.

Simons, Li & Associates, Inc., "River Mechanics and Floodplain Analysis of the Salt River for the East Papago and Hohokam Freeway Alignments", submitted to John Carollo Engineers for Arizona Department of Transportation, May 1987.

U.S. Army Corps of Engineers, "Gila River and Tributaries, Central Arizona Water Control Study, Hydrology", Los Angeles District, May 1982.

U.S. Bureau of Reclamation, Design of Small Dams, 1977 (Appendix H, Sedimentation).

APPENDIX A

Documentation and Correspondence

PUBLIC NOTICE OF INTENT TO REVISE FLOODWAY

THE CITY OF TEMPE IN CONJUNCTION WITH THE ARIZONA DEPARTMENT OF TRANSPORTATION AND THE FLOOD CONTROL DISTRICT OF MARICOPA COUNTY HAS RECENTLY COMPLETED THE DESIGN OF THE CHANNELIZATION OF THE SALT RIVER BETWEEN McCLINTOCK DRIVE AND 48th STREET. THE CHANNEL HAS BEEN COMPLETED WEST OF FARMER AVENUE AND CONSTRUCTION HAS BEGUN ON THE SEGMENT BETWEEN FARMER AVENUE AND McCLINTOCK DRIVE.

IN ORDER TO REMOVE AREAS OUTSIDE THE CHANNEL FROM THE FLOODPLAIN THE CITY OF TEMPE INTENDS TO APPLY FOR A LETTER OF MAP REVISION FROM THE FEDERAL EMERGENCY MANAGEMENT AGENCY. THE APPLICATION WILL INCLUDE TECHNICAL DATA TO SUPPORT REVISIONS OF THE LIMITS OF FLOOD HAZARD AREAS AND FLOOD ELEVATIONS.

THE TECHNICAL BACKUP IS BEING ASSEMBLED BY CRSS CIVIL ENGINEERS, INC. OF PHOENIX, ARIZONA.

THIS ANNOUNCEMENT IS INTENDED TO NOTIFY ALL INTERESTED PERSONS OF THE COMMENCEMENT OF THIS EFFORT SO THAT THEY MAY HAVE AN OPPORTUNITY TO BRING ANY RELEVANT FACTS AND TECHNICAL DATA CONCERNING LOCAL FLOOD HAZARDS TO THE ATTENTION OF THE CITY OF TEMPE FOR CONSIDERATION IN THE COURSE OF PREPARING THE APPLICATION. SUCH INFORMATION SHOULD BE FURNISHED TO MR. LEE M. QUAAS, CITY ENGINEER, CITY OF TEMPE, P.O. BOX 5002, 31 E. 5th STREET, TEMPE, ARIZONA 85280.

Tribune
Mesa • Tempe • Chandler
NEWSPAPERS

P.O. BOX 1547 • MESA, ARIZONA 85211

P. O. Number: _____

Invoice Number: 508808

RECEIVED
MAR 29 1991
CITY CLERK

STATE OF ARIZONA
County of Maricopa

I, CONNIE RICHMOND, Legal Clerk,

acknowledge that the attached hereto was published in a newspaper of general circulation at Mesa, Arizona, County of Maricopa on the following dates:

03/19,20,21,22,23 1991

M—Mesa T—Tempe C—Chandler

Connie Richmond
LEGAL CLERK

Subscribed and sworn to before me this date: 23-MAR-91

Cathy Jackson
NOTARY PUBLIC

OFFICIAL SEAL
CATHY JACKSON
Notary Public - Arizona
MARICOPA COUNTY
My Comm. Expires Mar. 5, 1993

AFFIDAVIT OF PUBLICATION

CITY OF TEMPE
PUBLIC NOTICE OF
INTENT TO
REVISE FLOODMAPS

The City of Tempe in conjunction with the Arizona Department of Transportation and the Flood Control District of Maricopa County has recently completed the design of the channelization of the Salt River between McClintock Drive and 48th Street. The channel has been completed west of Farmer Avenue and construction has begun on the segment between Farmer Avenue and McClintock Drive.

In order to remove areas outside the channel from the floodplain, the City of Tempe intends to apply for a Letter of Map Revision from the Federal Emergency Management Agency. The application will include [illegible] data to support revisions of the limits of flood hazard areas and flood elevations.

The technical backup is being assembled by CRSS Civil Engineers, Inc. of Phoenix, Arizona.

This announcement is intended to notify all interested parties of the commencement of this effort so that they may have an opportunity to bring any relevant facts and technical data concerning local flood hazards to the attention of the City of Tempe for consideration in the course of preparing the application. Such information should be furnished to Mr. Lee M. Gunn, City Engineer, City of Tempe, P.O. Box [illegible], [illegible] Street, Tempe, Arizona [illegible]

Pub March 19-23, 1991

94.60

City of Tempe
P.O. Box 5002
31 East Fifth Street
Tempe, AZ 85280
602-350-8371

Tempe

Public Works
Department

August 21, 1991

Arizona Department of Water Resources
15 South 15th Avenue
Phoenix, AZ 85007

ATTN: Jim Morris, Engineering Division

Dear Mr. Morris:

Enclosed is a copy of the application of the City of Tempe for a Letter of Map Revision for the Salt River from the City's western limit to the grade control structure located approximately 1500 feet west of the Southern Pacific Transportation Company bridge. If you would like to make any comments, please contact George Cotton of CRSS Civil Engineers, Inc. at 263-5309, or myself at 350-8897.

An application for a conditional Letter of Map Revision for the reach from the same grade control structure to approximately 1/4 mile east of the McClintock Drive Bridge will be submitted at a later date.

Sincerely,

CITY OF TEMPE

James E. Bond

James E. Bond, P.E.
Senior Civil Engineer

Enclosure

cc: George Cotton, ADOT
Ray Lenaburg, FEMA

City of Tempe
P.O. Box 5002
31 East Fifth Street
Tempe, AZ 85280
602-350-8371

Tempe

Public Works
Department

August 21, 1991

Flood Control District of Maricopa County
3335 W. Durango Street
Phoenix, AZ 85009

ATTN: D.E. Sagramoso, P.E.

Dear Mr. Sagramoso:

Enclosed is a copy of the application of the City of Tempe for a Letter of Map Revision for the Salt River from the City's western limit to the grade control structure located approximately 1500 feet west of the Southern Pacific Transportation Company bridge. If you would like to make any comments, please contact George Cotton of CRSS Civil Engineers, Inc. at 263-5309, or myself at 350-8897.

An application for a conditional Letter of Map Revision for the reach from the same grade control structure to approximately 1/4 mile east of the McClintock Drive Bridge will be submitted at a later date.

Sincerely,

CITY OF TEMPE

James E. Bond

James E. Bond, P.E.
Senior Civil Engineer

Enclosure

cc: George Cotton, ADOT
Ray Lenaburg, FEMA

March 15, 1991

City of Phoenix
Engineering Department
125 East Washington Street
Phoenix, AZ 85004

ATTN: Paul Kienow

RE: Salt River Floodplain Revisions (Project No. 906345B)

Dear Paul:

As you are probably aware, the channelization of the Salt River in Tempe between 48th Street and Farmer Avenue is complete and construction of the segment between Farmer Avenue and McClintock Drive is under way.

The City of Tempe will be applying for a Letter of Map Revision from the Federal Emergency Management Agency for the segment west of Farmer Avenue at the end of March 1991 and a Conditional Letter of Map Revision for the segment east of Farmer Avenue at the end of April 1991.

If you have any concerns or comments, please forward them to Lee M. Quaas, City Engineer for the City of Tempe. If you have any questions, you may direct them to me (350-8897) or George Cotton (263-5309) of CRSS Civil Engineers, Inc. Enclosed is a copy of the public notice published in the Tempe Daily News Tribune.

Sincerely,

CITY OF TEMPE

James E. Bond, P.E.
Senior Civil Engineer

JEB:lw

FINISHED AGENDA

June 20, 1991

INVOCATION - Rev. Ken Falk

PLEDGE OF ALLEGIANCE

MINUTES/CLAIMS

A. APPROVAL OF COUNCIL MINUTES - Councilman Sherman
   1. Council Executive Session - June 13, 1991
   2. Council Presession - June 13, 1991
   3. Council Regular Session - June 13, 1991

B. ACCEPTANCE OF COMMITTEE & BOARD MEETING MINUTES
   4. Parks and Recreation Board - May 14, 1991

C. REPORT OF CLAIMS PAID TO BE FILED FOR AUDIT

   5. Report of Claims Paid for the week ending June 14, 1991

REPORTS AND ANNOUNCEMENTS

A. MAYOR'S ANNOUNCEMENTS

Presentation of award from Government Finance Officers Association for Excellence in Financial Management.

B. MANAGER'S ANNOUNCEMENTS

CONSENT AGENDA

All items listed with an asterisk (*) or double asterisk (**) will be considered as a group by the City Council and will be enacted with one motion. There will be no separate discussion of these items unless a Councilmember or - in the case of items scheduled for a public hearing - a Citizen so requests, in which event the item will be removed from the Consent Agenda and considered as a separate item. Public hearing items on the consent agenda are designated by a double asterisk (**).

A. MISCELLANEOUS

*6. Motion to set Executive Session for June 27, 1991 if needed, in the Third

Floor Conference Room, Tempe Municipal Building. Agenda for Executive Session will be posted at least 24 hours prior to such meeting.

*7. Set a public hearing for July 25, 1991 on assessments for Apache Boulevard Sidewalks Phase I - Rural Road to McClintock Drive.

Comments:
STREETS (0809) Set a public hearing for July 25, 1991 on assessments for the Apache Boulevard Scalloped Sidewalk Improvements, Phase I - Rural Road to McClintock Drive, Project No. 876183.

~~**PUBLIC HEARING SET FOR JULY 25, 1991**~~

*8. Request approval of revisions to the Salt River Floodway/Floodplain.

Comments:
STORM DRAIN AND FLOOD CONTROL-FLOOD CONTROL ADMINISTRATION (0808-01) Approve revisions to the Salt River Floodway/Floodplain that have been completed or that are currently under construction by the Arizona Department of Transportation as part of the Salt River Channelization Project, Project No. 876191.

APPROVED

*9. Request approval for Computer Aided Dispatch.

Comments:
FIRE/PARAMEDIC SERVICE ADMIN (0605-01) Request approval for an annual agreement with the City of Phoenix for Computer Aided Dispatch.

APPROVED

B. AWARD OF BIDS

*10. Request to award bid for playground equipment.

Comments:
PURCHASES (1004-01) Bid #91-0095 Request to award bid for **playground equipment** to low bidders as shown on Staff Summary Report for a total of $90,736.23, including applicable taxes.

APPROVED

C. ORDINANCES FOR INTRODUCTION

D. ORDINANCES FOR ADOPTION

E. RESOLUTIONS

*11. Request approval of an Upstream Authority Agreement concerning the Pretreatment Program.

Comments:
WASTEWATER MANAGEMENT ADMIN (0812-01) RESOLUTION NO. 91.39 Request approval of an Upstream Authority Agreement concerning the Pretreatment Program between Phoenix, Tempe and Guadalupe - 91st Avenue Wastewater Plant.

APPROVED

F. MISCELLANEOUS DEPARTMENTAL REPORTS

*12. Community Services Department Status Report - April, 1991
*13. Building Construction Activity Report - May, 1991
*14. Property Conservation Report - May, 1991
*15. Municipal Court Monthly Statistical Report - May, 1991

NON-CONSENT AGENDA

A. MISCELLANEOUS

B. AWARD OF BIDS

C. ORDINANCES FOR ADOPTION

D. RESOLUTIONS

COUNCILMEN'S BUSINESS

SCHEDULED PUBLIC APPEARANCES

UNSCHEDULED PUBLIC APPEARANCES

Jm
FYI

SUBJECT: APPROVAL OF REVISIONS TO THE SALT RIVER FLOODWAY/FLOODPLAIN

PREPARED BY: JIM BOND, SENIOR CIVIL ENGINEER

REVIEWED BY: LEE QUAAS, CITY ENGINEER

COMMENTS:

STORM DRAIN AND FLOOD CONTROL-FLOOD CONTROL ADMINISTRATION (0808-01) Approve revisions to the Salt River Floodway/Floodplain that have been completed or that are currently under construction by the Arizona Department of Transportation as part of the Salt River Channelization Project, Project No. 876191.

HISTORY & FACTS:

The City has contracted with CRSS Civil Engineers, Inc. (Salt River Floodplain Revisions, Project No. 906345B) to prepare the documentation required to apply to the Federal Emergency Management Agency (FEMA) for revisions to the Salt River Floodway/Floodplain. A Letter of Map Revision will be requested for the completed portions of the Salt River Channelization between 48th Street and the Southern Pacific Railroad Bridge. A Conditional Letter of Map Revision will be requested for the channelization currently under construction between the railroad bridge and McClintock Drive. Before FEMA will review the requests, the revisions to the floodway/floodplain must be approved by the local jurisdictional authority. The City Council serves as the local review agency for the City of Tempe.

After FEMA issues the Letter and Conditional Letter of Map Revision, the areas outside the channel will be removed from the floodway/floodplain and development may proceed without having to meet local, state, and federal requirements for development within a floodway or floodplain.

The staff has reviewed the proposed revisions to the floodway/floodplain and finds them to be acceptable.

RECOMMENDATION:

That the City Council approve the revisions to the Salt River Floodway/Floodplain so that development may occur outside the new channel banks.

Jim Jones
Director of Public Works

A. G. Contract No.KR-89-0396
ECS File: IGA-88-06
Project: H2045 01C
Section: Salt River Channel
IGA FCD-87052

INTERGOVERNMENTAL AGREEMENT

BETWEEN
THE STATE OF ARIZONA,
THE FLOOD CONTROL DISTRICT OF MARICOPA COUNTY
and THE CITY OF TEMPE

THIS AGREEMENT is entered into 11 OCTOBER, 1989, between the STATE OF ARIZONA, acting by and through its DEPARTMENT OF TRANSPORTATION (the "STATE"), the FLOOD CONTROL DISTRICT OF MARICOPA COUNTY, a municipal corporation and political subdivision of the State of Arizona (the "DISTRICT"), and the CITY OF TEMPE, acting by and through its City Council ("TEMPE").

I. RECITALS

1. The STATE is empowered by Arizona Revised Statutes Sections 11-952 and 28-108 to enter into this agreement and has by resolution, a copy of which is attached hereto and made a part hereof, resolved to enter into this agreement and has delegated to the undersigned the authority to execute this agreement on behalf of the STATE.

2. The DISTRICT is empowered by Arizona Revised Statutes Section 48-3603 to enter into this agreement and has authorized the undersigned to execute this agreement on behalf of the DISTRICT.

3. TEMPE is empowered by Arizona Revised Statutes Section 48-572 and by Part I, Section 1.03 of its City Charter to enter into this agreement and has by resolution, a copy of which is attached hereto and made a part hereof, resolved to enter into this agreement and has authorized the undersigned to execute same on behalf of TEMPE.

NO. 14297
FILED WITH SECRETARY OF STATE
Date Filed 10-11-89
Jim Shumway
Secretary of State
By B Vermillion

4. The STATE, DISTRICT and TEMPE affirm that channelization of the Salt River from the area of 40th Street eastward to approximately the Southern Pacific Railroad (SPRR) Bridge near Mill Avenue is the desired alternative to protect the proposed East Papago, Hohokam and Sky Harbor Access roadways.

5. The STATE is proceeding with the planning, design and construction of the East Papago, Hohokam and Sky Harbor Access roadways all of which cross or are adjacent to the Salt River. The STATE has selected alignments for these roadways that require channelization of the Salt River from the area of 40th Street (Extended) to approximately the SPRR Bridge near Mill Avenue as described in exhibit "A". The STATE selected these alignments based on commitments from the DISTRICT to maintain the river channel and commitments from TEMPE, PHOENIX, and SRP to grant rights-of-way for Salt River Channel construction.

6. Based on Geotechnical analysis by the STATE, no known landfill deposits are within the rights of way proposed for Channel construction.

7. It is understood by all parties that the DISTRICT shall not assume now or in the future any costs for maintenance of any facilities within the Channel rights of way that are not directly related to the flood control functioning or operation of the Channel. The DISTRICT shall be solely responsible for determining what facilities it will be required to maintain when it assumes operation and maintenance of the Channel.

8. The purposes of this agreement are to define the responsibilities for design, construction, operation and maintenance of the Salt River Channel between the STATE, the DISTRICT, and TEMPE and to establish adequate rights of way for the Channel and the East Papago, Hohokam and Sky Harbor Access roadways.

9 Additional separate agreements between the STATE, DISTRICT, SRP and the City of PHOENIX will further define responsibilities for design, construction, operation, and maintenance of other portions of the Salt River Channel, and provide additional right of way for the channel.

THEREFORE, in consideration of the mutual agreements expressed herein, it is agreed as follows:

II. SCOPE OF RESPONSIBILITIES

A. Salt River Channel

The STATE shall:

1. In conjunction with design and construction of the East Papago, Hohokam and Sky Harbor Access roadways, obtain design and construction plans in accordance with design and construction criteria provided by the DISTRICT and the CITY OF TEMPE.

   a. Provide the DISTRICT and TEMPE with preliminary plans and specifications for the Channel prior to finalization, for their review and comment.

   b. Provide the DISTRICT and TEMPE with final plans and specifications for the Channel prior to advertisement of the construction contract for review and approval, and advertise only after written approval is obtained from the DISTRICT and TEMPE.

   c. Bear the total cost of said channel design and construction, estimated to be $23,500,000.

   d. Obtain all state, federal or local environmental discharge or other flood and regulatory permits required for the construction of the channel.

2. Upon completion of Channel, grant the DISTRICT a perpetual easement for drainage in the STATE's right of way through SR 143 and SR 153, and for use of the STATE rights of way for the DISTRICT's maintenance purposes.

3. Be responsible for the operation, maintenance, and the repair of all STATE roadways, and roadway bridges, superstructures, substructures, wingwalls, and approaches to the bridges that are constructed within the Channel.

4. Stockpile sufficient fill material for the existing Rio Salado Parkway in the south Salt River Channel levee, to be used by Tempe to close the opening when flooding is eminent.

The DISTRICT shall:

1. Monitor construction of the Channel. The DISTRICT shall inspect and approve the completed facility.

2. At its own cost, operate and maintain the Salt River Channel after it is constructed and any necessary easements for maintenance purposes have been transferred to the DISTRICT.

a. Maintain the Channel in such a manner so as not to endanger the Channel bridges. If the DISTRICT does not so maintain the channel, the STATE shall notify the DISTRICT, who shall perform the necessary maintenance within thirty days following notification. If the DISTRICT fails to perform, the STATE may perform the necessary maintenance, and the DISTRICT shall promptly reimburse the STATE for actual costs incurred.

b. Not be responsible for operation and maintenance of any landscaping or aesthetic features which may be installed as part of the Channel construction.

c. Reserve the right to approve the design and construction of any future changes to, or improvements on, the Salt River Channel.

3. Approve final plans and specifications for the Salt River Channel Work.

a. Submit comment to the state within 30 days of receipt of plans and specifications.

b. Have 30 days of receipt of final plans and specifications, submit their approval to the STATE or notify the STATE of their concerns. In the event no response is received by the STATE within 30 days, it shall be deemed approved by the DISTRICT.

The CITY OF TEMPE shall:

1. Monitor construction of the Channel and inspect and approve the completed facility.

2. Grant to the STATE the right to enter upon lands owned by TEMPE for the purpose of constructing the Salt River Channel. This right to enter shall expire upon completion of the Channel construction.

3. Grant the DISTRICT a perpetual and assignable easement to operate and maintain the Salt River Channel and to occasionally overflow, flood and submerge the lands within the banks of the Salt River Channel and all future improvements thereon, if any, upon completion of Channel construction within its ownership.

4. Approve the final plans and specifications for the Salt River Channelization work.

a. Within 30 days of receipt of plans and specifications, submit their comments to the STATE.

b. Within 30 days of receipt of final plans and specifications, submit their approval to the STATE or notify the STATE of their concerns. In the event no response is received by the STATE within 30 days, it shall be deemed approved by TEMPE.

5. Not permit any mining or excavation to occur in or adjacent to the Channel without first reviewing the permit application with the DISTRICT and receiving the DISTRICT's written concurrence.

6. Provide to the STATE a flood plain use permit for the construction of the Channel upon approval of channel design.

7. At its own expense, maintain, within the Salt River Channel landscaping or other aesthetic features that will not be maintained by the DISTRICT.

8. Be responsible for protecting lands behind the new Salt River Channel levee from river flows by closing the openings that provide for existing Rio Salado Parkway roadway to pass through the levee. The openings shall be closed when flooding is eminent by placement of fill material stockpiled by ADOT near the openings.

B. <u>East Papago, Hohokam and Sky Harbor Access Roadways</u>

The STATE shall:

1. Construct additional features shown on Exhibit "B".

2. At its own cost, construct, operate, and maintain the roadways, bridges, superstructures, substructures, wingwalls and bridge approaches associated with the East Papago, Hohokam and Sky Harbor Access roadways.

III. MISCELLANEOUS PROVISIONS

1. The DISTRICT agrees to indemnify and save harmless the STATE and TEMPE or any of their departments, agencies, officers or employees, from and against all loss, expense, damage or claim of any nature whatsoever which is caused by any activity, condition or event arising out of the performance or non-performance by the DISTRICT of any of the provisions of this Agreement. The STATE and TEMPE shall in all instances be indemnified against all liability, losses and damages of any nature for or on account of any injuries to, or death of persons, or damages to or destruction of property arising out of, or in any way connected with the DISTRICT's performance or non-performance of this Agreement, except such injury or damage as shall have been occasioned by the negligence of the STATE or TEMPE. The above cost of damages incurred by the STATE or TEMPE or any of their departments, agencies, officers or employees, shall include in the event of an action, court costs, expenses for litigation and reasonable attorney's fees.

2. The STATE agrees to indemnify and save harmless the DISTRICT and TEMPE or any of their departments, agencies, officers or employees, from and against all loss, expense, damage or claim of any nature whatsoever which is caused by any activity, condition or event arising out of the performance or non-performance by the STATE of any of the provisions of this Agreement. The DISTRICT and TEMPE shall in all instances be indemnified against all liability, losses and damages of any nature for or on account of any injuries to, or death of persons, or damages to or destruction of property arising out of or in any way connected with the STATE's performance or non-performance of this Agreement, except such injury or damage as shall have been occasioned by the negligence of the DISTRICT or TEMPE. The above cost of damages incurred by the DISTRICT or TEMPE or any of their departments, agencies, officers or employees, shall include in the event of an action, court costs, expenses for litigation and reasonable attorney's fees.

3. TEMPE agrees to indemnify and save harmless the DISTRICT and the STATE or any of their departments, agencies, officers or employees, from and against all loss, expense, damage or claim of any nature whatsoever which is caused by any activity, condition or event arising out of the performance or non-performance by TEMPE of any of the provisions of this Agreement. The DISTRICT and the STATE shall in all instances be indemnified against all liability, losses and damages of any nature for or on account of any injuries to, or death of persons, or damages to or destruction of property arising out of or in any way connected with the TEMPE's performance or non-performance of this Agreement, except such injury or damage as shall have been occasioned by the negligence of the DISTRICT or the STATE. The above cost of damages incurred by the DISTRICT or the STATE or any of their departments, agencies, officers or employees, shall include in the event of an action, court costs, expenses for litigation and reasonable attorney's fees.

4. This Agreement shall remain in force and effect as long as the roadways are part of the State Highway System unless modified or terminated by written agreement of all parties.

5. This Agreement shall become effective upon filing with the Secretary of State.

6. This Agreement may be cancelled in accordance with Arizona Revised Statutes Section 38-511.

7. The provisions of Arizona Revised Statutes Section 35-214 are applicable to this contract.

8. In the event of any controversy which may arise out of this Agreement, the parties hereto agree to abide by required arbitration as is set forth for public works contracts in Arizona Revised Statutes Section 12-1518(B) and (C).

9. Attached hereto and incorporated herein by reference is a copy of the written determination of each party's legal counsel that the parties are authorized under the laws of this STATE to enter into this Agreement and that the Agreement is in proper form.

IN WITNESS WHEREOF, the parties have executed this Agreement the day and year first above written.

FLOOD CONTROL DISTRICT OF MARICOPA COUNTY

RECOMMENDED BY:

D.E. Sagramoso 4-14-89

D.E. Sagramoso, P.E. Date
Chief Engineer and General Manager

APPROVED AND ACCEPTED:

By: Fred Koory, Jr.
Chairman, Board of Directors

ATTEST:

By: Cleve Pennington
Clerk of the Board Date
4-17-89

Approved as to Form:

Julie M. Simmons 4/20/89
General Counsel Date

CITY OF TEMPE

By: Harry E. Mitchell
Title: Mayor

ATTEST:

Helen R. Fowler
Helen R. Fowler, CMC
City Clerk

STATE OF ARIZONA
Department of Transportation

By: Gary K. Robinson
GARY K. ROBINSON
Chief Deputy State Engineer

APPROVED AS TO FORM:

David R. Merkel
David R. Merkel
City Attorney

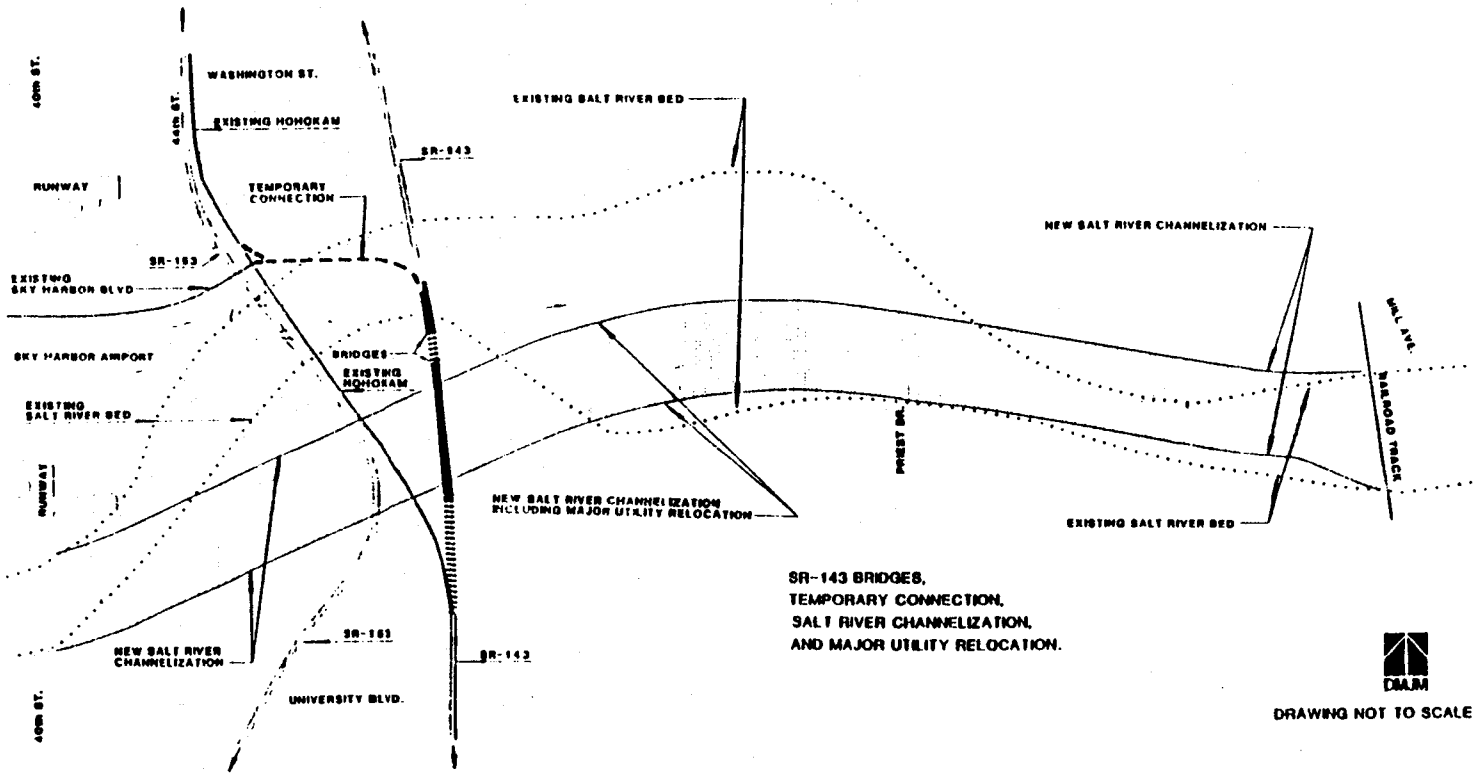

SR-143 BRIDGES,
TEMPORARY CONNECTION,
SALT RIVER CHANNELIZATION,
AND MAJOR UTILITY RELOCATION.

DRAWING NOT TO SCALE

EXHIBIT "A"

EXHIBIT "B"

The following list of additional features for the enhancement of the East Papago Freeway Corridor are acceptable to ADOT and TEMPE for funding with Salt River Channel project funds. The availability of funds for these features approved by ADOT shall not exceed $4.2 million.

1. Construction of a Mill Ave. Bridge over Salt River

2. Design and Construct Upgrade Landscaping for the East Papago Freeway

1756j
05APR

RESOLUTION

BE IT RESOLVED on this 4th day of January 1989, that I, CHARLES L. MILLER, as Director of the Arizona Department of Transporation, have determined that it is in the best interests of the State of Arizona that the Department of Transportation, acting by and through the Highways Division, to enter into an agreement with the City of Tempe and Maricopa County Flood Control District for the purpose of the channelization of the Salt River.

THEREFORE, authorization is hereby granted to draft said agreement which, upon completion, shall be submitted for approval and execution by the Chief Deputy State Engineer.

CHARLES L. MILLER, Director
Arizona Department of
Transportation

1204j

Attorney General
1275 WEST WASHINGTON
Phoenix, Arizona 85007
Robert K. Corbin

INTERGOVERNMENTAL AGREEMENT

DETERMINATION

A. G. Contract No. KA89-0398, is an agreement between public agencies, has been reviewed pursuant to A.R.S. § 11-952, as amended, by the undersigned Assistant Attorney General who has determined that it is in the proper form and is within the powers and authority granted to the State of Arizona.

No opinion is expressed as to the authority of the remaining parties, other than the State or its agencies, to enter into said agreement.

DATED this 18th day of May, 1989.

ROBERT K. CORBIN
Attorney General

Albert Morelan
Assistant Attorney General
Transportation Division

3658G

County of Maricopa

State of Arizona

Office of the Clerk

State of Arizona
County of Maricopa } ss.

I, Cherie Pennington, Clerk of the Board of Supervisors do hereby Certify That the attached is a true and correct extract from the minutes of the Board of Directors' of the Flood Control District meeting held April 17, 1989:

CHAIRMAN AUTHORIZED TO SIGN INTERGOVERNMENTAL AGREEMENTS WITH THE ARIZONA DEPARTMENT OF TRANSPORTATION, THE SALT RIVER PROJECT, THE CITY OF TEMPE, AND THE CITY OF PHOENIX APPROVED:

Motion was made by Supervisor Freestone and unanimously carried to approve and authorize the Chairman of the Board to sign Intergovernmental Agreements FCD 87051, FCD 87052, and FCD 87053 with the Arizona Department of Transportation, the Salt River Project, the City of Tempe and the City of Phoenix, respectively, for the design, construction, operation and maintenance of the Salt River Channel between 40th Street and Mill Avenue.

In Witness Whereof, I have hereunto set my hand and affixed the Official Seal of the Board of Supervisors. Done at Phoenix, the County Seat this 27th day of April, 1989 A.D.

Cherie Pennington

Clerk of the Board of Supervisors

Flood Control
File

1300-003 R6-86

RESOLUTION NO. 89.20

A RESOLUTION OF THE COUNCIL OF THE CITY OF TEMPE, ARIZONA, AUTHORIZING EXECUTION OF AGREEMENT WITH ARIZONA DEPARTMENT OF TRANSPORTATION FOR THE CONSTRUCTION OF THE SALT RIVER CHANNEL.

WHEREAS, with the construction of the East Papago Freeway by the State of Arizona Department of Transportation, it will be necessary to construct a channel in the Salt River for flood protection.

WHEREAS, with the construction of the project, the City of Tempe has requested that certain design features be incorporated into the channel design.

WHEREAS, the State of Arizona is empowered by Section 28-108 Arizona Revised Statutes and the City of Tempe is empowered by Section 9-672B Arizona Revised Statutes to enter into an intergovernmental agreement setting forth the conditions for construction of said channel.

NOW THEREFORE, be it resolved by the City Council of the City of Tempe:

That the Mayor is authorized to execute said intergovernmental agreement with the State of Arizona Department of Transportation for the Salt River Channel Project H 2045 01C.

PASSED AND ADOPTED by the Mayor and City Council of the City of Tempe this 23rd day of March, 1989.

Harry E. Mitchell
Mayor

ATTEST:

Helen R. Fowler
City Clerk

APPROVED AS TO FORM:

W. Kent Jones
City Attorney

I, Helen R. Fowler, the duly appointed City Clerk of the City of Tempe, Maricopa County, Arizona, do hereby certify the above to be a true and exact copy of Res. 89.20, passed and adopted at the Regular Council Meeting of March 23, 1989, by the Tempe City Council, Tempe, Arizona.

DATED this 28th day of March, 1989.

Helen R. Fowler
Helen R. Fowler, CMC
City Clerk

I, Helen R. Fowler, the duly appointed City Clerk of the City of Tempe, Maricopa County, Arizona, do hereby certify the attached to be a true and exact excerpt of the Minutes of the Regular City Council Meeting of March 23, 1989, of the City of Tempe, Arizona.

DATED this 31st day of March, 1989.

Helen R. Fowler

Helen R. Fowler, CMC
City Clerk

#ZON-89.09. Zoning change from the R/O Residence/Office District (.287 acres) and the R1-6 Single Family Residential District (.306 acres) to the C-1 Neighborhood Commercial District for .593 acres.

#SIP-89.16. Site Plan for the NWC of Rural and Broadway Roads consisting of 2,980 s.f. on .593 net acres. In addition the following are requested:

Use Permit
Allow a service station (convenience store with self-serve gas pumps) in the C-1 Zoning District.

Variances
a. Reduce the required distance between an arterial street intersection and a driveway from 100′ to 87′ along Broadway Road.
b. Increase maximum wall height in the front yard setback of the C-1 District from 6′ to 8′ (along Solano Drive).
c. Reduce the width of a lot for a service station (convenience store w/gas pumps) from 150′ to 137′ (110′ along Solano Drive).

*29. **TEMPE CITY CODE (0503-19) ORDINANCE NO. 89.11** Set a public hearing for April 13, 1989 for approval of an ordinance amending Chapter 19, Article V, of the Tempe City Code establishing speed limits.

ORDINANCES FOR ADOPTION - Hold Public Hearings

RESOLUTIONS

*30. **REDEVELOPMENT SOUTHEAST QUADRANT (0403-02-06) RESOLUTION NO. 89.18** Adopted a resolution authorizing acquisition of title to parcel Block 2, Tempe, University-Hayden Butte Project Area by use of eminent domain if negotiations are unsuccessful.

*31. **IMPROVEMENT (ASSESSMENT) DISTRICT (0805-66) RESOLUTION NO. 89.19** Adopted a resolution extending the time until and including April 10, 1989 to file complaint for the Papago Park Center I.D. 166, Project No. 876203.

*32. **ARIZONA DEPARTMENT OF TRANSPORTATION (0107-01) RESOLUTION NO. 89.20** - Adopted a resolution authorizing execution of Contract #89-75, an Intergovernmental Agreement between the Arizona Department of Transportion and the City of Tempe for Salt River channelization.

MISCELLANEOUS DEPARTMENTAL REPORTS, ETC.

*33. Community Services Department Status Report - January 1989
*34. Tempe Municipal Court Monthly Statistical Report - February 1989

NON-CONSENT AGENDA

MISCELLANEOUS

City of Tempe
P.O. Box 5002
31 East Fifth Street
Tempe, AZ 85280
602-350-8371

Tempe

Public Works
Department

August 21, 1991

Federal Emergency Management Agency
Chief, Natural Technological Hazards Division
Presidio of San Francisco
Building 105
San Francisco, CA 94129

ATTN: Ray Lenaburg

RE: Letter of Map Revision for Salt River
Tempe Project No. 906345B

Dear Ray:

The City of Tempe would like to request a Letter of Map Revision for the reach of the Salt River between the western city boundary and the recently completed grade control structure 1500 feet west of the Southern Pacific Transportation Company bridge. At a later date, a Conditional Letter of Map Revision will be applied for for the reach of the Salt River upstream of the same grade control structure to approximately 1/4 mile east of the McClintock Drive bridge which is currently under construction.

The "Public Notice of Intent to Revise Floodway" and the "Notification of Affected Jurisdictions" (letter to City of Phoenix) are enclosed but please take note that they were not included in the bound volume as stated on Page 5 of the Preliminary Technical Data Notebook. Also enclosed is the approval of the floodplain/floodway revisions by the Tempe City Council which has jurisdiction over the floodplain/floodway within Tempe.

Copies of the Preliminary Technical Data Notebook and accompanying attachments are also being submitted to the Arizona Department of Water Resources and the Flood Control District of Maricopa County. For additional information, please contact George Cotton of CRSS Civil Engineer, Inc. at (602) 263-5309 or Jim Bond of the City of Tempe at (602) 350-8897.

All documents submitted in support of this appeal are correct to the best of my knowledge. I understand that any false statement may be punishable by fine or imprisonment under Title 18 of the United States Code, Section 1001.

Sincerely,

CITY OF TEMPE

Lee M. Quaas, P.E.
Floodplain Administrator

cc: Jim Morris (AZ Dept. of Water Resources)
D. E. Sagramoso (Maricopa County Flood Control District)
George Cotton (CRSS)

Federal Emergency Management Agency

Washington, D.C. 20472

(202) 646-2770

CERTIFIED MAIL
RETURN RECEIPT REQUESTED

IN REPLY REFER TO:
65-PRE

Mr. James E. Bond, P.E.
Senior Civil Engineer
Department of Public Works
P.O. Box 5002
31 East Fifth Street
Tempe, Arizona 85280

Date: September 13, 1991
Case Number: 91-09-152P
Re: Salt River Channelization
Community: City of Tempe, Arizona

Dear Mr. Bond:

This is in regard to your request for a revision to the Flood Insurance Rate Map and/or Flood Boundary and Floodway Map for the referenced community. Our preacceptance review indicates that we do not have the minimum data we need to begin our evaluation of your request. The required data are described on the enclosed checklist and must be submitted before we can accept your request. Unless otherwise directed by you in writing, we will keep the submitted data in our files. We will not begin a detailed review of the submitted data until we receive the requested data.

When you write to us about your request, please include the case number (shown above) in your letter. If you have any questions about the requested data, please call Michael Baker, Jr., Inc., our Technical Evaluation Contractor, at (703) 838-0400, and ask for the Revisions Coordinator for your state.

Sincerely,

William R. Locke

William R. Locke
Chief, Risk Studies Division
Federal Insurance Administration

Enclosure

cc: The Honorable Harry Mitchell
Mayor, City of Tempe

Mr. Jim Morris
Engineering Division
Arizona Department of Water Resources

Mr. D. E. Sagramoso
Floodplain Administrator
Maricopa County Flood
Control District

Mr. Paul E. Kienow
Floodplain Management Engineer
City of Phoenix

Mr. George Cotton
CRSS Civil Engineers, Inc.

Federal Emergency Management Agency

Washington, D.C. 20472

DATA REQUEST CHECKLIST FOR REVISION TO
FLOOD INSURANCE STUDY (FIS)/FLOOD INSURANCE RATE MAP (FIRM)
BY LETTER OF MAP REVISION (LOMR) OR PHYSICAL MAP REVISION

Date: September 13, 1991

Requestor: Mr. James E. Bond, P.E. Community: City of Tempe, Arizona

Re: Salt River Channelization Case Number: 91-09-152P

To help you prepare the required supporting data for your revision request, we are enclosing copies of the following:

X	"National Flood Insurance Program and Related Regulations," dated October 1, 1989 and 1990
	Appeals, Revisions, and Amendments to Flood Insurance Maps, A Guide for Community Officials, dated January 1990
X	"Conditions and Criteria for Map Revisions," dated December 30, 1985
X	"Conditions and Criteria for Floodway Revisions," dated August 27, 1984
X	Copy of multiple and floodway HEC-2 hydraulic models used for the LOMR issued to City of Phoenix, dated September 4, 1991, (copy enclosed), along Salt River from downstream of Interstate 10 to 40th Street.

The data identified below as "Required" must be submitted for our review. The data identified as "Received" should not be resubmitted. References to the sections of the National Flood Insurance Program (NFIP) regulations that establish specific requirements for supporting data are included as appropriate in the checklist entries. All analyses submitted must be certified by a registered professional engineer. All topographic data submitted must be certified by a registered professional engineer or licensed land surveyor. The meaning of "certification" as it applies to the types of required supporting data is given in Paragraph 65.2(b) of the NFIP regulations.

Please note that upstream of this revision, the Salt River has been revised between Scottsdale and Hayden Roads. This revision is reflected in the effective FIS and FIRM dated September 4, 1991. In addition, downstream of this revision a LOMR dated September 4, 1991, was issued for the City of Phoenix for a reach of the Salt River between I-10 and 40th Street. Therefore, the calibration and revised multiple and floodway hydraulic complete models must incorporate these revisions.

Description of Data	Required	Received
1. A concise description of the nature and extent of the requested revision.		X
2. Evidence that the Chief Executive Officer (CEO) of the affected community, or an official designated by the CEO, was asked to submit the revision request. (See Section 65.4 of the NFIP regulations.)		X
3. A general description of the changed hydrologic conditions on which the revision request is based. (See Paragraph 65.6(c)(1)(i) of the NFIP regulations.)	X	
4. A general description of the changed hydraulic conditions, including channel modifications or other projects, on which the revision request is based. (See Paragraph 65.6(c)(2)(i) of the NFIP regulations.)		X
5. New hydrologic analysis, including a brief description of the methodology used, for the 10-, 50-, 100, and 500-year flood(s) for Salt River. (See Paragraph 65.6(a)(7) of the NFIP regulations.)	X	
6. Evidence that the appropriate local, State, or Federal agency (i.e., District of Maricopa County and the Arizona Flood Control Department of Water Resources) has approved the new hydrologic analysis, including the resulting peak discharge values.	X	
7. Printouts (including full input and output listings) from a calibration model, produced by the requestor, that duplicates the hydraulic computer model used to determine the 10-, 50-, 100-, and 500-year water-surface elevations shown for Salt River in the effective FIS report and on the effective FIRM. (See Paragraph 65.6(a)(8) of the NFIP regulations.) The calibration model may be either the FIS Model, reproduced on the requestor's equipment, or a model that yields computed water-surface profiles that duplicate the flood profiles shown for Salt River in the effective FIS report.	X	

Description of Data	Required	Received
8. Printouts (including full input and output listings) from a calibration model, produced by the requestor, that duplicates the hydraulic computer model used to determine the limits of the 100-year floodway shown for Salt River on the effective Flood Boundary and Floodway Map (FBFM)/FIRM. (See Paragraph 65.6(a)(8) of the NFIP regulations.) The calibration model may be either the FIS floodway model, reproduced on the requestor's equipment, or a model that yields the computed floodway widths and water-surface elevations presented in the Floodway Data Table for Salt River in the effective FIS report.	X	
9. Printouts (including full input and output listings) from a revised hydraulic model for the 10-, 50-, 100-, and 500-year water-surface elevations on Salt River. The revised model must be created from the calibration model (Item 7) and must meet the requirement(s) listed below.		
____ The model must be based on the same peak discharge values used in the calibration model (Item 7).		
X The model must be based on the peak discharge values determined in the new hydrologic analysis (Item 5).		
X The model must account for the effects of the changed hydraulic conditions on which the revision request is based.		
In addition, the revised model must account for the effects of any encroachments that have occurred in the 100-year floodplain since the FIS hydraulic model was developed and must cover a sufficient length of Salt River so that the water-surface elevations computed at cross sections upstream of the revised reach will match those shown at the same cross sections on the Flood Profiles in the effective FIS report within approximately 0.5 foot. All changes to the input data in the calibration model (Item 7) must be highlighted on the printouts. (See Paragraph 65.6(a)(8) of the NFIP regulations.) Please note that if construction of the SR153 bridge is not completed, then the revised HEC-2 run must not include this bridge.	X	

Description of Data	Required	Received
10. A hydraulic analysis, including a brief description of the methodology used, for the 100-year flood on _____. (See Paragraph 65.6(a)(9) of the NFIP regulations.)	N/A	
11. Printouts (including full input and output listings) from a revised hydraulic model for the 100-year floodway on Salt River. The revised model must be created from the calibration model (Item 8) and must meet the requirements listed below.		
____ The model must be based on the 100-year peak discharge value(s) used in the calibration model (Item 8).		
X The model must be based on the 100-year peak discharge value(s) determined in the new hydrologic analysis (Item 5).		
X The model must account for the effects of the changed hydraulic conditions on which the revision request is based.		
In addition, the revised model must account for the effects of any encroachments that have occurred in the 100-year floodplain since the FIS floodway model was developed and must cover a sufficient length of Salt River so that the water-surface elevations and floodway widths computed at cross sections upstream and downstream of the revised reach will match those shown at the same cross sections on the Flood Profiles and Floodway Data Table in the effective FIS report. The revised model must be based on the equal conveyance reduction method unless agreements have been made with affected property owners that an alternative method would be used. The net effect of the changed hydraulic conditions, the encroachments that have occurred since the FIS floodway model was developed, and the revised floodway limits must not increase the computed 100-year water-surface elevations by more than 1.0 foot above those computed in the calibration model (Item 7) or those computed in the revised model (Item 9), whichever are lower. (See Paragraph 65.7(b)(4) of the NFIP regulations.)	X	

Description of Data	Required	Received
12. Documentation, as shown below, concerning the approval of the revised floodway. (See Paragraphs 65.7(b)(1), (2), and (3) of the NFIP regulations.)		
X Copy of the public notice distributed by the community stating the community's intent to revise the floodway or a statement by the community that it has notified all affected property owners and affected adjacent jurisdictions.		
X Copy of a letter notifying the appropriate State agency of the floodway revision.		
X Documentation of the approval of the revised floodway by the appropriate State agency.		X
13. Corporate limit map and/or annexation ordinances that reflect the current community boundaries.	N/A	
14. A topographic map that shows the revised 100-year and 500-year floodplain and 100-year floodway boundaries, the locations and alignments of all cross sections used in the revised hydraulic models (Items 9 and 11), stream alignments, road alignments, and the community boundaries. The revised 100-year and 500-year floodplain and 100-year floodway boundaries must tie into those shown on the effective FIRM and FBFM upstream of the revised reach. The scale and topographic definition of the map must be sufficient to provide reasonable accuracy, and the map must be certified by a registered professional engineer. (See Paragraphs 65.6(a)(11) and 65.7(b)(5) of the NFIP regulations.)	X	
15. "As-built" (full size) plans, certified by a registered professional engineer, for all project elements, specifically for the north and south levees, SR153, SR143, and Priest Drive bridges.	X	

Description of Data	Required	Received
16. The following data concerning the ability of the north and south levees along Salt River to meet the minimum design and maintenance requirements established for levee systems in Section 65.10 of the NFIP regulations:		
a. **Freeboard** -- Evidence which shows that the levee(s) meet(s) the minimum freeboard requirements set forth in Paragraph 65.10(b)(1) of the NFIP regulations.		X
b. **Closures** -- Evidence which shows that all drainage structures that penetrate the levee(s) are fitted with closure devices that are (1) structural parts of the levee(s) during operation and (2) designed according to sound engineering practice, as set forth in Paragraph 65.10(b)(2) of the NFIP regulations.		X
c. **Embankment Protection** -- An engineering analysis which demonstrates that no appreciable erosion of the levee embankment(s) can be expected during the 100-year flood. The analysis must be performed according to the guidelines set forth in Paragraph 65.10(b)(3) of the NFIP regulations.		X
d. **Stability** -- An engineering analysis that evaluates the stability of the levee embankment(s) and foundation(s). The analysis must be performed according to the guidelines set forth in Paragraph 65.10(b)(4) of the NFIP regulations.		X
e. **Settlement** -- An engineering analysis that assesses the potential for and magnitude of losses of freeboard that may result from settlement of the levee(s) and that demonstrates that the minimum required freeboard will be maintained. The analysis must be performed according to the guidelines set forth in Paragraph 65.10(b)(5) of the NFIP regulations.	X	

ANWAR HARANI
(S.H.B.)

Description of Data	Required	Received
f. **Interior Drainage** -- An engineering analysis of the potential hazards associated with floodwaters that originate on the landward side of the levee(s) and that are prevented by the levee(s) from flowing into Salt River. The analysis must be performed according to the guidelines set forth in Paragraph 65.10(b)(6) of the NFIP regulations.		X
g. **Operations** -- A formal levee operation plan that meets, at a minimum, the requirements set forth in Paragraph 65.10(c) of the NFIP regulations.	X	
h. **Maintenance** -- A formal levee maintenance plan that meets, at a minimum, the requirements set forth in Paragraph 65.10(d) of the NFIP regulations.	X	
i. **Alternative Federal Agency Certification** -- As an alternative to the data described in Items 16a - 16e, a certification by a Federal agency with responsibility for levee design that the levee(s) has/have been adequately designed and constructed to provide protection from the 100-year flood. (See Paragraph 65.10(e) of the NFIP regulations.) Such a certification must, however, be accompanied by an adequate interior drainage analysis. (See Item f above and Paragraph 65.10(b)(6) of the NFIP regulations.)	X	
j. Geotechnical field and laboratory investigation data and report.	X	
17. Evidence that the City of Phoenix, Arizona is in agreement with the peak discharges determined in Item 5, and that they are aware of the impact of these flow increases within their community.	X	

FLOOD CONTROL DISTRICT
of
Maricopa County

3335 West Durango Street • Phoenix, Arizona 85009
Telephone (602) ~~262~~ 506-1501

D. E. Sagramoso, P.E., Chief Engineer and General Manager

BOARD OF DIRECTORS
Betsey Bayless
James D. Bruner
Carole Carpenter
Tom Freestone
Ed Pastor

SEPTEMBER 12 1991

SEP 1991
CITY OF TEMPE
ENGINEERING

Mr. James E. Bond, P.E.
Senior Civil Engineer
Public Works Department
City of Tempe
Post Office Box 5002
Tempe, Arizona 85280

SUBJECT: Salt River Channelization Floodplain Delineation Study - Preliminary Technical Data Notebook (TDN)

Dear Mr. Bond:

The Flood Control District Hydrology Division has reviewed the subject TDN submittal, and has made a number of recommendations and comments. The review was done from the standpoint of what we believe, through past experience with FEMA, to be the information necessary to gain issuance of the proposed LOMR.

The District recommends that the following information be submitted to FEMA in support of the LOMR:

1. Annotated copies of the Flood Insurance Rate Map, Flood Profiles and Flood Insurance Study report tables that show the requested revisions.

2. Revised delineations of the floodplain and floodway boundaries on a topographic map.

3. As-builts of the channelization project.

In addition, the Hydrology Division has the following comments:

1. On page 19 of the Data Notebook, last paragraph, the remnant channel area north of Sky Harbor Blvd. and south of the Grand Canal is addressed. That area should be shown as subject to inundation by the 100-year flood on the Flood Insurance Rate Map.

2. On page 21 of the Data Notebook, paragraph two, the discussion of the levee settlement will likely not be sufficient to meet FEMA requirements. An engineering analysis would be required that assesses the potential for, and magnitude of, losses of freeboard that may result from settlement of the levee and that demonstrates that the minimum freeboard will be mantained.

3. On page 22 of the Data Notebook, last paragraph, the discussion of maintenance will likely not be sufficient. A formal maintenance plan for levee system and the river structures will likely be required.

4. An issue might be raised concerning the upstream end of the levees with regard to containment of the flows. If FEMA issues a LOMR for this subject reach which does not reflect the continuation of the levees upstream, then the flood limits of the 100-year flood would have to be shown just upstream of the levees. Sheet 227 of 369 of Appendix A indicates that the flow would get behind the levees, especially on the south side.

If you have any questions, or wish to discuss these recommendations and comments, please do not hesitate to call Mr. Dave Johnson, Chief of the Hydrology Division at 262-1501.

Sincerely,

Donald J. Rerick
Project Manager

ARIZONA DEPARTMENT OF WATER RESOURCES

15 South 15th Avenue, Phoenix, Arizona 85007
Telephone (602) 542-1553
Fax (602 256-0506

FIFE SYMINGTON
Governor

ELIZABETH ANN RIEKE
Director

October 4, 1991

OCT 1991
CITY OF TEMPE
ENGINEERING

Mr. James E. Bond, P.E.
Senior Civil Engineer
City of Tempe
P.O. Box 5002
Tempe, AZ 85280

Dear Mr. Bond:

On August 21, 1991, you forwarded a copy of your application for a LOMR for the Salt River from 48th Street to the SPRR Bridge. Our review has been completed and a copy of David Creighton's comments are enclosed.

We have written a letter to FEMA advising that we concur with your study. A copy of this letter is enclosed for your records.

If you have any questions, please don't hesitate to contact me or Mr. Creighton at 542-1541.

Sincerely,

Terri Miller

Terri Miller
Program Coordinator
Flood Management Section

TM:js

encl.

ARIZONA DEPARTMENT OF WATER RESOURCES
15 South 15th Avenue, Phoenix, Arizona 85007
Telephone (602) 542-1553
Fax (602 256-0506

FIFE SYMINGTON
Governor

ELIZABETH ANN RIEKE
Director

October 4, 1991

Federal Emergency Management Agency
Risk Studies Division
Federal Insurance Administration
500 C Street, S.W.
Washington, D.C. 20472

Re: City of Tempe, Arizona; Project No. 906345B, LOMR

Gentlemen:

On August 21, 1991, the City of Tempe forwarded to you a request for a letter of map revision for the reach of the Salt River from 48th Street to the SPRR Bridge. At the same time, the study was forwarded to us for review.

Our engineers have completed their review and concur with the findings of CRSS Civil Engineers, Inc.

Sincerely,

Terri Miller

Terri Miller
Program Coordinator
Flood Management Section

TM:js

cc: Mr. James E. Bond, P.E.
City of Tempe

DEPARTMENT OF WATER RESOURCES
ENGINEERING DIVISION

M E M O R A N D U M

TO: James R. Morris, P.E., Chief

FROM: David E. Creighton, Jr., P.E.

DATE: September 30, 1991

SUBJECT: The CRSS Civil Engineer's August 1991 Preliminary TDN Report on the Salt River Channelization - 48th Street to SPRR Salt River Bridge in Tempe has been reviewed.

1. The intent to redo an acceptable HEC-2 analysis up to Grade Control Structure #4 appears to have been met satisfactorily.

2. The reach from SPRR to McClintock using data extremely different from now existing, or future As-Built presents a study whose purpose is of no current value for review or possible regulatory use.

3. The HEC-2 runs included provide a group of 4 historic runs, one current updating run and one hybrid run. Four of the runs are from 48th Street to SPRR, and 2 runs are from SPRR to McClintock Road Bridges. The hybrid run for SPRR to McClintock has a minor transition between SPRR and Mill Avenue where the Ash Avenue bridge has been removed. The cross-section data appears to be the same USCE 1982-FIS 1983 data with no modification for the conditions existing in April 1991 (date of run).

4. There will be a future set of LOMR requests to be supported for the SPRR-McClintock reach.

5. This study appears to be to bring grade control structure #4 up to As-Built conditions.

6. The USCE GR,SB,BT data for the 10 span concrete arch with 9-9 ft. wide piers appear to have taken some liberties with the BWC, BWP parameters. The BWC = 1460 ft. is at elevation 1155, about 20 ft. higher than the 440 ft. channel at elev. 1135.7. There appears to be no computational difference at the McClintock Road location.

7. There is an extensive display of the computation sheets and process used to check channel scour, bank stability. Scour depth, and armor layer size, previously determined by other methods.

8. The TDN phrasing and organization could be somewhat more clearly written to identify the purpose of the Appendicies B-1 and B-2.

9. The Study Documentation Abstract Section 2C - Scale should be reconciled with paragraph 3, pg. 6, particularly the first sentence meaning.

FLOOD CONTROL DISTRICT
of
Maricopa County

2801 West Durango Street • Phoenix, Arizona 85009
Telephone (602) 506-1501
Fax (602) 506-4601

D. E. Sagramoso, P.E., Chief Engineer and General Manager

BOARD OF DIRECTORS

P. Ben Arredondo
Betsey Bayless
James D. Bruner
Carole Carpenter
Tom Freestone

Mr. James E. Bond
City of Tempe
Public Works Department
P.O. Box 5002
31 East Fifth Street
Tempe, Arizona 85280

Re: Channelization of Salt River
Letter of Map Revision
C.O.T. Project No. 906345 B

Dear Mr. Bond:

Following research of our files and documentation published by the Corps of Engineers, we offer the following information regarding the 100-year peak discharges for the Salt River.

Salt River Current Peak Discharges (*)
(Maricopa County Flood Insurance Study)

LOCATION	100-YEAR PEAK DISCHARGES (cfs)
At Price Road Alignment	220,000
Downstream Side of Price Road Alignment	215,000
At Southern Pacific Railroad Bridge	215,000
Downstream Side of Southern Pacific Railroad Bridge	210,000
At Hohokam Expressway	210,000
Downstream of Hohokam Expressway	205,000
At 24th Street	205,000

(*) Used as input data to HEC-2 for flood insurance study analysis.

For future consideration the following table provides a comparison of flows at specific locations for present and future conditions with Plan 9 (565,000 acre feet of flood control storage on the Salt River at modified Roosevelt Dam).

Salt River 100-Year Peak Discharges (cfs)

LOCATION	CURRENT(1)	FUTURE(2)	FUTURE WITH FUTURE LAND USE CONDITIONS(3)
At Gilbert Road	230,000	170,000	170,000
At Tempe Bridge	215,000	166,000	166,000
At Central Ave.	200,000	164,000	165,000

(1) FEMA used in Maricopa County Flood Insurance Study.

(2) As established by the Corps of Engineers for 1988 land use conditions and Plan 9 outflow from Bureau of Reclamation reservoirs.

(3) As established by the Corps of Engineers for future land use conditions (channelization) and Plan 9 outflow from Bureau of Reclamation reservoirs.

If you have any questions, please call me at 506-1501.

Sincerely,

David R. Johnson
Chief, Hydrology Division

Copy to: Paul Kienow, P.E., City of Phoenix

APPENDIX B

Calculations

B1 - Baseline Watersurface profile models
B2 - Revised watersurface profile models
B3 - River structures data
B4 - Levee data
B5 - Levee settlement
B6 - Sedimentation analysis

APPENDIX B1

Baseline Water-Surface Profile Models

Baseline HEC-2 Runs

Reach: 1000 feet west of I-10 Salt River Bridge to Price Road (one mile east of McClintock Drive Salt River Bridge)

Source: Cella Barr Evan & Associates:
Mile 16.733 to 18.330
Corps of Engineers
Mile 18.637 to 23.667

```
****************************************************
*  WATER SURFACE PROFILES                          *
*  VERSION OF NOVEMBER 1976                        *
*  UPDATED MAY 1984                                *
*  IBM-PC-XT VERSION AUGUST 1985                   *
*  RUN DATE  03-10-92   TIME  12:29:06               *
****************************************************
```

```
****************************************
*  U.S. ARMY CORPS OF ENGINEERS        *
*  THE HYDROLOGIC ENGINEERING CENTER   *
*  609 SECOND STREET, SUITE D          *
*  DAVIS, CALIFORNIA 95616             *
  *  (916) 440-2105 (FTS) 448-2105
****************************************
```

```
X     X  XXXXXXX   XXXXX            XXXXX
X     X  X       X     X          X     X
X     X  X       X                      X
XXXXXXX  XXXX     X         XXXXX   XXXXX
X     X  X       X                X
X     X  X       X     X          X
X     X  XXXXXXX   XXXXX           XXXXXXX
```

THIS RUN EXECUTED 03-10-92

```
**************************************************
  HEC2 RELEASE DATED NOV 76 UPDATED MAY  1984
  ERROR CORR -  01,02,03,04,05,06
  MODIFICATION -  50,51,52,53,54,55,56
  IBM-PC-XT VERSION AUGUST 1985
**************************************************


C
T1      SALT RIVER HEC2                  X-SEC's          X-SEC's
T2      FILE NAME: SRBASE.HC2  PL)       16.733-18.33     18.367-23.667
T3      100-YEAR FLOODPLAIN WITH LEVEE   CELLA BARR       CORP OF ENGINEERS

J1  ICHECK    INQ      NINV     IDIR     STRT     METRIC   HVINS    Q        WSEL     FQ

      0.       3.       0.       0.   .000000      .00       .0       0.  1106.270    .000

J2  NPROF     IPLOT    PRFVS    XSECV    XSECH    FN       ALLDC    IBW      CHNIM    ITRACE

    -1.000     .000   -1.000     .000     .000     .000     .000     .000     .000   15.000

J3  VARIABLE CODES FOR SUMMARY PRINTOUT

    38.000   42.000   39.000   43.000    1.000    3.000   25.000    4.000    5.000     .000


QT     2.000 205000.000 205000.000       .000       .000       .000       .000       .000       .000       .000
NC      .040      .040      .030       .100       .300       .000       .000       .000       .000       .000
ET      .000      .000     4.100   9526.000  10630.000       .000       .000       .000       .000       .000
        CROSS-SECTION PER U.S. ARMY CORPS OF ENGINEERS 1983-1984
        STUDY (FEMA FIS) AND A.D.O.T. TOPO.
X1    16.733    13.000  9520.000 10630.000       .000       .000       .000       .000       .000       .000
GR  1106.000  8900.000  1100.000  9010.000   1102.100  9180.000  1100.000  9240.000  1099.000  9350.000
GR  1100.000  9460.000  1107.500  9520.000   1080.800  9620.000  1080.800 10520.000  1100.000 10580.000
GR  1105.000 10600.000  1107.500 10630.000   1107.500 10631.000       .000       .000       .000       .000

ET      .000      .000     4.100   9495.000  10545.000       .000       .000       .000       .000       .000
        GR STATIONS 9370, 9390 & 9430 (THE TEMPE DRAIN) WERE DELETED FROM
        THE CORPS' CROSS-SECTION TO REFLECT LEFT BANK IMPROVMENTS AND
        THE RELOCATION OF THE TEMPE DRAIN BY A.D.O.T.
X1    16.829    17.000  9270.000 10550.000    330.000    500.000    510.000       .000       .000       .000
GR  1107.500  8650.000  1100.000  8670.000   1100.000  8870.000  1102.000  8990.000  1100.000  9180.000
GR  1105.500  9270.000  1105.000  9300.000   1100.000  9320.000  1100.500  9480.000  1095.000  9620.000
GR  1085.000  9660.000  1080.900  9750.000   1080.900 10400.000  1085.000 10450.000  1105.000 10530.000
GR  1109.000 10550.000  1109.000 10551.000       .000       .000       .000       .000       .000       .000

NC      .000      .000      .000       .300       .500       .000       .000       .000       .000       .000
ET      .000      .000     4.100   9460.000  10510.000       .000       .000       .000       .000       .000
        GR STATIONS 9010, 9130, 9140 & 9180 WERE DELETED AND GR STATIONS
```

```
        9200, 9380 & 9425 WERE ADDED TO THE CORPS' CROSS-SECTION TO REFLECT
        LEFT BANK IMPROVMENTS AND RELOCATION OF THE TEMPE DRAIN BY A.D.O.T.
X1    16.875    11.000  8970.000 10530.000   550.000   190.000   240.000      .000      .000      .000
GR  1121.500  8880.000  1109.000  8970.000  1108.000  9425.000  1100.000  9540.000  1095.000  9650.000
GR  1085.000  9700.000  1081.200  9820.000  1080.900  9940.000  1080.900 10400.000  1105.000 10510.000
GR  1109.500 10530.000      .000      .000      .000      .000      .000      .000      .000      .000

ET     .000      .000     4.100  9460.000 10490.000      .000      .000      .000      .000      .000
        DOWNSTREAM SECTION OF I-10 BRIDGE. CROSS-SECTION PER FIELD MEASUREMENT
        MARCH 21, 1989.
X1    16.882    38.000  9445.000 10529.000    40.000    40.000    40.000      .000      .000      .000
X3    10.000      .000      .000      .000      .000      .000      .000  1115.000  1115.000      .000
GR  1125.000  9400.000  1115.000  9445.000  1100.000  9480.000  1100.000  9520.000  1088.000  9577.500
GR  1115.000  9577.500  1115.000  9583.500  1088.000  9583.500  1082.000  9615.000  1082.000  9713.000
GR  1115.000  9713.000  1115.000  9719.000  1082.000  9719.000  1082.000  9848.500  1115.000  9848.500
GR  1115.000  9854.500  1082.000  9854.500  1082.000  9984.000  1115.000  9984.000  1115.000  9990.000
GR  1082.000  9990.000  1082.000 10119.500  1115.000 10119.500  1115.000 10125.500  1082.000 10125.500
GR  1082.000 10255.000  1115.000 10255.000  1115.000 10261.000  1082.000 10261.000  1082.000 10390.500
GR  1115.000 10390.500  1115.000 10396.500  1082.000 10396.500  1084.000 10410.000  1098.000 10415.000
GR  1100.000 10445.000  1115.000 10529.000  1124.000 10560.000      .000      .000      .000      .000

ET     .000      .000     4.100  9470.000 10480.000      .000      .000      .000      .000      .000
        UPSTREAM SECTION OF I-10 BRIDGE. CROSS-SECTION PER FIELD MEASUREMENT
        MARCH 21, 1989.
        DISTANCE BETWEEN CROSS-SECTIONS AS LISTED ON THE X1 CARD HAVE BEEN
        CHANGED FROM 114' FOR THE LOB, ROB & CHNL TO 165' RESPECTIVELY
        PER MEASUREMENTS BETWEEN CROSS-SECTIONS AS INDICATED ON WORK MAPS
        TITLED "SALT RIVER CHANNEL, CENTRAL AVENUE TO SCOTTSDALE ROAD,
        8-10-82, MARICOPA COUNTY, SHEET 2B" AND AS REFERENCED AS THE AUGUST
        1982 A.D.O.T. TOPO BASE MAP AT THE "T" CARD LOCATION IN THE HEC2
        OF THE  U.S. ARMY CORPS OF ENGINEERS' SALT RIVER FLOOD INSURANCE STUDY
X1    16.904    38.000  9445.000 10529.000   165.000   165.000   165.000      .000      .000      .000
X2     .000      .000      .000  1115.000  1124.000      .000      .000      .000      .000      .000
GR  1125.000  9400.000  1115.000  9445.000  1100.000  9480.000  1100.000  9520.000  1088.000  9577.500
GR  1115.000  9577.500  1115.000  9583.500  1088.000  9583.500  1082.000  9615.000  1082.000  9713.000
GR  1115.000  9713.000  1115.000  9719.000  1082.000  9719.000  1082.000  9848.500  1115.000  9848.500
GR  1115.000  9854.500  1082.000  9854.500  1082.000  9984.000  1115.000  9984.000  1115.000  9990.000
GR  1082.000  9990.000  1082.000 10119.500  1115.000 10119.500  1115.000 10125.500  1082.000 10125.500
GR  1082.000 10255.000  1115.000 10255.000  1115.000 10261.000  1082.000 10261.000  1082.000 10390.500
GR  1115.000 10390.500  1115.000 10396.500  1082.000 10396.500  1084.000 10410.000  1098.000 10415.000
GR  1100.000 10445.000  1115.000 10529.000  1124.000 10560.000      .000      .000      .000      .000

ET     .000      .000     4.100  9468.000 10498.000      .000      .000      .000      .000      .000
        CHANNEL CROSS-SECTION GEOMETRY IS BASED UPON TOPO FURNISHED BY BOYLE
        ENGINEERING, DEC.1987.
        DISTANCE BETWEEN CROSS-SECTIONS AS LISTED ON THE X1 CARD HAVE BEEN
        CHANGED FROM 120' FOR THE LOB, ROB & CHNL TO 90' RESPECTIVELY
        PER MEASUREMENTS BETWEEN CROSS-SECTIONS AS INDICATED ON WORK MAPS
        TITLED "SALT RIVER CHANNEL, CENTRAL AVENUE TO SCOTTSDALE ROAD,
```

8-10-82, MARICOPA COUNTY, SHEET 2B" AND AS REFERENCED AS THE AUGUST
1982 A.D.O.T. TOPO BASE MAP AT THE "T" CARD LOCATION IN THE HEC2
OF THE U.S. ARMY CORPS OF ENGINEERS' SALT RIVER FLOOD INSURANCE STUDY
ET CARD STATIONS FROM 16.927 TO 17.833 HAVE BEEN CHANGED FROM THE
CORPS' TO FIT WITHIN EXISTING SECTIONS.

X1	16.927	18.000	9600.000	10405.000	90.000	90.000	90.000	.000	.000	.000
GR	1124.000	9000.000	1120.000	9030.000	1120.000	9425.000	1110.000	9460.000	1100.000	9480.000
GR	1090.000	9575.000	1086.000	9600.000	1086.000	9615.000	1084.000	9800.000	1083.000	10000.000
GR	1084.000	10060.000	1084.000	10145.000	1082.000	10280.000	1082.000	10340.000	1084.000	10405.000
GR	1090.000	10425.000	1098.200	10475.000	1115.000	10525.000	.000	.000	.000	.000
NC	.000	.000	.000	.100	.300	.000	.000	.000	.000	.000
NH	4.000	.150	9000.000	.025	9605.000	.030	10395.000	.040	11080.000	.000
ET	.000	.000	4.100	9520.000	10500.000	.000	.000	.000	.000	.000

CHANNEL CROSS-SECTION GEOMETRY IS BASED UPON TOPO FURNISHED BY BOYLE
ENGINEERING, DEC. 1987 AND BY THE GRADING AND DRAINAGE PLAN FOR THE
IMPROVEMENTS TO THE CALMAT CO.'S AIRPORT PROPERTY AS PREPARED BY
BARRETT CONSULTING GROUP INC., JUNE 1987. REFER TO ATTACHMENT D
FOR PROPOSED AIRPORT PROPERTY GRADES.
DEPRESSIONS BELOW THE NORMAL CHANNEL GRADE BETWEEN SECTIONS 17.027
AND 17.129 AND SMALL STOCK PILES OF MATERIAL, ALL THE RESULT OF
MINING IN THE RIVER CHANNEL, WERE NOT MODELED.

X1	17.027	26.000	9605.000	10395.000	440.000	540.000	528.000	.000	.000	.000
GR	1120.000	6940.000	1114.000	6960.000	1110.000	7010.000	1108.000	7235.000	1106.500	7610.000
GR	1106.000	7850.000	1106.000	9000.000	1106.000	9225.000	1106.000	9495.000	1108.000	9505.000
GR	1110.000	9520.000	1110.000	9535.000	1082.000	9605.000	1082.000	9650.000	1084.000	9755.000
GR	1084.000	10020.000	1083.000	10060.000	1082.200	10270.000	1082.000	10340.000	1082.000	10395.000
GR	1082.000	10395.000	1090.000	10425.000	1100.000	10445.000	1106.000	10840.000	1108.000	10875.000
GR	1110.000	11080.000	.000	.000	.000	.000	.000	.000	.000	.000
NH	4.000	.150	8835.000	.025	9610.000	.030	10455.000	.040	11275.000	.000
ET	.000	.000	4.100	9535.000	10480.000	.000	.000	.000	.000	.000

CHANNEL CROSS-SECTION GEOMETRY IS BASED UPON TOPO FURNISHED BY BOYLE
ENGINEERING, DEC. 1987 AND BY THE GRADING AND DRAINAGE PLAN FOR THE
IMPROVEMENTS TO THE CALMAT CO.'S AIRPORT PROPERTY AS PREPARED BY
BARRETT CONSULTING GROUP INC., JUNE 1987. REFER TO ATTACHMENT D
FOR PROPOSED AIRPORT PROPERTY GRADES.
DISTANCE BETWEEN CROSS-SECTIONS AS LISTED ON THE X1 CARD HAVE BEEN
CHANGED FROM 200' TO 135' FOR THE LOB, 200' TO 160' FOR THE ROB & 200'
TO 145' FOR THE CHNL PER MEASUREMENTS BETWEEN CROSS-SECTIONS AS
INDICATED ON WORK MAPS TITLED "SALT RIVER CHANNEL, CENTRAL AVENUE TO
SCOTTSDALE ROAD, 8-10-82, MARICOPA COUNTY, SHEET 2B" AND AS REFERENCED
AS THE AUGUST 1982 A.D.O.T. TOPO BASE MAP AT THE "T" CARD LOCATION IN
THE HEC2 OF THE U.S. ARMY CORPS OF ENGINEERS' SALT RIVER FLOOD
INSURANCE STUDY.

X1	17.053	26.000	9610.000	10455.000	135.000	160.000	145.000	.000	.000	.000
GR	1120.000	7010.000	1114.000	7030.000	1112.000	7060.000	1110.000	7070.000	1108.000	7430.000
GR	1106.000	8160.000	1108.000	8830.000	1106.000	9200.000	1106.000	9510.000	1110.000	9520.000
GR	1110.000	9525.000	1110.000	9535.000	1082.000	9610.000	1082.000	9685.000	1084.000	9740.000
GR	1084.000	9845.000	1082.000	9955.000	1082.000	10455.000	1090.000	10515.000	1100.000	10565.000
GR	1104.000	10670.000	1100.000	10750.000	1104.000	10845.000	1108.000	10880.000	1110.000	11105.000
GR	1112.000	11275.000	.000	.000	.000	.000	.000	.000	.000	.000

```
NH      4.000      .150  8620.000      .025  9625.000      .030 10420.000      .040 11235.000      .000
ET       .000      .000     4.100  9540.000 10485.000      .000      .000      .000      .000      .000
         CHANNEL CROSS-SECTION GEOMETRY IS BASED UPON TOPO FURNISHED BY BOYLE
         ENGINEERING, DEC. 1987 AND BY THE GRADING AND DRAINAGE PLAN FOR THE
         IMPROVEMENTS TO THE CALMAT CO.'S AIRPORT PROPERTY AS PREPARED BY
         BARRETT CONSULTING GROUP INC., JUNE 1987. REFER TO ATTACHMENT D
         FOR PROPOSED AIRPORT PROPERTY GRADES.
X1     17.091     17.000  9625.000 10420.000   200.000   200.000   200.000      .000      .000      .000
GR   1114.000   7145.000  1108.000  7900.000  1106.900  8230.000  1107.000  8620.000  1108.000  9470.000
GR   1110.000   9535.000  1110.000  9540.000  1090.000  9595.000  1082.000  9625.000  1082.000  9650.000
GR   1084.000   9715.000  1084.000  9920.000  1082.000 10080.000  1082.000 10420.000  1108.000 10485.000
GR   1110.000  11010.000  1112.000 11235.000      .000      .000      .000      .000      .000      .000

NH      4.000      .150  8440.000      .025  9620.000      .035 10420.000      .040 11120.000      .000
ET       .000      .000     4.100  9565.000 10490.000      .000      .000      .000      .000      .000
         DISTANCE BETWEEN CROSS-SECTIONS AS LISTED ON THE X1 CARD HAVE BEEN
         CHANGED FROM 200' FOR THE LOB, ROB & CHNL TO 186' RESPECTIVELY
         PER MEASUREMENTS BETWEEN CROSS-SECTIONS AS INDICATED ON WORK MAPS
         TITLED "SALT RIVER CHANNEL, CENTRAL AVENUE TO SCOTTSDALE ROAD,
         8-10-82, MARICOPA COUNTY, SHEET 2B" AND AS REFERENCED AS THE AUGUST
         1982 A.D.O.T. TOPO BASE MAP AT THE "T" CARD LOCATION IN THE HEC2
         OF THE  U.S. ARMY CORPS OF ENGINEERS' SALT RIVER FLOOD INSURANCE STUDY
         CHANNEL CROSS-SECTION GEOMETRY IS BASED UPON TOPO FURNISHED BY BOYLE
         ENGINEERING, DEC. 1987 AND BY THE GRADING AND DRAINAGE PLAN FOR THE
         IMPROVEMENTS TO THE CALMAT CO.'S AIRPORT PROPERTY AS PREPARED BY
         BARRETT CONSULTING GROUP INC., JUNE 1987. REFER TO ATTACHMENT D
         FOR PROPOSED AIRPORT PROPERTY GRADES.
X1     17.129     13.000  9620.000 10420.000   186.000   186.000   186.000      .000      .000      .000
GR   1109.000   7360.000  1108.000  7465.000  1107.000  8440.000  1108.000  9505.000  1110.000  9520.000
GR   1110.000   9540.000  1110.000  9565.000  1084.000  9620.000  1082.000  9740.000  1082.000 10420.000
GR   1108.000  10490.000  1110.000 10665.000  1112.000 11120.000      .000      .000      .000      .000

NH      4.000      .100  8290.000      .025  9675.000      .030 10420.000      .040 10910.000      .000
ET       .000      .000     4.100  9570.000 10495.000      .000      .000      .000      .000      .000
         DISTANCE BETWEEN CROSS-SECTIONS AS LISTED ON THE X1 CARD HAVE BEEN
         CHANGED FROM 200' FOR THE LOB, ROB & CHNL TO 220' RESPECTIVELY
         PER MEASUREMENTS BETWEEN CROSS-SECTIONS AS INDICATED ON WORK MAPS
         TITLED "SALT RIVER CHANNEL, CENTRAL AVENUE TO SCOTTSDALE ROAD,
         8-10-82, MARICOPA COUNTY, SHEET 2B" AND AS REFERENCED AS THE AUGUST
         1982 A.D.O.T. TOPO BASE MAP AT THE "T" CARD LOCATION IN THE HEC2
         OF THE  U.S. ARMY CORPS OF ENGINEERS' SALT RIVER FLOOD INSURANCE STUDY
         CHANNEL CROSS-SECTION GEOMETRY IS BASED UPON TOPO FURNISHED BY BOYLE
         ENGINEERING, DEC. 1987 AND BY THE GRADING AND DRAINAGE PLAN FOR THE
         IMPROVEMENTS TO THE CALMAT CO.'S AIRPORT PROPERTY AS PREPARED BY
         BARRETT CONSULTING GROUP INC., JUNE 1987. REFER TO ATTACHMENT D
         FOR PROPOSED AIRPORT PROPERTY GRADES.
X1     17.167     19.000  9675.000 10420.000   220.000   220.000   220.000      .000      .000      .000
GR   1109.000   7400.000  1108.000  7475.000  1107.300  8290.000  1107.200  8440.000  1108.000  8660.000
GR   1108.000   9330.000  1108.000  9460.000  1108.000  9505.000  1110.000  9515.000  1112.000  9530.000
GR   1110.000   9545.000  1110.000  9570.000  1086.000  9620.000  1084.000  9675.000  1082.000  9755.000
GR   1082.000  10420.000  1108.000 10495.000  1110.000 10670.000  1112.000 10910.000      .000      .000
```

```
NH      4.000      .100   8200.000      .025   9685.000      .030  10425.000      .040  10900.000      .000
ET       .000      .000      4.100  9545.000  10495.000      .000       .000      .000       .000      .000
         CHANNEL CROSS-SECTION GEOMETRY IS BASED UPON TOPO FURNISHED BY BOYLE
         ENGINEERING, DEC. 1987 AND BY THE GRADING AND DRAINAGE PLAN FOR THE
         IMPROVEMENTS TO THE CALMAT CO.'S AIRPORT PROPERTY AS PREPARED BY
         BARRETT CONSULTING GROUP INC., JUNE 1987. REFER TO ATTACHMENT D
         FOR PROPOSED AIRPORT PROPERTY GRADES.
X1     17.205     21.000   9685.000  10425.000     80.000     80.000     80.000      .000       .000      .000
GR   1108.000   7360.000   1109.000   7430.000   1108.000   7480.000   1107.500   8200.000   1107.300   8440.000
GR   1108.000   8580.000   1108.000   9400.000   1108.000   9500.000   1110.000   9510.000   1112.000   9530.000
GR   1112.500   9545.000   1110.000   9555.000   1086.000   9630.000   1084.000   9685.000   1082.000   9950.000
GR   1082.000  10035.000   1082.000  10250.000   1082.000  10425.000   1108.000  10495.000   1110.000  10675.000
GR   1112.000  10900.000       .000       .000       .000       .000       .000       .000       .000       .000

NH      4.000      .100   8110.000      .025   9685.000      .030  10400.000      .040  10890.000      .000
ET       .000      .000      4.100  9535.000  10500.000      .000       .000      .000       .000      .000
         CHANNEL CROSS-SECTION GEOMETRY IS BASED UPON TOPO FURNISHED BY BOYLE
         ENGINEERING, DEC. 1987 AND BY THE GRADING AND DRAINAGE PLAN FOR THE
         IMPROVEMENTS TO THE CALMAT CO.'S AIRPORT PROPERTY AS PREPARED BY
         BARRETT CONSULTING GROUP INC., JUNE 1987. REFER TO ATTACHMENT D
         FOR PROPOSED AIRPORT PROPERTY GRADES.
X1     17.242     20.000   9685.000  10400.000    120.000    120.000    120.000      .000       .000      .000
GR   1108.000   7455.000   1108.000   7730.000   1107.500   8100.000   1108.000   8380.000   1107.300   8460.000
GR   1108.000   8540.000   1108.000   9470.000   1110.000   9480.000   1112.000   9490.000   1112.500   9525.000
GR   1113.000   9535.000   1088.000   9625.000   1086.000   9675.000   1084.000   9685.000   1082.000  10270.000
GR   1082.000  10400.000   1084.000  10425.000   1108.000  10500.000   1110.000  10680.000   1112.000  10890.000

NH      4.000      .065   8340.000      .025   9690.000      .030  10400.000      .040  10890.000      .000
ET       .000      .000      4.100  9530.000  10510.000      .000       .000      .000       .000      .000
         CHANNEL CROSS-SECTION GEOMETRY IS BASED UPON TOPO FURNISHED BY BOYLE
         ENGINEERING, DEC. 1987 AND BY THE GRADING AND DRAINAGE PLAN FOR THE
         IMPROVEMENTS TO THE CALMAT CO.'S AIRPORT PROPERTY AS PREPARED BY
         BARRETT CONSULTING GROUP INC., JUNE 1987. REFER TO ATTACHMENT D
         FOR PROPOSED AIRPORT PROPERTY GRADES.
X1     17.280     22.000   9690.000  10400.000    200.000    200.000    200.000      .000       .000      .000
GR   1108.000   7480.000   1108.000   7870.000   1108.000   8130.000   1118.000   8130.000   1118.000   8340.000
GR   1108.000   8340.000   1107.300   8490.000   1108.000   8510.000   1108.000   9510.000   1114.000   9530.000
GR   1113.700   9570.000   1110.000   9580.000   1088.000   9615.000   1086.000   9670.000   1084.000   9690.000
GR   1082.800  10000.000   1084.000  10360.000   1086.000  10400.000   1088.000  10430.000   1108.000  10510.000
GR   1110.000  10700.000   1112.000  10890.000       .000       .000       .000       .000       .000       .000

NH      4.000      .065   8330.000      .025   9695.000      .030  10360.000      .040  10890.000      .000
ET       .000      .000      4.100  9570.000  10500.000      .000       .000      .000       .000      .000
X1     17.318     27.000   9695.000  10360.000    200.000    200.000    200.000      .000       .000      .000
GR   1108.000   7480.000   1108.000   7640.000   1118.000   7640.000   1118.000   7800.000   1108.000   7800.000
GR   1108.000   8130.000   1118.000   8130.000   1118.000   8330.000   1108.000   8330.000   1108.000   8470.000
GR   1107.500   8515.000   1108.000   8575.000   1108.000   9510.000   1112.000   9525.000   1114.000   9530.000
GR   1114.000   9540.000   1110.000   9565.000   1088.000   9610.000   1088.000   9665.000   1084.000   9695.000
GR   1083.100  10000.000   1084.000  10360.000   1086.000  10400.000   1088.000  10455.000   1108.000  10520.000
GR   1110.000  10745.000   1112.000  10890.000       .000       .000       .000       .000       .000       .000
```

```
NH      5.000      .065   8340.000      .025   9690.000      .030  10380.000      .040  10550.000      .100
NH  11009.000      .000      .000      .000      .000      .000       .000      .000       .000      .000
ET       .000      .000     4.100   9550.000  10540.000      .000       .000      .000       .000      .000
         17.356 THRU 17.833; CHANNEL CROSS-SECTION GEOMETRY IS BASED UPON TOPO
         FURNISHED BY BOYLE ENGINEERING, DEC. 1987, FOR THE LEFT LEVEE AND THE
         CORPS' CROSS-SECTIONS FOR THE RIGHT BANK.
         RIGHT OVERBANK IS ASSUMED INEFFECTIVE FLOW.
X1     17.356     32.000   9690.000  10380.000    200.000    200.000    200.000      .000       .000      .000
GR   1110.000   7500.000   1108.500   8120.000   1118.000   8120.000   1118.000   8340.000   1108.500   8340.000
GR   1108.000   8380.000   1108.000   9510.000   1110.000   9515.000   1112.000   9525.000   1114.000   9535.000
GR   1114.700   9550.000   1088.000   9615.000   1088.000   9670.000   1084.000   9690.000   1083.400  10000.000
GR   1082.500  10190.000   1084.000  10380.000   1090.000  10425.000   1090.000  10470.000   1097.000  10515.000
GR   1092.000  10550.000   1086.300  10591.900   1096.400  10645.400   1092.600  10688.000   1093.000  10757.500
GR   1096.700  10783.000   1102.200  10800.600   1110.800  10807.100   1113.300  10851.600   1114.600  10934.200
GR   1112.600  10993.700   1112.500  11009.000       .000       .000       .000       .000       .000       .000

NH      4.000      .065   8690.000      .025   9700.000      .030  10370.000      .040  10548.000      .000
ET       .000      .000     4.100   9550.000  10548.000      .000       .000      .000       .000      .000
         THE FOLLOWING MESSAGE IS TAKEN FROM THE HEC2 PRINTOUT OF THE U.S. ARMY
         CORPS OF ENGINEERS 1983-1984 STUDY (FEMA FIS).
         "FROM STATION 17.394 TO STATION 21.102, ALL HYDRAULIC
         DATA WAS OBTAINED FROM HNTB ENGINEERING FIRM
         HNTB IS THE DESIGN CONTRACTOR OF AIRPORT CHANNELIZATION
         PROJECT.  IN PHOENIX CALL MR. BOB MILLER, (602) 957-1931,
         IN KANSAS CITY, MR. DICK SHWAB (816) 333-4800."
X1     17.394     21.000   9700.000  10370.000    200.000    200.000    200.000      .000       .000      .000
GR   1110.000   7525.000   1108.400   7640.000   1108.500   8150.000   1118.000   8150.000   1118.000   8350.000
GR   1108.500   8350.000   1107.900   8650.000   1108.000   8690.000   1108.000   9510.000   1114.000   9535.000
GR   1115.000   9550.000   1110.000   9575.000   1090.000   9615.000   1088.000   9680.000   1084.000   9700.000
GR   1083.700  10000.000   1083.000  10290.000   1084.000  10370.000   1090.000  10425.000   1090.600  10500.000
GR   1114.600  10548.000       .000       .000       .000       .000       .000       .000       .000       .000

NH      4.000      .065   8650.000      .025   9705.000      .030  10380.000      .040  10548.000      .000
ET       .000      .000     4.100   9550.000  10548.000      .000       .000      .000       .000      .000
X1     17.432     24.000   9705.000  10380.000    200.000    200.000    200.000      .000       .000      .000
GR   1110.000   7650.000   1109.500   8030.000   1108.500   8440.000   1118.000   8440.000   1118.000   8650.000
GR   1108.000   8650.000   1108.000   9510.000   1110.000   9515.000   1112.000   9525.000   1114.000   9535.000
GR   1115.000   9550.000   1110.000   9575.000   1090.000   9620.000   1090.000   9670.000   1084.000   9705.000
GR   1084.000   9730.000   1084.000  10000.000   1084.300  10170.000   1084.000  10300.000   1084.000  10380.000
GR   1090.000  10420.000   1092.000  10480.000   1091.100  10500.000   1114.900  10548.000       .000       .000

NH      4.000      .065   8795.000      .025   9700.000      .030  10480.000      .040  10547.000      .000
ET       .000      .000     4.100   9550.000  10547.000      .000       .000      .000       .000      .000
X1     17.453     18.000   9700.000  10480.000    112.000    112.000    112.000      .000       .000      .000
GR   1110.000   7670.000   1109.500   8060.000   1108.000   8795.000   1108.000   9510.000   1114.000   9525.000
GR   1115.000   9550.000   1112.000   9570.000   1092.000   9615.000   1090.000   9680.000   1086.000   9700.000
GR   1084.000   9860.000   1083.000   9940.000   1084.000   9980.000   1084.000  10370.000   1092.000  10425.000
GR   1092.000  10480.000   1091.500  10500.000   1114.900  10547.000       .000       .000       .000       .000
```

NH	4.000	.045	8805.000	.025	9700.000	.030	10480.000	.040	10547.000	.000
ET	.000	.000	4.100	9550.000	10547.000	.000	.000	.000	.000	.000
X1	17.459	18.000	9700.000	10480.000	31.000	31.000	31.000	.000	.000	.000
GR	1110.000	7690.000	1109.500	8060.000	1108.000	8805.000	1108.000	9510.000	1114.000	9535.000
GR	1115.000	9550.000	1112.000	9570.000	1092.000	9615.000	1090.000	9680.000	1086.000	9700.000
GR	1084.000	9880.000	1083.000	9940.000	1084.000	9980.000	1084.000	10370.000	1092.000	10425.000
GR	1092.000	10480.000	1091.600	10500.000	1114.900	10547.000	.000	.000	.000	.000
NH	.000	.045	8560.000	.025	9705.000	.030	10360.000	.040	10547.000	.000
ET	.000	.000	4.100	9560.000	10547.000	.000	.000	.000	.000	.000
X1	17.470	16.000	9705.000	10360.000	57.000	57.000	57.000	.000	.000	.000
GR	1110.000	7765.000	1108.000	8560.000	1108.000	9510.000	1110.000	9520.000	1114.000	9540.000
GR	1115.000	9560.000	1092.000	9620.000	1090.000	9680.000	1086.000	9705.000	1084.000	9890.000
GR	1084.000	9965.000	1084.000	10275.000	1084.000	10360.000	1092.000	10425.000	1091.700	10500.000
GR	1115.000	10547.000	.000	.000	.000	.000	.000	.000	.000	.000
NH	4.000	.045	8580.000	.025	9700.000	.030	10425.000	.040	10546.000	.000
ET	.000	.000	4.100	9555.000	10546.000	.000	.000	.000	.000	.000
X1	17.486	18.000	9700.000	10425.000	84.000	84.000	84.000	.000	.000	.000
GR	1110.000	7815.000	1108.000	8580.000	1108.000	9520.000	1110.000	9525.000	1114.000	9540.000
GR	1115.800	9555.000	1114.000	9575.000	1092.000	9620.000	1086.000	9700.000	1084.000	9890.000
GR	1083.500	9940.000	1084.000	9970.000	1084.400	10200.000	1084.000	10345.000	1084.000	10380.000
GR	1092.000	10425.000	1092.000	10500.000	1115.100	10546.000	.000	.000	.000	.000
NH	4.000	.045	8660.000	.025	9710.000	.030	10425.000	.040	10546.000	.000
ET	.000	.000	4.100	9555.000	10546.000	.000	.000	.000	.000	.000
X1	17.498	18.000	9710.000	10425.000	68.000	68.000	68.000	.000	.000	.000
GR	1110.000	7810.000	1108.000	8660.000	1108.000	9515.000	1110.000	9525.000	1114.000	9540.000
GR	1115.800	9555.000	1114.000	9575.000	1092.000	9620.000	1086.000	9710.000	1086.000	9785.000
GR	1084.000	9910.000	1084.000	9930.000	1084.400	10200.000	1084.000	10335.000	1084.000	10380.000
GR	1092.000	10425.000	1092.200	10500.000	1115.200	10546.000	.000	.000	.000	.000
NH	4.000	.045	8880.000	.025	9695.000	.030	10390.000	.040	10546.000	.000
ET	.000	.000	4.100	9555.000	10546.000	.000	.000	.000	.000	.000
X1	17.508	16.000	9695.000	10390.000	48.000	48.000	48.000	.000	.000	.000
GR	1110.000	7810.000	1109.300	8315.000	1108.000	8865.000	1108.000	9510.000	1114.000	9535.000
GR	1116.000	9555.000	1092.000	9615.000	1090.000	9675.000	1088.000	9695.000	1086.000	9750.000
GR	1086.000	9800.000	1084.000	9940.000	1084.000	10390.000	1092.000	10425.000	1092.300	10500.000
GR	1115.200	10546.000	.000	.000	.000	.000	.000	.000	.000	.000
NH	4.000	.045	8910.000	.025	9685.000	.030	10405.000	.040	10545.000	.000
ET	.000	.000	4.100	9550.000	10545.000	.000	.000	.000	.000	.000
X1	17.536	20.000	9685.000	10405.000	150.000	150.000	150.000	.000	.000	.000
GR	1110.000	8130.000	1108.600	8370.000	1108.000	8910.000	1108.000	9510.000	1114.000	9530.000
GR	1115.800	9550.000	1092.000	9610.000	1090.000	9670.000	1088.000	9685.000	1086.000	9790.000
GR	1086.000	9825.000	1085.000	10065.000	1086.000	10125.000	1084.300	10270.000	1086.000	10310.000
GR	1086.000	10355.000	1088.000	10405.000	1092.000	10425.000	1092.700	10500.000	1115.400	10545.000

NH	4.000	.065	8970.000	.025	9690.000	.030	10400.000	.040	10545.000	.000
ET	.000	.000	4.100	9530.000	10545.000	.000	.000	.000	.000	.000
X1	17.568	17.000	9690.000	10400.000	170.000	170.000	170.000	.000	.000	.000
GR	1110.000	7900.000	1110.000	8660.000	1108.000	8970.000	1108.000	9490.000	1114.000	9515.000
GR	1115.800	9530.000	1094.000	9595.000	1092.000	9645.000	1088.000	9690.000	1086.000	9825.000
GR	1086.000	10180.000	1084.600	10240.000	1086.000	10325.000	1088.000	10400.000	1092.000	10415.000
GR	1093.200	10500.000	1115.500	10545.000	.000	.000	.000	.000	.000	.000
NH	4.000	.065	9035.000	.025	9640.000	.030	10400.000	.040	10544.000	.000
ET	.000	.000	4.100	9520.000	10544.000	.000	.000	.000	.000	.000
X1	17.606	20.000	9640.000	10400.000	200.000	200.000	200.000	.000	.000	.000
GR	1110.000	8320.000	1109.500	8950.000	1108.000	9035.000	1108.000	9480.000	1116.000	9505.000
GR	1116.000	9520.000	1110.000	9545.000	1100.000	9565.000	1094.000	9580.000	1092.000	9640.000
GR	1088.000	9760.000	1088.000	10060.000	1086.000	10155.000	1084.700	10185.000	1086.000	10210.000
GR	1088.000	10285.000	1088.000	10400.000	1092.000	10420.000	1093.800	10500.000	1115.700	10544.000
NH	4.000	.065	9100.000	.025	9690.000	.030	10425.000	.040	10543.000	.000
ET	.000	.000	4.100	9505.000	10543.000	.000	.000	.000	.000	.000
X1	17.644	23.000	9690.000	10425.000	200.000	200.000	200.000	.000	.000	.000
GR	1110.000	8460.000	1109.700	9010.000	1108.000	9100.000	1108.000	9470.000	1116.000	9500.000
GR	1115.800	9505.000	1094.000	9570.000	1094.000	9615.000	1088.000	9690.000	1087.000	9740.000
GR	1088.000	9810.000	1089.000	9890.000	1088.000	10000.000	1087.000	10015.000	1088.000	10040.000
GR	1088.000	10105.000	1086.000	10150.000	1085.000	10180.000	1088.000	10220.000	1090.000	10425.000
GR	1092.000	10435.000	1094.300	10500.000	1115.900	10543.000	.000	.000	.000	.000
NH	4.000	.065	9170.000	.025	9650.000	.030	10415.000	.040	10543.000	.000
ET	.000	.000	4.100	9495.000	10543.000	.000	.000	.000	.000	.000
X1	17.682	18.000	9650.000	10415.000	200.000	200.000	200.000	.000	.000	.000
GR	1110.000	8640.000	1110.000	9160.000	1108.000	9170.000	1108.000	9450.000	1116.000	9480.000
GR	1116.000	9495.000	1094.000	9560.000	1094.000	9605.000	1088.000	9650.000	1088.000	9755.000
GR	1088.000	10020.000	1088.000	10120.000	1086.000	10195.000	1088.000	10235.000	1090.000	10415.000
GR	1092.000	10425.000	1094.800	10500.000	1116.100	10543.000	.000	.000	.000	.000
NC	.040	.040	.030	.000	.000	.000	.000	.000	.000	.000
ET	.000	.000	4.100	9490.000	10542.000	.000	.000	.000	.000	.000
X1	17.720	17.000	9620.000	10415.000	200.000	200.000	200.000	.000	.000	.000
GR	1112.000	8780.000	1110.000	9220.000	1108.000	9225.000	1108.000	9440.000	1116.000	9470.000
GR	1116.600	9490.000	1096.000	9545.000	1094.000	9595.000	1091.000	9620.000	1090.500	10030.000
GR	1088.000	10140.000	1087.500	10190.000	1090.000	10240.000	1090.000	10415.000	1092.000	10425.000
GR	1095.400	10500.000	1116.300	10542.000	.000	.000	.000	.000	.000	.000
ET	.000	.000	4.100	9475.000	10541.000	.000	.000	.000	.000	.000
X1	17.758	17.000	9800.000	10400.000	200.000	200.000	200.000	.000	.000	.000
GR	1112.000	8980.000	1110.000	9265.000	1110.000	9425.000	1112.000	9440.000	1116.000	9450.000
GR	1117.000	9475.000	1096.000	9535.000	1096.000	9585.000	1092.000	9630.000	1090.000	9650.000
GR	1090.000	9800.000	1089.000	9930.000	1088.000	10180.000	1088.000	10235.000	1090.000	10400.000
GR	1095.900	10500.000	1116.500	10541.000	.000	.000	.000	.000	.000	.000

```
ET      .000      .000     4.100    9470.000   10541.000      .000      .000      .000      .000      .000
X1    17.795     15.000  9890.000   10415.000     200.000    200.000   200.000      .000      .000      .000
GR  1112.000   8880.000  1111.500    9075.000    1110.000   9310.000  1110.000   9410.000  1116.000   9435.000
GR  1117.200   9470.000  1098.000    9525.000    1096.000   9580.000  1090.000   9630.000  1090.000   9890.000
GR  1088.500  10125.000  1090.000   10415.000    1094.000  10465.000  1096.400  10500.000  1116.700  10541.000

ET      .000      .000     4.100    9465.000   10540.000      .000      .000      .000      .000      .000
X1    17.833     25.000  9835.000   10260.000     200.000    200.000   200.000      .000      .000      .000
GR  1112.000   8730.000  1111.500    9110.000    1110.000   9330.000  1110.000   9400.000  1116.000   9425.000
GR  1117.500   9465.000  1098.000    9510.000    1096.000   9635.000  1094.000   9700.000  1094.000   9790.000
GR  1092.000   9815.000  1090.000    9835.000    1092.000   9870.000  1092.000   9960.000  1090.000   9975.000
GR  1089.600  10040.000  1090.000   10110.000    1092.000  10140.000  1092.000  10230.000  1090.000  10260.000
GR  1092.000  10360.000  1094.000   10450.000    1096.000  10465.000  1096.900  10500.000  1116.900  10540.000

ET      .000      .000     4.100    9475.000   10525.000      .000      .000      .000      .000      .000
          17.871 TO 18.455 CROSS-SECTIONS PER U.S. ARMY CORPS OF ENGINEERS
          1983-1984 STUDY (FEMA FIS) AND A.D.O.T. TOPO. FLOODWAY ENCROACHMENT
          STATIONS ALSO PER COE.
X1    17.871     12.000  9820.100   10244.100     180.000    220.000   200.000      .000      .000      .000
GR  1117.100   9460.200  1116.600    9461.600    1097.400   9500.000  1097.400   9500.000  1097.400   9820.100
GR  1091.400   9832.100  1091.400   10232.100    1097.400  10244.100  1097.400  10500.000  1097.400  10500.000
GR  1116.600  10538.400  1117.100   10539.400       .000       .000      .000      .000      .000      .000

ET      .000      .000     4.100    9470.000   10525.000      .000      .000      .000      .000      .000
X1    17.909     12.000  9817.000   10241.100     180.000    220.000   200.000      .000      .000      .000
GR  1117.300   9461.200  1098.000    9500.000    1098.000   9715.000  1098.000   9755.000  1098.000   9817.000
GR  1092.000   9829.000  1092.000   10229.100    1098.000  10241.100  1098.000  10500.000  1098.000  10500.000
GR  1116.800  10537.800  1117.300   10538.800       .000       .000      .000      .000      .000      .000

ET      .000      .000     4.100    9475.000   10525.000      .000      .000      .000      .000      .000
X1    17.947     12.000  9813.900   10238.000     180.000    220.000   200.000      .000      .000      .000
GR  1117.500   9461.900  1098.500    9500.000    1098.500   9679.000  1098.500   9762.000  1098.500   9813.900
GR  1092.500   9825.900  1092.500   10226.000    1098.500  10238.000  1098.500  10500.000  1098.500  10500.000
GR  1117.000  10537.100  1117.500   10538.100       .000       .000      .000      .000      .000      .000

ET      .000      .000     4.100    9480.000   10520.000      .000      .000      .000      .000      .000
X1    17.970     12.000  9812.100   10236.100     110.000    130.000   120.000      .000      .000      .000
GR  1117.600   9462.300  1098.800    9500.000    1098.800   9655.000  1098.800   9770.000  1098.800   9812.100
GR  1092.800   9824.100  1092.800   10224.100    1098.800  10236.100  1098.800  10500.000  1098.800  10500.000
GR  1117.100  10536.700  1117.600   10537.700       .000       .000      .000      .000      .000      .000

NC      .035      .035      .035       .100       .300       .000      .000      .000      .000      .000
ET      .000      .000     4.100    9475.000   10524.000      .000      .000      .000      .000      .000
          STOCKPILED MATERIAL MODELED IN THE CORPS' ORIGINAL SECTION DOES NOT
          CURRENTLY EXIST AND THIS SECTION WAS MODIFIED TO DELETE SAME.
X1    17.998     12.000  9835.000   10233.800     130.000    160.000   150.000      .000      .000      .000
GR  1117.800   9462.700  1099.200    9500.000    1099.200   9630.000  1100.200   9670.000  1100.200   9795.000
GR  1099.200   9835.000  1093.200    9847.000    1093.200  10221.800  1099.200  10233.800  1099.200  10500.000
GR  1117.300  10536.300  1117.800   10537.300       .000       .000      .000      .000      .000      .000
```

ET	.000	.000	4.100	9470.000	10529.000	.000	.000	.000	.000	.000
X1	18.036	12.000	9806.600	10230.600	180.000	220.000	200.000	.000	.000	.000
GR	1118.500	9462.300	1118.000	9463.300	1099.700	9500.000	1099.700	9500.000	1099.700	9806.600
GR	1093.700	9818.600	1093.700	10218.600	1099.700	10230.600	1099.700	10500.000	1099.700	10500.000
GR	1118.000	10536.700	1118.500	10537.700	.000	.000	.000	.000	.000	.000
ET	.000	.000	4.100	9471.000	10528.000	.000	.000	.000	.000	.000
X1	18.074	12.000	9803.400	10277.400	180.000	220.000	200.000	.000	.000	.000
GR	1119.200	9461.900	1118.700	9462.900	1100.200	9500.000	1100.200	9500.000	1100.200	9803.400
GR	1094.200	9815.400	1094.200	10215.400	1100.200	10277.400	1100.200	10500.000	1100.200	10500.000
GR	1118.700	10537.100	1119.200	10538.100	.000	.000	.000	.000	.000	.000
ET	.000	.000	4.100	9471.000	10528.000	.000	.000	.000	.000	.000
X1	18.112	12.000	9800.200	10224.200	180.000	220.000	200.000	.000	.000	.000
GR	1120.000	9461.500	1119.500	9462.500	1100.700	9500.000	1100.700	9500.000	1100.700	9800.200
GR	1094.700	9812.200	1094.700	10212.200	1100.700	10224.200	1100.700	10500.000	1100.700	10500.000
GR	1119.500	10537.500	1120.000	10538.500	.000	.000	.000	.000	.000	.000
ET	.000	.000	4.100	9472.000	10516.000	.000	.000	.000	.000	.000
X1	18.150	12.000	9797.000	10221.000	180.000	220.000	200.000	.000	.000	.000
GR	1120.700	9461.100	1120.200	9462.100	1101.300	9500.000	1101.300	9500.000	1101.300	9797.000
GR	1095.300	9809.000	1095.300	10209.000	1101.300	10221.000	1101.300	10489.000	1101.300	10489.000
GR	1120.200	10526.900	1120.700	10527.900	.000	.000	.000	.000	.000	.000
ET	.000	.000	4.100	9474.000	10339.000	.000	.000	.000	.000	.000
X1	18.188	12.000	9793.800	10217.800	180.000	220.000	200.000	.000	.000	.000
GR	1121.000	9461.500	1120.500	9462.500	1101.800	9500.000	1101.800	9500.000	1101.800	9793.800
GR	1095.800	9805.800	1095.800	10205.800	1101.800	10217.800	1101.800	10313.900	1101.800	10313.900
GR	1120.500	10351.400	1121.000	10352.400	.000	.000	.000	.000	.000	.000
ET	.000	.000	4.100	9473.000	10352.000	.000	.000	.000	.000	.000
X1	18.216	12.000	9791.300	10215.400	140.000	160.000	150.000	.000	.000	.000
GR	1121.300	9461.800	1120.800	9462.800	1102.200	9500.000	1102.200	9500.000	1102.200	9791.300
GR	1096.200	9803.300	1096.200	10203.400	1102.200	10215.400	1102.200	10326.000	1102.200	10326.000
GR	1120.800	10363.200	1121.300	10364.200	.000	.000	.000	.000	.000	.000
ET	.000	.000	4.100	9471.000	10465.000	.000	.000	.000	.000	.000
X1	18.254	12.000	9788.300	10212.300	180.000	220.000	200.000	.000	.000	.000
GR	1121.600	9462.200	1121.100	9463.200	1102.700	9500.000	1102.700	9500.000	1102.700	9788.300
GR	1096.700	9800.300	1096.700	10200.300	1102.700	10212.300	1102.700	10436.900	1102.700	10436.900
GR	1121.100	10473.800	1121.600	10474.800	.000	.000	.000	.000	.000	.000
ET	.000	.000	4.100	9470.000	10529.000	.000	.000	.000	.000	.000
X1	18.292	12.000	9788.000	10212.000	190.000	210.000	200.000	.000	.000	.000
GR	1121.900	9462.600	1121.400	9463.600	1103.200	9500.000	1103.200	9500.000	1103.200	9788.000
GR	1097.200	9800.000	1097.200	10200.000	1103.200	10212.000	1103.200	10500.000	1103.200	10500.000
GR	1121.400	10536.400	1121.900	10537.400	.000	.000	.000	.000	.000	.000

ET	.000	.000	4.100	9440.000	10570.000	.000	.000	.000	.000	.000
X1	18.330	12.000	9788.000	10212.000	200.000	200.000	200.000	.000	.000	.000
X5	2.000	1118.120	1118.200	.000	.000	.000	.000	.000	.000	.000
GR	1122.200	9463.000	1121.700	9464.000	1103.700	9500.000	1103.700	9500.000	1103.700	9788.000
GR	1097.700	9800.000	1097.700	10200.000	1103.700	10212.000	1103.700	10500.000	1103.700	10500.000
GR	1121.700	10536.000	1122.200	10537.000	.000	.000	.000	.000	.000	.000
ET	.000	.000	9.100	.000	.000	.000	.000	.000	9471.000	10528.000
X1	18.367	12.000	9788.000	10212.000	200.000	200.000	200.000	.000	.000	.000
GR	1122.600	9463.400	1122.100	9464.400	1104.200	9500.000	1104.200	9500.000	1104.200	9788.000
GR	1098.200	9800.000	1098.200	10200.000	1104.200	10212.000	1104.200	10500.000	1104.200	10500.000
GR	1122.100	10535.600	1122.600	10536.600	.000	.000	.000	.000	.000	.000
ET	.000	.000	9.100	.000	.000	.000	.000	.000	9542.000	10527.000
X1	18.405	12.000	9788.000	10212.000	200.000	200.000	200.000	.000	.000	.000
GR	1122.900	9463.800	1122.400	9464.800	1104.800	9500.000	1104.800	9500.000	1104.800	9788.000
GR	1098.800	9800.000	1098.800	10200.000	1104.800	10212.000	1104.800	10500.000	1104.800	10500.000
GR	1122.400	10535.200	1122.900	10536.200	.000	.000	.000	.000	.000	.000
ET	.000	.000	9.100	.000	.000	.000	.000	.000	9472.000	10527.000
X1	18.417	12.000	9787.700	10211.700	65.000	55.000	60.000	.000	.000	.000
GR	1123.000	9463.900	1122.500	9464.900	1104.900	9500.000	1104.900	9500.000	1104.900	9787.700
GR	1098.900	9799.700	1098.900	10199.700	1104.900	10211.700	1104.900	10500.000	1104.900	10500.000
GR	1122.500	10535.100	1123.000	10536.100	.000	.000	.000	.000	.000	.000
ET	.000	.000	9.100	.000	.000	.000	.000	.000	9472.000	10527.000
X1	18.455	12.000	9783.500	10207.500	220.000	180.000	200.000	.000	.000	.000
GR	1123.300	9464.300	1122.800	9465.300	1105.400	9500.000	1105.400	9500.000	1105.400	9783.500
GR	1099.400	9795.500	1099.400	10195.500	1105.400	10207.500	1105.400	10500.000	1105.400	10500.000
GR	1122.800	10534.700	1123.300	10535.700	.000	.000	.000	.000	.000	.000
ET	.000	.000	9.100	.000	.000	.000	.000	.000	9472.000	10527.000
X1	18.492	12.000	9786.100	10210.400	220.000	180.000	200.000	.000	.000	.000
GR	1123.600	9464.700	1123.100	9465.700	1106.000	9500.000	1106.000	9500.000	1106.000	9786.100
GR	1100.000	9798.100	1100.000	10198.400	1106.000	10210.400	1106.000	10500.000	1106.000	10500.000
GR	1123.100	10534.300	1123.600	10535.300	.000	.000	.000	.000	.000	.000
ET	.000	.000	9.100	.000	.000	.000	.000	.000	9472.000	10527.000
X1	18.530	12.000	9798.700	10224.400	220.000	180.000	200.000	.000	.000	.000
GR	1124.000	9465.000	1123.500	9466.000	1106.500	9500.000	1106.500	9500.000	1106.500	9798.700
GR	1100.500	9810.700	1100.500	10212.400	1106.500	10224.400	1106.500	10500.000	1106.500	10500.000
GR	1123.500	10534.000	1124.000	10535.000	.000	.000	.000	.000	.000	.000
ET	.000	.000	9.100	.000	.000	.000	.000	.000	9473.000	10526.000
X1	18.568	12.000	9821.300	10249.600	220.000	180.000	200.000	.000	.000	.000
GR	1124.300	9465.400	1123.800	9466.400	1107.000	9500.000	1107.000	9500.000	1107.000	9821.300
GR	1101.000	9833.300	1101.000	10237.600	1107.000	10249.600	1107.000	10500.000	1107.000	10500.000
GR	1123.800	10533.600	1124.300	10534.600	.000	.000	.000	.000	.000	.000

ET	.000	.000	9.100	.000	.000	.000	.000	.000	9473.000	10526.000
X1	18.606	12.000	9853.900	10285.900	220.000	180.000	200.000	.000	.000	.000
GR	1124.600	9465.800	1124.100	9466.800	1107.500	9500.000	1107.500	9500.000	1107.500	9853.900
GR	1101.500	9865.900	1101.500	10273.900	1107.500	10285.900	1107.500	10500.000	1107.500	10500.000
GR	1124.100	10533.200	1124.600	10534.200	.000	.000	.000	.000	.000	.000
ET	.000	.000	9.100	.000	.000	.000	.000	.000	9473.000	10526.000
X1	18.644	12.000	9896.600	10333.600	220.000	180.000	200.000	.000	.000	.000
GR	1124.900	9466.200	1124.400	9467.200	1108.000	9500.000	1108.000	9500.000	1108.000	9896.600
GR	1102.000	9908.600	1102.000	10321.600	1108.000	10333.600	1108.000	10500.000	1108.000	10500.000
GR	1124.400	10532.800	1124.900	10533.800	.000	.000	.000	.000	.000	.000
ET	.000	.000	9.100	.000	.000	.000	.000	.000	9473.000	10526.000
X1	18.682	12.000	9949.300	10392.800	220.000	180.000	200.000	.000	.000	.000
GR	1125.300	9466.600	1124.800	9467.600	1108.600	9500.000	1108.600	9500.000	1108.600	9949.300
GR	1102.600	9961.300	1102.600	10380.800	1108.600	10392.800	1108.600	10500.000	1108.600	10500.000
GR	1124.800	10532.400	1125.300	10533.400	.000	.000	.000	.000	.000	.000
ET	.000	.000	9.100	.000	.000	.000	.000	.000	9473.000	10526.000
X1	18.720	12.000	10012.200	10463.700	220.000	180.000	200.000	.000	.000	.000
GR	1125.600	9467.000	1125.100	9468.000	1109.100	9500.000	1109.100	9500.000	1109.100	10012.200
GR	1103.100	10024.200	1103.100	10451.700	1109.100	10463.700	1109.100	10500.000	1109.100	10500.000
GR	1125.100	10532.000	1125.600	10533.000	.000	.000	.000	.000	.000	.000
ET	.000	.000	9.100	.000	.000	.000	.000	.000	9474.000	10563.000
X1	18.758	12.000	10085.100	10546.800	200.000	200.000	200.000	.000	.000	.000
GR	1127.900	9464.100	1125.400	9469.100	1109.900	9500.000	1109.900	9500.000	1109.900	10085.100
GR	1103.800	10097.300	1103.800	10534.600	1109.900	10546.800	1109.900	10547.900	1109.900	10547.900
GR	1125.400	10578.800	1125.900	10579.800	.000	.000	.000	.000	.000	.000
ET	.000	.000	9.100	.000	.000	.000	.000	.000	9474.000	10663.000
X1	18.795	12.000	10168.200	10637.700	200.000	200.000	200.000	.000	.000	.000
GR	1128.700	9464.200	1110.800	9500.000	1110.800	10140.000	1110.800	10165.000	1110.800	10168.200
GR	1104.600	10180.700	1104.600	10625.200	1110.800	10637.700	1110.800	10638.600	1110.800	10638.600
GR	1126.200	10669.300	1126.700	10670.300	.000	.000	.000	.000	.000	.000
ET	.000	.000	9.100	.000	.000	.000	.000	.000	9495.000	10834.000
X1	18.833	12.000	10257.000	10720.800	200.000	200.000	200.000	.000	.000	.000
X3	.000	.000	.000	9495.000	.000	.000	.000	.000	.000	.000
GR	1129.500	9464.400	1111.700	9500.000	1111.700	10140.000	1111.700	10245.000	1111.700	10257.000
GR	1105.300	10269.800	1105.300	10708.100	1111.700	10720.800	1111.700	10809.600	1111.700	10809.600
GR	1127.000	10840.200	1127.500	10841.200	.000	.000	.000	.000	.000	.000
ET	.000	.000	9.100	.000	.000	.000	.000	.000	9462.000	11004.000
X1	18.871	12.000	10337.000	10795.400	200.000	190.000	200.000	.000	.000	.000
GR	1130.300	9451.400	1112.600	9486.900	1112.600	10130.000	1112.600	10320.000	1112.600	10337.000
GR	1106.000	10350.600	1106.000	10782.300	1112.600	10795.400	1112.600	10979.600	1112.600	10979.600
GR	1127.800	11010.000	1128.300	11011.000	.000	.000	.000	.000	.000	.000

ET	.000	.000	9.100	.000	.000	.000	.000	.000	9470.000	11156.000
X1	18.909	13.000	10409.300	10861.900	200.000	190.000	200.000	.000	.000	.000
X3	.000	.000	.000	9470.000	.000	.000	.000	.000	.000	.000
GR	1131.100	9411.400	1113.400	9446.700	1113.400	10090.000	1133.000	10120.000	1133.000	10185.000
GR	1113.400	10235.000	1113.400	10390.000	1113.400	10409.300	1106.800	10422.600	1106.800	10848.600
GR	1113.400	10861.900	1113.400	11132.800	1130.100	11166.100	.000	.000	.000	.000
ET	.000	.000	9.100	.000	.000	.000	.000	.000	9555.000	11314.000
X1	18.947	12.000	10477.000	10927.700	200.000	190.000	200.000	.000	.000	.000
X3	.000	.000	.000	9555.000	.000	.000	.000	.000	.000	.000
GR	1131.900	9347.300	1114.300	9382.500	1114.300	10073.000	1125.000	10160.000	1132.000	10250.000
GR	1132.000	10440.000	1114.300	10477.000	1107.500	10490.600	1107.500	10914.100	1114.300	10927.700
GR	1114.300	11293.000	1130.900	11326.200	.000	.000	.000	.000	.000	.000
ET	.000	.000	9.100	.000	.000	.000	.000	.000	9432.000	11491.000
X1	18.987	13.000	10546.400	10997.600	200.000	200.000	210.000	.000	.000	.000
X3	.000	.000	.000	9432.000	.000	.000	.000	.000	.000	.000
GR	1131.700	9267.900	1115.200	9300.900	1115.200	10180.000	1117.400	10250.000	1118.000	10300.000
GR	1117.400	10350.000	1115.200	10420.000	1115.200	10546.400	1108.300	10560.200	1108.300	10983.700
GR	1115.200	10997.600	1115.200	11468.500	1131.700	11501.600	.000	.000	.000	.000
ET	.000	.000	9.100	.000	.000	.000	.000	.000	9408.000	11637.000
X1	19.027	12.000	10615.700	11067.500	200.000	200.000	210.000	.000	.000	.000
X3	.000	.000	.000	9408.000	.000	.000	.000	.000	.000	.000
GR	1132.500	9174.200	1131.000	9177.200	1116.000	9207.200	1116.000	9207.200	1116.000	10615.700
GR	1109.000	10629.800	1109.000	11053.400	1116.000	11067.500	1116.000	11604.100	1116.000	11604.100
GR	1131.000	11634.000	1132.500	11637.000	.000	.000	.000	.000	.000	.000
ET	.000	.000	9.100	.000	.000	.000	.000	.000	9393.000	11715.000
X1	19.066	12.000	10685.100	11137.400	200.000	200.000	210.000	.000	.000	.000
X3	.000	.000	.000	9383.000	.000	.000	.000	.000	.000	.000
GR	1132.700	9081.700	1131.200	9084.700	1116.900	9113.300	1116.900	9113.300	1116.900	10685.100
GR	1109.700	10699.500	1109.700	11123.000	1116.900	11137.400	1116.900	11694.700	1116.900	11694.700
GR	1131.200	11723.300	1132.700	11726.300	.000	.000	.000	.000	.000	.000
ET	.000	.000	9.100	.000	.000	.000	.000	.000	9360.000	11800.000
X1	19.106	12.000	10754.500	11207.300	200.000	200.000	210.000	.000	.000	.000
X3	.000	.000	.000	9360.000	.000	.000	.000	.000	.000	.000
GR	1132.900	8989.100	1131.400	8992.100	1117.800	9019.400	1117.800	9019.400	1117.800	10754.500
GR	1110.500	10769.100	1110.500	11192.600	1117.800	11207.300	1117.800	11770.200	1117.800	11770.200
GR	1131.400	11797.600	1132.900	11800.600	.000	.000	.000	.000	.000	.000
ET	.000	.000	9.100	.000	.000	.000	.000	.000	9328.000	11869.000
X1	19.146	12.000	10823.800	11277.200	200.000	200.000	210.000	.000	.000	.000
X3	.000	.000	.000	9328.000	.000	.000	.000	.000	.000	.000
GR	1133.200	8896.500	1131.700	8899.500	1118.600	8925.500	1118.600	8925.500	1118.600	10823.800
GR	1111.200	10838.700	1111.200	11262.300	1118.600	11277.200	1118.600	11840.800	1118.600	11840.800
GR	1131.700	11866.900	1133.200	11869.900	.000	.000	.000	.000	.000	.000

ET	.000	.000	9.100	.000	.000	.000	.000	.000	9304.000	11941.000
X1	19.186	12.000	10893.200	11347.100	200.000	200.000	210.000	.000	.000	.000
X3	.000	.000	.000	9304.000	.000	.000	.000	.000	.000	.000
GR	1133.400	8803.900	1131.900	8806.900	1119.500	8831.600	1119.500	8831.600	1119.500	10893.200
GR	1111.900	10908.400	1111.900	11331.900	1119.500	11347.100	1119.500	11914.000	1119.500	11914.000
GR	1131.900	11938.700	1133.400	11941.700	.000	.000	.000	.000	.000	.000
ET	.000	.000	9.100	.000	.000	.000	.000	.000	9224.000	12007.000
X1	19.225	12.000	10962.600	11416.600	200.000	200.000	210.000	.000	.000	.000
X3	.000	.000	.000	9224.000	.000	.000	.000	.000	.000	.000
GR	1133.600	8711.300	1132.100	8714.300	1120.400	8737.800	1120.400	8737.800	1120.400	10962.600
GR	1112.700	10978.000	1112.700	11401.100	1120.400	11416.600	1120.400	11980.600	1120.400	11980.600
GR	1132.100	12004.100	1133.600	12007.100	.000	.000	.000	.000	.000	.000
ET	.000	.000	9.100	.000	.000	.000	.000	.000	9160.000	12074.000
X1	19.265	12.000	11028.400	11472.500	200.000	200.000	210.000	.000	.000	.000
X3	.000	.000	.000	9160.000	.000	.000	.000	.000	.000	.000
GR	1121.300	8617.000	1121.300	8643.000	1121.300	8790.000	1121.300	8815.000	1121.300	11028.400
GR	1113.400	11044.000	1113.400	11456.800	1121.300	11472.500	1121.300	12049.000	1121.300	12049.000
GR	1132.300	12071.200	1133.800	12074.200	.000	.000	.000	.000	.000	.000
QT	2.000	210000.000	210000.000	.000	.000	.000	.000	.000	.000	.000
ET	.000	.000	9.100	.000	.000	.000	.000	.000	8980.000	12145.000
X1	19.303	12.000	11072.900	11509.400	200.000	200.000	200.000	.000	.000	.000
X3	.000	.000	.000	8980.000	.000	.000	.000	.000	.000	.000
GR	1122.100	8522.000	1122.100	8546.000	1122.100	8820.000	1122.100	8844.000	1122.100	11072.900
GR	1114.200	11088.900	1114.200	11493.400	1122.100	11509.400	1122.100	12121.300	1122.100	12121.300
GR	1132.600	12142.200	1134.100	12145.200	.000	.000	.000	.000	.000	.000
ET	.000	.000	9.100	.000	.000	.000	.000	.000	9007.000	12245.000
X1	19.348	12.000	11096.000	11544.000	180.000	225.000	240.000	.000	.000	.000
X3	.000	.000	.000	9007.000	.000	.000	.000	.000	.000	.000
GR	1135.300	8445.000	1123.000	8467.000	1123.000	8830.000	1123.000	8852.000	1123.000	10760.000
GR	1127.000	11096.000	1115.000	11120.000	1115.000	11520.000	1127.000	11544.000	1123.000	11980.000
GR	1123.000	12220.000	1135.300	12245.000	.000	.000	.000	.000	.000	.000
SB	1.050	1.500	2.500	3000.000	3339.000	263.000	40000.000	.000	1123.500	1123.000
X1	19.363	6.000	8550.000	11900.000	78.000	78.000	78.000	.000	.000	.000
X2	.000	.000	1.000	1136.000	1143.000	.000	.000	.000	.000	.000
X3	10.000	.000	.000	.000	.000	.000	.000	1136.000	1143.000	.000
BT	2.000	8550.000	1143.000	1136.000	11900.000	1143.000	1136.000	.000	.000	.000
GR	1143.000	8550.000	1136.000	8570.000	1123.000	8580.000	1123.000	11850.000	1136.000	11880.000
GR	1143.000	11900.000	.000	.000	.000	.000	.000	.000	.000	.000
NC	.040	.040	.035	.000	.000	.000	.000	.000	.000	.000
ET	.000	.000	9.100	.000	.000	.000	.000	.000	8924.000	12330.000
X1	19.381	52.000	11188.000	11741.000	160.000	260.000	250.000	.000	.000	.000
CI	10300.000	1123.600	.000	.010	.010	2000.000	.000	.000	.000	.000
X3	.000	.000	.000	8924.000	.000	.000	.000	.000	.000	.000
GR	1119.700	8666.000	1119.900	9021.000	1118.600	9140.000	1124.000	9329.000	1125.300	9411.000
GR	1125.700	9520.000	1127.500	9592.000	1128.500	9705.000	1128.700	9749.000	1123.800	9771.000
GR	1125.300	9855.000	1126.400	9929.000	1127.100	10000.000	1126.900	10113.000	1126.100	10160.000
GR	1128.100	10188.000	1128.900	10224.000	1126.700	10347.000	1124.600	10410.000	1126.100	10472.000

GR	1128.400	10487.000	1125.500	10507.000	1127.100	10645.000	1124.700	10660.000	1125.700	10702.000
GR	1125.300	10772.000	1125.200	10831.000	1124.300	10877.000	1123.600	10930.000	1127.200	11010.000
GR	1127.100	11063.000	1125.400	11108.000	1128.300	11188.000	1125.100	11202.000	1122.400	11262.000
GR	1122.600	11333.000	1120.300	11372.000	1115.600	11415.000	1113.200	11476.000	1113.200	11543.000
GR	1115.600	11605.000	1119.100	11669.000	1122.800	11741.000	1122.000	11774.000	1120.900	11825.000
GR	1122.800	11894.000	1123.900	11904.000	1123.900	11982.000	1123.900	12136.000	1125.600	12230.000
GR	1125.600	12310.000	1134.800	12330.000	.000	.000	.000	.000	.000	.000
ET	.000	.000	9.100	.000	.000	.000	.000	.000	8860.000	12460.000
X1	19.446	59.000	11140.000	11807.000	170.000	280.000	265.000	.000	.000	.000
CI	10275.000	1124.300	.000	.000	.000	2250.000	.000	.000	.000	.000
X3	.000	.000	.000	8860.000	.000	.000	.000	.000	.000	.000
GR	1133.800	8600.000	1133.800	8734.000	1132.500	8898.000	1131.600	8958.000	1127.800	9017.000
GR	1125.300	9124.000	1124.000	9146.000	1125.100	9223.000	1125.200	9320.000	1128.600	9463.000
GR	1128.700	9610.000	1137.900	9743.000	1127.300	9754.000	1125.700	9787.000	1123.300	9828.000
GR	1124.800	9849.000	1126.400	9918.000	1128.800	10000.000	1127.100	10045.000	1126.600	10091.000
GR	1128.000	10150.000	1130.300	10205.000	1127.800	10230.000	1126.000	10260.000	1125.800	10302.000
GR	1127.000	10387.000	1127.700	10480.000	1126.600	10568.000	1125.600	10674.000	1124.900	10784.000
GR	1124.200	10856.000	1126.000	10907.000	1124.500	10927.000	1125.400	10947.000	1131.000	11019.000
GR	1129.700	11041.000	1130.100	11140.000	1129.000	11145.000	1126.900	11165.000	1127.800	11260.000
GR	1126.400	11271.000	1124.200	11312.000	1124.700	11336.000	1121.800	11367.000	1120.000	11419.000
GR	1118.600	11484.000	1116.300	11506.000	1114.400	11568.000	1115.100	11644.000	1121.400	11754.000
GR	1122.000	11807.000	1120.300	11842.000	1121.000	11895.000	1122.800	11964.000	1123.500	11994.000
GR	1124.600	12090.000	1126.700	12214.000	1125.400	12430.000	1135.300	12460.000	.000	.000
ET	.000	.000	9.100	.000	.000	.000	.000	.000	8757.000	12577.000
X1	19.537	90.000	11180.800	12262.900	400.000	500.000	480.000	.000	.000	.000
CI	10325.000	1125.600	.000	.000	.000	2150.000	.000	.000	.000	.000
X3	.000	.000	.000	8757.000	.000	.000	.000	.000	.000	.000
GR	1132.200	7728.700	1132.200	7761.300	1135.000	7814.900	1135.700	7878.500	1134.500	7979.700
GR	1135.100	8041.600	1135.400	8114.600	1133.500	8137.000	1118.700	8161.400	1117.900	8204.500
GR	1121.500	8263.300	1121.900	8335.300	1124.500	8353.100	1123.700	8415.400	1135.300	8466.900
GR	1137.100	8491.500	1137.200	8546.300	1138.600	8584.700	1137.400	8599.700	1137.400	8642.800
GR	1136.000	8733.900	1136.000	8766.200	1136.700	8808.900	1135.300	8856.400	1135.300	8900.300
GR	1133.800	8929.000	1126.200	8948.200	1129.600	9009.300	1129.200	9065.000	1125.700	9193.700
GR	1123.700	9244.500	1127.600	9284.300	1128.600	9309.000	1132.500	9333.700	1133.700	9370.300
GR	1133.000	9408.700	1133.900	9487.900	1137.200	9536.700	1135.200	9587.700	1134.200	9637.300
GR	1134.900	9699.300	1134.200	9731.000	1132.400	9806.200	1130.800	9895.300	1128.200	9919.400
GR	1127.500	9954.300	1128.500	10000.000	1126.800	10033.200	1128.400	10073.600	1127.700	10081.400
GR	1127.900	10249.600	1126.700	10363.700	1124.700	10460.400	1129.800	10500.100	1130.100	10549.000
GR	1128.100	10668.100	1126.900	10686.700	1129.300	10730.600	1130.300	10784.500	1126.900	10944.500
GR	1132.200	10983.900	1135.000	11105.700	1136.900	11121.700	1135.400	11180.800	1129.100	11184.800
GR	1127.100	11201.700	1125.600	11263.500	1125.200	11399.500	1125.200	11509.300	1121.300	11526.300
GR	1119.300	11635.900	1117.000	11662.000	1118.800	11740.800	1121.900	11887.500	1120.700	11920.700
GR	1122.100	12011.400	1121.800	12154.200	1123.300	12193.700	1127.600	12262.900	1125.900	12330.900
GR	1129.000	12363.200	1129.800	12400.700	1132.700	12410.900	1132.700	12421.800	1126.400	12440.500
GR	1126.500	12471.900	1133.200	12490.500	1132.700	12500.500	1130.000	12510.100	1129.800	12577.000
ET	.000	.000	9.100	.000	.000	.000	.000	.000	8736.000	12417.000
X1	19.563	90.000	11374.600	12250.400	130.000	150.000	140.000	.000	.000	.000
CI	10400.000	1126.000	.000	.000	.000	2400.000	.000	.000	.000	.000
X3	.000	.000	.000	8736.000	.000	.000	.000	.000	.000	.000
GR	1132.900	7696.800	1132.300	7730.800	1132.300	7769.300	1138.800	7851.200	1138.800	7971.800
GR	1136.400	8018.500	1136.000	8051.500	1132.300	8098.400	1120.700	8116.100	1118.700	8135.500

GR	1119.100	8160.500	1122.100	8203.400	1122.800	8295.900	1124.900	8308.800	1125.500	8373.700
GR	1136.100	8422.300	1136.600	8544.800	1138.200	8590.800	1137.700	8678.900	1136.200	8699.900
GR	1136.900	8766.100	1134.600	8870.400	1133.700	8923.100	1125.900	8942.600	1128.400	8958.600
GR	1129.300	9017.100	1125.000	9187.200	1125.200	9205.600	1126.700	9234.900	1126.500	9279.100
GR	1133.400	9316.100	1134.100	9340.400	1133.000	9372.600	1134.200	9416.500	1136.600	9427.400
GR	1134.900	9457.700	1136.200	9496.600	1135.600	9614.800	1133.500	9668.000	1132.100	9712.900
GR	1131.200	9727.300	1132.600	9748.500	1130.400	9774.800	1135.000	9817.900	1130.100	9851.600
GR	1129.300	9905.300	1129.500	10000.000	1128.800	10034.600	1127.600	10075.800	1127.100	10185.300
GR	1127.700	10273.700	1128.700	10305.100	1128.500	10375.600	1130.400	10394.800	1129.900	10435.600
GR	1127.500	10450.300	1127.500	10486.600	1129.500	10531.300	1130.200	10602.000	1128.300	10670.700
GR	1126.300	10688.000	1128.100	10703.000	1129.300	10752.500	1128.700	10905.600	1131.000	10955.100
GR	1130.500	11018.600	1126.200	11084.800	1126.800	11241.900	1127.700	11290.600	1129.100	11374.600
GR	1127.200	11421.800	1124.400	11541.200	1122.000	11561.200	1120.400	11613.100	1121.900	11640.900
GR	1119.900	11777.500	1121.600	11886.200	1120.300	11920.600	1120.900	12078.300	1121.000	12162.800
GR	1122.200	12195.100	1127.300	12250.400	1127.500	12274.300	1129.900	12320.800	1132.200	12330.000
GR	1131.900	12340.000	1127.400	12359.600	1127.000	12387.400	1132.200	12407.900	1132.200	12417.700
ET	.000	.000	9.100	.000	.000	.000	.000	.000	8726.000	12594.000
X1	19.579	83.000	11389.000	12250.300	70.000	90.000	80.000	.000	.000	.000
CI	10377.000	1126.300	.000	.000	.000	2325.000	.000	.000	.000	.000
X3	.000	.000	.000	8726.000	.000	.000	.000	.000	.000	.000
GR	1133.600	7678.300	1133.900	7712.400	1132.700	7732.200	1132.700	7771.200	1138.700	7845.200
GR	1138.700	7964.100	1135.900	8058.200	1134.000	8074.600	1118.200	8099.600	1121.800	8165.500
GR	1124.500	8299.500	1127.000	8312.700	1127.300	8351.600	1136.100	8394.200	1138.000	8570.700
GR	1138.000	8635.200	1135.700	8692.300	1136.600	8744.700	1135.400	8812.700	1134.600	8884.100
GR	1130.000	8929.900	1126.100	8942.700	1128.700	8971.200	1128.600	9037.700	1124.900	9173.100
GR	1128.500	9200.300	1128.000	9225.500	1125.800	9257.900	1127.000	9273.300	1133.900	9302.500
GR	1134.600	9418.800	1136.800	9427.400	1136.300	9590.000	1134.400	9610.800	1133.100	9736.600
GR	1130.700	9835.200	1129.200	9888.400	1131.300	9896.200	1127.000	9915.000	1128.600	9933.700
GR	1128.100	9983.000	1128.400	10000.000	1128.400	10014.900	1127.000	10095.800	1129.000	10154.100
GR	1129.200	10229.500	1129.200	10343.800	1131.000	10378.400	1130.500	10495.600	1128.100	10530.800
GR	1127.200	10580.700	1129.700	10626.100	1127.600	10686.600	1129.000	10751.300	1129.800	10921.000
GR	1127.300	10974.100	1126.100	11112.900	1129.000	11230.200	1129.200	11320.800	1130.300	11389.000
GR	1126.800	11459.400	1124.700	11539.100	1122.800	11562.200	1122.800	11582.300	1121.100	11603.600
GR	1122.500	11620.300	1121.900	11708.100	1120.900	11808.500	1121.700	11892.300	1120.700	11963.700
GR	1120.000	12134.900	1121.500	12179.200	1122.900	12205.400	1130.000	12250.300	1129.700	12269.100
GR	1132.500	12282.900	1132.500	12292.300	1128.100	12307.900	1127.500	12332.700	1132.300	12360.500
GR	1131.300	12407.900	1131.500	12507.000	1132.000	12594.800	.000	.000	.000	.000
ET	.000	.000	9.100	.000	.000	.000	.000	.000	8697.000	12470.000
X1	19.618	79.000	11427.300	12188.500	200.000	220.000	210.000	.000	.000	.000
CI	9945.000	1126.900	.000	.000	2.000	1690.000	.000	.000	.000	.000
X3	.000	.000	.000	8697.000	.000	.000	.000	.000	.000	.000
GR	1134.800	7640.100	1135.300	7666.400	1135.200	7707.400	1132.700	7725.700	1132.700	7764.200
GR	1138.700	7835.800	1138.700	7958.000	1135.400	8039.300	1121.500	8061.000	1123.300	8092.300
GR	1124.000	8226.000	1132.300	8261.000	1130.900	8284.300	1135.100	8323.700	1136.400	8361.400
GR	1136.800	8590.000	1134.900	8749.700	1133.500	8779.300	1133.500	8834.600	1129.800	8864.300
GR	1131.300	8910.800	1131.300	8944.100	1126.900	8968.800	1127.500	8992.100	1124.800	9119.200
GR	1132.000	9173.300	1132.000	9192.300	1127.600	9227.900	1127.600	9254.500	1134.600	9291.400
GR	1135.100	9357.000	1135.300	9459.200	1135.300	9515.100	1133.200	9662.800	1130.700	9712.100
GR	1132.500	9741.100	1132.400	9791.700	1128.000	9804.600	1128.900	9832.300	1132.100	9842.900
GR	1128.600	9852.700	1130.600	9936.700	1128.700	10000.000	1127.500	10028.800	1126.100	10170.000
GR	1128.100	10203.100	1128.200	10312.800	1131.600	10359.100	1130.500	10593.500	1128.400	10651.600
GR	1130.100	10752.500	1129.200	10840.100	1127.200	10907.900	1128.700	10951.900	1128.600	11001.900

GR	1132.000	11031.400	1131.500	11151.600	1132.300	11279.200	1132.600	11357.900	1130.200	11427.300
GR	1125.600	11451.900	1125.500	11515.600	1123.700	11592.900	1121.500	11617.100	1123.700	11681.400
GR	1122.200	11818.100	1119.900	11947.700	1118.600	11962.100	1118.200	12049.400	1117.100	12133.900
GR	1118.200	12150.900	1122.800	12176.200	1131.500	12188.500	1128.800	12199.900	1128.700	12231.000
GR	1133.100	12262.300	1132.100	12292.600	1133.000	12411.300	1133.800	12550.900	.000	.000
ET	.000	.000	9.100	.000	.000	.000	.000	.000	8670.000	12419.000
X1	19.659	88.000	11270.300	12163.700	200.000	230.000	215.000	.000	.000	.000
CI	9900.000	1127.600	.000	.000	.000	1600.000	.000	.000	.000	.000
X3	.000	.000	.000	8670.000	.000	.000	.000	.000	.000	.000
GR	1134.500	7601.900	1135.600	7630.700	1136.000	7670.200	1133.300	7688.200	1133.500	7729.500
GR	1135.600	7747.400	1136.300	7793.600	1134.700	7825.600	1136.000	7852.100	1137.000	7927.900
GR	1136.400	7957.700	1125.600	7993.900	1122.700	8017.600	1123.000	8115.000	1124.800	8145.700
GR	1124.400	8162.700	1134.500	8217.600	1131.500	8240.700	1136.600	8277.500	1135.200	8287.800
GR	1135.200	8311.600	1137.300	8331.300	1137.400	8369.200	1136.400	8487.400	1136.500	8535.200
GR	1135.100	8593.600	1135.900	8643.000	1134.200	8713.500	1135.900	8729.800	1130.900	8763.100
GR	1130.400	8793.200	1131.400	8943.600	1132.500	8958.400	1125.600	8993.300	1126.700	9055.800
GR	1125.600	9109.300	1129.200	9134.400	1129.200	9157.900	1130.400	9220.600	1129.400	9230.000
GR	1128.800	9292.900	1134.700	9324.500	1135.900	9442.500	1134.900	9552.100	1132.200	9682.900
GR	1129.500	9705.900	1129.300	9740.300	1135.300	9761.700	1129.200	9785.000	1128.900	9908.900
GR	1130.500	9932.300	1126.600	9964.500	1127.500	10000.000	1128.000	10039.800	1126.400	10133.900
GR	1129.300	10157.100	1129.600	10264.800	1131.600	10293.400	1131.600	10351.300	1127.600	10409.100
GR	1127.700	10472.700	1128.600	10501.200	1127.300	10637.800	1128.400	10765.700	1133.600	10786.300
GR	1133.700	10874.800	1133.700	10967.900	1132.300	11139.800	1133.700	11210.900	1133.800	11270.300
GR	1126.400	11391.000	1124.500	11503.700	1122.900	11562.200	1120.900	11623.200	1120.300	11779.100
GR	1120.200	11877.300	1122.300	11912.200	1122.700	11949.500	1125.000	11996.900	1124.700	12013.200
GR	1115.300	12054.300	1113.600	12092.100	1117.900	12117.000	1133.300	12163.700	1133.500	12212.000
GR	1133.400	12302.000	1134.100	12435.600	1134.700	12526.300	.000	.000	.000	.000
ET	.000	.000	9.100	.000	.000	.000	.000	.000	8677.000	12514.000
X1	19.716	89.000	11265.100	12085.600	200.000	330.000	300.000	.000	.000	.000
CI	9845.000	1128.200	.000	.000	.000	1490.000	.000	.000	.000	.000
X3	.000	.000	.000	8677.000	.000	.000	.000	.000	.000	.000
GR	1134.200	7570.300	1134.600	7614.900	1135.600	7631.900	1133.400	7649.600	1133.700	7690.000
GR	1136.600	7709.000	1135.900	7775.400	1136.200	7809.800	1126.400	7829.100	1122.000	7870.700
GR	1123.700	7976.800	1122.100	8031.400	1125.500	8117.600	1130.400	8153.000	1130.400	8167.600
GR	1134.000	8186.700	1130.500	8209.700	1138.900	8247.600	1135.700	8279.100	1138.200	8342.600
GR	1138.100	8363.100	1136.000	8397.200	1135.400	8508.400	1132.900	8529.500	1133.500	8606.800
GR	1130.800	8655.000	1130.800	8713.600	1133.900	8849.600	1137.700	8861.100	1137.800	8944.200
GR	1125.300	8971.400	1126.500	9004.600	1126.500	9092.000	1128.300	9110.000	1128.700	9138.700
GR	1131.700	9176.000	1131.200	9276.700	1133.000	9298.600	1132.000	9353.800	1139.400	9375.900
GR	1135.200	9387.300	1135.300	9434.200	1132.600	9479.200	1130.600	9542.100	1132.400	9581.700
GR	1131.300	9643.100	1129.800	9689.500	1136.300	9714.700	1130.700	9730.100	1130.700	9745.800
GR	1127.900	9769.000	1127.300	9837.300	1127.500	9950.100	1130.000	9978.200	1130.200	10000.000
GR	1130.200	10000.100	1128.700	10041.200	1129.300	10224.300	1128.000	10330.200	1128.400	10430.300
GR	1130.400	10477.500	1130.700	10547.800	1129.500	10561.800	1130.700	10590.300	1132.800	10617.100
GR	1134.800	10660.800	1135.000	10712.400	1134.700	10808.700	1134.400	10993.000	1133.600	11092.300
GR	1132.800	11204.400	1130.400	11265.100	1124.100	11294.000	1123.600	11332.100	1127.500	11419.400
GR	1126.800	11534.900	1123.500	11611.600	1122.500	11679.500	1120.300	11693.100	1121.600	11712.600
GR	1121.100	11839.200	1122.600	11900.300	1122.500	11969.000	1123.500	12001.800	1126.300	12066.900
GR	1130.200	12085.600	1132.800	12149.200	1134.900	12325.600	1141.100	12514.400	.000	.000

ET	.000	.000	9.100	.000	.000	.000	.000	.000	8655.000	12513.000
X1	19.759	88.000	11188.200	11975.600	200.000	240.000	230.000	.000	.000	.000
CI	9780.000	1128.900	.000	.000	.000	1460.000	.000	.000	.000	.000
X3	.000	.000	.000	8655.000	.000	.000	.000	.000	.000	.000
GR	1134.600	7542.800	1134.600	7584.500	1135.600	7603.300	1133.700	7618.000	1134.000	7658.800
GR	1136.400	7683.500	1137.200	7769.700	1135.700	7781.200	1125.600	7814.700	1122.000	7852.500
GR	1122.000	7878.100	1123.600	7899.300	1122.000	8003.600	1126.000	8076.400	1130.000	8110.600
GR	1130.000	8145.800	1133.600	8163.400	1132.700	8207.100	1136.600	8221.600	1136.100	8301.100
GR	1133.300	8409.200	1134.300	8466.000	1131.100	8554.600	1131.800	8635.300	1135.000	8689.100
GR	1135.100	8717.100	1134.300	8740.600	1137.100	8760.800	1138.100	8855.400	1140.000	8885.400
GR	1138.900	8918.100	1126.400	8941.700	1126.100	9049.500	1130.600	9120.800	1133.000	9224.600
GR	1131.400	9293.500	1133.700	9350.400	1132.400	9436.000	1132.900	9495.600	1131.600	9542.100
GR	1125.900	9582.000	1125.800	9644.800	1133.700	9670.100	1127.300	9683.900	1131.500	9718.600
GR	1131.400	9819.900	1130.100	9930.500	1130.100	10000.000	1130.000	10027.900	1128.500	10252.900
GR	1129.400	10289.500	1131.800	10307.100	1132.200	10382.400	1131.100	10431.900	1132.600	10450.500
GR	1132.000	10494.600	1129.500	10518.400	1132.500	10532.900	1135.800	10605.000	1135.200	10769.700
GR	1134.800	10908.600	1133.900	11070.800	1131.500	11126.900	1128.700	11188.200	1125.200	11203.400
GR	1125.200	11222.500	1126.900	11244.500	1127.900	11299.800	1128.100	11490.900	1127.000	11574.500
GR	1122.800	11661.300	1119.400	11767.000	1121.500	11791.100	1119.900	11885.700	1121.300	11935.600
GR	1123.400	11959.400	1132.000	11975.600	1133.500	12032.500	1134.200	12066.100	1133.100	12083.500
GR	1135.000	12219.600	1135.400	12281.500	1136.600	12370.300	1142.600	12389.900	1143.100	12426.100
GR	1139.300	12438.500	1139.300	12501.700	1143.100	12513.300	.000	.000	.000	.000

ET	.000	.000	9.100	.000	.000	.000	.000	.000	8636.000	12504.000
X1	19.803	87.000	11056.300	11909.500	200.000	240.000	230.000	.000	.000	.000
CI	10075.000	1129.500	.000	.000	.010	2050.000	.000	.000	.000	.000
X3	.000	.000	.000	8636.000	.000	.000	.000	.000	.000	.000
GR	1135.100	7517.400	1136.100	7565.900	1133.900	7589.200	1133.900	7629.600	1135.700	7655.000
GR	1134.500	7677.300	1134.700	7761.300	1133.200	7872.600	1124.200	7894.200	1119.800	7930.900
GR	1121.900	7968.200	1125.500	8016.400	1127.200	8085.000	1131.000	8125.900	1133.500	8140.500
GR	1134.600	8165.300	1135.400	8230.600	1134.400	8321.300	1134.200	8393.700	1132.800	8429.600
GR	1134.200	8465.800	1132.200	8502.200	1136.000	8535.300	1137.200	8573.300	1137.200	8640.000
GR	1134.500	8681.100	1135.000	8703.600	1137.400	8710.700	1138.100	8783.900	1137.500	8833.000
GR	1138.900	8872.400	1137.700	8924.200	1125.400	8949.900	1125.500	9011.900	1131.700	9082.300
GR	1130.800	9150.900	1132.800	9209.800	1132.800	9327.900	1130.000	9397.400	1128.100	9477.900
GR	1129.100	9514.000	1133.400	9544.100	1133.100	9599.500	1138.100	9629.700	1134.200	9650.300
GR	1134.400	9723.700	1133.900	9793.500	1131.000	9874.800	1130.500	9951.900	1130.500	10000.000
GR	1129.400	10000.200	1129.100	10029.500	1129.800	10241.700	1132.200	10352.900	1132.000	10402.800
GR	1133.300	10453.900	1130.600	10478.800	1134.100	10494.100	1135.500	10559.300	1137.700	10611.900
GR	1137.700	10661.600	1135.600	10683.100	1135.800	10787.100	1134.800	10901.200	1136.500	10911.300
GR	1130.300	10933.500	1131.600	11007.600	1131.500	11056.300	1127.600	11097.100	1126.800	11272.000
GR	1127.700	11420.800	1128.000	11605.300	1122.700	11652.100	1119.200	11739.400	1118.400	11770.500
GR	1120.600	11830.600	1121.400	11891.800	1133.300	11909.500	1134.400	12027.600	1135.900	12129.300
GR	1143.000	12152.900	1143.000	12196.600	1139.700	12203.200	1139.700	12266.500	1144.800	12278.200
GR	1144.900	12345.000	1145.600	12504.300	.000	.000	.000	.000	.000	.000

ET	.000	.000	9.100	.000	.000	.000	.000	.000	8637.000	12109.000
X1	19.856	90.000	10946.900	11848.600	200.000	310.000	280.000	.000	.000	.000
CI	10050.000	1130.200	.000	.000	.000	1900.000	.000	.000	.000	.000
X3	.000	.000	.000	8637.000	.000	.000	.000	.000	.000	.000
GR	1135.600	7499.200	1135.600	7536.200	1134.400	7567.100	1134.400	7605.400	1141.000	7641.200
GR	1141.000	7810.500	1136.600	7818.400	1135.800	7846.600	1125.900	7869.100	1120.600	7899.200
GR	1119.000	7990.000	1126.000	8013.200	1126.900	8067.700	1130.200	8113.900	1133.300	8133.800

GR	1133.300	8148.200	1130.100	8177.500	1132.600	8196.200	1134.700	8246.900	1135.800	8311.600
GR	1135.700	8359.000	1134.700	8484.000	1136.500	8521.200	1138.100	8633.100	1137.100	8736.900
GR	1138.300	8866.900	1135.700	8938.800	1125.400	8953.400	1125.300	8987.500	1128.800	9056.100
GR	1132.800	9214.300	1132.100	9322.800	1129.600	9360.000	1129.100	9442.800	1130.200	9466.300
GR	1135.200	9480.300	1135.900	9587.300	1141.200	9601.200	1133.300	9622.000	1133.300	9643.000
GR	1135.300	9671.600	1135.300	9792.100	1132.700	9805.000	1129.800	9871.900	1130.600	9938.500
GR	1129.600	10000.000	1129.600	10000.100	1129.500	10048.300	1129.300	10090.100	1133.000	10141.800
GR	1129.800	10166.600	1131.400	10234.100	1131.600	10284.100	1132.800	10293.600	1132.000	10305.200
GR	1132.800	10337.700	1131.400	10489.100	1132.100	10527.100	1136.400	10542.700	1137.000	10615.600
GR	1136.000	10726.600	1137.000	10739.200	1136.400	10775.500	1132.200	10789.000	1132.600	10946.900
GR	1126.700	10985.300	1126.700	11103.600	1124.700	11139.200	1122.800	11150.800	1122.800	11192.400
GR	1123.700	11245.300	1122.100	11278.100	1122.100	11327.500	1122.700	11363.100	1127.300	11390.300
GR	1128.400	11470.800	1127.600	11532.800	1124.400	11582.800	1124.400	11634.000	1123.900	11692.500
GR	1120.200	11747.200	1115.600	11809.100	1132.300	11848.600	1131.800	11890.100	1133.800	11938.400
GR	1134.500	11995.600	1143.300	12033.700	1143.500	12063.300	1139.300	12070.800	1139.300	12109.500
ET	.000	.000	9.100	.000	.000	.000	.000	.000	8646.000	12150.000
X1	19.902	90.000	10719.900	11828.600	200.000	250.000	240.000	.000	.000	.000
CI	9950.000	1130.800	.000	.000	.000	1700.000	.000	.000	.000	.000
X3	.000	.000	.000	8646.000	.000	.000	.000	.000	.000	.000
GR	1136.300	7485.000	1136.100	7524.600	1135.000	7549.100	1135.000	7586.600	1136.400	7636.400
GR	1137.200	7745.500	1136.000	7829.500	1125.700	7853.200	1119.600	7880.200	1119.600	7910.400
GR	1117.200	7939.000	1117.200	7977.200	1121.800	7987.800	1117.700	7998.200	1127.100	8054.900
GR	1129.100	8110.100	1132.500	8141.700	1134.100	8193.800	1131.400	8223.500	1134.400	8239.800
GR	1134.000	8269.500	1136.800	8357.600	1135.900	8456.700	1137.200	8565.400	1138.600	8612.000
GR	1138.300	8735.200	1138.500	8840.500	1136.300	8893.800	1134.800	8908.100	1134.800	8943.300
GR	1128.100	8956.800	1127.300	8969.600	1127.500	9012.800	1130.100	9056.900	1130.500	9130.000
GR	1132.700	9219.200	1132.700	9257.000	1129.200	9361.000	1130.500	9406.800	1138.300	9420.600
GR	1137.800	9470.800	1136.000	9482.000	1136.500	9515.000	1135.000	9542.600	1137.400	9548.400
GR	1137.300	9566.200	1143.000	9582.400	1135.000	9601.100	1137.300	9644.100	1135.700	9759.600
GR	1130.400	9775.600	1130.800	9895.400	1131.200	9940.100	1129.100	9980.500	1129.300	10000.000
GR	1129.600	10016.300	1132.800	10049.500	1134.500	10203.000	1131.300	10263.600	1131.000	10300.400
GR	1132.400	10307.000	1133.200	10366.700	1133.400	10471.200	1132.600	10569.200	1137.000	10592.900
GR	1137.400	10676.700	1136.700	10719.900	1132.400	10750.000	1126.500	10790.000	1126.100	10992.600
GR	1126.200	11069.800	1129.900	11130.900	1131.400	11223.100	1128.100	11290.000	1125.600	11357.900
GR	1124.400	11517.700	1124.300	11593.200	1122.300	11649.500	1122.900	11767.000	1118.300	11789.100
GR	1131.800	11828.600	1135.100	11872.000	1137.000	11955.400	1144.400	12010.200	1145.400	12024.900
GR	1145.800	12063.100	1139.700	12072.900	1139.700	12100.500	1144.700	12107.600	1146.100	12150.100
NC	.050	.050	.040	.000	.000	.000	.000	.000	.000	.000
ET	.000	.000	9.100	.000	.000	.000	.000	.000	8659.000	12259.000
X1	19.943	88.000	10531.600	11275.300	200.000	230.000	220.000	.000	.000	.000
CI	10275.000	1131.500	.035	.000	.000	2250.000	.000	.000	.000	.000
X3	.000	.000	.000	8659.000	.000	.000	.000	.000	.000	.000
GR	1136.700	7475.200	1137.200	7498.800	1135.100	7530.200	1135.100	7569.000	1139.200	7615.000
GR	1139.200	7715.200	1139.800	7750.000	1137.400	7794.800	1127.700	7817.200	1121.600	7843.900
GR	1121.600	7918.100	1125.800	7947.800	1127.300	8080.900	1130.400	8129.700	1130.400	8148.300
GR	1134.300	8211.300	1132.000	8268.300	1134.900	8279.900	1137.700	8402.500	1136.500	8469.700
GR	1137.800	8514.700	1137.200	8559.200	1138.500	8640.100	1139.100	8735.100	1137.700	8826.300
GR	1135.400	8917.500	1129.900	8954.000	1128.900	9022.700	1131.000	9060.800	1130.500	9131.600
GR	1132.200	9225.200	1130.600	9306.600	1132.300	9371.600	1134.200	9389.400	1137.700	9401.000
GR	1137.000	9463.500	1134.900	9470.800	1136.900	9498.200	1136.900	9550.400	1141.100	9571.500
GR	1135.300	9601.500	1137.000	9627.900	1135.800	9639.800	1132.300	9652.000	1132.200	9721.800
GR	1130.000	9734.500	1133.000	9755.900	1131.100	9762.400	1132.400	9842.300	1132.400	9866.800

GR	1130.100	9901.200	1132.500	9945.700	1131.600	10000.000	1131.800	10029.100	1134.200	10123.900
GR	1134.900	10308.800	1133.000	10465.200	1133.900	10531.600	1127.900	10581.500	1125.100	10754.400
GR	1127.400	10846.200	1127.500	10963.000	1125.600	10984.700	1124.500	11079.400	1122.700	11111.700
GR	1124.600	11190.600	1132.300	11275.300	1131.500	11348.800	1126.800	11406.500	1125.600	11552.100
GR	1125.500	11657.000	1121.800	11710.400	1122.700	11733.300	1120.800	11856.900	1141.500	11889.200
GR	1136.400	11900.800	1137.400	11930.600	1144.200	11946.400	1145.500	11984.700	1142.900	12005.200
GR	1142.800	12045.800	1147.300	12061.300	1147.000	12089.400	1139.800	12102.000	1139.800	12134.700
GR	1145.800	12144.600	1146.300	12168.200	1148.200	12259.100	.000	.000	.000	.000
ET	.000	.000	9.100	.000	.000	.000	.000	.000	8680.000	12182.000
X1	19.985	89.000	10349.700	10967.500	200.000	230.000	220.000	.000	.000	.000
CI	10375.000	1132.100	.000	.000	.000	2250.000	.000	.000	.000	.000
X3	.000	.000	.000	8680.000	.000	.000	.000	.000	.000	.000
GR	1137.300	7469.700	1137.800	7499.600	1135.300	7516.000	1135.300	7556.600	1136.200	7584.500
GR	1136.700	7634.300	1135.000	7697.400	1135.800	7765.000	1127.400	7790.600	1128.400	7799.400
GR	1121.900	7841.700	1122.000	7906.100	1125.000	7945.300	1125.200	7992.500	1127.400	8117.400
GR	1130.500	8159.900	1130.900	8205.000	1133.400	8238.300	1132.500	8288.500	1135.400	8304.300
GR	1135.000	8329.900	1137.100	8351.700	1137.800	8540.800	1139.200	8622.400	1138.300	8676.500
GR	1138.500	8780.300	1136.700	8845.800	1134.600	8875.400	1134.600	8930.600	1130.000	8953.200
GR	1130.300	8997.300	1129.700	9032.000	1130.400	9053.600	1130.600	9240.300	1134.100	9356.500
GR	1134.400	9435.600	1137.200	9446.800	1137.200	9471.000	1136.400	9544.200	1143.400	9564.500
GR	1137.600	9575.900	1138.300	9600.900	1132.200	9627.300	1134.800	9679.000	1135.400	9741.900
GR	1131.700	9763.400	1132.400	9787.400	1131.400	9836.800	1134.400	9930.600	1133.700	10000.000
GR	1133.700	10000.100	1133.800	10020.000	1135.000	10213.900	1134.000	10349.700	1128.700	10391.800
GR	1126.000	10514.000	1125.200	10603.900	1126.100	10652.300	1129.800	10740.800	1128.000	10842.200
GR	1129.000	10910.400	1132.600	10941.300	1134.300	10967.500	1133.400	10987.300	1135.700	11011.400
GR	1133.900	11109.300	1136.300	11121.800	1137.100	11162.400	1138.400	11189.600	1138.000	11243.800
GR	1133.300	11269.800	1132.600	11422.800	1128.400	11484.400	1127.700	11554.500	1124.500	11657.200
GR	1125.800	11727.200	1127.200	11774.500	1127.200	11815.200	1129.700	11845.000	1128.900	11905.200
GR	1127.200	11933.800	1139.300	11963.100	1142.700	12058.800	1146.600	12075.500	1146.200	12097.900
GR	1140.200	12108.400	1140.200	12142.000	1145.800	12156.600	1146.500	12182.900	.000	.000
ET	.000	.000	9.100	.000	.000	.000	.000	.000	8704.000	12194.000
X1	20.028	87.000	10186.500	10810.400	190.000	260.000	230.000	.000	.000	.000
CI	10325.000	1132.800	.000	.000	.000	2150.000	.000	.000	.000	.000
X3	.000	.000	.000	8704.000	.000	.000	.000	.000	.000	.000
GR	1137.300	7467.600	1137.700	7495.100	1135.300	7517.900	1135.700	7559.000	1137.400	7588.300
GR	1136.300	7654.800	1135.500	7684.400	1135.900	7778.700	1138.400	7791.000	1123.300	7838.600
GR	1122.900	7860.200	1125.800	7909.700	1124.100	7931.100	1124.100	7958.000	1125.600	8028.600
GR	1128.700	8114.400	1128.100	8166.300	1130.700	8194.000	1131.700	8233.600	1131.700	8276.100
GR	1135.400	8344.400	1135.000	8354.600	1137.600	8400.100	1138.200	8503.700	1137.200	8536.000
GR	1138.600	8585.600	1138.200	8689.900	1137.700	8746.800	1135.300	8776.800	1136.300	8817.200
GR	1135.900	8847.400	1138.200	8871.700	1138.700	8915.500	1131.000	8949.800	1132.100	8956.500
GR	1130.000	9076.400	1131.100	9126.100	1129.700	9215.000	1133.600	9269.400	1136.700	9387.200
GR	1136.200	9425.900	1139.400	9455.200	1137.600	9532.800	1147.600	9566.600	1139.700	9586.300
GR	1139.700	9633.300	1134.700	9650.700	1134.700	9699.000	1133.900	9736.700	1131.200	9752.800
GR	1130.600	9791.600	1133.800	9808.400	1135.300	9931.700	1135.300	10000.000	1135.300	10018.300
GR	1134.500	10146.000	1135.700	10186.500	1129.500	10216.500	1126.500	10317.300	1126.000	10493.000
GR	1131.500	10580.800	1130.400	10708.300	1131.400	10771.300	1136.800	10810.400	1136.000	10924.700
GR	1136.700	11018.500	1138.000	11066.800	1136.900	11134.800	1134.100	11205.800	1133.700	11335.300
GR	1132.200	11388.500	1128.700	11472.300	1127.800	11626.100	1127.200	11771.600	1128.700	11818.100
GR	1127.800	11859.600	1129.300	11913.200	1129.200	11940.100	1142.100	11964.800	1143.700	12002.700
GR	1143.000	12041.800	1145.600	12095.600	1145.600	12114.300	1140.300	12119.800	1140.300	12153.800
GR	1146.200	12165.200	1146.600	12194.900	.000	.000	.000	.000	.000	.000

ET	.000	.000	9.100	.000	.000	.000	.000	.000	8739.000	12212.000
X1	20.072	88.000	10049.500	10683.800	190.000	260.000	230.000	.000	.000	.000
CI	10225.000	1133.400	.000	.000	.000	2050.000	.000	.000	.000	.000
X3	.000	.000	.000	8739.000	.000	.000	.000	.000	.000	.000
GR	1138.000	7664.400	1136.600	7677.800	1135.900	7777.200	1142.100	7792.300	1142.100	7805.400
GR	1128.900	7826.200	1125.100	7844.300	1123.600	7878.400	1123.700	7934.200	1124.700	8081.400
GR	1127.600	8128.900	1128.300	8175.400	1127.500	8214.000	1132.700	8317.800	1132.600	8344.500
GR	1133.800	8380.400	1136.500	8399.700	1136.300	8486.700	1138.200	8606.900	1137.200	8714.700
GR	1135.700	8733.900	1136.900	8764.900	1139.700	8812.700	1139.500	8917.300	1132.900	8933.200
GR	1131.200	8958.000	1131.800	9039.300	1129.900	9105.500	1128.400	9126.600	1128.400	9178.700
GR	1132.700	9233.200	1135.400	9295.400	1136.400	9351.100	1136.400	9408.100	1139.400	9436.400
GR	1139.600	9504.000	1137.000	9548.200	1145.000	9577.500	1138.400	9599.900	1140.400	9632.300
GR	1139.900	9690.100	1132.300	9721.800	1131.400	9772.300	1135.400	9834.000	1135.400	9948.800
GR	1135.900	10000.000	1136.000	10049.500	1129.700	10069.600	1127.900	10086.600	1126.500	10194.700
GR	1126.800	10261.000	1127.600	10344.500	1127.600	10376.400	1130.100	10433.400	1131.500	10461.700
GR	1132.700	10479.700	1132.400	10604.900	1134.400	10660.100	1136.900	10683.800	1137.100	10705.300
GR	1136.300	10738.700	1137.800	10779.000	1136.700	10835.800	1137.200	10962.000	1135.600	11125.300
GR	1131.600	11272.700	1131.900	11371.800	1131.400	11398.900	1128.700	11434.100	1129.000	11488.600
GR	1128.100	11586.000	1129.200	11625.800	1128.000	11655.100	1128.000	11744.500	1129.700	11764.700
GR	1128.900	11789.200	1123.800	11824.200	1123.800	11844.700	1125.000	11884.800	1141.800	11915.000
GR	1142.600	11996.700	1144.500	12074.400	1145.200	12106.700	1146.300	12123.000	1140.000	12131.700
GR	1140.000	12170.500	1145.500	12180.300	1146.700	12212.300	.000	.000	.000	.000

ET	.000	.000	9.100	.000	.000	.000	.000	.000	8770.000	12445.000
X1	20.112	90.000	9962.400	10638.100	190.000	260.000	210.000	.000	.000	.000
CI	10050.000	1134.100	.000	.000	.000	1700.000	.000	.000	.000	.000
X3	.000	.000	.000	8770.000	.000	.000	.000	.000	.000	.000
GR	1138.000	7680.200	1136.800	7691.800	1137.300	7766.400	1136.300	7778.700	1142.600	7794.300
GR	1142.700	7808.300	1135.600	7822.900	1133.900	7852.400	1130.200	7862.600	1130.200	7874.500
GR	1126.100	7893.400	1125.700	7930.900	1128.500	7954.900	1123.500	7985.900	1124.600	8000.400
GR	1123.800	8063.200	1124.500	8142.100	1128.200	8218.800	1128.200	8287.900	1130.200	8334.300
GR	1132.300	8447.600	1137.600	8475.200	1137.200	8572.900	1136.600	8680.900	1134.600	8705.100
GR	1136.600	8734.100	1136.500	8782.300	1139.500	8815.300	1139.500	8869.300	1131.300	8922.400
GR	1132.100	8955.600	1131.700	9075.700	1128.300	9113.700	1129.500	9199.500	1132.900	9215.400
GR	1137.500	9348.400	1137.500	9393.600	1139.900	9410.400	1138.700	9471.300	1140.100	9515.800
GR	1140.100	9548.300	1137.400	9570.800	1145.900	9590.700	1138.300	9609.200	1140.300	9638.500
GR	1138.800	9753.800	1132.100	9791.000	1132.100	9859.600	1136.700	9927.300	1137.100	9962.400
GR	1130.200	9978.400	1126.500	9995.900	1126.500	10000.000	1126.600	10065.200	1126.900	10141.900
GR	1129.000	10265.200	1132.200	10317.700	1134.300	10542.500	1136.500	10608.400	1137.600	10638.100
GR	1138.300	10709.600	1134.200	10845.300	1133.300	10922.700	1131.600	10984.000	1132.400	11091.700
GR	1130.900	11235.100	1130.100	11312.000	1128.300	11342.800	1127.600	11387.900	1129.800	11446.900
GR	1131.800	11470.000	1132.200	11542.700	1127.400	11573.600	1129.200	11590.400	1127.100	11752.400
GR	1129.000	11763.700	1131.200	11868.700	1125.000	11905.100	1128.200	11977.400	1143.700	12003.700
GR	1147.600	12122.600	1147.400	12142.200	1140.300	12152.700	1140.300	12194.100	1145.400	12200.400
GR	1146.200	12260.100	1149.200	12335.900	1149.200	12368.100	1150.900	12391.300	1151.300	12445.300

ET	.000	.000	9.100	.000	.000	.000	.000	.000	8819.000	12505.000
X1	20.152	90.000	9923.600	10540.300	190.000	230.000	210.000	.000	.000	.000
CI	9600.000	1134.700	.000	.000	.000	700.000	.000	.000	.000	.000
X3	.000	.000	.000	8819.000	.000	.000	.000	.000	.000	.000
GR	1138.500	7693.700	1138.500	7758.300	1137.600	7782.100	1143.200	7796.100	1143.300	7809.000
GR	1135.700	7825.000	1135.600	7863.900	1137.800	7897.900	1128.900	7925.700	1126.500	7971.500
GR	1126.000	8008.300	1129.500	8046.000	1129.500	8081.700	1124.700	8109.500	1123.000	8168.400

GR	1131.000	8449.000	1137.300	8601.800	1137.400	8789.400	1140.300	8794.700	1140.300	8811.700
GR	1137.100	8824.200	1131.100	8877.200	1131.100	8900.200	1135.200	8915.200	1133.600	8957.100
GR	1131.300	9053.500	1132.700	9076.300	1127.800	9134.600	1128.800	9203.100	1133.900	9217.000
GR	1134.600	9263.800	1137.200	9295.300	1137.600	9388.200	1140.800	9411.300	1139.700	9557.300
GR	1139.700	9584.100	1137.900	9594.200	1145.800	9612.100	1138.800	9633.400	1140.100	9664.300
GR	1140.500	9756.500	1142.100	9855.800	1141.100	9871.700	1134.800	9891.900	1134.800	9923.600
GR	1128.100	9953.000	1126.000	9981.200	1126.000	10000.000	1126.000	10080.200	1126.800	10104.700
GR	1130.300	10192.700	1133.900	10243.000	1134.900	10363.400	1133.900	10414.000	1134.900	10540.300
GR	1132.400	10686.700	1134.400	10853.500	1133.100	10922.700	1130.400	10948.800	1133.200	10982.800
GR	1130.900	11032.300	1136.600	11056.700	1136.300	11136.000	1133.300	11158.000	1134.800	11199.400
GR	1134.400	11267.800	1135.800	11310.500	1133.900	11354.800	1133.100	11503.700	1130.100	11606.000
GR	1128.100	11628.200	1127.600	11739.100	1128.800	11758.300	1129.200	11877.200	1131.100	11959.800
GR	1130.000	12084.400	1126.600	12133.800	1137.900	12158.500	1146.100	12184.600	1142.400	12202.000
GR	1142.000	12222.400	1149.500	12239.600	1149.300	12299.000	1140.400	12319.300	1140.400	12349.700
GR	1149.400	12361.400	1148.500	12425.500	1147.500	12448.200	1147.000	12464.000	1147.500	12505.200
ET	.000	.000	9.100	.000	.000	.000	.000	.000	8877.000	12490.000
X1	20.189	89.000	9917.300	10638.900	200.000	200.000	200.000	.000	.000	.000
CI	10200.000	1135.400	.000	.000	.000	1800.000	.000	.000	.000	.000
X3	.000	.000	.000	8877.000	.000	.000	.000	.000	.000	.000
GR	1136.800	7693.600	1138.400	7789.000	1144.500	7808.200	1144.500	7818.500	1135.500	7839.600
GR	1135.500	7869.100	1138.500	7927.600	1137.600	7970.300	1127.400	8013.900	1127.200	8051.500
GR	1131.700	8172.700	1125.200	8234.900	1124.500	8376.400	1136.700	8666.100	1135.800	8727.300
GR	1137.100	8752.800	1141.300	8767.300	1141.300	8782.200	1131.600	8817.100	1130.500	8840.200
GR	1130.500	8866.400	1135.400	8887.000	1133.800	9024.200	1128.100	9194.600	1128.100	9194.600
GR	1128.800	9234.500	1134.200	9251.500	1135.200	9312.200	1137.900	9337.300	1138.900	9393.900
GR	1145.100	9407.300	1146.000	9439.300	1146.000	9481.600	1141.100	9516.300	1140.900	9607.600
GR	1139.100	9629.700	1146.100	9645.700	1140.100	9666.000	1142.300	9684.100	1141.300	9770.400
GR	1140.100	9837.700	1141.300	9917.300	1127.600	9939.200	1125.500	9980.900	1125.800	10000.000
GR	1126.600	10043.000	1127.000	10068.700	1133.000	10196.200	1133.000	10258.900	1135.100	10360.900
GR	1134.200	10442.500	1132.100	10575.100	1137.300	10638.900	1136.800	10708.600	1137.800	10804.300
GR	1138.500	11020.500	1135.200	11074.900	1134.600	11121.700	1129.800	11304.900	1129.700	11341.200
GR	1128.300	11376.900	1127.500	11474.000	1134.600	11519.000	1134.500	11565.600	1131.600	11741.700
GR	1133.800	11779.400	1133.000	11800.100	1127.100	11864.500	1120.900	11897.400	1121.600	11923.600
GR	1121.200	11937.200	1121.200	11972.000	1127.200	12012.300	1133.000	12117.500	1133.100	12158.300
GR	1143.400	12193.300	1146.700	12222.100	1146.700	12233.600	1141.100	12254.200	1141.100	12275.100
GR	1151.700	12297.500	1149.400	12310.000	1149.400	12352.000	1140.600	12366.600	1140.600	12395.600
GR	1149.300	12406.900	1148.000	12463.700	1146.100	12481.200	1145.700	12490.400	.000	.000
ET	.000	.000	9.100	.000	.000	.000	.000	.000	8927.000	12361.000
X1	20.231	90.000	9884.900	10651.100	190.000	260.000	220.000	.000	.000	.000
CI	10375.000	1136.000	.000	.000	.000	2050.000	.000	.000	.000	.000
X3	.000	.000	.000	8927.000	.000	.000	.000	.000	.000	.000
GR	1139.800	7540.900	1139.200	7910.700	1141.600	7947.900	1138.700	8038.200	1130.900	8061.100
GR	1129.700	8149.300	1130.700	8242.800	1131.800	8289.800	1130.700	8310.800	1126.200	8355.500
GR	1124.500	8440.800	1124.800	8487.000	1126.200	8585.100	1130.200	8639.200	1130.900	8676.000
GR	1135.400	8714.100	1140.500	8729.100	1140.500	8743.100	1132.200	8771.600	1130.500	8796.200
GR	1130.200	8814.100	1132.200	8846.200	1136.600	8858.600	1136.600	8896.200	1135.200	8927.800
GR	1136.000	8946.300	1134.200	8989.200	1133.800	9051.100	1133.000	9066.900	1132.500	9157.400
GR	1129.000	9253.600	1129.000	9283.000	1134.600	9309.600	1133.900	9334.600	1134.900	9359.800
GR	1137.600	9374.100	1139.900	9417.000	1139.900	9444.600	1142.500	9471.100	1142.600	9575.200
GR	1141.100	9606.300	1141.500	9649.100	1140.400	9695.400	1145.100	9706.600	1140.900	9721.900
GR	1141.600	9849.700	1143.000	9884.900	1141.500	9914.600	1130.900	9929.300	1126.700	9953.700
GR	1126.200	9980.800	1126.200	10000.000	1127.700	10034.500	1131.100	10086.500	1133.100	10206.700

GR	1133.100	10277.600	1134.200	10394.400	1133.400	10503.300	1137.100	10574.500	1138.700	10651.100
GR	1136.800	10814.900	1133.600	10842.400	1129.700	10853.400	1130.100	10915.900	1128.200	11097.500
GR	1129.900	11141.800	1137.600	11197.800	1135.000	11411.600	1135.100	11473.100	1133.700	11623.700
GR	1131.100	11668.200	1135.700	11735.300	1135.400	11754.700	1133.300	11790.600	1137.000	11811.600
GR	1136.600	11839.700	1133.300	11857.100	1133.500	11883.700	1127.800	11957.100	1126.700	12023.900
GR	1120.800	12075.200	1120.800	12113.000	1124.700	12132.400	1152.300	12186.200	1151.600	12197.600
GR	1144.100	12219.100	1142.900	12249.400	1145.000	12287.400	1150.200	12299.300	1151.800	12361.900
ET	.000	.000	9.100	.000	.000	.000	.000	.000	8989.000	12337.000
X1	20.269	90.000	9884.500	10713.700	190.000	220.000	200.000	.000	.000	.000
CI	10400.000	1136.400	.000	.000	.000	2000.000	.000	.000	.000	.000
X3	.000	.000	.000	8989.000	.000	.000	.000	.000	.000	.000
GR	1140.800	7604.000	1139.100	7968.700	1143.300	8029.400	1140.700	8089.400	1140.900	8163.200
GR	1131.800	8193.800	1131.800	8241.000	1129.500	8266.100	1128.200	8381.200	1129.300	8437.800
GR	1125.300	8469.800	1125.300	8561.300	1126.500	8583.100	1125.800	8628.100	1127.800	8633.100
GR	1135.200	8673.600	1139.100	8680.400	1139.100	8692.700	1135.900	8699.300	1128.700	8737.300
GR	1128.700	8756.100	1131.400	8779.600	1130.900	8792.100	1133.100	8800.300	1131.400	8810.900
GR	1134.300	8948.500	1135.200	9016.900	1132.600	9185.400	1130.800	9250.200	1128.400	9295.000
GR	1129.600	9317.100	1133.600	9327.300	1136.000	9428.900	1136.800	9485.400	1141.100	9496.200
GR	1142.800	9524.600	1141.700	9605.700	1143.500	9631.300	1143.500	9705.200	1140.700	9741.900
GR	1147.500	9759.000	1141.200	9780.400	1143.400	9884.500	1142.200	9899.700	1130.300	9928.800
GR	1128.400	9942.300	1127.000	9974.100	1129.000	10000.000	1129.200	10049.600	1129.400	10079.900
GR	1132.900	10127.800	1133.700	10185.600	1132.000	10315.600	1133.900	10447.600	1130.700	10602.100
GR	1129.100	10631.500	1134.400	10658.100	1136.200	10713.700	1136.200	10835.000	1133.900	10945.400
GR	1139.800	10966.200	1140.400	11002.700	1138.900	11030.500	1139.200	11077.000	1137.300	11157.200
GR	1138.800	11209.400	1136.300	11345.400	1135.100	11464.700	1135.300	11512.000	1133.200	11536.000
GR	1135.800	11558.800	1133.000	11602.400	1132.800	11632.000	1134.400	11670.900	1133.900	11742.600
GR	1132.800	11772.700	1136.600	11807.300	1135.700	11838.300	1136.700	11860.300	1131.500	11884.500
GR	1132.700	11903.700	1130.900	11929.200	1124.700	12130.900	1125.600	12160.500	1133.900	12188.200
GR	1141.400	12196.100	1140.500	12250.900	1151.100	12268.300	1150.400	12285.300	1152.000	12337.800
ET	.000	.000	9.100	.000	.000	.000	.000	.000	9067.000	12386.000
X1	20.307	90.000	9790.300	10569.900	200.000	200.000	200.000	.000	.000	.000
CI	10550.000	1136.700	.000	.000	.000	1700.000	.000	.000	.000	.000
X3	.000	.000	.000	9067.000	.000	.000	.000	.000	.000	.000
GR	1141.400	7668.100	1138.600	8174.300	1140.300	8276.800	1137.400	8374.800	1136.300	8383.500
GR	1130.700	8399.700	1130.900	8410.400	1128.700	8490.100	1123.900	8513.200	1124.400	8559.800
GR	1129.500	8575.900	1135.800	8617.100	1140.100	8625.600	1140.000	8637.500	1132.600	8657.100
GR	1125.900	8688.800	1125.900	8731.500	1129.600	8817.200	1130.900	8899.400	1130.900	8950.400
GR	1131.500	8994.300	1131.500	9040.400	1131.300	9209.700	1129.500	9276.200	1134.300	9347.800
GR	1135.200	9471.600	1136.900	9518.100	1136.400	9670.600	1134.100	9701.800	1140.100	9722.900
GR	1139.000	9777.600	1145.000	9790.300	1138.000	9808.200	1139.100	9824.600	1138.700	9842.600
GR	1136.000	9871.300	1132.800	9901.000	1130.900	9949.900	1129.200	9971.700	1129.200	9998.900
GR	1129.200	10000.000	1126.300	10024.900	1129.900	10057.200	1129.900	10085.000	1132.700	10113.900
GR	1133.600	10149.200	1133.000	10210.100	1131.100	10259.900	1131.700	10318.400	1136.600	10547.300
GR	1138.600	10569.900	1138.900	10656.200	1137.800	10731.100	1136.300	10782.800	1137.700	10797.900
GR	1137.600	10810.900	1140.200	10852.300	1140.200	10951.100	1138.500	11028.500	1139.700	11146.500
GR	1137.400	11254.000	1137.900	11322.100	1136.000	11377.700	1135.900	11408.500	1136.000	11459.300
GR	1134.600	11518.200	1135.000	11562.400	1133.100	11661.200	1135.000	11675.200	1134.500	11732.200
GR	1136.600	11769.300	1135.300	11784.400	1132.600	11846.400	1132.400	11881.700	1130.400	11906.700
GR	1130.400	11931.700	1128.100	11955.100	1126.200	12066.800	1131.300	12127.500	1129.600	12155.700
GR	1140.500	12183.900	1139.900	12209.600	1151.200	12235.400	1152.100	12259.900	1152.100	12290.800
GR	1141.600	12307.300	1141.600	12337.600	1152.000	12349.500	1152.000	12371.100	1160.600	12386.100

ET	.000	.000	9.100	.000	.000	.000	.000	.000	9147.000	12345.000
X1	20.345	90.000	9790.700	10573.200	200.000	200.000	200.000	.000	.000	.000
CI	10975.000	1137.100	.000	.000	.000	950.000	.000	.000	.000	.000
X3	.000	.000	.000	9147.000	.000	.000	.000	.000	.000	.000
GR	1140.800	7732.100	1141.500	7773.800	1140.200	7825.600	1140.300	7902.100	1138.200	7907.400
GR	1141.900	7916.100	1139.500	7922.200	1140.900	7946.100	1139.300	8007.800	1140.200	8053.800
GR	1139.500	8101.900	1137.100	8162.000	1139.000	8179.000	1138.000	8293.800	1138.300	8360.800
GR	1136.700	8391.400	1139.200	8443.100	1137.600	8562.600	1139.800	8575.700	1139.800	8587.500
GR	1128.400	8666.000	1128.100	8715.200	1130.300	8752.100	1127.400	8819.200	1127.000	8859.600
GR	1128.500	8892.800	1129.900	8973.800	1128.200	8997.800	1130.000	9077.900	1128.700	9133.800
GR	1129.300	9180.600	1129.000	9293.400	1130.300	9306.200	1129.600	9387.500	1131.800	9436.700
GR	1134.900	9540.100	1135.100	9589.900	1130.800	9612.900	1130.800	9698.300	1132.500	9712.700
GR	1129.900	9739.200	1129.900	9765.300	1138.400	9783.300	1138.200	9790.700	1141.300	9800.900
GR	1136.500	9814.000	1135.800	9849.600	1132.300	9905.300	1132.500	9985.300	1131.600	10000.000
GR	1132.400	10031.800	1131.900	10111.400	1129.000	10132.700	1132.200	10153.200	1130.800	10182.800
GR	1131.200	10289.700	1134.500	10432.500	1136.900	10530.600	1139.100	10573.200	1139.500	10721.000
GR	1138.600	10804.800	1138.700	10866.900	1140.000	10915.400	1140.000	11059.100	1138.200	11150.000
GR	1136.800	11193.400	1137.400	11231.700	1135.900	11250.000	1137.100	11272.300	1136.900	11306.800
GR	1138.200	11371.700	1136.100	11434.200	1133.800	11459.500	1133.800	11491.800	1135.700	11549.300
GR	1134.700	11603.700	1134.000	11742.500	1132.300	11826.600	1130.500	11868.900	1127.200	11891.600
GR	1127.300	11995.700	1131.300	12042.300	1131.000	12107.900	1151.100	12161.100	1151.900	12177.600
GR	1150.900	12244.800	1141.300	12259.600	1141.300	12293.200	1150.800	12304.300	1150.800	12345.000

ET	.000	.000	9.100	.000	.000	.000	.000	.000	9216.000	12402.000
X1	20.383	90.000	9806.200	10612.300	200.000	200.000	200.000	.000	.000	.000
CI	10937.000	1137.400	.000	.000	.000	825.000	.000	.000	.000	.000
X3	.000	.000	.000	9216.000	.000	.000	.000	.000	.000	.000
GR	1140.900	7793.300	1140.400	7927.400	1138.800	7931.500	1143.800	7942.000	1140.400	7950.500
GR	1143.700	7978.400	1141.800	8030.000	1144.400	8042.100	1144.400	8101.700	1139.300	8118.600
GR	1137.100	8159.300	1137.500	8195.500	1137.200	8233.200	1138.300	8330.800	1137.900	8444.600
GR	1139.300	8470.800	1138.200	8527.900	1139.000	8598.700	1138.500	8703.000	1137.700	8736.700
GR	1135.900	8755.300	1134.400	8795.700	1130.100	8822.500	1129.300	8848.900	1130.200	8885.600
GR	1127.600	8951.800	1128.700	8967.000	1128.900	9071.100	1129.100	9188.700	1129.900	9276.000
GR	1128.200	9308.000	1129.800	9353.100	1127.400	9392.500	1127.400	9432.700	1129.300	9498.200
GR	1131.700	9559.900	1132.200	9622.000	1129.300	9664.100	1129.900	9706.100	1129.200	9766.200
GR	1135.200	9792.700	1141.100	9806.200	1134.500	9822.300	1133.300	9878.400	1133.800	10000.000
GR	1134.400	10039.500	1134.000	10065.000	1131.600	10094.400	1131.300	10180.700	1132.200	10249.900
GR	1130.500	10278.900	1133.700	10366.400	1133.700	10391.100	1136.400	10499.400	1139.300	10612.300
GR	1140.100	10679.700	1139.600	10742.300	1140.700	10804.600	1140.200	10895.600	1137.100	11032.100
GR	1137.500	11127.600	1136.600	11171.700	1138.400	11201.500	1138.400	11307.600	1136.500	11343.600
GR	1133.300	11378.800	1133.300	11406.000	1136.100	11497.300	1136.000	11556.500	1132.500	11681.300
GR	1133.100	11748.700	1127.600	11812.800	1127.200	11851.700	1131.100	11950.200	1131.700	12012.200
GR	1127.600	12034.400	1140.500	12065.900	1140.600	12099.300	1150.600	12152.600	1151.200	12190.700
GR	1141.900	12206.100	1141.900	12244.600	1150.000	12254.900	1150.300	12289.900	1147.800	12313.500
GR	1149.100	12335.900	1153.600	12348.300	1153.800	12359.200	1152.800	12376.900	1148.800	12402.300

ET	.000	.000	9.100	.000	.000	.000	.000	.000	9280.000	12502.000
X1	20.420	88.000	9797.700	10637.900	200.000	200.000	200.000	.000	.000	.000
CI	10912.000	1137.800	.000	.000	.000	675.000	.000	.000	.000	.000
X3	.000	.000	.000	9280.000	.000	.000	.000	.000	.000	.000
GR	1141.600	7859.000	1139.100	7878.700	1141.700	7954.300	1140.000	7958.800	1144.400	7969.200
GR	1140.700	7978.200	1142.100	8004.800	1141.600	8114.400	1138.300	8179.900	1138.300	8203.600
GR	1139.600	8230.000	1139.300	8272.000	1140.300	8326.100	1139.100	8388.100	1139.800	8499.400

GR	1140.100	8589.000	1139.300	8618.200	1140.500	8715.800	1138.800	8930.200	1140.300	8941.400
GR	1135.900	8948.700	1135.000	8972.700	1129.800	8985.800	1128.800	9059.300	1130.000	9108.100
GR	1128.400	9218.900	1128.800	9367.000	1130.000	9469.400	1128.900	9503.100	1130.800	9530.000
GR	1130.800	9616.300	1131.000	9768.000	1131.000	9768.000	1131.000	9768.000	1131.000	9768.000
GR	1134.700	9775.600	1134.500	9788.300	1139.800	9797.700	1134.600	9810.100	1131.600	9904.900
GR	1132.800	10000.000	1132.100	10053.700	1134.400	10068.300	1133.900	10105.100	1131.800	10143.000
GR	1132.100	10173.000	1130.000	10237.700	1132.700	10275.900	1132.400	10336.000	1134.200	10390.500
GR	1132.800	10401.000	1135.200	10411.400	1135.200	10467.400	1138.000	10598.200	1140.100	10637.900
GR	1140.500	10755.900	1137.900	10950.500	1138.800	11048.100	1137.000	11090.500	1138.600	11122.100
GR	1138.800	11165.000	1137.200	11237.300	1132.800	11277.500	1133.800	11335.100	1135.800	11391.400
GR	1135.500	11481.400	1132.300	11661.400	1128.100	11736.100	1128.100	11751.500	1130.000	11796.800
GR	1131.600	11919.300	1132.100	11954.000	1141.100	11980.100	1146.400	12036.800	1144.200	12051.700
GR	1151.500	12102.400	1151.600	12146.600	1142.200	12161.200	1142.200	12198.400	1149.600	12213.600
GR	1149.600	12249.800	1148.400	12308.500	1153.500	12319.900	1154.000	12332.000	1153.100	12344.300
GR	1148.800	12358.700	1148.400	12409.100	1150.100	12502.800	.000	.000	.000	.000
ET	.000	.000	9.100	.000	.000	.000	.000	.000	9356.000	12500.000
X1	20.458	85.000	9784.900	10661.800	200.000	200.000	200.000	.000	.000	.000
CI	10837.000	1138.100	.000	.000	.000	525.000	.000	.000	.000	.000
X3	.000	.000	.000	9356.000	.000	.000	.000	.000	.000	.000
GR	1140.400	7922.300	1142.100	7974.800	1140.400	7979.600	1145.900	7990.200	1139.800	8002.300
GR	1142.600	8047.400	1141.300	8117.600	1139.400	8184.300	1139.100	8250.500	1139.900	8275.100
GR	1139.400	8322.400	1140.400	8443.000	1140.200	8555.500	1141.700	8604.000	1141.600	8644.300
GR	1151.300	8681.500	1141.800	8712.900	1140.900	8778.300	1140.500	8893.600	1140.500	9022.300
GR	1128.000	9042.000	1128.000	9042.000	1128.300	9204.400	1127.900	9236.500	1130.200	9246.900
GR	1130.300	9268.800	1128.700	9284.200	1128.700	9284.200	1128.300	9327.300	1128.900	9446.500
GR	1128.900	9607.700	1128.900	9607.700	1128.900	9750.000	1128.900	9750.000	1130.700	9752.200
GR	1131.200	9763.800	1137.500	9784.900	1131.000	9803.700	1130.800	9859.500	1132.000	9901.400
GR	1132.100	10000.000	1131.300	10092.500	1131.200	10125.200	1132.700	10131.800	1130.700	10237.300
GR	1134.200	10416.600	1134.000	10460.700	1140.200	10661.800	1139.100	10817.800	1138.800	10969.000
GR	1139.200	11037.300	1138.000	11081.700	1131.700	11117.800	1131.300	11169.200	1132.500	11230.800
GR	1134.200	11257.900	1134.500	11300.700	1132.000	11395.500	1134.500	11439.600	1134.500	11537.400
GR	1129.700	11565.400	1130.400	11600.000	1129.300	11708.100	1131.000	11766.800	1130.500	11804.800
GR	1134.500	11835.600	1143.900	11840.400	1143.400	11881.700	1145.100	11909.300	1150.900	11955.300
GR	1150.100	12013.000	1141.600	12048.300	1141.600	12110.600	1149.800	12132.900	1149.800	12160.900
GR	1151.300	12200.800	1149.600	12236.100	1150.100	12278.100	1153.100	12286.300	1154.000	12299.700
GR	1153.100	12319.600	1150.800	12346.500	1148.500	12354.900	1149.700	12434.800	1151.100	12500.600
ET	.000	.000	9.100	.000	.000	.000	.000	.000	9423.000	12500.000
X1	20.496	88.000	9786.900	10647.800	200.000	200.000	200.000	.000	.000	.000
CI	10762.000	1138.500	.000	.000	.000	325.000	.000	.000	.000	.000
X3	.000	.000	.000	9423.000	.000	.000	.000	.000	.000	.000
GR	1142.200	7985.100	1142.300	7998.800	1140.500	8003.600	1145.200	8012.700	1140.800	8020.700
GR	1142.300	8046.500	1140.700	8187.100	1141.100	8246.500	1140.500	8313.100	1140.200	8441.200
GR	1138.500	8456.800	1138.500	8514.200	1141.200	8546.500	1141.800	8586.500	1140.600	8614.700
GR	1142.100	8719.900	1142.100	8767.200	1140.900	8824.600	1140.900	8910.400	1150.300	8926.900
GR	1156.000	8949.600	1156.500	8960.700	1149.200	8980.600	1140.600	8999.300	1140.700	9034.400
GR	1137.600	9075.000	1129.000	9088.000	1129.000	9088.000	1129.000	9088.000	1129.000	9088.000
GR	1129.000	9765.000	1129.000	9765.000	1138.200	9786.900	1131.600	9803.900	1130.500	9839.300
GR	1131.400	9921.100	1131.200	10000.000	1131.200	10000.100	1131.500	10047.100	1132.900	10120.700
GR	1130.900	10206.800	1131.100	10264.600	1133.700	10440.000	1133.400	10473.400	1134.900	10482.600
GR	1139.200	10647.800	1139.600	10725.600	1138.900	10810.000	1140.600	10869.900	1137.300	10911.500
GR	1137.900	10948.400	1131.300	10971.700	1129.700	11014.800	1130.900	11063.700	1134.300	11089.300
GR	1136.700	11179.300	1137.400	11291.200	1135.900	11434.800	1130.500	11465.400	1131.100	11495.600

GR	1130.000	11618.100	1130.500	11698.800	1136.100	11707.800	1137.200	11791.500	1147.700	11814.600
GR	1140.000	11837.700	1139.800	11864.400	1155.000	11903.300	1153.400	11913.900	1153.400	11933.400
GR	1142.200	11945.600	1142.200	11978.900	1151.100	11993.300	1151.100	12030.400	1151.900	12039.100
GR	1149.700	12062.900	1153.100	12085.000	1149.400	12131.400	1153.100	12154.000	1151.600	12201.300
GR	1155.300	12213.300	1151.000	12226.900	1153.800	12251.800	1154.800	12267.500	1153.500	12283.700
GR	1149.300	12305.900	1150.400	12404.600	1151.600	12500.100	.000	.000	.000	.000
ET	.000	.000	9.100	.000	.000	.000	.000	.000	9482.000	12503.000
X1	20.534	78.000	9794.000	10631.700	200.000	200.000	200.000	.000	.000	.000
CI	.000	.000	.000	.000	.000	.010	.000	.000	.000	.000
X3	.000	.000	.000	9482.000	.000	.000	.000	.000	.000	.000
GR	1141.900	8048.700	1142.500	8076.600	1142.300	8175.100	1140.200	8268.500	1140.400	8316.700
GR	1139.800	8343.800	1140.900	8371.000	1139.900	8491.600	1140.400	8546.400	1139.100	8672.300
GR	1141.500	8706.500	1142.000	8765.900	1141.700	8838.000	1140.700	8888.400	1139.600	8960.900
GR	1141.600	9014.200	1135.700	9015.500	1134.400	9034.200	1132.000	9037.000	1132.000	9085.000
GR	1142.900	9101.700	1132.000	9115.000	1132.000	9396.300	1131.700	9476.500	1130.800	9522.200
GR	1131.600	9585.700	1130.600	9627.900	1131.300	9679.800	1131.300	9679.800	1131.300	9679.800
GR	1131.300	9787.000	1137.500	9794.000	1131.800	9813.700	1131.800	9891.500	1130.700	9968.500
GR	1130.800	10000.000	1130.800	10052.000	1130.800	10165.400	1131.000	10334.500	1134.000	10486.600
GR	1134.000	10508.800	1135.100	10513.700	1134.700	10531.600	1138.700	10631.700	1138.900	10679.300
GR	1138.900	10731.300	1136.200	10810.800	1132.600	10842.200	1130.600	10906.100	1132.200	10926.600
GR	1137.300	10952.700	1137.800	11200.200	1134.900	11349.000	1130.500	11412.300	1129.800	11502.200
GR	1130.400	11555.700	1132.000	11587.000	1140.900	11610.500	1141.800	11666.100	1137.900	11694.300
GR	1137.200	11735.600	1140.900	11828.000	1154.000	11861.200	1153.600	11932.500	1142.800	11946.600
GR	1142.800	11978.200	1154.000	11987.400	1154.000	12008.800	1151.100	12031.200	1154.200	12079.600
GR	1154.000	12153.100	1150.200	12213.100	1154.400	12224.300	1155.400	12239.500	1154.300	12250.400
GR	1150.200	12273.300	1151.900	12396.900	1152.100	12503.900	.000	.000	.000	.000
NC	.050	.050	.035	.100	.300	.000	.000	.000	.000	.000
ET	.000	.000	9.100	.000	.000	.000	.000	.000	9552.000	12503.000
X1	20.572	79.000	9738.800	10594.000	200.000	200.000	200.000	.000	.000	.000
X3	.000	.000	.000	9552.000	.000	.000	.000	.000	.000	.000
GR	1142.100	8112.300	1141.500	8179.600	1142.300	8249.600	1142.500	8312.600	1141.700	8355.500
GR	1142.000	8390.900	1141.300	8435.800	1142.400	8478.000	1141.600	8550.400	1142.700	8571.700
GR	1141.900	8591.100	1142.700	8705.400	1142.000	8754.200	1140.200	8792.600	1142.200	8838.500
GR	1141.400	8905.900	1141.200	9015.600	1142.200	9038.200	1132.000	9052.000	1132.000	9052.000
GR	1132.000	9728.000	1132.000	9728.000	1132.000	9728.000	1137.900	9738.800	1132.100	9754.900
GR	1130.800	9803.300	1132.600	9842.500	1130.700	9971.900	1131.000	10000.000	1130.100	10044.200
GR	1129.000	10142.800	1131.100	10340.000	1133.600	10497.900	1134.600	10507.600	1134.600	10533.000
GR	1136.900	10594.000	1134.000	10655.100	1135.400	10702.100	1134.300	10718.200	1136.400	10754.100
GR	1134.400	10807.100	1138.100	10828.600	1138.300	10854.400	1136.900	10891.000	1136.900	10972.300
GR	1137.100	11077.200	1135.900	11172.200	1132.800	11308.000	1129.200	11336.400	1129.000	11375.700
GR	1132.000	11406.100	1131.100	11458.100	1136.500	11534.200	1142.700	11547.100	1141.800	11603.700
GR	1139.400	11648.300	1140.400	11698.700	1139.800	11750.900	1138.000	11771.900	1138.400	11813.300
GR	1136.800	11858.900	1144.200	11872.600	1153.100	11898.100	1152.800	11928.700	1142.700	11944.200
GR	1142.700	11976.300	1151.200	11987.700	1150.800	12049.100	1147.200	12081.300	1154.400	12103.100
GR	1154.700	12143.200	1152.900	12162.800	1153.300	12188.700	1155.500	12196.900	1156.200	12209.200
GR	1154.500	12227.300	1151.600	12244.800	1153.000	12381.100	1153.600	12503.800	.000	.000

ET	.000	.000	9.100	.000	.000	.000	.000	.000	9605.000	12503.000
X1	20.610	85.000	9704.900	10595.300	200.000	200.000	200.000	.000	.000	.000
X3	.000	.000	.000	9605.000	.000	.000	.000	.000	.000	.000
GR	1142.400	8176.200	1141.500	8223.800	1142.300	8303.600	1142.100	8381.500	1143.200	8438.000
GR	1142.000	8483.400	1143.100	8573.100	1141.100	8595.300	1143.700	8607.500	1142.900	8643.900
GR	1143.500	8737.700	1142.400	8799.900	1142.700	8818.600	1141.100	8957.700	1141.900	9078.900
GR	1139.900	9115.900	1140.900	9121.400	1137.500	9133.300	1137.300	9166.900	1138.900	9253.400
GR	1139.300	9332.200	1138.400	9448.400	1140.300	9587.300	1140.200	9620.700	1131.400	9645.400
GR	1130.000	9690.800	1137.300	9704.900	1129.700	9722.300	1129.300	9769.200	1132.600	9801.500
GR	1131.200	9938.800	1130.700	10000.000	1129.800	10062.600	1128.900	10170.600	1131.600	10394.100
GR	1133.700	10502.500	1134.400	10513.000	1133.800	10534.400	1135.200	10540.400	1135.200	10576.100
GR	1136.600	10595.300	1136.600	10702.900	1133.800	10740.200	1135.600	10763.800	1136.600	10873.700
GR	1136.000	10930.400	1134.100	11015.500	1132.000	11075.600	1132.900	11132.100	1131.800	11167.800
GR	1136.700	11192.100	1136.700	11214.800	1131.500	11289.400	1132.100	11334.300	1132.000	11389.900
GR	1134.300	11423.800	1134.300	11440.100	1141.200	11451.600	1140.200	11500.800	1141.500	11540.600
GR	1140.600	11649.600	1141.100	11723.900	1141.000	11844.600	1145.900	11881.900	1154.000	11897.600
GR	1154.000	11924.000	1143.000	11940.400	1143.000	11969.400	1152.900	11979.200	1153.300	12017.200
GR	1149.500	12041.700	1147.900	12077.000	1154.100	12103.700	1154.800	12177.300	1156.800	12203.100
GR	1155.200	12218.000	1156.900	12279.500	1155.300	12312.000	1156.400	12369.400	1158.200	12387.200
GR	1157.200	12410.700	1157.400	12437.800	1160.900	12466.900	1156.200	12490.600	1155.800	12503.500

ET	.000	.000	9.100	.000	.000	.000	.000	.000	9658.000	12501.000
X1	20.648	80.000	9643.200	10621.900	200.000	200.000	200.000	.000	.000	.000
X3	.000	.000	.000	9685.000	.000	.000	.000	.000	.000	.000
GR	1142.400	8239.200	1141.100	8329.800	1144.400	8519.800	1142.900	8545.400	1144.300	8654.200
GR	1142.900	8772.700	1143.600	8796.700	1142.000	8874.300	1141.300	8936.000	1142.100	8962.600
GR	1141.800	9008.100	1142.300	9089.400	1141.200	9147.500	1144.000	9160.900	1141.200	9172.000
GR	1140.900	9315.200	1142.400	9367.500	1141.200	9442.500	1142.100	9594.800	1141.900	9632.600
GR	1144.300	9643.200	1133.200	9669.200	1131.500	9686.500	1133.200	9763.900	1131.400	9849.100
GR	1130.300	9980.300	1130.400	9999.100	1131.400	10000.000	1129.300	10078.200	1128.800	10157.700
GR	1130.300	10229.600	1130.800	10386.100	1133.900	10518.500	1133.300	10538.900	1134.800	10550.400
GR	1134.800	10612.500	1138.600	10621.900	1138.400	10657.600	1133.600	10674.800	1133.300	10735.700
GR	1136.700	10798.400	1134.700	10966.700	1132.400	11021.300	1133.200	11119.700	1131.300	11183.600
GR	1133.100	11225.100	1131.500	11277.500	1134.100	11303.800	1132.800	11322.000	1142.200	11334.100
GR	1140.800	11481.900	1141.600	11543.600	1140.400	11818.200	1141.200	11857.200	1144.600	11863.700
GR	1143.800	11870.500	1153.600	11893.300	1153.100	11916.900	1143.100	11933.100	1143.100	11964.100
GR	1150.500	11975.200	1150.500	12001.800	1152.200	12006.200	1147.000	12035.000	1146.500	12080.000
GR	1151.200	12097.300	1152.200	12120.800	1148.300	12151.100	1149.200	12191.700	1156.100	12213.600
GR	1157.000	12225.000	1155.900	12239.400	1153.400	12249.300	1150.300	12296.400	1151.900	12323.800
GR	1150.700	12390.900	1152.300	12422.900	1148.000	12452.000	1150.200	12481.100	1146.500	12501.200

ET	.000	.000	9.100	.000	.000	.000	.000	.000	9754.000	12501.000
X1	20.686	72.000	9677.700	10623.400	200.000	200.000	200.000	.000	.000	.000
X3	.000	.000	.000	9754.000	.000	.000	.000	.000	.000	.000
GR	1142.000	8304.600	1143.500	8455.500	1144.300	8483.500	1140.700	8520.700	1145.900	8567.100
GR	1144.100	8628.800	1143.800	8708.700	1144.400	8781.500	1143.800	8786.800	1144.300	8906.500
GR	1143.400	9075.500	1143.900	9087.400	1143.400	9149.100	1144.000	9246.400	1142.400	9313.200
GR	1142.000	9396.200	1143.300	9489.000	1143.100	9524.000	1143.200	9620.000	1142.100	9677.700
GR	1136.900	9716.800	1133.300	9731.000	1133.800	9754.600	1132.300	9794.200	1129.700	9918.600
GR	1129.000	10000.000	1128.700	10070.300	1129.400	10145.800	1130.400	10376.300	1132.900	10529.400
GR	1133.700	10543.500	1133.600	10563.600	1134.400	10573.700	1134.900	10613.800	1139.400	10623.400
GR	1139.300	10658.800	1134.200	10674.700	1133.600	10703.100	1136.500	10761.300	1135.900	10923.700
GR	1135.100	10971.200	1133.200	11008.700	1133.600	11035.000	1131.500	11067.900	1132.500	11086.500

GR	1140.800	11117.600	1142.000	11171.400	1141.700	11267.500	1142.600	11324.900	1141.400	11541.800
GR	1140.600	11806.200	1140.400	11848.100	1152.300	11883.600	1152.300	11904.500	1143.100	11918.400
GR	1143.100	11973.100	1147.000	11984.300	1145.900	12043.500	1146.600	12174.900	1151.000	12203.600
GR	1149.200	12244.300	1156.000	12263.500	1156.200	12274.800	1155.500	12293.000	1148.200	12322.600
GR	1148.800	12367.900	1153.600	12392.200	1153.600	12412.900	1151.600	12428.000	1153.700	12442.300
GR	1152.900	12468.000	1154.600	12501.300	.000	.000	.000	.000	.000	.000
ET	.000	.000	9.100	.000	.000	.000	.000	.000	9797.000	12501.000
X1	20.723	86.000	9747.200	10613.900	200.000	200.000	200.000	.000	.000	.000
X3	.000	.000	.000	9797.000	.000	.000	.000	.000	.000	.000
GR	1143.900	8368.300	1143.600	8432.400	1145.300	8444.300	1145.700	8586.200	1146.400	8611.900
GR	1145.300	8647.800	1146.900	8708.100	1146.900	8742.300	1145.500	8771.900	1145.200	8865.300
GR	1146.100	8924.500	1145.300	8958.300	1145.500	9077.700	1143.400	9148.500	1142.000	9163.100
GR	1136.700	9175.700	1136.700	9188.100	1132.500	9215.300	1128.200	9218.300	1126.300	9250.600
GR	1126.800	9351.600	1130.200	9365.500	1129.400	9387.900	1131.300	9433.100	1138.400	9448.600
GR	1140.300	9495.200	1139.900	9533.000	1140.400	9557.600	1143.200	9594.900	1144.800	9631.700
GR	1145.100	9650.600	1143.600	9674.900	1143.100	9712.300	1144.600	9747.200	1143.300	9755.900
GR	1134.800	9764.600	1131.000	9783.400	1132.100	9815.800	1131.000	9866.000	1128.300	9905.700
GR	1127.500	9966.200	1128.000	10000.000	1128.800	10065.600	1128.500	10165.300	1130.400	10387.000
GR	1135.000	10579.000	1135.000	10605.700	1138.900	10613.900	1139.100	10645.400	1135.100	10663.400
GR	1135.000	10701.000	1138.300	10796.600	1136.100	10875.900	1134.400	10889.200	1134.200	10923.900
GR	1135.300	10942.400	1142.400	10972.100	1142.500	11094.200	1141.400	11196.300	1143.100	11275.700
GR	1142.700	11409.900	1142.000	11604.400	1141.000	11776.500	1141.600	11812.300	1141.600	11845.700
GR	1152.500	11873.000	1152.500	11900.100	1143.700	11913.400	1143.700	11967.500	1149.600	11975.200
GR	1149.500	11998.600	1152.900	12010.700	1153.100	12075.900	1146.300	12124.500	1148.500	12168.500
GR	1148.100	12204.600	1153.100	12235.600	1152.100	12259.200	1154.300	12306.700	1156.000	12318.400
GR	1156.600	12332.400	1155.700	12348.400	1149.600	12374.900	1152.300	12395.000	1155.100	12438.300
GR	1155.100	12501.700	.000	.000	.000	.000	.000	.000	.000	.000
ET	.000	4.100	9.100	9831.000	.000	.000	.000	.000	9831.000	11700.000
X1	20.761	81.000	9778.200	10651.400	200.000	200.000	200.000	.000	.000	.000
GR	1143.900	8433.100	1142.100	8549.300	1142.500	8563.700	1146.900	8584.100	1145.900	8622.400
GR	1146.600	8671.300	1145.400	8713.100	1145.800	8758.000	1144.200	8820.500	1146.200	8919.300
GR	1146.600	8954.500	1146.600	9056.000	1146.100	9090.900	1143.200	9181.300	1142.000	9194.900
GR	1135.800	9220.600	1125.300	9254.000	1124.800	9307.000	1125.200	9337.700	1124.400	9406.800
GR	1142.600	9438.900	1141.200	9451.700	1146.100	9490.500	1146.500	9516.400	1145.000	9587.100
GR	1148.000	9609.400	1147.800	9640.700	1144.900	9672.900	1144.900	9718.500	1142.300	9751.000
GR	1142.300	9778.200	1133.600	9797.100	1130.100	9833.900	1129.100	9856.400	1126.800	9877.500
GR	1126.400	9979.200	1127.500	10000.000	1129.100	10093.400	1130.300	10286.500	1131.200	10344.000
GR	1130.900	10399.700	1133.600	10476.900	1135.700	10588.200	1136.400	10630.100	1137.400	10651.400
GR	1135.900	10710.700	1138.100	10736.200	1136.000	10782.800	1136.300	10828.400	1141.900	10851.600
GR	1141.300	10885.300	1143.100	11030.300	1140.800	11044.900	1142.300	11052.400	1143.100	11105.100
GR	1142.600	11199.400	1143.700	11301.100	1143.300	11415.400	1142.700	11518.900	1142.400	11739.700
GR	1141.900	11751.500	1142.700	11776.300	1142.700	11824.300	1150.500	11851.600	1150.500	11869.300
GR	1143.400	11883.500	1143.400	11937.100	1146.500	11944.500	1145.200	12019.700	1146.300	12144.300
GR	1146.900	12270.500	1148.300	12303.500	1151.800	12314.200	1151.600	12334.800	1146.200	12354.700
GR	1155.300	12377.300	1156.600	12389.500	1156.200	12437.200	1149.600	12454.500	1150.200	12492.800
GR	1153.400	12503.500	.000	.000	.000	.000	.000	.000	.000	.000

ET	.000	4.100	9.100	9844.000	.000	.000	.000	.000	9844.000	11550.000
X1	20.799	72.000	9795.800	10538.900	200.000	200.000	200.000	.000	.000	.000
GR	1144.900	8494.900	1144.000	8554.600	1145.200	8636.900	1144.800	8740.500	1144.000	8850.200
GR	1147.200	8955.500	1145.500	9050.000	1141.700	9288.300	1138.400	9314.400	1137.600	9342.200
GR	1139.900	9360.200	1132.800	9381.500	1132.800	9401.100	1146.700	9430.700	1146.500	9474.900
GR	1147.300	9516.800	1146.700	9557.000	1150.000	9577.200	1149.500	9605.700	1147.400	9632.600
GR	1142.900	9795.800	1135.600	9802.200	1127.100	9823.600	1125.600	9839.400	1125.600	9896.500
GR	1126.700	9925.200	1127.600	10000.000	1128.300	10063.300	1130.300	10230.400	1132.900	10391.700
GR	1132.900	10446.800	1132.400	10515.100	1136.200	10538.900	1136.100	10581.500	1140.100	10630.300
GR	1141.700	10721.200	1141.200	10758.500	1143.600	10775.600	1143.500	10877.000	1142.000	10913.500
GR	1143.300	10948.000	1142.000	11006.500	1143.000	11029.600	1143.800	11237.600	1143.100	11269.500
GR	1144.500	11278.300	1144.100	11354.300	1144.100	11407.600	1143.000	11419.700	1143.900	11455.900
GR	1143.000	11603.800	1143.000	11741.200	1143.700	11787.600	1150.200	11803.800	1150.400	11835.900
GR	1143.500	11847.200	1143.500	11905.800	1146.800	11911.700	1146.300	11951.100	1146.100	12099.200
GR	1147.300	12319.900	1147.300	12353.500	1148.300	12357.900	1147.500	12362.200	1152.700	12384.400
GR	1152.600	12395.900	1146.800	12412.400	1156.300	12433.100	1157.200	12444.100	1155.800	12455.000
GR	1146.800	12475.100	1146.800	12501.600	.000	.000	.000	.000	.000	.000

ET	.000	4.100	9.100	9802.000	.000	.000	.000	.000	9802.000	11450.000
X1	20.837	63.000	9779.600	10534.500	200.000	200.000	200.000	.000	.000	.000
GR	1146.600	8559.600	1144.400	8781.100	1144.300	8862.100	1144.000	8927.400	1142.900	9019.100
GR	1142.300	9121.200	1149.400	9280.700	1150.800	9325.400	1149.800	9378.600	1151.200	9426.200
GR	1149.400	9513.500	1151.400	9531.100	1151.200	9562.400	1146.500	9603.300	1147.700	9635.200
GR	1145.100	9685.900	1145.900	9718.300	1143.900	9760.300	1143.900	9779.600	1130.600	9793.700
GR	1126.500	9805.300	1127.400	9874.600	1126.400	9950.600	1126.500	10000.000	1128.800	10080.500
GR	1130.900	10212.200	1130.400	10256.600	1131.900	10328.600	1131.900	10422.100	1133.900	10487.000
GR	1138.500	10498.100	1141.400	10534.500	1140.800	10664.600	1143.600	10788.700	1142.800	10850.400
GR	1142.400	10941.400	1143.700	10962.300	1143.900	11213.600	1145.100	11219.600	1143.900	11228.700
GR	1144.900	11261.600	1144.900	11400.000	1143.600	11546.900	1143.400	11699.900	1144.200	11716.600
GR	1144.200	11755.300	1150.000	11773.500	1150.400	11804.900	1143.400	11813.800	1143.400	11870.900
GR	1148.000	11876.600	1146.200	11929.800	1147.600	12203.300	1147.900	12397.400	1148.400	12401.200
GR	1147.700	12404.600	1153.300	12423.900	1152.700	12441.000	1147.100	12454.100	1147.100	12461.200
GR	1156.400	12476.300	1157.700	12488.000	1157.000	12502.500	.000	.000	.000	.000

ET	.000	4.100	9.100	9770.000	.000	.000	.000	.000	9770.000	11400.000
X1	20.875	71.000	9772.800	10431.000	200.000	200.000	200.000	.000	.000	.000
GR	1146.500	8622.900	1144.700	8822.300	1146.600	8897.600	1144.700	8922.900	1142.200	8950.700
GR	1141.400	9000.400	1147.800	9031.700	1150.200	9158.300	1150.200	9254.400	1151.700	9409.600
GR	1151.200	9463.700	1153.600	9481.400	1153.500	9512.000	1151.100	9544.800	1151.100	9590.400
GR	1149.300	9676.100	1145.400	9772.800	1132.000	9786.200	1129.100	9801.500	1126.800	9848.900
GR	1126.800	9922.900	1128.700	9949.100	1127.700	9986.300	1127.700	10000.000	1128.300	10000.700
GR	1129.600	10098.200	1130.700	10220.100	1132.100	10338.200	1131.700	10387.200	1132.800	10408.400
GR	1137.500	10431.000	1137.000	10454.000	1140.700	10567.400	1140.700	10610.000	1143.400	10662.700
GR	1142.600	10752.100	1140.200	10770.900	1142.200	10798.200	1141.900	10903.600	1144.300	10932.500
GR	1143.400	10962.300	1144.600	11109.400	1144.600	11198.300	1145.500	11207.000	1144.600	11211.700
GR	1145.500	11216.400	1144.900	11243.800	1146.300	11275.900	1145.500	11320.900	1146.200	11326.700
GR	1145.400	11337.200	1144.500	11526.200	1143.800	11715.900	1144.600	11733.500	1150.700	11743.700
GR	1150.700	11769.800	1143.800	11781.200	1143.800	11839.600	1147.800	11845.600	1147.800	11882.900
GR	1146.900	11893.100	1147.700	12149.300	1148.500	12399.300	1149.200	12414.000	1148.300	12418.300
GR	1153.900	12438.100	1153.800	12452.200	1147.700	12466.700	1147.700	12477.600	1156.500	12490.800
GR	1158.100	12502.600	.000	.000	.000	.000	.000	.000	.000	.000

ET	.000	4.100	9.100	9760.000	.000	.000	.000	.000	9760.000	11500.000
X1	20.913	67.000	9764.900	10606.200	200.000	200.000	200.000	.000	.000	.000
GR	1147.200	8686.100	1144.900	8890.900	1140.200	8969.400	1140.000	8993.500	1148.500	9032.900
GR	1149.900	9108.100	1149.900	9186.100	1149.500	9264.800	1151.000	9320.800	1150.700	9355.300
GR	1151.700	9387.700	1152.000	9420.200	1153.600	9434.800	1153.800	9463.000	1150.900	9485.400
GR	1150.700	9536.800	1152.600	9575.000	1152.900	9609.100	1150.300	9721.700	1148.600	9764.900
GR	1133.800	9771.700	1127.300	9792.900	1127.700	9922.700	1129.400	9949.100	1129.200	10000.000
GR	1128.600	10043.500	1129.100	10104.200	1131.400	10170.300	1131.400	10202.900	1136.800	10240.300
GR	1139.100	10444.000	1135.800	10458.900	1138.500	10577.500	1144.400	10606.200	1142.800	10660.800
GR	1144.400	10767.800	1141.000	10853.100	1141.000	10880.400	1144.600	10972.400	1144.000	11081.500
GR	1144.800	11171.800	1146.400	11235.800	1146.400	11265.900	1145.200	11271.900	1146.600	11279.400
GR	1145.900	11285.800	1145.400	11450.900	1143.800	11638.700	1144.600	11664.400	1144.000	11696.500
GR	1149.800	11711.300	1149.800	11734.600	1143.700	11743.000	1143.700	11802.200	1148.900	11812.700
GR	1146.900	11856.000	1147.500	12086.400	1149.000	12282.500	1148.900	12395.600	1149.700	12401.300
GR	1148.900	12406.300	1153.900	12424.600	1153.900	12437.900	1145.400	12457.400	1157.800	12483.500
GR	1157.500	12496.700	1156.100	12501.600	.000	.000	.000	.000	.000	.000

ET	.000	4.100	9.100	9393.000	.000	.000	.000	.000	9393.000	11500.000
X1	20.951	67.000	9749.900	10243.300	200.000	200.000	200.000	.000	.000	.000
X3	10.000	.000	.000	.000	.000	.000	.000	.000	.000	.000
GR	1148.900	8750.000	1146.500	8892.000	1142.200	8916.100	1141.400	8989.800	1145.800	9009.200
GR	1147.900	9045.300	1148.100	9078.300	1149.000	9166.200	1146.100	9193.600	1149.500	9213.500
GR	1150.500	9246.500	1150.900	9332.300	1151.100	9377.100	1154.300	9393.100	1154.300	9422.400
GR	1152.500	9447.700	1152.800	9479.900	1151.200	9523.800	1153.300	9610.000	1153.300	9681.500
GR	1150.700	9749.900	1148.800	9757.600	1135.600	9766.400	1125.700	9788.000	1127.200	9921.200
GR	1129.800	9944.400	1130.200	10000.000	1129.800	10066.800	1128.900	10166.700	1129.700	10212.600
GR	1136.600	10243.300	1136.700	10333.400	1140.000	10509.700	1142.100	10637.200	1144.300	10783.900
GR	1143.800	10814.900	1141.100	10835.600	1140.600	10888.400	1145.100	10906.700	1145.500	11015.400
GR	1144.400	11060.900	1145.400	11111.700	1145.700	11178.200	1146.600	11213.900	1146.600	11302.500
GR	1145.100	11513.900	1144.300	11619.400	1144.800	11650.100	1143.900	11657.000	1151.100	11681.100
GR	1150.900	11700.000	1143.900	11708.800	1143.900	11768.700	1148.700	11776.400	1146.900	11827.000
GR	1148.900	12076.100	1150.000	12333.000	1149.200	12376.500	1150.200	12380.100	1149.400	12383.600
GR	1153.500	12405.100	1153.500	12416.900	1147.600	12436.200	1156.900	12460.300	1157.700	12471.800
GR	1156.700	12484.300	1147.800	12501.000	.000	.000	.000	.000	.000	.000

ET	.000	4.100	9.100	9354.000	.000	.000	.000	.000	9354.000	11400.000
X1	20.989	67.000	9734.900	10337.600	200.000	200.000	200.000	.000	.000	.000
X3	10.000	.000	.000	.000	.000	.000	.000	.000	.000	.000
GR	1149.800	8814.400	1147.200	8883.200	1143.500	8908.500	1142.100	8976.600	1148.100	9005.400
GR	1152.000	9058.200	1152.700	9107.400	1152.900	9151.700	1151.500	9203.900	1153.600	9237.200
GR	1151.900	9273.300	1153.300	9285.000	1153.600	9315.700	1152.700	9333.800	1155.600	9354.800
GR	1155.600	9381.900	1153.700	9403.200	1154.200	9447.700	1151.600	9459.500	1151.800	9575.700
GR	1151.800	9674.900	1148.700	9734.900	1137.000	9744.500	1127.200	9771.200	1127.200	9920.800
GR	1130.600	9950.300	1131.500	9977.300	1131.800	10000.000	1130.000	10128.200	1129.100	10221.100
GR	1132.000	10315.500	1137.500	10337.600	1137.200	10380.400	1139.500	10439.900	1146.100	10665.100
GR	1144.700	10762.500	1142.600	10850.300	1140.200	10902.300	1143.400	10912.600	1146.100	10934.600
GR	1146.300	11014.500	1145.600	11068.600	1147.100	11212.400	1146.200	11236.000	1146.200	11276.100
GR	1146.500	11327.300	1145.600	11451.000	1144.700	11623.100	1150.300	11640.500	1150.900	11664.700
GR	1144.000	11674.800	1144.000	11733.100	1149.500	11742.000	1148.100	11797.100	1149.700	12090.400
GR	1149.900	12352.200	1150.900	12356.800	1149.400	12362.300	1155.100	12387.300	1155.100	12399.100
GR	1147.900	12413.400	1147.900	12423.800	1157.500	12439.900	1158.600	12450.900	1157.200	12463.700
GR	1146.900	12480.300	1148.100	12500.500	.000	.000	.000	.000	.000	.000

ET	.000	4.100	9.100	9315.700	.000	.000	.000	.000	9315.000	11350.000
X1	21.027	63.000	9717.500	10300.100	200.000	200.000	200.000	.000	.000	.000
X3	10.000	.000	.000	.000	.000	.000	.000	.000	.000	.000
GR	1146.100	8879.100	1145.300	8963.100	1146.400	8984.300	1153.100	9024.400	1154.800	9072.700
GR	1154.500	9135.300	1152.900	9180.200	1154.200	9220.800	1154.200	9259.600	1153.300	9265.500
GR	1153.300	9295.500	1156.000	9315.700	1156.000	9344.400	1153.700	9375.200	1154.300	9457.400
GR	1154.200	9524.100	1152.200	9544.700	1154.500	9623.500	1153.000	9717.500	1127.800	9748.400
GR	1129.200	9791.700	1128.200	9897.600	1132.200	9936.900	1132.100	10000.000	1132.100	10000.100
GR	1131.800	10092.400	1129.400	10123.800	1133.600	10277.900	1140.500	10300.100	1140.500	10325.400
GR	1142.400	10384.600	1144.900	10532.900	1146.700	10555.700	1147.200	10636.600	1143.200	10690.800
GR	1142.500	10722.100	1140.600	10740.600	1145.200	10763.600	1141.000	10782.400	1142.400	10813.400
GR	1146.100	10866.500	1146.200	10918.200	1146.100	11013.000	1147.100	11111.200	1145.700	11144.300
GR	1146.200	11195.600	1145.700	11229.000	1145.300	11488.200	1150.700	11507.000	1150.700	11533.400
GR	1144.200	11541.900	1144.200	11603.400	1149.700	11614.100	1148.800	11662.600	1150.100	12042.300
GR	1150.500	12238.000	1149.800	12243.600	1155.400	12268.100	1155.600	12310.700	1159.700	12326.500
GR	1158.300	12367.900	1169.500	12384.300	1163.800	12402.500	.000	.000	.000	.000

ET	.000	4.100	9.100	9273.900	.000	.000	.000	.000	9273.000	11300.000
X1	21.064	56.000	9713.400	10376.900	200.000	200.000	200.000	.000	.000	.000
X3	10.000	.000	.000	.000	.000	.000	.000	.000	.000	.000
GR	1149.500	8941.300	1150.900	8980.300	1154.600	9023.200	1154.200	9154.700	1154.500	9211.000
GR	1153.200	9257.400	1155.200	9273.900	1155.200	9302.400	1152.300	9329.800	1152.900	9472.900
GR	1154.800	9526.000	1155.200	9575.900	1154.600	9679.400	1151.800	9713.400	1128.100	9737.900
GR	1129.400	9796.900	1130.100	9867.400	1131.700	9927.900	1130.600	9965.600	1131.900	9999.800
GR	1131.900	10000.000	1129.300	10150.800	1129.700	10342.800	1139.200	10376.900	1142.500	10543.800
GR	1144.600	10744.000	1145.700	10868.800	1145.100	10897.200	1146.600	10964.100	1146.400	11072.800
GR	1147.100	11129.900	1146.000	11157.100	1147.300	11196.200	1146.700	11273.000	1147.300	11333.200
GR	1146.400	11364.900	1145.900	11468.900	1146.000	11548.000	1151.100	11570.900	1151.200	11601.700
GR	1144.800	11609.300	1144.800	11668.900	1150.500	11680.300	1149.200	11741.400	1149.700	11980.800
GR	1150.600	12301.900	1151.000	12306.200	1150.500	12310.800	1156.800	12342.900	1157.000	12364.700
GR	1160.900	12374.000	1159.500	12393.400	1160.800	12411.000	1160.600	12422.100	1166.700	12430.700
GR	1166.900	12500.200	.000	.000	.000	.000	.000	.000	.000	.000

ET	.000	4.100	9.100	9234.300	.000	.000	.000	.000	9234.000	11200.000
X1	21.102	71.000	9698.600	10411.000	200.000	200.000	200.000	.000	.000	.000
X3	10.000	.000	.000	.000	.000	.000	.000	1149.400	.000	.000
GR	1152.900	9000.000	1152.400	9018.800	1149.000	9054.800	1150.600	9088.000	1152.600	9099.400
GR	1152.300	9138.700	1153.500	9160.800	1152.800	9216.400	1155.200	9234.300	1155.200	9261.800
GR	1153.500	9290.400	1152.400	9367.000	1142.200	9461.100	1141.100	9531.800	1142.500	9567.400
GR	1149.200	9596.600	1149.400	9608.800	1148.700	9631.200	1146.800	9637.700	1143.800	9698.600
GR	1140.100	9716.300	1128.000	9730.800	1129.100	9779.400	1130.100	9860.800	1132.300	9870.100
GR	1131.800	10000.000	1131.000	10080.500	1127.000	10126.400	1130.300	10142.500	1131.600	10316.700
GR	1129.000	10374.000	1140.300	10411.000	1143.200	10677.300	1145.600	10902.700	1146.900	11016.700
GR	1146.100	11100.100	1147.700	11139.700	1146.500	11247.400	1146.700	11303.800	1146.000	11382.600
GR	1146.900	11478.500	1148.200	11509.900	1147.500	11515.500	1154.800	11532.900	1153.000	11541.400
GR	1152.500	11564.000	1145.000	11577.500	1145.000	11636.900	1150.200	11646.400	1149.900	11690.100
GR	1150.900	11979.800	1152.600	12000.400	1149.500	12012.100	1149.500	12029.300	1151.500	12035.000
GR	1151.000	12083.100	1150.700	12269.400	1151.700	12286.300	1150.500	12289.900	1151.500	12294.100
GR	1151.500	12308.900	1156.900	12329.500	1157.400	12350.400	1156.700	12372.300	1160.700	12379.500
GR	1162.100	12395.500	1161.000	12409.900	1158.400	12422.900	1157.600	12446.100	1154.000	12467.600
GR	1155.700	12500.500	.000	.000	.000	.000	.000	.000	.000	.000

NC	.045	.045	.027	.100	.300	.000	.000	.000	.000	.000
ET	.000	4.100	9.100	9460.000	.000	.000	.000	.000	9700.000	11100.000
X1	21.202	18.000	9700.000	10750.000	560.000	450.000	528.000	.000	.000	.000
X3	10.000	.000	.000	.000	.000	.000	.000	.000	.000	.000
GR	1155.000	8280.000	1152.500	8705.000	1150.000	9040.000	1150.000	9140.000	1156.000	9190.000
GR	1155.000	9220.000	1155.000	9400.000	1156.000	9460.000	1155.000	9540.000	1150.000	9700.000
GR	1135.000	9730.000	1132.000	9750.000	1132.000	10360.000	1135.000	10420.000	1140.000	10500.000
GR	1145.000	10750.000	1150.000	11370.000	1157.000	11420.000	.000	.000	.000	.000
ET	.000	4.100	9.100	9270.000	.000	.000	.000	.000	9590.000	11000.000
X1	21.302	16.000	9600.000	10820.000	600.000	440.000	528.000	.000	.000	.000
X3	10.000	.000	.000	.000	.000	.000	.000	.000	.000	.000
GR	1155.000	8340.000	1150.000	8930.000	1150.000	9110.000	1154.000	9170.000	1155.000	9270.000
GR	1151.000	9490.000	1150.000	9600.000	1135.000	9630.000	1133.000	9700.000	1133.000	10420.000
GR	1135.000	10450.000	1140.000	10520.000	1140.000	10780.000	1145.000	10820.000	1150.000	11300.000
GR	1157.000	11335.000	.000	.000	.000	.000	.000	.000	.000	.000
ET	.000	4.100	9.100	9210.000	.000	.000	.000	.000	9590.000	11050.000
X1	21.402	15.000	9600.000	11050.000	540.000	500.000	528.000	.000	.000	.000
X3	10.000	.000	.000	.000	.000	.000	.000	.000	.000	.000
GR	1156.000	8410.000	1155.000	8480.000	1152.000	8840.000	1150.000	9020.000	1154.000	9210.000
GR	1150.000	9600.000	1135.000	9680.000	1134.000	9770.000	1134.000	10430.000	1135.000	10490.000
GR	1140.000	10510.000	1140.000	10790.000	1145.000	10820.000	1150.000	11000.000	1159.500	11050.000
ET	.000	4.100	9.100	9100.000	.000	.000	.000	.000	9310.000	11020.000
X1	21.502	18.000	9320.000	11020.000	550.000	500.000	528.000	.000	.000	.000
X3	10.000	.000	.000	.000	.000	.000	.000	.000	.000	.000
GR	1156.500	8440.000	1155.100	8710.000	1155.000	8820.000	1153.500	8910.000	1155.000	9100.000
GR	1150.000	9220.000	1151.000	9260.000	1150.000	9320.000	1145.000	9350.000	1140.000	9370.000
GR	1140.000	9610.000	1135.000	9780.000	1135.000	10570.000	1140.000	10650.000	1145.000	10700.000
GR	1145.000	10880.000	1150.000	10920.000	1158.000	11020.000	.000	.000	.000	.000
NC	.000	.000	.000	.300	.500	.000	.000	.000	.000	.000
ET	.000	4.100	9.100	9200.000	.000	.000	.000	.000	9360.000	10830.000
X1	21.602	14.000	9370.000	10820.000	520.000	535.000	528.000	.000	.000	.000
X3	10.000	.000	.000	.000	.000	.000	.000	.000	.000	.000
GR	1157.000	8480.000	1155.500	8810.000	1155.000	9200.000	1150.000	9370.000	1145.000	9470.000
GR	1140.000	9500.000	1135.000	9890.000	1135.000	10450.000	1140.000	10530.000	1145.000	10790.000
GR	1150.000	10820.000	1150.500	11000.000	1155.000	11110.000	1165.000	11170.000	.000	.000
QT	5.000	215000.000	215000.000	93000.000	160000.000	330000.000	.000	.000	.000	.000
NC	.050	.050	.035	.100	.300	.000	.000	.000	.000	.000
ET	.000	.000	9.100	.000	.000	.000	.000	.000	9230.000	10950.000
X1	21.659	13.000	9230.000	10950.000	350.000	240.000	300.000	.000	.000	.000
X3	10.000	.000	.000	.000	.000	.000	.000	1160.000	1160.000	.000
GR	1164.000	9230.000	1160.000	9240.000	1150.000	9380.000	1145.000	9500.000	1140.000	9610.000
GR	1139.000	9790.000	1135.400	10300.000	1135.400	10400.000	1140.000	10570.000	1145.000	10770.000
GR	1150.000	10780.000	1155.000	10900.000	1166.000	10950.000	.000	.000	.000	.000

ET	.000	.000	9.100	.000	.000	.000	.000	.000	9230.000	10950.000
SB	.950	1.153	2.600	1377.000	1320.000	64.000	31000.000	.000	1135.800	1135.700
X1	21.667	.000	.000	.000	40.000	40.000	40.000	.000	.000	.000
X2	.000	.000	1.000	1160.000	1164.000	.000	.000	.000	.000	.000
X3	10.000	.000	.000	9250.000	.000	.000	.000	1164.000	1164.000	.000
ET	.000	.000	9.100	.000	.000	.000	.000	.000	9290.000	10830.000
X1	21.725	13.000	9290.000	10830.000	310.000	310.000	310.000	.000	.000	.000
X3	10.000	.000	.000	.000	.000	.000	.000	1163.000	1163.000	.000
GR	1167.000	9290.000	1150.000	9370.000	1145.000	9500.000	1140.000	9620.000	1140.000	9820.000
GR	1137.700	9960.000	1135.600	10120.000	1135.600	10360.000	1140.000	10550.000	1145.000	10680.000
GR	1150.000	10750.000	1170.000	10830.000	1175.000	10850.000	.000	.000	.000	.000
ET	.000	.000	9.100	.000	.000	.000	.000	.000	9290.000	10830.000
SB	1.750	1.570	2.700	1377.000	1500.000	90.000	44000.000	.000	1135.800	1135.700
X1	21.733	.000	.000	.000	40.000	40.000	40.000	.000	.000	.000
X2	.000	.000	1.000	1163.000	1171.000	.000	.000	.000	.000	.000
X3	10.000	.000	.000	.000	.000	.000	.000	1171.000	1171.000	.000
ET	.000	.000	9.100	.000	.000	.000	.000	.000	9300.000	11090.000
X1	21.795	14.000	9300.000	11090.000	520.000	70.000	330.000	.000	.000	.000
X3	10.000	.000	.000	.000	.000	.000	.000	1169.000	1169.000	.000
GR	1174.000	9300.000	1155.000	9370.000	1150.000	9400.000	1145.000	9480.000	1140.000	9580.000
GR	1135.700	9860.000	1135.700	10300.000	1140.000	10550.000	1145.000	10650.000	1150.000	10750.000
GR	1155.000	10830.000	1160.000	10880.000	1170.000	11000.000	1175.000	11090.000	.000	.000
ET	.000	.000	9.100	.000	.000	.000	.000	.000	9300.000	11090.000
SB	1.050	1.180	2.500	.000	1460.000	63.000	44704.000	.000	1137.000	1136.800
X1	21.809	.000	.000	.000	70.000	70.000	70.000	.000	.000	.000
X2	.000	.000	1.000	1169.000	1175.000	.000	.000	.000	.000	.000
X3	10.000	.000	.000	.000	.000	.000	.000	1175.000	1175.000	.000
BT	2.000	9300.000	1175.000	.000	11090.000	1175.000	.000	.000	.000	.000
NC	.040	.040	.030	.100	.300	.000	.000	.000	.000	.000
ET	.000	.000	9.100	.000	.000	.000	.000	.000	9400.000	10910.000
X1	21.837	15.000	9400.000	10900.000	100.000	200.000	150.000	.000	.000	.000
X3	10.000	.000	.000	9400.000	.000	.000	.000	.000	.000	.000
GR	1165.000	8850.000	1160.000	9000.000	1155.000	9070.000	1150.000	9400.000	1145.000	9520.000
GR	1142.500	9660.000	1136.000	9810.000	1136.000	10380.000	1140.000	10530.000	1150.000	10600.000
GR	1155.000	10710.000	1155.000	10900.000	1151.000	11150.000	1160.000	11200.000	1175.000	11250.000
NC	.000	.000	.000	.100	.300	.000	.000	.000	.000	.000
ET	.000	.000	9.100	.000	.000	.000	.000	.000	9345.000	10600.000
X1	21.937	18.000	9350.000	10480.000	330.000	860.000	528.000	.000	.000	.000
X3	10.000	.000	.000	.000	.000	.000	.000	.000	.000	.000
GR	1175.000	8560.000	1170.000	8720.000	1165.000	8770.000	1160.000	8950.000	1159.500	9020.000
GR	1155.000	9040.000	1150.000	9350.000	1145.000	9570.000	1140.000	9650.000	1138.000	9670.000
GR	1138.000	9740.000	1145.000	9800.000	1138.000	9870.000	1138.000	10470.000	1155.000	10480.000
GR	1156.000	11130.000	1162.000	11160.000	1175.000	11220.000	.000	.000	.000	.000

ET	.000	.000	9.100	.000	.000	.000	.000	.000	9200.000	10545.000
X1	22.037	19.000	9210.000	10540.000	470.000	565.000	528.000	.000	.000	.000
X3	10.000	.000	.000	.000	.000	.000	.000	.000	.000	.000
GR	1175.000	8570.000	1165.000	8800.000	1155.000	9100.000	1152.000	9150.000	1155.000	9210.000
GR	1150.000	9330.000	1145.000	9460.000	1140.000	9550.000	1145.000	9720.000	1150.000	9770.000
GR	1139.000	9850.000	1139.000	10270.000	1140.000	10290.000	1140.000	10480.000	1145.000	10520.000
GR	1155.000	10540.000	1155.000	10920.000	1162.000	10930.000	1175.000	11050.000	.000	.000
ET	.000	.000	9.100	.000	.000	.000	.000	.000	9140.000	10560.000
X1	22.137	17.000	9150.000	10550.000	510.000	540.000	528.000	.000	.000	.000
X3	10.000	.000	.000	.000	.000	.000	.000	.000	.000	.000
GR	1165.000	8820.000	1161.000	9150.000	1150.000	9210.000	1145.000	9270.000	1141.000	9400.000
GR	1145.000	9520.000	1145.000	9680.000	1155.000	9730.000	1145.000	9790.000	1140.000	9830.000
GR	1140.000	10230.000	1143.000	10400.000	1145.000	10520.000	1155.000	10550.000	1155.000	11000.000
GR	1160.000	11020.000	1175.000	11150.000	.000	.000	.000	.000	.000	.000
ET	.000	.000	9.100	.000	.000	.000	.000	.000	8870.000	10600.000
X1	22.237	15.000	8880.000	10550.000	520.000	535.000	528.000	.000	.000	.000
X3	10.000	.000	.000	.000	.000	.000	.000	.000	.000	.000
GR	1165.000	8770.000	1161.000	8880.000	1150.000	8990.000	1145.000	9030.000	1145.000	9500.000
GR	1150.000	9590.000	1157.000	9630.000	1141.000	9750.000	1141.000	10350.000	1141.000	10370.000
GR	1155.000	10550.000	1150.000	10970.000	1155.000	11300.000	1160.000	11340.000	1175.000	11520.000
ET	.000	.000	9.100	.000	.000	.000	.000	.000	8940.000	10550.000
X1	22.337	18.000	8950.000	10520.000	520.000	540.000	528.000	.000	.000	.000
X3	10.000	.000	.000	.000	.000	.000	.000	.000	.000	.000
GR	1165.000	8530.000	1160.000	8790.000	1155.000	8950.000	1150.000	9020.000	1147.000	9300.000
GR	1145.000	9480.000	1150.000	9530.000	1157.000	9590.000	1150.000	9640.000	1145.000	9690.000
GR	1142.000	9720.000	1142.000	10350.000	1150.000	10410.000	1155.000	10520.000	1156.500	10890.000
GR	1157.000	11250.000	1160.000	11320.000	1175.000	11520.000	.000	.000	.000	.000
ET	.000	.000	9.100	.000	.000	.000	.000	.000	8960.000	10375.000
X1	22.437	14.000	8970.000	10370.000	550.000	500.000	528.000	.000	.000	.000
X3	10.000	.000	.000	.000	.000	.000	.000	.000	.000	.000
GR	1165.000	8290.000	1160.000	8700.000	1155.000	8970.000	1150.000	9000.000	1149.000	9370.000
GR	1150.000	9520.000	1157.000	9590.000	1145.000	9670.000	1143.000	9710.000	1143.000	10320.000
GR	1160.000	10370.000	1161.500	10630.000	1160.000	11520.000	1165.000	11670.000	.000	.000
ET	.000	4.100	9.100	8700.000	.000	.000	.000	.000	8870.000	10425.000
X1	22.537	25.000	8880.000	10420.000	540.000	510.000	528.000	.000	.000	.000
X3	10.000	.000	.000	.000	.000	.000	.000	.000	.000	.000
GR	1165.000	7050.000	1160.000	7150.000	1159.000	7380.000	1160.000	7600.000	1160.000	7900.000
GR	1159.000	8110.000	1160.000	8430.000	1161.000	8700.000	1160.000	8880.000	1155.000	9000.000
GR	1150.000	9020.000	1150.000	9270.000	1149.000	9350.000	1150.000	9430.000	1155.000	9580.000
GR	1158.000	9650.000	1150.000	9760.000	1144.000	9800.000	1144.000	10360.000	1160.000	10420.000
GR	1156.500	10800.000	1158.000	11370.000	1158.500	11930.000	1160.000	12300.000	1165.000	12350.000
NC	.000	.000	.000	.300	.500	.000	.000	.000	.000	.000
ET	.000	4.100	9.100	8980.000	.000	.000	.000	.000	8980.000	10510.000

X1	22.637	20.000	8990.000	10500.000	510.000	540.000	528.000	.000	.000	.000
X3	10.000	.000	.000	.000	.000	.000	.000	.000	.000	.000
GR	1165.000	6300.000	1161.000	6870.000	1161.500	7280.000	1160.000	8450.000	1161.500	8720.000
GR	1160.000	8850.000	1155.000	8990.000	1150.000	9100.000	1146.000	9250.000	1150.000	9340.000
GR	1150.000	9650.000	1145.000	9850.000	1145.000	10370.000	1155.000	10430.000	1158.000	10500.000
GR	1162.000	11450.000	1160.000	11620.000	1160.000	12230.000	1165.000	12480.000	1170.000	12570.000
ET	.000	.000	9.100	.000	.000	.000	.000	.000	9050.000	10480.000
X1	22.662	16.000	9050.000	10480.000	130.000	130.000	130.000	.000	.000	.000
X3	10.000	.000	.000	.000	.000	.000	.000	1165.000	1165.000	.000
GR	1165.000	6770.000	1164.000	6930.000	1163.500	7490.000	1162.500	8000.000	1160.900	8560.000
GR	1165.000	8850.000	1172.000	9050.000	1145.500	9145.000	1145.500	10398.000	1172.000	10480.000
GR	1165.000	10690.000	1160.000	10950.000	1160.000	11340.000	1162.000	11590.000	1162.000	12300.000
GR	1165.000	12640.000	.000	.000	.000	.000	.000	.000	.000	.000
ET	.000	.000	9.100	.000	.000	.000	.000	.000	9050.000	10480.000
SB	1.200	1.600	2.500	.000	1253.000	100.000	24000.000	.450	1145.500	1145.400
X1	22.681	.000	.000	.000	100.000	100.000	100.000	.000	.000	.000
X2	.000	.000	1.000	1165.000	1163.000	.000	.000	.000	.000	.000
X3	10.000	.000	.000	.000	.000	.000	.000	1160.900	1160.900	.000
BT	16.000	6770.000	1165.000	.000	6930.000	1164.000	.000	7490.000	1163.500	.000
BT	8000.000	1162.500	.000	8560.000	1160.900	.000	8850.000	1165.000	.000	9050.000
BT	1172.000	.000	9051.000	1172.000	1165.000	10480.000	1172.000	1165.000	10481.000	1172.000
BT	.000	10690.000	1165.000	.000	10950.000	1160.000	.000	11340.000	1160.000	.000
BT	11590.000	1162.000	.000	12300.000	1162.000	.000	12640.000	1165.000	.000	.000
ET	.000	.000	9.100	.000	.000	.000	.000	.000	9045.000	10660.000
X1	22.799	27.000	9050.000	10655.000	640.000	590.000	625.000	.000	.000	.000
GR	1165.000	6760.000	1161.500	7440.000	1161.500	7441.000	1161.500	7442.000	1161.500	7443.000
GR	1162.500	8755.000	1160.000	8880.000	1160.500	8930.000	1160.000	9000.000	1160.000	9050.000
GR	1155.000	9065.000	1152.500	9330.000	1150.000	9500.000	1146.000	9620.000	1146.000	10430.000
GR	1150.000	10470.000	1160.000	10500.000	1162.500	10655.000	1160.000	10900.000	1157.000	10930.000
GR	1160.000	10950.000	1163.000	11450.000	1165.000	11750.000	1168.000	12200.000	1168.000	12650.000
GR	1170.000	12690.000	1173.500	12950.000	.000	.000	.000	.000	.000	.000
NC	.050	.050	.035	.100	.300	.000	.000	.000	.000	.000
ET	.000	.000	9.100	.000	.000	.000	.000	.000	8725.000	10920.000
X1	23.000	27.000	8725.000	10920.000	1040.000	1065.000	1060.000	.000	.000	.000
X3	10.000	.000	.000	.000	.000	.000	.000	.000	.000	.000
GR	1167.000	8500.000	1167.000	8501.000	1167.000	8502.000	1167.000	8503.000	1167.000	8504.000
GR	1165.000	8725.000	1164.000	8780.000	1160.000	8850.000	1160.000	9050.000	1155.000	9060.000
GR	1150.000	9110.000	1150.000	9295.000	1150.000	9490.000	1155.000	9940.000	1150.000	10045.000
GR	1147.000	10330.000	1150.000	10355.000	1155.000	10445.000	1155.000	10765.000	1160.000	10795.000
GR	1165.000	10820.000	1167.000	10920.000	1167.000	11260.000	1165.000	11500.000	1168.000	12040.000
GR	1170.000	12350.000	1174.000	12820.000	.000	.000	.000	.000	.000	.000
ET	.000	.000	9.100	.000	.000	.000	.000	.000	9260.000	10810.000
X1	23.199	22.000	9270.000	10810.000	1040.000	1060.000	1050.000	.000	.000	.000
X3	10.000	.000	.000	.000	.000	.000	.000	.000	.000	.000
GR	1167.000	8660.000	1165.000	8810.000	1164.000	8975.000	1165.000	9040.000	1165.000	9270.000
GR	1160.000	9320.000	1155.000	9340.000	1150.000	9380.000	1150.000	9480.000	1155.000	9660.000
GR	1155.000	9965.000	1153.000	10265.000	1155.000	10580.000	1160.000	10660.000	1165.000	10690.000
GR	1170.000	10810.000	1170.000	12000.000	1173.000	12250.000	1170.000	12460.000	1170.000	12550.000
GR	1175.000	12620.000	1178.000	12705.000	.000	.000	.000	.000	.000	.000

ET	.000	.000	9.100	.000	.000	.000	.000	.000	9315.000	10775.000
X1	23.398	27.000	9315.000	10770.000	1175.000	915.000	1052.000	.000	.000	.000
X3	10.000	.000	.000	.000	.000	.000	.000	.000	.000	.000
GR	1171.000	8500.000	1170.000	8600.000	1170.000	9315.000	1165.000	9400.000	1160.000	9470.000
GR	1151.000	9610.000	1151.000	9810.000	1155.000	9925.000	1155.000	10130.000	1157.000	10290.000
GR	1155.000	10470.000	1155.000	10690.000	1160.000	10750.000	1165.000	10770.000	1165.000	10860.000
GR	1160.000	10920.000	1165.000	10955.000	1166.500	11050.000	1165.000	11130.000	1165.000	11190.000
GR	1170.000	11270.000	1173.000	11300.000	1170.000	11330.000	1171.000	11660.000	1173.000	11955.000
GR	1175.000	12235.000	1177.000	12410.000	.000	.000	.000	.000	.000	.000
ET	.000	.000	9.100	.000	.000	.000	.000	.000	8920.000	11050.000
X1	23.597	26.000	8920.000	11050.000	1047.000	1052.000	1050.000	.000	.000	.000
X3	10.000	.000	.000	.000	.000	.000	.000	.000	.000	.000
GR	1172.000	8245.000	1170.000	8580.000	1170.000	8775.000	1174.500	8920.000	1170.000	9005.000
GR	1165.000	9025.000	1165.000	9180.000	1166.000	9360.000	1165.000	9550.000	1160.000	9620.000
GR	1155.000	9640.000	1152.000	9710.000	1152.000	10135.000	1155.000	10260.000	1160.000	10390.000
GR	1162.000	10595.000	1164.500	10800.000	1165.000	10950.000	1170.000	11040.000	1173.000	11050.000
GR	1170.000	11060.000	1170.000	11450.000	1173.000	11790.000	1175.000	12050.000	1175.000	12310.000
GR	1176.000	12365.000	.000	.000	.000	.000	.000	.000	.000	.000
ET	.000	.000	9.100	.000	.000	.000	.000	.000	9320.000	10510.000
X1	23.649	8.000	9320.000	10510.000	200.000	340.000	270.000	.000	.000	.000
X3	10.000	.000	.000	.000	.000	.000	.000	1175.000	1175.000	.000
GR	1173.000	8200.000	1170.000	8640.000	1182.000	9320.000	1150.000	9410.000	1150.000	10420.000
GR	1182.000	10510.000	1170.000	11370.000	1175.000	11970.000	.000	.000	.000	.000
ET	.000	.000	9.100	.000	.000	.000	.000	.000	9320.000	10510.000
SB	1.050	1.600	2.500	.000	1044.000	90.000	25600.000	2.500	1150.100	1150.000
X1	23.658	.000	9320.000	10510.000	45.000	45.000	45.000	.000	.000	.000
X2	.000	.000	1.000	1175.000	1170.000	.000	.000	.000	.000	.000
X3	10.000	.000	.000	.000	.000	.000	.000	1182.000	1182.000	.000
BT	-7.000	8200.000	1173.000	.000	8640.000	1170.000	.000	9320.000	1182.000	.000
BT	.000	9320.000	1182.000	1175.000	10510.000	1182.000	1175.000	11370.000	1170.000	.000
BT	.000	11970.000	1175.000	.000	.000	.000	.000	.000	.000	.000
ET	.000	.000	9.100	.000	.000	.000	.000	.000	9320.000	10510.000
X1	23.667	6.000	9320.000	10510.000	45.000	45.000	45.000	.000	.000	.000
X3	10.000	.000	.000	.000	.000	.000	.000	1175.000	1175.000	.000
GR	1173.000	8200.000	1170.000	8640.000	1182.000	9320.000	1150.100	9410.000	1150.100	10420.000
GR	1182.000	10510.000	.000	.000	.000	.000	.000	.000	.000	.000
EJ	.000	.000	.000	.000	.000	.000	.000	.000	.000	.000

```
  SECNO    DEPTH    CWSEL    CRIWS    WSELK    EG       HV       HL       OLOSS   BANK ELEV
  Q        QLOB     QCH      QROB     ALOB     ACH      AROB     VOL      TWA   LEFT/RIGHT
  TIME     VLOB     VCH      VROB     XNL      XNCH     XNR      WTN      ELMIN      SSTA
  SLOPE    XLOBL    XLCH     XLOBR    ITRIAL   IDC      ICONT    CORAR    TOPWID     ENDST


*PROF 1

CCHV=    .100 CEHV=    .300
*SECNO 16.733

3470 ENCROACHMENT STATIONS=    9526.0   10630.0  TYPE=     1  TARGET=    1104.000
         CROSS-SECTION PER U.S. ARMY CORPS OF ENGINEERS 1983-1984
         STUDY (FEMA FIS) AND A.D.O.T. TOPO.
    16.73    25.47  1106.27      .00      .00  1107.30     1.03      .00      .00100000.00
  205000.       0.  205000.       0.       0.   25175.       0.       0.       0. 100000.00
      .00      .00     8.14      .00     .040     .030     .040     .000  1080.80  9526.00
  .000414       0.       0.       0.        0        0        0      .00  1089.24 10615.24


FLOW DISTRIBUTION FOR SECNO=     16.73         CWSEL=   1106.27

STA=    9526.   10630.
  PER Q=    100.0
   AREA=  25174.8
    VEL=      8.1

*SECNO 16.829

3470 ENCROACHMENT STATIONS=    9495.0   10545.0  TYPE=     1  TARGET=    1050.000
         GR STATIONS 9370, 9390 & 9430 (THE TEMPE DRAIN) WERE DELETED FROM
         THE CORPS' CROSS-SECTION TO REFLECT LEFT BANK IMPROVMENTS AND
         THE RELOCATION OF THE TEMPE DRAIN BY A.D.O.T.
    16.83    25.43  1106.33      .00      .00  1107.62     1.29      .25      .08100000.00
  205000.       0.  205000.       0.       0.   22480.       0.     279.      12. 100000.00
      .02      .00     9.12      .00     .040     .030     .040     .000  1080.90  9495.00
  .000572     330.     510.     500.        2        0        0      .00  1041.67 10536.67


FLOW DISTRIBUTION FOR SECNO=     16.83         CWSEL=   1106.33

STA=    9495.   10550.
  PER Q=    100.0
   AREA=  22479.5
    VEL=      9.1

CCHV=    .300 CEHV=    .500
*SECNO 16.875
```

```
  SECNO    DEPTH    CWSEL    CRIWS    WSELK    EG       HV       HL       OLOSS   BANK ELEV
  Q        QLOB     QCH      QROB     ALOB     ACH      AROB     VOL      TWA   LEFT/RIGHT
  TIME     VLOB     VCH      VROB     XNL      XNCH     XNR      WTN      ELMIN      SSTA
  SLOPE    XLOBL    XLCH     XLOBR    ITRIAL   IDC      ICONT    CORAR    TOPWID     ENDST


3470 ENCROACHMENT STATIONS=    9460.0   10510.0  TYPE=     1  TARGET=    1050.000
         GR STATIONS 9010, 9130, 9140 & 9180 WERE DELETED AND GR STATIONS
         9200, 9380 & 9425 WERE ADDED TO THE CORPS' CROSS-SECTION TO REFLECT
         LEFT BANK IMPROVMENTS AND RELOCATION OF THE TEMPE DRAIN BY A.D.O.T.
   16.88    25.50  1106.40      .00      .00  1107.86     1.46      .15      .08100000.00
  205000.      0.  205000.       0.       0.   21137.       0.     399.      18. 100000.00
     .02      .00     9.70      .00     .040     .030     .040     .000  1080.90  9460.00
  .000706     550.     240.     190.        2        0        0      .00  1050.00 10510.00


FLOW DISTRIBUTION FOR SECNO=     16.88          CWSEL=   1106.40

STA=    9460.   10530.
  PER Q=    100.0
   AREA=  21136.5
    VEL=      9.7

*SECNO 16.882

3265 DIVIDED FLOW


3470 ENCROACHMENT STATIONS=    9460.0   10490.0  TYPE=     1  TARGET=    1030.000

3495 OVERBANK AREA ASSUMED NON-EFFECTIVE,ELLEA=     1115.00 ELREA=     1115.00

         DOWNSTREAM SECTION OF I-10 BRIDGE. CROSS-SECTION PER FIELD MEASUREMENT
         MARCH 21, 1989.
   16.88    24.40  1106.40      .00      .00  1107.93     1.54      .03      .04100000.00
  205000.      0.  205000.       0.       0.   20607.       0.     418.      19. 100000.00
     .02      .00     9.95      .00     .040     .030     .040     .000  1082.00  9465.07
  .001030      40.      40.      40.        2        0        0      .00   973.75 10480.82


FLOW DISTRIBUTION FOR SECNO=     16.88          CWSEL=   1106.40

STA=    9465.   10529.
  PER Q=    100.0
   AREA=  20607.4
    VEL=      9.9
```

```
  SECNO    DEPTH    CWSEL    CRIWS    WSELK    EG       HV       HL       OLOSS   BANK ELEV
  Q        QLOB     QCH      QROB     ALOB     ACH      AROB     VOL      TWA   LEFT/RIGHT
  TIME     VLOB     VCH      VROB     XNL      XNCH     XNR      WTN      ELMIN      SSTA
  SLOPE    XLOBL    XLCH     XLOBR    ITRIAL   IDC      ICONT    CORAR    TOPWID     ENDST


*SECNO 16.904

3265 DIVIDED FLOW


3370 NORMAL BRIDGE,NRD=  0 MIN ELTRD= 1124.00 MAX ELLC= 1115.00


3470 ENCROACHMENT STATIONS=    9470.0   10480.0  TYPE=     1  TARGET=    1010.000
         UPSTREAM SECTION OF I-10 BRIDGE. CROSS-SECTION PER FIELD MEASUREMENT
         MARCH 21, 1989.
         DISTANCE BETWEEN CROSS-SECTIONS AS LISTED ON THE X1 CARD HAVE BEEN
         CHANGED FROM 114' FOR THE LOB, ROB & CHNL TO 165' RESPECTIVELY
         PER MEASUREMENTS BETWEEN CROSS-SECTIONS AS INDICATED ON WORK MAPS
         TITLED "SALT RIVER CHANNEL, CENTRAL AVENUE TO SCOTTSDALE ROAD,
         8-10-82, MARICOPA COUNTY, SHEET 2B" AND AS REFERENCED AS THE AUGUST
         1982 A.D.O.T. TOPO BASE MAP AT THE "T" CARD LOCATION IN THE HEC2
         OF THE  U.S. ARMY CORPS OF ENGINEERS' SALT RIVER FLOOD INSURANCE STUDY
   16.90    24.60  1106.60      .00      .00  1108.11     1.51      .17      .01100000.00
  205000.      0.  205000.       0.       0.   20800.       0.     497.      23. 100000.00
     .03      .00     9.86      .00     .040     .030     .040     .000  1082.00  9470.00
 .000998     165.     165.     165.        2        0        0      .00   968.00 10480.00


FLOW DISTRIBUTION FOR SECNO=     16.90         CWSEL=   1106.60

STA=    9470.   10529.
  PER Q=    100.0
   AREA=  20799.6
    VEL=      9.9

*SECNO 16.927

3470 ENCROACHMENT STATIONS=    9468.0   10498.0  TYPE=     1  TARGET=    1030.000
         CHANNEL CROSS-SECTION GEOMETRY IS BASED UPON TOPO FURNISHED BY BOYLE
         ENGINEERING, DEC.1987.
         DISTANCE BETWEEN CROSS-SECTIONS AS LISTED ON THE X1 CARD HAVE BEEN
         CHANGED FROM 120' FOR THE LOB, ROB & CHNL TO 90' RESPECTIVELY
         PER MEASUREMENTS BETWEEN CROSS-SECTIONS AS INDICATED ON WORK MAPS
         TITLED "SALT RIVER CHANNEL, CENTRAL AVENUE TO SCOTTSDALE ROAD,
         8-10-82, MARICOPA COUNTY, SHEET 2B" AND AS REFERENCED AS THE AUGUST
         1982 A.D.O.T. TOPO BASE MAP AT THE "T" CARD LOCATION IN THE HEC2
         OF THE  U.S. ARMY CORPS OF ENGINEERS' SALT RIVER FLOOD INSURANCE STUDY
```

```
        ET CARD STATIONS FROM 16.927 TO 17.833 HAVE BEEN CHANGED FROM THE
        CORPS' TO FIT WITHIN EXISTING SECTIONS.
   16.93    24.65  1106.65      .00      .00  1108.21     1.56      .07      .03  1086.00
  205000.   8622.  190241.    6138.    1616.   18465.    1126.     540.      25.   1084.00
     .03    5.33    10.30     5.45     .040     .030     .040     .000  1082.00  9468.00
 .000664     90.      90.      90.        2        0        0      .00  1030.00 10498.00


FLOW DISTRIBUTION FOR SECNO=     16.93          CWSEL=   1106.65

STA=    9468.    9480.    9575.    9600.   10405.   10425.   10475.   10498.
  PER Q=      .0      2.6      1.5     92.8      1.3      1.6       .1
   AREA=    43.8   1106.4    466.2  18465.3    392.9    627.3    105.4
    VEL=     2.0      4.9      6.7     10.3      6.8      5.1      2.5

CCHV=    .100 CEHV=    .300
1490 NH CARD USED
*SECNO 17.027

3470 ENCROACHMENT STATIONS=    9520.0   10500.0  TYPE=     1  TARGET=     980.000
        CHANNEL CROSS-SECTION GEOMETRY IS BASED UPON TOPO FURNISHED BY BOYLE
        ENGINEERING, DEC. 1987 AND BY THE GRADING AND DRAINAGE PLAN FOR THE
        IMPROVEMENTS TO THE CALMAT CO.'S AIRPORT PROPERTY AS PREPARED BY
        BARRETT CONSULTING GROUP INC., JUNE 1987. REFER TO ATTACHMENT D
        FOR PROPOSED AIRPORT PROPERTY GRADES.
        DEPRESSIONS BELOW THE NORMAL CHANNEL GRADE BETWEEN SECTIONS 17.027
        AND 17.129 AND SMALL STOCK PILES OF MATERIAL, ALL THE RESULT OF
        MINING IN THE RIVER CHANNEL, WERE NOT MODELED.
   17.03    24.99  1106.99      .00      .00  1108.54     1.55      .33      .00  1082.00
  205000.   5887.  192647.    6466.     781.   18915.    1231.     793.      37.   1082.00
     .05    7.54    10.18     5.25     .025     .030     .040     .000  1082.00  9542.52
 .000613     440.     528.     540.        2        0        0      .00   957.48 10500.00


FLOW DISTRIBUTION FOR SECNO=     17.03          CWSEL=   1106.99

STA=    9543.    9605.   10395.   10425.   10445.   10500.
  PER Q=      2.9     94.0      2.1       .5       .5
   AREA=    780.7  18915.4    629.7    239.8    361.6
    VEL=      7.5     10.2      6.8      4.5      3.0

1490 NH CARD USED
*SECNO 17.053

3470 ENCROACHMENT STATIONS=    9535.0   10480.0  TYPE=     1  TARGET=     945.000
        CHANNEL CROSS-SECTION GEOMETRY IS BASED UPON TOPO FURNISHED BY BOYLE
        ENGINEERING, DEC. 1987 AND BY THE GRADING AND DRAINAGE PLAN FOR THE
        IMPROVEMENTS TO THE CALMAT CO.'S AIRPORT PROPERTY AS PREPARED BY
        BARRETT CONSULTING GROUP INC., JUNE 1987. REFER TO ATTACHMENT D
```

```
        FOR PROPOSED AIRPORT PROPERTY GRADES.
        DISTANCE BETWEEN CROSS-SECTIONS AS LISTED ON THE X1 CARD HAVE BEEN
        CHANGED FROM 200' TO 135' FOR THE LOB, 200' TO 160' FOR THE ROB & 200'
        TO 145' FOR THE CHNL PER MEASUREMENTS BETWEEN CROSS-SECTIONS AS
        INDICATED ON WORK MAPS TITLED "SALT RIVER CHANNEL, CENTRAL AVENUE TO
        SCOTTSDALE ROAD, 8-10-82, MARICOPA COUNTY, SHEET 2B" AND AS REFERENCED
        AS THE AUGUST 1982 A.D.O.T. TOPO BASE MAP AT THE "T" CARD LOCATION IN
        THE HEC2 OF THE  U.S. ARMY CORPS OF ENGINEERS' SALT RIVER FLOOD
        INSURANCE STUDY.
   17.05    25.32  1107.32      .00      .00  1108.65     1.33      .08      .02  1082.00
  205000.    5878.  196498.    2624.     859.   21021.     591.     866.      40.   1082.00
     .05     6.85     9.35     4.44     .025     .030     .040     .000  1082.00  9542.18
 .000490     135.     145.     160.        2        0        0      .00   937.82 10480.00


FLOW DISTRIBUTION FOR SECNO=     17.05          CWSEL=   1107.32

STA=    9542.    9610.   10455.   10480.
  PER Q=      2.9     95.9      1.3
   AREA=    858.7  21021.1    591.3
    VEL=      6.8      9.3      4.4

1490 NH CARD USED
*SECNO 17.091

3470 ENCROACHMENT STATIONS=    9540.0   10485.0  TYPE=     1  TARGET=     945.000
        CHANNEL CROSS-SECTION GEOMETRY IS BASED UPON TOPO FURNISHED BY BOYLE
        ENGINEERING, DEC. 1987 AND BY THE GRADING AND DRAINAGE PLAN FOR THE
        IMPROVEMENTS TO THE CALMAT CO.'S AIRPORT PROPERTY AS PREPARED BY
        BARRETT CONSULTING GROUP INC., JUNE 1987. REFER TO ATTACHMENT D
        FOR PROPOSED AIRPORT PROPERTY GRADES.
   17.09    25.32  1107.32      .00      .00  1108.79     1.47      .10      .04  1082.00
  205000.    9081.  192287.    3631.    1052.   19495.     801.     966.      44.   1082.00
     .06     8.63     9.86     4.53     .025     .030     .040     .000  1082.00  9547.37
 .000556     200.     200.     200.        2        0        0      .00   935.93 10483.30


FLOW DISTRIBUTION FOR SECNO=     17.09          CWSEL=   1107.32

STA=    9547.    9595.    9625.   10420.   10483.
  PER Q=      1.1      3.3     93.8      1.8
   AREA=    412.5    639.6  19495.2    801.4
    VEL=      5.7     10.5      9.9      4.5

1490 NH CARD USED
*SECNO 17.129

3470 ENCROACHMENT STATIONS=    9565.0   10490.0  TYPE=     1  TARGET=     925.000
        DISTANCE BETWEEN CROSS-SECTIONS AS LISTED ON THE X1 CARD HAVE BEEN
```

```
        CHANGED FROM 200' FOR THE LOB, ROB & CHNL TO 186' RESPECTIVELY
        PER MEASUREMENTS BETWEEN CROSS-SECTIONS AS INDICATED ON WORK MAPS
        TITLED "SALT RIVER CHANNEL, CENTRAL AVENUE TO SCOTTSDALE ROAD,
        8-10-82, MARICOPA COUNTY, SHEET 2B" AND AS REFERENCED AS THE AUGUST
        1982 A.D.O.T. TOPO BASE MAP AT THE "T" CARD LOCATION IN THE HEC2
        OF THE  U.S. ARMY CORPS OF ENGINEERS' SALT RIVER FLOOD INSURANCE STUDY
        CHANNEL CROSS-SECTION GEOMETRY IS BASED UPON TOPO FURNISHED BY BOYLE
        ENGINEERING, DEC. 1987 AND BY THE GRADING AND DRAINAGE PLAN FOR THE
        IMPROVEMENTS TO THE CALMAT CO.'S AIRPORT PROPERTY AS PREPARED BY
        BARRETT CONSULTING GROUP INC., JUNE 1987. REFER TO ATTACHMENT D
        FOR PROPOSED AIRPORT PROPERTY GRADES.
   17.13    25.50  1107.50      .00      .00  1108.92     1.42      .12      .01  1084.00
  205000.    4427.  196087.    4486.     584.   20280.     875.    1058.      48.   1082.00
     .06     7.58     9.67     5.13     .025     .035     .040     .000  1082.00  9570.29
 .000696     186.     186.     186.        2        0        0      .00   918.36 10488.65


FLOW DISTRIBUTION FOR SECNO=     17.13          CWSEL=   1107.50

STA=    9570.    9620.   10420.   10489.
  PER Q=      2.2     95.7      2.2
   AREA=    584.1  20279.5    875.3
    VEL=      7.6      9.7      5.1

1490 NH CARD USED
*SECNO 17.167

3470 ENCROACHMENT STATIONS=    9570.0   10495.0  TYPE=     1  TARGET=     925.000
        DISTANCE BETWEEN CROSS-SECTIONS AS LISTED ON THE X1 CARD HAVE BEEN
        CHANGED FROM 200' FOR THE LOB, ROB & CHNL TO 220' RESPECTIVELY
        PER MEASUREMENTS BETWEEN CROSS-SECTIONS AS INDICATED ON WORK MAPS
        TITLED "SALT RIVER CHANNEL, CENTRAL AVENUE TO SCOTTSDALE ROAD,
        8-10-82, MARICOPA COUNTY, SHEET 2B" AND AS REFERENCED AS THE AUGUST
        1982 A.D.O.T. TOPO BASE MAP AT THE "T" CARD LOCATION IN THE HEC2
        OF THE  U.S. ARMY CORPS OF ENGINEERS' SALT RIVER FLOOD INSURANCE STUDY
        CHANNEL CROSS-SECTION GEOMETRY IS BASED UPON TOPO FURNISHED BY BOYLE
        ENGINEERING, DEC. 1987 AND BY THE GRADING AND DRAINAGE PLAN FOR THE
        IMPROVEMENTS TO THE CALMAT CO.'S AIRPORT PROPERTY AS PREPARED BY
        BARRETT CONSULTING GROUP INC., JUNE 1987. REFER TO ATTACHMENT D
        FOR PROPOSED AIRPORT PROPERTY GRADES.
   17.17    25.62  1107.62      .00      .00  1109.05     1.43      .13      .00  1084.00
  205000.   16353.  184454.    4193.    1732.   19013.     947.    1168.      53.   1082.00
     .07     9.44     9.70     4.43     .025     .030     .040     .000  1082.00  9574.94
 .000510     220.     220.     220.        1        0        0      .00   918.99 10493.93


FLOW DISTRIBUTION FOR SECNO=     17.17          CWSEL=   1107.62

STA=    9575.    9620.    9675.   10420.   10494.
  PER Q=      1.5      6.5     90.0      2.0
   AREA=    487.3   1244.5  19013.0    947.3
    VEL=      6.1     10.7      9.7      4.4
```

```
  SECNO    DEPTH    CWSEL    CRIWS    WSELK    EG       HV       HL       OLOSS   BANK ELEV
  Q        QLOB     QCH      QROB     ALOB     ACH      AROB     VOL      TWA   LEFT/RIGHT
  TIME     VLOB     VCH      VROB     XNL      XNCH     XNR      WTN      ELMIN      SSTA
  SLOPE    XLOBL    XLCH     XLOBR    ITRIAL   IDC      ICONT    CORAR    TOPWID     ENDST


1490 NH CARD USED
*SECNO 17.205

3470 ENCROACHMENT STATIONS=    9545.0   10495.0  TYPE=     1  TARGET=     950.000
         CHANNEL CROSS-SECTION GEOMETRY IS BASED UPON TOPO FURNISHED BY BOYLE
         ENGINEERING, DEC. 1987 AND BY THE GRADING AND DRAINAGE PLAN FOR THE
         IMPROVEMENTS TO THE CALMAT CO.'S AIRPORT PROPERTY AS PREPARED BY
         BARRETT CONSULTING GROUP INC., JUNE 1987. REFER TO ATTACHMENT D
         FOR PROPOSED AIRPORT PROPERTY GRADES.
   17.20    25.65  1107.65      .00      .00  1109.10     1.44      .04      .00  1084.00
  205000.  18279.  182769.    3952.    1979.   18724.     886.    1208.      55.  1082.00
     .07     9.23     9.76     4.46     .025     .030     .040     .000  1082.00  9562.31
 .000523      80.      80.      80.        1        0        0      .00   931.77 10494.08


FLOW DISTRIBUTION FOR SECNO=     17.20         CWSEL=   1107.65

STA=    9562.    9630.    9685.   10425.   10494.
  PER Q=      2.3      6.6     89.2      1.9
   AREA=    733.1   1246.3  18723.5    886.4
    VEL=      6.4     10.9      9.8      4.5

1490 NH CARD USED
*SECNO 17.242

3470 ENCROACHMENT STATIONS=    9535.0   10500.0  TYPE=     1  TARGET=     965.000
         CHANNEL CROSS-SECTION GEOMETRY IS BASED UPON TOPO FURNISHED BY BOYLE
         ENGINEERING, DEC. 1987 AND BY THE GRADING AND DRAINAGE PLAN FOR THE
         IMPROVEMENTS TO THE CALMAT CO.'S AIRPORT PROPERTY AS PREPARED BY
         BARRETT CONSULTING GROUP INC., JUNE 1987. REFER TO ATTACHMENT D
         FOR PROPOSED AIRPORT PROPERTY GRADES.
   17.24    25.68  1107.68      .00      .00  1109.18     1.50      .07      .02  1084.00
  205000.  17970.  178520.    8510.    1958.   17775.    1493.    1267.      57.  1082.00
     .07     9.18    10.04     5.70     .025     .030     .040     .000  1082.00  9554.16
 .000567     120.     120.     120.        2        0        0      .00   944.83 10498.99


FLOW DISTRIBUTION FOR SECNO=     17.24         CWSEL=   1107.68

STA=    9554.    9625.    9675.    9685.   10400.   10425.   10499.
  PER Q=      2.2      5.4      1.2     87.1      2.3      1.9
   AREA=    697.0   1033.9    226.8  17774.8    617.0    876.0
    VEL=      6.3     10.7     11.2     10.0      7.5      4.4
```

```
  SECNO    DEPTH    CWSEL    CRIWS    WSELK    EG       HV       HL       OLOSS   BANK ELEV
  Q        QLOB     QCH      QROB     ALOB     ACH      AROB     VOL      TWA   LEFT/RIGHT
  TIME     VLOB     VCH      VROB     XNL      XNCH     XNR      WTN      ELMIN      SSTA
  SLOPE    XLOBL    XLCH     XLOBR    ITRIAL   IDC      ICONT    CORAR    TOPWID     ENDST


1490 NH CARD USED
*SECNO 17.280

3470 ENCROACHMENT STATIONS=    9530.0   10510.0  TYPE=     1  TARGET=     980.000
         CHANNEL CROSS-SECTION GEOMETRY IS BASED UPON TOPO FURNISHED BY BOYLE
         ENGINEERING, DEC. 1987 AND BY THE GRADING AND DRAINAGE PLAN FOR THE
         IMPROVEMENTS TO THE CALMAT CO.'S AIRPORT PROPERTY AS PREPARED BY
         BARRETT CONSULTING GROUP INC., JUNE 1987. REFER TO ATTACHMENT D
         FOR PROPOSED AIRPORT PROPERTY GRADES.
   17.28    24.92  1107.72      .00      .00  1109.33     1.61      .12      .03  1084.00
  205000.   19958.  177478.    7564.    1903.   17200.    1399.    1363.     61.   1086.00
     .08    10.49    10.32     5.41     .025     .030     .040     .000  1082.80  9583.63
  .000619    200.     200.     200.        2        0        0      .00   925.23 10508.86


FLOW DISTRIBUTION FOR SECNO=     17.28         CWSEL=   1107.72

STA=    9584.    9615.    9670.    9690.   10400.   10430.   10509.
  PER Q=       .9      6.2      2.6     86.6      2.1      1.6
   AREA=    309.2   1139.4    454.3  17200.4    621.5    777.4
    VEL=      6.1     11.2     11.8     10.3      7.0      4.2

1490 NH CARD USED
*SECNO 17.318

3470 ENCROACHMENT STATIONS=    9570.0   10500.0  TYPE=     1  TARGET=     930.000
   17.32    24.82  1107.92      .00      .00  1109.46     1.54      .12      .01  1084.00
  205000.   21812.  165827.   17362.    2159.   16206.    2652.    1458.     66.   1084.00
     .08    10.10    10.23     6.55     .025     .030     .040     .000  1083.10  9570.00
  .000604    200.     200.     200.        2        0        0      .00   930.00 10500.00


FLOW DISTRIBUTION FOR SECNO=     17.32         CWSEL=   1107.92

STA=    9570.    9610.    9665.    9695.   10360.   10400.   10455.   10500.
  PER Q=      1.3      5.7      3.6     80.9      3.3      3.9      1.3
   AREA=    405.7   1095.6    657.6  16206.1    916.8   1150.6    584.8
    VEL=      6.3     10.7     11.4     10.2      7.4      6.9      4.5

1490 NH CARD USED
*SECNO 17.356

3470 ENCROACHMENT STATIONS=    9550.0   10540.0  TYPE=     1  TARGET=     990.000
```

```
        17.356 THRU 17.833; CHANNEL CROSS-SECTION GEOMETRY IS BASED UPON TOPO
        FURNISHED BY BOYLE ENGINEERING, DEC. 1987, FOR THE LEFT LEVEE AND THE
        CORPS' CROSS-SECTIONS FOR THE RIGHT BANK.
        RIGHT OVERBANK IS ASSUMED INEFFECTIVE FLOW.
   17.36    25.65  1108.15      .00      .00  1109.59     1.44      .12      .01  1084.00
  205000.  19402.  169748.   15850.    2045.   17096.    2751.    1556.      70.   1084.00
     .09     9.49     9.93     5.76     .025     .030     .040     .000  1082.50  9565.95
 .000556     200.     200.     200.        2        0        0      .00   974.04 10540.00


FLOW DISTRIBUTION FOR SECNO=     17.36          CWSEL=   1108.15

STA=    9566.    9615.    9670.    9690.   10380.   10425.   10470.   10515.   10540.
  PER Q=      1.5      5.6      2.4     82.8      3.1      2.4      1.7       .6
   AREA=    494.1   1108.1    442.9  17096.1    951.6    816.6    659.1    323.3
    VEL=      6.2     10.4     10.9      9.9      6.7      6.1      5.2      3.5

1490 NH CARD USED
*SECNO 17.394

3470 ENCROACHMENT STATIONS=    9550.0   10548.0  TYPE=     1  TARGET=     998.000
        THE FOLLOWING MESSAGE IS TAKEN FROM THE HEC2 PRINTOUT OF THE U.S. ARMY
        CORPS OF ENGINEERS 1983-1984 STUDY (FEMA FIS).
        "FROM STATION 17.394 TO STATION 21.102, ALL HYDRAULIC
        DATA WAS OBTAINED FROM HNTB ENGINEERING FIRM
        HNTB IS THE DESIGN CONTRACTOR OF AIRPORT CHANNELIZATION
        PROJECT.  IN PHOENIX CALL MR. BOB MILLER, (602) 957-1931,
        IN KANSAS CITY, MR. DICK SHWAB (816) 333-4800."
   17.39    25.21  1108.21      .00      .00  1109.72     1.51      .11      .02  1084.00
  205000.  19843.  167738.   17419.    2025.   16496.    2820.    1656.      74.   1084.00
     .10     9.80    10.17     6.18     .025     .030     .040     .000  1083.00  9578.57
 .000588     200.     200.     200.        2        0        0      .00   956.65 10535.22


FLOW DISTRIBUTION FOR SECNO=     17.39          CWSEL=   1108.21

STA=    9579.    9615.    9680.    9700.   10370.   10425.   10500.   10535.
  PER Q=       .9      6.3      2.4     81.8      3.9      4.0       .5
   AREA=    331.7   1248.8    444.3  16496.0   1166.7   1343.4    310.2
    VEL=      5.8     10.3     11.2     10.2      6.9      6.2      3.6

1490 NH CARD USED
*SECNO 17.432

3470 ENCROACHMENT STATIONS=    9550.0   10548.0  TYPE=     1  TARGET=     998.000
   17.43    24.29  1108.29      .00      .00  1109.86     1.57      .12      .02  1084.00
  205000.  20136.  169300.   15564.    2036.   16352.    2522.    1753.      79.   1084.00
     .10     9.89    10.35     6.17     .025     .030     .040     .000  1084.00  9578.84
 .000623     200.     200.     200.        2        0        0      .00   955.83 10534.67
```

```
   SECNO    DEPTH    CWSEL    CRIWS    WSELK    EG       HV       HL       OLOSS   BANK ELEV
   Q        QLOB     QCH      QROB     ALOB     ACH      AROB     VOL      TWA   LEFT/RIGHT
   TIME     VLOB     VCH      VROB     XNL      XNCH     XNR      WTN      ELMIN      SSTA
   SLOPE    XLOBL    XLCH     XLOBR    ITRIAL   IDC      ICONT    CORAR    TOPWID     ENDST


FLOW DISTRIBUTION FOR SECNO=     17.43          CWSEL=   1108.29

STA=    9579.    9670.    9705.   10380.   10480.   10535.
  PER Q=      5.7      4.1     82.6      6.1      1.5
   AREA=   1291.0    745.2  16351.8   1889.2    632.9
    VEL=      9.1     11.3     10.4      6.6      4.9

1490 NH CARD USED
*SECNO 17.453

3470 ENCROACHMENT STATIONS=    9550.0   10547.0  TYPE=     1  TARGET=     997.000
    17.45    25.38  1108.38      .00      .00  1109.93     1.55      .07      .00  1086.00
  205000.   17401.  184571.    3028.    1838.   18247.     618.    1806.      81.  1092.00
      .10     9.47    10.12     4.90     .025     .030     .040     .000  1083.00  9578.17
  .000624     112.     112.     112.        1        0        0      .00   955.71 10533.88


FLOW DISTRIBUTION FOR SECNO=     17.45          CWSEL=   1108.38

STA=    9578.    9615.    9680.    9700.   10480.   10500.   10534.
  PER Q=       .8      5.5      2.2     90.0      1.0       .5
   AREA=    301.4   1128.9    407.4  18246.8    332.4    285.7
    VEL=      5.7     10.0     10.9     10.1      6.0      3.6

1490 NH CARD USED
*SECNO 17.459

3470 ENCROACHMENT STATIONS=    9550.0   10547.0  TYPE=     1  TARGET=     997.000
    17.46    25.40  1108.40      .00      .00  1109.95     1.55      .02      .00  1086.00
  205000.   17458.  184523.    3019.    1841.   18239.     616.    1821.      82.  1092.00
      .11     9.48    10.12     4.90     .025     .030     .040     .000  1083.00  9578.11
  .000624      31.      31.      31.        0        0        0      .00   955.77 10533.88


FLOW DISTRIBUTION FOR SECNO=     17.46          CWSEL=   1108.40

STA=    9578.    9615.    9680.    9700.   10480.   10500.   10534.
  PER Q=       .8      5.5      2.2     90.0      1.0       .5
   AREA=    302.5   1130.8    407.9  18239.4    331.9    284.5
    VEL=      5.7     10.0     10.9     10.1      6.0      3.6

1490 NH CARD USED
```

```
  SECNO    DEPTH    CWSEL    CRIWS    WSELK    EG       HV       HL       OLOSS   BANK ELEV
  Q        QLOB     QCH      QROB     ALOB     ACH      AROB     VOL      TWA   LEFT/RIGHT
  TIME     VLOB     VCH      VROB     XNL      XNCH     XNR      WTN      ELMIN      SSTA
  SLOPE    XLOBL    XLCH     XLOBR    ITRIAL   IDC      ICONT    CORAR    TOPWID     ENDST


*SECNO 17.470

3470 ENCROACHMENT STATIONS=    9560.0   10547.0  TYPE=     1  TARGET=     987.000
    17.47    24.32  1108.32      .00      .00  1110.04     1.71      .04      .05  1086.00
  205000.   12008.  174215.   18778.    1895.   15746.    2835.    1848.      83.   1084.00
      .11     6.34    11.06     6.62     .040     .030     .040     .000  1084.00  9577.42
  .000719      57.      57.      57.        2        0        0      .00   956.11 10533.53


FLOW DISTRIBUTION FOR SECNO=     17.47         CWSEL=   1108.32

STA=    9577.    9620.    9680.    9705.   10360.   10425.   10500.   10534.
  PER Q=       .7      3.4      1.8     85.0      4.8      3.9       .5
   AREA=    347.5   1039.4    508.1  15746.5   1321.0   1235.5    278.7
    VEL=      3.9      6.7      7.4     11.1      7.4      6.4      3.8

1490 NH CARD USED
*SECNO 17.486

3470 ENCROACHMENT STATIONS=    9555.0   10546.0  TYPE=     1  TARGET=     991.000
    17.49    25.02  1108.52      .00      .00  1110.11     1.58      .06      .01  1086.00
  205000.   18360.  178223.    8417.    1841.   17355.    1511.    1887.      85.   1092.00
      .11     9.97    10.27     5.57     .025     .030     .040     .000  1083.50  9586.20
  .000624      84.      84.      84.        2        0        0      .00   946.71 10532.91


FLOW DISTRIBUTION FOR SECNO=     17.49         CWSEL=   1108.52

STA=    9586.    9620.    9700.   10425.   10500.   10533.
  PER Q=       .8      8.2     86.9      3.6       .5
   AREA=    279.3   1562.0  17355.5   1239.4    271.9
    VEL=      5.6     10.7     10.3      6.0      3.5

1490 NH CARD USED
*SECNO 17.498

3470 ENCROACHMENT STATIONS=    9555.0   10546.0  TYPE=     1  TARGET=     991.000
    17.50    24.55  1108.55      .00      .00  1110.16     1.60      .04      .01  1086.00
  205000.   20726.  175847.    8427.    2041.   17026.    1502.    1920.      87.   1092.00
      .11    10.15    10.33     5.61     .025     .030     .040     .000  1084.00  9586.12
  .000635      68.      68.      68.        1        0        0      .00   946.60 10532.72
```

```
   SECNO    DEPTH    CWSEL    CRIWS    WSELK    EG       HV       HL       OLOSS   BANK ELEV
   Q        QLOB     QCH      QROB     ALOB     ACH      AROB     VOL      TWA   LEFT/RIGHT
   TIME     VLOB     VCH      VROB     XNL      XNCH     XNR      WTN      ELMIN      SSTA
   SLOPE    XLOBL    XLCH     XLOBR    ITRIAL   IDC      ICONT    CORAR    TOPWID     ENDST


FLOW DISTRIBUTION FOR SECNO=     17.50          CWSEL=   1108.55

STA=    9586.    9620.    9710.   10425.   10500.   10533.
  PER Q=       .8      9.3     85.8      3.6       .5
   AREA=    280.5   1760.6  17025.8   1234.7    267.7
    VEL=      5.7     10.9     10.3      6.1      3.5

1490 NH CARD USED
*SECNO 17.508

3470 ENCROACHMENT STATIONS=    9555.0   10546.0  TYPE=     1  TARGET=     991.000
    17.51    24.59  1108.59      .00      .00  1110.19     1.60      .03      .00  1088.00
  205000.   17058.  174471.   13471.    1790.   16680.    2219.    1942.      88.  1084.00
      .11     9.53    10.46     6.07     .025     .030     .040     .000  1084.00  9573.54
  .000644      48.      48.      48.        0        0        0      .00   959.17 10532.71


FLOW DISTRIBUTION FOR SECNO=     17.51          CWSEL=   1108.59

STA=    9574.    9615.    9675.    9695.   10390.   10425.   10500.   10533.
  PER Q=      1.0      5.2      2.1     85.1      2.4      3.7       .5
   AREA=    343.8   1055.0    391.7  16680.3    720.4   1232.5    266.3
    VEL=      5.9     10.2     10.9     10.5      7.0      6.1      3.5

1490 NH CARD USED
*SECNO 17.536

3470 ENCROACHMENT STATIONS=    9550.0   10545.0  TYPE=     1  TARGET=     995.000
    17.54    24.31  1108.61      .00      .00  1110.32     1.71      .10      .03  1088.00
  205000.   17049.  176594.   11357.    1699.   16434.    1843.    2012.      91.  1088.00
      .12    10.04    10.75     6.16     .025     .030     .040     .000  1084.30  9568.12
  .000727     150.     150.     150.        2        0        0      .00   963.43 10531.55


FLOW DISTRIBUTION FOR SECNO=     17.54          CWSEL=   1108.61

STA=    9568.    9670.    9685.   10405.   10500.   10532.
  PER Q=      6.7      1.7     86.1      5.1       .5
   AREA=   1404.8    294.2  16434.2   1592.1    251.0
    VEL=      9.7     11.6     10.7      6.5      3.7

1490 NH CARD USED
```

```
  SECNO    DEPTH    CWSEL    CRIWS    WSELK    EG       HV       HL       OLOSS   BANK ELEV
  Q        QLOB     QCH      QROB     ALOB     ACH      AROB     VOL      TWA   LEFT/RIGHT
  TIME     VLOB     VCH      VROB     XNL      XNCH     XNR      WTN      ELMIN      SSTA
  SLOPE    XLOBL    XLCH     XLOBR    ITRIAL   IDC      ICONT    CORAR    TOPWID     ENDST


*SECNO 17.568

3470 ENCROACHMENT STATIONS=    9530.0   10545.0  TYPE=     1  TARGET=    1015.000
    17.57    24.13  1108.73      .00      .00  1110.45     1.73      .13      .01  1088.00
  205000.   19601.  173627.   11773.    1953.   16030.    1895.    2090.      95.   1088.00
      .12    10.04    10.83     6.21     .025     .030     .040     .000  1084.60  9551.08
  .000749     170.     170.     170.        0        0        0      .00   980.26 10531.34


FLOW DISTRIBUTION FOR SECNO=     17.57         CWSEL=   1108.73

STA=    9551.    9595.    9645.    9690.   10400.   10415.   10500.   10531.
  PER Q=       .9      3.9      4.7     84.7      1.0      4.3       .4
   AREA=    323.5    786.5    842.9  16030.0    281.0   1371.1    243.3
    VEL=      5.9     10.2     11.4     10.8      7.0      6.5      3.7

1490 NH CARD USED
*SECNO 17.606

3470 ENCROACHMENT STATIONS=    9520.0   10544.0  TYPE=     1  TARGET=    1024.000
    17.61    24.07  1108.77      .00      .00  1110.67     1.89      .16      .05  1092.00
  205000.   12568.  179618.   12814.    1200.   15863.    1871.    2179.      99.   1088.00
      .13    10.47    11.32     6.85     .025     .030     .040     .000  1084.70  9547.45
  .000909     200.     200.     200.        2        0        0      .00   982.63 10530.08


FLOW DISTRIBUTION FOR SECNO=     17.61         CWSEL=   1108.77

STA=    9547.    9640.   10400.   10500.   10530.
  PER Q=      6.1     87.6      5.8       .4
   AREA=   1200.0  15863.4   1645.3    225.2
    VEL=     10.5     11.3      7.2      4.0

1490 NH CARD USED
*SECNO 17.644

3470 ENCROACHMENT STATIONS=    9505.0   10543.0  TYPE=     1  TARGET=    1038.000
    17.64    24.02  1109.02      .00      .00  1110.85     1.83      .18      .01  1088.00
  205000.   25514.  170231.    9256.    2364.   15412.    1428.    2267.     104.   1090.00
      .13    10.79    11.05     6.48     .025     .030     .040     .000  1085.00  9525.21
  .000860     200.     200.     200.        2        0        0      .00  1004.10 10529.31
```

```
   SECNO    DEPTH    CWSEL    CRIWS    WSELK    EG       HV       HL       OLOSS   BANK ELEV
   Q        QLOB     QCH      QROB     ALOB     ACH      AROB     VOL      TWA   LEFT/RIGHT
   TIME     VLOB     VCH      VROB     XNL      XNCH     XNR      WTN      ELMIN      SSTA
   SLOPE    XLOBL    XLCH     XLOBR    ITRIAL   IDC      ICONT    CORAR    TOPWID     ENDST


FLOW DISTRIBUTION FOR SECNO=     17.64          CWSEL=   1109.02

STA=    9525.    9615.    9690.   10425.   10500.   10529.
  PER Q=      4.6      7.9     83.0      4.1       .4
   AREA=   1012.5   1351.7  15412.0   1212.0    215.8
    VEL=      9.2     12.0     11.0      7.0      3.8

1490 NH CARD USED
*SECNO 17.682

3470 ENCROACHMENT STATIONS=    9495.0   10543.0  TYPE=     1  TARGET=    1048.000
    17.68    23.28  1109.28      .00      .00  1111.03     1.75      .17      .01  1088.00
  205000.   19032.  175868.   10100.    1855.   16211.    1585.    2356.     108.  1090.00
      .14    10.26    10.85     6.37     .025     .030     .040     .000  1086.00  9514.87
  .000818     200.     200.     200.        2        0        0      .00  1014.36 10529.22


FLOW DISTRIBUTION FOR SECNO=     17.68          CWSEL=   1109.28

STA=    9515.    9605.    9650.   10415.   10500.   10529.
  PER Q=      4.6      4.7     85.8      4.5       .4
   AREA=   1032.1    822.4  16210.9   1373.4    211.5
    VEL=      9.1     11.7     10.8      6.8      3.7

*SECNO 17.720

3470 ENCROACHMENT STATIONS=    9490.0   10542.0  TYPE=     1  TARGET=    1052.000
    17.72    21.71  1109.21      .00      .00  1111.33     2.11      .19      .11  1091.00
  205000.    9703.  183759.   11538.    1362.   15226.    1537.    2443.     113.  1090.00
      .14     7.13    12.07     7.50     .040     .030     .040     .000  1087.50  9509.72
  .001159     200.     200.     200.        2        0        0      .00  1018.04 10527.76


FLOW DISTRIBUTION FOR SECNO=     17.72          CWSEL=   1109.21

STA=    9510.    9545.    9595.    9620.   10415.   10425.   10500.   10528.
  PER Q=       .5      2.6      1.7     89.6       .8      4.5       .4
   AREA=    233.1    710.7    417.9  15225.6    182.1   1163.6    191.8
    VEL=      4.3      7.4      8.2     12.1      8.6      7.9      4.3

*SECNO 17.758

3470 ENCROACHMENT STATIONS=    9475.0   10541.0  TYPE=     1  TARGET=    1066.000
```

```
  SECNO    DEPTH    CWSEL    CRIWS    WSELK    EG       HV       HL       OLOSS   BANK ELEV
  Q        QLOB     QCH      QROB     ALOB     ACH      AROB     VOL      TWA   LEFT/RIGHT
  TIME     VLOB     VCH      VROB     XNL      XNCH     XNR      WTN      ELMIN      SSTA
  SLOPE    XLOBL    XLCH     XLOBR    ITRIAL   IDC      ICONT    CORAR    TOPWID     ENDST


   17.76    21.63  1109.63      .00      .00  1111.57     1.93      .22      .02  1090.00
  205000.   39883.  151307.   13810.    4968.   12495.    1856.    2529.     118.   1090.00
     .15     8.03    12.11     7.44     .040     .030     .040     .000  1088.00  9496.05
 .001043     200.     200.     200.        2        0        0      .00  1031.29 10527.33


FLOW DISTRIBUTION FOR SECNO=     17.76          CWSEL=   1109.63

STA=    9496.    9535.    9585.    9630.    9650.    9800.   10400.   10500.   10527.
  PER Q=       .5      2.3      2.6      1.5     12.5     73.8      6.4       .4
   AREA=    265.5    681.7    703.5    372.7   2945.1  12495.2   1668.4    187.7
    VEL=      4.2      6.8      7.5      8.4      8.7     12.1      7.8      4.0

*SECNO 17.795

3470 ENCROACHMENT STATIONS=    9470.0   10541.0  TYPE=     1  TARGET=    1071.000
   17.80    21.35  1109.85      .00      .00  1111.78     1.93      .21      .00  1090.00
  205000.   59112.  133841.   12047.    6913.   10817.    1588.    2617.     123.   1090.00
     .15     8.55    12.37     7.59     .040     .030     .040     .000  1088.50  9491.04
 .001105     200.     200.     200.        0        0        0      .00  1036.13 10527.17


FLOW DISTRIBUTION FOR SECNO=     17.80          CWSEL=   1109.85

STA=    9491.    9525.    9580.    9630.    9890.   10415.   10465.   10500.   10527.
  PER Q=       .4      2.3      3.3     22.8     65.3      3.7      1.8       .4
   AREA=    201.2    706.9    842.7   5161.9  10816.7    892.7    512.9    182.8
    VEL=      3.9      6.8      8.1      9.1     12.4      8.4      7.4      4.1

*SECNO 17.833

3301 HV CHANGED MORE THAN HVINS


3470 ENCROACHMENT STATIONS=    9465.0   10540.0  TYPE=     1  TARGET=    1075.000
   17.83    20.10  1109.70      .00      .00  1112.24     2.54      .28      .18  1090.00
  205000.   45544.  116479.   42977.    4906.    7931.    4222.    2701.     127.   1090.00
     .16     9.28    14.69    10.18     .040     .030     .040     .000  1089.60  9482.99
 .001778     200.     200.     200.        2        0        0      .00  1042.61 10525.60


FLOW DISTRIBUTION FOR SECNO=     17.83          CWSEL=   1109.70

STA=    9483.    9510.    9635.    9700.    9790.    9815.    9835.   10260.   10360.   10450.   10465.   10500.   10526.
  PER Q=       .4      6.6      4.4      6.8      2.1      2.0     56.8     10.1      7.5      1.0      2.0       .4
   AREA=    158.0   1587.8    955.7   1413.2    417.6    374.1   7930.6   1870.3   1503.2    220.5    463.8    163.9
    VEL=      4.8      8.5      9.4      9.8     10.2     11.0     14.7     11.0     10.2      9.3      8.8      5.0
```

```
  SECNO    DEPTH    CWSEL    CRIWS    WSELK    EG       HV       HL       OLOSS   BANK ELEV
  Q        QLOB     QCH      QROB     ALOB     ACH      AROB     VOL      TWA   LEFT/RIGHT
  TIME     VLOB     VCH      VROB     XNL      XNCH     XNR      WTN      ELMIN      SSTA
  SLOPE    XLOBL    XLCH     XLOBR    ITRIAL   IDC      ICONT    CORAR    TOPWID     ENDST


*SECNO 17.871

3301 HV CHANGED MORE THAN HVINS


3470 ENCROACHMENT STATIONS=    9475.0   10525.0  TYPE=     1  TARGET=    1050.000
         17.871 TO 18.455 CROSS-SECTIONS PER U.S. ARMY CORPS OF ENGINEERS
         1983-1984 STUDY (FEMA FIS) AND A.D.O.T. TOPO. FLOODWAY ENCROACHMENT
         STATIONS ALSO PER COE.
   17.87    17.93  1109.33      .00      .00  1113.02     3.70      .44      .35  1097.40
  205000.   39864.  133097.   32039.    3964.    7534.    3197.    2773.     132.   1097.40
     .16    10.06    17.67    10.02     .040     .030     .040     .000  1091.40  9476.13
  .002768    180.     200.     220.        2        0        0      .00  1047.75 10523.87


FLOW DISTRIBUTION FOR SECNO=     17.87          CWSEL=   1109.33

STA=    9476.    9500.    9820.   10244.   10500.   10524.
  PER Q=       .4     19.0     64.9     15.2       .4
   AREA=    142.5   3821.2   7533.5   3054.8    142.5
    VEL=      6.0     10.2     17.7     10.2      6.0

*SECNO 17.909

3470 ENCROACHMENT STATIONS=    9470.0   10525.0  TYPE=     1  TARGET=    1055.000
   17.91    17.85  1109.85      .00      .00  1113.59     3.74      .56      .01  1098.00
  205000.   39379.  133303.   32317.    3898.    7499.    3209.    2840.     137.   1098.00
     .16    10.10    17.78    10.07     .040     .030     .040     .000  1092.00  9476.18
  .002821    180.     200.     220.        2        0        0      .00  1047.65 10523.83


FLOW DISTRIBUTION FOR SECNO=     17.91          CWSEL=   1109.85

STA=    9476.    9500.    9715.    9755.    9817.   10241.   10500.   10524.
  PER Q=       .4     12.7      2.4      3.7     65.0     15.4       .4
   AREA=    141.2   2548.0    474.0    734.8   7498.6   3068.2    141.2
    VEL=      6.0     10.3     10.3     10.3     17.8     10.3      6.0

*SECNO 17.947

3470 ENCROACHMENT STATIONS=    9475.0   10525.0  TYPE=     1  TARGET=    1050.000
   17.95    17.99  1110.49      .00      .00  1114.16     3.67      .55      .01  1098.50
  205000.   39169.  132995.   32835.    3908.    7558.    3286.    2908.     142.   1098.50
     .17    10.02    17.60     9.99     .040     .030     .040     .000  1092.50  9475.96
  .002735    180.     200.     220.        2        0        0      .00  1048.09 10524.04
```

```
  SECNO    DEPTH    CWSEL    CRIWS    WSELK    EG       HV       HL       OLOSS   BANK ELEV
  Q        QLOB     QCH      QROB     ALOB     ACH      AROB     VOL      TWA   LEFT/RIGHT
  TIME     VLOB     VCH      VROB     XNL      XNCH     XNR      WTN      ELMIN      SSTA
  SLOPE    XLOBL    XLCH     XLOBR    ITRIAL   IDC      ICONT    CORAR    TOPWID     ENDST


FLOW DISTRIBUTION FOR SECNO=     17.95         CWSEL=   1110.49

STA=    9476.    9500.    9679.    9762.    9814.   10238.   10500.   10524.
  PER Q=      .4     10.7      4.9      3.1     64.9     15.6       .4
   AREA=   144.1   2146.3    995.2    622.3   7557.7   3141.4    144.1
    VEL=     6.0     10.2     10.2     10.2     17.6     10.2      6.0

*SECNO 17.970

3470 ENCROACHMENT STATIONS=    9480.0   10520.0  TYPE=     1  TARGET=    1040.000
    17.97    18.04  1110.84      .00      .00  1114.48     3.65      .33      .00  1098.80
  205000.   39009.  132871.   33120.    3895.    7572.    3315.    2948.     145.   1098.80
     .17    10.01    17.55     9.99     .040     .030     .040     .000  1092.80  9480.00
  .002711     110.     120.     130.        1        0        0      .00  1040.00 10520.00


FLOW DISTRIBUTION FOR SECNO=     17.97         CWSEL=   1110.84

STA=    9480.    9500.    9655.    9770.    9812.   10236.   10500.   10520.
  PER Q=      .4      9.2      6.9      2.5     64.8     15.7       .4
   AREA=   140.9   1864.6   1383.4    506.4   7572.5   3174.6    140.9
    VEL=     6.2     10.2     10.2     10.2     17.5     10.2      6.2

CCHV=    .100 CEHV=    .300
*SECNO 17.998

3301 HV CHANGED MORE THAN HVINS


3470 ENCROACHMENT STATIONS=    9475.0   10524.0  TYPE=     1  TARGET=    1049.000
         STOCKPILED MATERIAL MODELED IN THE CORPS' ORIGINAL SECTION DOES NOT
         CURRENTLY EXIST AND THIS SECTION WAS MODIFIED TO DELETE SAME.
    18.00    18.79  1111.99      .00      .00  1114.95     2.96      .40      .07  1099.20
  205000.   49307.  113703.   41990.    4284.    7422.    3569.    2999.     148.   1099.20
     .17    11.51    15.32    11.77     .035     .035     .035     .000  1093.20  9475.00
  .002664     130.     150.     160.        3        0        0      .00  1049.00 10524.00


FLOW DISTRIBUTION FOR SECNO=     18.00         CWSEL=   1111.99

STA=    9475.    9500.    9630.    9670.    9795.    9835.   10234.   10500.   10524.
  PER Q=      .6      9.7      2.8      8.2      2.8     55.5     19.9       .6
   AREA=   164.0   1663.0    491.7   1474.0    491.7   7422.3   3405.3    163.4
    VEL=     7.1     12.0     11.7     11.4     11.7     15.3     12.0      7.2
```

```
  SECNO    DEPTH    CWSEL    CRIWS    WSELK    EG       HV       HL       OLOSS   BANK ELEV
  Q        QLOB     QCH      QROB     ALOB     ACH      AROB     VOL      TWA   LEFT/RIGHT
  TIME     VLOB     VCH      VROB     XNL      XNCH     XNR      WTN      ELMIN      SSTA
  SLOPE    XLOBL    XLCH     XLOBR    ITRIAL   IDC      ICONT    CORAR    TOPWID     ENDST


*SECNO 18.036

3470 ENCROACHMENT STATIONS=    9470.0   10529.0  TYPE=     1  TARGET=    1059.000
    18.04    19.05  1112.75      .00      .00  1115.47     2.72      .50      .02  1099.70
  205000.   46940.  116677.   41383.    4173.    8006.    3687.    3070.     153.  1099.70
      .18    11.25    14.57    11.22     .035     .035     .035     .000  1093.70  9473.82
  .002364     180.     200.     220.        2        0        0      .00  1052.35 10526.18


FLOW DISTRIBUTION FOR SECNO=     18.04          CWSEL=   1112.75

STA=    9474.    9500.    9807.   10231.   10500.   10526.
  PER Q=       .6     22.3     56.9     19.6       .6
   AREA=    170.8   4001.9   8006.3   3516.3    170.8
    VEL=      6.7     11.4     14.6     11.4      6.7

*SECNO 18.074

3470 ENCROACHMENT STATIONS=    9471.0   10528.0  TYPE=     1  TARGET=    1057.000
    18.07    19.10  1113.30      .00      .00  1115.94     2.64      .46      .01  1100.20
  205000.   45815.  125271.   33915.    4146.    8831.    3088.    3143.     158.  1100.20
      .18    11.05    14.19    10.98     .035     .035     .035     .000  1094.20  9473.73
  .002271     180.     200.     220.        2        0        0      .00  1052.54 10526.27


FLOW DISTRIBUTION FOR SECNO=     18.07          CWSEL=   1113.30

STA=    9474.    9500.    9803.   10277.   10500.   10526.
  PER Q=       .6     21.8     61.1     16.0       .6
   AREA=    172.0   3974.3   8831.0   2915.9    172.0
    VEL=      6.6     11.2     14.2     11.2      6.6

*SECNO 18.112

3470 ENCROACHMENT STATIONS=    9471.0   10528.0  TYPE=     1  TARGET=    1057.000
    18.11    18.99  1113.69      .00      .00  1116.44     2.75      .46      .03  1100.70
  205000.   45915.  116811.   42275.    4069.    7981.    3752.    3216.     162.  1100.70
      .18    11.29    14.64    11.27     .035     .035     .035     .000  1094.70  9474.08
  .002394     180.     200.     220.        2        0        0      .00  1051.83 10525.91


FLOW DISTRIBUTION FOR SECNO=     18.11          CWSEL=   1113.69

STA=    9474.    9500.    9800.   10224.   10500.   10526.
  PER Q=       .6     21.8     57.0     20.1       .6
   AREA=    168.3   3900.3   7980.7   3583.2    168.3
    VEL=      6.7     11.5     14.6     11.5      6.7
```

```
  SECNO    DEPTH    CWSEL    CRIWS    WSELK    EG       HV       HL       OLOSS   BANK ELEV
  Q        QLOB     QCH      QROB     ALOB     ACH      AROB     VOL      TWA   LEFT/RIGHT
  TIME     VLOB     VCH      VROB     XNL      XNCH     XNR      WTN      ELMIN      SSTA
  SLOPE    XLOBL    XLCH     XLOBR    ITRIAL   IDC      ICONT    CORAR    TOPWID     ENDST


*SECNO 18.150

3470 ENCROACHMENT STATIONS=    9472.0   10516.0  TYPE=     1  TARGET=    1044.000
    18.15    18.80  1114.10      .00      .00  1116.97     2.87      .49      .04  1101.30
  205000.   45590.  118162.   41248.    3964.    7897.    3593.    3287.     167.  1101.30
      .19    11.50    14.96    11.48     .035     .035     .035     .000  1095.30  9474.34
  .002537     180.     200.     220.        2        0        0      .00  1040.32 10514.66


FLOW DISTRIBUTION FOR SECNO=     18.15         CWSEL=   1114.10

STA=    9474.    9500.    9797.   10221.   10489.   10515.
  PER Q=       .5     21.7     57.6     19.6       .5
   AREA=    164.2   3800.2   7897.2   3429.1    164.2
    VEL=      6.8     11.7     15.0     11.7      6.8

*SECNO 18.188

3301 HV CHANGED MORE THAN HVINS


3470 ENCROACHMENT STATIONS=    9474.0   10339.0  TYPE=     1  TARGET=     865.000
    18.19    17.77  1113.57      .00      .00  1118.10     4.52      .63      .50  1101.80
  205000.   50161.  137657.   17183.    3599.    7465.    1271.    3350.     172.  1101.80
      .19    13.94    18.44    13.52     .035     .035     .035     .000  1095.80  9476.39
  .004155     180.     200.     220.        3        0        0      .00   861.13 10337.51


FLOW DISTRIBUTION FOR SECNO=     18.19         CWSEL=   1113.57

STA=    9476.    9500.    9794.   10218.   10314.   10338.
  PER Q=       .6     23.9     67.1      7.8       .6
   AREA=    139.0   3459.5   7464.6   1131.6    139.0
    VEL=      8.3     14.2     18.4     14.2      8.3

*SECNO 18.216

3301 HV CHANGED MORE THAN HVINS


3470 ENCROACHMENT STATIONS=    9473.0   10352.0  TYPE=     1  TARGET=     879.000
    18.22    18.55  1114.75      .00      .00  1118.71     3.96      .56      .06  1102.20
  205000.   50421.  134667.   19912.    3812.    7793.    1545.    3394.     174.  1102.20
      .19    13.23    17.28    12.89     .035     .035     .035     .000  1096.20  9474.91
  .003446     140.     150.     160.        3        0        0      .00   876.18 10351.09
```

```
  SECNO    DEPTH    CWSEL    CRIWS    WSELK    EG       HV       HL       OLOSS   BANK ELEV
  Q        QLOB     QCH      QROB     ALOB     ACH      AROB     VOL      TWA   LEFT/RIGHT
  TIME     VLOB     VCH      VROB     XNL      XNCH     XNR      WTN      ELMIN      SSTA
  SLOPE    XLOBL    XLCH     XLOBR    ITRIAL   IDC      ICONT    CORAR    TOPWID     ENDST


FLOW DISTRIBUTION FOR SECNO=     18.22          CWSEL=   1114.75

STA=    9475.    9500.    9791.   10215.   10326.   10351.
  PER Q=       .6     24.0     65.7      9.1       .6
   AREA=    157.4   3654.7   7793.4   1387.6    157.4
    VEL=      7.9     13.5     17.3     13.5      7.9

*SECNO 18.254

3301 HV CHANGED MORE THAN HVINS


3470 ENCROACHMENT STATIONS=    9471.0   10465.0  TYPE=     1  TARGET=     994.000
    18.25    20.00  1116.70      .00      .00  1119.37     2.67      .53      .13  1102.70
  205000.   47357.  120457.   37186.    4232.    8408.    3341.    3460.     179.  1102.70
      .20    11.19    14.33    11.13     .035     .035     .035     .000  1096.70  9472.00
  .002140     180.     200.     220.        3        0        0      .00   992.97 10464.97


FLOW DISTRIBUTION FOR SECNO=     18.25          CWSEL=   1116.70

STA=    9472.    9500.    9788.   10212.   10437.   10465.
  PER Q=       .6     22.5     58.8     17.5       .6
   AREA=    196.0   4035.9   8407.6   3144.2    196.5
    VEL=      6.7     11.4     14.3     11.4      6.7

*SECNO 18.292

3470 ENCROACHMENT STATIONS=    9470.0   10529.0  TYPE=     1  TARGET=    1059.000
    18.29    20.29  1117.49      .00      .00  1119.80     2.31      .40      .04  1103.20
  205000.   45364.  114272.   45364.    4321.    8533.    4321.    3536.     183.  1103.20
      .20    10.50    13.39    10.50     .035     .035     .035     .000  1097.20  9471.41
  .001833     190.     200.     210.        2        0        0      .00  1057.18 10528.59


FLOW DISTRIBUTION FOR SECNO=     18.29          CWSEL=   1117.49

STA=    9471.    9500.    9788.   10212.   10500.   10529.
  PER Q=       .6     21.5     55.7     21.5       .6
   AREA=    204.3   4116.7   8532.7   4116.7    204.3
    VEL=      6.3     10.7     13.4     10.7      6.3
```

```
  SECNO    DEPTH    CWSEL    CRIWS    WSELK    EG       HV       HL       OLOSS   BANK ELEV
  Q        QLOB     QCH      QROB     ALOB     ACH      AROB     VOL      TWA   LEFT/RIGHT
  TIME     VLOB     VCH      VROB     XNL      XNCH     XNR      WTN      ELMIN      SSTA
  SLOPE    XLOBL    XLCH     XLOBR    ITRIAL   IDC      ICONT    CORAR    TOPWID     ENDST


*SECNO 18.330
 WATER EL=X5 CARD=  1118.200

3470 ENCROACHMENT STATIONS=    9440.0   10570.0  TYPE=     1  TARGET=    1130.000
    18.33    20.50  1118.20      .00      .00  1120.45     2.25      .36      .01  1103.70
  205000.   45548.  113904.   45548.    4386.    8620.    4386.    3615.     188.  1103.70
      .21    10.38    13.21    10.38     .035     .035     .035     .000  1097.70  9471.00
  .001761     200.     200.     200.        0        0        0      .00  1058.00 10529.00


FLOW DISTRIBUTION FOR SECNO=     18.33         CWSEL=   1118.20

STA=    9471.    9500.    9788.   10212.   10500.   10529.
  PER Q=       .6     21.6     55.6     21.6       .6
   AREA=    210.3   4176.0   8620.0   4176.0    210.3
    VEL=      6.2     10.6     13.2     10.6      6.2

*SECNO 18.367

3470 ENCROACHMENT STATIONS=    9471.0   10528.0  TYPE=     1  TARGET=    1057.000
    18.37    20.32  1118.52      .00      .00  1120.82     2.30      .36      .02  1104.20
  205000.   45383.  114226.   45390.    4329.    8545.    4329.    3695.     193.  1104.20
      .21    10.48    13.37    10.49     .035     .035     .035     .000  1098.20  9471.52
  .001824     200.     200.     200.        2        0        0      .00  1056.48 10528.00


FLOW DISTRIBUTION FOR SECNO=     18.37         CWSEL=   1118.52

STA=    9472.    9500.    9788.   10212.   10500.   10528.
  PER Q=       .6     21.5     55.7     21.5       .6
   AREA=    204.0   4124.8   8544.6   4124.8    203.9
    VEL=      6.2     10.7     13.4     10.7      6.3

*SECNO 18.405

3470 ENCROACHMENT STATIONS=    9542.0   10527.0  TYPE=     1  TARGET=     985.000
    18.41    19.85  1118.65      .00      .00  1121.34     2.70      .40      .12  1104.80
  205000.   37646.  120346.   47008.    3406.    8343.    4179.    3771.     198.  1104.80
      .22    11.05    14.42    11.25     .035     .035     .035     .000  1098.80  9542.00
  .002192     200.     200.     200.        2        0        0      .00   985.00 10527.00
```

```
  SECNO    DEPTH    CWSEL    CRIWS    WSELK    EG       HV       HL       OLOSS   BANK ELEV
  Q        QLOB     QCH      QROB     ALOB     ACH      AROB     VOL      TWA   LEFT/RIGHT
  TIME     VLOB     VCH      VROB     XNL      XNCH     XNR      WTN      ELMIN      SSTA
  SLOPE    XLOBL    XLCH     XLOBR    ITRIAL   IDC      ICONT    CORAR    TOPWID     ENDST


FLOW DISTRIBUTION FOR SECNO=     18.41          CWSEL=   1118.65

STA=    9542.    9788.   10212.   10500.   10527.
  PER Q=     18.4     58.7     22.3       .6
   AREA=   3406.3   8342.9   3987.8    191.6
    VEL=     11.1     14.4     11.5      6.8

*SECNO 18.417

3470 ENCROACHMENT STATIONS=    9472.0   10527.0  TYPE=     1  TARGET=    1055.000
    18.42    20.29  1119.19      .00      .00  1121.50     2.31      .12      .04  1104.90
  205000.   45317.  114263.   45420.    4316.    8532.    4324.    3794.     199.  1104.90
      .22    10.50    13.39    10.50     .035     .035     .035     .000  1098.90  9472.00
  .001833      65.      60.      55.        2        0        0      .00  1055.00 10527.00


FLOW DISTRIBUTION FOR SECNO=     18.42          CWSEL=   1119.19

STA=    9472.    9500.    9788.   10212.   10500.   10527.
  PER Q=       .6     21.5     55.7     21.5       .6
   AREA=    203.7   4112.2   8532.4   4120.8    203.1
    VEL=      6.3     10.7     13.4     10.7      6.4

*SECNO 18.455

3470 ENCROACHMENT STATIONS=    9472.0   10527.0  TYPE=     1  TARGET=    1055.000
    18.45    20.13  1119.53      .00      .00  1121.89     2.36      .37      .01  1105.40
  205000.   44521.  114571.   45908.    4204.    8462.    4331.    3872.     204.  1105.40
      .22    10.59    13.54    10.60     .035     .035     .035     .000  1099.40  9472.00
  .001895     220.     200.     180.        2        0        0      .00  1055.00 10527.00


FLOW DISTRIBUTION FOR SECNO=     18.45          CWSEL=   1119.53

STA=    9472.    9500.    9784.   10208.   10500.   10527.
  PER Q=       .6     21.1     55.9     21.8       .6
   AREA=    199.0   4005.1   8462.0   4132.2    198.7
    VEL=      6.3     10.8     13.5     10.8      6.4

*SECNO 18.492

3470 ENCROACHMENT STATIONS=    9472.0   10527.0  TYPE=     1  TARGET=    1055.000
    18.49    19.86  1119.86      .00      .00  1122.30     2.44      .39      .02  1106.00
  205000.   44663.  115130.   45206.    4157.    8354.    4206.    3949.     209.  1106.00
      .23    10.74    13.78    10.75     .035     .035     .035     .000  1100.00  9472.20
  .001999     220.     200.     180.        2        0        0      .00  1054.80 10527.00
```

```
  SECNO    DEPTH    CWSEL    CRIWS    WSELK    EG       HV       HL       OLOSS   BANK ELEV
  Q        QLOB     QCH      QROB     ALOB     ACH      AROB     VOL      TWA   LEFT/RIGHT
  TIME     VLOB     VCH      VROB     XNL      XNCH     XNR      WTN      ELMIN      SSTA
  SLOPE    XLOBL    XLCH     XLOBR    ITRIAL   IDC      ICONT    CORAR    TOPWID     ENDST


FLOW DISTRIBUTION FOR SECNO=     18.49         CWSEL=   1119.86

STA=    9472.    9500.    9786.   10210.   10500.   10527.
  PER Q=       .6     21.2     56.2     21.4       .6
   AREA=    192.6   3964.9   8353.9   4013.4    192.5
    VEL=      6.4     11.0     13.8     11.0      6.5

*SECNO 18.530

3470 ENCROACHMENT STATIONS=    9472.0   10527.0  TYPE=     1  TARGET=    1055.000
    18.53    19.74  1120.24      .00      .00  1122.72     2.48      .40      .01  1106.50
  205000.   46426.  115637.   42937.    4296.    8335.    3978.    4026.     214.   1106.50
      .23    10.81    13.87    10.79     .035     .035     .035     .000  1100.50  9472.50
  .002041     220.     200.     180.        0        0        0      .00  1054.50 10527.00


FLOW DISTRIBUTION FOR SECNO=     18.53         CWSEL=   1120.24

STA=    9473.    9500.    9799.   10224.   10500.   10527.
  PER Q=       .6     22.1     56.4     20.3       .6
   AREA=    189.0   4106.5   8334.7   3788.9    188.9
    VEL=      6.4     11.0     13.9     11.0      6.5

*SECNO 18.568

3470 ENCROACHMENT STATIONS=    9473.0   10526.0  TYPE=     1  TARGET=    1053.000
    18.57    19.63  1120.63      .00      .00  1123.14     2.51      .41      .01  1107.00
  205000.   49651.  116376.   38973.    4568.    8339.    3600.    4102.     219.   1107.00
      .24    10.87    13.96    10.82     .035     .035     .035     .000  1101.00  9473.00
  .002081     220.     200.     180.        1        0        0      .00  1053.00 10526.00


FLOW DISTRIBUTION FOR SECNO=     18.57         CWSEL=   1120.63

STA=    9473.    9500.    9821.   10250.   10500.   10526.
  PER Q=       .6     23.6     56.8     18.4       .6
   AREA=    186.0   4381.8   8338.9   3414.9    185.6
    VEL=      6.5     11.1     14.0     11.1      6.6

*SECNO 18.606

3470 ENCROACHMENT STATIONS=    9473.0   10526.0  TYPE=     1  TARGET=    1053.000
    18.61    19.54  1121.04      .00      .00  1123.57     2.53      .42      .01  1107.50
  205000.   54328.  117321.   33351.    4976.    8371.    3083.    4179.     223.   1107.50
      .24    10.92    14.02    10.82     .035     .035     .035     .000  1101.50  9473.00
  .002112     220.     200.     180.        0        0        0      .00  1053.00 10526.00
```

```
  SECNO    DEPTH    CWSEL    CRIWS    WSELK    EG       HV       HL       OLOSS   BANK ELEV
  Q        QLOB     QCH      QROB     ALOB     ACH      AROB     VOL      TWA   LEFT/RIGHT
  TIME     VLOB     VCH      VROB     XNL      XNCH     XNR      WTN      ELMIN      SSTA
  SLOPE    XLOBL    XLCH     XLOBR    ITRIAL   IDC      ICONT    CORAR    TOPWID     ENDST


FLOW DISTRIBUTION FOR SECNO=     18.61          CWSEL=   1121.04

STA=    9473.    9500.    9854.   10286.   10500.   10526.
  PER Q=       .6     25.9     57.2     15.7       .6
   AREA=    183.4   4792.9   8370.7   2899.6    183.1
    VEL=      6.5     11.1     14.0     11.1      6.6

*SECNO 18.644

3470 ENCROACHMENT STATIONS=    9473.0   10526.0  TYPE=     1  TARGET=    1053.000
    18.64    19.45  1121.45      .00      .00  1124.00     2.55      .43      .01  1108.00
  205000.   60435.  118514.   26052.    5517.    8430.    2420.    4255.     228.   1108.00
      .24    10.95    14.06    10.77     .035     .035     .035     .000  1102.00  9473.09
  .002137     220.     200.     180.        0        0        0      .00  1052.91 10526.00


FLOW DISTRIBUTION FOR SECNO=     18.64          CWSEL=   1121.45

STA=    9473.    9500.    9897.   10334.   10500.   10526.
  PER Q=       .6     28.9     57.8     12.1       .6
   AREA=    181.1   5336.4   8430.0   2239.0    180.8
    VEL=      6.5     11.1     14.1     11.1      6.6

*SECNO 18.682

3470 ENCROACHMENT STATIONS=    9473.0   10526.0  TYPE=     1  TARGET=    1053.000
    18.68    19.26  1121.86      .00      .00  1124.46     2.60      .44      .02  1108.60
  205000.   67751.  120200.   17049.    6138.    8474.    1598.    4331.     233.   1108.60
      .25    11.04    14.18    10.67     .035     .035     .035     .000  1102.60  9473.46
  .002203     220.     200.     180.        1        0        0      .00  1052.54 10526.00


FLOW DISTRIBUTION FOR SECNO=     18.68          CWSEL=   1121.86

STA=    9473.    9500.    9949.   10393.   10500.   10526.
  PER Q=       .6     32.5     58.6      7.8       .6
   AREA=    176.1   5961.9   8473.9   1422.5    176.0
    VEL=      6.5     11.2     14.2     11.2      6.6

*SECNO 18.720

3470 ENCROACHMENT STATIONS=    9473.0   10526.0  TYPE=     1  TARGET=    1053.000
    18.72    19.21  1122.31      .00      .00  1124.92     2.61      .45      .00  1109.10
  205000.   76569.  121942.    6489.    6935.    8597.     653.    4408.     238.   1109.10
      .25    11.04    14.18     9.93     .035     .035     .035     .000  1103.10  9473.60
  .002213     220.     200.     180.        1        0        0      .00  1052.40 10526.00
```

```
  SECNO    DEPTH    CWSEL    CRIWS    WSELK    EG       HV       HL       OLOSS   BANK ELEV
  Q        QLOB     QCH      QROB     ALOB     ACH      AROB     VOL      TWA   LEFT/RIGHT
  TIME     VLOB     VCH      VROB     XNL      XNCH     XNR      WTN      ELMIN      SSTA
  SLOPE    XLOBL    XLCH     XLOBR    ITRIAL   IDC      ICONT    CORAR    TOPWID     ENDST


FLOW DISTRIBUTION FOR SECNO=     18.72         CWSEL=   1122.31

STA=    9474.    9500.   10012.   10464.   10500.   10526.
  PER Q=       .6     36.8     59.5      2.6       .6
   AREA=    174.2   6760.8   8596.6    479.1    174.2
    VEL=      6.5     11.2     14.2     11.2      6.6

*SECNO 18.758

3470 ENCROACHMENT STATIONS=    9474.0   10563.0  TYPE=     1  TARGET=    1089.000
    18.76    19.10  1122.90      .00      .00  1125.37     2.47      .43      .01  1109.90
  205000.   83149.  120777.    1074.    7774.    8743.     153.    4484.     243.   1109.90
      .26    10.70    13.81     7.00     .035     .035     .035     .000  1103.80  9474.09
  .002114     200.     200.     200.        2        0        0      .00  1088.91 10563.00


FLOW DISTRIBUTION FOR SECNO=     18.76         CWSEL=   1122.90

STA=    9474.    9500.   10085.   10547.   10548.   10563.
  PER Q=       .5     40.0     58.9       .1       .4
   AREA=    168.4   7605.4   8743.4     14.3    139.1
    VEL=      6.3     10.8     13.8     10.8      6.6

*SECNO 18.795

3470 ENCROACHMENT STATIONS=    9474.0   10663.0  TYPE=     1  TARGET=    1189.000
    18.80    19.01  1123.61      .00      .00  1125.80     2.19      .40      .03  1110.80
  205000.   88016.  115881.    1103.    8726.    8849.     175.    4563.     249.   1110.80
      .26    10.09    13.09     6.31     .035     .035     .035     .000  1104.60  9474.37
  .001912     200.     200.     200.        2        0        0      .00  1188.63 10663.00


FLOW DISTRIBUTION FOR SECNO=     18.80         CWSEL=   1123.61

STA=    9474.    9500.   10140.   10165.   10168.   10638.   10639.   10663.
  PER Q=       .5     40.7      1.6       .2     56.5       .1       .5
   AREA=    164.2   8200.7    320.3     41.0   8849.4     11.5    163.3
    VEL=      5.9     10.2     10.2     10.2     13.1     10.2      6.0

*SECNO 18.833

3470 ENCROACHMENT STATIONS=    9495.0   10841.2  TYPE=     1  TARGET=   -9495.000
    18.83    19.13  1124.43      .00      .00  1126.19     1.76      .35      .04  1111.70
  205000.   88815.  104922.   11263.    9693.    8790.    1292.    4649.     254.   1111.70
      .27     9.16    11.94     8.72     .035     .035     .035     .000  1105.30  9495.00
  .001577     200.     200.     200.        2        0        0      .00  1340.06 10835.06
```

```
  SECNO    DEPTH    CWSEL    CRIWS    WSELK    EG       HV       HL       OLOSS   BANK ELEV
  Q        QLOB     QCH      QROB     ALOB     ACH      AROB     VOL      TWA   LEFT/RIGHT
  TIME     VLOB     VCH      VROB     XNL      XNCH     XNR      WTN      ELMIN      SSTA
  SLOPE    XLOBL    XLCH     XLOBR    ITRIAL   IDC      ICONT    CORAR    TOPWID     ENDST


FLOW DISTRIBUTION FOR SECNO=     18.83          CWSEL=   1124.43

STA=    9495.    9500.   10140.   10245.   10257.   10721.   10810.   10835.
  PER Q=       .1     36.5      6.0       .7     51.2      5.1       .4
   AREA=     57.4   8146.3   1336.5    152.7   8790.2   1130.3    162.0
    VEL=      4.0      9.2      9.2      9.2     11.9      9.2      5.4

*SECNO 18.871

3470 ENCROACHMENT STATIONS=    9462.0   11004.0  TYPE=     1  TARGET=    1542.000
    18.87    19.06  1125.06      .00      .00  1126.51     1.45      .29      .03  1112.60
  205000.   89669.   95301.   20031.   10748.    8649.    2450.    4744.     261.  1112.60
      .27     8.34    11.02     8.17     .035     .035     .035     .000  1106.00  9462.00
  .001353     200.     200.     190.        2        0        0      .00  1542.00 11004.00


FLOW DISTRIBUTION FOR SECNO=     18.87          CWSEL=   1125.06

STA=    9462.    9487.   10130.   10320.   10337.   10795.   10980.   11004.
  PER Q=       .4     32.8      9.7       .9     46.5      9.4       .4
   AREA=    155.7   8012.9   2367.4    211.8   8648.9   2295.1    155.2
    VEL=      4.9      8.4      8.4      8.4     11.0      8.4      4.9

*SECNO 18.909

3265 DIVIDED FLOW


3470 ENCROACHMENT STATIONS=    9470.0   11166.1  TYPE=     1  TARGET=   -9470.000
    18.91    18.49  1125.29      .00      .00  1126.82     1.53      .28      .02  1113.40
  205000.   81960.   94601.   28439.    9730.    8280.    3361.    4843.     268.  1113.40
      .28     8.42    11.43     8.46     .035     .035     .035     .000  1106.80  9470.00
  .001516     200.     200.     190.        2        0        0      .00  1590.02 11156.50


FLOW DISTRIBUTION FOR SECNO=     18.91          CWSEL=   1125.29

STA=    9470.   10090.   10108.   10235.   10390.   10409.   10862.   11133.   11157.
  PER Q=     30.6       .3       .5      7.7      1.0     46.1     13.5       .3
   AREA=   7370.1    108.1    180.2   1842.5    229.4   8279.6   3220.3    140.9
    VEL=      8.5      4.8      5.2      8.6      8.6     11.4      8.6      5.0
```

```
  SECNO    DEPTH    CWSEL    CRIWS    WSELK    EG       HV       HL       OLOSS   BANK ELEV
  Q        QLOB     QCH      QROB     ALOB     ACH      AROB     VOL      TWA   LEFT/RIGHT
  TIME     VLOB     VCH      VROB     XNL      XNCH     XNR      WTN      ELMIN      SSTA
  SLOPE    XLOBL    XLCH     XLOBR    ITRIAL   IDC      ICONT    CORAR    TOPWID     ENDST


*SECNO 18.947

3265 DIVIDED FLOW


3301 HV CHANGED MORE THAN HVINS


3470 ENCROACHMENT STATIONS=    9555.0   11326.2  TYPE=     1  TARGET=   -9555.000
    18.95    17.73  1125.23      .00      .00  1127.36     2.13      .36      .18  1114.30
  205000.   58800.  106156.   40044.    6272.    7898.    4112.    4933.     275.   1114.30
      .28     9.38    13.44     9.74     .035     .035     .035     .000  1107.50  9555.00
  .002222     200.     200.     190.        2        0        0      .00  1468.65 11314.86


FLOW DISTRIBUTION FOR SECNO=     18.95          CWSEL=  1125.23

STA=    9555.   10073.   10160.   10477.   10928.   11293.   11315.
  PER Q=     26.8      1.5       .4     51.8     19.2       .3
   AREA=   5661.1    485.4    124.8   7897.9   3992.3    119.4
    VEL=      9.7      6.3      5.8     13.4      9.9      5.8

*SECNO 18.987

3301 HV CHANGED MORE THAN HVINS


3470 ENCROACHMENT STATIONS=    9432.0   11501.6  TYPE=     1  TARGET=   -9432.000
    18.99    18.46  1126.76      .00      .00  1127.78     1.02      .31      .11  1115.20
  205000.   86579.   79104.   39318.   12478.    8233.    5577.    5037.     283.   1115.20
      .29     6.94     9.61     7.05     .035     .035     .035     .000  1108.30  9432.00
  .001076     200.     210.     200.        3        0        0      .00  2059.69 11491.69


FLOW DISTRIBUTION FOR SECNO=     18.99          CWSEL=  1126.76

STA=    9432.   10180.   10250.   10300.   10350.   10420.   10546.   10998.   11469.   11492.
  PER Q=     29.7      2.4      1.3      1.3      2.4      5.1     38.6     18.9       .3
   AREA=   8646.3    732.1    453.0    453.0    732.1   1461.1   8233.2   5443.2    134.0
    VEL=      7.0      6.7      6.1      6.1      6.7      7.1      9.6      7.1      4.2

*SECNO 19.027
```

```
  SECNO    DEPTH    CWSEL    CRIWS    WSELK    EG       HV       HL       OLOSS   BANK ELEV
  Q        QLOB     QCH      QROB     ALOB     ACH      AROB     VOL      TWA   LEFT/RIGHT
  TIME     VLOB     VCH      VROB     XNL      XNCH     XNR      WTN      ELMIN      SSTA
  SLOPE    XLOBL    XLCH     XLOBR    ITRIAL   IDC      ICONT    CORAR    TOPWID     ENDST


3470 ENCROACHMENT STATIONS=    9408.0   11637.0  TYPE=     1  TARGET=   -9408.000
    19.03    18.07  1127.07      .00      .00  1128.00      .93      .21      .01  1116.00
  205000.   89795.   74582.   40623.   13371.    8066.    6063.    5162.     293.   1116.00
      .30     6.72     9.25     6.70     .035     .035     .035     .000  1109.00  9408.00
  .001026     200.     210.     200.        2        0        0      .00  2218.17 11626.17


FLOW DISTRIBUTION FOR SECNO=     19.03          CWSEL=   1127.07

STA=    9408.   10616.   11068.   11604.   11626.
  PER Q=     43.8     36.4     19.6       .2
   AREA=  13370.9   8066.0   5940.9    122.2
    VEL=      6.7      9.2      6.8      3.9

*SECNO 19.066

3470 ENCROACHMENT STATIONS=    9383.0   11726.3  TYPE=     1  TARGET=   -9383.000
    19.07    17.57  1127.27      .00      .00  1128.23      .96      .22      .01  1116.90
  205000.   90985.   74440.   39575.   13514.    7847.    5892.    5290.     304.   1116.90
      .31     6.73     9.49     6.72     .035     .035     .035     .000  1109.70  9383.00
  .001122     200.     210.     200.        1        0        0      .00  2332.46 11715.46


FLOW DISTRIBUTION FOR SECNO=     19.07          CWSEL=   1127.27

STA=    9383.   10685.   11137.   11695.   11715.
  PER Q=     44.4     36.3     19.1       .2
   AREA=  13513.7   7847.1   5783.9    107.7
    VEL=      6.7      9.5      6.8      4.0

*SECNO 19.106

3470 ENCROACHMENT STATIONS=    9360.0   11800.6  TYPE=     1  TARGET=   -9360.000
    19.11    16.97  1127.47      .00      .00  1128.49     1.01      .24      .02  1117.80
  205000.   92405.   74743.   37852.   13502.    7583.    5545.    5415.     315.   1117.80
      .31     6.84     9.86     6.83     .035     .035     .035     .000  1110.50  9360.00
  .001271     200.     210.     200.        1        0        0      .00  2429.71 11789.71


FLOW DISTRIBUTION FOR SECNO=     19.11          CWSEL=   1127.47

STA=    9360.   10755.   11207.   11770.   11790.
  PER Q=     45.1     36.5     18.3       .2
   AREA=  13501.7   7582.6   5450.1     94.4
    VEL=      6.8      9.9      6.9      4.0
```

```
  SECNO    DEPTH    CWSEL    CRIWS    WSELK    EG       HV       HL       OLOSS   BANK ELEV
  Q        QLOB     QCH      QROB     ALOB     ACH      AROB     VOL      TWA   LEFT/RIGHT
  TIME     VLOB     VCH      VROB     XNL      XNCH     XNR      WTN      ELMIN      SSTA
  SLOPE    XLOBL    XLCH     XLOBR    ITRIAL   IDC      ICONT    CORAR    TOPWID     ENDST


*SECNO 19.146

3470 ENCROACHMENT STATIONS=    9328.0   11869.9  TYPE=     1  TARGET=   -9328.000
    19.15    16.52  1127.72      .00      .00  1128.77     1.05      .27      .01  1118.60
  205000.   94157.   74886.   35957.   13638.    7379.    5221.    5538.     326.   1118.60
      .32     6.90    10.15     6.89     .035     .035     .035     .000  1111.20  9328.00
  .001399     200.     210.     200.        0        0        0      .00  2530.97 11858.97


FLOW DISTRIBUTION FOR SECNO=     19.15         CWSEL=   1127.72

STA=    9328.   10824.   11277.   11841.   11859.
  PER Q=     45.9     36.5     17.4       .2
   AREA=  13638.0   7378.8   5138.6     82.8
    VEL=      6.9     10.1      6.9      4.1

*SECNO 19.186

3470 ENCROACHMENT STATIONS=    9304.0   11941.7  TYPE=     1  TARGET=   -9304.000
    19.19    16.06  1127.96      .00      .00  1129.10     1.14      .30      .02  1119.50
  205000.   94518.   76351.   34130.   13450.    7176.    4869.    5659.     338.   1119.50
      .33     7.03    10.64     7.01     .035     .035     .035     .000  1111.90  9304.00
  .001599     200.     210.     200.        2        0        0      .00  2626.86 11930.86


FLOW DISTRIBUTION FOR SECNO=     19.19         CWSEL=   1127.96

STA=    9304.   10893.   11347.   11914.   11931.
  PER Q=     46.1     37.2     16.5       .1
   AREA=  13450.4   7175.7   4798.0     71.3
    VEL=      7.0     10.6      7.1      4.1

*SECNO 19.225

3470 ENCROACHMENT STATIONS=    9224.0   12007.1  TYPE=     1  TARGET=   -9224.000
    19.23    15.57  1128.27      .00      .00  1129.46     1.19      .34      .02  1120.40
  205000.   96796.   76450.   31753.   13680.    6949.    4500.    5777.     351.   1120.40
      .33     7.08    11.00     7.06     .035     .035     .035     .000  1112.70  9224.00
  .001785     200.     210.     200.        0        0        0      .00  2772.40 11996.40


FLOW DISTRIBUTION FOR SECNO=     19.23         CWSEL=   1128.27

STA=    9224.   10963.   11417.   11981.   11996.
  PER Q=     47.2     37.3     15.4       .1
   AREA=  13679.8   6949.1   4437.7     62.2
    VEL=      7.1     11.0      7.1      4.2
```

```
  SECNO    DEPTH    CWSEL    CRIWS    WSELK    EG       HV       HL       OLOSS   BANK ELEV
  Q        QLOB     QCH      QROB     ALOB     ACH      AROB     VOL      TWA   LEFT/RIGHT
  TIME     VLOB     VCH      VROB     XNL      XNCH     XNR      WTN      ELMIN      SSTA
  SLOPE    XLOBL    XLCH     XLOBR    ITRIAL   IDC      ICONT    CORAR    TOPWID     ENDST


*SECNO 19.265

3470 ENCROACHMENT STATIONS=    9160.0   12074.2  TYPE=     1  TARGET=   -9160.000
    19.26    15.20  1128.60      .00      .00  1129.87     1.27      .39      .02  1121.30
  205000.   98033.   76412.   30554.   13654.    6630.    4267.    5892.     364.  1121.30
      .34     7.18    11.52     7.16     .035     .035     .035     .000  1113.40  9160.00
  .002027     200.     210.     200.        1        0        0      .00  2903.75 12063.75


FLOW DISTRIBUTION FOR SECNO=     19.26          CWSEL=   1128.60

STA=    9160.   11028.   11473.   12049.   12064.
  PER Q=     47.8     37.3     14.8       .1
   AREA=  13654.5   6630.3   4213.1     53.9
    VEL=      7.2     11.5      7.2      4.2

*SECNO 19.303

3470 ENCROACHMENT STATIONS=    8980.0   12145.2  TYPE=     1  TARGET=   -8980.000
    19.30    14.81  1129.01      .00      .00  1130.30     1.29      .42      .01  1122.10
  210000.  104391.   74820.   30789.   14459.    6337.    4275.    6006.     378.  1122.10
      .35     7.22    11.81     7.20     .035     .035     .035     .000  1114.20  8980.00
  .002207     200.     200.     200.        2        0        0      .00  3155.05 12135.05


FLOW DISTRIBUTION FOR SECNO=     19.30          CWSEL=   1129.01

STA=    8980.   11073.   11509.   12121.   12135.
  PER Q=     49.7     35.6     14.6       .1
   AREA=  14458.7   6337.5   4227.3     47.5
    VEL=      7.2     11.8      7.2      4.2

*SECNO 19.348

3301 HV CHANGED MORE THAN HVINS


3470 ENCROACHMENT STATIONS=    9007.0   12245.0  TYPE=     1  TARGET=   -9007.000
    19.35    14.20  1129.20      .00      .00  1131.03     1.83      .57      .16  1127.00
  210000.  100239.   85197.   24564.   12288.    6075.    3361.    6115.     392.  1127.00
      .35     8.16    14.02     7.31     .035     .035     .035     .000  1115.00  9007.00
  .003430     180.     240.     225.        2        0        0      .00  3225.61 12232.61
```

SECNO	DEPTH	CWSEL	CRIWS	WSELK	EG	HV	HL	OLOSS	BANK ELEV
Q	QLOB	QCH	QROB	ALOB	ACH	AROB	VOL	TWA	LEFT/RIGHT
TIME	VLOB	VCH	VROB	XNL	XNCH	XNR	WTN	ELMIN	SSTA
SLOPE	XLOBL	XLCH	XLOBR	ITRIAL	IDC	ICONT	CORAR	TOPWID	ENDST

FLOW DISTRIBUTION FOR SECNO= 19.35 CWSEL= 1129.20

STA=	9007.	10760.	11096.	11544.	11980.	12220.	12233.
PER Q=	43.4	4.4	40.6	5.7	6.0	.1	
AREA=	10875.1	1412.5	6075.3	1832.8	1488.9	39.1	
VEL=	8.4	6.5	14.0	6.5	8.4	4.9	

SPECIAL BRIDGE

5227 DOWNSTREAM ELEV IS 1127.00 ,NOT 1129.20 HYDRAULIC JUMP OCCURS DOWNSTREAM (IF LOW FLOW CONTROLS)

SB	XK	XKOR	COFQ	RDLEN	BWC	BWP	BAREA	SS	ELCHU	ELCHD
	1.05	1.50	2.50	3000.00	3339.00	263.00	40000.00	.00	1123.50	1123.00

*SECNO 19.363

3301 HV CHANGED MORE THAN HVINS

CLASS B LOW FLOW

3420 BRIDGE W.S.= 1128.50 BRIDGE VELOCITY=, 13.01 CALCULATED CHANNEL AREA=, 15375.

EGPRS	EGLWC	H3	QWEIR	QLOW	BAREA	TRAPEZOID AREA	ELLC	ELTRD
.00	1131.52	.00	0.	210000.	40000.	38450.	1136.00	1143.00

3495 OVERBANK AREA ASSUMED NON-EFFECTIVE,ELLEA= 1136.00 ELREA= 1143.00

19.36	7.34	1130.34	.00	.00	1131.52	1.18	.49	.00	1143.00
210000.	0.	210000.	0.	0.	24071.	0.	6156.	398.	1143.00
.35	.00	8.72	.00	.000	.035	.000	.000	1123.00	8574.36
.002982	78.	78.	78.	0	0	0	.00	3292.57	11866.93

FLOW DISTRIBUTION FOR SECNO= 19.36 CWSEL= 1130.34

STA=	8574.	11900.
PER Q=	100.0	
AREA=	24070.5	
VEL=	8.7	

```
  SECNO    DEPTH    CWSEL    CRIWS    WSELK    EG       HV       HL       OLOSS   BANK ELEV
  Q        QLOB     QCH      QROB     ALOB     ACH      AROB     VOL      TWA   LEFT/RIGHT
  TIME     VLOB     VCH      VROB     XNL      XNCH     XNR      WTN      ELMIN      SSTA
  SLOPE    XLOBL    XLCH     XLOBR    ITRIAL   IDC      ICONT    CORAR    TOPWID     ENDST


*SECNO 19.381
CHIMP CLSTA=  10300.00 CELCH=   1123.60 BW=   2000.00 STCHL=   9315.00 STCHR=  11741.00
EXCAVATION DATA
AEX=*********SQ-FT     VEXR=       .0K*CU-YD     VEXT=        .0K*CU-YD


3470 ENCROACHMENT STATIONS=    8924.0   12330.0  TYPE=     1  TARGET=   -8924.000
    19.38    18.11  1131.31      .00      .00  1132.07      .76      .51      .04  1123.60
  210000.   30936.  154190.   24874.    4331.   21543.    4357.    6308.     417.   1122.80
      .36     7.14     7.16     5.71     .040     .035     .040     .000  1113.20  8924.00
  .001546     160.     250.     260.        2        0        0      .00  3398.41 12322.41


FLOW DISTRIBUTION FOR SECNO=     19.38          CWSEL=   1131.31

STA=    8924.    9021.    9140.    9315.   11741.   11894.   12136.   12322.
  PER Q=      3.6      5.2      5.8     73.4      4.5      4.8      2.6
   AREA=   1109.4   1435.1   1786.6  21543.3   1449.5   1798.6   1108.8
    VEL=      6.9      7.7      6.9      7.2      6.5      5.6      4.9

*SECNO 19.446
CHIMP CLSTA=  10275.00 CELCH=   1124.30 BW=   2250.00 STCHL=   9167.00 STCHR=  11807.00
EXCAVATION DATA
AEX=*********SQ-FT     VEXR=-172577.8K*CU-YD     VEXT= -172577.8K*CU-YD


3470 ENCROACHMENT STATIONS=    8860.0   12460.0  TYPE=     1  TARGET=   -8860.000
    19.45    17.26  1131.66      .00      .00  1132.57      .91      .45      .04  1124.30
  210000.    4953.  175007.   30040.     975.   22222.    4628.    6481.     437.   1122.00
      .37     5.08     7.88     6.49     .040     .035     .040     .000  1114.40  8953.87
  .002010     170.     265.     280.        2        0        0      .00  3495.11 12448.97


FLOW DISTRIBUTION FOR SECNO=     19.45          CWSEL=   1131.66

STA=    8954.    9167.   11807.   11895.   11994.   12214.   12430.   12449.
  PER Q=      2.4     83.3      3.7      3.3      4.2      3.0       .1
   AREA=    974.8  22221.9    951.6    928.9   1476.2   1212.2     59.4
    VEL=      5.1      7.9      8.1      7.4      6.0      5.3      3.4

*SECNO 19.537
CHIMP CLSTA=  10325.00 CELCH=   1125.60 BW=   2150.00 STCHL=   9263.89 STCHR=  12262.90
```

```
  SECNO    DEPTH    CWSEL    CRIWS    WSELK    EG       HV       HL       OLOSS   BANK ELEV
  Q        QLOB     QCH      QROB     ALOB     ACH      AROB     VOL      TWA   LEFT/RIGHT
  TIME     VLOB     VCH      VROB     XNL      XNCH     XNR      WTN      ELMIN      SSTA
  SLOPE    XLOBL    XLCH     XLOBR    ITRIAL   IDC      ICONT    CORAR    TOPWID     ENDST


EXCAVATION DATA
AEX=*********SQ-FT     VEXR= -58776.2K*CU-YD     VEXT= -231354.0K*CU-YD


3265 DIVIDED FLOW

3280 CROSS SECTION     19.54 EXTENDED      2.83 FEET


3470 ENCROACHMENT STATIONS=    8757.0   12577.0  TYPE=     1  TARGET=   -8757.000
    19.54    15.63  1132.63      .00      .00  1133.57      .94      .99      .01  1125.60
  210000.    9455.  194863.    5683.    1745.   24537.    1200.    6784.     476.   1127.60
      .39     5.42     7.94     4.73     .040     .035     .040     .000  1117.00  8931.96
  .002123     400.     480.     500.        2        0        0      .00  3621.82 12577.00


FLOW DISTRIBUTION FOR SECNO=     19.54          CWSEL=   1132.63

STA=    8932.    9245.    9264.   12263.   12577.
  PER Q=      4.0       .5     92.8      2.7
   AREA=   1589.9    154.7  24537.0   1200.4
    VEL=      5.3      6.8      7.9      4.7

*SECNO 19.563
CHIMP CLSTA=  10400.00 CELCH=   1126.00 BW=   2400.00 STCHL=   8736.00 STCHR=  12417.70
EXCAVATION DATA
AEX=*********SQ-FT     VEXR=  67598.1K*CU-YD     VEXT= -163755.9K*CU-YD

3280 CROSS SECTION     19.56 EXTENDED       .72 FEET


3470 ENCROACHMENT STATIONS=    8736.0   12417.7  TYPE=     1  TARGET=   -8736.000
    19.56    13.02  1132.92      .00      .00  1133.88      .96      .31      .01 47526.00
  210000.       0.  210000.       0.       0.   26660.       0.    6871.     488.  82896.02
      .40      .00     7.88      .00     .040     .035     .040     .000  1119.90  8925.06
  .002294     130.     140.     150.        0        0        0      .00  3492.64 12417.70


FLOW DISTRIBUTION FOR SECNO=     19.56          CWSEL=   1132.92

STA=    8925.   12418.
  PER Q=    100.0
   AREA=  26659.7
    VEL=      7.9
```

```
  SECNO    DEPTH    CWSEL    CRIWS    WSELK    EG       HV       HL       OLOSS   BANK ELEV
  Q        QLOB     QCH      QROB     ALOB     ACH      AROB     VOL      TWA   LEFT/RIGHT
  TIME     VLOB     VCH      VROB     XNL      XNCH     XNR      WTN      ELMIN      SSTA
  SLOPE    XLOBL    XLCH     XLOBR    ITRIAL   IDC      ICONT    CORAR    TOPWID     ENDST


*SECNO 19.579
CHIMP CLSTA=  10377.00 CELCH=   1126.30 BW=   2325.00 STCHL=   9214.48 STCHR=  12250.30
EXCAVATION DATA
AEX=*********SQ-FT     VEXR=  38957.5K*CU-YD     VEXT= -124798.3K*CU-YD

3280 CROSS SECTION     19.58 EXTENDED      1.06 FEET


3470 ENCROACHMENT STATIONS=    8726.0   12594.8  TYPE=     1  TARGET=   -8726.000
    19.58    13.06  1133.06      .00      .00  1134.09     1.03      .19      .02  1128.16
  210000.    9621.  198033.    2345.    1659.   23871.     693.    6920.     494.   1130.00
      .40     5.80     8.30     3.39     .040     .035     .040     .000  1120.00  8899.45
  .002445      70.      80.      90.        2        0        0      .00  3695.35 12594.80


FLOW DISTRIBUTION FOR SECNO=     19.58          CWSEL=   1133.06

STA=    8899.    9173.    9214.   12250.   12595.
  PER Q=      3.9       .7     94.3      1.1
   AREA=   1419.3    240.1  23870.6    692.8
    VEL=      5.8      6.0      8.3      3.4

*SECNO 19.618
CHIMP CLSTA=   9945.00 CELCH=   1126.90 BW=   1690.00 STCHL=   9134.98 STCHR=  10795.52
EXCAVATION DATA
AEX=*********SQ-FT     VEXR= 115427.0K*CU-YD     VEXT=   -9371.3K*CU-YD


3470 ENCROACHMENT STATIONS=    8697.0   12550.9  TYPE=     1  TARGET=   -8697.000
    19.62    16.38  1133.48      .00      .00  1134.75     1.27      .58      .07  1126.90
  210000.   10882.   91376.  107742.    1569.   10956.   11052.    7041.     512.   1129.66
      .40     6.93     8.34     9.75     .040     .035     .040     .000  1117.10  8834.76
  .003119     200.     210.     220.        2        0        0      .00  3660.29 12495.05


FLOW DISTRIBUTION FOR SECNO=     19.62          CWSEL=   1133.48

STA=    8835.    9119.    9135.   10796.   11031.   11516.   11617.   11681.   11818.   11948.   12049.   12134.   12176.
  PER Q=      4.7       .5     43.5      3.2      3.3      4.2      3.4      6.8      8.5      9.1      8.3      3.4
   AREA=   1449.1    120.4  10956.2   1117.1   1277.4    949.7    699.6   1439.4   1610.9   1521.4   1337.6    597.5
    VEL=      6.8      8.0      8.3      5.9      5.4      9.2     10.2     10.0     11.1     12.6     13.1     12.1
STA=   12176.   12495.
  PER Q=      1.0
   AREA=    500.8
    VEL=      4.2
```

```
  SECNO    DEPTH    CWSEL    CRIWS    WSELK    EG       HV       HL       OLOSS   BANK ELEV
  Q        QLOB     QCH      QROB     ALOB     ACH      AROB     VOL      TWA   LEFT/RIGHT
  TIME     VLOB     VCH      VROB     XNL      XNCH     XNR      WTN      ELMIN      SSTA
  SLOPE    XLOBL    XLCH     XLOBR    ITRIAL   IDC      ICONT    CORAR    TOPWID     ENDST


*SECNO 19.659
CHIMP CLSTA=   9900.00 CELCH=   1127.60 BW=   1600.00 STCHL=   8670.00 STCHR=  10700.48
EXCAVATION DATA
AEX=*********SQ-FT     VEXR= 130490.5K*CU-YD     VEXT=  121119.2K*CU-YD


3470 ENCROACHMENT STATIONS=    8670.0   12526.3  TYPE=     1  TARGET=   -8670.000
    19.66    20.51  1134.11      .00      .00  1135.45     1.34      .69      .02 44127.60
  210000.       0.   97053.  112947.       0.   12215.   10950.    7159.     531.   1127.84
      .41      .00     7.95    10.31     .040     .035     .040     .000  1113.60  8741.70
  .003054     200.     215.     230.        2        0        0      .00  3695.95 12437.65


FLOW DISTRIBUTION FOR SECNO=     19.66          CWSEL=   1134.11

STA=    8742.   10700.   11504.   11623.   11779.   11877.   11950.   12054.   12092.   12117.   12438.
  PER Q=     46.2      7.0      6.7     11.7      7.7      4.6      6.2      5.3      3.1      1.7
   AREA=  12214.7   2287.6   1354.2   2106.7   1361.4    882.1   1217.6    743.3    457.3    540.3
    VEL=      7.9      6.4     10.4     11.6     11.8     10.9     10.6     14.9     14.2      6.5

*SECNO 19.716
CHIMP CLSTA=   9845.00 CELCH=   1128.20 BW=   1490.00 STCHL=   9109.00 STCHR=  10595.66
EXCAVATION DATA
AEX=*********SQ-FT     VEXR= 175660.5K*CU-YD     VEXT=  296779.8K*CU-YD


3265 DIVIDED FLOW


3470 ENCROACHMENT STATIONS=    8677.0   12514.4  TYPE=     1  TARGET=   -8677.000
    19.72    14.79  1135.09      .00      .00  1136.47     1.38     1.00      .01  1128.20
  210000.   13787.   93295.  102918.    1823.   10374.   10281.    7322.     557.   1131.03
      .42     7.56     8.99    10.01     .040     .035     .040     .000  1120.30  8677.00
  .003367     200.     300.     330.        2        0        0      .00  3557.43 12331.33


FLOW DISTRIBUTION FOR SECNO=     19.72          CWSEL=   1135.09

STA=    8677.    9092.    9109.   10596.   11332.   11419.   11535.   11612.   11680.   11839.   11900.   11969.   12067.
  PER Q=      6.0       .5     44.4      4.4      3.8      3.7      3.6      4.4     13.0      4.6      4.8      5.3
   AREA=   1691.4    131.5  10373.5   1442.4    832.7    916.9    762.3    820.8   2201.1    808.9    861.4   1059.8
    VEL=      7.5      8.4      9.0      6.3      9.7      8.6     10.0     11.4     12.4     12.1     11.6     10.6
STA=   12067.   12331.
  PER Q=      1.3
   AREA=    575.0
    VEL=      4.7
```

```
  SECNO    DEPTH    CWSEL    CRIWS    WSELK    EG       HV       HL       OLOSS   BANK ELEV
  Q        QLOB     QCH      QROB     ALOB     ACH      AROB     VOL      TWA   LEFT/RIGHT
  TIME     VLOB     VCH      VROB     XNL      XNCH     XNR      WTN      ELMIN      SSTA
  SLOPE    XLOBL    XLCH     XLOBR    ITRIAL   IDC      ICONT    CORAR    TOPWID     ENDST


*SECNO 19.759
CHIMP CLSTA=   9780.00 CELCH=   1128.90 BW=   1460.00 STCHL=   9093.87 STCHR=  10512.45
EXCAVATION DATA
AEX=*********SQ-FT     VEXR= 143253.9K*CU-YD     VEXT=  440033.7K*CU-YD


3265 DIVIDED FLOW


3470 ENCROACHMENT STATIONS=    8655.0   12513.3  TYPE=     1  TARGET=   -8655.000
    19.76    16.45  1135.85      .00      .00  1137.25     1.39      .78      .00  1128.90
  210000.   14038.   91691.  104271.    1612.   10131.   10503.    7441.     576.   1130.13
      .43     8.71     9.05     9.93     .040     .035     .040     .000  1119.40  8655.00
  .003308     200.     230.     240.        2        0        0      .00  3488.09 12315.12


FLOW DISTRIBUTION FOR SECNO=     19.76          CWSEL=   1135.85

STA=    8655.    9050.    9094.   10512.   11203.   11300.   11491.   11661.   11767.   11886.   11936.   12220.   12315.
  PER Q=      5.1      1.6     43.7      3.1      4.0      6.0      7.7      9.5     11.3      4.8      3.3       .0
   AREA=   1241.8    370.6  10130.8   1315.3    886.7   1501.0   1645.1   1559.5   1804.9    761.2    981.4     48.1
    VEL=      8.7      8.8      9.1      4.9      9.4      8.4      9.8     12.9     13.1     13.1      7.0      1.5

*SECNO 19.803
CHIMP CLSTA=  10075.00 CELCH=   1129.50 BW=   2050.00 STCHL=   9057.32 STCHR=  11909.50
EXCAVATION DATA
AEX=*********SQ-FT     VEXR= 145446.4K*CU-YD     VEXT=  585480.1K*CU-YD


3265 DIVIDED FLOW


3470 ENCROACHMENT STATIONS=    8636.0   12504.3  TYPE=     1  TARGET=   -8636.000
    19.80    18.49  1136.89      .00      .00  1137.88      .99      .59      .04  1129.50
  210000.   10085.  198227.    1687.    1371.   24679.     538.    7570.     593.   1133.30
      .44     7.36     8.03     3.14     .040     .035     .040     .000  1118.40  8644.71
  .002018     200.     230.     240.        2        0        0      .00  3271.19 12132.59


FLOW DISTRIBUTION FOR SECNO=     19.80          CWSEL=   1136.89

STA=    8645.    8681.    8704.    8950.    9012.    9057.   11910.   12028.   12129.   12133.
  PER Q=       .0       .1       .3      2.9      1.5     94.4       .6       .2       .0
   AREA=     43.5     48.2    143.2    709.3    426.5  24679.3    359.1    177.0      1.6
    VEL=      1.9      2.8      4.9      8.5      7.4      8.0      3.5      2.4      1.0
```

```
  SECNO    DEPTH    CWSEL    CRIWS    WSELK    EG       HV       HL       OLOSS   BANK ELEV
  Q        QLOB     QCH      QROB     ALOB     ACH      AROB     VOL      TWA   LEFT/RIGHT
  TIME     VLOB     VCH      VROB     XNL      XNCH     XNR      WTN      ELMIN      SSTA
  SLOPE    XLOBL    XLCH     XLOBR    ITRIAL   IDC      ICONT    CORAR    TOPWID     ENDST


*SECNO 19.856
CHIMP CLSTA=  10050.00 CELCH=   1130.20 BW=   1900.00 STCHL=   9111.47 STCHR=  11848.60
EXCAVATION DATA
AEX=*********SQ-FT     VEXR= 157333.8K*CU-YD     VEXT=  742813.9K*CU-YD


3265 DIVIDED FLOW


3470 ENCROACHMENT STATIONS=    8637.0   12109.5  TYPE=     1  TARGET=   -8637.000
    19.86    21.89  1137.49      .00      .00  1138.40      .91      .52      .01  1130.20
  210000.   11965.  195279.    2756.    1733.   25186.     662.    7742.     614.   1132.30
      .45     6.90     7.75     4.16     .040     .035     .040     .000  1115.60  8696.83
  .001733     200.     280.     310.        2        0        0      .00  3200.99 12008.53


FLOW DISTRIBUTION FOR SECNO=     19.86          CWSEL=   1137.49

STA=    8697.    8939.    8953.    8988.    9056.    9111.   11849.   11890.   11938.   11996.   12009.
  PER Q=       .0       .2      1.6      2.5      1.3     93.0       .5       .5       .3       .0
   AREA=     59.9    101.3    413.8    715.9    442.2  25186.3    225.6    226.3    190.8     19.3
    VEL=      1.2      4.9      8.2      7.4      6.2      7.8      4.8      4.3      3.5      2.0

*SECNO 19.902
CHIMP CLSTA=   9950.00 CELCH=   1130.80 BW=   1700.00 STCHL=   8646.00 STCHR=  11828.60
EXCAVATION DATA
AEX=*********SQ-FT     VEXR= 124986.8K*CU-YD     VEXT=  867800.8K*CU-YD


3470 ENCROACHMENT STATIONS=    8646.0   12150.1  TYPE=     1  TARGET=   -8646.000
    19.90    19.58  1137.88      .00      .00  1138.86      .98      .44      .02 46530.80
  210000.       0.  208779.    1221.       0.   26192.     347.    7890.     631.   1131.80
      .45      .00     7.97     3.52     .040     .035     .040     .000  1118.30  8855.62
  .001942     200.     240.     250.        2        0        0      .00  3106.27 11961.89


FLOW DISTRIBUTION FOR SECNO=     19.90          CWSEL=   1137.88

STA=    8856.   11829.   11872.   11955.   11962.
  PER Q=     99.4       .4       .2       .0
   AREA=  26192.1    192.1    152.3      2.8
    VEL=      8.0      4.4      2.4       .9
```

```
  SECNO    DEPTH    CWSEL    CRIWS    WSELK    EG       HV       HL       OLOSS   BANK ELEV
  Q        QLOB     QCH      QROB     ALOB     ACH      AROB     VOL      TWA   LEFT/RIGHT
  TIME     VLOB     VCH      VROB     XNL      XNCH     XNR      WTN      ELMIN      SSTA
  SLOPE    XLOBL    XLCH     XLOBR    ITRIAL   IDC      ICONT    CORAR    TOPWID     ENDST


*SECNO 19.943
CHIMP CLSTA=  10275.00 CELCH=   1131.50 BW=   2250.00 STCHL=   9186.66 STCHR=  12259.10
EXCAVATION DATA
AEX=*********SQ-FT     VEXR= 108724.2K*CU-YD     VEXT=  976524.9K*CU-YD


3265 DIVIDED FLOW


3470 ENCROACHMENT STATIONS=    8659.0   12259.1  TYPE=     1  TARGET=   -8659.000
    19.94    17.56  1138.36      .00      .00  1139.26      .90      .40      .01  1131.50
  210000.   10347.  199653.       0.    2268.   25793.       0.    8028.     647.  87041.46
      .46     4.56     7.74      .00     .050     .035     .050     .000  1120.80  8783.26
  .001673     200.     220.     230.        2        0        0      .00  3137.54 11932.83


FLOW DISTRIBUTION FOR SECNO=     19.94          CWSEL=   1138.36

STA=    8783.    8918.    8954.    9023.    9061.    9132.    9187.   12259.
  PER Q=       .1       .4      1.5       .8      1.2       .9     95.1
   AREA=    179.4    208.4    615.6    320.4    538.8    405.3  25793.2
    VEL=      1.7      3.9      5.2      5.0      4.7      4.6      7.7

*SECNO 19.985
CHIMP CLSTA=  10375.00 CELCH=   1132.10 BW=   2250.00 STCHL=   9290.10 STCHR=  12182.90
EXCAVATION DATA
AEX=8768680.0SQ-FT     VEXR=  86191.9K*CU-YD     VEXT= 1062717.0K*CU-YD


3470 ENCROACHMENT STATIONS=    8680.0   12182.9  TYPE=     1  TARGET=   -8680.000
    19.99    14.17  1138.67      .00      .00  1139.75     1.08      .43      .05  1132.10
  210000.   18189.  191811.       0.    3307.   22394.       0.    8162.     663.  69422.14
      .47     5.50     8.57      .00     .050     .035     .050     .000  1124.50  8680.00
  .002394     200.     220.     230.        2        0        0      .00  3281.57 11961.57


FLOW DISTRIBUTION FOR SECNO=     19.99          CWSEL=   1138.67

STA=    8680.    8846.    8875.    8931.    8953.    8997.    9032.    9054.    9240.    9290.   12183.
  PER Q=       .1       .1       .4       .3      1.1       .9       .5      4.3      1.0     91.3
   AREA=     96.6     89.4    224.6    143.9    375.7    300.8    186.2   1525.1    364.5  22393.8
    VEL=      1.3      3.0      3.7      4.9      6.1      6.1      6.1      5.9      5.5      8.6
```

```
  SECNO    DEPTH    CWSEL    CRIWS    WSELK    EG       HV       HL       OLOSS   BANK ELEV
  Q        QLOB     QCH      QROB     ALOB     ACH      AROB     VOL      TWA   LEFT/RIGHT
  TIME     VLOB     VCH      VROB     XNL      XNCH     XNR      WTN      ELMIN      SSTA
  SLOPE    XLOBL    XLCH     XLOBR    ITRIAL   IDC      ICONT    CORAR    TOPWID     ENDST


*SECNO 20.028
CHIMP CLSTA=  10325.00 CELCH=   1132.80 BW=   2150.00 STCHL=   9258.24 STCHR=  12194.90
EXCAVATION DATA
AEX=9802608.0SQ-FT     VEXR=  79099.9K*CU-YD     VEXT= 1141817.0K*CU-YD


3470 ENCROACHMENT STATIONS=    8704.0   12194.9  TYPE=     1  TARGET=   -8704.000
    20.03    13.21  1139.21      .00      .00  1140.32     1.11      .56      .01  1132.80
  210000.   17806.  192194.       0.    3190.   22159.       0.    8294.     680.  80622.84
      .48     5.58     8.67      .00     .050     .035     .050     .000  1126.00  8704.00
  .002526     190.     230.     260.        2        0        0      .00  3255.26 11959.26


FLOW DISTRIBUTION FOR SECNO=     20.03         CWSEL=   1139.21

STA=    8704.    9076.    9215.    9258.   12195.
  PER Q=      3.8      3.7      1.0     91.5
   AREA=   1632.8   1212.9    344.0  22158.8
    VEL=      4.9      6.3      5.9      8.7

*SECNO 20.072
CHIMP CLSTA=  10225.00 CELCH=   1133.40 BW=   2050.00 STCHL=   8739.00 STCHR=  12212.30
EXCAVATION DATA
AEX=*********SQ-FT     VEXR= 101065.8K*CU-YD     VEXT= 1242883.0K*CU-YD


3470 ENCROACHMENT STATIONS=    8739.0   12212.3  TYPE=     1  TARGET=   -8739.000
    20.07    16.04  1139.84      .00      .00  1140.87     1.03      .55      .01 47233.40
  210000.       0.  210000.       0.       0.   25735.       0.    8427.     696.  97363.38
      .48      .00     8.16      .00     .050     .035     .050     .000  1123.80  8739.00
  .002277     190.     230.     260.        2        0        0      .00  3172.47 11911.47


FLOW DISTRIBUTION FOR SECNO=     20.07         CWSEL=   1139.84

STA=    8739.   12212.
  PER Q=    100.0
   AREA=  25734.6
    VEL=      8.2

*SECNO 20.112
CHIMP CLSTA=  10050.00 CELCH=   1134.10 BW=   1700.00 STCHL=   8770.00 STCHR=  10638.10
```

```
  SECNO    DEPTH    CWSEL    CRIWS    WSELK    EG       HV       HL       OLOSS   BANK ELEV
  Q        QLOB     QCH      QROB     ALOB     ACH      AROB     VOL      TWA   LEFT/RIGHT
  TIME     VLOB     VCH      VROB     XNL      XNCH     XNR      WTN      ELMIN      SSTA
  SLOPE    XLOBL    XLCH     XLOBR    ITRIAL   IDC      ICONT    CORAR    TOPWID     ENDST


EXCAVATION DATA
AEX=*********SQ-FT     VEXR= 114855.0K*CU-YD     VEXT= 1357738.0K*CU-YD


3265 DIVIDED FLOW


3470 ENCROACHMENT STATIONS=    8770.0   12445.3  TYPE=     1  TARGET=   -8770.000
    20.11    15.49  1140.49      .00      .00  1141.40      .90      .51      .01 44134.10
  210000.       0.  118059.   91941.       0.   14208.   13849.    8565.     713.   1137.60
      .49      .00     8.31     6.64     .050     .035     .050     .000  1125.00  8770.00
  .002361     190.     210.     260.        2        0        0      .00  3270.18 12194.34


FLOW DISTRIBUTION FOR SECNO=     20.11          CWSEL=   1140.49

STA=    8770.   10854.   11092.   11235.   11343.   11447.   11574.   11752.   11869.   11977.   12194.
  PER Q=      5.0      5.1      3.7      3.7      4.6      3.6      8.1      4.1      5.6       .3
   AREA=   2127.9   1875.2   1268.2   1116.3   1261.5   1171.8   2204.5   1231.9   1455.6    136.3
    VEL=      5.0      5.7      6.2      6.9      7.6      6.4      7.7      7.0      8.1      4.2

*SECNO 20.152
CHIMP CLSTA=   9600.00 CELCH=   1134.70 BW=    700.00 STCHL=   8819.00 STCHR=  10540.30
EXCAVATION DATA
AEX=*********SQ-FT     VEXR= 121178.7K*CU-YD     VEXT= 1478916.0K*CU-YD


3265 DIVIDED FLOW


3470 ENCROACHMENT STATIONS=    8819.0   12505.2  TYPE=     1  TARGET=   -8819.000
    20.15    15.02  1141.02      .00      .00  1141.91      .89      .51      .00 44234.70
  210000.       0.  118631.   91369.       0.   14203.   14357.    8708.     729.   1134.90
      .50      .00     8.35     6.36     .050     .035     .050     .000  1126.00  8819.00
  .002332     190.     210.     230.        2        0        0      .00  3382.08 12350.51


FLOW DISTRIBUTION FOR SECNO=     20.15          CWSEL=   1141.02

STA=    8819.   10540.   10854.   11032.   11268.   11504.   11628.   11739.   11877.   11960.   12084.   12351.
  PER Q=     56.5      6.2      4.3      3.2      4.1      3.9      5.6      6.0      3.0      4.3      3.0
   AREA=  14202.7   2351.5   1503.4   1405.5   1647.0   1228.9   1461.1   1676.0    898.3   1305.2    880.6
    VEL=      8.4      5.5      6.0      4.8      5.3      6.6      8.0      7.6      7.0      6.9      7.0
```

```
  SECNO    DEPTH    CWSEL    CRIWS    WSELK    EG       HV       HL       OLOSS   BANK ELEV
  Q        QLOB     QCH      QROB     ALOB     ACH      AROB     VOL      TWA   LEFT/RIGHT
  TIME     VLOB     VCH      VROB     XNL      XNCH     XNR      WTN      ELMIN      SSTA
  SLOPE    XLOBL    XLCH     XLOBR    ITRIAL   IDC      ICONT    CORAR    TOPWID     ENDST


*SECNO 20.189
CHIMP CLSTA=  10200.00 CELCH=   1135.40 BW=   1800.00 STCHL=   8877.00 STCHR=  10638.90
EXCAVATION DATA
AEX=*********SQ-FT     VEXR= 116868.0K*CU-YD     VEXT= 1595784.0K*CU-YD


3265 DIVIDED FLOW


3470 ENCROACHMENT STATIONS=    8877.0   12490.4  TYPE=     1  TARGET=   -8877.000
    20.19    20.65  1141.55      .00      .00  1142.35      .80      .43      .01 43435.40
  210000.       0.  112894.   97106.       0.   14580.   15090.    8842.     745.   1137.30
      .51      .00     7.74     6.43     .050     .035     .050     .000  1120.90  8877.00
  .001970     200.     200.     200.        2        0        0      .00  3365.32 12396.83


FLOW DISTRIBUTION FOR SECNO=     20.19          CWSEL=   1141.55

STA=    8877.   11072.   11305.   11474.   11742.   11865.   11924.   11972.   12118.   12397.
  PER Q=      5.9      5.5      7.7      6.1      3.7      4.9      4.6      6.8      1.1
   AREA=   2804.1   2044.6   2201.6   2295.3   1242.9   1109.2    982.2   1903.6    506.9
    VEL=      4.4      5.7      7.3      5.6      6.2      9.3      9.8      7.5      4.6

*SECNO 20.231
CHIMP CLSTA=  10375.00 CELCH=   1136.00 BW=   2050.00 STCHL=   8927.00 STCHR=  12361.90
EXCAVATION DATA
AEX=*********SQ-FT     VEXR= 130383.8K*CU-YD     VEXT= 1726168.0K*CU-YD


3470 ENCROACHMENT STATIONS=    8927.0   12361.9  TYPE=     1  TARGET=   -8927.000
    20.23    21.14  1141.94      .00      .00  1142.77      .83      .41      .01 43436.00
  210000.       0.  210000.       0.       0.   28685.       0.    8996.     762.  97326.04
      .52      .00     7.32      .00     .050     .035     .050     .000  1120.80  8927.00
  .001634     190.     220.     260.        2        0        0      .00  3239.00 12166.00


FLOW DISTRIBUTION FOR SECNO=     20.23          CWSEL=   1141.94

STA=    8927.   12362.
  PER Q=    100.0
   AREA=  28685.5
    VEL=      7.3
```

```
  SECNO    DEPTH    CWSEL    CRIWS    WSELK    EG       HV       HL       OLOSS   BANK ELEV
  Q        QLOB     QCH      QROB     ALOB     ACH      AROB     VOL      TWA   LEFT/RIGHT
  TIME     VLOB     VCH      VROB     XNL      XNCH     XNR      WTN      ELMIN      SSTA
  SLOPE    XLOBL    XLCH     XLOBR    ITRIAL   IDC      ICONT    CORAR    TOPWID     ENDST


*SECNO 20.269
CHIMP CLSTA=  10400.00 CELCH=   1136.40 BW=   2000.00 STCHL=   8989.00 STCHR=  12337.80
EXCAVATION DATA
AEX=*********SQ-FT     VEXR= 121064.3K*CU-YD     VEXT= 1847232.0K*CU-YD


3470 ENCROACHMENT STATIONS=    8989.0   12337.8  TYPE=     1  TARGET=   -8989.000
    20.27    17.53  1142.23      .00      .00  1143.15      .92      .36      .03 42236.40
  210000.       0.  210000.       0.       0.   27337.       0.    9125.     777.  94916.38
      .52      .00     7.68      .00     .050     .035     .050     .000  1124.70  8989.00
  .001938     190.     200.     220.        2        0        0      .00  3264.74 12253.74


FLOW DISTRIBUTION FOR SECNO=     20.27          CWSEL=   1142.23

STA=    8989.   12338.
  PER Q=    100.0
   AREA=  27337.4
    VEL=      7.7

*SECNO 20.307
CHIMP CLSTA=  10550.00 CELCH=   1136.70 BW=   1700.00 STCHL=   9067.00 STCHR=  12386.10
EXCAVATION DATA
AEX=6325744.0SQ-FT     VEXR=  85230.3K*CU-YD     VEXT= 1932463.0K*CU-YD


3265 DIVIDED FLOW


3470 ENCROACHMENT STATIONS=    9067.0   12386.1  TYPE=     1  TARGET=   -9067.000
    20.31    16.39  1142.59      .00      .00  1143.57      .97      .40      .02 64436.80
  210000.       0.  210000.       0.       0.   26542.       0.    9248.     792.  99746.66
      .53      .00     7.91      .00     .050     .035     .050     .000  1126.20  9067.00
  .002067     200.     200.     200.        0        0        0      .00  3181.73 12338.73


FLOW DISTRIBUTION FOR SECNO=     20.31          CWSEL=   1142.59

STA=    9067.   12386.
  PER Q=    100.0
   AREA=  26541.9
    VEL=      7.9
```

```
  SECNO    DEPTH    CWSEL    CRIWS    WSELK    EG       HV       HL       OLOSS   BANK ELEV
  Q        QLOB     QCH      QROB     ALOB     ACH      AROB     VOL      TWA   LEFT/RIGHT
  TIME     VLOB     VCH      VROB     XNL      XNCH     XNR      WTN      ELMIN      SSTA
  SLOPE    XLOBL    XLCH     XLOBR    ITRIAL   IDC      ICONT    CORAR    TOPWID     ENDST


*SECNO 20.345
CHIMP CLSTA=  10975.00 CELCH=   1137.10 BW=    950.00 STCHL=     -1.00 STCHR=  12345.00
EXCAVATION DATA
AEX=   1456.0SQ-FT     VEXR=  23434.1K*CU-YD     VEXT= 1955897.0K*CU-YD


3265 DIVIDED FLOW


3470 ENCROACHMENT STATIONS=    9147.0   12345.0  TYPE=     1  TARGET=   -9147.000
    20.34    15.87  1143.07      .00      .00  1143.94      .87      .36      .01100000.00
  210000.       0.  210000.       0.       0.   28045.       0.    9374.     806.  90637.10
      .54      .00     7.49      .00     .050     .035     .050     .000  1127.20  9147.00
  .001617     200.     200.     200.        2        0        0      .00  3031.24 12295.27


FLOW DISTRIBUTION FOR SECNO=     20.34          CWSEL=   1143.07

STA=    9147.   12345.
  PER Q=    100.0
   AREA=  28044.8
    VEL=      7.5

*SECNO 20.383
CHIMP CLSTA=  10937.00 CELCH=   1137.40 BW=    825.00 STCHL=   9806.20 STCHR=  10612.30
EXCAVATION DATA
AEX=   1088.0SQ-FT     VEXR=      9.4K*CU-YD     VEXT= 1955906.0K*CU-YD


3265 DIVIDED FLOW


3470 ENCROACHMENT STATIONS=    9216.0   12402.3  TYPE=     1  TARGET=   -9216.000
    20.38    16.19  1143.39      .00      .00  1144.34      .95      .38      .02  1141.10
  210000.   63194.   67907.   78899.    7963.    7303.   12907.    9503.     820.  1139.30
      .55     7.94     9.30     6.11     .050     .035     .050     .000  1127.20  9216.00
  .002240     200.     200.     200.        2        0        0      .00  2941.07 12246.50


FLOW DISTRIBUTION FOR SECNO=     20.38          CWSEL=   1143.39
```

```
  SECNO    DEPTH    CWSEL    CRIWS    WSELK    EG       HV       HL       OLOSS   BANK ELEV
  Q        QLOB     QCH      QROB     ALOB     ACH      AROB     VOL      TWA   LEFT/RIGHT
  TIME     VLOB     VCH      VROB     XNL      XNCH     XNR      WTN      ELMIN     SSTA
  SLOPE    XLOBL    XLCH     XLOBR    ITRIAL   IDC      ICONT    CORAR    TOPWID    ENDST


STA=    9216.    9308.    9393.    9498.    9622.    9706.    9766.    9806.   11019.   11327.   11497.   11681.   11813.
  PER Q=      4.6      4.9      6.8      5.3      4.2      3.2      1.1      6.4      4.2      4.2      4.4      5.4
   AREA=   1285.2   1232.1   1628.4   1506.3   1111.7    832.0    367.4   2880.5   1877.9   1477.2   1576.0   1550.2
    VEL=      7.5      8.4      8.7      7.5      7.9      8.1      6.4      4.6      4.7      6.0      5.9      7.3
STA=   11813.   11950.   12034.   12247.
  PER Q=      8.2      3.8      1.0
   AREA=   2025.2   1048.8    470.9
    VEL=      8.5      7.5      4.6

*SECNO 20.420
CHIMP CLSTA=  10912.00 CELCH=   1137.80 BW=    675.00 STCHL=   9797.70 STCHR=  10637.90
EXCAVATION DATA
AEX=    736.0SQ-FT     VEXR=      6.8K*CU-YD     VEXT= 1955913.0K*CU-YD


3265 DIVIDED FLOW


3470 ENCROACHMENT STATIONS=    9280.0   12502.8  TYPE=     1  TARGET=   -9280.000
    20.42    15.70  1143.80      .00      .00  1144.81     1.01      .45      .02  1139.80
  210000.   55170.   78790.   76040.    6984.    8207.   12101.    9630.     833.   1140.10
     .55     7.90     9.60     6.28     .050     .035     .050     .000  1128.10  9280.00
  .002267     200.     200.     200.        1        0        0      .00  2771.80 12201.66


FLOW DISTRIBUTION FOR SECNO=     20.42          CWSEL=   1143.80

STA=    9280.    9367.    9469.    9530.    9616.    9768.    9798.   11072.   11278.   11391.   11661.   11736.   11797.
  PER Q=      4.9      5.9      3.4      4.2      7.2       .7      6.4      3.3      3.4      7.5      3.9      3.7
   AREA=   1314.2   1473.4    858.2   1120.9   1955.2    262.2   2891.3   1367.3   1110.2   2512.5   1015.1    909.3
    VEL=      7.8      8.4      8.3      7.8      7.8      5.9      4.7      5.1      6.5      6.3      8.1      8.6
STA=   11797.   11919.   12202.
  PER Q=      5.9      2.0
   AREA=   1591.1    704.2
    VEL=      7.8      6.0

*SECNO 20.458
CHIMP CLSTA=  10837.00 CELCH=   1138.10 BW=    525.00 STCHL=   9784.90 STCHR=  10661.80
EXCAVATION DATA
AEX=    544.0SQ-FT     VEXR=      4.7K*CU-YD     VEXT= 1955918.0K*CU-YD
```

```
  SECNO    DEPTH    CWSEL    CRIWS    WSELK    EG       HV       HL       OLOSS   BANK ELEV
  Q        QLOB     QCH      QROB     ALOB     ACH      AROB     VOL      TWA   LEFT/RIGHT
  TIME     VLOB     VCH      VROB     XNL      XNCH     XNR      WTN      ELMIN      SSTA
  SLOPE    XLOBL    XLCH     XLOBR    ITRIAL   IDC      ICONT    CORAR    TOPWID     ENDST


3265 DIVIDED FLOW


3470 ENCROACHMENT STATIONS=    9356.0   12500.6  TYPE=     1  TARGET=   -9356.000
    20.46    15.82  1144.26      .00      .00  1145.22      .96      .41      .01  1137.50
  210000.   49198.   86408.   74394.    6466.    9324.   12300.    9757.     846.   1140.20
      .56     7.61     9.27     6.05     .050     .035     .050     .000  1128.44  9356.00
  .001834     200.     200.     200.        1        0        0      .00  2620.14 12117.82


FLOW DISTRIBUTION FOR SECNO=     20.46          CWSEL=   1144.26

STA=    9356.    9447.    9608.    9750.    9785.   11078.   11169.   11258.   11396.   11537.   11708.   11805.   12118.
  PER Q=     4.8      9.3      8.2      1.2      6.1      3.1      3.3      4.3      4.1      8.4      4.7      1.4
   AREA=  1410.3   2475.3   2185.1    395.2   2981.2   1018.1   1056.6   1467.3   1439.4   2389.1   1341.2    606.9
    VEL=     7.1      7.9      7.9      6.3      4.3      6.4      6.6      6.2      6.0      7.4      7.3      4.8

*SECNO 20.496
CHIMP CLSTA=  10762.00 CELCH=   1138.50 BW=    325.00 STCHL=   9786.90 STCHR=  10647.80
EXCAVATION DATA
AEX=    240.0SQ-FT     VEXR=      2.9K*CU-YD     VEXT= 1955921.0K*CU-YD


3265 DIVIDED FLOW


3470 ENCROACHMENT STATIONS=    9423.0   12500.1  TYPE=     1  TARGET=   -9423.000
    20.50    15.56  1144.56      .00      .00  1145.64     1.07      .38      .03  1138.20
  210000.   43777.   96444.   69780.    5563.    9894.   11392.    9883.     857.   1139.20
      .57     7.87     9.75     6.13     .050     .035     .050     .000  1129.00  9423.00
  .001952     200.     200.     200.        2        0        0      .00  2476.98 11982.72


FLOW DISTRIBUTION FOR SECNO=     20.50          CWSEL=   1144.56

STA=    9423.    9765.    9787.   10896.   11015.   11089.   11291.   11465.   11618.   11699.   11983.
  PER Q=    20.1       .7      3.5      3.7      3.6      4.2      3.9      7.7      4.3      2.4
   AREA=  5322.7    240.1   1670.3   1196.0   1003.7   1656.5   1484.1   2132.3   1155.1   1094.4
    VEL=     7.9      6.1      4.4      6.4      7.5      5.4      5.5      7.6      7.7      4.6

*SECNO 20.534
```

```
  SECNO    DEPTH    CWSEL    CRIWS    WSELK    EG       HV       HL       OLOSS   BANK ELEV
  Q        QLOB     QCH      QROB     ALOB     ACH      AROB     VOL      TWA   LEFT/RIGHT
  TIME     VLOB     VCH      VROB     XNL      XNCH     XNR      WTN      ELMIN      SSTA
  SLOPE    XLOBL    XLCH     XLOBR    ITRIAL   IDC      ICONT    CORAR    TOPWID     ENDST


3265 DIVIDED FLOW


3470 ENCROACHMENT STATIONS=    9482.0   12503.9  TYPE=     1  TARGET=   -9482.000
   20.53    15.05  1144.85      .00      .00  1146.09     1.24      .40      .05  1137.50
  210000.   32108.  111036.   66856.    4244.   10557.   10733.   10003.     868.   1138.70
     .57     7.57    10.52     6.23     .050     .035     .050     .000  1129.80  9482.00
  .002096    200.     200.     200.        2        0        0      .00  2391.98 11979.89


FLOW DISTRIBUTION FOR SECNO=     20.53          CWSEL=   1144.85

STA=    9482.    9586.    9680.    9787.    9794.   10632.   10842.   10906.   11200.   11349.   11502.   11556.   11736.
  PER Q=     4.9      4.9      5.4       .2     52.9      3.7      3.1      6.2      3.4      7.8      3.1      3.4
   AREA=  1416.0   1301.9   1452.9     73.2  10556.5   1506.5    846.9   2346.9   1265.2   2091.1    789.3   1262.3
    VEL=      7.3      7.8      7.7      5.4     10.5      5.2      7.6      5.6      5.7      7.8      8.2      5.6
STA=   11736.   11980.
  PER Q=     1.2
   AREA=   625.3
    VEL=      4.1

CCHV=    .100 CEHV=    .300
*SECNO 20.572

3265 DIVIDED FLOW


3470 ENCROACHMENT STATIONS=    9552.0   12503.8  TYPE=     1  TARGET=   -9552.000
   20.57    16.23  1145.23      .00      .00  1146.50     1.27      .40      .01  1137.90
  210000.   16762.  124229.   69008.    2439.   11699.   11612.   10121.     879.   1136.90
     .58     6.87    10.62     5.94     .050     .035     .050     .000  1129.00  9552.00
  .001915    200.     200.     200.        2        0        0      .00  2362.91 11979.69


FLOW DISTRIBUTION FOR SECNO=     20.57          CWSEL=   1145.23

STA=    9552.    9728.    9739.   10594.   10702.   10829.   11077.   11308.   11376.   11458.   11604.   11859.   11980.
  PER Q=     7.7       .3     59.2      3.2      3.5      5.0      6.7      4.0      4.2      3.1      3.1       .2
   AREA=  2327.9    111.0  11698.7   1092.1   1235.4   2000.3   2306.0   1037.8   1158.9   1110.6   1513.9    156.5
    VEL=      6.9      5.6     10.6      6.1      5.9      5.2      6.1      8.0      7.6      5.8      4.3      2.7
```

```
  SECNO    DEPTH    CWSEL    CRIWS    WSELK    EG       HV       HL       OLOSS   BANK ELEV
  Q        QLOB     QCH      QROB     ALOB     ACH      AROB     VOL      TWA   LEFT/RIGHT
  TIME     VLOB     VCH      VROB     XNL      XNCH     XNR      WTN      ELMIN      SSTA
  SLOPE    XLOBL    XLCH     XLOBR    ITRIAL   IDC      ICONT    CORAR    TOPWID     ENDST


*SECNO 20.610

3265 DIVIDED FLOW


3470 ENCROACHMENT STATIONS=    9605.0   12503.5  TYPE=     1  TARGET=   -9605.000
    20.61    16.66  1145.56      .00      .00  1146.89     1.33      .37      .02  1137.30
  210000.    7809.  135600.   66590.    1167.   12722.   11397.   10238.     890.   1136.60
      .59     6.69    10.66     5.84     .050     .035     .050     .000  1128.90  9605.00
  .001823     200.     200.     200.        2        0        0      .00  2309.65 11971.93


FLOW DISTRIBUTION FOR SECNO=     20.61          CWSEL=   1145.56

STA=    9605.    9691.    9705.   10595.   10740.   10874.   11016.   11132.   11289.   11390.   11650.   11972.
  PER Q=      3.2       .5     64.6      3.6      3.6      4.0      4.9      5.6      4.7      3.7      1.7
   AREA=    999.4    167.9  12721.9   1350.4   1295.8   1419.3   1492.5   1802.3   1368.9   1612.0   1055.6
    VEL=      6.8      6.1     10.7      5.6      5.8      5.9      6.9      6.5      7.2      4.8      3.3

*SECNO 20.648

3265 DIVIDED FLOW


3470 ENCROACHMENT STATIONS=    9685.0   12501.2  TYPE=     1  TARGET=   -9685.000
    20.65    17.08  1145.88      .00      .00  1147.28     1.39      .37      .02100000.00
  210000.       0.  145192.   64808.       0.   13584.   10980.   10353.     901.   1138.60
      .59      .00    10.69     5.90     .050     .035     .050     .000  1128.80  9685.00
  .001833     200.     200.     200.        2        0        0      .00  2230.03 11968.27


FLOW DISTRIBUTION FOR SECNO=     20.65          CWSEL=   1145.88

STA=    9685.   10622.   10736.   10967.   11120.   11184.   11278.   11482.   11857.   11968.
  PER Q=     69.1      3.5      6.9      6.5      3.0      4.4      3.2      3.2       .1
   AREA=  13583.6   1190.7   2396.1   1960.7    871.1   1279.6   1319.5   1827.9    134.2
    VEL=     10.7      6.2      6.1      7.0      7.3      7.3      5.0      3.7      2.3

*SECNO 20.686

3265 DIVIDED FLOW
```

```
  SECNO    DEPTH    CWSEL    CRIWS    WSELK    EG       HV       HL       OLOSS   BANK ELEV
  Q        QLOB     QCH      QROB     ALOB     ACH      AROB     VOL      TWA   LEFT/RIGHT
  TIME     VLOB     VCH      VROB     XNL      XNCH     XNR      WTN      ELMIN      SSTA
  SLOPE    XLOBL    XLCH     XLOBR    ITRIAL   IDC      ICONT    CORAR    TOPWID     ENDST


3301 HV CHANGED MORE THAN HVINS


3470 ENCROACHMENT STATIONS=    9754.0   12501.3  TYPE=     1  TARGET=   -9754.000
   20.69    17.23  1145.93      .00      .00  1147.84     1.90      .41      .15100000.00
  210000.      0.  161280.   48720.      0.   13166.    8647.   10459.     911.   1139.40
     .60      .00    12.25     5.63     .050     .035     .050     .000  1128.70  9754.00
  .002267    200.     200.     200.       2        0        0      .00  2185.77 12049.76


FLOW DISTRIBUTION FOR SECNO=     20.69          CWSEL=   1145.93

STA=    9754.   10623.   10761.   10924.   11009.   11087.   11542.   11848.   12050.
  PER Q=     76.8      4.3      4.9      3.1      3.9      3.8      3.0       .3
   AREA=  13165.5   1354.2   1580.7    937.5   1029.1   1995.3   1532.0    218.4
    VEL=     12.3      6.6      6.5      7.0      7.9      4.0      4.1      2.7

*SECNO 20.723

3265 DIVIDED FLOW


3470 ENCROACHMENT STATIONS=    9797.0   12501.7  TYPE=     1  TARGET=   -9797.000
   20.72    18.57  1146.07      .00      .00  1148.47     2.40      .49      .15100000.00
  210000.      0.  173431.   36569.      0.   12889.    6966.   10555.     921.   1138.90
     .60      .00    13.46     5.25     .050     .035     .050     .000  1127.50  9797.00
  .002603    200.     200.     200.       2        0        0      .00  2120.69 11970.60


FLOW DISTRIBUTION FOR SECNO=     20.72          CWSEL=   1146.07

STA=    9797.   10614.   10797.   10924.   11276.   11777.   11971.
  PER Q=     82.6      5.5      4.2      3.4      3.5       .8
   AREA=  12889.0   1699.8   1256.2   1591.2   1937.4    481.8
    VEL=     13.5      6.8      7.0      4.5      3.8      3.7

*SECNO 20.761

3470 ENCROACHMENT STATIONS=    9831.0   11700.0  TYPE=     1  TARGET=    1869.000
   20.76    19.89  1146.29      .00      .00  1149.17     2.88      .56      .14100000.00
  210000.      0.  184909.   25091.      0.   12853.    4889.   10641.     930.   1137.40
     .61      .00    14.39     5.13     .050     .035     .050     .000  1126.40  9831.00
  .003006    200.     200.     200.       2        0        0      .00  1869.00 11700.00
```

```
  SECNO    DEPTH    CWSEL    CRIWS    WSELK    EG       HV       HL       OLOSS   BANK ELEV
  Q        QLOB     QCH      QROB     ALOB     ACH      AROB     VOL      TWA   LEFT/RIGHT
  TIME     VLOB     VCH      VROB     XNL      XNCH     XNR      WTN      ELMIN      SSTA
  SLOPE    XLOBL    XLCH     XLOBR    ITRIAL   IDC      ICONT    CORAR    TOPWID     ENDST


FLOW DISTRIBUTION FOR SECNO=     20.76         CWSEL=   1146.29

STA=    9831.   10651.   10783.   11030.   11700.
  PER Q=     88.1      4.3      3.7      4.0
   AREA=  12852.9   1239.8   1381.6   2267.3
    VEL=     14.4      7.3      5.6      3.7

*SECNO 20.799

3301 HV CHANGED MORE THAN HVINS


3470 ENCROACHMENT STATIONS=    9844.0   11550.0  TYPE=     1  TARGET=    1706.000
    20.80    20.52  1146.12  1145.01      .00  1150.24     4.12      .69      .37100000.00
  210000.       0.  191794.   18206.       0.   11301.    3598.   10716.     938.   1136.20
      .61      .00    16.97     5.06     .050     .035     .050     .000  1125.60  9844.00
  .004033     200.     200.     200.        6        5        0      .00  1706.00 11550.00


FLOW DISTRIBUTION FOR SECNO=     20.80         CWSEL=   1146.12

STA=    9844.   10539.   10630.   11007.   11550.
  PER Q=     91.3      3.2      3.2      2.3
   AREA=  11301.0    816.0   1418.1   1363.7
    VEL=     17.0      8.2      4.8      3.5

*SECNO 20.837

3301 HV CHANGED MORE THAN HVINS


3470 ENCROACHMENT STATIONS=    9802.0   11450.0  TYPE=     1  TARGET=    1648.000
    20.84    21.55  1147.95      .00      .00  1150.99     3.04      .64      .11100000.00
  210000.       0.  191046.   18954.       0.   13079.    4282.   10790.     946.   1141.40
      .61      .00    14.61     4.43     .050     .035     .050     .000  1126.40  9802.00
  .002636     200.     200.     200.        4        0        0      .00  1648.00 11450.00


FLOW DISTRIBUTION FOR SECNO=     20.84         CWSEL=   1147.95

STA=    9802.   10535.   10665.   10789.   10850.   10941.   10962.   11214.   11220.   11229.   11262.   11400.   11450.
  PER Q=     91.0      2.3      1.7       .6      1.1       .2      2.0       .0       .1       .2       .6       .3
   AREA=  13078.8    890.8    713.3    292.9    486.6    102.4   1042.2     20.7     31.4    116.7    421.8    163.4
    VEL=     14.6      5.5      4.9      4.3      4.7      4.4      3.9      3.4      3.5      3.5      3.2      3.2
```

```
  SECNO    DEPTH    CWSEL    CRIWS    WSELK    EG       HV       HL       OLOSS   BANK ELEV
  Q        QLOB     QCH      QROB     ALOB     ACH      AROB     VOL      TWA   LEFT/RIGHT
  TIME     VLOB     VCH      VROB     XNL      XNCH     XNR      WTN      ELMIN      SSTA
  SLOPE    XLOBL    XLCH     XLOBR    ITRIAL   IDC      ICONT    CORAR    TOPWID     ENDST


*SECNO 20.875

3470 ENCROACHMENT STATIONS=    9770.0   11400.0  TYPE=     1  TARGET=    1630.000
    20.88    21.65  1148.45      .00      .00  1151.52     3.07      .52      .01  1145.40
  210000.      16.  182213.   27771.       8.   12172.    5394.   10870.     953.   1137.50
      .62     1.94    14.97     5.15     .050     .035     .050     .000  1126.80  9770.00
  .002576     200.     200.     200.        3        0        0      .00  1630.00 11400.00


FLOW DISTRIBUTION FOR SECNO=     20.88          CWSEL=   1148.45

STA=    9770.    9773.   10431.   10567.   10771.   11109.   11400.
  PER Q=       .0     86.8      4.5      3.2      4.1      1.5
   AREA=      8.4  12172.3   1346.1   1286.9   1818.3    942.6
    VEL=      1.9     15.0      7.0      5.2      4.7      3.3

*SECNO 20.913

3470 ENCROACHMENT STATIONS=    9760.0   11500.0  TYPE=     1  TARGET=    1740.000
    20.91    22.06  1149.36      .00      .00  1152.08     2.72      .52      .04  1148.60
  210000.       4.  188681.   21315.       3.   13599.    4551.   10952.     961.   1144.40
      .62     1.09    13.87     4.68     .050     .035     .050     .000  1127.30  9760.00
  .002662     200.     200.     200.        2        0        0      .00  1740.00 11500.00


FLOW DISTRIBUTION FOR SECNO=     20.91          CWSEL=   1149.36

STA=    9760.    9765.   10606.   10853.   11082.   11500.
  PER Q=       .0     89.8      3.7      3.4      3.1
   AREA=      3.3  13599.4   1500.7   1385.5   1665.1
    VEL=      1.1     13.9      5.1      5.2      3.9

*SECNO 20.951
3280 CROSS SECTION     20.95 EXTENDED      1.78 FEET


3470 ENCROACHMENT STATIONS=    9393.0   11500.0  TYPE=     1  TARGET=    2107.000

3495 OVERBANK AREA ASSUMED NON-EFFECTIVE,ELLEA=     1150.70 ELREA=     1136.60

    20.95    23.87  1149.57      .00      .00  1152.75     3.17      .53      .14  1150.70
  210000.       0.  158985.   51015.       0.    9896.    8363.   11036.     969.   1136.60
      .63      .00    16.07     6.10     .050     .035     .050     .000  1125.70  9754.45
  .002667     200.     200.     200.        2        0        0      .00  1745.55 11500.00
```

```
  SECNO    DEPTH    CWSEL    CRIWS    WSELK    EG       HV       HL       OLOSS   BANK ELEV
  Q        QLOB     QCH      QROB     ALOB     ACH      AROB     VOL      TWA   LEFT/RIGHT
  TIME     VLOB     VCH      VROB     XNL      XNCH     XNR      WTN      ELMIN      SSTA
  SLOPE    XLOBL    XLCH     XLOBR    ITRIAL   IDC      ICONT    CORAR    TOPWID     ENDST


FLOW DISTRIBUTION FOR SECNO=     20.95         CWSEL=   1149.57

STA=    9754.   10243.   10333.   10510.   10637.   10836.   11061.   11500.
  PER Q=     75.7      4.7      7.3      3.3      3.1      3.1      2.8
   AREA=   9896.3   1164.7   1979.3   1087.2   1254.3   1259.3   1617.7
    VEL=     16.1      8.5      7.7      6.4      5.3      5.1      3.7

*SECNO 20.989
3280 CROSS SECTION     20.99 EXTENDED      2.51 FEET


3301 HV CHANGED MORE THAN HVINS


3470 ENCROACHMENT STATIONS=    9354.0   11400.0  TYPE=     1  TARGET=    2046.000
    20.99    23.40  1150.60      .00      .00  1153.26     2.66      .46      .05  1148.70
  210000.      46.  175366.   34588.      35.   12398.    6898.   11122.     977.   1137.50
      .63     1.29    14.14     5.01     .050     .035     .050     .000  1127.20  9697.91
  .002005     200.     200.     200.        2        0        0      .00  1702.09 11400.00


FLOW DISTRIBUTION FOR SECNO=     20.99         CWSEL=   1150.60

STA=    9698.    9735.   10338.   10440.   10665.   10902.   11276.   11400.
  PER Q=       .0     83.5      4.5      4.4      3.7      3.0       .9
   AREA=     35.3  12397.9   1297.1   1759.1   1597.7   1707.4    536.3
    VEL=      1.3     14.1      7.2      5.2      4.9      3.7      3.4

*SECNO 21.027

3301 HV CHANGED MORE THAN HVINS


3470 ENCROACHMENT STATIONS=    9315.0   11350.0  TYPE=     1  TARGET=    2035.000

3495 OVERBANK AREA ASSUMED NON-EFFECTIVE,ELLEA=     1153.00 ELREA=     1140.50

    21.03    22.71  1150.51      .00      .00  1153.98     3.47      .47      .24  1153.00
  210000.       0.  178369.   31631.       0.   11110.    5965.   11206.     984.   1140.50
      .63      .00    16.05     5.30     .050     .035     .050     .000  1127.80  9720.54
  .002848     200.     200.     200.        2        0        0      .00  1629.46 11350.00
```

```
  SECNO    DEPTH    CWSEL    CRIWS    WSELK    EG       HV       HL       OLOSS   BANK ELEV
  Q        QLOB     QCH      QROB     ALOB     ACH      AROB     VOL      TWA   LEFT/RIGHT
  TIME     VLOB     VCH      VROB     XNL      XNCH     XNR      WTN      ELMIN      SSTA
  SLOPE    XLOBL    XLCH     XLOBR    ITRIAL   IDC      ICONT    CORAR    TOPWID     ENDST


FLOW DISTRIBUTION FOR SECNO=     21.03          CWSEL=   1150.51

STA=    9721.   10300.   10533.   10764.   11013.   11350.
  PER Q=     84.9      5.4      3.2      3.4      3.1
   AREA=  11109.9   1809.3   1266.1   1386.1   1503.0
    VEL=     16.1      6.3      5.2      5.2      4.3

*SECNO 21.064

3265 DIVIDED FLOW


3301 HV CHANGED MORE THAN HVINS


3470 ENCROACHMENT STATIONS=    9273.0   11300.0  TYPE=     1  TARGET=    2027.000
    21.06    24.40  1152.50      .00      .00  1154.51     2.01      .39      .15  1151.80
  210000.       3.  177097.   32900.       8.   14487.    7244.   11295.     992.   1139.20
      .64      .35    12.22     4.54     .050     .035     .050     .000  1128.10  9327.93
  .001388     200.     200.     200.        3        0        0      .00  1644.01 11300.00


FLOW DISTRIBUTION FOR SECNO=     21.06          CWSEL=   1152.50

STA=    9328.    9713.   10377.   10544.   10744.   10964.   11273.   11300.
  PER Q=       .0     84.3      5.3      4.1      3.0      3.1       .2
   AREA=      7.6  14487.5   1944.0   1791.3   1563.2   1792.7    152.9
    VEL=       .4     12.2      5.7      4.8      4.1      3.6      3.1

*SECNO 21.102

3301 HV CHANGED MORE THAN HVINS


3470 ENCROACHMENT STATIONS=    9234.0   11200.0  TYPE=     1  TARGET=    1966.000
    21.10    26.31  1153.31      .00      .00  1154.80     1.49      .24      .05  1143.80
  210000.   10987.  168958.   30055.    2715.   15763.    7073.   11404.    1000.   1140.30
      .65     4.05    10.72     4.25     .050     .035     .050     .000  1127.00  9303.53
  .001040     200.     200.     200.        2        0        0      .00  1896.47 11200.00


FLOW DISTRIBUTION FOR SECNO=     21.10          CWSEL=   1153.31

STA=    9304.    9567.    9699.   10411.   10677.   10903.   11200.
  PER Q=      3.7      1.5     80.5      7.2      3.9      3.2
   AREA=   1828.9    886.3  15762.7   3078.8   2008.7   1985.6
    VEL=      4.3      3.5     10.7      4.9      4.1      3.4
```

```
  SECNO    DEPTH    CWSEL    CRIWS    WSELK    EG       HV       HL       OLOSS   BANK ELEV
  Q        QLOB     QCH      QROB     ALOB     ACH      AROB     VOL      TWA   LEFT/RIGHT
  TIME     VLOB     VCH      VROB     XNL      XNCH     XNR      WTN      ELMIN      SSTA
  SLOPE    XLOBL    XLCH     XLOBR    ITRIAL   IDC      ICONT    CORAR    TOPWID     ENDST


CCHV=    .100 CEHV=    .300
*SECNO 21.202

3470 ENCROACHMENT STATIONS=    9700.0   11100.0  TYPE=     1  TARGET=    1400.000
    21.20    21.66  1153.66      .00      .00  1155.30     1.64      .46      .05  1150.00
  210000.       0.  201461.    8539.       0.   19247.    2538.   11683.    1019.   1145.00
      .66      .00    10.47     3.36     .045     .027     .045     .000  1132.00  9700.00
  .000756     560.     528.     450.        2        0        0      .00  1400.00 11100.00


FLOW DISTRIBUTION FOR SECNO=     21.20         CWSEL=   1153.66

STA=    9700.   10750.   11100.
  PER Q=     95.9      4.1
   AREA=  19247.1   2538.4
    VEL=     10.5      3.4

*SECNO 21.302

3470 ENCROACHMENT STATIONS=    9590.0   11000.0  TYPE=     1  TARGET=    1410.000
    21.30    21.49  1154.49      .00      .00  1155.67     1.18      .32      .05  1150.00
  210000.      70.  205292.    4638.      44.   23318.    1539.   11962.    1036.   1145.00
      .68     1.57     8.80     3.01     .045     .027     .045     .000  1133.00  9590.00
  .000503     600.     528.     440.        2        0        0      .00  1410.00 11000.00


FLOW DISTRIBUTION FOR SECNO=     21.30         CWSEL=   1154.49

STA=    9590.    9600.   10820.   11000.
  PER Q=       .0     97.8      2.2
   AREA=     44.4  23318.1   1539.5
    VEL=      1.6      8.8      3.0

*SECNO 21.402

3470 ENCROACHMENT STATIONS=    9590.0   11050.0  TYPE=     1  TARGET=    1460.000

3495 OVERBANK AREA ASSUMED NON-EFFECTIVE,ELLEA=     1150.00 ELREA=   100000.00

    21.40    20.77  1154.77      .00      .00  1155.96     1.19      .29      .00  1150.00
  210000.      82.  209918.       0.      47.   23944.       0.   12258.    1053. 100000.00
      .69     1.75     8.77      .00     .045     .027     .045     .000  1134.00  9590.00
  .000591     540.     528.     500.        2        0        0      .00  1435.09 11025.09
```

```
  SECNO    DEPTH    CWSEL    CRIWS    WSELK    EG       HV       HL       OLOSS   BANK ELEV
  Q        QLOB     QCH      QROB     ALOB     ACH      AROB     VOL      TWA   LEFT/RIGHT
  TIME     VLOB     VCH      VROB     XNL      XNCH     XNR      WTN      ELMIN      SSTA
  SLOPE    XLOBL    XLCH     XLOBR    ITRIAL   IDC      ICONT    CORAR    TOPWID     ENDST


FLOW DISTRIBUTION FOR SECNO=     21.40          CWSEL=   1154.77

STA=    9590.    9600.   11050.
  PER Q=       .0    100.0
   AREA=     47.2  23943.9
    VEL=      1.7      8.8

*SECNO 21.502

3470 ENCROACHMENT STATIONS=    9310.0   11020.0  TYPE=     1  TARGET=    1710.000

3495 OVERBANK AREA ASSUMED NON-EFFECTIVE,ELLEA=     1150.00 ELREA=   100000.00

    21.50    20.37  1155.37      .00      .00  1156.26      .89      .27      .03  1150.00
  210000.       85.  209915.       0.      53.   27751.       0.   12571.    1072. 100000.00
      .71     1.60     7.56      .00     .045     .027     .045     .000  1135.00  9310.00
  .000445     550.     528.     500.        2        0        0      .00  1677.15 10987.15


FLOW DISTRIBUTION FOR SECNO=     21.50          CWSEL=   1155.37

STA=    9310.    9320.   11020.
  PER Q=       .0    100.0
   AREA=     52.9  27751.1
    VEL=      1.6      7.6

CCHV=    .300 CEHV=    .500
*SECNO 21.602

3470 ENCROACHMENT STATIONS=    9360.0   10830.0  TYPE=     1  TARGET=    1470.000
    21.60    20.52  1155.52      .00      .00  1156.63     1.11      .26      .11  1150.00
  210000.       95.  209806.      98.      54.   24776.      55.   12891.    1091.  1150.00
      .73     1.78     8.47     1.78     .045     .027     .045     .000  1135.00  9360.00
  .000538     520.     528.     535.        2        0        0      .00  1470.00 10830.00


FLOW DISTRIBUTION FOR SECNO=     21.60          CWSEL=   1155.52

STA=    9360.    9370.   10820.   10830.
  PER Q=       .0     99.9       .0
   AREA=     53.7  24776.2     55.0
    VEL=      1.8      8.5      1.8
```

```
  SECNO    DEPTH    CWSEL    CRIWS    WSELK    EG       HV       HL       OLOSS   BANK ELEV
  Q        QLOB     QCH      QROB     ALOB     ACH      AROB     VOL      TWA   LEFT/RIGHT
  TIME     VLOB     VCH      VROB     XNL      XNCH     XNR      WTN      ELMIN      SSTA
  SLOPE    XLOBL    XLCH     XLOBR    ITRIAL   IDC      ICONT    CORAR    TOPWID     ENDST


CCHV=    .100 CEHV=    .300
*SECNO 21.659

3470 ENCROACHMENT STATIONS=    9230.0   10950.0  TYPE=     1  TARGET=    1720.000

3495 OVERBANK AREA ASSUMED NON-EFFECTIVE,ELLEA=     1160.00 ELREA=     1160.00

    21.66    20.20  1155.60      .00      .00  1156.95     1.35      .25      .07  1164.00
  215000.       0.  215000.       0.       0.   23046.       0.   13056.    1101. 100000.00
      .74      .00     9.33      .00     .050     .035     .050     .000  1135.40  9301.64
  .001381     350.     300.     240.        2        0        0      .00  1601.07 10902.71


FLOW DISTRIBUTION FOR SECNO=     21.66          CWSEL=   1155.60

STA=    9302.   10950.
  PER Q=    100.0
   AREA=  23046.4
    VEL=      9.3


SPECIAL BRIDGE

SB  XK        XKOR      COFQ      RDLEN     BWC       BWP       BAREA     SS        ELCHU     ELCHD
      .95      1.15      2.60   1377.00   1320.00     64.00  31000.00       .00   1135.80   1135.70

*SECNO 21.667
CLASS A LOW FLOW

3420 BRIDGE W.S.=   1155.52 BRIDGE VELOCITY=,      8.66      CALCULATED CHANNEL AREA=,    24773.

 EGPRS      EGLWC      H3       QWEIR      QLOW      BAREA   TRAPEZOID      ELLC     ELTRD
                                                              AREA
       .00   1157.05      .13        0.   215000.    31000.    30395.     1160.00   1164.00



3470 ENCROACHMENT STATIONS=    9250.0   10950.0  TYPE=     1  TARGET=   -9250.000

3495 OVERBANK AREA ASSUMED NON-EFFECTIVE,ELLEA=     1164.00 ELREA=     1164.00

    21.67    20.32  1155.72      .00      .00  1157.05     1.33      .10      .00100000.00
  215000.       0.  215000.       0.       0.   23252.       0.   13077.    1103.   1166.00
      .74      .00     9.25      .00     .000     .035     .000     .000  1135.40  9299.85
  .001343      40.      40.      40.        0        0        0      .00  1603.44 10903.29
```

```
  SECNO    DEPTH    CWSEL    CRIWS    WSELK    EG       HV       HL       OLOSS   BANK ELEV
  Q        QLOB     QCH      QROB     ALOB     ACH      AROB     VOL      TWA   LEFT/RIGHT
  TIME     VLOB     VCH      VROB     XNL      XNCH     XNR      WTN      ELMIN      SSTA
  SLOPE    XLOBL    XLCH     XLOBR    ITRIAL   IDC      ICONT    CORAR    TOPWID     ENDST


FLOW DISTRIBUTION FOR SECNO=     21.67          CWSEL=   1155.72

STA=    9300.   10950.
  PER Q=    100.0
   AREA=  23251.6
    VEL=      9.2

*SECNO 21.725

3470 ENCROACHMENT STATIONS=    9290.0   10830.0  TYPE=     1  TARGET=    1540.000

3495 OVERBANK AREA ASSUMED NON-EFFECTIVE,ELLEA=     1163.00 ELREA=     1163.00

    21.73    20.46  1156.06      .00      .00  1157.50     1.43      .41      .03  1167.00
  215000.       0.  215000.       0.       0.   22372.       0.   13239.    1114. 100000.00
      .75      .00     9.61      .00     .050     .035     .050     .000  1135.60  9341.47
  .001315     310.     310.     310.        2        0        0      .00  1432.78 10774.25


FLOW DISTRIBUTION FOR SECNO=     21.73          CWSEL=   1156.06

STA=    9341.   10830.
  PER Q=    100.0
   AREA=  22372.3
    VEL=      9.6


SPECIAL BRIDGE

SB  XK        XKOR      COFQ      RDLEN     BWC       BWP       BAREA     SS        ELCHU     ELCHD
     1.75      1.57      2.70   1377.00   1500.00     90.00  44000.00       .00   1135.80   1135.70

*SECNO 21.733
CLASS A LOW FLOW

3420 BRIDGE W.S.=   1155.99 BRIDGE VELOCITY=,      7.53     CALCULATED CHANNEL AREA=,    28466.

 EGPRS      EGLWC       H3       QWEIR      QLOW      BAREA   TRAPEZOID      ELLC     ELTRD
                                                              AREA
       .00   1157.96      .56        0.   215000.    44000.    38352.     1163.00   1171.00


3470 ENCROACHMENT STATIONS=    9290.0   10830.0  TYPE=     1  TARGET=    1540.000
```

```
  SECNO    DEPTH    CWSEL    CRIWS    WSELK    EG       HV       HL       OLOSS   BANK ELEV
  Q        QLOB     QCH      QROB     ALOB     ACH      AROB     VOL      TWA   LEFT/RIGHT
  TIME     VLOB     VCH      VROB     XNL      XNCH     XNR      WTN      ELMIN      SSTA
  SLOPE    XLOBL    XLCH     XLOBR    ITRIAL   IDC      ICONT    CORAR    TOPWID     ENDST


3495 OVERBANK AREA ASSUMED NON-EFFECTIVE,ELLEA=     1171.00 ELREA=     1171.00

   21.73    21.02  1156.62      .00      .00  1157.96     1.34      .46      .00  1167.00
 215000.       0.  215000.       0.       0.   23176.       0.   13260.    1115. 100000.00
     .75      .00     9.28      .00     .000     .035     .000     .000  1135.60  9338.83
 .001174      40.      40.      40.        0        0        0      .00  1437.66 10776.49


FLOW DISTRIBUTION FOR SECNO=     21.73         CWSEL=   1156.62

STA=    9339.   10830.
  PER Q=    100.0
   AREA=  23176.1
    VEL=      9.3

*SECNO 21.795

3470 ENCROACHMENT STATIONS=    9300.0   11090.0  TYPE=     1  TARGET=    1790.000

3495 OVERBANK AREA ASSUMED NON-EFFECTIVE,ELLEA=     1169.00 ELREA=     1169.00

   21.80    21.47  1157.17      .00      .00  1158.33     1.16      .35      .02  1174.00
 215000.       0.  215000.       0.       0.   24908.       0.   13442.    1126. 100000.00
     .76      .00     8.63      .00     .050     .035     .050     .000  1135.70  9362.00
 .000968     520.     330.      70.        2        0        0      .00  1489.71 10851.71


FLOW DISTRIBUTION FOR SECNO=     21.80         CWSEL=   1157.17

STA=    9362.   11090.
  PER Q=    100.0
   AREA=  24908.3
    VEL=      8.6


SPECIAL BRIDGE

SB  XK        XKOR      COFQ      RDLEN     BWC       BWP       BAREA     SS        ELCHU     ELCHD
     1.05      1.18      2.50       .00   1460.00     63.00  44704.00      .00   1137.00   1136.80

*SECNO 21.809
```

```
  SECNO    DEPTH    CWSEL    CRIWS    WSELK    EG       HV       HL       OLOSS   BANK ELEV
  Q        QLOB     QCH      QROB     ALOB     ACH      AROB     VOL      TWA   LEFT/RIGHT
  TIME     VLOB     VCH      VROB     XNL      XNCH     XNR      WTN      ELMIN      SSTA
  SLOPE    XLOBL    XLCH     XLOBR    ITRIAL   IDC      ICONT    CORAR    TOPWID     ENDST


CLASS A LOW FLOW

3420 BRIDGE W.S.=   1157.19 BRIDGE VELOCITY=,     7.59     CALCULATED CHANNEL AREA=,    28204.

 EGPRS      EGLWC      H3       QWEIR      QLOW      BAREA   TRAPEZOID      ELLC     ELTRD
                                                             AREA
      .00   1158.42      .11        0.   215000.    44704.   44704.     1169.00   1175.00


3470 ENCROACHMENT STATIONS=    9300.0   11090.0  TYPE=     1  TARGET=    1790.000

3495 OVERBANK AREA ASSUMED NON-EFFECTIVE,ELLEA=    1175.00 ELREA=     1175.00

    21.81    21.58  1157.28      .00      .00  1158.42     1.14      .09      .00  1174.00
  215000.       0.  215000.       0.       0.   25067.       0.   13483.    1128. 100000.00
      .76      .00     8.58      .00     .000     .035     .000     .000  1135.70  9361.61
  .000949      70.      70.      70.        0        0        0      .00  1491.17 10852.78


FLOW DISTRIBUTION FOR SECNO=     21.81          CWSEL=   1157.28

STA=    9362.   11090.
  PER Q=    100.0
   AREA=  25067.5
    VEL=      8.6

CCHV=    .100 CEHV=    .300
*SECNO 21.837

3470 ENCROACHMENT STATIONS=    9400.0   11250.0  TYPE=     1  TARGET=   -9400.000
    21.84    21.29  1157.29      .00      .00  1158.62     1.34      .14      .06  1150.00
  215000.       0.  211473.    3527.       0.   22620.    1181.   13567.    1134.  1155.00
      .77      .00     9.35     2.99     .040     .030     .040     .000  1136.00  9400.00
  .000963     100.     150.     200.        2        0        0      .00  1784.92 11184.92


FLOW DISTRIBUTION FOR SECNO=     21.84          CWSEL=   1157.29

STA=    9400.   10900.   11150.   11185.
  PER Q=     98.4      1.5       .1
   AREA=  22620.4   1071.3    109.7
    VEL=      9.3      3.0      2.4
```

```
  SECNO    DEPTH    CWSEL    CRIWS    WSELK    EG       HV       HL       OLOSS   BANK ELEV
  Q        QLOB     QCH      QROB     ALOB     ACH      AROB     VOL      TWA   LEFT/RIGHT
  TIME     VLOB     VCH      VROB     XNL      XNCH     XNR      WTN      ELMIN      SSTA
  SLOPE    XLOBL    XLCH     XLOBR    ITRIAL   IDC      ICONT    CORAR    TOPWID     ENDST


CCHV=    .100 CEHV=    .300
*SECNO 21.937

3301 HV CHANGED MORE THAN HVINS


3470 ENCROACHMENT STATIONS=    9345.0   10600.0  TYPE=     1  TARGET=    1255.000
    21.94    19.41  1157.41      .00      .00  1159.39     1.98      .58      .19  1150.00
  215000.     100.  214272.     628.      37.   18923.     278.   13834.    1154.   1155.00
      .78     2.71    11.32     2.26     .040     .030     .040     .000  1138.00  9345.00
  .001235     330.     528.     860.        2        0        0      .00  1255.00 10600.00


FLOW DISTRIBUTION FOR SECNO=     21.94          CWSEL=   1157.41

STA=    9345.    9350.   10480.   10600.
  PER Q=       .0     99.7       .3
   AREA=     36.8  18923.3    278.1
    VEL=      2.7     11.3      2.3

*SECNO 22.037

3470 ENCROACHMENT STATIONS=    9200.0   10545.0  TYPE=     1  TARGET=    1345.000
    22.04    19.38  1158.38      .00      .00  1160.05     1.67      .62      .03  1155.00
  215000.      86.  214880.      34.      36.   20717.      17.   14076.    1170.   1155.00
      .79     2.37    10.37     2.00     .040     .030     .040     .000  1139.00  9200.00
  .001132     470.     528.     565.        2        0        0      .00  1345.00 10545.00


FLOW DISTRIBUTION FOR SECNO=     22.04          CWSEL=   1158.38

STA=    9200.    9210.   10540.   10545.
  PER Q=       .0     99.9       .0
   AREA=     36.3  20717.0     16.9
    VEL=      2.4     10.4      2.0

*SECNO 22.137

3470 ENCROACHMENT STATIONS=    9140.0   10560.0  TYPE=     1  TARGET=    1420.000

3495 OVERBANK AREA ASSUMED NON-EFFECTIVE,ELLEA=     1161.00 ELREA=     1155.00

    22.14    19.10  1159.10      .00      .00  1160.64     1.54      .57      .01  1161.00
  215000.       0.  214900.     100.       0.   21582.      41.   14333.    1187.   1155.00
      .81      .00     9.96     2.45     .040     .030     .040     .000  1140.00  9160.38
  .001048     510.     528.     540.        2        0        0      .00  1399.62 10560.00
```

```
  SECNO    DEPTH    CWSEL    CRIWS    WSELK    EG       HV       HL       OLOSS   BANK ELEV
  Q        QLOB     QCH      QROB     ALOB     ACH      AROB     VOL      TWA   LEFT/RIGHT
  TIME     VLOB     VCH      VROB     XNL      XNCH     XNR      WTN      ELMIN      SSTA
  SLOPE    XLOBL    XLCH     XLOBR    ITRIAL   IDC      ICONT    CORAR    TOPWID     ENDST


FLOW DISTRIBUTION FOR SECNO=     22.14          CWSEL=   1159.10

STA=    9160.   10550.   10560.
  PER Q=    100.0       .0
   AREA=  21581.8     41.0
    VEL=     10.0      2.4

*SECNO 22.237

3470 ENCROACHMENT STATIONS=    8870.0   10600.0  TYPE=     1  TARGET=    1730.000

3495 OVERBANK AREA ASSUMED NON-EFFECTIVE,ELLEA=     1161.00 ELREA=     1155.00

    22.24    19.00  1160.00      .00      .00  1161.17     1.16      .49      .04  1161.00
  215000.       0.  214192.     808.       0.   24704.     265.   14616.    1205.   1155.00
      .83      .00     8.67     3.05     .040     .030     .040     .000  1141.00  8889.95
  .000839     520.     528.     535.        2        0        0      .00  1710.05 10600.00


FLOW DISTRIBUTION FOR SECNO=     22.24          CWSEL=   1160.00

STA=    8890.   10550.   10600.
  PER Q=     99.6       .4
   AREA=  24703.5    265.1
    VEL=      8.7      3.0

*SECNO 22.337

3470 ENCROACHMENT STATIONS=    8940.0   10550.0  TYPE=     1  TARGET=    1610.000
    22.34    18.32  1160.32      .00      .00  1161.76     1.44      .51      .08  1155.00
  215000.     145.  214324.     530.      52.   22229.     158.   14903.    1226.   1155.00
      .84     2.82     9.64     3.36     .040     .030     .040     .000  1142.00  8940.00
  .001108     520.     528.     540.        2        0        0      .00  1610.00 10550.00


FLOW DISTRIBUTION FOR SECNO=     22.34          CWSEL=   1160.32

STA=    8940.    8950.   10520.   10550.
  PER Q=       .1     99.7       .2
   AREA=     51.6  22229.4    157.7
    VEL=      2.8      9.6      3.4
```

```
  SECNO    DEPTH    CWSEL    CRIWS    WSELK    EG       HV       HL       OLOSS   BANK ELEV
  Q        QLOB     QCH      QROB     ALOB     ACH      AROB     VOL      TWA   LEFT/RIGHT
  TIME     VLOB     VCH      VROB     XNL      XNCH     XNR      WTN      ELMIN      SSTA
  SLOPE    XLOBL    XLCH     XLOBR    ITRIAL   IDC      ICONT    CORAR    TOPWID     ENDST


*SECNO 22.437

3470 ENCROACHMENT STATIONS=    8960.0   10375.0  TYPE=     1  TARGET=    1415.000
    22.44    17.66  1160.66      .00      .00  1162.60     1.94      .69      .15  1155.00
  215000.     191.  214805.       3.      56.   19214.       3.   15156.    1244.   1160.00
      .85     3.44    11.18     1.01     .040     .030     .040     .000  1143.00  8960.00
  .001557     550.     528.     500.        2        0        0      .00  1415.00 10375.00


FLOW DISTRIBUTION FOR SECNO=     22.44         CWSEL=   1160.66

STA=    8960.    8970.   10370.   10375.
  PER Q=       .1     99.9       .0
   AREA=     55.6  19214.3      3.2
    VEL=      3.4     11.2      1.0

*SECNO 22.537

3470 ENCROACHMENT STATIONS=    8870.0   10425.0  TYPE=     1  TARGET=    1555.000
    22.54    17.51  1161.51      .00      .00  1163.51     2.00      .90      .02  1160.00
  215000.      28.  214958.      14.      15.   18945.       8.   15388.    1262.   1160.00
      .87     1.90    11.35     1.77     .040     .030     .040     .000  1144.00  8870.00
  .001853     540.     528.     510.        2        0        0      .00  1555.00 10425.00


FLOW DISTRIBUTION FOR SECNO=     22.54         CWSEL=   1161.51

STA=    8870.    8880.   10420.   10425.
  PER Q=       .0    100.0       .0
   AREA=     14.8  18945.4      7.7
    VEL=      1.9     11.3      1.8

CCHV=    .300 CEHV=    .500
*SECNO 22.637

3301 HV CHANGED MORE THAN HVINS


3470 ENCROACHMENT STATIONS=    8980.0   10510.0  TYPE=     1  TARGET=    1530.000
    22.64    17.98  1162.98      .00      .00  1164.39     1.42      .71      .17  1155.00
  215000.     249.  214620.     131.      78.   22450.      50.   15639.    1281.   1158.00
      .88     3.20     9.56     2.64     .040     .030     .040     .000  1145.00  8980.00
  .001020     510.     528.     540.        2        0        0      .00  1530.00 10510.00
```

```
  SECNO    DEPTH    CWSEL    CRIWS    WSELK    EG       HV       HL       OLOSS   BANK ELEV
  Q        QLOB     QCH      QROB     ALOB     ACH      AROB     VOL      TWA   LEFT/RIGHT
  TIME     VLOB     VCH      VROB     XNL      XNCH     XNR      WTN      ELMIN      SSTA
  SLOPE    XLOBL    XLCH     XLOBR    ITRIAL   IDC      ICONT    CORAR    TOPWID     ENDST


FLOW DISTRIBUTION FOR SECNO=     22.64          CWSEL=   1162.98

STA=    8980.    8990.   10500.   10510.
  PER Q=       .1     99.8       .1
   AREA=     78.0  22449.6     49.6
    VEL=      3.2      9.6      2.6

*SECNO 22.662

3470 ENCROACHMENT STATIONS=    9050.0   10480.0  TYPE=     1  TARGET=    1430.000

3495 OVERBANK AREA ASSUMED NON-EFFECTIVE,ELLEA=     1165.00 ELREA=     1165.00

    22.66    17.71  1163.21      .00      .00  1164.54     1.33      .12      .03  1172.00
  215000.       0.  215000.       0.       0.   23234.       0.   15708.    1285. 100000.00
      .89      .00     9.25      .00     .040     .030     .040     .000  1145.50  9081.52
  .000806     130.     130.     130.        2        0        0      .00  1371.27 10452.79


FLOW DISTRIBUTION FOR SECNO=     22.66          CWSEL=   1163.21

STA=    9082.   10480.
  PER Q=    100.0
   AREA=  23233.7
    VEL=      9.3


SPECIAL BRIDGE

SB  XK        XKOR      COFQ      RDLEN     BWC       BWP       BAREA     SS        ELCHU     ELCHD
     1.20      1.60      2.50       .00   1253.00    100.00  24000.00       .45   1145.50   1145.40

*SECNO 22.681
6840,FLOW IS BY WEIR AND LOW FLOW
3420 BRIDGE W.S.=   1163.41 BRIDGE VELOCITY=,      8.65      CALCULATED CHANNEL AREA=,    20799.

 EGPRS      EGLWC      H3       QWEIR      QLOW      BAREA   TRAPEZOID      ELLC     ELTRD
                                                              AREA
   1165.00   1164.57       .21    34854.   180369.    24000.    22655.     1165.00   1163.00



3470 ENCROACHMENT STATIONS=    9050.0   10480.0  TYPE=     1  TARGET=    1430.000
    22.68    17.75  1163.25      .00      .00  1164.57     1.32      .04      .00  1172.00
  215000.       0.  215000.       0.       0.   23296.       0.   15761.    1288. 100000.00
      .89      .00     9.23      .00     .000     .030     .000     .000  1145.50  9081.36
  .000799     100.     100.     100.        3        0        2      .00  1371.57 10452.93
```

```
  SECNO    DEPTH    CWSEL    CRIWS    WSELK    EG       HV       HL       OLOSS   BANK ELEV
  Q        QLOB     QCH      QROB     ALOB     ACH      AROB     VOL      TWA   LEFT/RIGHT
  TIME     VLOB     VCH      VROB     XNL      XNCH     XNR      WTN      ELMIN      SSTA
  SLOPE    XLOBL    XLCH     XLOBR    ITRIAL   IDC      ICONT    CORAR    TOPWID     ENDST


FLOW DISTRIBUTION FOR SECNO=     22.68         CWSEL=   1163.25

STA=    9081.   10480.
  PER Q=    100.0
   AREA=  23295.9
    VEL=      9.2

*SECNO 22.799

3470 ENCROACHMENT STATIONS=    9045.0   10660.0  TYPE=     1  TARGET=    1615.000
    22.80    17.79  1163.79      .00      .00  1165.21     1.42      .58      .05  1160.00
  215000.      39.  214953.       8.      19.   22476.       7.   16090.    1310.   1162.50
      .91     2.06     9.56     1.26     .040     .030     .040     .000  1146.00  9045.00
  .001107     640.     625.     590.        2        0        0      .00  1615.00 10660.00


FLOW DISTRIBUTION FOR SECNO=     22.80         CWSEL=   1163.79

STA=    9045.    9050.   10655.   10660.
  PER Q=       .0    100.0       .0
   AREA=     18.9  22475.8      6.6
    VEL=      2.1      9.6      1.3

CCHV=    .100 CEHV=    .300
*SECNO 23.000

3470 ENCROACHMENT STATIONS=    8725.0   10920.0  TYPE=     1  TARGET=    2195.000

3495 OVERBANK AREA ASSUMED NON-EFFECTIVE,ELLEA=     1165.00 ELREA=   100000.00

    23.00    18.46  1165.46      .00      .00  1166.58     1.12     1.35      .03  1165.00
  215000.       0.  215000.       0.       0.   25284.       0.   16671.    1355. 100000.00
      .94      .00     8.50      .00     .050     .035     .050     .000  1147.00  8725.00
  .001473    1040.    1060.    1065.        2        0        0      .00  2118.30 10843.30


FLOW DISTRIBUTION FOR SECNO=     23.00         CWSEL=   1165.46

STA=    8725.   10920.
  PER Q=    100.0
   AREA=  25284.1
    VEL=      8.5
```

```
   SECNO     DEPTH     CWSEL     CRIWS     WSELK     EG        HV        HL        OLOSS    BANK ELEV
   Q         QLOB      QCH       QROB      ALOB      ACH       AROB      VOL       TWA    LEFT/RIGHT
   TIME      VLOB      VCH       VROB      XNL       XNCH      XNR       WTN       ELMIN       SSTA
   SLOPE     XLOBL     XLCH      XLOBR     ITRIAL    IDC       ICONT     CORAR     TOPWID      ENDST


*SECNO 23.199

3301 HV CHANGED MORE THAN HVINS


3470 ENCROACHMENT STATIONS=    9260.0   10810.0  TYPE=     1  TARGET=    1550.000

3495 OVERBANK AREA ASSUMED NON-EFFECTIVE,ELLEA=     1165.00 ELREA=   100000.00

    23.20    16.77  1166.77      .00      .00  1169.09     2.33     2.15      .36  1165.00
  215000.      38.  214962.       0.      18.   17560.       0.   17188.    1398. 100000.00
      .97     2.14    12.24      .00     .050     .035     .050     .000  1150.00  9260.00
  .003028    1040.    1050.    1060.        2        0        0      .00  1472.38 10732.38


FLOW DISTRIBUTION FOR SECNO=     23.20          CWSEL=   1166.77

STA=    9260.    9270.   10810.
  PER Q=      .0    100.0
   AREA=     17.7  17560.0
    VEL=      2.1     12.2

*SECNO 23.398

3301 HV CHANGED MORE THAN HVINS


3470 ENCROACHMENT STATIONS=    9315.0   10775.0  TYPE=     1  TARGET=    1460.000

3495 OVERBANK AREA ASSUMED NON-EFFECTIVE,ELLEA=     1170.00 ELREA=     1165.00

    23.40    18.86  1169.86      .00      .00  1171.59     1.73     2.44      .06  1170.00
  215000.       0.  214944.      56.       0.   20358.      24.   17646.    1434.   1165.00
      .99      .00    10.56     2.32     .050     .035     .050     .000  1151.00  9317.33
  .001832    1175.    1052.     915.        2        0        0      .00  1457.67 10775.00


FLOW DISTRIBUTION FOR SECNO=     23.40          CWSEL=   1169.86

STA=    9317.   10770.   10775.
  PER Q=    100.0       .0
   AREA=  20358.2     24.3
    VEL=     10.6      2.3
```

```
  SECNO    DEPTH    CWSEL    CRIWS    WSELK    EG       HV       HL       OLOSS   BANK ELEV
  Q        QLOB     QCH      QROB     ALOB     ACH      AROB     VOL      TWA   LEFT/RIGHT
  TIME     VLOB     VCH      VROB     XNL      XNCH     XNR      WTN      ELMIN      SSTA
  SLOPE    XLOBL    XLCH     XLOBR    ITRIAL   IDC      ICONT    CORAR    TOPWID     ENDST


*SECNO 23.597

3301 HV CHANGED MORE THAN HVINS


3470 ENCROACHMENT STATIONS=    8920.0   11050.0  TYPE=     1  TARGET=    2130.000

3495 OVERBANK AREA ASSUMED NON-EFFECTIVE,ELLEA=     1174.50 ELREA=   100000.00

    23.60    20.24  1172.24      .00      .00  1173.43     1.18     1.78      .05  1174.50
  215000.       0.  215000.       0.       0.   24620.       0.   18188.    1476. 100000.00
     1.03      .00     8.73      .00     .050     .035     .050     .000  1152.00  8962.63
  .001575    1047.    1050.    1052.        2        0        0      .00  2084.85 11047.48


FLOW DISTRIBUTION FOR SECNO=     23.60         CWSEL=   1172.24

STA=    8963.   11050.
  PER Q=    100.0
   AREA=  24619.8
    VEL=      8.7

*SECNO 23.649

3470 ENCROACHMENT STATIONS=    9320.0   10510.0  TYPE=     1  TARGET=    1190.000

3495 OVERBANK AREA ASSUMED NON-EFFECTIVE,ELLEA=     1175.00 ELREA=     1175.00

    23.65    22.49  1172.49      .00      .00  1173.73     1.23      .28      .01  1182.00
  215000.       0.  215000.       0.       0.   24143.       0.   18340.    1486. 100000.00
     1.04      .00     8.91      .00     .050     .035     .050     .000  1150.00  9346.73
  .000754     200.     270.     340.        2        0        0      .00  1136.53 10483.27


FLOW DISTRIBUTION FOR SECNO=     23.65         CWSEL=   1172.49

STA=    9347.   10510.
  PER Q=    100.0
   AREA=  24142.7
    VEL=      8.9
```

SECNO	DEPTH	CWSEL	CRIWS	WSELK	EG	HV	HL	OLOSS	BANK ELEV
Q	QLOB	QCH	QROB	ALOB	ACH	AROB	VOL	TWA	LEFT/RIGHT
TIME	VLOB	VCH	VROB	XNL	XNCH	XNR	WTN	ELMIN	SSTA
SLOPE	XLOBL	XLCH	XLOBR	ITRIAL	IDC	ICONT	CORAR	TOPWID	ENDST

SPECIAL BRIDGE

SB	XK	XKOR	COFQ	RDLEN	BWC	BWP	BAREA	SS	ELCHU	ELCHD
	1.05	1.60	2.50	.00	1044.00	90.00	25600.00	2.50	1150.10	1150.00

*SECNO 23.658
6840,FLOW IS BY WEIR AND LOW FLOW
3420 BRIDGE W.S.= 1172.68 BRIDGE VELOCITY=, 8.98 CALCULATED CHANNEL AREA=, 22819.

EGPRS	EGLWC	H3	QWEIR	QLOW	BAREA	TRAPEZOID AREA	ELLC	ELTRD
1175.00	1173.94	.19	10781.	205441.	25600.	25305.	1175.00	1170.00

3470 ENCROACHMENT STATIONS= 9320.0 10510.0 TYPE= 1 TARGET= 1190.000

3495 OVERBANK AREA ASSUMED NON-EFFECTIVE,ELLEA= 1182.00 ELREA= 1182.00

23.66	22.73	1172.73	.00	.00	1173.94	1.20	.21	.00	1182.00
215000.	0.	215000.	0.	0.	24418.	0.	18365.	1487.	100000.00
1.04	.00	8.80	.00	.000	.035	.000	.000	1150.00	9346.05
.000728	45.	45.	45.	2	0	2	.00	1137.89	10483.95

FLOW DISTRIBUTION FOR SECNO= 23.66 CWSEL= 1172.73

STA= 9346. 10510.
PER Q= 100.0
AREA= 24418.0
VEL= 8.8

*SECNO 23.667

3470 ENCROACHMENT STATIONS= 9320.0 10510.0 TYPE= 1 TARGET= 1190.000

3495 OVERBANK AREA ASSUMED NON-EFFECTIVE,ELLEA= 1175.00 ELREA= 1175.00

23.67	22.66	1172.76	.00	.00	1173.97	1.21	.03	.00	1182.00
215000.	0.	215000.	0.	0.	24341.	0.	18390.	1489.	100000.00
1.04	.00	8.83	.00	.050	.035	.050	.000	1150.10	9346.06
.000735	45.	45.	45.	0	0	0	.00	1137.89	10483.94

SECNO	DEPTH	CWSEL	CRIWS	WSELK	EG	HV	HL	OLOSS	BANK ELEV
Q	QLOB	QCH	QROB	ALOB	ACH	AROB	VOL	TWA	LEFT/RIGHT
TIME	VLOB	VCH	VROB	XNL	XNCH	XNR	WTN	ELMIN	SSTA
SLOPE	XLOBL	XLCH	XLOBR	ITRIAL	IDC	ICONT	CORAR	TOPWID	ENDST

FLOW DISTRIBUTION FOR SECNO= 23.67 CWSEL= 1172.76

STA= 9346. 10510.
PER Q= 100.0
AREA= 24340.6
VEL= 8.8

THIS RUN EXECUTED 03-10-92

```
**************************************************
  HEC2 RELEASE DATED NOV 76 UPDATED MAY  1984
  ERROR CORR -  01,02,03,04,05,06
  MODIFICATION -  50,51,52,53,54,55,56
  IBM-PC-XT VERSION AUGUST 1985
**************************************************
```

NOTE- ASTERISK (*) AT LEFT OF CROSS-SECTION NUMBER INDICATES MESSAGE IN SUMMARY OF ERRORS LIST

100-YEAR FLOODPLAIN WITH

SUMMARY PRINTOUT

SECNO	ELMIN	XLCH	Q	CWSEL	EG	AREA	TOPWID	10K*S
16.733	1080.80	.00	205000.00	1106.27	1107.30	25174.83	1089.24	4.14
16.829	1080.90	510.00	205000.00	1106.33	1107.62	22479.54	1041.67	5.72
16.875	1080.90	240.00	205000.00	1106.40	1107.86	21136.54	1050.00	7.06
16.882	1082.00	40.00	205000.00	1106.40	1107.93	20607.37	973.75	10.30
16.904	1082.00	165.00	205000.00	1106.60	1108.11	20799.56	968.00	9.98
16.927	1082.00	90.00	205000.00	1106.65	1108.21	21207.28	1030.00	6.64
17.027	1082.00	528.00	205000.00	1106.99	1108.54	20927.21	957.48	6.13
17.053	1082.00	145.00	205000.00	1107.32	1108.65	22471.08	937.82	4.90
17.091	1082.00	200.00	205000.00	1107.32	1108.79	21348.82	935.93	5.56
17.129	1082.00	186.00	205000.00	1107.50	1108.92	21738.87	918.36	6.96
17.167	1082.00	220.00	205000.00	1107.62	1109.05	21692.11	918.99	5.10
17.205	1082.00	80.00	205000.00	1107.65	1109.10	21589.24	931.77	5.23
17.242	1082.00	120.00	205000.00	1107.68	1109.18	21225.50	944.83	5.67
17.280	1082.80	200.00	205000.00	1107.72	1109.33	20502.22	925.23	6.19
17.318	1083.10	200.00	205000.00	1107.92	1109.46	21017.24	930.00	6.04
17.356	1082.50	200.00	205000.00	1108.15	1109.59	21891.67	974.04	5.56
17.394	1083.00	200.00	205000.00	1108.21	1109.72	21341.11	956.65	5.88

SECNO	ELMIN	XLCH	Q	CWSEL	EG	AREA	TOPWID	10K*S
17.432	1084.00	200.00	205000.00	1108.29	1109.86	20910.06	955.83	6.23
17.453	1083.00	112.00	205000.00	1108.38	1109.93	20702.51	955.71	6.24
17.459	1083.00	31.00	205000.00	1108.40	1109.95	20696.99	955.77	6.24
17.470	1084.00	57.00	205000.00	1108.32	1110.04	20476.59	956.11	7.19
17.486	1083.50	84.00	205000.00	1108.52	1110.11	20707.96	946.71	6.24
17.498	1084.00	68.00	205000.00	1108.55	1110.16	20569.32	946.60	6.35
17.508	1084.00	48.00	205000.00	1108.59	1110.19	20689.86	959.17	6.44
17.536	1084.30	150.00	205000.00	1108.61	1110.32	19976.19	963.43	7.27
17.568	1084.60	170.00	205000.00	1108.73	1110.45	19878.18	980.26	7.49
17.606	1084.70	200.00	205000.00	1108.77	1110.67	18933.87	982.63	9.09
17.644	1085.00	200.00	205000.00	1109.02	1110.85	19204.06	1004.10	8.60
17.682	1086.00	200.00	205000.00	1109.28	1111.03	19650.32	1014.36	8.18
17.720	1087.50	200.00	205000.00	1109.21	1111.33	18124.81	1018.04	11.59
17.758	1088.00	200.00	205000.00	1109.63	1111.57	19319.72	1031.29	10.43
17.795	1088.50	200.00	205000.00	1109.85	1111.78	19317.70	1036.13	11.05
17.833	1089.60	200.00	205000.00	1109.70	1112.24	17058.66	1042.61	17.78
17.871	1091.40	200.00	205000.00	1109.33	1113.02	14694.50	1047.75	27.68
17.909	1092.00	200.00	205000.00	1109.85	1113.59	14606.03	1047.65	28.21
17.947	1092.50	200.00	205000.00	1110.49	1114.16	14751.12	1048.09	27.35
17.970	1092.80	120.00	205000.00	1110.84	1114.48	14783.13	1040.00	27.11
17.998	1093.20	150.00	205000.00	1111.99	1114.95	15275.28	1049.00	26.64
18.036	1093.70	200.00	205000.00	1112.75	1115.47	15866.16	1052.35	23.64
18.074	1094.20	200.00	205000.00	1113.30	1115.94	16065.34	1052.54	22.71
18.112	1094.70	200.00	205000.00	1113.69	1116.44	15800.87	1051.83	23.94
18.150	1095.30	200.00	205000.00	1114.10	1116.97	15454.84	1040.32	25.37
18.188	1095.80	200.00	205000.00	1113.57	1118.10	12333.74	861.13	41.55

	SECNO	ELMIN	XLCH	Q	CWSEL	EG	AREA	TOPWID	10K*S
	18.216	1096.20	150.00	205000.00	1114.75	1118.71	13150.52	876.18	34.46
	18.254	1096.70	200.00	205000.00	1116.70	1119.37	15980.16	992.97	21.40
	18.292	1097.20	200.00	205000.00	1117.49	1119.80	17174.84	1057.18	18.33
*	18.330	1097.70	200.00	205000.00	1118.20	1120.45	17392.50	1058.00	17.61
	18.367	1098.20	200.00	205000.00	1118.52	1120.82	17202.16	1056.48	18.24
	18.405	1098.80	200.00	205000.00	1118.65	1121.34	15928.60	985.00	21.92
	18.417	1098.90	60.00	205000.00	1119.19	1121.50	17172.26	1055.00	18.33
	18.455	1099.40	200.00	205000.00	1119.53	1121.89	16996.97	1055.00	18.95
	18.492	1100.00	200.00	205000.00	1119.86	1122.30	16717.27	1054.80	19.99
	18.530	1100.50	200.00	205000.00	1120.24	1122.72	16608.07	1054.50	20.41
	18.568	1101.00	200.00	205000.00	1120.63	1123.14	16507.16	1053.00	20.81
	18.606	1101.50	200.00	205000.00	1121.04	1123.57	16429.75	1053.00	21.12
	18.644	1102.00	200.00	205000.00	1121.45	1124.00	16367.33	1052.91	21.37
	18.682	1102.60	200.00	205000.00	1121.86	1124.46	16210.36	1052.54	22.03
	18.720	1103.10	200.00	205000.00	1122.31	1124.92	16185.00	1052.40	22.13
	18.758	1103.80	200.00	205000.00	1122.90	1125.37	16670.61	1088.91	21.14
	18.795	1104.60	200.00	205000.00	1123.61	1125.80	17750.50	1188.63	19.12
	18.833	1105.30	200.00	205000.00	1124.43	1126.19	19775.51	1340.06	15.77
	18.871	1106.00	200.00	205000.00	1125.06	1126.51	21846.97	1542.00	13.53
	18.909	1106.80	200.00	205000.00	1125.29	1126.82	21371.23	1590.02	15.16
	18.947	1107.50	200.00	205000.00	1125.23	1127.36	18281.34	1468.65	22.22
	18.987	1108.30	210.00	205000.00	1126.76	1127.78	26287.99	2059.69	10.76
	19.027	1109.00	210.00	205000.00	1127.07	1128.00	27499.99	2218.17	10.26
	19.066	1109.70	210.00	205000.00	1127.27	1128.23	27252.42	2332.46	11.22
	19.106	1110.50	210.00	205000.00	1127.47	1128.49	26628.81	2429.71	12.71
	19.146	1111.20	210.00	205000.00	1127.72	1128.77	26238.31	2530.97	13.99

SECNO	ELMIN	XLCH	Q	CWSEL	EG	AREA	TOPWID	10K*S
19.186	1111.90	210.00	205000.00	1127.96	1129.10	25495.51	2626.86	15.99
19.225	1112.70	210.00	205000.00	1128.27	1129.46	25128.75	2772.40	17.85
19.265	1113.40	210.00	205000.00	1128.60	1129.87	24551.77	2903.75	20.27
19.303	1114.20	200.00	210000.00	1129.01	1130.30	25070.96	3155.05	22.07
19.348	1115.00	240.00	210000.00	1129.20	1131.03	21723.71	3225.61	34.30
* 19.363	1123.00	78.00	210000.00	1130.34	1131.52	24070.50	3292.57	29.82
19.381	1113.20	250.00	210000.00	1131.31	1132.07	30231.27	3398.41	15.46
19.446	1114.40	265.00	210000.00	1131.66	1132.57	27825.18	3495.11	20.10
19.537	1117.00	480.00	210000.00	1132.63	1133.57	27481.94	3621.82	21.23
19.563	1119.90	140.00	210000.00	1132.92	1133.88	26659.70	3492.64	22.94
19.579	1120.00	80.00	210000.00	1133.06	1134.09	26222.79	3695.35	24.45
19.618	1117.10	210.00	210000.00	1133.48	1134.75	23577.30	3660.29	31.19
19.659	1113.60	215.00	210000.00	1134.11	1135.45	23165.16	3695.95	30.54
19.716	1120.30	300.00	210000.00	1135.09	1136.47	22477.59	3557.43	33.67
19.759	1119.40	230.00	210000.00	1135.85	1137.25	22246.52	3488.09	33.08
19.803	1118.40	230.00	210000.00	1136.89	1137.88	26587.85	3271.19	20.18
19.856	1115.60	280.00	210000.00	1137.49	1138.40	27581.39	3200.99	17.33
19.902	1118.30	240.00	210000.00	1137.88	1138.86	26539.30	3106.27	19.42
19.943	1120.80	220.00	210000.00	1138.36	1139.26	28061.19	3137.54	16.73
19.985	1124.50	220.00	210000.00	1138.67	1139.75	25700.53	3281.57	23.94
20.028	1126.00	230.00	210000.00	1139.21	1140.32	25348.61	3255.26	25.26
20.072	1123.80	230.00	210000.00	1139.84	1140.87	25734.62	3172.47	22.77
20.112	1125.00	210.00	210000.00	1140.49	1141.40	28057.15	3270.18	23.61
20.152	1126.00	210.00	210000.00	1141.02	1141.91	28560.06	3382.08	23.32
20.189	1120.90	200.00	210000.00	1141.55	1142.35	29670.36	3365.32	19.70
20.231	1120.80	220.00	210000.00	1141.94	1142.77	28685.48	3239.00	16.34

SECNO	ELMIN	XLCH	Q	CWSEL	EG	AREA	TOPWID	10K*S
20.269	1124.70	200.00	210000.00	1142.23	1143.15	27337.38	3264.74	19.38
20.307	1126.20	200.00	210000.00	1142.59	1143.57	26541.95	3181.73	20.67
20.345	1127.20	200.00	210000.00	1143.07	1143.94	28044.77	3031.24	16.17
20.383	1127.20	200.00	210000.00	1143.39	1144.34	28172.47	2941.07	22.40
20.420	1128.10	200.00	210000.00	1143.80	1144.81	27292.20	2771.80	22.67
20.458	1128.44	200.00	210000.00	1144.26	1145.22	28089.16	2620.14	18.34
20.496	1129.00	200.00	210000.00	1144.56	1145.64	26849.32	2476.98	19.52
20.534	1129.80	200.00	210000.00	1144.85	1146.09	25533.88	2391.98	20.96
20.572	1129.00	200.00	210000.00	1145.23	1146.50	25749.08	2362.91	19.15
20.610	1128.90	200.00	210000.00	1145.56	1146.89	25286.00	2309.65	18.23
20.648	1128.80	200.00	210000.00	1145.88	1147.28	24563.45	2230.03	18.33
20.686	1128.70	200.00	210000.00	1145.93	1147.84	21812.72	2185.77	22.67
20.723	1127.50	200.00	210000.00	1146.07	1148.47	19855.32	2120.69	26.03
20.761	1126.40	200.00	210000.00	1146.29	1149.17	17741.70	1869.00	30.06
20.799	1125.60	200.00	210000.00	1146.12	1150.24	14898.74	1706.00	40.33
20.837	1126.40	200.00	210000.00	1147.95	1150.99	17360.97	1648.00	26.36
20.875	1126.80	200.00	210000.00	1148.45	1151.52	17574.61	1630.00	25.76
20.913	1127.30	200.00	210000.00	1149.36	1152.08	18154.00	1740.00	26.62
20.951	1125.70	200.00	210000.00	1149.57	1152.75	18258.80	1745.55	26.67
20.989	1127.20	200.00	210000.00	1150.60	1153.26	19330.86	1702.09	20.05
21.027	1127.80	200.00	210000.00	1150.51	1153.98	17074.50	1629.46	28.48
21.064	1128.10	200.00	210000.00	1152.50	1154.51	21739.35	1644.01	13.88
21.102	1127.00	200.00	210000.00	1153.31	1154.80	25551.01	1896.47	10.40
21.202	1132.00	528.00	210000.00	1153.66	1155.30	21785.55	1400.00	7.56
21.302	1133.00	528.00	210000.00	1154.49	1155.67	24902.02	1410.00	5.03
21.402	1134.00	528.00	210000.00	1154.77	1155.96	23991.06	1435.09	5.91

SECNO	ELMIN	XLCH	Q	CWSEL	EG	AREA	TOPWID	10K*S
21.502	1135.00	528.00	210000.00	1155.37	1156.26	27803.98	1677.15	4.45
21.602	1135.00	528.00	210000.00	1155.52	1156.63	24884.94	1470.00	5.38
21.659	1135.40	300.00	215000.00	1155.60	1156.95	23046.40	1601.07	13.81
21.667	1135.40	40.00	215000.00	1155.72	1157.05	23251.57	1603.44	13.43
21.725	1135.60	310.00	215000.00	1156.06	1157.50	22372.25	1432.78	13.15
21.733	1135.60	40.00	215000.00	1156.62	1157.96	23176.06	1437.66	11.74
21.795	1135.70	330.00	215000.00	1157.17	1158.33	24908.29	1489.71	9.68
21.809	1135.70	70.00	215000.00	1157.28	1158.42	25067.49	1491.17	9.49
21.837	1136.00	150.00	215000.00	1157.29	1158.62	23801.47	1784.92	9.63
21.937	1138.00	528.00	215000.00	1157.41	1159.39	19238.31	1255.00	12.35
22.037	1139.00	528.00	215000.00	1158.38	1160.05	20770.25	1345.00	11.32
22.137	1140.00	528.00	215000.00	1159.10	1160.64	21622.73	1399.62	10.48
22.237	1141.00	528.00	215000.00	1160.00	1161.17	24968.64	1710.05	8.39
22.337	1142.00	528.00	215000.00	1160.32	1161.76	22438.78	1610.00	11.08
22.437	1143.00	528.00	215000.00	1160.66	1162.60	19273.11	1415.00	15.57
22.537	1144.00	528.00	215000.00	1161.51	1163.51	18967.90	1555.00	18.53
22.637	1145.00	528.00	215000.00	1162.98	1164.39	22577.18	1530.00	10.20
22.662	1145.50	130.00	215000.00	1163.21	1164.54	23233.67	1371.27	8.06
22.681	1145.50	100.00	215000.00	1163.25	1164.57	23295.95	1371.57	7.99
22.799	1146.00	625.00	215000.00	1163.79	1165.21	22501.31	1615.00	11.07
23.000	1147.00	1060.00	215000.00	1165.46	1166.58	25284.08	2118.30	14.73
23.199	1150.00	1050.00	215000.00	1166.77	1169.09	17577.61	1472.38	30.28
23.398	1151.00	1052.00	215000.00	1169.86	1171.59	20382.51	1457.67	18.32
23.597	1152.00	1050.00	215000.00	1172.24	1173.43	24619.75	2084.85	15.75
23.649	1150.00	270.00	215000.00	1172.49	1173.73	24142.72	1136.53	7.54
23.658	1150.00	45.00	215000.00	1172.73	1173.94	24418.00	1137.89	7.28

SECNO	ELMIN	XLCH	Q	CWSEL	EG	AREA	TOPWID	10K*S
23.667	1150.10	45.00	215000.00	1172.76	1173.97	24340.59	1137.89	7.35

SUMMARY OF ERRORS AND SPECIAL NOTES

NOTE	SECNO=	18.330	PROFILE= 1	WSEL BASED ON X5 CARD
CAUTION	SECNO=	19.363	PROFILE= 1	HYDRAULIC JUMP D.S.

THIS RUN EXECUTED 03-10-92

```
**************************************************
  HEC2 RELEASE DATED NOV 76 UPDATED MAY  1984
  ERROR CORR -  01,02,03,04,05,06
  MODIFICATION -  50,51,52,53,54,55,56
  IBM-PC-XT VERSION AUGUST 1985
**************************************************
```

APPENDIX B2

Water-Surface Profile Computations for Project Reach

Three HEC-2 runs are provided in this analysis.

- Run #1 is for the downstream baseline conditions from mile 16.733 to 18.417 (start of construction).

- Run #2 is for the project reach from Station 100+35 (mile 18.417) to Station 267.37 (mile 21.725) (40th Street to Southern Pacific Railroad Bridge).

- Run #3 is for the upstream baseline conditions as affected by the project from mile 21.725 (end of construction) to 23.667 (Mill Avenue to Price Road).

Run #1

Reach:	1000 feet west of I-10 Salt River Bridge to beginnin of project (approximately 40th St.) Mile 16.733 to 18.417
Source:	Cella Barr Evans & Associates Mile 16.733 to 18.330 Corps of Engineers Mile 18.367 to 18.417

```
****************************************************
*  WATER SURFACE PROFILES                          *
*  VERSION OF NOVEMBER 1976                        *
*  UPDATED MAY 1984                                *
*  IBM-PC-XT VERSION AUGUST 1985                   *
*  RUN DATE  03-10-92   TIME  12:05:04               *
****************************************************
```


```
*************************************
*  U.S. ARMY CORPS OF ENGINEERS     *
*  THE HYDROLOGIC ENGINEERING CENTER *
*  609 SECOND STREET, SUITE D       *
*  DAVIS, CALIFORNIA 95616          *
  *  (916) 440-2105 (FTS) 448-2105
*************************************
```


```
X     X  XXXXXXX   XXXXX            XXXXX
X     X  X       X     X          X     X
X     X  X       X                      X
XXXXXXX  XXXX     X        XXXXX   XXXXX
X     X  X       X                X
X     X  X       X     X          X
X     X  XXXXXXX   XXXXX           XXXXXXX
```

THIS RUN EXECUTED 03-10-92

```
**************************************************
  HEC2 RELEASE DATED NOV 76 UPDATED MAY  1984
  ERROR CORR -  01,02,03,04,05,06
  MODIFICATION -  50,51,52,53,54,55,56
  IBM-PC-XT VERSION AUGUST 1985
**************************************************


C
T1      SALT RIVER - CALMAT AIRPORT PROP.   X-SEC's          X-SEC's
T2      File Name: SRBASE1.HC2              16.733-18.33     18.367-18.417
T3      100-YEAR FLOODPLAIN WITH LEVEE      CELLA BARR ASSOC. CORP OF ENGINEERS

J1  ICHECK    INQ      NINV     IDIR     STRT     METRIC   HVINS    Q        WSEL     FQ

      0.       3.       0.       0.   .000000      .00       .0       0.  1106.270    .000

J2  NPROF    IPLOT    PRFVS    XSECV    XSECH     FN      ALLDC    IBW      CHNIM    ITRACE

    -1.000     .000   -1.000     .000     .000     .000     .000     .000     .000   15.000

J3  VARIABLE CODES FOR SUMMARY PRINTOUT

    38.000   42.000   39.000   43.000    1.000    3.000   25.000    4.000    5.000     .000


QT      2.000 205000.000 205000.000       .000       .000       .000       .000       .000       .000       .000
NC       .040       .040       .030       .100       .300       .000       .000       .000       .000       .000
ET       .000       .000      4.100   9526.000  10630.000       .000       .000       .000       .000       .000
         CROSS-SECTION PER U.S. ARMY CORPS OF ENGINEERS 1983-1984
         STUDY (FEMA FIS) AND A.D.O.T. TOPO.
X1     16.733     13.000   9520.000  10630.000       .000       .000       .000       .000       .000       .000
GR   1106.000   8900.000   1100.000   9010.000   1102.100   9180.000   1100.000   9240.000   1099.000   9350.000
GR   1100.000   9460.000   1107.500   9520.000   1080.800   9620.000   1080.800  10520.000   1100.000  10580.000
GR   1105.000  10600.000   1107.500  10630.000   1107.500  10631.000       .000       .000       .000       .000

ET       .000       .000      4.100   9495.000  10545.000       .000       .000       .000       .000       .000
         GR STATIONS 9370, 9390 & 9430 (THE TEMPE DRAIN) WERE DELETED FROM
         THE CORPS' CROSS-SECTION TO REFLECT LEFT BANK IMPROVMENTS AND
         THE RELOCATION OF THE TEMPE DRAIN BY A.D.O.T.
X1     16.829     17.000   9270.000  10550.000    330.000    500.000    510.000       .000       .000       .000
GR   1107.500   8650.000   1100.000   8670.000   1100.000   8870.000   1102.000   8990.000   1100.000   9180.000
GR   1105.500   9270.000   1105.000   9300.000   1100.000   9320.000   1100.500   9480.000   1095.000   9620.000
GR   1085.000   9660.000   1080.900   9750.000   1080.900  10400.000   1085.000  10450.000   1105.000  10530.000
GR   1109.000  10550.000   1109.000  10551.000       .000       .000       .000       .000       .000       .000

NC       .000       .000       .000       .300       .500       .000       .000       .000       .000       .000
ET       .000       .000      4.100   9460.000  10510.000       .000       .000       .000       .000       .000
         GR STATIONS 9010, 9130, 9140 & 9180 WERE DELETED AND GR STATIONS
```

```
          9200, 9380 & 9425 WERE ADDED TO THE CORPS' CROSS-SECTION TO REFLECT
          LEFT BANK IMPROVMENTS AND RELOCATION OF THE TEMPE DRAIN BY A.D.O.T.
X1     16.875     11.000   8970.000  10530.000    550.000    190.000    240.000       .000       .000       .000
GR   1121.500   8880.000   1109.000   8970.000   1108.000   9425.000   1100.000   9540.000   1095.000   9650.000
GR   1085.000   9700.000   1081.200   9820.000   1080.900   9940.000   1080.900  10400.000   1105.000  10510.000
GR   1109.500  10530.000       .000       .000       .000       .000       .000       .000       .000       .000

ET       .000       .000      4.100   9460.000  10490.000       .000       .000       .000       .000       .000
          DOWNSTREAM SECTION OF I-10 BRIDGE. CROSS-SECTION PER FIELD MEASUREMENT
          MARCH 21, 1989.
X1     16.882     38.000   9445.000  10529.000     40.000     40.000     40.000       .000       .000       .000
X3     10.000       .000       .000       .000       .000       .000       .000   1115.000   1115.000       .000
GR   1125.000   9400.000   1115.000   9445.000   1100.000   9480.000   1100.000   9520.000   1088.000   9577.500
GR   1115.000   9577.500   1115.000   9583.500   1088.000   9583.500   1082.000   9615.000   1082.000   9713.000
GR   1115.000   9713.000   1115.000   9719.000   1082.000   9719.000   1082.000   9848.500   1115.000   9848.500
GR   1115.000   9854.500   1082.000   9854.500   1082.000   9984.000   1115.000   9984.000   1115.000   9990.000
GR   1082.000   9990.000   1082.000  10119.500   1115.000  10119.500   1115.000  10125.500   1082.000  10125.500
GR   1082.000  10255.000   1115.000  10255.000   1115.000  10261.000   1082.000  10261.000   1082.000  10390.500
GR   1115.000  10390.500   1115.000  10396.500   1082.000  10396.500   1084.000  10410.000   1098.000  10415.000
GR   1100.000  10445.000   1115.000  10529.000   1124.000  10560.000       .000       .000       .000       .000

ET       .000       .000      4.100   9470.000  10480.000       .000       .000       .000       .000       .000
          UPSTREAM SECTION OF I-10 BRIDGE. CROSS-SECTION PER FIELD MEASUREMENT
          MARCH 21, 1989.
          DISTANCE BETWEEN CROSS-SECTIONS AS LISTED ON THE X1 CARD HAVE BEEN
          CHANGED FROM 114' FOR THE LOB, ROB & CHNL TO 165' RESPECTIVELY
          PER MEASUREMENTS BETWEEN CROSS-SECTIONS AS INDICATED ON WORK MAPS
          TITLED "SALT RIVER CHANNEL, CENTRAL AVENUE TO SCOTTSDALE ROAD,
          8-10-82, MARICOPA COUNTY, SHEET 2B" AND AS REFERENCED AS THE AUGUST
          1982 A.D.O.T. TOPO BASE MAP AT THE "T" CARD LOCATION IN THE HEC2
          OF THE  U.S. ARMY CORPS OF ENGINEERS' SALT RIVER FLOOD INSURANCE STUDY
X1     16.904     38.000   9445.000  10529.000    165.000    165.000    165.000       .000       .000       .000
X2       .000       .000       .000   1115.000   1124.000       .000       .000       .000       .000       .000
GR   1125.000   9400.000   1115.000   9445.000   1100.000   9480.000   1100.000   9520.000   1088.000   9577.500
GR   1115.000   9577.500   1115.000   9583.500   1088.000   9583.500   1082.000   9615.000   1082.000   9713.000
GR   1115.000   9713.000   1115.000   9719.000   1082.000   9719.000   1082.000   9848.500   1115.000   9848.500
GR   1115.000   9854.500   1082.000   9854.500   1082.000   9984.000   1115.000   9984.000   1115.000   9990.000
GR   1082.000   9990.000   1082.000  10119.500   1115.000  10119.500   1115.000  10125.500   1082.000  10125.500
GR   1082.000  10255.000   1115.000  10255.000   1115.000  10261.000   1082.000  10261.000   1082.000  10390.500
GR   1115.000  10390.500   1115.000  10396.500   1082.000  10396.500   1084.000  10410.000   1098.000  10415.000
GR   1100.000  10445.000   1115.000  10529.000   1124.000  10560.000       .000       .000       .000       .000

ET       .000       .000      4.100   9468.000  10498.000       .000       .000       .000       .000       .000
          CHANNEL CROSS-SECTION GEOMETRY IS BASED UPON TOPO FURNISHED BY BOYLE
          ENGINEERING, DEC.1987.
          DISTANCE BETWEEN CROSS-SECTIONS AS LISTED ON THE X1 CARD HAVE BEEN
          CHANGED FROM 120' FOR THE LOB, ROB & CHNL TO 90' RESPECTIVELY
          PER MEASUREMENTS BETWEEN CROSS-SECTIONS AS INDICATED ON WORK MAPS
          TITLED "SALT RIVER CHANNEL, CENTRAL AVENUE TO SCOTTSDALE ROAD,
```

8-10-82, MARICOPA COUNTY, SHEET 2B" AND AS REFERENCED AS THE AUGUST
1982 A.D.O.T. TOPO BASE MAP AT THE "T" CARD LOCATION IN THE HEC2
OF THE U.S. ARMY CORPS OF ENGINEERS' SALT RIVER FLOOD INSURANCE STUDY
ET CARD STATIONS FROM 16.927 TO 17.833 HAVE BEEN CHANGED FROM THE
CORPS' TO FIT WITHIN EXISTING SECTIONS.

X1	16.927	18.000	9600.000	10405.000	90.000	90.000	90.000	.000	.000	.000
GR	1124.000	9000.000	1120.000	9030.000	1120.000	9425.000	1110.000	9460.000	1100.000	9480.000
GR	1090.000	9575.000	1086.000	9600.000	1086.000	9615.000	1084.000	9800.000	1083.000	10000.000
GR	1084.000	10060.000	1084.000	10145.000	1082.000	10280.000	1082.000	10340.000	1084.000	10405.000
GR	1090.000	10425.000	1098.200	10475.000	1115.000	10525.000	.000	.000	.000	.000
NC	.000	.000	.000	.100	.300	.000	.000	.000	.000	.000
NH	4.000	.150	9000.000	.025	9605.000	.030	10395.000	.040	11080.000	.000
ET	.000	.000	4.100	9520.000	10500.000	.000	.000	.000	.000	.000

CHANNEL CROSS-SECTION GEOMETRY IS BASED UPON TOPO FURNISHED BY BOYLE
ENGINEERING, DEC. 1987 AND BY THE GRADING AND DRAINAGE PLAN FOR THE
IMPROVEMENTS TO THE CALMAT CO.'S AIRPORT PROPERTY AS PREPARED BY
BARRETT CONSULTING GROUP INC., JUNE 1987. REFER TO ATTACHMENT D
FOR PROPOSED AIRPORT PROPERTY GRADES.
DEPRESSIONS BELOW THE NORMAL CHANNEL GRADE BETWEEN SECTIONS 17.027
AND 17.129 AND SMALL STOCK PILES OF MATERIAL, ALL THE RESULT OF
MINING IN THE RIVER CHANNEL, WERE NOT MODELED.

X1	17.027	26.000	9605.000	10395.000	440.000	540.000	528.000	.000	.000	.000
GR	1120.000	6940.000	1114.000	6960.000	1110.000	7010.000	1108.000	7235.000	1106.500	7610.000
GR	1106.000	7850.000	1106.000	9000.000	1106.000	9225.000	1106.000	9495.000	1108.000	9505.000
GR	1110.000	9520.000	1110.000	9535.000	1082.000	9605.000	1082.000	9650.000	1084.000	9755.000
GR	1084.000	10020.000	1083.000	10060.000	1082.200	10270.000	1082.000	10340.000	1082.000	10395.000
GR	1082.000	10395.000	1090.000	10425.000	1100.000	10445.000	1106.000	10840.000	1108.000	10875.000
GR	1110.000	11080.000	.000	.000	.000	.000	.000	.000	.000	.000
NH	4.000	.150	8835.000	.025	9610.000	.030	10455.000	.040	11275.000	.000
ET	.000	.000	4.100	9535.000	10480.000	.000	.000	.000	.000	.000

CHANNEL CROSS-SECTION GEOMETRY IS BASED UPON TOPO FURNISHED BY BOYLE
ENGINEERING, DEC. 1987 AND BY THE GRADING AND DRAINAGE PLAN FOR THE
IMPROVEMENTS TO THE CALMAT CO.'S AIRPORT PROPERTY AS PREPARED BY
BARRETT CONSULTING GROUP INC., JUNE 1987. REFER TO ATTACHMENT D
FOR PROPOSED AIRPORT PROPERTY GRADES.
DISTANCE BETWEEN CROSS-SECTIONS AS LISTED ON THE X1 CARD HAVE BEEN
CHANGED FROM 200' TO 135' FOR THE LOB, 200' TO 160' FOR THE ROB & 200'
TO 145' FOR THE CHNL PER MEASUREMENTS BETWEEN CROSS-SECTIONS AS
INDICATED ON WORK MAPS TITLED "SALT RIVER CHANNEL, CENTRAL AVENUE TO
SCOTTSDALE ROAD, 8-10-82, MARICOPA COUNTY, SHEET 2B" AND AS REFERENCED
AS THE AUGUST 1982 A.D.O.T. TOPO BASE MAP AT THE "T" CARD LOCATION IN
THE HEC2 OF THE U.S. ARMY CORPS OF ENGINEERS' SALT RIVER FLOOD
INSURANCE STUDY.

X1	17.053	26.000	9610.000	10455.000	135.000	160.000	145.000	.000	.000	.000
GR	1120.000	7010.000	1114.000	7030.000	1112.000	7060.000	1110.000	7070.000	1108.000	7430.000
GR	1106.000	8160.000	1108.000	8830.000	1106.000	9200.000	1106.000	9510.000	1110.000	9520.000
GR	1110.000	9525.000	1110.000	9535.000	1082.000	9610.000	1082.000	9685.000	1084.000	9740.000
GR	1084.000	9845.000	1082.000	9955.000	1082.000	10455.000	1090.000	10515.000	1100.000	10565.000
GR	1104.000	10670.000	1100.000	10750.000	1104.000	10845.000	1108.000	10880.000	1110.000	11105.000
GR	1112.000	11275.000	.000	.000	.000	.000	.000	.000	.000	.000

```
NH      4.000      .150   8620.000      .025   9625.000      .030  10420.000      .040  11235.000      .000
ET       .000      .000      4.100  9540.000  10485.000      .000       .000      .000       .000      .000
         CHANNEL CROSS-SECTION GEOMETRY IS BASED UPON TOPO FURNISHED BY BOYLE
         ENGINEERING, DEC. 1987 AND BY THE GRADING AND DRAINAGE PLAN FOR THE
         IMPROVEMENTS TO THE CALMAT CO.'S AIRPORT PROPERTY AS PREPARED BY
         BARRETT CONSULTING GROUP INC., JUNE 1987. REFER TO ATTACHMENT D
         FOR PROPOSED AIRPORT PROPERTY GRADES.
X1     17.091     17.000   9625.000  10420.000    200.000    200.000    200.000       .000       .000       .000
GR   1114.000   7145.000   1108.000   7900.000   1106.900   8230.000   1107.000   8620.000   1108.000   9470.000
GR   1110.000   9535.000   1110.000   9540.000   1090.000   9595.000   1082.000   9625.000   1082.000   9650.000
GR   1084.000   9715.000   1084.000   9920.000   1082.000  10080.000   1082.000  10420.000   1108.000  10485.000
GR   1110.000  11010.000   1112.000  11235.000       .000       .000       .000       .000       .000       .000

NH      4.000      .150   8440.000      .025   9620.000      .035  10420.000      .040  11120.000      .000
ET       .000      .000      4.100  9565.000  10490.000      .000       .000      .000       .000      .000
         DISTANCE BETWEEN CROSS-SECTIONS AS LISTED ON THE X1 CARD HAVE BEEN
         CHANGED FROM 200' FOR THE LOB, ROB & CHNL TO 186' RESPECTIVELY
         PER MEASUREMENTS BETWEEN CROSS-SECTIONS AS INDICATED ON WORK MAPS
         TITLED "SALT RIVER CHANNEL, CENTRAL AVENUE TO SCOTTSDALE ROAD,
         8-10-82, MARICOPA COUNTY, SHEET 2B" AND AS REFERENCED AS THE AUGUST
         1982 A.D.O.T. TOPO BASE MAP AT THE "T" CARD LOCATION IN THE HEC2
         OF THE  U.S. ARMY CORPS OF ENGINEERS' SALT RIVER FLOOD INSURANCE STUDY
         CHANNEL CROSS-SECTION GEOMETRY IS BASED UPON TOPO FURNISHED BY BOYLE
         ENGINEERING, DEC. 1987 AND BY THE GRADING AND DRAINAGE PLAN FOR THE
         IMPROVEMENTS TO THE CALMAT CO.'S AIRPORT PROPERTY AS PREPARED BY
         BARRETT CONSULTING GROUP INC., JUNE 1987. REFER TO ATTACHMENT D
         FOR PROPOSED AIRPORT PROPERTY GRADES.
X1     17.129     13.000   9620.000  10420.000    186.000    186.000    186.000       .000       .000       .000
GR   1109.000   7360.000   1108.000   7465.000   1107.000   8440.000   1108.000   9505.000   1110.000   9520.000
GR   1110.000   9540.000   1110.000   9565.000   1084.000   9620.000   1082.000   9740.000   1082.000  10420.000
GR   1108.000  10490.000   1110.000  10665.000   1112.000  11120.000       .000       .000       .000       .000

NH      4.000      .100   8290.000      .025   9675.000      .030  10420.000      .040  10910.000      .000
ET       .000      .000      4.100  9570.000  10495.000      .000       .000      .000       .000      .000
         DISTANCE BETWEEN CROSS-SECTIONS AS LISTED ON THE X1 CARD HAVE BEEN
         CHANGED FROM 200' FOR THE LOB, ROB & CHNL TO 220' RESPECTIVELY
         PER MEASUREMENTS BETWEEN CROSS-SECTIONS AS INDICATED ON WORK MAPS
         TITLED "SALT RIVER CHANNEL, CENTRAL AVENUE TO SCOTTSDALE ROAD,
         8-10-82, MARICOPA COUNTY, SHEET 2B" AND AS REFERENCED AS THE AUGUST
         1982 A.D.O.T. TOPO BASE MAP AT THE "T" CARD LOCATION IN THE HEC2
         OF THE  U.S. ARMY CORPS OF ENGINEERS' SALT RIVER FLOOD INSURANCE STUDY
         CHANNEL CROSS-SECTION GEOMETRY IS BASED UPON TOPO FURNISHED BY BOYLE
         ENGINEERING, DEC. 1987 AND BY THE GRADING AND DRAINAGE PLAN FOR THE
         IMPROVEMENTS TO THE CALMAT CO.'S AIRPORT PROPERTY AS PREPARED BY
         BARRETT CONSULTING GROUP INC., JUNE 1987. REFER TO ATTACHMENT D
         FOR PROPOSED AIRPORT PROPERTY GRADES.
X1     17.167     19.000   9675.000  10420.000    220.000    220.000    220.000       .000       .000       .000
GR   1109.000   7400.000   1108.000   7475.000   1107.300   8290.000   1107.200   8440.000   1108.000   8660.000
GR   1108.000   9330.000   1108.000   9460.000   1108.000   9505.000   1110.000   9515.000   1112.000   9530.000
GR   1110.000   9545.000   1110.000   9570.000   1086.000   9620.000   1084.000   9675.000   1082.000   9755.000
GR   1082.000  10420.000   1108.000  10495.000   1110.000  10670.000   1112.000  10910.000       .000       .000
```

```
NH      4.000      .100  8200.000      .025   9685.000      .030  10425.000      .040  10900.000      .000
ET       .000      .000     4.100  9545.000  10495.000      .000       .000      .000       .000      .000
         CHANNEL CROSS-SECTION GEOMETRY IS BASED UPON TOPO FURNISHED BY BOYLE
         ENGINEERING, DEC. 1987 AND BY THE GRADING AND DRAINAGE PLAN FOR THE
         IMPROVEMENTS TO THE CALMAT CO.'S AIRPORT PROPERTY AS PREPARED BY
         BARRETT CONSULTING GROUP INC., JUNE 1987. REFER TO ATTACHMENT D
         FOR PROPOSED AIRPORT PROPERTY GRADES.
X1     17.205     21.000  9685.000  10425.000     80.000     80.000     80.000      .000      .000      .000
GR   1108.000   7360.000  1109.000   7430.000   1108.000   7480.000   1107.500   8200.000   1107.300   8440.000
GR   1108.000   8580.000  1108.000   9400.000   1108.000   9500.000   1110.000   9510.000   1112.000   9530.000
GR   1112.500   9545.000  1110.000   9555.000   1086.000   9630.000   1084.000   9685.000   1082.000   9950.000
GR   1082.000  10035.000  1082.000  10250.000   1082.000  10425.000   1108.000  10495.000   1110.000  10675.000
GR   1112.000  10900.000      .000       .000       .000       .000       .000       .000       .000       .000

NH      4.000      .100  8110.000      .025   9685.000      .030  10400.000      .040  10890.000      .000
ET       .000      .000     4.100  9535.000  10500.000      .000       .000      .000       .000      .000
         CHANNEL CROSS-SECTION GEOMETRY IS BASED UPON TOPO FURNISHED BY BOYLE
         ENGINEERING, DEC. 1987 AND BY THE GRADING AND DRAINAGE PLAN FOR THE
         IMPROVEMENTS TO THE CALMAT CO.'S AIRPORT PROPERTY AS PREPARED BY
         BARRETT CONSULTING GROUP INC., JUNE 1987. REFER TO ATTACHMENT D
         FOR PROPOSED AIRPORT PROPERTY GRADES.
X1     17.242     20.000  9685.000  10400.000    120.000    120.000    120.000      .000      .000      .000
GR   1108.000   7455.000  1108.000   7730.000   1107.500   8100.000   1108.000   8380.000   1107.300   8460.000
GR   1108.000   8540.000  1108.000   9470.000   1110.000   9480.000   1112.000   9490.000   1112.500   9525.000
GR   1113.000   9535.000  1088.000   9625.000   1086.000   9675.000   1084.000   9685.000   1082.000  10270.000
GR   1082.000  10400.000  1084.000  10425.000   1108.000  10500.000   1110.000  10680.000   1112.000  10890.000

NH      4.000      .065  8340.000      .025   9690.000      .030  10400.000      .040  10890.000      .000
ET       .000      .000     4.100  9530.000  10510.000      .000       .000      .000       .000      .000
         CHANNEL CROSS-SECTION GEOMETRY IS BASED UPON TOPO FURNISHED BY BOYLE
         ENGINEERING, DEC. 1987 AND BY THE GRADING AND DRAINAGE PLAN FOR THE
         IMPROVEMENTS TO THE CALMAT CO.'S AIRPORT PROPERTY AS PREPARED BY
         BARRETT CONSULTING GROUP INC., JUNE 1987. REFER TO ATTACHMENT D
         FOR PROPOSED AIRPORT PROPERTY GRADES.
X1     17.280     22.000  9690.000  10400.000    200.000    200.000    200.000      .000      .000      .000
GR   1108.000   7480.000  1108.000   7870.000   1108.000   8130.000   1118.000   8130.000   1118.000   8340.000
GR   1108.000   8340.000  1107.300   8490.000   1108.000   8510.000   1108.000   9510.000   1114.000   9530.000
GR   1113.700   9570.000  1110.000   9580.000   1088.000   9615.000   1086.000   9670.000   1084.000   9690.000
GR   1082.800  10000.000  1084.000  10360.000   1086.000  10400.000   1088.000  10430.000   1108.000  10510.000
GR   1110.000  10700.000  1112.000  10890.000       .000       .000       .000       .000       .000       .000

NH      4.000      .065  8330.000      .025   9695.000      .030  10360.000      .040  10890.000      .000
ET       .000      .000     4.100  9570.000  10500.000      .000       .000      .000       .000      .000
X1     17.318     27.000  9695.000  10360.000    200.000    200.000    200.000      .000      .000      .000
GR   1108.000   7480.000  1108.000   7640.000   1118.000   7640.000   1118.000   7800.000   1108.000   7800.000
GR   1108.000   8130.000  1118.000   8130.000   1118.000   8330.000   1108.000   8330.000   1108.000   8470.000
GR   1107.500   8515.000  1108.000   8575.000   1108.000   9510.000   1112.000   9525.000   1114.000   9530.000
GR   1114.000   9540.000  1110.000   9565.000   1088.000   9610.000   1088.000   9665.000   1084.000   9695.000
GR   1083.100  10000.000  1084.000  10360.000   1086.000  10400.000   1088.000  10455.000   1108.000  10520.000
GR   1110.000  10745.000  1112.000  10890.000       .000       .000       .000       .000       .000       .000
```

```
NH      5.000      .065   8340.000      .025   9690.000      .030  10380.000      .040  10550.000      .100
NH  11009.000      .000      .000      .000      .000      .000      .000      .000      .000      .000
ET      .000      .000     4.100   9550.000  10540.000      .000      .000      .000      .000      .000
        17.356 THRU 17.833; CHANNEL CROSS-SECTION GEOMETRY IS BASED UPON TOPO
        FURNISHED BY BOYLE ENGINEERING, DEC. 1987, FOR THE LEFT LEVEE AND THE
        CORPS' CROSS-SECTIONS FOR THE RIGHT BANK.
        RIGHT OVERBANK IS ASSUMED INEFFECTIVE FLOW.
X1     17.356     32.000   9690.000  10380.000    200.000    200.000    200.000      .000      .000      .000
GR   1110.000   7500.000   1108.500   8120.000   1118.000   8120.000   1118.000   8340.000   1108.500   8340.000
GR   1108.000   8380.000   1108.000   9510.000   1110.000   9515.000   1112.000   9525.000   1114.000   9535.000
GR   1114.700   9550.000   1088.000   9615.000   1088.000   9670.000   1084.000   9690.000   1083.400  10000.000
GR   1082.500  10190.000   1084.000  10380.000   1090.000  10425.000   1090.000  10470.000   1097.000  10515.000
GR   1092.000  10550.000   1086.300  10591.900   1096.400  10645.400   1092.600  10688.000   1093.000  10757.500
GR   1096.700  10783.000   1102.200  10800.600   1110.800  10807.100   1113.300  10851.600   1114.600  10934.200
GR   1112.600  10993.700   1112.500  11009.000      .000      .000      .000      .000      .000      .000

NH      4.000      .065   8690.000      .025   9700.000      .030  10370.000      .040  10548.000      .000
ET      .000      .000     4.100   9550.000  10548.000      .000      .000      .000      .000      .000
        THE FOLLOWING MESSAGE IS TAKEN FROM THE HEC2 PRINTOUT OF THE U.S. ARMY
        CORPS OF ENGINEERS 1983-1984 STUDY (FEMA FIS).
        "FROM STATION 17.394 TO STATION 21.102, ALL HYDRAULIC
        DATA WAS OBTAINED FROM HNTB ENGINEERING FIRM
        HNTB IS THE DESIGN CONTRACTOR OF AIRPORT CHANNELIZATION
        PROJECT.  IN PHOENIX CALL MR. BOB MILLER, (602) 957-1931,
        IN KANSAS CITY, MR. DICK SHWAB (816) 333-4800."
X1     17.394     21.000   9700.000  10370.000    200.000    200.000    200.000      .000      .000      .000
GR   1110.000   7525.000   1108.400   7640.000   1108.500   8150.000   1118.000   8150.000   1118.000   8350.000
GR   1108.500   8350.000   1107.900   8650.000   1108.000   8690.000   1108.000   9510.000   1114.000   9535.000
GR   1115.000   9550.000   1110.000   9575.000   1090.000   9615.000   1088.000   9680.000   1084.000   9700.000
GR   1083.700  10000.000   1083.000  10290.000   1084.000  10370.000   1090.000  10425.000   1090.600  10500.000
GR   1114.600  10548.000      .000      .000      .000      .000      .000      .000      .000      .000

NH      4.000      .065   8650.000      .025   9705.000      .030  10380.000      .040  10548.000      .000
ET      .000      .000     4.100   9550.000  10548.000      .000      .000      .000      .000      .000
X1     17.432     24.000   9705.000  10380.000    200.000    200.000    200.000      .000      .000      .000
GR   1110.000   7650.000   1109.500   8030.000   1108.500   8440.000   1118.000   8440.000   1118.000   8650.000
GR   1108.000   8650.000   1108.000   9510.000   1110.000   9515.000   1112.000   9525.000   1114.000   9535.000
GR   1115.000   9550.000   1110.000   9575.000   1090.000   9620.000   1090.000   9670.000   1084.000   9705.000
GR   1084.000   9730.000   1084.000  10000.000   1084.300  10170.000   1084.000  10300.000   1084.000  10380.000
GR   1090.000  10420.000   1092.000  10480.000   1091.100  10500.000   1114.900  10548.000      .000      .000

NH      4.000      .065   8795.000      .025   9700.000      .030  10480.000      .040  10547.000      .000
ET      .000      .000     4.100   9550.000  10547.000      .000      .000      .000      .000      .000
X1     17.453     18.000   9700.000  10480.000    112.000    112.000    112.000      .000      .000      .000
GR   1110.000   7670.000   1109.500   8060.000   1108.000   8795.000   1108.000   9510.000   1114.000   9525.000
GR   1115.000   9550.000   1112.000   9570.000   1092.000   9615.000   1090.000   9680.000   1086.000   9700.000
GR   1084.000   9860.000   1083.000   9940.000   1084.000   9980.000   1084.000  10370.000   1092.000  10425.000
GR   1092.000  10480.000   1091.500  10500.000   1114.900  10547.000      .000      .000      .000      .000
```

NH	4.000	.045	8805.000	.025	9700.000	.030	10480.000	.040	10547.000	.000
ET	.000	.000	4.100	9550.000	10547.000	.000	.000	.000	.000	.000
X1	17.459	18.000	9700.000	10480.000	31.000	31.000	31.000	.000	.000	.000
GR	1110.000	7690.000	1109.500	8060.000	1108.000	8805.000	1108.000	9510.000	1114.000	9535.000
GR	1115.000	9550.000	1112.000	9570.000	1092.000	9615.000	1090.000	9680.000	1086.000	9700.000
GR	1084.000	9880.000	1083.000	9940.000	1084.000	9980.000	1084.000	10370.000	1092.000	10425.000
GR	1092.000	10480.000	1091.600	10500.000	1114.900	10547.000	.000	.000	.000	.000
NH	.000	.045	8560.000	.025	9705.000	.030	10360.000	.040	10547.000	.000
ET	.000	.000	4.100	9560.000	10547.000	.000	.000	.000	.000	.000
X1	17.470	16.000	9705.000	10360.000	57.000	57.000	57.000	.000	.000	.000
GR	1110.000	7765.000	1108.000	8560.000	1108.000	9510.000	1110.000	9520.000	1114.000	9540.000
GR	1115.000	9560.000	1092.000	9620.000	1090.000	9680.000	1086.000	9705.000	1084.000	9890.000
GR	1084.000	9965.000	1084.000	10275.000	1084.000	10360.000	1092.000	10425.000	1091.700	10500.000
GR	1115.000	10547.000	.000	.000	.000	.000	.000	.000	.000	.000
NH	4.000	.045	8580.000	.025	9700.000	.030	10425.000	.040	10546.000	.000
ET	.000	.000	4.100	9555.000	10546.000	.000	.000	.000	.000	.000
X1	17.486	18.000	9700.000	10425.000	84.000	84.000	84.000	.000	.000	.000
GR	1110.000	7815.000	1108.000	8580.000	1108.000	9520.000	1110.000	9525.000	1114.000	9540.000
GR	1115.800	9555.000	1114.000	9575.000	1092.000	9620.000	1086.000	9700.000	1084.000	9890.000
GR	1083.500	9940.000	1084.000	9970.000	1084.400	10200.000	1084.000	10345.000	1084.000	10380.000
GR	1092.000	10425.000	1092.000	10500.000	1115.100	10546.000	.000	.000	.000	.000
NH	4.000	.045	8660.000	.025	9710.000	.030	10425.000	.040	10546.000	.000
ET	.000	.000	4.100	9555.000	10546.000	.000	.000	.000	.000	.000
X1	17.498	18.000	9710.000	10425.000	68.000	68.000	68.000	.000	.000	.000
GR	1110.000	7810.000	1108.000	8660.000	1108.000	9515.000	1110.000	9525.000	1114.000	9540.000
GR	1115.800	9555.000	1114.000	9575.000	1092.000	9620.000	1086.000	9710.000	1086.000	9785.000
GR	1084.000	9910.000	1084.000	9930.000	1084.400	10200.000	1084.000	10335.000	1084.000	10380.000
GR	1092.000	10425.000	1092.200	10500.000	1115.200	10546.000	.000	.000	.000	.000
NH	4.000	.045	8880.000	.025	9695.000	.030	10390.000	.040	10546.000	.000
ET	.000	.000	4.100	9555.000	10546.000	.000	.000	.000	.000	.000
X1	17.508	16.000	9695.000	10390.000	48.000	48.000	48.000	.000	.000	.000
GR	1110.000	7810.000	1109.300	8315.000	1108.000	8865.000	1108.000	9510.000	1114.000	9535.000
GR	1116.000	9555.000	1092.000	9615.000	1090.000	9675.000	1088.000	9695.000	1086.000	9750.000
GR	1086.000	9800.000	1084.000	9940.000	1084.000	10390.000	1092.000	10425.000	1092.300	10500.000
GR	1115.200	10546.000	.000	.000	.000	.000	.000	.000	.000	.000
NH	4.000	.045	8910.000	.025	9685.000	.030	10405.000	.040	10545.000	.000
ET	.000	.000	4.100	9550.000	10545.000	.000	.000	.000	.000	.000
X1	17.536	20.000	9685.000	10405.000	150.000	150.000	150.000	.000	.000	.000
GR	1110.000	8130.000	1108.600	8370.000	1108.000	8910.000	1108.000	9510.000	1114.000	9530.000
GR	1115.800	9550.000	1092.000	9610.000	1090.000	9670.000	1088.000	9685.000	1086.000	9790.000
GR	1086.000	9825.000	1085.000	10065.000	1086.000	10125.000	1084.300	10270.000	1086.000	10310.000
GR	1086.000	10355.000	1088.000	10405.000	1092.000	10425.000	1092.700	10500.000	1115.400	10545.000

NH	4.000	.065	8970.000	.025	9690.000	.030	10400.000	.040	10545.000	.000
ET	.000	.000	4.100	9530.000	10545.000	.000	.000	.000	.000	.000
X1	17.568	17.000	9690.000	10400.000	170.000	170.000	170.000	.000	.000	.000
GR	1110.000	7900.000	1110.000	8660.000	1108.000	8970.000	1108.000	9490.000	1114.000	9515.000
GR	1115.800	9530.000	1094.000	9595.000	1092.000	9645.000	1088.000	9690.000	1086.000	9825.000
GR	1086.000	10180.000	1084.600	10240.000	1086.000	10325.000	1088.000	10400.000	1092.000	10415.000
GR	1093.200	10500.000	1115.500	10545.000	.000	.000	.000	.000	.000	.000
NH	4.000	.065	9035.000	.025	9640.000	.030	10400.000	.040	10544.000	.000
ET	.000	.000	4.100	9520.000	10544.000	.000	.000	.000	.000	.000
X1	17.606	20.000	9640.000	10400.000	200.000	200.000	200.000	.000	.000	.000
GR	1110.000	8320.000	1109.500	8950.000	1108.000	9035.000	1108.000	9480.000	1116.000	9505.000
GR	1116.000	9520.000	1110.000	9545.000	1100.000	9565.000	1094.000	9580.000	1092.000	9640.000
GR	1088.000	9760.000	1088.000	10060.000	1086.000	10155.000	1084.700	10185.000	1086.000	10210.000
GR	1088.000	10285.000	1088.000	10400.000	1092.000	10420.000	1093.800	10500.000	1115.700	10544.000
NH	4.000	.065	9100.000	.025	9690.000	.030	10425.000	.040	10543.000	.000
ET	.000	.000	4.100	9505.000	10543.000	.000	.000	.000	.000	.000
X1	17.644	23.000	9690.000	10425.000	200.000	200.000	200.000	.000	.000	.000
GR	1110.000	8460.000	1109.700	9010.000	1108.000	9100.000	1108.000	9470.000	1116.000	9500.000
GR	1115.800	9505.000	1094.000	9570.000	1094.000	9615.000	1088.000	9690.000	1087.000	9740.000
GR	1088.000	9810.000	1089.000	9890.000	1088.000	10000.000	1087.000	10015.000	1088.000	10040.000
GR	1088.000	10105.000	1086.000	10150.000	1085.000	10180.000	1088.000	10220.000	1090.000	10425.000
GR	1092.000	10435.000	1094.300	10500.000	1115.900	10543.000	.000	.000	.000	.000
NH	4.000	.065	9170.000	.025	9650.000	.030	10415.000	.040	10543.000	.000
ET	.000	.000	4.100	9495.000	10543.000	.000	.000	.000	.000	.000
X1	17.682	18.000	9650.000	10415.000	200.000	200.000	200.000	.000	.000	.000
GR	1110.000	8640.000	1110.000	9160.000	1108.000	9170.000	1108.000	9450.000	1116.000	9480.000
GR	1116.000	9495.000	1094.000	9560.000	1094.000	9605.000	1088.000	9650.000	1088.000	9755.000
GR	1088.000	10020.000	1088.000	10120.000	1086.000	10195.000	1088.000	10235.000	1090.000	10415.000
GR	1092.000	10425.000	1094.800	10500.000	1116.100	10543.000	.000	.000	.000	.000
NC	.040	.040	.030	.000	.000	.000	.000	.000	.000	.000
ET	.000	.000	4.100	9490.000	10542.000	.000	.000	.000	.000	.000
X1	17.720	17.000	9620.000	10415.000	200.000	200.000	200.000	.000	.000	.000
GR	1112.000	8780.000	1110.000	9220.000	1108.000	9225.000	1108.000	9440.000	1116.000	9470.000
GR	1116.600	9490.000	1096.000	9545.000	1094.000	9595.000	1091.000	9620.000	1090.500	10030.000
GR	1088.000	10140.000	1087.500	10190.000	1090.000	10240.000	1090.000	10415.000	1092.000	10425.000
GR	1095.400	10500.000	1116.300	10542.000	.000	.000	.000	.000	.000	.000
ET	.000	.000	4.100	9475.000	10541.000	.000	.000	.000	.000	.000
X1	17.758	17.000	9800.000	10400.000	200.000	200.000	200.000	.000	.000	.000
GR	1112.000	8980.000	1110.000	9265.000	1110.000	9425.000	1112.000	9440.000	1116.000	9450.000
GR	1117.000	9475.000	1096.000	9535.000	1096.000	9585.000	1092.000	9630.000	1090.000	9650.000
GR	1090.000	9800.000	1089.000	9930.000	1088.000	10180.000	1088.000	10235.000	1090.000	10400.000
GR	1095.900	10500.000	1116.500	10541.000	.000	.000	.000	.000	.000	.000

```
ET      .000      .000     4.100   9470.000  10541.000      .000      .000      .000      .000      .000
X1    17.795     15.000  9890.000  10415.000    200.000   200.000   200.000      .000      .000      .000
GR  1112.000   8880.000  1111.500   9075.000   1110.000  9310.000  1110.000  9410.000  1116.000  9435.000
GR  1117.200   9470.000  1098.000   9525.000   1096.000  9580.000  1090.000  9630.000  1090.000  9890.000
GR  1088.500  10125.000  1090.000  10415.000   1094.000 10465.000  1096.400 10500.000  1116.700 10541.000

ET      .000      .000     4.100   9465.000  10540.000      .000      .000      .000      .000      .000
X1    17.833     25.000  9835.000  10260.000    200.000   200.000   200.000      .000      .000      .000
GR  1112.000   8730.000  1111.500   9110.000   1110.000  9330.000  1110.000  9400.000  1116.000  9425.000
GR  1117.500   9465.000  1098.000   9510.000   1096.000  9635.000  1094.000  9700.000  1094.000  9790.000
GR  1092.000   9815.000  1090.000   9835.000   1092.000  9870.000  1092.000  9960.000  1090.000  9975.000
GR  1089.600  10040.000  1090.000  10110.000   1092.000 10140.000  1092.000 10230.000  1090.000 10260.000
GR  1092.000  10360.000  1094.000  10450.000   1096.000 10465.000  1096.900 10500.000  1116.900 10540.000

ET      .000      .000     4.100   9475.000  10525.000      .000      .000      .000      .000      .000
          17.871 TO 18.455 CROSS-SECTIONS PER U.S. ARMY CORPS OF ENGINEERS
          1983-1984 STUDY (FEMA FIS) AND A.D.O.T. TOPO. FLOODWAY ENCROACHMENT
          STATIONS ALSO PER COE.
X1    17.871     12.000  9820.100  10244.100    180.000   220.000   200.000      .000      .000      .000
GR  1117.100   9460.200  1116.600   9461.600   1097.400  9500.000  1097.400  9500.000  1097.400  9820.100
GR  1091.400   9832.100  1091.400  10232.100   1097.400 10244.100  1097.400 10500.000  1097.400 10500.000
GR  1116.600  10538.400  1117.100  10539.400       .000      .000      .000      .000      .000      .000

ET      .000      .000     4.100   9470.000  10525.000      .000      .000      .000      .000      .000
X1    17.909     12.000  9817.000  10241.100    180.000   220.000   200.000      .000      .000      .000
GR  1117.300   9461.200  1098.000   9500.000   1098.000  9715.000  1098.000  9755.000  1098.000  9817.000
GR  1092.000   9829.000  1092.000  10229.100   1098.000 10241.100  1098.000 10500.000  1098.000 10500.000
GR  1116.800  10537.800  1117.300  10538.800       .000      .000      .000      .000      .000      .000

ET      .000      .000     4.100   9475.000  10525.000      .000      .000      .000      .000      .000
X1    17.947     12.000  9813.900  10238.000    180.000   220.000   200.000      .000      .000      .000
GR  1117.500   9461.900  1098.500   9500.000   1098.500  9679.000  1098.500  9762.000  1098.500  9813.900
GR  1092.500   9825.900  1092.500  10226.000   1098.500 10238.000  1098.500 10500.000  1098.500 10500.000
GR  1117.000  10537.100  1117.500  10538.100       .000      .000      .000      .000      .000      .000

ET      .000      .000     4.100   9480.000  10520.000      .000      .000      .000      .000      .000
X1    17.970     12.000  9812.100  10236.100    110.000   130.000   120.000      .000      .000      .000
GR  1117.600   9462.300  1098.800   9500.000   1098.800  9655.000  1098.800  9770.000  1098.800  9812.100
GR  1092.800   9824.100  1092.800  10224.100   1098.800 10236.100  1098.800 10500.000  1098.800 10500.000
GR  1117.100  10536.700  1117.600  10537.700       .000      .000      .000      .000      .000      .000

NC      .035      .035      .035      .100      .300      .000      .000      .000      .000      .000
ET      .000      .000     4.100   9475.000  10524.000      .000      .000      .000      .000      .000
          STOCKPILED MATERIAL MODELED IN THE CORPS' ORIGINAL SECTION DOES NOT
          CURRENTLY EXIST AND THIS SECTION WAS MODIFIED TO DELETE SAME.
X1    17.998     12.000  9835.000  10233.800    130.000   160.000   150.000      .000      .000      .000
GR  1117.800   9462.700  1099.200   9500.000   1099.200  9630.000  1100.200  9670.000  1100.200  9795.000
GR  1099.200   9835.000  1093.200   9847.000   1093.200 10221.800  1099.200 10233.800  1099.200 10500.000
GR  1117.300  10536.300  1117.800  10537.300       .000      .000      .000      .000      .000      .000
```

ET	.000	.000	4.100	9470.000	10529.000	.000	.000	.000	.000	.000
X1	18.036	12.000	9806.600	10230.600	180.000	220.000	200.000	.000	.000	.000
GR	1118.500	9462.300	1118.000	9463.300	1099.700	9500.000	1099.700	9500.000	1099.700	9806.600
GR	1093.700	9818.600	1093.700	10218.600	1099.700	10230.600	1099.700	10500.000	1099.700	10500.000
GR	1118.000	10536.700	1118.500	10537.700	.000	.000	.000	.000	.000	.000
ET	.000	.000	4.100	9471.000	10528.000	.000	.000	.000	.000	.000
X1	18.074	12.000	9803.400	10277.400	180.000	220.000	200.000	.000	.000	.000
GR	1119.200	9461.900	1118.700	9462.900	1100.200	9500.000	1100.200	9500.000	1100.200	9803.400
GR	1094.200	9815.400	1094.200	10215.400	1100.200	10277.400	1100.200	10500.000	1100.200	10500.000
GR	1118.700	10537.100	1119.200	10538.100	.000	.000	.000	.000	.000	.000
ET	.000	.000	4.100	9471.000	10528.000	.000	.000	.000	.000	.000
X1	18.112	12.000	9800.200	10224.200	180.000	220.000	200.000	.000	.000	.000
GR	1120.000	9461.500	1119.500	9462.500	1100.700	9500.000	1100.700	9500.000	1100.700	9800.200
GR	1094.700	9812.200	1094.700	10212.200	1100.700	10224.200	1100.700	10500.000	1100.700	10500.000
GR	1119.500	10537.500	1120.000	10538.500	.000	.000	.000	.000	.000	.000
ET	.000	.000	4.100	9472.000	10516.000	.000	.000	.000	.000	.000
X1	18.150	12.000	9797.000	10221.000	180.000	220.000	200.000	.000	.000	.000
GR	1120.700	9461.100	1120.200	9462.100	1101.300	9500.000	1101.300	9500.000	1101.300	9797.000
GR	1095.300	9809.000	1095.300	10209.000	1101.300	10221.000	1101.300	10489.000	1101.300	10489.000
GR	1120.200	10526.900	1120.700	10527.900	.000	.000	.000	.000	.000	.000
ET	.000	.000	4.100	9474.000	10339.000	.000	.000	.000	.000	.000
X1	18.188	12.000	9793.800	10217.800	180.000	220.000	200.000	.000	.000	.000
GR	1121.000	9461.500	1120.500	9462.500	1101.800	9500.000	1101.800	9500.000	1101.800	9793.800
GR	1095.800	9805.800	1095.800	10205.800	1101.800	10217.800	1101.800	10313.900	1101.800	10313.900
GR	1120.500	10351.400	1121.000	10352.400	.000	.000	.000	.000	.000	.000
ET	.000	.000	4.100	9473.000	10352.000	.000	.000	.000	.000	.000
X1	18.216	12.000	9791.300	10215.400	140.000	160.000	150.000	.000	.000	.000
GR	1121.300	9461.800	1120.800	9462.800	1102.200	9500.000	1102.200	9500.000	1102.200	9791.300
GR	1096.200	9803.300	1096.200	10203.400	1102.200	10215.400	1102.200	10326.000	1102.200	10326.000
GR	1120.800	10363.200	1121.300	10364.200	.000	.000	.000	.000	.000	.000
ET	.000	.000	4.100	9471.000	10465.000	.000	.000	.000	.000	.000
X1	18.254	12.000	9788.300	10212.300	180.000	220.000	200.000	.000	.000	.000
GR	1121.600	9462.200	1121.100	9463.200	1102.700	9500.000	1102.700	9500.000	1102.700	9788.300
GR	1096.700	9800.300	1096.700	10200.300	1102.700	10212.300	1102.700	10436.900	1102.700	10436.900
GR	1121.100	10473.800	1121.600	10474.800	.000	.000	.000	.000	.000	.000
ET	.000	.000	4.100	9470.000	10529.000	.000	.000	.000	.000	.000
X1	18.292	12.000	9788.000	10212.000	190.000	210.000	200.000	.000	.000	.000
GR	1121.900	9462.600	1121.400	9463.600	1103.200	9500.000	1103.200	9500.000	1103.200	9788.000
GR	1097.200	9800.000	1097.200	10200.000	1103.200	10212.000	1103.200	10500.000	1103.200	10500.000
GR	1121.400	10536.400	1121.900	10537.400	.000	.000	.000	.000	.000	.000

```
ET      .000      .000      4.100   9471.000  10528.000      .000      .000      .000      .000      .000
X1    18.330    12.000   9788.000  10212.000    200.000   200.000   200.000      .000      .000      .000
GR  1122.200  9463.000  1121.700   9464.000   1103.700  9500.000  1103.700  9500.000  1103.700  9788.000
GR  1097.700  9800.000  1097.700  10200.000   1103.700 10212.000  1103.700 10500.000  1103.700 10500.000
GR  1121.700 10536.000  1122.200  10537.000       .000      .000      .000      .000      .000      .000

ET      .000      .000      9.100      .000      .000      .000      .000      .000   9471.000 10528.000
        CROSS-SECTION FROM CORP OF ENGINEERS RUN ***** ADDED *****
X1    18.367    12.000   9788.000  10212.000    200.000   200.000   200.000      .000      .000      .000
GR  1122.600  9463.400  1122.100   9464.400   1104.200  9500.000  1104.200  9500.000  1104.200  9788.000
GR  1098.200  9800.000  1098.200  10200.000   1104.200 10212.000  1104.200 10500.000  1104.200 10500.000
GR  1122.100 10535.600  1122.600  10536.600       .000      .000      .000      .000      .000      .000

ET      .000      .000      9.100      .000      .000      .000      .000      .000   9542.000 10527.000
        CROSS-SECTION FROM CORP OF ENGINEERS RUN ***** ADDED *****
X1    18.405    12.000   9788.000  10212.000    200.000   200.000   200.000      .000      .000      .000
GR  1122.900  9463.800  1122.400   9464.800   1104.800  9500.000  1104.800  9500.000  1104.800  9788.000
GR  1098.800  9800.000  1098.800  10200.000   1104.800 10212.000  1104.800 10500.000  1104.800 10500.000
GR  1122.400 10535.200  1122.900  10536.200       .000      .000      .000      .000      .000      .000

        CROSS-SECTION FROM CORP OF ENGINEERS RUN ***** ADDED *****
        THIS CROSS-SECTION EQUATES TO ADOT CROSS-SECTION 100+35
X1    18.417    12.000  10020.000  11105.000     65.000    55.000    60.000      .000      .000      .000
GR  1125.000 10000.000  1125.000  10010.000   1122.000 10020.000  1105.000 10056.000  1104.000 10340.000
GR  1100.000 10356.000  1097.200  10540.000   1100.000 10750.000  1105.000 10770.000  1105.000 11050.000
GR  1125.000 11105.000  1125.000  11150.000       .000      .000      .000      .000      .000      .000
EJ      .000      .000      .000      .000      .000      .000      .000      .000      .000      .000
```

```
  SECNO    DEPTH    CWSEL    CRIWS    WSELK    EG       HV       HL       OLOSS   BANK ELEV
  Q        QLOB     QCH      QROB     ALOB     ACH      AROB     VOL      TWA   LEFT/RIGHT
  TIME     VLOB     VCH      VROB     XNL      XNCH     XNR      WTN      ELMIN      SSTA
  SLOPE    XLOBL    XLCH     XLOBR    ITRIAL   IDC      ICONT    CORAR    TOPWID     ENDST


*PROF 1

CCHV=    .100 CEHV=    .300
*SECNO 16.733

3470 ENCROACHMENT STATIONS=    9526.0   10630.0  TYPE=     1  TARGET=    1104.000
         CROSS-SECTION PER U.S. ARMY CORPS OF ENGINEERS 1983-1984
         STUDY (FEMA FIS) AND A.D.O.T. TOPO.
   16.73    25.47  1106.27      .00      .00  1107.30     1.03      .00      .00100000.00
 205000.       0.  205000.       0.       0.   25175.       0.       0.       0. 100000.00
     .00      .00     8.14      .00     .040     .030     .040     .000  1080.80  9526.00
 .000414       0.       0.       0.        0        0        0      .00  1089.24 10615.24


FLOW DISTRIBUTION FOR SECNO=     16.73          CWSEL=   1106.27

STA=    9526.   10630.
  PER Q=    100.0
   AREA=  25174.8
    VEL=      8.1

*SECNO 16.829

3470 ENCROACHMENT STATIONS=    9495.0   10545.0  TYPE=     1  TARGET=    1050.000
         GR STATIONS 9370, 9390 & 9430 (THE TEMPE DRAIN) WERE DELETED FROM
         THE CORPS' CROSS-SECTION TO REFLECT LEFT BANK IMPROVMENTS AND
         THE RELOCATION OF THE TEMPE DRAIN BY A.D.O.T.
   16.83    25.43  1106.33      .00      .00  1107.62     1.29      .25      .08100000.00
 205000.       0.  205000.       0.       0.   22480.       0.     279.      12. 100000.00
     .02      .00     9.12      .00     .040     .030     .040     .000  1080.90  9495.00
 .000572     330.     510.     500.        2        0        0      .00  1041.67 10536.67


FLOW DISTRIBUTION FOR SECNO=     16.83          CWSEL=   1106.33

STA=    9495.   10550.
  PER Q=    100.0
   AREA=  22479.5
    VEL=      9.1

CCHV=    .300 CEHV=    .500
*SECNO 16.875
```

```
  SECNO    DEPTH    CWSEL    CRIWS    WSELK    EG       HV       HL       OLOSS   BANK ELEV
  Q        QLOB     QCH      QROB     ALOB     ACH      AROB     VOL      TWA   LEFT/RIGHT
  TIME     VLOB     VCH      VROB     XNL      XNCH     XNR      WTN      ELMIN      SSTA
  SLOPE    XLOBL    XLCH     XLOBR    ITRIAL   IDC      ICONT    CORAR    TOPWID     ENDST


3470 ENCROACHMENT STATIONS=    9460.0   10510.0  TYPE=     1  TARGET=    1050.000
         GR STATIONS 9010, 9130, 9140 & 9180 WERE DELETED AND GR STATIONS
         9200, 9380 & 9425 WERE ADDED TO THE CORPS' CROSS-SECTION TO REFLECT
         LEFT BANK IMPROVMENTS AND RELOCATION OF THE TEMPE DRAIN BY A.D.O.T.
   16.88    25.50  1106.40      .00      .00  1107.86     1.46      .15      .08100000.00
  205000.      0.  205000.       0.       0.   21137.       0.     399.      18. 100000.00
     .02      .00     9.70      .00     .040     .030     .040     .000  1080.90  9460.00
 .000706     550.     240.     190.        2        0        0      .00  1050.00 10510.00


FLOW DISTRIBUTION FOR SECNO=     16.88          CWSEL=   1106.40

STA=    9460.   10530.
  PER Q=    100.0
   AREA=  21136.5
    VEL=      9.7

*SECNO 16.882

3265 DIVIDED FLOW


3470 ENCROACHMENT STATIONS=    9460.0   10490.0  TYPE=     1  TARGET=    1030.000

3495 OVERBANK AREA ASSUMED NON-EFFECTIVE,ELLEA=     1115.00 ELREA=     1115.00

         DOWNSTREAM SECTION OF I-10 BRIDGE. CROSS-SECTION PER FIELD MEASUREMENT
         MARCH 21, 1989.
   16.88    24.40  1106.40      .00      .00  1107.93     1.54      .03      .04100000.00
  205000.      0.  205000.       0.       0.   20607.       0.     418.      19. 100000.00
     .02      .00     9.95      .00     .040     .030     .040     .000  1082.00  9465.07
 .001030      40.      40.      40.        2        0        0      .00   973.75 10480.82


FLOW DISTRIBUTION FOR SECNO=     16.88          CWSEL=   1106.40

STA=    9465.   10529.
  PER Q=    100.0
   AREA=  20607.4
    VEL=      9.9
```

```
  SECNO    DEPTH    CWSEL    CRIWS    WSELK    EG       HV       HL       OLOSS   BANK ELEV
  Q        QLOB     QCH      QROB     ALOB     ACH      AROB     VOL      TWA   LEFT/RIGHT
  TIME     VLOB     VCH      VROB     XNL      XNCH     XNR      WTN      ELMIN      SSTA
  SLOPE    XLOBL    XLCH     XLOBR    ITRIAL   IDC      ICONT    CORAR    TOPWID     ENDST


*SECNO 16.904

3265 DIVIDED FLOW


3370 NORMAL BRIDGE,NRD=  0 MIN ELTRD= 1124.00 MAX ELLC= 1115.00


3470 ENCROACHMENT STATIONS=    9470.0   10480.0  TYPE=     1  TARGET=    1010.000
         UPSTREAM SECTION OF I-10 BRIDGE. CROSS-SECTION PER FIELD MEASUREMENT
         MARCH 21, 1989.
         DISTANCE BETWEEN CROSS-SECTIONS AS LISTED ON THE X1 CARD HAVE BEEN
         CHANGED FROM 114' FOR THE LOB, ROB & CHNL TO 165' RESPECTIVELY
         PER MEASUREMENTS BETWEEN CROSS-SECTIONS AS INDICATED ON WORK MAPS
         TITLED "SALT RIVER CHANNEL, CENTRAL AVENUE TO SCOTTSDALE ROAD,
         8-10-82, MARICOPA COUNTY, SHEET 2B" AND AS REFERENCED AS THE AUGUST
         1982 A.D.O.T. TOPO BASE MAP AT THE "T" CARD LOCATION IN THE HEC2
         OF THE  U.S. ARMY CORPS OF ENGINEERS' SALT RIVER FLOOD INSURANCE STUDY
   16.90    24.60  1106.60      .00      .00  1108.11     1.51      .17      .01100000.00
  205000.      0.  205000.       0.       0.   20800.       0.     497.      23. 100000.00
     .03      .00     9.86      .00     .040     .030     .040     .000  1082.00  9470.00
 .000998     165.     165.     165.        2        0        0      .00   968.00 10480.00


FLOW DISTRIBUTION FOR SECNO=     16.90          CWSEL=   1106.60

STA=    9470.   10529.
  PER Q=    100.0
   AREA=  20799.6
    VEL=      9.9

*SECNO 16.927

3470 ENCROACHMENT STATIONS=    9468.0   10498.0  TYPE=     1  TARGET=    1030.000
         CHANNEL CROSS-SECTION GEOMETRY IS BASED UPON TOPO FURNISHED BY BOYLE
         ENGINEERING, DEC.1987.
         DISTANCE BETWEEN CROSS-SECTIONS AS LISTED ON THE X1 CARD HAVE BEEN
         CHANGED FROM 120' FOR THE LOB, ROB & CHNL TO 90' RESPECTIVELY
         PER MEASUREMENTS BETWEEN CROSS-SECTIONS AS INDICATED ON WORK MAPS
         TITLED "SALT RIVER CHANNEL, CENTRAL AVENUE TO SCOTTSDALE ROAD,
         8-10-82, MARICOPA COUNTY, SHEET 2B" AND AS REFERENCED AS THE AUGUST
         1982 A.D.O.T. TOPO BASE MAP AT THE "T" CARD LOCATION IN THE HEC2
         OF THE  U.S. ARMY CORPS OF ENGINEERS' SALT RIVER FLOOD INSURANCE STUDY
```

```
        ET CARD STATIONS FROM 16.927 TO 17.833 HAVE BEEN CHANGED FROM THE
        CORPS' TO FIT WITHIN EXISTING SECTIONS.
   16.93    24.65  1106.65      .00      .00  1108.21     1.56      .07      .03  1086.00
  205000.   8622.  190241.    6138.    1616.   18465.    1126.     540.      25.   1084.00
     .03    5.33    10.30     5.45     .040     .030     .040     .000  1082.00  9468.00
 .000664     90.      90.      90.        2        0        0      .00  1030.00 10498.00


FLOW DISTRIBUTION FOR SECNO=     16.93         CWSEL=   1106.65

STA=    9468.    9480.    9575.    9600.   10405.   10425.   10475.   10498.
  PER Q=       .0      2.6      1.5     92.8      1.3      1.6       .1
   AREA=     43.8   1106.4    466.2  18465.3    392.9    627.3    105.4
    VEL=      2.0      4.9      6.7     10.3      6.8      5.1      2.5

CCHV=    .100 CEHV=    .300
1490 NH CARD USED
*SECNO 17.027

3470 ENCROACHMENT STATIONS=    9520.0   10500.0  TYPE=     1  TARGET=     980.000
        CHANNEL CROSS-SECTION GEOMETRY IS BASED UPON TOPO FURNISHED BY BOYLE
        ENGINEERING, DEC. 1987 AND BY THE GRADING AND DRAINAGE PLAN FOR THE
        IMPROVEMENTS TO THE CALMAT CO.'S AIRPORT PROPERTY AS PREPARED BY
        BARRETT CONSULTING GROUP INC., JUNE 1987. REFER TO ATTACHMENT D
        FOR PROPOSED AIRPORT PROPERTY GRADES.
        DEPRESSIONS BELOW THE NORMAL CHANNEL GRADE BETWEEN SECTIONS 17.027
        AND 17.129 AND SMALL STOCK PILES OF MATERIAL, ALL THE RESULT OF
        MINING IN THE RIVER CHANNEL, WERE NOT MODELED.
   17.03    24.99  1106.99      .00      .00  1108.54     1.55      .33      .00  1082.00
  205000.   5887.  192647.    6466.     781.   18915.    1231.     793.      37.   1082.00
     .05    7.54    10.18     5.25     .025     .030     .040     .000  1082.00  9542.52
 .000613     440.     528.     540.        2        0        0      .00   957.48 10500.00


FLOW DISTRIBUTION FOR SECNO=     17.03         CWSEL=   1106.99

STA=    9543.    9605.   10395.   10425.   10445.   10500.
  PER Q=      2.9     94.0      2.1       .5       .5
   AREA=    780.7  18915.4    629.7    239.8    361.6
    VEL=      7.5     10.2      6.8      4.5      3.0

1490 NH CARD USED
*SECNO 17.053

3470 ENCROACHMENT STATIONS=    9535.0   10480.0  TYPE=     1  TARGET=     945.000
        CHANNEL CROSS-SECTION GEOMETRY IS BASED UPON TOPO FURNISHED BY BOYLE
        ENGINEERING, DEC. 1987 AND BY THE GRADING AND DRAINAGE PLAN FOR THE
        IMPROVEMENTS TO THE CALMAT CO.'S AIRPORT PROPERTY AS PREPARED BY
        BARRETT CONSULTING GROUP INC., JUNE 1987. REFER TO ATTACHMENT D
```

```
        FOR PROPOSED AIRPORT PROPERTY GRADES.
        DISTANCE BETWEEN CROSS-SECTIONS AS LISTED ON THE X1 CARD HAVE BEEN
        CHANGED FROM 200' TO 135' FOR THE LOB, 200' TO 160' FOR THE ROB & 200'
        TO 145' FOR THE CHNL PER MEASUREMENTS BETWEEN CROSS-SECTIONS AS
        INDICATED ON WORK MAPS TITLED "SALT RIVER CHANNEL, CENTRAL AVENUE TO
        SCOTTSDALE ROAD, 8-10-82, MARICOPA COUNTY, SHEET 2B" AND AS REFERENCED
        AS THE AUGUST 1982 A.D.O.T. TOPO BASE MAP AT THE "T" CARD LOCATION IN
        THE HEC2 OF THE  U.S. ARMY CORPS OF ENGINEERS' SALT RIVER FLOOD
        INSURANCE STUDY.
   17.05    25.32  1107.32      .00      .00  1108.65     1.33      .08      .02  1082.00
  205000.    5878.  196498.    2624.     859.   21021.     591.     866.      40.   1082.00
     .05     6.85     9.35     4.44     .025     .030     .040     .000  1082.00  9542.18
 .000490     135.     145.     160.        2        0        0      .00   937.82 10480.00


FLOW DISTRIBUTION FOR SECNO=     17.05          CWSEL=   1107.32

STA=    9542.    9610.   10455.   10480.
  PER Q=      2.9     95.9      1.3
   AREA=    858.7  21021.1    591.3
    VEL=      6.8      9.3      4.4

1490 NH CARD USED
*SECNO 17.091

3470 ENCROACHMENT STATIONS=    9540.0   10485.0  TYPE=     1  TARGET=     945.000
        CHANNEL CROSS-SECTION GEOMETRY IS BASED UPON TOPO FURNISHED BY BOYLE
        ENGINEERING, DEC. 1987 AND BY THE GRADING AND DRAINAGE PLAN FOR THE
        IMPROVEMENTS TO THE CALMAT CO.'S AIRPORT PROPERTY AS PREPARED BY
        BARRETT CONSULTING GROUP INC., JUNE 1987. REFER TO ATTACHMENT D
        FOR PROPOSED AIRPORT PROPERTY GRADES.
   17.09    25.32  1107.32      .00      .00  1108.79     1.47      .10      .04  1082.00
  205000.    9081.  192287.    3631.    1052.   19495.     801.     966.      44.   1082.00
     .06     8.63     9.86     4.53     .025     .030     .040     .000  1082.00  9547.37
 .000556     200.     200.     200.        2        0        0      .00   935.93 10483.30


FLOW DISTRIBUTION FOR SECNO=     17.09          CWSEL=   1107.32

STA=    9547.    9595.    9625.   10420.   10483.
  PER Q=      1.1      3.3     93.8      1.8
   AREA=    412.5    639.6  19495.2    801.4
    VEL=      5.7     10.5      9.9      4.5

1490 NH CARD USED
*SECNO 17.129

3470 ENCROACHMENT STATIONS=    9565.0   10490.0  TYPE=     1  TARGET=     925.000
        DISTANCE BETWEEN CROSS-SECTIONS AS LISTED ON THE X1 CARD HAVE BEEN
```

```
        CHANGED FROM 200' FOR THE LOB, ROB & CHNL TO 186' RESPECTIVELY
        PER MEASUREMENTS BETWEEN CROSS-SECTIONS AS INDICATED ON WORK MAPS
        TITLED "SALT RIVER CHANNEL, CENTRAL AVENUE TO SCOTTSDALE ROAD,
        8-10-82, MARICOPA COUNTY, SHEET 2B" AND AS REFERENCED AS THE AUGUST
        1982 A.D.O.T. TOPO BASE MAP AT THE "T" CARD LOCATION IN THE HEC2
        OF THE  U.S. ARMY CORPS OF ENGINEERS' SALT RIVER FLOOD INSURANCE STUDY
        CHANNEL CROSS-SECTION GEOMETRY IS BASED UPON TOPO FURNISHED BY BOYLE
        ENGINEERING, DEC. 1987 AND BY THE GRADING AND DRAINAGE PLAN FOR THE
        IMPROVEMENTS TO THE CALMAT CO.'S AIRPORT PROPERTY AS PREPARED BY
        BARRETT CONSULTING GROUP INC., JUNE 1987. REFER TO ATTACHMENT D
        FOR PROPOSED AIRPORT PROPERTY GRADES.
   17.13    25.50  1107.50      .00      .00  1108.92     1.42      .12      .01  1084.00
  205000.   4427.  196087.    4486.     584.   20280.     875.    1058.      48.  1082.00
     .06     7.58     9.67     5.13     .025     .035     .040     .000  1082.00  9570.29
 .000696     186.     186.     186.        2        0        0      .00   918.36 10488.65


FLOW DISTRIBUTION FOR SECNO=     17.13         CWSEL=   1107.50

STA=    9570.    9620.   10420.   10489.
  PER Q=      2.2     95.7      2.2
   AREA=    584.1  20279.5    875.3
    VEL=      7.6      9.7      5.1

1490 NH CARD USED
*SECNO 17.167

3470 ENCROACHMENT STATIONS=    9570.0   10495.0  TYPE=     1  TARGET=     925.000
        DISTANCE BETWEEN CROSS-SECTIONS AS LISTED ON THE X1 CARD HAVE BEEN
        CHANGED FROM 200' FOR THE LOB, ROB & CHNL TO 220' RESPECTIVELY
        PER MEASUREMENTS BETWEEN CROSS-SECTIONS AS INDICATED ON WORK MAPS
        TITLED "SALT RIVER CHANNEL, CENTRAL AVENUE TO SCOTTSDALE ROAD,
        8-10-82, MARICOPA COUNTY, SHEET 2B" AND AS REFERENCED AS THE AUGUST
        1982 A.D.O.T. TOPO BASE MAP AT THE "T" CARD LOCATION IN THE HEC2
        OF THE  U.S. ARMY CORPS OF ENGINEERS' SALT RIVER FLOOD INSURANCE STUDY
        CHANNEL CROSS-SECTION GEOMETRY IS BASED UPON TOPO FURNISHED BY BOYLE
        ENGINEERING, DEC. 1987 AND BY THE GRADING AND DRAINAGE PLAN FOR THE
        IMPROVEMENTS TO THE CALMAT CO.'S AIRPORT PROPERTY AS PREPARED BY
        BARRETT CONSULTING GROUP INC., JUNE 1987. REFER TO ATTACHMENT D
        FOR PROPOSED AIRPORT PROPERTY GRADES.
   17.17    25.62  1107.62      .00      .00  1109.05     1.43      .13      .00  1084.00
  205000.  16353.  184454.    4193.    1732.   19013.     947.    1168.      53.  1082.00
     .07     9.44     9.70     4.43     .025     .030     .040     .000  1082.00  9574.94
 .000510     220.     220.     220.        1        0        0      .00   918.99 10493.93


FLOW DISTRIBUTION FOR SECNO=     17.17         CWSEL=   1107.62

STA=    9575.    9620.    9675.   10420.   10494.
  PER Q=      1.5      6.5     90.0      2.0
   AREA=    487.3   1244.5  19013.0    947.3
    VEL=      6.1     10.7      9.7      4.4
```

```
  SECNO    DEPTH    CWSEL    CRIWS    WSELK    EG       HV       HL       OLOSS   BANK ELEV
  Q        QLOB     QCH      QROB     ALOB     ACH      AROB     VOL      TWA   LEFT/RIGHT
  TIME     VLOB     VCH      VROB     XNL      XNCH     XNR      WTN      ELMIN      SSTA
  SLOPE    XLOBL    XLCH     XLOBR    ITRIAL   IDC      ICONT    CORAR    TOPWID     ENDST


1490 NH CARD USED
*SECNO 17.205

3470 ENCROACHMENT STATIONS=    9545.0   10495.0  TYPE=     1  TARGET=     950.000
         CHANNEL CROSS-SECTION GEOMETRY IS BASED UPON TOPO FURNISHED BY BOYLE
         ENGINEERING, DEC. 1987 AND BY THE GRADING AND DRAINAGE PLAN FOR THE
         IMPROVEMENTS TO THE CALMAT CO.'S AIRPORT PROPERTY AS PREPARED BY
         BARRETT CONSULTING GROUP INC., JUNE 1987. REFER TO ATTACHMENT D
         FOR PROPOSED AIRPORT PROPERTY GRADES.
   17.20    25.65  1107.65      .00      .00  1109.10     1.44      .04      .00  1084.00
  205000.   18279.  182769.    3952.    1979.   18724.     886.    1208.      55.   1082.00
     .07     9.23     9.76     4.46     .025     .030     .040     .000  1082.00  9562.31
  .000523     80.      80.      80.        1        0        0      .00   931.77 10494.08


FLOW DISTRIBUTION FOR SECNO=     17.20          CWSEL=  1107.65

STA=    9562.    9630.    9685.   10425.   10494.
  PER Q=      2.3      6.6     89.2      1.9
   AREA=    733.1   1246.3  18723.5    886.4
    VEL=      6.4     10.9      9.8      4.5

1490 NH CARD USED
*SECNO 17.242

3470 ENCROACHMENT STATIONS=    9535.0   10500.0  TYPE=     1  TARGET=     965.000
         CHANNEL CROSS-SECTION GEOMETRY IS BASED UPON TOPO FURNISHED BY BOYLE
         ENGINEERING, DEC. 1987 AND BY THE GRADING AND DRAINAGE PLAN FOR THE
         IMPROVEMENTS TO THE CALMAT CO.'S AIRPORT PROPERTY AS PREPARED BY
         BARRETT CONSULTING GROUP INC., JUNE 1987. REFER TO ATTACHMENT D
         FOR PROPOSED AIRPORT PROPERTY GRADES.
   17.24    25.68  1107.68      .00      .00  1109.18     1.50      .07      .02  1084.00
  205000.   17970.  178520.    8510.    1958.   17775.    1493.    1267.      57.   1082.00
     .07     9.18    10.04     5.70     .025     .030     .040     .000  1082.00  9554.16
  .000567    120.     120.     120.        2        0        0      .00   944.83 10498.99


FLOW DISTRIBUTION FOR SECNO=     17.24          CWSEL=  1107.68

STA=    9554.    9625.    9675.    9685.   10400.   10425.   10499.
  PER Q=      2.2      5.4      1.2     87.1      2.3      1.9
   AREA=    697.0   1033.9    226.8  17774.8    617.0    876.0
    VEL=      6.3     10.7     11.2     10.0      7.5      4.4
```

```
  SECNO    DEPTH    CWSEL    CRIWS    WSELK    EG       HV       HL       OLOSS   BANK ELEV
  Q        QLOB     QCH      QROB     ALOB     ACH      AROB     VOL      TWA   LEFT/RIGHT
  TIME     VLOB     VCH      VROB     XNL      XNCH     XNR      WTN      ELMIN      SSTA
  SLOPE    XLOBL    XLCH     XLOBR    ITRIAL   IDC      ICONT    CORAR    TOPWID     ENDST


1490 NH CARD USED
*SECNO 17.280

3470 ENCROACHMENT STATIONS=    9530.0   10510.0  TYPE=     1  TARGET=     980.000
         CHANNEL CROSS-SECTION GEOMETRY IS BASED UPON TOPO FURNISHED BY BOYLE
         ENGINEERING, DEC. 1987 AND BY THE GRADING AND DRAINAGE PLAN FOR THE
         IMPROVEMENTS TO THE CALMAT CO.'S AIRPORT PROPERTY AS PREPARED BY
         BARRETT CONSULTING GROUP INC., JUNE 1987. REFER TO ATTACHMENT D
         FOR PROPOSED AIRPORT PROPERTY GRADES.
   17.28    24.92  1107.72      .00      .00  1109.33     1.61      .12      .03  1084.00
  205000.   19958.  177478.    7564.    1903.   17200.    1399.    1363.      61.   1086.00
     .08    10.49    10.32     5.41     .025     .030     .040     .000  1082.80  9583.63
  .000619     200.     200.     200.        2        0        0      .00   925.23 10508.86


FLOW DISTRIBUTION FOR SECNO=     17.28         CWSEL=   1107.72

STA=    9584.    9615.    9670.    9690.   10400.   10430.   10509.
  PER Q=      .9      6.2      2.6     86.6      2.1      1.6
   AREA=    309.2   1139.4    454.3  17200.4    621.5    777.4
    VEL=      6.1     11.2     11.8     10.3      7.0      4.2

1490 NH CARD USED
*SECNO 17.318

3470 ENCROACHMENT STATIONS=    9570.0   10500.0  TYPE=     1  TARGET=     930.000
   17.32    24.82  1107.92      .00      .00  1109.46     1.54      .12      .01  1084.00
  205000.   21812.  165827.   17362.    2159.   16206.    2652.    1458.      66.   1084.00
     .08    10.10    10.23     6.55     .025     .030     .040     .000  1083.10  9570.00
  .000604     200.     200.     200.        2        0        0      .00   930.00 10500.00


FLOW DISTRIBUTION FOR SECNO=     17.32         CWSEL=   1107.92

STA=    9570.    9610.    9665.    9695.   10360.   10400.   10455.   10500.
  PER Q=      1.3      5.7      3.6     80.9      3.3      3.9      1.3
   AREA=    405.7   1095.6    657.6  16206.1    916.8   1150.6    584.8
    VEL=      6.3     10.7     11.4     10.2      7.4      6.9      4.5

1490 NH CARD USED
*SECNO 17.356

3470 ENCROACHMENT STATIONS=    9550.0   10540.0  TYPE=     1  TARGET=     990.000
```

```
        17.356 THRU 17.833; CHANNEL CROSS-SECTION GEOMETRY IS BASED UPON TOPO
        FURNISHED BY BOYLE ENGINEERING, DEC. 1987, FOR THE LEFT LEVEE AND THE
        CORPS' CROSS-SECTIONS FOR THE RIGHT BANK.
        RIGHT OVERBANK IS ASSUMED INEFFECTIVE FLOW.
   17.36    25.65  1108.15      .00      .00  1109.59     1.44      .12      .01  1084.00
  205000.   19402.  169748.   15850.    2045.   17096.    2751.    1556.      70.   1084.00
     .09     9.49     9.93     5.76     .025     .030     .040     .000  1082.50  9565.95
 .000556     200.     200.     200.        2        0        0      .00   974.04 10540.00


FLOW DISTRIBUTION FOR SECNO=     17.36          CWSEL=   1108.15

STA=    9566.    9615.    9670.    9690.   10380.   10425.   10470.   10515.   10540.
  PER Q=      1.5      5.6      2.4     82.8      3.1      2.4      1.7       .6
   AREA=    494.1   1108.1    442.9  17096.1    951.6    816.6    659.1    323.3
    VEL=      6.2     10.4     10.9      9.9      6.7      6.1      5.2      3.5

1490 NH CARD USED
*SECNO 17.394

3470 ENCROACHMENT STATIONS=    9550.0   10548.0  TYPE=     1  TARGET=     998.000
        THE FOLLOWING MESSAGE IS TAKEN FROM THE HEC2 PRINTOUT OF THE U.S. ARMY
        CORPS OF ENGINEERS 1983-1984 STUDY (FEMA FIS).
        "FROM STATION 17.394 TO STATION 21.102, ALL HYDRAULIC
        DATA WAS OBTAINED FROM HNTB ENGINEERING FIRM
        HNTB IS THE DESIGN CONTRACTOR OF AIRPORT CHANNELIZATION
        PROJECT.  IN PHOENIX CALL MR. BOB MILLER, (602) 957-1931,
        IN KANSAS CITY, MR. DICK SHWAB (816) 333-4800."
   17.39    25.21  1108.21      .00      .00  1109.72     1.51      .11      .02  1084.00
  205000.   19843.  167738.   17419.    2025.   16496.    2820.    1656.      74.   1084.00
     .10     9.80    10.17     6.18     .025     .030     .040     .000  1083.00  9578.57
 .000588     200.     200.     200.        2        0        0      .00   956.65 10535.22


FLOW DISTRIBUTION FOR SECNO=     17.39          CWSEL=   1108.21

STA=    9579.    9615.    9680.    9700.   10370.   10425.   10500.   10535.
  PER Q=       .9      6.3      2.4     81.8      3.9      4.0       .5
   AREA=    331.7   1248.8    444.3  16496.0   1166.7   1343.4    310.2
    VEL=      5.8     10.3     11.2     10.2      6.9      6.2      3.6

1490 NH CARD USED
*SECNO 17.432

3470 ENCROACHMENT STATIONS=    9550.0   10548.0  TYPE=     1  TARGET=     998.000
   17.43    24.29  1108.29      .00      .00  1109.86     1.57      .12      .02  1084.00
  205000.   20136.  169300.   15564.    2036.   16352.    2522.    1753.      79.   1084.00
     .10     9.89    10.35     6.17     .025     .030     .040     .000  1084.00  9578.84
 .000623     200.     200.     200.        2        0        0      .00   955.83 10534.67
```

```
  SECNO    DEPTH    CWSEL    CRIWS    WSELK    EG       HV       HL       OLOSS   BANK ELEV
  Q        QLOB     QCH      QROB     ALOB     ACH      AROB     VOL      TWA   LEFT/RIGHT
  TIME     VLOB     VCH      VROB     XNL      XNCH     XNR      WTN      ELMIN      SSTA
  SLOPE    XLOBL    XLCH     XLOBR    ITRIAL   IDC      ICONT    CORAR    TOPWID     ENDST


FLOW DISTRIBUTION FOR SECNO=     17.43         CWSEL=   1108.29

STA=    9579.    9670.    9705.   10380.   10480.   10535.
  PER Q=      5.7      4.1     82.6      6.1      1.5
  AREA=    1291.0    745.2  16351.8   1889.2    632.9
   VEL=      9.1     11.3     10.4      6.6      4.9

1490 NH CARD USED
*SECNO 17.453

3470 ENCROACHMENT STATIONS=    9550.0   10547.0  TYPE=     1  TARGET=     997.000
    17.45    25.38  1108.38      .00      .00  1109.93     1.55      .07      .00  1086.00
  205000.   17401.  184571.    3028.    1838.   18247.     618.    1806.     81.   1092.00
      .10     9.47    10.12     4.90     .025     .030     .040     .000  1083.00  9578.17
  .000624     112.     112.     112.        1        0        0      .00   955.71 10533.88


FLOW DISTRIBUTION FOR SECNO=     17.45         CWSEL=   1108.38

STA=    9578.    9615.    9680.    9700.   10480.   10500.   10534.
  PER Q=       .8      5.5      2.2     90.0      1.0       .5
   AREA=    301.4   1128.9    407.4  18246.8    332.4    285.7
    VEL=      5.7     10.0     10.9     10.1      6.0      3.6

1490 NH CARD USED
*SECNO 17.459

3470 ENCROACHMENT STATIONS=    9550.0   10547.0  TYPE=     1  TARGET=     997.000
    17.46    25.40  1108.40      .00      .00  1109.95     1.55      .02      .00  1086.00
  205000.   17458.  184523.    3019.    1841.   18239.     616.    1821.     82.   1092.00
      .11     9.48    10.12     4.90     .025     .030     .040     .000  1083.00  9578.11
  .000624      31.      31.      31.        0        0        0      .00   955.77 10533.88


FLOW DISTRIBUTION FOR SECNO=     17.46         CWSEL=   1108.40

STA=    9578.    9615.    9680.    9700.   10480.   10500.   10534.
  PER Q=       .8      5.5      2.2     90.0      1.0       .5
   AREA=    302.5   1130.8    407.9  18239.4    331.9    284.5
    VEL=      5.7     10.0     10.9     10.1      6.0      3.6

1490 NH CARD USED
```

```
  SECNO    DEPTH    CWSEL    CRIWS    WSELK    EG       HV       HL       OLOSS   BANK ELEV
  Q        QLOB     QCH      QROB     ALOB     ACH      AROB     VOL      TWA   LEFT/RIGHT
  TIME     VLOB     VCH      VROB     XNL      XNCH     XNR      WTN      ELMIN      SSTA
  SLOPE    XLOBL    XLCH     XLOBR    ITRIAL   IDC      ICONT    CORAR    TOPWID     ENDST


*SECNO 17.470

3470 ENCROACHMENT STATIONS=    9560.0   10547.0  TYPE=     1  TARGET=     987.000
    17.47    24.32  1108.32      .00      .00  1110.04     1.71      .04      .05  1086.00
  205000.   12008.  174215.   18778.    1895.   15746.    2835.    1848.      83.  1084.00
      .11     6.34    11.06     6.62     .040     .030     .040     .000  1084.00  9577.42
  .000719      57.      57.      57.        2        0        0      .00   956.11 10533.53


FLOW DISTRIBUTION FOR SECNO=     17.47          CWSEL=   1108.32

STA=    9577.    9620.    9680.    9705.   10360.   10425.   10500.   10534.
  PER Q=       .7      3.4      1.8     85.0      4.8      3.9       .5
   AREA=    347.5   1039.4    508.1  15746.5   1321.0   1235.5    278.7
    VEL=      3.9      6.7      7.4     11.1      7.4      6.4      3.8

1490 NH CARD USED
*SECNO 17.486

3470 ENCROACHMENT STATIONS=    9555.0   10546.0  TYPE=     1  TARGET=     991.000
    17.49    25.02  1108.52      .00      .00  1110.11     1.58      .06      .01  1086.00
  205000.   18360.  178223.    8417.    1841.   17355.    1511.    1887.      85.  1092.00
      .11     9.97    10.27     5.57     .025     .030     .040     .000  1083.50  9586.20
  .000624      84.      84.      84.        2        0        0      .00   946.71 10532.91


FLOW DISTRIBUTION FOR SECNO=     17.49          CWSEL=   1108.52

STA=    9586.    9620.    9700.   10425.   10500.   10533.
  PER Q=       .8      8.2     86.9      3.6       .5
   AREA=    279.3   1562.0  17355.5   1239.4    271.9
    VEL=      5.6     10.7     10.3      6.0      3.5

1490 NH CARD USED
*SECNO 17.498

3470 ENCROACHMENT STATIONS=    9555.0   10546.0  TYPE=     1  TARGET=     991.000
    17.50    24.55  1108.55      .00      .00  1110.16     1.60      .04      .01  1086.00
  205000.   20726.  175847.    8427.    2041.   17026.    1502.    1920.      87.  1092.00
      .11    10.15    10.33     5.61     .025     .030     .040     .000  1084.00  9586.12
  .000635      68.      68.      68.        1        0        0      .00   946.60 10532.72
```

```
  SECNO    DEPTH    CWSEL    CRIWS    WSELK    EG       HV       HL       OLOSS   BANK ELEV
  Q        QLOB     QCH      QROB     ALOB     ACH      AROB     VOL      TWA   LEFT/RIGHT
  TIME     VLOB     VCH      VROB     XNL      XNCH     XNR      WTN      ELMIN      SSTA
  SLOPE    XLOBL    XLCH     XLOBR    ITRIAL   IDC      ICONT    CORAR    TOPWID     ENDST


FLOW DISTRIBUTION FOR SECNO=     17.50         CWSEL=   1108.55

STA=    9586.    9620.    9710.   10425.   10500.   10533.
  PER Q=       .8      9.3     85.8      3.6       .5
   AREA=    280.5   1760.6  17025.8   1234.7    267.7
    VEL=      5.7     10.9     10.3      6.1      3.5

1490 NH CARD USED
*SECNO 17.508

3470 ENCROACHMENT STATIONS=    9555.0   10546.0  TYPE=     1  TARGET=     991.000
    17.51    24.59  1108.59      .00      .00  1110.19     1.60      .03      .00  1088.00
  205000.   17058.  174471.   13471.    1790.   16680.    2219.    1942.      88.   1084.00
      .11     9.53    10.46     6.07     .025     .030     .040     .000  1084.00  9573.54
  .000644      48.      48.      48.        0        0        0      .00   959.17 10532.71


FLOW DISTRIBUTION FOR SECNO=     17.51         CWSEL=   1108.59

STA=    9574.    9615.    9675.    9695.   10390.   10425.   10500.   10533.
  PER Q=      1.0      5.2      2.1     85.1      2.4      3.7       .5
   AREA=    343.8   1055.0    391.7  16680.3    720.4   1232.5    266.3
    VEL=      5.9     10.2     10.9     10.5      7.0      6.1      3.5

1490 NH CARD USED
*SECNO 17.536

3470 ENCROACHMENT STATIONS=    9550.0   10545.0  TYPE=     1  TARGET=     995.000
    17.54    24.31  1108.61      .00      .00  1110.32     1.71      .10      .03  1088.00
  205000.   17049.  176594.   11357.    1699.   16434.    1843.    2012.      91.   1088.00
      .12    10.04    10.75     6.16     .025     .030     .040     .000  1084.30  9568.12
  .000727     150.     150.     150.        2        0        0      .00   963.43 10531.55


FLOW DISTRIBUTION FOR SECNO=     17.54         CWSEL=   1108.61

STA=    9568.    9670.    9685.   10405.   10500.   10532.
  PER Q=      6.7      1.7     86.1      5.1       .5
   AREA=   1404.8    294.2  16434.2   1592.1    251.0
    VEL=      9.7     11.6     10.7      6.5      3.7

1490 NH CARD USED
```

```
  SECNO    DEPTH    CWSEL    CRIWS    WSELK    EG       HV       HL       OLOSS   BANK ELEV
  Q        QLOB     QCH      QROB     ALOB     ACH      AROB     VOL      TWA   LEFT/RIGHT
  TIME     VLOB     VCH      VROB     XNL      XNCH     XNR      WTN      ELMIN      SSTA
  SLOPE    XLOBL    XLCH     XLOBR    ITRIAL   IDC      ICONT    CORAR    TOPWID     ENDST


*SECNO 17.568

3470 ENCROACHMENT STATIONS=    9530.0   10545.0  TYPE=     1  TARGET=    1015.000
    17.57    24.13  1108.73      .00      .00  1110.45     1.73      .13      .01  1088.00
  205000.   19601.  173627.   11773.    1953.   16030.    1895.    2090.      95.  1088.00
      .12    10.04    10.83     6.21     .025     .030     .040     .000  1084.60  9551.08
  .000749     170.     170.     170.        0        0        0      .00   980.26 10531.34


FLOW DISTRIBUTION FOR SECNO=     17.57          CWSEL=   1108.73

STA=    9551.    9595.    9645.    9690.   10400.   10415.   10500.   10531.
  PER Q=       .9      3.9      4.7     84.7      1.0      4.3       .4
   AREA=    323.5    786.5    842.9  16030.0    281.0   1371.1    243.3
    VEL=      5.9     10.2     11.4     10.8      7.0      6.5      3.7

1490 NH CARD USED
*SECNO 17.606

3470 ENCROACHMENT STATIONS=    9520.0   10544.0  TYPE=     1  TARGET=    1024.000
    17.61    24.07  1108.77      .00      .00  1110.67     1.89      .16      .05  1092.00
  205000.   12568.  179618.   12814.    1200.   15863.    1871.    2179.      99.  1088.00
      .13    10.47    11.32     6.85     .025     .030     .040     .000  1084.70  9547.45
  .000909     200.     200.     200.        2        0        0      .00   982.63 10530.08


FLOW DISTRIBUTION FOR SECNO=     17.61          CWSEL=   1108.77

STA=    9547.    9640.   10400.   10500.   10530.
  PER Q=      6.1     87.6      5.8       .4
   AREA=   1200.0  15863.4   1645.3    225.2
    VEL=     10.5     11.3      7.2      4.0

1490 NH CARD USED
*SECNO 17.644

3470 ENCROACHMENT STATIONS=    9505.0   10543.0  TYPE=     1  TARGET=    1038.000
    17.64    24.02  1109.02      .00      .00  1110.85     1.83      .18      .01  1088.00
  205000.   25514.  170231.    9256.    2364.   15412.    1428.    2267.     104.  1090.00
      .13    10.79    11.05     6.48     .025     .030     .040     .000  1085.00  9525.21
  .000860     200.     200.     200.        2        0        0      .00  1004.10 10529.31
```

```
  SECNO    DEPTH    CWSEL    CRIWS    WSELK    EG       HV       HL       OLOSS   BANK ELEV
  Q        QLOB     QCH      QROB     ALOB     ACH      AROB     VOL      TWA   LEFT/RIGHT
  TIME     VLOB     VCH      VROB     XNL      XNCH     XNR      WTN      ELMIN      SSTA
  SLOPE    XLOBL    XLCH     XLOBR    ITRIAL   IDC      ICONT    CORAR    TOPWID     ENDST


FLOW DISTRIBUTION FOR SECNO=     17.64         CWSEL=   1109.02

STA=    9525.    9615.    9690.   10425.   10500.   10529.
  PER Q=      4.6      7.9     83.0      4.1       .4
   AREA=   1012.5   1351.7  15412.0   1212.0    215.8
    VEL=      9.2     12.0     11.0      7.0      3.8

1490 NH CARD USED
*SECNO 17.682

3470 ENCROACHMENT STATIONS=    9495.0   10543.0  TYPE=     1  TARGET=    1048.000
    17.68    23.28  1109.28      .00      .00  1111.03     1.75      .17      .01  1088.00
  205000.   19032.  175868.   10100.    1855.   16211.    1585.    2356.     108.  1090.00
      .14    10.26    10.85     6.37     .025     .030     .040     .000  1086.00  9514.87
  .000818     200.     200.     200.        2        0        0      .00  1014.36 10529.22


FLOW DISTRIBUTION FOR SECNO=     17.68         CWSEL=   1109.28

STA=    9515.    9605.    9650.   10415.   10500.   10529.
  PER Q=      4.6      4.7     85.8      4.5       .4
   AREA=   1032.1    822.4  16210.9   1373.4    211.5
    VEL=      9.1     11.7     10.8      6.8      3.7

*SECNO 17.720

3470 ENCROACHMENT STATIONS=    9490.0   10542.0  TYPE=     1  TARGET=    1052.000
    17.72    21.71  1109.21      .00      .00  1111.33     2.11      .19      .11  1091.00
  205000.    9703.  183759.   11538.    1362.   15226.    1537.    2443.     113.  1090.00
      .14     7.13    12.07     7.50     .040     .030     .040     .000  1087.50  9509.72
  .001159     200.     200.     200.        2        0        0      .00  1018.04 10527.76


FLOW DISTRIBUTION FOR SECNO=     17.72         CWSEL=   1109.21

STA=    9510.    9545.    9595.    9620.   10415.   10425.   10500.   10528.
  PER Q=       .5      2.6      1.7     89.6       .8      4.5       .4
   AREA=    233.1    710.7    417.9  15225.6    182.1   1163.6    191.8
    VEL=      4.3      7.4      8.2     12.1      8.6      7.9      4.3

*SECNO 17.758

3470 ENCROACHMENT STATIONS=    9475.0   10541.0  TYPE=     1  TARGET=    1066.000
```

```
  SECNO    DEPTH    CWSEL    CRIWS    WSELK    EG       HV       HL       OLOSS   BANK ELEV
  Q        QLOB     QCH      QROB     ALOB     ACH      AROB     VOL      TWA   LEFT/RIGHT
  TIME     VLOB     VCH      VROB     XNL      XNCH     XNR      WTN      ELMIN      SSTA
  SLOPE    XLOBL    XLCH     XLOBR    ITRIAL   IDC      ICONT    CORAR    TOPWID     ENDST


   17.76    21.63  1109.63      .00      .00  1111.57     1.93      .22      .02  1090.00
  205000.   39883.  151307.   13810.    4968.   12495.    1856.    2529.     118.  1090.00
     .15     8.03    12.11     7.44     .040     .030     .040     .000  1088.00  9496.05
 .001043     200.     200.     200.        2        0        0      .00  1031.29 10527.33


FLOW DISTRIBUTION FOR SECNO=     17.76          CWSEL=   1109.63

STA=    9496.    9535.    9585.    9630.    9650.    9800.   10400.   10500.   10527.
  PER Q=      .5      2.3      2.6      1.5     12.5     73.8      6.4       .4
   AREA=   265.5    681.7    703.5    372.7   2945.1  12495.2   1668.4    187.7
    VEL=     4.2      6.8      7.5      8.4      8.7     12.1      7.8      4.0

*SECNO 17.795

3470 ENCROACHMENT STATIONS=    9470.0   10541.0  TYPE=     1  TARGET=    1071.000
   17.80    21.35  1109.85      .00      .00  1111.78     1.93      .21      .00  1090.00
  205000.   59112.  133841.   12047.    6913.   10817.    1588.    2617.     123.  1090.00
     .15     8.55    12.37     7.59     .040     .030     .040     .000  1088.50  9491.04
 .001105     200.     200.     200.        0        0        0      .00  1036.13 10527.17


FLOW DISTRIBUTION FOR SECNO=     17.80          CWSEL=   1109.85

STA=    9491.    9525.    9580.    9630.    9890.   10415.   10465.   10500.   10527.
  PER Q=      .4      2.3      3.3     22.8     65.3      3.7      1.8       .4
   AREA=   201.2    706.9    842.7   5161.9  10816.7    892.7    512.9    182.8
    VEL=     3.9      6.8      8.1      9.1     12.4      8.4      7.4      4.1

*SECNO 17.833

3301 HV CHANGED MORE THAN HVINS


3470 ENCROACHMENT STATIONS=    9465.0   10540.0  TYPE=     1  TARGET=    1075.000
   17.83    20.10  1109.70      .00      .00  1112.24     2.54      .28      .18  1090.00
  205000.   45544.  116479.   42977.    4906.    7931.    4222.    2701.     127.  1090.00
     .16     9.28    14.69    10.18     .040     .030     .040     .000  1089.60  9482.99
 .001778     200.     200.     200.        2        0        0      .00  1042.61 10525.60


FLOW DISTRIBUTION FOR SECNO=     17.83          CWSEL=   1109.70

STA=    9483.    9510.    9635.    9700.    9790.    9815.    9835.   10260.   10360.   10450.   10465.   10500.   10526.
  PER Q=      .4      6.6      4.4      6.8      2.1      2.0     56.8     10.1      7.5      1.0      2.0       .4
   AREA=   158.0   1587.8    955.7   1413.2    417.6    374.1   7930.6   1870.3   1503.2    220.5    463.8    163.9
    VEL=     4.8      8.5      9.4      9.8     10.2     11.0     14.7     11.0     10.2      9.3      8.8      5.0
```

```
  SECNO    DEPTH    CWSEL    CRIWS    WSELK    EG       HV       HL       OLOSS   BANK ELEV
  Q        QLOB     QCH      QROB     ALOB     ACH      AROB     VOL      TWA   LEFT/RIGHT
  TIME     VLOB     VCH      VROB     XNL      XNCH     XNR      WTN      ELMIN      SSTA
  SLOPE    XLOBL    XLCH     XLOBR    ITRIAL   IDC      ICONT    CORAR    TOPWID     ENDST


*SECNO 17.871

3301 HV CHANGED MORE THAN HVINS


3470 ENCROACHMENT STATIONS=    9475.0   10525.0  TYPE=     1  TARGET=    1050.000
         17.871 TO 18.455 CROSS-SECTIONS PER U.S. ARMY CORPS OF ENGINEERS
         1983-1984 STUDY (FEMA FIS) AND A.D.O.T. TOPO. FLOODWAY ENCROACHMENT
         STATIONS ALSO PER COE.
   17.87    17.93  1109.33      .00      .00  1113.02     3.70      .44      .35  1097.40
  205000.   39864.  133097.   32039.    3964.    7534.    3197.    2773.     132.   1097.40
     .16    10.06    17.67    10.02     .040     .030     .040     .000  1091.40  9476.13
  .002768    180.     200.     220.        2        0        0      .00  1047.75 10523.87


FLOW DISTRIBUTION FOR SECNO=     17.87         CWSEL=   1109.33

STA=    9476.    9500.    9820.   10244.   10500.   10524.
  PER Q=       .4     19.0     64.9     15.2       .4
   AREA=    142.5   3821.2   7533.5   3054.8    142.5
    VEL=      6.0     10.2     17.7     10.2      6.0

*SECNO 17.909

3470 ENCROACHMENT STATIONS=    9470.0   10525.0  TYPE=     1  TARGET=    1055.000
   17.91    17.85  1109.85      .00      .00  1113.59     3.74      .56      .01  1098.00
  205000.   39379.  133303.   32317.    3898.    7499.    3209.    2840.     137.   1098.00
     .16    10.10    17.78    10.07     .040     .030     .040     .000  1092.00  9476.18
  .002821    180.     200.     220.        2        0        0      .00  1047.65 10523.83


FLOW DISTRIBUTION FOR SECNO=     17.91         CWSEL=   1109.85

STA=    9476.    9500.    9715.    9755.    9817.   10241.   10500.   10524.
  PER Q=       .4     12.7      2.4      3.7     65.0     15.4       .4
   AREA=    141.2   2548.0    474.0    734.8   7498.6   3068.2    141.2
    VEL=      6.0     10.3     10.3     10.3     17.8     10.3      6.0

*SECNO 17.947

3470 ENCROACHMENT STATIONS=    9475.0   10525.0  TYPE=     1  TARGET=    1050.000
   17.95    17.99  1110.49      .00      .00  1114.16     3.67      .55      .01  1098.50
  205000.   39169.  132995.   32835.    3908.    7558.    3286.    2908.     142.   1098.50
     .17    10.02    17.60     9.99     .040     .030     .040     .000  1092.50  9475.96
  .002735    180.     200.     220.        2        0        0      .00  1048.09 10524.04
```

```
  SECNO    DEPTH    CWSEL    CRIWS    WSELK    EG       HV       HL       OLOSS   BANK ELEV
  Q        QLOB     QCH      QROB     ALOB     ACH      AROB     VOL      TWA   LEFT/RIGHT
  TIME     VLOB     VCH      VROB     XNL      XNCH     XNR      WTN      ELMIN      SSTA
  SLOPE    XLOBL    XLCH     XLOBR    ITRIAL   IDC      ICONT    CORAR    TOPWID     ENDST


FLOW DISTRIBUTION FOR SECNO=     17.95          CWSEL=   1110.49

STA=    9476.    9500.    9679.    9762.    9814.   10238.   10500.   10524.
  PER Q=       .4     10.7      4.9      3.1     64.9     15.6       .4
   AREA=    144.1   2146.3    995.2    622.3   7557.7   3141.4    144.1
    VEL=      6.0     10.2     10.2     10.2     17.6     10.2      6.0

*SECNO 17.970

3470 ENCROACHMENT STATIONS=    9480.0   10520.0  TYPE=     1  TARGET=    1040.000
    17.97    18.04  1110.84      .00      .00  1114.48     3.65      .33      .00  1098.80
  205000.   39009.  132871.   33120.    3895.    7572.    3315.    2948.     145.   1098.80
      .17    10.01    17.55     9.99     .040     .030     .040     .000  1092.80  9480.00
  .002711     110.     120.     130.        1        0        0      .00  1040.00 10520.00


FLOW DISTRIBUTION FOR SECNO=     17.97          CWSEL=   1110.84

STA=    9480.    9500.    9655.    9770.    9812.   10236.   10500.   10520.
  PER Q=       .4      9.2      6.9      2.5     64.8     15.7       .4
   AREA=    140.9   1864.6   1383.4    506.4   7572.5   3174.6    140.9
    VEL=      6.2     10.2     10.2     10.2     17.5     10.2      6.2

CCHV=    .100 CEHV=    .300
*SECNO 17.998

3301 HV CHANGED MORE THAN HVINS


3470 ENCROACHMENT STATIONS=    9475.0   10524.0  TYPE=     1  TARGET=    1049.000
         STOCKPILED MATERIAL MODELED IN THE CORPS' ORIGINAL SECTION DOES NOT
         CURRENTLY EXIST AND THIS SECTION WAS MODIFIED TO DELETE SAME.
    18.00    18.79  1111.99      .00      .00  1114.95     2.96      .40      .07  1099.20
  205000.   49307.  113703.   41990.    4284.    7422.    3569.    2999.     148.   1099.20
      .17    11.51    15.32    11.77     .035     .035     .035     .000  1093.20  9475.00
  .002664     130.     150.     160.        3        0        0      .00  1049.00 10524.00


FLOW DISTRIBUTION FOR SECNO=     18.00          CWSEL=   1111.99

STA=    9475.    9500.    9630.    9670.    9795.    9835.   10234.   10500.   10524.
  PER Q=       .6      9.7      2.8      8.2      2.8     55.5     19.9       .6
   AREA=    164.0   1663.0    491.7   1474.0    491.7   7422.3   3405.3    163.4
    VEL=      7.1     12.0     11.7     11.4     11.7     15.3     12.0      7.2
```

```
  SECNO    DEPTH    CWSEL    CRIWS    WSELK    EG       HV       HL       OLOSS   BANK ELEV
  Q        QLOB     QCH      QROB     ALOB     ACH      AROB     VOL      TWA   LEFT/RIGHT
  TIME     VLOB     VCH      VROB     XNL      XNCH     XNR      WTN      ELMIN      SSTA
  SLOPE    XLOBL    XLCH     XLOBR    ITRIAL   IDC      ICONT    CORAR    TOPWID     ENDST


*SECNO 18.036

3470 ENCROACHMENT STATIONS=   9470.0   10529.0  TYPE=     1  TARGET=    1059.000
    18.04    19.05  1112.75      .00      .00  1115.47     2.72      .50      .02  1099.70
  205000.   46940.  116677.   41383.    4173.    8006.    3687.    3070.     153.  1099.70
      .18    11.25    14.57    11.22     .035     .035     .035     .000  1093.70  9473.82
  .002364     180.     200.     220.        2        0        0      .00  1052.35 10526.18


FLOW DISTRIBUTION FOR SECNO=     18.04         CWSEL=   1112.75

STA=    9474.    9500.    9807.   10231.   10500.   10526.
  PER Q=       .6     22.3     56.9     19.6       .6
   AREA=    170.8   4001.9   8006.3   3516.3    170.8
    VEL=      6.7     11.4     14.6     11.4      6.7

*SECNO 18.074

3470 ENCROACHMENT STATIONS=   9471.0   10528.0  TYPE=     1  TARGET=    1057.000
    18.07    19.10  1113.30      .00      .00  1115.94     2.64      .46      .01  1100.20
  205000.   45815.  125271.   33915.    4146.    8831.    3088.    3143.     158.  1100.20
      .18    11.05    14.19    10.98     .035     .035     .035     .000  1094.20  9473.73
  .002271     180.     200.     220.        2        0        0      .00  1052.54 10526.27


FLOW DISTRIBUTION FOR SECNO=     18.07         CWSEL=   1113.30

STA=    9474.    9500.    9803.   10277.   10500.   10526.
  PER Q=       .6     21.8     61.1     16.0       .6
   AREA=    172.0   3974.3   8831.0   2915.9    172.0
    VEL=      6.6     11.2     14.2     11.2      6.6

*SECNO 18.112

3470 ENCROACHMENT STATIONS=   9471.0   10528.0  TYPE=     1  TARGET=    1057.000
    18.11    18.99  1113.69      .00      .00  1116.44     2.75      .46      .03  1100.70
  205000.   45915.  116811.   42275.    4069.    7981.    3752.    3216.     162.  1100.70
      .18    11.29    14.64    11.27     .035     .035     .035     .000  1094.70  9474.08
  .002394     180.     200.     220.        2        0        0      .00  1051.83 10525.91


FLOW DISTRIBUTION FOR SECNO=     18.11         CWSEL=   1113.69

STA=    9474.    9500.    9800.   10224.   10500.   10526.
  PER Q=       .6     21.8     57.0     20.1       .6
   AREA=    168.3   3900.3   7980.7   3583.2    168.3
    VEL=      6.7     11.5     14.6     11.5      6.7
```

```
  SECNO    DEPTH    CWSEL    CRIWS    WSELK    EG       HV       HL       OLOSS   BANK ELEV
  Q        QLOB     QCH      QROB     ALOB     ACH      AROB     VOL      TWA   LEFT/RIGHT
  TIME     VLOB     VCH      VROB     XNL      XNCH     XNR      WTN      ELMIN      SSTA
  SLOPE    XLOBL    XLCH     XLOBR    ITRIAL   IDC      ICONT    CORAR    TOPWID     ENDST


*SECNO 18.150

3470 ENCROACHMENT STATIONS=    9472.0   10516.0  TYPE=     1  TARGET=    1044.000
    18.15    18.80  1114.10      .00      .00  1116.97     2.87      .49      .04  1101.30
  205000.   45590.  118162.   41248.    3964.    7897.    3593.    3287.     167.  1101.30
      .19    11.50    14.96    11.48     .035     .035     .035     .000  1095.30  9474.34
  .002537     180.     200.     220.        2        0        0      .00  1040.32 10514.66


FLOW DISTRIBUTION FOR SECNO=     18.15          CWSEL=   1114.10

STA=    9474.    9500.    9797.   10221.   10489.   10515.
  PER Q=       .5     21.7     57.6     19.6       .5
   AREA=    164.2   3800.2   7897.2   3429.1    164.2
    VEL=      6.8     11.7     15.0     11.7      6.8

*SECNO 18.188

3301 HV CHANGED MORE THAN HVINS


3470 ENCROACHMENT STATIONS=    9474.0   10339.0  TYPE=     1  TARGET=     865.000
    18.19    17.77  1113.57      .00      .00  1118.10     4.52      .63      .50  1101.80
  205000.   50161.  137657.   17183.    3599.    7465.    1271.    3350.     172.  1101.80
      .19    13.94    18.44    13.52     .035     .035     .035     .000  1095.80  9476.39
  .004155     180.     200.     220.        3        0        0      .00   861.13 10337.51


FLOW DISTRIBUTION FOR SECNO=     18.19          CWSEL=   1113.57

STA=    9476.    9500.    9794.   10218.   10314.   10338.
  PER Q=       .6     23.9     67.1      7.8       .6
   AREA=    139.0   3459.5   7464.6   1131.6    139.0
    VEL=      8.3     14.2     18.4     14.2      8.3

*SECNO 18.216

3301 HV CHANGED MORE THAN HVINS


3470 ENCROACHMENT STATIONS=    9473.0   10352.0  TYPE=     1  TARGET=     879.000
    18.22    18.55  1114.75      .00      .00  1118.71     3.96      .56      .06  1102.20
  205000.   50421.  134667.   19912.    3812.    7793.    1545.    3394.     174.  1102.20
      .19    13.23    17.28    12.89     .035     .035     .035     .000  1096.20  9474.91
  .003446     140.     150.     160.        3        0        0      .00   876.18 10351.09
```

```
  SECNO    DEPTH    CWSEL    CRIWS    WSELK    EG       HV       HL       OLOSS   BANK ELEV
  Q        QLOB     QCH      QROB     ALOB     ACH      AROB     VOL      TWA   LEFT/RIGHT
  TIME     VLOB     VCH      VROB     XNL      XNCH     XNR      WTN      ELMIN      SSTA
  SLOPE    XLOBL    XLCH     XLOBR    ITRIAL   IDC      ICONT    CORAR    TOPWID     ENDST


FLOW DISTRIBUTION FOR SECNO=     18.22          CWSEL=   1114.75

STA=    9475.    9500.    9791.   10215.   10326.   10351.
  PER Q=       .6     24.0     65.7      9.1       .6
   AREA=    157.4   3654.7   7793.4   1387.6    157.4
    VEL=      7.9     13.5     17.3     13.5      7.9

*SECNO 18.254

3301 HV CHANGED MORE THAN HVINS


3470 ENCROACHMENT STATIONS=    9471.0   10465.0  TYPE=     1  TARGET=     994.000
    18.25    20.00  1116.70      .00      .00  1119.37     2.67      .53      .13  1102.70
  205000.   47357.  120457.   37186.    4232.    8408.    3341.    3460.     179.   1102.70
      .20    11.19    14.33    11.13     .035     .035     .035     .000  1096.70  9472.00
  .002140     180.     200.     220.        3        0        0      .00   992.97 10464.97


FLOW DISTRIBUTION FOR SECNO=     18.25          CWSEL=   1116.70

STA=    9472.    9500.    9788.   10212.   10437.   10465.
  PER Q=       .6     22.5     58.8     17.5       .6
   AREA=    196.0   4035.9   8407.6   3144.2    196.5
    VEL=      6.7     11.4     14.3     11.4      6.7

*SECNO 18.292

3470 ENCROACHMENT STATIONS=    9470.0   10529.0  TYPE=     1  TARGET=    1059.000
    18.29    20.29  1117.49      .00      .00  1119.80     2.31      .40      .04  1103.20
  205000.   45364.  114272.   45364.    4321.    8533.    4321.    3536.     183.   1103.20
      .20    10.50    13.39    10.50     .035     .035     .035     .000  1097.20  9471.41
  .001833     190.     200.     210.        2        0        0      .00  1057.18 10528.59


FLOW DISTRIBUTION FOR SECNO=     18.29          CWSEL=   1117.49

STA=    9471.    9500.    9788.   10212.   10500.   10529.
  PER Q=       .6     21.5     55.7     21.5       .6
   AREA=    204.3   4116.7   8532.7   4116.7    204.3
    VEL=      6.3     10.7     13.4     10.7      6.3
```

```
  SECNO    DEPTH    CWSEL    CRIWS    WSELK    EG       HV       HL       OLOSS   BANK ELEV
  Q        QLOB     QCH      QROB     ALOB     ACH      AROB     VOL      TWA   LEFT/RIGHT
  TIME     VLOB     VCH      VROB     XNL      XNCH     XNR      WTN      ELMIN      SSTA
  SLOPE    XLOBL    XLCH     XLOBR    ITRIAL   IDC      ICONT    CORAR    TOPWID     ENDST


*SECNO 18.330

3470 ENCROACHMENT STATIONS=    9471.0   10528.0  TYPE=     1  TARGET=    1057.000
    18.33    20.13  1117.83      .00      .00  1120.19     2.36      .37      .01  1103.70
  205000.   45215.  114565.   45220.    4270.    8464.    4270.    3614.     188.  1103.70
      .21    10.59    13.54    10.59     .035     .035     .035     .000  1097.70  9471.74
  .001893     200.     200.     200.        2        0        0      .00  1056.26 10528.00


FLOW DISTRIBUTION FOR SECNO=     18.33          CWSEL=   1117.83

STA=    9472.    9500.    9788.   10212.   10500.   10528.
  PER Q=       .6     21.4     55.9     21.4       .6
   AREA=    199.7   4070.1   8464.2   4070.1    199.7
    VEL=      6.3     10.8     13.5     10.8      6.3

*SECNO 18.367

3470 ENCROACHMENT STATIONS=    9471.0   10528.0  TYPE=     1  TARGET=    1057.000
         CROSS-SECTION FROM CORP OF ENGINEERS RUN ***** ADDED *****
    18.37    19.98  1118.18      .00      .00  1120.59     2.40      .38      .01  1104.20
  205000.   45075.  114851.   45075.    4222.    8401.    4222.    3692.     193.  1104.20
      .21    10.68    13.67    10.68     .035     .035     .035     .000  1098.20  9472.19
  .001950     200.     200.     200.        2        0        0      .00  1055.62 10527.81


FLOW DISTRIBUTION FOR SECNO=     18.37          CWSEL=   1118.18

STA=    9472.    9500.    9788.   10212.   10500.   10528.
  PER Q=       .6     21.4     56.0     21.4       .6
   AREA=    194.5   4027.5   8401.4   4027.5    194.5
    VEL=      6.4     10.9     13.7     10.9      6.4

*SECNO 18.405

3470 ENCROACHMENT STATIONS=    9542.0   10527.0  TYPE=     1  TARGET=     985.000
         CROSS-SECTION FROM CORP OF ENGINEERS RUN ***** ADDED *****
    18.41    19.53  1118.33      .00      .00  1121.14     2.81      .43      .12  1104.80
  205000.   37422.  120927.   46651.    3328.    8208.    4079.    3767.     198.  1104.80
      .22    11.25    14.73    11.44     .035     .035     .035     .000  1098.80  9542.00
  .002337     200.     200.     200.        2        0        0      .00   985.00 10527.00
```

```
  SECNO    DEPTH    CWSEL    CRIWS    WSELK    EG       HV       HL       OLOSS   BANK ELEV
  Q        QLOB     QCH      QROB     ALOB     ACH      AROB     VOL      TWA   LEFT/RIGHT
  TIME     VLOB     VCH      VROB     XNL      XNCH     XNR      WTN      ELMIN      SSTA
  SLOPE    XLOBL    XLCH     XLOBR    ITRIAL   IDC      ICONT    CORAR    TOPWID     ENDST


FLOW DISTRIBUTION FOR SECNO=     18.41         CWSEL=   1118.33

STA=    9542.    9788.   10212.   10500.   10527.
  PER Q=     18.3     59.0     22.1       .6
   AREA=   3327.9   8207.9   3896.1    183.0
    VEL=     11.2     14.7     11.7      6.8

*SECNO 18.417

3301 HV CHANGED MORE THAN HVINS

        CROSS-SECTION FROM CORP OF ENGINEERS RUN ***** ADDED *****
        THIS CROSS-SECTION EQUATES TO ADOT CROSS-SECTION 100+35
    18.42    21.95  1119.15      .00      .00  1121.33     2.17      .13      .06  1122.00
  205000.       0.  205000.       0.       0.   17325.       0.    3789.     199.   1125.00
      .22      .00    11.83      .00     .035     .035     .035     .000  1097.20 10026.01
  .001895      65.      60.      55.        2        0        0      .00  1062.93 11088.94


FLOW DISTRIBUTION FOR SECNO=     18.42         CWSEL=   1119.15

STA=   10026.   11105.
  PER Q=    100.0
   AREA=  17324.8
    VEL=     11.8
```

THIS RUN EXECUTED 03-10-92

```
**************************************************
  HEC2 RELEASE DATED NOV 76 UPDATED MAY  1984
  ERROR CORR -  01,02,03,04,05,06
  MODIFICATION -  50,51,52,53,54,55,56
  IBM-PC-XT VERSION AUGUST 1985
**************************************************
```

NOTE- ASTERISK (*) AT LEFT OF CROSS-SECTION NUMBER INDICATES MESSAGE IN SUMMARY OF ERRORS LIST

100-YEAR FLOODPLAIN WITH

SUMMARY PRINTOUT

SECNO	ELMIN	XLCH	Q	CWSEL	EG	AREA	TOPWID	10K*S
16.733	1080.80	.00	205000.00	1106.27	1107.30	25174.83	1089.24	4.14
16.829	1080.90	510.00	205000.00	1106.33	1107.62	22479.54	1041.67	5.72
16.875	1080.90	240.00	205000.00	1106.40	1107.86	21136.54	1050.00	7.06
16.882	1082.00	40.00	205000.00	1106.40	1107.93	20607.37	973.75	10.30
16.904	1082.00	165.00	205000.00	1106.60	1108.11	20799.56	968.00	9.98
16.927	1082.00	90.00	205000.00	1106.65	1108.21	21207.28	1030.00	6.64
17.027	1082.00	528.00	205000.00	1106.99	1108.54	20927.21	957.48	6.13
17.053	1082.00	145.00	205000.00	1107.32	1108.65	22471.08	937.82	4.90
17.091	1082.00	200.00	205000.00	1107.32	1108.79	21348.82	935.93	5.56
17.129	1082.00	186.00	205000.00	1107.50	1108.92	21738.87	918.36	6.96
17.167	1082.00	220.00	205000.00	1107.62	1109.05	21692.11	918.99	5.10
17.205	1082.00	80.00	205000.00	1107.65	1109.10	21589.24	931.77	5.23
17.242	1082.00	120.00	205000.00	1107.68	1109.18	21225.50	944.83	5.67
17.280	1082.80	200.00	205000.00	1107.72	1109.33	20502.22	925.23	6.19
17.318	1083.10	200.00	205000.00	1107.92	1109.46	21017.24	930.00	6.04
17.356	1082.50	200.00	205000.00	1108.15	1109.59	21891.67	974.04	5.56
17.394	1083.00	200.00	205000.00	1108.21	1109.72	21341.11	956.65	5.88

SECNO	ELMIN	XLCH	Q	CWSEL	EG	AREA	TOPWID	10K*S
17.432	1084.00	200.00	205000.00	1108.29	1109.86	20910.06	955.83	6.23
17.453	1083.00	112.00	205000.00	1108.38	1109.93	20702.51	955.71	6.24
17.459	1083.00	31.00	205000.00	1108.40	1109.95	20696.99	955.77	6.24
17.470	1084.00	57.00	205000.00	1108.32	1110.04	20476.59	956.11	7.19
17.486	1083.50	84.00	205000.00	1108.52	1110.11	20707.96	946.71	6.24
17.498	1084.00	68.00	205000.00	1108.55	1110.16	20569.32	946.60	6.35
17.508	1084.00	48.00	205000.00	1108.59	1110.19	20689.86	959.17	6.44
17.536	1084.30	150.00	205000.00	1108.61	1110.32	19976.19	963.43	7.27
17.568	1084.60	170.00	205000.00	1108.73	1110.45	19878.18	980.26	7.49
17.606	1084.70	200.00	205000.00	1108.77	1110.67	18933.87	982.63	9.09
17.644	1085.00	200.00	205000.00	1109.02	1110.85	19204.06	1004.10	8.60
17.682	1086.00	200.00	205000.00	1109.28	1111.03	19650.32	1014.36	8.18
17.720	1087.50	200.00	205000.00	1109.21	1111.33	18124.81	1018.04	11.59
17.758	1088.00	200.00	205000.00	1109.63	1111.57	19319.72	1031.29	10.43
17.795	1088.50	200.00	205000.00	1109.85	1111.78	19317.70	1036.13	11.05
17.833	1089.60	200.00	205000.00	1109.70	1112.24	17058.66	1042.61	17.78
17.871	1091.40	200.00	205000.00	1109.33	1113.02	14694.50	1047.75	27.68
17.909	1092.00	200.00	205000.00	1109.85	1113.59	14606.03	1047.65	28.21
17.947	1092.50	200.00	205000.00	1110.49	1114.16	14751.12	1048.09	27.35
17.970	1092.80	120.00	205000.00	1110.84	1114.48	14783.13	1040.00	27.11
17.998	1093.20	150.00	205000.00	1111.99	1114.95	15275.28	1049.00	26.64
18.036	1093.70	200.00	205000.00	1112.75	1115.47	15866.16	1052.35	23.64
18.074	1094.20	200.00	205000.00	1113.30	1115.94	16065.34	1052.54	22.71
18.112	1094.70	200.00	205000.00	1113.69	1116.44	15800.87	1051.83	23.94
18.150	1095.30	200.00	205000.00	1114.10	1116.97	15454.84	1040.32	25.37
18.188	1095.80	200.00	205000.00	1113.57	1118.10	12333.74	861.13	41.55

SECNO	ELMIN	XLCH	Q	CWSEL	EG	AREA	TOPWID	10K*S
18.216	1096.20	150.00	205000.00	1114.75	1118.71	13150.52	876.18	34.46
18.254	1096.70	200.00	205000.00	1116.70	1119.37	15980.16	992.97	21.40
18.292	1097.20	200.00	205000.00	1117.49	1119.80	17174.84	1057.18	18.33
18.330	1097.70	200.00	205000.00	1117.83	1120.19	17003.87	1056.26	18.93
18.367	1098.20	200.00	205000.00	1118.18	1120.59	16845.43	1055.62	19.50
18.405	1098.80	200.00	205000.00	1118.33	1121.14	15614.78	985.00	23.37
18.417	1097.20	60.00	205000.00	1119.15	1121.33	17324.81	1062.93	18.95

SUMMARY OF ERRORS AND SPECIAL NOTES

THIS RUN EXECUTED 03-10-92

```
**************************************************
  HEC2 RELEASE DATED NOV 76 UPDATED MAY  1984
  ERROR CORR -  01,02,03,04,05,06
  MODIFICATION -  50,51,52,53,54,55,56
  IBM-PC-XT VERSION AUGUST 1985
**************************************************
```

Run #2

Reach:	Project Reach (approximately 40th St to SPRR Bridge) Replaces reach from mile 18.417 to 21.725
Source:	CRSS Civil Engineers

```
****************************************************
*  WATER SURFACE PROFILES                          *
*  VERSION OF NOVEMBER 1976                        *
*  UPDATED MAY 1984                                *
*  IBM-PC-XT VERSION AUGUST 1985                   *
*  RUN DATE  03-10-92   TIME  11:00:49               *
****************************************************
```


```
****************************************
*  U.S. ARMY CORPS OF ENGINEERS        *
*  THE HYDROLOGIC ENGINEERING CENTER   *
*  609 SECOND STREET, SUITE D          *
*  DAVIS, CALIFORNIA 95616             *
  *  (916) 440-2105 (FTS) 448-2105
****************************************
```


```
X     X  XXXXXXX   XXXXX            XXXXX
X     X  X       X     X          X     X
X     X  X       X                      X
XXXXXXX  XXXX     X         XXXXX   XXXXX
X     X  X       X                X
X     X  X       X     X          X
X     X  XXXXXXX   XXXXX           XXXXXXX
```

THIS RUN EXECUTED 03-10-92

```
**************************************************
  HEC2 RELEASE DATED NOV 76 UPDATED MAY  1984
  ERROR CORR -  01,02,03,04,05,06
  MODIFICATION -  50,51,52,53,54,55,56
  IBM-PC-XT VERSION AUGUST 1985
**************************************************


C
T1      Channelized Salt River                    CRSS Civil Engineers, Inc
T2      City of Tempe   File Name: RSSRP1.HC2     4041 N. Central, Ste 650
T3      100 Year Floodplain with Levees           Phoenix, Arizona

J1  ICHECK    INQ       NINV      IDIR      STRT      METRIC    HVINS     Q         WSEL      FQ

      0.        2.        0.        0.   .000000      .00       .0        0.   119.150      .000

J2  NPROF     IPLOT     PRFVS     XSECV     XSECH     FN        ALLDC     IBW       CHNIM     ITRACE

    -1.000     .000    -1.000     .000      .000      .000      .000      .000      .000    15.000

J3  VARIABLE CODES FOR SUMMARY PRINTOUT

    38.000    42.000    39.000    43.000     1.000     3.000    25.000     4.000     5.000      .000


QT      2.000 205000.000 205000.000       .000       .000       .000       .000       .000       .000       .000
NC       .050       .050       .035       .100       .300       .000       .000       .000       .000       .000
          Begin ADOT Channelization
X1  10035.000     12.000  10020.000  11105.000       .000       .000       .000      1.000       .000       .000
GR    125.000  10000.000    125.000  10010.000    122.000  10020.000    105.000  10056.000    104.000  10340.000
GR    100.000  10356.000     97.200  10540.000    100.000  10750.000    105.000  10770.000    105.000  11050.000
GR    125.000  11105.000    125.000  11150.000       .000       .000       .000       .000       .000       .000

X1  10200.000     11.000  10025.000  11100.000    165.000    165.000    165.000      1.000       .000       .000
GR    122.000  10000.000    123.000  10025.000    105.000  10065.000    104.000  10355.000    100.000  10365.000
GR     98.100  10548.000    100.000  10758.000    105.000  10775.000    105.000  11060.000    123.000  11100.000
GR    123.000  11150.000       .000       .000       .000       .000       .000       .000       .000       .000

X1  10400.000     11.000  10035.000  11103.000    200.000    200.000    200.000      1.000       .000       .000
GR    122.000  10000.000    122.000  10035.000    105.000  10070.000    105.000  10353.000    100.000  10385.000
GR     98.100  10548.000    100.000  10758.000    105.000  10775.000    105.000  11060.000    123.000  11103.000
GR    123.000  11140.000       .000       .000       .000       .000       .000       .000       .000       .000

X1  10600.000     11.000  10025.000  11100.000    200.000    200.000    200.000      1.000       .000       .000
GR    123.000  10000.000    123.000  10025.000    105.000  10068.000    105.000  10362.000    100.000  10392.000
GR     98.500  10544.000    100.000  10760.000    105.000  10775.000    106.000  11050.000    124.000  11100.000
GR    124.000  11130.000       .000       .000       .000       .000       .000       .000       .000       .000
```

X1	10800.000	11.000	10030.000	11100.000	200.000	200.000	200.000	1.000	.000	.000
GR	123.000	10000.000	123.000	10030.000	105.000	10067.000	106.000	10380.000	100.000	10400.000
GR	99.000	10540.000	101.000	10780.000	106.000	10800.000	107.000	11060.000	124.000	11100.000
GR	124.000	11145.000	.000	.000	.000	.000	.000	.000	.000	.000
X1	11000.000	11.000	10022.000	11095.000	200.000	200.000	200.000	1.000	.000	.000
GR	123.000	10000.000	123.000	10022.000	105.000	10065.000	106.000	10392.000	101.000	10418.000
GR	99.500	10538.000	101.000	10810.000	106.000	10830.000	107.000	11060.000	124.000	11095.000
GR	125.000	11195.000	.000	.000	.000	.000	.000	.000	.000	.000
X1	11200.000	12.000	10030.000	11100.000	200.000	200.000	200.000	1.000	.000	.000
GR	123.000	10000.000	123.000	10030.000	106.000	10064.000	106.000	10413.000	100.000	10425.000
GR	100.000	10538.000	100.000	10815.000	103.000	10821.000	106.000	10875.000	107.000	11055.000
GR	126.000	11100.000	126.000	11160.000	.000	.000	.000	.000	.000	.000
X1	11400.000	11.000	10030.000	11113.000	200.000	200.000	200.000	1.000	.000	.000
GR	124.000	10000.000	124.000	10030.000	107.000	10064.000	103.400	10405.000	100.400	10411.000
GR	100.400	10810.000	103.400	10816.000	108.000	10925.000	108.000	11060.000	126.000	11113.000
GR	128.000	11195.000	.000	.000	.000	.000	.000	.000	.000	.000
X1	11600.000	12.000	10030.000	11122.000	200.000	200.000	200.000	1.000	.000	.000
GR	124.000	10000.000	124.000	10030.000	108.000	10065.000	103.900	10399.000	100.900	10405.000
GR	100.900	10805.000	103.900	10811.000	103.900	11060.000	116.500	11080.000	116.500	11089.000
GR	127.500	11122.000	127.500	11133.000	.000	.000	.000	.000	.000	.000
X1	11800.000	12.000	10035.000	11130.000	200.000	200.000	200.000	1.000	.000	.000
GR	125.500	10000.000	125.000	10035.000	110.000	10075.000	104.400	10386.000	101.400	10392.000
GR	101.400	10792.000	104.400	10798.000	104.400	11071.000	116.900	11089.000	116.900	11097.000
GR	127.900	11130.000	127.900	11141.000	.000	.000	.000	.000	.000	.000
X1	12000.000	12.000	10035.000	11130.000	200.000	200.000	200.000	1.000	.000	.000
GR	127.600	10000.000	127.000	10035.000	110.000	10070.000	104.800	10364.000	101.800	10370.000
GR	101.800	10770.000	104.800	10776.000	104.800	11070.000	117.400	11089.000	117.400	11097.000
GR	128.400	11130.000	128.400	11140.000	.000	.000	.000	.000	.000	.000
X1	12100.000	12.000	10035.000	11125.000	100.000	100.000	100.000	1.000	.000	.000
GR	127.800	10000.000	127.000	10035.000	110.500	10070.000	105.100	10347.000	102.100	10353.000
GR	102.100	10753.000	105.100	10759.000	105.100	11065.000	117.600	11084.000	117.600	11092.000
GR	128.600	11125.000	128.600	11136.000	.000	.000	.000	.000	.000	.000
X1	12200.000	12.000	10032.000	11123.000	100.000	100.000	100.000	1.000	.000	.000
GR	128.000	10000.000	126.000	10032.000	110.000	10082.000	105.300	10334.000	102.300	10340.000
GR	102.300	10740.000	105.300	10746.000	105.300	11063.000	117.800	11082.000	117.800	11090.000
GR	128.800	11123.000	128.800	11134.000	.000	.000	.000	.000	.000	.000
X1	12400.000	12.000	10047.000	11109.000	200.000	200.000	200.000	1.000	.000	.000
GR	129.300	10000.000	129.000	10047.000	111.000	10085.000	105.800	10308.000	102.800	10314.000
GR	102.800	10714.000	105.800	10720.000	105.800	11049.000	118.200	11068.000	118.200	11076.000
GR	129.200	11109.000	129.200	11119.000	.000	.000	.000	.000	.000	.000

X1	12600.000	14.000	10033.000	11097.000	200.000	200.000	200.000	1.000	.000	.000
GR	130.000	10000.000	130.000	10033.000	118.600	10078.000	118.600	10086.000	106.200	10105.000
GR	106.200	10281.000	103.200	10287.000	103.200	10687.000	106.200	10693.000	106.200	11038.000
GR	118.600	11056.000	118.600	11064.000	129.600	11097.000	129.600	11108.000	.000	.000
X1	12800.000	14.000	10055.000	11130.000	200.000	200.000	200.000	1.000	.000	.000
GR	130.400	10000.000	131.000	10055.000	119.100	10108.000	119.100	10116.000	106.700	10135.000
GR	106.700	10284.000	103.700	10290.000	103.700	10690.000	106.700	10696.000	106.700	11071.000
GR	119.100	11089.000	119.100	11097.000	130.000	11130.000	130.000	11141.000	.000	.000
X1	13000.000	14.000	10059.000	11115.000	200.000	200.000	200.000	1.000	.000	.000
GR	132.000	10000.000	131.000	10059.000	119.400	10087.000	119.400	10095.000	107.200	10113.000
GR	107.200	10244.000	104.200	10250.000	104.200	10650.000	107.200	10656.000	107.200	11055.000
GR	119.500	11074.000	119.500	11082.000	130.500	11115.000	130.500	11126.000	.000	.000
X1	13200.000	14.000	10040.000	11092.000	200.000	200.000	200.000	1.000	.000	.000
GR	131.000	10000.000	130.000	10040.000	119.900	10064.000	119.900	10072.000	107.700	10090.000
GR	107.700	10194.000	104.700	10200.000	104.700	10600.000	107.700	10606.000	107.700	11032.000
GR	119.900	11051.000	119.900	11059.000	130.900	11092.000	130.900	11102.000	.000	.000
X1	13400.000	14.000	10040.000	11092.000	200.000	200.000	200.000	1.000	.000	.000
GR	131.000	10000.000	130.000	10040.000	120.300	10064.000	120.300	10072.000	108.100	10090.000
GR	108.100	10172.000	105.100	10178.000	105.100	10578.000	108.100	10584.000	108.100	11032.000
GR	120.300	11051.000	120.300	11059.000	131.300	11092.000	131.300	11102.000	.000	.000
X1	13600.000	14.000	10042.000	11087.000	200.000	200.000	200.000	1.000	.000	.000
GR	132.000	10000.000	130.000	10042.000	120.800	10067.000	120.800	10075.000	108.600	10093.000
GR	108.600	10144.000	105.600	10150.000	105.600	10550.000	108.600	10556.000	108.600	11027.000
GR	120.800	11046.000	120.800	11054.000	131.800	11087.000	131.800	11097.000	.000	.000
X1	13800.000	14.000	10035.000	11081.000	200.000	200.000	200.000	1.000	.000	.000
GR	132.500	10000.000	130.000	10035.000	121.200	10055.000	121.200	10063.000	109.100	10081.000
GR	109.100	10114.000	106.100	10120.000	106.100	10520.000	109.100	10526.000	109.100	11022.000
GR	121.200	11040.000	121.200	11048.000	132.200	11081.000	132.200	11092.000	.000	.000
X1	14000.000	14.000	10033.000	11085.000	200.000	200.000	200.000	1.000	.000	.000
GR	132.000	10000.000	130.000	10033.000	121.600	10049.000	121.600	10057.000	109.500	10075.000
GR	109.500	10096.000	106.500	10102.000	106.500	10502.000	109.500	10508.000	109.500	11026.000
GR	121.600	11044.000	121.600	11052.000	132.600	11085.000	132.600	11096.000	.000	.000
X1	14200.000	14.000	10011.000	11093.000	200.000	200.000	200.000	1.000	.000	.000
GR	133.000	10000.000	133.000	10011.000	122.000	10044.000	122.000	10052.000	110.000	10070.000
GR	110.000	10091.000	107.000	10097.000	107.000	10497.000	110.000	10503.000	110.000	11034.000
GR	122.000	11052.000	122.000	11060.000	133.000	11093.000	133.000	11104.000	.000	.000
NC	.000	.000	.000	.300	.500	.000	.000	.000	.000	.000

Grade Control Str. No. 2

X1	14400.000	13.000	10027.000	11093.000	200.000	200.000	200.000	1.000	.000	.000
GR	133.500	10000.000	133.500	10027.000	133.500	10035.000	110.500	10070.000	110.500	10086.000
GR	107.500	10092.000	107.500	10492.000	110.500	10498.000	110.500	11034.000	122.500	11052.000
GR	122.500	11060.000	133.500	11093.000	133.500	11104.000	.000	.000	.000	.000

```
NC       .050       .050       .035       .300       .500       .000       .000       .000       .000       .000
         SR 153 Bridge (D/S limit)
X1  14665.000     10.000  10036.000  11068.000    265.000    265.000    265.000      1.000       .000       .000
X3       .000       .000       .000  10036.000    147.000  11068.000    147.000       .000       .000       .000
GR    134.100  10000.000    134.100  10036.000    111.200  10070.000    111.200  10092.000    108.200  10098.000
GR    108.200  10498.000    111.200  10504.000    111.200  11034.000    134.100  11068.000    134.100  11103.000

         SR 153 Bridge (U/S limit)
X1  14785.000     12.000  10011.000  11068.000    120.000    120.000    120.000      1.000       .000       .000
GR    134.300  10000.000    134.300  10011.000    123.300  10044.000    123.300  10052.000    111.400  10070.000
GR    111.400  10092.000    108.400  10098.000    108.400  10498.000    111.400  10504.000    111.400  11034.000
GR    134.300  11068.000    134.300  11103.000       .000       .000       .000       .000       .000       .000

NC       .000       .000       .000       .100       .300       .000       .000       .000       .000       .000
X1  15000.000     14.000  10011.000  11091.000    215.000    215.000    215.000      1.000       .000       .000
GR    134.700  10000.000    134.700  10011.000    123.700  10044.000    123.700  10052.000    111.900  10070.000
GR    111.900  10091.000    108.900  10097.000    108.900  10497.000    111.900  10503.000    111.900  11033.000
GR    123.700  11050.000    123.700  11058.000    134.700  11091.000    134.700  11102.000       .000       .000

NC       .050       .050       .035       .100       .300       .000       .000       .000       .000       .000
X1  15200.000     14.000  10011.000  11091.000    200.000    200.000    200.000      1.000       .000       .000
GR    135.200  10000.000    135.200  10011.000    124.200  10044.000    124.200  10052.000    112.400  10070.000
GR    112.400  10091.000    109.400  10097.000    109.400  10497.000    112.400  10503.000    112.400  11033.000
GR    124.200  11050.000    124.200  11058.000    135.200  11091.000    135.200  11102.000       .000       .000

X1  15400.000     12.000  10035.000  11091.000    200.000    200.000    200.000      1.000       .000       .000
GR    135.600  10000.000    135.600  10035.000    112.800  10069.000    112.800  10091.000    109.800  10097.000
GR    109.800  10497.000    112.800  10503.000    112.800  11033.000    124.600  11051.000    124.600  11059.000
GR    135.600  11091.000    135.600  11102.000       .000       .000       .000       .000       .000       .000

QT      2.000 210000.000 210000.000       .000       .000       .000       .000       .000       .000       .000
NC       .050       .050       .035       .300       .500       .000       .000       .000       .000       .000
         SR 143 Bridge (D/S limit)
X1  15586.000     12.000  10035.000  11091.000    186.000    186.000    186.000      1.000       .000       .000
X3       .000       .000       .000  10035.000    145.400  11091.000    145.400       .000       .000       .000
GR    136.000  10000.000    136.000  10035.000    113.300  10069.000    113.300  10091.000    110.300  10097.000
GR    110.300  10497.000    113.300  10503.000    113.300  11033.000    125.000  11051.000    125.000  11059.000
GR    136.000  11091.000    136.000  11102.000       .000       .000       .000       .000       .000       .000

SB      1.050      1.560      2.600     200.000    963.000     48.000  26680.000      1.500    110.500    110.300
         SR 143 Bridge (U/S limit)
X1  15710.000     12.000  10011.000  11066.000    124.000    124.000    124.000      1.000       .000       .000
X2       .000       .000      1.000     137.000    145.400       .000       .000      2.000       .000       .000
GR    136.100  10000.000    136.200  10011.000    125.200  10044.000    125.200  10052.000    113.600  10070.000
GR    113.600  10091.000    110.600  10097.000    110.600  10497.000    113.600  10503.000    113.600  11032.000
GR    136.200  11066.000    136.200  11102.000       .000       .000       .000       .000       .000       .000

NC       .000       .000       .000       .100       .300       .000       .000       .000       .000       .000
X1  16000.000     16.000  10011.000  11084.000    290.000    290.000    290.000      1.000       .000       .000
GR    136.900  10000.000    136.900  10011.000    125.900  10044.000    125.900  10052.000    114.300  10078.000
GR    114.300  10089.000    111.300  10095.000    111.300  10495.000    114.300  10501.000    114.300  11032.000
GR    125.900  11050.000    125.900  11058.000    122.900  11062.000    122.900  11063.000    136.900  11084.000
GR    136.900  11098.000       .000       .000       .000       .000       .000       .000       .000       .000
```

NC	.035	.035	.035	.100	.300	.000	.000	.000	.000	.000
X1	16200.000	15.000	10020.000	11096.000	200.000	200.000	200.000	1.000	.000	.000
GR	137.300	10000.000	137.300	10012.000	137.300	10020.000	114.700	10081.000	114.700	10109.000
GR	111.700	10115.000	111.700	10515.000	114.700	10521.000	114.700	11043.000	126.300	11061.000
GR	126.300	11069.000	123.300	11073.000	123.300	11074.000	137.300	11096.000	137.300	11109.000
X1	16400.000	16.000	10011.000	11083.000	200.000	200.000	200.000	1.000	.000	.000
GR	137.700	10000.000	137.700	10011.000	126.700	10044.000	126.700	10052.000	115.200	10069.000
GR	115.200	10102.000	112.200	10108.000	112.200	10508.000	115.200	10514.000	115.200	11031.000
GR	126.700	11049.000	126.700	11057.000	123.700	11061.000	123.700	11062.000	138.300	11083.000
GR	138.300	11098.000	.000	.000	.000	.000	.000	.000	.000	.000
X1	16600.000	16.000	10011.000	11085.000	200.000	200.000	200.000	1.000	.000	.000
GR	138.100	10000.000	138.100	10011.000	127.100	10043.000	127.100	10051.000	115.700	10069.000
GR	115.700	10124.000	112.700	10130.000	112.700	10530.000	115.700	10536.000	115.700	11033.000
GR	127.100	11050.000	127.100	11058.000	124.100	11063.000	124.100	11064.000	138.700	11085.000
GR	138.700	11099.000	.000	.000	.000	.000	.000	.000	.000	.000
X1	16800.000	16.000	10010.000	11087.000	200.000	200.000	200.000	1.000	.000	.000
GR	138.600	10000.000	138.600	10010.000	127.600	10043.000	127.600	10051.000	116.200	10069.000
GR	116.200	10157.000	113.200	10163.000	113.200	10563.000	116.200	10569.000	116.200	11035.000
GR	127.600	11052.000	127.600	11060.000	124.600	11065.000	124.600	11066.000	139.200	11087.000
GR	139.200	11101.000	.000	.000	.000	.000	.000	.000	.000	.000
X1	17000.000	16.000	10011.000	11089.000	200.000	200.000	200.000	1.000	.000	.000
GR	139.000	10000.000	139.000	10011.000	128.000	10044.000	128.000	10052.000	116.600	10069.000
GR	116.600	10205.000	113.600	10211.000	113.600	10611.000	116.600	10617.000	116.600	11037.000
GR	128.000	11054.000	128.000	11062.000	125.000	11067.000	125.000	11068.000	139.600	11089.000
GR	139.600	11103.000	.000	.000	.000	.000	.000	.000	.000	.000
X1	17200.000	16.000	10011.000	11089.000	200.000	200.000	200.000	1.000	.000	.000
GR	139.400	10000.000	139.400	10011.000	128.400	10044.000	128.400	10052.000	117.100	10069.000
GR	117.100	10263.000	114.100	10269.000	114.100	10669.000	117.100	10675.000	117.100	11037.000
GR	128.400	11054.000	128.400	11062.000	125.400	11067.000	125.400	11068.000	140.000	11089.000
GR	140.000	11103.000	.000	.000	.000	.000	.000	.000	.000	.000
X1	17400.000	12.000	10010.000	11088.000	200.000	200.000	200.000	1.000	.000	.000
GR	139.800	10000.000	139.800	10010.000	128.800	10043.000	128.800	10051.000	117.600	10068.000
GR	117.600	10322.000	114.600	10328.000	114.600	10728.000	117.600	10734.000	117.600	11036.000
GR	140.400	11088.000	140.400	11102.000	.000	.000	.000	.000	.000	.000
X1	17600.000	12.000	10011.000	11070.000	200.000	200.000	200.000	1.000	.000	.000
GR	140.300	10000.000	140.300	10011.000	129.300	10044.000	129.300	10052.000	118.000	10069.000
GR	118.000	10382.000	115.000	10388.000	115.000	10788.000	118.000	10794.000	118.000	11035.000
GR	140.900	11070.000	140.900	11084.000	.000	.000	.000	.000	.000	.000
X1	17800.000	12.000	10011.000	11067.000	200.000	200.000	200.000	1.000	.000	.000
GR	140.700	10000.000	140.700	10011.000	129.700	10044.000	129.700	10052.000	118.500	10068.000
GR	118.500	10431.000	115.500	10437.000	115.500	10837.000	118.500	10843.000	118.500	11033.000
GR	141.300	11067.000	141.300	11081.000	.000	.000	.000	.000	.000	.000

X1	18000.000	12.000	10011.000	11065.000	200.000	200.000	200.000	1.000	.000	.000
GR	141.000	10000.000	141.000	10011.000	130.100	10044.000	130.100	10052.000	119.000	10069.000
GR	119.000	10485.000	116.000	10491.000	116.000	10891.000	119.000	10897.000	119.000	11031.000
GR	141.700	11065.000	141.700	11079.000	.000	.000	.000	.000	.000	.000
X1	18200.000	12.000	10011.000	11061.000	200.000	200.000	200.000	1.000	.000	.000
GR	141.500	10000.000	141.500	10011.000	130.500	10044.000	130.500	10052.000	119.500	10069.000
GR	119.500	10528.000	116.500	10534.000	116.500	10934.000	119.500	10940.000	119.500	11027.000
GR	142.100	11061.000	142.100	11075.000	.000	.000	.000	.000	.000	.000
X1	18400.000	10.000	10015.000	11080.000	200.000	200.000	200.000	1.000	.000	.000
GR	142.000	10000.000	142.000	10015.000	119.900	10077.000	119.900	10567.000	116.900	10573.000
GR	116.900	10973.000	119.900	10979.000	119.900	11032.000	142.600	11080.000	142.600	11090.000
X1	18600.000	10.000	10018.000	11050.000	200.000	200.000	200.000	1.000	.000	.000
GR	142.400	10000.000	142.400	10018.000	120.400	10067.000	120.400	10576.000	117.400	10582.000
GR	117.400	10982.000	120.400	10988.000	120.400	11016.000	143.000	11050.000	143.000	11063.000
X1	18800.000	12.000	10011.000	11046.000	200.000	200.000	200.000	1.000	.000	.000
GR	142.800	10000.000	142.800	10011.000	131.800	10044.000	131.800	10052.000	120.900	10069.000
GR	120.900	10587.000	117.900	10593.000	117.900	10993.000	120.900	10999.000	120.900	11012.000
GR	143.400	11046.000	143.400	11060.000	.000	.000	.000	.000	.000	.000
X1	19000.000	12.000	10011.000	11039.000	200.000	200.000	200.000	1.000	.000	.000
GR	143.200	10000.000	143.200	10011.000	132.200	10044.000	132.200	10052.000	121.300	10069.000
GR	121.300	10586.000	118.300	10592.000	118.300	10992.000	121.300	10998.000	121.300	11005.000
GR	143.800	11039.000	143.800	11053.000	.000	.000	.000	.000	.000	.000
X1	19200.000	12.000	10011.000	11031.000	200.000	200.000	200.000	1.000	.000	.000
GR	143.700	10000.000	143.700	10011.000	132.700	10044.000	132.700	10052.000	121.800	10068.000
GR	121.800	10574.000	118.800	10580.000	118.800	10980.000	121.800	10986.000	121.800	10998.000
GR	144.300	11031.000	144.300	11045.000	.000	.000	.000	.000	.000	.000
X1	19400.000	12.000	10011.000	11023.000	200.000	200.000	200.000	1.000	.000	.000
GR	144.100	10000.000	144.100	10011.000	133.100	10044.000	133.100	10052.000	122.300	10068.000
GR	122.300	10555.000	119.300	10561.000	119.300	10961.000	122.300	10967.000	122.300	10989.000
GR	144.700	11023.000	144.700	11037.000	.000	.000	.000	.000	.000	.000
X1	19600.000	12.000	10011.000	11014.000	200.000	200.000	200.000	1.000	.000	.000
GR	144.500	10000.000	144.500	10011.000	133.500	10044.000	133.500	10052.000	122.800	10068.000
GR	122.800	10516.000	119.800	10522.000	119.800	10922.000	122.800	10928.000	122.800	10980.000
GR	145.100	11014.000	145.100	11028.000	.000	.000	.000	.000	.000	.000
X1	19800.000	12.000	10011.000	11005.000	200.000	200.000	200.000	1.000	.000	.000
GR	145.000	10000.000	145.000	10011.000	134.000	10044.000	134.000	10052.000	123.200	10068.000
GR	123.200	10480.000	120.200	10486.000	120.200	10886.000	123.200	10892.000	123.200	10972.000
GR	145.600	11005.000	145.600	11019.000	.000	.000	.000	.000	.000	.000

X1	20000.000	12.000	10010.000	10994.000	200.000	200.000	200.000	1.000	.000	.000
GR	145.600	10000.000	145.600	10010.000	134.600	10043.000	134.600	10051.000	123.700	10068.000
GR	123.700	10435.000	120.700	10441.000	120.700	10841.000	123.700	10847.000	123.700	10961.000
GR	145.600	10994.000	145.600	11008.000	.000	.000	.000	.000	.000	.000
X1	20200.000	12.000	10011.000	10987.000	200.000	200.000	200.000	1.000	.000	.000
GR	146.100	10000.000	146.100	10011.000	135.100	10044.000	135.100	10052.000	124.200	10068.000
GR	124.200	10382.000	121.200	10388.000	121.200	10788.000	124.200	10794.000	124.200	10951.000
GR	146.100	10987.000	146.100	11000.000	.000	.000	.000	.000	.000	.000
X1	20400.000	10.000	10020.000	10987.000	200.000	200.000	200.000	1.000	.000	.000
GR	146.600	10000.000	146.600	10020.000	124.600	10066.000	124.600	10325.000	121.600	10331.000
GR	121.600	10731.000	124.600	10737.000	124.600	10938.000	146.600	10987.000	146.600	11000.000
X1	20600.000	12.000	10010.000	10965.000	200.000	200.000	200.000	1.000	.000	.000
GR	147.100	10000.000	147.100	10010.000	136.100	10043.000	136.100	10051.000	125.100	10068.000
GR	125.100	10276.000	122.100	10282.000	122.100	10682.000	125.100	10688.000	125.100	10932.000
GR	147.100	10965.000	147.100	10979.000	.000	.000	.000	.000	.000	.000
X1	20782.000	14.000	10012.000	10988.000	178.000	178.000	178.000	1.000	.000	.000
GR	147.670	10000.000	147.670	10012.000	136.660	10045.000	136.660	10053.000	125.560	10069.000
GR	125.560	10230.000	122.500	10236.000	122.500	10636.000	125.560	10642.000	125.560	10931.000
GR	136.660	10947.000	136.660	10955.000	147.670	10988.000	147.670	10999.000	.000	.000

Grade Control Str. No. 3

X1	20800.000	14.000	10012.000	10988.000	18.000	18.000	18.000	1.000	.000	.000
GR	147.700	10000.000	147.700	10012.000	136.690	10045.000	136.690	10053.000	125.590	10069.000
GR	125.590	10230.000	122.530	10236.000	122.530	10636.000	125.590	10642.000	125.590	10931.000
GR	136.690	10947.000	136.690	10955.000	147.700	10988.000	147.700	10999.000	.000	.000
X1	21000.000	10.000	10032.000	10964.000	200.000	200.000	200.000	1.000	.000	.000
GR	148.200	10000.000	148.200	10032.000	125.940	10069.000	125.940	10190.000	122.860	10196.000
GR	122.860	10596.000	125.940	10602.000	125.940	10931.000	148.200	10964.000	148.200	10999.000
X1	21200.000	10.000	10035.000	10965.000	200.000	200.000	200.000	1.000	.000	.000
GR	148.900	10000.000	148.900	10035.000	126.200	10069.000	126.200	10160.000	123.190	10166.000
GR	123.190	10566.000	126.200	10572.000	126.200	10931.000	148.900	10965.000	148.900	11000.000
X1	21400.000	14.000	10011.000	10991.000	200.000	200.000	200.000	1.000	.000	.000
GR	149.600	10000.000	149.600	10011.000	137.860	10045.000	137.860	10053.000	126.560	10070.000
GR	126.560	10133.000	123.520	10139.000	123.520	10539.000	126.560	10545.000	126.560	10932.000
GR	137.860	10949.000	137.860	10957.000	149.600	10991.000	149.600	11002.000	.000	.000
X1	21600.000	10.000	10013.000	11006.000	200.000	200.000	200.000	1.000	.000	.000
GR	150.000	10000.000	150.000	10013.000	126.910	10078.000	126.910	10119.000	123.850	10125.000
GR	123.850	10525.000	126.910	10531.000	126.910	10940.000	150.500	11006.000	150.500	11017.000
X1	21800.000	14.000	10011.000	10991.000	200.000	200.000	200.000	1.000	.000	.000
GR	150.500	10000.000	150.500	10011.000	138.470	10045.000	138.470	10053.000	127.170	10070.000
GR	127.170	10101.000	124.180	10107.000	124.180	10507.000	127.170	10513.000	127.170	10932.000
GR	138.470	10949.000	138.470	10957.000	150.500	10991.000	150.500	11002.000	.000	.000

X1	22000.000	14.000	10011.000	10991.000	200.000	200.000	200.000	1.000	.000	.000
GR	151.000	10000.000	151.000	10011.000	138.820	10045.000	138.820	10053.000	127.520	10070.000
GR	127.520	10104.000	124.510	10110.000	124.510	10510.000	127.520	10516.000	127.520	10932.000
GR	138.820	10949.000	138.820	10957.000	151.000	10991.000	151.000	11002.000	.000	.000
X1	22200.000	14.000	10010.000	10990.000	200.000	200.000	200.000	1.000	.000	.000
GR	151.400	10000.000	151.400	10010.000	139.080	10044.000	139.080	10052.000	127.880	10069.000
GR	127.880	10123.000	124.840	10129.000	124.840	10529.000	127.880	10535.000	127.880	10931.000
GR	139.080	10948.000	139.080	10956.000	151.400	10990.000	151.400	11000.000	.000	.000
X1	22400.000	14.000	10010.000	10990.000	200.000	200.000	200.000	1.000	.000	.000
GR	151.900	10000.000	151.900	10010.000	139.440	10044.000	139.440	10052.000	128.240	10069.000
GR	128.240	10160.000	125.180	10166.000	125.180	10566.000	128.240	10572.000	128.240	10931.000
GR	139.440	10948.000	139.440	10956.000	151.900	10990.000	151.900	11000.000	.000	.000
X1	22600.000	14.000	10010.000	10990.000	200.000	200.000	200.000	1.000	.000	.000
GR	152.300	10000.000	152.300	10010.000	139.690	10044.000	139.690	10052.000	128.490	10069.000
GR	128.490	10205.000	125.510	10211.000	125.510	10611.000	128.490	10617.000	128.490	10931.000
GR	139.690	10948.000	139.690	10956.000	152.300	10990.000	152.300	11000.000	.000	.000
X1	22800.000	14.000	10010.000	10990.000	200.000	200.000	200.000	1.000	.000	.000
GR	152.800	10000.000	152.800	10010.000	140.050	10044.000	140.050	10052.000	128.850	10069.000
GR	128.850	10260.000	125.840	10266.000	125.840	10666.000	128.850	10672.000	128.850	10931.000
GR	140.050	10948.000	140.050	10956.000	152.800	10990.000	152.800	11000.000	.000	.000
X1	23000.000	14.000	10011.000	10989.000	200.000	200.000	200.000	1.000	.000	.000
GR	153.200	10000.000	153.200	10011.000	140.300	10045.000	140.300	10053.000	129.200	10069.000
GR	129.200	10325.000	126.700	10331.000	126.700	10731.000	129.200	10737.000	129.200	10931.000
GR	140.300	10947.000	140.300	10955.000	153.200	10989.000	153.200	11000.000	.000	.000
X1	23200.000	14.000	10010.000	10990.000	200.000	200.000	200.000	1.000	.000	.000
GR	153.700	10000.000	153.700	10010.000	140.660	10044.000	140.660	10052.000	129.460	10069.000
GR	129.460	10390.000	126.500	10396.000	126.500	10796.000	129.460	10802.000	129.460	10931.000
GR	140.660	10948.000	140.660	10956.000	153.700	10990.000	153.700	11000.000	.000	.000
X1	23400.000	14.000	10011.000	10989.000	200.000	200.000	200.000	1.000	.000	.000
GR	154.100	10000.000	154.100	10011.000	140.920	10045.000	140.920	10053.000	129.820	10069.000
GR	129.820	10440.000	126.830	10446.000	126.830	10846.000	129.820	10852.000	129.820	10931.000
GR	140.920	10947.000	140.920	10955.000	154.100	10989.000	154.100	11000.000	.000	.000
X1	23600.000	14.000	10011.000	10989.000	200.000	200.000	200.000	1.000	.000	.000
GR	154.600	10000.000	154.600	10011.000	141.270	10045.000	141.270	10053.000	130.170	10069.000
GR	130.170	10480.000	127.160	10486.000	127.160	10886.000	130.170	10892.000	130.170	10931.000
GR	141.270	10947.000	141.270	10955.000	154.600	10989.000	154.600	11000.000	.000	.000
X1	23800.000	14.000	10011.000	10989.000	200.000	200.000	200.000	1.000	.000	.000
GR	155.000	10000.000	155.000	10011.000	141.530	10045.000	141.530	10053.000	130.530	10069.000
GR	130.530	10500.000	127.460	10506.000	127.460	10906.000	130.530	10912.000	130.530	10931.000
GR	141.530	10947.000	141.530	10955.000	155.000	10989.000	155.000	11000.000	.000	.000

X1	24000.000	14.000	10011.000	10989.000	200.000	200.000	200.000	1.000	.000	.000
GR	155.500	10000.000	155.500	10011.000	141.880	10045.000	141.880	10053.000	130.400	10069.000
GR	130.400	10510.000	127.820	10516.000	127.820	10916.000	130.400	10922.000	130.400	10931.000
GR	141.880	10947.000	141.880	10955.000	155.500	10989.000	155.500	11000.000	.000	.000
X1	24200.000	14.000	10011.000	10989.000	200.000	200.000	200.000	1.000	.000	.000
GR	155.900	10000.000	155.900	10011.000	142.140	10045.000	142.140	10053.000	130.400	10069.000
GR	130.400	10507.000	128.150	10513.000	128.150	10913.000	130.400	10919.000	130.400	10931.000
GR	142.140	10947.000	142.140	10955.000	155.900	10989.000	155.900	11000.000	.000	.000
X1	24400.000	10.000	10014.000	10981.000	200.000	200.000	200.000	1.000	.000	.000
GR	156.400	10000.000	156.400	10014.000	130.400	10066.000	130.400	10487.000	128.480	10493.000
GR	128.480	10893.000	130.400	10899.000	130.400	10928.000	156.400	10981.000	156.400	10994.000
X1	24600.000	10.000	10010.000	11004.000	200.000	200.000	200.000	1.000	.000	.000
GR	156.800	10000.000	156.800	10010.000	130.400	10076.000	130.400	10465.000	128.810	10471.000
GR	128.810	10871.000	130.400	10877.000	130.400	10938.000	156.800	11004.000	156.800	11019.000
X1	24800.000	14.000	10011.000	10989.000	200.000	200.000	200.000	1.000	.000	.000
GR	157.300	10000.000	157.300	10011.000	143.110	10045.000	143.110	10053.000	130.400	10069.000
GR	130.400	10410.000	129.140	10416.000	129.140	10816.000	130.400	10822.000	130.400	10931.000
GR	143.110	10947.000	143.110	10955.000	157.300	10989.000	157.300	11000.000	.000	.000
NC	.050	.050	.035	.000	.000	.000	.000	.000	.000	.000
	GCS #4									
X1	24955.000	12.000	581.500	1500.000	155.000	155.000	155.000	1.000	.000	.000
X3	.000	.000	.000	.000	.000	.000	.000	.000	.000	.000
GR	154.750	505.000	154.600	520.000	142.100	557.500	141.860	581.500	132.400	609.880
GR	129.400	1022.000	132.400	1454.700	147.500	1500.000	147.650	1515.000	147.500	1517.000
GR	157.700	1548.000	157.850	1563.000	.000	.000	.000	.000	.000	.000
X1	25115.000	13.000	598.500	1500.000	120.000	200.000	160.000	1.000	.000	.000
GR	154.910	522.000	154.910	573.000	142.400	574.500	142.400	598.500	132.530	626.940
GR	129.610	1082.000	132.610	1454.550	147.830	1500.000	147.830	1515.000	145.830	1521.000
GR	145.830	1568.000	155.040	1594.000	155.040	1609.000	.000	.000	.000	.000
X1	25315.000	13.000	611.500	1500.000	200.000	200.000	200.000	1.000	.000	.000
GR	155.410	535.000	155.410	550.000	142.900	587.500	142.900	611.500	132.740	640.630
GR	129.820	1141.000	132.820	1454.340	148.170	1500.000	148.320	1515.000	146.170	1521.000
GR	146.170	1611.000	155.440	1639.000	155.440	1654.000	.000	.000	.000	.000
X1	25515.000	13.000	621.500	1515.000	200.000	200.000	200.000	1.000	.000	.000
GR	155.910	545.000	155.910	560.000	143.400	597.500	143.400	621.500	132.960	651.290
GR	130.030	1190.000	133.030	1413.590	148.500	1460.000	148.500	1515.000	146.500	1521.000
GR	146.500	1660.000	155.830	1686.000	155.830	1701.000	.000	.000	.000	.000
X1	25715.000	13.000	629.500	1500.000	200.000	200.000	200.000	1.000	.000	.000
GR	156.410	553.000	156.410	568.000	143.900	605.500	143.660	629.500	133.500	659.980
GR	130.240	1225.000	133.500	1454.010	148.830	1500.000	148.830	1515.000	146.830	1521.000
GR	147.730	1701.830	156.220	1730.000	156.220	1745.000	.000	.000	.000	.000

```
X1  25915.000     13.000    627.500   1500.000    200.000    200.000    200.000      1.000       .000       .000
GR    156.910    551.000    156.910    566.000    144.400    603.500    144.400    627.500    133.380    658.640
GR    130.450   1247.000    133.450   1453.860    149.170   1500.000    149.170   1515.000    147.170   1521.000
GR    148.310   1748.000    156.630   1777.000    156.630   1792.000       .000       .000       .000       .000

X1  26115.000     13.000    623.500   1500.000    200.000    200.000    200.000      1.000       .000       .000
GR    157.410    547.000    157.410    562.000    144.900    599.500    144.900    623.500    133.600    655.150
GR    130.660   1255.000    133.660   1453.650    149.500   1500.000    149.500   1515.000    147.500   1521.000
GR    148.880   1796.000    157.040   1822.000    157.040   1837.000       .000       .000       .000       .000

X1  26273.000     13.000    611.430   1500.000    115.000    200.000    158.000      1.000       .000       .000
GR    157.690    535.310    157.690    550.240    145.190    587.550    145.190    611.430    133.720    643.130
GR    130.860   1243.750    133.860   1452.090    149.830   1500.000    149.830   1507.430    147.830   1513.400
GR    149.420   1830.740    157.470   1859.660    157.470   1874.580       .000       .000       .000       .000

NC       .000       .000       .000       .300       .500       .000       .000       .000       .000       .000
          SPRR Bridge (D/S) (COE Sta. 21.659)
X1  26395.000     13.000    599.490   1420.000     85.000    160.000    122.000      1.000       .000       .000
GR    157.900    523.370    157.900    538.300    145.400    575.610    145.400    599.490    133.810    630.710
GR    131.030   1233.800    134.030   1371.790    150.100   1420.000    150.100   1515.000    148.100   1521.000
GR    149.930   1886.520    157.790   1911.320    157.790   1926.320       .000       .000       .000       .000

SB      1.480      1.560      2.670   1388.000    816.000     72.000  29800.000     10.700    131.580    131.550
X1  26413.000     13.000    598.490   1420.000     15.000     20.000     18.000      1.000       .000       .000
X2       .000       .000      1.000    161.000    165.000       .000       .000      2.000       .000       .000
GR    158.940    522.380    157.940    537.300    145.440    574.610    145.440    598.490    133.830    629.750
GR    131.050   1232.810    134.050   1371.760    150.130   1420.000    150.130   1515.000    148.130   1521.000
GR    149.960   1886.520    157.790   1911.400    157.790   1926.320       .000       .000       .000       .000

QT      5.000 215000.000 215000.000       .000       .000       .000       .000       .000       .000       .000
NC       .050       .050       .035       .100       .300       .000       .000       .000       .000       .000
X1  26737.000     13.000   9290.000  10830.000    335.000    315.000    324.000       .000       .000       .000
GR    167.000   9290.000    150.000   9370.000    145.000   9500.000    140.000   9620.000    140.000   9820.000
GR    137.700   9960.000    135.600  10120.000    135.600  10360.000    140.000  10550.000    145.000  10680.000
GR    150.000  10750.000    170.000  10830.000    175.000  10850.000       .000       .000       .000       .000
EJ       .000       .000       .000       .000       .000       .000       .000       .000       .000       .000
```

```
  SECNO    DEPTH    CWSEL    CRIWS    WSELK    EG       HV       HL       OLOSS   BANK ELEV
  Q        QLOB     QCH      QROB     ALOB     ACH      AROB     VOL      TWA   LEFT/RIGHT
  TIME     VLOB     VCH      VROB     XNL      XNCH     XNR      WTN      ELMIN      SSTA
  SLOPE    XLOBL    XLCH     XLOBR    ITRIAL   IDC      ICONT    CORAR    TOPWID     ENDST


*PROF 1

CCHV=    .100 CEHV=    .300
*SECNO 10035.000
         Begin ADOT Channelization
 10035.00    21.95   119.15      .00   119.15   121.33     2.18      .00      .00   122.00
  205000.       0.  205000.       0.       0.   17314.       0.       0.       0..   125.00
      .00      .00    11.84      .00     .050     .035     .050     .000    97.20 10026.04
  .001899       0.       0.       0.        0        0        0      .00  1062.88 11088.91


FLOW DISTRIBUTION FOR SECNO=  10035.00         CWSEL=    119.15

STA=   10026.   11105.
  PER Q=    100.0
   AREA=  17314.0
    VEL=     11.8

*SECNO 10200.000
 10200.00    21.39   119.49      .00      .00   121.64     2.14      .31      .00   123.00
  205000.       0.  205000.       0.       0.   17445.       0.      66.       4.   123.00
      .00      .00    11.75      .00     .050     .035     .050     .000    98.10 10032.79
  .001846     165.     165.     165.        2        0        0      .00  1059.42 11092.21


FLOW DISTRIBUTION FOR SECNO=  10200.00         CWSEL=    119.49

STA=   10033.   11100.
  PER Q=    100.0
   AREA=  17445.1
    VEL=     11.8

*SECNO 10400.000
 10400.00    21.79   119.89      .00      .00   122.01     2.11      .36      .00   122.00
  205000.       0.  205000.       0.       0.   17581.       0.     146.       9.   123.00
      .01      .00    11.66      .00     .050     .035     .050     .000    98.10 10039.33
  .001791     200.     200.     200.        2        0        0      .00  1056.25 11095.58


FLOW DISTRIBUTION FOR SECNO=  10400.00         CWSEL=    119.89

STA=   10039.   11103.
  PER Q=    100.0
   AREA=  17581.1
    VEL=     11.7
```

```
  SECNO    DEPTH    CWSEL    CRIWS    WSELK    EG       HV       HL       OLOSS   BANK ELEV
  Q        QLOB     QCH      QROB     ALOB     ACH      AROB     VOL      TWA   LEFT/RIGHT
  TIME     VLOB     VCH      VROB     XNL      XNCH     XNR      WTN      ELMIN      SSTA
  SLOPE    XLOBL    XLCH     XLOBR    ITRIAL   IDC      ICONT    CORAR    TOPWID     ENDST


*SECNO 10600.000
 10600.00    21.77   120.27      .00      .00   122.36     2.10      .36      .00   123.00
  205000.       0.  205000.       0.       0.   17635.       0.     227.      14.    124.00
      .01      .00    11.62      .00     .050     .035     .050     .000    98.50 10031.55
  .001775     200.     200.     200.        0        0        0      .00  1058.06 11089.61


FLOW DISTRIBUTION FOR SECNO=  10600.00          CWSEL=    120.27

STA=   10032.   11100.
  PER Q=    100.0
   AREA=  17635.3
    VEL=     11.6

*SECNO 10800.000
 10800.00    21.60   120.60      .00      .00   122.74     2.14      .36      .01   123.00
  205000.       0.  205000.       0.       0.   17447.       0.     308.      19.    124.00
      .02      .00    11.75      .00     .050     .035     .050     .000    99.00 10034.94
  .001840     200.     200.     200.        2        0        0      .00  1057.05 11091.99


FLOW DISTRIBUTION FOR SECNO=  10800.00          CWSEL=    120.60

STA=   10035.   11100.
  PER Q=    100.0
   AREA=  17447.2
    VEL=     11.7

*SECNO 11000.000
 11000.00    21.57   121.07      .00      .00   123.10     2.03      .35      .01   123.00
  205000.       0.  205000.       0.       0.   17928.       0.     389.      23.    124.00
      .02      .00    11.43      .00     .050     .035     .050     .000    99.50 10026.60
  .001692     200.     200.     200.        2        0        0      .00  1062.37 11088.97


FLOW DISTRIBUTION FOR SECNO=  11000.00          CWSEL=    121.07

STA=   10027.   11095.
  PER Q=    100.0
   AREA=  17927.5
    VEL=     11.4
```

```
  SECNO    DEPTH    CWSEL    CRIWS    WSELK    EG       HV       HL       OLOSS   BANK ELEV
  Q        QLOB     QCH      QROB     ALOB     ACH      AROB     VOL      TWA   LEFT/RIGHT
  TIME     VLOB     VCH      VROB     XNL      XNCH     XNR      WTN      ELMIN      SSTA
  SLOPE    XLOBL    XLCH     XLOBR    ITRIAL   IDC      ICONT    CORAR    TOPWID     ENDST


*SECNO 11200.000
 11200.00    21.47   121.47      .00      .00   123.44     1.97      .33      .01   123.00
  205000.       0.  205000.       0.       0.   18213.       0.     472.      28.    126.00
      .03      .00    11.26      .00     .050     .035     .050     .000   100.00 10033.06
 .001595     200.     200.     200.        2        0        0      .00  1056.21 11089.27


FLOW DISTRIBUTION FOR SECNO=  11200.00         CWSEL=    121.47

STA=   10033.   11100.
  PER Q=    100.0
   AREA=  18212.7
    VEL=     11.3

*SECNO 11400.000
 11400.00    21.48   121.88      .00      .00   123.76     1.88      .31      .01   124.00
  205000.       0.  205000.       0.       0.   18637.       0.     556.      33.    126.00
      .03      .00    11.00      .00     .050     .035     .050     .000   100.40 10034.25
 .001494     200.     200.     200.        2        0        0      .00  1066.61 11100.86


FLOW DISTRIBUTION FOR SECNO=  11400.00         CWSEL=    121.88

STA=   10034.   11113.
  PER Q=    100.0
   AREA=  18637.1
    VEL=     11.0

*SECNO 11600.000
 11600.00    21.42   122.32      .00      .00   124.05     1.73      .28      .02   124.00
  205000.       0.  205000.       0.       0.   19434.       0.     644.      38.    127.50
      .04      .00    10.55      .00     .050     .035     .050     .000   100.90 10033.67
 .001312     200.     200.     200.        2        0        0      .00  1072.80 11106.47


FLOW DISTRIBUTION FOR SECNO=  11600.00         CWSEL=    122.32

STA=   10034.   11122.
  PER Q=    100.0
   AREA=  19433.7
    VEL=     10.5
```

```
  SECNO    DEPTH    CWSEL    CRIWS    WSELK    EG       HV       HL       OLOSS    BANK ELEV
  Q        QLOB     QCH      QROB     ALOB     ACH      AROB     VOL      TWA    LEFT/RIGHT
  TIME     VLOB     VCH      VROB     XNL      XNCH     XNR      WTN      ELMIN       SSTA
  SLOPE    XLOBL    XLCH     XLOBR    ITRIAL   IDC      ICONT    CORAR    TOPWID      ENDST


*SECNO 11800.000
 11800.00    21.13   122.53      .00      .00   124.35     1.82      .27      .03   125.00
  205000.       0.  205000.       0.       0.   18920.       0.     732.      43.   127.90
      .04      .00    10.83      .00     .050     .035     .050     .000   101.40 10041.59
  .001433     200.     200.     200.        2        0        0      .00  1072.30 11113.89


FLOW DISTRIBUTION FOR SECNO=  11800.00          CWSEL=    122.53

STA=   10042.   11130.
  PER Q=    100.0
   AREA=  18920.2
    VEL=     10.8

*SECNO 12000.000
 12000.00    21.02   122.82      .00      .00   124.64     1.82      .29      .00   127.00
  205000.       0.  205000.       0.       0.   18944.       0.     819.      48.   128.40
      .05      .00    10.82      .00     .050     .035     .050     .000   101.80 10043.62
  .001423     200.     200.     200.        1        0        0      .00  1069.61 11113.23


FLOW DISTRIBUTION FOR SECNO=  12000.00          CWSEL=    122.82

STA=   10044.   11130.
  PER Q=    100.0
   AREA=  18943.9
    VEL=     10.8

*SECNO 12100.000
 12100.00    20.83   122.93      .00      .00   124.80     1.87      .15      .02   127.00
  205000.       0.  205000.       0.       0.   18679.       0.     862.      50.   128.60
      .05      .00    10.97      .00     .050     .035     .050     .000   102.10 10043.63
  .001481     100.     100.     100.        2        0        0      .00  1064.35 11107.99


FLOW DISTRIBUTION FOR SECNO=  12100.00          CWSEL=    122.93

STA=   10044.   11125.
  PER Q=    100.0
   AREA=  18679.2
    VEL=     11.0
```

```
  SECNO     DEPTH     CWSEL     CRIWS     WSELK     EG        HV        HL        OLOSS    BANK ELEV
  Q         QLOB      QCH       QROB      ALOB      ACH       AROB      VOL       TWA    LEFT/RIGHT
  TIME      VLOB      VCH       VROB      XNL       XNCH      XNR       WTN       ELMIN       SSTA
  SLOPE     XLOBL     XLCH      XLOBR     ITRIAL    IDC       ICONT     CORAR     TOPWID      ENDST


*SECNO 12200.000
 12200.00    20.77   123.07       .00       .00    124.95      1.88       .15       .00    126.00
  205000.       0.  205000.        0.        0.    18632.        0.      905.       53.    128.80
      .05      .00    11.00       .00      .050      .035      .050      .000    102.30 10041.14
  .001493     100.     100.      100.         0         0         0       .00   1064.68 11105.82


FLOW DISTRIBUTION FOR SECNO=  12200.00          CWSEL=    123.07

STA=   10041.   11123.
  PER Q=    100.0
   AREA=  18632.4
    VEL=     11.0

*SECNO 12400.000
 12400.00    20.48   123.28       .00       .00    125.31      2.03       .31       .04    129.00
  205000.       0.  205000.        0.        0.    17941.        0.      989.       58.    129.20
      .06      .00    11.43       .00      .050      .035      .050      .000    102.80 10059.08
  .001626     200.     200.      200.         2         0         0       .00   1032.16 11091.24


FLOW DISTRIBUTION FOR SECNO=  12400.00          CWSEL=    123.28

STA=   10059.   11109.
  PER Q=    100.0
   AREA=  17941.2
    VEL=     11.4

*SECNO 12600.000
 12600.00    20.43   123.63       .00       .00    125.63      2.00       .32       .00    130.00
  205000.       0.  205000.        0.        0.    18063.        0.     1071.       62.    129.60
      .06      .00    11.35       .00      .050      .035      .050      .000    103.20 10058.15
  .001571     200.     200.      200.         2         0         0       .00   1020.94 11079.09


FLOW DISTRIBUTION FOR SECNO=  12600.00          CWSEL=    123.63

STA=   10058.   11097.
  PER Q=    100.0
   AREA=  18063.1
    VEL=     11.3
```

```
  SECNO    DEPTH    CWSEL    CRIWS    WSELK    EG       HV       HL       OLOSS   BANK ELEV
  Q        QLOB     QCH      QROB     ALOB     ACH      AROB     VOL      TWA   LEFT/RIGHT
  TIME     VLOB     VCH      VROB     XNL      XNCH     XNR      WTN      ELMIN      SSTA
  SLOPE    XLOBL    XLCH     XLOBR    ITRIAL   IDC      ICONT    CORAR    TOPWID     ENDST


*SECNO 12800.000
 12800.00    20.22   123.92      .00      .00   125.96     2.03      .32      .01   131.00
  205000.       0.  205000.       0.       0.   17913.       0.    1154.      67.    130.00
      .07      .00    11.44      .00     .050     .035     .050     .000   103.70 10086.51
  .001624     200.     200.     200.        2        0        0      .00  1025.10 11111.61


FLOW DISTRIBUTION FOR SECNO=  12800.00          CWSEL=    123.92

STA=   10087.   11130.
  PER Q=    100.0
   AREA=  17912.6
    VEL=     11.4

*SECNO 13000.000
 13000.00    20.04   124.24      .00      .00   126.29     2.06      .33      .01   131.00
  205000.       0.  205000.       0.       0.   17816.       0.    1236.      72.    130.50
      .07      .00    11.51      .00     .050     .035     .050     .000   104.20 10075.31
  .001645     200.     200.     200.        0        0        0      .00  1020.92 11096.23


FLOW DISTRIBUTION FOR SECNO=  13000.00          CWSEL=    124.24

STA=   10075.   11115.
  PER Q=    100.0
   AREA=  17816.4
    VEL=     11.5

*SECNO 13200.000
 13200.00    19.84   124.54      .00      .00   126.64     2.10      .34      .01   130.00
  205000.       0.  205000.       0.       0.   17608.       0.    1317.      76.    130.90
      .08      .00    11.64      .00     .050     .035     .050     .000   104.70 10052.98
  .001708     200.     200.     200.        2        0        0      .00  1019.93 11072.91


FLOW DISTRIBUTION FOR SECNO=  13200.00          CWSEL=    124.54

STA=   10053.   11092.
  PER Q=    100.0
   AREA=  17607.8
    VEL=     11.6
```

```
  SECNO    DEPTH    CWSEL    CRIWS    WSELK    EG       HV       HL       OLOSS   BANK ELEV
  Q        QLOB     QCH      QROB     ALOB     ACH      AROB     VOL      TWA   LEFT/RIGHT
  TIME     VLOB     VCH      VROB     XNL      XNCH     XNR      WTN      ELMIN      SSTA
  SLOPE    XLOBL    XLCH     XLOBR    ITRIAL   IDC      ICONT    CORAR    TOPWID     ENDST


*SECNO 13400.000
 13400.00    19.77   124.87      .00      .00   126.99     2.12      .34      .00   130.00
  205000.       0.  205000.       0.       0.   17543.       0.    1398.      81.    131.30
      .08      .00    11.69      .00     .050     .035     .050     .000   105.10 10052.69
  .001729     200.     200.     200.        0        0        0      .00  1020.03 11072.72


FLOW DISTRIBUTION FOR SECNO=  13400.00         CWSEL=    124.87

STA=   10053.   11092.
  PER Q=    100.0
   AREA=  17542.7
    VEL=    11.7

*SECNO 13600.000
 13600.00    19.57   125.17      .00      .00   127.37     2.21      .36      .03   130.00
  205000.       0.  205000.       0.       0.   17202.       0.    1478.      86.    131.80
      .09      .00    11.92      .00     .050     .035     .050     .000   105.60 10055.14
  .001827     200.     200.     200.        2        0        0      .00  1011.96 11067.10


FLOW DISTRIBUTION FOR SECNO=  13600.00         CWSEL=    125.17

STA=   10055.   11087.
  PER Q=    100.0
   AREA=  17202.1
    VEL=    11.9

*SECNO 13800.000
 13800.00    19.43   125.53      .00      .00   127.74     2.22      .37      .00   130.00
  205000.       0.  205000.       0.       0.   17162.       0.    1557.      90.    132.20
      .09      .00    11.94      .00     .050     .035     .050     .000   106.10 10045.18
  .001850     200.     200.     200.        0        0        0      .00  1015.79 11060.96


FLOW DISTRIBUTION FOR SECNO=  13800.00         CWSEL=    125.53

STA=   10045.   11081.
  PER Q=    100.0
   AREA=  17162.3
    VEL=    11.9
```

```
  SECNO    DEPTH    CWSEL    CRIWS    WSELK    EG       HV       HL       OLOSS   BANK ELEV
  Q        QLOB     QCH      QROB     ALOB     ACH      AROB     VOL      TWA   LEFT/RIGHT
  TIME     VLOB     VCH      VROB     XNL      XNCH     XNR      WTN      ELMIN      SSTA
  SLOPE    XLOBL    XLCH     XLOBR    ITRIAL   IDC      ICONT    CORAR    TOPWID     ENDST


*SECNO 14000.000
 14000.00    19.44   125.94      .00      .00   128.11     2.17      .37      .00   130.00
  205000.       0.  205000.       0.       0.   17345.       0.    1636.     95.    132.60
      .10      .00    11.82      .00     .050     .035     .050     .000   106.50 10040.73
  .001806     200.     200.     200.        2        0        0      .00  1024.30 11065.03


FLOW DISTRIBUTION FOR SECNO=  14000.00          CWSEL=    125.94

STA=   10041.   11085.
  PER Q=    100.0
   AREA=  17345.4
    VEL=     11.8

*SECNO 14200.000
 14200.00    19.34   126.34      .00      .00   128.48     2.14      .36      .00   133.00
  205000.       0.  205000.       0.       0.   17464.       0.    1716.    100.    133.00
      .10      .00    11.74      .00     .050     .035     .050     .000   107.00 10030.99
  .001805     200.     200.     200.        2        0        0      .00  1042.02 11073.01


FLOW DISTRIBUTION FOR SECNO=  14200.00          CWSEL=    126.34

STA=   10031.   11093.
  PER Q=    100.0
   AREA=  17464.5
    VEL=     11.7

CCHV=    .300 CEHV=    .500
*SECNO 14400.000
         Grade Control Str. No. 2
 14400.00    19.18   126.68      .00      .00   128.87     2.19      .36      .03   133.50
  205000.       0.  205000.       0.       0.   17253.       0.    1796.    105.    133.50
      .11      .00    11.88      .00     .050     .035     .050     .000   107.50 10045.39
  .001845     200.     200.     200.        2        0        0      .00  1027.14 11072.53


FLOW DISTRIBUTION FOR SECNO=  14400.00          CWSEL=    126.68

STA=   10045.   11093.
  PER Q=    100.0
   AREA=  17252.7
    VEL=     11.9
```

```
  SECNO    DEPTH    CWSEL    CRIWS    WSELK    EG       HV       HL       OLOSS   BANK ELEV
  Q        QLOB     QCH      QROB     ALOB     ACH      AROB     VOL      TWA   LEFT/RIGHT
  TIME     VLOB     VCH      VROB     XNL      XNCH     XNR      WTN      ELMIN      SSTA
  SLOPE    XLOBL    XLCH     XLOBR    ITRIAL   IDC      ICONT    CORAR    TOPWID     ENDST


CCHV=    .300 CEHV=    .500
*SECNO 14665.000

3470 ENCROACHMENT STATIONS=   10036.0   11068.0  TYPE=     1  TARGET=    1032.000
 ELENCL=    147.00  ELENCR=    147.00
         SR 153 Bridge (D/S limit)
 14665.00    18.93   127.13      .00      .00   129.40     2.27      .50      .04   134.10
  205000.       0.  205000.       0.       0.   16956.       0.    1900.     111.    147.00
      .11      .00    12.09      .00     .050     .035     .050     .000   108.20 10046.34
  .001917     265.     265.     265.        2        0        0      .00  1011.32 11057.66


FLOW DISTRIBUTION FOR SECNO=  14665.00         CWSEL=    127.13

STA=   10046.   11068.
  PER Q=    100.0
   AREA=  16956.3
    VEL=     12.1

*SECNO 14785.000
         SR 153 Bridge (U/S limit)
 14785.00    19.01   127.41      .00      .00   129.64     2.24      .23      .01   134.30
  205000.       0.  205000.       0.       0.   17077.       0.    1946.     114.    134.30
      .11      .00    12.00      .00     .050     .035     .050     .000   108.40 10031.68
  .001907     120.     120.     120.        2        0        0      .00  1026.08 11057.76


FLOW DISTRIBUTION FOR SECNO=  14785.00         CWSEL=    127.41

STA=   10032.   11068.
  PER Q=    100.0
   AREA=  17077.2
    VEL=     12.0

CCHV=    .100 CEHV=    .300
*SECNO 15000.000
 15000.00    18.91   127.81      .00      .00   130.06     2.25      .42      .01   134.70
  205000.       0.  205000.       0.       0.   17013.       0.    2031.     119.    134.70
      .12      .00    12.05      .00     .050     .035     .050     .000   108.90 10031.65
  .001961     215.     215.     215.        0        0        0      .00  1038.70 11070.35
```

```
   SECNO    DEPTH    CWSEL    CRIWS    WSELK    EG       HV       HL       OLOSS   BANK ELEV
   Q        QLOB     QCH      QROB     ALOB     ACH      AROB     VOL      TWA   LEFT/RIGHT
   TIME     VLOB     VCH      VROB     XNL      XNCH     XNR      WTN      ELMIN      SSTA
   SLOPE    XLOBL    XLCH     XLOBR    ITRIAL   IDC      ICONT    CORAR    TOPWID     ENDST


FLOW DISTRIBUTION FOR SECNO=  15000.00         CWSEL=    127.81

STA=   10032.   11091.
  PER Q=    100.0
   AREA=  17013.4
    VEL=     12.0

CCHV=    .100 CEHV=    .300
*SECNO 15200.000
 15200.00    18.78   128.18      .00      .00   130.47     2.29      .40      .01   135.20
  205000.       0.  205000.       0.       0.   16881.       0.    2108.     123.    135.20
      .12      .00    12.14      .00     .050     .035     .050     .000   109.40 10032.03
  .002010     200.     200.     200.        1        0        0      .00  1037.94 11069.97


FLOW DISTRIBUTION FOR SECNO=  15200.00         CWSEL=    128.18

STA=   10032.   11091.
  PER Q=    100.0
   AREA=  16881.5
    VEL=     12.1

*SECNO 15400.000
 15400.00    18.78   128.58      .00      .00   130.88     2.30      .40      .00   135.60
  205000.       0.  205000.       0.       0.   16848.       0.    2186.     128.    135.60
      .13      .00    12.17      .00     .050     .035     .050     .000   109.80 10045.47
  .001992     200.     200.     200.        0        0        0      .00  1025.11 11070.58


FLOW DISTRIBUTION FOR SECNO=  15400.00         CWSEL=    128.58

STA=   10045.   11091.
  PER Q=    100.0
   AREA=  16847.5
    VEL=     12.2

CCHV=    .300 CEHV=    .500
*SECNO 15586.000

3470 ENCROACHMENT STATIONS=   10035.0   11091.0  TYPE=     1  TARGET=    1056.000
 ELENCL=    145.40  ELENCR=    145.40
         SR 143 Bridge (D/S limit)
 15586.00    18.58   128.88      .00      .00   131.35     2.47      .39      .09   136.00
  210000.       0.  210000.       0.       0.   16644.       0.    2257.     133.    145.40
      .13      .00    12.62      .00     .050     .035     .050     .000   110.30 10045.67
  .002175     186.     186.     186.        2        0        0      .00  1024.61 11070.28
```

SECNO	DEPTH	CWSEL	CRIWS	WSELK	EG	HV	HL	OLOSS	BANK ELEV
Q	QLOB	QCH	QROB	ALOB	ACH	AROB	VOL	TWA	LEFT/RIGHT
TIME	VLOB	VCH	VROB	XNL	XNCH	XNR	WTN	ELMIN	SSTA
SLOPE	XLOBL	XLCH	XLOBR	ITRIAL	IDC	ICONT	CORAR	TOPWID	ENDST

FLOW DISTRIBUTION FOR SECNO= 15586.00 CWSEL= 128.88

STA= 10046. 11091.
PER Q= 100.0
AREA= 16643.5
VEL= 12.6

SPECIAL BRIDGE

SB	XK	XKOR	COFQ	RDLEN	BWC	BWP	BAREA	SS	ELCHU	ELCHD
	1.05	1.56	2.60	200.00	963.00	48.00	26680.00	1.50	110.50	110.30

*SECNO 15710.000
CLASS A LOW FLOW

3420 BRIDGE W.S.= 128.69 BRIDGE VELOCITY=, 12.18 CALCULATED CHANNEL AREA=, 17141.

EGPRS	EGLWC	H3	QWEIR	QLOW	BAREA	TRAPEZOID AREA	ELLC	ELTRD
.00	131.76	.45	0.	210000.	26680.	25301.	137.00	145.40

SR 143 Bridge (U/S limit)

15710.00	18.73	129.33	.00	.00	131.76	2.44	.41	.00	136.20
210000.	0.	210000.	0.	0.	16769.	0.	2305.	136.	136.20
.14	.00	12.52	.00	.000	.035	.000	.000	110.60	10031.62
.002120	124.	124.	124.	0	0	0	.00	1024.03	11055.66

FLOW DISTRIBUTION FOR SECNO= 15710.00 CWSEL= 129.33

STA= 10032. 11066.
PER Q= 100.0
AREA= 16768.8
VEL= 12.5

CCHV= .100 CEHV= .300
*SECNO 16000.000

16000.00	18.64	129.94	.00	.00	132.39	2.45	.62	.00	136.90
210000.	0.	210000.	0.	0.	16735.	0.	2416.	142.	136.90
.14	.00	12.55	.00	.050	.035	.050	.000	111.30	10031.86
.002185	290.	290.	290.	0	0	0	.00	1041.72	11073.57

```
  SECNO    DEPTH    CWSEL    CRIWS    WSELK    EG       HV       HL       OLOSS   BANK ELEV
  Q        QLOB     QCH      QROB     ALOB     ACH      AROB     VOL      TWA   LEFT/RIGHT
  TIME     VLOB     VCH      VROB     XNL      XNCH     XNR      WTN      ELMIN      SSTA
  SLOPE    XLOBL    XLCH     XLOBR    ITRIAL   IDC      ICONT    CORAR    TOPWID     ENDST


FLOW DISTRIBUTION FOR SECNO=  16000.00          CWSEL=    129.94

STA=   10032.   11084.
  PER Q=    100.0
   AREA=  16735.2
    VEL=     12.5

CCHV=    .100 CEHV=    .300
*SECNO 16200.000
 16200.00    18.75   130.45      .00      .00   132.82     2.37      .43      .01   137.30
  210000.       0.  210000.       0.       0.   16985.       0.    2494.     147.    137.30
      .15      .00    12.36      .00     .035     .035     .035     .000   111.70 10038.49
  .002092     200.     200.     200.        2        0        0      .00  1046.74 11085.23


FLOW DISTRIBUTION FOR SECNO=  16200.00          CWSEL=    130.45

STA=   10038.   11096.
  PER Q=    100.0
   AREA=  16985.1
    VEL=     12.4

*SECNO 16400.000
 16400.00    18.63   130.83      .00      .00   133.27     2.44      .43      .02   137.70
  210000.       0.  210000.       0.       0.   16758.       0.    2571.     152.    138.30
      .15      .00    12.53      .00     .035     .035     .035     .000   112.20 10031.61
  .002176     200.     200.     200.        2        0        0      .00  1040.64 11072.25


FLOW DISTRIBUTION FOR SECNO=  16400.00          CWSEL=    130.83

STA=   10032.   11083.
  PER Q=    100.0
   AREA=  16757.5
    VEL=     12.5

*SECNO 16600.000
 16600.00    18.56   131.26      .00      .00   133.71     2.45      .44      .00   138.10
  210000.       0.  210000.       0.       0.   16723.       0.    2648.     157.    138.70
      .16      .00    12.56      .00     .035     .035     .035     .000   112.70 10030.91
  .002197     200.     200.     200.        0        0        0      .00  1043.39 11074.29
```

```
  SECNO     DEPTH     CWSEL     CRIWS     WSELK     EG        HV        HL        OLOSS    BANK ELEV
  Q         QLOB      QCH       QROB      ALOB      ACH       AROB      VOL       TWA    LEFT/RIGHT
  TIME      VLOB      VCH       VROB      XNL       XNCH      XNR       WTN       ELMIN       SSTA
  SLOPE     XLOBL     XLCH      XLOBR     ITRIAL    IDC       ICONT     CORAR     TOPWID      ENDST


FLOW DISTRIBUTION FOR SECNO=  16600.00         CWSEL=    131.26

STA=   10031.   11085.
  PER Q=    100.0
   AREA=  16723.4
    VEL=     12.6

*SECNO 16800.000
 16800.00    18.50   131.70      .00      .00   134.15     2.46      .44      .00   138.60
  210000.       0.  210000.       0.       0.   16693.       0.    2725.     162.    139.20
      .16      .00    12.58      .00     .035     .035     .035     .000   113.20 10030.71
  .002216     200.     200.     200.        0        0        0      .00  1045.50 11076.21


FLOW DISTRIBUTION FOR SECNO=  16800.00         CWSEL=    131.70

STA=   10031.   11087.
  PER Q=    100.0
   AREA=  16693.4
    VEL=     12.6

*SECNO 17000.000
 17000.00    18.56   132.16      .00      .00   134.59     2.43      .44      .00   139.00
  210000.       0.  210000.       0.       0.   16785.       0.    2802.     166.    139.60
      .16      .00    12.51      .00     .035     .035     .035     .000   113.60 10031.51
  .002180     200.     200.     200.        2        0        0      .00  1046.80 11078.30


FLOW DISTRIBUTION FOR SECNO=  17000.00         CWSEL=    132.16

STA=   10032.   11089.
  PER Q=    100.0
   AREA=  16784.7
    VEL=     12.5

*SECNO 17200.000
 17200.00    18.49   132.59      .00      .00   135.04     2.45      .44      .01   139.40
  210000.       0.  210000.       0.       0.   16721.       0.    2879.     171.    140.00
      .17      .00    12.56      .00     .035     .035     .035     .000   114.10 10031.41
  .002208     200.     200.     200.        1        0        0      .00  1046.95 11078.35
```

```
  SECNO    DEPTH    CWSEL    CRIWS    WSELK    EG       HV       HL       OLOSS   BANK ELEV
  Q        QLOB     QCH      QROB     ALOB     ACH      AROB     VOL      TWA   LEFT/RIGHT
  TIME     VLOB     VCH      VROB     XNL      XNCH     XNR      WTN      ELMIN      SSTA
  SLOPE    XLOBL    XLCH     XLOBR    ITRIAL   IDC      ICONT    CORAR    TOPWID     ENDST


FLOW DISTRIBUTION FOR SECNO=  17200.00          CWSEL=    132.59

STA=   10031.   11089.
  PER Q=    100.0
   AREA=  16721.0
    VEL=     12.6

*SECNO 17400.000
 17400.00    18.42   133.02      .00      .00   135.49     2.47      .44      .01   139.80
  210000.       0.  210000.       0.       0.   16647.       0.    2955.     176.    140.40
      .17      .00    12.61      .00     .035     .035     .035     .000   114.60 10030.33
  .002215     200.     200.     200.        1        0        0      .00  1040.85 11071.18


FLOW DISTRIBUTION FOR SECNO=  17400.00          CWSEL=    133.02

STA=   10030.   11088.
  PER Q=    100.0
   AREA=  16646.9
    VEL=     12.6

*SECNO 17600.000
 17600.00    18.44   133.44      .00      .00   135.94     2.50      .44      .01   140.30
  210000.       0.  210000.       0.       0.   16539.       0.    3031.     181.    140.90
      .18      .00    12.70      .00     .035     .035     .035     .000   115.00 10031.58
  .002228     200.     200.     200.        2        0        0      .00  1027.01 11058.60


FLOW DISTRIBUTION FOR SECNO=  17600.00          CWSEL=    133.44

STA=   10032.   11070.
  PER Q=    100.0
   AREA=  16539.3
    VEL=     12.7

*SECNO 17800.000
 17800.00    18.37   133.87      .00      .00   136.40     2.53      .45      .01   140.70
  210000.       0.  210000.       0.       0.   16448.       0.    3107.     185.    141.30
      .18      .00    12.77      .00     .035     .035     .035     .000   115.50 10031.47
  .002262     200.     200.     200.        1        0        0      .00  1024.46 11055.93
```

```
  SECNO    DEPTH    CWSEL    CRIWS    WSELK    EG       HV       HL       OLOSS   BANK ELEV
  Q        QLOB     QCH      QROB     ALOB     ACH      AROB     VOL      TWA   LEFT/RIGHT
  TIME     VLOB     VCH      VROB     XNL      XNCH     XNR      WTN      ELMIN      SSTA
  SLOPE    XLOBL    XLCH     XLOBR    ITRIAL   IDC      ICONT    CORAR    TOPWID     ENDST


FLOW DISTRIBUTION FOR SECNO=  17800.00         CWSEL=    133.87

STA=   10031.   11067.
  PER Q=    100.0
   AREA=  16448.5
    VEL=     12.8

*SECNO 18000.000
 18000.00    18.30   134.30      .00      .00   136.87     2.56      .46      .01   141.00
  210000.       0.  210000.       0.       0.   16349.       0.    3182.     190.    141.70
      .19      .00    12.84      .00     .035     .035     .035     .000   116.00 10031.25
  .002302     200.     200.     200.        1        0        0      .00  1022.68 11053.93


FLOW DISTRIBUTION FOR SECNO=  18000.00         CWSEL=    134.30

STA=   10031.   11065.
  PER Q=    100.0
   AREA=  16349.0
    VEL=     12.8

*SECNO 18200.000
 18200.00    18.24   134.74      .00      .00   137.34     2.60      .46      .01   141.50
  210000.       0.  210000.       0.       0.   16231.       0.    3257.     195.    142.10
      .19      .00    12.94      .00     .035     .035     .035     .000   116.50 10031.25
  .002346     200.     200.     200.        1        0        0      .00  1018.70 11049.94


FLOW DISTRIBUTION FOR SECNO=  18200.00         CWSEL=    134.74

STA=   10031.   11061.
  PER Q=    100.0
   AREA=  16230.7
    VEL=     12.9

*SECNO 18400.000
 18400.00    18.39   135.29      .00      .00   137.81     2.51      .46      .01   142.00
  210000.       0.  210000.       0.       0.   16503.       0.    3332.     200.    142.60
      .19      .00    12.73      .00     .035     .035     .035     .000   116.90 10033.81
  .002247     200.     200.     200.        2        0        0      .00  1030.74 11064.55
```

```
  SECNO    DEPTH    CWSEL    CRIWS    WSELK    EG       HV       HL       OLOSS   BANK ELEV
  Q        QLOB     QCH      QROB     ALOB     ACH      AROB     VOL      TWA   LEFT/RIGHT
  TIME     VLOB     VCH      VROB     XNL      XNCH     XNR      WTN      ELMIN      SSTA
  SLOPE    XLOBL    XLCH     XLOBR    ITRIAL   IDC      ICONT    CORAR    TOPWID     ENDST


FLOW DISTRIBUTION FOR SECNO=  18400.00          CWSEL=    135.29

STA=   10034.   11080.
  PER Q=    100.0
   AREA=  16502.9
    VEL=     12.7

*SECNO 18600.000
 18600.00    18.28   135.68      .00      .00   138.30     2.63      .46      .03   142.40
  210000.       0.  210000.       0.       0.   16150.       0.    3407.     204.   143.00
      .20      .00    13.00      .00     .035     .035     .035     .000   117.40 10032.98
  .002344     200.     200.     200.        2        0        0      .00  1006.00 11038.98


FLOW DISTRIBUTION FOR SECNO=  18600.00          CWSEL=    135.68

STA=   10033.   11050.
  PER Q=    100.0
   AREA=  16150.1
    VEL=     13.0

*SECNO 18800.000
 18800.00    18.21   136.11      .00      .00   138.80     2.69      .48      .02   142.80
  210000.       0.  210000.       0.       0.   15964.       0.    3481.     209.   143.40
      .20      .00    13.15      .00     .035     .035     .035     .000   117.90 10031.07
  .002432     200.     200.     200.        2        0        0      .00  1003.92 11034.98


FLOW DISTRIBUTION FOR SECNO=  18800.00          CWSEL=    136.11

STA=   10031.   11046.
  PER Q=    100.0
   AREA=  15964.3
    VEL=     13.2

*SECNO 19000.000
 19000.00    18.29   136.59      .00      .00   139.29     2.70      .49      .00   143.20
  210000.       0.  210000.       0.       0.   15935.       0.    3554.     213.   143.80
      .21      .00    13.18      .00     .035     .035     .035     .000   118.30 10030.84
  .002425     200.     200.     200.        0        0        0      .00   997.26 11028.10
```

```
  SECNO    DEPTH    CWSEL    CRIWS    WSELK    EG       HV       HL       OLOSS   BANK ELEV
  Q        QLOB     QCH      QROB     ALOB     ACH      AROB     VOL      TWA   LEFT/RIGHT
  TIME     VLOB     VCH      VROB     XNL      XNCH     XNR      WTN      ELMIN      SSTA
  SLOPE    XLOBL    XLCH     XLOBR    ITRIAL   IDC      ICONT    CORAR    TOPWID     ENDST


FLOW DISTRIBUTION FOR SECNO=  19000.00         CWSEL=    136.59

STA=   10031.   11039.
  PER Q=    100.0
   AREA=  15935.1
    VEL=     13.2

*SECNO 19200.000
 19200.00    18.24   137.04      .00      .00   139.79     2.75      .49      .02   143.70
  210000.       0.  210000.       0.       0.   15784.       0.    3627.     218.    144.30
      .21      .00    13.30      .00     .035     .035     .035     .000   118.80 10030.97
  .002478     200.     200.     200.        2        0        0      .00   989.39 11020.36


FLOW DISTRIBUTION FOR SECNO=  19200.00         CWSEL=    137.04

STA=   10031.   11031.
  PER Q=    100.0
   AREA=  15784.1
    VEL=     13.3

*SECNO 19400.000
 19400.00    18.20   137.50      .00      .00   140.31     2.81      .50      .02   144.10
  210000.       0.  210000.       0.       0.   15617.       0.    3699.     222.    144.70
      .22      .00    13.45      .00     .035     .035     .035     .000   119.30 10030.79
  .002539     200.     200.     200.        2        0        0      .00   981.29 11012.08


FLOW DISTRIBUTION FOR SECNO=  19400.00         CWSEL=    137.50

STA=   10031.   11023.
  PER Q=    100.0
   AREA=  15616.8
    VEL=     13.4

*SECNO 19600.000
 19600.00    18.18   137.98      .00      .00   140.84     2.87      .51      .02   144.50
  210000.       0.  210000.       0.       0.   15457.       0.    3771.     227.    145.10
      .22      .00    13.59      .00     .035     .035     .035     .000   119.80 10030.57
  .002597     200.     200.     200.        2        0        0      .00   972.57 11003.14
```

```
  SECNO     DEPTH     CWSEL     CRIWS     WSELK     EG        HV        HL        OLOSS    BANK ELEV
  Q         QLOB      QCH       QROB      ALOB      ACH       AROB      VOL       TWA    LEFT/RIGHT
  TIME      VLOB      VCH       VROB      XNL       XNCH      XNR       WTN       ELMIN       SSTA
  SLOPE     XLOBL     XLCH      XLOBR     ITRIAL    IDC       ICONT     CORAR     TOPWID      ENDST


FLOW DISTRIBUTION FOR SECNO=  19600.00          CWSEL=    137.98

STA=   10031.   11014.
  PER Q=    100.0
   AREA=  15457.3
    VEL=     13.6

*SECNO 19800.000
 19800.00    18.29   138.49      .00      .00   141.36     2.87      .52      .00   145.00
  210000.       0.  210000.       0.       0.   15436.       0.    3841.     231.    145.60
      .22      .00    13.60      .00     .035     .035     .035     .000   120.20 10030.53
  .002579     200.     200.     200.        0        0        0      .00   963.99 10994.53


FLOW DISTRIBUTION FOR SECNO=  19800.00          CWSEL=    138.49

STA=   10031.   11005.
  PER Q=    100.0
   AREA=  15436.4
    VEL=     13.6

*SECNO 20000.000
 20000.00    18.26   138.96      .00      .00   141.91     2.94      .52      .02   145.60
  210000.       0.  210000.       0.       0.   15253.       0.    3912.     236.    145.60
      .23      .00    13.77      .00     .035     .035     .035     .000   120.70 10029.91
  .002647     200.     200.     200.        2        0        0      .00   954.08 10984.00


FLOW DISTRIBUTION FOR SECNO=  20000.00          CWSEL=    138.96

STA=   10030.   10994.
  PER Q=    100.0
   AREA=  15252.7
    VEL=     13.8

*SECNO 20200.000
 20200.00    18.25   139.45      .00      .00   142.46     3.00      .53      .02   146.10
  210000.       0.  210000.       0.       0.   15100.       0.    3982.     240.    146.10
      .23      .00    13.91      .00     .035     .035     .035     .000   121.20 10030.94
  .002703     200.     200.     200.        2        0        0      .00   945.14 10976.08
```

```
  SECNO    DEPTH    CWSEL    CRIWS    WSELK    EG       HV       HL       OLOSS   BANK ELEV
  Q        QLOB     QCH      QROB     ALOB     ACH      AROB     VOL      TWA   LEFT/RIGHT
  TIME     VLOB     VCH      VROB     XNL      XNCH     XNR      WTN      ELMIN      SSTA
  SLOPE    XLOBL    XLCH     XLOBR    ITRIAL   IDC      ICONT    CORAR    TOPWID     ENDST


FLOW DISTRIBUTION FOR SECNO=  20200.00         CWSEL=    139.45

STA=   10031.   10987.
  PER Q=    100.0
   AREA=  15099.6
    VEL=     13.9

*SECNO 20400.000
 20400.00    18.42   140.02      .00      .00   142.99     2.97      .53      .00   146.60
  210000.       0.  210000.       0.       0.   15180.       0.    4051.     244.    146.60
      .24      .00    13.83      .00     .035     .035     .035     .000   121.60 10033.75
  .002626     200.     200.     200.        2        0        0      .00   938.60 10972.35


FLOW DISTRIBUTION FOR SECNO=  20400.00         CWSEL=    140.02

STA=   10034.   10987.
  PER Q=    100.0
   AREA=  15180.2
    VEL=     13.8

*SECNO 20600.000
 20600.00    18.39   140.49      .00      .00   143.56     3.08      .54      .03   147.10
  210000.       0.  210000.       0.       0.   14921.       0.    4120.     249.    147.10
      .24      .00    14.07      .00     .035     .035     .035     .000   122.10 10029.84
  .002736     200.     200.     200.        2        0        0      .00   925.24 10955.08


FLOW DISTRIBUTION FOR SECNO=  20600.00         CWSEL=    140.49

STA=   10030.   10965.
  PER Q=    100.0
   AREA=  14920.9
    VEL=     14.1

*SECNO 20782.000
 20782.00    18.51   141.01      .00      .00   144.05     3.04      .49      .00   147.67
  210000.       0.  210000.       0.       0.   15002.       0.    4181.     253.    147.67
      .24      .00    14.00      .00     .035     .035     .035     .000   122.50 10031.97
  .002727     178.     178.     178.        2        0        0      .00   936.07 10968.03
```

```
  SECNO    DEPTH    CWSEL    CRIWS    WSELK    EG       HV       HL       OLOSS   BANK ELEV
  Q        QLOB     QCH      QROB     ALOB     ACH      AROB     VOL      TWA   LEFT/RIGHT
  TIME     VLOB     VCH      VROB     XNL      XNCH     XNR      WTN      ELMIN      SSTA
  SLOPE    XLOBL    XLCH     XLOBR    ITRIAL   IDC      ICONT    CORAR    TOPWID     ENDST


FLOW DISTRIBUTION FOR SECNO=  20782.00          CWSEL=    141.01

STA=   10032.   10988.
  PER Q=    100.0
   AREA=  15001.9
    VEL=     14.0

*SECNO 20800.000
         Grade Control Str. No. 3
 20800.00    18.54   141.07      .00      .00   144.10     3.04      .05      .00   147.70
  210000.       0.  210000.       0.       0.   15020.       0.    4188.     253.    147.70
      .24      .00    13.98      .00     .035     .035     .035     .000   122.53 10031.91
  .002717     18.      18.      18.        0        0        0      .00   936.18 10968.09


FLOW DISTRIBUTION FOR SECNO=  20800.00          CWSEL=    141.07

STA=   10032.   10988.
  PER Q=    100.0
   AREA=  15019.9
    VEL=     14.0

*SECNO 21000.000
 21000.00    18.81   141.67      .00      .00   144.63     2.97      .52      .01   148.20
  210000.       0.  210000.       0.       0.   15195.       0.    4257.     257.    148.20
      .25      .00    13.82      .00     .035     .035     .035     .000   122.86 10042.86
  .002526    200.     200.     200.        2        0        0      .00   911.45 10954.31


FLOW DISTRIBUTION FOR SECNO=  21000.00          CWSEL=    141.67

STA=   10043.   10964.
  PER Q=    100.0
   AREA=  15195.0
    VEL=     13.8

*SECNO 21200.000
 21200.00    19.08   142.27      .00      .00   145.13     2.87      .49      .01   148.90
  210000.       0.  210000.       0.       0.   15458.       0.    4327.     261.    148.90
      .25      .00    13.59      .00     .035     .035     .035     .000   123.19 10044.94
  .002383    200.     200.     200.        2        0        0      .00   910.13 10955.06
```

```
  SECNO    DEPTH    CWSEL    CRIWS    WSELK    EG       HV       HL       OLOSS   BANK ELEV
  Q        QLOB     QCH      QROB     ALOB     ACH      AROB     VOL      TWA   LEFT/RIGHT
  TIME     VLOB     VCH      VROB     XNL      XNCH     XNR      WTN      ELMIN      SSTA
  SLOPE    XLOBL    XLCH     XLOBR    ITRIAL   IDC      ICONT    CORAR    TOPWID     ENDST


FLOW DISTRIBUTION FOR SECNO=  21200.00         CWSEL=    142.27

STA=   10045.   10965.
  PER Q=    100.0
   AREA=  15458.1
    VEL=     13.6

*SECNO 21400.000
 21400.00    19.36   142.88      .00      .00   145.61     2.74      .47      .01   149.60
  210000.       0.  210000.       0.       0.   15814.       0.    4399.     266.    149.60
      .26      .00    13.28      .00     .035     .035     .035     .000   123.52 10030.47
  .002304     200.     200.     200.        2        0        0      .00   941.05 10971.53


FLOW DISTRIBUTION FOR SECNO=  21400.00         CWSEL=    142.88

STA=   10030.   10991.
  PER Q=    100.0
   AREA=  15814.2
    VEL=     13.3

*SECNO 21600.000
 21600.00    19.65   143.50      .00      .00   146.07     2.57      .44      .02   150.00
  210000.       0.  210000.       0.       0.   16314.       0.    4473.     270.    150.50
      .26      .00    12.87      .00     .035     .035     .035     .000   123.85 10031.30
  .002110     200.     200.     200.        2        0        0      .00   955.11 10986.41


FLOW DISTRIBUTION FOR SECNO=  21600.00         CWSEL=    143.50

STA=   10031.   11006.
  PER Q=    100.0
   AREA=  16313.8
    VEL=     12.9

*SECNO 21800.000
 21800.00    19.71   143.89      .00      .00   146.51     2.62      .43      .01   150.50
  210000.       0.  210000.       0.       0.   16175.       0.    4547.     274.    150.50
      .26      .00    12.98      .00     .035     .035     .035     .000   124.18 10029.67
  .002143     200.     200.     200.        2        0        0      .00   942.65 10972.33
```

```
  SECNO    DEPTH    CWSEL    CRIWS    WSELK    EG       HV       HL       OLOSS   BANK ELEV
  Q        QLOB     QCH      QROB     ALOB     ACH      AROB     VOL      TWA   LEFT/RIGHT
  TIME     VLOB     VCH      VROB     XNL      XNCH     XNR      WTN      ELMIN      SSTA
  SLOPE    XLOBL    XLCH     XLOBR    ITRIAL   IDC      ICONT    CORAR    TOPWID     ENDST


FLOW DISTRIBUTION FOR SECNO=  21800.00          CWSEL=    143.89

STA=   10030.   10991.
  PER Q=    100.0
   AREA=  16174.8
    VEL=     13.0

*SECNO 22000.000
 22000.00    19.85   144.36      .00      .00   146.94     2.58      .42      .00   151.00
  210000.       0.  210000.       0.       0.   16289.       0.    4622.     279.    151.00
      .27      .00    12.89      .00     .035     .035     .035     .000   124.51 10029.55
  .002094     200.     200.     200.        2        0        0      .00   942.91 10972.45


FLOW DISTRIBUTION FOR SECNO=  22000.00          CWSEL=    144.36

STA=   10030.   10991.
  PER Q=    100.0
   AREA=  16289.4
    VEL=     12.9

*SECNO 22200.000
 22200.00    19.97   144.81      .00      .00   147.35     2.55      .41      .00   151.40
  210000.       0.  210000.       0.       0.   16392.       0.    4697.     283.    151.40
      .27      .00    12.81      .00     .035     .035     .035     .000   124.84 10028.20
  .002053     200.     200.     200.        2        0        0      .00   943.61 10971.80


FLOW DISTRIBUTION FOR SECNO=  22200.00          CWSEL=    144.81

STA=   10028.   10990.
  PER Q=    100.0
   AREA=  16391.8
    VEL=     12.8

*SECNO 22400.000
 22400.00    20.06   145.24      .00      .00   147.76     2.53      .41      .00   151.90
  210000.       0.  210000.       0.       0.   16457.       0.    4772.     287.    151.90
      .28      .00    12.76      .00     .035     .035     .035     .000   125.18 10028.21
  .002026     200.     200.     200.        1        0        0      .00   943.58 10971.79
```

```
  SECNO    DEPTH    CWSEL    CRIWS    WSELK    EG       HV       HL       OLOSS   BANK ELEV
  Q        QLOB     QCH      QROB     ALOB     ACH      AROB     VOL      TWA   LEFT/RIGHT
  TIME     VLOB     VCH      VROB     XNL      XNCH     XNR      WTN      ELMIN      SSTA
  SLOPE    XLOBL    XLCH     XLOBR    ITRIAL   IDC      ICONT    CORAR    TOPWID     ENDST


FLOW DISTRIBUTION FOR SECNO=  22400.00         CWSEL=    145.24

STA=   10028.   10990.
  PER Q=    100.0
   AREA=  16456.7
    VEL=     12.8

*SECNO 22600.000
 22600.00    20.18   145.69      .00      .00   148.17     2.48      .40      .01   152.30
  210000.       0.  210000.       0.       0.   16624.       0.    4848.     292.    152.30
      .28      .00    12.63      .00     .035     .035     .035     .000   125.51 10027.82
  .001961     200.     200.     200.        2        0        0      .00   944.36 10972.18


FLOW DISTRIBUTION FOR SECNO=  22600.00         CWSEL=    145.69

STA=   10028.   10990.
  PER Q=    100.0
   AREA=  16624.1
    VEL=     12.6

*SECNO 22800.000
 22800.00    20.26   146.10      .00      .00   148.56     2.46      .39      .00   152.80
  210000.       0.  210000.       0.       0.   16672.       0.    4925.     296.    152.80
      .29      .00    12.60      .00     .035     .035     .035     .000   125.84 10027.90
  .001942     200.     200.     200.        0        0        0      .00   944.21 10972.10


FLOW DISTRIBUTION FOR SECNO=  22800.00         CWSEL=    146.10

STA=   10028.   10990.
  PER Q=    100.0
   AREA=  16671.7
    VEL=     12.6

*SECNO 23000.000
 23000.00    19.75   146.45      .00      .00   148.98     2.53      .40      .02   153.20
  210000.       0.  210000.       0.       0.   16454.       0.    5001.     300.    153.20
      .29      .00    12.76      .00     .035     .035     .035     .000   126.70 10028.80
  .002024     200.     200.     200.        2        0        0      .00   942.40 10971.20
```

```
  SECNO    DEPTH    CWSEL    CRIWS    WSELK    EG       HV       HL       OLOSS   BANK ELEV
  Q        QLOB     QCH      QROB     ALOB     ACH      AROB     VOL      TWA   LEFT/RIGHT
  TIME     VLOB     VCH      VROB     XNL      XNCH     XNR      WTN      ELMIN      SSTA
  SLOPE    XLOBL    XLCH     XLOBR    ITRIAL   IDC      ICONT    CORAR    TOPWID     ENDST


FLOW DISTRIBUTION FOR SECNO=  23000.00         CWSEL=    146.45

STA=   10029.   10989.
  PER Q=    100.0
   AREA=  16453.9
    VEL=     12.8

*SECNO 23200.000
 23200.00    20.48   146.98      .00      .00   149.38     2.39      .39      .01   153.70
  210000.       0.  210000.       0.       0.   16919.       0.    5077.     305.    153.70
      .30      .00    12.41      .00     .035     .035     .035     .000   126.50 10027.51
  .001851     200.     200.     200.        2        0        0      .00   944.98 10972.49


FLOW DISTRIBUTION FOR SECNO=  23200.00         CWSEL=    146.98

STA=   10028.   10990.
  PER Q=    100.0
   AREA=  16919.0
    VEL=     12.4

*SECNO 23400.000
 23400.00    20.53   147.36      .00      .00   149.75     2.39      .37      .00   154.10
  210000.       0.  210000.       0.       0.   16933.       0.    5155.     309.    154.10
      .30      .00    12.40      .00     .035     .035     .035     .000   126.83 10028.37
  .001843     200.     200.     200.        1        0        0      .00   943.26 10971.63


FLOW DISTRIBUTION FOR SECNO=  23400.00         CWSEL=    147.36

STA=   10028.   10989.
  PER Q=    100.0
   AREA=  16932.6
    VEL=     12.4

*SECNO 23600.000
 23600.00    20.57   147.73      .00      .00   150.11     2.38      .37      .00   154.60
  210000.       0.  210000.       0.       0.   16950.       0.    5233.     313.    154.60
      .30      .00    12.39      .00     .035     .035     .035     .000   127.16 10028.53
  .001836     200.     200.     200.        0        0        0      .00   942.94 10971.47
```

```
  SECNO    DEPTH    CWSEL    CRIWS    WSELK    EG       HV       HL       OLOSS   BANK ELEV
  Q        QLOB     QCH      QROB     ALOB     ACH      AROB     VOL      TWA   LEFT/RIGHT
  TIME     VLOB     VCH      VROB     XNL      XNCH     XNR      WTN      ELMIN      SSTA
  SLOPE    XLOBL    XLCH     XLOBR    ITRIAL   IDC      ICONT    CORAR    TOPWID     ENDST

FLOW DISTRIBUTION FOR SECNO=  23600.00         CWSEL=    147.73

STA=   10029.   10989.
  PER Q=    100.0
   AREA=  16950.4
    VEL=     12.4

*SECNO 23800.000
 23800.00    20.65   148.11      .00      .00   150.48     2.37      .37      .00   155.00
  210000.       0.  210000.       0.       0.   16996.       0.    5311.     318.    155.00
      .31      .00    12.36      .00     .035     .035     .035     .000   127.46 10028.41
  .001820     200.     200.     200.        1        0        0      .00   943.19 10971.59


FLOW DISTRIBUTION FOR SECNO=  23800.00         CWSEL=    148.11

STA=   10028.   10989.
  PER Q=    100.0
   AREA=  16996.3
    VEL=     12.4

*SECNO 24000.000
 24000.00    20.74   148.56      .00      .00   150.84     2.28      .35      .01   155.50
  210000.       0.  210000.       0.       0.   17317.       0.    5390.     322.    155.50
      .31      .00    12.13      .00     .035     .035     .035     .000   127.82 10028.33
  .001711     200.     200.     200.        2        0        0      .00   943.35 10971.67


FLOW DISTRIBUTION FOR SECNO=  24000.00         CWSEL=    148.56

STA=   10028.   10989.
  PER Q=    100.0
   AREA=  17316.7
    VEL=     12.1

*SECNO 24200.000
 24200.00    20.81   148.96      .00      .00   151.18     2.23      .33      .01   155.90
  210000.       0.  210000.       0.       0.   17541.       0.    5470.     326.    155.90
      .32      .00    11.97      .00     .035     .035     .035     .000   128.15 10028.15
  .001640     200.     200.     200.        2        0        0      .00   943.70 10971.85
```

```
  SECNO    DEPTH    CWSEL    CRIWS    WSELK    EG       HV       HL       OLOSS   BANK ELEV
  Q        QLOB     QCH      QROB     ALOB     ACH      AROB     VOL      TWA   LEFT/RIGHT
  TIME     VLOB     VCH      VROB     XNL      XNCH     XNR      WTN      ELMIN      SSTA
  SLOPE    XLOBL    XLCH     XLOBR    ITRIAL   IDC      ICONT    CORAR    TOPWID     ENDST


FLOW DISTRIBUTION FOR SECNO=  24200.00          CWSEL=    148.96

STA=   10028.   10989.
  PER Q=    100.0
   AREA=  17540.7
    VEL=     12.0

*SECNO 24400.000
 24400.00    20.88   149.36      .00      .00   151.51     2.15      .32      .01   156.40
  210000.       0.  210000.       0.       0.   17848.       0.    5551.     331.    156.40
      .32      .00    11.77      .00     .035     .035     .035     .000   128.48 10028.08
  .001533     200.     200.     200.        2        0        0      .00   938.56 10966.65


FLOW DISTRIBUTION FOR SECNO=  24400.00          CWSEL=    149.36

STA=   10028.   10981.
  PER Q=    100.0
   AREA=  17847.8
    VEL=     11.8

*SECNO 24600.000
 24600.00    20.96   149.77      .00      .00   151.82     2.05      .30      .01   156.80
  210000.       0.  210000.       0.       0.   18278.       0.    5634.     335.    156.80
      .33      .00    11.49      .00     .035     .035     .035     .000   128.81 10027.58
  .001454     200.     200.     200.        2        0        0      .00   958.84 10986.42


FLOW DISTRIBUTION FOR SECNO=  24600.00          CWSEL=    149.77

STA=   10028.   11004.
  PER Q=    100.0
   AREA=  18278.0
    VEL=     11.5

*SECNO 24800.000
 24800.00    20.89   150.03      .00      .00   152.12     2.09      .29      .01   157.30
  210000.       0.  210000.       0.       0.   18083.       0.    5717.     339.    157.30
      .33      .00    11.61      .00     .035     .035     .035     .000   129.14 10028.42
  .001482     200.     200.     200.        2        0        0      .00   943.16 10971.58
```

```
  SECNO    DEPTH    CWSEL    CRIWS    WSELK    EG       HV       HL       OLOSS   BANK ELEV
  Q        QLOB     QCH      QROB     ALOB     ACH      AROB     VOL      TWA   LEFT/RIGHT
  TIME     VLOB     VCH      VROB     XNL      XNCH     XNR      WTN      ELMIN      SSTA
  SLOPE    XLOBL    XLCH     XLOBR    ITRIAL   IDC      ICONT    CORAR    TOPWID     ENDST


FLOW DISTRIBUTION FOR SECNO=  24800.00         CWSEL=    150.03

STA=   10028.   10989.
  PER Q=    100.0
   AREA=  18082.6
    VEL=     11.6

*SECNO 24955.000
         GCS #4
 24955.00    20.73   150.13      .00      .00   152.43     2.31      .25      .06   141.86
  210000.    1256.  208630.     114.     292.   17074.      54.    5780.     343.    147.50
     .34     4.30    12.22     2.11     .050     .035     .050     .000   129.40   533.42
  .001692     155.     155.     155.        2        0        0      .00   991.57  1524.98


FLOW DISTRIBUTION FOR SECNO=  24955.00         CWSEL=    150.13

STA=     533.     558.     582.    1500.    1515.    1525.
  PER Q=       .1       .5     99.3       .0       .0
   AREA=     96.7    195.5  17073.5     38.3     15.6
    VEL=      3.0      4.9     12.2      2.3      1.7

*SECNO 25115.000
 25115.00    20.75   150.36      .00      .00   152.73     2.37      .27      .02   142.40
  210000.     947.  208126.     927.     195.   16773.     301.    5844.     347.    147.83
     .34     4.86    12.41     3.08     .050     .035     .050     .000   129.61   573.55
  .001743     120.     160.     200.        2        0        0      .00  1007.23  1580.77


FLOW DISTRIBUTION FOR SECNO=  25115.00         CWSEL=    150.36

STA=     574.     599.    1500.    1515.    1521.    1568.    1581.
  PER Q=       .5     99.1       .0       .0       .3       .0
   AREA=    194.7  16772.9     37.9     21.2    212.7     28.9
    VEL=      4.9     12.4      2.3      2.8      3.4      2.1

*SECNO 25315.000
 25315.00    20.88   150.70      .00      .00   153.08     2.38      .35      .00   142.90
  210000.    1184.  207227.    1588.     278.   16630.     496.    5924.     351.    148.17
     .34     4.26    12.46     3.20     .050     .035     .050     .000   129.82   564.12
  .001744     200.     200.     200.        0        0        0      .00  1060.56  1624.68
```

```
  SECNO    DEPTH    CWSEL    CRIWS    WSELK    EG       HV       HL       OLOSS   BANK ELEV
  Q        QLOB     QCH      QROB     ALOB     ACH      AROB     VOL      TWA   LEFT/RIGHT
  TIME     VLOB     VCH      VROB     XNL      XNCH     XNR      WTN      ELMIN      SSTA
  SLOPE    XLOBL    XLCH     XLOBR    ITRIAL   IDC      ICONT    CORAR    TOPWID     ENDST


FLOW DISTRIBUTION FOR SECNO=  25315.00         CWSEL=    150.70

STA=     564.     588.     612.    1500.    1515.    1521.    1611.    1625.
  PER Q=      .1       .4     98.7       .0       .0       .7       .0
   AREA=    91.2    187.2  16629.6     36.8     20.7    407.6     31.0
    VEL=     3.0      4.9     12.5      2.3      2.7      3.4      2.1

*SECNO 25515.000
 25515.00    20.88   150.91      .00      .00   153.53     2.62      .38      .07   143.40
  210000.    1204.  206439.    2356.     265.   15777.     661.    6002.     356.   148.50
      .35     4.55    13.09     3.57     .050     .035     .050     .000   130.03   574.98
  .002079     200.     200.     200.        2        0        0      .00  1097.31  1672.30


FLOW DISTRIBUTION FOR SECNO=  25515.00         CWSEL=    150.91

STA=     575.     598.     622.    1515.    1521.    1660.    1672.
  PER Q=      .1       .4     98.3       .0      1.1       .0
   AREA=    84.6    180.3  15776.6     20.5    613.3     27.1
    VEL=     3.2      5.2     13.1      3.0      3.6      2.2

*SECNO 25715.000
 25715.00    21.31   151.55      .00      .00   153.93     2.38      .38      .02   143.66
  210000.    1158.  206128.    2714.     274.   16499.     859.    6081.     361.   148.83
      .35     4.22    12.49     3.16     .050     .035     .050     .000   130.24   582.57
  .001724     200.     200.     200.        2        0        0      .00  1131.93  1714.50


FLOW DISTRIBUTION FOR SECNO=  25715.00         CWSEL=    151.55

STA=     583.     606.     630.    1500.    1515.    1521.    1702.    1715.
  PER Q=      .1       .4     98.2       .0       .0      1.2       .0
   AREA=    87.7    186.5  16498.8     40.8     22.3    772.0     24.2
    VEL=     2.9      4.8     12.5      2.4      2.9      3.2      1.8

*SECNO 25915.000
 25915.00    21.56   152.01      .00      .00   154.27     2.26      .33      .01   144.40
  210000.    1083.  205676.    3242.     270.   16877.    1059.    6163.     367.   149.17
      .36     4.02    12.19     3.06     .050     .035     .050     .000   130.45   580.68
  .001597     200.     200.     200.        2        0        0      .00  1180.23  1760.91
```

```
  SECNO    DEPTH    CWSEL    CRIWS    WSELK    EG       HV       HL       OLOSS   BANK ELEV
  Q        QLOB     QCH      QROB     ALOB     ACH      AROB     VOL      TWA   LEFT/RIGHT
  TIME     VLOB     VCH      VROB     XNL      XNCH     XNR      WTN      ELMIN      SSTA
  SLOPE    XLOBL    XLCH     XLOBR    ITRIAL   IDC      ICONT    CORAR    TOPWID     ENDST


FLOW DISTRIBUTION FOR SECNO=  25915.00         CWSEL=    152.01

STA=     581.     604.     628.    1500.    1515.    1521.    1748.    1761.
  PER Q=      .1       .4     97.9       .0       .0      1.4       .0
   AREA=    86.9    182.7  16877.2     42.6     23.1    969.9     23.9
    VEL=     2.8      4.6     12.2      2.4      2.8      3.1      1.7

*SECNO 26115.000
 26115.00    21.75   152.41      .00      .00   154.59     2.19      .31      .01   144.90
  210000.    1032.  205249.    3719.     265.   17102.    1246.    6248.     372.    149.50
      .36     3.90    12.00     2.99     .050     .035     .050     .000   130.66   577.00
  .001532     200.     200.     200.        2        0        0      .00  1230.23  1807.23


FLOW DISTRIBUTION FOR SECNO=  26115.00         CWSEL=    152.41

STA=     577.     600.     624.    1500.    1515.    1521.    1796.    1807.
  PER Q=      .1       .4     97.7       .0       .0      1.7      -.0
   AREA=    84.4    180.1  17101.9     43.6     23.4   1159.2     19.8
    VEL=     2.7      4.5     12.0      2.4      2.8      3.0      1.6

*SECNO 26273.000
 26273.00    21.89   152.75      .00      .00   154.84     2.09      .24      .01   145.19
  210000.    1012.  205034.    3953.     266.   17483.    1375.    6317.     377.    149.83
      .37     3.81    11.73     2.88     .050     .035     .050     .000   130.86   564.98
  .001446     115.     158.     200.        2        0        0      .00  1277.73  1842.71


FLOW DISTRIBUTION FOR SECNO=  26273.00         CWSEL=    152.75

STA=     565.     588.     611.    1500.    1507.    1513.    1831.    1843.
  PER Q=      .1       .4     97.6       .0       .0      1.8       .0
   AREA=    85.3    180.6  17482.5     21.7     23.4   1309.7     19.9
    VEL=     2.6      4.4     11.7      2.3      2.7      2.9      1.5

CCHV=    .300 CEHV=    .500
*SECNO 26395.000
         SPRR Bridge (D/S) (COE Sta. 21.659)
 26395.00    21.73   152.76      .00      .00   155.22     2.47      .19      .19   145.40
  210000.    1054.  204177.    4769.     256.   15982.    1655.    6370.     381.    150.10
      .37     4.11    12.78     2.88     .050     .035     .050     .000   131.03   553.65
  .001741      85.     122.     160.        2        0        0      .00  1341.79  1895.44
```

```
  SECNO    DEPTH    CWSEL    CRIWS    WSELK    EG       HV       HL       OLOSS   BANK ELEV
  Q        QLOB     QCH      QROB     ALOB     ACH      AROB     VOL      TWA   LEFT/RIGHT
  TIME     VLOB     VCH      VROB     XNL      XNCH     XNR      WTN      ELMIN      SSTA
  SLOPE    XLOBL    XLCH     XLOBR    ITRIAL   IDC      ICONT    CORAR    TOPWID     ENDST


FLOW DISTRIBUTION FOR SECNO=  26395.00          CWSEL=    152.76

STA=     554.     576.     599.    1420.    1515.    1521.    1887.    1895.
  PER Q=      .1       .4     97.2       .3       .0      1.9       .0
   AREA=    80.8    175.7  15981.8    252.4     21.9   1367.6     12.6
    VEL=     2.9      4.7     12.8      2.4      2.8      3.0      1.5


SPECIAL BRIDGE

SB  XK        XKOR      COFQ      RDLEN     BWC       BWP       BAREA     SS        ELCHU     ELCHD
     1.48      1.56      2.67   1388.00    816.00     72.00  29800.00     10.70    131.58    131.55

*SECNO 26413.000
CLASS A LOW FLOW

3420 BRIDGE W.S.=    152.49 BRIDGE VELOCITY=,     10.37      CALCULATED CHANNEL AREA=,    20237.

 EGPRS      EGLWC      H3       QWEIR      QLOW      BAREA   TRAPEZOID      ELLC      ELTRD
                                                              AREA
       .00    155.96     1.04        0.   210000.    29800.    31150.      161.00    165.00


 26413.00    22.74   153.79      .00      .00   155.96     2.16      .73      .00   145.44
  210000.    1219.  202202.    6579.     304.   16835.    2134.    6378.     382.    150.13
      .37     4.02    12.01     3.08     .050     .035     .050     .000   131.05   549.68
  .001438     15.      18.      20.        0        0        0      .00  1349.02  1898.70


FLOW DISTRIBUTION FOR SECNO=  26413.00          CWSEL=    153.79

STA=     550.     575.     598.    1420.    1515.    1521.    1887.    1899.
  PER Q=      .1       .4     96.3       .4       .0      2.6       .0
   AREA=   104.1    199.5  16835.5    347.9     28.0   1735.3     23.3
    VEL=     2.8      4.6     12.0      2.7      3.0      3.2      1.7

CCHV=    .100 CEHV=    .300
*SECNO 26737.000
 26737.00    19.22   154.82      .00      .00   156.51     1.69      .51      .05   167.00
  215000.       0.  215000.       0.       0.   20603.       0.    6526.     392.    170.00
      .38      .00    10.44      .00     .050     .035     .050     .000   135.60  9347.30
  .001713     335.     324.     315.        2        0        0      .00  1421.99 10769.29
```

SECNO	DEPTH	CWSEL	CRIWS	WSELK	EG	HV	HL	OLOSS	BANK ELEV
Q	QLOB	QCH	QROB	ALOB	ACH	AROB	VOL	TWA	LEFT/RIGHT
TIME	VLOB	VCH	VROB	XNL	XNCH	XNR	WTN	ELMIN	SSTA
SLOPE	XLOBL	XLCH	XLOBR	ITRIAL	IDC	ICONT	CORAR	TOPWID	ENDST

FLOW DISTRIBUTION FOR SECNO= 26737.00 CWSEL= 154.82

STA= 9347. 10830.
PER Q= 100.0
AREA= 20603.4
VEL= 10.4

THIS RUN EXECUTED 03-10-92

```
**************************************************
  HEC2 RELEASE DATED NOV 76 UPDATED MAY  1984
  ERROR CORR -  01,02,03,04,05,06
  MODIFICATION -  50,51,52,53,54,55,56
  IBM-PC-XT VERSION AUGUST 1985
**************************************************
```

NOTE- ASTERISK (*) AT LEFT OF CROSS-SECTION NUMBER INDICATES MESSAGE IN SUMMARY OF ERRORS LIST

100 Year Floodplain with

SUMMARY PRINTOUT

SECNO	ELMIN	XLCH	Q	CWSEL	EG	AREA	TOPWID	10K*S
10035.000	97.20	.00	205000.00	119.15	121.33	17314.01	1062.88	18.99
10200.000	98.10	165.00	205000.00	119.49	121.64	17445.05	1059.42	18.46
10400.000	98.10	200.00	205000.00	119.89	122.01	17581.09	1056.25	17.91
10600.000	98.50	200.00	205000.00	120.27	122.36	17635.34	1058.06	17.75
10800.000	99.00	200.00	205000.00	120.60	122.74	17447.15	1057.05	18.40
11000.000	99.50	200.00	205000.00	121.07	123.10	17927.51	1062.37	16.92
11200.000	100.00	200.00	205000.00	121.47	123.44	18212.69	1056.21	15.95
11400.000	100.40	200.00	205000.00	121.88	123.76	18637.09	1066.61	14.94
11600.000	100.90	200.00	205000.00	122.32	124.05	19433.69	1072.80	13.12
11800.000	101.40	200.00	205000.00	122.53	124.35	18920.24	1072.30	14.33
12000.000	101.80	200.00	205000.00	122.82	124.64	18943.85	1069.61	14.23
12100.000	102.10	100.00	205000.00	122.93	124.80	18679.20	1064.35	14.81
12200.000	102.30	100.00	205000.00	123.07	124.95	18632.40	1064.68	14.93
12400.000	102.80	200.00	205000.00	123.28	125.31	17941.23	1032.16	16.26
12600.000	103.20	200.00	205000.00	123.63	125.63	18063.14	1020.94	15.71
12800.000	103.70	200.00	205000.00	123.92	125.96	17912.60	1025.10	16.24
13000.000	104.20	200.00	205000.00	124.24	126.29	17816.38	1020.92	16.45

SECNO	ELMIN	XLCH	Q	CWSEL	EG	AREA	TOPWID	10K*S
13200.000	104.70	200.00	205000.00	124.54	126.64	17607.76	1019.93	17.08
13400.000	105.10	200.00	205000.00	124.87	126.99	17542.72	1020.03	17.29
13600.000	105.60	200.00	205000.00	125.17	127.37	17202.11	1011.96	18.27
13800.000	106.10	200.00	205000.00	125.53	127.74	17162.28	1015.79	18.50
14000.000	106.50	200.00	205000.00	125.94	128.11	17345.37	1024.30	18.06
14200.000	107.00	200.00	205000.00	126.34	128.48	17464.47	1042.02	18.05
14400.000	107.50	200.00	205000.00	126.68	128.87	17252.69	1027.14	18.45
14665.000	108.20	265.00	205000.00	127.13	129.40	16956.32	1011.32	19.17
14785.000	108.40	120.00	205000.00	127.41	129.64	17077.15	1026.08	19.07
15000.000	108.90	215.00	205000.00	127.81	130.06	17013.39	1038.70	19.61
15200.000	109.40	200.00	205000.00	128.18	130.47	16881.46	1037.94	20.10
15400.000	109.80	200.00	205000.00	128.58	130.88	16847.52	1025.11	19.92
15586.000	110.30	186.00	210000.00	128.88	131.35	16643.55	1024.61	21.75
15710.000	110.60	124.00	210000.00	129.33	131.76	16768.83	1024.03	21.20
16000.000	111.30	290.00	210000.00	129.94	132.39	16735.23	1041.72	21.85
16200.000	111.70	200.00	210000.00	130.45	132.82	16985.12	1046.74	20.92
16400.000	112.20	200.00	210000.00	130.83	133.27	16757.54	1040.64	21.76
16600.000	112.70	200.00	210000.00	131.26	133.71	16723.38	1043.39	21.97
16800.000	113.20	200.00	210000.00	131.70	134.15	16693.41	1045.50	22.16
17000.000	113.60	200.00	210000.00	132.16	134.59	16784.68	1046.80	21.80
17200.000	114.10	200.00	210000.00	132.59	135.04	16721.03	1046.95	22.08
17400.000	114.60	200.00	210000.00	133.02	135.49	16646.86	1040.85	22.15
17600.000	115.00	200.00	210000.00	133.44	135.94	16539.32	1027.01	22.28
17800.000	115.50	200.00	210000.00	133.87	136.40	16448.45	1024.46	22.62
18000.000	116.00	200.00	210000.00	134.30	136.87	16349.03	1022.68	23.02
18200.000	116.50	200.00	210000.00	134.74	137.34	16230.69	1018.70	23.46

SECNO	ELMIN	XLCH	Q	CWSEL	EG	AREA	TOPWID	10K*S
18400.000	116.90	200.00	210000.00	135.29	137.81	16502.89	1030.74	22.47
18600.000	117.40	200.00	210000.00	135.68	138.30	16150.13	1006.00	23.44
18800.000	117.90	200.00	210000.00	136.11	138.80	15964.27	1003.92	24.32
19000.000	118.30	200.00	210000.00	136.59	139.29	15935.11	997.26	24.25
19200.000	118.80	200.00	210000.00	137.04	139.79	15784.13	989.39	24.78
19400.000	119.30	200.00	210000.00	137.50	140.31	15616.78	981.29	25.39
19600.000	119.80	200.00	210000.00	137.98	140.84	15457.26	972.57	25.97
19800.000	120.20	200.00	210000.00	138.49	141.36	15436.44	963.99	25.79
20000.000	120.70	200.00	210000.00	138.96	141.91	15252.74	954.08	26.47
20200.000	121.20	200.00	210000.00	139.45	142.46	15099.58	945.14	27.03
20400.000	121.60	200.00	210000.00	140.02	142.99	15180.24	938.60	26.26
20600.000	122.10	200.00	210000.00	140.49	143.56	14920.86	925.24	27.36
20782.000	122.50	178.00	210000.00	141.01	144.05	15001.94	936.07	27.27
20800.000	122.53	18.00	210000.00	141.07	144.10	15019.85	936.18	27.17
21000.000	122.86	200.00	210000.00	141.67	144.63	15195.05	911.45	25.26
21200.000	123.19	200.00	210000.00	142.27	145.13	15458.12	910.13	23.83
21400.000	123.52	200.00	210000.00	142.88	145.61	15814.21	941.05	23.04
21600.000	123.85	200.00	210000.00	143.50	146.07	16313.85	955.11	21.10
21800.000	124.18	200.00	210000.00	143.89	146.51	16174.84	942.65	21.43
22000.000	124.51	200.00	210000.00	144.36	146.94	16289.40	942.91	20.94
22200.000	124.84	200.00	210000.00	144.81	147.35	16391.80	943.61	20.53
22400.000	125.18	200.00	210000.00	145.24	147.76	16456.74	943.58	20.26
22600.000	125.51	200.00	210000.00	145.69	148.17	16624.13	944.36	19.61
22800.000	125.84	200.00	210000.00	146.10	148.56	16671.70	944.21	19.42
23000.000	126.70	200.00	210000.00	146.45	148.98	16453.87	942.40	20.24
23200.000	126.50	200.00	210000.00	146.98	149.38	16919.01	944.98	18.51

SECNO	ELMIN	XLCH	Q	CWSEL	EG	AREA	TOPWID	10K*S
23400.000	126.83	200.00	210000.00	147.36	149.75	16932.55	943.26	18.43
23600.000	127.16	200.00	210000.00	147.73	150.11	16950.44	942.94	18.36
23800.000	127.46	200.00	210000.00	148.11	150.48	16996.27	943.19	18.20
24000.000	127.82	200.00	210000.00	148.56	150.84	17316.66	943.35	17.11
24200.000	128.15	200.00	210000.00	148.96	151.18	17540.67	943.70	16.40
24400.000	128.48	200.00	210000.00	149.36	151.51	17847.83	938.56	15.33
24600.000	128.81	200.00	210000.00	149.77	151.82	18277.99	958.84	14.54
24800.000	129.14	200.00	210000.00	150.03	152.12	18082.64	943.16	14.82
24955.000	129.40	155.00	210000.00	150.13	152.43	17419.60	991.57	16.92
25115.000	129.61	160.00	210000.00	150.36	152.73	17268.23	1007.23	17.43
25315.000	129.82	200.00	210000.00	150.70	153.08	17403.96	1060.56	17.44
25515.000	130.03	200.00	210000.00	150.91	153.53	16702.37	1097.31	20.79
25715.000	130.24	200.00	210000.00	151.55	153.93	17632.33	1131.93	17.24
25915.000	130.45	200.00	210000.00	152.01	154.27	18206.28	1180.23	15.97
26115.000	130.66	200.00	210000.00	152.41	154.59	18612.37	1230.23	15.32
26273.000	130.86	158.00	210000.00	152.75	154.84	19123.19	1277.73	14.46
26395.000	131.03	122.00	210000.00	152.76	155.22	17892.79	1341.79	17.41
26413.000	131.05	18.00	210000.00	153.79	155.96	19273.53	1349.02	14.38
26737.000	135.60	324.00	215000.00	154.82	156.51	20603.36	1421.99	17.13

SUMMARY OF ERRORS AND SPECIAL NOTES

THIS RUN EXECUTED 03-10-92

```
**************************************************
  HEC2 RELEASE DATED NOV 76 UPDATED MAY  1984
  ERROR CORR -  01,02,03,04,05,06
  MODIFICATION -  50,51,52,53,54,55,56
  IBM-PC-XT VERSION AUGUST 1985
**************************************************
```

Run #3

Reach:	SPRR Bridge to Price Road Mile 21.725 to 23.667
Source:	Corps of Engineers

THIS RUN EXECUTED 03-10-92

```
**************************************************
  HEC2 RELEASE DATED NOV 76 UPDATED MAY  1984
  ERROR CORR -  01,02,03,04,05,06
  MODIFICATION -  50,51,52,53,54,55,56
  IBM-PC-XT VERSION AUGUST 1985
**************************************************


T1   SALT RIVER FLOOD INSURANCE STUDY 1983-1984
T2   CORP OF ENGINEERS DATA
T3   100-YEAR FLOODPLAIN                          File Name: SRBASE3.HC2

J1  ICHECK    INQ      NINV     IDIR     STRT     METRIC   HVINS    Q        WSEL     FQ

      0.       3.       0.       0.   .000000     .00      .0       0.  1154.820    .000

J2  NPROF    IPLOT    PRFVS    XSECV    XSECH    FN       ALLDC    IBW      CHNIM    ITRACE

    -1.000    .000   -1.000    .000     .000     .000     .000     .000     .000    15.000

J3  VARIABLE CODES FOR SUMMARY PRINTOUT

    38.000   42.000   39.000   43.000    1.000    3.000   25.000    4.000    5.000     .000


QT     2.000 215000.000 215000.000      .000      .000      .000      .000      .000      .000      .000
NC      .050      .050      .035      .100      .300      .000      .000      .000      .000      .000
ET      .000      .000     9.100      .000      .000      .000      .000      .000   9290.000  10830.000
X1    21.725    13.000  9290.000 10830.000      .000      .000      .000      .000      .000      .000
X3    10.000      .000      .000      .000      .000      .000      .000   1163.000   1163.000      .000
GR  1167.000  9290.000  1150.000  9370.000  1145.000  9500.000  1140.000  9620.000  1140.000  9820.000
GR  1137.700  9960.000  1135.600 10120.000  1135.600 10360.000  1140.000 10550.000  1145.000 10680.000
GR  1150.000 10750.000  1170.000 10830.000  1175.000 10850.000      .000      .000      .000      .000

ET      .000      .000     9.100      .000      .000      .000      .000      .000   9300.000  11090.000
X1    21.795    14.000  9300.000 11090.000   560.000   110.000   370.000      .000      .000      .000
X3    10.000      .000      .000      .000      .000      .000      .000   1169.000   1169.000      .000
GR  1174.000  9300.000  1155.000  9370.000  1150.000  9400.000  1145.000  9480.000  1140.000  9580.000
GR  1135.700  9860.000  1135.700 10300.000  1140.000 10550.000  1145.000 10650.000  1150.000 10750.000
GR  1155.000 10830.000  1160.000 10880.000  1170.000 11000.000  1175.000 11090.000      .000      .000

ET      .000      .000     9.100      .000      .000      .000      .000      .000   9300.000  11090.000
SB     1.050     1.180     2.500      .000  1460.000    63.000 44704.000      .000  1137.000  1136.800
X1    21.809      .000      .000      .000    70.000    70.000    70.000      .000      .000      .000
X2      .000      .000     1.000  1169.000  1175.000      .000      .000      .000      .000      .000
X3    10.000      .000      .000      .000      .000      .000      .000   1175.000   1175.000      .000
BT     2.000  9300.000  1175.000      .000 11090.000  1175.000      .000      .000      .000      .000

NC      .040      .040      .030      .100      .300      .000      .000      .000      .000      .000
ET      .000      .000     9.100      .000      .000      .000      .000      .000   9400.000  10910.000
```

X1	21.837	15.000	9400.000	10900.000	100.000	200.000	150.000	.000	.000	.000
X3	10.000	.000	.000	9400.000	.000	.000	.000	.000	.000	.000
GR	1165.000	8850.000	1160.000	9000.000	1155.000	9070.000	1150.000	9400.000	1145.000	9520.000
GR	1142.500	9660.000	1136.000	9810.000	1136.000	10380.000	1140.000	10530.000	1150.000	10600.000
GR	1155.000	10710.000	1155.000	10900.000	1151.000	11150.000	1160.000	11200.000	1175.000	11250.000
NC	.000	.000	.000	.100	.300	.000	.000	.000	.000	.000
ET	.000	.000	9.100	.000	.000	.000	.000	.000	9345.000	10600.000
X1	21.937	18.000	9350.000	10480.000	330.000	860.000	528.000	.000	.000	.000
X3	10.000	.000	.000	.000	.000	.000	.000	.000	.000	.000
GR	1175.000	8560.000	1170.000	8720.000	1165.000	8770.000	1160.000	8950.000	1159.500	9020.000
GR	1155.000	9040.000	1150.000	9350.000	1145.000	9570.000	1140.000	9650.000	1138.000	9670.000
GR	1138.000	9740.000	1145.000	9800.000	1138.000	9870.000	1138.000	10470.000	1155.000	10480.000
GR	1156.000	11130.000	1162.000	11160.000	1175.000	11220.000	.000	.000	.000	.000
ET	.000	.000	9.100	.000	.000	.000	.000	.000	9200.000	10545.000
X1	22.037	19.000	9210.000	10540.000	470.000	565.000	528.000	.000	.000	.000
X3	10.000	.000	.000	.000	.000	.000	.000	.000	.000	.000
GR	1175.000	8570.000	1165.000	8800.000	1155.000	9100.000	1152.000	9150.000	1155.000	9210.000
GR	1150.000	9330.000	1145.000	9460.000	1140.000	9550.000	1145.000	9720.000	1150.000	9770.000
GR	1139.000	9850.000	1139.000	10270.000	1140.000	10290.000	1140.000	10480.000	1145.000	10520.000
GR	1155.000	10540.000	1155.000	10920.000	1162.000	10930.000	1175.000	11050.000	.000	.000
ET	.000	.000	9.100	.000	.000	.000	.000	.000	9140.000	10560.000
X1	22.137	17.000	9150.000	10550.000	510.000	540.000	528.000	.000	.000	.000
X3	10.000	.000	.000	.000	.000	.000	.000	.000	.000	.000
GR	1165.000	8820.000	1161.000	9150.000	1150.000	9210.000	1145.000	9270.000	1141.000	9400.000
GR	1145.000	9520.000	1145.000	9680.000	1155.000	9730.000	1145.000	9790.000	1140.000	9830.000
GR	1140.000	10230.000	1143.000	10400.000	1145.000	10520.000	1155.000	10550.000	1155.000	11000.000
GR	1160.000	11020.000	1175.000	11150.000	.000	.000	.000	.000	.000	.000
ET	.000	.000	9.100	.000	.000	.000	.000	.000	8870.000	10600.000
X1	22.237	15.000	8880.000	10550.000	520.000	535.000	528.000	.000	.000	.000
X3	10.000	.000	.000	.000	.000	.000	.000	.000	.000	.000
GR	1165.000	8770.000	1161.000	8880.000	1150.000	8990.000	1145.000	9030.000	1145.000	9500.000
GR	1150.000	9590.000	1157.000	9630.000	1141.000	9750.000	1141.000	10350.000	1141.000	10370.000
GR	1155.000	10550.000	1150.000	10970.000	1155.000	11300.000	1160.000	11340.000	1175.000	11520.000
ET	.000	.000	9.100	.000	.000	.000	.000	.000	8940.000	10550.000
X1	22.337	18.000	8950.000	10520.000	520.000	540.000	528.000	.000	.000	.000
X3	10.000	.000	.000	.000	.000	.000	.000	.000	.000	.000
GR	1165.000	8530.000	1160.000	8790.000	1155.000	8950.000	1150.000	9020.000	1147.000	9300.000
GR	1145.000	9480.000	1150.000	9530.000	1157.000	9590.000	1150.000	9640.000	1145.000	9690.000
GR	1142.000	9720.000	1142.000	10350.000	1150.000	10410.000	1155.000	10520.000	1156.500	10890.000
GR	1157.000	11250.000	1160.000	11320.000	1175.000	11520.000	.000	.000	.000	.000
ET	.000	.000	9.100	.000	.000	.000	.000	.000	8960.000	10375.000
X1	22.437	14.000	8970.000	10370.000	550.000	500.000	528.000	.000	.000	.000
X3	10.000	.000	.000	.000	.000	.000	.000	.000	.000	.000
GR	1165.000	8290.000	1160.000	8700.000	1155.000	8970.000	1150.000	9000.000	1149.000	9370.000
GR	1150.000	9520.000	1157.000	9590.000	1145.000	9670.000	1143.000	9710.000	1143.000	10320.000
GR	1160.000	10370.000	1161.500	10630.000	1160.000	11520.000	1165.000	11670.000	.000	.000

ET	.000	4.100	9.100	8700.000	.000	.000	.000	.000	8870.000	10425.000
X1	22.537	25.000	8880.000	10420.000	540.000	510.000	528.000	.000	.000	.000
X3	10.000	.000	.000	.000	.000	.000	.000	.000	.000	.000
GR	1165.000	7050.000	1160.000	7150.000	1159.000	7380.000	1160.000	7600.000	1160.000	7900.000
GR	1159.000	8110.000	1160.000	8430.000	1161.000	8700.000	1160.000	8880.000	1155.000	9000.000
GR	1150.000	9020.000	1150.000	9270.000	1149.000	9350.000	1150.000	9430.000	1155.000	9580.000
GR	1158.000	9650.000	1150.000	9760.000	1144.000	9800.000	1144.000	10360.000	1160.000	10420.000
GR	1156.500	10800.000	1158.000	11370.000	1158.500	11930.000	1160.000	12300.000	1165.000	12350.000
NC	.000	.000	.000	.300	.500	.000	.000	.000	.000	.000
ET	.000	4.100	9.100	8980.000	.000	.000	.000	.000	8980.000	10510.000
X1	22.637	20.000	8990.000	10500.000	510.000	540.000	528.000	.000	.000	.000
X3	10.000	.000	.000	.000	.000	.000	.000	.000	.000	.000
GR	1165.000	6300.000	1161.000	6870.000	1161.500	7280.000	1160.000	8450.000	1161.500	8720.000
GR	1160.000	8850.000	1155.000	8990.000	1150.000	9100.000	1146.000	9250.000	1150.000	9340.000
GR	1150.000	9650.000	1145.000	9850.000	1145.000	10370.000	1155.000	10430.000	1158.000	10500.000
GR	1162.000	11450.000	1160.000	11620.000	1160.000	12230.000	1165.000	12480.000	1170.000	12570.000
ET	.000	.000	9.100	.000	.000	.000	.000	.000	9050.000	10480.000
X1	22.662	16.000	9050.000	10480.000	130.000	130.000	130.000	.000	.000	.000
X3	10.000	.000	.000	.000	.000	.000	.000	1165.000	1165.000	.000
GR	1165.000	6770.000	1164.000	6930.000	1163.500	7490.000	1162.500	8000.000	1160.900	8560.000
GR	1165.000	8850.000	1172.000	9050.000	1145.500	9145.000	1145.500	10398.000	1172.000	10480.000
GR	1165.000	10690.000	1160.000	10950.000	1160.000	11340.000	1162.000	11590.000	1162.000	12300.000
GR	1165.000	12640.000	.000	.000	.000	.000	.000	.000	.000	.000
ET	.000	.000	9.100	.000	.000	.000	.000	.000	9050.000	10480.000
SB	1.200	1.600	2.500	.000	1253.000	100.000	24000.000	.450	1145.500	1145.400
X1	22.681	.000	.000	.000	100.000	100.000	100.000	.000	.000	.000
X2	.000	.000	1.000	1165.000	1163.000	.000	.000	.000	.000	.000
X3	10.000	.000	.000	.000	.000	.000	.000	1160.900	1160.900	.000
BT	16.000	6770.000	1165.000	.000	6930.000	1164.000	.000	7490.000	1163.500	.000
BT	8000.000	1162.500	.000	8560.000	1160.900	.000	8850.000	1165.000	.000	9050.000
BT	1172.000	.000	9051.000	1172.000	1165.000	10480.000	1172.000	1165.000	10481.000	1172.000
BT	.000	10690.000	1165.000	.000	10950.000	1160.000	.000	11340.000	1160.000	.000
BT	11590.000	1162.000	.000	12300.000	1162.000	.000	12640.000	1165.000	.000	.000
ET	.000	.000	9.100	.000	.000	.000	.000	.000	9045.000	10660.000
X1	22.799	27.000	9050.000	10655.000	640.000	590.000	625.000	.000	.000	.000
GR	1165.000	6760.000	1161.500	7440.000	1161.500	7441.000	1161.500	7442.000	1161.500	7443.000
GR	1162.500	8755.000	1160.000	8880.000	1160.500	8930.000	1160.000	9000.000	1160.000	9050.000
GR	1155.000	9065.000	1152.500	9330.000	1150.000	9500.000	1146.000	9620.000	1146.000	10430.000
GR	1150.000	10470.000	1160.000	10500.000	1162.500	10655.000	1160.000	10900.000	1157.000	10930.000
GR	1160.000	10950.000	1163.000	11450.000	1165.000	11750.000	1168.000	12200.000	1168.000	12650.000
GR	1170.000	12690.000	1173.500	12950.000	.000	.000	.000	.000	.000	.000
NC	.050	.050	.035	.100	.300	.000	.000	.000	.000	.000
ET	.000	.000	9.100	.000	.000	.000	.000	.000	8725.000	10920.000
X1	23.000	27.000	8725.000	10920.000	1040.000	1065.000	1060.000	.000	.000	.000
X3	10.000	.000	.000	.000	.000	.000	.000	.000	.000	.000
GR	1167.000	8500.000	1167.000	8501.000	1167.000	8502.000	1167.000	8503.000	1167.000	8504.000
GR	1165.000	8725.000	1164.000	8780.000	1160.000	8850.000	1160.000	9050.000	1155.000	9060.000
GR	1150.000	9110.000	1150.000	9295.000	1150.000	9490.000	1155.000	9940.000	1150.000	10045.000

GR	1147.000	10330.000	1150.000	10355.000	1155.000	10445.000	1155.000	10765.000	1160.000	10795.000
GR	1165.000	10820.000	1167.000	10920.000	1167.000	11260.000	1165.000	11500.000	1168.000	12040.000
GR	1170.000	12350.000	1174.000	12820.000	.000	.000	.000	.000	.000	.000
ET	.000	.000	9.100	.000	.000	.000	.000	.000	9260.000	10810.000
X1	23.199	22.000	9270.000	10810.000	1040.000	1060.000	1050.000	.000	.000	.000
X3	10.000	.000	.000	.000	.000	.000	.000	.000	.000	.000
GR	1167.000	8660.000	1165.000	8810.000	1164.000	8975.000	1165.000	9040.000	1165.000	9270.000
GR	1160.000	9320.000	1155.000	9340.000	1150.000	9380.000	1150.000	9480.000	1155.000	9660.000
GR	1155.000	9965.000	1153.000	10265.000	1155.000	10580.000	1160.000	10660.000	1165.000	10690.000
GR	1170.000	10810.000	1170.000	12000.000	1173.000	12250.000	1170.000	12460.000	1170.000	12550.000
GR	1175.000	12620.000	1178.000	12705.000	.000	.000	.000	.000	.000	.000
ET	.000	.000	9.100	.000	.000	.000	.000	.000	9315.000	10775.000
X1	23.398	27.000	9315.000	10770.000	1175.000	915.000	1052.000	.000	.000	.000
X3	10.000	.000	.000	.000	.000	.000	.000	.000	.000	.000
GR	1171.000	8500.000	1170.000	8600.000	1170.000	9315.000	1165.000	9400.000	1160.000	9470.000
GR	1151.000	9610.000	1151.000	9810.000	1155.000	9925.000	1155.000	10130.000	1157.000	10290.000
GR	1155.000	10470.000	1155.000	10690.000	1160.000	10750.000	1165.000	10770.000	1165.000	10860.000
GR	1160.000	10920.000	1165.000	10955.000	1166.500	11050.000	1165.000	11130.000	1165.000	11190.000
GR	1170.000	11270.000	1173.000	11300.000	1170.000	11330.000	1171.000	11660.000	1173.000	11955.000
GR	1175.000	12235.000	1177.000	12410.000	.000	.000	.000	.000	.000	.000
ET	.000	.000	9.100	.000	.000	.000	.000	.000	8920.000	11050.000
X1	23.597	26.000	8920.000	11050.000	1047.000	1052.000	1050.000	.000	.000	.000
X3	10.000	.000	.000	.000	.000	.000	.000	.000	.000	.000
GR	1172.000	8245.000	1170.000	8580.000	1170.000	8775.000	1174.500	8920.000	1170.000	9005.000
GR	1165.000	9025.000	1165.000	9180.000	1166.000	9360.000	1165.000	9550.000	1160.000	9620.000
GR	1155.000	9640.000	1152.000	9710.000	1152.000	10135.000	1155.000	10260.000	1160.000	10390.000
GR	1162.000	10595.000	1164.500	10800.000	1165.000	10950.000	1170.000	11040.000	1173.000	11050.000
GR	1170.000	11060.000	1170.000	11450.000	1173.000	11790.000	1175.000	12050.000	1175.000	12310.000
GR	1176.000	12365.000	.000	.000	.000	.000	.000	.000	.000	.000
ET	.000	.000	9.100	.000	.000	.000	.000	.000	9320.000	10510.000
X1	23.649	8.000	9320.000	10510.000	200.000	340.000	270.000	.000	.000	.000
X3	10.000	.000	.000	.000	.000	.000	.000	1175.000	1175.000	.000
GR	1173.000	8200.000	1170.000	8640.000	1182.000	9320.000	1150.000	9410.000	1150.000	10420.000
GR	1182.000	10510.000	1170.000	11370.000	1175.000	11970.000	.000	.000	.000	.000
ET	.000	.000	9.100	.000	.000	.000	.000	.000	9320.000	10510.000
SB	1.050	1.600	2.500	.000	1044.000	90.000	25600.000	2.500	1150.100	1150.000
X1	23.658	.000	9320.000	10510.000	45.000	45.000	45.000	.000	.000	.000
X2	.000	.000	1.000	1175.000	1170.000	.000	.000	.000	.000	.000
X3	10.000	.000	.000	.000	.000	.000	.000	1182.000	1182.000	.000
BT	-7.000	8200.000	1173.000	.000	8640.000	1170.000	.000	9320.000	1182.000	.000
BT	.000	9320.000	1182.000	1175.000	10510.000	1182.000	1175.000	11370.000	1170.000	.000
BT	.000	11970.000	1175.000	.000	.000	.000	.000	.000	.000	.000
ET	.000	.000	9.100	.000	.000	.000	.000	.000	9320.000	10510.000
X1	23.667	6.000	9320.000	10510.000	45.000	45.000	45.000	.000	.000	.000
X3	10.000	.000	.000	.000	.000	.000	.000	1175.000	1175.000	.000
GR	1173.000	8200.000	1170.000	8640.000	1182.000	9320.000	1150.100	9410.000	1150.100	10420.000
GR	1182.000	10510.000	.000	.000	.000	.000	.000	.000	.000	.000
EJ	.000	.000	.000	.000	.000	.000	.000	.000	.000	.000

```
  SECNO    DEPTH    CWSEL    CRIWS    WSELK    EG       HV       HL       OLOSS   BANK ELEV
  Q        QLOB     QCH      QROB     ALOB     ACH      AROB     VOL      TWA   LEFT/RIGHT
  TIME     VLOB     VCH      VROB     XNL      XNCH     XNR      WTN      ELMIN      SSTA
  SLOPE    XLOBL    XLCH     XLOBR    ITRIAL   IDC      ICONT    CORAR    TOPWID     ENDST


*PROF 1

CCHV=    .100 CEHV=    .300
*SECNO 21.725

3470 ENCROACHMENT STATIONS=    9290.0   10830.0  TYPE=     1  TARGET=    1540.000

3495 OVERBANK AREA ASSUMED NON-EFFECTIVE,ELLEA=     1163.00 ELREA=     1163.00

    21.73    19.22  1154.82      .00      .00  1156.51     1.69      .00      .00  1167.00
  215000.       0.  215000.       0.       0.   20599.       0.       0.       0. 100000.00
      .00      .00    10.44      .00     .050     .035     .050     .000  1135.60  9347.32
  .001714       0.       0.       0.        0        0        0      .00  1421.96 10769.28


FLOW DISTRIBUTION FOR SECNO=     21.73          CWSEL=   1154.82

STA=    9347.   10830.
  PER Q=    100.0
   AREA=  20598.7
    VEL=     10.4

*SECNO 21.795

3470 ENCROACHMENT STATIONS=    9300.0   11090.0  TYPE=     1  TARGET=    1790.000

3495 OVERBANK AREA ASSUMED NON-EFFECTIVE,ELLEA=     1169.00 ELREA=     1169.00

    21.80    20.00  1155.70      .00      .00  1157.09     1.39      .55      .03  1174.00
  215000.       0.  215000.       0.       0.   22733.       0.     184.      12. 100000.00
      .01      .00     9.46      .00     .050     .035     .050     .000  1135.70  9367.42
  .001289     560.     370.     110.        2        0        0      .00  1469.59 10837.01


FLOW DISTRIBUTION FOR SECNO=     21.80          CWSEL=   1155.70

STA=    9367.   11090.
  PER Q=    100.0
   AREA=  22733.3
    VEL=      9.5
```

SECNO	DEPTH	CWSEL	CRIWS	WSELK	EG	HV	HL	OLOSS	BANK ELEV
Q	QLOB	QCH	QROB	ALOB	ACH	AROB	VOL	TWA	LEFT/RIGHT
TIME	VLOB	VCH	VROB	XNL	XNCH	XNR	WTN	ELMIN	SSTA
SLOPE	XLOBL	XLCH	XLOBR	ITRIAL	IDC	ICONT	CORAR	TOPWID	ENDST

SPECIAL BRIDGE

SB	XK	XKOR	COFQ	RDLEN	BWC	BWP	BAREA	SS	ELCHU	ELCHD
	1.05	1.18	2.50	.00	1460.00	63.00	44704.00	.00	1137.00	1136.80

*SECNO 21.809
CLASS A LOW FLOW

3420 BRIDGE W.S.= 1155.70 BRIDGE VELOCITY=, 8.19 CALCULATED CHANNEL AREA=, 26126.

EGPRS	EGLWC	H3	QWEIR	QLOW	BAREA	TRAPEZOID AREA	ELLC	ELTRD
.00	1157.21	.15	0.	215000.	44704.	44704.	1169.00	1175.00

3470 ENCROACHMENT STATIONS= 9300.0 11090.0 TYPE= 1 TARGET= 1790.000

3495 OVERBANK AREA ASSUMED NON-EFFECTIVE,ELLEA= 1175.00 ELREA= 1175.00

21.81	20.15	1155.85	.00	.00	1157.21	1.36	.12	.00	1174.00
215000.	0.	215000.	0.	0.	22952.	0.	221.	15.	100000.00
.01	.00	9.37	.00	.000	.035	.000	.000	1135.70	9366.87
.001251	70.	70.	70.	0	0	0	.00	1471.62	10838.49

FLOW DISTRIBUTION FOR SECNO= 21.81 CWSEL= 1155.85

STA= 9367. 11090.
PER Q= 100.0
AREA= 22951.5
VEL= 9.4

CCHV= .100 CEHV= .300
*SECNO 21.837

3470 ENCROACHMENT STATIONS= 9400.0 11250.0 TYPE= 1 TARGET= -9400.000

21.84	19.83	1155.83	.00	.00	1157.50	1.67	.20	.09	1150.00
215000.	0.	212896.	2104.	0.	20439.	773.	297.	20.	1155.00
.02	.00	10.42	2.72	.040	.030	.040	.000	1136.00	9400.00
.001367	100.	150.	200.	2	0	0	.00	1776.84	11176.84

```
  SECNO    DEPTH    CWSEL    CRIWS    WSELK    EG       HV       HL       OLOSS   BANK ELEV
  Q        QLOB     QCH      QROB     ALOB     ACH      AROB     VOL      TWA   LEFT/RIGHT
  TIME     VLOB     VCH      VROB     XNL      XNCH     XNR      WTN      ELMIN      SSTA
  SLOPE    XLOBL    XLCH     XLOBR    ITRIAL   IDC      ICONT    CORAR    TOPWID     ENDST


FLOW DISTRIBUTION FOR SECNO=     21.84         CWSEL=   1155.83

STA=    9400.   10900.   11150.   11177.
  PER Q=     99.0       .9       .1
   AREA=  20439.4    707.8     64.8
    VEL=     10.4      2.7      2.4

CCHV=    .100 CEHV=    .300
*SECNO 21.937

3301 HV CHANGED MORE THAN HVINS


3470 ENCROACHMENT STATIONS=    9345.0   10600.0  TYPE=     1  TARGET=    1255.000
    21.94    18.15  1156.15      .00      .00  1158.48     2.33      .78      .20  1150.00
  215000.      90.  214715.     196.      31.   17501.     127.     536.      40.   1155.00
      .03     2.93    12.27     1.54     .040     .030     .040     .000  1138.00  9345.00
  .001609     330.     528.     860.        2        0        0      .00  1255.00 10600.00


FLOW DISTRIBUTION FOR SECNO=     21.94         CWSEL=   1156.15

STA=    9345.    9350.   10480.   10600.
  PER Q=       .0     99.9       .1
   AREA=     30.6  17500.8    127.1
    VEL=      2.9     12.3      1.5

*SECNO 22.037

3470 ENCROACHMENT STATIONS=    9200.0   10545.0  TYPE=     1  TARGET=    1345.000
    22.04    18.42  1157.42      .00      .00  1159.32     1.90      .79      .04  1155.00
  215000.      60.  214916.      23.      27.   19448.      12.     761.      56.   1155.00
      .04     2.25    11.05     1.93     .040     .030     .040     .000  1139.00  9200.00
  .001398     470.     528.     565.        2        0        0      .00  1345.00 10545.00


FLOW DISTRIBUTION FOR SECNO=     22.04         CWSEL=   1157.42

STA=    9200.    9210.   10540.   10545.
  PER Q=       .0    100.0       .0
   AREA=     26.8  19447.7     12.1
    VEL=      2.3     11.1      1.9
```

```
  SECNO    DEPTH    CWSEL    CRIWS    WSELK    EG       HV       HL       OLOSS   BANK ELEV
  Q        QLOB     QCH      QROB     ALOB     ACH      AROB     VOL      TWA   LEFT/RIGHT
  TIME     VLOB     VCH      VROB     XNL      XNCH     XNR      WTN      ELMIN      SSTA
  SLOPE    XLOBL    XLCH     XLOBR    ITRIAL   IDC      ICONT    CORAR    TOPWID     ENDST


*SECNO 22.137

3470 ENCROACHMENT STATIONS=    9140.0   10560.0  TYPE=     1  TARGET=    1420.000

3495 OVERBANK AREA ASSUMED NON-EFFECTIVE,ELLEA=    1161.00 ELREA=     1155.00

    22.14    18.33  1158.33      .00      .00  1160.03     1.70      .69      .02  1161.00
  215000.       0.  214920.     80.       0.   20513.      33.    1004.      73.   1155.00
      .06      .00    10.48     2.40     .040     .030     .040     .000  1140.00  9164.58
  .001236     510.     528.     540.        2        0        0      .00  1395.42 10560.00


FLOW DISTRIBUTION FOR SECNO=     22.14          CWSEL=   1158.33

STA=    9165.   10550.   10560.
  PER Q=    100.0       .0
   AREA=  20513.0     33.3
    VEL=     10.5      2.4

*SECNO 22.237

3470 ENCROACHMENT STATIONS=    8870.0   10600.0  TYPE=     1  TARGET=    1730.000

3495 OVERBANK AREA ASSUMED NON-EFFECTIVE,ELLEA=    1161.00 ELREA=     1155.00

    22.24    18.38  1159.38      .00      .00  1160.65     1.27      .57      .04  1161.00
  215000.       0.  214292.    708.       0.   23669.     234.    1273.      91.   1155.00
      .07      .00     9.05     3.03     .040     .030     .040     .000  1141.00  8896.19
  .000964     520.     528.     535.        2        0        0      .00  1703.81 10600.00


FLOW DISTRIBUTION FOR SECNO=     22.24          CWSEL=   1159.38

STA=    8896.   10550.   10600.
  PER Q=     99.7       .3
   AREA=  23668.9    233.9
    VEL=      9.1      3.0

*SECNO 22.337

3470 ENCROACHMENT STATIONS=    8940.0   10550.0  TYPE=     1  TARGET=    1610.000
    22.34    17.76  1159.76      .00      .00  1161.32     1.56      .58      .09  1155.00
  215000.     132.  214393.    475.      46.   21347.     141.    1549.     112.   1155.00
      .09     2.86    10.04     3.37     .040     .030     .040     .000  1142.00  8940.00
  .001269     520.     528.     540.        2        0        0      .00  1610.00 10550.00
```

```
  SECNO    DEPTH    CWSEL    CRIWS    WSELK    EG       HV       HL       OLOSS   BANK ELEV
  Q        QLOB     QCH      QROB     ALOB     ACH      AROB     VOL      TWA   LEFT/RIGHT
  TIME     VLOB     VCH      VROB     XNL      XNCH     XNR      WTN      ELMIN      SSTA
  SLOPE    XLOBL    XLCH     XLOBR    ITRIAL   IDC      ICONT    CORAR    TOPWID     ENDST


FLOW DISTRIBUTION FOR SECNO=     22.34         CWSEL=   1159.76

STA=    8940.    8950.   10520.   10550.
  PER Q=       .1     99.7       .2
   AREA=     46.0  21346.7    140.8
    VEL=      2.9     10.0      3.4

*SECNO 22.437

3301 HV CHANGED MORE THAN HVINS


3470 ENCROACHMENT STATIONS=    8960.0   10375.0  TYPE=     1  TARGET=    1415.000
    22.44    17.17  1160.17      .00      .00  1162.26     2.08      .78      .16  1155.00
  215000.     178.  214821.       0.      51.   18538.       1.    1792.     130.   1160.00
      .10     3.51    11.59      .45     .040     .030     .040     .000  1143.00  8960.00
  .001754     550.     528.     500.        2        0        0      .00  1415.00 10375.00


FLOW DISTRIBUTION FOR SECNO=     22.44         CWSEL=   1160.17

STA=    8960.    8970.   10370.   10375.
  PER Q=       .1     99.9       .0
   AREA=     50.8  18538.2       .8
    VEL=      3.5     11.6       .4

*SECNO 22.537

3470 ENCROACHMENT STATIONS=    8870.0   10425.0  TYPE=     1  TARGET=    1555.000
    22.54    17.15  1161.15      .00      .00  1163.27     2.12     1.00      .01  1160.00
  215000.      19.  214972.       9.      11.   18385.       6.    2016.     148.   1160.00
      .11     1.69    11.69     1.62     .040     .030     .040     .000  1144.00  8870.00
  .002049     540.     528.     510.        2        0        0      .00  1555.00 10425.00


FLOW DISTRIBUTION FOR SECNO=     22.54         CWSEL=   1161.15

STA=    8870.    8880.   10420.   10425.
  PER Q=       .0    100.0       .0
   AREA=     11.2  18385.0      5.8
    VEL=      1.7     11.7      1.6
```

```
  SECNO    DEPTH    CWSEL    CRIWS    WSELK    EG       HV       HL       OLOSS   BANK ELEV
  Q        QLOB     QCH      QROB     ALOB     ACH      AROB     VOL      TWA   LEFT/RIGHT
  TIME     VLOB     VCH      VROB     XNL      XNCH     XNR      WTN      ELMIN      SSTA
  SLOPE    XLOBL    XLCH     XLOBR    ITRIAL   IDC      ICONT    CORAR    TOPWID     ENDST


CCHV=    .300 CEHV=    .500
*SECNO 22.637

3301 HV CHANGED MORE THAN HVINS


3470 ENCROACHMENT STATIONS=    8980.0   10510.0  TYPE=     1  TARGET=    1530.000
    22.64    17.77  1162.77      .00      .00  1164.23     1.46      .76      .20  1155.00
  215000.     246.  214628.     126.      76.   22143.      48.    2263.     167.   1158.00
      .13     3.24     9.69     2.65     .040     .030     .040     .000  1145.00  8980.00
  .001068     510.     528.     540.        2        0        0      .00  1530.00 10510.00


FLOW DISTRIBUTION FOR SECNO=     22.64          CWSEL=   1162.77

STA=    8980.    8990.   10500.   10510.
  PER Q=       .1     99.8       .1
   AREA=     76.0  22143.4     47.6
    VEL=      3.2      9.7      2.7

*SECNO 22.662

3470 ENCROACHMENT STATIONS=    9050.0   10480.0  TYPE=     1  TARGET=    1430.000

3495 OVERBANK AREA ASSUMED NON-EFFECTIVE,ELLEA=    1165.00 ELREA=     1165.00

    22.66    17.52  1163.02      .00      .00  1164.38     1.36      .12      .03  1172.00
  215000.       0.  215000.       0.       0.   22978.       0.    2330.     171. 100000.00
      .13      .00     9.36      .00     .040     .030     .040     .000  1145.50  9082.19
  .000835     130.     130.     130.        2        0        0      .00  1370.02 10452.21


FLOW DISTRIBUTION FOR SECNO=     22.66          CWSEL=   1163.02

STA=    9082.   10480.
  PER Q=    100.0
   AREA=  22978.4
    VEL=      9.4
```

```
  SECNO    DEPTH    CWSEL    CRIWS    WSELK    EG       HV       HL       OLOSS   BANK ELEV
  Q        QLOB     QCH      QROB     ALOB     ACH      AROB     VOL      TWA   LEFT/RIGHT
  TIME     VLOB     VCH      VROB     XNL      XNCH     XNR      WTN      ELMIN      SSTA
  SLOPE    XLOBL    XLCH     XLOBR    ITRIAL   IDC      ICONT    CORAR    TOPWID     ENDST


SPECIAL BRIDGE

SB  XK       XKOR     COFQ     RDLEN    BWC      BWP      BAREA    SS       ELCHU    ELCHD
    1.20     1.60     2.50      .00   1253.00   100.00  24000.00   .45   1145.50  1145.40

*SECNO 22.681
6840,FLOW IS BY WEIR AND LOW FLOW
3420 BRIDGE W.S.=   1163.24 BRIDGE VELOCITY=,      8.84      CALCULATED CHANNEL AREA=,    20599.

 EGPRS     EGLWC      H3       QWEIR     QLOW      BAREA   TRAPEZOID     ELLC     ELTRD
                                                             AREA
  1165.00  1164.46     .22    32741.  182653.    24000.   22655.    1165.00  1163.00



3470 ENCROACHMENT STATIONS=    9050.0   10480.0  TYPE=     1  TARGET=    1430.000
    22.68    17.61  1163.11     .00      .00  1164.46    1.34      .08      .00  1172.00
  215000.       0.  215000.      0.       0.   23104.      0.    2383.     174. 100000.00
     .13      .00     9.31     .00     .000     .030    .000     .000  1145.50  9081.86
  .000821     100.     100.    100.        3        0       2      .00  1370.63 10452.50


FLOW DISTRIBUTION FOR SECNO=     22.68         CWSEL=   1163.11

STA=    9082.   10480.
  PER Q=    100.0
   AREA=  23103.8
    VEL=      9.3

*SECNO 22.799

3470 ENCROACHMENT STATIONS=    9045.0   10660.0  TYPE=     1  TARGET=    1615.000
    22.80    17.66  1163.66     .00      .00  1165.11    1.45      .60      .05  1160.00
  215000.      38.  214955.      7.       18.   22275.      6.    2709.     195.   1162.50
     .15     2.07     9.65    1.22     .040     .030    .040     .000  1146.00  9045.00
  .001140     640.     625.    590.        2        0       0      .00  1615.00 10660.00


FLOW DISTRIBUTION FOR SECNO=     22.80         CWSEL=   1163.66

STA=    9045.    9050.   10655.   10660.
  PER Q=      .0    100.0       .0
   AREA=     18.3  22275.2      5.9
    VEL=      2.1      9.6      1.2
```

```
  SECNO    DEPTH    CWSEL    CRIWS    WSELK    EG       HV       HL       OLOSS   BANK ELEV
  Q        QLOB     QCH      QROB     ALOB     ACH      AROB     VOL      TWA   LEFT/RIGHT
  TIME     VLOB     VCH      VROB     XNL      XNCH     XNR      WTN      ELMIN      SSTA
  SLOPE    XLOBL    XLCH     XLOBR    ITRIAL   IDC      ICONT    CORAR    TOPWID     ENDST


CCHV=    .100 CEHV=    .300
*SECNO 23.000

3470 ENCROACHMENT STATIONS=    8725.0   10920.0  TYPE=     1  TARGET=    2195.000

3495 OVERBANK AREA ASSUMED NON-EFFECTIVE,ELLEA=     1165.00 ELREA=   100000.00

    23.00    18.38  1165.38      .00      .00  1166.52     1.14     1.38      .03  1165.00
  215000.       0.  215000.       0.       0.   25118.       0.    3286.     241. 100000.00
      .19      .00     8.56      .00     .050     .035     .050     .000  1147.00  8725.00
  .001502    1040.    1060.    1065.        2        0        0      .00  2114.37 10839.37


FLOW DISTRIBUTION FOR SECNO=     23.00          CWSEL=   1165.38

STA=    8725.   10920.
  PER Q=    100.0
   AREA=  25118.0
    VEL=      8.6

*SECNO 23.199

3301 HV CHANGED MORE THAN HVINS


3470 ENCROACHMENT STATIONS=    9260.0   10810.0  TYPE=     1  TARGET=    1550.000

3495 OVERBANK AREA ASSUMED NON-EFFECTIVE,ELLEA=     1165.00 ELREA=   100000.00

    23.20    16.72  1166.72      .00      .00  1169.06     2.34     2.18      .36  1165.00
  215000.      37.  214963.       0.      17.   17493.       0.    3799.     284. 100000.00
      .21     2.12    12.29      .00     .050     .035     .050     .000  1150.00  9260.00
  .003064    1040.    1050.    1060.        2        0        0      .00  1471.27 10731.27


FLOW DISTRIBUTION FOR SECNO=     23.20          CWSEL=   1166.72

STA=    9260.    9270.   10810.
  PER Q=       .0    100.0
   AREA=     17.2  17492.5
    VEL=      2.1     12.3
```

```
  SECNO    DEPTH    CWSEL    CRIWS    WSELK    EG       HV       HL       OLOSS   BANK ELEV
  Q        QLOB     QCH      QROB     ALOB     ACH      AROB     VOL      TWA   LEFT/RIGHT
  TIME     VLOB     VCH      VROB     XNL      XNCH     XNR      WTN      ELMIN      SSTA
  SLOPE    XLOBL    XLCH     XLOBR    ITRIAL   IDC      ICONT    CORAR    TOPWID     ENDST


*SECNO 23.398

3301 HV CHANGED MORE THAN HVINS


3470 ENCROACHMENT STATIONS=    9315.0   10775.0  TYPE=     1  TARGET=    1460.000

3495 OVERBANK AREA ASSUMED NON-EFFECTIVE,ELLEA=     1170.00 ELREA=     1165.00

   23.40    18.85  1169.85      .00      .00  1171.58     1.73     2.46      .06  1170.00
  215000.      0.  214944.      56.       0.   20339.      24.    4257.     319.   1165.00
     .24      .00    10.57     2.32     .050     .035     .050     .000  1151.00  9317.56
  .001838   1175.    1052.     915.        2        0        0      .00  1457.44 10775.00


FLOW DISTRIBUTION FOR SECNO=     23.40         CWSEL=  1169.85

STA=    9318.   10770.   10775.
  PER Q=    100.0       .0
   AREA=  20338.5     24.2
    VEL=     10.6      2.3

*SECNO 23.597

3301 HV CHANGED MORE THAN HVINS


3470 ENCROACHMENT STATIONS=    8920.0   11050.0  TYPE=     1  TARGET=    2130.000

3495 OVERBANK AREA ASSUMED NON-EFFECTIVE,ELLEA=     1174.50 ELREA=   100000.00

   23.60    20.24  1172.24      .00      .00  1173.42     1.19     1.79      .05  1174.50
  215000.      0.  215000.       0.       0.   24606.       0.    4799.     362. 100000.00
     .27      .00     8.74      .00     .050     .035     .050     .000  1152.00  8962.75
  .001578   1047.    1050.    1052.        2        0        0      .00  2084.70 11047.45


FLOW DISTRIBUTION FOR SECNO=     23.60         CWSEL=  1172.24

STA=    8963.   11050.
  PER Q=    100.0
   AREA=  24605.8
    VEL=      8.7
```

```
  SECNO    DEPTH    CWSEL    CRIWS    WSELK    EG       HV       HL       OLOSS   BANK ELEV
  Q        QLOB     QCH      QROB     ALOB     ACH      AROB     VOL      TWA   LEFT/RIGHT
  TIME     VLOB     VCH      VROB     XNL      XNCH     XNR      WTN      ELMIN      SSTA
  SLOPE    XLOBL    XLCH     XLOBR    ITRIAL   IDC      ICONT    CORAR    TOPWID     ENDST


*SECNO 23.649

3470 ENCROACHMENT STATIONS=    9320.0   10510.0  TYPE=     1  TARGET=    1190.000

3495 OVERBANK AREA ASSUMED NON-EFFECTIVE,ELLEA=    1175.00 ELREA=     1175.00

    23.65    22.49  1172.49      .00      .00  1173.72     1.23      .28      .01  1182.00
   215000.      0.  215000.       0.       0.   24136.       0.    4950.     372. 100000.00
      .28      .00     8.91      .00     .050     .035     .050     .000  1150.00  9346.75
  .000755     200.     270.     340.        2        0        0      .00  1136.50 10483.25


FLOW DISTRIBUTION FOR SECNO=     23.65          CWSEL=   1172.49

STA=    9347.   10510.
  PER Q=    100.0
   AREA=  24135.8
    VEL=      8.9


SPECIAL BRIDGE

SB  XK        XKOR      COFQ      RDLEN     BWC       BWP       BAREA     SS        ELCHU     ELCHD
     1.05      1.60      2.50       .00   1044.00     90.00  25600.00      2.50   1150.10   1150.00

*SECNO 23.658
6840,FLOW IS BY WEIR AND LOW FLOW
3420 BRIDGE W.S.=   1172.68 BRIDGE VELOCITY=,      8.99     CALCULATED CHANNEL AREA=,    22812.

 EGPRS      EGLWC      H3       QWEIR      QLOW      BAREA   TRAPEZOID      ELLC      ELTRD
                                                              AREA
   1175.00   1173.93      .19    10750.   205465.    25600.    25305.     1175.00   1170.00


3470 ENCROACHMENT STATIONS=    9320.0   10510.0  TYPE=     1  TARGET=    1190.000

3495 OVERBANK AREA ASSUMED NON-EFFECTIVE,ELLEA=    1182.00 ELREA=     1182.00

    23.66    22.73  1172.73      .00      .00  1173.93     1.20      .21      .00  1182.00
   215000.      0.  215000.       0.       0.   24412.       0.    4975.     373. 100000.00
      .28      .00     8.81      .00     .000     .035     .000     .000  1150.00  9346.07
  .000728      45.      45.      45.        2        0        2      .00  1137.86 10483.93
```

```
  SECNO    DEPTH    CWSEL    CRIWS    WSELK    EG       HV       HL       OLOSS   BANK ELEV
  Q        QLOB     QCH      QROB     ALOB     ACH      AROB     VOL      TWA   LEFT/RIGHT
  TIME     VLOB     VCH      VROB     XNL      XNCH     XNR      WTN      ELMIN      SSTA
  SLOPE    XLOBL    XLCH     XLOBR    ITRIAL   IDC      ICONT    CORAR    TOPWID     ENDST


FLOW DISTRIBUTION FOR SECNO=     23.66         CWSEL=   1172.73

STA=    9346.   10510.
  PER Q=    100.0
   AREA=  24411.7
    VEL=      8.8

*SECNO 23.667

3470 ENCROACHMENT STATIONS=    9320.0   10510.0  TYPE=     1  TARGET=    1190.000

3495 OVERBANK AREA ASSUMED NON-EFFECTIVE,ELLEA=     1175.00 ELREA=     1175.00

    23.67    22.65  1172.75      .00      .00  1173.97     1.21      .03      .00  1182.00
  215000.       0.  215000.       0.       0.   24334.       0.    5000.     374. 100000.00
      .28      .00     8.84      .00     .050     .035     .050     .000  1150.10  9346.07
  .000736      45.      45.      45.        0        0        0      .00  1137.86 10483.93


FLOW DISTRIBUTION FOR SECNO=     23.67         CWSEL=   1172.75

STA=    9346.   10510.
  PER Q=    100.0
   AREA=  24334.5
    VEL=      8.8
```

THIS RUN EXECUTED 03-10-92

```
**************************************************
  HEC2 RELEASE DATED NOV 76 UPDATED MAY  1984
  ERROR CORR -  01,02,03,04,05,06
  MODIFICATION -  50,51,52,53,54,55,56
  IBM-PC-XT VERSION AUGUST 1985
**************************************************
```

NOTE- ASTERISK (*) AT LEFT OF CROSS-SECTION NUMBER INDICATES MESSAGE IN SUMMARY OF ERRORS LIST

-YEAR FLOODPLAIN

SUMMARY PRINTOUT

SECNO	ELMIN	XLCH	Q	CWSEL	EG	AREA	TOPWID	10K*S
21.725	1135.60	.00	215000.00	1154.82	1156.51	20598.67	1421.96	17.14
21.795	1135.70	370.00	215000.00	1155.70	1157.09	22733.25	1469.59	12.89
21.809	1135.70	70.00	215000.00	1155.85	1157.21	22951.54	1471.62	12.51
21.837	1136.00	150.00	215000.00	1155.83	1157.50	21212.11	1776.84	13.67
21.937	1138.00	528.00	215000.00	1156.15	1158.48	17658.38	1255.00	16.09
22.037	1139.00	528.00	215000.00	1157.42	1159.32	19486.65	1345.00	13.98
22.137	1140.00	528.00	215000.00	1158.33	1160.03	20546.27	1395.42	12.36
22.237	1141.00	528.00	215000.00	1159.38	1160.65	23902.86	1703.81	9.64
22.337	1142.00	528.00	215000.00	1159.76	1161.32	21533.54	1610.00	12.69
22.437	1143.00	528.00	215000.00	1160.17	1162.26	18589.80	1415.00	17.54
22.537	1144.00	528.00	215000.00	1161.15	1163.27	18402.05	1555.00	20.49
22.637	1145.00	528.00	215000.00	1162.77	1164.23	22266.96	1530.00	10.68
22.662	1145.50	130.00	215000.00	1163.02	1164.38	22978.35	1370.02	8.35
22.681	1145.50	100.00	215000.00	1163.11	1164.46	23103.81	1370.63	8.21
22.799	1146.00	625.00	215000.00	1163.66	1165.11	22299.43	1615.00	11.40
23.000	1147.00	1060.00	215000.00	1165.38	1166.52	25117.96	2114.37	15.02
23.199	1150.00	1050.00	215000.00	1166.72	1169.06	17509.70	1471.27	30.64

SECNO	ELMIN	XLCH	Q	GWSEL	EG	AREA	TOPWID	10K*S
23.398	1151.00	1052.00	215000.00	1169.85	1171.58	20362.76	1457.44	18.38
23.597	1152.00	1050.00	215000.00	1172.24	1173.42	24605.76	2084.70	15.78
23.649	1150.00	270.00	215000.00	1172.49	1173.72	24135.78	1136.50	7.55
23.658	1150.00	45.00	215000.00	1172.73	1173.93	24411.75	1137.86	7.28
23.667	1150.10	45.00	215000.00	1172.75	1173.97	24334.47	1137.86	7.36

SUMMARY OF ERRORS AND SPECIAL NOTES

THIS RUN EXECUTED 03-10-92

```
**************************************************
  HEC2 RELEASE DATED NOV 76 UPDATED MAY  1984
  ERROR CORR -  01,02,03,04,05,06
  MODIFICATION -  50,51,52,53,54,55,56
  IBM-PC-XT VERSION AUGUST 1985
**************************************************
```

APPENDIX B3:

River Structures Data

1. Gabion Slope Protection
2. Grade Control Structure No. 2
3. Grade Control Structure No. 4

Gabion Slope Protection

CRSS	PROJECT: Salt River Map Revision	JOB NO: R10MR	NO. 1
	CLIENT: Tempe	DESIGNED BY: GKC / DATE: 7/25/91	OF 4
	SUBJECT: Gabion Size Check	CHECKED BY: JFM / DATE: 8/2/91	

This check is made by CRSS of ADOT specified mattress thickness and stone size. This is the check calculation <u>not</u> the design calculation.

ADOT Design: Mattress Thickness = 12"

Stone Fill Gradation: D_{max} = 12"

D_{50} = 6"

D_{min} = 3½"

Channel Side Slope = 3:1 (H:V)

<u>Boundary Shear Stress Conditions</u>: Q = 215,000 cfs

Location - North Bank	Min	Avg	Max
Reach #1: 40th St. to GC #2	1.56	1.87	2.07
Reach #2: GC #2 to GC #3	2.08	2.76	3.38
Reach #3: GC #3 to GC #4	2.46	2.65	2.92

Location - South Bank	Min	Avg	Max
Reach #1: 40th St. to GC #2	1.71	2.19	2.75
Reach #2: GC #2 to GC #3	2.08	2.42	2.94
Reach #3: GC #3 to GC #4	2.46	2.65	2.92

<u>Boundary Shear Adjustment for Side Slopes</u>:

$$K_{ss} = C\left[\frac{B/d_a + z\sqrt{z^2+1}}{B/d_a + z}\right] \quad \text{for 3:1 slope } C = 0.85$$

$$K_{ss} = 0.85\left[\frac{B/d_a + 6.32}{B/d_a + 3}\right]$$

Since the gabions are placed on the upper half of the bank section maximum shear on the gabions will be $K_{ssg} = \frac{1}{2} K_{ss}$.

Channel Hydraulic Conditions by Reach
Boundary Shear Stress Computations for Side Slopes
Tempe - Rio Salado: West Salt River Reach

Q	Reach	Mean Reach Shear N. Bank	Mean Reach Shear S. Bank	Max Reach Shear N. Bank	Max Reach Shear S. Bank
40000	#1	0.59	0.68	0.74	0.93
	#2	0.91	0.81	0.99	0.87
	#3	0.86	0.85	0.90	0.89
93000	#1	1.00	1.16	1.17	1.50
	#2	1.52	1.34	1.73	1.53
	#3	1.45	1.43	1.53	1.51
135000	#1	1.27	1.47	1.43	1.87
	#2	1.90	1.66	2.24	1.94
	#3	1.82	1.79	1.94	1.92
160000	#1	1.26	1.44	1.50	1.71
	#2	2.08	1.81	2.52	2.17
	#3	2.02	1.99	2.18	2.15
215000	#1	1.70	1.96	1.89	2.46 *
	#2	2.51	2.17	3.09	2.64
	#3	2.43	2.38	2.67	2.63
296000	#1	2.01	2.35	2.29	2.92
	#2	3.03	2.59	3.84	3.24
	#3	2.95	2.89	3.32	3.25

* Maximum shear stress on bank.
shear on gabion $\tau_g = K_{ssg}\,\tau_{bank}$

CRSS	PROJECT: Salt River Map Revision	JOB NO: R10MR	NO. 3
	CLIENT: Tempe	DESIGNED BY: GKC / DATE: 7/25/91	OF 4
	SUBJECT: Gabion Size Check	CHECKED BY: JFM / DATE: 8/2/91	

Design Shear Stress for Gabion Slope Mattress:

Factor of Safety Method (Simons & Stevens)

$$\tau_c = \tau_* (\gamma_s - \gamma) D_{50}$$

where τ_* = shields parameter for wire enclosed stone, $\tau_* = 0.10$

$\gamma_s = 165$ lb/cf

$\gamma = 62$ lb/cf

D_{50} = mean size in ft

$$\tau_c = 10.3\, D_{50}$$

Design Shear:

$$\tau_d = C_a \tau_c$$

where

$$C_a = (1/SF)\, C_\ell\, C_z\, (1 - C_r\, C_b\, (SF))$$

$$C_r = \tan(A_z)/\tan(A_r)$$

$$C_z = \cos(A_z)$$

$$C_b = \cos(\tan^{-1}(1/E))$$

$$E = 2(\tau_c/\tau)\, C_z\, C_r$$

for 8" stone $C_r = 0.41$

$$E = 2.51/\tau$$

$$C_\ell = 2/(1 + \sin(\tan^{-1}(1/E)))$$

A_z = angle of side slope

A_r = Angle of repose

CRSS	PROJECT: Salt River Map Revision	JOB NO: R10MR	NO. 4
	CLIENT: Tempe	DESIGNED BY: GKC / DATE: 7/25/91	OF 4
	SUBJECT: Gabion Size Check	CHECKED BY: JFM / DATE: 8/2/91	

for 6" stone $A_r = 39°$

for 3:1 side slope $A_z = 18.4°$

which gives $C_r = 0.41$

$C_z = 0.95$

For $Q = 215{,}000$ cfs $SF = 1.5$

Location	τ_{max}	D_{50}	E	C_a	τ_c	τ_d
Reach #1(N)	0.90	6"	1.33	0.40	5.2	2.07
Reach #1(S)	1.23	6"	1.02	0.42	5.2	2.05
Reach #2(N)	1.54	6"	0.81	0.81	5.2	2.06
Reach #2(S)	1.32	6"	0.95	0.42	5.2	2.05
Reach #3(N)	1.34	6"	0.94	0.41	5.2	2.05
Reach #3(S)	1.32	6"	0.95	0.41	5.2	2.05

Conclusions

1. The gabion fill material is acceptable, stability exceeds a factor of safety of 1.5.
2. Critical shear stress for the entire matress is 4.3 psf which is in excess of the maximum shear stress on the gabion.

Reference Material

Attached: 1) Critical Shear/Mattress Thickness Chart
2) Derivation of Critical Shear Stress Correction Factor

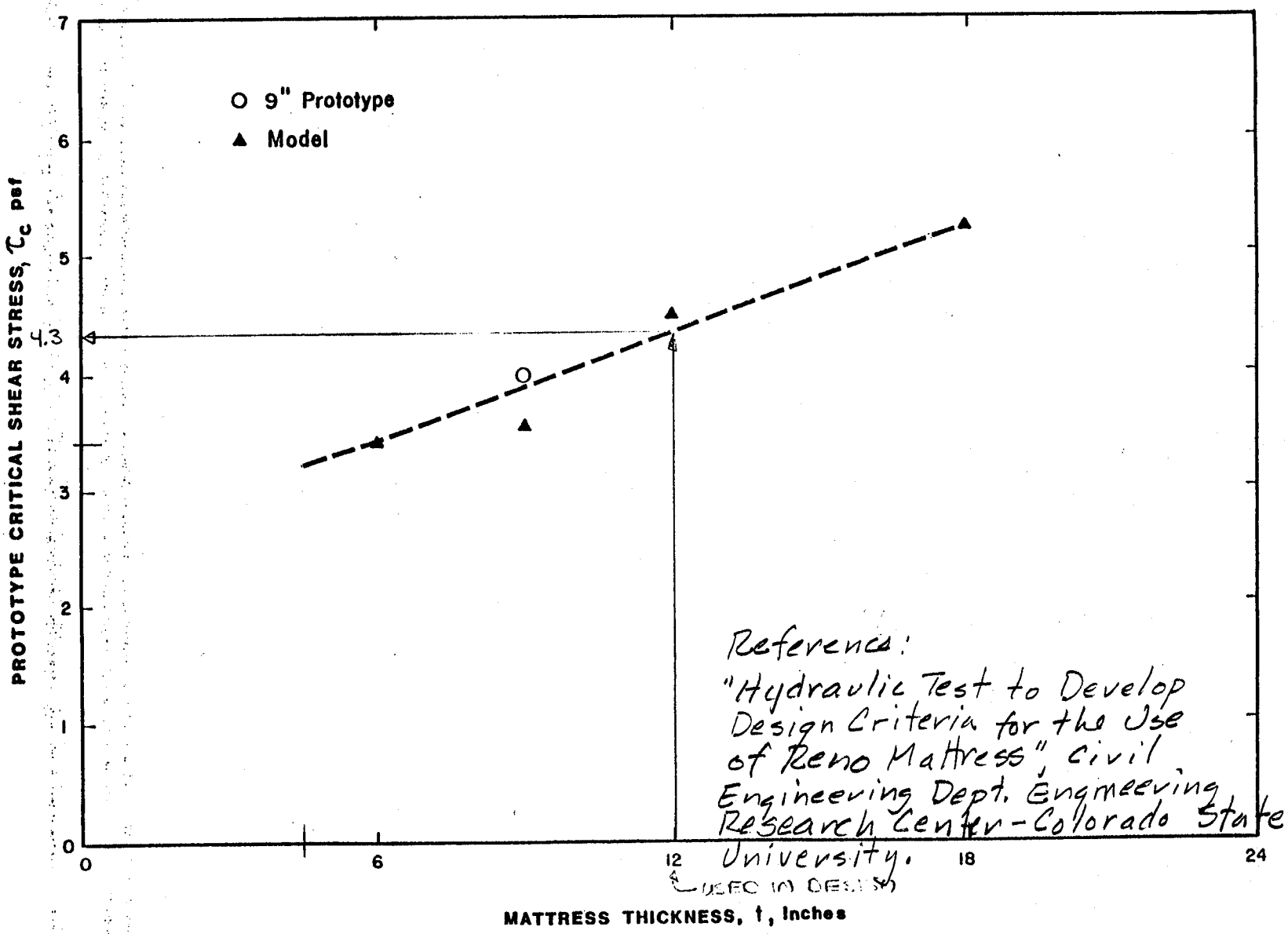

Figure 4.13. Critical shear stress versus mattress thickness.

APPENDIX B

Derivation of Critical Shear Stress Correction Factor

The forces on the rock particle are lift force Fl, drag force Fd and weight of the particle Ws. Rock particles on side-slopes tend to roll rather than slide, so it is appropriate to consider stability of rock particles in terms of moments about a contact point O about which rotation must take place. The components of forces relative to the plane of motion are shown in Figure B.1(b).

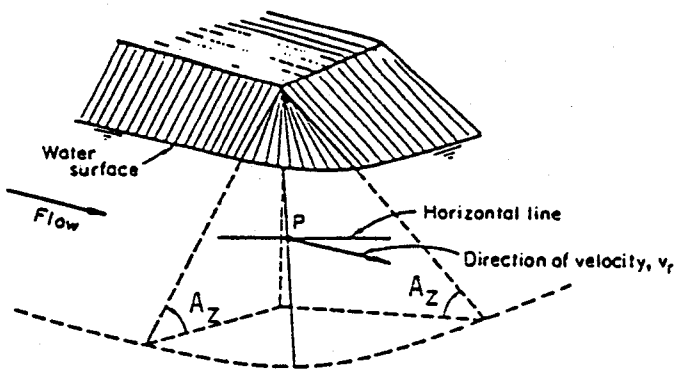

(a) General view

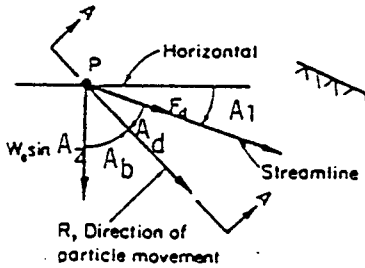

(b) View of vectors in the plane of the side slope.

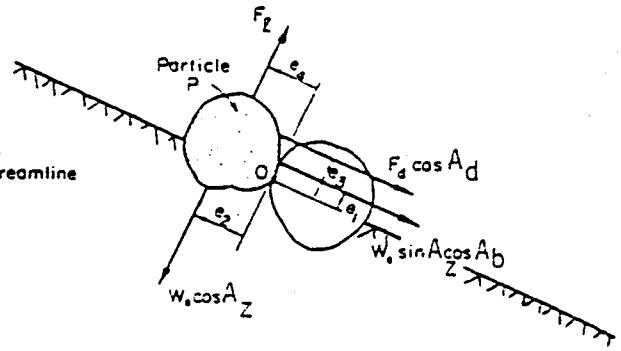

(c) Section A-A cross-section of side slope in the direction of particle motion.

Figure B.1 Diagrams for the Riprap Stability Analysis

At incipient motion, there is a balance of moments such that

$$e_2 W_s \cos A_z = e_1 W_s \sin A_z + e_3 F_d \cos A_d + e_4 F_l$$

Where e is the moment arm of each force.

The factor of safety, SF, of particles against rotation is then determined by the ratio of the moments.

$$SF = \frac{e_2 W_n}{e_1 W_t \cos A_b + e_3 F_d \cos A_d + e_4 F_l}$$

Rearranging the above equation can be written as:

$$1/SF = (e_1/e_2)(W_t/W_n)\cos A_b + (e_3/e_2)(F_d/W_n)\cos A_d + (e_4/e_2)(F_l/W_n)$$

Where

$W_n = W_s \cos A_z$ (the weight component normal to the side-slope)
$W_t = W_s \sin A_z$ (the weight component tangent to the side-slope)

It can be shown that

$$e_2/e_1 = \tan Ar$$

Where Ar is the bearing angle of the stone which is assumed to equal the angle of repose.

Let the side-slope stability number be given by

$$SN = (e_3/e_2)(F_d/W_s)\cos A_d + (e_4/e_2)(F_l/W_s)$$

so,

$$(1/SF) = (\tan A_z/\tan A_r)\cos A_b + SN/\cos A_z \qquad \text{(B1)}$$

The lift and drag forces are proportional to the boundary shear where

$F_l = c_1 d^2 To$
$F_d = c_2 d^2 To$

Where

d = the stone diameter; and,
To = the mean boundary shear stress.

The submerged weight of a stone is

$$W_s = c_3 (U_s - U_w) d^3$$

Where U_s and U_w and the unit weight of stone and water respectively.

So,

$$SN = [(e_3/e_2)(c_2/c_3)\cos A_d + (e_4/e_2)(c_1/c_3)] \frac{To}{(U_s-U_w)d}$$

let $m = (e_4/e_2)(c_1/c_3)$
$n = (e_3/e_2)(c_2/c_3)$

then

$$SN = (n \cos Ad + m) \frac{To}{(Us-Uw)d}$$

For a stone on a plain bed Ad = 0° (i.e., Ab=90°) and incipient conditions (SF=1.0), then SN=1.0 from equation Ba, so

$$1 = (n+m) \frac{Tc}{(Us-Uw)d} \qquad \text{(B2)}$$

Where Tc is the critical boundary shear stress. The term n+m is equivalent to the Shield's parameter. The stability number on a plane horizontal bed is therefore given by

$$SN' = To/Tc$$

In considering the incipient motion of stones in a riprap layer, the ratios of c_1/c_2 and e_4/e_3 vary depending on the turbulent conditions of the flow and the interlocking arrangement of the stones. If it is assumed that the stones are approximately spherical in shape, then

$$e_4/e_3 = 2$$

The ratio of lift to drag was assumed by Stevens and Simons (1971) to be

$$c_1/c_2 = \tfrac{1}{2}$$

The drag coefficient for a sphere is approximately 0.5. Lift coefficients from various studies on hemispheres are reported by Benedict and Christensen, 1971.

Lift Coefficient, C_L, for Hemispheres

C_L	Study	Comment
0.405	Chepil (1958)	Based on potential flow for widely packed spheres
0.348	Chepil (1958)	Pressure measurements for widely packed spheres

0.359	Benedict (1968)	Closely packed spheres theoretical solution
0.178	El Samni and Einstein	Pressure measurements closely packed spheres

The Stevens and Simons assumption for the lift to drag ratio is a compromise between various measurements for beds composed of spherical particles. Measurements by Apperley (1968) showed the range of lift to drag that can occur as flow depth varies relative to the particle diameter.

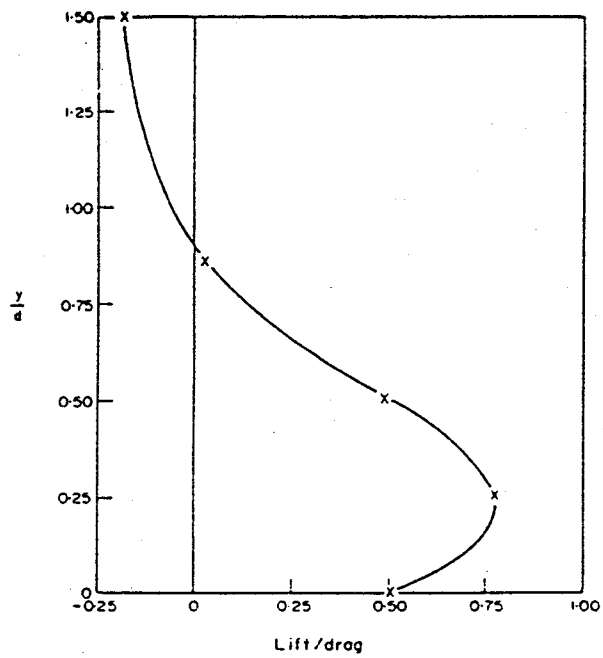

Variation of lift/drag ratio with relative depth

The ratio of stability number on a side-slope, SN, to the stability factor on a plane horizontal bed, SN′ is

$$\frac{SN}{SN'} = \frac{m + n \cos Ad}{m + n} = \frac{m/n + \cos Ad}{m/n + 1}$$

Where $\frac{m}{n} = \frac{e4}{e3} \frac{c1}{c2}$

Substituting the Stevens/Simons assumptions gives

$$\frac{m}{n} = 1 \qquad \text{(B3)}$$

and

$$\frac{SN}{SN'} = \tfrac{1}{2}\,(1 + \cos Ad)$$

or

$$SN = \tfrac{1}{2}\,(1 + \cos Ad)\ To/Tc$$

by trigonometric identity, where

$$Ad = 90 - Al - Ab$$

$$\cos Ad = \cos\,(90 - Al - Ab)$$

$$= \sin\,(Al + Ab)$$

Equation B1 becomes

$$\frac{1}{SF} = \frac{\tan Az}{\tan Ar} \cos Ab + \tfrac{1}{2}\,\frac{(1+\sin(Al+Ab))}{\cos Az}\,\frac{Td}{Tc}$$

where Td is the allowable or design shear stress.

$$\boxed{Td = \frac{1}{SF}\,\frac{2\cos Az}{(1+\sin(Al+Ab))}\,(1 - SF\,\frac{\tan Az}{\tan Ar}\cos Ab)\ Tc}$$

The angle Al shown in Figure B.1 is the angle between the velocity vector and the horizontal plane in the plane of the side-slope. The angle Al is a function of hydraulic conditions. The angle Ab can be derived from a balance of moments normal to the direction of stone motion.

$$e_3\ Fd\ \sin Ad = e_1\ W_s\ \sin Az\ \sin Ab$$

now from trigonometric identity

$$\sin Ad = \cos Al\ \cos Ab - \sin Al\ \sin Ab$$

$$\cos Al - \sin Al\ \tan Ab = \frac{e1Ws}{e_3Fd}\ \sin Az\ \tan Ab$$

$$\tan Ab = \frac{\cos Al}{\frac{e1Ws}{e3Fd}\sin Az + \sin Al}$$

The term $\frac{e1Ws}{e3Fd}$ can be written as

$$\frac{e1Ws}{e3Fd} = \frac{e2}{e3}\frac{Ws}{Fd}\frac{e1}{e2}$$

$$= \frac{e2}{e3}\frac{(Us-Uw)d}{To}\frac{1}{\tan Ar}$$

$$= \frac{1}{n}\frac{(Us-Uw)d}{To}\frac{1}{\tan Ar}$$

from equation B2 and B3

$$\frac{e1Ws}{e3Fd} = \frac{1}{\frac{1}{2}To/Tc}\frac{1}{\tan Ar}$$

so

$$\boxed{\tan Ab = \frac{\cos Al}{\frac{2}{To/Tc}\frac{\sin Az}{\tan Ar} + \sin Al}}$$

REFERENCES:

Stevens, M.A. and D.B. Simons, 1971, "Stability Analysis for Coarse Granular Material on Slopes", Chapter 17, in River Mechanics, Hsieh Wen Shen, ed.

Benedict, B.A. and B.A. Christensen, 1972, "Hydrodynamic Lift on a Stream Bed", Chapter 5, in Sedimentation, Hsieh Wen Shen, ed.

Apperley, L.W., 1968, "The Effect of Turbulence on Sediment Entrainment", Ph.D., Thesis Univeristy of Auckland, N.Z., sited from Loose Boundary Hydraulics, A.J. Raudkivi, Second edition, 1976.

Grade Control Structure No. 2

CRS SIRRINE	PROJECT: Rio Salado Map Revision	JOB NO. R10MR	NO. 1
	CLIENT: Tempe	DESIGNED BY: CKC / DATE	
	SUBJECT: Grade Control Stability	CHECKED BY: VFM / DATE: 8/2/91	OF 8

Structure No. 2

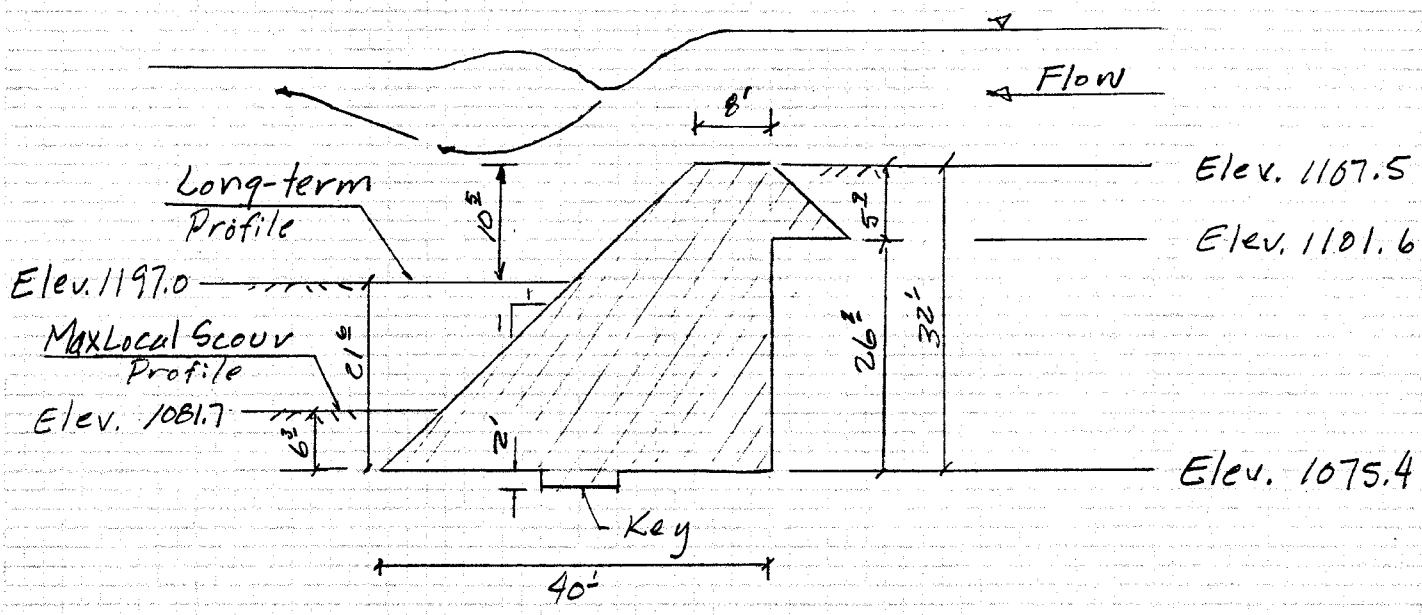

Data:

1. Dry unit weight of cement stabilized alluvium
   $\gamma_{CSA} = 145\ lb/ft^3$
2. Submerged unit weight of soil $\gamma_s' = 75\ lb/ft^3$
3. Concrete Strength, $f_c' = 1000$ psi
4. Water surface elevation at max. scour:
   Above crest = 1123.0
   Below crest = 1124.0

Assumptions:

1. Hydrostatic pressure upstream of structure and within the scour hole
2. No impact loading
3. Uplift force in accordance the Lane's "weighted creep" method.

① Dead Weight of Structure (per ft of width)

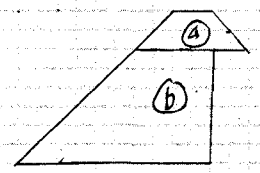

ⓐ $5.9[8+(8+2*5.9)]/2 = 82.0 \ ft^3/ft$

ⓑ $26.2[(8+5.9)+(8+5.9+26.2)]/2 = 707.4 \ ft^3/ft$

$789.4 \ ft^3/ft$

Dry weight = 789 * 145 lb/ft³ = 114.4 kips/ft

Submerged wt. = 789 * 83 lb/ft³ = 65.5 kips/ft

② Pressure Distribution

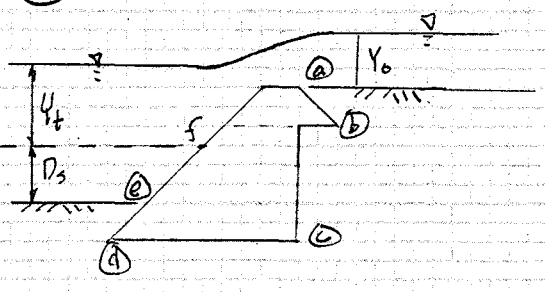

Conditions:

I. Saturated bed - post scour

II. Max discharge prior to scour

III. Discharge at maximum scour.

Condition	Y_o	Y_t	Q	D_s
I.	0.0	0.0	0	0.0
II.	7.3	16.8	70,000	0.0
III.	15.5	27.0	215,000	15.3

Weighted length of path = Vert Dist + 1/3 (Horiz Dist)

Condition	L_v	L_w	L_w
I.	32.1+2(2)	5.9+40.1	57.7
II.	32.1+21.6+2(2)	5.9+40.1	73.0
III.	32.1+6.3+2(2)	5.9+40.1	57.7

CRS SIRRINE	PROJECT: Rio Salado Map Revision	JOB NO. 210MR	NO. 3
	CLIENT: Tempe	DESIGNED BY GKC / DATE	
	SUBJECT: Grade control No. 2	CHECKED BY VFM / DATE 8/2/91	OF 8

Weighted Length (ft):

Location	Condition I	II	III
a	0.	0.	0.
b	5.9	5.9	5.9
b'	7.9	7.9	7.9
c	34.1	34.1	34.1
d	51.4	51.4	51.4
e	57.7	57.7	57.7
f	–	73.0	–

Weighted Head Difference:

Location	Condition I	II	III
a	0.0	0.00	-1.00
b	1.07	0.08	-0.90
b'	1.44	0.11	-0.86
c	6.21	0.47	-0.41
d	9.35	0.70	-0.11
e	10.50	0.79	0.0
f	–	1.00	–

Pressure Distribution:

Location	(ft) I	II	III	kips/ft² I	II	III
a	0.0	7.3	15.50	0.0	0.46	0.97
b	4.83	13.12	21.50	0.30	0.82	1.34
b'	4.46	13.09	21.54	0.28	0.82	1.34
c	25.89	38.93	48.19	1.62	2.43	3.01
d	22.75	38.70	48.49	1.42	2.41	3.03
e	15.30	32.31	42.3	0.95	2.02	2.64
f	0.0	16.8	27.00	0.0	1.05	1.68

Head on Structure = Headwater - Tailwater
Weighted-creep ration = Weighted Length/Head on Str.

Condition	Str Head	Cr
I.	10.5	7.0
II.	0.7	104.3
III.	-1.0	57.7

Structure is safe from piping at all stages for materials coarser than fine sand.

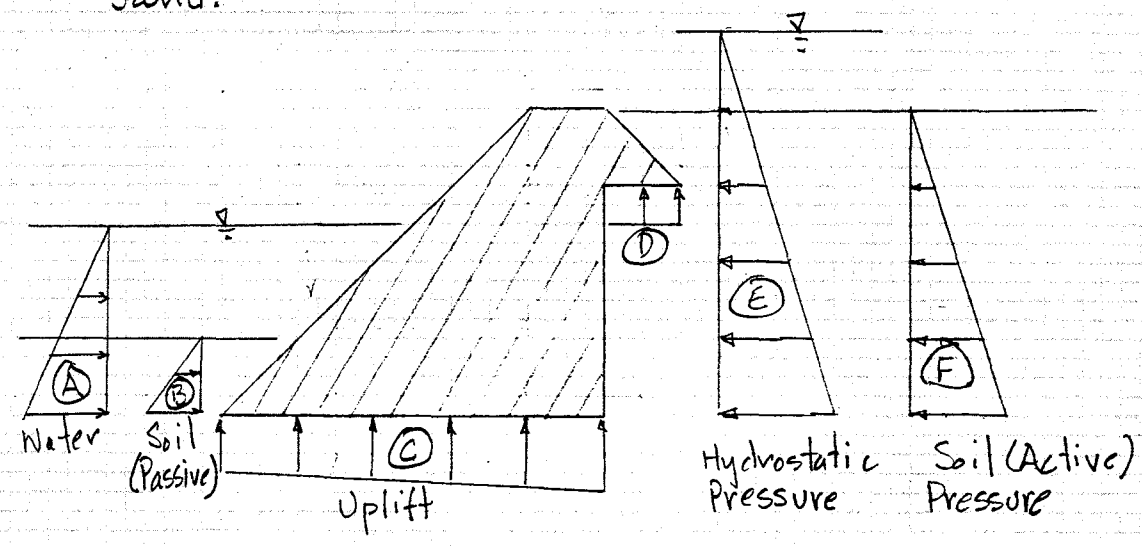

Effective Internal Friction Angle, $\alpha = 35°$

Active Pressure Coefficient

$$C_a = \frac{1-\sin\alpha}{1+\sin\alpha} = \frac{1-0.574}{1+0.574}$$
$$= 0.27$$

Passive Pressure Coefficient

$$C_p = \frac{1+\sin\alpha}{1-\sin\alpha} = 1/C_a$$
$$= 1/0.27$$
$$= 3.7$$

CRSS	PROJECT: Rio Salado	JOB NO: RIOMR	NO. 5
	CLIENT: Tempe	DESIGNED BY: NN / DATE	OF 8
	SUBJECT: Grade Control No 2.	CHECKED BY: GKC / DATE: 8/2/91	

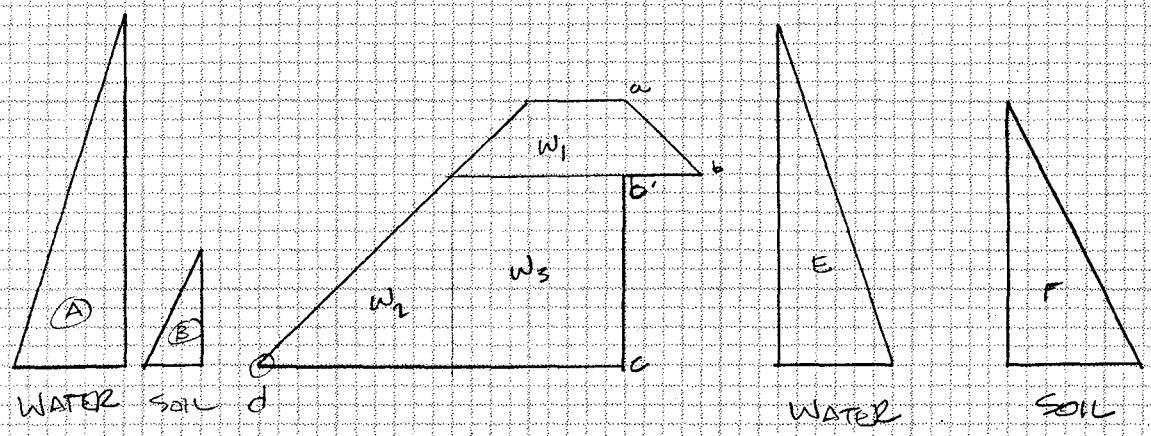

W

CONCRETE:

	VOL	γ, PCF	W, K	ARM, FT	MOM.
W1 :	82 FT^3	145	11.9 ↓	36'	428.4 ↻
W2 :	343 FT^3	145	49.7 ↓	17.5'	869.8 ↻
W3 :	364	145	52.8 ↓	33.2	1752.0 '-K ↻
			114.4 K ↓		3050 '-K ↻

SOIL, CASE I, III

	H	kγ, KCF	$k\gamma H \times \frac{H}{2}$ ↓ FORCE	ARM	
"F"	34'	.27(.075)	11.7 K ←	$\frac{34}{3} - 2 = 9.33$	109.2 '-K ↻
"B"	8.3'	3.7(.075)	9.6 K →	$\frac{8.3}{3} - 2 = .77'$	7.4 '-K ↻

CASE II

"F"	34	—	11.7 K ←	—	109.2 '-K ↻
"B"	23.6	3.7(.075)	77.3 K →	$\frac{23.6}{3} - 2 = 5.87$	453 '-K ↻

CRSS	PROJECT: Rio Salado	JOB NO: RIOMR	NO. 6
	CLIENT: Tempe	DESIGNED BY: NN / DATE	
	SUBJECT: Grade Control No. 2	CHECKED BY: GKC / DATE: 8/2/91	OF 8

WATER, CASE I

	KSF	FORCE	ARM	MOMENT around "d"
a → b	0 → .3	$\frac{.3}{2}(6') = .9^K$ ←	28'	25.2 ↺
		$.9^K$ ↓	42'	37.8 ↻
b → b'	.3 → .28	$.29(6) = 1.74$ ↑	43'	74.8 ↺
b' → c	.28 → 1.62	$\frac{1.62+.28}{2}(26) = 24.7$ ←		$M = \frac{26^2}{6}(2(.28)+1.62) = 245.6^{'-K}$
c → d	1.62 → 1.42	60.8^K ↑		$M = \frac{40^2}{6}(2(1.62)+1.42) = 1243^{'-K}$ ↖
d → f	1.42 → 0	$\frac{1.42}{2}(21.6) = 15.3$ →	$\frac{21.6}{3} = 7.2$	$110.2^{'-K}$ ↻
		15.3^K ↓	$\frac{21.6}{3} = 7.2$	$110.2^{'-K}$ ↻
CASE I TOTAL		46^K ↑	10.3^K ←	$1330^{'-K}$ ↺

CASE II

a → b	.46 → .82	$\frac{.46+.82}{2}(6) = 3.84^K$ ←		$M = (3.84^K \times 26) + \frac{6^2}{6}((.46)2 + .82) = 110.3^{'K}$ ↺
		3.84^K ↓		$M = (3.84 \times 40) + \frac{6^2}{6}(2(.46) + .82) = 164.0$ ↻
b → b'	.82	$.82(6) = 4.92^K$ ↑	43'	$211.6^{'-K}$ ↺
b' → c	.82 → 2.43	$\frac{.82+2.43}{2}(26) = 42.3$ ←		$M = \frac{26^2}{6}(2(.82) + 2.43) = 458.6^{'-K}$ ↺
c → d	2.43 → 2.41	$2.42(40) = 96.8^K$ ↑		$M = \frac{40^2}{6}(2(2.43) + 2.41) = 1939^{'-K}$ ↺
d → a'	2.41 → .46	$\frac{2.41+.46}{2}(32) = 45.9$ →		$M = \frac{32^2}{6}(2(.46) + 2.41) = 568^{'-K}$ ↻
		45.9 ↓		$= 568^{'-K}$ ↻
a' → a	.46 →	$.46 \times 8 = 3.7^K$ ↓	36'	$132.5^{'-K}$ ↻
CASE II TOTAL		48.3^K ↑	Ø →	$1288^{'-K}$ ↺

CRSS	PROJECT: Rio Salado	JOB NO: RIOMR	NO. 7
	CLIENT: TEMPE	DESIGNED BY: NN / DATE:	OF 8
	SUBJECT: Grade Control No. 2	CHECKED BY: GKC / DATE: 8/2/91	

CASE III

	KSF	FORCE	ARM	MOMENT
a→b	.97→1.34	$\frac{.97+1.34}{2}(6)=6.93^K$ ←	$M=(6.93\times26)+\frac{6^2}{6}(2(.97)+1.34)$	$=200.0'^{-K}$ ↻
		6.93^K ↓	$M=(6.93\times40)+\frac{6^2}{6}(2(.97)+1.34)$	$=297'^{-K}$ ↺
b→b'	1.34	$1.34(6)=8.0^K$ ↑	43'	$346'^{-K}$ ↻
b'→c	1.34→3.01	$\frac{1.34+3.01}{2}(26)=56.6^K$ ←	$M=\frac{26^2}{6}(2(1.34)+3.01)$	$=641'^{-K}$ ↻
c→d	3.02	$3.02\times40=121^K$ ↑	20'	$2416'^{-K}$ ↻
d→a'	3.02→.97	$\frac{3.02+.97}{2}(32)=64^K$ →	$M=\frac{32^2}{6}(2(.97)+3.02)=846.5'^{-K}$	
		64^K ↓		$=846.5'^{-K}$ ↺
a'-a	.97	$.97(8')=7.8^K$ ↓	36'	$279'^{-K}$ ↺
TOTAL CASE III		50.3^K ↑	$\sim\emptyset$ →	$1334'^{-K}$ ↻

SLIDING	CASE I	II	III
RESISTANCE FORCE	C. COEF FRICTION		
WT	$.46(114.4-46)=31.5^K$	$.46(114.4-48.3)=30.4$	$.46(114.4-50.3)$ 20.5^K
PASSIVE	9.6^K	77.3^K	9.6^K
TOTAL	41^K	107^K	39^K
DRIVING FORCE			
SOIL	11.7^K	11.7^K	11.7^K
WATER	10.3^K	$\emptyset$	$\emptyset$
	22^K	11.7^K	11.7^K

MIN F.S. = $\frac{41}{22}=1.86$ W/PASSIVE RESISTANCE OK

$\frac{31.5}{22}=1.43$ W/O PASSIVE SOIL RESISTANCE

CRSS	PROJECT: Rio Salado	JOB NO: R10MR	NO. 8
	CLIENT: Tempe	DESIGNED BY: NN / DATE	OF 8
	SUBJECT: Grade Control No. 2	CHECKED BY: GLC / DATE: 8/2/91	

OVERTURNING

	CASE I	CASE II	CASE III
RESISTING MOMENT			
WT	3050 '-K	3050 '-K	3050 '-K
IGNORE PASSIVE SOIL FOR I & III	—	453 '-K	—
	3050 '-K	3503 '-K	3050 '-K
DRIVING MOMENT			
SOIL	109 '-K	109 '-K	109 '-K
WATER	1330 '-K	1288	1334 '-K
	1439 '-K	1397 '-K	⟹ 1443 '-K CONTROLS

MIN. F.S. = $\frac{3050}{1443}$ = 2.11 OK

F.H.W.A. REGION	STATE	PROJECT NO.	SHEET NO.	TOTAL SHEETS	AS BUILT
	ARIZ.	RAM-600-3-511	233	969	
		143 MA 1			

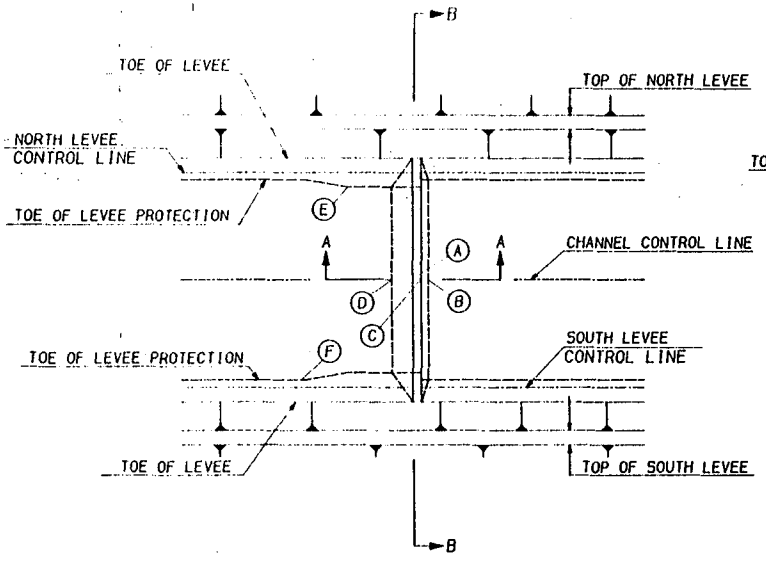

GRADE CONTROL STRUCTURES NO. 2,3,&4
NOT TO SCALE

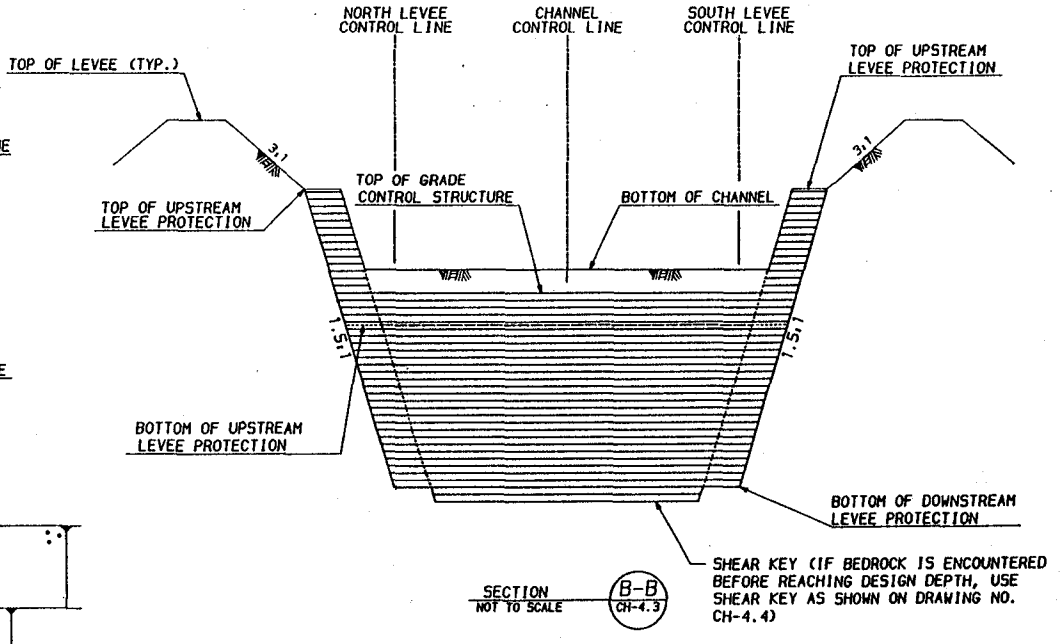

SECTION B-B
NOT TO SCALE CH-4.3

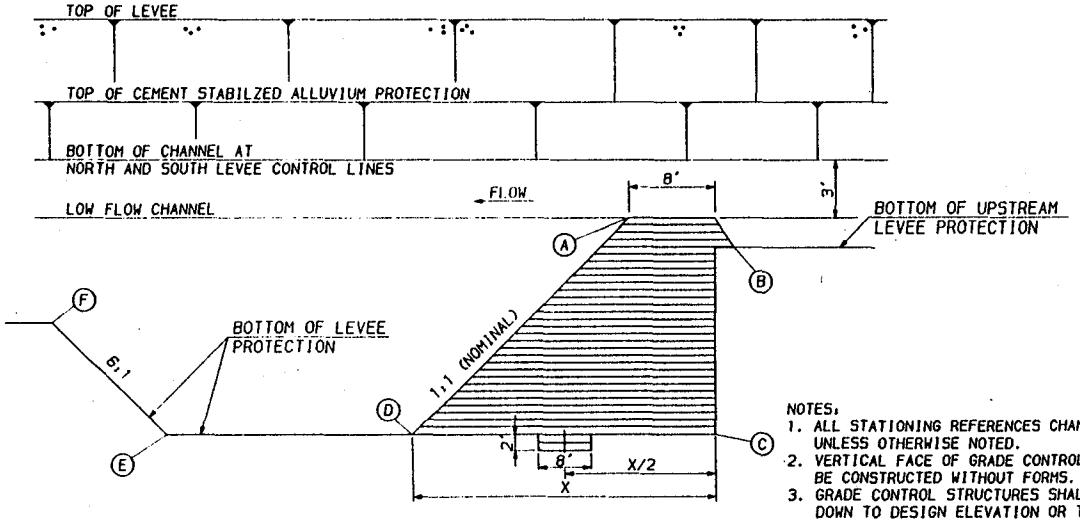

SECTION A-A
NOT TO SCALE CH-4.3

	GRADE CONTROL STRUCTURE NO.2		~~GRADE CONTROL STRUCTURE NO. 3~~		GRADE CONTROL STRUCTURE NO. 4	
	STATION	ELEVATION	~~STATION~~	~~ELEVATION~~	STATION	ELEVATION
A	144+00	1107.5	207+82	1122.5	249+55	1132.4
B	144+14	1101.6	207+98	1114.8	249+71	1124.0
C	144+08	1075.4	207+90	1087.8	249+63	1101.0
D	143+68	1075.4	207+42	1087.8	249+24	1101.0
E	141+75	1075.4	205+39	1087.8	247+36	1101.0
F	140+57	1095.1	204+21	1107.4	246+26	1119.3

NOTES:
1. ALL STATIONING REFERENCES CHANNEL CONTROL LINE UNLESS OTHERWISE NOTED.
2. VERTICAL FACE OF GRADE CONTROL STRUCTURE SHALL BE CONSTRUCTED WITHOUT FORMS.
3. GRADE CONTROL STRUCTURES SHALL BE CONSTRUCTED DOWN TO DESIGN ELEVATION OR TO BEDROCK, WHICHEVER IS HIGHER. SHOULD BEDROCK BE ENCOUNTERED, SEE DRAWING NO. CH-4.4 FOR ANCHORING GRADE CONTROL STRUCTURE TO BEDROCK.

	NAME	DATE
DESIGN	D.N.J.	4/89
DRAWN	S.L.B.	4/89
CHECKED	H.A.P.	4/89
DMJM CONSULTING ENGINEERS PHOENIX ARIZONA		
ROUTE 143	BUILDPART 1	

ARIZONA DEPARTMENT OF TRANSPORTATION
HIGHWAYS DIVISION

GRADE CONTROL STRUCTURES NO. 2, 3 & 4

LOCATION HOHOKAM (UNIVERSITY - SKY HARBOR)

DWG. NO. CH-4.3

TRACS NO. H 2015 01L

CRS SIRRINE	PROJECT: Rio Salado Map Revision	JOB NO. R1OMR	NO. 1
	CLIENT: City of Tempe	DESIGNED BY GKC / DATE	
	SUBJECT: Lane's Weighted-creep method	CHECKED BY — / DATE	OF 1

Mr. Lane gives credit for various concepts of creep analysis to the early investigators, Clibborn, Beresford, Bligh, Griffith, and others. He did, however, test his theory by analysis of more than 200 dams on pervious foundations, both failures and nonfailures. His main conclusions (omitting those regarding the "short-path" which is not applicable here) were as follows:

(1) The weighted-creep distance of a cross section of a dam is the sum of the vertical creep distances (steeper than 45°) plus one-third of the horizontal creep distances (less than 45°).

(2) The weighted-creep head ratio is the weighted-creep distance divided by the effective head.

(3) Reverse filter drains, weep holes, and pipe drains are aids to security from underseepage, and recommended safe weighted-creep head ratios may be reduced as much as 10 percent if they are used.

(4) Care must be exercised to insure that cutoffs are properly tied in at the ends so that the water will not outflank them.

(5) The upward pressure to be used in design may be estimated by assuming that the drop in pressure from headwater to tailwater along the contact line of the dam and foundation is proportional to the weighted-creep distance.

Based on his findings, Mr. Lane recommended the weighted-creep ratios shown below:

Material:	Ratio
Very fine sand or silt	8.5
Fine sand	7.0
Medium sand	6.0
Coarse sand	5.0
Fine gravel	4.0
Medium gravel	3.5
Coarse gravel including cobbles	3.0
Boulders with some cobbles and gravel	2.5
Soft clay	3.0
Medium clay	2.0
Hard clay	1.8
Very hard clay or hardpan	1.6

Weighted Path Length

$L_W = \Sigma L_V + \Sigma L_H / 3$

Creep Ratio:

$C_r = L_W / \Delta H$

where ΔH = Head on str - Tailwater

Reference: Bureau of Reclamation "Design of Small Dams", 1977 Chapter VIII, Section 181 "Seepage and Uplift" pg 341.

Grade Control Structure No. 4

Structure No. 4

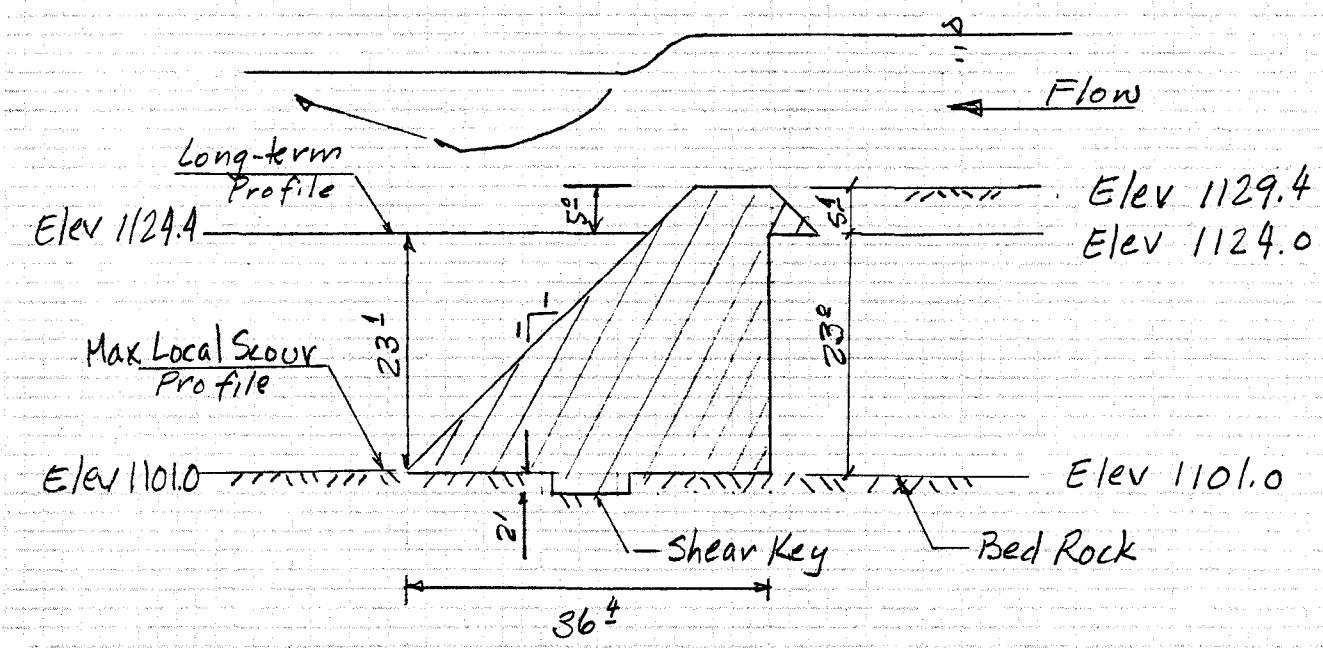

Data:

1. Dry unit weight of cement stabilized alluvium
   $\gamma_{CSA} = 145\ lb/ft^3$
2. Submerged unit weight of soil, $\gamma_s' = 75\ lb/ft^3$
3. Concrete strength, $f_c' = 1000\ psi$
4. Water surface at maximum scour
   Above crest = 1152.8
   Below crest = 1152.1

Assumptions:

1. Hydrostatic pressure upstream of structure and within scour hole.
2. No impact loading.
3. Uplift force in accordance with Lane's "weighted creep" method.

① Dead weight of structure (per ft. of width).

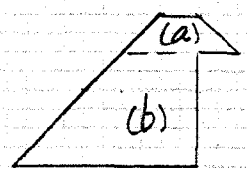

(a) $5.4(8+(8+2*5.4))/2 = 72.4$ cf/ft

(b) $23.0((8+5.4)+(8+5.4+23.0))/2 = 572.7$ cf/ft

645.1 cf/ft

Dry weight = 645 * 145 = 93.5 kips/ft

Submerged wt = 645 * 83 = 53.5 kips/ft

② Pressure Distribution

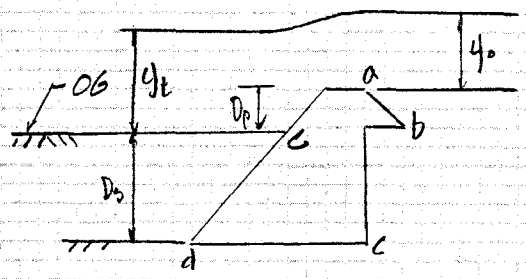

Conditions:

I. Saturated bed-post scour

II. Max discharge prior to scour

III. Discharge at max scour

Condition	y_o	y_t	Q	D_s
I.	0.0	0.0	0	0.
II.	4.5	10.0	32,500	0
III.	22.7	28.4	296,000	23.4

Weighted Length of Flow Path

Condition	L_v	L_H	L_w
I.	28.4+4	5.4+36.4	46.3
II.	28.4+4+23.4	5.4+36.4	69.7
III.	28.4+4	5.4+36.4	46.3

CRS SIRRINE	PROJECT: Rio Salado Map Revision	JOB NO. R10MR	NO. 3
	CLIENT: City of Tempe	DESIGNED BY: OKC / DATE:	OF 6
	SUBJECT: Grade Control No. 4	CHECKED BY: JFM / DATE: 8/2/91	

Weighted Length:

Location	Condition I	II	III
a	0	0	0
b	5.4	5.4	5.4
b'	7.2	7.2	7.2
c	30.2	30.2	30.2
d	46.3	46.3	46.3
e	-	69.7	-

Weighted Head Difference:

Location	Condition I	II	III
a	0.0	-0.50	-0.70
b	0.58	-0.46	-0.62
b'	0.78	-0.45	-0.59
c	3.26	-0.28	-0.24
d	5.0	-0.17	0.0
e	-	0.0	-
ΔH	5.0	-0.5	-0.7

Pressure Distribution:

Location	I	II*	III*	I	II*	III*
a	0.0			0.		
b	4.82			0.30		
b'	4.62			0.29		
c	25.14			1.57		
d	23.40			1.46		
e	-					

* Hydrostatic Pressures in upstream direction

Check for piping

Head on structure = Headwater - Tailwater
= 1129.4 - 1124.4
= 5.0

Weighted-creep ratio = Weighted Length/Head on Str
= 46.3/5.0 = 9.3

Structure is OK for soils coarser than very fine sand or silt.

Soil Pressure Coefficients

Effective Friction Angle, $\alpha = 35°$

Active Pressure Coefficient

$$C_a = \frac{1-\sin\alpha}{1+\sin\alpha}$$

$$= \frac{1-0.574}{1+0.574}$$

$$= 0.27$$

Passive Pressure Coefficient

$$C_p = \frac{1+\sin\alpha}{1-\sin\alpha} = 1/C_a$$

$$= 1/0.27$$

$$= 3.7$$

CRS SIRRINE	PROJECT: Rio Salado	JOB NO. RIOMR	NO. 5 / 6
	CLIENT: Tempe	DESIGNED BY GRC / DATE	
	SUBJECT: Grade Control No. 4	CHECKED BY JW / DATE 8-7-91	OF

Case I

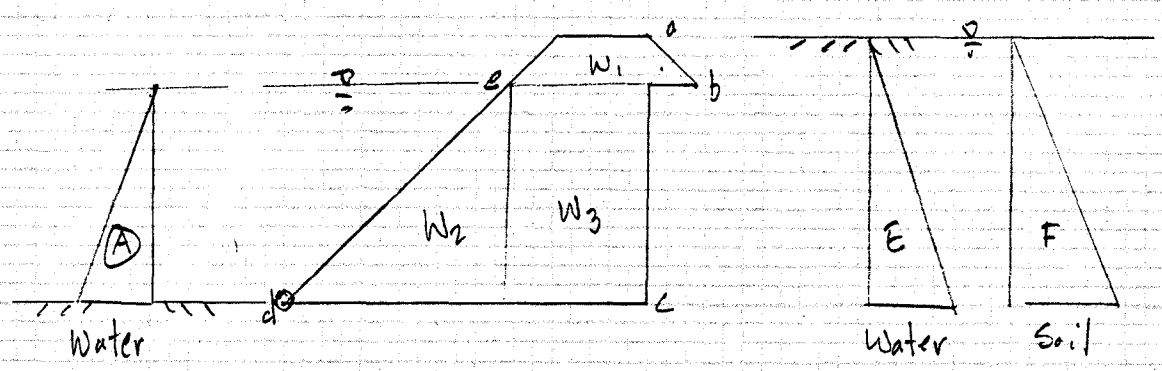

Concrete: (145 lb/ft³)

	Vol	W	Arm	Moment
W_1	72.4 ft³	10.5 ↓	32.4	340.2 ↻
W_2	308.2	44.6 ↓	15.3	682.4 ↻
W_3	264.5	38.4 ↓	29.7	1140.5 ↻
		93.5 ↓		2163.1

Soil:

	H	Force	Arm	Moment
~~B~~	~~23.4~~	~~5.5 →~~	~~7.8~~	~~42.9 ↻~~
F	28.4	8.2 ←	9.5	77.9 ↻

Water:

	Pressure	Force	Arm	Moment
a-b	0.0 - 0.30	0.8 ←	24.8	19.8 ↻
		0.8 ↓	38.2	30.6 ↻
b'-b'	0.30 - 0.29	1.6 ↑	39.1	62.6 ↻
b'-c	0.29 - 1.57	21.4 ←	8.9	190.5 ↻
c-d	1.57 - 1.46	55.1 ↑	18.4	1013.8 ↻
d-e	1.46 - 0.	17.1 →	7.8	133.4 ↻
		17.1 ↓	7.8	133.4 ↻
		5.1 ← 38.8 ↑		989.3

Sliding Resistance

$\Sigma F_y = 93.5 - 38.8 = 54.7$ kips ↓

Friction coef = 0.46

$F_s = 0.46(54.7) = 25.2$ kips →

Shear key resistance:

shear stress, $0.95\sqrt{f'_c} = 0.95\sqrt{1000}$
$= 30$ psi

Shear force $= 8(144)30 = 34.6$ kips

Sliding:

Driving Force = Soil + Water
$= 8.2 + 5.1 = 13.3$ kips

Resisting Force = Friction + Shear key
$= 25.2 + 34.6 = 59.8$ kips

F.S. Sliding $= 59.8/13.3 = 4.5$

Overturning:

Driving Mom = Soil + Water
$= 77.9 + 989.3$
$= 1067.2$

Resist. Mom = Concrete
$= 2163.1$

F.S. Overturning $= 2163.1/1067.2 = 2.0$

F.H.W.A. REGION	STATE	PROJECT NO.	SHEET NO.	TOTAL SHEETS	AS BUILT
	ARIZ.	RAM-600-3-511	283	969	
		143 MA 1			

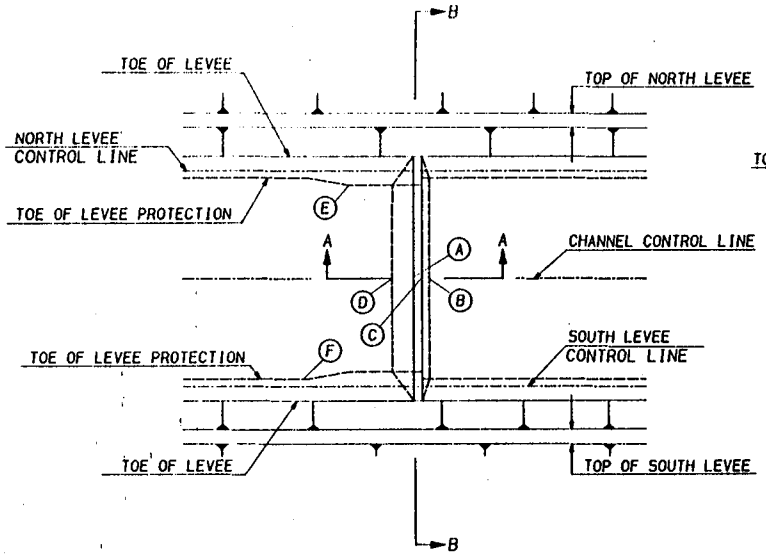

GRADE CONTROL STRUCTURES NO. 2,3,&4
NOT TO SCALE

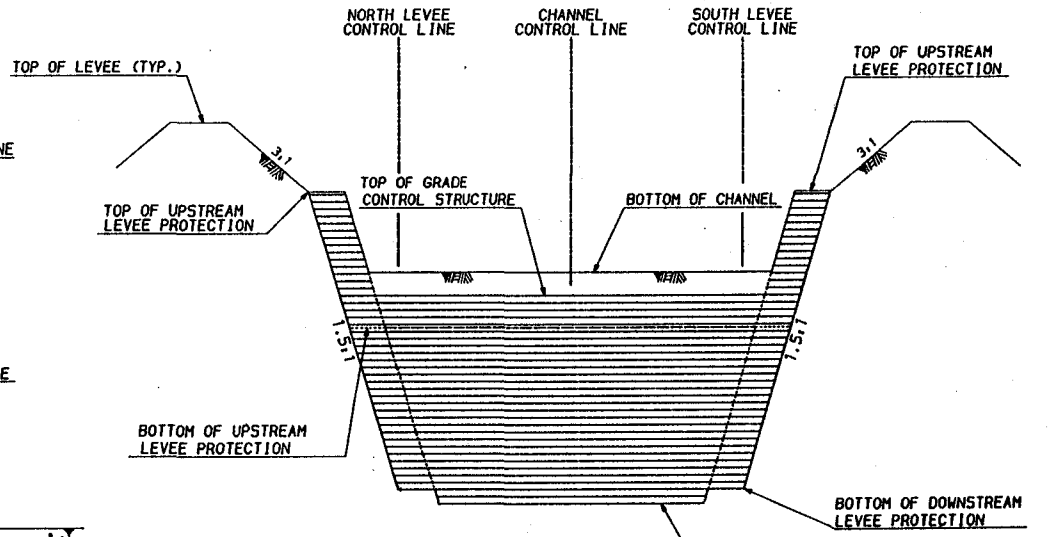

SECTION B-B
NOT TO SCALE CH-4.3

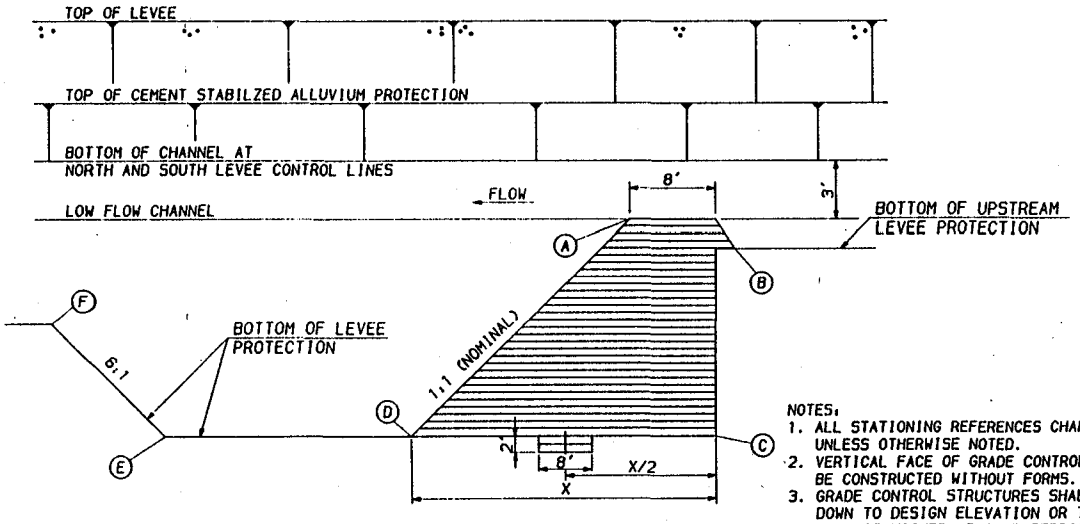

SECTION A-A
NOT TO SCALE CH-4.3

	GRADE CONTROL STRUCTURE NO.2		~~GRADE CONTROL STRUCTURE NO. 3~~		GRADE CONTROL STRUCTURE NO. 4	
	STATION	ELEVATION	STATION	ELEVATION	STATION	ELEVATION
A	144+00	1107.5	207+80	1122.5	249+55	1132.4
B	144+14	1101.6	207+98	1114.8	249+71	1124.0
C	144+08	1075.4	207+90	1087.8	249+63	1101.0
D	143+68	1075.4	207+47	1087.8	249+24	1101.0
E	141+75	1075.4	205+39	1087.8	247+36	1101.0
F	140+57	1095.1	204+21	1107.4	246+26	1119.3

NOTES:
1. ALL STATIONING REFERENCES CHANNEL CONTROL LINE UNLESS OTHERWISE NOTED.
2. VERTICAL FACE OF GRADE CONTROL STRUCTURE SHALL BE CONSTRUCTED WITHOUT FORMS.
3. GRADE CONTROL STRUCTURES SHALL BE CONSTRUCTED DOWN TO DESIGN ELEVATION OR TO BEDROCK, WHICHEVER IS HIGHER. SHOULD BEDROCK BE ENCOUNTERED, SEE DRAWING NO. CH-4.4 FOR ANCHORING GRADE CONTROL STRUCTURE TO BEDROCK.

	NAME	DATE
DESIGN	D.N.J.	4/89
DRAWN	S.L.B.	4/89
CHECKED	H.A.P.	4/89

DMJM CONSULTING ENGINEERS PHOENIX ARIZONA

ROUTE 143 | MILEPOST 1

ARIZONA DEPARTMENT OF TRANSPORTATION
HIGHWAYS DIVISION

GRADE CONTROL STRUCTURES NO. 2, 3 & 4

LOCATION HOHOKAM (UNIVERSITY - SKY HARBOR)

DWG. NO. CH-4.3

CRS SIRRINE	PROJECT: Rio Salado Map Revision	JOB NO: RIOMR	NO 1
	CLIENT: City of Tempe	DESIGNED BY: GKC / DATE	
	SUBJECT: Lane's Weighted-creep method	CHECKED BY / DATE	OF 1

Mr. Lane gives credit for various concepts of creep analysis to the early investigators, Clibborn, Beresford, Bligh, Griffith, and others. He did, however, test his theory by analysis of more than 200 dams on pervious foundations, both failures and nonfailures. His main conclusions (omitting those regarding the "short-path" which is not applicable here) were as follows:

(1) The weighted-creep distance of a cross section of a dam is the sum of the vertical creep distances (steeper than 45°) plus one-third of the horizontal creep distances (less than 45°).

(2) The weighted-creep head ratio is the weighted-creep distance divided by the effective head.

(3) Reverse filter drains, weep holes, and pipe drains are aids to security from underseepage, and recommended safe weighted-creep head ratios may be reduced as much as 10 percent if they are used.

(4) Care must be exercised to insure that cutoffs are properly tied in at the ends so that the water will not outflank them.

(5) The upward pressure to be used in design may be estimated by assuming that the drop in pressure from headwater to tailwater along the contact line of the dam and foundation is proportional to the weighted-creep distance.

Based on his findings, Mr. Lane recommended the weighted-creep ratios shown below:

Material:	*Ratio*
Very fine sand or silt	8.5
Fine sand	7.0
Medium sand	6.0
Coarse sand	5.0
Fine gravel	4.0
Medium gravel	3.5
Coarse gravel including cobbles	3.0
Boulders with some cobbles and gravel	2.5
Soft clay	3.0
Medium clay	2.0
Hard clay	1.8
Very hard clay or hardpan	1.6

Weighted Path Length

$L_W = \Sigma L_V + \Sigma L_H / 3$

Creep Ratio:

$C_r = L_W / \Delta H$

where ΔH = Head on str - Tailwater

Reference: Bureau of Reclamation "Design of Small Dams", 1977 Chapter VIII, Section 181 "Seepage and Uplift" pg 341.

APPENDIX B4:

Levee Embankment Stability Data

CRS SIRRINE	PROJECT: Rio Salado	JOB NO.: R101N	NO. 1
	CLIENT: Tempe	DESIGNED BY: GKC / DATE: 8/24/90	OF 3
	SUBJECT: Bank Stability	CHECKED BY: JFM / DATE: 8/29/90	

Definition sketch

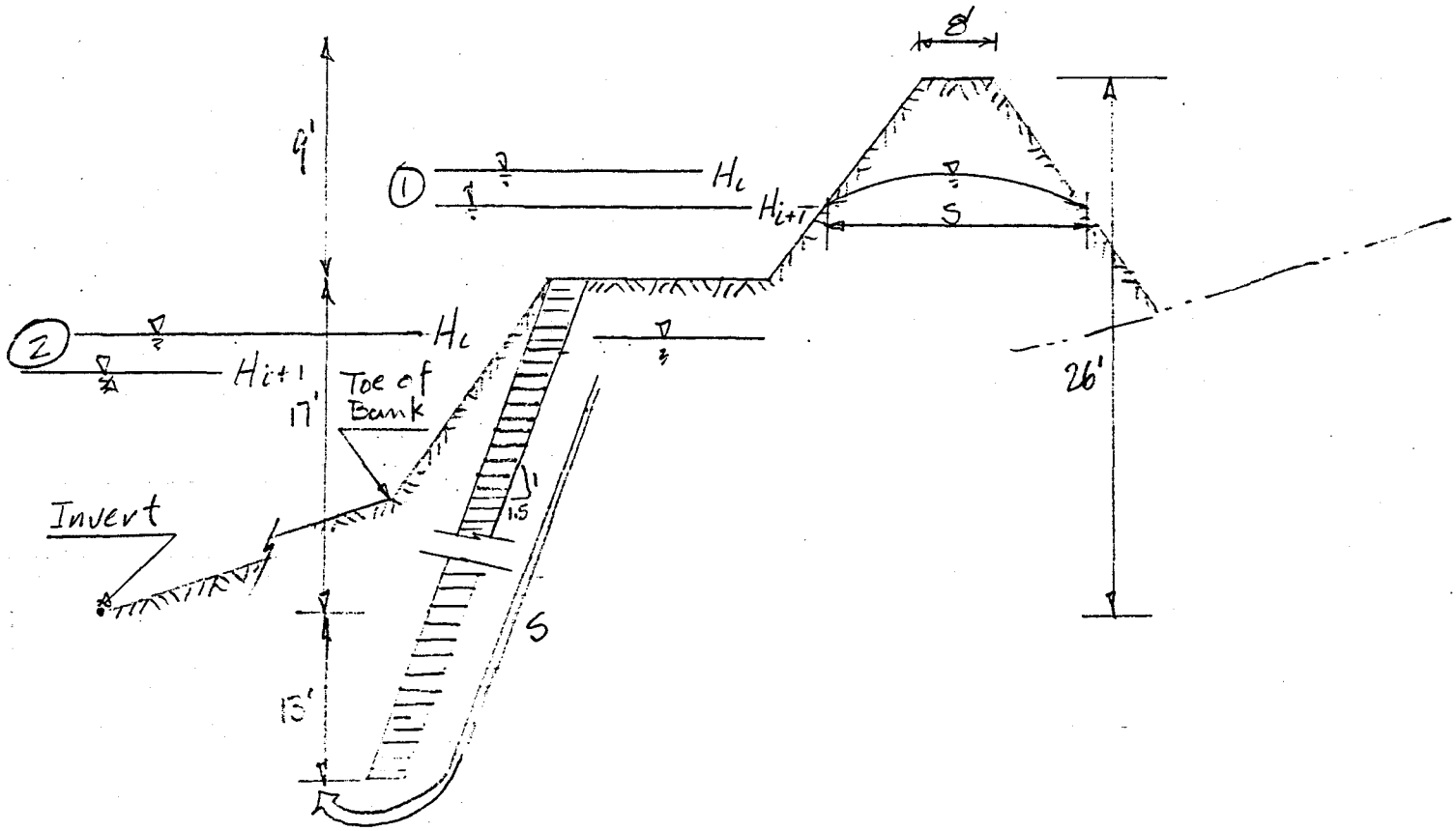

① Case I: Water surface is above hard bank and drains laterally through levee banks.

② Case II: Water surface is below hard bank and drains to channel from beneith the hard bank.

For case I : $S = [3(26 - y_{i+1}) + 4]2 = 164 - 6y_{i+1}$

For case II : $S = 1.8y_i + 8 + 13 = 21 + 1.8y_i$

Draw Down Rate

Case I: This is similar to a condition of parallel drains where

$$S^2 = \frac{4kH}{v}(2d+H)$$

solving for unit inflow rate

$$v = \frac{4kH}{S^2}(2d+H)$$

For a large depth to aquiclude the effective depth to a barrier layer, d, is about

$$d = \frac{S}{12.5} + 3$$

Case II: The unit inflow rate is simply

$$v = ki$$

where $i = \Delta h / S$

where S is the path length through the embankment.

Conductivity

For coarse sand $k = 0.052$ cm/s
For gravel $k = 0.403$ cm/s

The outer envelope for Salt River bed material which describes the finest gradation of material gives $D_{50} = 10$ mm
This is medium to fine gravel use

$$k = \sqrt{0.052 \times 0.403} = 0.14 \text{ cm/sec}$$

CRSS	PROJECT: Rio Salado	JOB NO. R101N	NO. 3
	CLIENT: Tempe	DESIGNED BY GKC / DATE 8/24/90	
CRS SIRRINE	SUBJECT: Bank Stability	CHECKED BY JFM / DATE 8/29/90	OF 3

Spread Sheet Equations

2/7 $$y = \left[\frac{q\,n}{1.49\,S^{1/2}}\right]^{0.6}$$

where $n = 0.035$; $S = 0.105\%$

$$y = 0.82\,q^{0.6}$$

3/7 $$\Delta h = y_{i+1} - y_i$$

4/7 if $\Delta h < 0$

if $y_{i+1} > 17$

$S = 164 - 6\,y_{i+1}$

if $y_{i+1} < 17$

$S = 21. + 1.8\,y_i$

else no computation

5/7 if $\Delta h < 0$

if $y_{i+1} > 17$

$V = 4k\,H\,(1/6.25 + S + 6/S^2 + H)$

if $y_{i+1} < 17$

$V = k\,\Delta h / S$

6/7 $$\Delta h_d = V * (6 * 3600)$$

$$= 21{,}600\,V$$

7/7 if $\Delta h < h_d$ then "drains" else "pools"

23-Aug-90 DATE

Job R401N Date
Calc by: GRC 8/24/90
Checked by: JFM 8/29/90
Dwg Chk:

Salt River Flood Hydrographs
Location: Granite Reef Dam

Discharge Hydrograph:

Time	50-yr	100-yr	200-yr	300-yr	500-yr
0	0.0	0.0	0.0	0.0	0.0
6	6540.0	10085.0	14090.0	14514.4	15015.0
12	13080.0	20170.0	28180.0	29028.8	30030.0
18	13530.0	20670.0	28960.0	29582.4	30310.0
24	14720.0	21630.0	30610.0	31441.8	32420.0
30	11530.0	24110.0	33230.0	34062.8	35040.0
36	10610.0	36000.0	37970.0	38740.4	39640.0
42	13040.0	37000.0	39260.0	39838.5	40510.0
48	13040.0	40870.0	43350.0	43970.3	44690.0
54	24780.0	41610.0	45140.0	45742.1	46440.0
60	28140.0	43170.0	46420.0	47003.8	47680.0
66	27020.0	46060.0	48580.0	51231.9	54440.0
72	42960.0	66880.0	70790.0	74650.4	79320.0
78	76320.0	101060.0	109820.0	114787.7	120740.0
84	112760.0	142850.0	158560.0	165853.8	174600.0
90	150000.0	174000.0	193000.0	203500.2	216200.0
96	106700.0	122240.0	133610.0	227000.0	274000.0
102	96610.0	104490.0	113520.0	150000.0	248630.0
108	101910.0	108170.0	116280.0	128500.0	215540.0
114	84710.0	88210.0	122490.0	137689.4	157380.0
120	67420.0	70650.0	100190.0	110313.6	123140.0
126	49490.0	52440.0	81930.0	88292.5	96170.0
132	42990.0	45610.0	72060.0	77366.4	83910.0
138	42990.0	44590.0	69480.0	73193.3	77680.0
144	40940.0	44260.0	65920.0	68302.2	71130.0
150	40940.0	44030.0	64300.0	65955.7	67900.0
156	39550.0	42370.0	46830.0	47257.1	47750.0
162	39550.0	41300.0	44880.0	45394.7	45990.0
168	38470.0	41300.0	41010.0	41712.5	42530.0
174	38060.0	40270.0	40120.0	41227.3	42530.0
180	38060.0	40270.0	40120.0	41227.3	42530.0
186	38060.0	40110.0	39650.0	40969.0	42530.0
192	38060.0	38820.0	39650.0	40393.4	41260.0
198	37290.0	37520.0	39370.0	39709.0	40100.0
204	37290.0	37520.0	39370.0	39709.0	40100.0
210	37290.0	37220.0	39370.0	39709.0	40100.0
216	36580.0	36440.0	39370.0	39709.0	40100.0
222	38580.0	36440.0	38240.0	39042.4	39980.0
228	36030.0	36120.0	37870.0	38338.1	38880.0
234	35180.0	35550.0	37870.0	38338.1	38880.0
240	35180.0	35550.0	37870.0	38338.1	38880.0

23-Aug-90 DATE

Calc by: GKC 8/24/90
Checked by: JPM 8/29/90
Dwg Chk:

Salt River Flood Hydrographs
Location: Granite Reef Dam

Stage Hydrograph:

Time	50-yr	100-yr	200-yr	300-yr	500-yr
0	0.0	0.0	0.0	0.0	0.0
6	2.5	3.3	4.0	4.1	4.2
12	3.9	5.0	6.1	6.2	6.3
18	3.9	5.1	6.2	6.3	6.4
24	4.1	5.2	6.4	6.5	6.6
30	3.6	5.6	6.7	6.8	7.0
36	3.4	7.1	7.3	7.4	7.5
42	3.8	7.2	7.5	7.5	7.6
48	3.8	7.6	7.9	8.0	8.1
54	5.7	7.7	8.1	8.2	8.2
60	6.1	7.9	8.2	8.3	8.4
66	6.0	8.2	8.5	8.7	9.1
72	7.9	10.3	10.6	11.0	11.4
78	11.1	13.2	13.8	14.2	14.6
84	14.0	16.2	17.2	17.7	18.3
90	16.7	18.2	19.4	20.0	20.8
96	13.6	14.7	15.5	21.4	23.9
102	12.8	13.4	14.1	16.7	22.6
108	13.2	13.7	14.3	15.2	20.7
114	11.8	12.1	14.8	15.8	17.2
120	10.3	10.6	13.1	13.9	14.8
126	8.6	8.9	11.6	12.1	12.8
132	7.9	8.2	10.7	11.2	11.8
138	7.9	8.0	10.5	10.8	11.2
144	7.6	8.0	10.2	10.4	10.7
150	7.6	8.0	10.0	10.2	10.4
156	7.5	7.8	8.3	8.3	8.4
162	7.5	7.7	8.1	8.1	8.2
168	7.4	7.7	7.7	7.7	7.8
174	7.3	7.6	7.6	7.7	7.8
180	7.3	7.6	7.6	7.7	7.8
186	7.3	7.6	7.5	7.7	7.8
192	7.3	7.4	7.5	7.6	7.7
198	7.2	7.3	7.5	7.5	7.6
204	7.2	7.3	7.5	7.5	7.6
210	7.2	7.2	7.5	7.5	7.6
216	7.1	7.1	7.5	7.5	7.6
222	7.4	7.1	7.3	7.4	7.5
228	7.1	7.1	7.3	7.4	7.4
234	7.0	7.0	7.3	7.4	7.4
240	7.0	7.0	7.3	7.4	7.4

where $\text{stage} = \left(\frac{Qn}{1.49 S^{1/2}}\right)^{0.6}$

$n = 0.035$

$S = 0.105\%$

23-Aug-90 DATE

Job: 1210/N Date
Computed by: GLC 8/24/90
Checked by: JFM 8/29/90
Dwg Chk:

Salt River Flood Hydrographs
Location: Granite Reef Dam

Stage Fall (ft):

Time	50-yr	100-yr	200-yr	300-yr	500-yr
0	--	--	--	--	--
6	NA	NA	NA	NA	NA
12	NA	NA	NA	NA	NA
18	NA	NA	NA	NA	NA
24	NA	NA	NA	NA	NA
30	0.6	NA	NA	NA	NA
36	0.2	NA	NA	NA	NA
42	NA	NA	NA	NA	NA
48	NA	NA	NA	NA	NA
54	NA	NA	NA	NA	NA
60	NA	NA	NA	NA	NA
66	0.1	NA	NA	NA	NA
72	NA	NA	NA	NA	NA
78	NA	NA	NA	NA	NA
84	NA	NA	NA	NA	NA
90	NA	NA	NA	NA	NA
96	3.1	3.5	3.8	NA	NA
102	0.8	1.3	1.4	4.7	1.4
108	NA	NA	NA	1.5	1.9
114	1.4	1.6	NA	NA	3.6
120	1.5	1.5	1.7	2.0	2.3
126	1.7	1.7	1.5	1.7	2.0
132	0.7	0.7	0.9	0.9	1.0
138	NA	0.1	0.2	0.4	0.5
144	0.2	0.0	0.3	0.4	0.6
150	NA	0.0	0.2	0.2	0.3
156	0.2	0.2	1.7	1.8	2.0
162	NA	0.1	0.2	0.2	0.2
168	0.1	NA	0.4	0.4	0.4
174	0.0	0.1	0.1	0.1	NA
180	NA	NA	NA	NA	NA
186	NA	0.0	0.1	0.0	NA
192	NA	0.1	NA	0.1	0.1
198	0.1	0.1	0.0	0.1	0.1
204	NA	NA	NA	NA	NA
210	NA	0.0	NA	NA	NA
216	0.1	0.1	NA	NA	NA
222	NA	NA	0.1	0.1	0.0
228	0.3	0.0	0.0	0.1	0.1
234	0.1	0.1	NA	NA	NA
240	NA	NA	NA	NA	NA

where fall = $stage_{i+1} - stage_i$

if fall < 0 then na (not computed)

24-Aug-90 DATE

Salt River Flood Hydrographs
Location: Granite Reef Dam

Job: 12101N
Date: 8/24/90
Made by: GKC
Checked by: JFM 8/29/90
Dwg Chk:

Drainage Path Length:

Time	50-yr	100-yr	200-yr	300-yr	500-yr
0	--	--	--	--	--
6	NA	NA	NA	NA	NA
12	NA	NA	NA	NA	NA
18	NA	NA	NA	NA	NA
24	NA	NA	NA	NA	NA
30	28.5	NA	NA	NA	NA
36	27.4	NA	NA	NA	NA
42	NA	NA	NA	NA	NA
48	NA	NA	NA	NA	NA
54	NA	NA	NA	NA	NA
60	NA	NA	NA	NA	NA
66	32.0	NA	NA	NA	NA
72	NA	NA	NA	NA	NA
78	NA	NA	NA	NA	NA
84	NA	NA	NA	NA	NA
90	NA	NA	NA	NA	NA
96	51.0	53.8	55.9	NA	NA
102	45.5	47.5	49.0	59.5	28.6
108	NA	NA	NA	51.0	39.7
114	44.8	45.7	NA	NA	61.1
120	42.3	42.8	47.6	49.5	51.9
126	39.6	40.1	44.5	45.9	47.7
132	36.4	37.0	41.9	42.8	44.0
138	NA	35.7	40.3	41.2	42.2
144	35.2	35.5	39.9	40.5	41.2
150	NA	35.4	39.3	39.7	40.2
156	34.8	35.4	39.0	39.3	39.6
162	NA	35.1	35.9	36.0	36.1
168	34.5	NA	35.5	35.6	35.8
174	34.3	34.8	34.8	34.9	NA
180	NA	NA	NA	NA	NA
186	NA	34.6	34.6	34.8	NA
192	NA	34.6	NA	34.8	35.1
198	34.2	34.3	34.5	34.7	34.8
204	NA	NA	NA	NA	NA
210	NA	34.1	NA	NA	NA
216	34.0	34.0	NA	NA	NA
222	NA	NA	34.4	34.5	34.6
228	34.3	33.8	34.2	34.4	34.6
234	33.7	33.8	NA	NA	NA
240	NA	NA	NA	NA	NA

24-Aug-90 DATE

Job: 410IN
Calc by: GKC Date 8/24/90
Checked by: JFM 8/29/90
Dwg Chk.

Draw Down Rate (ft/sec):

Time	50-yr	100-yr	200-yr	300-yr	500-yr
0	--	--	--	--	--
6	NA	NA	NA	NA	NA
12	NA	NA	NA	NA	NA
18	NA	NA	NA	NA	NA
24	NA	NA	NA	NA	NA
30	-9.12E-05	NA	NA	NA	NA
36	-2.92E-05	NA	NA	NA	NA
42	NA	NA	NA	NA	NA
48	NA	NA	NA	NA	NA
54	NA	NA	NA	NA	NA
60	NA	NA	NA	NA	NA
66	-2.11E-05	NA	NA	NA	NA
72	NA	NA	NA	NA	NA
78	NA	NA	NA	NA	NA
84	NA	NA	NA	NA	NA
90	NA	NA	NA	NA	NA
96	-2.78E-04	-2.97E-04	-3.16E-04	NA	NA
102	-7.96E-05	-1.28E-04	-1.36E-04	-3.64E-04	-3.41E-02
108	NA	NA	NA	-1.33E-04	-6.35E-02
114	-1.43E-04	-1.59E-04	NA	NA	-2.34E-01
120	-1.65E-04	-1.62E-04	-1.62E-04	-1.83E-04	-2.08E-04
126	-2.03E-04	-1.99E-04	-1.54E-04	-1.74E-04	-1.97E-04
132	-8.77E-05	-8.87E-05	-9.44E-05	-9.93E-05	-1.05E-04
138	NA	-1.42E-05	-2.65E-05	-4.10E-05	-5.80E-05
144	-2.98E-05	-4.64E-06	-3.76E-05	-5.00E-05	-6.45E-05
150	NA	-3.25E-06	-1.76E-05	-2.50E-05	-3.35E-05
156	-2.08E-05	-2.37E-05	-2.05E-04	-2.16E-04	-2.29E-04
162	NA	-1.56E-05	-2.67E-05	-2.54E-05	-2.38E-05
168	-1.65E-05	NA	-5.51E-05	-5.20E-05	-4.84E-05
174	-6.34E-06	-1.53E-05	-1.32E-05	-7.13E-06	NA
180	NA	NA	NA	NA	NA
186	NA	-2.40E-06	-7.08E-06	-3.82E-06	NA
192	NA	-1.95E-05	NA	-8.56E-06	-1.85E-05
198	-1.20E-05	-2.01E-05	-4.24E-06	-1.03E-05	-1.72E-05
204	NA	NA	NA	NA	NA
210	NA	-4.71E-06	NA	NA	NA
216	-1.12E-05	-1.23E-05	NA	NA	NA
222	NA	NA	-1.73E-05	-1.01E-05	-1.80E-06
228	-3.98E-05	-5.12E-06	-5.74E-06	-1.08E-05	-1.67E-05
234	-1.37E-05	-9.18E-06	NA	NA	NA
240	NA	NA	NA	NA	NA

24-Aug-90 DATE

Job: 2101N Date
Calc by: GKC 8/24/90
Checked by: JFM 8/29/90
Dwg Calc:

Draw Down Fall (ft):

Time	50-yr	100-yr	200-yr	300-yr	500-yr
0	--	--	--	--	--
6	NA	NA	NA	NA	NA
12	NA	NA	NA	NA	NA
18	NA	NA	NA	NA	NA
24	NA	NA	NA	NA	NA
30	-2.0	NA	NA	NA	NA
36	-0.6	NA	NA	NA	NA
42	NA	NA	NA	NA	NA
48	NA	NA	NA	NA	NA
54	NA	NA	NA	NA	NA
60	NA	NA	NA	NA	NA
66	-0.5	NA	NA	NA	NA
72	NA	NA	NA	NA	NA
78	NA	NA	NA	NA	NA
84	NA	NA	NA	NA	NA
90	NA	NA	NA	NA	NA
96	-6.0	-6.4	-6.8	NA	NA
102	-1.7	-2.8	-2.9	-7.9	-736.5
108	NA	NA	NA	-2.9	-1371.1
114	-3.1	-3.4	NA	NA	-5049.4
120	-3.6	-3.5	-3.5	-4.0	-4.5
126	-4.4	-4.3	-3.3	-3.7	-4.3
132	-1.9	-1.9	-2.0	-2.1	-2.3
138	NA	-0.3	-0.6	-0.9	-1.3
144	-0.6	-0.1	-0.8	-1.1	-1.4
150	NA	-0.1	-0.4	-0.5	-0.7
156	-0.4	-0.5	-4.4	-4.7	-4.9
162	NA	-0.3	-0.6	-0.5	-0.5
168	-0.4	NA	-1.2	-1.1	-1.0
174	-0.1	-0.3	-0.3	-0.2	NA
180	NA	NA	NA	NA	NA
186	NA	-0.1	-0.2	-0.1	NA
192	NA	-0.4	NA	-0.2	-0.4
198	-0.3	-0.4	-0.1	-0.2	-0.4
204	NA	NA	NA	NA	NA
210	NA	-0.1	NA	NA	NA
216	-0.2	-0.3	NA	NA	NA
222	NA	NA	-0.4	-0.2	-0.0
228	-0.9	-0.1	-0.1	-0.2	-0.4
234	-0.3	-0.2	NA	NA	NA
240	NA	NA	NA	NA	NA

24-Aug-90 DATE

Job: 140/N Date
Calc by: GKC 8/24/90
Checked by: JEM 8/29/90
Dwg Chk:

Draw Down Check:

Time	50-yr	100-yr	200-yr	300-yr	500-yr
0					
6	NA	NA	NA	NA	NA
12	NA	NA	NA	NA	NA
18	NA	NA	NA	NA	NA
24	NA	NA	NA	NA	NA
30	drains	NA	NA	NA	NA
36	drains	NA	NA	NA	NA
42	NA	NA	NA	NA	NA
48	NA	NA	NA	NA	NA
54	NA	NA	NA	NA	NA
60	NA	NA	NA	NA	NA
66	drains	NA	NA	NA	NA
72	NA	NA	NA	NA	NA
78	NA	NA	NA	NA	NA
84	NA	NA	NA	NA	NA
90	NA	NA	NA	NA	NA
96	drains	drains	drains	NA	NA
102	drains	drains	drains	drains	drains
108	NA	NA	NA	drains	drains
114	drains	drains	NA	NA	drains
120	drains	drains	drains	drains	drains
126	drains	drains	drains	drains	drains
132	drains	drains	drains	drains	drains
138	NA	drains	drains	drains	drains
144	drains	drains	drains	drains	drains
150	NA	drains	drains	drains	drains
156	drains	drains	drains	drains	drains
162	NA	drains	drains	drains	drains
168	drains	NA	drains	drains	drains
174	drains	drains	drains	drains	NA
180	NA	NA	NA	NA	NA
186	NA	drains	drains	drains	NA
192	NA	drains	NA	drains	drains
198	drains	drains	drains	drains	drains
204	NA	NA	NA	NA	NA
210	NA	drains	NA	NA	NA
216	drains	drains	NA	NA	NA
222	NA	NA	drains	drains	drains
228	drains	drains	drains	drains	drains
234	drains	drains	NA	NA	NA
240	NA	NA	NA	NA	NA

24-Aug-90 DATE

Worst Case
Use lowest possible
conductivity

5/7

R101N
GKC 8/29/90
Checked by: JFM 8/29/90
Dwg Chk:

Draw Down Rate (ft/sec):

Time	50-yr	100-yr	200-yr	300-yr	500-yr
0	--	--	--	--	--
6	NA	NA	NA	NA	NA
12	NA	NA	NA	NA	NA
18	NA	NA	NA	NA	NA
24	NA	NA	NA	NA	NA
30	-3.37E-05	NA	NA	NA	NA
36	-1.08E-05	NA	NA	NA	NA
42	NA	NA	NA	NA	NA
48	NA	NA	NA	NA	NA
54	NA	NA	NA	NA	NA
60	NA	NA	NA	NA	NA
66	-7.81E-06	NA	NA	NA	NA
72	NA	NA	NA	NA	NA
78	NA	NA	NA	NA	NA
84	NA	NA	NA	NA	NA
90	NA	NA	NA	NA	NA
96	-1.03E-04	-1.10E-04	-1.17E-04	NA	NA
102	-2.94E-05	-4.74E-05	-5.03E-05	-1.34E-04	-1.26E-02
108	NA	NA	NA	-4.92E-05	-2.35E-02
114	-5.27E-05	-5.88E-05	NA	NA	-8.64E-02
120	-6.09E-05	-6.00E-05	-5.99E-05	-6.77E-05	-7.69E-05
126	-7.50E-05	-7.37E-05	-5.68E-05	-6.41E-05	-7.28E-05
132	-3.24E-05	-3.28E-05	-3.49E-05	-3.67E-05	-3.88E-05
138	NA	-5.24E-06	-9.79E-06	-1.51E-05	-2.14E-05
144	-1.10E-05	-1.71E-06	-1.39E-05	-1.85E-05	-2.38E-05
150	NA	-1.20E-06	-6.52E-06	-9.24E-06	-1.24E-05
156	-7.67E-06	-8.75E-06	-7.56E-05	-7.98E-05	-8.46E-05
162	NA	-5.77E-06	-9.88E-06	-9.38E-06	-8.80E-06
168	-6.08E-06	NA	-2.04E-05	-1.92E-05	-1.79E-05
174	-2.34E-06	-5.64E-06	-4.89E-06	-2.63E-06	NA
180	NA	NA	NA	NA	NA
186	NA	-8.87E-07	-2.62E-06	-1.41E-06	NA
192	NA	-7.21E-06	NA	-3.16E-06	-6.83E-06
198	-4.44E-06	-7.42E-06	-1.57E-06	-3.80E-06	-6.36E-06
204	NA	NA	NA	NA	NA
210	NA	-1.74E-06	NA	NA	NA
216	-4.14E-06	-4.56E-06	NA	NA	NA
222	NA	NA	-6.39E-06	-3.74E-06	-6.67E-07
228	-1.47E-05	-1.89E-06	-2.12E-06	-3.99E-06	-6.15E-06
234	-5.07E-06	-3.39E-06	NA	NA	NA
240	NA	NA	NA	NA	NA

for K = 0.05 cm/sec
for [illegible]

24-Aug-90 DATE

Job: 12110 | Date
Calc by: GKC | 8/24/90
Checked by: JFM | 9/29/90
Dwg Chk:

Draw Down Fall (ft):

Time	50-yr	100-yr	200-yr	300-yr	500-yr
0	--	--	--	--	--
6	NA	NA	NA	NA	NA
12	NA	NA	NA	NA	NA
18	NA	NA	NA	NA	NA
24	NA	NA	NA	NA	NA
30	-0.7	NA	NA	NA	NA
36	-0.2	NA	NA	NA	NA
42	NA	NA	NA	NA	NA
48	NA	NA	NA	NA	NA
54	NA	NA	NA	NA	NA
60	NA	NA	NA	NA	NA
66	-0.2	NA	NA	NA	NA
72	NA	NA	NA	NA	NA
78	NA	NA	NA	NA	NA
84	NA	NA	NA	NA	NA
90	NA	NA	NA	NA	NA
96	-2.2	-2.4 1.1	-2.5 1.3	NA	NA
102	-0.6	-1.0	-1.1 0.3	-2.9 1.8	-272.2
108	NA	NA	NA	-1.1 0.4	-506.7
114	-1.1	-1.3	NA	NA	-1866.1
120	-1.3	-1.3	-1.3 0.4	-1.5 0.5	-1.7 0.6
126	-1.6	-1.6	-1.2 0.3	-1.4 0.3	-1.6 0.4
132	-0.7	-0.7	-0.8 0.1	-0.8 0.1	-0.8 0.2
138	NA	-0.1	-0.2	-0.3 0.1	-0.5 0
144	-0.2	-0.0	-0.3	-0.4	-0.5 0.3
150	NA	-0.0	-0.1	-0.2	-0.3 0.
156	-0.2	-0.2	-1.6	-1.7	-1.8 0.2
162	NA	-0.1	-0.2	-0.2	-0.2
168	-0.1	NA	-0.4	-0.4	-0.4
174	-0.1	-0.1	-0.1	-0.1	NA
180	NA	NA	NA	NA	NA
186	NA	-0.0	-0.1	-0.0	NA
192	NA	-0.2	NA	-0.1	-0.1
198	-0.1	-0.2	-0.0	-0.1	-0.1
204	NA	NA	NA	NA	NA
210	NA	-0.0	NA	NA	NA
216	-0.1	-0.1	NA	NA	NA
222	NA	NA	-0.1	-0.1	-0.0
228	-0.3	-0.0	-0.0	-0.1	-0.1
234	-0.1	-0.1	NA	NA	NA
240	NA	NA	NA	NA	NA
max dh	1.7	2.0	2.4	3.2	1.7

24-Aug-90 DATE

Job: 1210/N
Date
Calc by: GKC 8/29/90
Checked by: JFM 8/29/90
Dwg Chk:

Draw Down Check:

Time	50-yr	100-yr	200-yr	300-yr	500-yr
0					
6	NA	NA	NA	NA	NA
12	NA	NA	NA	NA	NA
18	NA	NA	NA	NA	NA
24	NA	NA	NA	NA	NA
30	drains	NA	NA	NA	NA
36	drains	NA	NA	NA	NA
42	NA	NA	NA	NA	NA
48	NA	NA	NA	NA	NA
54	NA	NA	NA	NA	NA
60	NA	NA	NA	NA	NA
66	drains	NA	NA	NA	NA
72	NA	NA	NA	NA	NA
78	NA	NA	NA	NA	NA
84	NA	NA	NA	NA	NA
90	NA	NA	NA	NA	NA
96	pools	pools	pools	NA	NA
102	pools	pools	pools	pools	drains
108	NA	NA	NA	pools	drains
114	pools	pools	NA	NA	drains
120	pools	pools	pools	pools	pools
126	pools	pools	pools	pools	pools
132	drains	pools	pools	pools	pools
138	NA	drains	pools	pools	pools
144	drains	drains	pools	pools	pools
150	NA	drains	pools	pools	pools
156	drains	drains	pools	pools	pools
162	NA	drains	drains	drains	drains
168	drains	NA	drains	drains	drains
174	drains	drains	drains	drains	NA
180	NA	NA	NA	NA	NA
186	NA	drains	drains	drains	NA
192	NA	drains	NA	drains	drains
198	drains	drains	drains	drains	drains
204	NA	NA	NA	NA	NA
210	NA	drains	NA	NA	NA
216	drains	drains	NA	NA	NA
222	NA	NA	drains	drains	drains
228	drains	drains	drains	drains	drains
234	drains	drains	NA	NA	NA
240	NA	NA	NA	NA	NA

5th edition
ly and Pollution Control,

n
dition
te
esign, 5th edition
n
edition
sign and Behavior,

edition
oduction to Hydrology,

esign, 3rd edition

Soil Engineering

Fourth Edition

Merlin G. Spangler • Richard L. Handy
Iowa State University

HARPER & ROW, PUBLISHERS, New York
Cambridge, Philadelphia, San Francisco,
London, Mexico City, São Paulo, Sydney
1817

proximately inverse to D^2. Then the flow per unit area is

$$nq = \frac{Q}{A} = C_1 D^2 i \frac{\gamma_w}{\eta} = ki$$

or

$$k = C_1 D^2 \frac{\gamma_w}{\eta} \tag{11.6a}$$

where C_1 is a constant and k is the coefficient of hydraulic conductivity of the soil.

Since the capillary diameter D is not known and is not readily measured, empirical investigations have for the most part attempted to relate fluid flow characteristics of soils to their particle size and void ratio. An empirical equation by Hazen (*4*) is

$$k = C_2 D_{10}^2 \tag{11.7}$$

where D_{10} is the soil effective size, $C_2 = 100$, and k is in centimeters per second. This of course does not account for variability in void ratio or influences from other grain sizes, and is unreliable for prediction. Other studies have shown that as an approximation with particle size constant,

$$k = C_3 \left(\frac{e^3}{1 + e}\right) \tag{11.8}$$

where C_3 is a constant and e is the void ratio. Thus the coefficient of hydraulic conductivity increases roughly as the square of both the particle size and the void ratio.

Typical ranges of k values are indicated in Table 11.1. Metric units in wide use are centimeters per second, and because of the extended range of values, the coefficient frequently is given in terms of the exponent, a permeability coefficient of "minus 1" signifying 10^{-1} cm/s. There are numerous types of problems in connection with engineering projects which require knowledge of the hydraulic conductivity characteristics of the soil involved, such as computations of seepage through earth dams and levees and losses from irrigation ditches. Estimates of pumpage-capacity requirements for dewatering cofferdams or excavations below a water table are familiar examples of such problems. The spacing and depth of underdrains for lowering the water table under a road or runway in order to improve subgrade stability

TABLE 11.1 Hydraulic Conductivity Values

Range	k (cm/s)	Soils
Very high	$>10^0$ (>1.0)	Clean gravel
High	10^{-1}–10^0	Gravel, clean coarse sand
Medium	10^{-3}–10^{-1}	Graded sand, fine sand
Low	10^{-5}–10^{-3}	Silty sand, silt
Very low	10^{-7}–10^{-5}	Dense silt, clayey silt
Practically impermeable	$<10^{-7}$	Clay, silty clay

or for draining waterlogg
which the conductivity of
of settlement of a structu
rate at which water move

Several methods of n
able. Some methods invo
turbed samples, and other
of the soil in place below a
tages that are important in
most feasible and approp
chosen. For example, in s
would be appropriate to m
to be used which would be
structure. On the other h
appropriate in the case of
In every case, the objecti
soil in its natural or norm
possible. Furthermore, so
spect to flow; that is, the c
differ considerably from
exists, it may be necessar

11.8. LABORATORY TE
APPARATUS

A laboratory test that is p
cient of hydraulic conduc
which the hydraulic gradi
A typical arrangement of

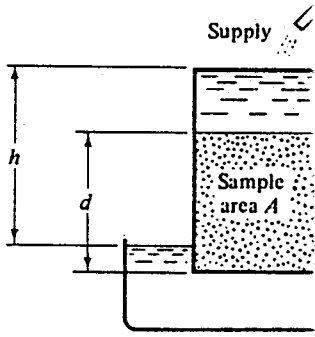

Gr

Figure 11.4 Constant-hea
conductivity of coarse-grai

GEOHYDROLOGY

ROGER J. M. De WIEST

Freeman Fellow ASCE
Professor of Hydraulics and Hydrology
Princeton University

John Wiley & Sons, Inc., New York · London · Sydney

solution, namely, $x_1 = 1, x_2 = -1$,

$$f^2\gamma/\mu \tag{4.18}$$

K, such as effective permeability [5], epage coefficient [7], and hydraulic luctivity, in view of the analogy with gaining widespread use. It is used ısic permeability for

$$Cd^2 \tag{4.19}$$

ıracteristic of the medium alone, and

$$k\frac{\gamma}{\mu} \tag{4.18*}$$

.he dimensions of a velocity. It may consistent units, generally different l mechanics, petroleum engineering, to continent (Europe, the United .er-gram-second units are universally this country are carried out with K in

ɔetroleum engineering, has been pre- permeability k because of an incom- eed, for horizontal flow, Darcy's law

$$-(k/\mu)(dp/dl)$$

ı absolute value,

$$\frac{u(Q/A)}{dp/dl} \tag{4.20}$$

defined as

$$\frac{\text{ipoise} \times 1\ \text{cm}^3/\text{sec}}{1\ \text{cm}^2}$$

ıtmosphere/cm

ıf $[L]^2$. It may be expressed as such by

ɔoise = 0.01 dyne sec/cm²

2 × 10⁶ dynes/cm²

Table 4.1 Average Values of K and k

Soil Class	K cm/sec	K darcys	K gpd/ft²
Gravel	1——10^2	10^3——10^5	10^4——10^6
Clean sands (good aquifers)	10^{-3}——1	1——10^3	10——10^4
Clayey sands, fine sands (poor aquifers)	10^{-6}——10^{-3}	10^{-3}——1	10^{-2}——10

This leads to

$$1 \text{ darcy} = 0.987 \times 10^{-8}\ \text{cm}^2$$

or

$$1 \text{ darcy} = 1.062 \times 10^{-11}\ \text{ft}^2$$

Because Eq. 4.18 may be written as

$$K = kg/\nu \tag{4.21}$$

in which $\nu = \mu/\rho$ is the kinematic viscosity of the fluid, and ρ is the density of the fluid. It is easy to convert from darcy units to gpd/ft². The knowledge of the temperature of the fluid makes it possible to read ν from tables of physical properties of fluids [11]. The U.S. Geological Survey uses the meinzer unit to measure the hydraulic conductivity, honoring the late Dr. O. E. Meinzer. The meinzer unit is defined as the flow of water in gallons per day through a cross-sectional area of 1 square foot under a hydraulic gradient of one at a temperature of 60°F.

A second coefficient, the field coefficient of hydraulic conductivity, is also used by the Water Resources Division of the Geological Survey.

Table 4.2 Representative Values for k and K

Geologic Classification		Darcys (k)	Meinzers (K)
Argillaceous limestone	2% porosity	1.0×10^{-4}	1.80×10^{-3}
Limestone	16% porosity	1.4×10^{-1}	2.50
Sandstone, silty	12% porosity	2.6×10^{-3}	4.74×10^{-2}
Sandstone, coarse	12% porosity	1.1	19.90
Sandstone	29% porosity	2.4	43.60
Very fine sand	well sorted	9.9	18.00×10
Medium sand	very well sorted	2.6×10^2	4.60×10^3
Coarse sand	very well sorted	3.1×10^3	5.80×10^4
Gravel	very well sorted	4.3×10^4	7.88×10^5
Montmorillonite clay		10^{-5}	10^{-4}
Kaolinite clay		10^{-3}	10^{-2}

For the clays only the order of magnitude is indicated.

K ≐ hydraulic conductivity

k ≐ permeability

GROUND-WATER HYDROLOGY AND HYDRAULICS

by

David B. McWhorter

and

Daniel K. Sunada

Water Resources Publications
P. O. Box 303
Fort Collins, Colorado 80522 USA

Table 3-1 contains values of hydraulic conductivity to water for several different porous materials. It is striking to note that the hydraulic conductivity of materials with which the hydrologist must deal range over 9 orders of magnitude.

Table 3-1. Hydraulic Conductivity of Porous Materials (Adapted from Morris & Johnson, 1967)

Material	No. of Analyses	Range cm/s	Arithmetic Mean cm/s
Igneous Rocks			
Weathered granite	7	$(3.3 - 52) \times 10^{-4}$	1.65×10^{-3}
Weathered gabbro	4	$(0.5 - 3.8) \times 10^{-4}$	1.89×10^{-4}
Basalt	93	$(0.2 - 4250) \times 10^{-8}$	9.45×10^{-6}
Sedimentary Materials			
Sandstone (fine)	20	$(0.5 - 2270) \times 10^{-6}$	3.31×10^{-4}
Siltstone	8	$(0.1 - 142) \times 10^{-8}$	1.9×10^{-7}
Sand (fine)	159	$(0.2 - 189) \times 10^{-4}$	2.88×10^{-3}
Sand (med.)	255	$(0.9 - 567) \times 10^{-4}$	1.42×10^{-2}
Sand (coarse)	158	$(0.9 - 6610) \times 10^{-4}$	5.20×10^{-2}
Gravel	40	$(0.3 - 31.2) \times 10^{-1}$	4.03×10^{-1}
Silt	39	$(0.09 - 7090) \times 10^{-7}$	2.83×10^{-5}
Clay	19	$(0.1 - 47) \times 10^{-8}$	9×10^{-8}
Metamorphic Rocks			
Schist	17	$(0.002 - 1130) \times 10^{-6}$	1.9×10^{-4}

3.2 NON-HOMOGENIETY AND ANISOTROPY

Non-homogeneous Aquifers

An aquifer is said to be *homogeneous* with respect to hydraulic conductivity if K is not a function of the space coordinates. If $K = K(x,y,z)$ the aquifer is *non-homogeneous*. Rarely is an aquifer actually homogeneous, but the practical and financial difficulties of establishing the function $K = K(x,y,z)$ in the field are substantial. Flow nets, a method of analysis to be discussed in Chapter IV, is one method by which non-homogeniety can be deduced quantitatively. Nevertheless, the hydrologist is often obliged to assign a constant value to K in full realization that doing so is only an approximation.

No modification of Darcy's Law is required for flow in non-homogeneous aquifers. Both Eqs. 3-10 and 3-20 apply because

K = K(x,y,z) remains a scalar
with, but opposite in sense t
head just as in the case of c
homogeniety that must be deal
of the aquifer. The hydrauli
within individual stratum but
Such an aquifer can be regard
with discontinuities in K at
layers.

Treatment of block-wise
plished by defining a piezome
which K is constant. For exa
and b in which the hydraulic
the piezometric heads are h_a
the two regions is denoted by
velocity $\vec{q}_a$ at any point on C

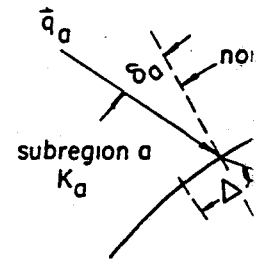

Figure 3-8. Refraction of th
between differer

q_{an} normal to C and one tange
depth into the paper through
is the coordinate measured ta
can be similarly decomposed.
ment $\Delta\ell$ must be the same reg
used to calculate it, the co
$\vec{q}_a$ and $\vec{q}_b$ normal to C must b

$$q_a \cos \delta_a$$

The fact that $(p/\rho g)_a =$
means that $h_a = h_b$ on C. Th

CRS SIRRINE	PROJECT: Rio Salado Channel	JOB NO. R101N	NO. 1
	CLIENT: Tempe	DESIGNED BY GKC / DATE 6/24/90	OF 5
	SUBJECT: Bank Stability	CHECKED BY JV / DATE 8/29/90	

Overturning Condition

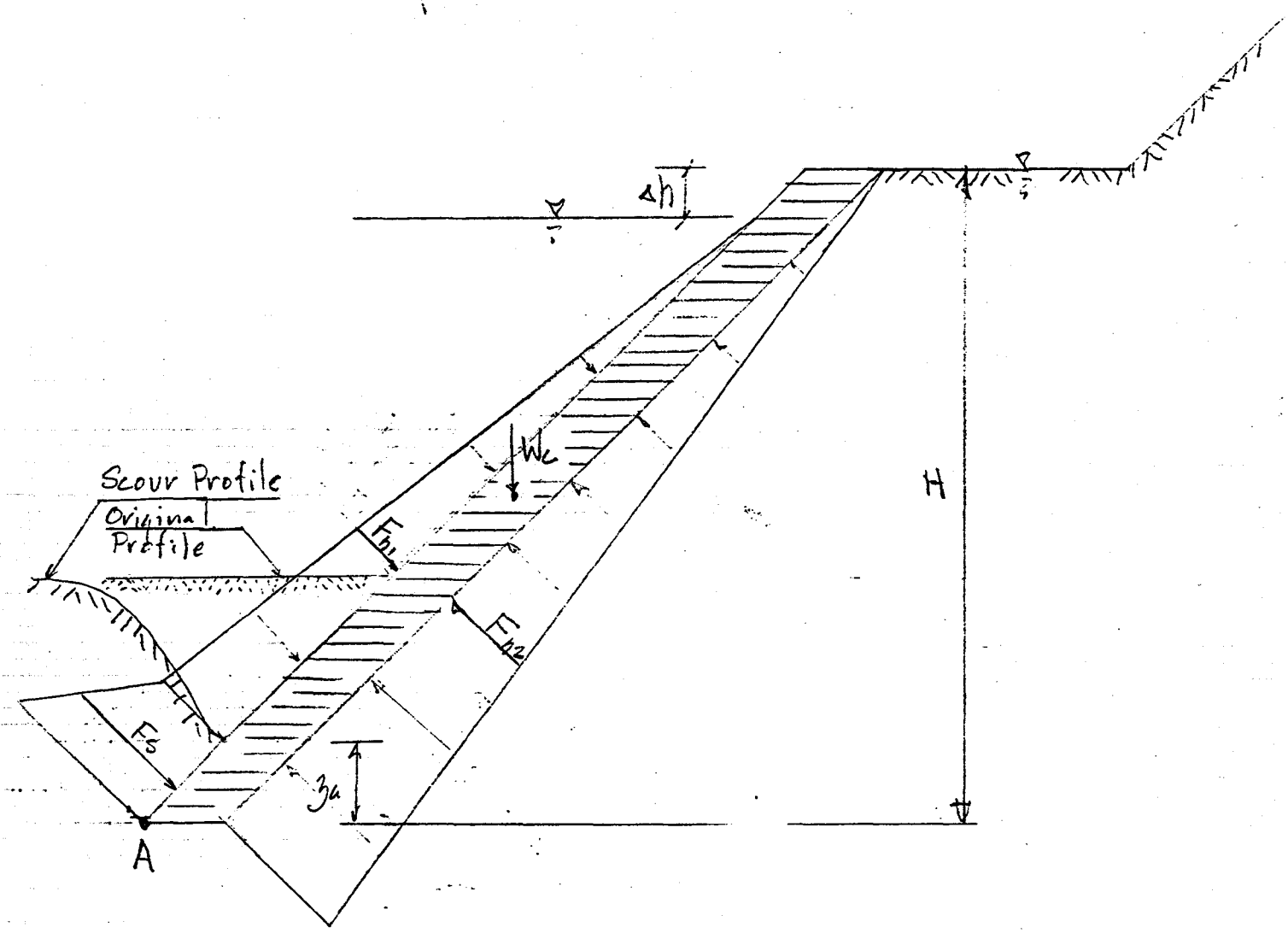

where H : bank protection height
Δh : drawdown depth
y_a : toe embedment depth
F_{h1} : hydrostatic force at center of pressure
F_{h2} : uplift force at center of pressure
F_s : soil pressure force at center of pressure

Forces:

Pressure (acting normal to submerge surface

$$F_{h1} = \gamma_w (H - \Delta h - z_a)^2 / (2 \cos\theta)$$

$$F_{h2} = \gamma_w H^2 / (2 \cos\theta)$$

$$F_s = \tfrac{1}{2} (2\gamma_w (H - \Delta h - z_a) + U_s z_a) z_a / \cos\theta$$

$$= \gamma_w (H - \Delta h + (\tfrac{1}{2} U_s / \gamma_w - 1) z_a) z_a / \cos\theta$$

Body (acting vertically)

$$W_{cy} = 8 (H * \gamma_c - (H - \tfrac{1}{2} \Delta h) \gamma_w)$$

Component Forces

$$F_{h1x} = \gamma_w (H - \Delta h - z_a)^2 / 2$$

$$F_{h1y} = \gamma_w (H - \Delta h - z_a)^2 \tan\theta / 2$$

$$F_{h2x} = \gamma_w H^2 / 2$$

$$F_{h2y} = \gamma_w H^2 \tan\theta / 2$$

$$F_{sx} = \gamma_w (H - \Delta h + (\tfrac{1}{2} U_s / \gamma_w - 1) z_a) z_a$$

$$F_{sx} = \gamma_w (H - \Delta h + (\tfrac{1}{2} U_s / \gamma_w - 1) z_a) z_a \tan\theta$$

Moments

$$d_{h1x} = z_a + \tfrac{1}{3}(H - \Delta h - z_a)$$

$$d_{h1y} = d_{h1x} \tan\theta$$

$$d_{h2x} = \tfrac{1}{3} H$$

$$d_{h2y} = B + d_{h2x} \tan\theta$$

$$d_{sx} = \tfrac{1}{3} z_a \left[\frac{(\gamma_w (H - \Delta h) + U_s z_a) + 2\gamma_w (H - \Delta h)}{(\gamma_w (H - \Delta h) + U_s z_a) + \gamma_w (H - \Delta h)} \right]$$

$$d_{sy} = d_{sx} \tan\theta$$

$$d_{cy} = 4 + \tfrac{3}{2} \tfrac{1}{2} H = 4 + \tfrac{3}{4} H$$

For: $H = 30'$ $H_o = 17'$

$y_a = \frac{1}{3}(H - H_o) = \frac{1}{3}(30-17) = 4.3'$

$\Delta h = 3.2'$

$\gamma_w = 62.4$ pcf

$\gamma_c = 150$ pcf

$U_s = 180$ pcf

$F_{h1x} = 62.4(30 - 3.2 - 4.3)^2/2 = 15.8$ kips

$F_{h1y} = 1.5(F_{h1x}) = 23.7$ kips

$F_{h2x} = 62.4(30)^2/2 = 28.1$ kips

$F_{h2y} = 1.5(F_{h2x}) = 42.1$ kips

$F_{sx} = 62.4(30 - 3.2 + (\frac{1}{2}(180/62.4 - 1)4.3)4.3$
$= 7.7$ kips

$F_{sy} = 1.5(F_{sx}) = 11.6$ kips

$W_c = 8((150-62)(30 - \frac{1}{2}3.2) + \frac{1}{2}(50 \times 3.2)) = 21.9$ k

$d_{h1x} = 4.3 + \frac{1}{3}(30 - 3.2 - 4.3) = 11.8'$

$d_{h1y} = 1.5\, d_{h1x} = 17.7'$

$d_{h2x} = \frac{1}{3}(30) = 10.0'$

$d_{h2y} = 8 + 1.5\, d_{h2x} = 23.0'$

$$d_{sx} = \frac{1}{3}4.3\left[\frac{62.4(30-3.2) + 180 \times 4.3 + 2 \times 62.4(30-3.2)}{62.4(30-3.2) + 180 \times 4.3 + 62.4(30-3.2)}\right]$$

$= 2.0$

$d_{sy} = 1.5\, d_{sx} = 3.0$

CRSS	PROJECT: Rio Salado Channel	JOB NO. R101N	NO. 5
CRS SIRRINE	CLIENT: Tempe	DESIGNED BY GLC, DATE 8/29/90	OF 5
	SUBJECT: Bank Stability	CHECKED BY JV, DATE 8/29/90	

$$SF = \frac{(F_{h1x} d_{h1x} + F_{h2x} d_{h2x} + F_{sx} d_{sx} + F_{sy} d_{sy} + W_{cy} d_{cy})}{(F_{h2x} d_{h2x} + F_{h2y} d_{h2y})}$$

$$= \frac{(15.8(11.8) + 23.7(17.7) + 7.7(2.9) + 11.6(3.0) + 21.9(26.}{(28.1(10.0) + 42.1(23.0))}$$

$$= \frac{1236.5}{1249.3}$$

$$= 0.99$$

<u>For Sliding</u>:

$$SF = \frac{F_{h1x} + F_{sx} + \tan\phi\, W_c}{F_{h2x}}$$

$$= \frac{28.1 + 7.7 + 0.7(21.9)}{28.1}$$

$$= 1.82$$

Rio Salado Channel
City of Tempe
Bank Stability Computation

Proj: RIOIN
Dgn: GKC 29-Aug-90
Chk: √V 8/29/90

H =	30.0 '	Uw =	62.0 pcf	Z =	1.50
dh =	3.2 '	Uc =	150.0 pcf	Az =	33.7 degrees
za =	4.3 '	Us =	180.0 pcf	Tc =	8.0

Force:	kips	Moment:	ft
Fh1x	15.7	d1x	11.8
Fh1y	23.5	d1y	17.7
Fh2x	27.9	d2x	10.0
Fh2y	41.9	d2y	23.0
Fsx	7.7	dsx	2.0
Fsy	11.5	dsy	3.0
Wc	21.9	dc	26.5

Factor of Safety:
Overturning:
SF = 0.99

Sliding:
SF = 1.82

Rio Salado Channel
City of Tempe
Bank Stability Computation

Proj: RIOIN
Dgn: GKC 29-Aug-90
Chk:

H =	30.0 '	Uw =	62.0 pcf	Z =	1.25
dh =	3.2 '	Uc =	150.0 pcf	Az =	38.7 degrees
za =	4.3 '	Us =	180.0 pcf	Tc =	8.0

Force:	kips	Moment:	ft
Fh1x	15.7	d1x	11.8
Fh1y	19.6	d1y	14.8
Fh2x	27.9	d2x	10.0
Fh2y	34.9	d2y	20.5
Fsx	7.7	dsx	2.0
Fsy	9.6	dsy	2.5
Wc	21.9	dc	26.5

Factor of Safety:
Overturning:
SF = 1.10

Sliding:
SF = 1.82

Rio Salado Channel
City of Tempe
Bank Stability Computation

Proj: RIDIN
Dgn: GKC 29-Aug-90
Chk: JV 8/29/90

H =	25.0 '	Uw =	62.0 pcf	Z =	1.50
dh =	3.2 '	Uc =	150.0 pcf	Az =	33.7 degrees
za =	4.3 '	Us =	180.0 pcf	Tc =	8.0

Force:	kips	Moment:	ft
Fh1x	9.5	d1x	10.1
Fh1y	14.2	d1y	15.2
Fh2x	19.4	d2x	8.3
Fh2y	29.1	d2y	20.5
Fsx	6.3	dsx	2.0
Fsy	9.5	dsy	3.0
Wc	18.4	dc	22.8

Factor of Safety:
Overturning:
SF = 1.02

Sliding:
SF = 1.99

Rio Salado Channel
City of Tempe
Bank Stability Computation

Proj: RIDIN
Dgn: GKC 29-Aug-90
Chk:

H =	25.0 '	Uw =	62.0 pcf	Z =	1.25
dh =	3.2 '	Uc =	150.0 pcf	Az =	38.7 degrees
za =	4.3 '	Us =	180.0 pcf	Tc =	8.0

Force:	kips	Moment:	ft
Fh1x	9.5	d1x	10.1
Fh1y	11.9	d1y	12.7
Fh2x	19.4	d2x	8.3
Fh2y	24.2	d2y	18.4
Fsx	6.3	dsx	2.0
Fsy	7.9	dsy	2.5
Wc	18.4	dc	22.8

Factor of Safety:
Overturning:
SF = 1.15

Sliding:
SF = 1.99

Rio Salado Channel
City of Tempe
Bank Stability Computation

Proj: RIOIN
Dgn: GKC 29-Aug-90
Chk: ✓ 8/29/90

H =	20.0 '	Uw =	62.0 pcf	Z =	1.50
dh =	3.2 '	Uc =	150.0 pcf	Az =	33.7 degrees
za =	4.3 '	Us =	180.0 pcf	Tc =	8.0

Force:	kips	Moment:	ft
Fh1x	4.8	d1x	8.5
Fh1y	7.3	d1y	12.7
Fh2x	12.4	d2x	6.7
Fh2y	18.6	d2y	18.0
Fsx	5.0	dsx	2.0
Fsy	7.5	dsy	2.9
Wc	14.9	dc	19.0

Factor of Safety:
Overturning:
SF = 1.07

Sliding:
SF = 2.24

Rio Salado Channel
City of Tempe
Bank Stability Computation

Proj: RIOIN
Dgn: GKC 29-Aug-90
Chk:

H =	20.0 '	Uw =	62.0 pcf	Z =	1.25
dh =	3.2 '	Uc =	150.0 pcf	Az =	38.7 degrees
za =	4.3 '	Us =	180.0 pcf	Tc =	8.0

Force:	kips	Moment:	ft
Fh1x	4.8	d1x	8.5
Fh1y	6.1	d1y	10.6
Fh2x	12.4	d2x	6.7
Fh2y	15.5	d2y	16.3
Fsx	5.0	dsx	2.0
Fsy	6.2	dsy	2.4
Wc	14.9	dc	19.0

Factor of Safety:
Overturning:
SF = 1.23

Sliding:
SF = 2.24

Rio Salado Channel
City of Tempe
Bank Stability Computation

Proj: RIDIN
Dgn: GKC 29-Aug-90
Chk: VV 8/29/90

H =	30.0 '	Uw =	62.0 pcf
dh =	0.0 '	Uc =	150.0 pcf
za =	0.0 '	Us =	180.0 pcf

Z = 1.50
Az = 33.7 degrees
Tc = 8.0

Force:	kips	Moment:	ft
Fh1x	27.9	d1x	10.0
Fh1y	41.9	d1y	15.0
Fh2x	27.9	d2x	10.0
Fh2y	41.9	d2y	23.0
Fsx	0.0	dsx	0.0
Fsy	0.0	dsy	0.0
Wc	21.1	dc	26.5

Factor of Safety:
Overturning:
SF = 1.18

Sliding:
SF = 1.53

Rio Salado Channel
City of Tempe
Bank Stability Computation

Proj: RIDIN
Dgn: GKC 29-Aug-90
Chk:

H =	30.0 '	Uw =	62.0 pcf
dh =	0.0 '	Uc =	150.0 pcf
za =	0.0 '	Us =	180.0 pcf

Z = 1.25
Az = 38.7 degrees
Tc = 8.0

Force:	kips	Moment:	ft
Fh1x	27.9	d1x	10.0
Fh1y	34.9	d1y	12.5
Fh2x	27.9	d2x	10.0
Fh2y	34.9	d2y	20.5
Fsx	0.0	dsx	0.0
Fsy	0.0	dsy	0.0
Wc	21.1	dc	26.5

Factor of Safety:
Overturning:
SF = 1.28

Sliding:
SF = 1.53

Rio Salado Channel
City of Tempe
Bank Stability Computation

Proj: RIOIN
Dgn: GKC 29-Aug-90
Chk: ✓ 8/29/90

H =	25.0 '	Uw =	62.0 pcf	Z =	1.50
dh =	0.0 '	Uc =	150.0 pcf	Az =	33.7 degrees
za =	0.0 '	Us =	180.0 pcf	Tc =	8.0

Force:	kips	Moment:	ft
Fh1x	19.4	d1x	8.3
Fh1y	29.1	d1y	12.5
Fh2x	19.4	d2x	8.3
Fh2y	29.1	d2y	20.5
Fsx	0.0	dsx	0.0
Fsy	0.0	dsy	0.0
Wc	17.6	dc	22.8

Factor of Safety:
Overturning:
SF = 1.22

Sliding:
SF = 1.64

Rio Salado Channel
City of Tempe
Bank Stability Computation

Proj: RIOIN
Dgn: GKC 29-Aug-90
Chk:

H =	25.0 '	Uw =	62.0 pcf	Z =	1.25
dh =	0.0 '	Uc =	150.0 pcf	Az =	38.7 degrees
za =	0.0 '	Us =	180.0 pcf	Tc =	8.0

Force:	kips	Moment:	ft
Fh1x	19.4	d1x	8.3
Fh1y	24.2	d1y	10.4
Fh2x	19.4	d2x	8.3
Fh2y	24.2	d2y	18.4
Fsx	0.0	dsx	0.0
Fsy	0.0	dsy	0.0
Wc	17.6	dc	22.8

Factor of Safety:
Overturning:
SF = 1.34

Sliding:
SF = 1.64

Rio Salado Channel
City of Tempe
Bank Stability Computation

Proj: RIOIN
Dgn: GKC 29-Aug-90
Chk: JV 8/29/90

H =	20.0 '	Uw =	62.0 pcf
dh =	0.0 '	Uc =	150.0 pcf
za =	0.0 '	Us =	180.0 pcf

Z = 1.50
Az = 33.7 degrees
Tc = 8.0

Force:	kips	Moment:	ft
Fh1x	12.4	d1x	6.7
Fh1y	18.6	d1y	10.0
Fh2x	12.4	d2x	6.7
Fh2y	18.6	d2y	18.0
Fsx	0.0	dsx	0.0
Fsy	0.0	dsy	0.0
Wc	14.1	dc	19.0

Factor of Safety:
Overturning:
SF = 1.28

Sliding:
SF = 1.79

Rio Salado Channel
City of Tempe
Bank Stability Computation

Proj: RIOIN
Dgn: GKC 29-Aug-90
Chk:

H =	20.0 '	Uw =	62.0 pcf
dh =	0.0 '	Uc =	150.0 pcf
za =	0.0 '	Us =	180.0 pcf

Z = 1.25
Az = 38.7 degrees
Tc = 8.0

Force:	kips	Moment:	ft
Fh1x	12.4	d1x	6.7
Fh1y	15.5	d1y	8.3
Fh2x	12.4	d2x	6.7
Fh2y	15.5	d2y	16.3
Fsx	0.0	dsx	0.0
Fsy	0.0	dsy	0.0
Wc	14.1	dc	19.0

Factor of Safety:
Overturning:
SF = 1.43

Sliding:
SF = 1.79

APPENDIX B5:

Levee Settlement Analysis

THOMAS-HARTIG & ASSOCIATES, INC.

Geotechnical, Materials Testing, and Environmental Consultants

7031 West Oakland Street • Chandler, Arizona 85226

Chandler: Phone (602) 961-1169, Fax (602) 940-0952 • Phoenix: Phone (602) 437-5450

Tom W. Thomas, P.E.
James R. Morrow
John P. Boyd, P.E.
Kenneth L. Ricker, P.E.

Charles H. Atkinson, P.E.
James M. Willson, P.E.
Steven A. Haire, P.E.

Judith A. McBee
Dale V. Bedenkop, P.E.
John C. Patton
Kenneth D. Walsh, P.E.

City of Tempe
Engineering Department
P.O. Box 5002
31 East 5th Street
Tempe, Arizona 85281

19 March 1992

Attention: Jim Bond

Project: Rio Salado Improvements
Salt River Channelization
Hohokam (University - Sky Harbor)
Tempe, Arizona

Project No. 89-0919
Supplement No. 1

In accordance with your request, this firm has estimated settlements for typical levee sections along the project. Settlements were estimated using an elastic solution for determining displacement under a strip load on the surface of an elastic layer overlying a rigid base. A modulus of elasticity of 20,000 psi was assumed for the Salt River deposits beneath the levees based upon settlement data for caisson foundations obtained during the Papago Load Test. The caissons were embedded in materials similar to the natural deposits beneath the levees. The settlement estimates ranged between approximately 0.3 and 1.2 inches for the seven sections evaluated. Due to the granular nature of the Salt River deposits above the bedrock level, settlements would have occurred rapidly (elastically) after levee construction and should now be essentially complete.

Settlement calculations and levee cross sections are attached for the seven typical locations evaluated. Please call if we may be of further assistance.

Respectfully submitted,

THOMAS-HARTIG & ASSOCIATES, INC.

By: _____ Reviewed by: _____
John P. Boyd, P.E. Kenneth L. Ricker, P.E.

/dh
Copies to: Addressee (3).

Thomas-Hartig & Assoc, Inc.
2720 S. Hardy Drive
Tempe, Arizona 85282

PROJECT NO. 89-0919 COMPUTED BY JPB DATE 3-18-92
SUBJECT Settlements CHECKED BY DATE

Sta. 125 +00 N. Dike

Use $\gamma \approx 145$ pcf total
Use $\mu = 0.30$
Use $E = 20{,}000$ psi (Range 14,000 to 31,500 psi at $\delta = 1''$ Papago load test).

Rock depth = 60' = h

At Sta 125 use 2 equiv rectangles

① $(151+87)\times 1/2 = 119'$ @ $14' \times 0.145 = 2.03$ ksf

② $(80+14)\times 1/2 = 47'$ @ $11' \times 0.145 = 1.60$ ksf

where: $I\Delta z ① = 1.1$ and $I\Delta z ② = 0.93$

$$\delta = \frac{4\, q① \cdot h \cdot I\Delta z①}{\pi E} + \frac{4\, q② \cdot h \cdot I\Delta z②}{\pi E}$$

$$= \frac{4h}{\pi E}\left(q① \cdot I\Delta z① + q② \cdot I\Delta z②\right)$$

$$= \frac{4 \times 60}{\pi \cdot 20{,}000 \times 144}\left(2030 \cdot 1.1 + 1600 \cdot 0.93\right) = 0.099'$$

→ $\delta = \underline{1.2''}$ ±

Sta. 144 +00 So. Dike

Use $h = 60'$

① 53' @ $14' \times 0.145 = 2.03$ ksf

$I\Delta z① = 1.0$

$$\delta = \frac{4 \times 60}{\pi \cdot 20{,}000 \times 144}\left(2030 \cdot 1.0\right) = 0.054'$$

→ $\delta = \underline{0.6''}$ ±

Thomas-Hartig & Assoc, Inc.
2720 S. Hardy Drive
Tempe, Arizona 85282

PROJECT NO. 89 0919 COMPUTED BY NB DATE 3-18-92
SUBJECT Settlements CHECKED BY DATE

Sta. 154+00 No. Dike
Use $h = 60$ feet
① 33' @ 7' × 0.145 = 1.02 ksf

$I\Delta z$ ① = 0.87

$$\delta = \frac{4 \times 60}{\pi \times 20{,}000 \times 144}(1020 \times 0.87) = 0.024'$$

→ $\delta = \underline{0.3''} \pm$

Sta. 160+00 South Dike
Use $h = 60$ ft.

① (136 + 86) × ½ = 111' @ 11' × 0.145 = 1.60 ksf
② (78 + 14) × ½ = 46 @ 11' @ 0.145 = 1.60 ksf

$I\Delta z$ ① = 1.1 $I\Delta z$ ② = 0.93

$$\delta = \frac{4 \cdot 60}{\pi \cdot 20{,}000 \cdot 144}(1600 \times 1.1 + 1600 \times 0.93) = 0.086'$$

→ $\delta = \underline{1.0''} \pm$

Sta. 191+00 No. Dike
① 48' @ 16' × 0.145 = 2.32 ksf.
Use $h = 50'$
$I\Delta z$ ① = 1.02

$$\delta = \frac{4 \cdot 50}{\pi \cdot 20{,}000 \cdot 144}(2320 \times 1.02) = 0.052'$$

→ $\delta = \underline{0.6''} \pm$

Thomas-Hartig & Assoc, Inc.
2720 S. Hardy Drive
Tempe, Arizona 85282

PROJECT NO. 89-0919 COMPUTED BY JPB DATE 3-18-92
SUBJECT Settlements CHECKED BY _____ DATE _____

Sta 230 So. Dike
Use $h = 50'$

① $(144 + 85) \times \frac{1}{2} = 115$ @ $12' \times 0.145 = 1.74$ ksf

② $(77 + 11) \times \frac{1}{2} = 44$ @ $11' \times 0.145 = 1.60$ ksf

$I\Delta z_{①} = 1.12$ $I\Delta z_{②} = 1.0$

$$\delta = \frac{4 \cdot 50}{\pi \cdot 20{,}000 \cdot 144} (1740 \times 1.12 + 1600 \times 1.0) = 0.078'$$

→ $\delta = \underline{\underline{0.9'' \pm}}$

Sta. 248+00 N Dike
Use $h = 40'$

① $(122 + 85) \times \frac{1}{2} = 104$ @ $10' \times 0.145 = 1.45$ ksf

② $(77 + 11) \times \frac{1}{2} = 44$ @ $11' \times 0.145 = 1.60$ ksf

$I\Delta z_{①} = 1.1$ $I\Delta z_{②} = 1.08$

$$\delta = \frac{4 \cdot 40}{\pi \times 20{,}000 \cdot 144} (1450 \times 1.1 + 1600 \times 1.08) = 0.059'$$

→ $\delta = \underline{\underline{0.7'' \pm}}$

N

Horiz: 1" = 20'
Vert: 1" = 20'

Sta 125+00 N Dike

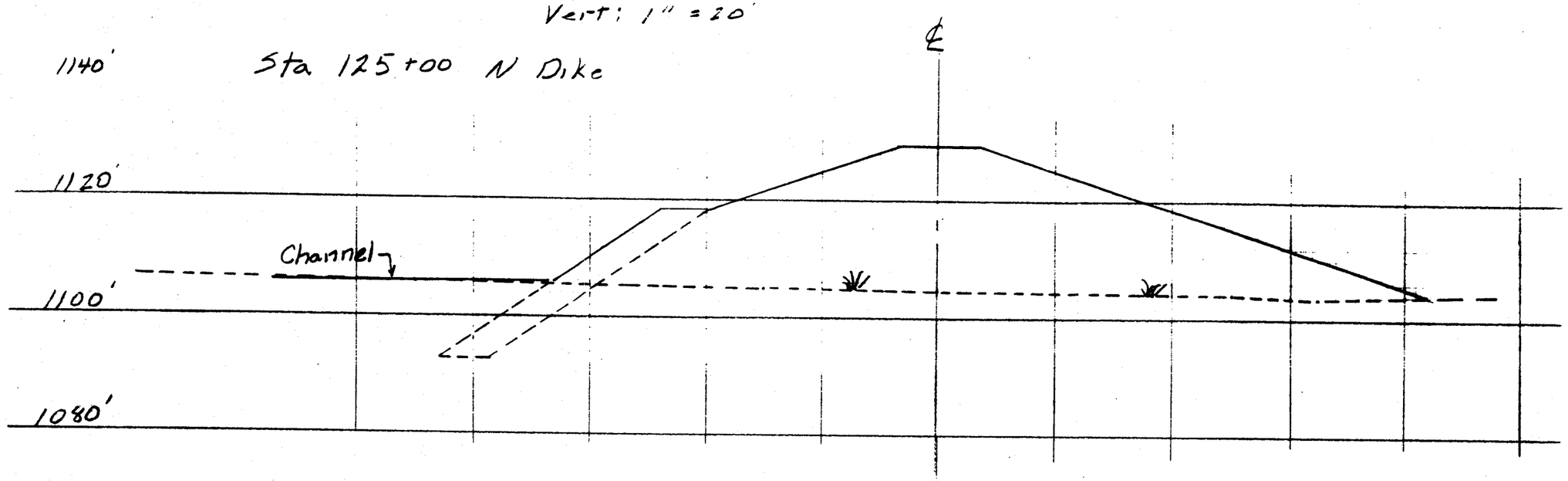

Sta 144+00 S. Dike

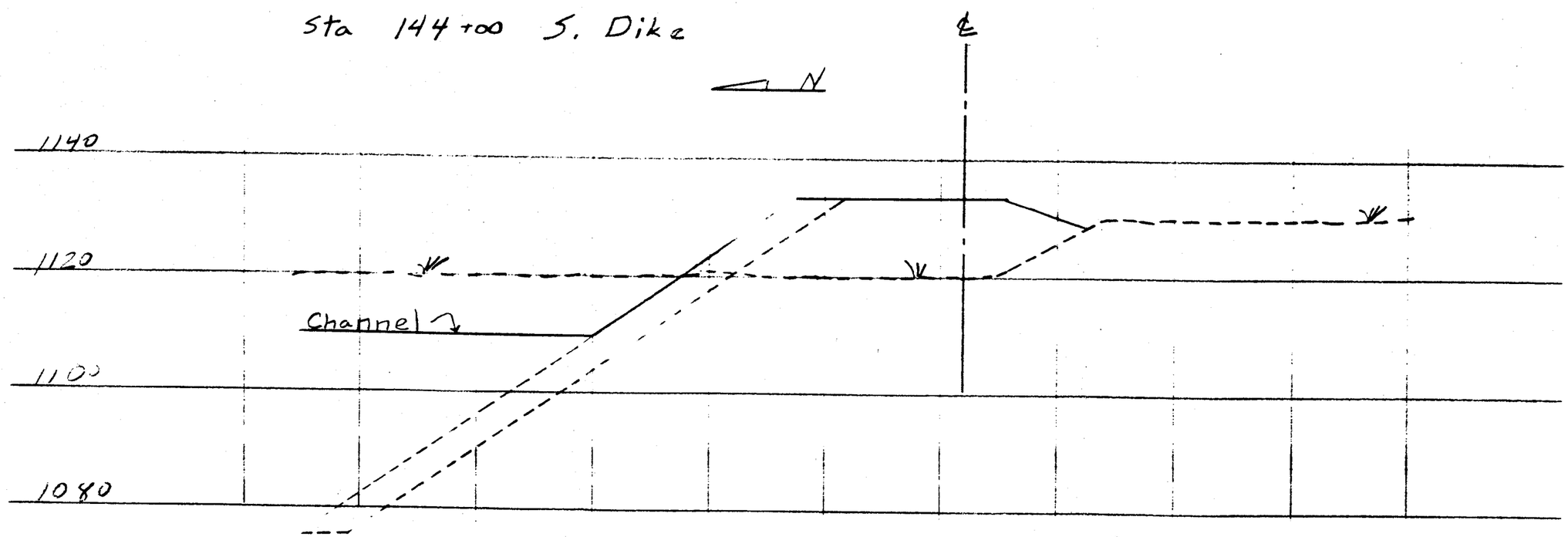

Sta. 154+00 N Dike

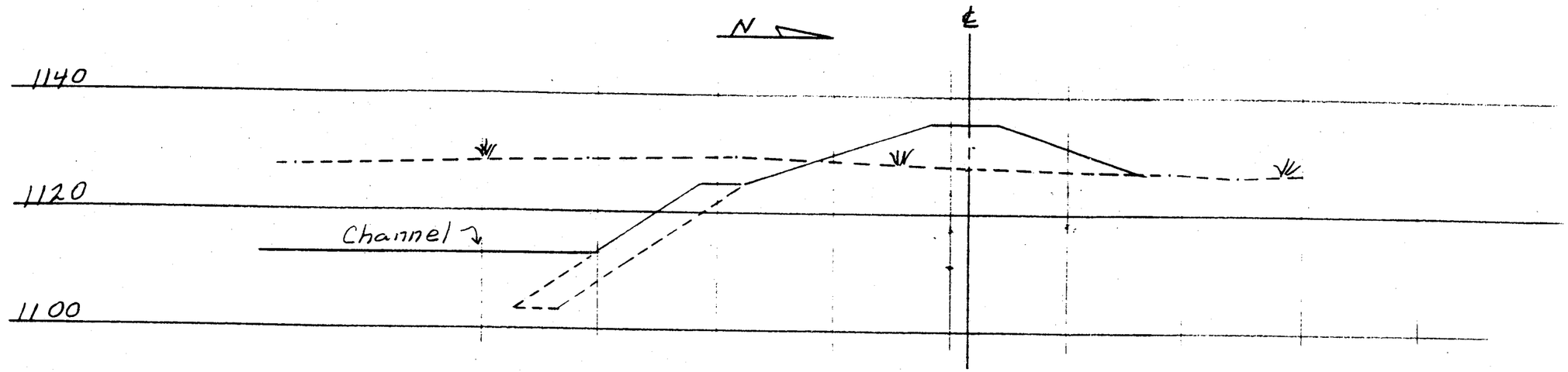

Sta. -160+00 S Dike

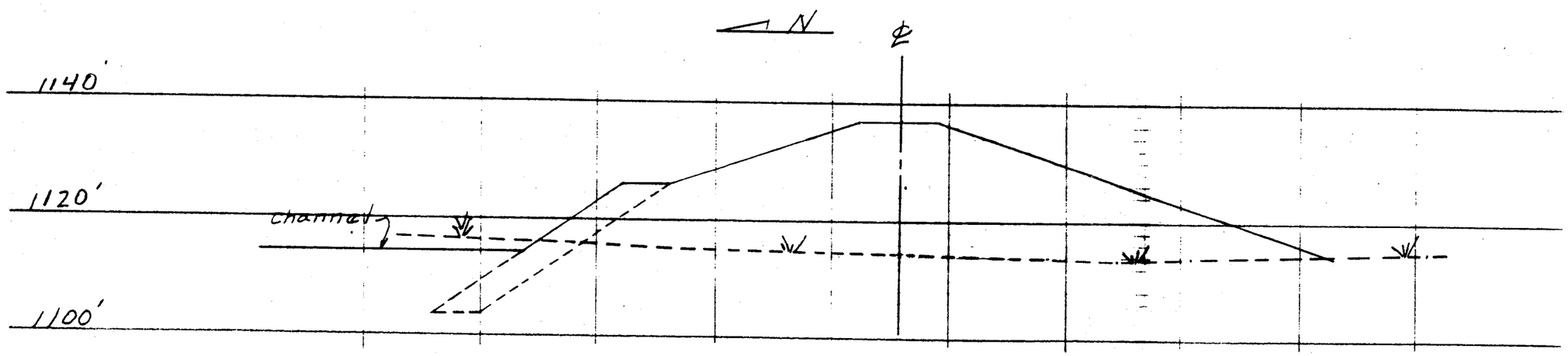

Sta. 191 +00 N Dike

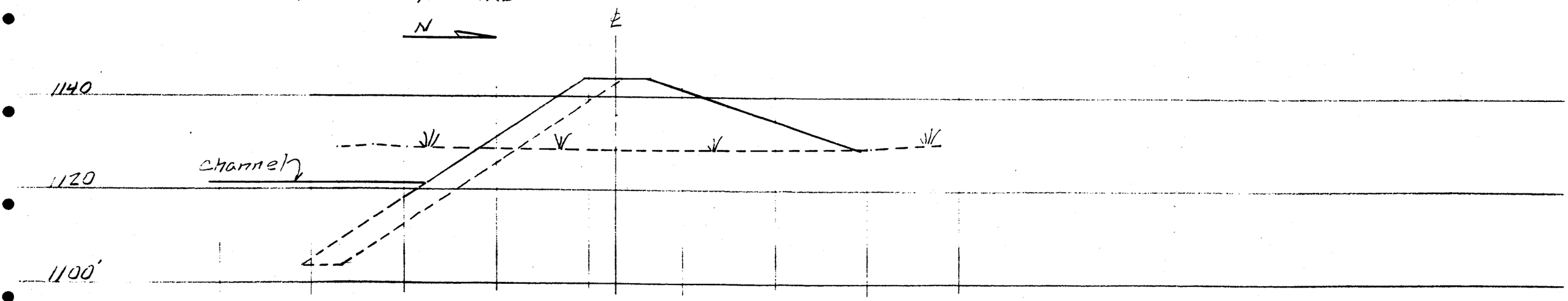

Sta. 230+00 S Dike

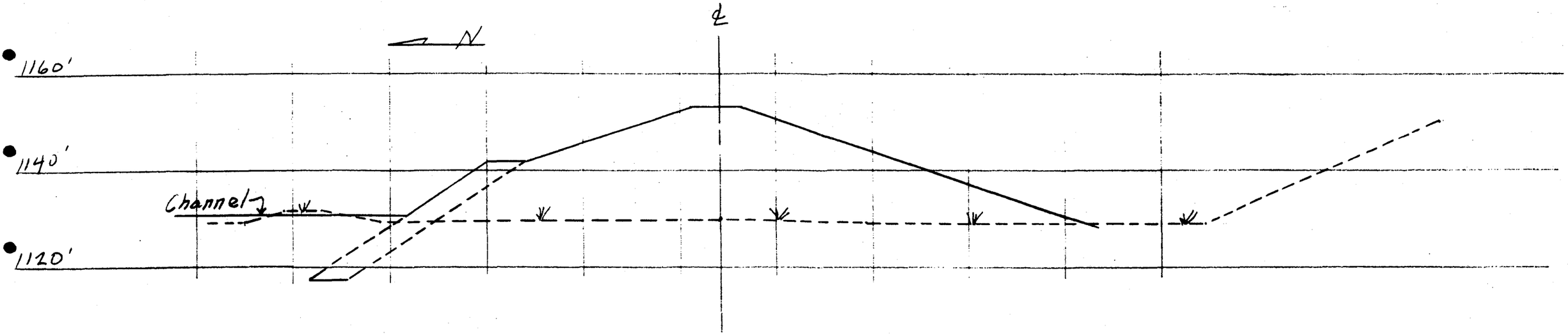

Sta 248+00 N Dike

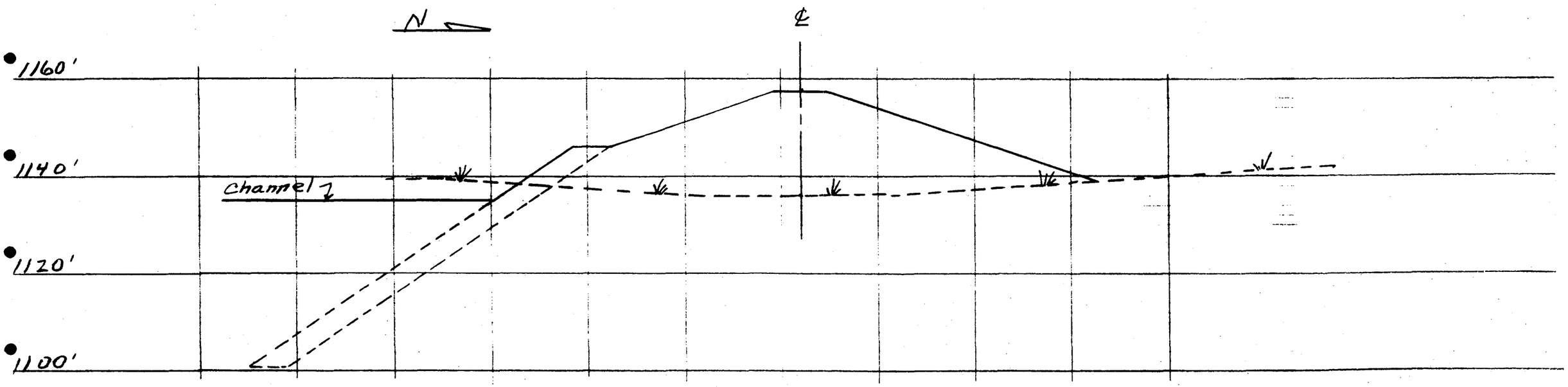

APPENDIX B6:

Sediment Transport Analysis

1. Long-term Scour Analysis
2. Bank Toe-down Computation
3. Local Scour Computations
   a. Scout at Grade Control Structures
   b. Scour at Bridge Piers
4. Total Scour Tabulation

Long-term Scour Analysis

Channel Hydraulic Conditions by Reach

Boundary Shear Stress Computations

Tempe - Rio Salado: West Salt River Reach

Q	Reach	Mean Reach Shear		Min Reach Shear	
		N. Bank	S. Bank	N. Bank	S. Bank
40000	#1	0.67	0.78	0.46	0.58
	#2	1.04	0.93	0.88	0.88
	#3	0.98	0.98	0.93	0.93
93000	#1	1.13	1.31	0.88	1.01
	#2	1.71	1.53	1.37	1.37
	#3	1.63	1.63	1.53	1.53
135000	#1	1.41	1.65	1.14	1.28
	#2	2.12	1.87	1.64	1.64
	#3	2.02	2.02	1.88	1.88
160000	#1	1.39	1.62	1.13	1.27
	#2	2.31	2.03	1.71	1.71
	#3	2.23	2.23	2.08	2.08
215000	#1	1.87	2.19	1.56	1.71
	#2	2.76	2.42	2.08	2.08
	#3	2.65	2.65	2.46	2.46
296000	#1	2.19	2.60	1.86	2.02
	#2	3.30	2.88	2.45	2.45
	#3	3.19	3.19	2.96	2.96

CRSS Civil Engineers

Sediment Transport Computation
Meyer-Peter Mueller Bedload Equation
Project: Tempe-Rio Salado Map Revision
Client: City of Tempe

Job:	
Date	
Calc by: GKC	7/25/91
Checked by: VFM	8/2/91
Dwg Chk:	

Mean Boundary Shear Stress =	2.08 psf
Manning "n" value =	0.035
Mean sediment size, D50 =	64.00 mm
Skin friction, Manning "n" value=	0.03
Applied Shear Stress =	1.53 psf

Meyer-Peter Muller Equation:

gs = 12.85/sqrt(rho)*(To - Tc)^1.5

where: gs = unit transport rate, lb/sec/ft
rho = density of water, 62.4 lbs/cf
To, Tc = applied and critical shear stress, repectively, psf

Unit Sediment Transport by Size Fraction

[1]	[2]	[3]	[4]	[5]
0.125	0.002533	27.64	3	0.83
0.25	0.005067	27.62	6	0.83
0.5	0.010134	27.55	8	0.55
1	0.020268	27.40	12	1.10
2	0.040535	27.12	16	1.08
4	0.081071	26.55	20	1.06
8	0.162142	25.43	24	1.02
16	0.324283	23.24	32	1.86
32	0.648567	19.06	40	1.52
64	1.297134	11.57	49	1.04
128	2.594268	0.00	57	0.00
256	5.188535	0.00	70	0.00
512	10.37707	0.00	100	0.00

Total unit transport rate 10.89 lbs/sec/ft

Computation Fields:

[1] Upper limit sediment size interval, mm
[2] Critical shear stress for particle, psf
[3] Net sediment transport for size, lb/sec/ft
[4] Cummulative fraction finer, %
[5] Transport by size fraction, lb/sec/ft

Notes: Mean boundary shear stress based on min. shear in reach #3 for Q = 160,000 cfs.
Channel bed gradation is based on coarse range with armoring
Skin friction based on Strictler eq. n = 0.0395*D50^(1/6)

CRSS Civil Engineers

Sediment Transport Computation
Meyer-Peter Mueller Bedload Equation
Project: Tempe-Rio Salado Map Revision
Client: City of Tempe

Job:	Date
Calc by: GKC	7/25/91
Checked by: JFM	8/2/91
Dwg Chk:	

Mean Boundary Shear Stress =	1.56	psf
Manning "n" value =	0.035	
Mean sediment size, D50 =	8.00	mm
Skin friction, Manning "n" value=	0.022	
Applied Shear Stress =	0.62	psf

Meyer-Peter Muller Equation:

gs = 12.85/sqrt(rho)*(To - Tc)^1.5

where: gs = unit transport rate, lb/sec/ft
rho = density of water, 62.4 lbs/cf
To, Tc = applied and critical shear stress, repectively, psf

Unit Sediment Transport by Size Fraction

[1]	[2]	[3]	[4]	[5]
0.125	0.002533	17.94	11	1.97
0.25	0.005067	17.92	16	0.90
0.5	0.010134	17.86	21	0.89
1	0.020268	17.74	28	1.24
2	0.040535	17.49	36	1.40
4	0.081071	17.00	41	0.85
8	0.162142	16.04	48	1.12
16	0.324283	14.17	57	1.28
32	0.648567	10.67	64	0.75
64	1.297134	4.76	73	0.43
128	2.594268	0.00	87	0.00
256	5.188535	0.00	99	0.00
512	10.37707	0.00	100	0.00

Total unit transport rate 10.83 lbs/sec/ft

Computation Fields:

[1] Upper limit sediment size interval, mm
[2] Critical shear stress for particle, psf
[3] Net sediment transport for size, lb/sec/ft
[4] Cummulative fraction finer, %
[5] Transport by size fraction, lb/sec/ft

Notes: Mean boundary shear stress based on min. shear in reach #3 for Q = 160,000 cfs.
Channel bed gradation is based on coarse range with armoring
Skin friction based on Strictler eq. n = 0.0395*D50^(1/6)

Estimated Bed Material Transport Mode

Fall Velocity:

D_{50} size = 10 mm

Fall vel, w = 2.6 fps

Shear Velocity

Q	τ_{max}	U_*	U_*/w
40,000	1.0	0.72	0.28
93,000	1.7	0.94	0.36
135,000	2.1	1.04	0.40
160,000	2.3	1.09	0.42
215,000	2.8	1.20	0.46
296,000	3.3	1.30	0.50

For $U_*/w < 0.5$ the mode of transport is mostly contact bed load.

2/3

Hydraulic Engineering Circular No. 18

U.S. Department
of Transportaion

**Federal Highway
Administration**

DRAFT

EVALUATING SCOUR at BRIDGES

by

E. V. Richardson, Ph.D., P.E.

Office of Engineering

Bridge Division

August 1990

V_{*c}/w	e	K_1	K_2	Mode of Bed Material Transport
<0.50	0.25	0.59	0.066	mostly contact bed material discharge
1.0	1.0	0.64	0.21	some suspended bed material discharge
>2.0	2.25	0.69	0.37	mostly suspended bed material discharge

e = transport factor
$V_{*c} = (gy_1S_1)^{0.5}$, shear velocity
w = fall velocity of D_{50} of bed material (See Figure 4.2)
g = gravity constant
S_1 = slope, energy grade line of main channel
$K_1 = \frac{6(2+e)}{7(3+e)}$
$K_2 = \frac{6e}{7(3+e)}$

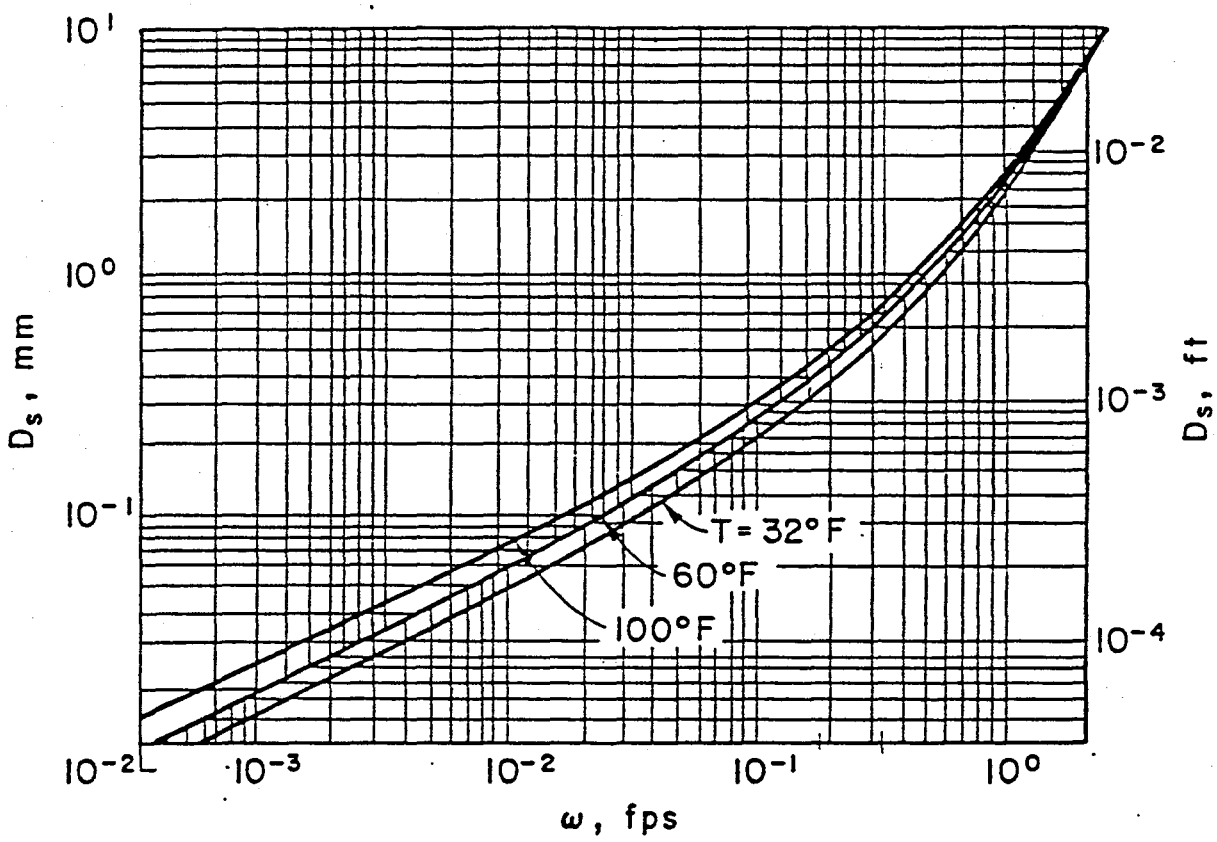

Figure 4.2 Fall Velocity of Sand Size Particals

CRS SIRRINE	PROJECT Rio Salado Map Revision	JOB NO. 1210MR	NO. 1
	CLIENT City of Tempe	DESIGNED BY GRC / DATE	OF 1
	SUBJECT Equilibrium Slope Analysis	CHECKED BY VFM / DATE 8/2/91	

(1) Derive the equilibrium slope of the channel as a function of boundary shear stress, channel discharge per unit width, and roughness.

(2)
$$\tau_o = \gamma d_a S_e$$
$$q = \frac{1.49}{n} d_a^{5/3} S_e^{1/2}$$

Substituting the first eq. for d_a in eq. 2 and solving for S_e gives

$$S_e = \left(\frac{q n}{1.49}\right)^2 \left(\frac{\gamma S_e}{\tau_o}\right)^{10/3}$$
$$S_e^{-7/3} = \left(\frac{q n}{1.49}\right)^2 \left(\frac{\gamma}{\tau_o}\right)^{10/3}$$
$$S_e = \left(\frac{1.49}{q n}\right)^{6/7} \left(\tau_o/\gamma\right)^{10/7}$$
$$S_e = 3.84 \times 10^{-3} \left[\frac{\tau_o}{(q n)^{0.6}}\right]^{10/7}$$

(3) For

$\tau_o = 1.53$ ft	$\tau_o = 0.62$
$q = 160$ cfs/ft	$q = 160$ cfs/ft
$n = 0.035$	$n = 0.035$
$S_e = 0.00161$ '/'	$S_e = 0.000443$ '/'
$d_a = 15.2$ ft	$d_a = 22.5$ ft

Bank Toe-down Computation

Channel Hydraulic Conditions by Reach
Boundary Shear Stress Computations
Tempe - Rio Salado: West Salt River Reach

Q	Reach	Mean Reach Shear		Max Reach Shear	
		N. Bank	S. Bank	N. Bank	S. Bank
40000	#1	0.67	0.78	0.84	1.07
	#2	1.04	0.93	1.13	1.01
	#3	0.98	0.98	1.02	1.02
93000	#1	1.13	1.31	1.32	1.71
	#2	1.71	1.53	1.94	1.73
	#3	1.63	1.63	1.71	1.71
135000	#1	1.41	1.65	1.60	2.11
	#2	2.12	1.87	2.49	2.19
	#3	2.02	2.02	2.16	2.16
160000	#1	1.39	1.62	1.66	1.92
	#2	2.31	2.03	2.78	2.44
	#3	2.23	2.23	2.41	2.41
215000	#1	1.87	2.19	2.07	2.75
	#2	2.76	2.42	3.38	2.94
	#3	2.65	2.65	2.92	2.92
296000	#1	2.19	2.60	2.48	3.24
	#2	3.30	2.88	4.15	3.58
	#3	3.19	3.19	3.58	3.58

Channel Hydraulic Conditions by Reach
Boundary Shear Stress Computations
Tempe - Rio Salado: West Salt River Reach

Q	Reach	Mean Shear		Max. Shear	
		N.Bank	S.Bank	N.Bank	S.Bank
40000	#1	0.24	0.29	0.38	0.53
	#2	0.53	0.48	0.82	0.82
	#3	0.72	0.76	2.93	3.76
93000	#1	0.54	0.64	0.79	1.10
	#2	1.01	0.91	1.50	1.50
	#3	1.23	1.28	2.60	3.35
135000	#1	0.76	0.88	1.05	1.48
	#2	1.34	1.20	1.94	1.94
	#3	1.59	1.66	2.68	3.47
160000	#1	0.76	0.87	0.95	1.36
	#2	1.55	1.38	2.31	2.31
	#3	1.78	1.87	2.82	3.58
215000	#1	1.12	1.27	1.47	2.10
	#2	1.94	1.71	2.81	2.81
	#3	2.17	2.31	3.43	4.01
296000	#1	1.40	1.57	1.81	2.60
	#2	2.41	2.10	3.26	3.26
	#3	2.69	2.69	4.26	4.26

Salt River Bed Material Gradation
Tempe - Rio Salado: West Salt River Reach

Lookup Table Size (mm)	Coaser (%)	off-set distribution	log size
0.125	0.89	0.84	-0.90309
0.25	0.84	0.79	-0.60206
0.5	0.79	0.72	-0.30103
1	0.72	0.64	0
2	0.64	0.59	0.30103
4	0.59	0.52	0.60206
8	0.52	0.43	0.90309
16	0.43	0.36	1.20412
32	0.36	0.27	1.50515
64	0.27	0.18	1.80618
128	0.18	0.1	2.10721
256	0.1	0	2.40824
512	0		2.70927

Channel Degradation Conditions (3)

Channel Bed Scour for Maximum Reach Shear Stress
Tempe - Rio Salado: West Salt River Reach

Reach	Q (cfs)	Min. Armor Size N.Bank (mm)	Min. Armor Size S.Bank (mm)	Coarse Frac. N.Bank	Coarse Frac. S.Bank	Armor Depth * N.Bank (ft)	Armor Depth * S.Bank (ft)
#1	40000	4	7	0.58	0.53	0.03	0.06
#2		13	13	0.45	0.45	0.16	0.16
#3		91	132	0.22	0.18	3.09	6.05
#1	93000	13	21	0.46	0.40	0.15	0.31
#2		33	33	0.35	0.35	0.60	0.60
#3		76	111	0.25	0.20	2.27	4.43
#1	135000	20	33	0.41	0.36	0.28	0.58
#2		49	49	0.30	0.30	1.10	1.10
#3		79	117	0.24	0.19	2.45	4.87
#1	160000	17	29	0.42	0.37	0.23	0.48
#2		63	63	0.27	0.27	1.68	1.68
#3		86	123	0.23	0.19	2.79	5.31
#1	215000	32	55	0.36	0.29	0.57	1.33
#2		85	85	0.23	0.23	2.77	2.77
#3		115	145	0.19	0.17	4.70	7.22
#1	296000	44	76	0.32	0.25	0.93	2.28
#2		107	107	0.20	0.20	4.10	4.10
#3		159	159	0.15	0.15	8.55	8.55

Job:
Date
Calc by: GRC 7/25/91
Checked by: JFM 8/2/91
Dwg Chk:

* where $d_a = 3(1/p_c - 1) D_s$

Local Scour Computations

1. Scour at Grade Control Structures
2. Scour at Bridge Piers

Scour at Grade Control Structures

CRS SIRRINE	PROJECT Rio Salado Map Revision	JOB NO. R10 MR	NO. 1
	CLIENT City of Tempe	DESIGNED BY GKC / DATE	OF 2
	SUBJECT Local Scour: GC No. 2	CHECKED BY JFM / DATE 8/2/91	

Summary of Local Scour Computation
Stage/Scour Relationship

Discharge	Water Surface at Drop	Water Surface Below Drop	Topwidth at Drop	Local Scour
5,000	1109.2	1101.8	407	0
10,000	1110.7	1103.8	965	0
20,000	1111.6	1106.3	967	0
40,000	1113.0	1110.3	972	0
80,000	1115.2	1114.6	978	2.2
93,000	1115.8	1115.7	980	4.1
135,000	1117.7	1118.6	986	10.2
160,000	1120.7	1121.6	995	9.5
215,000	1123.0	1124.0	1010	15.3
296,000	1127.4	1128.4	1030	11.3

Maximum discharge prior to local scour = 70,000 cfs.

Elevations:

Crest of GC # 2 = 1107.5
Invert below drop = 1097.0

2/2

Job:	Date
Calc by: GKC	7/25/91
Checked by: JFM	8/2/91
Dwg Chk:	

CRSS

Excel Template by: George K. Cotton, PE
Last Revised: August 1, 1991
Description: Solution of scour downstream of a grade control structure. Method is based on equations by Borman and Julien, 1991, "Scour Downstream of Grade-Control Structures", Journal of Hydraulic Engineering, Vol. 115, No. 5.

Constants:		
Diffusion Coef.,	Cd =	1.8
Local Friction Eq.:		
Exponent,	x =	0.5
Coefficient,	B =	2.0

Definition Sketch:

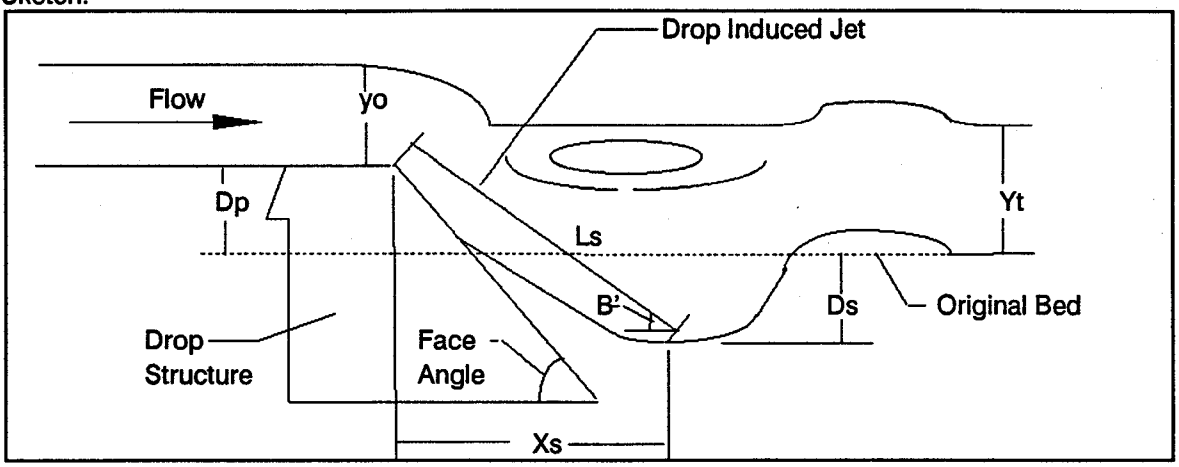

Input:			Computation:		
Drop Height,	Dp =	10.5 ft	Jet angle / bed,	B' =	0.398 radians
Unit discharge,	q =	212.9 cfs/ft	Diffusion Eq.:		
Jet thickness,	Yo =	15.5 ft	Coefficient,	K =	0.796
Jet velocity,	Uo =	13.7 fps	q exponent,	a =	0.600
Jet Froude No.,	Fr =	0.6	Uo exponent,	b =	1.000
Tailwater Depth,	Yt =	27.0 ft	g exponent,	f =	0.800
Face Angle,	Af =	0.785 radians	ds exponent,	i =	0.400
Angle of repose,	Ar =	0.436 radians	Diffused length,	Ls =	66.6 ft
Sed. density,	rhos =	2.65	Scour Depth,	Ds =	15.3 ft
Sed. Size,	ds =	10.000 mm	Scour Length,	Xs =	61.4 ft

Note:
Grade Control Structure No. 2 Scour Analysis
Check calculation for Rio Salado Map Revision

CRS SIRRINE	PROJECT Rio Salado Map Revision	JOB NO. R10MR	NO. 1
	CLIENT City of Tempe	DESIGNED BY GKC / DATE	OF 2
	SUBJECT Local Scour: GC No. 4	CHECKED BY JFM / DATE 8/2/91	

Summary of Local Scour Computations
Stage/Scour Relationship

Discharge	Water Surface at Drop	Water Surface below Drop	Topwidth at Drop	Local Scour
5,000	1131.1	1129.0	407	0.0
10,000	1132.5	1130.4	862	0.0
20,000	1133.5	1132.4	864	0.0
40,000	1134.9	1135.2	868	1.6
80,000	1138.6	1139.3	876	5.9
93,000	1139.7	1140.5	879	7.1
135,000	1142.9	1143.6	886	10.8
160,000	1144.6	1145.3	890	13.1
215,000	1147.9	1148.6	930	17.0
296,000	1152.1	1152.8	945	23.0

Maximum Discharge prior to local scour = 32,500 cfs.

Elevations

Crest of GC# 4 = 1129.4
Invert below drop = 1124.4

Job:	Date
Calc by: GLC	7/25/91
Checked by: JFM	8/2/91
Dwg Chk:	

CRSS

Excel Template by: George K. Cotton, PE
Last Revised: August 1, 1991
Description: Solution of scour downstream of a grade control structure. Method is based on equations by Borman and Julien, 1991, "Scour Downstream of Grade-Control Structures", Journal of Hydraulic Engineering, Vol. 115, No. 5.

Constants:		
Diffusion Coef.,	Cd =	1.8
Local Friction Eq.:		
Exponent,	x =	0.5
Coefficient,	B =	2.0

Definition Sketch:

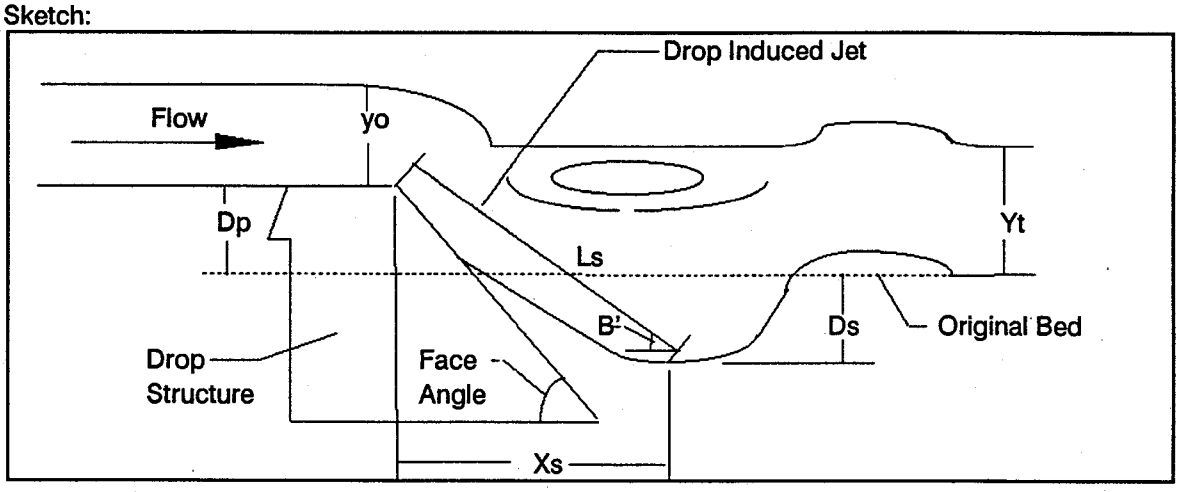

Input:			Computation:		
Drop Height, Dp =	5.0	ft	Jet angle / bed, B' =	0.316	radians
Unit discharge, q =	313.2	cfs/ft	Diffusion Eq.:		
Jet thickness, Yo =	22.7	ft	Coefficient, K =	0.849	
Jet velocity, Uo =	13.8	fps	q exponent, a =	0.600	
Jet Froude No., Fr =	0.5		Uo exponent, b =	1.000	
Tailwater Depth, Yt =	28.4	ft	g exponent, f =	0.800	
Face Angle, Af =	0.785	radians	ds exponent, i =	0.400	
Angle of repose, Ar =	0.436	radians	Diffused length, Ls =	90.0	ft
Sed. density, rhos =	2.65		Scour Depth, Ds =	23.0	ft
Sed. Size, ds =	10.000	mm	Scour Length, Xs =	85.5	ft

Note:
Grade Control Structure No. 4 Scour Analysis
Check calculation for Rio Salado Map Revision

CRS SIRRINE	PROJECT: Rio Salado Map Revision	JOB NO: R10MR	NO
	CLIENT: Tempe	DESIGNED BY: GKC / DATE: 8/2/91	
	SUBJECT: Summary of Spread Sheet Eq.	CHECKED BY: JFM / DATE: 8/2/91	OF

Jet Diffusion Angle:

This is given by equation 14 in the Borman/Julien paper as:

$$\beta' = 0.316 \sin(\lambda) + 0.15 \ln\left(\frac{D_p + Y_o}{Y_o}\right) + 0.13 \ln\left(\frac{Y_t}{Y_o}\right) - 0.05 \ln\left(\frac{U_o}{\sqrt{g Y_o}}\right)$$

where λ = face angle, and other variable as per spread sheet.

Jet Diffusion Length:

This is given by equation 13 in the Borman/Julien paper with the coefficient derived from equation 10.

$$L_s = K q^a U^b / g^f / (d_s^i)$$

note all variable in equation 13 are in metric units (m, cms/m, and m/s).

$$K = C_d^2 \left(\sin\phi / B / (\rho_s - 1) / \sin(\phi + \beta')\right)^{(2/(2+x))}$$

$$a = (2-x)/(2+x)$$

$$b = 4/(2+x) - a$$

$$f = 2/(2+x)$$

$$i = (2-2x)/(2+x)$$

Scour Depth:

$$D_s = L_s \sin(\beta') - D_p$$

Scour at Bridge Piers

CRSS	PROJECT Rio Salado Map Revision	JOB NO. R10MR	NO. 1
CRS SIRRINE	CLIENT City of Tempe	DESIGNED BY GKC / DATE	OF 2
	SUBJECT Pier Scour	CHECKED BY JFM / DATE 8/2/91	

① Method

CSU Eq.

$$y_s/y_1 = 2.0\ K_1 K_2 (a/y_1)^{0.65} F_r^{0.43}$$

where

y_s = scour depth, ft
y_1 = approach flow depth, ft
a = pier width, ft
F_r = approach flow Froude No.
K_1, K_2 = correction factors for: pier shape and angle of attack

② For Salt River Bridges:

$K_1 = 1.0$ (cylinder piers)
$K_2 = 1.0$ (0° angle of attack)
$a = 5.0'$ (all bridges)

So, $y_s = 5.7\ y_1^{0.35} F_r^{0.43}$

③ Approach hydraulic conditions: Q = 215,000 cfs

Location	y_1	V_1	F_r	y_s
Hwy 153	18.2	13.3	0.55	12.2
Hohokam Fwy	20.4	11.7	0.49	12.1
Priest Dr.	18.7	14.1	0.57	12.5

CRS SIRRINE	PROJECT Rio Salado Map Revision	JOB NO. R10MR	NO. 2
	CLIENT City of Tempe	DESIGNED BY GKC / DATE	
	SUBJECT Pier Scour	CHECKED BY JFM / DATE 8/2/91	OF 2

(4) Approach hydraulic conditions: Q = 296,000 cfs

Location	y_1	U_1	F_r	y_s
Hwy 153	22.1	14.7	0.55	13.0
Hohokam Fwy.	24.4	13.2	0.47	12.6
Priest Dr.	22.3	15.9	0.59	13.5

Total Scour Tabulation

Total Scour Tabulation

Results

Section	Long-term Profile	Armor No.Bank	Depth So.Bank	Local Scour	Scour Profile No.Bank	So.Bank
100+35	1095.1	0.93	2.28		1094.2	1092.8
102+00	1095.2	0.93	2.28		1094.3	1092.9
104+00	1095.3	0.93	2.28		1094.4	1093.0
106+00	1095.4	0.93	2.28		1094.5	1093.1
108+00	1095.4	0.93	2.28		1094.5	1093.1
110+00	1095.5	0.93	2.28		1094.6	1093.2
112+00	1095.6	0.93	2.28		1094.7	1093.3
114+00	1095.7	0.93	2.28		1094.8	1093.4
116+00	1095.8	0.93	2.28		1094.9	1093.5
118+00	1095.9	0.93	2.28		1095.0	1093.6
120+00	1096.0	0.93	2.28		1095.1	1093.7
121+00	1096.0	0.93	2.28		1095.2	1093.8
122+00	1096.1	0.93	2.28		1095.2	1093.8
124+00	1096.2	0.93	2.28		1095.3	1093.9
126+00	1096.2	0.93	2.28		1095.3	1093.9
128+00	1096.3	0.93	2.28		1095.4	1094.0
130+00	1096.4	0.93	2.28		1095.5	1094.1
132+00	1096.5	0.93	2.28		1095.6	1094.2
134+00	1096.6	0.93	2.28		1095.7	1094.3
136+00	1096.7	0.93	2.28		1095.8	1094.2
138+00	1096.8	0.93	2.28		1095.9	1094.3
140+00	1096.9	0.93	2.28		1096.0	1094.4
142+00	1096.9	0.93	2.28	8.5	1087.5	1085.9
144+00	1107.5	0.00	0.00	15.3	1081.7	1079.1
146+65	1107.6	4.10	4.10	13.0	1090.5	1090.5
147+85	1107.7	4.10	4.10	13.0	1090.6	1090.6
150+00	1107.8	4.10	4.10		1103.7	1103.7
152+00	1107.9	4.10	4.10		1103.8	1103.8
154+00	1107.9	4.10	4.10		1103.8	1103.8
155+86	1108.0	4.10	4.10	12.6	1091.3	1091.3
157+10	1108.1	4.10	4.10	12.6	1091.4	1091.4
160+00	1108.2	4.10	4.10		1104.1	1104.1
162+00	1108.3	4.10	4.10		1104.2	1104.2
164+00	1108.4	4.10	4.10		1104.3	1104.3
166+00	1108.5	4.10	4.10		1104.4	1104.4
168+00	1108.6	4.10	4.10		1104.5	1104.5
170+00	1108.7	4.10	4.10		1104.6	1104.6
172+00	1108.7	4.10	4.10		1104.6	1104.6
174+00	1108.8	4.10	4.10		1104.7	1104.7
176+00	1108.9	4.10	4.10		1104.8	1104.8
178+00	1109.0	4.10	4.10		1104.9	1104.9
180+00	1109.1	4.10	4.10		1105.0	1105.0
182+00	1109.2	4.10	4.10		1105.1	1105.1
184+00	1109.3	4.10	4.10		1105.2	1105.2
186+00	1109.4	4.10	4.10		1105.3	1105.3
188+00	1109.4	4.10	4.10		1105.3	1105.3
190+00	1109.5	4.10	4.10		1105.4	1105.4
192+00	1109.6	4.10	4.10		1105.5	1105.5
194+00	1109.7	4.10	4.10		1105.6	1105.6

Section	Long-term Profile	Armor No.Bank	Depth So.Bank	Local Scour	Scour No.Bank	Profile So.Bank
196+00	1109.8	4.10	4.10		1105.7	1105.7
198+00	1109.9	4.10	4.10		1105.8	1105.8
200+00	1110.0	4.10	4.10		1105.9	1105.9
202+00	1110.1	4.10	4.10		1106.0	1106.0
204+00	1110.2	4.10	4.10		1106.1	1106.1
206+00	1110.2	4.10	4.10		1106.1	1106.1
208+00	1122.6	8.55	8.55		1106.1	1106.1
210+00	1122.7	8.55	8.55		1114.2	1114.2
210+50	1122.7	8.55	8.55	13.5	1100.7	1100.7
211+50	1122.8	8.55	8.55	13.5	1100.8	1100.8
212+00	1122.8	8.55	8.55		1114.3	1114.3
214+00	1122.9	8.55	8.55		1114.4	1114.4
216+00	1123.0	8.55	8.55		1114.5	1114.5
218+00	1123.1	8.55	8.55		1114.6	1114.6
220+00	1123.1	8.55	8.55		1114.6	1114.6
222+00	1123.2	8.55	8.55		1114.7	1114.7
224+00	1123.3	8.55	8.55		1114.8	1114.8
226+00	1123.4	8.55	8.55		1114.9	1114.9
228+00	1123.5	8.55	8.55		1115.0	1115.0
230+00	1123.6	8.55	8.55		1115.1	1115.1
232+00	1123.7	8.55	8.55		1115.2	1115.2
234+00	1123.8	8.55	8.55		1115.3	1115.3
236+00	1123.8	8.55	8.55		1115.3	1115.3
238+00	1123.9	8.55	8.55		1115.4	1115.4
240+00	1124.0	8.55	8.55		1115.5	1115.5
242+00	1124.1	8.55	8.55		1115.6	1115.6
244+00	1124.2	8.55	8.55		1115.7	1115.7
246+00	1124.3	8.55	8.55		1115.8	1115.8
248+00	1124.4	8.55	8.55	19.9*	1101.0	1101.0
249+55	1129.4	8.55	8.55	23.0*	1101.0	1101.0

* Local scour limit by bedrock outcrop.

APPENDIX C

Key to Cross Section (XS) Labeling

SECTION NUMBER CORRELATION:

The hydraulic analysis presented in this report covers a 6.9 mile reach of the Salt River (Mile 16.733 to Mile 23.667). The middle 3.31 miles of this reach (Mile 18.417 to Mile 21.725) has been realigned and channelized. As such, there is very little correlation between the former floodplain cross-sections and the cross-sections for the new channel alignment. The previous floodplain analysis, which is referred to as the baseline analysis, has 77 cross-sections in the middle reach. The revised analysis has 88 cross-sections but covers a slightly shorter reach length of 3.16 miles. In the revised analysis, the cross-sections are identified according to the channel construction center line stationing where:

Section 100+35	Revised Cross Section	=	Section 18.417 Baseline Cross Section
Section 267+37	Revised Cross Section	=	Section 21.725 Baseline Cross Section