2003F019
MC MICKEN DAM
OUTLET WASH

The WLB Group Inc.

RANCHO CABRILLO
DRAINAGE REPORT FOR ONSITE AND OFFSITE COLLECTOR/ARTERIAL ROADS

Prepared for:
SCOTT HOMES
2151 East Broadway, Suite 210
Tempe, AZ 85282
(480) 446-8800

Prepared by:
THE WLB GROUP, INC.
333 East Osborn Road, Suite 380
Phoenix, AZ 85012
(602) 279-1016

Registered Professional Engineer (Civil)
CERTIFICATE NO.
20928
KA-CHEE
ALBERT MA
Date Signed 5/13/04
ARIZONA, U.S.A.

May 13, 2004
WLB Project No. 202017A001

RANCHO CABRILLO
DRAINAGE REPORT
FOR ONSITE AND OFFSITE
COLLECTOR/ARTERIAL ROADS

Prepared for:
SCOTT HOMES
2151 East Broadway, Suite 210
Tempe, AZ 85282
(480) 446-8800

Prepared by:
THE WLB GROUP, INC.
333 East Osborn Road, Suite 380
Phoenix, AZ 85012
(602) 279-1016

Registered Professional Engineer (Civil)
Certificate No.
20928
KA-CHEE
ALBERT MA
Date Signed 5/13/04
ARIZONA, U.S.A.

May 13, 2004
WLB Project No. 202017A001

TABLE OF CONTENTS

Item		Page
1.0	INTRODUCTION	1
2.0	HYDROLOGY	1
3.0	HYDRAULIC DESIGN	1
4.0	CONCLUSIONS	1
5.0	REFERENCES	3

List of Figures

Figure 1	Vicinity Map	2
Figure 2	Drainage Map for Onsite Collector/Arterial Roads	4
Figure 3	Drainage Map for Offsite Collector/Arterial Roads	5

Appendices

Appendix A	Hydrologic Data Sheets a) Onsite b) Offsite
Appendix B	Retention Volume Calculations a) Onsite
Appendix C	Street Capacity Calculations
Appendix D	Scupper/Catch Basin Design a) Onsite b) Offsite
Appendix E	Open Channel / Ditch Design a) Onsite
Appendix F	Culvert Design a) Onsite b) Offsite
Appendix G	Scour and Erosion Setback Calculations for Water & Sewer Crossings along McMicken Dam Outlet Wash

Registered Professional Engineer (Civil)
CERTIFICATE NO.
20928
KA-CHEE
ALBERT MA
Date Signed 5/13/04
ARIZONA, U.S.A.

1.0 INTRODUCTION

Rancho Cabrillo is located in an unincorporated area of Maricopa County, Arizona within portions of Sections 3 and 10, Township 4 North, Range 1 West, Gila and Salt River Base and Meridian. It is bounded by Dysart Road to the east, Litchfield Road to the west, Jomax Road to the north and the McMicken Dam/Trilby Wash flowage easement to the south (see Figure 1). The offsite roadways that serve Rancho Cabrillo traverse portions of Sections 1 and 2, T 4N, R1W.

The purpose of this drainage report is to provide the technical calculations for onsite and offsite hydrologic and hydraulic designs for Rancho Cabrillo Phase 1. The Master Drainage Report (Master Report) prepared by Stantec Consulting, Inc. in September 2001 (Reference 3) and the Addendum to the Master Drainage Report (Addendum Report) prepared by WLB Group, Inc. in December 2, 2003 had been submitted to the Maricopa County Flood Control District (FCDMC) and approved by the agency. The drainage designs provided in this report have complied with the guideline and criteria described in the Master Drainage Report and the Addendum Report.

2.0 HYDROLOGY

Drainage sub-areas (Exhibits A and B) are delineated on the drainage maps. Onsite and offsite peak flow for the sub-areas were estimated using the Rational Method. Estimated peak discharges of 2-, 5-, 10-, 25-, 50- and 100-year storm frequencies have been calculated for the onsite and offsite areas and are provided in Appendix A.

Retention storage is provided for the onsite collector and arterial streets. The required 100-year, 2-hour volumes are included in Appendix B.

3.0 HYDRAULIC DESIGN

Pavement runoff will be conveyed in sheet flow into the proposed retention areas via scuppers, catch basins and open ditches throughout the project site and offsite roads. Pavement drainage design, including street capacity, scuppers and open ditches are included in Appendices C through E, respectively.

Haestad Methods FlowMaster was used to design open ditches and check street capacity. For arterial streets, it is required to maintain one dry lane of 12' each direction for traffic during a 10-year storm event. Calculations for street capacity are included in Appendix C and open ditch design is in Appendix E.

Scupper or catch basin design is given in Appendix D.

Haestad Methods CulvertMaster was used to design cross culverts underneath collector and arterial streets for onsite and offsite areas. The printouts are provided in Appendix F.

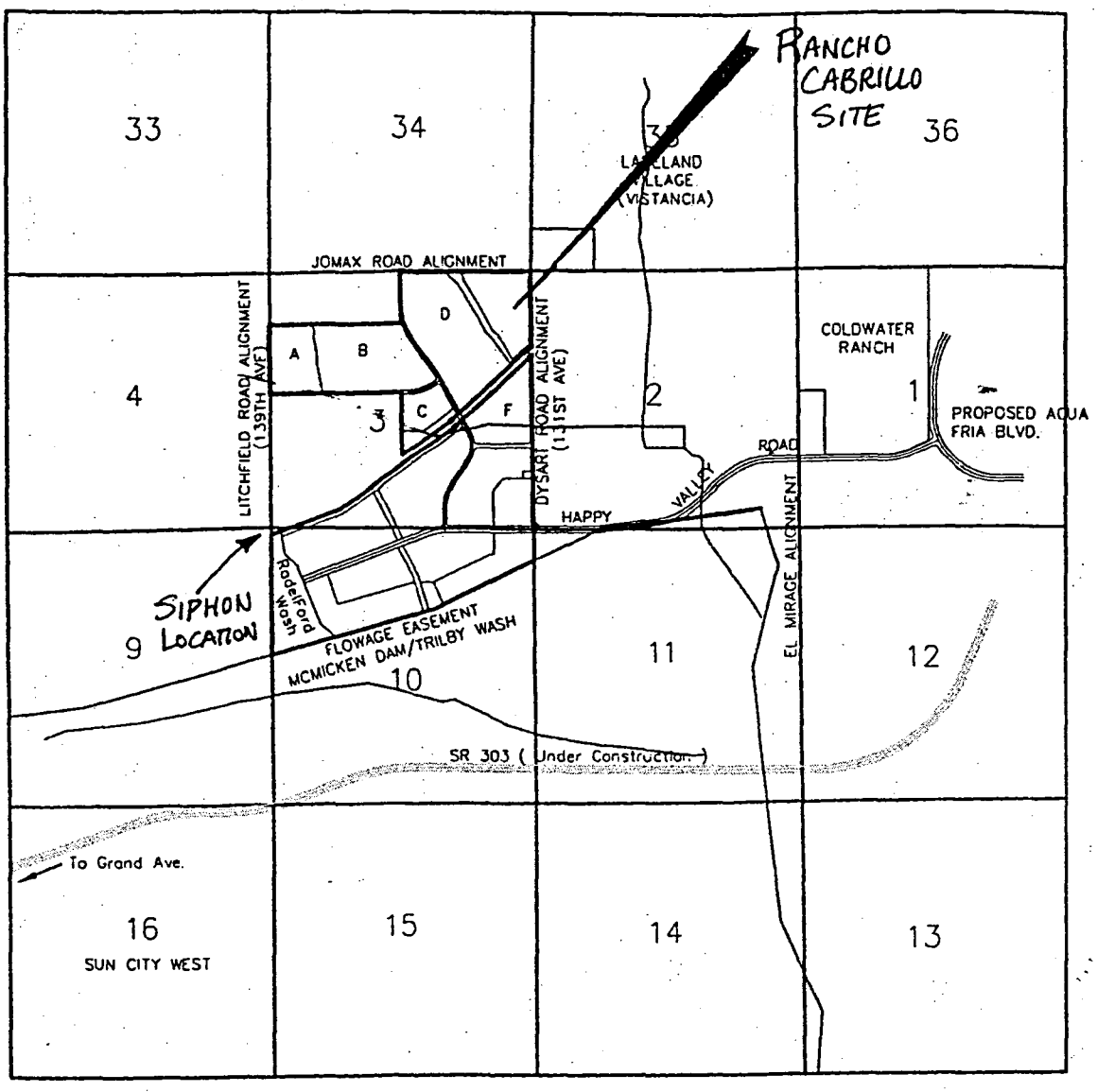

FIGURE 1: VICINITY MAP

MARICOPA COUNTY, ARIZONA
N.T.S.

NORTH

The WLB Group Inc.
WLB No.

Engineering • Planning • Surveying
Landscape Architecture • Urban Design
Offices located in Tucson, Phoenix and Las Vegas, NV.
333 East Osborn Road, Suite 300
Phoenix, Arizona 85012 (602) 279-1616

RANCHO CABRILLO

4.0 CONCLUSIONS

The hydrologic and hydraulic designs for onsite and offsite collector roads are included in the appendices of this report. All analyses and designs for onsite and offsite drainage infrastructures are in accordance with the FCDMC criteria. Onsite flows generated from the 100-year, 2-hour storm event will be directed to and contained in onsite retention facilities.

Arterial streets are designed to adequately convey the 10-year peak flow with one dry lane open to traffic during the storm event.

5.0 REFERENCES

1. Master Drainage Report for Rancho Cabrillo, Stantec Consulting, Inc., revised September 18, 2001.
2. Addendum to the Master Drainage Report for Rancho Cabrillo, The WLB Group, Inc., December 2, 2002.
3. Drainage Design Manual for Maricopa County, Arizona, Volume I Hydrology and Volume II Hydraulics, Flood Control District of Maricopa County, January 1995.

APPENDIX A

HYDROLOGIC DATA SHEETS

a) Onsite

b) Offsite

A(a) Onsite

Flood Control District of Maricopa County
Hydrologic Design Manual Rational Method

Computed by: WLB Date: 12-16-03

LOCATION DATA

Location: LITCHFIELD RD & W. YEARLING BLVD (LP STA 10+61)

Project Name: RANCHO CABRILLO Subarea id: DA1

Drainage Area Cover: PAVEMENT

DESIGN DATA

Drainage Area	2.29	acres
Watercourse Length	1300.0	feet
Top Elevation	100.0	feet
Bottom Elevation	88.8	feet
Slope	.00860	feet/feet
Roughness Coefficient (Kb)	.03775	
10-Year, 6-Hour Rainfall	2.07	inches

Hydrological Summary Table

Parameter	2-Yr	5-Yr	10-Yr	25-Yr	50-Yr	100-Yr
Q (cfs)	5	7	8	11	14	16
C	0.800	0.800	0.800	0.880	0.950	0.950
Tc (min)	13.1	11.6	10.8	9.9	9.4	8.9
i (in/hr)	2.6	3.6	4.3	5.5	6.3	7.3

Flood Control District of Maricopa County
Hydrologic Design Manual Rational Method

Computed by: WLB Date: 12-16-03

LOCATION DATA

Location: W. YEARLING BLVD (LP STA 20+05)

Project Name: RANCHO CABRILLO Subarea id: DA2

Drainage Area Cover: PAVEMENT

DESIGN DATA

Drainage Area	0.76	acres
Watercourse Length	620.0	feet
Top Elevation	100.0	feet
Bottom Elevation	96.9	feet
Slope	.00500	feet/feet
Roughness Coefficient (Kb)	.04074	
10-Year, 6-Hour Rainfall	2.07	inches

Hydrological Summary Table

Parameter	2-Yr	5-Yr	10-Yr	25-Yr	50-Yr	100-Yr
Q (cfs)	2	2	3	4	5	6
C	0.800	0.800	0.800	0.880	0.950	0.950
Tc (min)	10.8	9.5	8.9	8.2	7.8	7.3
i (in/hr)	2.9	3.9	4.7	5.9	6.8	7.9

Flood Control District of Maricopa County
Hydrologic Design Manual Rational Method

Computed by: WLB Date: 12-16-03

LOCATION DATA

Location: W. YEARLING BLVD (LP STA 22+95)

Project Name: RANCHO CABRILLO Subarea id: DA3

Drainage Area Cover: pavement

DESIGN DATA

Drainage Area	0.50	acres
Watercourse Length	370.0	feet
Top Elevation	100.0	feet
Bottom Elevation	97.8	feet
Slope	.00581	feet/feet
Roughness Coefficient (Kb)	.04188	
10-Year, 6-Hour Rainfall	2.07	inches

Hydrological Summary Table

Parameter	2-Yr	5-Yr	10-Yr	25-Yr	50-Yr	100-Yr
Q (cfs)	1	2	2	3	4	4
C	0.800	0.800	0.800	0.880	0.950	0.950
Tc (min)	7.7	6.8	6.3	5.9	5.5	5.3
i (in/hr)	3.3	4.5	5.4	6.7	7.7	8.8

Flood Control District of Maricopa County
Hydrologic Design Manual Rational Method

Computed by: WLB GROUP Date: 1-28-04

LOCATION DATA

Location: W. YEARLING BLVD @ STA 39+17 (N)

Project Name: RANCHO CABRILLO Subarea id: DA 4A

Drainage Area Cover: PAVEMENT

DESIGN DATA

Drainage Area	1.33 acres
Watercourse Length	1270.0 feet
Top Elevation	100.0 feet
Bottom Elevation	93.7 feet
Slope	.00500 feet/feet
Roughness Coefficient (Kb)	.03923
10-Year, 6-Hour Rainfall	2.07 inches

Hydrological Summary Table

Parameter	2-Yr	5-Yr	10-Yr	25-Yr	50-Yr	100-Yr
Q (cfs)	3	3	4	6	7	9
C	0.800	0.800	0.800	0.880	0.950	0.950
Tc (min)	16.3	14.4	13.4	12.2	11.6	10.9
i (in/hr)	2.4	3.3	3.9	5.1	5.8	6.7

Flood Control District of Maricopa County
Hydrologic Design Manual Rational Method

Computed by: WLB GROUP Date: 1-28-04

LOCATION DATA

Location: W. YEARLING BLVD @ STA 39+17 (S)

Project Name: RANCHO CABRILLO Subarea id: DA4B

Drainage Area Cover: PAVEMENT

DESIGN DATA

Drainage Area	0.45 acres
Watercourse Length	295.0 feet
Top Elevation	100.0 feet
Bottom Elevation	98.5 feet
Slope	.00498 feet/feet
Roughness Coefficient (Kb)	.04217
10-Year, 6-Hour Rainfall	2.07 inches

Hydrological Summary Table

Parameter	2-Yr	5-Yr	10-Yr	25-Yr	50-Yr	100-Yr
Q (cfs)	1	2	2	3	3	4
C	0.800	0.800	0.800	0.880	0.950	0.950
Tc (min)	7.1	6.3	5.9	5.5	5.2	5.0
i (in/hr)	3.4	4.6	5.5	6.8	7.9	9.0

Flood Control District of Maricopa County
Hydrologic Design Manual Rational Method

Computed by: WLB Date: 12-16-03

LOCATION DATA

Location: JOMAX RD (LP STA 19+51)

Project Name: RANCHO CABRILLO Subarea id: DA5

Drainage Area Cover: PAVEMENT

DESIGN DATA

Drainage Area	2.05	acres
Watercourse Length	950.0	feet
Top Elevation	100.0	feet
Bottom Elevation	95.3	feet
Slope	.00500	feet/feet
Roughness Coefficient (Kb)	.03805	
10-Year, 6-Hour Rainfall	2.07	inches

Hydrological Summary Table

Parameter	2-Yr	5-Yr	10-Yr	25-Yr	50-Yr	100-Yr
Q (cfs)	4	6	7	10	12	14
C	0.800	0.800	0.800	0.880	0.950	0.950
Tc (min)	13.4	11.8	11.0	10.1	9.6	9.0
i (in/hr)	2.6	3.6	4.3	5.5	6.3	7.3

Flood Control District of Maricopa County
Hydrologic Design Manual Rational Method

Computed by: WLB Date: 12-16-03

LOCATION DATA

Location: JOMAX RD (LP STA 26+15)

Project Name: RANCHO CABRILLO Subarea id: DA6

Drainage Area Cover: PAVEMENT

DESIGN DATA

Drainage Area	1.07	acres
Watercourse Length	460.0	feet
Top Elevation	100.0	feet
Bottom Elevation	90.8	feet
Slope	.02000	feet/feet
Roughness Coefficient (Kb)	.03982	
10-Year, 6-Hour Rainfall	2.07	inches

Hydrological Summary Table

Parameter	2-Yr	5-Yr	10-Yr	25-Yr	50-Yr	100-Yr
Q (cfs)	3	4	5	7	8	9
C	0.800	0.800	0.800	0.880	0.950	0.950
Tc (min)	5.4	5.0	5.0	5.0	5.0	5.0
i (in/hr)	3.8	5.0	5.9	7.0	8.0	9.0

Flood Control District of Maricopa County
Hydrologic Design Manual Rational Method

Computed by: WLB Date: 12-16-03

LOCATION DATA

Location: DYSART RD (LP STA 49+45)

Project Name: RANCHO CABRILLO Subarea id: DA7

Drainage Area Cover: PAVEMENT

DESIGN DATA

Drainage Area	2.95	acres
Watercourse Length	1600.0	feet
Top Elevation	100.0	feet
Bottom Elevation	82.9	feet
Slope	.01070	feet/feet
Roughness Coefficient (Kb)	.03707	
10-Year, 6-Hour Rainfall	2.07	inches

Hydrological Summary Table

Parameter	2-Yr	5-Yr	10-Yr	25-Yr	50-Yr	100-Yr
Q (cfs)	6	8	10	14	18	20
C	0.800	0.800	0.800	0.880	0.950	0.950
Tc (min)	13.6	12.0	11.2	10.2	9.7	9.2
i (in/hr)	2.6	3.6	4.3	5.5	6.3	7.2

Flood Control District of Maricopa County
Hydrologic Design Manual Rational Method

Computed by: WLB Date: 12-16-03

LOCATION DATA

Location: DYSART RD (LP STA 21+18)

Project Name: RANCHO CABRILLO Subarea id: DA8

Drainage Area Cover: PAVEMENT

DESIGN DATA

Drainage Area	4.36	acres
Watercourse Length	2400.0	feet
Top Elevation	100.0	feet
Bottom Elevation	80.6	feet
Slope	.00810	feet/feet
Roughness Coefficient (Kb)	.03601	
10-Year, 6-Hour Rainfall	2.07	inches

Hydrological Summary Table

Parameter	2-Yr	5-Yr	10-Yr	25-Yr	50-Yr	100-Yr
Q (cfs)	8	11	13	18	23	26
C	0.800	0.800	0.800	0.880	0.950	0.950
Tc (min)	19.0	16.7	15.6	14.2	13.4	12.7
i (in/hr)	2.2	3.0	3.7	4.7	5.5	6.3

Flood Control District of Maricopa County
Hydrologic Design Manual Rational Method

Computed by: WLB Date: 12-16-03

LOCATION DATA

Location: EL GRANADA BLVD (LP STA 39+25)

Project Name: RANCHO CABRILLO Subarea id: DA9

Drainage Area Cover: PAVEMENT

DESIGN DATA

Drainage Area	5.62	acres
Watercourse Length	2600.0	feet
Top Elevation	100.0	feet
Bottom Elevation	80.2	feet
Slope	.00760	feet/feet
Roughness Coefficient (Kb)	.03532	
10-Year, 6-Hour Rainfall	2.07	inches

Hydrological Summary Table

Parameter	2-Yr	5-Yr	10-Yr	25-Yr	50-Yr	100-Yr
Q (cfs)	10	13	16	23	28	33
C	0.800	0.800	0.800	0.880	0.950	0.950
Tc (min)	20.2	17.8	16.6	15.1	14.2	13.5
i (in/hr)	2.1	3.0	3.5	4.6	5.3	6.2

Flood Control District of Maricopa County
Hydrologic Design Manual Rational Method

Computed by: WLB Date: 12-16-03

LOCATION DATA

Location: EL GRANADA BLVD (LP STA 26+50)

Project Name: RANCHO CABRILLO Subarea id: DA10 or DA10A

Drainage Area Cover: PAVEMENT

DESIGN DATA

Drainage Area	1.23	acres
Watercourse Length	700.0	feet
Top Elevation	100.0	feet
Bottom Elevation	96.5	feet
Slope	.00500	feet/feet
Roughness Coefficient (Kb)	.03944	
10-Year, 6-Hour Rainfall	2.07	inches

Hydrological Summary Table

Parameter	2-Yr	5-Yr	10-Yr	25-Yr	50-Yr	100-Yr
Q (cfs)	3	4	5	6	8	9
C	0.800	0.800	0.800	0.880	0.950	0.950
Tc (min)	11.4	10.1	9.4	8.6	8.2	7.7
i (in/hr)	2.8	3.9	4.6	5.9	6.7	7.7

Flood Control District of Maricopa County
Hydrologic Design Manual Rational Method

Computed by: WLB Date: 1-16-04

LOCATION DATA

Location: W RANGE MULE DR

Project Name: RANCHO CABRILLO Subarea id: DA 11 OR DA 12

Drainage Area Cover: PAVEMENT

DESIGN DATA

Drainage Area	0.79	acres
Watercourse Length	700.0	feet
Top Elevation	100.0	feet
Bottom Elevation	96.4	feet
Slope	.00510	feet/feet
Roughness Coefficient (Kb)	.04064	
10-Year, 6-Hour Rainfall	2.07	inches

Hydrological Summary Table

Parameter	2-Yr	5-Yr	10-Yr	25-Yr	50-Yr	100-Yr
Q (cfs)	2	2	3	4	5	6
C	0.800	0.800	0.800	0.880	0.950	0.950
Tc (min)	11.5	10.2	9.5	8.7	8.2	7.8
i (in/hr)	2.8	3.8	4.6	5.8	6.7	7.7

Flood Control District of Maricopa County
Hydrologic Design Manual Rational Method

Computed by: WLB Date: 12-16-03

LOCATION DATA

Location: NW OF EL GRANADA BLVD & HAPPY VALLEY RD

Project Name: RANCHO CABRILLO Subarea id: DA13

Drainage Area Cover: PAVEMENT

DESIGN DATA

Drainage Area	1.04	acres
Watercourse Length	1050.0	feet
Top Elevation	100.0	feet
Bottom Elevation	94.5	feet
Slope	.00520	feet/feet
Roughness Coefficient (Kb)	.03989	
10-Year, 6-Hour Rainfall	2.07	inches

Hydrological Summary Table

Parameter	2-Yr	5-Yr	10-Yr	25-Yr	50-Yr	100-Yr
Q (cfs)	2	3	3	5	6	7
C	0.800	0.800	0.800	0.880	0.950	0.950
Tc (min)	14.4	12.7	11.9	10.8	10.3	9.7
i (in/hr)	2.5	3.5	4.1	5.3	6.1	7.1

Flood Control District of Maricopa County
Hydrologic Design Manual Rational Method

Computed by: WLB GROUP Date: 1-20-04

LOCATION DATA

Location: HAPPY VALLEY RD TO BASIN 3

Project Name: RANCHO CABRILLO Subarea id: DA14

Drainage Area Cover: PAVEMENT

DESIGN DATA

Drainage Area	4.43	acres
Watercourse Length	2700.0	feet
Top Elevation	100.0	feet
Bottom Elevation	86.3	feet
Slope	.00507	feet/feet
Roughness Coefficient (Kb)	.03596	
10-Year, 6-Hour Rainfall	2.07	inches

Hydrological Summary Table

Parameter	2-Yr	5-Yr	10-Yr	25-Yr	50-Yr	100-Yr
Q (cfs)	7	9	11	16	20	24
C	0.800	0.800	0.800	0.880	0.950	0.950
Tc (min)	24.8	21.7	20.0	18.3	17.2	16.2
i (in/hr)	1.8	2.6	3.2	4.1	4.9	5.7

Flood Control District of Maricopa County
Hydrologic Design Manual Rational Method

Computed by: WLB GROUP Date: 1-20-04

LOCATION DATA

Location: HAPPY VALLEY RD - DISCHARGE TO SOUTH

Project Name: RANCHO CABRILLO Subarea id: DA15

Drainage Area Cover: PAVEMENT

DESIGN DATA

Drainage Area	3.65	acres
Watercourse Length	1870.0	feet
Top Elevation	100.0	feet
Bottom Elevation	90.7	feet
Slope	.00497	feet/feet
Roughness Coefficient (Kb)	.03649	
10-Year, 6-Hour Rainfall	2.07	inches

Hydrological Summary Table

Parameter	2-Yr	5-Yr	10-Yr	25-Yr	50-Yr	100-Yr
Q (cfs)	6	9	10	15	19	22
C	0.800	0.800	0.800	0.880	0.950	0.950
Tc (min)	19.8	17.4	16.3	14.8	14.0	13.2
i (in/hr)	2.1	3.0	3.6	4.6	5.4	6.2

Flood Control District of Maricopa County
Hydrologic Design Manual Rational Method

Computed by: WLB GROUP Date: 1-20-04

LOCATION DATA

Location: N DYSART RD TO BASIN 3

Project Name: RANCHO CABRILLO Subarea id: DA16

Drainage Area Cover: PAVEMENT

DESIGN DATA

Drainage Area	1.34	acres
Watercourse Length	900.0	feet
Top Elevation	100.0	feet
Bottom Elevation	93.6	feet
Slope	.00710	feet/feet
Roughness Coefficient (Kb)	.03921	
10-Year, 6-Hour Rainfall	2.07	inches

Hydrological Summary Table

Parameter	2-Yr	5-Yr	10-Yr	25-Yr	50-Yr	100-Yr
Q (cfs)	3	4	5	7	8	10
C	0.800	0.800	0.800	0.880	0.950	0.950
Tc (min)	11.6	10.2	9.6	8.7	8.3	7.9
i (in/hr)	2.8	3.8	4.6	5.8	6.7	7.7

A(b) Offsite

Flood Control District of Maricopa County
Hydrologic Design Manual Rational Method

Computed by: WLB GROUP Date: 1-29-04

LOCATION DATA

Location: HAPPY VALLEY RD @ STA 60+00

Project Name: RANCHO CABRILLO Subarea id: A1

Drainage Area Cover: PAVEMENT

DESIGN DATA

Drainage Area	2.97	acres
Watercourse Length	500.0	feet
Top Elevation	100.0	feet
Bottom Elevation	97.5	feet
Slope	.00500	feet/feet
Roughness Coefficient (Kb)	.03705	
10-Year, 6-Hour Rainfall	2.07	inches

Hydrological Summary Table

Parameter	2-Yr	5-Yr	10-Yr	25-Yr	50-Yr	100-Yr
Q (cfs)	7	10	12	17	21	24
C	0.800	0.800	0.800	0.880	0.950	0.950
Tc (min)	9.0	7.9	7.4	6.8	6.5	6.1
i (in/hr)	3.1	4.3	5.1	6.3	7.3	8.4

For checking dry lane width during 10-yr storm event,
Use $Q_{10} = \frac{12}{2} = 6$ cfs (approx. 50% of 12 cfs of runoff) comes from east and west to CPC1

Note: No dry lane checking is needed because of no curb & gutter.

Flood Control District of Maricopa County
Hydrologic Design Manual Rational Method

Computed by: WLB GROUP Date: 1-29-04

LOCATION DATA

Location: HAPPY VALLEY ROAD @ STA 71+81

Project Name: RANCHO CABRILLO Subarea id: A2

Drainage Area Cover: PAVEMENT

DESIGN DATA

Drainage Area	2.71	acres
Watercourse Length	681.0	feet
Top Elevation	100.0	feet
Bottom Elevation	96.6	feet
Slope	.00499	feet/feet
Roughness Coefficient (Kb)	.03730	
10-Year, 6-Hour Rainfall	2.07	inches

Hydrological Summary Table

Parameter	2-Yr	5-Yr	10-Yr	25-Yr	50-Yr	100-Yr
Q (cfs)	6	9	10	14	18	20
C	0.800	0.800	0.800	0.880	0.950	0.950
Tc (min)	10.8	9.6	9.0	8.2	7.8	7.4
i (in/hr)	2.8	3.9	4.7	5.9	6.8	7.9

For dry lane calculations, approx. 75% of runoff comes from west to CP C2
$Q_{10} = 0.75 \times 10 = 7.5$ cfs

Note: No dry lane checking is needed because of no curb & gutter

Flood Control District of Maricopa County
Hydrologic Design Manual Rational Method

Computed by: WLB GROUP Date: 1-29-04

LOCATION DATA

Location: HAPPY VALLEY RD @ STA 79+00

Project Name: RANCHO CABRILLO Subarea id: A3

Drainage Area Cover: PAVEMENT

DESIGN DATA

Drainage Area	4.51	acres
Watercourse Length	1020.0	feet
Top Elevation	100.0	feet
Bottom Elevation	94.8	feet
Slope	.00510	feet/feet
Roughness Coefficient (Kb)	.03591	
10-Year, 6-Hour Rainfall	2.07	inches

Hydrological Summary Table

Parameter	2-Yr	5-Yr	10-Yr	25-Yr	50-Yr	100-Yr
Q (cfs)	9	13	15	22	27	31
C	0.800	0.800	0.800	0.880	0.950	0.950
Tc (min)	13.4	11.8	11.0	10.0	9.5	9.0
i (in/hr)	2.6	3.6	4.3	5.5	6.3	7.3

For dry lane calculations, approx. $\frac{1020}{1020+492} \times 100\% = 67\%$ of runoff from the east to CP C3

$\therefore Q_{10} = 0.67 \times 15 = 10.0$ cfs.

Q_{10} for east bound = 5 cfs. (ck dry lane width)

Flood Control District of Maricopa County
Hydrologic Design Manual Rational Method

Computed by: WLB GROUP Date: 1-29-04

LOCATION DATA

Location: HAPPY VALLEY RD @ STA 97+87

Project Name: RANCHO CABRILLO Subarea id: A4

Drainage Area Cover: PAVEMENT

DESIGN DATA

Drainage Area	5.58 acres
Watercourse Length	992.0 feet
Top Elevation	100.0 feet
Bottom Elevation	95.1 feet
Slope	.00497 feet/feet
Roughness Coefficient (Kb)	.03534
10-Year, 6-Hour Rainfall	2.07 inches

Hydrological Summary Table

Parameter	2-Yr	5-Yr	10-Yr	25-Yr	50-Yr	100-Yr
Q (cfs)	12	16	19	27	34	39
C	0.800	0.800	0.800	0.880	0.950	0.950
Tc (min)	13.1	11.6	10.9	9.9	9.4	8.9
i (in/hr)	2.6	3.6	4.3	5.5	6.3	7.3

For dry lane calculations, approx. 53% of runoff comes from east to CP C4

$Q_{10} = 0.53 \times 19 = 10.1$ cfs

Q_{10} for west bound $= \frac{1}{2}(10.1) = \underline{5.1}$ cfs (check dry lane width)

Flood Control District of Maricopa County
Hydrologic Design Manual Rational Method

Computed by: WLB GROUP Date: 05-14-04

LOCATION DATA

Location: HAPPY VALLEY RD @ 110+00

Project Name: RANCHO CABRILLO Subarea id: A5

Drainage Area Cover: PAVEMENT

DESIGN DATA

Drainage Area	1.51	acres
Watercourse Length	290.0	feet
Top Elevation	1326.2	feet
Bottom Elevation	1325.3	feet
Slope	.00328	feet/feet
Roughness Coefficient (Kb)	.03888	
10-Year, 6-Hour Rainfall	2.07	inches

Hydrological Summary Table

Parameter	2-Yr	5-Yr	10-Yr	25-Yr	50-Yr	100-Yr
Q (cfs)	4	5	6	9	11	13
C	0.800	0.800	0.800	0.880	0.950	0.950
Tc (min)	7.8	6.9	6.5	6.0	5.7	5.4
i (in/hr)	3.3	4.5	5.3	6.6	7.6	8.8

For Dry Lane Calculations, approx 57% of runoff comes from east to C5 @ STA 110+00

$Q_{10} = 0.57 \times 6 = 3.42$ cfs.

Q_{10} from westbound $= \frac{1}{2}(3.42) = 1.71$ cfs (this is a small flow that should not cause drylane problem)

Flood Control District of Maricopa County
Hydrologic Design Manual Rational Method

Computed by: WLB GROUP Date: 05-14-04

LOCATION DATA

Location: HAPPY VALLEY RD @ STA 115+80

Project Name: RANCHO CABRILLO Subarea id: A6

Drainage Area Cover: PAVEMENT

DESIGN DATA

Drainage Area	1.94	acres
Watercourse Length	360.0	feet
Top Elevation	1326.6	feet
Bottom Elevation	1325.3	feet
Slope	.00361	feet/feet
Roughness Coefficient (Kb)	.03820	
10-Year, 6-Hour Rainfall	2.07	inches

Hydrological Summary Table

Parameter	2-Yr	5-Yr	10-Yr	25-Yr	50-Yr	100-Yr
Q (cfs)	5	7	8	11	14	16
C	0.800	0.800	0.800	0.880	0.950	0.950
Tc (min)	8.5	7.5	7.0	6.5	6.1	5.8
i (in/hr)	3.2	4.4	5.2	6.5	7.4	8.6

For Dry lane calculations, approx. 55% of runoff comes from east to C6 @ STA 115+80

$Q_{10} = 0.55 \times 8 = 4.4$ cfs

Q_{10} from westbound $= \frac{1}{2}(4.4) = 2.2$ cfs (this is a small flow that should not cause dry lane problem)

Flood Control District of Maricopa County
Hydrologic Design Manual Rational Method

Computed by: WLB GROUP Date: 05-14-04

LOCATION DATA

Location: HAPPY VALLEY RD @ STA 123+00

Project Name: RANCHO CABRILLO Subarea id: A7

Drainage Area Cover: PAVEMENT

DESIGN DATA

Drainage Area	4.53	acres
Watercourse Length	1158.0	feet
Top Elevation	1331.4	feet
Bottom Elevation	1325.3	feet
Slope	.00534	feet/feet
Roughness Coefficient (Kb)	.03590	
10-Year, 6-Hour Rainfall	2.07	inches

Hydrological Summary Table

Parameter	2-Yr	5-Yr	10-Yr	25-Yr	50-Yr	100-Yr
Q (cfs)	9	13	15	21	26	31
C	0.800	0.800	0.800	0.880	0.950	0.950
Tc (min)	14.2	12.5	11.7	10.7	10.1	9.6
i (in/hr)	2.5	3.5	4.2	5.4	6.2	7.1

For dry lane calculations, 76% of runoff from east portion of C7 at STA 123+00

$Q_{10} = 0.76 \times 15 = 11.4$ cfs

Q_{10} from west bound $= \frac{1}{2}(11.4) = 5.7$ cfs (check dry lane width)

APPENDIX B

REQUIRED RETENTION VOLUMES
a) Onsite

RETENTION VOLUME CALCULATIONS FOR ONSITE COLLECTOR ROADWAYS

January 20, 2004 (file: H:\Al's Projects\Ranchocabrillo\offsite)
WLB Project No. 202017A001

Basin Name	Basin Location	Contributing Area (ac)	C	P (inch)	Required Vol (ac-ft)
Basin #1	West of Dysart Rd	2.95	0.95	2.72	0.64
Basin #2	West of Dysart Rd	4.36	0.95	2.72	0.94
Basin #3	NW of Dysart Rd & Happy Valley Rd	5.77	0.95	2.72	1.24
Basin #4	W. Range Mule Dr & N. El Granada Blvd	1.23	0.95	2.72	0.26
Basin #5	NW of Happy Valley Rd & El Granada	1.04	0.95	2.72	0.22
Basin #6	South of W. Range Mule Dr	2.02	0.95	2.72	0.43
Subtotal		17.37			3.74

P is the rainfall depth for 100-year, 2-hour storm event in inches

APPENDIX C

STREET CAPACITY CALCULATIONS

Arterial Street Capacity - Dysart Rd @ CP#7
Worksheet for Irregular Channel

Project Description	
Project File	h:\al'spr~1\rancho~1\roads.fm2
Worksheet	Street Capacity
Flow Element	Irregular Channel
Method	Manning's Formula
Solve For	Water Elevation

Input Data

Channel Slope 0.006400 ft/ft (Control slope)

Elevation range: 99.39 ft to 100.12 ft.

Station (ft)	Elevation (ft)	Start Station	End Station	Roughness
-17.00	100.00	-17.00	48.00	0.015
11.00	99.89			
11.50	99.89			
11.50	99.39			
48.00	100.12			

Discharge 10.00 ft^3/s = Q_{10}

Results		
Wtd. Mannings Coefficient	0.015	
Water Surface Elevation	99.78	ft
Flow Area	3.80	ft^2
Wetted Perimeter	19.89	ft
Top Width	19.50	ft
Depth	0.39	ft
Critical Water Elev.	99.79	ft
Critical Slope	0.005769	ft/ft
Velocity	2.63	ft/s
Velocity Head	0.11	ft
Specific Energy	99.89	ft
Froude Number	1.05	
Full Flow Capacity	62.11	ft^3/s
Flow is supercritical.		

Dry lane width = 36.5 - 19.5 = 17.0' > 12' (OK)

Cross Section for Dysart Rd
Cross Section for Irregular Channel

Project Description	
Project File	h:\al'spr~1\rancho~1\roads.fm2
Worksheet	Street Capacity
Flow Element	Irregular Channel
Method	Manning's Formula
Solve For	Water Elevation

Section Data		
Wtd. Mannings Coefficient	0.015	
Channel Slope	0.006400	ft/ft
Water Surface Elevation	99.78	ft
Discharge	10.00	ft^3/s

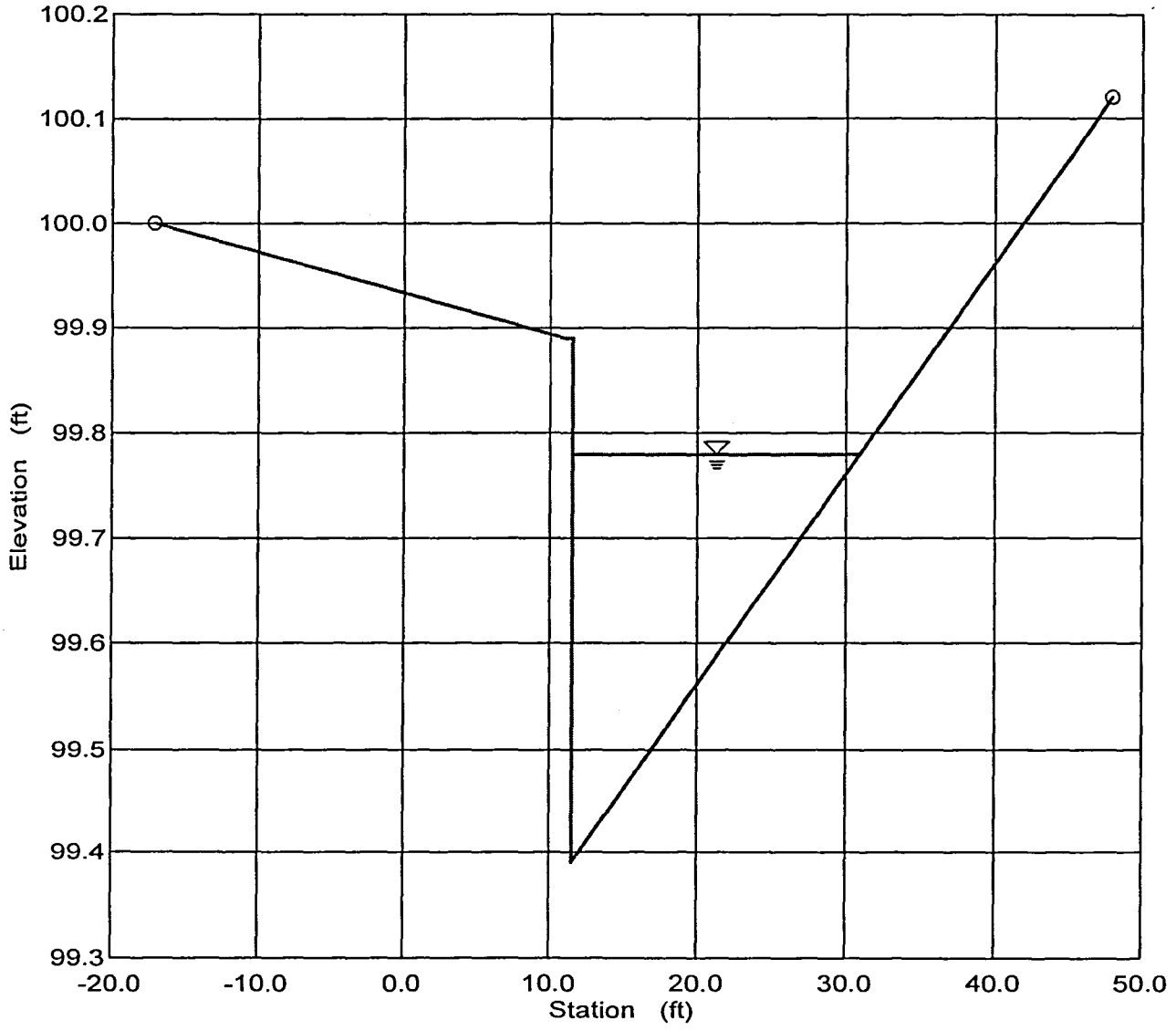

Arterial Street Capacity - Dysart Rd @CP8
Worksheet for Irregular Channel

Project Description	
Project File	h:\al'spr~1\rancho~1\roads.fm2
Worksheet	Street Capacity for Dysart Rd
Flow Element	Irregular Channel
Method	Manning's Formula
Solve For	Water Elevation

Input Data

Channel Slope 0.009800 ft/ft

Elevation range: 99.39 ft to 100.12 ft.

Station (ft)	Elevation (ft)	Start Station	End Station	Roughness
-17.00	100.00	-17.00	48.00	0.015
11.00	99.89			
11.50	99.89			
11.50	99.39			
48.00	100.12			

Discharge 13.00 ft^3/s

Results		
Wtd. Mannings Coefficient	0.015	
Water Surface Elevation	99.79	ft
Flow Area	3.95	ft^2
Wetted Perimeter	20.27	ft
Top Width	19.86	ft
Depth	0.40	ft
Critical Water Elev.	99.83	ft
Critical Slope	0.005571	ft/ft
Velocity	3.29	ft/s
Velocity Head	0.17	ft
Specific Energy	99.96	ft
Froude Number	1.30	
Full Flow Capacity	76.86	ft^3/s
Flow is supercritical.		

dry lane width = 36.5 - 19.86 = 16.64' > 12' (OK)

Cross Section for Dysart Rd @ CP8
Cross Section for Irregular Channel

Project Description	
Project File	h:\al'spr~1\rancho~1\roads.fm2
Worksheet	Street Capacity for Dysart Rd
Flow Element	Irregular Channel
Method	Manning's Formula
Solve For	Water Elevation

Section Data		
Wtd. Mannings Coefficient	0.015	
Channel Slope	0.009800	ft/ft
Water Surface Elevation	99.79	ft
Discharge	13.00	ft^3/s

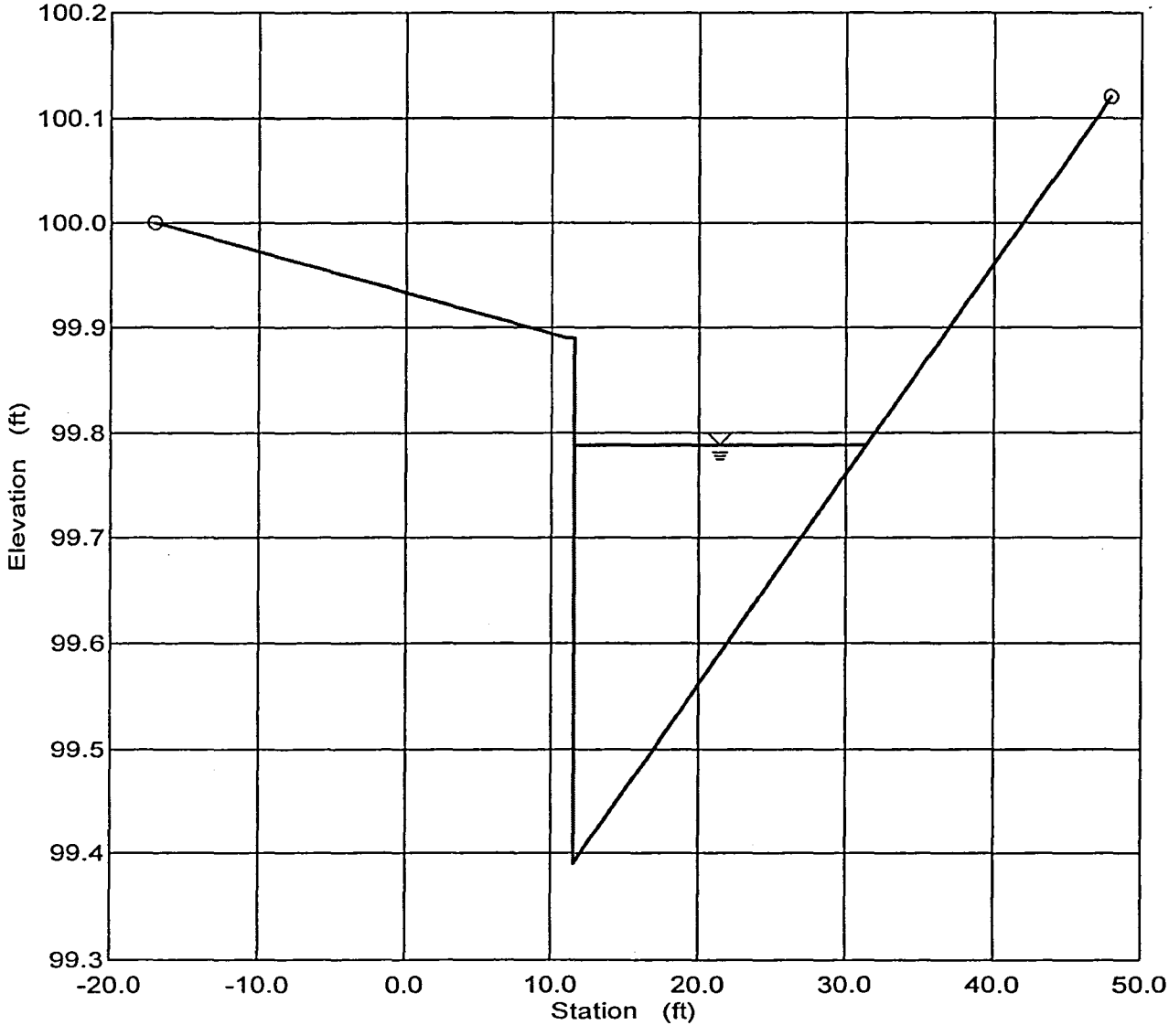

Happy Valley Rd @ Dysart Rd
Worksheet for Irregular Channel

Project Description	
Project File	h:\al'spr~1\rancho~1\roads.fm2
Worksheet	Street Capacity for Happy Valley Rd
Flow Element	Irregular Channel
Method	Manning's Formula
Solve For	Water Elevation

Input Data

Channel Slope 0.005000 ft/ft

Elevation range: 99.39 ft to 100.04 ft.

Station (ft)	Elevation (ft)	Start Station	End Station	Roughness
-14.00	100.00	-14.00	44.00	0.015
11.00	99.89			
11.50	99.89			
11.50	99.39			
44.00	100.04			

Discharge 11.00 ft^3/s

Results

Wtd. Mannings Coefficient	0.015	
Water Surface Elevation	99.81	ft
Flow Area	4.48	ft^2
Wetted Perimeter	21.60	ft
Top Width	21.17	ft
Depth	0.42	ft
Critical Water Elev.	99.80	ft
Critical Slope	0.005696	ft/ft
Velocity	2.45	ft/s
Velocity Head	0.09	ft
Specific Energy	99.91	ft
Froude Number	0.94	
Full Flow Capacity	33.44	ft^3/s

Flow is subcritical.

Dry lane width = 32.5 - 21.17
= 11.3' ≈ 12' (OK)

Happy Valley Rd @ Dysart Rd
Cross Section for Irregular Channel

Project Description	
Project File	h:\al'spr~1\rancho~1\roads.fm2
Worksheet	Street Capacity for Happy Valley Rd
Flow Element	Irregular Channel
Method	Manning's Formula
Solve For	Water Elevation

Section Data		
Wtd. Mannings Coefficient	0.015	
Channel Slope	0.005000	ft/ft
Water Surface Elevation	99.81	ft
Discharge	11.00	ft^3/s

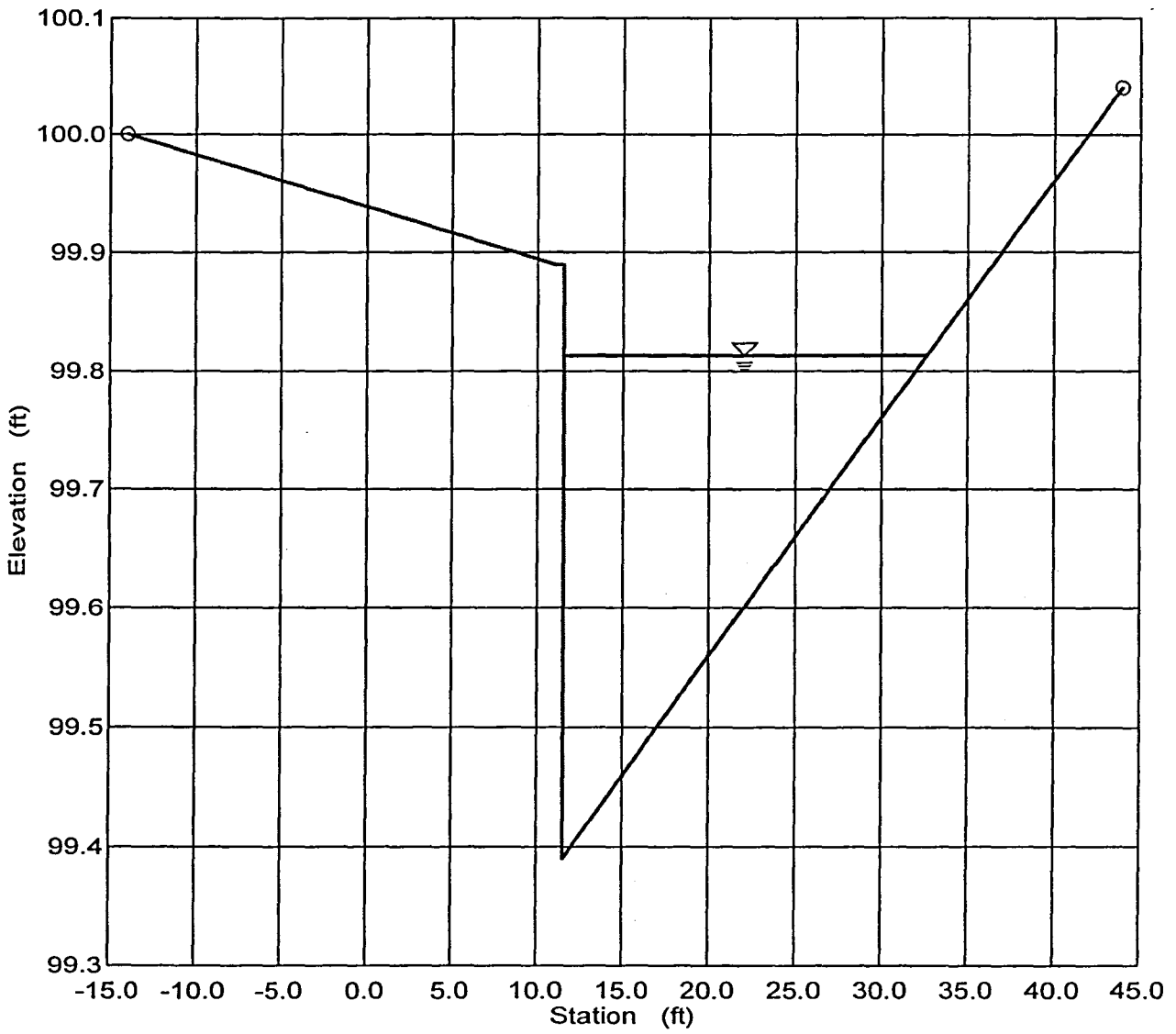

N. El Granada Blvd-10-yr Street Capacity @ CP9
Worksheet for Irregular Channel w/ 6" curb

Project Description	
Project File	h:\al'spr~1\rancho~1\roads.fm2
Worksheet	N. El Granada Blvd - Street Capacity
Flow Element	Irregular Channel
Method	Manning's Formula
Solve For	Water Elevation

Input Data

Channel Slope 0.007600 ft/ft

Elevation range: 51.16 ft to 51.76 ft.

Station (ft)	Elevation (ft)	Start Station	End Station	Roughness
0.00	51.76	0.00	80.00	0.015
5.00	51.75			
14.00	51.66			
14.50	51.66			
14.50	51.16			
40.00	51.67			
65.50	51.16			
65.50	51.66			
66.00	51.66			
75.00	51.75			
80.00	51.76			

Discharge 16.00 ft^3/s

Results

Wtd. Mannings Coefficient	0.015	
Water Surface Elevation	51.51	ft
Flow Area	6.03	ft^2
Wetted Perimeter	35.43	ft
Top Width	34.73	ft
Depth	0.35	ft
Critical Water Elev.	51.52	ft
Critical Slope	0.005943	ft/ft
Velocity	2.65	ft/s
Velocity Head	0.11	ft
Specific Energy	51.62	ft
Froude Number	1.12	
Full Flow Capacity	60.96	ft^3/s

Flow is supercritical.

Flow is divided.

Cross Section-10yr street capacity
Cross Section for Irregular Channel

Project Description	
Project File	h:\al'spr~1\rancho~1\roads.fm2
Worksheet	N. El Granada Blvd - Street Capacity
Flow Element	Irregular Channel
Method	Manning's Formula
Solve For	Water Elevation

Section Data		
Wtd. Mannings Coefficient	0.015	
Channel Slope	0.007600	ft/ft
Water Surface Elevation	51.51	ft
Discharge	16.00	ft^3/s

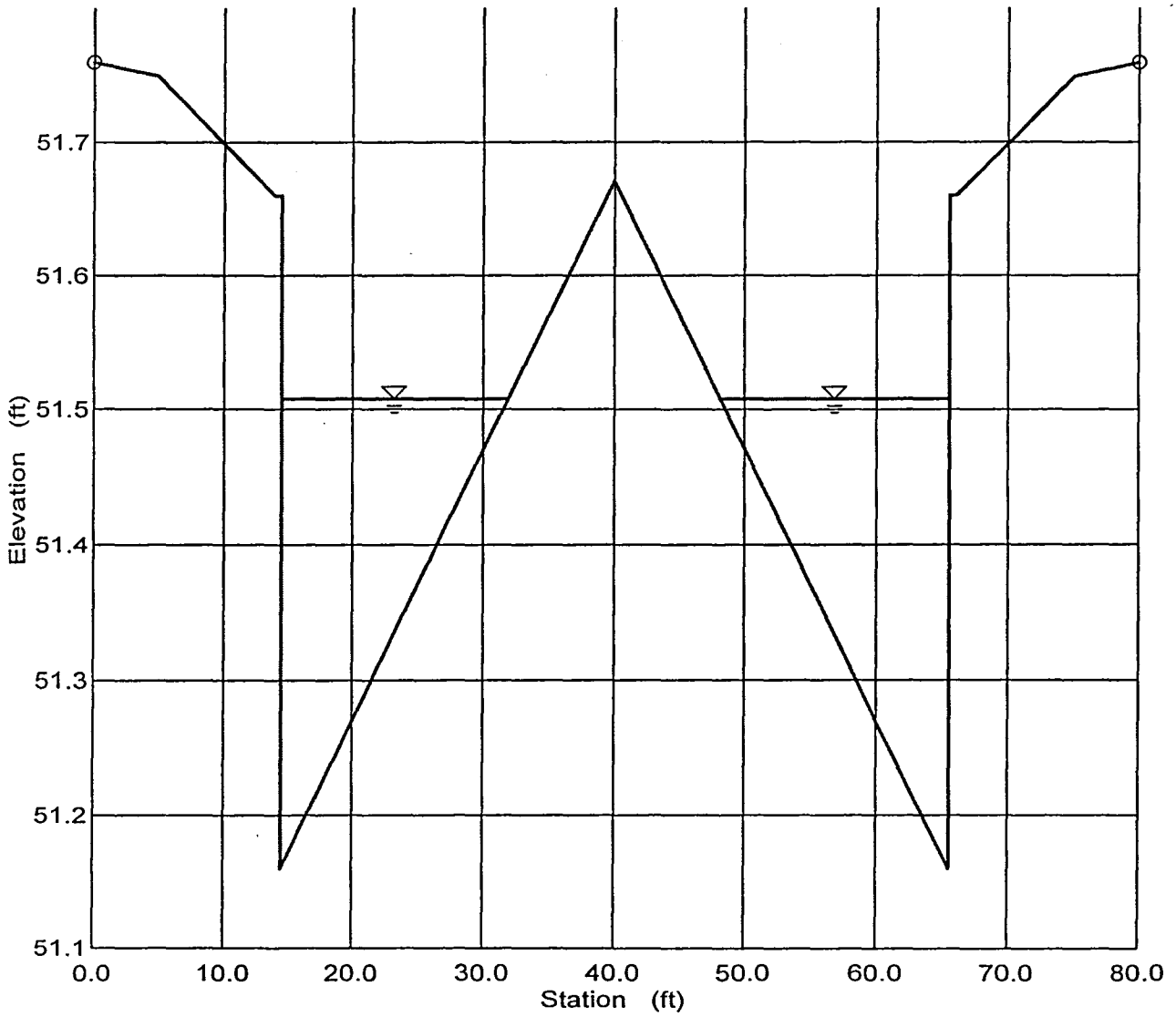

Happy Valley Rd @ Sta 79+00
Worksheet for Irregular Channel

Project Description	
Project File	h:\al'spr~1\rancho~1\roads.fm2
Worksheet	Street Capacity for Happy Valley Rd
Flow Element	Irregular Channel
Method	Manning's Formula
Solve For	Water Elevation

Input Data

Channel Slope 0.005100 ft/ft

Elevation range: 99.39 ft to 100.04 ft.

Station (ft)	Elevation (ft)	Start Station	End Station	Roughness
-14.00	100.00	-14.00	44.00	0.015
11.00	99.89			
11.50	99.89			
11.50	99.39			
44.00	100.04			

Discharge 5.00 ft^3/s

Results

Wtd. Mannings Coefficient	0.015	
Water Surface Elevation	99.70	ft
Flow Area	2.46	ft^2
Wetted Perimeter	16.01	ft
Top Width	15.69	ft
Depth	0.31	ft
Critical Water Elev.	99.69	ft
Critical Slope	0.006327	ft/ft
Velocity	2.03	ft/s
Velocity Head	0.06	ft
Specific Energy	99.77	ft
Froude Number	0.90	
Full Flow Capacity	33.78	ft^3/s

Flow is subcritical.

Dry lane width = 32.5 - 15.69
= 16.8' > 12' (OK)

Happy Valley Rd @ Sta 79+00
Cross Section for Irregular Channel

Project Description	
Project File	h:\al'spr~1\rancho~1\roads.fm2
Worksheet	Street Capacity for Happy Valley Rd
Flow Element	Irregular Channel
Method	Manning's Formula
Solve For	Water Elevation

Section Data		
Wtd. Mannings Coefficient	0.015	
Channel Slope	0.005100	ft/ft
Water Surface Elevation	99.70	ft
Discharge	5.00	ft^3/s

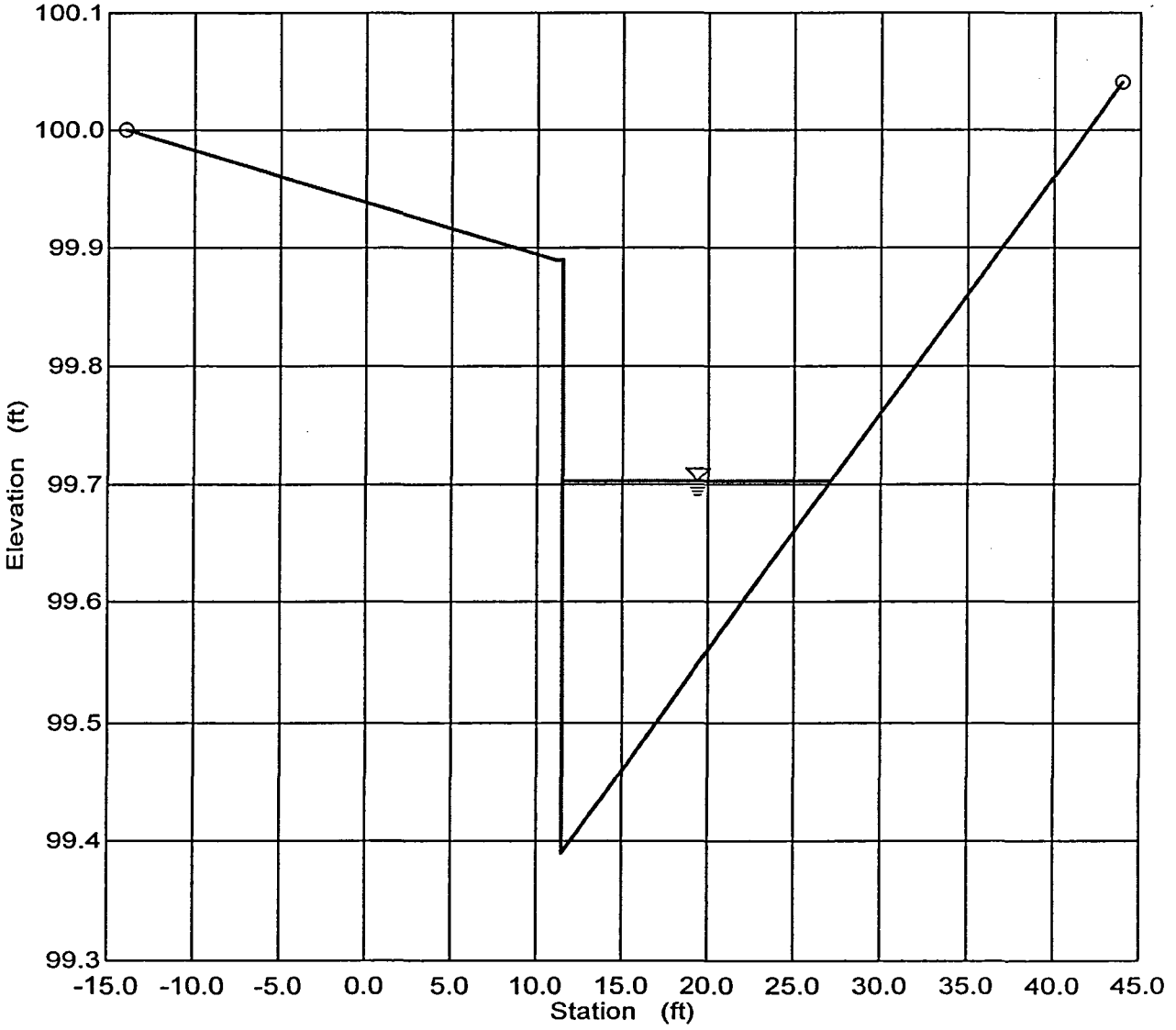

Happy Valley Rd @ Sta 97+87
Worksheet for Irregular Channel

Project Description	
Project File	h:\al'spr~1\rancho~1\roads.fm2
Worksheet	Street Capacity for Happy Valley Rd
Flow Element	Irregular Channel
Method	Manning's Formula
Solve For	Water Elevation

Input Data

Channel Slope 0.007400 ft/ft

Elevation range: 99.39 ft to 100.04 ft.

Station (ft)	Elevation (ft)	Start Station	End Station	Roughness
-14.00	100.00	-14.00	44.00	0.015
11.00	99.89			
11.50	99.89			
11.50	99.39			
44.00	100.04			

Discharge 5.10 ft^3/s

Results

Wtd. Mannings Coefficient	0.015	
Water Surface Elevation	99.68	ft
Flow Area	2.17	ft^2
Wetted Perimeter	15.04	ft
Top Width	14.74	ft
Depth	0.29	ft
Critical Water Elev.	99.69	ft
Critical Slope	0.006311	ft/ft
Velocity	2.35	ft/s
Velocity Head	0.09	ft
Specific Energy	99.77	ft
Froude Number	1.08	
Full Flow Capacity	40.69	ft^3/s

Flow is supercritical.

dry lane width = 32.5 - 14.74
= 17.8' > 12' (OK)

Happy Valley Rd @ Sta 97+87
Cross Section for Irregular Channel

Project Description	
Project File	h:\al'spr~1\rancho~1\roads.fm2
Worksheet	Street Capacity for Happy Valley Rd
Flow Element	Irregular Channel
Method	Manning's Formula
Solve For	Water Elevation

Section Data		
Wtd. Mannings Coefficient	0.015	
Channel Slope	0.007400	ft/ft
Water Surface Elevation	99.68	ft
Discharge	5.10	ft^3/s

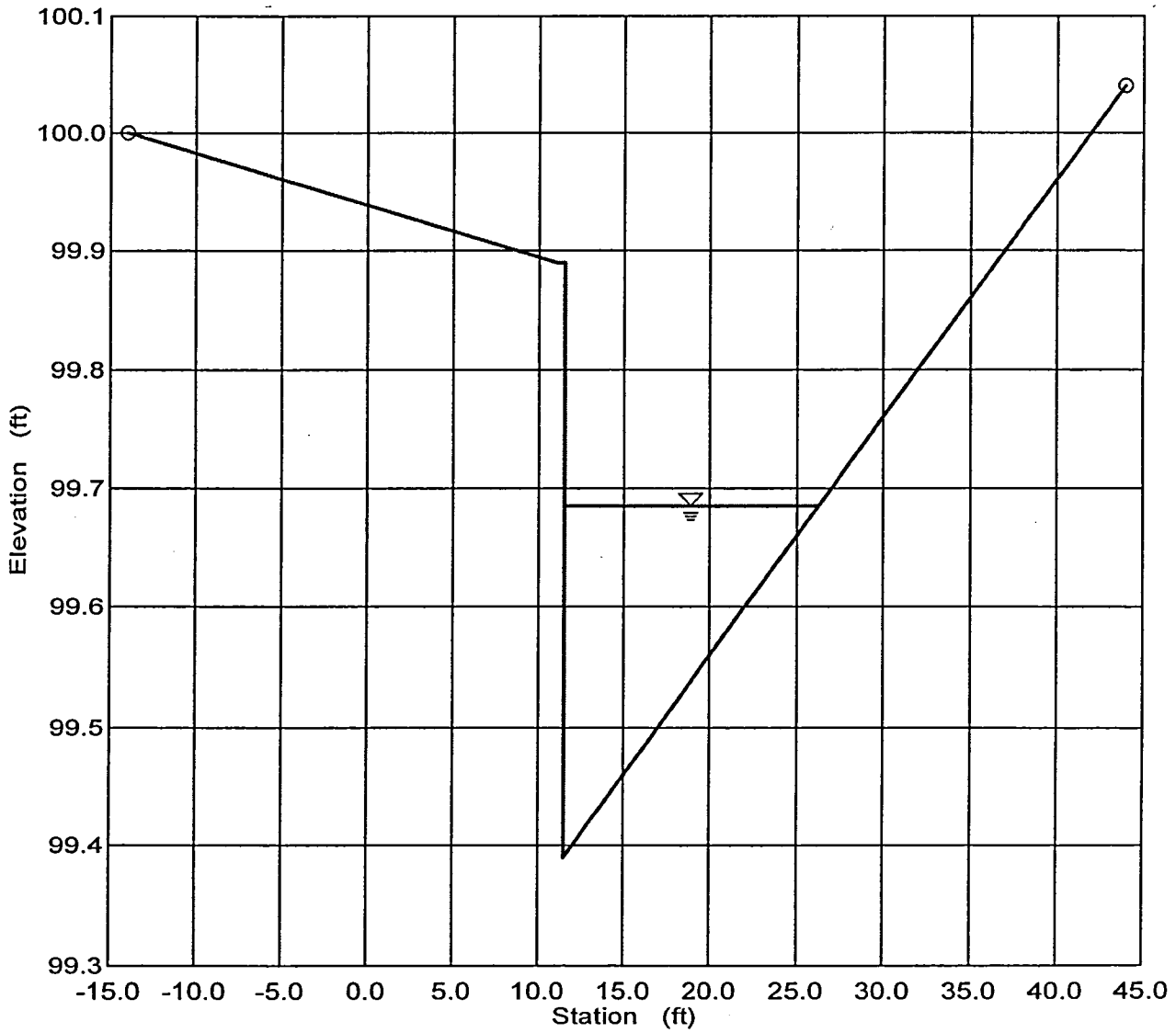

Happy Valley Rd @ Sta 123+00
Worksheet for Irregular Channel

Project Description	
Project File	h:\al'spr~1\rancho~1\roads.fm2
Worksheet	Street Capacity for Happy Valley Rd
Flow Element	Irregular Channel
Method	Manning's Formula
Solve For	Water Elevation

Input Data

Channel Slope 0.005300 ft/ft

Elevation range: 99.39 ft to 100.04 ft.

Station (ft)	Elevation (ft)	Start Station	End Station	Roughness
-14.00	100.00	-14.00	44.00	0.015
11.00	99.89			
11.50	99.89			
11.50	99.39			
44.00	100.04			

Discharge 5.70 ft^3/s

Results		
Wtd. Mannings Coefficient	0.015	
Water Surface Elevation	99.72	ft
Flow Area	2.68	ft^2
Wetted Perimeter	16.69	ft
Top Width	16.36	ft
Depth	0.33	ft
Critical Water Elev.	99.71	ft
Critical Slope	0.006218	ft/ft
Velocity	2.13	ft/s
Velocity Head	0.07	ft
Specific Energy	99.79	ft
Froude Number	0.93	
Full Flow Capacity	34.43	ft^3/s
Flow is subcritical.		

dry lane Calculations

$= 32.5 - 16.36 = 16.14' > 12.0'$ (OK)

Happy Valley Rd @ Sta 123+00
Cross Section for Irregular Channel

Project Description	
Project File	h:\al'spr~1\rancho~1\roads.fm2
Worksheet	Street Capacity for Happy Valley Rd
Flow Element	Irregular Channel
Method	Manning's Formula
Solve For	Water Elevation

Section Data		
Wtd. Mannings Coefficient	0.015	
Channel Slope	0.005300	ft/ft
Water Surface Elevation	99.72	ft
Discharge	5.70	ft^3/s

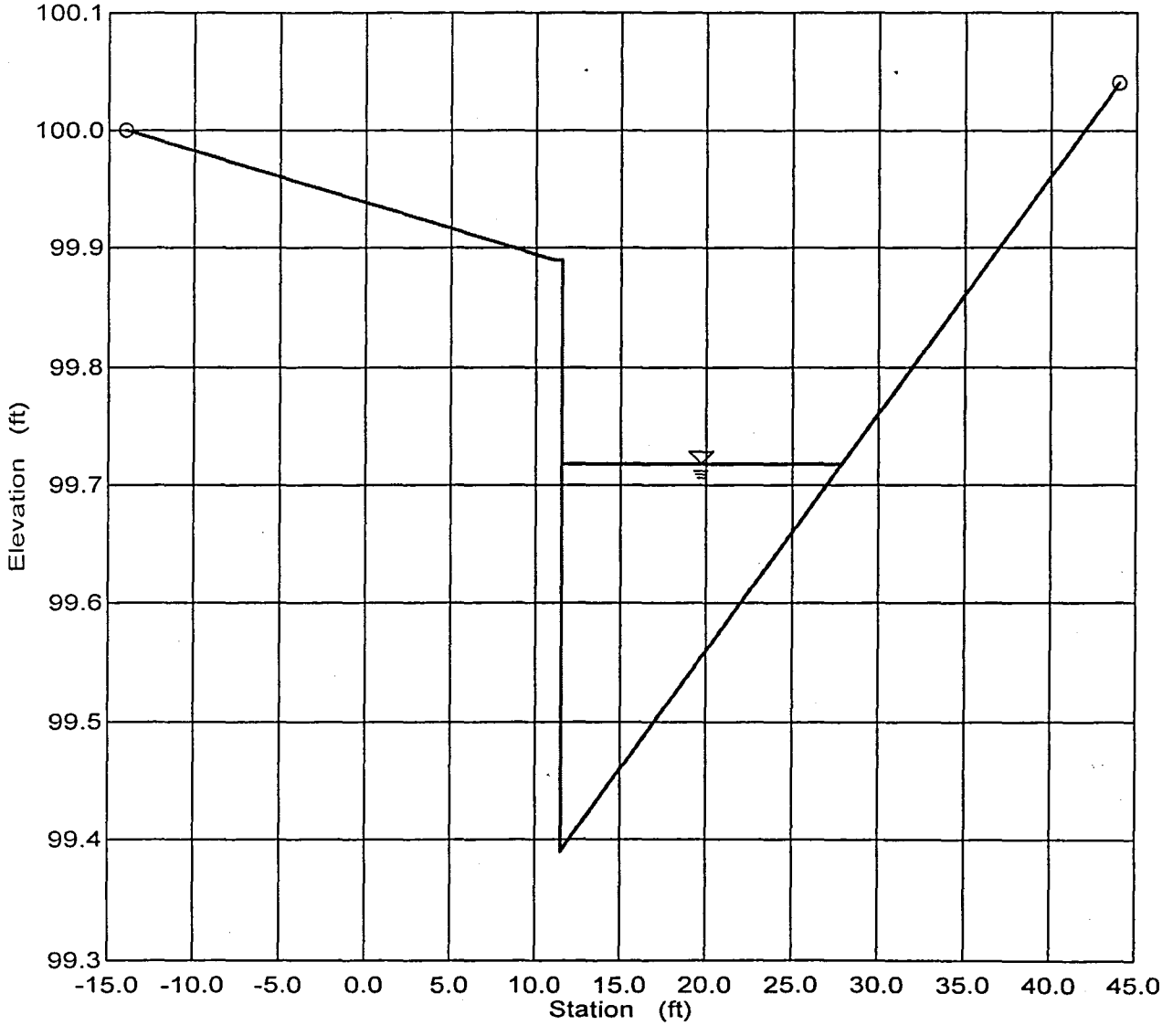

APPENDIX D

SCUPPER/CATCH BASIN DESIGN

a) Onsite

b) Offsite

D(a) Onsite

SCUPPER/CATCH BASIN DESIGN CALCULATIONS

Project Name: Rancho Cabrillo - ~~Offsite~~ Onsite Roadways
Name of Scupper or Curb Opening Catch Basin: **Litchfield Rd & ~~W.~~ YEARLING RD**
At Concentration Point No.: **CP1 (LP STA 10+61)**

10-year peak flow to scupper or catch basin = Q10 = **8** cfs

Formula used for Sump type of scupper or catch basin:

Q10 = Cw (L + 1.8 x W) d^1.5 x Reduction Factor

where Cw =	**2.3**	
L = length of opening	**UNKNOWN**	Feet
W = width of depression	**1.5**	Feet
d = flow depth	**0.5**	Feet
Reduction Factor	**0.8**	

L = Q10/(Cw x Reduction Factor x Flow Depth ^1.5) - 1.8 x W
= **9.6** FEET

Therefore, use the following scupper or curb opening catch basin:

INSTALL CONCRETE SCUPPER PER MAG STANDARD DETAIL 206 WITH A MINIMUM OPENING LENGTH = 10'

SCUPPER/CATCH BASIN DESIGN CALCULATIONS

Project Name: Rancho Cabrillo - ~~Offsite~~ Onsite Roadways
Name of Scupper or Curb Opening Catch Basin: W. YEARLING RD
At Concentration Point No.: **CP2 (LP STA 20+05)**

10-year peak flow to scupper or catch basin = Q10 = **3** cfs

Formula used for Sump type of scupper or catch basin:

Q10 = Cw (L + 1.8 x W) d^1.5 x Reduction Factor

where Cw =	**2.3**	
L = length of opening	**UNKNOWN**	Feet
W = width of depression	**1.5**	Feet
d = flow depth	**0.5**	Feet
Reduction Factor	**0.8**	

L = Q10/(Cw x Reduction Factor x Flow Depth ^1.5) - 1.8 x W
= **1.9** FEET

Therefore, use the following scupper or curb opening catch basin:

INSTALL CONCRETE SCUPPER PER MAG STANDARD DETAIL 206 WITH A MINIMUM OPENING LENGTH = 2'

SCUPPER/CATCH BASIN DESIGN CALCULATIONS

Project Name: Rancho Cabrillo - ~~Offsite~~ Onsite Roadways
Name of Scupper or Curb Opening Catch Basin: W. YEARLING RD
At Concentration Point No.: **CP3 (LP STA 22+95)**

10-year peak flow to scupper or catch basin = Q10 = **2** cfs

Formula used for Sump type of scupper or catch basin:

Q10 = Cw (L + 1.8 x W) d^1.5 x Reduction Factor

where Cw =	**2.3**	
L = length of opening	**UNKNOWN**	Feet
W = width of depression	**1.5**	Feet
d = flow depth	**0.5**	Feet
Reduction Factor	**0.8**	

L = Q10/(Cw x Reduction Factor x Flow Depth ^1.5) - 1.8 x W
= **0.4** FEET

Therefore, use the following scupper or curb opening catch basin:

INSTALL CONCRETE SCUPPER PER MAG STANDARD DETAIL 206 WITH A MINIMUM OPENING LENGTH = 1'

SCUPPER/CATCH BASIN DESIGN CALCULATIONS

Project Name: Rancho Cabrillo - Onsite Roadways
Name of Scupper or Curb Opening Catch Basin: W. YEARLING RD @ Sta 39+17N
At Concentration Point No.: CP 4A

10-year peak flow to scupper or catch basin = Q10 = **4** cfs

Formula used for Sump type of scupper or catch basin:

Q10 = Cw (L + 1.8 x W) d^1.5 x Reduction Factor

where Cw =	**2.3**	
L = length of opening	**UNKNOWN**	Feet
W = width of depression	**1.5**	Feet
d = flow depth	**0.5**	Feet
Reduction Factor	**0.8**	

L = Q10/(Cw x Reduction Factor x Flow Depth ^1.5) - 1.8 x W
= **3.4** FEET

Therefore, use the following for scuppers:

INSTALL A CONCRETE SCUPPER PER MAG STANDARD DETAIL 206 WITH A MINIMUM OPENING LENGTH OF 4'

SCUPPER/CATCH BASIN DESIGN CALCULATIONS

Project Name: Rancho Cabrillo - Onsite Roadways
Name of Scupper or Curb Opening Catch Basin: W. YEARLING RD @ Sta 39+17 S
At Concentration Point No.: CP 4B

10-year peak flow to scupper or catch basin = Q10 = 2 cfs

Formula used for Sump type of scupper or catch basin:

Q10 = Cw (L + 1.8 x W) d^1.5 x Reduction Factor

where Cw =	2.3	
L = length of opening	UNKNOWN	Feet
W = width of depression	1.5	Feet
d = flow depth	0.5	Feet
Reduction Factor	0.8	

L = Q10/(Cw x Reduction Factor x Flow Depth ^1.5) - 1.8 x W
= 0.4 FEET

Therefore, use the following for scuppers:

INSTALL A CONCRETE SCUPPER PER MAG STANDARD DETAIL 206 WITH A MINIMUM OPENING LENGTH OF 1'

SCUPPER/CATCH BASIN DESIGN CALCULATIONS

Project Name: Rancho Cabrillo - ~~Offsite~~ Onsite Roadways
Name of Scupper or Curb Opening Catch Basin: **Jomax Rd**
At Concentration Point No.: **CP5 (LP STA 19+51)**

10-year peak flow to scupper or catch basin = Q10 = **7** cfs

Formula used for Sump type of scupper or catch basin:

Q10 = Cw (L + 1.8 x W) d^1.5 x Reduction Factor

where Cw =	**2.3**	
L = length of opening	**UNKNOWN**	Feet
W = width of depression	**1.5**	Feet
d = flow depth	**0.5**	Feet
Reduction Factor	**0.8**	

L = Q10/(Cw x Reduction Factor x Flow Depth ^1.5) - 1.8 x W
= **8.1** FEET

Therefore, use the following scupper or curb opening catch basin:

INSTALL CONCRETE SCUPPER PER MAG STANDARD DETAIL 206 WITH A MINIMUM OPENING LENGTH = 9'

SCUPPER/CATCH BASIN DESIGN CALCULATIONS

Project Name: Rancho Cabrillo - ~~Offsite~~ Onsite Roadways
Name of Scupper or Curb Opening Catch Basin: **Jomax Rd**
At Concentration Point No.: **CP6 (LP STA 26+15)**

10-year peak flow to scupper or catch basin = Q10 = **5** cfs

Formula used for Sump type of scupper or catch basin:

Q10 = Cw (L + 1.8 x W) d^1.5 x Reduction Factor

where Cw =	**2.3**	
L = length of opening	**UNKNOWN**	Feet
W = width of depression	**1.5**	Feet
d = flow depth	**0.5**	Feet
Reduction Factor	**0.8**	

L = Q10/(Cw x Reduction Factor x Flow Depth ^1.5) - 1.8 x W
= **5.0** FEET

Therefore, use the following scupper or curb opening catch basin:

INSTALL CONCRETE SCUPPER PER MAG STANDARD DETAIL 206 WITH A MINIMUM OPENING LENGTH = 5'

SCUPPER/CATCH BASIN DESIGN CALCULATIONS

Project Name: Rancho Cabrillo - ~~Offsite~~ Onsite Roadways
Name of Scupper or Curb Opening Catch Basin: **Dysart Rd**
At Concentration Point No.: **CP7 (LP STA 49+45)**

10-year peak flow to scupper or catch basin = Q10 = **10** cfs

Formula used for Sump type of scupper or catch basin:

Q10 = Cw (L + 1.8 x W) d^1.5 x Reduction Factor

where Cw =	**2.3**	
L = length of opening	**UNKNOWN**	Feet
W = width of depression	**1.5**	Feet
d = flow depth	**0.5**	Feet
Reduction Factor	**0.8**	

L = Q10/(Cw x Reduction Factor x Flow Depth ^1.5) - 1.8 x W
= **12.7** FEET

Therefore, use the following scupper or curb opening catch basin:

INSTALL CONCRETE SCUPPER PER MAG STANDARD DETAIL 206 WITH A MINIMUM OPENING LENGTH = 13'

SCUPPER/CATCH BASIN DESIGN CALCULATIONS

Project Name: Rancho Cabrillo - ~~Offsite~~ Onsite Roadways
Name of Scupper or Curb Opening Catch Basin: **Dysart Rd**
At Concentration Point No.: **CP8 (LP STA 21+18)**

10-year peak flow to scupper or catch basin = Q10 = **13** cfs

Formula used for Sump type of scupper or catch basin:

Q10 = Cw (L + 1.8 x W) d^1.5 x Reduction Factor

where Cw =	**2.3**	
L = length of opening	**UNKNOWN**	Feet
W = width of depression	**1.5**	Feet
d = flow depth	**0.5**	Feet
Reduction Factor	**0.8**	

L = Q10/(Cw x Reduction Factor x Flow Depth ^1.5) - 1.8 x W
= **17.3** FEET

Therefore, use the following scupper or curb opening catch basin:

INSTALL CONCRETE SCUPPER PER MAG STANDARD DETAIL 206 WITH A MINIMUM OPENING LENGTH = 18'

SCUPPER/CATCH BASIN DESIGN CALCULATIONS

Project Name: Rancho Cabrillo - Onsite Roadways
Name of Scupper or Curb Opening Catch Basin: **El Granada Blvd Sta 39+25**
At Concentration Point No.: **CP9**

10-year peak flow to scupper or catch basin = Q10 = **8** cfs

Formula used for Sump type of scupper or catch basin:

Q10 = Cw (L + 1.8 x W) d^1.5 x Reduction Factor

where Cw =	**2.3**	
L = length of opening	**UNKNOWN**	Feet
W = width of depression	**1.5**	Feet
d = flow depth	**0.5**	Feet
Reduction Factor	**0.8**	

L = Q10/(Cw x Reduction Factor x Flow Depth ^1.5) - 1.8 x W
= **9.6** FEET

Therefore, use the following for scuppers:

INSTALL 2 CONCRETE SCUPPERS PER MAG STANDARD DETAIL 206
EACH WITH A MINIMUM OPENING LENGTH OF 10'

SCUPPER/CATCH BASIN DESIGN CALCULATIONS

Project Name: Rancho Cabrillo - ~~Offsite~~ Onsite Roadways
Name of Scupper or Curb Opening Catch Basin: **El Granada Blvd**
At Concentration Point No.: **CP10 (LP STA 26+50)**

10-year peak flow to scupper or catch basin = Q10 = **5** cfs

Formula used for Sump type of scupper or catch basin:

Q10 = Cw (L + 1.8 x W) d^1.5 x Reduction Factor

where Cw =	**2.3**	
L = length of opening	**UNKNOWN**	Feet
W = width of depression	**1.5**	Feet
d = flow depth	**0.5**	Feet
Reduction Factor	**0.8**	

L = Q10/(Cw x Reduction Factor x Flow Depth ^1.5) - 1.8 x W
= **5.0** FEET

Therefore, use the following scupper or curb opening catch basin:

INSTALL CONCRETE SCUPPER PER MAG STANDARD DETAIL 206 WITH A MINIMUM OPENING LENGTH = 5'

SCUPPER/CATCH BASIN DESIGN CALCULATIONS

Project Name: Rancho Cabrillo - Onsite Roadways
Name of Scupper or Curb Opening Catch Basin: **N. El Granada Blvd Sta. 26+50**
At Concentration Point No.: **CP10A**

10-year peak flow to scupper or catch basin = Q10 = **5** cfs

Formula used for Sump type of scupper or catch basin:

Q10 = Cw (L + 1.8 x W) d^1.5 x Reduction Factor

where Cw =	**2.3**	
L = length of opening	**UNKNOWN**	Feet
W = width of depression	**1.5**	Feet
d = flow depth	**0.5**	Feet
Reduction Factor	**0.8**	

L = Q10/(Cw x Reduction Factor x Flow Depth ^1.5) - 1.8 x W
= **5.0** FEET

Therefore, use the following for scupper:

INSTALL CONCRETE SCUPPER PER MAG STANDARD DETAIL 206 WITH A MINIMUM OPENING LENGTH = 5'

SCUPPER/CATCH BASIN DESIGN CALCULATIONS

Project Name: Rancho Cabrillo - Onsite Roadways
Name of Scupper or Curb Opening Catch Basin: **W. RANGE MULE DR Sta. 12+70**
At Concentration Point No.: **CP11 OR CP12**

10-year peak flow to scupper or catch basin = Q10 = **3** cfs

Formula used for Sump type of scupper or catch basin:

Q10 = Cw (L + 1.8 x W) d^1.5 x Reduction Factor

where Cw =	**2.3**	
L = length of opening	**UNKNOWN**	Feet
W = width of depression	**1.5**	Feet
d = flow depth	**0.5**	Feet
Reduction Factor	**0.8**	

L = Q10/(Cw x Reduction Factor x Flow Depth ^1.5) - 1.8 x W
= **1.9** FEET

Therefore, use the following for scupper:

INSTALL CONCRETE SCUPPER PER MAG STANDARD DETAIL 206 WITH A MINIMUM OPENING LENGTH = 2'

SCUPPER/CATCH BASIN DESIGN CALCULATIONS

Project Name: Rancho Cabrillo - ~~Offsite~~ Onsite Roadways
Name of Scupper or Curb Opening Catch Basin: **NW of El Granada Blvd & Happy Valley Rd**
At Concentration Point No.: **CP13**

10-year peak flow to scupper or catch basin = Q10 = **3** cfs

Formula used for Sump type of scupper or catch basin:

Q10 = Cw (L + 1.8 x W) d^1.5 x Reduction Factor

where Cw =	**2.3**	
L = length of opening	**UNKNOWN**	Feet
W = width of depression	**1.5**	Feet
d = flow depth	**0.5**	Feet
Reduction Factor	**0.8**	

L = Q10/(Cw x Reduction Factor x Flow Depth ^1.5) - 1.8 x W
= **1.9** FEET

Therefore, use the following scupper or curb opening catch basin:

INSTALL CONCRETE SCUPPER PER MAG STANDARD DETAIL 206 WITH A MINIMUM OPENING LENGTH = 2'

SCUPPER/CATCH BASIN DESIGN CALCULATIONS

Project Name: Rancho Cabrillo - Onsite Roadways
Name of Scupper or Curb Opening Catch Basin: **Happy Valley Rd @ Sta 49+16**
At Concentration Point No.: **CP14**

10-year peak flow to scupper or catch basin = Q10 = **11** cfs

Formula used for Sump type of scupper or catch basin:

Q10 = Cw (L + 1.8 x W) d^1.5 x Reduction Factor

where Cw =	**2.3**	
L = length of opening	**UNKNOWN**	Feet
W = width of depression	**1.5**	Feet
d = flow depth	**0.5**	Feet
Reduction Factor	**0.8**	

L = Q10/(Cw x Reduction Factor x Flow Depth ^1.5) - 1.8 x W
= **14.2** FEET

Therefore, use the following for scuppers:

INSTALL A CONCRETE SCUPPER PER MAG STANDARD DETAIL 206 WITH A MINIMUM OPENING LENGTH OF 15'

SCUPPER/CATCH BASIN DESIGN CALCULATIONS

Project Name: Rancho Cabrillo - Onsite Roadways
Name of Scupper or Curb Opening Catch Basin: **Happy Valley Rd @ Sta 49+16**
At Concentration Point No.: **CP15 (Discharge to the south)**

10-year peak flow to scupper or catch basin = Q10 = **10** cfs

Formula used for Sump type of scupper or catch basin:

Q10 = Cw (L + 1.8 x W) d^1.5 x Reduction Factor

where Cw =	**2.3**	
L = length of opening	**UNKNOWN**	Feet
W = width of depression	**1.5**	Feet
d = flow depth	**0.5**	Feet
Reduction Factor	**0.8**	

L = Q10/(Cw x Reduction Factor x Flow Depth ^1.5) - 1.8 x W
= **12.7** FEET

Therefore, use the following for scuppers:

INSTALL A CONCRETE SCUPPER PER MAG STANDARD DETAIL 206 WITH A MINIMUM OPENING LENGTH OF 13'

SCUPPER/CATCH BASIN DESIGN CALCULATIONS

Project Name: Rancho Cabrillo - Onsite Roadways
Name of Scupper or Curb Opening Catch Basin: **N. Dysart Rd to Basin 3**
At Concentration Point No.: **CP16**

10-year peak flow to scupper or catch basin = Q10 = **5** cfs

Formula used for Sump type of scupper or catch basin:

Q10 = Cw (L + 1.8 x W) d^1.5 x Reduction Factor

where Cw =	**2.3**	
L = length of opening	**UNKNOWN**	Feet
W = width of depression	**1.5**	Feet
d = flow depth	**0.5**	Feet
Reduction Factor	**0.8**	

L = Q10/(Cw x Reduction Factor x Flow Depth ^1.5) - 1.8 x W
= **5.0** FEET

Therefore, use the following for scuppers:

INSTALL A CONCRETE SCUPPER PER MAG STANDARD DETAIL 206 WITH A MINIMUM OPENING LENGTH OF 5'

D(b) Offsite

SCUPPER/CATCH BASIN DESIGN CALCULATIONS

Project Name: Rancho Cabrillo - Offsite Roadways
Name of Scupper or Curb Opening Catch Basin: **CB1 @** **Happy Valley Road Sta. 79+00**
At Concentration Point No.: **C3**

10-year peak flow to scupper or catch basin = Q10 = **7.5** cfs

Formula used for Sump type of scupper or catch basin:

Q10 = Cw (L + 1.8 x W) d^1.5 x Reduction Factor

where Cw =	**2.3**	
L = length of opening	**UNKNOWN**	Feet
W = width of depression	**1.5**	Feet
d = flow depth	**0.5**	Feet
Reduction Factor	**0.8**	

L = Q10/(Cw x Reduction Factor x Flow Depth ^1.5) - 1.8 x W
= **8.8** FEET

Therefore, use the following curb opening catch basin:

INSTALL 1- CATCH BASIN ON NORTH EDGE PER CITY OF PHOENIX STANDARD DETAIL P-1569, TYPE "M" SINGLE WING L = 6' (TOTAL OPENING INCLUDING MAINTENANCE BASIN = 9').
USE 24" DISCHARGE PIPE FROM BASIN @ 0.2% TO OUTLET

SCUPPER/CATCH BASIN DESIGN CALCULATIONS

Project Name: Rancho Cabrillo - Offsite Roadways
Name of Scupper or Curb Opening Catch Basin: **CB2 @** **Happy Valley Road Sta. 97+87**
At Concentration Point No.: **C4**

10-year peak flow to scupper or catch basin = Q10 = **9.5** cfs

Formula used for Sump type of scupper or catch basin:

Q10 = Cw (L + 1.8 x W) d^1.5 x Reduction Factor

where Cw =	**2.3**	
L = length of opening	**UNKNOWN**	Feet
W = width of depression	**1.5**	Feet
d = flow depth	**0.5**	Feet
Reduction Factor	**0.8**	

L = Q10/(Cw x Reduction Factor x Flow Depth ^1.5) - 1.8 x W
= **11.9** FEET

Therefore, use the following curb opening catch basin:

INSTALL 1- CATCH BASIN ON NORTH EDGE PER CITY OF PHOENIX STANDARD DETAIL P-1569, TYPE "M" SINGLE WING L = 10' (TOTAL OPENING INCLUDING MAINTENANCE BASIN = 13').
USE 24" DISCHARGE PIPE FROM BASIN @ 0.2% TO OUTLET

SCUPPER/CATCH BASIN DESIGN CALCULATIONS

Project Name: Rancho Cabrillo - Offsite Roadways
Name of Scupper or Curb Opening Catch Basin: **CB3 (HV Road Sta. 110+00)**
At Concentration Point No.: **C5**

10-year peak flow to scupper or catch basin = Q10 = **3** cfs

Formula used for Sump type of scupper or catch basin:

Q10 = Cw (L + 1.8 x W) d^1.5 x Reduction Factor

where Cw =	**2.3**	
L = length of opening	**UNKNOWN**	Feet
W = width of depression	**1.5**	Feet
d = flow depth	**0.5**	Feet
Reduction Factor	**0.8**	

L = Q10/(Cw x Reduction Factor x Flow Depth ^1.5) - 1.8 x W
= **1.9** FEET

Therefore, use the following curb opening catch basin:

INSTALL 1- CATCH BASIN ON NORTH EDGE PER MAG STANDARD DETAIL 530, TYPE "A" WITH 3.5' CURB OPENING.
USE 24" DISCHARGE PIPE FROM BASIN @ 0.2% TO THE RETENTION BASIN IN COLDWATER RANCH

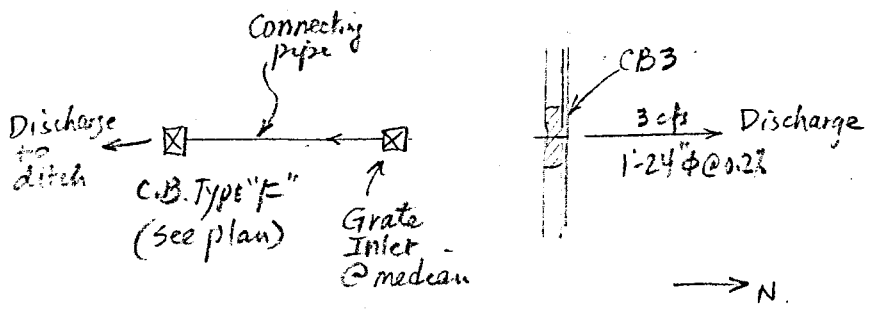

SCUPPER/CATCH BASIN DESIGN CALCULATIONS

Project Name: Rancho Cabrillo - Offsite Roadways
Name of Scupper or Curb Opening Catch Basin: **CB4. (HV Road Sta. 115+80)**
At Concentration Point No.: **C6**

10-year peak flow to scupper or catch basin = Q10 = **4** cfs

Formula used for Sump type of scupper or catch basin:

Q10 = Cw (L + 1.8 x W) d^1.5 x Reduction Factor

where Cw =	**2.3**	
L = length of opening	**UNKNOWN**	Feet
W = width of depression	**1.5**	Feet
d = flow depth	**0.5**	Feet
Reduction Factor	**0.8**	

L = Q10/(Cw x Reduction Factor x Flow Depth ^1.5) - 1.8 x W
= **3.4** FEET

Therefore, use the following curb opening catch basin:

INSTALL 1- CATCH BASIN ON NORTH EDGE PER MAG STANDARD DETAIL 530, TYPE "A" WITH 3.5' CURB OPENING OR APPROVED EQUAL.
USE 24" DISCHARGE PIPE FROM BASIN @ 0.2% TO THE RETENTION BASIN IN COLDWATER RANCH

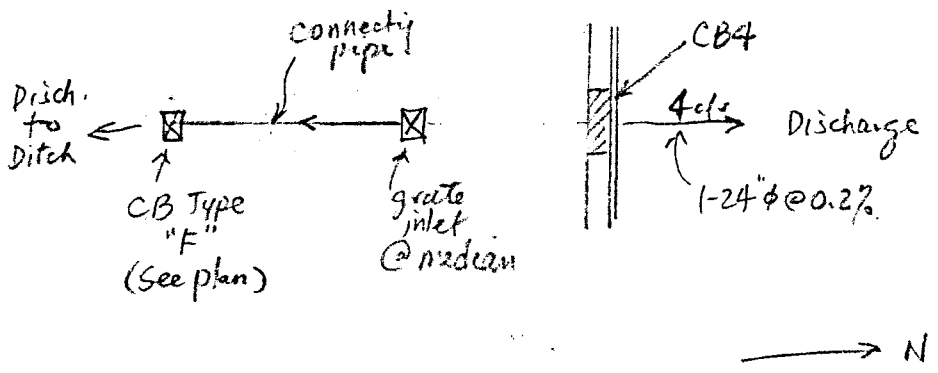

SCUPPER/CATCH BASIN DESIGN CALCULATIONS

Project Name: Rancho Cabrillo - Offsite Roadways
Name of Scupper or Curb Opening Catch Basin: **CB5 (HV Road Sta. 123+00)**
At Concentration Point No.: **C7**

10-year peak flow to scupper or catch basin = Q10 = **7.5** cfs

Formula used for Sump type of scupper or catch basin:

Q10 = Cw (L + 1.8 x W) d^1.5 x Reduction Factor

where Cw =	**2.3**	
L = length of opening	**UNKNOWN**	Feet
W = width of depression	**1.5**	Feet
d = flow depth	**0.5**	Feet
Reduction Factor	**0.8**	

L = Q10/(Cw x Reduction Factor x Flow Depth ^1.5) - 1.8 x W
= **8.8** FEET

Therefore, use the following curb opening catch basin:

INSTALL 1- CATCH BASIN ON NORTH EDGE PER CITY OF PHOENIX STANDARD DETAIL 1569-1, TYPE "M" SINGLE WING L = 6' FOR A TOTAL CURB OPENING OF 9'.
USE 24" DISCHARGE PIPE FROM BASIN @ 0.2% TO THE RETENTION BASIN IN COLDWATER RANCH

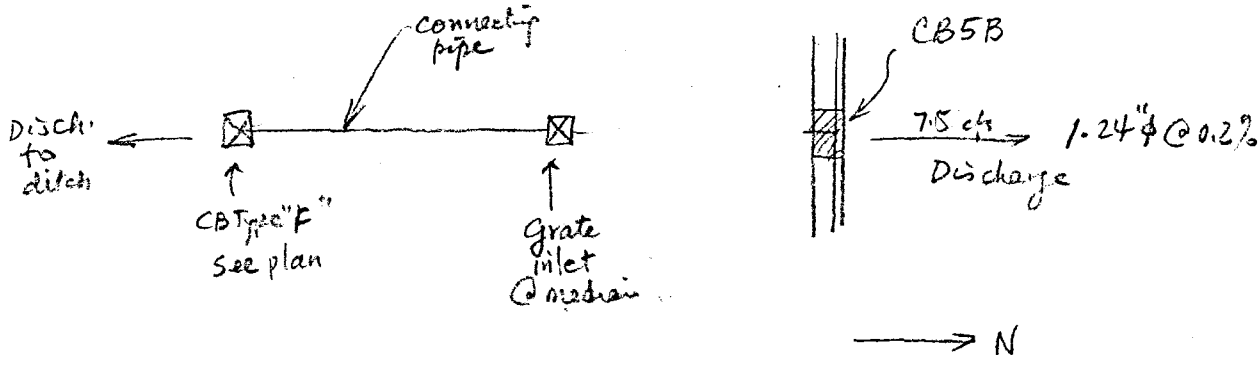

APPENDIX E

OPEN CHANNEL / DITCH DESIGN
a) Onsite

TABLE 1: RANCHO CABRILLO - SUMMARY OF DITCH/CHANNEL DESIGNS FOR OFFSITE FLOWS

January 2, 2004 (file: H:\Albert's Projects\Rancho Cabrillo)

Ditch No.	Q100 (cfs)	Bottom Width (ft)	Side Slopes (H:V)	Bottom Slope (ft/ft)	Flow Depth (ft)	Outlet Velo. (fps)
1	79	10	4 to 1	0.0010	1.95	2.3
2	390 - 498	30	4 to 1	0.0020	3.80 - 4.50	2.2 - 4.0
3	861	40	4 to 1	0.0010	3.93	3.9
4A	38	3	4 to 1	0.0058	1.37	3.3
4B	157	5	4 to 1	0.0060	2.32	4.7
4C	314	10	4 to 1	0.0060	2.70	5.6
5	15	3	4 to 1	0.0035	1.00	2.1
6	NOT USED	N/A	N/A	N/A	N/A	N/A
7	NOT USED	N/A	N/A	N/A	N/A	N/A
8A	35	3	4 to 1	0.0050	1.36	3.04
8B	114	5	4 to 1	0.0050	2.09	4.08
9	204	10	4 to 1	0.0050	2.30	4.63
10A	53	5	4 to 1	0.0050	1.46	3.34
10B	152	10	4 to 1	0.0050	1.98	4.28

Note: Refer to Appendix D for detailed design calculations.

Rancho Cabrillo Ditch 4A
Worksheet for Trapezoidal Channel

Project Description	
Project File	h:\al'spr~1\rancho~1\ranchcab.fm2
Worksheet	Rancho Cabrillo Ditch 4A
Flow Element	Trapezoidal Channel
Method	Manning's Formula
Solve For	Channel Depth

Input Data		
Mannings Coefficient	0.030	
Channel Slope	0.005800	ft/ft
Left Side Slope	3.00	H : V
Right Side Slope	3.00	H : V
Bottom Width	3.00	ft
Discharge	38.00	ft^3/s

Results		
Depth	1.47	ft
Flow Area	10.91	ft^2
Wetted Perimeter	12.31	ft
Top Width	11.83	ft
Critical Depth	1.18	ft
Critical Slope	0.015083	ft/ft
Velocity	3.48	ft/s
Velocity Head	0.19	ft
Specific Energy	1.66	ft
Froude Number	0.64	
Flow is subcritical.		

Cross Section for Ditch 4A
Cross Section for Trapezoidal Channel

Project Description	
Project File	h:\al'spr~1\rancho~1\ranchcab.fm2
Worksheet	Rancho Cabrillo Ditch 4A
Flow Element	Trapezoidal Channel
Method	Manning's Formula
Solve For	Channel Depth

Section Data		
Mannings Coefficient	0.030	
Channel Slope	0.005800	ft/ft
Depth	1.47	ft
Left Side Slope	3.00	H : V
Right Side Slope	3.00	H : V
Bottom Width	3.00	ft
Discharge	38.00	ft^3/s

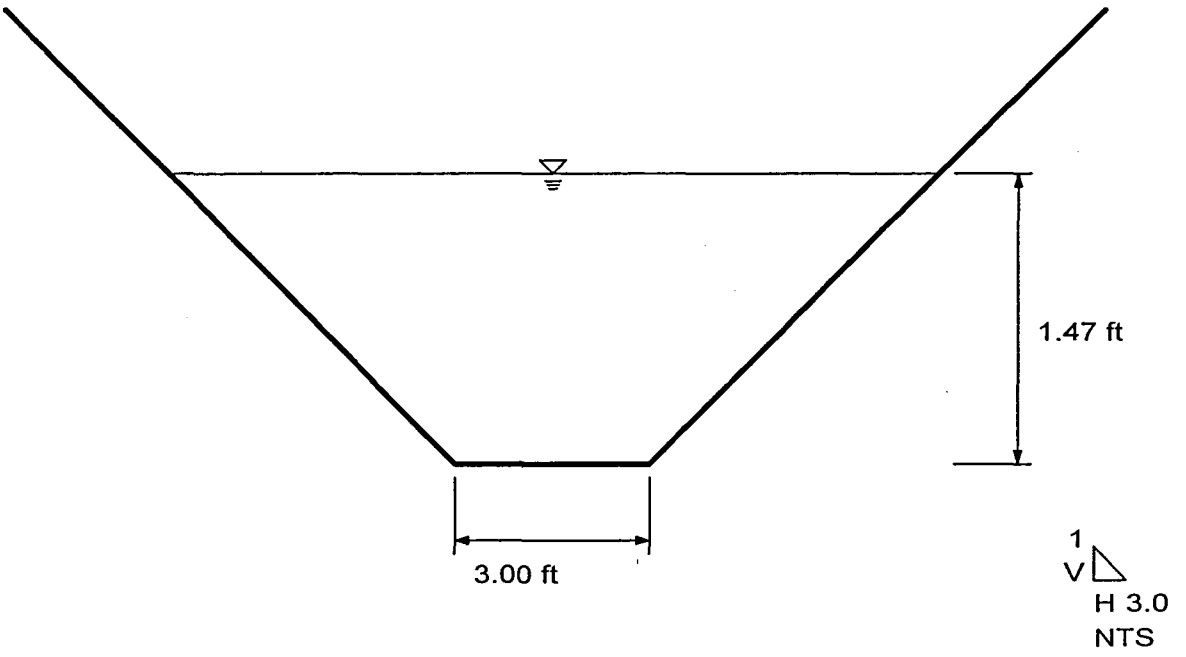

Rancho Cabrillo Ditch 4B
Worksheet for Trapezoidal Channel

Project Description	
Project File	h:\al'spr~1\rancho~1\ranchcab.fm2
Worksheet	Rancho Cabrillo Ditch 4B
Flow Element	Trapezoidal Channel
Method	Manning's Formula
Solve For	Channel Depth

Input Data		
Mannings Coefficient	0.030	
Channel Slope	0.017400	ft/ft
Left Side Slope	3.00	H : V
Right Side Slope	3.00	H : V
Bottom Width	8.00	ft
Discharge	314.00	ft^3/s

Results		
Depth	2.37	ft
Flow Area	35.78	ft^2
Wetted Perimeter	22.98	ft
Top Width	22.21	ft
Critical Depth	2.63	ft
Critical Slope	0.011392	ft/ft
Velocity	8.78	ft/s
Velocity Head	1.20	ft
Specific Energy	3.57	ft
Froude Number	1.22	
Flow is supercritical.		

Cross Section for Ditch 4B
Cross Section for Trapezoidal Channel

Project Description	
Project File	h:\al'spr~1\rancho~1\ranchcab.fm2
Worksheet	Rancho Cabrillo Ditch 4B
Flow Element	Trapezoidal Channel
Method	Manning's Formula
Solve For	Channel Depth

Section Data		
Mannings Coefficient	0.030	
Channel Slope	0.017400	ft/ft
Depth	2.37	ft
Left Side Slope	3.00	H : V
Right Side Slope	3.00	H : V
Bottom Width	8.00	ft
Discharge	314.00	ft^3/s

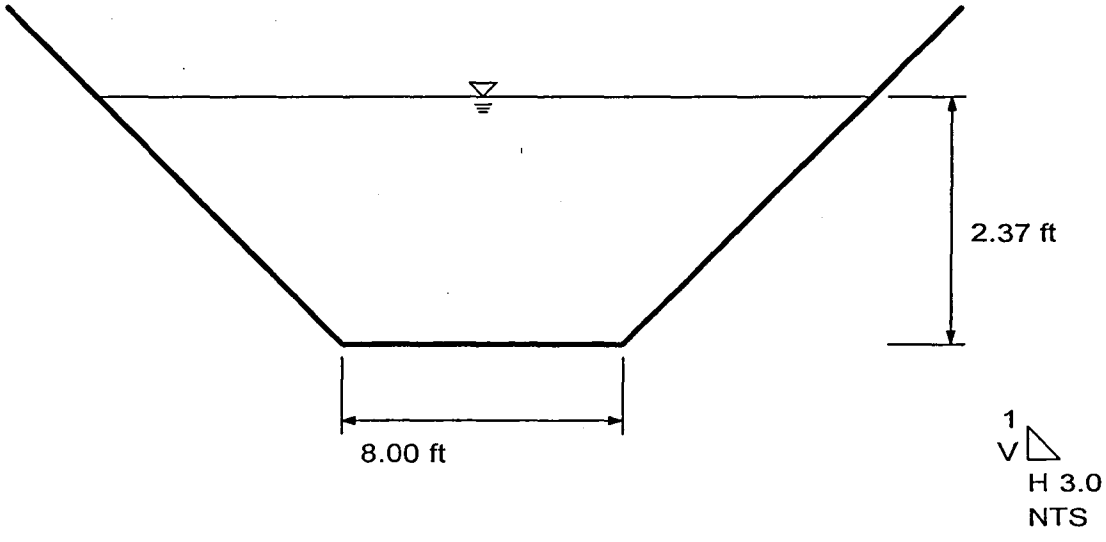

Rancho Cabrillo Ditch 5
Worksheet for Trapezoidal Channel

Project Description	
Project File	h:\al'spr~1\rancho~1\ranchcab.fm2
Worksheet	Rancho Cabrillo Ditch 5
Flow Element	Trapezoidal Channel
Method	Manning's Formula
Solve For	Channel Depth

Input Data		
Mannings Coefficient	0.030	
Channel Slope	0.002600	ft/ft
Left Side Slope	4.00	H : V
Right Side Slope	4.00	H : V
Bottom Width	3.00	ft
Discharge	15.00	ft^3/s

Results		
Depth	1.07	ft
Flow Area	7.83	ft^2
Wetted Perimeter	11.85	ft
Top Width	11.59	ft
Critical Depth	0.68	ft
Critical Slope	0.017426	ft/ft
Velocity	1.92	ft/s
Velocity Head	0.06	ft
Specific Energy	1.13	ft
Froude Number	0.41	
Flow is subcritical.		

Cross Section for Ditch 5
Cross Section for Trapezoidal Channel

Project Description	
Project File	h:\al'spr~1\rancho~1\ranchcab.fm2
Worksheet	Rancho Cabrillo Ditch 5
Flow Element	Trapezoidal Channel
Method	Manning's Formula
Solve For	Channel Depth

Section Data		
Mannings Coefficient	0.030	
Channel Slope	0.002600	ft/ft
Depth	1.07	ft
Left Side Slope	4.00	H : V
Right Side Slope	4.00	H : V
Bottom Width	3.00	ft
Discharge	15.00	ft^3/s

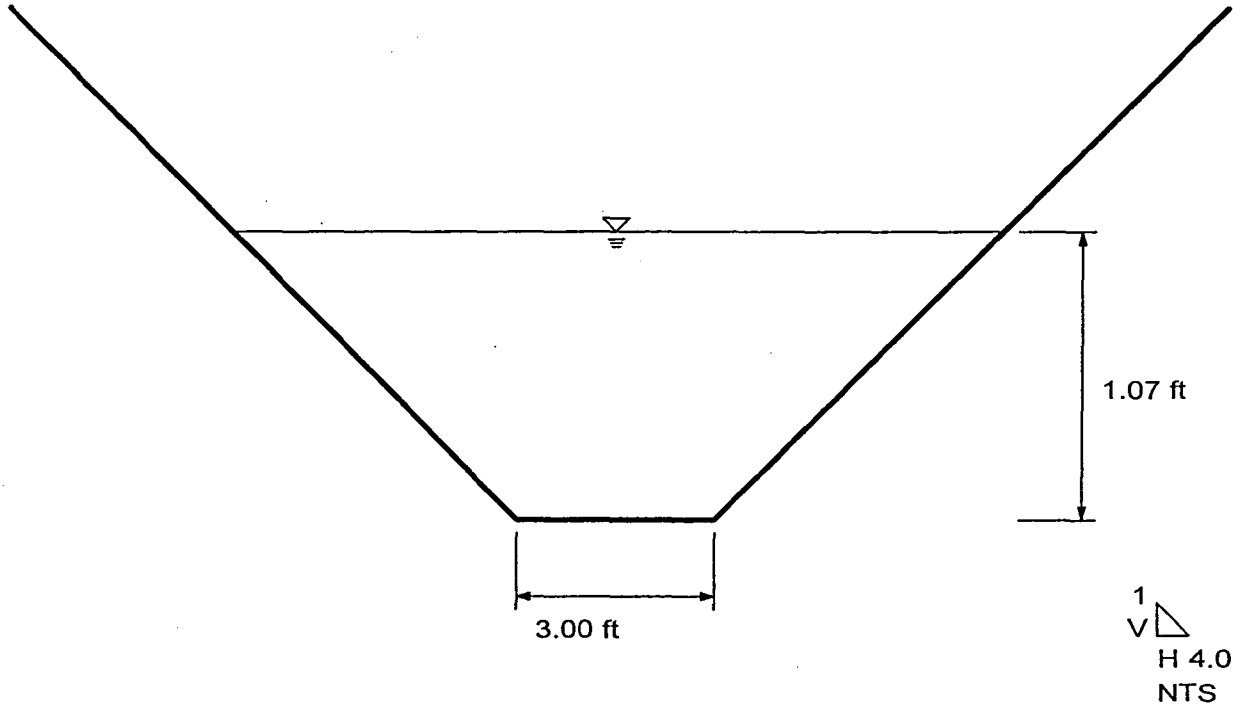

Rancho Cabrillo Ditch #8A
Worksheet for Trapezoidal Channel

Project Description	
Project File	h:\al'spr~1\rancho~1\ranchcab.fm2
Worksheet	Ditch #8A
Flow Element	Trapezoidal Channel
Method	Manning's Formula
Solve For	Channel Depth

Input Data		
Mannings Coefficient	0.030	
Channel Slope	0.005000	ft/ft
Left Side Slope	4.00	H : V
Right Side Slope	4.00	H : V
Bottom Width	3.00	ft
Discharge	35.00	ft^3/s

Results		
Depth	1.36	ft
Flow Area	11.51	ft^2
Wetted Perimeter	14.24	ft
Top Width	13.90	ft
Critical Depth	1.05	ft
Critical Slope	0.015490	ft/ft
Velocity	3.04	ft/s
Velocity Head	0.14	ft
Specific Energy	1.51	ft
Froude Number	0.59	
Flow is subcritical.		

Cross Section for Ditch #8A
Cross Section for Trapezoidal Channel

Project Description	
Project File	h:\al'spr~1\rancho~1\ranchcab.fm2
Worksheet	Ditch #8A
Flow Element	Trapezoidal Channel
Method	Manning's Formula
Solve For	Channel Depth

Section Data		
Mannings Coefficient	0.030	
Channel Slope	0.005000	ft/ft
Depth	1.36	ft
Left Side Slope	4.00	H : V
Right Side Slope	4.00	H : V
Bottom Width	3.00	ft
Discharge	35.00	ft^3/s

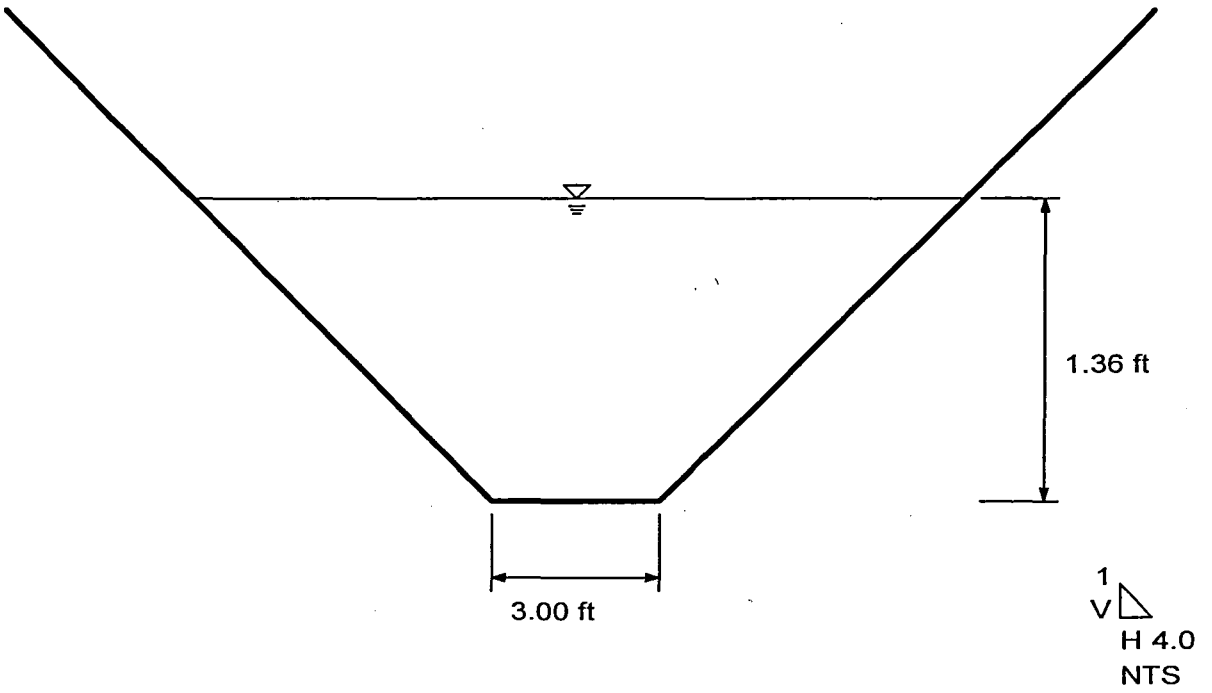

Rancho Cabrillo Ditch #8B
Worksheet for Trapezoidal Channel

Project Description	
Project File	h:\al'spr~1\rancho~1\ranchcab.fm2
Worksheet	Ditch #8B
Flow Element	Trapezoidal Channel
Method	Manning's Formula
Solve For	Channel Depth

Input Data		
Mannings Coefficient	0.030	
Channel Slope	0.005000	ft/ft
Left Side Slope	4.00	H : V
Right Side Slope	4.00	H : V
Bottom Width	5.00	ft
Discharge	114.00	ft^3/s

Results		
Depth	2.09	ft
Flow Area	27.95	ft^2
Wetted Perimeter	22.25	ft
Top Width	21.73	ft
Critical Depth	1.67	ft
Critical Slope	0.013238	ft/ft
Velocity	4.08	ft/s
Velocity Head	0.26	ft
Specific Energy	2.35	ft
Froude Number	0.63	
Flow is subcritical.		

Cross Section for Ditch #8B
Cross Section for Trapezoidal Channel

Project Description	
Project File	h:\al'spr~1\rancho~1\ranchcab.fm2
Worksheet	Ditch #8B
Flow Element	Trapezoidal Channel
Method	Manning's Formula
Solve For	Channel Depth

Section Data		
Mannings Coefficient	0.030	
Channel Slope	0.005000	ft/ft
Depth	2.09	ft
Left Side Slope	4.00	H : V
Right Side Slope	4.00	H : V
Bottom Width	5.00	ft
Discharge	114.00	ft^3/s

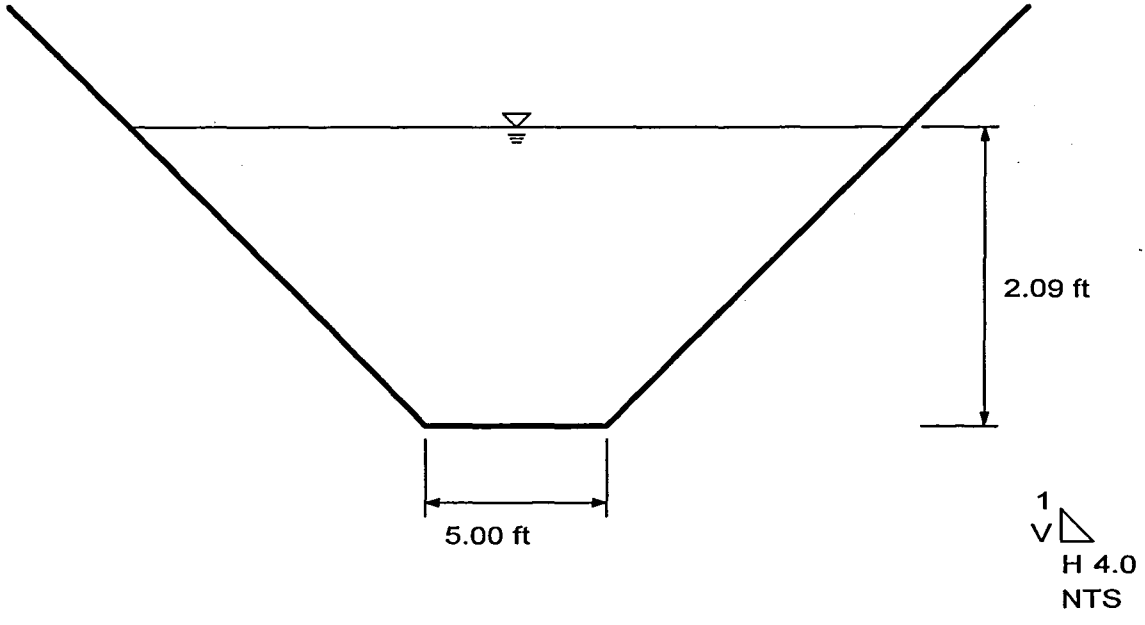

Rancho Cabrillo Ditch #9
Worksheet for Trapezoidal Channel

Project Description	
Project File	h:\al'spr~1\rancho~1\ranchcab.fm2
Worksheet	Ditch #9
Flow Element	Trapezoidal Channel
Method	Manning's Formula
Solve For	Channel Depth

Input Data		
Mannings Coefficient	0.030	
Channel Slope	0.005000	ft/ft
Left Side Slope	4.00	H : V
Right Side Slope	4.00	H : V
Bottom Width	10.00	ft
Discharge	204.00	ft^3/s

Results		
Depth	2.30	ft
Flow Area	44.02	ft^2
Wetted Perimeter	28.93	ft
Top Width	28.36	ft
Critical Depth	1.83	ft
Critical Slope	0.012353	ft/ft
Velocity	4.63	ft/s
Velocity Head	0.33	ft
Specific Energy	2.63	ft
Froude Number	0.66	
Flow is subcritical.		

Cross Section for ditch #9
Cross Section for Trapezoidal Channel

Project Description	
Project File	h:\al'spr~1\rancho~1\ranchcab.fm2
Worksheet	Ditch #9
Flow Element	Trapezoidal Channel
Method	Manning's Formula
Solve For	Channel Depth

Section Data		
Mannings Coefficient	0.030	
Channel Slope	0.005000	ft/ft
Depth	2.30	ft
Left Side Slope	4.00	H : V
Right Side Slope	4.00	H : V
Bottom Width	10.00	ft
Discharge	204.00	ft^3/s

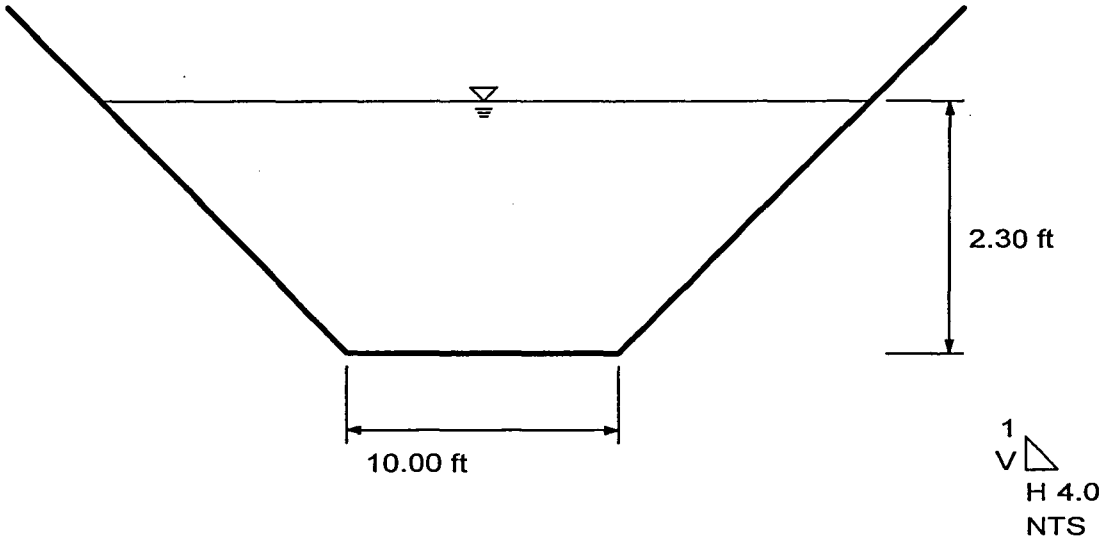

Rancho Cabrillo Ditch #10A
Worksheet for Trapezoidal Channel

Project Description	
Project File	h:\al'spr~1\rancho~1\ranchcab.fm2
Worksheet	Ditch #10A
Flow Element	Trapezoidal Channel
Method	Manning's Formula
Solve For	Channel Depth

Input Data		
Mannings Coefficient	0.030	
Channel Slope	0.005000	ft/ft
Left Side Slope	4.00	H : V
Right Side Slope	4.00	H : V
Bottom Width	5.00	ft
Discharge	53.00	ft^3/s

Results		
Depth	1.46	ft
Flow Area	15.88	ft^2
Wetted Perimeter	17.06	ft
Top Width	16.70	ft
Critical Depth	1.13	ft
Critical Slope	0.014728	ft/ft
Velocity	3.34	ft/s
Velocity Head	0.17	ft
Specific Energy	1.64	ft
Froude Number	0.60	
Flow is subcritical.		

Cross Section for Ditch #10A
Cross Section for Trapezoidal Channel

Project Description	
Project File	h:\al'spr~1\rancho~1\ranchcab.fm2
Worksheet	Ditch #10A
Flow Element	Trapezoidal Channel
Method	Manning's Formula
Solve For	Channel Depth

Section Data		
Mannings Coefficient	0.030	
Channel Slope	0.005000	ft/ft
Depth	1.46	ft
Left Side Slope	4.00	H : V
Right Side Slope	4.00	H : V
Bottom Width	5.00	ft
Discharge	53.00	ft^3/s

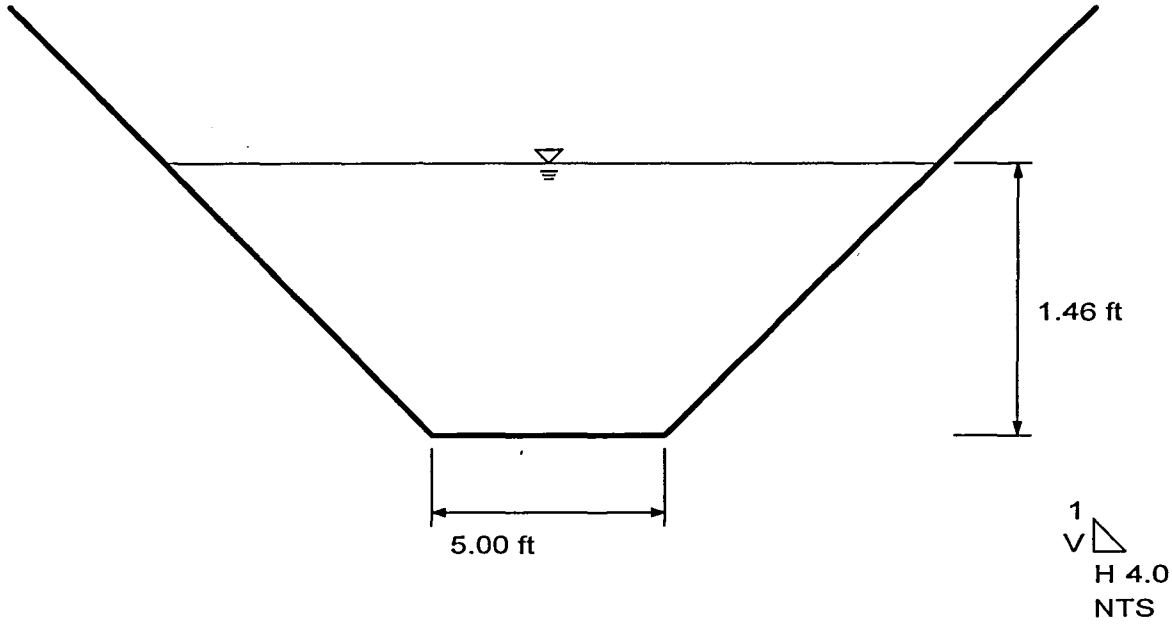

Rancho Cabrillo Ditch #10B
Worksheet for Trapezoidal Channel

Project Description	
Project File	h:\al'spr~1\rancho~1\ranchcab.fm2
Worksheet	ditch #10B
Flow Element	Trapezoidal Channel
Method	Manning's Formula
Solve For	Channel Depth

Input Data		
Mannings Coefficient	0.030	
Channel Slope	0.005000	ft/ft
Left Side Slope	4.00	H : V
Right Side Slope	4.00	H : V
Bottom Width	10.00	ft
Discharge	152.00	ft^3/s

Results		
Depth	1.98	ft
Flow Area	35.55	ft^2
Wetted Perimeter	26.35	ft
Top Width	25.86	ft
Critical Depth	1.56	ft
Critical Slope	0.012897	ft/ft
Velocity	4.28	ft/s
Velocity Head	0.28	ft
Specific Energy	2.27	ft
Froude Number	0.64	
Flow is subcritical.		

Cross Section for Ditch #10B
Cross Section for Trapezoidal Channel

Project Description	
Project File	h:\al'spr~1\rancho~1\ranchcab.fm2
Worksheet	ditch #10B
Flow Element	Trapezoidal Channel
Method	Manning's Formula
Solve For	Channel Depth

Section Data		
Mannings Coefficient	0.030	
Channel Slope	0.005000	ft/ft
Depth	1.98	ft
Left Side Slope	4.00	H : V
Right Side Slope	4.00	H : V
Bottom Width	10.00	ft
Discharge	152.00	ft^3/s

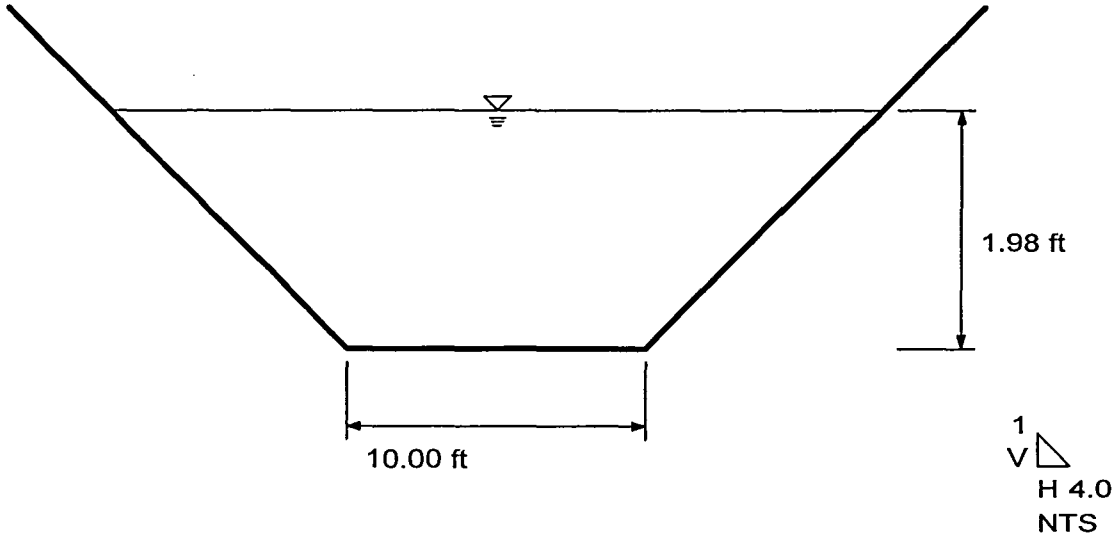

APPENDIX F

CULVERT DESIGN

a) Onsite

b) Offsite

TABLE 2: RANCHO CABRILLO - SUMMARY OF CROSS DRAINAGE CULVERTS FOR OFFSITE FLOWS

May 13, 2004 (file: H:\Albert's Projects\Rancho Cabrillo)

Culvert No.	Q100 (cfs)	Size	Approx. Length (ft)	Bottom Slope (ft/ft)	Inlet Invert Elev. (ft)	Outlet Invert Elev. (ft)	Headwater Elev. (ft)	Headwater Depth (ft)	Outlet Velo. (fps)
I. FOR ONSITE									
1	228	3 - 6'x4' CBC	95	0.006	1355.24	1354.67	1358.23	2.99	8.7
2	NOT USED	N/A	N/A	N/A	N/A	N/A	N/A	N/A	N/A
3	NOT USED	N/A	N/A	N/A	N/A	N/A	N/A	N/A	N/A
4	378	3 - 8'x4' CBC	112	0.0045	1352.00	1351.50	1355.46	3.46	8.8
5	NOT USED	N/A	N/A	N/A	N/A	N/A	N/A	N/A	N/A
6	NOT USED	N/A	N/A	N/A	N/A	N/A	N/A	N/A	N/A
7	303	3 - 6'x4' CBC	70	0.0034	1352.31	1352.07	1355.89	3.58	8.2
8	796	4 - 10'x4' CBC	136	0.0042	1342.00	1341.42	1345.08	4.04	7.7
9 (Future)	485	3 - 10'x4' CBC	80	0.0031	1346.20	1346.00	1349.72	3.52	7.6
10	NOT USED	N/A	N/A	N/A	N/A	N/A	N/A	N/A	N/A
11	303	3 - 6'x4' CBC	90	0.0056	1356.00	1355.50	1359.61	3.61	6.7
II. FOR OFFSITE									
Happy Valley Rd @ Sta 86+80	4772	8 - 10'x8' CBC	255	0.0050	1311.00	1309.72	1319.40	8.40	10.3
Happy Valley Rd @ Sta 60+00	212	6 - 36.25" x 22.5" Arch Pipes	129	0.0050	1319.25	1318.60	1323.44	4.19	8.0
Happy Valley Rd @ Sta 71+81	28	2 - 24" Pipes	121	0.0050	1318.57	1317.96	1322.72	4.15	4.5

Note: Refer to Appendix C for detailed culvert design.

F(a) Onsite

Culvert Calculator Report
Culvert #1

Solve For: Headwater Elevation

Culvert Summary					
Allowable HW Elevation	1,364.00	ft	Headwater Depth/ Height	0.75	
Computed Headwater Elevation	1,358.23	ft	Discharge	228.00	cfs
Inlet Control HW Elev	1,358.14	ft	Tailwater Elevation	1,356.06	ft
Outlet Control HW Elev	1,358.23	ft	Control Type	Outlet Control	

Grades					
Upstream Invert	1,355.24	ft	Downstream Invert	1,354.67	ft
Length	95.00	ft	Constructed Slope	0.006000	ft/ft

Hydraulic Profile					
Profile	S2		Depth, Downstream	1.47	ft
Slope Type	Steep		Normal Depth	1.45	ft
Flow Regime	Supercritical		Critical Depth	1.71	ft
Velocity Downstream	8.65	ft/s	Critical Slope	0.003757	ft/ft

Section					
Section Shape	Box		Mannings Coefficient	0.013	
Section Material	Concrete		Span	6.00	ft
Section Size	6 x 4 ft		Rise	4.00	ft
Number Sections	3				

Outlet Control Properties					
Outlet Control HW Elev	1,358.23	ft	Upstream Velocity Head	0.85	ft
Ke	0.50		Entrance Loss	0.43	ft

Inlet Control Properties					
Inlet Control HW Elev	1,358.14	ft	Flow Control	Unsubmerged	
Inlet Type	90 and 15 ° wingwall flares		Area Full	72.0	ft²
K	0.06100		HDS 5 Chart	8	
M	0.75000		HDS 5 Scale	2	
C	0.04000		Equation Form	1	
Y	0.80000				

Culvert Calculator Report
Culvert #4

Solve For: Headwater Elevation

Culvert Summary					
Allowable HW Elevation	1,363.50	ft	Headwater Depth/ Height	0.86	
Computed Headwater Elevation	1,355.46	ft	Discharge	378.00	cfs
Inlet Control HW Elev	1,355.36	ft	Tailwater Elevation	1,352.86	ft
Outlet Control HW Elev	1,355.46	ft	Control Type	Outlet Control	

Grades					
Upstream Invert	1,352.00	ft	Downstream Invert	1,351.50	ft
Length	112.00	ft	Constructed Slope	0.004464	ft/ft

Hydraulic Profile					
Profile	S2		Depth, Downstream	1.79	ft
Slope Type	Steep		Normal Depth	1.79	ft
Flow Regime	Supercritical		Critical Depth	1.98	ft
Velocity Downstream	8.79	ft/s	Critical Slope	0.003352	ft/ft

Section					
Section Shape	Box		Mannings Coefficient	0.013	
Section Material	Concrete		Span	8.00	ft
Section Size	8 x 4 ft		Rise	4.00	ft
Number Sections	3				

Outlet Control Properties					
Outlet Control HW Elev	1,355.46	ft	Upstream Velocity Head	0.99	ft
Ke	0.50		Entrance Loss	0.49	ft

Inlet Control Properties					
Inlet Control HW Elev	1,355.36	ft	Flow Control	Unsubmerged	
Inlet Type	90 and 15 ° wingwall flares		Area Full	96.0	ft²
K	0.06100		HDS 5 Chart	8	
M	0.75000		HDS 5 Scale	2	
C	0.04000		Equation Form	1	
Y	0.80000				

Culvert Calculator Report
Culvert #7

Solve For: Headwater Elevation

Culvert Summary					
Allowable HW Elevation	1,358.00	ft	Headwater Depth/ Height	0.89	
Computed Headwater Elevation	1,355.89	ft	Discharge	303.00	cfs
Inlet Control HW Elev	1,355.83	ft	Tailwater Elevation	1,353.00	ft
Outlet Control HW Elev	1,355.89	ft	Control Type	Outlet Control	

Grades					
Upstream Invert	1,352.31	ft	Downstream Invert	1,352.07	ft
Length	70.00	ft	Constructed Slope	0.003429	ft/ft

Hydraulic Profile					
Profile	M2		Depth, Downstream	2.07	ft
Slope Type	Mild		Normal Depth	2.16	ft
Flow Regime	Subcritical		Critical Depth	2.07	ft
Velocity Downstream	8.15	ft/s	Critical Slope	0.003888	ft/ft

Section					
Section Shape	Box		Mannings Coefficient	0.013	
Section Material	Concrete		Span	6.00	ft
Section Size	6 x 4 ft		Rise	4.00	ft
Number Sections	3				

Outlet Control Properties					
Outlet Control HW Elev	1,355.89	ft	Upstream Velocity Head	0.94	ft
Ke	0.50		Entrance Loss	0.47	ft

Inlet Control Properties					
Inlet Control HW Elev	1,355.83	ft	Flow Control	Unsubmerged	
Inlet Type	90 and 15 ° wingwall flares		Area Full	72.0	ft²
K	0.06100		HDS 5 Chart	8	
M	0.75000		HDS 5 Scale	2	
C	0.04000		Equation Form	1	
Y	0.80000				

Culvert Calculator Report
Culvert #8

Solve For: Headwater Elevation

Culvert Summary					
Allowable HW Elevation	1,347.00	ft	Headwater Depth/ Height	1.01	
Computed Headwater Elevation	1,346.04	ft	Discharge	796.00	cfs
Inlet Control HW Elev	1,345.94	ft	Tailwater Elevation	1,344.00	ft
Outlet Control HW Elev	1,346.04	ft	Control Type	Outlet Control	

Grades					
Upstream Invert	1,342.00	ft	Downstream Invert	1,341.42	ft
Length	136.00	ft	Constructed Slope	0.004265	ft/ft

Hydraulic Profile					
Profile	CompositeS1S2		Depth, Downstream	2.58	ft
Slope Type	Steep		Normal Depth	2.07	ft
Flow Regime	N/A		Critical Depth	2.31	ft
Velocity Downstream	7.71	ft/s	Critical Slope	0.003091	ft/ft

Section					
Section Shape	Box		Mannings Coefficient	0.013	
Section Material	Concrete		Span	10.00	ft
Section Size	10 x 4 ft		Rise	4.00	ft
Number Sections	4				

Outlet Control Properties					
Outlet Control HW Elev	1,346.04	ft	Upstream Velocity Head	1.15	ft
Ke	0.50		Entrance Loss	0.58	ft

Inlet Control Properties					
Inlet Control HW Elev	1,345.94	ft	Flow Control	Unsubmerged	
Inlet Type	90 and 15 ° wingwall flares		Area Full	160.0	ft²
K	0.06100		HDS 5 Chart	8	
M	0.75000		HDS 5 Scale	2	
C	0.04000		Equation Form	1	
Y	0.80000				

Culvert Calculator Report
Culvert #9 (Future)

Solve For: Headwater Elevation

Culvert Summary					
Allowable HW Elevation	1,352.00	ft	Headwater Depth/ Height	0.88	
Computed Headwater Elevation	1,349.72	ft	Discharge	485.00	cfs
Inlet Control HW Elev	1,349.62	ft	Tailwater Elevation	1,348.12	ft
Outlet Control HW Elev	1,349.72	ft	Control Type	Outlet Control	

Grades					
Upstream Invert	1,346.20	ft	Downstream Invert	1,346.00	ft
Length	65.00	ft	Constructed Slope	0.003077	ft/ft

Hydraulic Profile					
Profile	CompositeS1S2		Depth, Downstream	2.12	ft
Slope Type	Steep		Normal Depth	2.01	ft
Flow Regime	N/A		Critical Depth	2.01	ft
Velocity Downstream	7.63	ft/s	Critical Slope	0.003062	ft/ft

Section					
Section Shape	Box		Mannings Coefficient	0.013	
Section Material	Concrete		Span	10.00	ft
Section Size	10 x 4 ft		Rise	4.00	ft
Number Sections	3				

Outlet Control Properties					
Outlet Control HW Elev	1,349.72	ft	Upstream Velocity Head	1.01	ft
Ke	0.50		Entrance Loss	0.50	ft

Inlet Control Properties					
Inlet Control HW Elev	1,349.62	ft	Flow Control	Unsubmerged	
Inlet Type	90 and 15 ° wingwall flares		Area Full	120.0	ft²
K	0.06100		HDS 5 Chart	8	
M	0.75000		HDS 5 Scale	2	
C	0.04000		Equation Form	1	
Y	0.80000				

Culvert Calculator Report
Culvert #11

Solve For: Headwater Elevation

Culvert Summary					
Allowable HW Elevation	1,360.00	ft	Headwater Depth/ Height	0.90	
Computed Headwater Elevation	1,359.61	ft	Discharge	303.00	cfs
Inlet Control HW Elev	1,359.51	ft	Tailwater Elevation	1,358.00	ft
Outlet Control HW Elev	1,359.61	ft	Control Type	Outlet Control	

Grades					
Upstream Invert	1,356.00	ft	Downstream Invert	1,355.50	ft
Length	90.00	ft	Constructed Slope	0.005556	ft/ft

Hydraulic Profile					
Profile	CompositeS1S2		Depth, Downstream	2.50	ft
Slope Type	Steep		Normal Depth	1.82	ft
Flow Regime	N/A		Critical Depth	2.07	ft
Velocity Downstream	6.73	ft/s	Critical Slope	0.003888	ft/ft

Section					
Section Shape	Box		Mannings Coefficient	0.013	
Section Material	Concrete		Span	6.00	ft
Section Size	6 x 4 ft		Rise	4.00	ft
Number Sections	3				

Outlet Control Properties					
Outlet Control HW Elev	1,359.61	ft	Upstream Velocity Head	1.03	ft
Ke	0.50		Entrance Loss	0.52	ft

Inlet Control Properties					
Inlet Control HW Elev	1,359.51	ft	Flow Control	N/A	
Inlet Type	90 and 15 ° wingwall flares		Area Full	72.0	ft²
K	0.06100		HDS 5 Chart	8	
M	0.75000		HDS 5 Scale	2	
C	0.04000		Equation Form	1	
Y	0.80000				

Culvert Calculator Report
Culvert for Ditch 8A
(Near NW Corner of Parcel "D")

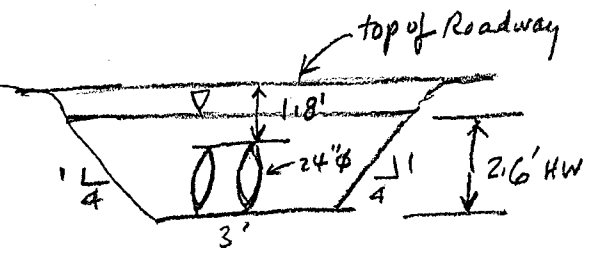

Solve For: Headwater Elevation

Culvert Summary					
Allowable HW Elevation	13.00	ft	Headwater Depth/ Height	1.29	
Computed Headwater Elevation	12.58	ft	Discharge	35.00	cfs
Inlet Control HW Elev	12.57	ft	Tailwater Elevation	10.80	ft
Outlet Control HW Elev	12.58	ft	Control Type	Outlet Control	

Grades					
Upstream Invert	10.00	ft	Downstream Invert	9.75	ft
Length	50.00	ft	Constructed Slope	0.005000	ft/ft

Hydraulic Profile					
Profile	M2		Depth, Downstream	1.51	ft
Slope Type	Mild		Normal Depth	N/A	ft
Flow Regime	Subcritical		Critical Depth	1.51	ft
Velocity Downstream	6.89	ft/s	Critical Slope	0.007113	ft/ft

Section					
Section Shape	Circular		Mannings Coefficient	0.013	
Section Material	Concrete		Span	2.00	ft
Section Size	24 inch		Rise	2.00	ft
Number Sections	2				

Outlet Control Properties					
Outlet Control HW Elev	12.58	ft	Upstream Velocity Head	0.58	ft
Ke	0.50		Entrance Loss	0.29	ft

Inlet Control Properties					
Inlet Control HW Elev	12.57	ft	Flow Control	Transition	
Inlet Type	Square edge w/headwall		Area Full	6.3	ft^2
K	0.00980		HDS 5 Chart	1	
M	2.00000		HDS 5 Scale	1	
C	0.03980		Equation Form	1	
Y	0.67000				

F(b) Offsite

use 8-10'x8' CBC

Culvert Designer/Analyzer Report
Rancho Cabrillo - Happy Valley Crossing
@ STA. 86+79.71

HW=1319.40-1311.00
= 8.40'

Component:Culvert-1

Culvert Summary			
Computed Headwater Elevation	1,319.40 ft	Discharge	4,772.00 cfs
Inlet Control HW Elev	1,319.19 ft	Tailwater Elevation	1,315.53 ft
Outlet Control HW Elev	1,319.40 ft	Control Type	Outlet Control
Headwater Depth/ Height	1.05		

Grades			
Upstream Invert	1,311.00 ft	Downstream Invert	1,309.72 ft
Length	255.00 ft	Constructed Slope	0.005020 ft/ft

Hydraulic Profile			
Profile	CompositeS1S2	Depth, Downstream	5.81 ft
Slope Type	Steep	Normal Depth	4.24 ft
Flow Regime	N/A	Critical Depth	4.80 ft
Velocity Downstream	10.26 ft/s	Critical Slope	0.003581 ft/ft

Section			
Section Shape	Box	Mannings Coefficient	0.013
Section Material	Concrete	Span	10.00 ft
Section Size	10 x 8 ft	Rise	8.00 ft
Number Sections	8		

Outlet Control Properties			
Outlet Control HW Elev	1,319.40 ft	Upstream Velocity Head	2.40 ft
Ke	0.50	Entrance Loss	1.20 ft

Inlet Control Properties			
Inlet Control HW Elev	1,319.19 ft	Flow Control	Unsubmerged
Inlet Type	90 and 15 ° wingwall flares	Area Full	640.0 ft²
K	0.06100	HDS 5 Chart	8
M	0.75000	HDS 5 Scale	2
C	0.04000	Equation Form	1
Y	0.80000		

Outlet velocity = 10.26 fps
Downstream velocity = 6.83 fps

Culvert Designer/Analyzer Report
Rancho Cabrillo - Happy Valley Crossing

Analysis Component			
Storm Event	Design	Discharge	4,772.00 cfs

Peak Discharge Method: User-Specified			
Design Discharge	4,772.00 cfs	Check Discharge	4,772.00 cfs

Tailwater properties: Irregular Channel			
Slope	0.007692 ft/ft	Mannings Coefficient	0.035

Roughness Segments		
Start Station (ft)	End Station (ft)	Mannings Coefficient
0.00	375.00	0.035

Natural Channel Points	
Station (ft)	Elevation (ft)
0.00	1,316.00
21.00	1,315.00
36.00	1,314.00
78.00	1,313.00
81.00	1,312.00
85.00	1,311.00
90.00	1,312.00
94.00	1,313.00
102.00	1,313.00
106.00	1,312.00
110.00	1,312.00
113.00	1,313.00
144.00	1,314.00
152.00	1,314.00
162.00	1,309.00
176.00	1,308.30
190.00	1,309.00
200.00	1,313.00
207.00	1,313.00
214.00	1,313.00
240.00	1,314.00
275.00	1,315.00
375.00	1,319.00

* Cross Section data are obtained from the contour map.

Tailwater conditions for Design Storm.			
Discharge	4,772.00 cfs	Depth	7.23 ft
Velocity	6.83 ft/s		

Name	Description	Discharge	HW Elev	Velocity
Culvert-1	8-10 x 8 ft Box	4,772.00 cfs	1,319.40 ft	10.26 ft/s
Weir	Not Considered	N/A	N/A	N/A

Performance Curves Report
Rancho Cabrillo - Happy Valley Crossing

Range Data:			
	Minimum	Maximum	Increment
Discharge	2,000.00	4,800.00	100.00 cfs

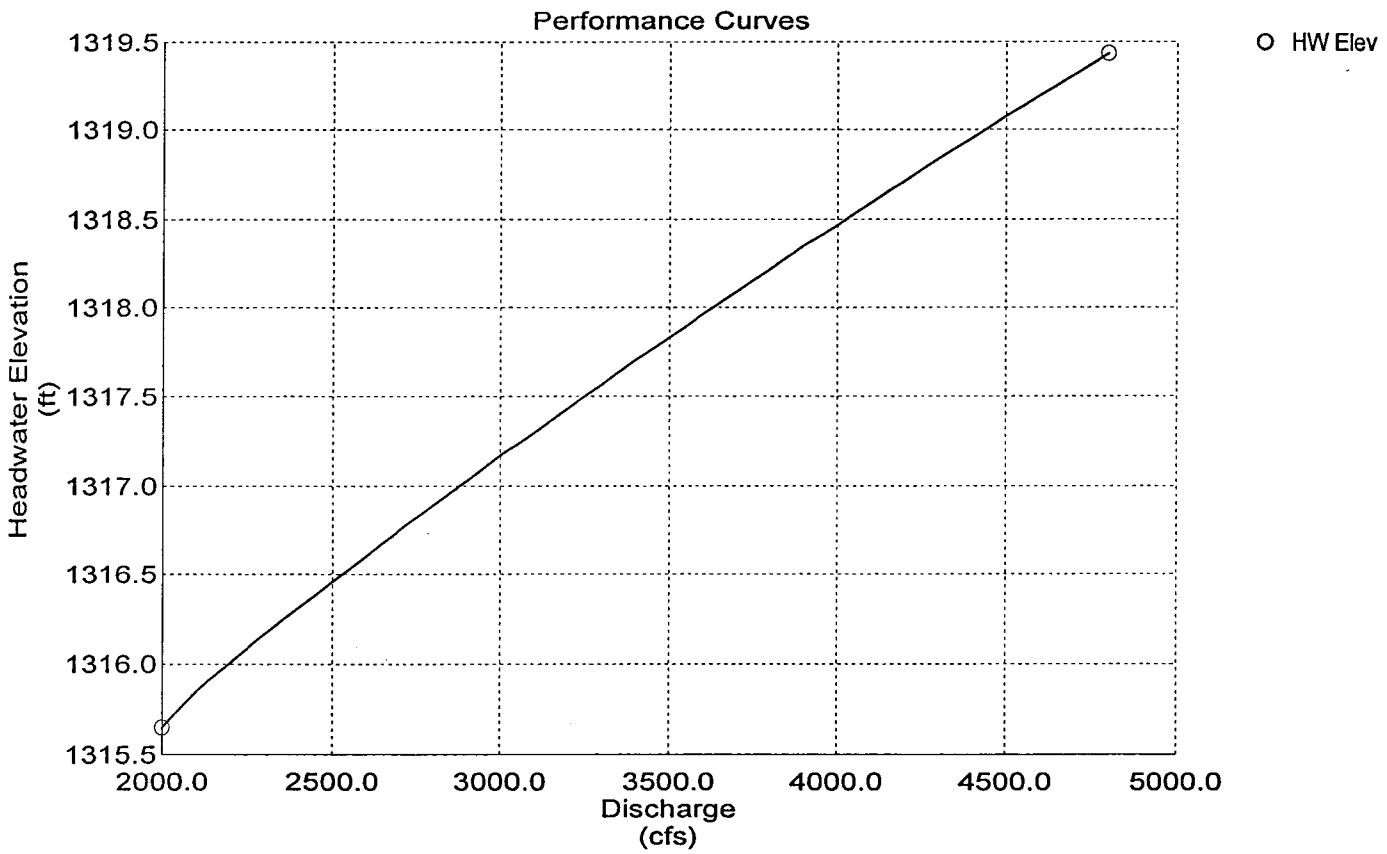

Cross Section
Cross Section for Irregular Channel

- Culvert under Happy Valley Rd @ STA 86+79.71

Project Description	
Project File	untitled
Worksheet	channel at D.S. of Happy Valley Culvert
Flow Element	Irregular Channel
Method	Manning's Formula
Solve For	Water Elevation

Section Data		
Wtd. Mannings Coefficient	0.035	
Channel Slope	0.007692	ft/ft
Water Surface Elevation	1315.52	ft
Discharge	4772.00	ft³/s

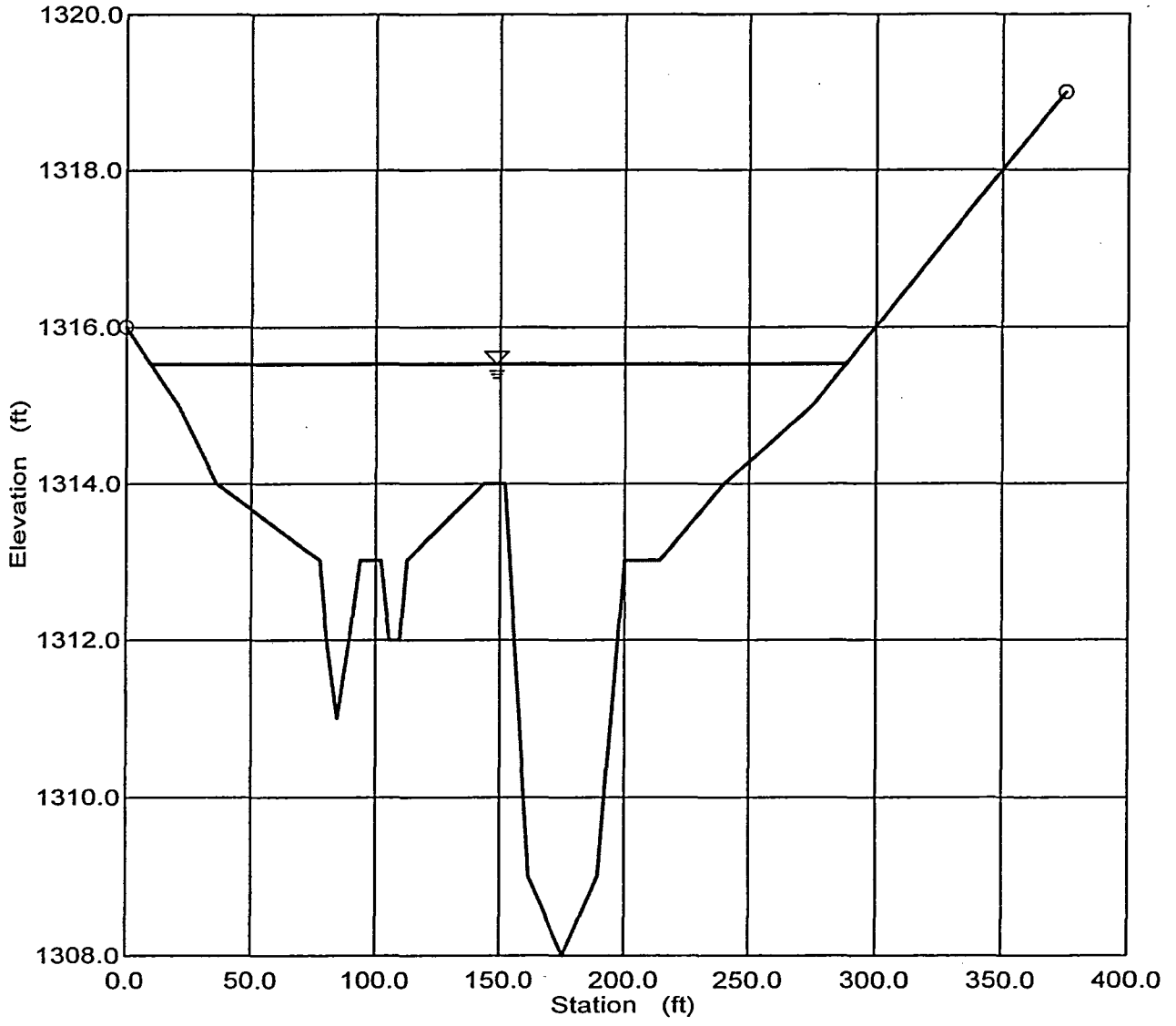

The WLB Group Inc. WLB

COMPUTATION DATA SHEET

Subject Rancho Cabrillo – Culvert Outlet Protection Prepared by KAM Date 1/13/04
Rev. 5/13/04

For 8-10'x8' CBC (Q_{100} = 4,772 cfs)

Downstream flow velocity = 6.83 fps (see FlowMaster printout)

Outlet velocity at culvert = 10.26 fps (see CulvertMaster printout)

Ratio of outlet velocity to natural stream velocity

$$R = \frac{10.26}{6.83} = 1.50$$

According to FCDMC Drainage manual Volume II Hydraulics, January 1996, Pg 5-64 when R is 1.3 to 2.5 with velocity approximately 10 fps dumped rock riprap can be used for outlet protection (Ref. 1)

(A) Riprap Apron design

Tailwater depth = 5.81 ft > $\frac{1}{2}$ x height of culvert = $\frac{1}{2}$ x 8 = 4'

∴ Use Eqt 5.22 of FCDMC Drainage Manual, Vol. II, Pg 5-75

$$L_a = \left[\frac{3Q/8}{D^{3/2}} + 7D\right] = \frac{3 \times 4772/8}{10^{3/2}} + 7(10) = 127 \text{ ft (for 8-barrel box)}$$

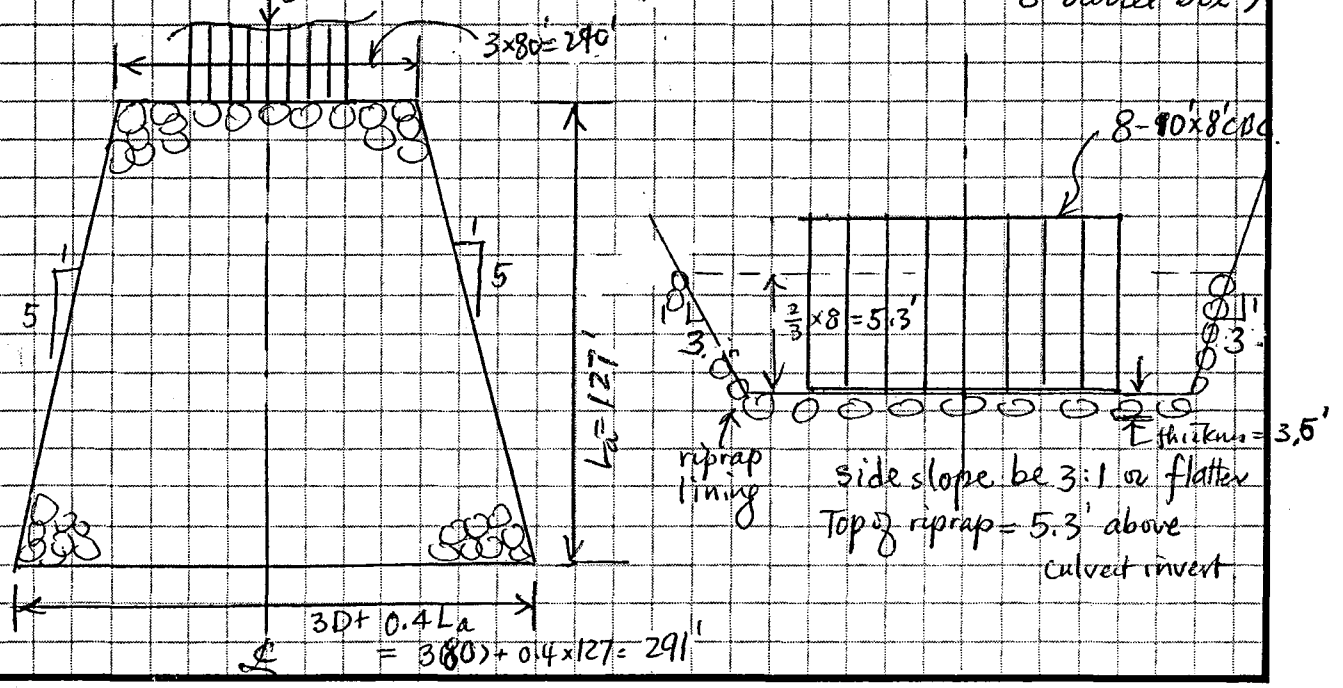

The WLB Group Inc. WLB

COMPUTATION DATA SHEET

Subject Rancho Cabrillo - Culvert Outlet Protection Prepared by KAM Date 1/13/04
Rev 5/13/04

(B) Riprap Apron Stone Size

Use Eq. 5.25, Pg 5-77 of Reference 1

$$\text{Median stone diameter } d_{50} = \frac{0.02(Q)^{4/3}}{(TW)(D)}$$

$$= \frac{0.02(477.2/8)^{4/3}}{5.81(10)} = 1.69' \sim 21''$$

Use filter fabric under riprap apron for protection

c) Thickness of riprap = 2 x 21" = 3.5'

Culvert Designer/Analyzer Report
HV - Offfsite Cross Culvert @ Sta 60+00

HW = 1323.44 - 1319.25
= 4.19'

Component: Culvert-1

Culvert Summary					
Computed Headwater Elevation	1,323.44	ft	Discharge	212.00	cfs
Inlet Control HW Elev	1,323.04	ft	Tailwater Elevation	1,320.60	ft
Outlet Control HW Elev	1,323.44	ft	Control Type	Outlet Control	
Headwater Depth/ Height	2.24				

Grades					
Upstream Invert	1,319.25	ft	Downstream Invert	1,318.60	ft
Length	129.00	ft	Constructed Slope	0.005039	ft/ft

Hydraulic Profile					
Profile	Pressure		Depth, Downstream	2.00	ft
Slope Type	N/A		Normal Depth	N/A	ft
Flow Regime	N/A		Critical Depth	1.60	ft
Velocity Downstream	7.99	ft/s	Critical Slope	0.009453	ft/ft

Section					
Section Shape	Arch		Mannings Coefficient	0.013	
Section Material	Concrete		Span	3.02	ft
Section Size	36.25 x 22.5 inch		Rise	1.88	ft
Number Sections	6				

Outlet Control Properties					
Outlet Control HW Elev	1,323.44	ft	Upstream Velocity Head	0.99	ft
Ke	0.50		Entrance Loss	0.50	ft

Inlet Control Properties					
Inlet Control HW Elev	1,323.04	ft	Flow Control	Submerged	
Inlet Type	Square edge w/headwall		Area Full	26.5	ft^2
K	0.00980		HDS 5 Chart	0	
M	2.00000		HDS 5 Scale	0	
C	0.03980		Equation Form	1	
Y	0.67000				

Performance Curves Report
HV - Offfsite Cross Culvert @ Sta 60+00

Range Data:			
	Minimum	Maximum	Increment
Discharge	0.00	400.00	10.00 cfs

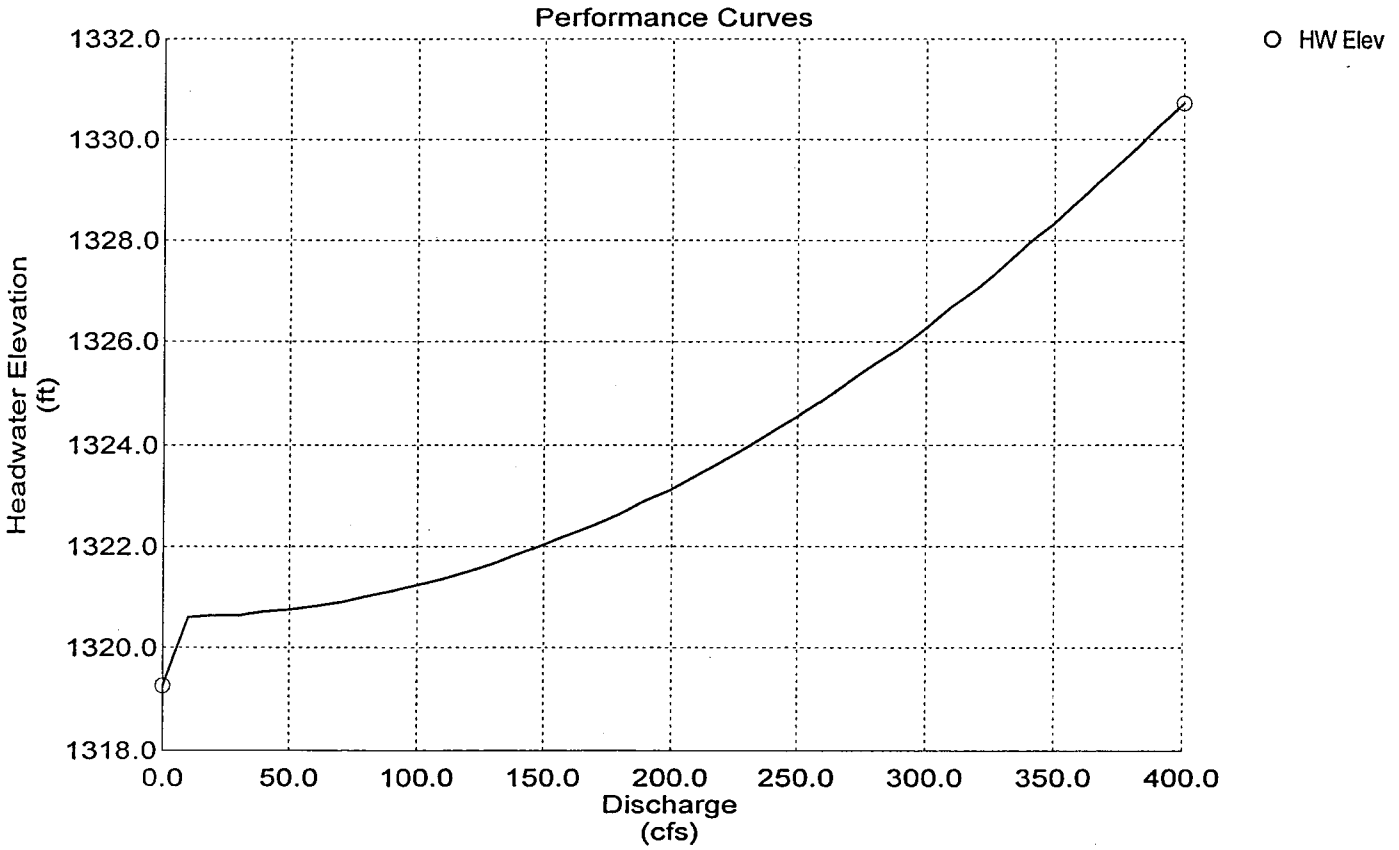

Culvert Calculator Report
HV - Offsite Cross Culvert @ Sta 71+81

Solve For: Headwater Elevation

Culvert Summary			
Allowable HW Elevation	1,322.75 ft	Headwater Depth/ Height	1.15
Computed Headwater Elevation	1,320.87 ft	Discharge	28.00 cfs
Inlet Control HW Elev	1,320.71 ft	Tailwater Elevation	1,319.96 ft
Outlet Control HW Elev	1,320.87 ft	Control Type	Outlet Control

Grades			
Upstream Invert	1,318.57 ft	Downstream Invert	1,317.96 ft
Length	121.00 ft	Constructed Slope	0.005041 ft/ft

Hydraulic Profile			
Profile	M1	Depth, Downstream	2.00 ft
Slope Type	Mild	Normal Depth	1.44 ft
Flow Regime	Subcritical	Critical Depth	1.35 ft
Velocity Downstream	4.46 ft/s	Critical Slope	0.006053 ft/ft

Section			
Section Shape	Circular	Mannings Coefficient	0.013
Section Material	Concrete	Span	2.00 ft
Section Size	24 inch	Rise	2.00 ft
Number Sections	2		

Outlet Control Properties			
Outlet Control HW Elev	1,320.87 ft	Upstream Velocity Head	0.35 ft
Ke	0.50	Entrance Loss	0.18 ft

Inlet Control Properties			
Inlet Control HW Elev	1,320.71 ft	Flow Control	Unsubmerged
Inlet Type	Square edge w/headwall	Area Full	6.3 ft²
K	0.00980	HDS 5 Chart	1
M	2.00000	HDS 5 Scale	1
C	0.03980	Equation Form	1
Y	0.67000		

Performance Curves Report
HV - Offsite Cross Culvert @ Sta 71+81

Range Data:				
	Minimum	Maximum	Increment	
Discharge	0.00	60.00	5.00	cfs

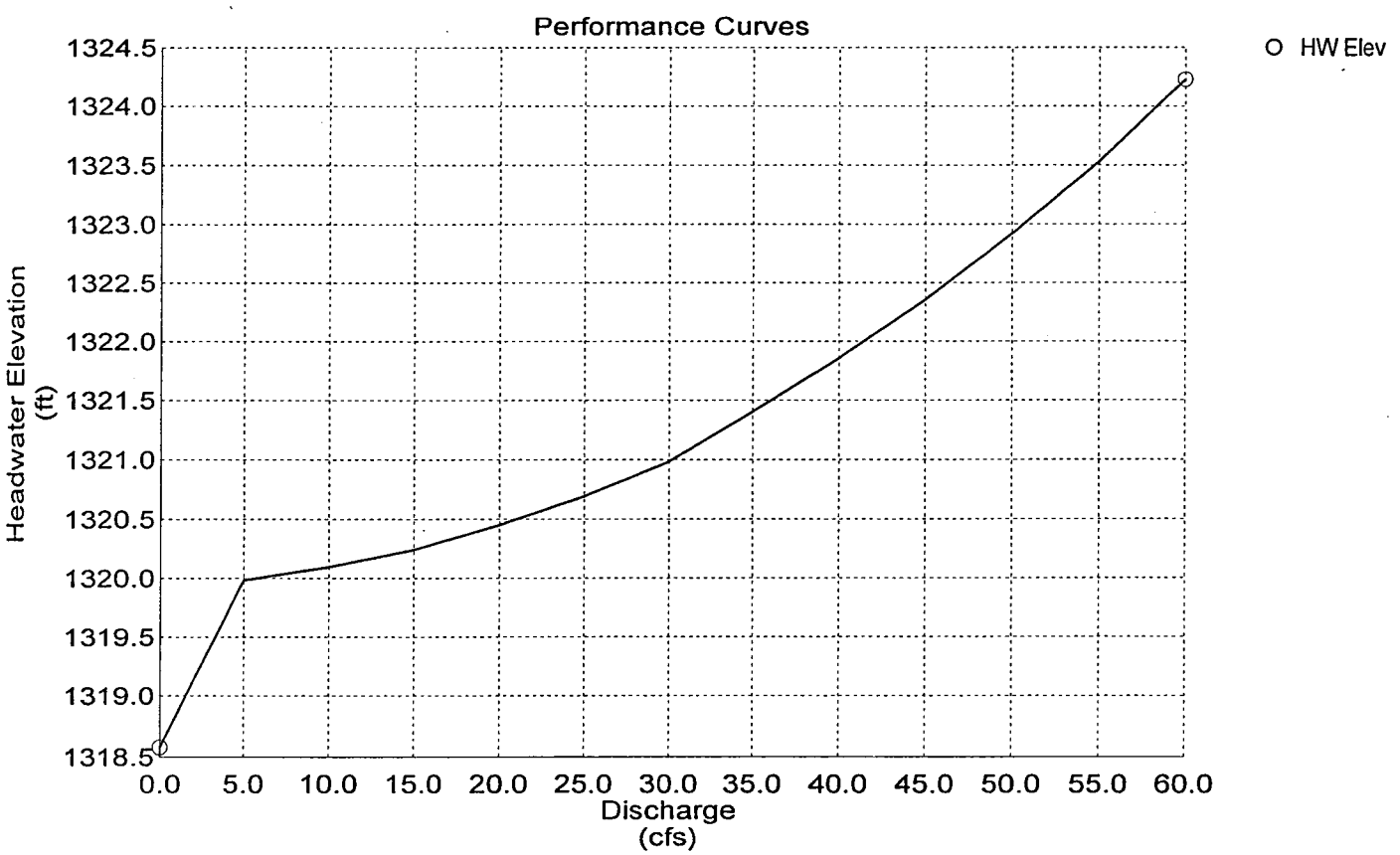

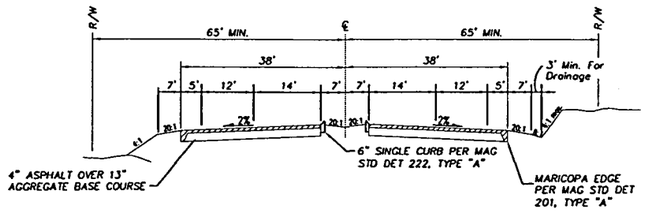

M/2 RURAL PRINCIPAL ARTERIAL ROAD
HAPPY VALLEY ROAD
TYPICAL SECTION
N.T.S.

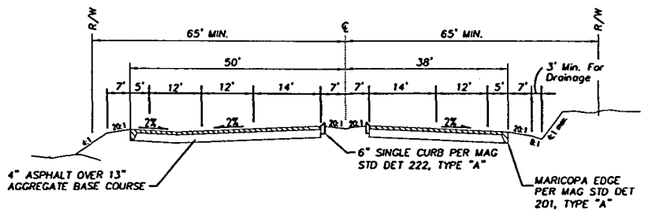

N/2 RURAL PRINCIPAL ARTERIAL ROAD
HAPPY VALLEY ROAD
DECELERATION SECTION
N.T.S.

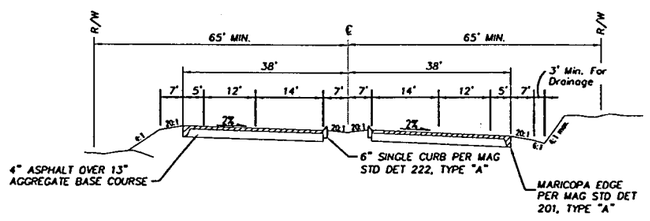

Q/2 RURAL PRINCIPAL ARTERIAL ROAD
HAPPY VALLEY ROAD
TYPICAL SUPERELEVATED SECTION
N.T.S.

TYPICAL SECTIONS - HAPPY VALLEY ROAD
N.T.S.

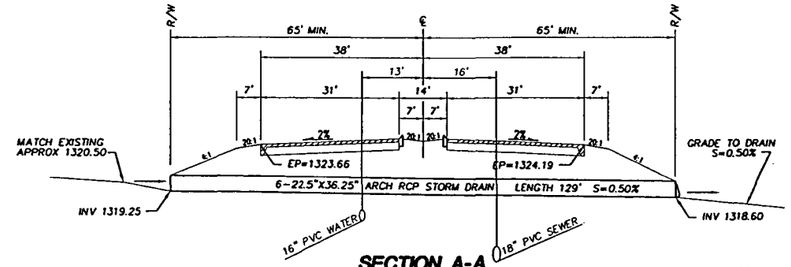

SECTION A-A
HAPPY VALLEY ROAD STA 60+00.00
N.T.S.

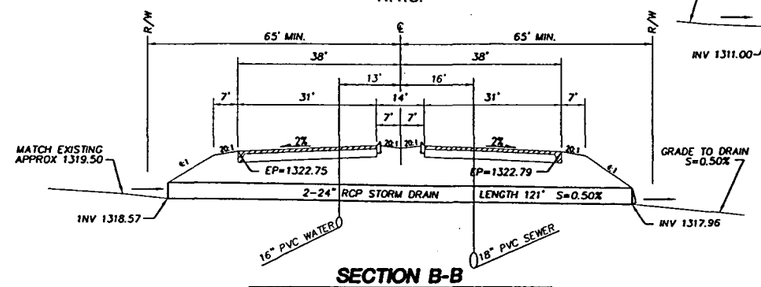

SECTION B-B
HAPPY VALLEY ROAD STA 71+80.86
N.T.S.

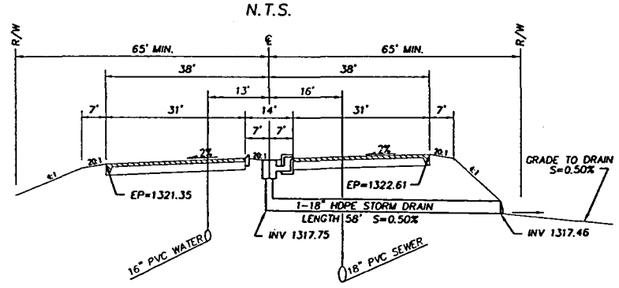

SECTION C-C
HAPPY VALLEY ROAD STA 78+98.97
N.T.S.

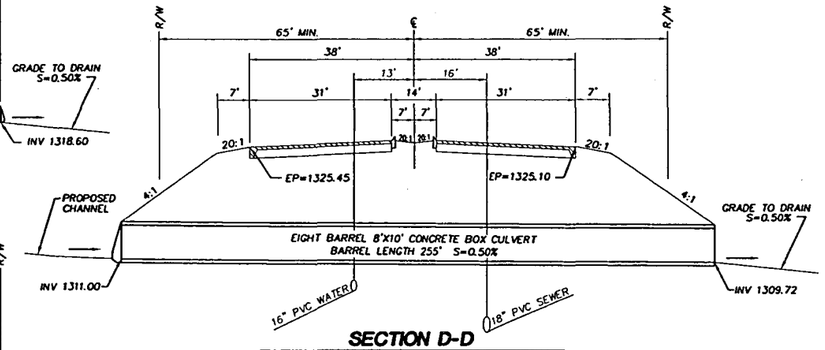

SECTION D-D
HAPPY VALLEY ROAD STA 86+79.71
N.T.S.

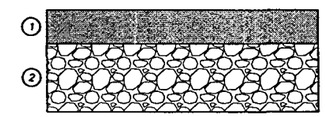

1. 4" ASPHALTIC TOP COURSE (C-3/4) PER MAG SPEC. 321 & 710
2. 13" AGGREGATE BASE COURSE PER MAG SPEC. 321 & 710

PAVEMENT SECTION
N.T.S.

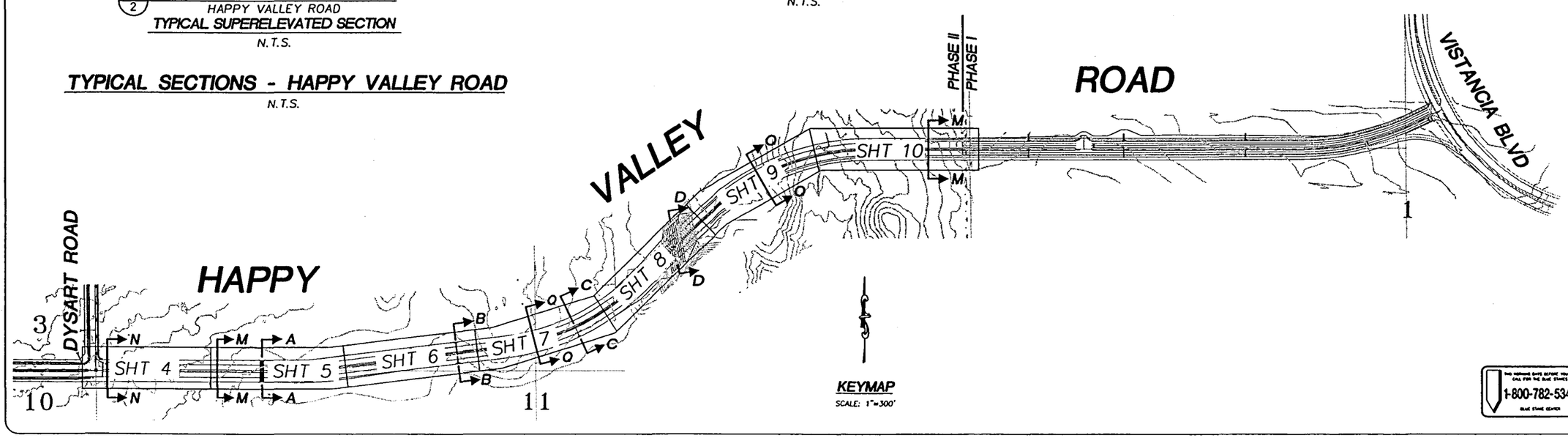

KEYMAP
SCALE: 1"=300'

1-800-782-5348
BLUE STAKE CENTER

REVISIONS			
NO:	DATE:	ITEM:	

The WLB Group INC
Engineering • Planning • Surveying
Landscape Architecture • Urban Design
Offices Located In: Tucson • Phoenix, and Las Vegas, NV.
333 E. Osborn, Suite 380, Phoenix, Az 85012
PH.(602) 279-1016

RANCHO CABRILLO
PHASE II - HAPPY VALLEY ROAD
OFFSITE PAVING AND GRADING PLANS
TYPICAL SECTIONS AND KEYMAP

REGISTERED PROFESSIONAL ENGINEER
DENNIS G. PURCELL BYALL
No. 15966
Date Signed
ARIZONA, U.S.A.

DESIGNED BY: WMK
DRAWN BY: RLC
CHECK BY: RGB
DATE: JANUARY, 2004
BY: O.K. REVIEW
DATE:

PROJECT NO. 202017-A-001

SHEET	OF
2	10

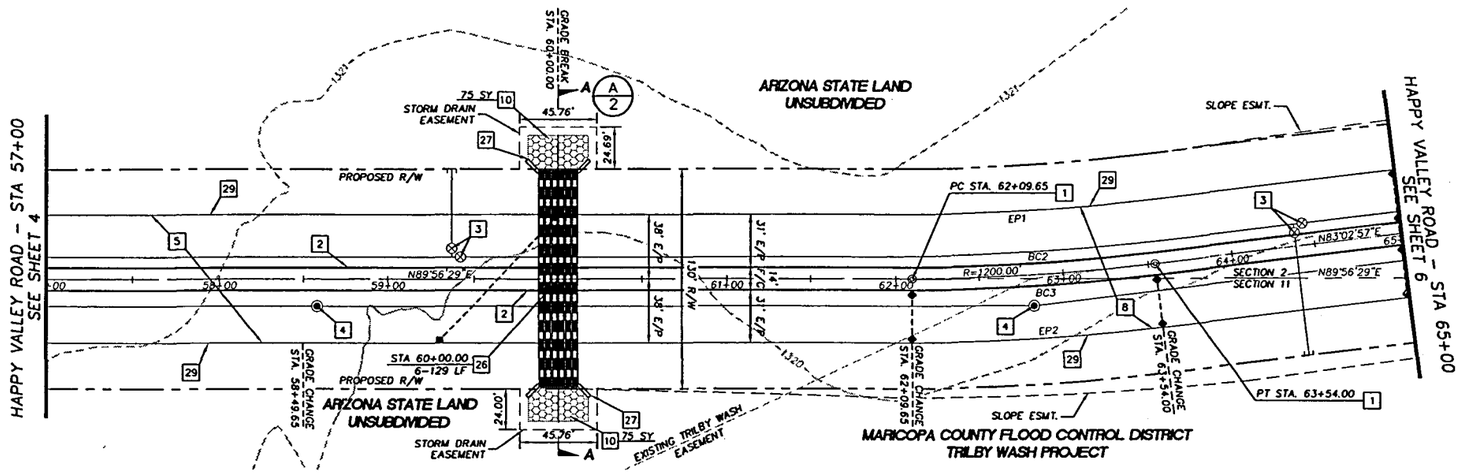

BACK OF CURB CURVE TABLE

CURVE TABLE			
CURVE	LENGTH	RADIUS	DELTA
BC2	143.57	1193.50	6°53'32"
BC3	145.13	1206.50	6°53'32"

EDGE OF PAVEMENT CURVE TABLE

CURVE TABLE			
CURVE	LENGTH	RADIUS	DELTA
EP1	139.78	1162.00	6°53'32"
EP2	148.92	1238.00	6°53'32"

HAPPY VALLEY ROAD

HIGH POINT ELEV = 1325.72
HIGH POINT STA = 65+00
PVI STA = 65+00
PVI ELEV = 1325.97
A.D. = -1.00
K = 200.00

GRAPHIC SCALE
40' 0 20' 40' 80'
1"=40' H
1"= 4' V
CONTOUR INTERVAL = 1ft.

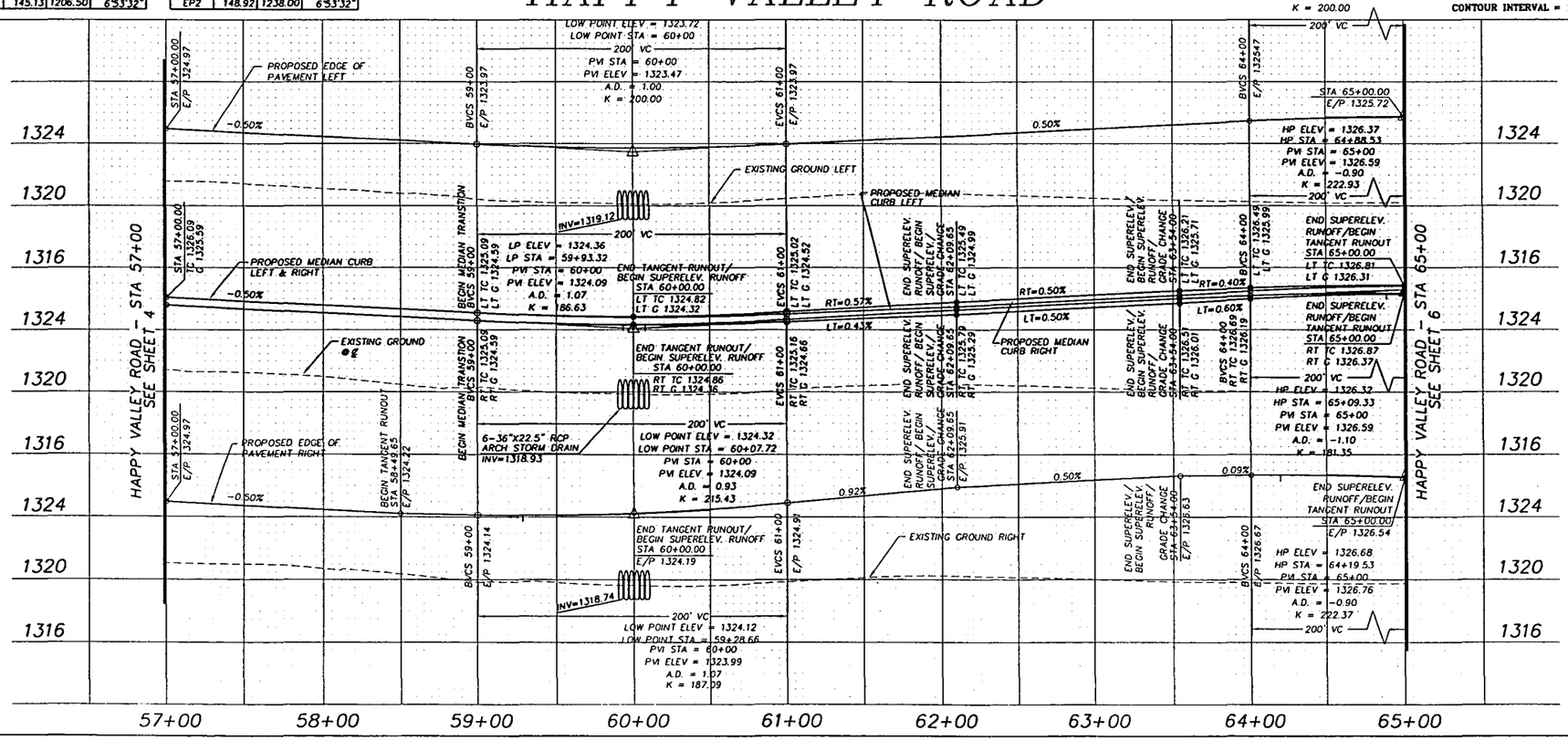

PAVING CONSTRUCTION NOTES:

1. INSTALL SURVEY MARKER PER M.A.G. STD. DTL. 120-1, TYPE "A".
2. INSTALL 6" VERTICAL "SINGLE" CURB PER M.A.G. STD. DTL. 222, TYPE "A".
3. ADJUST VALVE FRAME & COVER TO FINISH GRADE PER M.A.G. STD. DTL. 270.
4. ADJUST MH RIM & COVER TO FINISH GRADE PER M.A.G. STD. DTL. 424.
5. CONSTRUCT CROWNED PAVEMENT SECTION. (M/2)
6. CONSTRUCT CROWNED PAVEMENT SECTION. (N/2)
7. CONSTRUCT PAVEMENT SECTION. (P/2)
8. CONSTRUCT SUPERELEVATED PAVEMENT SECTION. (O/2)
9. CONSTRUCT ASPHALT PAVEMENT PER SECTION ON SHEET 2.
10. INSTALL RIP-RAP D_{50}=10", THICKNESS=2.0'
11. CONSTRUCT 6" VERTICAL CURB AND GUTTER PER M.A.G. STD. DTL. 220, TYPE "A".
12. CONSTRUCT CONCRETE SIDEWALK PER M.A.G. STD. DTL. 230, WIDTH PER PLAN
13. CONSTRUCT 2.5' CURB & GUTTER TERMINATION PER M.A.G. STD. DTL. 222.
14. CONSTRUCT SIDEWALK RAMP TYPE "A" PER MCDOT DTL. 2031A.
15. CONSTRUCT 8 BARREL 10'x8' REINFORCED CONCRETE BOX CULVERT AND WING WALLS PER A.D.O.T. STD. DTLS. 8-02.10 AND 8-04.50, BARREL LENGTH AS SHOWN ON PLANS.
16. INSTALL GROUTED RIP-RAP D_{50}=21", THICKNESS=3.5'
17. INSTALL PAVEMENT MARKERS FOR FIRE HYDRANT PER M.A.G. STD. DET. G-3212.
18. INSTALL BARRICADE PER M.A.G. STD. DTL. 130, TYPE "B".
19. REMOVE EXISTING BARRICADE AND PAVEMENT TERMINATION HEADER.
20. CONSTRUCT CROWNED PAVEMENT SECTION. (R/2)
21. INSTALL 4"x6" CONCRETE PAVEMENT TERMINATION HEADER PER DETAIL ON SHEET 3.
22. INSTALL TYPE "M-1" CATCH BASIN PER C.O.P. STD. DTL. 1569-1 (WING LENGTH PER PLAN)
23. INSTALL CATCH BASIN TYPE "H" PER M.A.G STD. DTLS. 538, 539.
24. INSTALL 24" HDPE STORM DRAIN PIPE.
25. INSTALL 24" RGRCP STORM DRAIN.
26. INSTALL 22.5"X36.25" ARCH RCP STORM DRAIN.
27. INSTALL CONC. HEADWALL PER M.A.G. STD. DTL. 501-4 AND TRASH RACK PER M.A.G. STD. DTL. 502-2.
28. INSTALL 18" HDPE STORM DRAIN PIPE.
29. INSTALL THICKENED EDGE PER M.A.G. STD. DTL. 201, TYPE "A".
30. INSTALL 30" HDPE STORM DRAIN PIPE.

PAVING QUANTITIES

1	SURVEY MARKER	2	EA
2	6" VERTICAL "SINGLE" CURB	1600	LF
3	ADJUST VALVE FRAME & COVER	4	EA
4	ADJUST MH RIM & COVER	2	EA
5	4" AC ON 13" ABC	5511	SY
10	RIP RAP (D_{50}=10", THICKNESS=2.0')	150	SY
11	6" VERTICAL CURB & GUTTER	0	LF
12	CONCRETE SIDEWALK	0	SF
13	CURB TERMINATION	0	EA
15	8-10'X8' BOX CULVERT	0	LF
16	GROUTED RIP RAP (D_{50}=21", THICK=3.5')	0	SY
22	CATCH BASIN (TYPE M-1)	0	EA
23	CATCH BASIN (TYPE H)	0	EA
24	24" HDPE STORM DRAIN	0	LF
25	24" RGRCP STORM DRAIN	0	LF
26	22.5"X36.25" ARCH RGRCP	774	LF
27	CONCRETE HEADWALL	2	EA
28	18" HDPE STORM DRAIN	0	LF
30	30" HDPE STORM DRAIN	0	LF

1-800-782-5348
BLUE STAKE, INC.

NO.	DATE	REVISIONS	ITEM

The WLB Group, INC.
Engineering • Planning • Surveying
Landscape Architecture • Urban Design
Offices Located in: Tucson, Phoenix, Las Vegas, NV
333 E. Osborn, Suite 380, Phoenix, Az 85012
PH.(602) 279-1016

RANCHO CABRILLO
PHASE II - HAPPY VALLEY ROAD
OFFSITE PAVING AND GRADING PLANS
PLAN AND PROFILE
HAPPY VALLEY ROAD
STA 57+00 TO 65+00

REGISTERED PROFESSIONAL ENGINEER (CIVIL) 13906 MICHAEL C. BYALL ARIZONA U.S.A.

DESIGNED BY: WMK
DRAWN BY: ORG
CHECK BY: RGB
DATE: JANUARY, 2004
BY: Q.A. REVIEW
DATE:

PROJECT NO. 202017-A-001

SHEET	OF
5	10

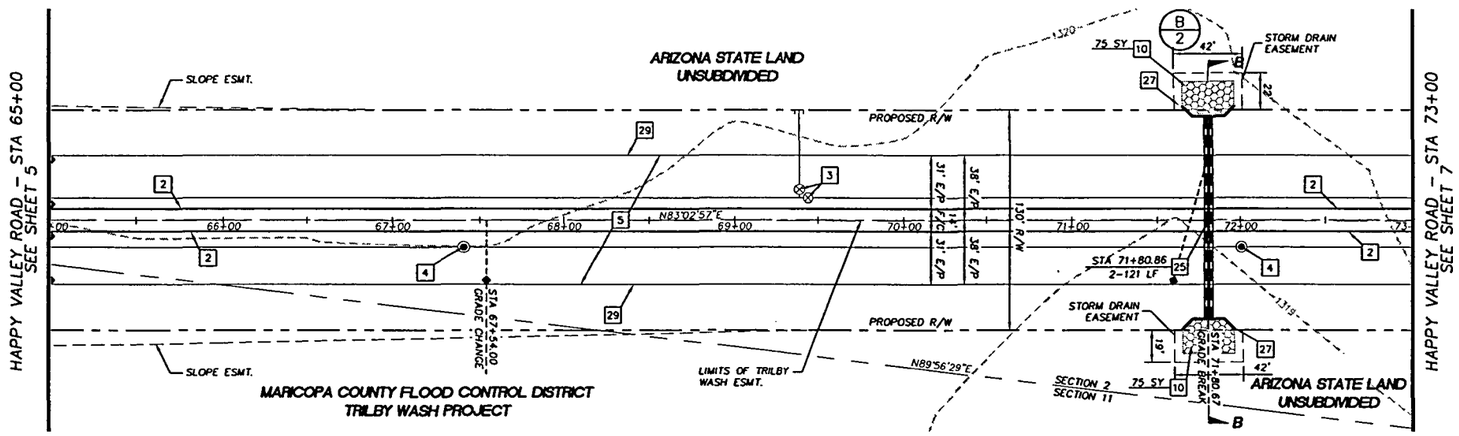

GRAPHIC SCALE

40' 0 20' 40' 80'

1"=40' H
1"= 4' V
CONTOUR INTERVAL = 1ft.

HAPPY VALLEY ROAD

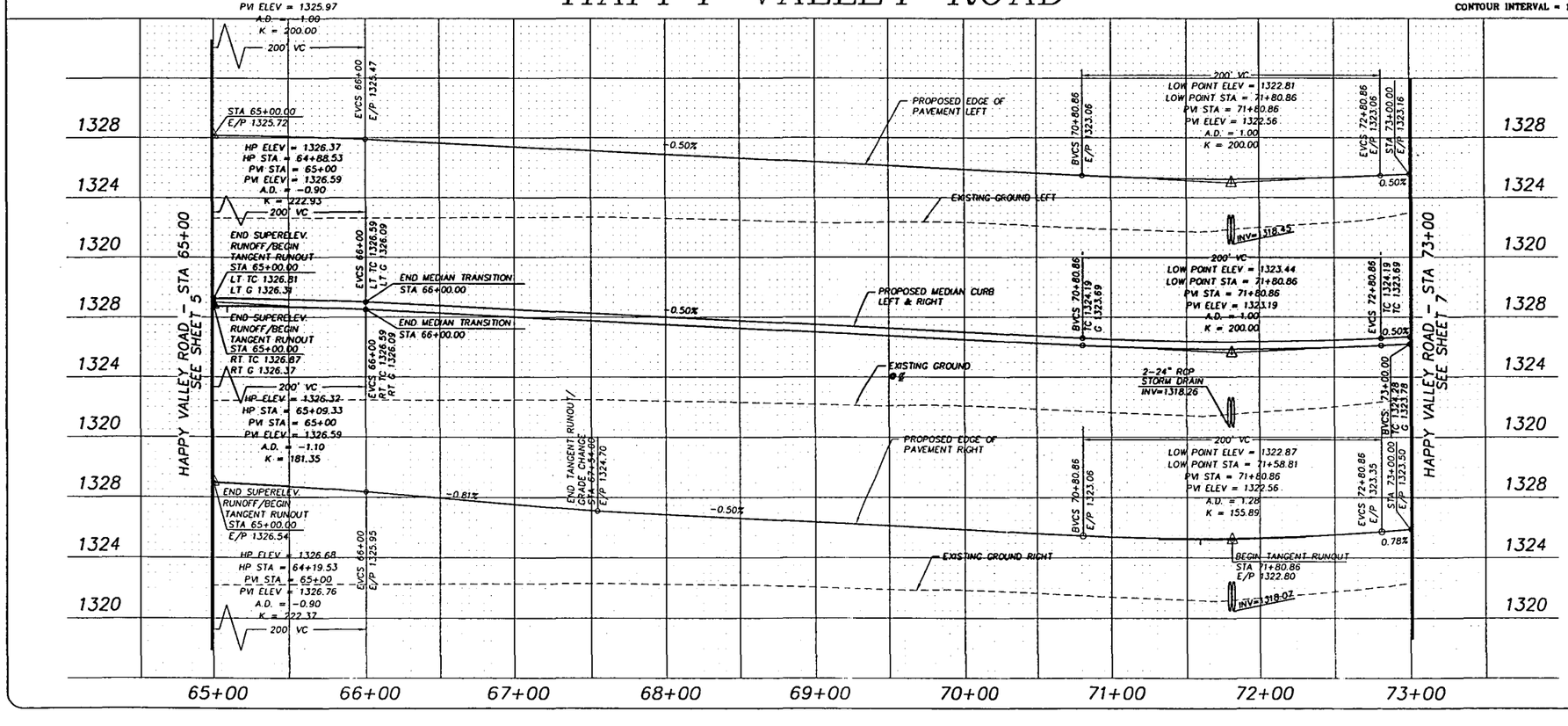

PAVING CONSTRUCTION NOTES:

1. INSTALL SURVEY MARKER PER M.A.G. STD. DTL. 120-1, TYPE "A".
2. INSTALL 6" VERTICAL "SINGLE" CURB PER M.A.G. STD. DTL. 222, TYPE "A".
3. ADJUST VALVE FRAME & COVER TO FINISH GRADE PER M.A.G. STD. DTL. 270.
4. ADJUST MH RIM & COVER TO FINISH GRADE PER M.A.G. STD. DTL. 424.
5. CONSTRUCT CROWNED PAVEMENT SECTION. (M/2)
6. CONSTRUCT CROWNED PAVEMENT SECTION. (N/2)
7. CONSTRUCT PAVEMENT SECTION. (P/2)
8. CONSTRUCT SUPERELEVATED PAVEMENT SECTION. (Q/2)
9. CONSTRUCT ASPHALT PAVEMENT PER SECTION ON SHEET 2.
10. INSTALL RIP-RAP D_{50}=10", THICKNESS=2.0'
11. CONSTRUCT 6" VERTICAL CURB AND GUTTER PER M.A.G. STD. DTL. 220, TYPE "A".
12. CONSTRUCT CONCRETE SIDEWALK PER M.A.G. STD. DTL. 230, WIDTH PER PLAN
13. CONSTRUCT 2.5' CURB & GUTTER TERMINATION PER M.A.G. STD. DTL. 222.
14. CONSTRUCT SIDEWALK RAMP TYPE "A" PER MCDOT DTL. 2031A.
15. CONSTRUCT 8 BARREL 10'x8' REINFORCED CONCRETE BOX CULVERT AND WING WALLS PER A.D.O.T. STD. DTLS. B-02.10 AND B-04.50, BARREL LENGTH AS SHOWN ON PLANS.
16. INSTALL GROUTED RIP-RAP D_{50}=21", THICKNESS=3.5'
17. INSTALL PAVEMENT MARKERS FOR FIRE HYDRANT PER M.A.G. STD. DET. G-3212.
18. INSTALL BARRICADE PER M.A.G. STD. DTL. 130, TYPE "B".
19. REMOVE EXISTING BARRICADE AND PAVEMENT TERMINATION HEADER.
20. CONSTRUCT CROWNED PAVEMENT SECTION. (R/2)
21. INSTALL 4"x6" CONCRETE PAVEMENT TERMINATION HEADER PER DETAIL ON SHEET 3.
22. INSTALL TYPE "M-1" CATCH BASIN PER C.O.P. STD. DTL. 1569-1 (WING LENGTH PER PLAN)
23. INSTALL CATCH BASIN TYPE "H" PER M.A.G STD. DTLS. 538, 539.
24. INSTALL 24" HDPE STORM DRAIN PIPE.
25. INSTALL 24" RGRCP STORM DRAIN.
26. INSTALL 22.5"X36.25" ARCH RCP STORM DRAIN.
27. INSTALL CONC. HEADWALL PER M.A.G. STD. DTL. 501-4 AND TRASH RACK PER M.A.G. STD. DTL. 502-2.
28. INSTALL 18" HDPE STORM DRAIN PIPE.
29. INSTALL THICKENED EDGE PER M.A.G. STD. DTL. 201, TYPE "A".
30. INSTALL 30" HDPE STORM DRAIN PIPE.

PAVING QUANTITIES

1	SURVEY MARKER	0	EA
2	6" VERTICAL "SINGLE" CURB	1600	LF
3	ADJUST VALVE FRAME & COVER	2	EA
4	ADJUST MH RIM & COVER	2	EA
5	4" AC ON 13" ABC	5511	SY
10	RIP RAP (D_{50}=10", THICKNESS=2.0')	150	SY
11	6" VERTICAL CURB & GUTTER	0	LF
12	CONCRETE SIDEWALK	0	SF
13	CURB TERMINATION	0	EA
15	8-10'X8' BOX CULVERT	0	LF
16	GROUTED RIP RAP(D_{50}=21", THICK=3.5')	0	SY
22	CATCH BASIN (TYPE M-1)	0	EA
23	CATCH BASIN (TYPE H)	0	EA
24	24" HDPE STORM DRAIN	0	LF
25	24" RGRCP STORM DRAIN	242	LF
26	22.5"X36.25" ARCH RGRCP	0	LF
27	CONCRETE HEADWALL	2	EA
28	18" HDPE STORM DRAIN	0	LF
30	30" HDPE STORM DRAIN	0	LF

THE WORKING DAYS BEFORE YOU DIG CALL FOR THE BLUE STAKES
1-800-782-5348
BLUE STAKE CENTER

NO.	DATE:	ITEM:

REVISIONS

The WLB Group INC
Engineering • Planning • Surveying
Landscape Architecture • Urban Design
Offices located in: Tucson, Phoenix, and Las Vegas, NV.
333 E. Osborn, Suite 380, Phoenix, Az 85012
PH.(602) 279-1016

RANCHO CABRILLO
PHASE II - HAPPY VALLEY ROAD
OFFSITE PAVING AND GRADING PLANS

PLAN AND PROFILE
HAPPY VALLEY ROAD
STA 65+00 TO 73+00

REGISTERED PROFESSIONAL ENGINEER
CERTIFICATE NO. 15908
CHRIS R. GRAY
ARIZONA
12-31-04

DESIGNED BY: WMK
DRAWN BY: CRG
CHECK BY: RCB
DATE: JANUARY, 2004
BY: Q.A. REVIEW
DATE:

PROJECT NO. 202017-A-001

SHEET	OF
6	10

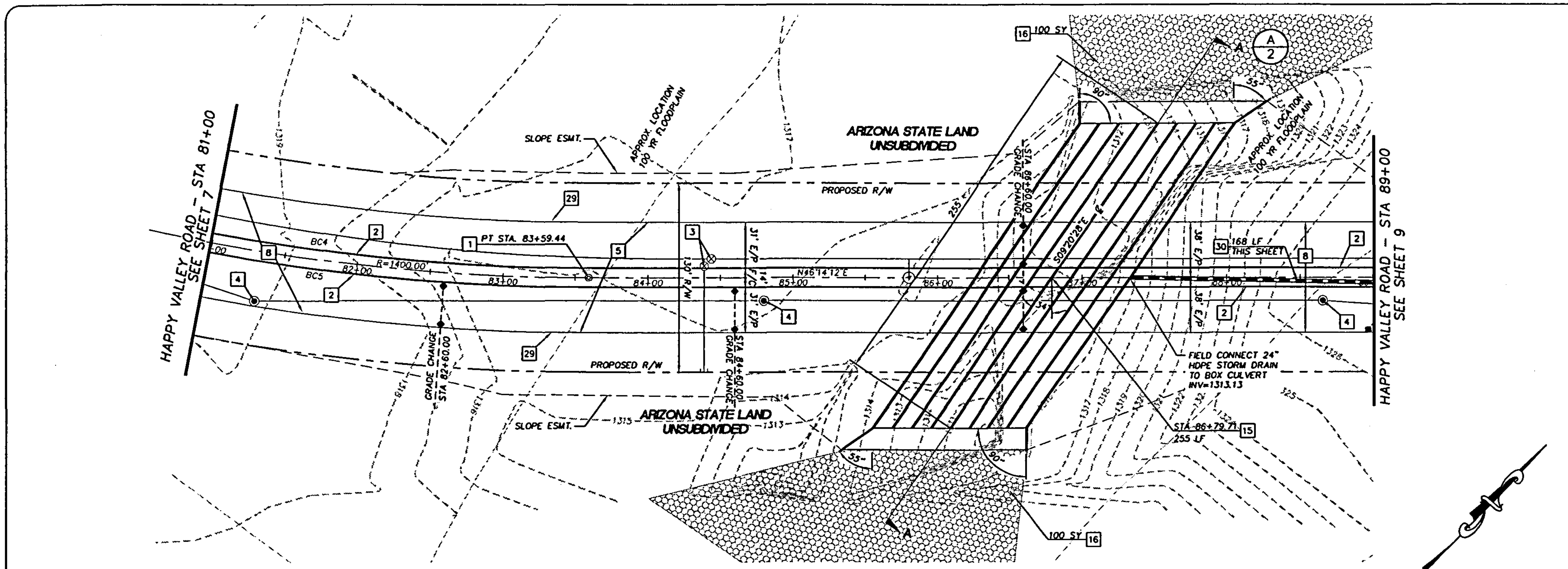

BACK OF CURB CURVE TABLE

CURVE TABLE			
CURVE	LENGTH	RADIUS	DELTA
BC4	895.33	1393.50	36°48'46"
BC5	903.68	1406.50	36°48'46"

EDGE OF PAVEMENT CURVE TABLE

CURVE TABLE			
CURVE	LENGTH	RADIUS	DELTA
EP3	875.09	1362.00	36°48'46"
EP4	923.92	1438.00	36°48'46"

GRAPHIC SCALE

40' 0 20' 40' 80'

1"=40' H
1"= 4' V

CONTOUR INTERVAL = 1ft.

HAPPY VALLEY ROAD

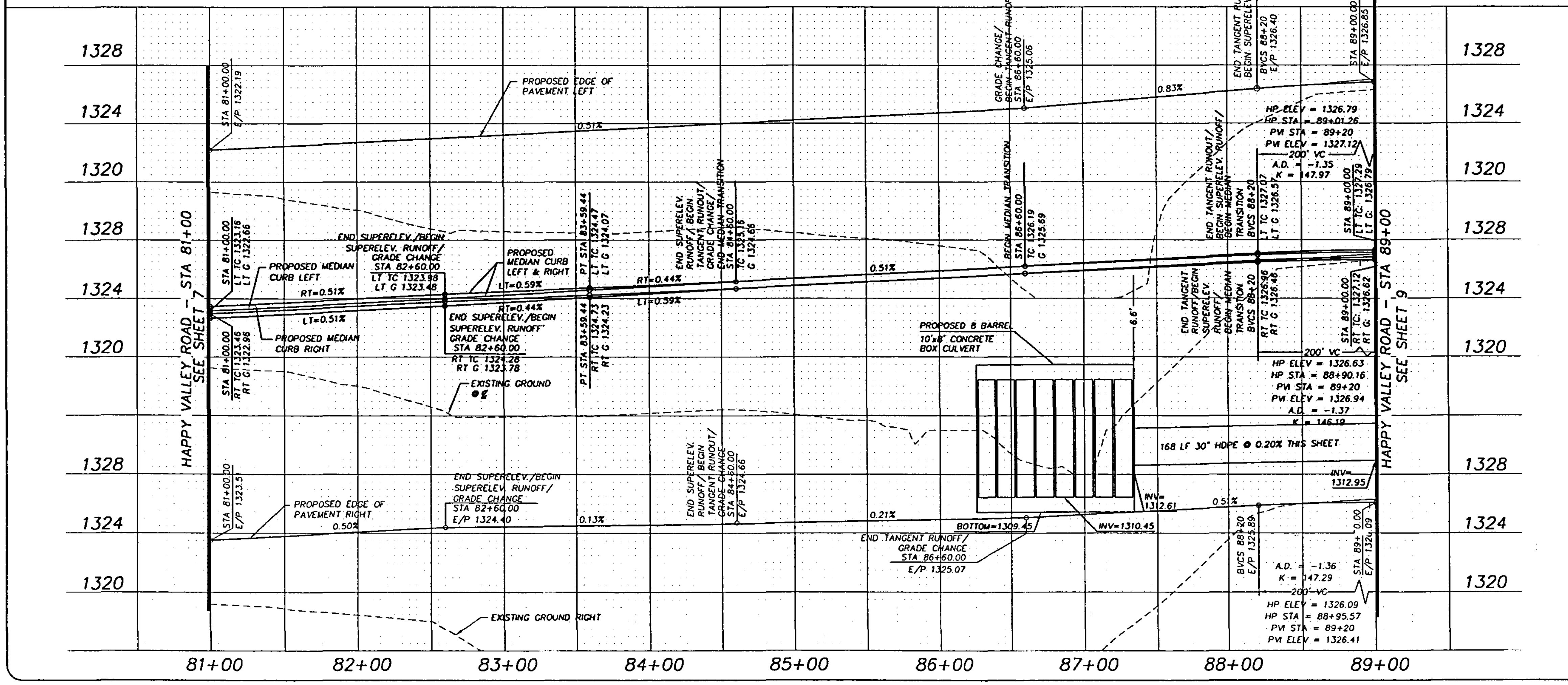

PAVING CONSTRUCTION NOTES:

1. INSTALL SURVEY MARKER PER M.A.G. STD. DTL. 120-1, TYPE "A".
2. INSTALL 6" VERTICAL "SINGLE" CURB PER M.A.G. STD. DTL. 222, TYPE "A".
3. ADJUST VALVE FRAME & COVER TO FINISH GRADE PER M.A.G. STD. DTL. 270.
4. ADJUST MH RIM & COVER TO FINISH GRADE PER M.A.G. STD. DTL. 424.
5. CONSTRUCT CROWNED PAVEMENT SECTION. (M/2)
6. CONSTRUCT CROWNED PAVEMENT SECTION. (N/2)
7. CONSTRUCT PAVEMENT SECTION. (P/2)
8. CONSTRUCT SUPERELEVATED PAVEMENT SECTION. (O/2)
9. CONSTRUCT ASPHALT PAVEMENT PER SECTION ON SHEET 2.
10. INSTALL RIP-RAP D_{50}=10", THICKNESS=2.0'
11. CONSTRUCT 6" VERTICAL CURB AND GUTTER PER M.A.G. STD. DTL. 220, TYPE "A".
12. CONSTRUCT CONCRETE SIDEWALK PER M.A.G. STD. DTL. 230, WIDTH PER PLAN
13. CONSTRUCT 2.5' CURB & GUTTER TERMINATION PER M.A.G. STD. DTL. 222.
14. CONSTRUCT SIDEWALK RAMP TYPE "A" PER MCDOT DTL. 2031A.
15. CONSTRUCT 8 BARREL 10'x8' REINFORCED CONCRETE BOX CULVERT AND WING WALLS PER A.D.O.T. STD. DTLS. B-02.10 AND B-04.50, BARREL LENGTH AS SHOWN ON PLANS.
16. INSTALL GROUTED RIP-RAP D_{50}=21", THICKNESS=3.5'
17. INSTALL PAVEMENT MARKERS FOR FIRE HYDRANT PER M.A.G. STD. DET. G-3212.
18. INSTALL BARRICADE PER M.A.G. STD. DTL. 130, TYPE "B".
19. REMOVE EXISTING BARRICADE AND PAVEMENT TERMINATION HEADER.
20. CONSTRUCT CROWNED PAVEMENT SECTION. (R/2)
21. INSTALL 4"x6" CONCRETE PAVEMENT TERMINATION HEADER PER DETAIL ON SHEET 3.
22. INSTALL TYPE "M-1" CATCH BASIN PER C.O.P. STD. DTL. 1569-1 (WING LENGTH PER PLAN)
23. INSTALL CATCH BASIN TYPE "H" PER M.A.G STD. DTLS. 538, 539.
24. INSTALL 24" HDPE STORM DRAIN PIPE.
25. INSTALL 24" RGRCP STORM DRAIN.
26. INSTALL 22.5"X36.25" ARCH RCP STORM DRAIN.
27. INSTALL CONC. HEADWALL PER M.A.G. STD. DTL. 501-4 AND TRASH RACK PER M.A.G. STD. DTL. 502-2.
28. INSTALL 18" HDPE STORM DRAIN PIPE.
29. INSTALL THICKENED EDGE PER M.A.G. STD. DTL. 201, TYPE "A".
30. INSTALL 30" HDPE STORM DRAIN PIPE.

PAVING QUANTITIES

1	SURVEY MARKER	1	EA
2	6" VERTICAL "SINGLE" CURB	1600	LF
3	ADJUST VALVE FRAME & COVER	2	EA
4	ADJUST MH RIM & COVER	3	EA
5	4" AC ON 13" ABC	5511	SY
10	RIP RAP (D_{50}=10", THICKNESS=2.0')	0	SY
11	6" VERTICAL CURB & GUTTER	0	LF
12	CONCRETE SIDEWALK	0	SF
13	CURB TERMINATION	0	EA
15	8-10'X8' BOX CULVERT	255	LF
16	GROUTED RIP RAP (D_{50}=21", THICK=3.5')	200	SY
22	CATCH BASIN (TYPE M-1)	0	EA
23	CATCH BASIN (TYPE H)	0	EA
24	24" HDPE STORM DRAIN	0	LF
25	24" RGRCP STORM DRAIN	0	LF
26	22.5"X36.25" ARCH RGRCP	0	LF
27	CONCRETE HEADWALL	0	EA
28	18" HDPE STORM DRAIN	0	LF
30	30" HDPE STORM DRAIN	168	LF

1-800-782-5348

NO:	DATE:	ITEM:
REVISIONS		

The WLB Group INC.

Engineering · Planning · Surveying
Landscape Architecture · Urban Design
Offices located in: Tucson, Phoenix, and Las Vegas, NV.
333 E. Osborn, Suite 380, Phoenix, Az 85012 PH.(602) 279-1016

RANCHO CABRILLO
PHASE II - HAPPY VALLEY ROAD
OFFSITE PAVING AND GRADING PLANS

PLAN AND PROFILE
HAPPY VALLEY ROAD
STA 81+00 TO 89+00

REGISTERED PROFESSIONAL ENGINEER (Civil) CERTIFICATE NO. 13906 ROBERT G. BYALL ARIZONA, USA

DESIGNED BY: WMK
DRAWN BY: ORG
CHECK BY: RGB
DATE: JANUARY, 2004
Q.A. REVIEW
BY:
DATE:

PROJECT NO. 202017-A-001

SHEET 8 OF 10

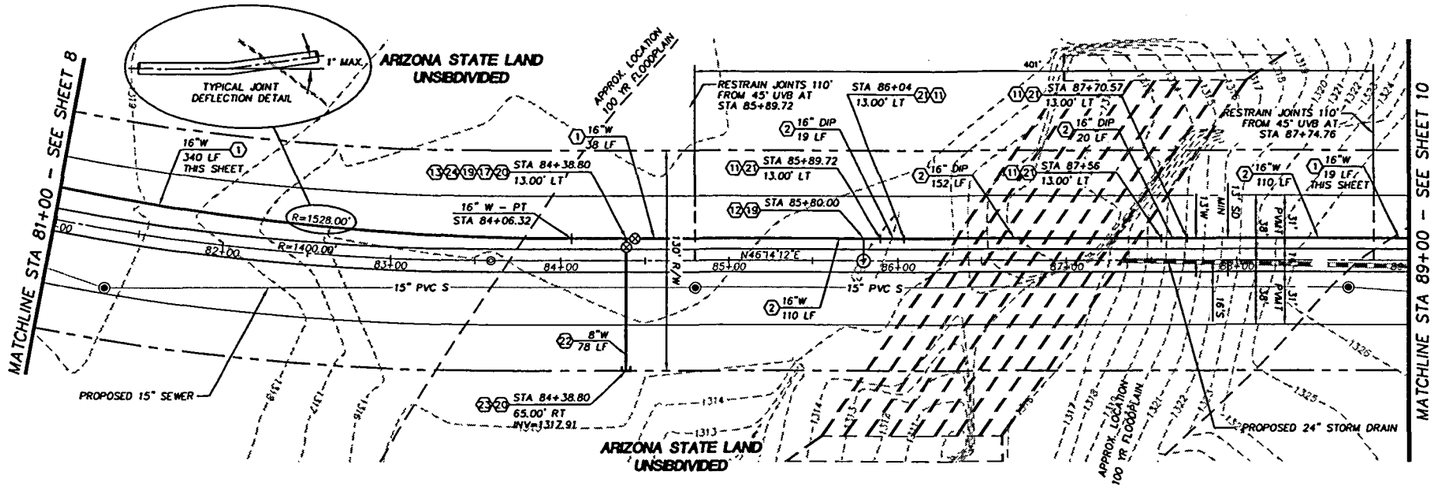

HAPPY VALLEY ROAD

GRAPHIC SCALE
40' 0 20' 40' 80'
1"=40' H
1"= 4' V
CONTOUR INTERVAL = 1'

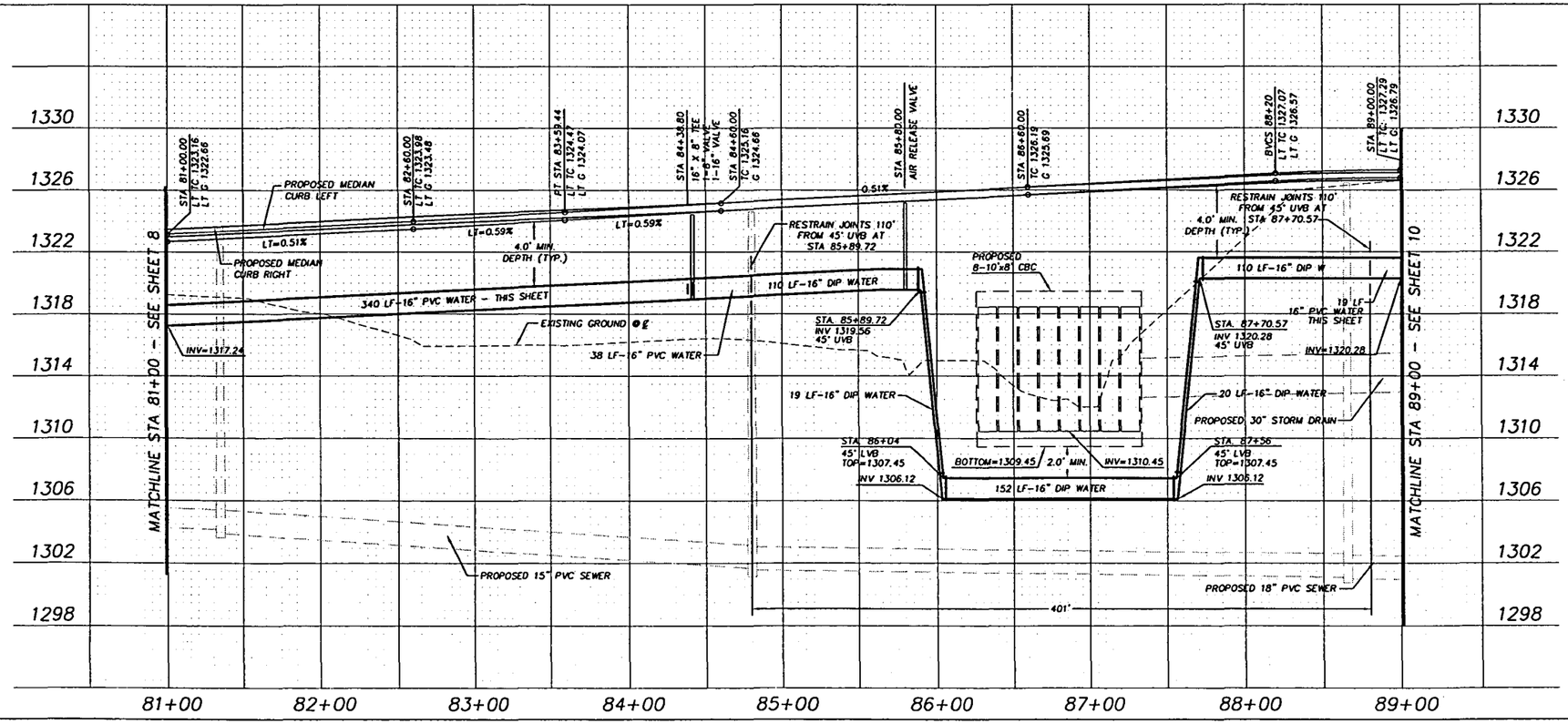

WATER CONSTRUCTION NOTES:

1. INSTALL 16" PVC (C905, DR18) WATER LINE.
2. INSTALL 16" DUCTILE IRON WATER LINE.
3. INSTALL 12" PVC (C900, DR18) WATER LINE.
4. INSTALL 16" x 16" CROSS.
5. INSTALL 16" x 16" TEE.
6. INSTALL 16" x 12" TEE.
7. INSTALL 12" x 12" TEE.
8. INSTALL 16" x 12" CROSS.
9. INSTALL 11-1/4° HORIZONTAL BEND.
10. INSTALL 22-1/2° HORIZONTAL BEND.
11. INSTALL 16" 45° DIP VERTICAL BEND.
12. INSTALL 16" AIR RELEASE VALVE PER AAWC STD. DTL. 3351.1.
13. INSTALL 16" GATE VALVE PER MAG STD. DTL. 391-1, TYPE "C".
14. INSTALL 12" GATE VALVE PER MAG STD. DTL. 391-1, TYPE "C".
15. INSTALL 12" CAP AND BLOWOFF ASSEMBLY.
16. INSTALL 16" CAP AND BLOWOFF ASSEMBLY.
17. INSTALL 16" x 8" TEE.
18. INSTALL 32" STEEL SLEEVE.
19. INSTALL VALVE THRUST BLOCKING PER MAG STD. DTL. 301.
20. INSTALL THRUST BLOCKING PER MAG STD. DTL. 380.
21. INSTALL ANCHOR BLOCKING PER MAG STD. DTL. 381.
22. INSTALL 8" PVC (C900, DR18) WATER LINE.
23. INSTALL 8" CAP AND BLOWOFF ASSEMBLY.
24. INSTALL 8" GATE VALVE PER MAG STD. DTL. 391-1, TYPE "C".
25. INSTALL 16" X 12" REDUCER.
26. REMOVE CAP AND CONNECT TO EXISTING WATER.
27. INSTALL 8" DUCTILE IRON WATER LINE.
28. INSTALL 12" DUCTILE IRON WATER LINE.

WATER QUANTITIES

1	16" PVC (C905, DR18) WATER LINE.	340	LF
2	16" DUCTILE IRON WATER LINE.	475	LF
3	12" PVC (C900, DR18) WATER LINE.	0	LF
12	16" AIR RELEASE VALVE	1	EA
13	16" GATE VALVE	1	EA
14	12" GATE VALVE	0	EA
18	INSTALL 32" STEEL SLEEVE.	0	LF
22	8" PVC (C900, DR18) WATER LINE.	78	LF
24	8" GATE VALVE	1	EA
27	8" DUCTILE IRON WATER LINE.	0	LF
28	12" DUCTILE IRON WATER LINE.	0	LF

1-800-782-5348
BLUE STAKE CENTER

NO.	DATE	REVISIONS	ITEM

The WLB Group INC.
Engineering • Planning • Surveying
Landscape Architecture • Urban Design
Offices located in: Tucson • Phoenix, Prescott Valley
333 E. Osborn, Suite 380, Phoenix, Az 85012
PH.(602) 279-1016

RANCHO CABRILLO
PHASE I - OFFSITE WATER PLANS
PLAN AND PROFILE
HAPPY VALLEY ROAD
STA 81+00 TO 89+00

13906 ROBERT L. BALL JR. ARIZONA

DESIGNED BY: WMK
DRAWN BY: RLP
CHECK BY: RGB
DATE: JANUARY, 2004
BY: Q.A. REVIEW
DATE:

PROJECT NO. 202017-A-001

SHEET	OF
9	11

APPENDIX G

SCOUR AND EROSION SETBACK CALCULATIONS

The WLB Group Inc. WLB

COMPUTATION DATA SHEET

Subject Rancho Cabrillo – Scour Depth and Erosion Setback Prepared by KAM Date 5/12/04

Re: HEC-2/HECRAS analysis for Wittmann ADMS along McMicken Dam Outlet Wash

(I) Water & Sewer crossing at Happy Valley Road (see attached map)

(1) Per the Flood Control District of Maricopa County, flow rate in the McMicken Dam Outlet Wash at this location for SPF = 14,000 cfs

Per HEC2/HECRAS model, the energy grade line slope at Section 3.879 = 0.006586 ft/ft

and velocity = 9.43 fps

(2) Design Scour – Per AZ State Standard for Watercourse System Sediment Balance SSS-96:

$$Y_{ts} = Y_{et} + Y_{gs} + Y_{ef}$$

where Y_{ts} = Total Scour (ft)

Y_{et} = Long Term Degradation (ft)

Y_{gs} = General Scour (ft)

Y_{ef} = Low flow channel (ft)

The WLB Group Inc. WLB

COMPUTATION DATA SHEET

Subject Rancho Cabrillo – Scour Depth and Erosion Setback Prepared by KAm Date 5/12/04 Pg 2/2

2) cont.

A) Long-Term Degradation

L.T. Degration is based on the AZ State Standard for Watercourse System Sediment Balance (SS-5-96) for Level I analysis

$$Y_{lt} = 0.02(Q_{SPF})^{0.6} = 0.02(14{,}000)^{0.6} = 6.15 \text{ ft}$$

B) General Degradation

$$Y_{gs} = 0.157(Q_{SPF})^{0.4} \text{ for straight channel}$$

$$= 0.157(14{,}000)^{0.4} = 7.15 \text{ ft}$$

C) Low Flow Thalweg

The cross section 3.879 shows 7.0' for low flow thalweg

$\therefore$ Total Scour = 6.15 + 7.15 + 7.0 = 20.3 ft

3) Lateral Migration

Level I procedure as outlined in the AZ State Standard for Watercourse Sediment Balance (SS 5-96)

$$\text{Setback} = 1.0(Q_{SPF})^{0.5}$$

$$= 1.0\sqrt{14{,}000} = 118.3 \text{ ft (use 120 ft)}$$

Note:

Since erosion setback distance from the 100-yr floodplain boundary to the sewer & water crossings at this location, scour depth is not a concern.

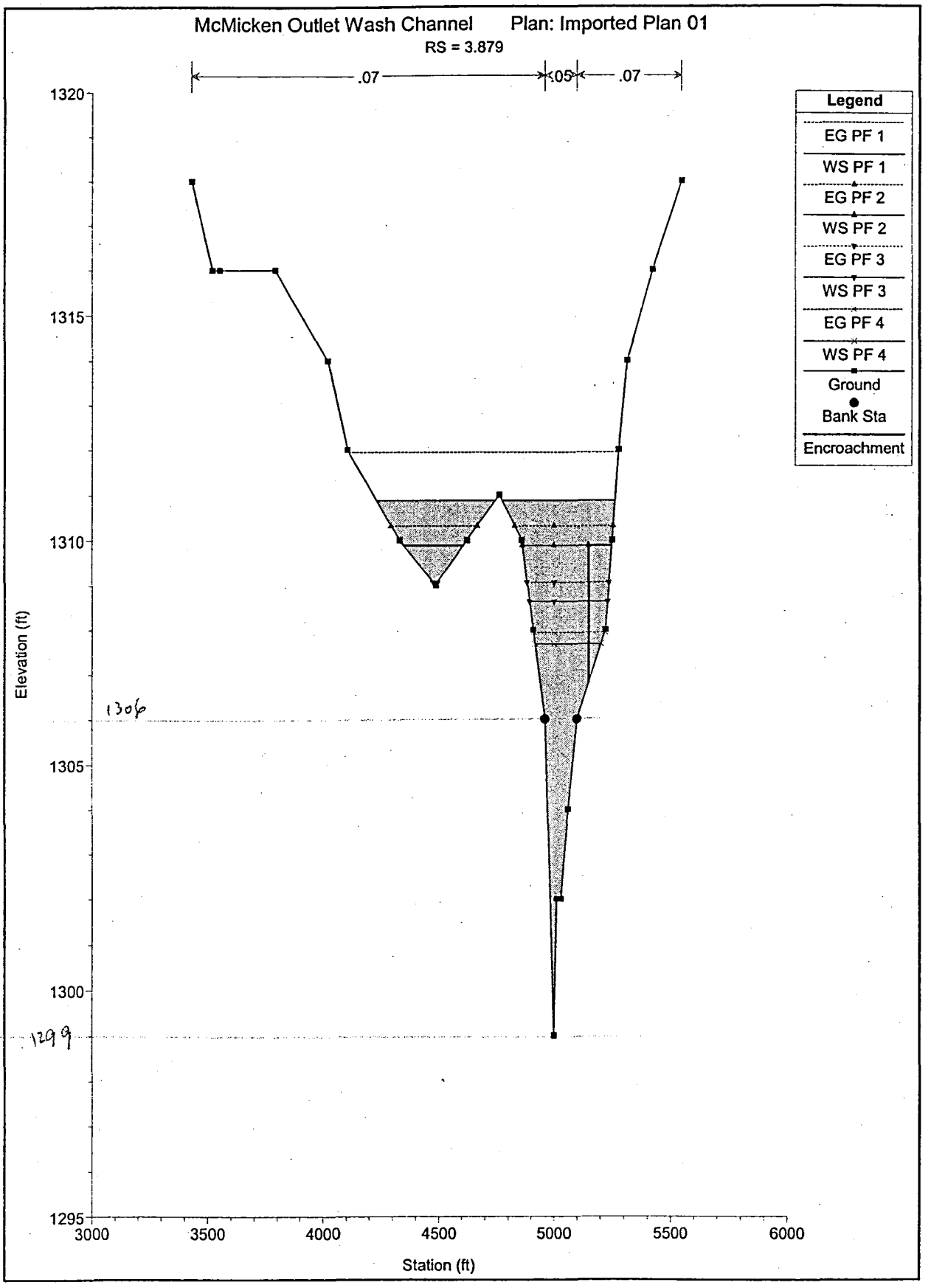
McMicken Outlet Wash Channel Plan: Imported Plan 01
RS = 3.879
.07
.05
.07
Legend
EG PF 1
WS PF 1
EG PF 2
WS PF 2
EG PF 3
WS PF 3
EG PF 4
WS PF 4
Ground
Bank Sta
Encroachment
Elevation (ft)
Station (ft)
1320
1315
1310
1306
1305
1300
1299
1295
3000
3500
4000
4500
5000
5500
6000

The WLB Group Inc. WLB

COMPUTATION DATA SHEET

Subject Rancho Cabrillo - Scour Depth & Erosion Setback Prepared by KAM Date 5/12/04

(II) Sewer Crossing at Sta 28+00 ($1\frac{1}{2}$ mi. south of Happy Valley Road alignment in the McMicken Dam Outlet Wash. (see attached map)

(1) At Cross Section 2.31,

Q_{SPF} = 14,000 cfs

velocity = 10.22 fps.

Energy grade line slope = 0.005470 ft/ft

(2) Design Scour

$Y_{ts} = Y_{et} + Y_{gs} + Y_{ef}$

A) Long-Term Degradation

Based on the AZ State Standard for Watercourse system Sediment Balance (SSS-96) for Level I analysis:

$Y_{et} = 0.02(Q_{SPF})^{0.6} = 6.15$

B) General Degradation

$Y_{gs} = 0.157(Q_{SPF})^{0.4} = 7.15$ ft

C) Low Flow Thalweg

The cross section 2.31 shows 2.0' low flow thalweg.

$\therefore$ Total Scour = 6.15 + 7.15 + 2.0 = 15.3'

3) Lateral migration = $1.0(Q_{SPF})^{0.5}$ = 118.3 ft.

Note: Since the sewer crossing is within the 100-yr floodplain area and does not meet both the erosion setback & scour depth requirements, protection for the sewer line at crossing is necessary which should extend beyond the 100-yr floodplain limits.

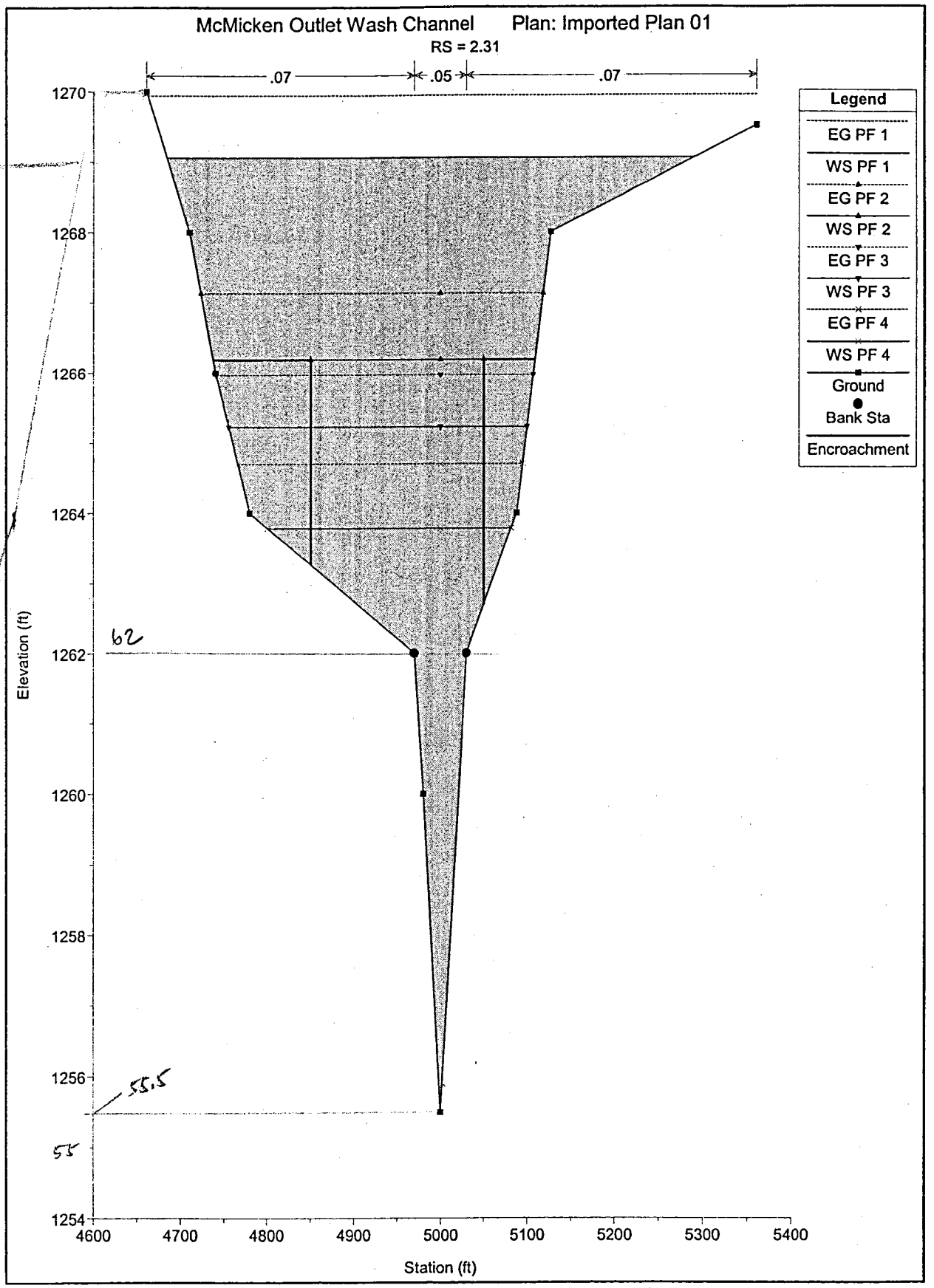
McMicken Outlet Wash Channel
Plan: Imported Plan 01
RS = 2.31
.07
.05
.07
Legend
EG PF 1
WS PF 1
EG PF 2
WS PF 2
EG PF 3
WS PF 3
EG PF 4
WS PF 4
Ground
Bank Sta
Encroachment
Elevation (ft)
Station (ft)
1270
1268
1266
1264
1262
1260
1258
1256
1254
4600
4700
4800
4900
5000
5100
5200
5300
5400
62
55.5
55

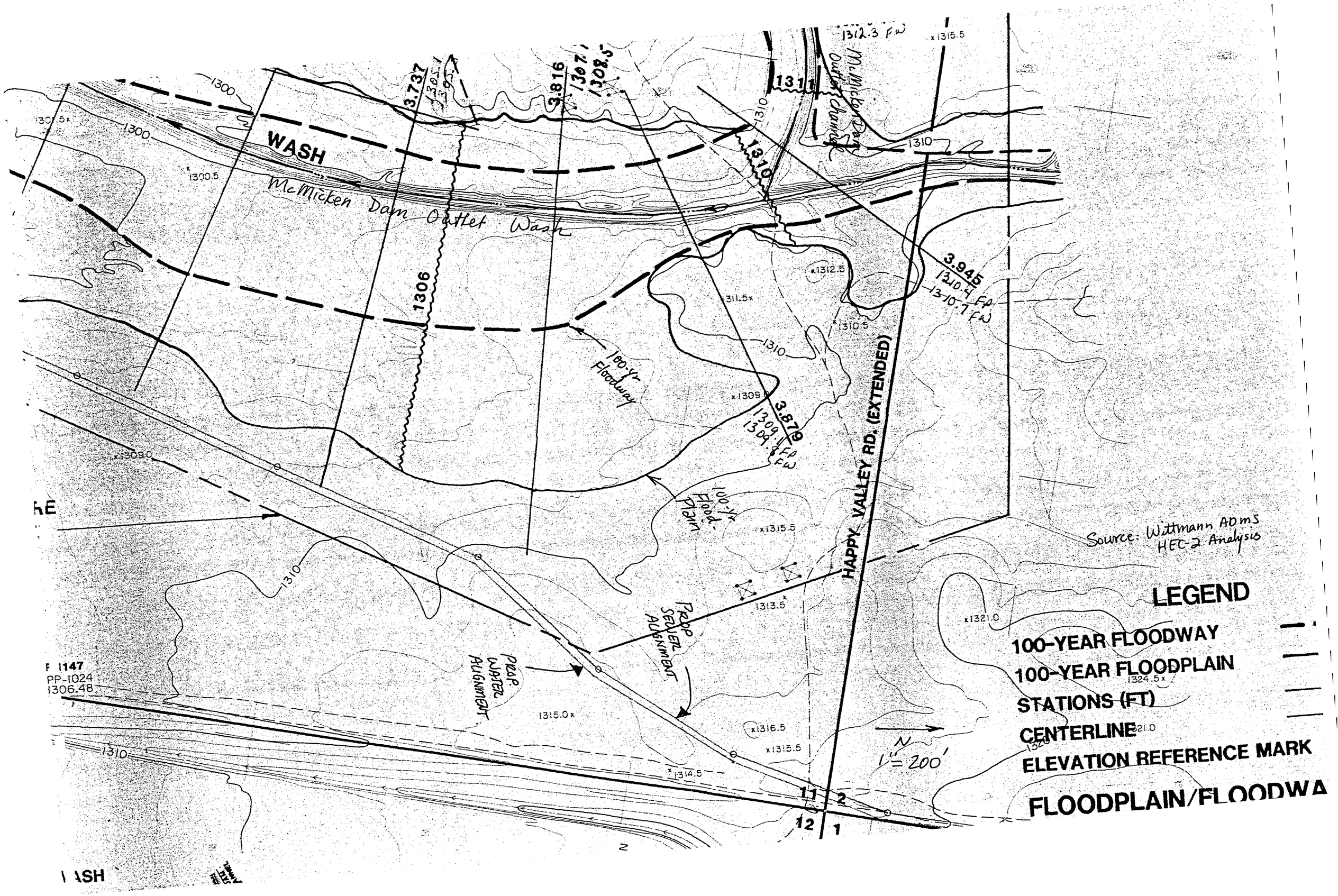
WASH
McMicken Dam Outlet Wash
McMicken Dam Outlet Channel
3.737
3.816
3.879
3.945
1306
1311
1310
1312.3 FW
1315.5
1312.5
1310.5
1311.5
1309
1309.0
1300
1300.5
1301.5
1313.5
1315.5
1313.5
1315.0
1316.5
1314.5
1321.0
1324.5
100-Yr Floodway
100-Yr Flood-Plain
Prop Sewer Alignment
Prop Water Alignment
HAPPY VALLEY RD. (EXTENDED)
Source: Wittmann ADMS HEC-2 Analysis
N
1" = 200'
LEGEND
100-YEAR FLOODWAY
100-YEAR FLOODPLAIN
STATIONS (FT)
CENTERLINE
ELEVATION REFERENCE MARK
FLOODPLAIN/FLOODWA
F 1147
PP-1024
1306.48
11
12
2
1

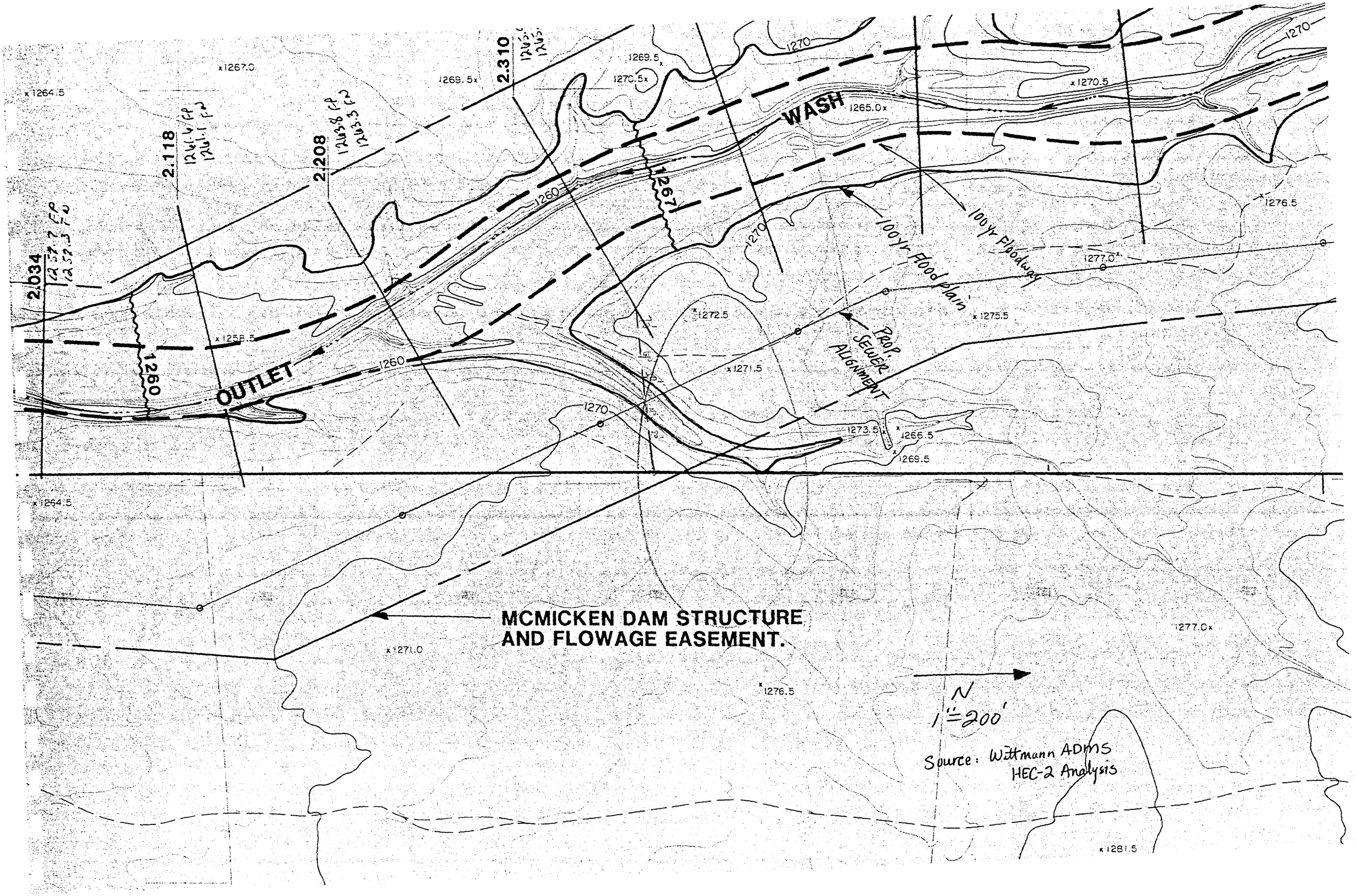
WASH
OUTLET
2.034
2.118
2.208
2.310
1260
1267
1270
100yr Floodway
100yr Flood plain
PROP. SEWER ALIGNMENT
MCMICKEN DAM STRUCTURE AND FLOWAGE EASEMENT.
N
1"=200'
Source: Wittmann ADMS HEC-2 Analysis