FINAL DRAINAGE REPORT

Property of
Flood Control District of MC Library
Please Return to
2801 W. Durango
Phoenix, AZ 85009

TONTO VERDE EAST EXTENSION

Prepared For:

RIO VERDE SERVICES, INC.
25609 Danny Lane, Suite 1
Rio Verde, Arizona 85263
(602)471-7247

Prepared By:

BROOKS, HERSEY & ASSOCIATES, INC.
4602 E. Elwood Street, #16
Phoenix, AZ 85040
(602)437-3733

November 7, 1997

C:\WPDOCS\TONTO\TV-EASTP.DR

FLOOD CONTROL DISTRICT
of
Maricopa County

2801 West Durango Street • Phoenix, Arizona 85009-6399
Telephone (602) 506-1501
Fax (602) 506-4601
TT (602) 506-5897

BOARD OF DIRECTORS
Jan Brewer
Fulton Brock
Andrew Kunasek
Don Stapley
Mary Rose Garrido Wilcox

NOV 18 1997

Lute Obaidi, P.E.
Brooks, Hersey & Associates, Inc.
4602 East Elwood Street, #16
Phoenix, Arizona 85040

Subject: Tonto Verde East Extension

Dear Mr. Obaidi:

We have reviewed the Final Drainage Report submittal for Tonto Verde East Extension. The report is consistent with the existing Tonto Verde Flood Delineation Study. We find the report acceptable.

Prior to Tonto Verde Golf Club Drainage Clearance approval, the Plan of Development must be revised to incorporate the approved Tonto Verde East Extension.

I have enclosed a copy of our Drainage Clearance Check List, I hope you find it helpful.

Sincerely,

Magnus R. Jolayemi
Drainage Reviewer

MRJ/clg

Enclosure

FLOOD CONTROL DISTRICT
of
Maricopa County

2801 West Durango Street • Phoenix, Arizona 85009-6399
Telephone (602) 506-1501
Fax (602) 506-4601
TT (602) 506-5897

BOARD OF DIRECTORS
Betsey Bayless
Jan Brewer
Fulton Brock
Don Stapley
Mary Rose Garrido Wilcox

NOV 12 1997

Lute Obaidi, P.E.
Brooks, Hersey & Associates, Inc.
4602 East Elwood Street, #16
Phoenix, Arizona 85040

Re: Preliminary Drainage Report on Tonto Verde East Extension

Dear Mr. Obaidi:

The review comments on the above-mentioned project, dated September 29, 1997, have been adequately addressed with the following exception.

(1) The channel designs for Washes 10, 11, and 12, have Froude numbers close to 1.0. The recommended channel designs should have Froude numbers equal or less than 0.86. This is according to the Drainage Design Manual for Maricopa County, Volume II, Hydraulics.

Should you have further questions, please do not hesitate to contact me at (602) 506-4528. Thank you very much for your time and cooperation.

Sincerely,

Hasan Mushtaq, P.E.
Engineering Division

Coord: PAC HSM MRJ MRS

Info: HSM 11/12

BROOKS, HERSEY & ASSOCIATES, INC.
ENGINEERS/SURVEYORS
CONSTRUCTION ADMINISTRATORS

November 6, 1997

Mr. Hasan Mushtaq, P.E.
Flood Control District of Maricopa County
2801 West Durango Street
Phoenix, Arizona 85009-6399

Re: **Final Drainage Report on Tonto Verde East Extension**

Dear Hasan,

This letter is in regard to your review comments on the above referenced project. Comments on the channel design as well as the HEC-2 hydraulic models have been carefully reviewed and responses are provided under a separate sheet "RESPONSE TO THE COMMENTS."

A copy of electronic HEC-2 data file for FIRM Washes 10, 11 and 12 is also included. If you require additional information or data, please call me at 437-3733 and I will respond immediately in order to get this project approved.

Thank you for your endless effort and cooperation.

Sincerely,
Brooks, Hersey and Associates, Inc.

Lute Obaidi

Lute Obaidi, P.E.
Project Engineer

LO/nef

Enclosures

cc: Dave Ritchie w/enclosures

C:\WPDOCS\TONTO\TV-EASTP.DR

4602 E. Elwood Street #16
Phoenix, Arizona 85040-1960
PH (602) 437-3733
FAX (602) 858-0204

RESPONSE TO THE COMMENTS

CHANNEL DESIGN

1. The design 100-year discharge at the start of channels for washes 10 and 11 has been checked and corrected. The discharge in the FCD Technical Data Note Book Hydraulics Existing Condition Book 2 of 2 appears to be 2010 CFS.

2. Reaches of the channels at washes 10, 11 and 12 which resulted in a super critical flow condition have been revised. The revised flow conditions appears to be in a subcritical state with a Froude Number equal to or less than one. Manning Coefficient has been adjusted to fall within the range as outlined in the *FCD Technical Data Notebook.*

3. Channel velocities fall within the range limit as depicted for the existing FIRM Washes in the FCD Technical Data Note Book.

HYDRAULIC MODELING HEC-2

1. The starting 100-year water surface elevations for FIRM Washes 10, 11, 12 have been included in this report. Please refer to part PROCEDURE #2, Page 4 in the text of the report.

2. The non-matching "GR" points for cross sections at stations 1500 and 3160 for Wash 11 have been corrected.

3. The existing floodplain/floodway boundaries were compared at the exit and entrance of the project with the results obtained from the HEC-2 models. Water elevation variations are approximately within the 1 foot limit.

4. The upstream and downstream sections (exit and entrance) of each modified wash match vertically and horizontally with the existing FEMA study. The FCD existing sections for each FIRM wash have been selected upstream and downstream of the proposed channels to match the existing with the proposed sections. Please refer to Part PROCEDURES #2, Page 4 of this report.

5. The revised HEC-2 cross section extended messages along the delineated washes have been corrected and extended cross sections have been reduced to less than half a foot.

FLOOD CONTROL DISTRICT
of
Maricopa County

2801 West Durango Street • Phoenix, Arizona 85009-6399
Telephone (602) 506-1501
Fax (602) 506-4601
TT (602) 506-5897

BOARD OF DIRECTORS
Betsey Bayless
Jan Brewer
Fulton Brock
Don Stapley
Mary Rose Garrido Wilcox

Lute Obaidi, P.E.
Brooks, Hersey & Associates, Inc.
4602 East Elwood Street, #16
Phoenix, Arizona 85040

Re: Preliminary Drainage Report on Tonto Verde East Extension

Dear Mr. Obaidi:

Staff has completed reviewing the above-mentioned submittal. Please find the following comments on the Preliminary Drainage Report.

Channel Design

(1) The design 100-year discharge at the start of Channels at Washes 10 and 11 should be 1,900.0 cfs., instead of 2,850.0 cfs.

(2) Numerous reaches of the Channels at Washes 10, 11, 12, have supercritical flow, according to the design. It is recommended that the earthen channels should be designed for sub-critical state only. Please refer to the Drainage Design Manual for Maricopa County, Volume II, Hydraulics, for guidelines for the Earth Lined Channel designs.

(3) Maximum velocity limitation has been exceeded throughout the channel lengths. The design velocities, for earthen channels, must be within the permissible values as recommended by the manual.

Hydraulic Modeling HEC-2

(1) The starting 100-year water surface elevation for the revised hydraulic modeling needs to be clarified in the text portion of the report.

(2) The revised hydraulic model for Wash 11 has bank station identified at non-matching GR points at cross sections 1500 and 3160.

(3) The existing floodplain/floodway boundaries should be compared with the results from the revised hydraulic modeling.

(4) The upstream and downstream of the each modified wash must match, both vertically and horizontally, with the existing FEMA study, within the acceptable limits.

(5) The revised HEC-2 results show numerous cross-section extended messages along the delineated washes. These cross section extended messages must be reduced to less than 0.5'.

It is recommended that the above-mentioned concerns be addressed before a more detailed evaluation of the submittal can be made. If the existing floodplain/floodway boundaries are revised and/or modified in

any manner, a Letter of Map Revision (LOMR) request must be submitted to the Federal Emergency Management Agency (FEMA), for approval.

Should you have further questions, please do not hesitate to contact me at (602) 506-4528. Thank you very much for your time and cooperation.

Sincerely,

Hasan Mushtaq, P.E.
Engineering Division

Coord:

Coord: PAC HSM

Info: HSM

BROOKS, HERSEY & ASSOCIATES, INC.
4602 E. Elwood Street, #16, Phoenix, AZ 85040-1960
(602)437-3733 fax 858-0204

PLEASE CALL IF THIS FAX IS INCOMPLETE

FAX COVER SHEET

COMPANY NAME: ATTN: FAX #: 506-4601

(1) MCFCD HASSA MUSHTAQ, P.E.

(2) 506-4601

(3)

FROM: LUTE OBAIDI, P.E.

DATE: No. OF PAGES W/ COVER: ~~FOUR~~ FIVE

ORIGINALS TO FOLLOW IN MAIL: ____ YES X NO ____ MESSENGER

PROJECT: TONTO VERDE PROJECT No.: 51911 TM

ITEMS FAXED: TONTO VERDE DEVELOPMENT MASTER PLAN

MESSENGER: EXCEPTS FOR YOUR USE

HASSAN: Please let me know if you have any questions. THANKS!

TRANSMITTED BY: Lute Obaidi DATE: 10/8/97 TIME: 14:25

Tonto Verde

Development Master Plan

Prepared for:

Owner:
Tonto at Verde; a limited partnership

Developer:
Rio Verde Services, Inc.
25609 Danny Lane
Rio Verde, Arizona 85255
(602) 471-7247

Prepared by:

Cornoyer Hedrick, Architects and Planners
2425 East Camelback Road, Fourth Floor
Phoenix, Arizona 85016
(602) 381-4848
Contact: Jackie L. Guthrie

July 16, 1992
Revised September 21, 1992
Revised November 17, 1992

Development Impact

Development of Tonto Verde will continue the high quality, desert sensitive land use pattern established in the area by the community of Rio Verde and will have minimal social and economic impacts on the area. From a land use standpoint, Tonto Verde will coexist in a positive way with similar adjacent developments and with adjacent undeveloped Tonto National Forest. Because of the low density land use pattern, and private infrastructure financing and construction, Tonto Verde will also have minimal impacts upon the area transportation system and essential services. From the standpoint of environmental quality and resource management, Tonto Verde will have minimal impacts upon the water and air quality of the area due to the low density. Visual impacts, and impacts to soils conservation will be mitigated with the practice of restrictive grading, revegetation of disturbed areas, limited use of non-indigenous plant material, and employment of an effective transplant program.

The areas on the site most sensitive to development impact are the existing washes which contain dense vegetation areas and serve as wildlife movement corridors between the Verde River and the lands to the west. The golf course is designed to sensitively integrate with the environment, and in accordance to county desires, will not disturb primary wash channels. Overall, the main channels of the site's major washes will be preserved in a natural condition and openings will be left in the perimeter walls to allow wildlife travel. The Arizona Game and Fish Department will assist the developer in creating a wildlife mitigation program. Since there is a possibility of encountering desert tortoise on the property, and because of its status as a candidate for the list of threatened Native Wildlife in Arizona, the Arizona Game and Fish Department has outlined some guidelines which are listed in the Appendix of this Report. These guidelines will be followed if any tortoises are found.

- Topography and Slope

Elevations on the site range from 1,550 feet at the low point to 1,680 feet at the high point location. The property does not exceed 15% slopes in any area. Overall, the site is relatively flat with a number of braided washes traversing the site west to east towards the Verde River. The slopes of wash banks have ~~course,~~ coarse well drained soils with fine sand on the bottoms of the washes.

- Vegetation and Wildlife

Vegetation within the Sonoran desert is extremely variable depending upon many factors that can create or ease environmental tensions. The primary factor in determining vegetational pattern is moisture availability. This is closely correlated with amounts and seasonality of rainfall, topography and slope exposure, and the water holding capacities of the soils.

Vegetation in the area is perennial southern desert shrub typical of the upper Sonoran desert. Characteristic cacti are saguaro, barrel, ocotillo, and buckhorn cholla. Typical woody plants and trees include palo verde, mesquite, creosote, bursage, ironwood, acacia, and catclaw, and are found in greater concentrations in association with the major and minor washes that traverse the site. There is also an extensive growth of annual herbs and grasses during periods of increased moisture, particularity in the washes.

The vegetation on the site will be preserved where possible. Saguaros and other specimen vegetation will be relocated on the site if disturbed by development to preserve wildlife habitat and the aesthetic beauty of this natural desert area.

The relative wealth of vegetation provides protection and food for many animals. It can be assumed that these include the reptiles: whip-tailed lizards, red racer, Sonora gopher snake, and western diamondback rattlesnake; birds: white-winged dove, mourning dove, Gambel's quail, turkey vultures, Harris hawk, and red-tailed hawk; and mammals: rock and ground squirrels, packrats, wood rat, kangaroo rats, deer mice, and other desert rodents, grey fox, ringtail cats, blacktailed jackrabbit and desert cottontail, coyote, bobcats, and javelina.

The site is cut by washes with narrow, sandy channels that are kept clear of vegetation by periodic scouring after heavy rains. The increase in available moisture supports the growth of dense vegetation along the narrow banks. This is a favorable environment for a number of associated animals, such as: spadefoot toads, great plains toad, southwestern earless lizard, western diamondback rattle snake, desert tortoise, Gambel's quail, white-winged dove, mourning dove, ash-throated flycatcher, roadrunner, rock wren, blacktailed jackrabbit, desert cottontail, round-tailed ground squirrel, coyote and javelina.

Probably the most important, most delicate habitats are the washes. These areas of dense, varied vegetation and increased moisture are important to the survival of most of the animal population. During the heat of the day, the dense cover offers shelter and protection to all animal groups. In addition, the washes are important as migration routes for such species as coyote, mule deer, javelina, jackrabbit, cottontail, ground squirrel and Gambel's quail.

Existing Rights-of-Way and Related Improvements

Perimeter Roadways and Rights-of-Way:

a. Rio Verde Drive extends east/west and forms the northern boundary of the property. The roadway right-of-way is maintained by the Maricopa County Highway Department and is 200 feet wide, until Rio Verde Drive where it narrows to 110 feet wide. Rio Verde Drive is a paved two-lane roadway which ends at Forest Road.

b. An unimproved road continues past Forest Road to serve the Rio Verde Ranch and to access the Verde River one mile to the east. The easement for the existing road right-of-way (Forest Service Access Road #160), is 66 feet wide, 33 feet on each side of the centerline across portions of Lot 1 and Section 31.

c. The Highway Department maintains Forest Road which extends north/south, dividing Tonto Verde. The Forest Road right-of-way consists of two 66 foot half streets for a total width of 132 feet. Forest Road is a paved two lane roadway which ends at Rio Verde Drive. An unimproved dirt road continues north for a short distance, providing access to Forest Service land.

d. There is a 34 foot Forest Service easement extending from Forest Road, east to the section line, as illustrated on the Physical Features exhibit.

   Any change from the proposed location of the easement illustrated along Rio Verde Drive east of Forest Road will require Planning Commission and Board of Supervisors approval for that portion of the Plan.

INDEX

Cover	1
Index	2
Introduction	3
Purpose	3
Existing Conditions	3
Procedures	4
Proposed Improvements	4
Conclusions	5
References	6
Appendix Cover	7

Registered Professional Engineer (Civil) CERTIFICATE NO. 23996 GREGG T. KENT Date Signed 11-6-97 ARIZONA, U.S.A.

Registered Professional Engineer (Civil) CERTIFICATE NO. 25005 L (LUTE) OBAIDI Date Signed 11/6/97 ARIZONA, U.S.A.

C:\WPDOCS\TONTO\TV-EASTP.DR

INTRODUCTION

Tonto Verde is a master planned community located in northeast Maricopa County, Arizona in Sections 31 and 36, Township 5 North, Ranges 6 and 7 East, of the Gila and Salt River Base and Meridian. The community has recently completed the construction of Tonto Verde Four and has started plans for Tonto Verde Five and Six. All these phases are located west of Forest Road. The subject of this report for the remaining area to be developed is the area east of Forest Road. (*See Location Map*) This 300 acre site will contain a new golf course, additional single family homes and townhomes as noted on the approved master plan for the area.

The proposed improvements in this report are outlined in the *Master Drainage Plan for Tonto Verde*, Revised June 1993.

PURPOSE

The purpose of this report is as follows:

1. To design drainage channels and culverts to accommodate storm water flow for the 100-year, 24-hour storm event generated onsite and offsite from the areas west of Tonto Verde.

2. To realign portions of the existing wash corridors within the parcel to accommodate proposed site improvements.

3. To reduce areas of shallow flooding from FEMA Floodplains FIRM 10, 11 and 12 and subsequentially remove those areas from the floodplain.

EXISTING CONDITIONS

The area around the Tonto Verde consists of mostly undeveloped desert except for areas directly south is the Rio Verde Master Planned Community. The terrain is typical of the area which slopes moderately to the east toward the Verde River at 2 to 2 1/2 % and is traversed by several large and small washes. Most prominent are the three FIRM washes (FIRM 10, 11 and 12) which were the subject of the recent MCFCD *Rio Verde South Floodplain Delineation Study*. This study has designated flood zones west of Tonto Verde through Tonto Verde and Rio Verde to the Verde River. Portions of FIRM 10 and FIRM 11 are channelized through Tonto/Rio Verde developments west of Forest Road and are included in the noted delineation study. FIRM 12 enters Tonto Verde from the northwest and has not been channelized. In addition, some smaller non-FIRM washes have been channelized through Tonto Verde in places to accommodate earlier phases of development. Channel 01 with 100-year carrying capacity of 99.3 CFS is not categorized as FIRM washes; however, due to flow magnitude, it is deemed necessary to be included as part of this report. Channel 02 appears to carry local storms which ranges from 30 to 60 CFS. Channels 01 and 02 detail design shall be included as part of Tonto Verde East Extension phasing.

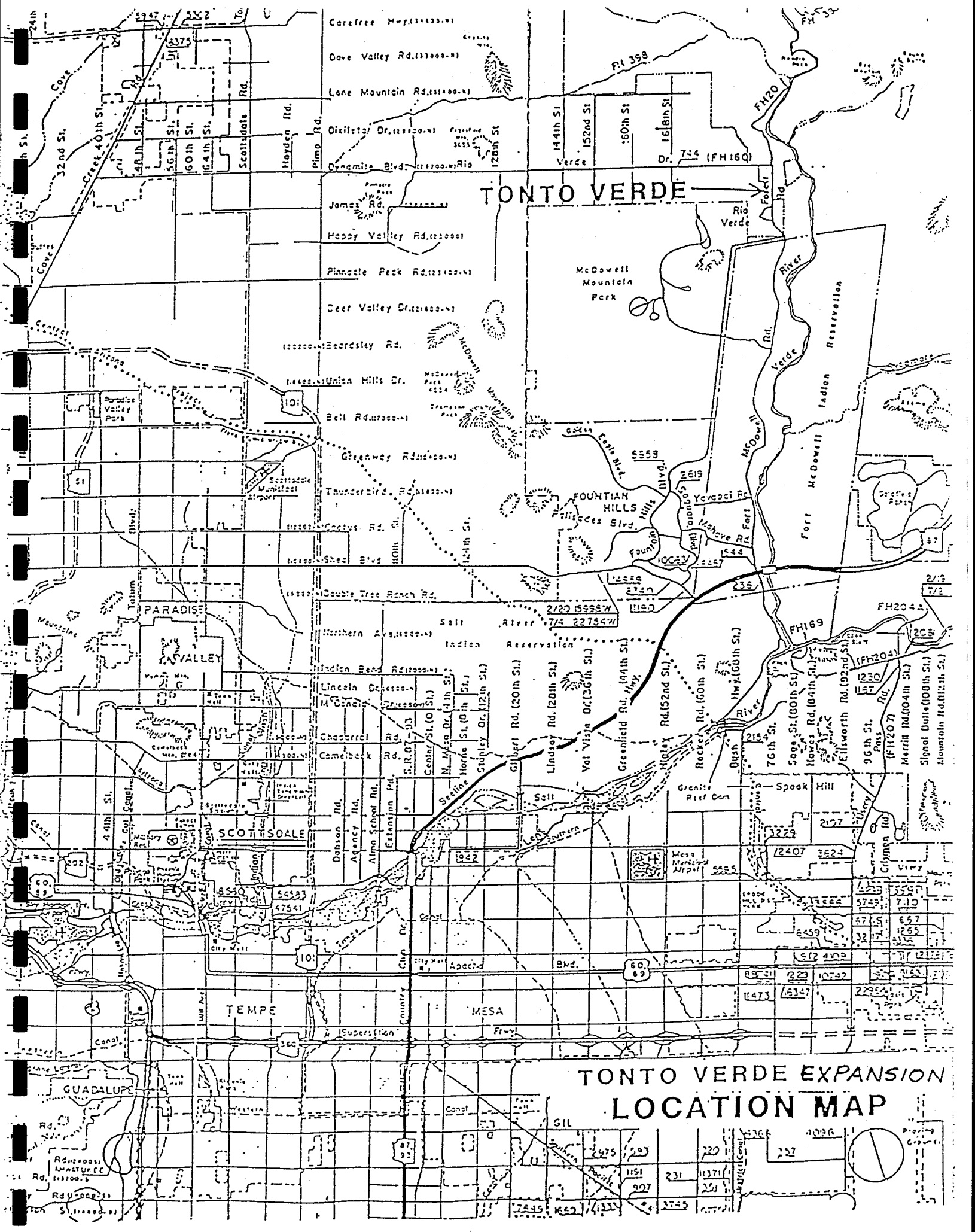
TONTO VERDE
TONTO VERDE EXPANSION
LOCATION MAP
Carefree Hwy.
Dove Valley Rd.
Lone Mountain Rd.
Dixileta Dr.
Dynamite Blvd.
James Rd.
Happy Valley Rd.
Pinnacle Peak Rd.
Deer Valley Dr.
Beardsley Rd.
Union Hills Dr.
Bell Rd.
Greenway Rd.
Thunderbird Rd.
Cactus Rd.
Shea Blvd.
Double Tree Ranch Rd.
Northern Ave.
Indian Bend Rd.
Lincoln Dr.
McDonald Dr.
Chaparral Rd.
Camelback Rd.
Rio Verde Dr.
Folev Rd.
McDowell Mountain Park
Fort McDowell Indian Reservation
Verde River
Salt River Indian Reservation
FOUNTAIN HILLS
Palisades Blvd.
Eagle Blvd.
Fountain Hills Blvd.
Saguaro Blvd.
Yavapai Rd.
Mohave Rd.
Fort McDowell Rd.
PARADISE VALLEY
Paradise Valley Park
Scottsdale Municipal Airport
SCOTTSDALE
TEMPE
MESA
GUADALUPE
Mesa Municipal Airport
Granite Reef Dam
Spook Hill
Apache Blvd.
Superstition Fwy.
Sedona Hwy.
Gilbert Rd.
Lindsay Rd.
Val Vista Dr.
Greenfield Rd.
Hawes Rd.
Ellsworth Rd.
Signal Butte Rd.
Mountain Rd.
Merrill Rd.
Crismon Rd.
Dobson Rd.
Alma School Rd.
Extension Rd.
Stapley Dr.
Center St.
Horne St.
Sossaman Rd.
Power Rd.
Ellsworth Rd.
Scottsdale Rd.
Hayden Rd.
Pima Rd.
Tatum Blvd.
Cave Creek Rd.
Rio Verde
FH 20
FH 169
FH 204
FH 160
Rt 398
Salt River
Canal
Gila River

PROCEDURES

1. In order to perform this study and to provide basic information for subsequent improvement designs and studies, the project site was aerial photographed and electronic topographic maps were prepared. A copy of the *Rio Verde South Floodplain Delineation Study* was obtained from the Maricopa County Flood Control District. This study provided the storm water flows and existing wash/floodplain alignments. Datums were verified and these alignments were added to our maps. Next, the future development phases and golf course were added according to the approved master plan for the area that took into account the washes and other site topographic features. Where necessary, small alignment changes were made to accommodate the proposed site layouts. These changes were made within the project limits and the washes were returned to their original alignments before exiting the site. (*See enclosed Drainage Maps*) Channel grades were then set and box culvert crossings for Forest Road were sized.

2. To complete the study, HEC-2 water surface models were run for each of the FIRM washes within the project limit. Each of the FIRM Washes 10, 11 and 12 were matched at the exit and entrance of each wash. Washes exit and entrance stations (matching the existing stations as outlined in the *FCD Technical Data Notebook Hydrology, Existing Conditions*) are located as follows:

(1) <u>FIRM Wash 10</u>

FCD Exit Station X1	=	0.021
Tonto Verde East Extension Station X1	=	7 + 40
CWSEL	=	1550.27
FCD Entrance Station X1	=	0.567
Tonto Verde East Extension Station X1	=	36 + 85

(2) <u>FIRM Wash 11</u>

FCD Exit Station X1	=	0.021
Tonto Verde East Extension Station X1	=	7 + 40
FCD Entrance Station X1	=	1.257
Tonto Verde East Extension Station X1	=	34 + 90

(3) <u>FIRM Wash 12</u>

FCD Exit Station X1	=	0.292
Tonto Verde East Extension Station X1	=	3 + 78
FCD Entrance Station X1	=	0.935
Tonto Verde East Extension Station X1	=	37 + 82

All design calculations are included in the *Appendix*.

PROPOSED IMPROVEMENTS

As noted above, all of the proposed channel improvements will be completed within the project limits having considered that all the washes will return to their natural state prior to leaving the site. The natural vegetation will only be subject to a minimum of disturbance and will be transplanted as practical to enhance other areas. Channels were sized according to the noted MCFCD Floodplain Study to contain the 100-yr 24-hour storm flows within the channel and according to the area's Master Drainage Plan. All channels will be earthen throughout the project limits, with riprap bank protection as needed at box culverts, drops and other locations as needed for erosion control or to control sedimentation. Additionally, geotextile fabric may be used in the golf course areas to protect grass turf. Design details shall be included in construction plans as the project design progresses.

The existing Floodplain/floodway boundaries were compared at the exit and entrance of the project with the results obtained from the HEC-2 models. Water elevation variations are approximately within the 1 foot limit.

CONCLUSIONS

The following are the results of this study:

1. Alignments for all substantial washes in Tonto Verde east of Forest Road have been determined.

2. The washes which are channelized will contain the 100-year 24-hour storm and will leave the site at the same location as the existing wash.

3. There is no apparent increase in the amount of offsite flows due to onsite development according to the Tonto Verde Master Drainage Plan.

REFERENCES

Flood Control District of Maricopa County, Phoenix, Arizona; Rio Verde South Floodplain Delineation Study FCD 93-07; Technical Data Notebook Hydrology Existing Condition; Books 1 of 2 and 2 of 2, August 1995.

Flood Control District of Maricopa County, Phoenix, Arizona; Rio Verde South Floodplain Delineation Study FCD 93-07; Technical Data Notebook Hydrology Existing Condition; Books 1 of 2 and 2 of 2, September 1995.

Revised Master Drainage Report for Tonto Verde, Brooks, Hersey and Associates, Inc.

Final Drainage Report of Tonto Verde Unit 4, Brooks, Hersey and Associates, Inc., March, 1996.

Final Drainage Report of Tonto Verde Unit 3, Brooks, Hersey and Associates, Inc., September 1994 and Addendum #1 October 1994.

Drainage Design Manual for Maricopa County, Arizona, Volume II, Hydraulics.

Open Channel Hydraulics, Ven Te Chow, 1959.

APPENDIX

A.	Wash 10 Channel	(FIRM 10)
B.	Wash 11 Channel	(FIRM 11)
C.	Wash 12 Channel	(FIRM 12)
D.	Wash 01 Channel	
E.	Wash 10 Channel Culvert in Forest Road	
	Wash 11 Channel Culvert in Forest Road	
F.	Wash 10 Water Surface	
	Profile - HEC 2 Analysis	(FIRM 10)
G.	Wash 11 Water Surface	
	Profile - HEC 2 Analysis	(FIRM 11)
H.	Wash 12 Water Surface	
	Profile - HEC 2 Analysis	(FIRM 12)
I.	Project Drainage Maps	

A. Wash 10 Channel (FIRM 10)

Tnto V Wash 10, Q=2850cfs,10+00-10+60
Worksheet for Trapezoidal Channel

Project Description	
Project File	c:\haestad\fmw\tontow10.fm2
Worksheet	Tnto V Wash 10, Q=2010cfs,10+00-10+60
Flow Element	Trapezoidal Channel
Method	Manning's Formula
Solve For	Channel Depth

Input Data		
Mannings Coefficient	0.045	
Channel Slope	0.020000	ft/ft
Left Side Slope	4.000000	H : V
Right Side Slope	4.000000	H : V
Bottom Width	35.00	ft
Discharge	2,010.00	cfs

Results		
Depth	4.03	ft
Flow Area	206.04	ft^2
Wetted Perimeter	68.23	ft
Top Width	67.24	ft
Critical Depth	3.99	ft
Critical Slope	0.020773	ft/ft
Velocity	9.76	ft/s
Velocity Head	1.48	ft
Specific Energy	5.51	ft
Froude Number	0.98	
Flow is subcritical.		

Cross Section
Cross Section for Trapezoidal Channel

Project Description	
Project File	c:\haestad\fmw\tontow10.fm2
Worksheet	Tnto V Wash 10, Q=2010cfs,10+00-10+60
Flow Element	Trapezoidal Channel
Method	Manning's Formula
Solve For	Channel Depth

Section Data		
Mannings Coefficient	0.045	
Channel Slope	0.020000	ft/ft
Depth	4.03	ft
Left Side Slope	4.000000	H : V
Right Side Slope	4.000000	H : V
Bottom Width	35.00	ft
Discharge	2,010.00	cfs

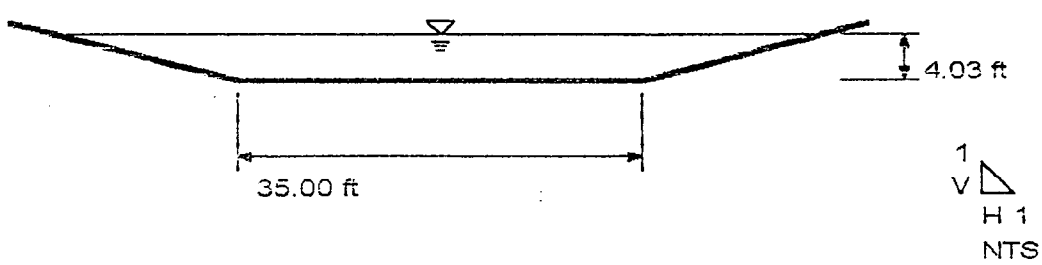

Tnto V Wash 10,Q=1900cfs,10+60-14+00
Worksheet for Trapezoidal Channel

Project Description	
Project File	c:\haestad\fmw\tontow10.fm2
Worksheet	Tnto V Wash 10, Q=2010cfs,10+60-14+00
Flow Element	Trapezoidal Channel
Method	Manning's Formula
Solve For	Channel Depth

Input Data		
Mannings Coefficient	0.045	
Channel Slope	0.020000	ft/ft
Left Side Slope	4.000000	H : V
Right Side Slope	4.000000	H : V
Bottom Width	25.00	ft
Discharge	2,010.00	cfs

Results		
Depth	4.60	ft
Flow Area	199.44	ft²
Wetted Perimeter	62.91	ft
Top Width	61.77	ft
Critical Depth	4.57	ft
Critical Slope	0.020488	ft/ft
Velocity	10.08	ft/s
Velocity Head	1.58	ft
Specific Energy	6.18	ft
Froude Number	0.99	
Flow is subcritical.		

Cross Section
Cross Section for Trapezoidal Channel

Project Description	
Project File	c:\haestad\fmw\tontow10.fm2
Worksheet	Tnto V Wash 10, Q=2010cfs,10+60-14+00
Flow Element	Trapezoidal Channel
Method	Manning's Formula
Solve For	Channel Depth

Section Data		
Mannings Coefficient	0.045	
Channel Slope	0.020000	ft/ft
Depth	4.60	ft
Left Side Slope	4.000000	H : V
Right Side Slope	4.000000	H : V
Bottom Width	25.00	ft
Discharge	2,010.00	cfs

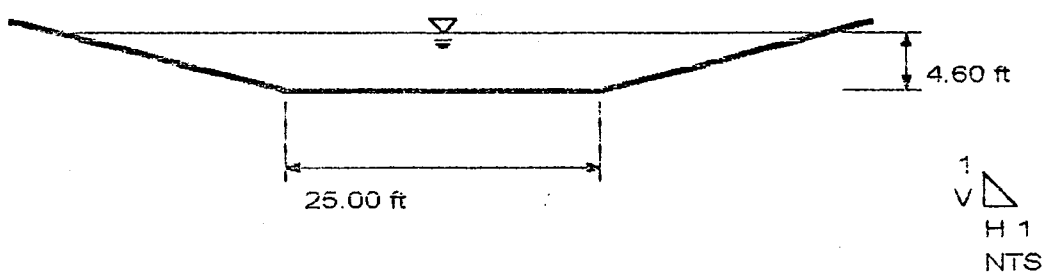

Tonto V Wash 10,Q=1900cfs,14+00-20+00
Worksheet for Trapezoidal Channel

Project Description	
Project File	c:\haestad\fmw\tontow10.fm2
Worksheet	Tonto V Wash 10,Q=2010,14+00-20+00
Flow Element	Trapezoidal Channel
Method	Manning's Formula
Solve For	Channel Depth

Input Data		
Mannings Coefficient	0.045	
Channel Slope	0.008000	ft/ft
Left Side Slope	6.000000	H : V
Right Side Slope	6.000000	H : V
Bottom Width	25.00	ft
Discharge	2,010.00	cfs

Results		
Depth	5.32	ft
Flow Area	302.56	ft^2
Wetted Perimeter	89.69	ft
Top Width	88.81	ft
Critical Depth	4.21	ft
Critical Slope	0.021188	ft/ft
Velocity	6.64	ft/s
Velocity Head	0.69	ft
Specific Energy	6.00	ft
Froude Number	0.63	
Flow is subcritical.		

Cross Section

Cross Section for Trapezoidal Channel

Project Description	
Project File	c:\haestad\fmw\tontow10.fm2
Worksheet	Tonto V Wash 10,Q=2010,14+00-20+00
Flow Element	Trapezoidal Channel
Method	Manning's Formula
Solve For	Channel Depth

Section Data		
Mannings Coefficient	0.045	
Channel Slope	0.008000	ft/ft
Depth	5.32	ft
Left Side Slope	6.000000	H : V
Right Side Slope	6.000000	H : V
Bottom Width	25.00	ft
Discharge	2,010.00	cfs

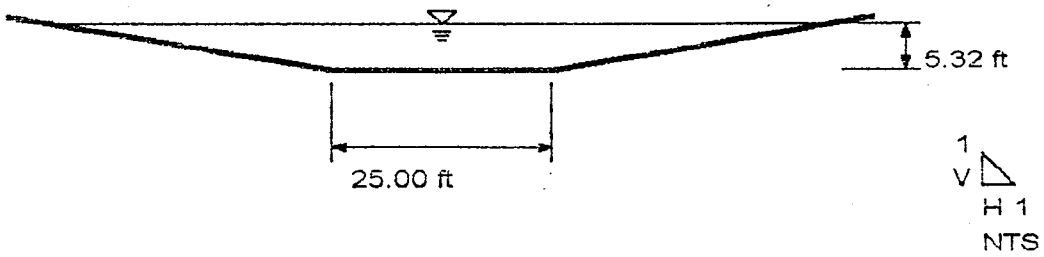

Tonto V Wash10,q=1900cfs,~~20+00-24+50~~
Worksheet for Trapezoidal Channel

Project Description	
Project File	c:\haestad\fmw\tontow10.fm2
Worksheet	Tont V Wash 10,Q=2010cfs,20+00-28+00
Flow Element	Trapezoidal Channel
Method	Manning's Formula
Solve For	Channel Depth

Input Data		
Mannings Coefficient	0.045	
Channel Slope	0.014100	ft/ft
Left Side Slope	4.000000	H : V
Right Side Slope	4.000000	H : V
Bottom Width	25.00	ft
Discharge	2,010.00	cfs

Results		
Depth	5.02	ft
Flow Area	226.33	ft^2
Wetted Perimeter	66.40	ft
Top Width	65.16	ft
Critical Depth	4.57	ft
Critical Slope	0.020487	ft/ft
Velocity	8.88	ft/s
Velocity Head	1.23	ft
Specific Energy	6.25	ft
Froude Number	0.84	
Flow is subcritical.		

Cross Section
Cross Section for Trapezoidal Channel

Project Description	
Project File	c:\haestad\fmw\tontow10.fm2
Worksheet	Tont V Wash 10,Q=2010cfs,20+00-28+00
Flow Element	Trapezoidal Channel
Method	Manning's Formula
Solve For	Channel Depth

Section Data		
Mannings Coefficient	0.045	
Channel Slope	0.014100	ft/ft
Depth	5.02	ft
Left Side Slope	4.000000	H : V
Right Side Slope	4.000000	H : V
Bottom Width	25.00	ft
Discharge	2,010.00	cfs

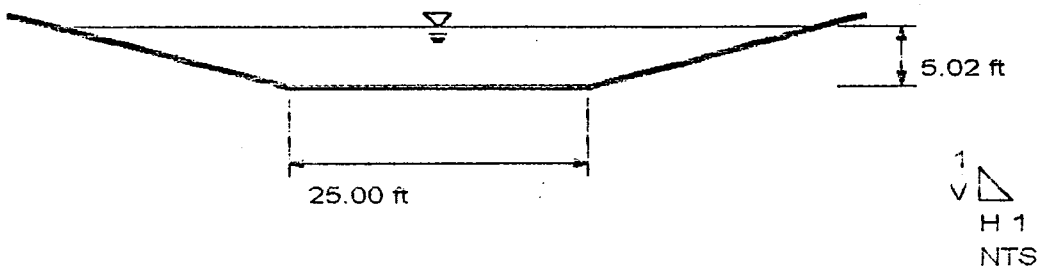

Tonto V Wash 10,Q=1900cfs,24+50-32+00
Worksheet for Trapezoidal Channel

Project Description	
Project File	c:\haestad\fmw\tontow10.fm2
Worksheet	Tonto V Wash 10,Q=2010cfs,28+00-32+00
Flow Element	Trapezoidal Channel
Method	Manning's Formula
Solve For	Channel Depth

Input Data		
Mannings Coefficient	0.045	
Channel Slope	0.008600	ft/ft
Left Side Slope	4.000000	H : V
Right Side Slope	4.000000	H : V
Bottom Width	25.00	ft
Discharge	2,010.00	cfs

Results		
Depth	5.68	ft
Flow Area	270.89	ft^2
Wetted Perimeter	71.82	ft
Top Width	70.42	ft
Critical Depth	4.57	ft
Critical Slope	0.020487	ft/ft
Velocity	7.42	ft/s
Velocity Head	0.86	ft
Specific Energy	6.53	ft
Froude Number	0.67	
Flow is subcritical.		

Cross Section
Cross Section for Trapezoidal Channel

Project Description	
Project File	c:\haestad\fmw\tontow10.fm2
Worksheet	Tonto V Wash 10,Q=2010cfs,28+00-32+00
Flow Element	Trapezoidal Channel
Method	Manning's Formula
Solve For	Channel Depth

Section Data		
Mannings Coefficient	0.045	
Channel Slope	0.008600	ft/ft
Depth	5.68	ft
Left Side Slope	4.000000	H : V
Right Side Slope	4.000000	H : V
Bottom Width	25.00	ft
Discharge	2,010.00	cfs

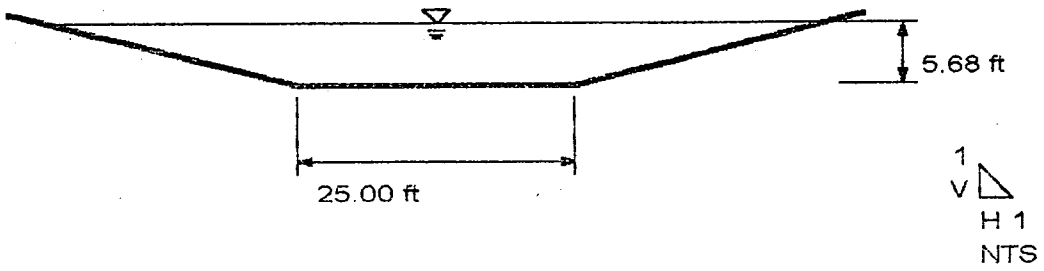

Tonto V Wash 10,Q=1900cfs,32+00-33+00
Worksheet for Trapezoidal Channel

Project Description	
Project File	c:\haestad\fmw\tontow10.fm2
Worksheet	Tonto V Wash 10, Q=2010cfs, 32+00-33+00
Flow Element	Trapezoidal Channel
Method	Manning's Formula
Solve For	Channel Depth

Input Data		
Mannings Coefficient	0.045	
Channel Slope	0.020000	ft/ft
Left Side Slope	4.000000	H : V
Right Side Slope	4.000000	H : V
Bottom Width	25.00	ft
Discharge	2,010.00	cfs

Results		
Depth	4.60	ft
Flow Area	199.44	ft^2
Wetted Perimeter	62.91	ft
Top Width	61.77	ft
Critical Depth	4.57	ft
Critical Slope	0.020488	ft/ft
Velocity	10.08	ft/s
Velocity Head	1.58	ft
Specific Energy	6.18	ft
Froude Number	0.99	
Flow is subcritical.		

Cross Section
Cross Section for Trapezoidal Channel

Project Description	
Project File	c:\haestad\fmw\tontow10.fm2
Worksheet	Tonto V Wash 10, Q=2010cfs, 32+00-33+00
Flow Element	Trapezoidal Channel
Method	Manning's Formula
Solve For	Channel Depth

Section Data		
Mannings Coefficient	0.045	
Channel Slope	0.020000	ft/ft
Depth	4.60	ft
Left Side Slope	4.000000	H : V
Right Side Slope	4.000000	H : V
Bottom Width	25.00	ft
Discharge	2,010.00	cfs

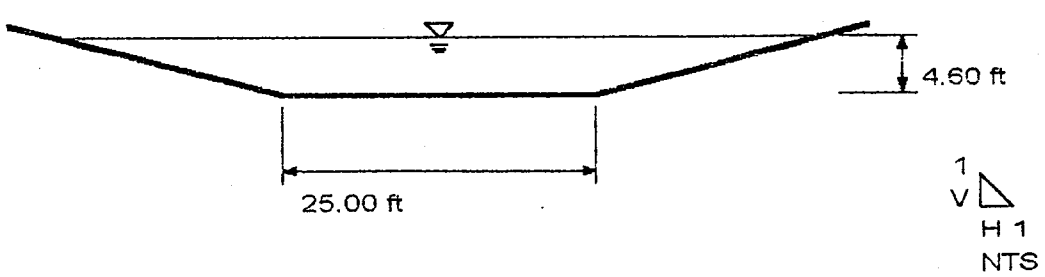

Tonto V Wash 10,Q=1900cfs,33+00-36+00
Worksheet for Trapezoidal Channel

Project Description	
Project File	c:\haestad\fmw\tontow10.fm2
Worksheet	Tonto V Wash 10,Q=2010cfs,33+00-36+00
Flow Element	Trapezoidal Channel
Method	Manning's Formula
Solve For	Channel Depth

Input Data		
Mannings Coefficient	0.045	
Channel Slope	0.011000	ft/ft
Left Side Slope	4.000000	H : V
Right Side Slope	4.000000	H : V
Bottom Width	25.00	ft
Discharge	2,010.00	cfs

Results		
Depth	5.34	ft
Flow Area	247.68	ft^2
Wetted Perimeter	69.05	ft
Top Width	67.73	ft
Critical Depth	4.57	ft
Critical Slope	0.020487	ft/ft
Velocity	8.12	ft/s
Velocity Head	1.02	ft
Specific Energy	6.37	ft
Froude Number	0.75	
Flow is subcritical.		

Cross Section
Cross Section for Trapezoidal Channel

Project Description	
Project File	c:\haestad\fmw\tontow10.fm2
Worksheet	Tonto V Wash 10,Q=2010cfs,33+00-36+00
Flow Element	Trapezoidal Channel
Method	Manning's Formula
Solve For	Channel Depth

Section Data		
Mannings Coefficient	0.045	
Channel Slope	0.011000	ft/ft
Depth	5.34	ft
Left Side Slope	4.000000	H : V
Right Side Slope	4.000000	H : V
Bottom Width	25.00	ft
Discharge	2,010.00	cfs

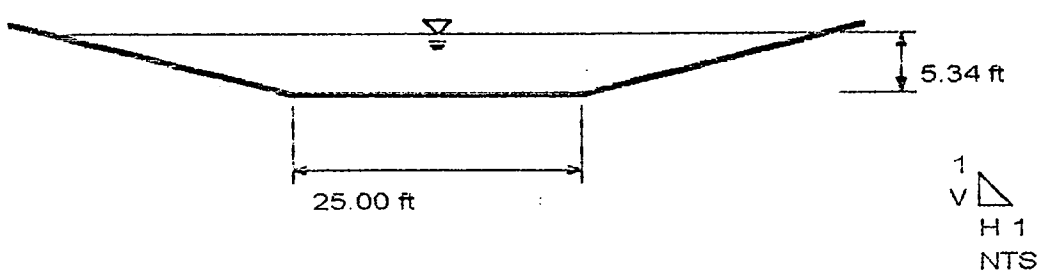

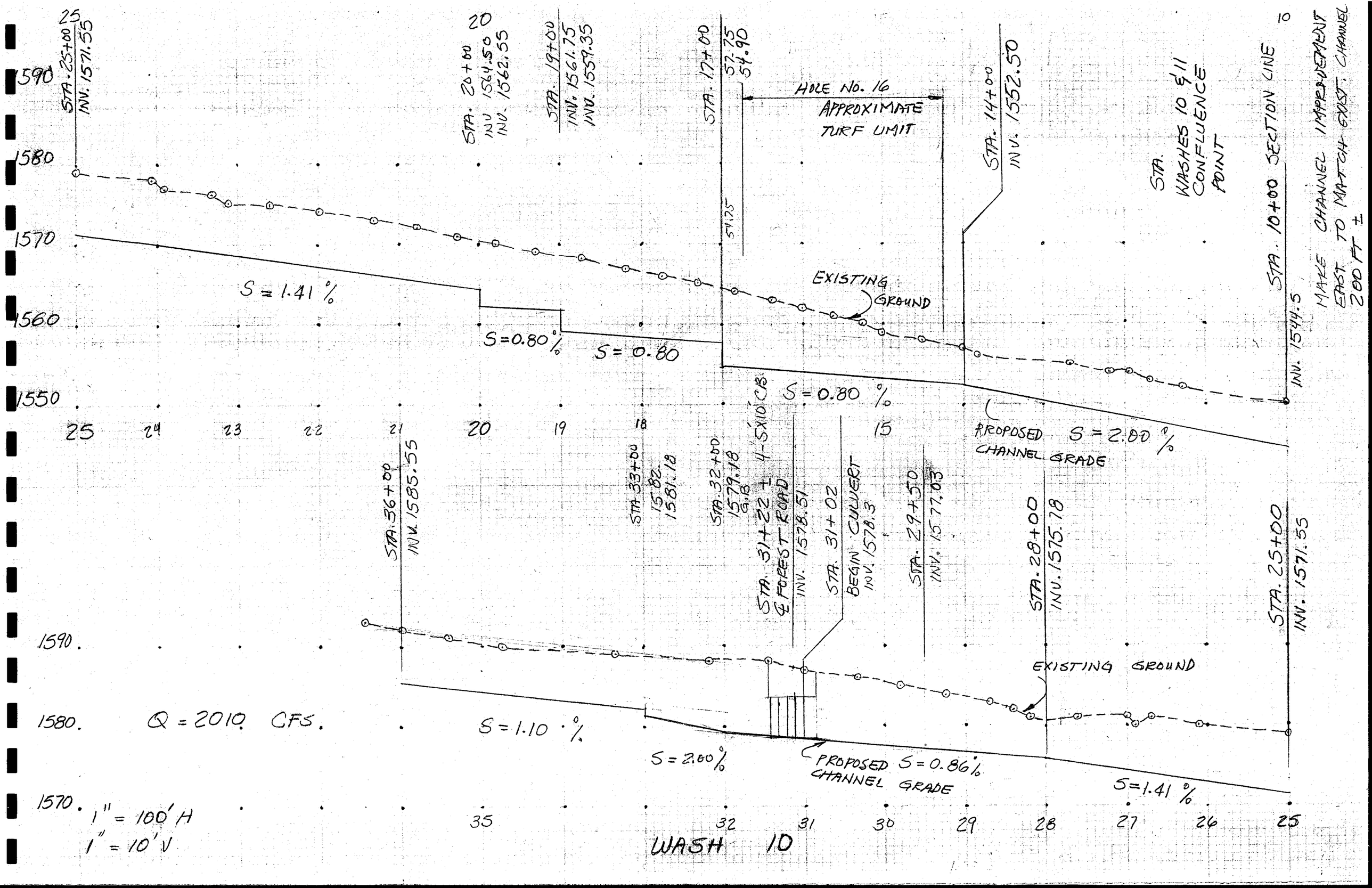
STA. 25+00
INV. 1571.55
STA. 20+00
INV. 1564.50
INV. 1562.55
STA. 19+00
INV. 1561.75
INV. 1559.35
STA. 17+00
57.75
54.90
HOLE NO. 16
APPROXIMATE TURF LIMIT
STA. 14+00
INV. 1552.50
STA. WASHES 10 & 11 CONFLUENCE POINT
STA. 10+00 SECTION LINE
INV. 1544.5
MAKE CHANNEL IMPROVEMENT EAST TO MATCH EXIST. CHANNEL 200 FT ±
EXISTING GROUND
S = 1.41 %
S = 0.80 %
S = 0.80
S = 0.80 %
PROPOSED CHANNEL GRADE
S = 2.00 %
STA. 36+00
INV. 1585.55
STA. 33+00
1582
1581.18
STA. 32+00
1579.18
6.8
4-5'x10' CB
STA. 31+22 ± & FOREST ROAD
INV. 1578.51
STA. 31+02
BEGIN CULVERT
INV. 1578.3
STA. 29+50
INV. 1577.03
STA. 28+00
INV. 1575.78
STA. 25+00
INV. 1571.55
EXISTING GROUND
Q = 2010 CFS.
S = 1.10 %
S = 2.00 %
PROPOSED CHANNEL GRADE
S = 0.86 %
S = 1.41 %
1590
1580
1570
1560
1550
25 24 23 22 21 20 19 18 15 10
35 32 31 30 29 28 27 26 25
1" = 100' H
1" = 10' V
WASH 10

B. Wash 11 Channel (FIRM 11)

Worksheet
Worksheet for Trapezoidal Channel

Project Description	
Project File	c:\haestad\fmw\tontow11.fm2
Worksheet	Tontov W11,Q=2850cfs,10+00-10+60
Flow Element	Trapezoidal Channel
Method	Manning's Formula
Solve For	Channel Depth

Input Data		
Mannings Coefficient	0.045	
Channel Slope	0.020000	ft/ft
Left Side Slope	4.000000	H : V
Right Side Slope	4.000000	H : V
Bottom Width	35.00	ft
Discharge	2,010.00	cfs

Results		
Depth	4.03	ft
Flow Area	206.04	ft²
Wetted Perimeter	68.23	ft
Top Width	67.24	ft
Critical Depth	3.99	ft
Critical Slope	0.020773	ft/ft
Velocity	9.76	ft/s
Velocity Head	1.48	ft
Specific Energy	5.51	ft
Froude Number	0.98	
Flow is subcritical.		

Cross Section

Cross Section for Trapezoidal Channel

Project Description	
Project File	c:\haestad\fmw\tontow11.fm2
Worksheet	Tontow W11,Q=2650cfs,10+00-10+60
Flow Element	Trapezoidal Channel
Method	Manning's Formula
Solve For	Channel Depth

Section Data		
Mannings Coefficient	0.045	
Channel Slope	0.020000	ft/ft
Depth	4.03	ft
Left Side Slope	4.000000	H : V
Right Side Slope	4.000000	H : V
Bottom Width	35.00	ft
Discharge	2,010.00	cfs

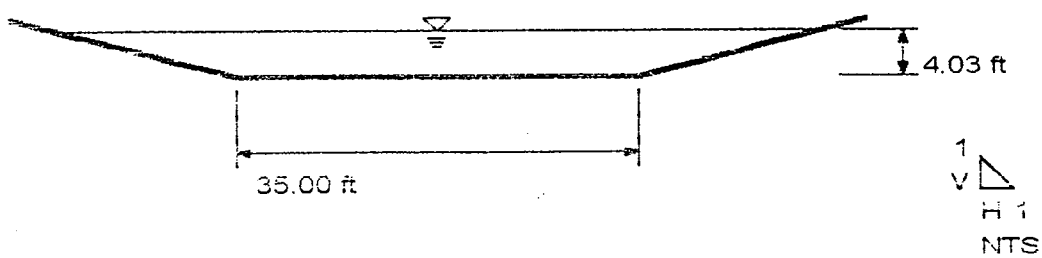

Worksheet
Worksheet for Trapezoidal Channel

Project Description	
Project File	c:\haestad\fmw\tontow11.fm2
Worksheet	Tontov W11,Q=950cfs,10+60-14+50
Flow Element	Trapezoidal Channel
Method	Manning's Formula
Solve For	Channel Depth

Input Data		
Mannings Coefficient	0.045	
Channel Slope	0.013600	ft/ft
Left Side Slope	4.000000	H : V
Right Side Slope	4.000000	H : V
Bottom Width	15.00	ft
Discharge	950.00	cfs

Results		
Depth	4.11	ft
Flow Area	129.10	ft^2
Wetted Perimeter	48.87	ft
Top Width	47.86	ft
Critical Depth	3.63	ft
Critical Slope	0.022528	ft/ft
Velocity	7.36	ft/s
Velocity Head	0.84	ft
Specific Energy	4.95	ft
Froude Number	0.79	
Flow is subcritical.		

Cross Section
Cross Section for Trapezoidal Channel

Project Description	
Project File	c:\haestad\fmw\tontow11.fm2
Worksheet	Tontov W11,Q=950cfs,10+60-14+50
Flow Element	Trapezoidal Channel
Method	Manning's Formula
Solve For	Channel Depth

Section Data		
Mannings Coefficient	0.045	
Channel Slope	0.013600	ft/ft
Depth	4.11	ft
Left Side Slope	4.000000	H : V
Right Side Slope	4.000000	H : V
Bottom Width	15.00	ft
Discharge	950.00	cfs

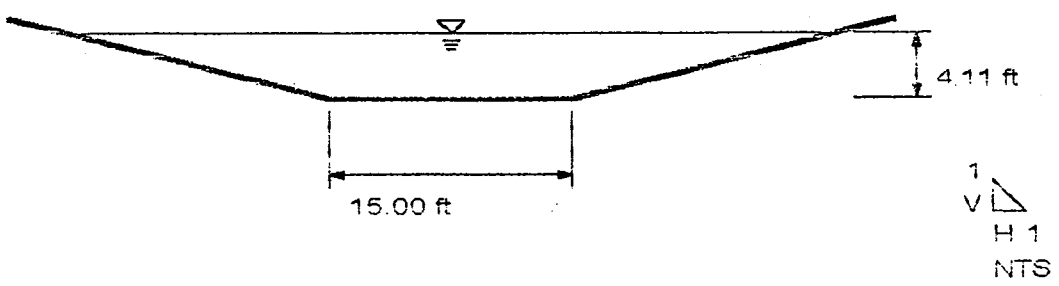

Worksheet
Worksheet for Trapezoidal Channel

Project Description	
Project File	c:\haestad\fmw\tontow11.fm2
Worksheet	Tontow W11,Q=950cfs,14+50-13+00
Flow Element	Trapezoidal Channel
Method	Manning's Formula
Solve For	Channel Depth

Input Data		
Mannings Coefficient	0.045	
Channel Slope	0.015100	ft/ft
Left Side Slope	4.000000	H : V
Right Side Slope	4.000000	H : V
Bottom Width	15.00	ft
Discharge	950.00	cfs

Results		
Depth	4.01	ft
Flow Area	124.24	ft^2
Wetted Perimeter	48.03	ft
Top Width	47.04	ft
Critical Depth	3.63	ft
Critical Slope	0.022528	ft/ft
Velocity	7.65	ft/s
Velocity Head	0.91	ft
Specific Energy	4.91	ft
Froude Number	0.83	
Flow is subcritical.		

Cross Section
Cross Section for Trapezoidal Channel

Project Description	
Project File	c:\haestad\fmw\tontow11.fm2
Worksheet	Tontov W11,Q=950cfs,14+50-18+00
Flow Element	Trapezoidal Channel
Method	Manning's Formula
Solve For	Channel Depth

Section Data		
Mannings Coefficient	0.045	
Channel Slope	0.015100	ft/ft
Depth	4.01	ft
Left Side Slope	4.000000	H : V
Right Side Slope	4.000000	H : V
Bottom Width	15.00	ft
Discharge	950.00	cfs

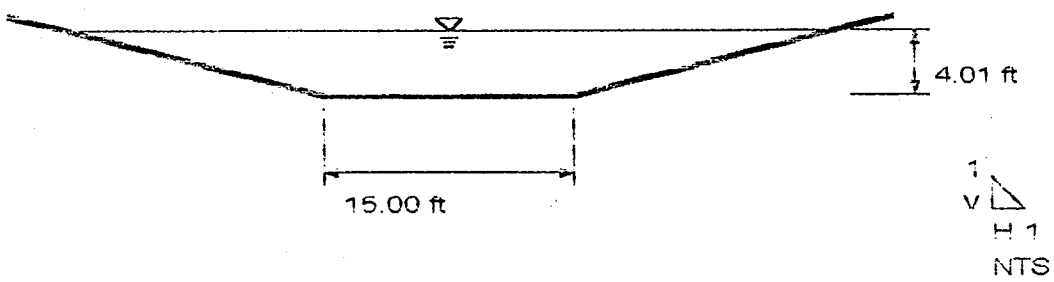

Worksheet
Worksheet for Trapezoidal Channel

Project Description	
Project File	c:\haestad\fmw\tontow11.fm2
Worksheet	Tontov Wash 11,Q=950cfs, 18+00-20+00
Flow Element	Trapezoidal Channel
Method	Manning's Formula
Solve For	Channel Depth

Input Data		
Mannings Coefficient	0.045	
Channel Slope	0.005000	ft/ft
Left Side Slope	4.000000	H : V
Right Side Slope	4.000000	H : V
Bottom Width	15.00	ft
Discharge	950.00	cfs

Results		
Depth	5.21	ft
Flow Area	186.58	ft^2
Wetted Perimeter	57.94	ft
Top Width	56.66	ft
Critical Depth	3.63	ft
Critical Slope	0.022528	ft/ft
Velocity	5.09	ft/s
Velocity Head	0.40	ft
Specific Energy	5.61	ft
Froude Number	0.49	
Flow is subcritical.		

Cross Section

Cross Section for Trapezoidal Channel

Project Description	
Project File	c:\haestad\fmw\tontow11.fm2
Worksheet	Tontov Wash 11,Q=950cfs, 18+00-20+00
Flow Element	Trapezoidal Channel
Method	Manning's Formula
Solve For	Channel Depth

Section Data		
Mannings Coefficient	0.045	
Channel Slope	0.005000	ft/ft
Depth	5.21	ft
Left Side Slope	4.000000	H : V
Right Side Slope	4.000000	H : V
Bottom Width	15.00	ft
Discharge	950.00	cfs

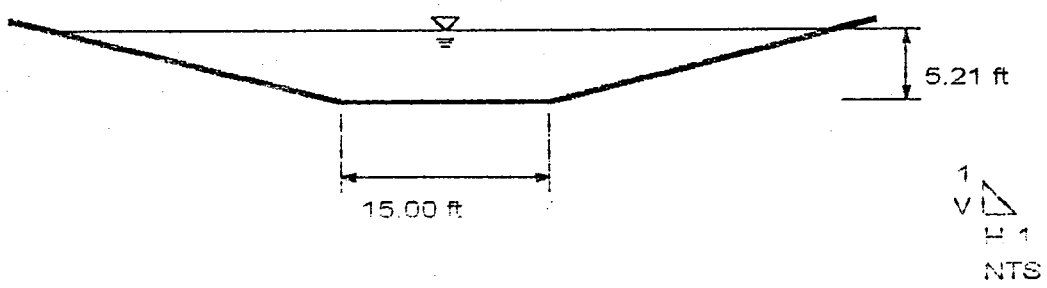

Worksheet
Worksheet for Trapezoidal Channel

Project Description	
Project File	c:\haestad\fmw\tontow11.fm2
Worksheet	Tontov W 11,Q+950cfs,Station 20+00-21+00
Flow Element	Trapezoidal Channel
Method	Manning's Formula
Solve For	Channel Depth

Input Data		
Mannings Coefficient	0.045	
Channel Slope	0.007500	ft/ft
Left Side Slope	4.000000	H : V
Right Side Slope	4.000000	H : V
Bottom Width	15.00	ft
Discharge	950.00	cfs

Results		
Depth	4.73	ft
Flow Area	160.67	ft²
Wetted Perimeter	54.04	ft
Top Width	52.87	ft
Critical Depth	3.63	ft
Critical Slope	0.022528	ft/ft
Velocity	5.91	ft/s
Velocity Head	0.54	ft
Specific Energy	5.28	ft
Froude Number	0.60	
Flow is subcritical.		

Cross Section
Cross Section for Trapezoidal Channel

Project Description	
Project File	c:\haestad\fmw\tontow11.fm2
Worksheet	Tontov W 11,Q+950cfs,Station 20+00-21+00
Flow Element	Trapezoidal Channel
Method	Manning's Formula
Solve For	Channel Depth

Section Data		
Mannings Coefficient	0.045	
Channel Slope	0.007500	ft/ft
Depth	4.73	ft
Left Side Slope	4.000000	H : V
Right Side Slope	4.000000	H : V
Bottom Width	15.00	ft
Discharge	950.00	cfs

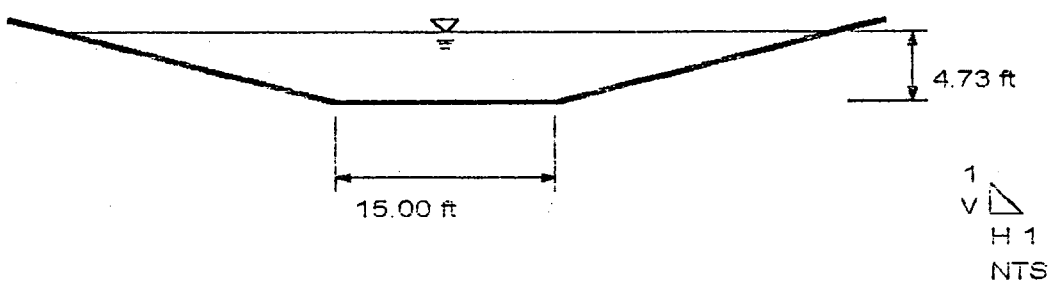

Worksheet
Worksheet for Trapezoidal Channel

Project Description	
Project File	c:\haestad\fmw\tontow11.fm2
Worksheet	Tonto V W 11, Q=950cfs, Sta.21+00-25+50
Flow Element	Trapezoidal Channel
Method	Manning's Formula
Solve For	Channel Depth

Input Data		
Mannings Coefficient	0.045	
Channel Slope	0.020000	ft/ft
Left Side Slope	4.000000	H : V
Right Side Slope	4.000000	H : V
Bottom Width	15.00	ft
Discharge	950.00	cfs

Results		
Depth	3.74	ft
Flow Area	112.10	ft^2
Wetted Perimeter	45.85	ft
Top Width	44.93	ft
Critical Depth	3.63	ft
Critical Slope	0.022528	ft/ft
Velocity	8.47	ft/s
Velocity Head	1.12	ft
Specific Energy	4.86	ft
Froude Number	0.95	
Flow is subcritical.		

Cross Section
Cross Section for Trapezoidal Channel

Project Description	
Project File	c:\haestad\fmw\tontow11.fm2
Worksheet	Tonto V W 11, Q=950cfs, Sta.21+00-25+50
Flow Element	Trapezoidal Channel
Method	Manning's Formula
Solve For	Channel Depth

Section Data		
Mannings Coefficient	0.045	
Channel Slope	0.020000	ft/ft
Depth	3.74	ft
Left Side Slope	4.000000	H : V
Right Side Slope	4.000000	H : V
Bottom Width	15.00	ft
Discharge	950.00	cfs

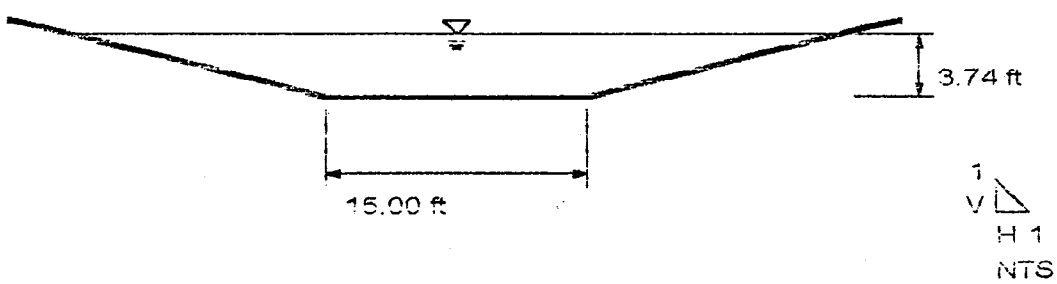

Worksheet
Worksheet for Trapezoidal Channel

Project Description	
Project File	c:\haestad\fmw\tontow11.fm2
Worksheet	Tonto V W11, Q=950cfs, Sta. 25+50-29+00
Flow Element	Trapezoidal Channel
Method	Manning's Formula
Solve For	Channel Depth

Input Data		
Mannings Coefficient	0.045	
Channel Slope	0.005000	ft/ft
Left Side Slope	4.000000	H : V
Right Side Slope	4.000000	H : V
Bottom Width	15.00	ft
Discharge	950.00	cfs

Results		
Depth	5.21	ft
Flow Area	186.58	ft²
Wetted Perimeter	57.94	ft
Top Width	56.66	ft
Critical Depth	3.63	ft
Critical Slope	0.022528	ft/ft
Velocity	5.09	ft/s
Velocity Head	0.40	ft
Specific Energy	5.61	ft
Froude Number	0.49	
Flow is subcritical.		

Cross Section
Cross Section for Trapezoidal Channel

Project Description	
Project File	c:\haestad\fmw\tontow11.fm2
Worksheet	Tonto V W11, Q=950cfs, Sta. 25+50-29+00
Flow Element	Trapezoidal Channel
Method	Manning's Formula
Solve For	Channel Depth

Section Data		
Mannings Coefficient	0.045	
Channel Slope	0.005000	ft/ft
Depth	5.21	ft
Left Side Slope	4.000000	H : V
Right Side Slope	4.000000	H : V
Bottom Width	15.00	ft
Discharge	950.00	cfs

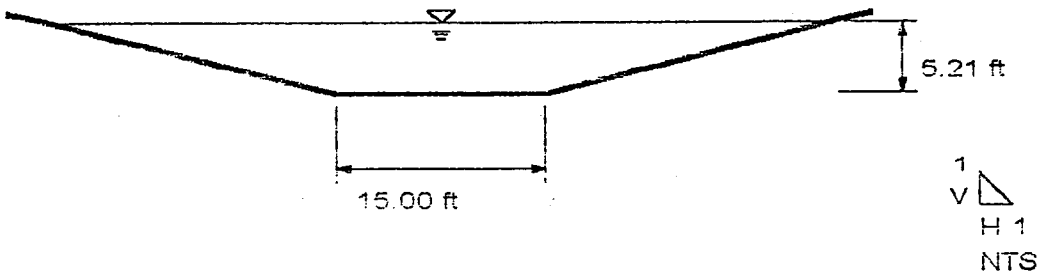

Worksheet

Worksheet for Trapezoidal Channel

Project Description	
Project File	c:\haestad\fmw\tontow11.fm2
Worksheet	Tonto V W11, Q=950cfs, 29+00-32+00
Flow Element	Trapezoidal Channel
Method	Manning's Formula
Solve For	Channel Depth

Input Data		
Mannings Coefficient	0.045	
Channel Slope	0.011800	ft/ft
Left Side Slope	4.000000	H : V
Right Side Slope	4.000000	H : V
Bottom Width	15.00	ft
Discharge	950.00	cfs

Results		
Depth	4.25	ft
Flow Area	136.00	ft^2
Wetted Perimeter	50.05	ft
Top Width	49.00	ft
Critical Depth	3.63	ft
Critical Slope	0.022528	ft/ft
Velocity	6.99	ft/s
Velocity Head	0.76	ft
Specific Energy	5.01	ft
Froude Number	0.74	
Flow is subcritical.		

Cross Section
Cross Section for Trapezoidal Channel

Project Description	
Project File	c:\haestad\fmw\tontow11.fm2
Worksheet	Tonto V W11, Q=950cfs, 29+00-32+00
Flow Element	Trapezoidal Channel
Method	Manning's Formula
Solve For	Channel Depth

Section Data		
Mannings Coefficient	0.045	
Channel Slope	0.011800	ft/ft
Depth	4.25	ft
Left Side Slope	4.000000	H : V
Right Side Slope	4.000000	H : V
Bottom Width	15.00	ft
Discharge	950.00	cfs

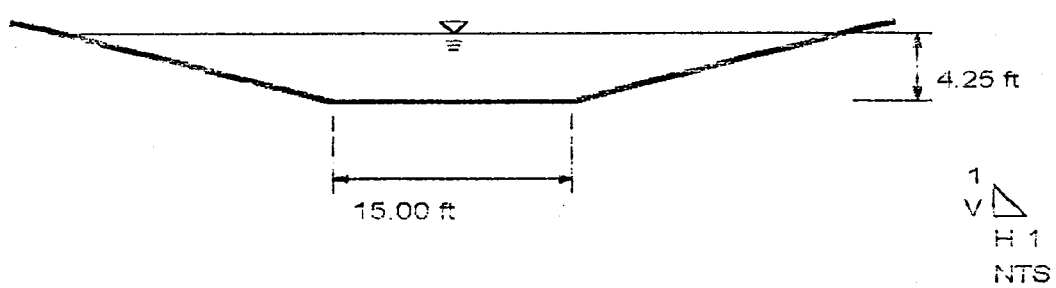

Worksheet
Worksheet for Trapezoidal Channel

Project Description	
Project File	c:\haestad\fmw\tontow11.fm2
Worksheet	Tonto V W 11, Q=950cfs, Sta. 32+00-34+00
Flow Element	Trapezoidal Channel
Method	Manning's Formula
Solve For	Channel Depth

Input Data		
Mannings Coefficient	0.045	
Channel Slope	0.019200	ft/ft
Left Side Slope	2.000000	H : V
Right Side Slope	2.000000	H : V
Bottom Width	50.00	ft
Discharge	950.00	cfs

Results		
Depth	2.32	ft
Flow Area	126.68	ft^2
Wetted Perimeter	60.37	ft
Top Width	59.27	ft
Critical Depth	2.17	ft
Critical Slope	0.023921	ft/ft
Velocity	7.50	ft/s
Velocity Head	0.87	ft
Specific Energy	3.19	ft
Froude Number	0.90	
Flow is subcritical.		

Notes:

Channel bottom varies from b=50' to b=25' @ Station 32+00. Side slopes varies from 1:2 to 1:4

Cross Section

Cross Section for Trapezoidal Channel

Project Descriotion	
Project File	c:\haestad\fmw\tontow11.fm2
Worksheet	Tonto V W 11, Q=950cfs, Sta. 32+00-34+00
Flow Element	Trapezoidal Channel
Method	Manning's Formula
Solve For	Channel Depth

Section Data		
Mannings Coefficient	0.045	
Channel Slope	0.019200	ft/ft
Depth	2.32	ft
Left Side Slope	2.000000	H : V
Right Side Slope	2.000000	H : V
Bottom Width	50.00	ft
Discharge	950.00	cfs

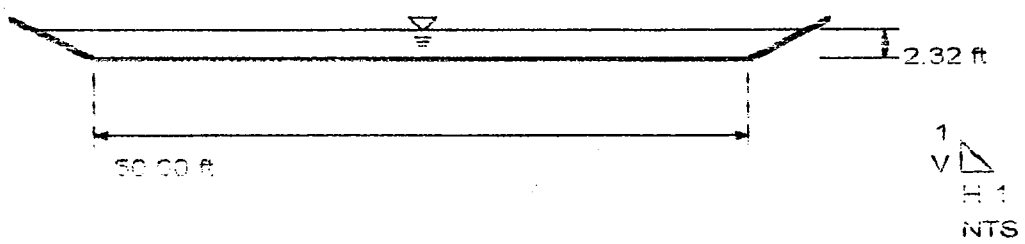

Worksheet
Worksheet for Trapezoidal Channel

Project Description	
Project File	c:\haestad\fmw\tontow11.fm2
Worksheet	Tonto V W 11, 950cfs, Sta. 34+00-34+90
Flow Element	Trapezoidal Channel
Method	Manning's Formula
Solve For	Channel Depth

Input Data		
Mannings Coefficient	0.045	
Channel Slope	0.019200	ft/ft
Left Side Slope	2.000000	H : V
Right Side Slope	2.000000	H : V
Bottom Width	50.00	ft
Discharge	950.00	cfs

Results		
Depth	2.32	ft
Flow Area	126.68	ft^2
Wetted Perimeter	60.37	ft
Top Width	59.27	ft
Critical Depth	2.17	ft
Critical Slope	0.023921	ft/ft
Velocity	7.50	ft/s
Velocity Head	0.87	ft
Specific Energy	3.19	ft
Froude Number	0.90	
Flow is subcritical.		

Notes:

Outlet existing box culvert

Cross Section
Cross Section for Trapezoidal Channel

Project Description	
Project File	c:\haestad\fmw\tontow11.fm2
Worksheet	Tonto V W 11, 950cfs, Sta. 34+00-34+90
Flow Element	Trapezoidal Channel
Method	Manning's Formula
Solve For	Channel Depth

Section Data		
Mannings Coefficient	0.045	
Channel Slope	0.019200	ft/ft
Depth	2.32	ft
Left Side Slope	2.000000	H : V
Right Side Slope	2.000000	H : V
Bottom Width	50.00	ft
Discharge	950.00	cfs

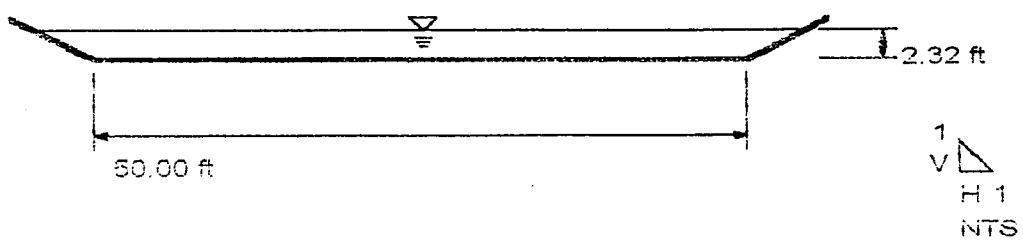

Worksheet
Worksheet for Trapezoidal Channel

Project Description	
Project File	c:\haestad\fmw\tontow11.fm2
Worksheet	Tonto V W11, Q=950cfs, 35+50-36+18.11
Flow Element	Trapezoidal Channel
Method	Manning's Formula
Solve For	Channel Depth

Input Data		
Mannings Coefficient	0.045	
Channel Slope	0.019200	ft/ft
Left Side Slope	5.000000	H : V
Right Side Slope	5.000000	H : V
Bottom Width	25.00	ft
Discharge	950.00	cfs

Results		
Depth	3.06	ft
Flow Area	123.07	ft^2
Wetted Perimeter	56.16	ft
Top Width	55.56	ft
Critical Depth	2.91	ft
Critical Slope	0.023278	ft/ft
Velocity	7.72	ft/s
Velocity Head	0.93	ft
Specific Energy	3.98	ft
Froude Number	0.91	
Flow is subcritical.		

Cross Section

Cross Section for Trapezoidal Channel

Project Description	
Project File	c:\haestad\fmw\tontow11.fm2
Worksheet	Tonto V W11, Q=950cfs, 35+50-36+18.11
Flow Element	Trapezoidal Channel
Method	Manning's Formula
Solve For	Channel Depth

Section Data		
Mannings Coefficient	0.045	
Channel Slope	0.019200	ft/ft
Depth	3.06	ft
Left Side Slope	5.000000	H : V
Right Side Slope	5.000000	H : V
Bottom Width	25.00	ft
Discharge	950.00	cfs

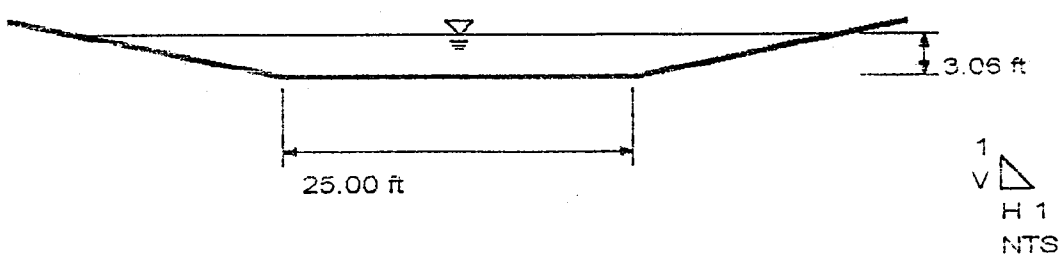

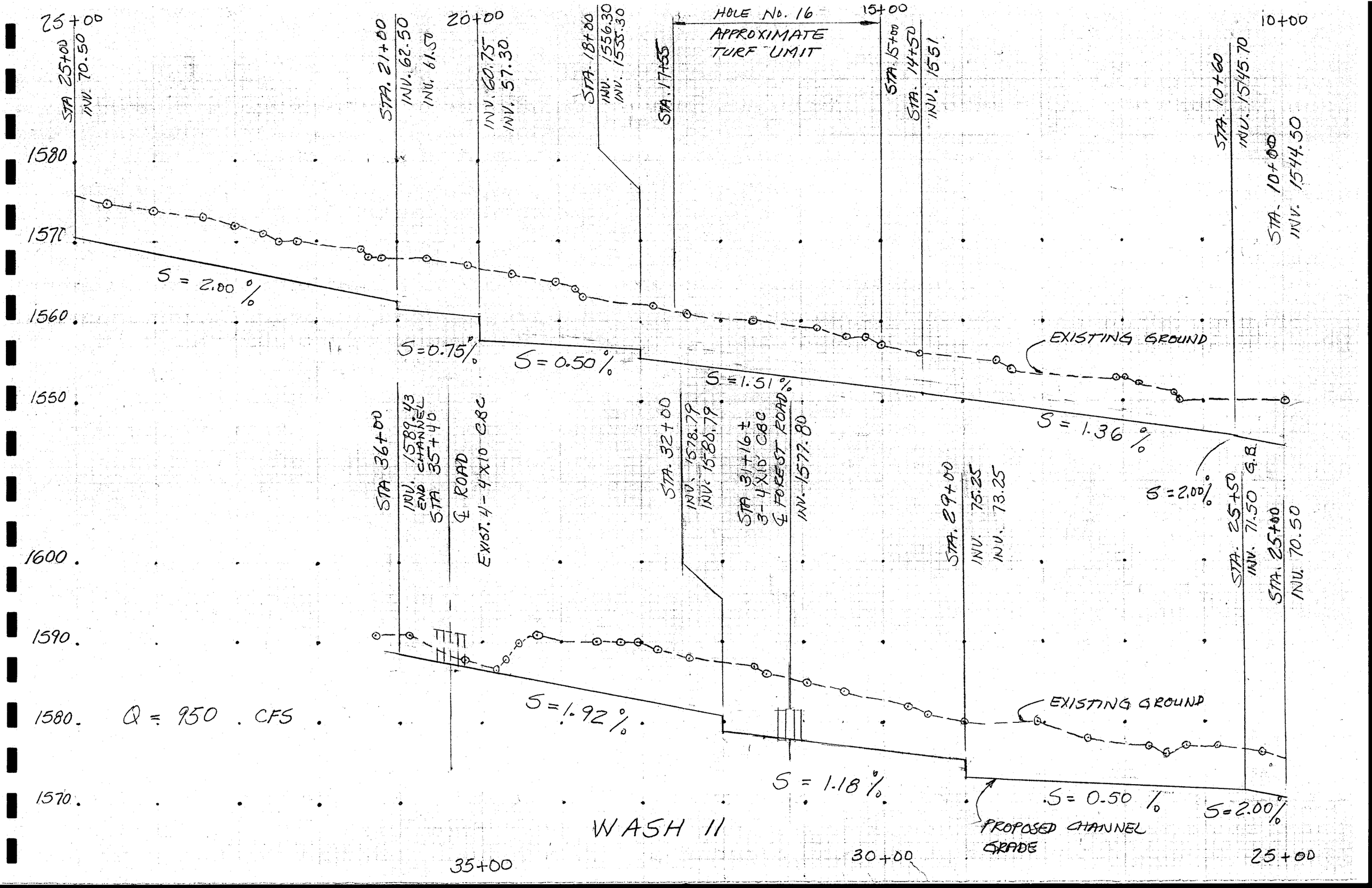
25+00
STA 25+00
INV. 70.50
STA. 21+00
INV. 62.50
INV. 61.50
20+00
INV. 60.75
INV. 57.30
STA. 18+00
INV. 1556.30
INV. 1555.30
STA. 17+55
HOLE No. 16
APPROXIMATE TURF UMIT
15+00
STA. 15+00
STA. 14+50
INV. 1551
STA. 10+60
INV. 1545.70
10+00
STA. 10+00
INV. 1544.50
1580
1570
1560
1550
1600
1590
1580
1570
S = 2.00 %
S = 0.75 %
S = 0.50 %
S = 1.51 %
S = 1.36 %
EXISTING GROUND
STA 36+00
INV. 1589.43
END CHANNEL
STA 35+40
℄ ROAD
EXIST. 4-4X10 CBC
STA. 32+00
INV. 1578.79
INV. 1580.79
STA 31+16±
3-4X10' CBC
℄ FOREST ROAD
INV. 1577.80
STA. 29+00
INV. 75.25
INV. 73.25
S = 2.00%
STA. 25+50
INV. 71.50
G.B.
STA. 25+00
INV. 70.50
Q = 950 CFS
S = 1.92 %
S = 1.18 %
S = 0.50 %
S = 2.00%
EXISTING GROUND
PROPOSED CHANNEL GRADE
WASH 11
35+00
30+00
25+00

C. Wash 12 Channel (FIRM 12)

Worksheet
Worksheet for Trapezoidal Channel

Project Description	
Project File	c:\haestad\fmw\tontow12.fm2
Worksheet	Tonto V Wash 12, Q=1060 cfs, Sta 8+00
Flow Element	Trapezoidal Channel
Method	Manning's Formula
Solve For	Channel Depth

Input Data		
Mannings Coefficient	0.045	
Channel Slope	0.005000	ft/ft
Left Side Slope	3.000000	H : V
Right Side Slope	10.000000	H : V
Bottom Width	120.00	ft
Discharge	1,060.00	cfs

Results		
Depth	2.17	ft
Flow Area	290.44	ft^2
Wetted Perimeter	148.62	ft
Top Width	148.16	ft
Critical Depth	1.31	ft
Critical Slope	0.027617	ft/ft
Velocity	3.65	ft/s
Velocity Head	0.21	ft
Specific Energy	2.37	ft
Froude Number	0.46	
Flow is subcritical.		

Cross Section

Cross Section for Trapezoidal Channel

Project Description	
Project File	c:\haestad\fmw\tontow12.fm2
Worksheet	Tonto V Wash 12, Q=1060 cfs, Sta 8+00
Flow Element	Trapezoidal Channel
Method	Manning's Formula
Solve For	Channel Depth

Section Data		
Mannings Coefficient	0.045	
Channel Slope	0.005000	ft/ft
Depth	2.17	ft
Left Side Slope	3.000000	H : V
Right Side Slope	10.000000	H : V
Bottom Width	120.00	ft
Discharge	1,060.00	cfs

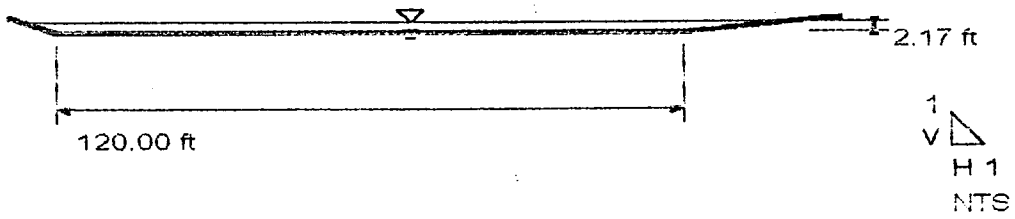

Worksheet
Worksheet for Trapezoidal Channel

Project Description	
Project File	c:\haestad\fmw\tontow12.fm2
Worksheet	Tonto V W 12, Q+1060, Sta 9+00
Flow Element	Trapezoidal Channel
Method	Manning's Formula
Solve For	Channel Depth

Input Data		
Mannings Coefficient	0.045	
Channel Slope	0.005000	ft/ft
Left Side Slope	3.000000	H : V
Right Side Slope	10.000000	H : V
Bottom Width	85.00	ft
Discharge	1,060.00	cfs

Results		
Depth	2.61	ft
Flow Area	266.17	ft^2
Wetted Perimeter	119.49	ft
Top Width	118.93	ft
Critical Depth	1.62	ft
Critical Slope	0.026130	ft/ft
Velocity	3.98	ft/s
Velocity Head	0.25	ft
Specific Energy	2.86	ft
Froude Number	0.47	
Flow is subcritical.		

Cross Section
Cross Section for Trapezoidal Channel

Project Description	
Project File	c:\haestad\fmw\tontow12.fm2
Worksheet	Tonto V W 12, Q+1060, Sta 9+00
Flow Element	Trapezoidal Channel
Method	Manning's Formula
Solve For	Channel Depth

Section Data		
Mannings Coefficient	0.045	
Channel Slope	0.005000	ft/ft
Depth	2.61	ft
Left Side Slope	3.000000	H : V
Right Side Slope	10.000000	H : V
Bottom Width	85.00	ft
Discharge	1,060.00	cfs

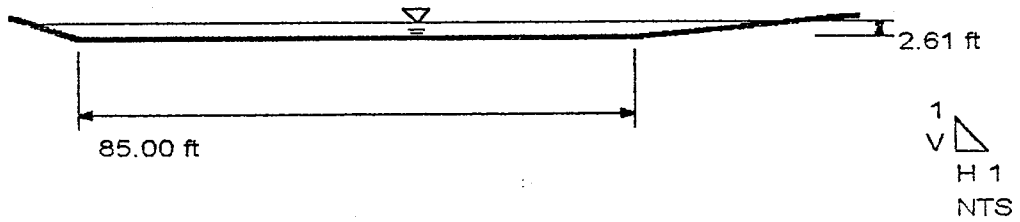

Worksheet
Worksheet for Trapezoidal Channel

Project Description	
Project File	c:\haestad\fmw\tontow12.fm2
Worksheet	Tonto V Wash 12, Q=1060 cfs, Sta 10+00
Flow Element	Trapezoidal Channel
Method	Manning's Formula
Solve For	Channel Depth

Input Data		
Mannings Coefficient	0.045	
Channel Slope	0.005000	ft/ft
Left Side Slope	2.000000	H : V
Right Side Slope	2.000000	H : V
Bottom Width	50.00	ft
Discharge	1,060.00	cfs

Results		
Depth	3.67	ft
Flow Area	210.44	ft^2
Wetted Perimeter	66.41	ft
Top Width	64.68	ft
Critical Depth	2.33	ft
Critical Slope	0.023435	ft/ft
Velocity	5.04	ft/s
Velocity Head	0.39	ft
Specific Energy	4.06	ft
Froude Number	0.49	
Flow is subcritical.		

Notes:

1) Upstream flow is 0.0085 %. Grade break @ Station 10+00.

Cross Section
Cross Section for Trapezoidal Channel

Project Description	
Project File	c:\haestad\fmw\tontow12.fm2
Worksheet	Tonto V Wash 12, Q=1060 cfs, Sta 10+00
Flow Element	Trapezoidal Channel
Method	Manning's Formula
Solve For	Channel Depth

Section Data		
Mannings Coefficient	0.045	
Channel Slope	0.005000	ft/ft
Depth	3.67	ft
Left Side Slope	2.000000	H : V
Right Side Slope	2.000000	H : V
Bottom Width	50.00	ft
Discharge	1,060.00	cfs

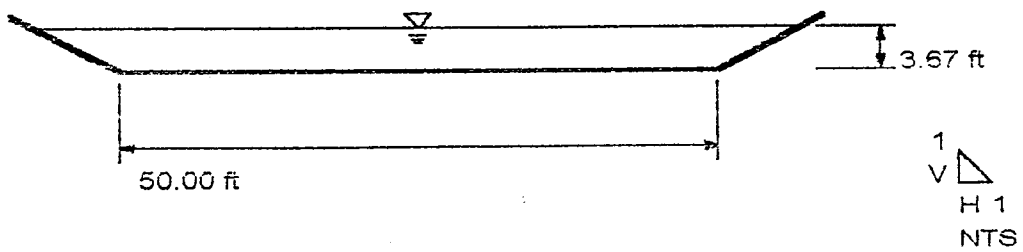

Worksheet
Worksheet for Trapezoidal Channel

Project Description	
Project File	c:\haestad\fmw\tontow12.fm2
Worksheet	Tonto V Wash 12, Q=1060cfs,10+00-11+00
Flow Element	Trapezoidal Channel
Method	Manning's Formula
Solve For	Channel Depth

Input Data		
Mannings Coefficient	0.045	
Channel Slope	0.014000	ft/ft
Left Side Slope	4.000000	H : V
Right Side Slope	4.000000	H : V
Bottom Width	50.00	ft
Discharge	1,060.00	cfs

Results		
Depth	2.63	ft
Flow Area	159.33	ft²
Wetted Perimeter	71.71	ft
Top Width	71.06	ft
Critical Depth	2.26	ft
Critical Slope	0.023834	ft/ft
Velocity	6.65	ft/s
Velocity Head	0.69	ft
Specific Energy	3.32	ft
Froude Number	0.78	
Flow is subcritical.		

Notes:

1) Downstream slope is 0.5%. Grade break @ Station 10+00

Cross Section
Cross Section for Trapezoidal Channel

Project Description	
Project File	c:\haestad\fmw\tontow12.fm2
Worksheet	Tonto V Wash 12, Q=1060cfs,10+00-11+00
Flow Element	Trapezoidal Channel
Method	Manning's Formula
Solve For	Channel Depth

Section Data		
Mannings Coefficient	0.045	
Channel Slope	0.014000	ft/ft
Depth	2.63	ft
Left Side Slope	4.000000	H : V
Right Side Slope	4.000000	H : V
Bottom Width	50.00	ft
Discharge	1,060.00	cfs

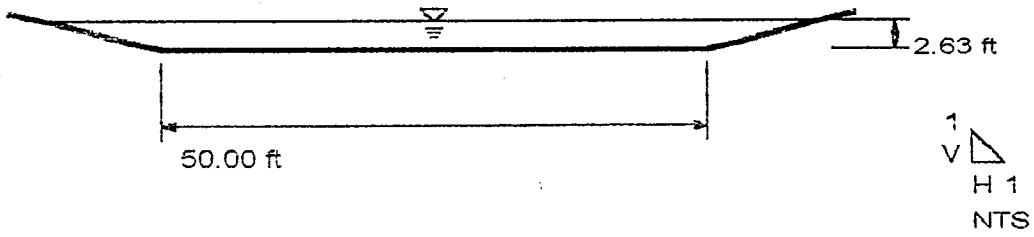

Worksheet
Worksheet for Trapezoidal Channel

Project Description	
Project File	c:\haestad\fmw\tontow12.fm2
Worksheet	Tonto V Wash 12,Q=1060cfs,Sta11+00-16+50
Flow Element	Trapezoidal Channel
Method	Manning's Formula
Solve For	Channel Depth

Input Data		
Mannings Coefficient	0.045	
Channel Slope	0.012000	ft/ft
Left Side Slope	4.000000	H : V
Right Side Slope	4.000000	H : V
Bottom Width	10.00	ft
Discharge	1,060.00	cfs

Results		
Depth	4.90	ft
Flow Area	144.90	ft^2
Wetted Perimeter	50.38	ft
Top Width	49.18	ft
Critical Depth	4.27	ft
Critical Slope	0.022095	ft/ft
Velocity	7.32	ft/s
Velocity Head	0.83	ft
Specific Energy	5.73	ft
Froude Number	0.75	
Flow is subcritical.		

Cross Section

Cross Section for Trapezoidal Channel

Project Description	
Project File	c:\haestad\fmw\tontow12.fm2
Worksheet	Tonto V Wash 12,Q=1060cfs,Sta11+00-16+50
Flow Element	Trapezoidal Channel
Method	Manning's Formula
Solve For	Channel Depth

Section Data		
Mannings Coefficient	0.045	
Channel Slope	0.012000	ft/ft
Depth	4.90	ft
Left Side Slope	4.000000	H : V
Right Side Slope	4.000000	H : V
Bottom Width	10.00	ft
Discharge	1,060.00	cfs

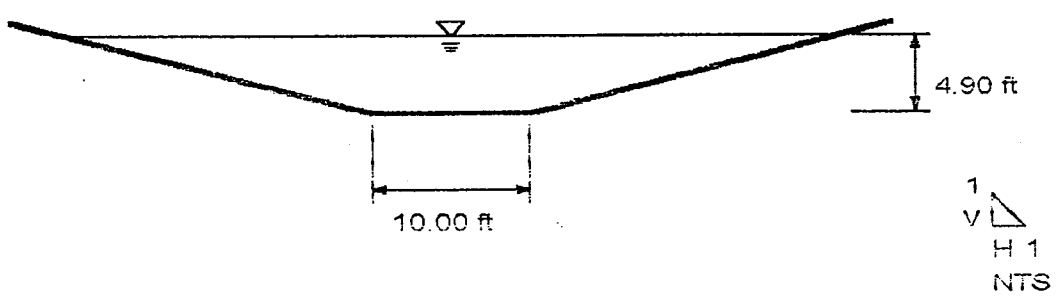

Worksheet
Worksheet for Trapezoidal Channel

Project Description	
Project File	c:\haestad\fmw\tontow12.fm2
Worksheet	Tonto V Wash 12, Q=1060cfs,16+50-21+50
Flow Element	Trapezoidal Channel
Method	Manning's Formula
Solve For	Channel Depth

Input Data		
Mannings Coefficient	0.045	
Channel Slope	0.014000	ft/ft
Left Side Slope	2.500000	H : V
Right Side Slope	2.500000	H : V
Bottom Width	10.00	ft
Discharge	1,060.00	cfs

Results		
Depth	5.34	ft
Flow Area	124.54	ft^2
Wetted Perimeter	38.74	ft
Top Width	36.68	ft
Critical Depth	4.81	ft
Critical Slope	0.021692	ft/ft
Velocity	8.51	ft/s
Velocity Head	1.13	ft
Specific Energy	6.46	ft
Froude Number	0.81	
Flow is subcritical.		

Cross Section
Cross Section for Trapezoidal Channel

Project Description	
Project File	c:\haestad\fmw\tontow12.fm2
Worksheet	Tonto V Wash 12, Q=1060cfs,16+50-21+50
Flow Element	Trapezoidal Channel
Method	Manning's Formula
Solve For	Channel Depth

Section Data		
Mannings Coefficient	0.045	
Channel Slope	0.014000	ft/ft
Depth	5.34	ft
Left Side Slope	2.500000	H : V
Right Side Slope	2.500000	H : V
Bottom Width	10.00	ft
Discharge	1,060.00	cfs

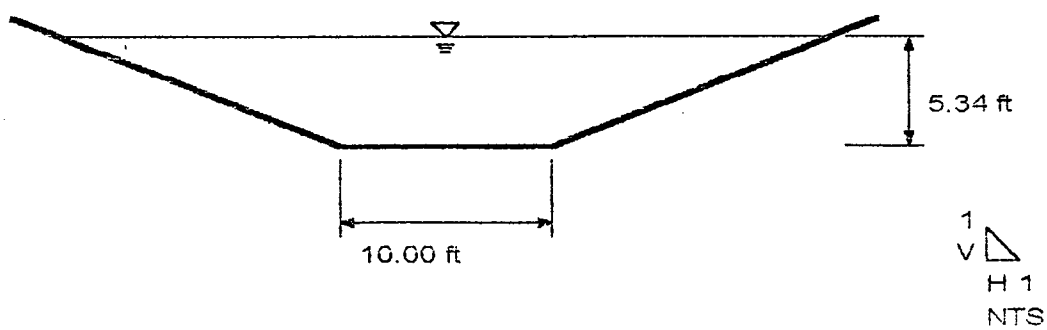

Worksheet
Worksheet for Trapezoidal Channel

Project Description	
Project File	c:\haestad\fmw\tontow12.fm2
Worksheet	Tonto V Wash12, Q=1010cfs,21+50-26+00
Flow Element	Trapezoidal Channel
Method	Manning's Formula
Solve For	Channel Depth

Input Data		
Mannings Coefficient	0.045	
Channel Slope	0.011000	ft/ft
Left Side Slope	2.500000	H : V
Right Side Slope	2.500000	H : V
Bottom Width	10.00	ft
Discharge	1,010.00	cfs

Results		
Depth	5.52	ft
Flow Area	131.38	ft²
Wetted Perimeter	39.73	ft
Top Width	37.60	ft
Critical Depth	4.69	ft
Critical Slope	0.021831	ft/ft
Velocity	7.69	ft/s
Velocity Head	0.92	ft
Specific Energy	6.44	ft
Froude Number	0.73	
Flow is subcritical.		

Cross Section
Cross Section for Trapezoidal Channel

Project Description	
Project File	c:\haestad\fmw\tontow12.fm2
Worksheet	Tonto V Wash12, Q=1010cfs,21+50-26+00
Flow Element	Trapezoidal Channel
Method	Manning's Formula
Solve For	Channel Depth

Section Data		
Mannings Coefficient	0.045	
Channel Slope	0.011000	ft/ft
Depth	5.52	ft
Left Side Slope	2.500000	H : V
Right Side Slope	2.500000	H : V
Bottom Width	10.00	ft
Discharge	1,010.00	cfs

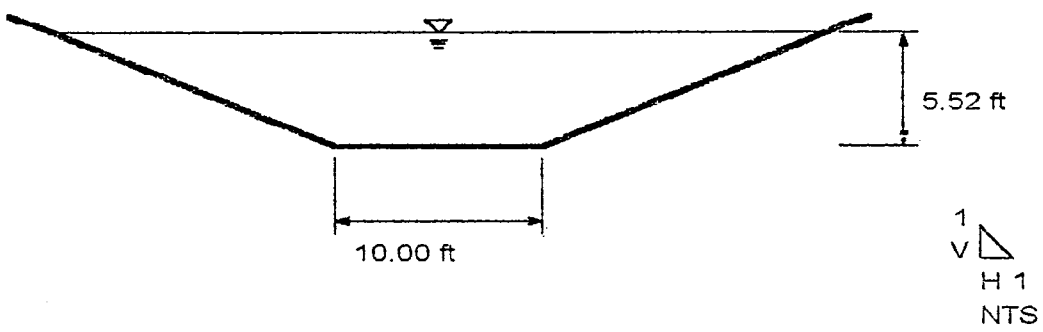

Worksheet
Worksheet for Trapezoidal Channel

Project Description	
Project File	c:\haestad\fmw\tontow12.fm2
Worksheet	Tonto V Wash12,Q=750cfs,28+00-31+40
Flow Element	Trapezoidal Channel
Method	Manning's Formula
Solve For	Channel Depth

Input Data		
Mannings Coefficient	0.045	
Channel Slope	0.022000	ft/ft
Left Side Slope	2.500000	H : V
Right Side Slope	2.500000	H : V
Bottom Width	10.00	ft
Discharge	750.00	cfs

Results		
Depth	4.06	ft
Flow Area	81.71	ft^2
Wetted Perimeter	31.85	ft
Top Width	30.28	ft
Critical Depth	4.03	ft
Critical Slope	0.022712	ft/ft
Velocity	9.18	ft/s
Velocity Head	1.31	ft
Specific Energy	5.37	ft
Froude Number	0.99	
Flow is subcritical.		

Notes:

1) Station 31+00 to 32+00 is the transition zone from a bottom width of 10 ft to that of 30 ft.

Cross Section
Cross Section for Trapezoidal Channel

Project Description	
Project File	c:\haestad\fmw\tontow12.fm2
Worksheet	Tonto V Wash12,Q=750cfs,26+00-31+40
Flow Element	Trapezoidal Channel
Method	Manning's Formula
Solve For	Channel Depth

Section Data		
Mannings Coefficient	0.045	
Channel Slope	0.022000	ft/ft
Depth	4.06	ft
Left Side Slope	2.500000	H : V
Right Side Slope	2.500000	H : V
Bottom Width	10.00	ft
Discharge	750.00	cfs

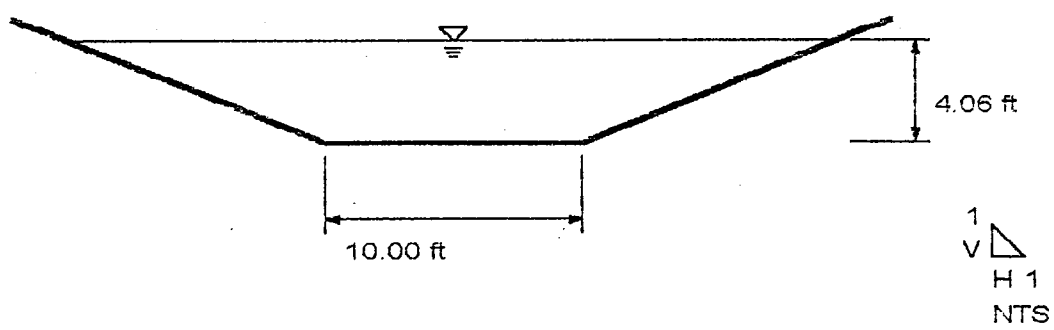

Worksheet
Worksheet for Trapezoidal Channel

Project Description	
Project File	c:\haestad\fmw\tontow12.fm2
Worksheet	Tonto V Wash 12,Q=750cfs 31+40-31+70
Flow Element	Trapezoidal Channel
Method	Manning's Formula
Solve For	Channel Depth

Input Data		
Mannings Coefficient	0.045	
Channel Slope	0.022000	ft/ft
Left Side Slope	2.000000	H : V
Right Side Slope	2.000000	H : V
Bottom Width	10.00	ft
Discharge	750.00	cfs

Results		
Depth	4.25	ft
Flow Area	78.73	ft^2
Wetted Perimeter	29.02	ft
Top Width	27.02	ft
Critical Depth	4.22	ft
Critical Slope	0.022779	ft/ft
Velocity	9.53	ft/s
Velocity Head	1.41	ft
Specific Energy	5.66	ft
Froude Number	0.98	
Flow is subcritical.		

Notes:

1) Station 31+00 to 32+00 is a transition zone. The bottom width varies from 10 ft to that of 30 ft.

Cross Section
Cross Section for Trapezoidal Channel

Project Description	
Project File	c:\haestad\fmw\tontow12.fm2
Worksheet	Tonto V Wash 12,Q=750cfs 31+40-31+70
Flow Element	Trapezoidal Channel
Method	Manning's Formula
Solve For	Channel Depth

Section Data		
Mannings Coefficient	0.045	
Channel Slope	0.022000	ft/ft
Depth	4.25	ft
Left Side Slope	2.000000	H : V
Right Side Slope	2.000000	H : V
Bottom Width	10.00	ft
Discharge	750.00	cfs

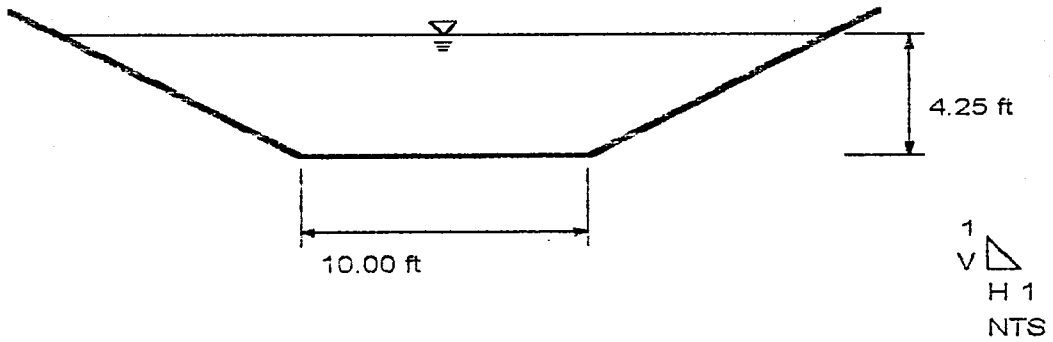

Tonto V W 12, Q=1060cfs, Sta 9+00
Worksheet for Trapezoidal Channel

Project Description	
Project File	c:\haestad\fmw\tontow12.fm2
Worksheet	Tonto V W12, Q=750cfs, 31+70 - 33+50
Flow Element	Trapezoidal Channel
Method	Manning's Formula
Solve For	Channel Depth

Input Data		
Mannings Coefficient	0.045	
Channel Slope	0.022000	ft/ft
Left Side Slope	2.000000	H : V
Right Side Slope	2.000000	H : V
Bottom Width	10.00	ft
Discharge	750.00	cfs

Results		
Depth	4.25	ft
Flow Area	78.73	ft²
Wetted Perimeter	29.02	ft
Top Width	27.02	ft
Critical Depth	4.22	ft
Critical Slope	0.022779	ft/ft
Velocity	9.53	ft/s
Velocity Head	1.41	ft
Specific Energy	5.66	ft
Froude Number	0.98	
Flow is subcritical.		

Cross Section
Cross Section for Trapezoidal Channel

Project Description	
Project File	c:\haestad\fmw\tontow12.fm2
Worksheet	Tonto V W12, Q=750cfs, 31+70 - 33+50
Flow Element	Trapezoidal Channel
Method	Manning's Formula
Solve For	Channel Depth

Section Data		
Mannings Coefficient	0.045	
Channel Slope	0.022000	ft/ft
Depth	4.25	ft
Left Side Slope	2.000000	H : V
Right Side Slope	2.000000	H : V
Bottom Width	10.00	ft
Discharge	750.00	cfs

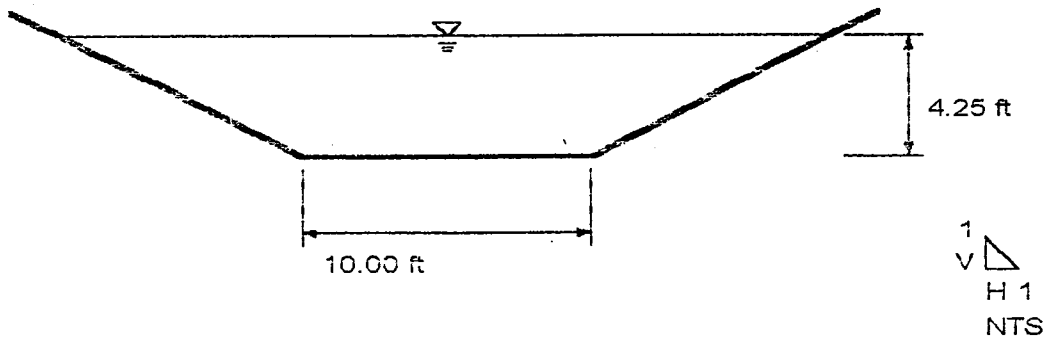

Worksheet
Worksheet for Trapezoidal Channel

Project Description	
Project File	c:\haestad\fmw\tontow12.fm2
Worksheet	Tonto V W12, Q=750cfs, Sta.33+50-36+00
Flow Element	Trapezoidal Channel
Method	Manning's Formula
Solve For	Channel Depth

Input Data		
Mannings Coefficient	0.045	
Channel Slope	0.022000	ft/ft
Left Side Slope	3.000000	H : V
Right Side Slope	3.000000	H : V
Bottom Width	30.00	ft
Discharge	750.00	cfs

Results		
Depth	2.52	ft
Flow Area	94.60	ft^2
Wetted Perimeter	45.93	ft
Top Width	45.11	ft
Critical Depth	2.46	ft
Critical Slope	0.023753	ft/ft
Velocity	7.93	ft/s
Velocity Head	0.98	ft
Specific Energy	3.50	ft
Froude Number	0.97	
Flow is subcritical.		

Cross Section
Cross Section for Trapezoidal Channel

Project Description	
Project File	c:\haestad\fmw\tontow12.fm2
Worksheet	Tonto V W12, Q=750cfs, Sta.33+50-36+00
Flow Element	Trapezoidal Channel
Method	Manning's Formula
Solve For	Channel Depth

Section Data		
Mannings Coefficient	0.045	
Channel Slope	0.022000	ft/ft
Depth	2.52	ft
Left Side Slope	3.000000	H : V
Right Side Slope	3.000000	H : V
Bottom Width	30.00	ft
Discharge	750.00	cfs

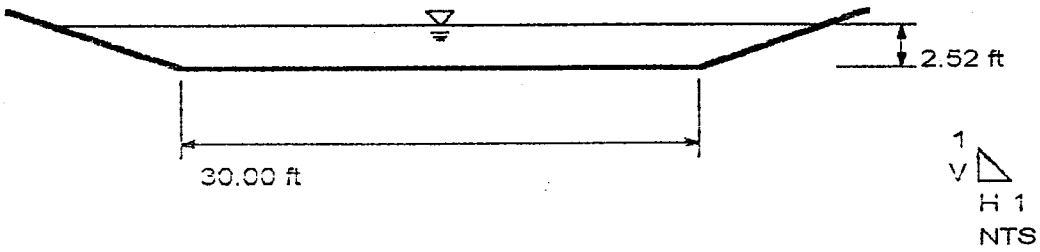

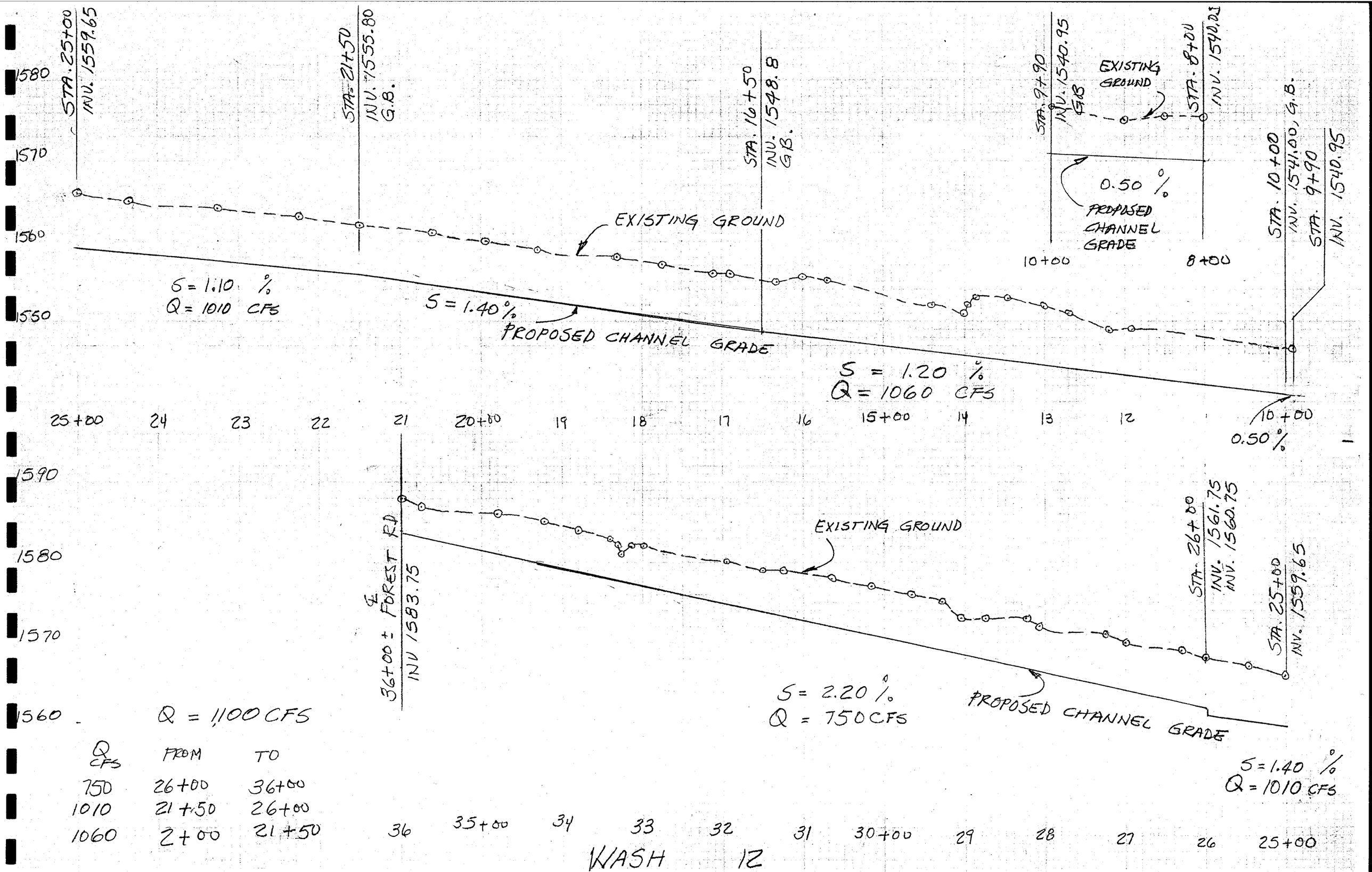

Q = 1,100 CFS

Q CFS	FROM	TO
750	26+00	36+00
1010	21+50	26+00
1060	2+00	21+50

WASH 12

D. Wash 01 Channel

TntovW01, Q=993cfs, 10+00-39+00
Worksheet for Trapezoidal Channel

Project Description	
Project File	c:\haestad\fmw\tontow01.fm2
Worksheet	Tntov W01,Q=993cfs,10+00-23+00
Flow Element	Trapezoidal Channel
Method	Manning's Formula
Solve For	Channel Depth

Input Data		
Mannings Coefficient	0.045	
Channel Slope	0.016000	ft/ft
Left Side Slope	2.000000	H : V
Right Side Slope	2.000000	H : V
Bottom Width	8.00	ft
Discharge	993.00	cfs

Results		
Depth	5.62	ft
Flow Area	108.03	ft^2
Wetted Perimeter	33.13	ft
Top Width	30.47	ft
Critical Depth	5.21	ft
Critical Slope	0.022044	ft/ft
Velocity	9.19	ft/s
Velocity Head	1.31	ft
Specific Energy	6.93	ft
Froude Number	0.86	
Flow is subcritical.		

Cross Section
Cross Section for Trapezoidal Channel

Project Description	
Project File	c:\haestad\fmw\tontow01.fm2
Worksheet	Tntov W01,Q=993cfs,10+00-23+00
Flow Element	Trapezoidal Channel
Method	Manning's Formula
Solve For	Channel Depth

Section Data		
Mannings Coefficient	0.045	
Channel Slope	0.016000	ft/ft
Depth	5.62	ft
Left Side Slope	2.000000	H : V
Right Side Slope	2.000000	H : V
Bottom Width	8.00	ft
Discharge	993.00	cfs

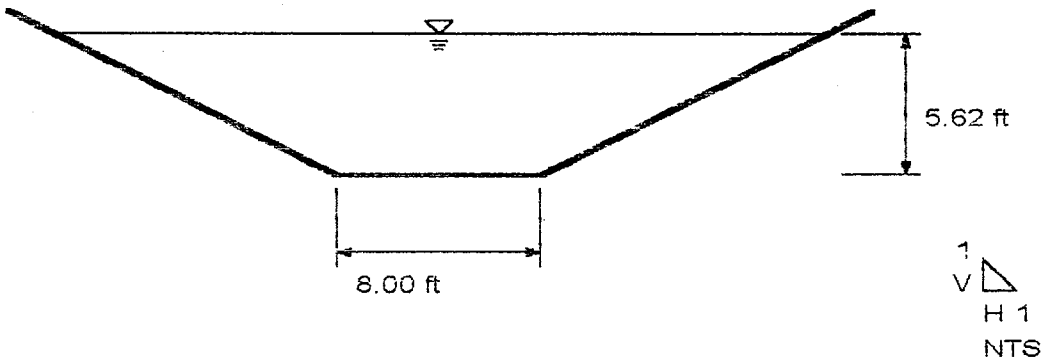

Worksheet
Worksheet for Trapezoidal Channel

Project Description	
Project File	c:\haestad\fmw\tontow01.fm2
Worksheet	Tonto V W01,Q=993cfs,23+00-38+00
Flow Element	Trapezoidal Channel
Method	Manning's Formula
Solve For	Channel Depth

Input Data		
Mannings Coefficient	0.045	
Channel Slope	0.016000	ft/ft
Left Side Slope	3.000000	H : V
Right Side Slope	3.000000	H : V
Bottom Width	10.00	ft
Discharge	993.00	cfs

Results		
Depth	4.79	ft
Flow Area	116.92	ft²
Wetted Perimeter	40.33	ft
Top Width	38.77	ft
Critical Depth	4.45	ft
Critical Slope	0.021956	ft/ft
Velocity	8.49	ft/s
Velocity Head	1.12	ft
Specific Energy	5.92	ft
Froude Number	0.86	
Flow is subcritical.		

Cross Section
Cross Section for Trapezoidal Channel

Project Description	
Project File	c:\haestad\fmw\tontow01.fm2
Worksheet	Tonto V W01,Q=993cfs,23+00-38+00
Flow Element	Trapezoidal Channel
Method	Manning's Formula
Solve For	Channel Depth

Section Data		
Mannings Coefficient	0.045	
Channel Slope	0.016000	ft/ft
Depth	4.79	ft
Left Side Slope	3.000000	H : V
Right Side Slope	3.000000	H : V
Bottom Width	10.00	ft
Discharge	993.00	cfs

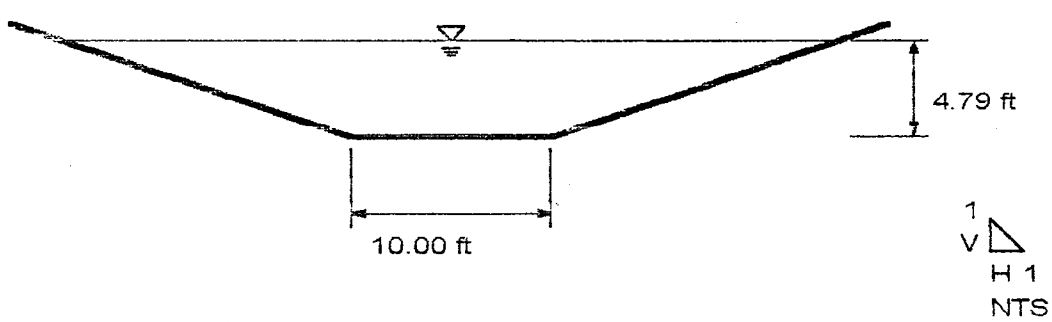

	c:\haestad\fmw\tontow01.fm2
Worksheet	Tonto V W01,Q=993cfs,38+00-40+02.92
Flow Element	Trapezoidal Channel
Method	Manning's Formula
Solve For	Channel Depth

Input Data		
Mannings Coefficient	0.045	
Channel Slope	0.016000	ft/ft
Left Side Slope	0.500000	H : V
Right Side Slope	0.500000	H : V
Bottom Width	10.00	ft
Discharge	993.00	cfs

Results		
Depth	7.22	ft
Flow Area	98.33	ft^2
Wetted Perimeter	26.15	ft
Top Width	17.22	ft
Critical Depth	6.06	ft
Critical Slope	0.028911	ft/ft
Velocity	10.10	ft/s
Velocity Head	1.58	ft
Specific Energy	8.81	ft
Froude Number	0.75	
Flow is subcritical.		

Cross Section
Cross Section for Trapezoidal Channel

Project Description	
Project File	c:\haestad\fmw\tontow01.fm2
Worksheet	Tonto V W01,Q=993cfs,38+00-40+02.92
Flow Element	Trapezoidal Channel
Method	Manning's Formula
Solve For	Channel Depth

Section Data		
Mannings Coefficient	0.045	
Channel Slope	0.016000	ft/ft
Depth	7.22	ft
Left Side Slope	0.500000	H : V
Right Side Slope	0.500000	H : V
Bottom Width	10.00	ft
Discharge	993.00	cfs

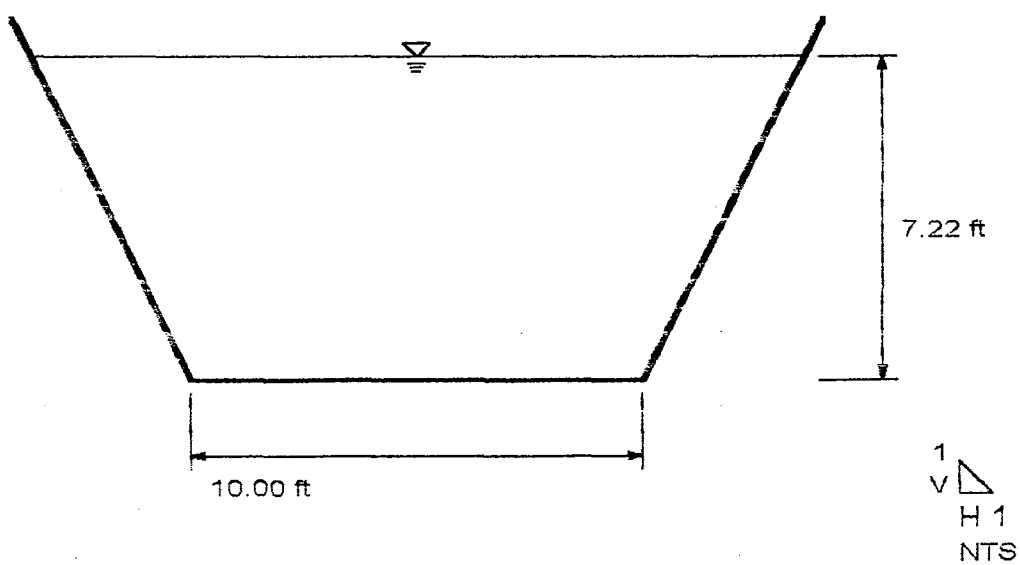

WASH-1

VERTICAL SCALE: 10'
HORIZONTAL SACLE: 100'

SHEET 1 OF 2

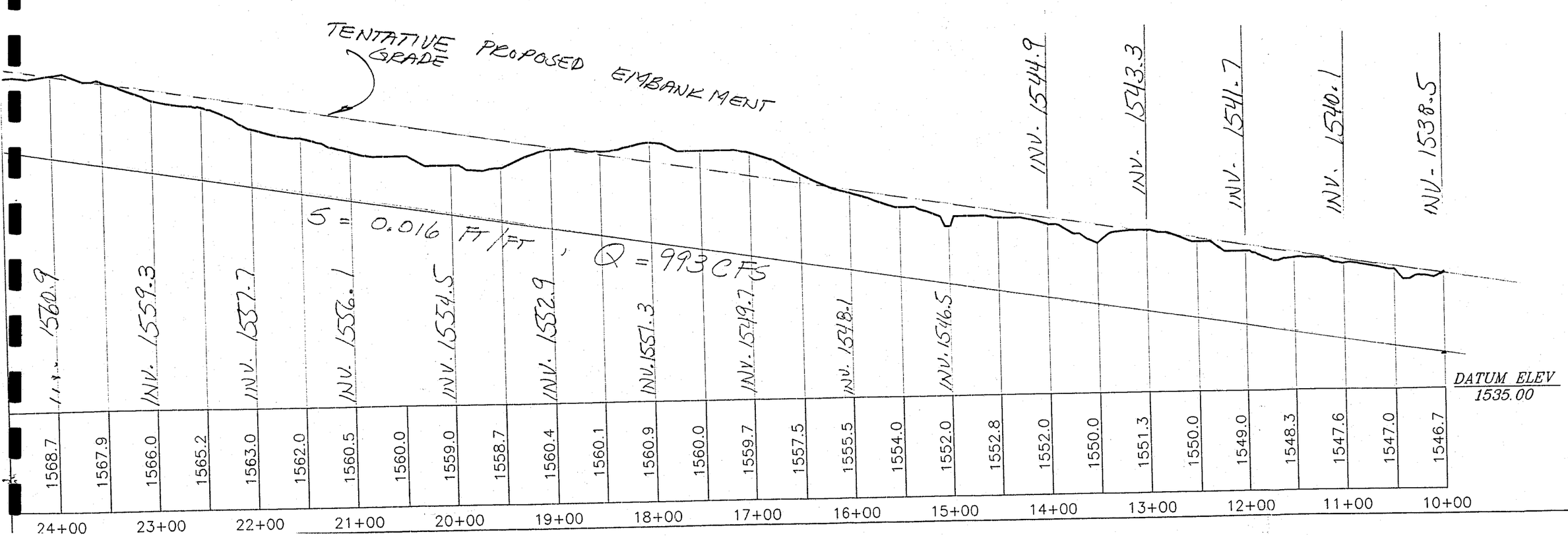

WASH-1

VERTICAL SCALE: 10'
HORIZONTAL SACLE: 100'

1584.9

Q = 993 CFS

1.60%

SHEET 2 OF 2

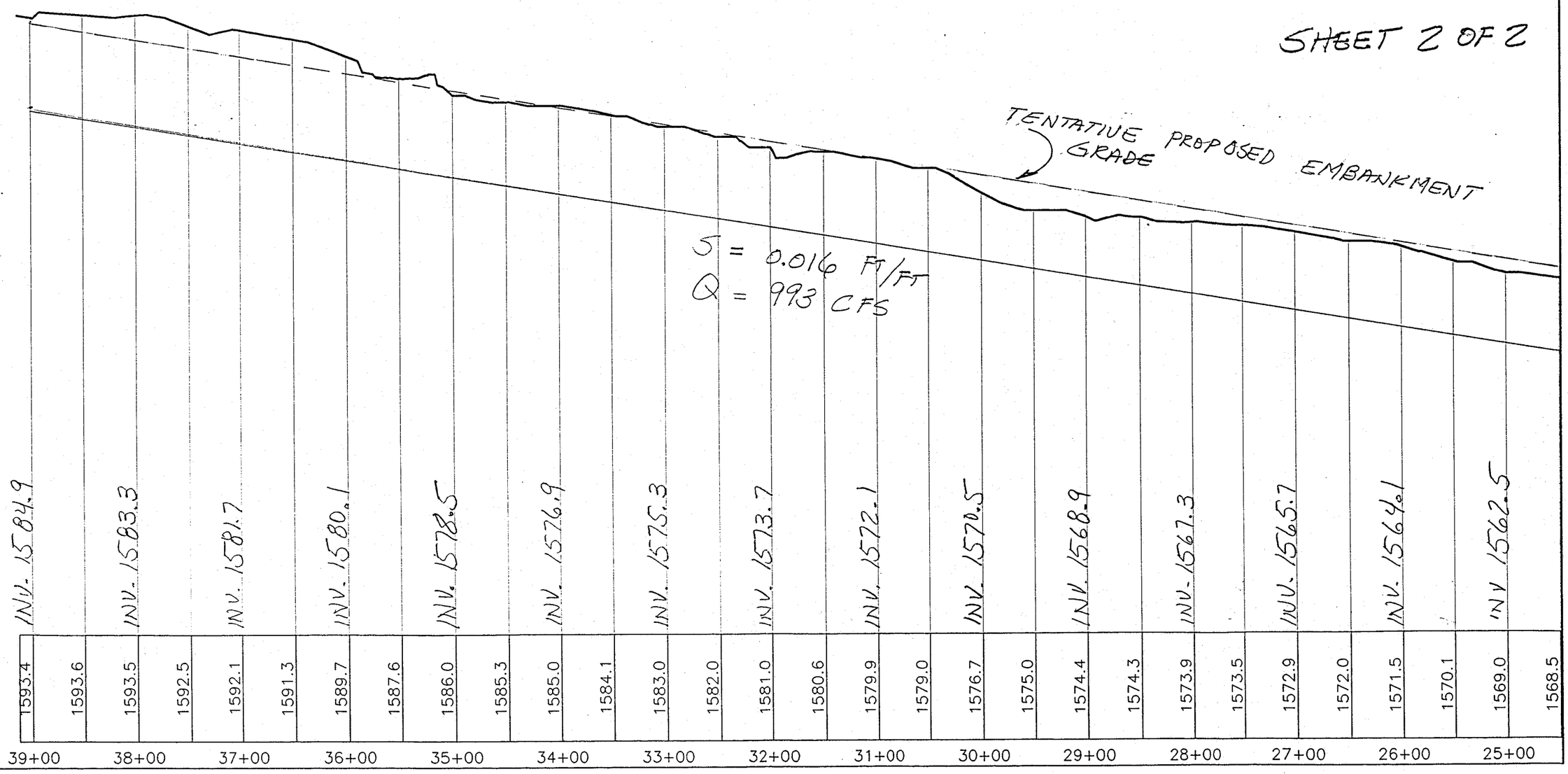

E. Wash 10 Channel Culvert in Forest Road

Wash 11 Channel Culvert in Forest Road

Culvert Calculator Report
Tntov Wash 10,Q=1900cfs

Comments: 1) Manning coefficient of 0.035 has been chosen assuming that the channel at culvert area shall be cleaned at alternate year.

2) Inlet and outlet elevations are relative elevations to facilitate sizing the culvert

3) Culvert lengths are approximate. Actulal construction length shall be shown on the plans

Solve For: Headwater Elevation

Culvert Summary			
Allowable HW Elevation	7.00 ft	Headwater Depth/ Height	1.47
Computed Headwater Elevation	107.34 ft	Discharge	1,900.00 cfs
Inlet Control HW Elev	107.34 ft	Tailwater Elevation	4.50 ft
Outlet Control HW Elev	107.33 ft	Control Type	Inlet Control

Grades			
Upstream Invert	100.00 ft	Downstream Invert	99.35 ft
Length	76.00 ft	Constructed Slope	0.008553 ft/ft

Hydraulic Profile			
Profile	CompositeM2Pressure	Depth, Downstream	4.12 ft
Slope Type	Mild	Normal Depth	N/A ft
Flow Regime	Subcritical	Critical Depth	4.12 ft
Velocity Downstream	11.52 ft/s	Critical Slope	0.018236 ft/ft

Section			
Section Shape	Box	Mannings Coefficient	0.030
Section Material	Concrete	Span	10.00 ft
Section Size	10 x 5 ft	Rise	5.00 ft
Number Sections	4		

Outlet Control Properties			
Outlet Control HW Elev	107.33 ft	Upstream Velocity Head	1.40 ft
Ke	0.40	Entrance Loss	0.56 ft

Inlet Control Properties			
Inlet Control HW Elev	107.34 ft	Flow Control	N/A
Inlet Type 3/4" chamfers; 30 ° skewed headwall		Area Full	200.0 ft²
K	0.53300	HDS 5 Chart	11
M	0.66700	HDS 5 Scale	2
C	0.04250	Equation Form	2
Y	0.70500		

Rating Table Report
Tntov Wash 10,Q=1900cfs

Range Data:

	Minimum	Maximum	Increment	
Discharge	100.00	1,900.00	100.00	cfs

Discharge (cfs)	HW Elev (ft)
100.00	100.99
200.00	101.56
300.00	102.04
400.00	102.47
500.00	102.87
600.00	103.24
700.00	103.59
800.00	103.93
900.00	104.25
1,000.00	104.56
1,100.00	104.86
1,200.00	105.15
1,300.00	105.43
1,400.00	105.71
1,500.00	105.97
1,600.00	106.26
1,700.00	106.60
1,800.00	106.95
1,900.00	107.34

Culvert Calculator Report
Tontov Wash 11, Q=950cfs, @ Forest Rd.

Comments: 1) Manning coefficient of 0.035 has been chosen assuming that the channel at culvert area shall be cleaned at alternate year.

2) Inlet and outlet elevations are relative elevations to facilitate sizing the culvert

3) Culvert length is approximate. Actual length shall be shown on construction plans

Solve For: Headwater Elevation

Culvert Summary				
Allowable HW Elevation	5.00 ft		Headwater Depth/ Height	1.42
Computed Headwater Elevation	105.70 ft		Discharge	950.00 cfs
Inlet Control HW Elev	105.47 ft		Tailwater Elevation	3.49 ft
Outlet Control HW Elev	105.70 ft		Control Type	Outlet Control

Grades				
Upstream Invert	100.00 ft		Downstream Invert	98.90 ft
Length	93.00 ft		Constructed Slope	0.011828 ft/ft

Hydraulic Profile				
Profile	CompositeM2Pressure		Depth, Downstream	3.15 ft
Slope Type	Mild		Normal Depth	N/A ft
Flow Regime	Subcritical		Critical Depth	3.15 ft
Velocity Downstream	10.06 ft/s		Critical Slope	0.023356 ft/ft

Section				
Section Shape	Box		Mannings Coefficient	0.035
Section Material	Concrete		Span	10.00 ft
Section Size	10 x 4 ft		Rise	4.00 ft
Number Sections	3			

Outlet Control Properties				
Outlet Control HW Elev	105.70 ft		Upstream Velocity Head	0.97 ft
Ke	0.40		Entrance Loss	0.39 ft

Inlet Control Properties				
Inlet Control HW Elev	105.47 ft		Flow Control	N/A
Inlet Type 3/4" chamfers; 30 ° skewed headwall			Area Full	120.0 ft²
K	0.53300		HDS 5 Chart	11
M	0.66700		HDS 5 Scale	2
C	0.04250		Equation Form	2
Y	0.70500			

Rating Table Report
Tontov Wash 11, Q=950cfs, @ Forest Rd.

Range Data:

	Minimum	Maximum	Increment	
Discharge	50.00	950.00	50.00	cfs

Discharge (cfs)	HW Elev (ft)
50.00	100.75
100.00	101.19
150.00	101.56
200.00	101.89
250.00	102.19
300.00	102.47
350.00	102.74
400.00	103.00
450.00	103.24
500.00	103.48
550.00	103.71
600.00	103.93
650.00	104.15
700.00	104.36
750.00	104.57
800.00	105.00
850.00	104.97
900.00	105.22
950.00	105.70

F. Wash 10 Water Surface

Profile - HEC 2 Analysis (FIRM 10)

HEC2 S/N: 1366000135 HMVersion: 6.52 Data File: TNTOVW10.hc2

```
*****************************************
*  HEC-2 WATER SURFACE PROFILES          *
*                                        *
*  Version   4.6.2;  May 1991            *
*                                        *
*  RUN DATE     4NOV97    TIME   11:04:40 *
*****************************************
```

```
*********************************
*  U.S. ARMY CORPS OF ENGINEERS
*  HYDROLOGIC ENGINEERING CENTER
*  609 SECOND STREET, SUITE D
*  DAVIS, CALIFORNIA 95616-4687
*         (916) 756-1104
*********************************
```

```
X     X  XXXXXXX   XXXXX             XXXXX
X     X  X       X    X           X     X
X     X  X       X                      X
XXXXXXX  XXXX     X         XXXXX   XXXXX
X     X  X       X                X
X     X  X       X    X           X
X     X  XXXXXXX   XXXXX           XXXXXXX
```

```
:::::::::::::::::::::::::::::::::::::::::::::
:::::::::::::::::::::::::::::::::::::::::::::
:::                                       :::
:::   FULL MICRO-COMPUTER IMPLEMENTATION   :::
:::                                       :::
:::::::::::::::::::::::::::::::::::::::::::::
:::::::::::::::::::::::::::::::::::::::::::::
```

```
============================
H A E S T A D   M E T H O D S
============================
```

37 Brookside Road * Waterbury, Connecticut 06708 * (203) 755-1666

THIS RUN EXECUTED 4NOV97 11:04:40

```
************************************
 HEC-2 WATER SURFACE PROFILES

 Version   4.6.2;  May 1991
************************************
```

T1eonto Verde East Extension Preliminary Drainage Report Segmental Water Surface
T2Profile Model for Wash 10 Approximately from Forest Rd. to East line of
T3 Section 31. T5N. R7E.
T4LO Run Date July 31.1997; Revised Oct. 27.1997

J1	ICHECK	INQ	NINV	IDIR	STRT	METRIC	HVINS	Q	WSEL	FQ
	0	2	0	0	0	0	0	0	1550.27	0

J2	NPROF	IPLOT	PRFVS	XSECV	XSECH	FN	ALLDC	IBW	CHNIM	ITRACE
	1	0	-1	0	0	0	-1	0	0	0

QT	1	2010								
NC	0.04	0.04	0.04	0.1	0.3					
X1	740	60	340.1	380.3	0	0	0			
GR	1551.5	0	1550.6	6.6	1551.4	16.3	1551.1	35.4	1551.2	61.8
GR	1551.2	89.6	1550.6	125	1550.5	159.5	1550.5	202.2	1550.3	232.4
GR	1549.7	245.8	1548.5	255	1547.1	258	1549.0	267.1	1547.2	271.7
GR	1548.3	288.6	1549.2	302.8	1547.9	311.4	1547.6	314.1	1548.7	325.7
GR	1548.9	340.1	1548.6	350	1547.8	360.5	1546.6	364.1	1546.8	373.6
GR	1547.4	374.2	1549.5	380.3	1549.6	405.8	1550.1	448.5	1550.6	485.9
GR	1550.3	525.6	1550.0	542.4	1550.1	572.7	1550.6	612	1551.0	656.6
GR	1551.1	691.3	1550.5	729.7	1550.3	764.4	1550.2	798.8	1549.9	819.4
GR	1549.9	826.3	1549.0	830.6	1550.4	844.4	1549.0	847.3	1548.9	854.3
GR	1549.8	861	1550.0	895.1	1549.7	926.6	1550.0	943.2	1549.4	959.1
GR	1547.9	969.9	1549.5	976.2	1549.9	989	1549.9	1002.9	1547.9	1011.2
GR	1549.8	1017.7	1550.3	1038.6	1550.3	1067	1550.5	1096.8	1550.6	1108.7
X1	1000	5	10	76.2	260	260	260			
GR	1551.5	0	1551.0	10	1544.5	25.6	1544.5	60.6	1551.0	76.2
X1	1060	5	10	76.2	60	60	60			
GR	1551.4	0	1550.9	10	1545.7	25.6	1545.7	60.6	1550.9	76.2
QT	1	1900								
NC	0.04	0.04	0.04	0.1	0.3					
X1	1100	5	10	79.8	100	100	100			
GR	1552.6	0	1552.1	10	1546.5	32.4	1546.5	57.4	1552.1	79.8
X1	1200	5	10	79.8	100	100	100			
GR	1554.6	0	1554.1	10	1548.50	32.4	1548.50	57.4	1554.1	79.8

X1	1300	5	10	79.8	100	100	100			
GR	1556.6	0	1556.1	10	1550.5	32.4	1550.5	57.4	1556.1	79.8
X1	1400	5	10	79.8	100	100	100			
GR	1558.6	0	1558.1	10	1552.5	32.4	1552.5	57.4	1558.1	79.8
X1	1450	5	10	111	50	50	50			
GR	1559.7	0	1559.2	10	1552.9	48	1552.9	73	1559.2	111
X1	1500	5	10	111	50	50	50			
GR	1560.3	0	1559.8	10	1553.5	48	1553.5	73	1559.8	111
X1	1550	5	10	111	50	50	50			
GR	1560.7	0	1560.2	10	1553.9	48	1553.9	73	1560.2	111
X1	1600	5	10	111	50	50	50			
GR	1560.9	0	1560.4	10	1554.1	48	1554.1	73	1560.4	111
X1	1650	5	10	111	50	50	50			
GR	1561.3	0	1560.8	10	1554.5	48	1554.5	73	1560.8	111
X1	1700	5	10	111	50	50	50			
GR	1561.7	0	1561.2	10	1554.9	48	1554.9	73	1561.2	111
X1	1701	5	10	111	1	1	1			
GR	1564.5	0	1564.0	10	1557.7	48	1557.7	73	1564.0	111
X1	1800	5	10	111	99	99	99			
GR	1565.3	0	1564.8	10	1558.5	48	1558.5	73.6	1564.8	111
X1	1900	5	10	111	100	100	100			
GR	1564.1	0	1565.6	10	1559.3	48	1559.3	73	1565.6	111
X1	1901	5	10	111	100	100	100			
GR	1568.6	0	1568.1	10	1561.8	48	1561.8	73	1568.1	111
X1	2000	5	10	111	100	100	100			
GR	1569.3	0	1568.8	10	1562.5	48	1562.5	73	1568.8	111
X1	2001	5	10	83	1	1	1			
GR	1571.0	0	1570.5	10	1564.5	34	1564.5	59	1570.5	83
X1	2100	5	10	83	99	99	99			
GR	1572.4	0	1571.9	10	1565.9	34	1565.9	59	1571.9	83
X1	2200	5	10	83	100	100	100			
GR	1573.8	0	1573.3	10	1567.3	34	1567.3	59	1573.3	83

X1	2300	5	10	83	100	100	100			
GR	1575.2	0	1574.7	10	1568.7	34	1568.7	59	1574.7	83
X1	2400	5	10	83	100	100	100			
GR	1576.6	0	1576.1	10	1570.1	34	1570.1	59	1576.1	83
X1	2500	5	10	83	100	100	100			
GR	1578.0	0	1577.5	10	1571.5	34	1571.5	59	1577.5	83
X1	2600	5	10	83	100	100	100			
GR	1579.5	0	1579.0	10	1573.0	34	1573.0	59	1579.0	83
X1	2700	5	10	83	100	100	100			
GR	1580.9	0	1580.4	10	1574.4	34	1574.4	59	1580.4	83
X1	2800	5	10	83	100	100	100			
GR	1582.3	0	1581.8	10	1575.8	34	1575.8	59	1581.8	83
X1	2900	5	10	89	100	100	100			
GR	1583.8	0	1583.3	10	1576.6	37	1576.6	62	1583.3	89
X1	3000	5	10	89.0	100	100	100			
GR	1584.7	0	1584.2	10	1577.5	37	1577.5	62	1584.2	89
X1	3034	5	10	89.0	34	34	34			
GR	1584.9	0	1584.4	10	1577.7	37	1577.7	62	1584.4	89
X1	3080	5	10	89.0	46	46	46			
GR	1585.3	0	1584.8	10	1578.1	37	1578.1	62	1584.8	89
X1	3084	18	10	53	4	4	4			
X2				1583.3	1586.3					
GR	1586.3	0	1586.2	10	1578.3	10	1578.3	20	1583.3	20
GR	1583.3	21	1578.3	21	1578.3	31	1583.3	31	1583.3	32
GR	1578.3	32	1578.3	42	1583.3	42	1583.3	43	1578.3	43
GR	1578.3	53	1586.3	53	1586.3	63				
X1	3160	18	10	53	76	76	76			
X2				1583.9	1586.9					
GR	1586.9	0	1586.8	10	1578.9	10	1578.9	20	1583.9	20
GR	1583.9	21	1578.9	21	1578.9	31	1583.9	31	1583.3	32
GR	1578.9	32	1578.9	42	1583.9	42	1583.9	43	1578.9	43
GR	1578.9	53	1586.9	53	1587.0	63				
NC				0.1	0.3					
X1	3165	5	10	89.0	5	5	5			
GR	1586.6	0	1586.1	5	1578.9	37	1578.9	62	1586.1	89

X1	3200	5	10	89.0	35	35	35			
GR	1586.6	0	1586.1	10	1579.2	37	1579.2	62	1586.1	89
X1	3300	5	10	72	100	100	100			
GR	1587.3	0	1586.8	10	1581.2	32.4	1581.2	57.4	1586.8	79.8
X1	3301	5	10	85.8	1	1	1			
GR	1589.1	0	1588.6	10	1582.3	35.4	1582.3	60.4	1588.6	85.8
X1	3400	5	10	85.8	99	99	99			
GR	1590.1	0	1589.6	10	1583.3	35.4	1583.3	60.4	1589.6	85.8
X1	3500	5	85	106.2	100	100	100			
GR	1591.2	0	1590.7	10	1584.4	35.4	1584.4	60.4	1590.7	85.8
X1	3600	5	10	85.8	100	100	100			
GR	1592.3	0	1591.8	10	1585.5	35.4	1585.5	60.4	1591.8	85.8
X1	3685	9	60.9	134.0						
GR	1600.7	0	1600	34.3	1600	60.9	1596	61	1596	73.3
GR	1595.5	103.6	1596	133.9	1600	134.0	1602	194.3		

SECNO	DEPTH	CWSEL	CRIWS	WSELK	EG	HV	HL	OLOSS	L-BANK ELEV
Q	QLOB	QCH	QROB	ALOB	ACH	AROB	VOL	TWA	R-BANK ELEV
TIME	VLOB	VCH	VROB	XNL	XNCH	XNR	WTN	ELMIN	SSTA
SLOPE	XLOBL	XLCH	XLOBR	ITRIAL	IDC	ICONT	CORAR	TOPWID	ENDST

*PROF 1

CRITICAL DEPTH TO BE CALCULATED AT ALL CROSS SECTIONS

CCHV= 0.100 CEHV= 0.300
*SECNO 740.000

3265 DIVIDED FLOW

740.000	3.67	1550.27	1550.12	1550.27	1550.64	0.37	0.00	0.00	1548.90
2010.0	947.2	550.8	512.0	183.5	94.8	190.6	0.0	0.0	1549.50
0.00	5.16	5.81	2.69	0.040	0.040	0.040	0.000	1546.60	233.07
0.008021	0.	0.	0.	0	10	0	0.00	548.01	1037.34

*SECNO 1000.000
3280 CROSS SECTION 1000.00 EXTENDED 0.31 FEET

3302 WARNING: CONVEYANCE CHANGE OUTSIDE OF ACCEPTABLE RANGE. KRATIO = 1.70

1000.000	6.81	1551.31	1548.72	0.00	1551.82	0.51	1.14	0.04	1551.00
2010.0	0.5	2009.5	0.0	1.0	349.4	0.0	2.4	1.9	1551.00
0.01	0.56	5.75	0.00	0.040	0.040	0.000	0.000	1544.50	3.82
0.002763	260.	260.	260.	3	8	0	0.00	72.38	76.20

*SECNO 1060.000
3280 CROSS SECTION 1060.00 EXTENDED 0.48 FEET

1060.000	5.68	1551.38	1549.81	0.00	1552.10	0.72	0.21	0.06	1550.90
2010.0	2.3	2007.7	0.0	2.3	295.0	0.0	2.9	2.0	1550.90
0.02	0.99	6.81	0.00	0.040	0.040	0.000	0.000	1545.70	0.38
0.004779	60.	60.	60.	2	14	0	0.00	75.82	76.20

CCHV= 0.100 CEHV= 0.300
*SECNO 1100.000

1100.000	5.34	1551.84	1550.91	0.00	1552.75	0.92	0.60	0.06	1552.10
1900.0	0.0	1900.0	0.0	0.0	247.5	0.0	3.5	2.1	1552.10
0.02	0.00	7.68	0.00	0.000	0.040	0.000	0.000	1546.50	11.05
0.007784	100.	100.	100.	2	15	0	0.00	67.71	78.75

SECNO	DEPTH	CWSEL	CRIWS	WSELK	EG	HV	HL	OLOSS	L-BANK ELEV
Q	QLOB	QCH	QROB	ALOB	ACH	AROB	VOL	TWA	R-BANK ELEV
TIME	VLOB	VCH	VROB	XNL	XNCH	XNR	WTN	ELMIN	SSTA
SLOPE	XLOBL	XLCH	XLOBR	ITRIAL	IDC	ICONT	CORAR	TOPWID	ENDST

*SECNO 1200.000

3301 HV CHANGED MORE THAN HVINS

7185 MINIMUM SPECIFIC ENERGY
3720 CRITICAL DEPTH ASSUMED

1200.000	4.41	1552.91	1552.91	0.00	1554.50	1.59	1.10	0.20	1554.10
1900.0	0.0	1900.0	0.0	0.0	188.0	0.0	4.0	2.3	1554.10
0.02	0.00	10.11	0.00	0.000	0.040	0.000	0.000	1548.50	14.76
0.016624	100.	100.	100.	0	15	0	0.00	60.28	75.04

*SECNO 1300.000
7185 MINIMUM SPECIFIC ENERGY
3720 CRITICAL DEPTH ASSUMED

1300.000	4.42	1554.92	1554.92	0.00	1556.50	1.58	1.66	0.00	1556.10
1900.0	0.0	1900.0	0.0	0.0	188.5	0.0	4.4	2.4	1556.10
0.02	0.00	10.08	0.00	0.000	0.040	0.000	0.000	1550.50	14.73
0.016516	100.	100.	100.	0	5	0	0.00	60.34	75.07

*SECNO 1400.000
7185 MINIMUM SPECIFIC ENERGY
3720 CRITICAL DEPTH ASSUMED

1400.000	4.42	1556.92	1556.92	0.00	1558.50	1.58	1.65	0.00	1558.10
1900.0	0.0	1900.0	0.0	0.0	188.4	0.0	4.9	2.5	1558.10
0.03	0.00	10.09	0.00	0.000	0.040	0.000	0.000	1552.50	14.74
0.016534	100.	100.	100.	0	5	0	0.00	60.33	75.06

*SECNO 1450.000

3301 HV CHANGED MORE THAN HVINS

3302 WARNING: CONVEYANCE CHANGE OUTSIDE OF ACCEPTABLE RANGE. KRATIO = 1.89

1450.000	5.57	1558.47	1556.97	0.00	1559.00	0.53	0.40	0.11	1559.20
1900.0	0.0	1900.0	0.0	0.0	326.2	0.0	5.2	2.6	1559.20
0.03	0.00	5.83	0.00	0.000	0.040	0.000	0.000	1552.90	14.42
0.004620	50.	50.	50.	3	11	0	0.00	92.16	106.58

```
   SECNO      DEPTH     CWSEL     CRIWS     WSELK     EG        HV        HL        OLOSS     L-BANK ELEV
   Q          QLOB      QCH       QROB      ALOB      ACH       AROB      VOL       TWA       R-BANK ELEV
   TIME       VLOB      VCH       VROB      XNL       XNCH      XNR       WTN       ELMIN     SSTA
   SLOPE      XLOBL     XLCH      XLOBR     ITRIAL    IDC       ICONT     CORAR     TOPWID    ENDST


*SECNO 1500.000
  1500.000      5.14   1558.64   1557.56      0.00   1559.31      0.68      0.27      0.04   1559.80
    1900.0       0.0    1900.0       0.0       0.0     288.0       0.0       5.5       2.7   1559.80
      0.03      0.00      6.60      0.00     0.000     0.040     0.000     0.000   1553.50     16.99
  0.006477       50.       50.       50.         2        19         0      0.00     87.03    104.01


*SECNO 1550.000
  1550.000      5.04   1558.94   1557.96      0.00   1559.66      0.72      0.34      0.01   1560.20
    1900.0       0.0    1900.0       0.0       0.0     279.6       0.0       5.9       2.8   1560.20
      0.03      0.00      6.80      0.00     0.000     0.040     0.000     0.000   1553.90     17.57
  0.007020       50.       50.       50.         2        15         0      0.00     85.85    103.43


*SECNO 1600.000
  1600.000      5.26   1559.36   1558.16      0.00   1559.99      0.63      0.32      0.01   1560.40
    1900.0       0.0    1900.0       0.0       0.0     298.6       0.0       6.2       2.9   1560.40
      0.04      0.00      6.36      0.00     0.000     0.040     0.000     0.000   1554.10     16.26
  0.005869       50.       50.       50.         2        15         0      0.00     88.49    104.74


*SECNO 1650.000
  1650.000      5.14   1559.64   1558.56      0.00   1560.31      0.68      0.31      0.01   1560.80
    1900.0       0.0    1900.0       0.0       0.0     287.5       0.0       6.5       3.0   1560.80
      0.04      0.00      6.61      0.00     0.000     0.040     0.000     0.000   1554.50     17.02
  0.006506       50.       50.       50.         2        15         0      0.00     86.96    103.98


*SECNO 1700.000
  1700.000      5.05   1559.95   1558.97      0.00   1560.66      0.72      0.34      0.01   1561.20
    1900.0       0.0    1900.0       0.0       0.0     279.7       0.0       6.8       3.1   1561.20
      0.04      0.00      6.79      0.00     0.000     0.040     0.000     0.000   1554.90     17.57
  0.007015       50.       50.       50.         0        15         0      0.00     85.87    103.43


*SECNO 1701.000

3301 HV CHANGED MORE THAN HVINS

7185 MINIMUM SPECIFIC ENERGY
3720 CRITICAL DEPTH ASSUMED
  1701.000      4.07   1561.77   1561.77      0.00   1563.15      1.38      0.01      0.20   1564.00
    1900.0       0.0    1900.0       0.0       0.0     201.3       0.0       6.9       3.1   1564.00
      0.04      0.00      9.44      0.00     0.000     0.040     0.000     0.000   1557.70     23.48
  0.017207        1.        1.        1.         0        15         0      0.00     74.04     97.52
```

SECNO	DEPTH	CWSEL	CRIWS	WSELK	EG	HV	HL	OLOSS	L-BANK ELEV
Q	QLOB	QCH	QROB	ALOB	ACH	AROB	VOL	TWA	R-BANK ELEV
TIME	VLOB	VCH	VROB	XNL	XNCH	XNR	WTN	ELMIN	SSTA
SLOPE	XLOBL	XLCH	XLOBR	ITRIAL	IDC	ICONT	CORAR	TOPWID	ENDST

*SECNO 1800.000

3301 HV CHANGED MORE THAN HVINS

3302 WARNING: CONVEYANCE CHANGE OUTSIDE OF ACCEPTABLE RANGE. KRATIO = 1.57

1800.000	5.03	1563.53	1562.54	0.00	1564.24	0.71	1.03	0.07	1564.80
1900.0	0.0	1900.0	0.0	0.0	280.3	0.0	7.4	3.3	1564.80
0.04	0.00	6.78	0.00	0.000	0.040	0.000	0.000	1558.50	17.65
0.006958	99.	99.	99.	2	5	0	0.00	85.82	103.47

*SECNO 1900.000

3265 DIVIDED FLOW

3280 CROSS SECTION 1900.00 EXTENDED 0.12 FEET

1900.000	4.92	1564.22	1563.37	0.00	1565.00	0.78	0.74	0.02	1565.60
1900.0	0.0	1900.0	0.0	0.0	268.7	0.0	8.0	3.5	1565.60
0.05	0.03	7.07	0.00	0.040	0.040	0.000	0.000	1559.30	0.00
0.007822	100.	100.	100.	2	15	0	0.00	85.09	102.66

*SECNO 1901.000

3301 HV CHANGED MORE THAN HVINS

7185 MINIMUM SPECIFIC ENERGY
3720 CRITICAL DEPTH ASSUMED

1901.000	4.07	1565.87	1565.87	0.00	1567.25	1.38	1.12	0.18	1568.10
1900.0	0.0	1900.0	0.0	0.0	201.3	0.0	8.6	3.7	1568.10
0.05	0.00	9.44	0.00	0.000	0.040	0.000	0.000	1561.60	23.48
0.017215	100.	100.	100.	0	15	0	0.00	74.04	97.52

*SECNO 2000.000

3301 HV CHANGED MORE THAN HVINS

SECNO	DEPTH	CWSEL	CRIWS	WSELK	EG	HV	HL	OLOSS	L-BANK ELEV
Q	QLOB	QCH	QROB	ALOB	ACH	AROB	VOL	TWA	R-BANK ELEV
TIME	VLOB	VCH	VROB	XNL	XNCH	XNR	WTN	ELMIN	SSTA
SLOPE	XLOBL	XLCH	XLOBR	ITRIAL	IDC	ICONT	CORAR	TOPWID	ENDST

3302 WARNING: CONVEYANCE CHANGE OUTSIDE OF ACCEPTABLE RANGE. KRATIO = 1.63

2000.000	5.14	1567.64	1566.57	0.00	1568.32	0.68	1.00	0.07	1568.80
1900.0	0.0	1900.0	0.0	0.0	287.8	0.0	9.1	3.9	1568.80
0.05	0.00	6.60	0.00	0.000	0.040	0.000	0.000	1562.50	17.00
0.006492	100.	100.	100.	2	5	0	0.00	86.99	104.00

*SECNO 2001.000

3301 HV CHANGED MORE THAN HVINS

7185 MINIMUM SPECIFIC ENERGY
3720 CRITICAL DEPTH ASSUMED

2001.000	4.41	1568.91	1568.91	0.00	1570.50	1.58	0.01	0.27	1570.50
1900.0	0.0	1900.0	0.0	0.0	188.1	0.0	9.1	3.9	1570.50
0.05	0.00	10.10	0.00	0.000	0.040	0.000	0.000	1564.50	16.36
0.016611	1.	1.	1.	0	15	0	0.00	60.28	76.64

*SECNO 2100.000

2100.000	4.76	1570.66	1570.32	0.00	1571.93	1.28	1.41	0.03	1571.90
1900.0	0.0	1900.0	0.0	0.0	209.5	0.0	9.6	4.0	1571.90
0.06	0.00	9.07	0.00	0.000	0.040	0.000	0.000	1565.90	14.97
0.012316	99.	99.	99.	2	5	0	0.00	63.07	78.03

*SECNO 2200.000

2200.000	4.58	1571.88	1571.71	0.00	1573.30	1.42	1.33	0.04	1573.30
1900.0	0.0	1900.0	0.0	0.0	198.4	0.0	10.1	4.2	1573.30
0.06	0.00	9.58	0.00	0.000	0.040	0.000	0.000	1567.30	15.68
0.014319	100.	100.	100.	3	11	0	0.00	61.64	77.32

*SECNO 2300.000

2300.000	4.63	1573.33	1573.13	0.00	1574.71	1.38	1.40	0.00	1574.70
1900.0	0.0	1900.0	0.0	0.0	201.3	0.0	10.5	4.3	1574.70
0.06	0.00	9.44	0.00	0.000	0.040	0.000	0.000	1568.70	15.49
0.013755	100.	100.	100.	3	8	0	0.00	62.02	77.51

SECNO	DEPTH	CWSEL	CRIWS	WSELK	EG	HV	HL	OLOSS	L-BANK ELEV
Q	QLOB	QCH	QROB	ALOB	ACH	AROB	VOL	TWA	R-BANK ELEV
TIME	VLOB	VCH	VROB	XNL	XNCH	XNR	WTN	ELMIN	SSTA
SLOPE	XLOBL	XLCH	XLOBR	ITRIAL	IDC	ICONT	CORAR	TOPWID	ENDST

*SECNO 2400.000

2400.000	4.60	1574.70	1574.53	0.00	1576.11	1.40	1.39	0.01	1576.10
1900.0	0.0	1900.0	0.0	0.0	199.7	0.0	11.0	4.4	1576.10
0.07	0.00	9.51	0.00	0.000	0.040	0.000	0.000	1570.10	15.59
0.014058	100.	100.	100.	2	8	0	0.00	61.81	77.41

*SECNO 2500.000

2500.000	4.61	1576.11	1575.93	0.00	1577.51	1.40	1.41	0.00	1577.50
1900.0	0.0	1900.0	0.0	0.0	199.8	0.0	11.4	4.6	1577.50
0.07	0.00	9.51	0.00	0.000	0.040	0.000	0.000	1571.50	15.59
0.014057	100.	100.	100.	1	8	0	0.00	61.81	77.41

*SECNO 2600.000

2600.000	4.51	1577.51	1577.43	0.00	1579.00	1.48	1.46	0.02	1579.00
1900.0	0.0	1900.0	0.0	0.0	194.4	0.0	11.9	4.7	1579.00
0.07	0.00	9.77	0.00	0.000	0.040	0.000	0.000	1573.00	15.94
0.015148	100.	100.	100.	0	8	0	0.00	61.12	77.06

*SECNO 2700.000

2700.000	4.68	1579.08	1578.82	0.00	1580.42	1.34	1.41	0.01	1580.40
1900.0	0.0	1900.0	0.0	0.0	204.9	0.0	12.3	4.9	1580.40
0.08	0.00	9.27	0.00	0.000	0.040	0.000	0.000	1574.40	15.26
0.013099	100.	100.	100.	2	8	0	0.00	62.48	77.74

*SECNO 2800.000

2800.000	4.59	1580.39	1580.21	0.00	1581.81	1.42	1.37	0.02	1581.80
1900.0	0.0	1900.0	0.0	0.0	198.8	0.0	12.8	5.0	1581.80
0.08	0.00	9.56	0.00	0.000	0.040	0.000	0.000	1575.80	15.65
0.014238	100.	100.	100.	2	11	0	0.00	61.70	77.35

*SECNO 2900.000

3301 HV CHANGED MORE THAN HVINS

2900.000	5.38	1581.98	1581.02	0.00	1582.87	0.89	1.01	0.05	1583.30
1900.0	0.0	1900.0	0.0	0.0	251.4	0.0	13.3	5.2	1583.30
0.08	0.00	7.56	0.00	0.000	0.040	0.000	0.000	1576.60	15.31
0.007484	100.	100.	100.	2	8	0	0.00	68.39	83.69

SECNO	DEPTH	CWSEL	CRIWS	WSELK	EG	HV	HL	OLOSS	L-BANK ELEV
Q	QLOB	QCH	QROB	ALOB	ACH	AROB	VOL	TWA	R-BANK ELEV
TIME	VLOB	VCH	VROB	XNL	XNCH	XNR	WTN	ELMIN	SSTA
SLOPE	XLOBL	XLCH	XLOBR	ITRIAL	IDC	ICONT	CORAR	TOPWID	ENDST

*SECNO 3000.000

3000.000	5.22	1582.72	1581.90	0.00	1583.69	0.97	0.80	0.03	1584.20
1900.0	0.0	1900.0	0.0	0.0	240.1	0.0	13.9	5.3	1584.20
0.09	0.00	7.91	0.00	0.000	0.040	0.000	0.000	1577.50	15.97
0.008488	100.	100.	100.	3	15	0	0.00	67.05	83.03

*SECNO 3034.000

3034.000	5.38	1583.08	1582.10	0.00	1583.97	0.89	0.27	0.01	1584.40
1900.0	0.0	1900.0	0.0	0.0	251.3	0.0	14.1	5.4	1584.40
0.09	0.00	7.56	0.00	0.000	0.040	0.000	0.000	1577.70	15.31
0.007493	34.	34.	34.	2	15	0	0.00	68.38	83.69

*SECNO 3080.000

3080.000	5.31	1583.41	1582.50	0.00	1584.33	0.92	0.35	0.01	1584.80
1900.0	0.0	1900.0	0.0	0.0	246.4	0.0	14.3	5.4	1584.80
0.09	0.00	7.71	0.00	0.000	0.040	0.000	0.000	1578.10	15.60
0.007910	46.	46.	46.	2	15	0	0.00	67.80	83.40

*SECNO 3084.000

3265 DIVIDED FLOW

3301 HV CHANGED MORE THAN HVINS

3302 WARNING: CONVEYANCE CHANGE OUTSIDE OF ACCEPTABLE RANGE. KRATIO = 0.59

3370 NORMAL BRIDGE. NRD= 0 MIN ELTRD= 1586.30 MAX ELLC= 1583.30

3084.000	4.70	1583.00	1582.41	0.00	1584.58	1.59	0.05	0.20	1586.20
1900.0	0.0	1900.0	0.0	0.0	188.0	0.0	14.4	5.4	1586.30
0.09	0.00	10.11	0.00	0.000	0.040	0.000	0.000	1578.30	10.00
0.022750	4.	4.	4.	3	12	0	0.00	40.00	53.00

*SECNO 3160.000

SECNO	DEPTH	CWSEL	CRIWS	WSELK	EG	HV	HL	QLOSS	L-BANK ELEV
Q	QLOB	QCH	QROB	ALOB	ACH	AROB	VOL	TWA	R-BANK ELEV
TIME	VLOB	VCH	VROB	XNL	XNCH	XNR	WTN	ELMIN	SSTA
SLOPE	XLOBL	XLCH	XLOBR	ITRIAL	IDC	ICONT	CORAR	TOPWID	ENDST

3370 NORMAL BRIDGE, NRD= 0 MIN ELTRD= 1586.90 MAX ELLC= 1583.90

3160.000	6.38	1585.28	1583.01	0.00	1586.68	1.40	2.08	0.02	1586.80
1900.0	0.0	1900.0	0.0	0.0	200.3	0.0	14.7	5.5	1586.90
0.09	0.00	9.49	0.00	0.000	0.040	0.000	0.000	1578.90	10.00
0.033501	76.	76.	76.	2	12	0	-59.44	43.00	53.00

CCHV= 0.100 CEHV= 0.300
*SECNO 3165.000
3280 CROSS SECTION 3165.00 EXTENDED 0.40 FEET

3301 HV CHANGED MORE THAN HVINS

3302 WARNING: CONVEYANCE CHANGE OUTSIDE OF ACCEPTABLE RANGE, KRATIO = 4.43

3165.000	7.60	1586.50	1583.29	0.00	1586.81	0.31	0.02	0.11	1586.10
1900.0	0.4	1899.6	0.0	0.8	426.1	0.0	14.7	5.5	1586.10
0.09	0.52	4.46	0.00	0.040	0.040	0.000	0.000	1578.90	0.99
0.001708	5.	5.	5.	3	19	0	0.00	88.01	89.00

*SECNO 3200.000
3280 CROSS SECTION 3200.00 EXTENDED 0.42 FEET

3200.000	7.33	1586.53	1583.65	0.00	1586.89	0.36	0.07	0.02	1586.10
1900.0	1.1	1898.9	0.0	1.8	392.2	0.0	15.1	5.6	1586.10
0.09	0.60	4.84	0.00	0.040	0.040	0.000	0.000	1579.20	1.54
0.002078	35.	35.	35.	2	11	0	0.00	87.46	89.00

*SECNO 3300.000

3301 HV CHANGED MORE THAN HVINS

3302 WARNING: CONVEYANCE CHANGE OUTSIDE OF ACCEPTABLE RANGE, KRATIO = 0.51

3300.000	5.25	1586.45	1585.66	0.00	1587.45	0.99	0.36	0.19	1586.80
1900.0	0.0	1558.2	341.7	0.0	186.7	55.3	15.8	5.8	1581.20
0.10	0.00	8.34	6.18	0.000	0.040	0.040	0.000	1581.20	11.37
0.007944	100.	100.	100.	2	14	0	0.00	67.06	78.43

SECNO	DEPTH	CWSEL	CRIWS	WSELK	EG	HV	HL	OLOSS	L-BANK ELEV
Q	QLOB	QCH	QROB	ALOB	ACH	AROB	VOL	TWA	R-BANK ELEV
TIME	VLOB	VCH	VROB	XNL	XNCH	XNR	WTN	ELMIN	SSTA
SLOPE	XLOBL	XLCH	XLOBR	ITRIAL	IDC	ICONT	CORAR	TOPWID	ENDST

*SECNO 3301.000

3301 HV CHANGED MORE THAN HVINS

7185 MINIMUM SPECIFIC ENERGY
3720 CRITICAL DEPTH ASSUMED

3301.000	4.40	1586.70	1586.70	0.00	1588.29	1.58	0.01	0.18	1588.60
1900.0	0.0	1900.0	0.0	0.0	188.3	0.0	15.8	5.8	1588.60
0.10	0.00	10.09	0.00	0.000	0.040	0.000	0.000	1582.30	17.65
0.016631	1.	1.	1.	0	15	0	0.00	60.51	78.15

*SECNO 3400.000

3301 HV CHANGED MORE THAN HVINS

3302 WARNING: CONVEYANCE CHANGE OUTSIDE OF ACCEPTABLE RANGE. KRATIO = 1.40

3400.000	5.22	1588.52	1587.71	0.00	1589.49	0.97	1.14	0.06	1589.60
1900.0	0.0	1900.0	0.0	0.0	240.3	0.0	16.3	5.9	1589.60
0.10	0.00	7.91	0.00	0.000	0.040	0.000	0.000	1583.30	14.36
0.008472	99.	99.	99.	2	5	0	0.00	67.09	81.44

*SECNO 3500.000

3500.000	4.82	1589.22	1588.86	0.00	1590.51	1.29	0.92	0.09	1584.40
1900.0	1591.9	308.1	0.0	167.3	46.8	0.0	16.8	6.1	1590.70
0.10	9.51	6.58	0.00	0.040	0.040	0.000	0.000	1584.40	15.97
0.010099	100.	100.	100.	2	15	0	0.00	63.87	79.83

*SECNO 3600.000

3600.000	4.90	1590.40	1589.90	0.00	1591.57	1.16	1.05	0.01	1591.80
1900.0	0.0	1900.0	0.0	0.0	219.7	0.0	17.3	6.2	1591.80
0.11	0.00	8.65	0.00	0.000	0.040	0.000	0.000	1585.50	15.62
0.010855	100.	100.	100.	3	11	0	0.00	64.56	80.18

*SECNO 3685.000
7185 MINIMUM SPECIFIC ENERGY
3720 CRITICAL DEPTH ASSUMED

3685.000	3.04	1598.54	1598.54	0.00	1599.93	1.39	0.00	0.07	1600.00
1900.0	0.0	1900.0	0.0	0.0	200.6	0.0	17.3	6.2	1600.00
0.11	0.00	9.47	0.00	0.000	0.040	0.000	0.000	1595.50	60.94
0.018446	0.	0.	0.	0	14	0	0.00	73.03	133.96

THIS RUN EXECUTED 4NOV97 11:04:40

****
HEC-2 WATER SURFACE PROFILES

Version 4.6.2: May 1991
****

NOTE- ASTERISK (*) AT LEFT OF CROSS-SECTION NUMBER INDICATES MESSAGE IN SUMMARY OF ERRORS LIST

Section 31. T5N. R7E.

SUMMARY PRINTOUT TABLE 150

	SECNO	XLCH	ELTRD	ELLC	ELMIN	Q	CWSEL	CRIWS	EG	10*KS	VCH	AREA	.01K
	740.000	0.00	0.00	0.00	1546.60	2010.00	1550.27	1550.12	1550.64	80.21	5.81	468.90	224.44
*	1000.000	260.00	0.00	0.00	1544.50	2010.00	1551.31	1548.72	1551.82	27.63	5.75	350.32	382.41
	1060.000	60.00	0.00	0.00	1545.70	2010.00	1551.38	1549.81	1552.10	47.79	6.81	297.28	290.75
	1100.000	100.00	0.00	0.00	1546.50	1900.00	1551.84	1550.91	1552.75	77.84	7.68	247.46	215.36
*	1200.000	100.00	0.00	0.00	1548.50	1900.00	1552.91	1552.91	1554.50	166.24	10.11	188.02	147.36
*	1300.000	100.00	0.00	0.00	1550.50	1900.00	1554.92	1554.92	1556.50	165.16	10.08	188.46	147.84
*	1400.000	100.00	0.00	0.00	1552.50	1900.00	1556.92	1556.92	1558.50	165.34	10.09	188.39	147.76
*	1450.000	50.00	0.00	0.00	1552.90	1900.00	1558.47	1556.97	1559.00	46.20	5.83	326.16	279.54
	1500.000	50.00	0.00	0.00	1553.50	1900.00	1558.64	1557.56	1559.31	64.77	6.60	288.01	236.09
	1550.000	50.00	0.00	0.00	1553.90	1900.00	1558.94	1557.96	1559.66	70.20	6.80	279.60	226.76
	1600.000	50.00	0.00	0.00	1554.10	1900.00	1559.36	1558.16	1559.99	58.69	6.36	298.64	248.02
	1650.000	50.00	0.00	0.00	1554.50	1900.00	1559.64	1558.56	1560.31	65.06	6.61	287.53	235.55
	1700.000	50.00	0.00	0.00	1554.90	1900.00	1559.95	1558.97	1560.66	70.15	6.79	279.68	226.96
*	1701.000	1.00	0.00	0.00	1557.70	1900.00	1561.77	1561.77	1563.15	172.07	9.44	201.34	144.85
*	1800.000	99.00	0.00	0.00	1558.50	1900.00	1563.53	1562.54	1564.24	69.58	6.78	280.31	227.78
	1900.000	100.00	0.00	0.00	1559.30	1900.00	1564.22	1563.37	1565.00	78.22	7.07	268.76	214.83
*	1901.000	100.00	0.00	0.00	1561.80	1900.00	1565.87	1565.87	1567.25	172.15	9.44	201.30	144.81

	SECNO	XLCH	ELTRD	ELLC	ELMIN	Q	CWSEL	CRIWS	EG	10*KS	VCH	AREA	.01K
*	2000.000	100.00	0.00	0.00	1562.50	1900.00	1567.64	1566.57	1568.32	64.92	6.60	287.76	235.81
*	2001.000	1.00	0.00	0.00	1564.50	1900.00	1568.91	1568.91	1570.50	166.11	10.10	188.07	147.42
	2100.000	99.00	0.00	0.00	1565.90	1900.00	1570.66	1570.32	1571.93	123.16	9.07	209.53	171.21
	2200.000	100.00	0.00	0.00	1567.30	1900.00	1571.88	1571.71	1573.30	143.19	9.58	198.43	158.78
	2300.000	100.00	0.00	0.00	1568.70	1900.00	1573.33	1573.13	1574.71	137.55	9.44	201.32	162.00
	2400.000	100.00	0.00	0.00	1570.10	1900.00	1574.70	1574.53	1576.11	140.58	9.51	199.74	160.25
	2500.000	100.00	0.00	0.00	1571.50	1900.00	1576.11	1575.93	1577.51	140.57	9.51	199.75	160.25
	2600.000	100.00	0.00	0.00	1573.00	1900.00	1577.51	1577.43	1579.00	151.48	9.77	194.43	154.37
	2700.000	100.00	0.00	0.00	1574.40	1900.00	1579.08	1578.82	1580.42	130.99	9.27	204.91	166.01
	2800.000	100.00	0.00	0.00	1575.80	1900.00	1580.39	1580.21	1581.81	142.38	9.56	198.83	159.23
	2900.000	100.00	0.00	0.00	1576.60	1900.00	1581.98	1581.02	1582.87	74.84	7.56	251.37	219.62
	3000.000	100.00	0.00	0.00	1577.50	1900.00	1582.72	1581.90	1583.69	84.88	7.91	240.13	206.22
	3034.000	34.00	0.00	0.00	1577.70	1900.00	1583.08	1582.10	1583.97	74.93	7.56	251.27	219.49
	3080.000	46.00	0.00	0.00	1578.10	1900.00	1583.41	1582.50	1584.33	79.10	7.71	246.37	213.63
*	3084.000	4.00	1586.30	1583.30	1578.30	1900.00	1583.00	1582.41	1584.58	227.50	10.11	187.98	125.97
	3160.000	76.00	1586.90	1583.90	1578.90	1900.00	1585.23	1583.01	1586.68	335.01	9.49	200.30	103.81
*	3165.000	5.00	0.00	0.00	1578.90	1900.00	1586.50	1583.29	1586.81	17.08	4.46	426.93	459.71
	3200.000	35.00	0.00	0.00	1579.20	1900.00	1586.53	1583.65	1586.89	20.79	4.86	394.02	416.77
*	3300.000	100.00	0.00	0.00	1581.20	1900.00	1586.45	1585.66	1587.45	79.44	8.34	242.02	213.17
*	3301.000	1.00	0.00	0.00	1582.30	1900.00	1586.70	1586.70	1588.29	166.31	10.09	188.27	147.33
*	3400.000	99.00	0.00	0.00	1583.30	1900.00	1588.52	1587.71	1589.49	84.72	7.91	240.33	206.42
	3500.000	100.00	0.00	0.00	1584.40	1900.00	1589.22	1588.86	1590.51	100.99	6.58	214.17	189.07
	3600.000	100.00	0.00	0.00	1585.50	1900.00	1590.40	1589.90	1591.57	108.55	8.65	219.66	182.36
*	3685.000	0.00	0.00	0.00	1595.50	1900.00	1598.54	1598.54	1599.93	184.46	9.47	200.60	139.90

Section 31. T5N. R7E.

SUMMARY PRINTOUT TABLE 150

	SECNO	Q	CWSEL	DIFWSP	DIFWSX	DIFKWS	TOPWID	XLCH
	740.000	2010.00	1550.27	0.00	0.00	0.00	548.01	0.00
*	1000.000	2010.00	1551.31	0.00	1.04	0.00	72.38	260.00
	1060.000	2010.00	1551.38	0.00	0.07	0.00	75.82	60.00
	1100.000	1900.00	1551.84	0.00	0.46	0.00	67.71	100.00
*	1200.000	1900.00	1552.91	0.00	1.07	0.00	60.28	100.00
*	1300.000	1900.00	1554.92	0.00	2.01	0.00	60.34	100.00
*	1400.000	1900.00	1556.92	0.00	2.00	0.00	60.33	100.00
*	1450.000	1900.00	1558.47	0.00	1.55	0.00	92.16	50.00
	1500.000	1900.00	1558.64	0.00	0.17	0.00	87.03	50.00
	1550.000	1900.00	1558.94	0.00	0.31	0.00	85.85	50.00
	1600.000	1900.00	1559.36	0.00	0.42	0.00	88.49	50.00
	1650.000	1900.00	1559.64	0.00	0.27	0.00	86.96	50.00
	1700.000	1900.00	1559.95	0.00	0.31	0.00	85.87	50.00
*	1701.000	1900.00	1561.77	0.00	1.82	0.00	74.04	1.00
*	1800.000	1900.00	1563.53	0.00	1.77	0.00	85.82	99.00
	1900.000	1900.00	1564.22	0.00	0.69	0.00	85.09	100.00
*	1901.000	1900.00	1565.87	0.00	1.64	0.00	74.04	100.00
*	2000.000	1900.00	1567.64	0.00	1.77	0.00	86.99	100.00
*	2001.000	1900.00	1568.91	0.00	1.27	0.00	60.28	1.00
	2100.000	1900.00	1570.66	0.00	1.75	0.00	63.07	99.00
	2200.000	1900.00	1571.88	0.00	1.22	0.00	61.64	100.00
	2300.000	1900.00	1573.33	0.00	1.45	0.00	62.02	100.00
	2400.000	1900.00	1574.70	0.00	1.38	0.00	61.81	100.00
	2500.000	1900.00	1576.11	0.00	1.41	0.00	61.81	100.00

	SECNO	Q	CWSEL	DIFWSP	DIFWSX	DIFKWS	TOPWID	XLCH
	2600.000	1900.00	1577.51	0.00	1.40	0.00	61.12	100.00
	2700.000	1900.00	1579.08	0.00	1.57	0.00	62.48	100.00
	2800.000	1900.00	1580.39	0.00	1.31	0.00	61.70	100.00
	2900.000	1900.00	1581.98	0.00	1.59	0.00	68.39	100.00
	3000.000	1900.00	1582.72	0.00	0.74	0.00	67.05	100.00
	3034.000	1900.00	1583.08	0.00	0.36	0.00	68.38	34.00
	3080.000	1900.00	1583.41	0.00	0.33	0.00	67.80	46.00
*	3084.000	1900.00	1583.00	0.00	-0.41	0.00	40.00	4.00
	3160.000	1900.00	1585.28	0.00	2.29	0.00	43.00	76.00
*	3165.000	1900.00	1586.50	0.00	1.22	0.00	88.01	5.00
	3200.000	1900.00	1586.53	0.00	0.03	0.00	87.46	35.00
*	3300.000	1900.00	1586.45	0.00	-0.08	0.00	67.06	100.00
*	3301.000	1900.00	1586.70	0.00	0.25	0.00	60.51	1.00
*	3400.000	1900.00	1588.52	0.00	1.81	0.00	67.09	99.00
	3500.000	1900.00	1589.22	0.00	0.70	0.00	63.87	100.00
	3600.000	1900.00	1590.40	0.00	1.18	0.00	64.56	100.00
*	3685.000	1900.00	1598.54	0.00	8.14	0.00	73.03	0.00

SUMMARY OF ERRORS AND SPECIAL NOTES

```
WARNING SECNO=   1000.000  PROFILE=  1  CONVEYANCE CHANGE OUTSIDE ACCEPTABLE RANGE

CAUTION SECNO=   1200.000  PROFILE=  1  CRITICAL DEPTH ASSUMED
CAUTION SECNO=   1200.000  PROFILE=  1  MINIMUM SPECIFIC ENERGY

CAUTION SECNO=   1300.000  PROFILE=  1  CRITICAL DEPTH ASSUMED
CAUTION SECNO=   1300.000  PROFILE=  1  MINIMUM SPECIFIC ENERGY

CAUTION SECNO=   1400.000  PROFILE=  1  CRITICAL DEPTH ASSUMED
CAUTION SECNO=   1400.000  PROFILE=  1  MINIMUM SPECIFIC ENERGY

WARNING SECNO=   1450.000  PROFILE=  1  CONVEYANCE CHANGE OUTSIDE ACCEPTABLE RANGE

CAUTION SECNO=   1701.000  PROFILE=  1  CRITICAL DEPTH ASSUMED
CAUTION SECNO=   1701.000  PROFILE=  1  MINIMUM SPECIFIC ENERGY

WARNING SECNO=   1800.000  PROFILE=  1  CONVEYANCE CHANGE OUTSIDE ACCEPTABLE RANGE

CAUTION SECNO=   1901.000  PROFILE=  1  CRITICAL DEPTH ASSUMED
CAUTION SECNO=   1901.000  PROFILE=  1  MINIMUM SPECIFIC ENERGY

WARNING SECNO=   2000.000  PROFILE=  1  CONVEYANCE CHANGE OUTSIDE ACCEPTABLE RANGE

CAUTION SECNO=   2001.000  PROFILE=  1  CRITICAL DEPTH ASSUMED
CAUTION SECNO=   2001.000  PROFILE=  1  MINIMUM SPECIFIC ENERGY

WARNING SECNO=   3084.000  PROFILE=  1  CONVEYANCE CHANGE OUTSIDE ACCEPTABLE RANGE

WARNING SECNO=   3165.000  PROFILE=  1  CONVEYANCE CHANGE OUTSIDE ACCEPTABLE RANGE

WARNING SECNO=   3300.000  PROFILE=  1  CONVEYANCE CHANGE OUTSIDE ACCEPTABLE RANGE

CAUTION SECNO=   3301.000  PROFILE=  1  CRITICAL DEPTH ASSUMED
CAUTION SECNO=   3301.000  PROFILE=  1  MINIMUM SPECIFIC ENERGY

WARNING SECNO=   3400.000  PROFILE=  1  CONVEYANCE CHANGE OUTSIDE ACCEPTABLE RANGE

CAUTION SECNO=   3685.000  PROFILE=  1  CRITICAL DEPTH ASSUMED
CAUTION SECNO=   3685.000  PROFILE=  1  MINIMUM SPECIFIC ENERGY
```

G. Wash 11 Water Surface

Profile - HEC 2 Analysis (FIRM 11)

HEC2 S/N: 1366000135 HMVersion: 6.52 Data File: TNTOVW11.hc2

```
*****************************************
*  HEC-2 WATER SURFACE PROFILES         *
*                                       *
*  Version   4.6.2:  May 1991           *
*                                       *
*  SUN DATE    4NOV97    TIME   11:51:39 *
*****************************************
```

```
*********************************
*  U.S. ARMY CORPS OF ENGINEERS
*  HYDROLOGIC ENGINEERING CENTER
*  609 SECOND STREET, SUITE D
*  DAVIS, CALIFORNIA 95616-4687
*         (916) 756-1104
*********************************
```

```
X     X  XXXXXXX   XXXXX             XXXXX
X     X  X       X    X           X     X
X     X  X       X                      X
XXXXXXX  XXXX     X         XXXXX   XXXXX
X     X  X       X                X
X     X  X       X    X           X
X     X  XXXXXXX   XXXXX           XXXXXXX
```

```
:::::::::::::::::::::::::::::::::::::::::::::
:::::::::::::::::::::::::::::::::::::::::::::
:::                                       :::
:::   FULL MICRO-COMPUTER IMPLEMENTATION   :::
:::                                       :::
:::::::::::::::::::::::::::::::::::::::::::::
:::::::::::::::::::::::::::::::::::::::::::::
```

==========
H A E S T A D M E T H O D S
==========

37 Brookside Road * Waterbury, Connecticut 06708 * (203) 755-1666

THIS RUN EXECUTED 4NOV97 11:51:39

```
************************************
 HEC-2 WATER SURFACE PROFILES

 Version   4.6.2;  May 1991
************************************
```

T1Tonto Verde East Extension Preliminary Drainage Report Segmental Water Surface
T2Profile Model for Wash 11 Approximately from Forest Rd. to East line of
T3 Section 31, T5N, R7E.
T4LO Run Date July 31,1997; Revised Oct. 28,1997

J1	ICHECK	INQ	NINV	IDIR	STRT	METRIC	HVINS	Q	WSEL	FQ
	0	2	0	0	0	0	0	0	1550.27	0

J2	NPROF	IPLOT	PRFVS	XSECV	XSECH	FN	ALLDC	IBW	CHNIM	ITRACE
	1	0	-1	0	0	0	-1	0	0	0

QT	1	2010								
NC	0.04	0.04	0.04	0.1	0.3					
X1	740	60	340.1	380.3	0	0	0			
GR	1551.5	0	1550.6	6.6	1551.4	16.3	1551.1	35.4	1551.2	61.8
GR	1551.2	89.6	1550.6	125	1550.5	159.5	1550.5	202.2	1550.3	232.4
GR	1549.7	245.8	1548.5	255	1547.1	258	1549.0	267.1	1547.2	271.7
GR	1548.3	288.6	1549.2	302.8	1547.9	311.4	1547.6	314.1	1548.7	325.7
GR	1548.9	340.1	1548.6	350	1547.8	360.5	1546.6	364.1	1546.8	373.6
GR	1547.4	374.2	1549.5	380.3	1549.6	405.8	1550.1	448.5	1550.6	485.9
GR	1550.3	525.6	1550.0	542.4	1550.1	572.7	1550.6	612	1551.0	656.6
GR	1551.1	691.3	1550.5	729.7	1550.3	764.4	1550.2	798.8	1549.9	819.4
GR	1549.9	826.3	1549.0	830.6	1550.4	844.1	1549.0	847.3	1548.9	854.3
GR	1549.8	861	1550.0	895.1	1549.7	926.6	1550.0	943.2	1549.4	959.1
GR	1547.9	969.9	1549.5	976.2	1549.9	989	1549.9	1002.9	1547.9	1011.2
GR	1549.8	1017.7	1550.3	1038.6	1550.3	1067	1550.5	1096.9	1550.6	1108.7
X1	1000	5	10	85.2	0	0	0			
GR	1550.0	0	1549.5	10	1545.5	30.1	1544.5	65.1	1549.5	85.2
X1	1060	5	10	65.8	60	60	60			
GR	1551.3	0	1550.8	10	1545.7	30.1	1545.7	45.1	1550.8	65.8
QT	1	950								
NC	0.04	0.04	0.04	0.1	0.3					
X1	1100	5	10	65.8	40	40	40			
GR	1552.8	0	1552.3	10	1546.2	30.4	1546.2	45.4	1552.3	65.8
X1	1200	5	10	65.8	100	100	100			
GR	1553.2	0	1552.2	10	1547.6	30.4	1547.6	45.4	1552.7	65.8

X1	1300	5	10	65.8	100	100	100			
GR	1554.6	0	1554.1	10	1549.0	30.4	1549.0	45.4	1554.1	65.8
X1	1400	5	10	65.8	100	100	100			
GR	1555.9	0	1555.4	10	1550.3	30.4	1551.3	45.4	1555.4	65.8
X1	1450	5	10	65.8	50	50	50			
GR	1556.6	0	1556.1	10	1551.0	30.4	1551.0	45.4	1556.1	65.8
X1	1500	5	10	65.0	100	100	100			
GR	1557.3	0	1556.8	10	1551.8	30.0	1551.8	45	1556.8	65
X1	1600	5	10	65.0	100	100	100			
GR	1558.8	0	1558.3	10	1553.3	30.0	1553.3	45	1558.3	65
X1	1700	5	10	65.0	100	100	100			
GR	1560.2	0	1559.7	10	1554.8	30	1554.8	45	1559.7	65
X1	1800	5	10	65	100	100	100			
GR	1561.8	0	1561.3	10	1556.3	30	1556.3	45	1561.3	65
X1	1801	5	10	75	1	1	1			
GR	1563.0	0	1562.5	10	1556.3	35	1556.3	50	1562.5	75
X1	1900	5	10	75	100	100	100			
GR	1563.5	0	1563.0	10	1556.8	35	1556.8	50	1563.0	75
X1	2000	5	10	75	100	100	100			
GR	1564.0	0	1563.5	10	1557.3	35	1557.3	50	1563.5	75
X1	2001	5	10	71.0	1	1	1			
GR	1566.0	0	1566.5	10	1560.8	33	1560.8	48	1566.5	71
X1	2100	5	10	71	99	99	99			
GR	1567.7	0	1567.2	10	1561.5	33	1561.5	48	1567.2	71
X1	2101	5	10	63.0	1	1	1			
GR	1567.7	0	1567.2	10	1562.5	29	1562.5	44	1567.2	63
X1	2200	5	10	63	99	99	99			
GR	1569.7	0	1569.2	10	1564.50	29	1564.5	44	1569.2	63
X1	2300	5	10	63.0	100	100	100			
GR	1571.7	0	1571.2	10	1566.50	29	1566.50	44	1571.2	63
X1	2400	5	10	63	100	100	100			
GR	1573.7	0	1573.2	10	1568.5	29	1568.5	44	1573.2	63

X1	2500	5	10	63	100	100	100			
GR	1575.7	0	1575.2	10	1570.5	29	1570.5	44	1575.2	63
X1	2550	5	10	63	50	50	50			
GR	1576.7	0	1576.2	10	1571.5	29	1571.5	44	1576.2	63
X1	2600	5	10	75	50	50	50			
GR	1578.5	0	1578.0	10	1571.7	35	1571.7	50	1578.0	75
X1	2700	5	10	75.0	100	100	100			
GR	1579.0	0	1578.5	10	1572.2	35	1572.2	50	1578.5	75
X1	2800	5	10	75	100	100	100			
GR	1579.5	0	1579.0	10	1572.7	35	1572.7	50	1579	75
X1	2900	5	10	75	100	100	100			
GR	1580	0	1579.5	10	1573.2	35	1573.2	50	1579.5	75
X1	2901	5	10	67	1	1	1			
GR	1581	0	1580.5	10	1575.2	31	1579.2	46.0	1580.5	67
X1	3000	5	10	67	99	99	99			
GR	1582.2	0	1581.7	10	1576.4	31	1576.4	46	1581.7	67
X1	3042	5	10	72.4	42	42	42			
GR	1585.1	0	1584.8	10	1576.9	16.2	1576.9	66.2	1584.8	72.4
X1	3073	5	10	42	31	31	31			
GR	1583	0	1582.5	10	1577.3	11	1577.3	41	1582.5	42
X1	3078	14	10	52	5	5	5			
X2				1581.4	1584.4					
GR	1584.4	0	1584.3	10	1577.4	10	1577.4	20	1581.4	20
GR	1581.4	21	1577.4	21	1577.4	31	1581.4	31	1581.4	32
GR	1577.4	32	1577.4	42	1584.3	42	1584.4	52		
X1	3155	14	10	52	77	77	77			
X2				1582.2	1585.2					
GR	1585.2	0	1585.2	10	1578.2	10	1578.2	20	1582.2	20
GR	1582.2	21	1578.2	21	1578.2	31	1582.2	31	1582.2	32
GR	1578.2	32	1578.2	42	1585.2	42	1585.2	52		
X1	3160	5	10	42	5	5	5			
GR	1584.8	0	1584.3	10	1578.5	11	1578.5	41	1584.3	42
X1	3175	5	10	72	15	15	15			
GR	1585.0	0	1584.5	10	1578.7	16	1578.7	66	1584.5	72

X1	3200	5	10	67.0	25	25	25			
GR	1584.8	0	1584.3	10	1578.8	31	1578.8	46	1584.3	67
X1	3201	5	10	67	1	1	1			
GR	1584.8	0	1584.3	10	1580.8	16.6	1580.8	66.6	1584.3	73.2
X1	3300	5	10	67	99	99	99			
GR	1586.5	0	1586.0	10	1582.7	31	1582.7	46	1586.0	67
X1	3400	5	10	67	100	100	100			
GR	1588.4	0	1587.9	10	1584.6	16.6	1584.6	66.6	1587.9	73.2
X1	3490	9	26.9	97	90	90	90			
GR	1590.5	0	1590.5	26.9	1590.2	28.8	1585.7	46.2	1585.2	64.6
GR	1586	80.2	1589.9	93.7	1590.7	97	1591.9	125.8		

SECNO	DEPTH	CWSEL	CRIWS	WSELK	EG	HV	HL	OLOSS	L-BANK ELEV
Q	QLOB	QCH	QROB	ALOB	ACH	AROB	VOL	TWA	R-BANK ELEV
TIME	VLOB	VCH	VROB	XNL	XNCH	XNR	WTN	ELMIN	SSTA
SLOPE	XLOBL	XLCH	XLOBR	ITRIAL	IDC	ICONT	CORAR	TOPWID	ENDST

*PROF 1

CRITICAL DEPTH TO BE CALCULATED AT ALL CROSS SECTIONS

CCHV= 0.100 CEHV= 0.300
*SECNO 740.000

3265 DIVIDED FLOW

740.000	3.67	1550.27	1550.20	1550.27	1550.64	0.37	0.00	0.00	1548.90
2010.0	947.2	550.8	512.0	183.5	94.8	190.6	0.0	0.0	1549.50
0.00	5.16	5.81	2.69	0.040	0.040	0.040	0.000	1546.60	233.07
0.008020	0.	0.	0.	0	5	0	0.00	548.01	1037.34

*SECNO 1000.000
3280 CROSS SECTION 1000.00 EXTENDED 0.49 FEET

1000.000	5.49	1549.99	1548.91	0.00	1550.76	0.77	0.00	0.12	1549.50
2010.0	2.8	2007.2	0.0	2.4	285.1	0.0	0.0	0.0	1549.50
0.00	1.15	7.04	0.00	0.040	0.040	0.000	0.000	1544.50	0.13
0.006241	0.	0.	0.	2	11	0	0.00	85.07	85.20

*SECNO 1060.000
3280 CROSS SECTION 1060.00 EXTENDED 0.20 FEET

3301 HV CHANGED MORE THAN HVINS

7185 MINIMUM SPECIFIC ENERGY
3720 CRITICAL DEPTH ASSUMED

1060.000	5.30	1551.00	1551.00	0.00	1552.71	1.71	0.57	0.28	1550.80
2010.0	0.4	2009.6	0.0	0.4	191.6	0.0	0.3	0.1	1550.80
0.00	1.00	10.49	0.00	0.040	0.040	0.000	0.000	1545.70	6.04
0.015929	60.	60.	60.	0	8	0	0.00	59.76	65.80

CCHV= 0.100 CEHV= 0.300
*SECNO 1100.000
3280 CROSS SECTION 1100.00 EXTENDED 0.54 FEET

SECNO	DEPTH	CWSEL	CRIWS	WSELK	EG	HV	HL	OLOSS	L-BANK ELEV
Q	QLOB	QCH	QROB	ALOB	ACH	AROB	VOL	TWA	R-BANK ELEV
TIME	VLOB	VCH	VROB	XNL	XNCH	XNR	WTN	ELMIN	SSTA
SLOPE	XLOBL	XLCH	XLOBR	ITRIAL	IDC	ICONT	CORAR	TOPWID	ENDST

3301 HV CHANGED MORE THAN HVINS

3302 WARNING: CONVEYANCE CHANGE OUTSIDE OF ACCEPTABLE RANGE. KRATIO = 1.51

1100.000	6.64	1552.84	1549.95	0.00	1553.07	0.23	0.22	0.15	1552.30
950.0	1.9	948.1	0.0	2.9	246.3	0.0	0.5	0.2	1552.30
0.00	0.65	3.85	0.00	0.040	0.040	0.000	0.000	1546.20	0.00
0.001567	40.	40.	40.	3	19	0	0.00	65.80	65.80

*SECNO 1200.000
3280 CROSS SECTION 1200.00 EXTENDED 0.28 FEET

1200.000	5.38	1552.98	1551.18	0.00	1553.32	0.34	0.21	0.03	1552.20
950.0	3.3	946.7	0.0	3.1	201.4	0.0	1.1	0.3	1552.70
0.01	1.08	4.70	0.00	0.040	0.040	0.000	0.000	1547.60	2.17
0.002989	100.	100.	100.	2	11	0	0.00	63.63	65.80

*SECNO 1300.000

3302 WARNING: CONVEYANCE CHANGE OUTSIDE OF ACCEPTABLE RANGE. KRATIO = 0.54

1300.000	4.15	1553.15	1552.62	0.00	1553.96	0.81	0.50	0.14	1554.10
950.0	0.0	950.0	0.0	0.0	131.2	0.0	1.4	0.4	1554.10
0.01	0.00	7.24	0.00	0.000	0.040	0.000	0.000	1549.00	13.80
0.010286	100.	100.	100.	2	14	0	0.00	48.21	62.00

*SECNO 1400.000
7185 MINIMUM SPECIFIC ENERGY
3720 CRITICAL DEPTH ASSUMED

1400.000	4.04	1554.34	1554.34	0.00	1555.53	1.18	1.34	0.11	1555.40
950.0	0.0	950.0	0.0	0.0	109.0	0.0	1.7	0.5	1555.40
0.02	0.00	8.72	0.00	0.000	0.040	0.000	0.000	1550.30	14.22
0.018038	100.	100.	100.	0	8	0	0.00	46.33	60.55

*SECNO 1450.000

SECNO	DEPTH	CWSEL	CRIWS	WSELK	EG	HV	HL	OLOSS	L-BANK ELEV
Q	QLOB	QCH	QROB	ALOB	ACH	AROB	VOL	TWA	R-BANK ELEV
TIME	VLOB	VCH	VROB	XNL	XNCH	XNR	WTN	ELMIN	SSTA
SLOPE	XLOBL	XLCH	XLOBR	ITRIAL	IDC	ICONT	CORAR	TOPWID	ENDST

3301 HV CHANGED MORE THAN HVINS

3302 WARNING: CONVEYANCE CHANGE OUTSIDE OF ACCEPTABLE RANGE. KRATIO = 1.57

1450.000	4.49	1555.49	1554.62	0.00	1556.13	0.64	0.55	0.05	1556.10
950.0	0.0	950.0	0.0	0.0	148.3	0.0	1.9	0.6	1556.10
0.02	0.00	6.40	0.00	0.000	0.040	0.000	0.000	1551.00	12.41
0.007362	50.	50.	50.	2	11	0	0.00	50.97	63.39

*SECNO 1500.000

1500.000	4.43	1556.23	1555.42	0.00	1556.89	0.67	0.76	0.01	1556.80
950.0	0.0	950.0	0.0	0.0	145.1	0.0	2.2	0.7	1556.80
0.02	0.00	6.55	0.00	0.000	0.040	0.000	0.000	1551.80	12.27
0.007818	100.	100.	100.	2	15	0	0.00	50.46	62.73

*SECNO 1600.000

3302 WARNING: CONVEYANCE CHANGE OUTSIDE OF ACCEPTABLE RANGE. KRATIO = 0.68

1600.000	3.68	1556.98	1556.92	0.00	1558.15	1.16	1.10	0.15	1558.30
950.0	0.0	950.0	0.0	0.0	109.7	0.0	2.5	0.8	1558.30
0.03	0.00	8.66	0.00	0.000	0.040	0.000	0.000	1553.30	15.25
0.016751	100.	100.	100.	0	15	0	0.00	44.50	59.75

*SECNO 1700.000

1700.000	3.88	1558.68	1558.41	0.00	1559.66	0.98	1.49	0.02	1559.70
950.0	0.0	950.0	0.0	0.0	119.6	0.0	2.8	0.9	1559.70
0.03	0.00	7.94	0.00	0.000	0.040	0.000	0.000	1554.80	14.16
0.013369	100.	100.	100.	2	8	0	0.00	46.67	60.84

*SECNO 1800.000

1800.000	3.74	1560.04	1559.92	0.00	1561.15	1.12	1.45	0.04	1561.30
950.0	0.0	950.0	0.0	0.0	111.9	0.0	3.0	1.0	1561.30
0.03	0.00	8.49	0.00	0.000	0.040	0.000	0.000	1556.30	15.05
0.015875	100.	100.	100.	2	11	0	0.00	44.89	59.95

```
    SECNO     DEPTH     CWSEL     CRIWS     WSELK     EG        HV        HL        OLOSS     L-BANK ELEV
    Q         QLOB      QCH       QROB      ALOB      ACH       AROB      VOL       TWA       R-BANK ELEV
    TIME      VLOB      VCH       VROB      XNL       XNCH      XNR       WTN       ELMIN     SSTA
    SLOPE     XLOBL     XLCH      XLOBR     ITRIAL    IDC       ICONT     CORAR     TOPWID    ENDST

*SECNO 1801.000
  1801.000      3.92   1560.22   1559.92      0.00   1561.18      0.97      0.01      0.02   1562.50
     950.0       0.0     950.0       0.0       0.0     120.3       0.0       3.0       1.0   1562.50
      0.03      0.00      7.90      0.00     0.000     0.040     0.000     0.000   1556.30     19.24
  0.013091        1.        1.        1.         4         8         0      0.00     46.53     65.76

*SECNO 1900.000

3302 WARNING:  CONVEYANCE CHANGE OUTSIDE OF ACCEPTABLE RANGE.  KRATIO =  1.49

  1900.000      4.73   1561.53   1560.41      0.00   1562.07      0.54      0.84      0.04   1563.00
     950.0       0.0     950.0       0.0       0.0     161.3       0.0       3.3       1.1   1563.00
      0.04      0.00      5.89      0.00     0.000     0.040     0.000     0.000   1556.80     15.92
  0.005889      100.      100.      100.         2        11         0      0.00     53.17     69.08

*SECNO 2000.000
  2000.000      4.83   1562.13   1560.91      0.00   1562.64      0.50      0.56      0.00   1563.50
     950.0       0.0     950.0       0.0       0.0     167.0       0.0       3.7       1.3   1563.50
      0.04      0.00      5.69      0.00     0.000     0.040     0.000     0.000   1557.30     15.49
  0.005361      100.      100.      100.         2        15         0      0.00     54.02     69.51

*SECNO 2001.000

3301 HV CHANGED MORE THAN HVINS

7185 MINIMUM SPECIFIC ENERGY
3720 CRITICAL DEPTH ASSUMED
  2001.000      3.62   1564.42   1564.42      0.00   1565.64      1.22      0.01      0.22   1566.50
     950.0       0.0     950.0       0.0       0.0     107.0       0.0       3.7       1.3   1566.50
      0.04      0.00      8.88      0.00     0.000     0.040     0.000     0.000   1560.80     18.41
  0.018031        1.        1.        1.         0        15         0      0.00     44.18     62.59

*SECNO 2100.000

3301 HV CHANGED MORE THAN HVINS

3302 WARNING:  CONVEYANCE CHANGE OUTSIDE OF ACCEPTABLE RANGE.  KRATIO =  1.67
```

SECNO	DEPTH	CWSEL	CRIWS	WSELK	EG	HV	HL	OLOSS	L-BANK ELEV
Q	QLOB	QCH	QROB	ALOB	ACH	AROB	VOL	TWA	R-BANK ELEV
TIME	VLOB	VCH	VROB	XNL	XNCH	XNR	WTN	ELMIN	SSTA
SLOPE	XLOBL	XLCH	XLOBR	ITRIAL	IDC	ICONT	CORAR	TOPWID	ENDST
2100.000	4.63	1566.13	1565.11	0.00	1566.71	0.58	1.00	0.06	1567.20
950.0	0.0	950.0	0.0	0.0	155.9	0.0	4.0	1.4	1567.20
0.05	0.00	6.09	0.00	0.000	0.040	0.000	0.000	1561.50	14.32
0.006460	99.	99.	99.	2	5	0	0.00	52.36	66.68

*SECNO 2101.000

3301 HV CHANGED MORE THAN HVINS

7185 MINIMUM SPECIFIC ENERGY
3720 CRITICAL DEPTH ASSUMED

2101.000	3.61	1566.11	1566.11	0.00	1567.34	1.23	0.01	0.20	1567.20
950.0	0.0	950.0	0.0	0.0	106.8	0.0	4.0	1.4	1567.20
0.05	0.00	8.90	0.00	0.000	0.040	0.000	0.000	1562.50	14.41
0.018146	1.	1.	1.	0	15	0	0.00	44.18	58.59

*SECNO 2200.000
7185 MINIMUM SPECIFIC ENERGY
3720 CRITICAL DEPTH ASSUMED

2200.000	3.61	1568.11	1568.11	0.00	1569.34	1.22	1.79	0.00	1569.20
950.0	0.0	950.0	0.0	0.0	107.0	0.0	4.3	1.5	1569.20
0.05	0.00	8.88	0.00	0.000	0.040	0.000	0.000	1564.50	14.39
0.018034	99.	99.	99.	0	5	0	0.00	44.22	58.61

*SECNO 2300.000
7185 MINIMUM SPECIFIC ENERGY
3720 CRITICAL DEPTH ASSUMED

2300.000	3.61	1570.11	1570.11	0.00	1571.34	1.22	1.80	0.00	1571.20
950.0	0.0	950.0	0.0	0.0	107.0	0.0	4.5	1.6	1571.20
0.05	0.00	8.88	0.00	0.000	0.040	0.000	0.000	1566.50	14.39
0.018058	100.	100.	100.	0	5	0	0.00	44.21	58.61

*SECNO 2400.000
7185 MINIMUM SPECIFIC ENERGY
3720 CRITICAL DEPTH ASSUMED

2400.000	3.61	1572.11	1572.11	0.00	1573.34	1.23	1.81	0.00	1573.20
950.0	0.0	950.0	0.0	0.0	106.9	0.0	4.8	1.7	1573.20
0.06	0.00	8.88	0.00	0.000	0.040	0.000	0.000	1568.50	14.40
0.018073	100.	100.	100.	0	5	0	0.00	44.21	58.60

SECNO	DEPTH	CWSEL	CRIWS	WSELK	EG	HV	HL	QLOSS	L-BANK ELEV
Q	QLOB	QCH	QROB	ALOB	ACH	AROB	VOL	TWA	R-BANK ELEV
TIME	VLOB	VCH	VROB	XNL	XNCH	XNR	WTN	ELMIN	SSTA
SLOPE	XLOBL	XLCH	XLOBR	ITRIAL	IDC	ICONT	CORAR	TOPWID	ENDST

*SECNO 2500.000
7185 MINIMUM SPECIFIC ENERGY
3720 CRITICAL DEPTH ASSUMED

2500.000	3.61	1574.11	1574.11	0.00	1575.34	1.23	1.81	0.00	1575.20
950.0	0.0	950.0	0.0	0.0	106.9	0.0	5.0	1.8	1575.20
0.06	0.00	8.88	0.00	0.000	0.040	0.000	0.000	1570.50	14.40
0.018073	100.	100.	100.	0	5	0	0.00	44.21	58.60

*SECNO 2550.000
7185 MINIMUM SPECIFIC ENERGY
3720 CRITICAL DEPTH ASSUMED

2550.000	3.61	1575.11	1575.11	0.00	1576.34	1.23	0.90	0.00	1576.20
950.0	0.0	950.0	0.0	0.0	106.9	0.0	5.1	1.8	1576.20
0.06	0.00	8.88	0.00	0.000	0.040	0.000	0.000	1571.50	14.40
0.018073	50.	50.	50.	0	5	0	0.00	44.21	58.60

*SECNO 2600.000

3301 HV CHANGED MORE THAN HVINS

3302 WARNING: CONVEYANCE CHANGE OUTSIDE OF ACCEPTABLE RANGE. KRATIO = 1.66

2600.000	4.63	1576.33	1575.33	0.00	1576.91	0.59	0.51	0.06	1578.00
950.0	0.0	950.0	0.0	0.0	154.7	0.0	5.3	1.9	1578.00
0.06	0.00	6.14	0.00	0.000	0.040	0.000	0.000	1571.70	16.61
0.006537	50.	50.	50.	2	5	0	0.00	51.77	68.39

*SECNO 2700.000

2700.000	4.80	1577.00	1575.82	0.00	1577.52	0.53	0.61	0.01	1578.50
950.0	0.0	950.0	0.0	0.0	163.4	0.0	5.6	2.0	1578.50
0.07	0.00	5.81	0.00	0.000	0.040	0.000	0.000	1572.20	15.96
0.005637	100.	100.	100.	3	15	0	0.00	53.09	69.04

*SECNO 2800.000

2800.000	4.87	1577.57	1576.33	0.00	1578.07	0.50	0.55	0.00	1579.00
950.0	0.0	950.0	0.0	0.0	167.2	0.0	6.0	2.1	1579.00
0.07	0.00	5.68	0.00	0.000	0.040	0.000	0.000	1572.70	15.67
0.005293	100.	100.	100.	2	15	0	0.00	53.66	69.33

SECNO	DEPTH	CWSEL	CRIWS	WSELK	EG	HV	HL	OLOSS	L-BANK ELEV
Q	QLOB	QCH	QROB	ALOB	ACH	AROB	VOL	TWA	R-BANK ELEV
TIME	VLOB	VCH	VROB	XNL	XNCH	XNR	WTN	ELMIN	SSTA
SLOPE	XLOBL	XLCH	XLOBR	ITRIAL	IDC	ICONT	CORAR	TOPWID	ENDST

*SECNO 2900.000

2900.000	4.91	1578.11	1576.83	0.00	1578.59	0.49	0.52	0.00	1579.50
950.0	0.0	950.0	0.0	0.0	169.4	0.0	6.4	2.3	1579.50
0.08	0.00	5.61	0.00	0.000	0.040	0.000	0.000	1573.20	15.51
0.005109	100.	100.	100.	1	15	0	0.00	53.98	69.49

*SECNO 2901.000

3301 HV CHANGED MORE THAN HVINS

7185 MINIMUM SPECIFIC ENERGY
3720 CRITICAL DEPTH ASSUMED

2901.000	5.22	1580.42	1580.42	0.00	1581.49	1.07	0.01	0.18	1580.50
950.0	0.0	950.0	0.0	0.0	114.2	0.0	6.4	2.3	1580.50
0.08	0.00	8.32	0.00	0.000	0.040	0.000	0.000	1575.20	10.32
0.019648	1.	1.	1.	0	8	0	0.00	55.35	65.68

*SECNO 3000.000
3280 CROSS SECTION 3000.00 EXTENDED 0.15 FEET

3301 HV CHANGED MORE THAN HVINS

3302 WARNING: CONVEYANCE CHANGE OUTSIDE OF ACCEPTABLE RANGE. KRATIO = 2.47

3000.000	5.46	1581.86	1580.02	0.00	1582.21	0.35	0.64	0.07	1581.70
950.0	0.1	949.9	0.0	0.2	199.3	0.0	6.8	2.4	1581.70
0.08	0.37	4.77	0.00	0.040	0.040	0.000	0.000	1576.40	7.02
0.003209	99.	99.	99.	2	19	0	0.00	59.98	67.00

*SECNO 3042.000

3302 WARNING: CONVEYANCE CHANGE OUTSIDE OF ACCEPTABLE RANGE. KRATIO = 1.70

3042.000	5.23	1582.13	1579.10	0.00	1582.30	0.18	0.07	0.02	1584.80
950.0	0.0	950.0	0.0	0.0	282.7	0.0	7.0	2.5	1584.80
0.09	0.00	3.36	0.00	0.000	0.040	0.000	0.000	1576.90	12.10
0.001112	42.	42.	42.	2	18	0	0.00	58.20	70.30

SECNO	DEPTH	CWSEL	CRIWS	WSELK	EG	HV	HL	OLOSS	L-BANK ELEV
Q	QLOB	QCH	QROB	ALOB	ACH	AROB	VOL	TWA	R-BANK ELEV
TIME	VLOB	VCH	VROB	XNL	XNCH	XNR	WTN	ELMIN	SSTA
SLOPE	XLOBL	XLCH	XLOBR	ITRIAL	IDC	ICONT	CORAR	TOPWID	ENDST

*SECNO 3073.000

3301 HV CHANGED MORE THAN HVINS

3302 WARNING: CONVEYANCE CHANGE OUTSIDE OF ACCEPTABLE RANGE. KRATIO = 0.42

3073.000	4.51	1581.81	1580.41	0.00	1582.53	0.72	0.07	0.16	1582.50
950.0	0.0	950.0	0.0	0.0	139.4	0.0	7.2	2.5	1582.50
0.09	0.00	6.81	0.00	0.000	0.040	0.000	0.000	1577.30	10.13
0.006194	31.	31.	31.	2	14	0	0.00	31.74	41.87

*SECNO 3078.000

3302 WARNING: CONVEYANCE CHANGE OUTSIDE OF ACCEPTABLE RANGE. KRATIO = 0.47

3370 NORMAL BRIDGE. NRD= 0 MIN ELTRD= 1584.40 MAX ELLC= 1581.40

3078.000	4.29	1581.69	1580.54	0.00	1582.67	0.97	0.06	0.08	1584.30
950.0	0.0	950.0	0.0	0.0	120.0	0.0	7.2	2.5	1584.40
0.09	0.00	7.92	0.00	0.000	0.040	0.000	0.000	1577.40	10.00
0.028224	5.	5.	5.	2	12	0	-9.37	32.00	42.00

*SECNO 3155.000

3370 NORMAL BRIDGE. NRD= 0 MIN ELTRD= 1585.20 MAX ELLC= 1582.20

3155.000	5.67	1583.87	1581.34	0.00	1584.84	0.97	2.17	0.00	1585.20
950.0	0.0	950.0	0.0	0.0	120.0	0.0	7.4	2.5	1585.20
0.09	0.00	7.92	0.00	0.000	0.040	0.000	0.000	1579.20	10.00
0.028224	77.	77.	77.	2	12	0	-53.32	32.00	42.00

*SECNO 3160.000
3280 CROSS SECTION 3160.00 EXTENDED 0.23 FEET

3301 HV CHANGED MORE THAN HVINS

SECNO	DEPTH	CWSEL	CRIWS	WSELK	EG	HV	HL	OLOSS	L-BANK ELEV
Q	QLOB	QCH	QROB	ALOB	ACH	AROB	VOL	TWA	R-BANK ELEV
TIME	VLOB	VCH	VROB	XNL	XNCH	XNR	WTN	ELMIN	SSTA
SLOPE	XLOBL	XLCH	XLOBR	ITRIAL	IDC	ICONT	CORAR	TOPWID	ENDST

3302 WARNING: CONVEYANCE CHANGE OUTSIDE OF ACCEPTABLE RANGE. KRATIO = 3.33

3160.000	6.03	1584.53	1581.62	0.00	1584.93	0.40	0.03	0.06	1584.30
950.0	0.2	949.8	0.0	0.5	187.3	0.0	7.4	2.5	1584.30
0.09	0.45	5.07	0.00	0.040	0.040	0.000	0.000	1578.50	5.32
0.002539	5.	5.	5.	2	11	0	0.00	36.68	42.00

*SECNO 3175.000
3280 CROSS SECTION 3175.00 EXTENDED 0.35 FEET

3302 WARNING: CONVEYANCE CHANGE OUTSIDE OF ACCEPTABLE RANGE. KRATIO = 2.04

3175.000	6.16	1584.85	1580.90	0.00	1584.97	0.12	0.02	0.03	1584.50
950.0	0.4	949.6	0.0	1.3	346.8	0.0	7.5	2.6	1584.50
0.09	0.29	2.74	0.00	0.040	0.040	0.000	0.000	1578.70	2.90
0.000607	15.	15.	15.	2	18	0	0.00	69.10	72.00

*SECNO 3200.000
3280 CROSS SECTION 3200.00 EXTENDED 0.47 FEET

3302 WARNING: CONVEYANCE CHANGE OUTSIDE OF ACCEPTABLE RANGE. KRATIO = 0.53

3200.000	5.97	1584.77	1582.45	0.00	1585.05	0.28	0.03	0.05	1584.30
950.0	1.4	948.6	0.0	2.2	224.7	0.0	7.7	2.6	1584.30
0.10	0.66	4.22	0.00	0.040	0.040	0.000	0.000	1578.60	0.62
0.002164	25.	25.	25.	2	14	0	0.00	66.38	67.00

*SECNO 3201.000
3280 CROSS SECTION 3201.00 EXTENDED 0.47 FEET

3201.000	3.97	1584.77	1582.98	0.00	1585.05	0.28	0.00	0.00	1584.30
950.0	1.5	909.3	39.2	2.2	213.2	14.7	7.7	2.6	1580.80
0.10	0.68	4.27	2.68	0.040	0.040	0.040	0.000	1580.80	0.60
0.002296	1.	1.	1.	0	18	0	0.00	72.60	73.20

SECNO	DEPTH	CWSEL	CRIWS	WSELK	ES	HV	HL	OLOSS	L-BANK ELEV
Q	QLOB	QCH	QROB	ALOB	ACH	AROB	VOL	TWA	R-BANK ELEV
TIME	VLOB	VCH	VROB	XNL	XNCH	XNR	WTN	ELMIN	SSTA
SLOPE	XLOBL	XLCH	XLOBR	ITRIAL	IDC	ICONT	CORAR	TOPWID	ENDST

*SECNO 3300.000

3301 HV CHANGED MORE THAN HVINS

7185 MINIMUM SPECIFIC ENERGY
3720 CRITICAL DEPTH ASSUMED

3300.000	3.25	1585.95	1585.95	0.00	1586.99	1.05	0.50	0.23	1586.00
950.0	0.0	950.0	0.0	0.0	115.8	0.0	8.1	2.8	1586.00
0.10	0.00	8.21	0.00	0.000	0.040	0.000	0.000	1582.70	10.34
0.018893	99.	99.	99.	0	15	0	0.00	56.32	66.66

*SECNO 3400.000

3301 HV CHANGED MORE THAN HVINS

3302 WARNING: CONVEYANCE CHANGE OUTSIDE OF ACCEPTABLE RANGE. KRATIO = 1.70

3400.000	2.95	1587.55	1586.77	0.00	1588.08	0.53	1.03	0.05	1587.90
950.0	0.0	918.7	31.3	0.0	156.0	8.7	6.4	2.9	1584.60
0.10	0.00	5.89	3.60	0.000	0.040	0.040	0.000	1584.60	10.71
0.006499	100.	100.	100.	2	14	0	0.00	61.79	72.49

*SECNO 3490.000

3301 HV CHANGED MORE THAN HVINS

7185 MINIMUM SPECIFIC ENERGY
3720 CRITICAL DEPTH ASSUMED

3490.000	3.02	1588.22	1588.22	0.00	1589.32	1.11	0.92	0.17	1590.50
950.0	0.0	950.0	0.0	0.0	112.4	0.0	8.7	3.0	1590.70
0.11	0.00	8.45	0.00	0.000	0.040	0.000	0.000	1585.20	36.47
0.018544	90.	90.	90.	0	8	0	0.00	51.39	87.87

THIS RUN EXECUTED 4NOV97 11:51:39

****
HEC-2 WATER SURFACE PROFILES

Version 4.6.2; May 1991
****

NOTE- ASTERISK (*) AT LEFT OF CROSS-SECTION NUMBER INDICATES MESSAGE IN SUMMARY OF ERRORS LIST

Section 31. T5N. R7E.

SUMMARY PRINTOUT TABLE 150

	SECNO	XLCH	ELTRD	ELLC	ELMIN	Q	CWSEL	CRIWS	EG	10*KS	VCH	AREA	.01K
	740.000	0.00	0.00	0.00	1546.60	2010.00	1550.27	1550.20	1550.64	80.20	5.81	468.90	224.44
	1000.000	0.00	0.00	0.00	1544.50	2010.00	1549.99	1548.91	1550.76	62.41	7.04	287.50	254.43
*	1060.000	60.00	0.00	0.00	1545.70	2010.00	1551.00	1551.00	1552.71	159.29	10.49	191.97	159.26
*	1100.000	40.00	0.00	0.00	1546.20	950.00	1552.84	1549.95	1553.07	15.67	3.85	249.19	240.02
	1200.000	100.00	0.00	0.00	1547.60	950.00	1552.98	1551.18	1553.32	29.89	4.70	204.48	173.75
*	1300.000	100.00	0.00	0.00	1549.00	950.00	1553.15	1552.62	1553.96	102.86	7.24	131.18	93.67
*	1400.000	100.00	0.00	0.00	1550.30	950.00	1554.34	1554.24	1555.52	180.38	8.72	108.95	70.73
*	1450.000	50.00	0.00	0.00	1551.00	950.00	1555.49	1554.62	1556.13	73.62	6.40	148.33	110.72
	1500.000	100.00	0.00	0.00	1551.80	950.00	1556.23	1555.42	1556.89	78.18	6.55	145.09	107.45
*	1600.000	100.00	0.00	0.00	1553.30	950.00	1556.98	1556.92	1558.15	167.51	8.66	109.72	73.40
	1700.000	100.00	0.00	0.00	1554.80	950.00	1558.68	1558.41	1559.66	133.69	7.94	119.65	82.16
	1800.000	100.00	0.00	0.00	1556.30	950.00	1560.04	1559.92	1561.15	158.75	8.49	111.90	75.40
	1801.000	1.00	0.00	0.00	1556.30	950.00	1560.22	1559.92	1561.18	130.91	7.90	120.27	83.03
*	1900.000	100.00	0.00	0.00	1556.80	950.00	1561.53	1560.41	1562.07	58.89	5.89	161.30	123.80
	2000.000	100.00	0.00	0.00	1557.30	950.00	1562.13	1560.91	1562.64	53.61	5.69	166.98	129.75
*	2001.000	1.00	0.00	0.00	1560.80	950.00	1564.42	1564.42	1565.64	180.31	8.88	107.00	70.75
*	2100.000	99.00	0.00	0.00	1561.50	950.00	1566.13	1565.11	1566.71	64.60	6.09	155.92	118.20

	SECNO	XLCH	ELTRD	ELLC	ELMIN	Q	CWSEL	CRIWS	EG	10*KS	VCH	AREA	.01K
*	2101.000	1.00	0.00	0.00	1562.50	950.00	1566.11	1566.11	1567.34	181.46	8.90	106.79	70.52
*	2200.000	99.00	0.00	0.00	1564.50	950.00	1568.11	1568.11	1569.34	180.34	8.88	107.03	70.74
*	2300.000	100.00	0.00	0.00	1566.50	950.00	1570.11	1570.11	1571.34	180.58	8.88	106.98	70.69
*	2400.000	100.00	0.00	0.00	1568.50	950.00	1572.11	1572.11	1573.34	180.73	8.88	106.95	70.66
*	2500.000	100.00	0.00	0.00	1570.50	950.00	1574.11	1574.11	1575.34	180.73	8.88	106.95	70.66
*	2550.000	50.00	0.00	0.00	1571.50	950.00	1575.11	1575.11	1576.34	180.73	8.88	106.95	70.66
*	2600.000	50.00	0.00	0.00	1571.70	950.00	1576.33	1575.33	1576.91	65.37	6.14	154.71	117.50
	2700.000	100.00	0.00	0.00	1572.20	950.00	1577.00	1575.82	1577.52	56.37	5.81	163.38	126.54
	2800.000	100.00	0.00	0.00	1572.70	950.00	1577.57	1576.33	1578.07	52.93	5.68	167.21	130.58
	2900.000	100.00	0.00	0.00	1573.20	950.00	1578.11	1576.83	1578.59	51.09	5.61	169.40	132.91
*	2901.000	1.00	0.00	0.00	1575.20	950.00	1580.42	1580.42	1581.49	196.48	8.32	114.20	67.77
*	3000.000	99.00	0.00	0.00	1576.40	950.00	1581.86	1580.02	1582.21	32.09	4.77	199.51	167.70
*	3042.000	42.00	0.00	0.00	1576.90	950.00	1582.13	1579.10	1582.30	11.12	3.36	282.75	284.95
*	3073.000	31.00	0.00	0.00	1577.30	950.00	1581.81	1580.41	1582.53	61.94	6.81	139.44	120.71
*	3078.000	5.00	1584.40	1581.40	1577.40	950.00	1581.69	1580.54	1582.67	282.24	7.92	120.00	56.55
	3155.000	77.00	1585.20	1582.20	1579.20	950.00	1583.87	1581.34	1584.84	282.24	7.92	120.00	56.55
*	3160.000	5.00	0.00	0.00	1579.50	950.00	1584.53	1581.62	1584.93	25.39	5.07	187.84	188.54
*	3175.000	15.00	0.00	0.00	1579.70	950.00	1584.65	1580.90	1584.97	6.07	2.74	348.07	385.53
*	3200.000	25.00	0.00	0.00	1579.80	950.00	1584.77	1582.45	1585.05	21.64	4.22	226.95	204.23
	3201.000	1.00	0.00	0.00	1580.80	950.00	1584.77	1582.98	1585.05	22.96	4.27	230.03	198.26
*	3300.000	99.00	0.00	0.00	1582.70	950.00	1585.95	1585.95	1586.99	188.93	8.21	115.77	69.12
*	3400.000	100.00	0.00	0.00	1584.60	950.00	1587.55	1586.77	1588.08	64.99	5.89	164.70	117.84
*	3490.000	90.00	0.00	0.00	1585.20	950.00	1588.22	1588.22	1589.32	185.44	8.45	112.40	69.76

Section 31, T5N, R7E,

SUMMARY PRINTOUT TABLE 150

	SECNO	Q	CWSEL	DIFWSP	DIFWSX	DIFKWS	TOPWID	XLCH
	740.000	2010.00	1550.27	0.00	0.00	0.00	548.01	0.00
	1000.000	2010.00	1549.99	0.00	-0.28	0.00	85.07	0.00
*	1060.000	2010.00	1551.00	0.00	1.01	0.00	59.76	60.00
*	1100.000	950.00	1552.84	0.00	1.85	0.00	65.80	40.00
	1200.000	950.00	1552.98	0.00	0.13	0.00	63.63	100.00
*	1300.000	950.00	1553.15	0.00	0.17	0.00	48.21	100.00
*	1400.000	950.00	1554.34	0.00	1.19	0.00	46.33	100.00
*	1450.000	950.00	1555.49	0.00	1.15	0.00	50.97	50.00
	1500.000	950.00	1556.23	0.00	0.74	0.00	50.46	100.00
*	1600.000	950.00	1556.98	0.00	0.76	0.00	44.50	100.00
	1700.000	950.00	1558.68	0.00	1.70	0.00	46.67	100.00
	1800.000	950.00	1560.04	0.00	1.36	0.00	44.89	100.00
	1801.000	950.00	1560.22	0.00	0.18	0.00	46.53	1.00
*	1900.000	950.00	1561.53	0.00	1.32	0.00	53.17	100.00
	2000.000	950.00	1562.13	0.00	0.60	0.00	54.02	100.00
*	2001.000	950.00	1564.42	0.00	2.28	0.00	44.18	1.00
*	2100.000	950.00	1566.13	0.00	1.71	0.00	52.36	99.00
*	2101.000	950.00	1566.11	0.00	-0.02	0.00	44.18	1.00
*	2200.000	950.00	1568.11	0.00	2.01	0.00	44.22	99.00
*	2300.000	950.00	1570.11	0.00	2.00	0.00	44.21	100.00
*	2400.000	950.00	1572.11	0.00	2.00	0.00	44.21	100.00
*	2500.000	950.00	1574.11	0.00	2.00	0.00	44.21	100.00
*	2550.000	950.00	1575.11	0.00	1.00	0.00	44.21	50.00
*	2600.000	950.00	1576.33	0.00	1.21	0.00	51.77	50.00

	SECNO	Q	CWSEL	DIFWSP	DIFWSX	DIFKWS	TOPWID	XLCH
	2700.000	950.00	1577.00	0.00	0.67	0.00	53.09	100.00
	2800.000	950.00	1577.57	0.00	0.57	0.00	53.66	100.00
	2900.000	950.00	1578.11	0.00	0.53	0.00	53.98	100.00
*	2901.000	950.00	1580.42	0.00	2.31	0.00	55.35	1.00
*	3000.000	950.00	1581.86	0.00	1.44	0.00	59.98	99.00
*	3042.000	950.00	1582.13	0.00	0.27	0.00	58.20	42.00
*	3073.000	950.00	1581.81	0.00	-0.31	0.00	31.74	31.00
*	3078.000	950.00	1581.69	0.00	-0.12	0.00	32.00	5.00
	3155.000	950.00	1583.87	0.00	2.17	0.00	32.00	77.00
*	3160.000	950.00	1584.53	0.00	0.66	0.00	36.68	5.00
*	3175.000	950.00	1584.85	0.00	0.33	0.00	69.10	15.00
*	3200.000	950.00	1584.77	0.00	-0.09	0.00	66.38	25.00
	3201.000	950.00	1584.77	0.00	0.00	0.00	72.60	1.00
*	3300.000	950.00	1585.95	0.00	1.17	0.00	56.32	99.00
*	3400.000	950.00	1587.55	0.00	1.60	0.00	61.79	100.00
*	3490.000	950.00	1588.22	0.00	0.67	0.00	51.39	90.00

SUMMARY OF ERRORS AND SPECIAL NOTES

```
CAUTION SECNO=   1060.000  PROFILE=  1  CRITICAL DEPTH ASSUMED
CAUTION SECNO=   1060.000  PROFILE=  1  MINIMUM SPECIFIC ENERGY

WARNING SECNO=   1100.000  PROFILE=  1  CONVEYANCE CHANGE OUTSIDE ACCEPTABLE RANGE

WARNING SECNO=   1300.000  PROFILE=  1  CONVEYANCE CHANGE OUTSIDE ACCEPTABLE RANGE

CAUTION SECNO=   1400.000  PROFILE=  1  CRITICAL DEPTH ASSUMED
CAUTION SECNO=   1400.000  PROFILE=  1  MINIMUM SPECIFIC ENERGY

WARNING SECNO=   1450.000  PROFILE=  1  CONVEYANCE CHANGE OUTSIDE ACCEPTABLE RANGE

WARNING SECNO=   1600.000  PROFILE=  1  CONVEYANCE CHANGE OUTSIDE ACCEPTABLE RANGE

WARNING SECNO=   1900.000  PROFILE=  1  CONVEYANCE CHANGE OUTSIDE ACCEPTABLE RANGE

CAUTION SECNO=   2001.000  PROFILE=  1  CRITICAL DEPTH ASSUMED
CAUTION SECNO=   2001.000  PROFILE=  1  MINIMUM SPECIFIC ENERGY

WARNING SECNO=   2100.000  PROFILE=  1  CONVEYANCE CHANGE OUTSIDE ACCEPTABLE RANGE

CAUTION SECNO=   2101.000  PROFILE=  1  CRITICAL DEPTH ASSUMED
CAUTION SECNO=   2101.000  PROFILE=  1  MINIMUM SPECIFIC ENERGY

CAUTION SECNO=   2200.000  PROFILE=  1  CRITICAL DEPTH ASSUMED
CAUTION SECNO=   2200.000  PROFILE=  1  MINIMUM SPECIFIC ENERGY

CAUTION SECNO=   2300.000  PROFILE=  1  CRITICAL DEPTH ASSUMED
CAUTION SECNO=   2300.000  PROFILE=  1  MINIMUM SPECIFIC ENERGY

CAUTION SECNO=   2400.000  PROFILE=  1  CRITICAL DEPTH ASSUMED
CAUTION SECNO=   2400.000  PROFILE=  1  MINIMUM SPECIFIC ENERGY

CAUTION SECNO=   2500.000  PROFILE=  1  CRITICAL DEPTH ASSUMED
CAUTION SECNO=   2500.000  PROFILE=  1  MINIMUM SPECIFIC ENERGY

CAUTION SECNO=   2550.000  PROFILE=  1  CRITICAL DEPTH ASSUMED
CAUTION SECNO=   2550.000  PROFILE=  1  MINIMUM SPECIFIC ENERGY

WARNING SECNO=   2600.000  PROFILE=  1  CONVEYANCE CHANGE OUTSIDE ACCEPTABLE RANGE

CAUTION SECNO=   2901.000  PROFILE=  1  CRITICAL DEPTH ASSUMED
CAUTION SECNO=   2901.000  PROFILE=  1  MINIMUM SPECIFIC ENERGY

WARNING SECNO=   3000.000  PROFILE=  1  CONVEYANCE CHANGE OUTSIDE ACCEPTABLE RANGE

WARNING SECNO=   3042.000  PROFILE=  1  CONVEYANCE CHANGE OUTSIDE ACCEPTABLE RANGE

WARNING SECNO=   3073.000  PROFILE=  1  CONVEYANCE CHANGE OUTSIDE ACCEPTABLE RANGE

WARNING SECNO=   3078.000  PROFILE=  1  CONVEYANCE CHANGE OUTSIDE ACCEPTABLE RANGE
```

```
WARNING SECNO=   3160.000  PROFILE=  1  CONVEYANCE CHANGE OUTSIDE ACCEPTABLE RANGE

WARNING SECNO=   3175.000  PROFILE=  1  CONVEYANCE CHANGE OUTSIDE ACCEPTABLE RANGE

WARNING SECNO=   3200.000  PROFILE=  1  CONVEYANCE CHANGE OUTSIDE ACCEPTABLE RANGE

CAUTION SECNO=   3300.000  PROFILE=  1  CRITICAL DEPTH ASSUMED
CAUTION SECNO=   3300.000  PROFILE=  1  MINIMUM SPECIFIC ENERGY

WARNING SECNO=   3400.000  PROFILE=  1  CONVEYANCE CHANGE OUTSIDE ACCEPTABLE RANGE

CAUTION SECNO=   3490.000  PROFILE=  1  CRITICAL DEPTH ASSUMED
CAUTION SECNO=   3490.000  PROFILE=  1  MINIMUM SPECIFIC ENERGY
```

H. Wash 12 Water Surface

Profile - HEC 2 Analysis (FIRM 12)

HEC2 S/N: 1366000135 HMVersion: 6.52 Data File: TNTOVW12.hc2

```
*****************************************
*  HEC-2 WATER SURFACE PROFILES         *
*                                       *
*  Version   4.6.2;  May 1991           *
*                                       *
*  RUN DATE     5NOV97    TIME   10:22:29 *
*****************************************
```

```
*********************************
*  U.S. ARMY CORPS OF ENGINEERS
*  HYDROLOGIC ENGINEERING CENTER
*  609 SECOND STREET, SUITE D
*  DAVIS, CALIFORNIA 95616-4687
*          (916) 756-1104
*********************************
```

```
X     X  XXXXXXX   XXXXX             XXXXX
X     X  X       X     X           X     X
X     X  X       X                       X
XXXXXXX  XXXX     X         XXXXX   XXXXX
X     X  X       X                 X
X     X  X       X     X           X
X     X  XXXXXXX   XXXXX           XXXXXXX
```

```
::::::::::::::::::::::::::::::::::::::::::::
::::::::::::::::::::::::::::::::::::::::::::
:::                                      :::
:::   FULL MICRO-COMPUTER IMPLEMENTATION  :::
:::                                      :::
::::::::::::::::::::::::::::::::::::::::::::
::::::::::::::::::::::::::::::::::::::::::::
```

```
============================
H A E S T A D   M E T H O D S
============================
```

37 Brookside Road * Waterbury, Connecticut 06708 * (203) 755-1666

THIS RUN EXECUTED 5NOV97 10:22:29

```
************************************
 HEC-2 WATER SURFACE PROFILES

 Version  4.6.2;  May 1991
************************************
```

T1Tonto Verde East Extension Preliminary Drainage Report Segmental Water Surface
T2Profile Model for Wash 12 Approximately from Forest Rd. to East line of
T3 Section 31, T5N, R7E.
T4LO Run Date July 31,1997; Revised Oct. 28,1997

J1	ICHECK	INQ	NINV	IDIR	STRT	METRIC	HVINS	Q	WSEL	FQ
	0	2	0	0	0	0	0	0	1535.83	0

J2	NPROF	IPLOT	PRFVS	XSECV	XSECH	FN	ALLDC	IBW	CHNIM	ITRACE
	1	0	-1	0	0	0	-1	0	0	0

QT	1	1060								
NC	0.04	0.04	0.04	0.1	0.3					
X1	378	15	177.1	233.6	0	0	0			
GR	1537	0	1536.7	33.3	1536.2	77.2	1535.5	121.2	1535.3	155.9
GR	1535.2	177.1	1533.6	184.1	1532.4	192.6	1532.3	203.4	1532.3	214.0
GR	1536.8	220.8	1537.3	233.6	1537.3	258	1537.8	285.2	1537.8	292.5
X1	800	5	10	171.5	422	422	422			
GR	1543.8	0	1543.3	10	1540.1	42	1540.1	162	1543.3	171.5
X1	900	5	10	141.8	100	100	100			
GR	1543.8	0	1543.9	10	1540.3	46.0	1540.3	131.0	1543.9	141.8
X1	1000	5	10	78.6	100	100	100			
GR	1546.1	0	1545.6	10	1540.0	19.3	1540.9	69.3	1545.6	78.6
X1	1100	5	10	89	100	100	100			
GR	1546.3	0	1545.8	10	1542.2	24.5	1542.2	74.5	1545.8	89
X1	1200	5	10	67.2	100	100	100			
GR	1549.8	0	1549.7	10	1543.4	33.6	1543.4	43.6	1549.7	67.2
X1	1300	5	10	67.2	100	100	100			
GR	1551.0	0	1550.5	10	1544.6	33.6	1544.6	43.6	1550.5	67.2
X1	1400	5	10	67.2	100	100	100			
GR	1552.5	0	1551.7	10	1545.8	33.6	1545.8	43.6	1551.7	67.2

X1	1500	5	10	67.2	100	100	100			
GR	1553.4	0	1552.9	10	1547.0	33.6	1547.0	43.6	1552.9	67.2
X1	1600	5	10	67.2	100	100	100			
GR	1554.6	0	1554.1	10	1548.2	33.6	1548.2	43.6	1554.1	67.2
X1	1650	5	10	67.2	50	50	50			
GR	1555.2	0	1554.7	10	1548.9	33.6	1548.9	43.6	1554.7	67.2
X1	1700	5	10	51.6	50	50	50			
GR	1556.3	0	1555.8	10	1549.5	25.8	1549.5	35.8	1555.8	51.6
X1	1800	5	10	51.6	100	100	100			
GR	1557.7	0	1557.2	10	1550.9	21.8	1550.9	35.8	1557.2	51.8
X1	1900	5	10	51.6	100	100	100			
GR	1559.1	0	1558.6	10	1552.3	25.8	1552.3	35.8	1558.6	51.6
X1	2000	5	10	51.6	100	100	100			
GR	1560.5	0	1560.0	10	1553.7	25.8	1553.7	35.8	1560.0	51.6
X1	2100	5	10	51.6	100	100	100			
GR	1562.4	0	1561.4	10	1555.1	25.8	1555.1	35.8	1561.4	51.6
QT	1	1010								
NC	0.04	0.04	0.04	0.1	0.3					
X1	2150	5	10	52.6	50	50	50			
GR	1562.6	0	1562.1	10	1555.8	26.3	1555.8	36.3	1562.1	52.6
X1	2200	5	10	52.6	50	50	50			
GR	1563.3	0	1562.8	10	1556.3	26.3	1556.3	36.3	1562.8	52.6
X1	2300	5	10	52.6	100	100	100			
GR	1564.4	0	1563.9	10	1557.4	26.3	1557.4	36.3	1563.9	52.6
X1	2400	5	10	52.6	100	100	100			
GR	1565.5	0	1565.0	10	1558.5	26.3	1558.5	36.3	1565.0	52.6
X1	2500	5	10	52.6	100	100	100			
GR	1566.6	0	1566.1	10	1559.6	26.3	1559.6	36.3	1566.1	52.6
QT	1	750								
NC	0.04	0.04	0.04	0.1	0.3					
X1	2600	5	10	52.6	100	100	100			
GR	1567.7	0	1567.2	10	1560.7	26.3	1560.7	36.3	1567.2	52.6
X1	2601	5	10	45.2	1	1	1			
GR	1567.3	0	1566.8	10	1561.7	22.6	1561.7	32.6	1566.8	45.2

X1	2700	5	10	45.2	99	99	99			
GR	1568.5	0	1568.0	10	1563.9	22.6	1563.9	32.6	1568.0	45.2
X1	2800	5	10	45.2	100	100	100			
GR	1571.7	0	1571.2	10	1566.1	22.6	1566.1	32.6	1571.2	45.2
X1	2900	5	10	45.2	100	100	100			
GR	1573.9	0	1573.4	10	1568.3	22.6	1568.3	32.6	1573.4	45.2
X1	3000	5	10	45.2	100	100	100			
GR	1576.1	0	1575.6	10	1570.5	22.6	1570.5	32.6	1575.6	45.2
X1	3100	5	10	45.2	100	100	100			
GR	1578.3	0	1577.8	10	1572.7	22.6	1572.7	32.6	1577.8	45.2
X1	3140	5	10	41.0	40	40	40			
GR	1579.4	0	1578.9	10	1573.6	20.5	1573.6	30.5	1578.9	41
X1	3170	5	10	41	30	30	30			
GR	1580.0	0	1579.5	10	1574.3	20.5	1574.3	30.5	1579.5	41
X1	3200	5	10	41	30	30	30			
GR	1580.6	0	1580.1	10	1574.9	20.5	1574.9	30.5	1580.1	41
X1	3300	5	10	41	100	100	100			
GR	1582.8	0	1582.3	10	1577.1	20.5	1577.1	30.5	1582.3	41
X1	3350	5	10	41	50	50	50			
GR	1583.9	0	1583.4	10	1578.2	20.5	1578.2	30.5	1583.4	41
X1	3400	5	10	41	50	50	50			
GR	1583.6	0	1583.1	10	1579.3	20.5	1579.3	30.5	1583.1	41
X1	3500	5	10	41	100	100	100			
GR	1585.5	0	1585.0	10	1581.5	20.5	1581.5	30.5	1585.0	41
X1	3600	5	10	41	100	100	100			
GR	1587.7	0	1587.2	10	1583.7	20.5	1583.7	30.5	1587.2	41
X1	3782	16	0	580.9	182	182	182			
GR	1589.2	0	1589.2	48.5	1589.1	56.3	1588.7	95	1588.4	148.6
GR	1588.7	200.4	1588.0	249	1587.3	297	1587.2	336	1587.3	348.7
GR	1587.8	404.1	1587.5	449	1586.9	495	1587.4	542.7	1587.8	580.9
GR	1588.2	642								

SECNO	DEPTH	CWSEL	CRIWS	WSELK	ES	HV	HL	QLOSS	L-BANK ELEV
Q	QLOB	QCH	QROB	ALOB	ACH	AROB	VOL	TWA	R-BANK ELEV
TIME	VLOB	VCH	VROB	XWL	XWCH	XWR	WTN	ELMIN	SSTA
SLOPE	XLOBL	XLCH	XLOBR	ITRIAL	IDC	ICONT	COBAR	TOPWID	ENDST

*PROF 1

CRITICAL DEPTH TO BE CALCULATED AT ALL CROSS SECTIONS

CCHV= 0.100 CEHV= 0.300
*SECNO 378.000
3720 CRITICAL DEPTH ASSUMED

378.000	3.74	1536.04	1536.04	1535.83	1536.79	0.75	0.00	0.00	1535.20
1060.0	125.3	934.7	0.0	48.2	127.4	0.0	0.0	0.0	1537.30
0.00	2.60	7.34	0.00	0.040	0.040	0.000	0.000	1532.30	87.19
0.009428	0.	0.	0.	0	7	0	0.00	132.46	219.65

*SECNO 800.000

800.000	1.41	1541.51	1541.41	0.00	1542.03	0.52	5.22	0.02	1543.30
1060.0	0.0	1060.0	0.0	0.0	182.5	0.0	1.7	1.3	1543.30
0.02	0.00	5.81	0.00	0.000	0.040	0.000	0.000	1540.10	27.87
0.016945	422.	422.	422.	3	22	0	0.00	138.32	166.19

*SECNO 900.000

3302 WARNING: CONVEYANCE CHANGE OUTSIDE OF ACCEPTABLE RANGE, KRATIO = 1.73

900.000	2.35	1542.65	1541.92	0.00	1542.97	0.31	0.91	0.02	1543.90
1060.0	0.0	1060.0	0.0	0.0	235.8	0.0	2.2	1.6	1543.90
0.03	0.00	4.50	0.00	0.000	0.040	0.000	0.000	1540.30	22.49
0.005690	100.	100.	100.	2	8	0	0.00	115.57	138.05

*SECNO 1000.000

3301 HV CHANGED MORE THAN HVINS

3302 WARNING: CONVEYANCE CHANGE OUTSIDE OF ACCEPTABLE RANGE, KRATIO = 0.68

1000.000	3.09	1543.09	1542.78	0.00	1543.92	0.83	0.80	0.15	1545.60
1060.0	0.0	1060.0	0.0	0.0	145.0	0.0	2.7	1.8	1545.60
0.03	0.00	7.31	0.00	0.000	0.040	0.000	0.000	1540.00	14.16
0.012169	100.	100.	100.	3	11	0	0.00	59.49	73.64

SECNO	DEPTH	CWSEL	CRIWS	WSELK	EG	HV	HL	OLOSS	L-BANK ELEV
Q	QLOB	QCH	QROB	ALOB	ACH	AROB	VOL	TWA	R-BANK ELEV
TIME	VLOB	VCH	VROB	XNL	XNCH	XNR	WTN	ELMIN	SSTA
SLOPE	XLOBL	XLCH	XLOBR	ITRIAL	IDC	ICONT	CORAR	TOPWID	ENDST

*SECNO 1100.000

1100.000	2.28	1544.48	1544.46	0.00	1545.44	0.96	1.46	0.04	1545.80
1060.0	0.0	1060.0	0.0	0.0	134.9	0.0	3.0	2.0	1545.80
0.03	0.00	7.86	0.00	0.000	0.040	0.000	0.000	1542.20	15.32
0.018289	100.	100.	100.	0	15	0	0.00	68.36	83.68

*SECNO 1200.000

7185 MINIMUM SPECIFIC ENERGY

3720 CRITICAL DEPTH ASSUMED

1200.000	4.34	1547.74	1547.74	0.00	1549.08	1.34	1.78	0.11	1549.70
1060.0	0.0	1060.0	0.0	0.0	114.1	0.0	3.3	2.1	1549.70
0.04	0.00	9.29	0.00	0.000	0.040	0.000	0.000	1543.40	17.33
0.017370	100.	100.	100.	0	14	0	0.00	42.55	59.87

*SECNO 1300.000

3301 HV CHANGED MORE THAN HVINS

1300.000	4.96	1549.56	1548.86	0.00	1550.35	0.80	1.22	0.05	1550.50
1060.0	0.0	1060.0	0.0	0.0	147.8	0.0	3.6	2.2	1550.50
0.04	0.00	7.17	0.00	0.000	0.040	0.000	0.000	1544.60	13.78
0.008991	100.	100.	100.	2	8	0	0.00	49.64	63.42

*SECNO 1400.000

1400.000	4.65	1550.45	1550.05	0.00	1551.44	0.98	1.03	0.06	1551.70
1060.0	0.0	1060.0	0.0	0.0	133.2	0.0	3.9	2.3	1551.70
0.04	0.00	7.96	0.00	0.000	0.040	0.000	0.000	1545.80	14.98
0.011891	100.	100.	100.	3	15	0	0.00	47.24	62.22

*SECNO 1500.000

1500.000	4.64	1551.64	1551.25	0.00	1552.63	0.99	1.19	0.00	1552.90
1060.0	0.0	1060.0	0.0	0.0	132.8	0.0	4.2	2.4	1552.90
0.05	0.00	7.98	0.00	0.000	0.040	0.000	0.000	1547.00	15.02
0.011989	100.	100.	100.	2	11	0	0.00	47.17	62.18

*SECNO 1600.000

1600.000	4.64	1552.84	1552.45	0.00	1553.84	0.99	1.20	0.00	1554.10
1060.0	0.0	1060.0	0.0	0.0	132.5	0.0	4.5	2.5	1554.10
0.05	0.00	8.00	0.00	0.000	0.040	0.000	0.000	1548.20	15.05
0.012072	100.	100.	100.	0	11	0	0.00	47.11	62.15

SECNO	DEPTH	CWSEL	CRIWS	WSELK	EG	HV	HL	OLOSS	L-BANK ELEV
Q	QLOB	QCH	QROB	ALOB	ACH	AROB	VOL	TWA	R-BANK ELEV
TIME	VLOB	VCH	VROB	XNL	XNCH	XNR	WTN	ELMIN	SSTA
SLOPE	XLOBL	XLCH	XLOBR	ITRIAL	IDC	ICONT	CORAR	TOPWID	ENDST

*SECNO 1650.000

1650.000	4.65	1553.45	1553.05	0.00	1554.44	0.99	0.60	0.00	1554.70
1060.0	0.0	1060.0	0.0	0.0	132.8	0.0	4.6	2.6	1554.70
0.05	0.00	7.98	0.00	0.000	0.040	0.000	0.000	1549.80	15.02
0.011992	50.	50.	50.	0	11	0	0.00	47.17	62.18

*SECNO 1700.000

3301 HV CHANGED MORE THAN HVINS

7185 MINIMUM SPECIFIC ENERGY
3720 CRITICAL DEPTH ASSUMED

1700.000	4.78	1554.28	1554.28	0.00	1555.86	1.58	0.72	0.18	1555.80
1060.0	0.0	1060.0	0.0	0.0	105.2	0.0	4.8	2.6	1555.80
0.05	0.00	10.08	0.00	0.000	0.040	0.000	0.000	1549.50	13.81
0.017497	50.	50.	50.	0	8	0	0.00	33.99	47.79

*SECNO 1800.000

3301 HV CHANGED MORE THAN HVINS

1800.000	5.16	1556.06	1555.37	0.00	1557.13	1.06	1.22	0.05	1557.20
1060.0	0.0	846.5	213.5	0.0	97.3	33.9	5.1	2.7	1550.90
0.06	0.00	8.70	6.30	0.000	0.040	0.040	0.000	1550.90	12.13
0.008951	100.	100.	100.	2	11	0	0.00	36.79	48.91

*SECNO 1900.000

3301 HV CHANGED MORE THAN HVINS

7185 MINIMUM SPECIFIC ENERGY
3720 CRITICAL DEPTH ASSUMED

1900.000	4.78	1557.08	1557.08	0.00	1558.66	1.58	1.22	0.15	1558.60
1060.0	0.0	1060.0	0.0	0.0	105.2	0.0	5.3	2.8	1558.60
0.06	0.00	10.08	0.00	0.000	0.040	0.000	0.000	1552.30	13.80
0.017491	100.	100.	100.	0	11	0	0.00	33.99	47.80

*SECNO 2000.000

2000.000	5.24	1558.94	1558.49	0.00	1560.13	1.18	1.43	0.04	1560.00
1060.0	0.0	1060.0	0.0	0.0	121.4	0.0	5.6	2.9	1560.00
0.06	0.00	8.73	0.00	0.000	0.040	0.000	0.000	1553.70	12.65
0.011872	100.	100.	100.	2	5	0	0.00	36.30	48.95

SECNO	DEPTH	CWSEL	CRIWS	WSELK	EG	HV	HL	OLOSS	L-BANK ELEV
Q	QLOB	QCH	QROB	ALOB	ACH	AROB	VOL	TWA	R-BANK ELEV
TIME	VLOB	VCH	VROB	XNL	XNCH	XNR	WTN	ELMIN	SSTA
SLOPE	XLOBL	XLCH	XLOBR	ITRIAL	IDC	ICONT	CORAR	TOPWID	ENDST

*SECNO 2100.000

2100.000	5.02	1560.12	1559.89	0.00	1561.48	1.36	1.30	0.05	1561.40
1060.0	0.0	1060.0	0.0	0.0	113.4	0.0	5.9	2.9	1561.40
0.07	0.00	9.35	0.00	0.000	0.040	0.000	0.000	1555.10	13.21
0.014274	100.	100.	100.	3	11	0	0.00	35.18	48.39

CCHV= 0.100 CEHV= 0.300

*SECNO 2150.000

2150.000	5.30	1561.10	1560.43	0.00	1562.11	1.00	0.59	0.04	1562.10
1010.0	0.0	1010.0	0.0	0.0	125.8	0.0	5.0	3.0	1562.10
0.07	0.00	8.03	0.00	0.000	0.040	0.000	0.000	1555.80	12.58
0.009948	50.	50.	50.	3	11	0	0.00	37.44	50.02

*SECNO 2200.000

2200.000	5.28	1561.58	1560.98	0.00	1562.63	1.05	0.51	0.02	1562.80
1010.0	0.0	1010.0	0.0	0.0	122.7	0.0	6.1	3.0	1562.80
0.07	0.00	8.23	0.00	0.000	0.040	0.000	0.000	1556.30	13.06
0.010475	50.	50.	50.	3	11	0	0.00	36.40	49.54

*SECNO 2300.000

2300.000	5.23	1562.63	1562.07	0.00	1563.71	1.09	1.07	0.01	1563.90
1010.0	0.0	1010.0	0.0	0.0	120.7	0.0	6.4	3.1	1563.90
0.07	0.00	8.37	0.00	0.000	0.040	0.000	0.000	1557.40	13.20
0.010938	100.	100.	100.	2	11	0	0.00	36.21	49.40

*SECNO 2400.000

2400.000	5.22	1563.72	1563.17	0.00	1564.81	1.09	1.10	0.00	1565.00
1010.0	0.0	1010.0	0.0	0.0	120.5	0.0	6.7	3.2	1565.00
0.08	0.00	8.38	0.00	0.000	0.040	0.000	0.000	1558.50	13.21
0.010993	100.	100.	100.	2	11	0	0.00	36.18	49.39

*SECNO 2500.000

2500.000	5.22	1564.82	1564.27	0.00	1565.91	1.09	1.10	0.00	1566.10
1010.0	0.0	1010.0	0.0	0.0	120.4	0.0	7.0	3.3	1566.10
0.08	0.00	8.39	0.00	0.000	0.040	0.000	0.000	1559.60	13.22
0.011024	100.	100.	100.	0	11	0	0.00	36.16	49.38

SECNO	DEPTH	CWSEL	CRIWS	WSELK	EG	HV	HL	OLOSS	L-BANK ELEV
Q	QLOB	QCH	QROB	ALOB	ACH	AROB	VOL	TWA	R-BANK ELEV
TIME	VLOB	VCH	VROB	XNL	XNCH	XNR	WTN	ELMIN	SSTA
SLOPE	XLOBL	XLCH	XLOBR	ITRIAL	IDC	ICONT	CORAR	TOPWID	ENDST

CCHV= 0.100 CEHV= 0.300
*SECNO 2600.000

3301 HV CHANGED MORE THAN HVINS

2600.000	5.51	1566.21	1564.70	0.00	1566.71	0.51	0.74	0.06	1567.20
750.0	0.0	750.0	0.0	0.0	131.2	0.0	7.3	3.4	1567.20
0.08	0.00	5.72	0.00	0.000	0.040	0.000	0.000	1560.70	12.49
0.004820	100.	100.	100.	2	15	0	0.00	37.63	50.11

*SECNO 2601.000

3301 HV CHANGED MORE THAN HVINS

7185 MINIMUM SPECIFIC ENERGY
3720 CRITICAL DEPTH ASSUMED

2601.000	4.02	1565.72	1565.72	0.00	1567.08	1.36	0.01	0.26	1566.80
750.0	0.0	750.0	0.0	0.0	80.0	0.0	7.3	3.4	1566.80
0.08	0.00	9.37	0.00	0.000	0.040	0.000	0.000	1561.70	12.68
0.018297	1.	1.	1.	0	19	0	0.00	29.84	42.52

*SECNO 2700.000
7185 MINIMUM SPECIFIC ENERGY
3720 CRITICAL DEPTH ASSUMED

2700.000	3.84	1567.74	1567.74	0.00	1569.09	1.24	1.80	0.01	1568.00
750.0	0.0	750.0	0.0	0.0	83.8	0.0	7.4	3.4	1568.00
0.09	0.00	9.35	0.00	0.000	0.040	0.000	0.000	1563.90	10.79
0.018022	99.	99.	99.	0	3	0	0.00	33.61	44.41

*SECNO 2800.000
7185 MINIMUM SPECIFIC ENERGY
3720 CRITICAL DEPTH ASSUMED

2800.000	4.02	1570.12	1570.12	0.00	1571.48	1.36	1.82	0.04	1571.20
750.0	0.0	750.0	0.0	0.0	80.0	0.0	7.6	3.5	1571.20
0.09	0.00	9.37	0.00	0.000	0.040	0.000	0.000	1566.10	12.68
0.018301	100.	100.	100.	0	8	0	0.00	29.84	42.52

*SECNO 2900.000
7185 MINIMUM SPECIFIC ENERGY

SECNO	DEPTH	CWSEL	CRIWS	WSELK	EG	HV	HL	OLOSS	L-BANK ELEV
Q	QLOB	QCH	QROB	ALOB	ACH	AROB	VOL	TWA	R-BANK ELEV
TIME	VLOB	VCH	VROB	XNL	XNCH	XNR	WTN	ELMIN	SSTA
SLOPE	XLOBL	XLCH	XLOBR	ITRIAL	IDC	ICONT	CORAR	TOPWID	ENDST

3720 CRITICAL DEPTH ASSUMED

2900.000	4.02	1572.32	1572.32	0.00	1573.68	1.36	1.82	0.00	1573.40
750.0	0.0	750.0	0.0	0.0	80.2	0.0	7.8	3.6	1573.40
0.09	0.00	9.35	0.00	0.000	0.040	0.000	0.000	1568.30	12.66
0.018170	100.	100.	100.	0	5	0	0.00	29.88	42.54

*SECNO 3000.000
7185 MINIMUM SPECIFIC ENERGY
3720 CRITICAL DEPTH ASSUMED

3000.000	4.02	1574.52	1574.52	0.00	1575.88	1.36	1.82	0.00	1575.60
750.0	0.0	750.0	0.0	0.0	80.2	0.0	8.0	3.6	1575.60
0.10	0.00	9.36	0.00	0.000	0.040	0.000	0.000	1570.50	12.67
0.018206	100.	100.	100.	0	5	0	0.00	29.87	42.53

*SECNO 3100.000
7185 MINIMUM SPECIFIC ENERGY
3720 CRITICAL DEPTH ASSUMED

3100.000	4.02	1576.72	1576.72	0.00	1578.08	1.36	1.82	0.00	1577.80
750.0	0.0	750.0	0.0	0.0	80.2	0.0	8.2	3.7	1577.80
0.10	0.00	9.36	0.00	0.000	0.040	0.000	0.000	1572.70	12.67
0.018206	100.	100.	100.	0	5	0	0.00	29.87	42.53

*SECNO 3140.000
7185 MINIMUM SPECIFIC ENERGY
3720 CRITICAL DEPTH ASSUMED

3140.000	4.21	1577.81	1577.81	0.00	1579.28	1.47	0.73	0.03	1578.90
750.0	0.0	750.0	0.0	0.0	77.1	0.0	8.3	3.7	1578.90
0.10	0.00	9.73	0.00	0.000	0.040	0.000	0.000	1573.60	12.17
0.018342	40.	40.	40.	0	8	0	0.00	26.66	38.83

*SECNO 3170.000
7185 MINIMUM SPECIFIC ENERGY
3720 CRITICAL DEPTH ASSUMED

3170.000	4.19	1578.49	1578.49	0.00	1579.95	1.46	0.55	0.00	1579.50
750.0	0.0	750.0	0.0	0.0	77.4	0.0	8.3	3.8	1579.50
0.10	0.00	9.69	0.00	0.000	0.040	0.000	0.000	1574.30	12.03
0.018263	30.	30.	30.	0	5	0	0.00	26.93	38.97

SECNO	DEPTH	CWSEL	CRIWS	WSELK	EG	HV	HL	OLOSS	L-BANK ELEV
Q	QLOB	QCH	QROB	ALOB	ACH	AROB	VOL	TWA	R-BANK ELEV
TIME	VLOB	VCH	VROB	XNL	XNCH	XNR	WTN	ELMIN	SSTA
SLOPE	XLOBL	XLCH	XLOBR	ITRIAL	IDC	ICONT	CORAR	TOPWID	ENDST

*SECNO 3200.000
7185 MINIMUM SPECIFIC ENERGY
3720 CRITICAL DEPTH ASSUMED

3200.000	4.20	1579.10	1579.10	0.00	1580.55	1.45	0.55	0.00	1580.10
750.0	0.0	750.0	0.0	0.0	77.5	0.0	8.4	3.8	1580.10
0.10	0.00	9.68	0.00	0.000	0.040	0.000	0.000	1574.90	12.03
0.018221	30.	30.	30.	0	5	0	0.00	26.94	38.97

*SECNO 3300.000
7185 MINIMUM SPECIFIC ENERGY
3720 CRITICAL DEPTH ASSUMED

3300.000	4.19	1581.29	1581.29	0.00	1582.75	1.46	1.82	0.00	1582.30
750.0	0.0	750.0	0.0	0.0	77.5	0.0	8.5	3.8	1582.30
0.11	0.00	9.68	0.00	0.000	0.040	0.000	0.000	1577.10	12.03
0.018243	100.	100.	100.	0	5	0	0.00	26.94	38.97

*SECNO 3350.000
7185 MINIMUM SPECIFIC ENERGY
3720 CRITICAL DEPTH ASSUMED

3350.000	4.20	1582.40	1582.40	0.00	1583.85	1.45	0.91	0.00	1583.40
750.0	0.0	750.0	0.0	0.0	77.5	0.0	8.6	3.9	1583.40
0.11	0.00	9.68	0.00	0.000	0.040	0.000	0.000	1578.20	12.03
0.018228	50.	50.	50.	0	5	0	0.00	26.94	38.97

*SECNO 3400.000
3280 CROSS SECTION 3400.00 EXTENDED 0.54 FEET

3400.000	4.34	1583.64	1583.20	0.00	1584.60	0.96	0.70	0.05	1583.10
750.0	4.8	745.2	0.0	2.9	94.5	0.0	8.7	3.9	1583.10
0.11	1.69	7.88	0.00	0.040	0.040	0.000	0.000	1579.00	0.00
0.011019	50.	50.	50.	3	11	0	0.00	41.00	41.00

*SECNO 3500.000
3280 CROSS SECTION 3500.00 EXTENDED 0.07 FEET

7185 MINIMUM SPECIFIC ENERGY
3720 CRITICAL DEPTH ASSUMED

3500.000	3.87	1585.37	1585.37	0.00	1586.62	1.25	1.34	0.09	1585.00
750.0	2.1	747.9	0.0	1.4	83.2	0.0	8.9	4.0	1585.00
0.11	1.56	8.99	0.00	0.040	0.040	0.000	0.000	1581.50	2.61
0.016722	100.	100.	100.	0	11	0	0.00	38.39	41.00

SECNO	DEPTH	CWSEL	CRIWS	WSELK	EG	HV	HL	OLOSS	L-BANK ELEV
Q	QLOB	QCH	QROB	ALOB	ACH	AROB	VOL	TWA	R-BANK ELEV
TIME	VLOB	VCH	VROB	XNL	XNCH	XNR	WTN	ELMIN	SSTA
SLOPE	XLOBL	XLCH	XLOBR	ITRIAL	IDC	ICONT	CORAR	TOPWID	ENDST

*SECNO 3600.000
3280 CROSS SECTION 3600.00 EXTENDED 0.37 FEET

7185 MINIMUM SPECIFIC ENERGY
3720 CRITICAL DEPTH ASSUMED

3600.000	3.87	1587.57	1587.57	0.00	1588.82	1.25	1.67	0.00	1587.20
750.0	2.1	747.9	0.0	1.4	83.2	0.0	9.1	4.1	1587.20
0.11	1.56	8.99	0.00	0.040	0.040	0.000	0.000	1583.70	2.61
0.016722	100.	100.	100.	0	5	0	0.00	38.39	41.00

*SECNO 3782.000
3280 CROSS SECTION 3782.00 EXTENDED 1.00 FEET

3301 HV CHANGED MORE THAN HVINS

3302 WARNING: CONVEYANCE CHANGE OUTSIDE OF ACCEPTABLE RANGE, KRATIO = 5.78

3782.000	2.30	1589.20	1587.96	0.00	1589.21	0.01	0.26	0.12	1589.20
750.0	0.0	681.5	68.5	0.0	714.3	73.6	11.0	5.5	1587.80
0.17	0.00	0.95	0.93	0.000	0.040	0.040	0.000	1586.90	0.00
0.000501	182.	182.	182.	3	14	0	0.00	642.00	642.00

THIS RUN EXECUTED 5NOV97 10:22:29

****
HEC-2 WATER SURFACE PROFILES

Version 4.6.2; May 1991
****

NOTE- ASTERISK (*) AT LEFT OF CROSS-SECTION NUMBER INDICATES MESSAGE IN SUMMARY OF ERRORS LIST

Section 01, T5N, R7E.

SUMMARY PRINTOUT TABLE 150

	SECNO	XLCH	ELTRD	ELLC	ELMIN	Q	CWSEL	CRIWS	EG	10*KS	VCH	AREA	.01K
*	378.000	0.00	0.00	0.00	1532.30	1060.00	1536.04	1536.04	1536.79	94.28	7.34	175.64	109.17
	800.000	422.00	0.00	0.00	1540.10	1060.00	1541.51	1541.61	1542.03	169.45	5.81	182.48	81.43
*	900.000	100.00	0.00	0.00	1540.30	1060.00	1542.65	1541.92	1542.97	56.90	4.50	235.60	140.52
*	1000.000	100.00	0.00	0.00	1540.00	1060.00	1542.09	1542.79	1543.92	121.69	7.31	145.01	96.09
	1100.000	100.00	0.00	0.00	1542.20	1060.00	1544.48	1544.46	1545.44	182.69	7.86	134.86	78.38
*	1200.000	100.00	0.00	0.00	1543.40	1060.00	1547.74	1547.74	1549.08	173.70	9.29	114.13	80.43
	1300.000	100.00	0.00	0.00	1544.60	1060.00	1549.56	1548.86	1550.35	89.91	7.17	147.78	111.79
	1400.000	100.00	0.00	0.00	1545.80	1060.00	1550.45	1550.05	1551.44	118.91	7.96	133.20	97.21
	1500.000	100.00	0.00	0.00	1547.00	1060.00	1551.64	1551.25	1552.63	119.89	7.98	132.79	96.81
	1600.000	100.00	0.00	0.00	1548.20	1060.00	1552.84	1552.45	1553.84	120.72	8.00	132.46	96.48
	1650.000	50.00	0.00	0.00	1548.80	1060.00	1553.45	1553.05	1554.44	119.92	7.98	132.79	96.80
*	1700.000	50.00	0.00	0.00	1549.50	1060.00	1554.28	1554.28	1555.86	174.97	10.08	105.19	80.14
	1800.000	100.00	0.00	0.00	1550.90	1060.00	1556.06	1555.37	1557.13	89.51	8.70	131.13	112.04
*	1900.000	100.00	0.00	0.00	1552.30	1060.00	1557.08	1557.08	1558.66	174.91	10.08	105.21	80.15
	2000.000	100.00	0.00	0.00	1553.70	1060.00	1558.94	1558.49	1560.13	118.72	8.73	121.39	97.28
	2100.000	100.00	0.00	0.00	1555.10	1060.00	1560.12	1559.89	1561.48	142.74	9.35	113.40	88.72
	2150.000	50.00	0.00	0.00	1555.80	1010.00	1561.10	1560.43	1562.11	99.48	8.03	125.76	101.26

	SECNO	XLOH	ELTRD	ELLC	ELMIN	Q	CWSEL	CRIWS	EG	10*KS	VCH	AREA	.01K
	2200.000	50.00	0.00	0.00	1556.30	1010.00	1561.58	1560.98	1562.63	104.75	8.23	122.68	98.68
	2300.000	100.00	0.00	0.00	1557.40	1010.00	1562.63	1562.07	1563.71	109.38	8.37	120.73	96.57
	2400.000	100.00	0.00	0.00	1558.50	1010.00	1563.72	1563.17	1564.81	109.93	8.38	120.51	96.33
	2500.000	100.00	0.00	0.00	1559.60	1010.00	1564.82	1564.27	1565.91	110.24	8.39	120.38	96.20
	2600.000	100.00	0.00	0.00	1560.70	750.00	1566.21	1564.70	1566.71	48.20	5.72	131.17	108.03
*	2601.000	1.00	0.00	0.00	1561.70	750.00	1565.72	1565.72	1567.08	182.97	9.37	80.01	55.45
*	2700.000	99.00	0.00	0.00	1563.90	750.00	1567.74	1567.74	1568.99	180.22	8.95	83.77	55.87
*	2800.000	100.00	0.00	0.00	1566.10	750.00	1570.12	1570.12	1571.40	183.01	9.37	80.01	55.64
*	2900.000	100.00	0.00	0.00	1568.30	750.00	1572.32	1572.32	1573.68	181.70	9.35	80.22	55.64
*	3000.000	100.00	0.00	0.00	1570.50	750.00	1574.52	1574.52	1575.88	182.06	9.36	80.16	55.58
*	3100.000	100.00	0.00	0.00	1572.70	750.00	1576.72	1576.72	1578.08	182.06	9.36	80.16	55.58
*	3140.000	40.00	0.00	0.00	1573.60	750.00	1577.81	1577.81	1579.28	183.42	9.73	77.08	55.38
*	3170.000	30.00	0.00	0.00	1574.30	750.00	1578.49	1578.49	1579.95	182.63	9.69	77.43	55.50
*	3200.000	30.00	0.00	0.00	1574.90	750.00	1579.10	1579.10	1580.55	182.21	9.68	77.50	55.56
*	3300.000	100.00	0.00	0.00	1577.10	750.00	1581.29	1581.29	1582.75	182.43	9.68	77.46	55.53
*	3350.000	50.00	0.00	0.00	1578.20	750.00	1582.40	1582.40	1583.85	182.28	9.68	77.49	55.55
	3400.000	50.00	0.00	0.00	1579.30	750.00	1583.64	1583.20	1584.60	110.13	7.88	97.38	71.47
*	3500.000	100.00	0.00	0.00	1581.50	750.00	1585.37	1585.37	1586.62	167.22	8.99	84.56	58.00
*	3600.000	100.00	0.00	0.00	1583.70	750.00	1587.57	1587.57	1588.82	167.22	8.99	84.56	58.00
*	3782.000	182.00	0.00	0.00	1586.90	750.00	1589.20	1587.96	1589.21	5.01	0.95	787.91	335.19

Section 31, T5N, R7E.

SUMMARY PRINTOUT TABLE 150

	SECNO	Q	CWSEL	DIFWSP	DIFWSX	DIFKWS	TOPWID	XLCH
*	378.000	1060.00	1536.04	0.00	0.00	0.21	132.46	0.00
	800.000	1060.00	1541.51	0.00	5.47	0.00	106.32	422.00
*	900.000	1060.00	1542.65	0.00	1.14	0.00	115.57	100.00
*	1000.000	1060.00	1543.09	0.00	0.44	0.00	59.49	100.00
	1100.000	1060.00	1544.48	0.00	1.39	0.00	68.36	100.00
*	1200.000	1060.00	1547.74	0.00	3.26	0.00	42.55	100.00
	1300.000	1060.00	1549.56	0.00	1.81	0.00	49.64	100.00
	1400.000	1060.00	1550.45	0.00	0.90	0.00	47.24	100.00
	1500.000	1060.00	1551.64	0.00	1.19	0.00	47.17	100.00
	1600.000	1060.00	1552.84	0.00	1.20	0.00	47.11	100.00
	1650.000	1060.00	1553.45	0.00	0.61	0.00	47.17	50.00
*	1700.000	1060.00	1554.28	0.00	0.83	0.00	33.99	50.00
	1800.000	1060.00	1556.06	0.00	1.78	0.00	36.79	100.00
*	1900.000	1060.00	1557.08	0.00	1.02	0.00	33.99	100.00
	2000.000	1060.00	1558.94	0.00	1.86	0.00	36.30	100.00
	2100.000	1060.00	1560.12	0.00	1.18	0.00	35.18	100.00
	2150.000	1010.00	1561.10	0.00	0.98	0.00	37.44	50.00
	2200.000	1010.00	1561.58	0.00	0.47	0.00	36.48	50.00
	2300.000	1010.00	1562.63	0.00	1.05	0.00	36.21	100.00
	2400.000	1010.00	1563.72	0.00	1.09	0.00	36.18	100.00
	2500.000	1010.00	1564.82	0.00	1.10	0.00	36.16	100.00
	2600.000	750.00	1565.21	0.00	1.39	0.00	37.63	100.00
*	2601.000	750.00	1565.72	0.00	-0.49	0.00	29.84	1.00
*	2700.000	750.00	1567.74	0.00	2.03	0.00	33.61	99.00

	SECNO	Q	CWSEL	DIFWSP	DIFWSX	DIFKWS	TOPWID	VLCH
*	2900.000	750.00	1570.12	0.00	2.27	0.00	29.94	100.00
*	2900.000	750.00	1572.32	0.00	2.21	0.00	29.99	100.00
*	3000.000	750.00	1574.52	0.00	2.20	0.00	29.87	100.00
*	3100.000	750.00	1576.72	0.00	2.20	0.00	29.87	100.00
*	3140.000	750.00	1577.81	0.00	1.08	0.00	26.66	40.00
*	3170.000	750.00	1578.49	0.00	0.69	0.00	26.93	30.00
*	3200.000	750.00	1579.10	0.00	0.60	0.00	26.94	30.00
*	3300.000	750.00	1581.29	0.00	2.20	0.00	26.94	100.00
*	3350.000	750.00	1582.40	0.00	1.10	0.00	26.94	50.00
	3400.000	750.00	1583.64	0.00	1.24	0.00	41.00	50.00
*	3500.000	750.00	1585.37	0.00	1.73	0.00	38.39	100.00
*	3600.000	750.00	1587.57	0.00	2.20	0.00	38.39	100.00
*	3782.000	750.00	1589.20	0.00	1.63	0.00	642.00	182.00

SUMMARY OF ERRORS AND SPECIAL NOTES

```
CAUTION SECNO=    378.000  PROFILE=  1  CRITICAL DEPTH ASSUMED

WARNING SECNO=    900.000  PROFILE=  1  CONVEYANCE CHANGE OUTSIDE ACCEPTABLE RANGE

WARNING SECNO=   1000.000  PROFILE=  1  CONVEYANCE CHANGE OUTSIDE ACCEPTABLE RANGE

CAUTION SECNO=   1200.000  PROFILE=  1  CRITICAL DEPTH ASSUMED
CAUTION SECNO=   1200.000  PROFILE=  1  MINIMUM SPECIFIC ENERGY

CAUTION SECNO=   1700.000  PROFILE=  1  CRITICAL DEPTH ASSUMED
CAUTION SECNO=   1700.000  PROFILE=  1  MINIMUM SPECIFIC ENERGY

CAUTION SECNO=   1900.000  PROFILE=  1  CRITICAL DEPTH ASSUMED
CAUTION SECNO=   1900.000  PROFILE=  1  MINIMUM SPECIFIC ENERGY

CAUTION SECNO=   2601.000  PROFILE=  1  CRITICAL DEPTH ASSUMED
CAUTION SECNO=   2601.000  PROFILE=  1  MINIMUM SPECIFIC ENERGY

CAUTION SECNO=   2700.000  PROFILE=  1  CRITICAL DEPTH ASSUMED
CAUTION SECNO=   2700.000  PROFILE=  1  MINIMUM SPECIFIC ENERGY

CAUTION SECNO=   2600.000  PROFILE=  1  CRITICAL DEPTH ASSUMED
CAUTION SECNO=   2800.000  PROFILE=  1  MINIMUM SPECIFIC ENERGY

CAUTION SECNO=   2900.000  PROFILE=  1  CRITICAL DEPTH ASSUMED
CAUTION SECNO=   2900.000  PROFILE=  1  MINIMUM SPECIFIC ENERGY

CAUTION SECNO=   3000.000  PROFILE=  1  CRITICAL DEPTH ASSUMED
CAUTION SECNO=   3000.000  PROFILE=  1  MINIMUM SPECIFIC ENERGY

CAUTION SECNO=   3100.000  PROFILE=  1  CRITICAL DEPTH ASSUMED
CAUTION SECNO=   3100.000  PROFILE=  1  MINIMUM SPECIFIC ENERGY

CAUTION SECNO=   3140.000  PROFILE=  1  CRITICAL DEPTH ASSUMED
CAUTION SECNO=   3140.000  PROFILE=  1  MINIMUM SPECIFIC ENERGY

CAUTION SECNO=   3170.000  PROFILE=  1  CRITICAL DEPTH ASSUMED
CAUTION SECNO=   3170.000  PROFILE=  1  MINIMUM SPECIFIC ENERGY

CAUTION SECNO=   3200.000  PROFILE=  1  CRITICAL DEPTH ASSUMED
CAUTION SECNO=   3200.000  PROFILE=  1  MINIMUM SPECIFIC ENERGY

CAUTION SECNO=   3300.000  PROFILE=  1  CRITICAL DEPTH ASSUMED
CAUTION SECNO=   3300.000  PROFILE=  1  MINIMUM SPECIFIC ENERGY

CAUTION SECNO=   3350.000  PROFILE=  1  CRITICAL DEPTH ASSUMED
CAUTION SECNO=   3350.000  PROFILE=  1  MINIMUM SPECIFIC ENERGY

CAUTION SECNO=   3500.000  PROFILE=  1  CRITICAL DEPTH ASSUMED
CAUTION SECNO=   3500.000  PROFILE=  1  MINIMUM SPECIFIC ENERGY
```

```
CAUTION SECNO=   3600.000  PROFILE=  1  CRITICAL DEPTH ASSUMED
CAUTION SECNO=   3600.000  PROFILE=  1  MINIMUM SPECIFIC ENERGY

WARNING SECNO=   3782.000  PROFILE=  1  CONVEYANCE CHANGE OUTSIDE ACCEPTABLE RANGE
```

I. Project Drainage Maps

MATCHLINE B

MATCHLINE A

PARKING EXPANSION

70 SPACES MINIMUM

PARKING EXPANSION

PUMP STATION

FOREST ROAD

NO. 6 410 YDS. PAR 4

NO. 7 390 YDS. PAR 4

NO. 8 560 YDS. PAR 5

NO. 9 170 YDS. PAR 3

NO. 15 195 YDS. PAR 3

NO. 16 450 YDS. PAR 4

NO. 17 525 YDS. PAR 5

LAKE
W.L. 1532
2.1 ACRES

℄ CHANNEL 1

℄ CHANNEL 11

℄ CHANNEL 10

FIRM 11

FIRM 10

FIRM 10 & 11

LOW FLOW

SLIDE WALL

LEGEND:

℄ CHANNEL

℄ ROAD

N

NOTICE: THESE PLANS ARE
PRELIMINARY
NOT FOR CONSTRUCTION
OR RECORDING
ARIZONA BOARD OF TECHNICAL REGISTRATION
04-20-304
THIS NOTE TO BE REMOVED
AT TIME OF AGENCY APPROVAL

BROOKS, HERSEY AND ASSOCIATES, INC.
ENGINEERS/SURVEYORS
4602 E. Elwood Street, 16
Phoenix, Arizona 85040
(602) 437-3733

TONTO VERDE EAST EXTENSION DRAINAGE MAP CHANNEL LAYOUT

DESIGN:	LO
DRAWN:	GZ
CHECK:	LO
SCALE:	
HORZ:	1"=100'
VERT:	N/A

JOB NO. 519-11TM DATE: 11-6-97 SHEET 1 OF 2

11-6-97 GZ 009 1"=1"
FILE:ch1128 PATH: C:\519-11TM

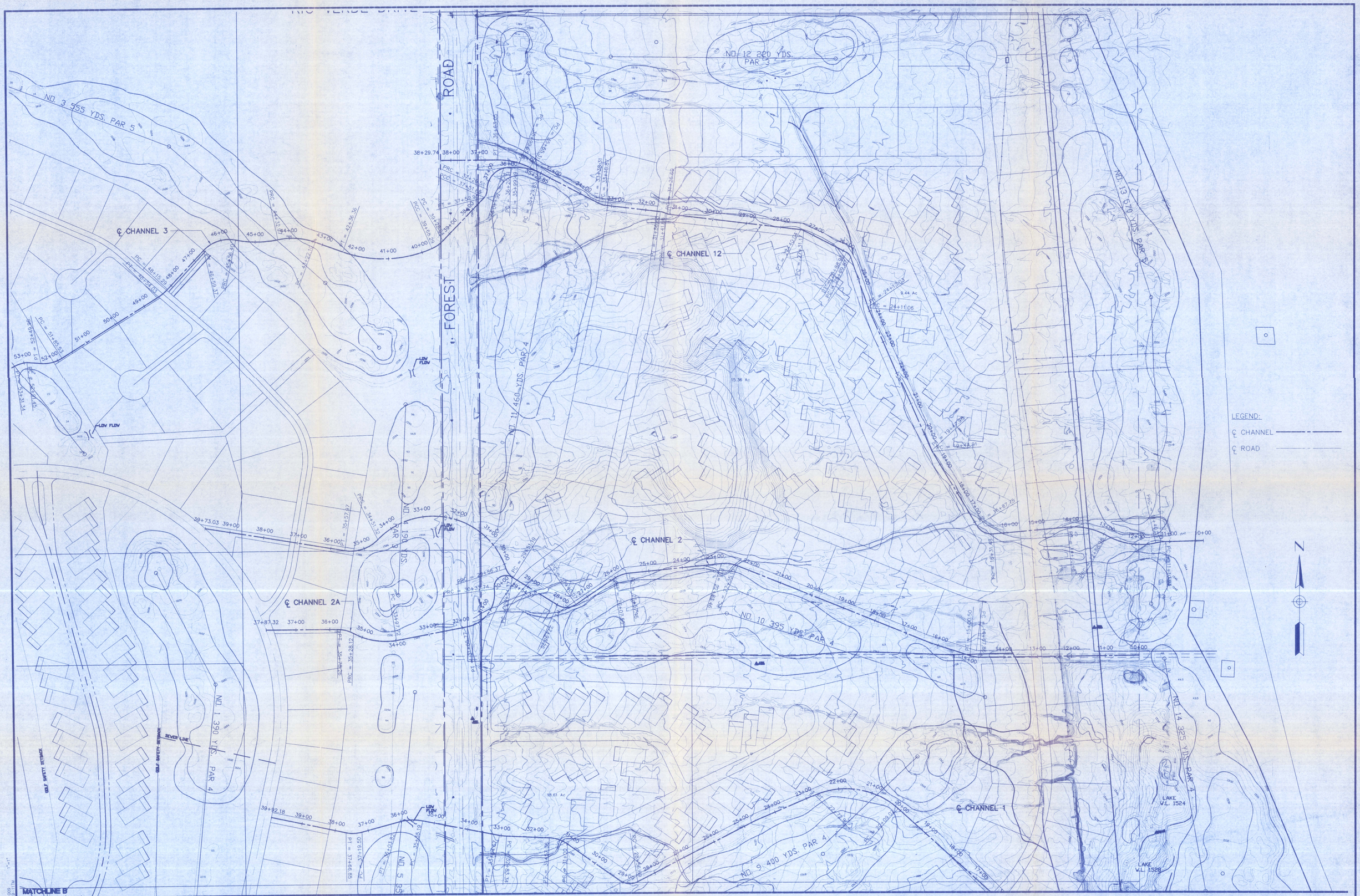

NOTICE: THESE PLANS ARE
PRELIMINARY
NOT FOR CONSTRUCTION OR RECORDING
ARIZONA BOARD OF TECHNICAL REGISTRATION
04-30-94
THIS NOTE TO BE REMOVED AT TIME OF AGENCY APPROVAL

BROOKS, HERSEY AND ASSOCIATES, INC.
ENGINEERS/SURVEYORS
4802 E. Elwood Street, 16
Phoenix, Arizona 85040
(602) 437-3733

TONTO VERDE EAST EXTENSION DRAINAGE MAP CHANNEL LAYOUT

DESIGN:	LO
DRAWN:	GZ
CHECK:	LO
SCALE:	
HORZ:	1" =100'
VERT:	N/A

JOB NO. 519-11TM DATE: 11-6-97 SHEET 2 OF 2

11-6-97 GZ
FILE:519TB PATH: G:\519\11TM 1"=1'