Bridge Scour Investigation
and Design of Corrective Measures

Work Order No. 80407
Maricopa County Department of Transportation

Property of
Flood Control District of Maricopa County
Please Return to
2801 W. Durango
Phoenix, AZ 85009

August 18, 1998
23048-APA

Addendum to

FINAL REPORT (REVISED)

Dated June 23, 1998

Structure Number 9825
Carefree Highway Bridge over Cave Creek

Submitted To

Maricopa County

Department of Transportation

Submitted By

Baker

A267.903

Table of Contents

Introduction 1
Bridge Location and Description 1
Report Review 1
Site Inspection 2
Hydrology and Hydraulics 4
Hydraulic and Scour Analysis 4
Revised Scour Analyses 6
Scour Countermeasure Considerations 8
Abutment Countermeasures 8
Scour Countermeasure Alternatives 11
Impacts to the New Carefree Highway Parallel Bridge Just Downstream 12
Recommended Alternative 12
References 13

List of Tables

Table 1 - PB Scour Results 4
Table 2 - 100-Year Scour Results (in feet) 7
Table 3 - 500-Year Scour Results (in feet) 7
Table 4 - Abutment Riprap Results 9
Table 5 - FHWA 2-Ton Gradation 9

Appendix A

Hydraulic Calculations

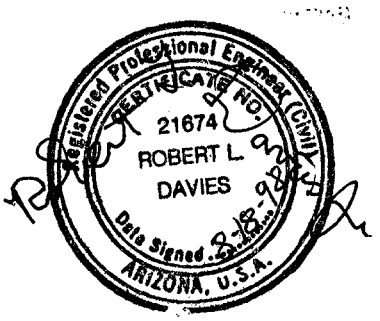

BRIDGE SCOUR INVESTIGATION AND
DESIGN OF CORRECTIVE MEASURES

Work Order No. 80407
Maricopa County Department of Transportation

FINAL REPORT

Structure Number 9825
Carefree Highway over Cave Creek

Introduction

Maricopa County Department of Transportation (MCDOT) has completed an initial scour investigation of all Maricopa County bridges. Of the bridges studied, ten scour critical bridges are being considered for countermeasure design. The Baker team is investigating and performing the final design required to retrofit five of these bridges. Existing data/reports were reviewed, site investigations made, countermeasure alternative reports developed, and PS&E packages will be completed for each structure.

Bridge Location and Description

The Carefree Highway Bridge over Cave Creek is a 4-span (350 feet in length) precast concrete I-beam superstructure. The piers and abutments are concrete bents on columns and spread footings. The project was built in 1986 under MCDOT project No. 07100 and Federal Aid No. ER-RS-571(5)P.

Report Review

Parsons Brinckerhoff (PB) evaluated this bridge for scour risk under a previous contract with MCDOT. PB's report, completed in February 1997, has been reviewed and the following comment is made.

Comment:

1. Page 16: The report indicates that the west abutment is not vulnerable due to the dumped riprap section. The reliability of the existing dumped riprap may be questionable and should not be counted on to protect the abutment without further study.

2. Page 18: The Q100 scour is about one foot above the footing. This is too close to call okay. The science of scour is not exact enough for a safe call that close to the vulnerable part of the foundation, especially a spread footing.

3. General comment: Page 3 indicates some erosion of the banks and the original as-builts show a dumped section of riprap. It is not clear why the consultant shows a deficiency of the east bridge end bank protection and not the west abutment.

Site Inspection

The site inspection was made on June 25, 1997 with the following present: Bob Davies, John Misik, and Richard Bruesch of Baker, Ken Ricker of RAM, Mark Larson of Larson & Company, Marty Teal of WEST Consultants, and Tom Sonneman of MCDOT.

Observations:

1. There does not appear to be any damage or loss to the dumped riprap on either bank. This report will investigate the adequacy of the existing riprap design and placement. Although significant events occurred in the early 1990's, the discharges used for scour calculations and riprap design herein are for the 100-year and 500-year events.

2. There are large boulders in the channel, indicating that the stream could be capable of moving large sized material. However, topographic data indicate the channel invert has degraded by four feet over a 20-year period. The riprap section and bed have similar sized material. This could suggest that the existing dumped riprap may move under the larger flood flows or that the boulders in the streambed have become exposed due to channel degradation. The scour evaluation and riprap design will be performed using the discharges discussed.

3. There is an inactive gravel mining operation directly upstream on the east bank.

4. Review of as-builts indicate that the dumped section extends down a 2:1 slope to extend over the end pier footings.

5. The gradation of the riprap in place appears to be of a larger size than that specified on the plans, but is somewhat gap-graded with areas of large material without smaller stones and areas with none of the larger stones. Maximum size is up to 48 inches.

6. Tom Sonneman indicated that the County plans to build a new parallel bridge directly downstream, sometime later this year. The new bridge will be on drilled shafts, and will have dumped riprap for bank protection.

7. The construction of a soil cement floor alternate at this site would require considerable excavation (up to 30 ft) at the downstream toe, and would be under the new bridge if it is built in advance of the countermeasure for the existing bridge. Additional study of the site hydraulics and the adequacy of the dumped riprap in place is warranted.

8. Existing site surface conditions and available subsurface data have been reviewed. The information indicates that the wash bed contains sand, gravel, and cobbles with various amounts of boulders. Generally, the percentage of boulders increases with depth.

9. Construction of a potential scour resistant layer between the piers could be composed of cement stabilized alluvium (roller compacted concrete), or reinforced concrete.

10. Excavation parameters could include:

    Cut Slopes*

    Dry Soils 1H:1V
    Submerged 2H:1V
    * Dewatering will affect cut slopes in that dewatering from sumps within the excavation may require flatter slopes. Dewatering using external well points may result in steeper slopes.

11. Excavated material will probably be sand, gravel and cobbles with various amounts of boulders. These materials could be used as the primary constituent of cement stabilized alluvium (CSA). The CSA will probably require about 12 percent cement.

12. Since groundwater levels within Cave Creek are not controlled upstream, the site may be subjected to short term high intensity flows and an occasional long term minor flow. The depth of groundwater in the area is directly related to these events. An external well point or large diameter well system may be required. The design of the dewatering system should be accomplished by an experienced dewatering firm. The discharge from dewatering may have to meet some water quality standards.

13. The vegetation within the wash is sparse, consisting of mesquite, desert broom, a few perennials, and desert ragweed. Vegetation above the banks is typically Lower Sonoran, Upland Division, consisting of mesquite, foothill paloverde, saguaro cactus, cholla, prickly pear, and various perennials and dried annuals. There is no surface water present, and no sign of near-surface water.

14. Surrounding land uses include a County-operated landfill immediately southeast of the bridge, a former materials pit and concrete batch plant adjoining the site to the northeast, and vacant desert open space elsewhere.

15. The only bird species using the bridge as a domicile is a barn owl, an uncommon bird in Maricopa County. Other birds in the area are typical of the surrounding habitat: verdin, ash-throated flycatcher, Albert's towhee, mourning dove, house finch, common raven, Gila woodpecker, and cactus wren.

16. The materials that would be excavated to construct the floor could be stockpiled outside of the floodplain on the site of the inactive gravel mining area just northeast of the bridge. No vegetation of value to wildlife would be lost due to construction or the stockpiling operation.

Hydrology and Hydraulics

WEST Consultants (WEST) reviewed background information for the bridge, including the bridge scour report dated February, 1997 submitted to the Maricopa County Department of Transportation (MCDOT). Bridge scour calculations were performed with the aid of a HEC-2 computer model provided by the Flood Control District of Maricopa County (FCDMC) and the computer program HEC-RAS. The site was visited in conjunction with other members of the Michael Baker team on June 25, 1997.

The review and preliminary countermeasure ideas presented by WEST follow.

Hydraulic and Scour Analysis

Review of Previous Analyses

WEST reviewed the report "Cave Creek Wash Bridge at Carefree Highway" prepared by Parsons Brinckerhoff (PB) for MCDOT and dated February, 1997. Table 1 summarizes their findings. Note that the report text mistakenly states that the contraction scour is 19 and 33 feet for the 100- and 500-year events, respectively. However, PB's calculated values rounded to the nearest foot are correctly presented in Table 2 of the PB report and Table 1 herein.

Table 1 - PB Scour Results

	100-year Event			500-year Event		
	East Abutment	Pier	West Abutment	East Abutment	Pier	West Abutment
Degradation	0	0	0	0	0	0
Local Scour	33.8	16.0	0	43.4	18.0	0
Contraction Scour	2.0	2.0	0	3.0	3.0	0
Total Scour	35.8	18.0	0	46.4	21.0	0

PB created a five cross section HEC-2 model which was used for pier and abutment scour calculations. The model was then imported into HEC-RAS, and the bridge removed, for contraction scour calculations. The contraction scour methodology was not rigorous. Because the bridge section was removed from the model, the reduction in area due to the piers was not accounted for in the hydraulic calculations (pier widths were later subtracted from top width in a spreadsheet calculating the final scour results, albeit with a slight arithmetic error). Not including the piers in the hydraulic model affects the average upstream depth in the main channel (Y_1) in the live-bed contraction scour equation:

$$\frac{Y_2}{Y_1} = \left(\frac{Q_2}{Q_1}\right)^{6/7} \left(\frac{W_1}{W_2}\right)^{K_1}$$

$Y_s = Y_2 - Y_o$ = Average Scour Depth

where:

Y_1 = Average depth in the upstream main channel

Y_2 = Average depth in the contracted main section

Y_o = Existing depth in the contracted section before scour

Q_1 = Flow in the upstream channel transporting sediment

Q_2 = Flow in the contracted channel

W_1 = Bottom width of the upstream main channel

W_2 = Bottom width of the main channel in the contracted section

K_1 = Exponent determined by the shear velocity, fall velocity of bed material based on D50, and the mode of bed material transport, all as defined in HEC18

Without re-running their model, it is impossible to know how much the contraction scour results would change. However, the results would be expected to change a few feet rather than tens of feet.

The pier scour results appeared satisfactory although, again, the methodology was not rigorous. The velocity upstream of the face of the pier was taken as equal to the average channel velocity for the 100-year event; normally streamtubes are defined such that the velocity of the streamtube upstream of the pier is used. For the 500-year event the velocity used in the calculations, 13.4 fps, did not appear anywhere in the output file; therefore, we do not know where this number came from.

The abutment scour calculations contained one slight error. The correction factor for skew angle was set to 1, corresponding to a bridge at right angles to the flow. The factor should have been adjusted for the 60 and 120 degree skew angles for the abutments. Also, given the technical calculations appended to the report, it is difficult to know how the projection lengths for the left (east) abutment of 92.7 and 144 feet were obtained. Because the left abutment cuts off a very large portion of the historic floodplain, it seems that these lengths should have been much larger.

Because of the uncertainties associated with the previous scour calculations, WEST performed new scour calculations as described in the following sections.

Revised Scour Analyses

HEC-2 FEMA Model

WEST was provided a flood insurance restudy model by FCDMC dated August 1996. We imported the FEMA HEC-2 model into HEC-RAS. Scour was calculated for the 100-year event using flows in the model (33,800 cfs at the bridge). The 500-year flow was input to the model (51,000 cfs), and scour was again calculated. The model was modified by removing the spur dike upstream of the bridge for abutment scour calculations.

To assess the effects of encroaching banks and revised "n" – values under the bridge due to the alternatives evaluated, the following model runs were made. The existing model already incorporated the riprap roughness under the bridge. We modified the model to reflect a five foot additional riprap layer on each side of the channel (total width reduction of ten feet). No change in water surface elevation was noted through the bridge. Water surface elevations upstream of the bridge were slightly higher (up to 0.3 feet). When we then changed the roughness under the bridge (not including riprapped side slopes) to that of concrete, the resulting water surface elevations compared to the original model results were lower in the bridge section (up to one foot) and unchanged upstream of the bridge. No other adjustments were made to the model.

When the scour countermeasure design began MCDOT was finishing the design for the new Carefree Highway Bridge. There was a question on how soon the bridge would be constructed. Baker was directed not to consider scour countermeasure design for the new bridge. MCDOT had already incorporated scour considerations into the design.

During construction of the new bridge MCDOT directed Baker to take a look at the hydraulics taking the new bridge into consideration.

Scour Results

Using HEC-18 procedures, contraction, pier, and abutment scour was calculated for both the 100-year and 500-year events. Because sediment gradations were not available, and since no sediment sizes were given in the PB report, the median sediment size was estimated to be 1 inch based on field observations. For this sediment size and the calculated hydraulic conditions, live-bed contraction scour will occur. Results of the new scour calculations are given in Tables 2 and 3. No data is included for the west abutment since the projection into flow is very small. The spur dike on the east abutment is assumed ineffective for the analysis. For the 100-year event (Table 2), the WEST results show slightly higher contraction and pier scour due to higher calculated velocities, and a lower abutment scour. Overall, the total channel scour is higher than the PB results by almost six feet, and the total abutment scour is

slightly lower (2 feet). For the 500-year event the WEST contraction scour results are again higher than the PB results. The pier scour is almost exactly the same, and the WEST abutment scour results are lower. Overall, the total channel scour is nearly six feet greater than the previous results, and the total abutment scour is nearly the same (1.3 feet greater). These results do not change the bridge's rating of scour critical.

As previously discussed Baker was directed to perform a scour evaluation with the new bridge in place. Including debris 7-foot diameter piers were evaluated for scour. The contraction and long-term scour results were assumed to be the same as shown in the WEST analyses. The resulting pier scour depths for the 100-year and 500-year floods are 15.1 feet and 14.8 feet. The velocity actually goes down for the 500-year flood due to the depth of flow increasing and the velocity decreasing. The downstream cutoff wall was set using the 500-year scour depth. Review of the roadway profile shows there are low points in the westbound lanes on both sides of the bridge. About 738 feet west of the PVI over the bridge there is a low point elevation of about 1871.3 feet. About 640 feet east of the PVI over the bridge there is a low point elevation of about 1873.5 feet. The spur dike elevation is at elevation 1871 feet. Flood elevations above 1871.3 may begin overtopping the eastbound lanes. These results are not shown in the following table. Scour calculations are included in Appendix A.

Table 2 - 100-Year Scour Results (in feet)

	WEST	PB	Diff.
(1) Contraction	5.5	2.0	3.5
(2) Pier	18.2	16.0	2.2
(3) E. Abutment	28.3	33.8	-5.5
Total Channel Scour [(1)+(2)]	23.7	18.0	5.7
Total E. Abutment Scour [(1)+(3)]	33.8	35.8	-2.0

Table 3 - 500-Year Scour Results (in feet)

	WEST	PB	Diff.
(1) Contraction	8.8	3.0	5.8
(2) Pier	17.9	18.0	-0.1
(3) E. Abutment	38.9	43.4	-4.5
Total Channel Scour [(1)+(2)]	26.7	21.0	5.7
Total E. Abutment Scour [(1)+(3)]	47.7	46.4	1.3

Long-term Degradation

The PB report stated that approximately 1 foot of aggradation occurred at the bridge over 13 years based on the difference between the 1982 plans design thalweg and surveyed elevations taken in 1995. A qualitative long-term degradation study requires an estimate of dominant discharge (generally between the 5- and 10-year event for ephemeral streams), sediment gradation, channel control point(s) and inflowing sediment load. Because of the lack of information for this site, a qualitative long-term degradation study was not performed. However, given the large sediment sizes encountered at the site, we believe that any general degradation that may occur would be limited by channel armoring. Using the equations given in Pemberton and Lara (1984; pp. 9-14) the diameter of armor material and depth to armor was estimated for long-term degradation. Calculations using the ten-year discharge as the channel forming flow indicate that any degradation would be limited by armoring at a depth of five to seven feet below the current channel elevation. However, because of the observed aggradation and the built-in conservatism of the scour equations, we do not recommend the addition of the depth to armor to the results shown in Tables 2 and 3.

Scour Countermeasure Considerations

General

Two forms of scour protection countermeasures are considered - those to protect the abutments, and those to protect the piers. Several options are available for each, and cost will play an important role in the measure(s) selected.

Abutment Countermeasures

During the field reconnaissance we observed that the existing riprap at the abutments was highly segregated, i.e., there were areas with predominantly large stone and other areas with small stone. Also, the smaller stones in the revetment appeared roughly the same size as the larger bed material in the channel. These two factors raised doubts regarding the adequacy of the existing protection. Using preliminary results from the HEC-RAS model with the 100-year event, rock size and thickness were calculated. Results are presented in Table 4.

Table 4 - Abutment Riprap Results

Method	FHWA Abutment (HEC-18)	ASCE	Isbash	USBR
D_{50} (ft)	3.1	2.4	2.65	3.0
Layer Thickness (ft)	4.7	4.3	4.3	5.4

If riprap is selected as a countermeasure for the abutments, we recommend using a FHWA 2-ton gradation (Table 5) with a layer thickness of 5 feet. Existing rock could be used as part of the new revetment in one of two ways. If the existing rock is completely removed first to remedy the segregation problem, the rock could be mixed with new (larger) stones to make up the required gradation. Bedding and filter fabric should be used as per the original bridge plans (as-builts dated 6/25/86). A second option would be to leave the existing rock in place and install the rock with the new gradation over the existing revetment. The layer thickness of the new rock over the existing rock would be equal to 4.5 feet, the largest rock size of the 2-ton gradation. Construction quality control should be provided to prevent placement of segregated rock.

Both U.S. Army Corps of Engineers and Federal Highways (HEC-18) guidance state that the rock riprap thickness should not be less than the larger of either 1.5 times D50 or D100. It is common engineering practice to provide a layer thickness greater than D100 to provide a well-graded riprap design preventing loss of smaller material. Our design would meet these standards if placed over salvaged riprap from the existing bank protection.

Table 5 - FHWA 2-Ton Gradation

Rock Size (ft)	Rock Size (lbs.)	% Passing
4.5	8000	100
3.6	4000	50
2.85	2000	5

Based on the hydraulic and riprap calculations, the existing riprap on the spur dike should be sufficient in size and thickness for the 100-year event. Therefore, the larger riprap need only be placed at the abutments themselves. This would provide approximately 160 linear feet of new riprap on the west abutment and 126 linear feet on the east abutment. If a new layer is put in place with a layer thickness of 4.5 feet and a toe-down depth to elevation 1838 feet, the total new rock needed (includes both abutments) would be about 4600 cubic yards.

Other options available to protect the abutments include gabions, concrete lining, soil cement, "sackcrete" or cable-tied concrete blocks. Riprap is recommended due to its ability to "self-heal" and ease of repair if damage occurs during an event. With any of

the options, the toe protection is a major concern, and should be considered in conjunction with the pier scour countermeasures. If the pier/ch annel scour countermeasures are installed as described below, the existing toe-down depth of 13.5 feet (from 1982 as-builts) should be sufficient. Without channel scour countermeasures, the amount of rock at the toe of the installation would have to be increased to provide a sufficient volume for launching of rock into the scour hole that would form.

The existing riprap installation at the piers can not be counted on to arrest scour. We recommend building an apron under the bridge across the entire channel to protect the piers from being undermined. The apron could be constructed of concrete, soil cement, articulating (cable-tied) concrete blocks, grout-filled bags or mattresses or riprap. Materials that allow the apron to flex and adjust its shape to small changes in the bed are generally to be preferred over rigid solutions (such as concrete) which are more easily undermined. Grouted riprap is not recommended as the grout tends to deteriorate with time. Gabions are not recommended due to the large bed load material in the channel which could break the wire cages.

Studies show (e.g. Jones et al., 1995; Bertoldi etal., 1996) that interconnected mats such as cable-tied blocks and grout mats have two modes of failure. The first is overturning and rolling up of the leading edge if it is not adequately anchored or toed-in. The second is uplift of the inner portion of the mat which usually occurs at much higher velocities when the leading edge is adequately anchored. Also, interconnected mats have to be fitted around a pier and require a good seal between the mat and pier to avoid being undermined by the diving currents along the upstream face of the pier. Many of the mats are commercial products whose manufacturer often helps with final engineering and installation. Depending on the mat type and material, a filter layer or blanket may be required under the mat. Mat materials will also have different useful lives, and may need to be replaced in the future. Gabions, although used successfully in many parts of the world, are an example of this where the wire cages may break over time. However, use of a gabion mattress under riprap may be quite effective if the mattress performs essentially as a flexible filter blanket which can deform as scour holes develop. If a gabion layer is proposed for use in this way, the substrate should be designed in accordance with filter design criteria. Cost, aesthetics, durability, vandalism, safety and environmental issues should be considered for flexible mat installation.

The ends of the apron should be keyed in on the sides and the upstream and downstream ends. The channel bottom elevation is about 1856. The proposed top of slab elevation is El. 1841. The proposed downstream toe-down is El. 1832. The proposed upstream and side toe-down elevation of the apron is El. 1837. This allows 15 feet of cover for potential scour. The toe-down minimum elevation should be based on long-term degradation plus local scour. The amount of scour due to degradation downstream of the sill apron, as previously discussed under Long-term Degradation, could be calculated using the Veronese equation (pg.109, HEC-20). This approach

would be used if the slab were on grade. Since the slab is now buried 15 feet the cutoff wall toe-down depths are set based on engineering judgement and past experience. Our proposed design provides excess scour capacity than that predicted (15 feet as opposed to 14 feet). We believe this is warranted since this area is urbanizing and will have increased runoff in the future. Extent of the apron upstream and downstream of the piers is usually recommended as 2Ys where Ys is the calculated scour depth. This would give a minimum distance of 36 feet based on the calculated scour depths both upstream and downstream from edge of each pier. Given a pier length of 43 feet (1982 as-builts), adding 72 feet for the additional apron width, and multiplying by the approximate width between abutments (perpendicular to the flow) of 220 ft yields an apron area of 25,300 square feet. Direction from MCDOT required terminating the apron short of the new bridge since it was adequately designed for scour.

Scour Countermeasure Alternatives

The following alternatives are based on the site conditions and on the foregoing analysis by WEST:

Alternative No. 1

This alternative consists of constructing a reinforced concrete floor to protect the piers and a strengthened dumped riprap section to protect the abutments. This alternative utilizes the existing riprap material already at the site, and results in the least excavation overall.

The estimated cost of this alternative is $915,000.

Alternative No. 2

This alternative consists of constructing a cement stabilized alluvium (CSA) floor under the bridge to protect the piers and CSA banks on both sides to protect the abutments. Existing dumped riprap material will be used at the downstream side of the floor.

During the larger flood events larger boulders can be transported downstream. The proposed CSA floor should experience a minor impact since the section is three feet thick.

High river flows that can entrain large material will abrade CSA and/or concrete structures in the channel. However, the high flows that are able to entrain the large material are also the least frequent. Routine bridge inspections and special inspections after large flood events should observe the condition of the sill and recommend any necessary repairs.

The estimated cost of this alternative is $1,265,000.

Impacts to the New Carefree Highway Parallel Bridge Just Downstream

The new bridge crossing Cave Creek Wash directly downstream from the older existing bridge (Str. # 9825) is close enough to be potentially influenced by the proposed new scour protection system. As noted previously in the report, extension of the scour protection apron upstream and downstream of the piers is usually recommended as twice the calculated scour depth. Because of construction problems with the new Carefree Highway Bridge at Cave Creek, the County has required that the scour protection apron terminate at the upstream side of the new bridge. Therefore, the full extension of the scour protection apron cannot be developed. As a result of the shorter length apron, increased local scour around the new bridge pier shafts can be expected after significant flows through Cave Creek. The County should anticipate increased maintenance to restore the channel to pre-flood conditions after flood flows.

The new bridge has been designed by the County for scour conditions produced by the Q100 and Q500 flood events. The piers and abutments have deep drilled shaft foundations extending about 66 feet and 53 feet below the present channel bottom respectively. Parsons Brinkerhoff indicated that the design scour for the Q500 event is 21 feet at the piers.

The new downstream bridge should be not be significantly impacted by scour changes caused by the proposed scour protection system for the older upstream bridge.

Recommended Alternative

Alternative No. 1, a reinforced concrete floor with strengthened bank protection is recommended. This alternative is the costs the least and utilizes existing dumped riprap protection that is in place.

References

Bertoldi, D.A., Jones, J.S., Stein, S.M., Kilgore, R.T., and Atayee, A.T. (1996). "An Experimental Study of Scour Protection Alternatives at Bridge Piers," FHWA Publication No. FHWA-RD-95-187, McLean, VA.

Jones, J.S., Bertoldi, D., and Stein, S. (1995). "Alternative Scour Countermeasures," *Proceedings, First International Conference on Water Resource Engineering*, ASCE, New York, NY.

Parsons Brinckerhoff (February 1997). "Cave Creek Wash Bridge at Carefree Highway," Submitted to Maricopa County Department of Transportation, Phoenix, AZ.

Pemberton, E.L., and Lara, J.M. (January 1984). "Computing Degradation and Local Scour," Technical Guideline for Bureau of Reclamation, Denver, CO.

APPENDIX A

Hydraulic Calculations

BRIDGE SCOUR

Carefree Highway at Cave Creek
Q500, WO spurdike, D50=0.083

HEC-RAS

Contraction Scour	500-Year Scour	From HEC-RAS Model			From Previous Report			Difference	
			Channel			Channel			
Input Data									
	Average Depth (ft):		18.65			7.13		11.52	
	Approach Velocity (ft/s):		5.55					---	
	Br Average Depth (ft):		13.2					---	
	BR Opening Flow (cfs):		51000			51000		0.00	
	BR Top WD (ft): **(TW- 3 piers @ 8ft.)**		270			262		8.00	
	Grain Size D50 (ft):		0.083					---	
	Approach Flow (cfs):		29674.51			43202		13527.49	
	Approach Top WD (ft):		286.5			393		106.50	
	K1 Coefficient:		0.59			0.59		0.00	
Results								---	
	Scour Depth Ys (ft):		**8.81**			**3**		**5.81**	
	Critical Velocity (ft/s):		7.79					---	
	Equation:		Clear			Live			
Pier Scour									
	All piers have the same scour depth								
Input Data									
	Pier Shape:	Round nose				Round nose			
	Pier Width (ft): **(doubled for debris)**	8				8		---	
	Grain Size D50 (ft):	0.083						---	
	Depth Upstream (ft):	21.06				17		4.06	
	Velocity Upstream (ft/s):	12.25				13.4		1.15	
	K1 Nose Shape:	1				1		---	
	Pier Angle:	0				0		---	
	Pier Length (ft):	50				--		---	
	K2 Angle Coef:	1				1		---	
	K3 Bed Cond Coef:	1.1				1.1		---	
	Grain Size D90 (ft):	1				--		---	
	K4 Armouring Coef:	1				--		---	
Results								---	
	Scour Depth Ys (ft):	**17.86**				**18**		**0.14**	
	Froude #:	0.47				0.57		0.1	
	Equation:	CSU equation							

BRIDGE SCOUR

Carefree Highway at Cave Creek
Q500, WO spurdike, D50=0.083

Abutment Scour									
		Left	Right		Left	Right		Left	Right
Input Data									
	Station at Toe (ft):	9639.3	9872.03					--	--
	Toe Sta at appr (ft):	9810.71	9966.62					--	--
	Abutment Length (ft):	624.73	1596.62		92.7	7.4		---	---
	Depth at Toe (ft):	20.51	20.51					20.51	20.51
	K1 Shape Coef:	0.55 - Spill-through abutment			0.55 - Spill-through abutment			---	---
	Degree of Skew (degrees): (given)	60	120		90	90		30	30
	K2 Skew Coef:	0.95	1.04		1	1		0.05	0.04
	Projected Length L' (ft):	541.03	798.31		92.7	7.4		448.33	790.9
	Avg Depth Obstructed Ya (ft):	13.82	6.26		12.19	17.65		1.63	11.39
	Flow Obstructed Qe (cfs):	19657.63	13413.95					--	--
	Area Obstructed Ae (sq ft):	6147.91	5138.93					--	--
Results									
	Scour Depth Ys (ft):	**38.92**	**25.72**		**43.4**	**24.8**		**4.48**	**0.92**
	Qe/Ae = Ve:	3.2	2.61		6.99	6.99		3.79	4.38
	Froude #:	0.15	0.18		0.29	0.29		0.14	0.11
	Equation:	Froehlich	Froehlich		Froehlich	Froehlich			
Combined Scour Depths									
Pier Scour + Contraction Scour (ft):		**Channel:**	**26.67**		**Channel:**	**21**		**Channel:**	**5.67**
Left abutment scour + contraction scour (ft):		**47.73**				**46.4**			**1.33**
Right abutment scour + contraction scour (ft):		**34.53**				**27.8**			**6.73**

BRIDGE SCOUR

Carefree Highway at Cave Creek
Q100, WO spurdike, D50=0.083

HEC-RAS

	100-Year Scour	From HEC-RAS Model			From Previous Report			Difference	
Contraction Scour			Channel			Channel			
Input Data									
	Average Depth (ft):		11.26			6.3		4.96	
	Approach Velocity (ft/s):		7.73					---	
	Br Average Depth (ft):		9.89					---	
	BR Opening Flow (cfs):		33800			35900		2100.00	
	BR Top WD (ft): **(TW- 3 piers @ 8ft.)**		264.6			262		2.60	
	Grain Size D50 (ft):		0.083					---	
	Approach Flow (cfs):		24412.71			31883		7470.29	
	Approach Top WD (ft):		280.69			387		106.31	
	K1 Coefficient:		0.59			0.59		0.00	
Results								---	
	Scour Depth Ys (ft):		**5.52**			**2**		**3.52**	
	Critical Velocity (ft/s):		7.16					---	
	Equation:		Live			Live			
Pier Scour									
	All piers have the same scour depth								
Input Data									
	Pier Shape:	Round nose				Round nose			
	Pier Width (ft): **(doubled for debris)**	8				8		---	
	Grain Size D50 (ft):	0.083						---	
	Depth Upstream (ft):	12.76				13.5		0.74	
	Velocity Upstream (ft/s):	14.91				10.4		4.51	
	K1 Nose Shape:	1				1		---	
	Pier Angle:	0				0		---	
	Pier Length (ft):	50						---	
	K2 Angle Coef:	1				1		---	
	K3 Bed Cond Coef:	1.1				1.1		---	
	Grain Size D90 (ft):	1						---	
	K4 Armouring Coef:	1						---	
Results								---	
	Scour Depth Ys (ft):	**18.16**				**16**		**2.16**	
	Froude #:	0.74				0.5		0.24	
	Equation:	CSU equation				CSU equation			

BRIDGE SCOUR

Carefree Highway at Cave Creek
Q100, WO spurdike, D50=0.083

Abutment Scour									
		Left	Right		Left	Right		Left	Right
Input Data									
	Station at Toe (ft):	9639.3	9872.03					--	--
	Toe Sta at appr (ft):	9810.71	9966.62					--	--
	Abutment Length (ft):	495	22.43		92.7	3.2		---	---
	Depth at Toe (ft):	12.22	12.22					12.22	12.22
	K1 Shape Coef:	0.55 - Spill-through abutment			0.55 - Spill-through abutment			---	---
	Degree of Skew (degrees): **(given)**	60	30		90	90		30	60
	K2 Skew Coef:	0.95	0.87		1	1		0.05	0.13
	Projected Length L' (ft):	428.68	11.21		92.7	3.2		335.98	8.01
	Avg Depth Obstructed Ya (ft):	6.76	10.33		12.19	12.19		5.43	1.86
	Flow Obstructed Qe (cfs):	12048.62	6785.73					--	--
	Area Obstructed Ae (sq ft):	3008.8	872.9					--	--
Results									
	Scour Depth Ys (ft):	**28.31**	**17.24**		**33.8**	**17.3**		**5.49**	**0.06**
	Qe/Ae = Ve:	4	7.77		8.4	8.4		4.4	0.63
	Froude #:	0.27	0.43		0.42	0.42		0.15	0.01
	Equation:	Froehlich	Froehlich		Froehlich	Froehlich			
Combined Scour Depths									
Pier Scour + Contraction Scour (ft):		**Channel:**	**23.68**		**Channel:**	**18**		**Channel:**	**5.68**
Left abutment scour + contraction scour (ft):		**33.83**				**35.8**			**1.97**
Right abutment scour + contraction scour (ft):		**22.76**				**19.3**			**3.46**

Updated Gradations and Sensitivity Analysis

RAM Gradations

Sample No.	200	100	50	30	16	8	4	3/4"	1"	2"	3"
1	13	17	21	28	36	46	53	72	76	88	100
2	8	10	12	17	24	33	42	66	72	87	100

Multiplied by 0.8 (Assume 20% coarser than 3 inches based on RAM field estimate)

1	10.4	13.6	16.8	22.4	28.8	36.8	42.4	57.6	60.8	70.4	80
2	6.4	8	9.6	13.6	19.2	26.4	33.6	52.8	57.6	69.6	80

Sensitivity of armoring depth (yd) to number of critical particle (Dc) layers and percent coaser (Δp) material in field:

		ya(in)	fraction coarser	yd (in)	yd (ft)
Dc=	7.5 in	7.5	0.2	30	2.50
2Dc	15	7.5	0.15	42.5	3.54
3Dc	22.5	7.5	0.1	67.5	5.63
		15	0.2	60	5.00
		15	0.15	85	7.08
		15	0.1	135	11.25
		22.5	0.2	90	7.50
		22.5	0.15	127.5	10.63
		22.5	0.1	202.5	16.88

Governing equation (Pemberton & Lara, 1984)

$$y_d = y_a \left(\frac{1}{\Delta p} - 1 \right)$$

Note: Based on Q100 and Q500, Q10 (assumed to be the dominant discharge) is 22,000 cfs
Average of depth, energy slope, velocities through reach used for Dc calculations

Using Q5 instead of Q10 would result in a smaller Dc and smaller depth to armoring values.

Meyer-Peter, Muler (Bedload Transport Equation)

$$D_c = \frac{dS}{K\left(\frac{n_s}{D_{90}^{1/6}}\right)^{3/2}}$$

d =	8.59	ft (mean water depth at dominant discharge)		
S =	0.007675	ft/ft (slope of energy gradient)		
K =	0.19	inch-pound units		
n_s =	0.051	Manning's "n" for stream bed		
D_{90} =	24.0	in.		
D_{90} =	609.6	mm		
		D_c =	150.46	mm

Additional Parameters for other methods

$\mathfrak{G}_w$ =	62.4	lb/ft^2		
$\mathfrak{G}_s$ =	165	lb/ft^2		
S =	0.007675	ft/ft	Bed Slope	
V_m =	10.67	ft/s	Mean Velocity	

Using Q100 will give larger Dc necessary for armoring

This will give larger scour depth, so conservative

Competent Bottom Velocity				
		$D_c = 1.88 V_m^2$		
V_m =	10.67	ft/s (mean channel velocity)		
		D_c =	214	mm

Shields Diagram

$$D_c = \frac{T_c}{(\gamma_s - \gamma_w)T_*}$$

γ_w =	62.4	lb/ft^2
γ_s =	165	lb/ft^2
d =	8.59083	ft (depth)
S =	0.00768	ft/ft slope
T_c =	4.1145	lb/ft^2 = $\gamma_w dS$
T_* =	0.06	Dimensionless Shear Stress
	D_c =	203.71 mm

Lane's Tractive Force Theory

$$T_c = \gamma_w d s$$

γ_w =	62.4	lb/ft^2	
d =	8.590833	ft (mean water depth)	
S =	0.007675	ft/ft (slope)	
T_c =	4.114501	lb/ft^2	
D_c =	200	mm	from Figure 4. Computing Degradation and Local Scour, U.S. Bureau of Rec. Off the chart - had to extrapolate

100 - Year Output - New Bridge - EB lanes

Plan: Sill River: RIVER-1 Reach:Reach-1 Riv Sta: 29.685 Profile: PF#1 Opening: Bridge #1

		Element	Inside BR US	Inside BR DS
E.G. US. (ft)	1869.32			
W.S. US. (ft)	1867.09	E.G. Elev (ft)	1869.15	1869.01
Q Total (cfs)	33800	W.S. Elev (ft)	1866.25	1865.31
Q Bridge (cfs)	33800	Crit W.S. (ft)	1865.36	1865.31
Q Weir (cfs)		Max Chl Dpth (ft)	8.64	7.7
Weir Sta Lft (ft)		Vel Total (ft/s)	13.66	15.44
Weir Sta Rgt (ft)		Flow Area (sq ft)	2474.78	2189.42
Weir Submerg		Froude # Chl	0.84	1.01
Weir Max Depth (ft)		Specif Force (cu ft)	24816.47	24479.62
Min Top Rd (ft)	1876.74	Hydr Depth (ft)	8.15	7.3
Min El Prs (ft)	1872.04	W.P. Total (ft)	359.55	349.64
Delta EG (ft)	0.55	Conv. Total (cfs)	665306.7	552624
Delta WS (ft)	1.9	Top Width (ft)	303.61	299.82
BR Open Area (sq ft)	4280.75	Frctn Loss (ft)		
BR Open Vel (ft/s)	15.44	C & E Loss (ft)		
Coef of Q		Shear Total (lb/sq ft)	1.11	1.46
Br Sel Mthd	Momentum	Power Total (lb/ft s)	15.15	22.58

100-Year Output - Existing Bridge-WB lanes

Plan: Sill	River: RIVER-1	Reach:Reach-1	Riv Sta: 29.715	Profile: PF#1	Opening: Bridge #1
E.G. US. (ft)	1870.27	Element		Inside BR US	Inside BR DS
W.S. US. (ft)	1867.94	E.G. Elev (ft)		1870.03	1869.7
Q Total (cfs)	33800	W.S. Elev (ft)		1867.64	1867.36
Q Bridge (cfs)	33800	Crit W.S. (ft)		1865.05	1864.76
Q Weir (cfs)		Max Chl Dpth (ft)		11.64	11.36
Weir Sta Lft (ft)		Vel Total (ft/s)		12.43	12.27
Weir Sta Rgt (ft)		Flow Area (sq ft)		2719.66	2753.9
Weir Submerg		Froude # Chl		0.68	0.67
Weir Max Depth (ft)		Specif Force (cu ft)		28259.71	28055.34
Min Top Rd (ft)	1879.8	Hydr Depth (ft)		10.35	10.43
Min El Prs (ft)	1871	W.P. Total (ft)		337.32	337.74
Delta EG (ft)	0.54	Conv. Total (cfs)		817834.3	834490.6
Delta WS (ft)	1.23	Top Width (ft)		262.73	264.01
BR Open Area (sq ft)	3634.73	Frctn Loss (ft)			
BR Open Vel (ft/s)	12.43	C & E Loss (ft)			
Coef of Q		Shear Total (lb/sq ft)		0.86	0.84
Br Sel Mthd	Momentum	Power Total (lb/ft s)		10.68	10.25

500 - Year Output - New Bridge - EB lanes

Plan: Sill River: RIVER-1 Reach:Reach-1 Riv Sta: 29.685 Profile: PF#1 Opening: Bridge #1

E.G. US. (ft)	1876.3	Element	Inside BR US	Inside BR DS
W.S. US. (ft)	1874.9	E.G. Elev (ft)	1876.3	1872.13
Q Total (cfs)	51000	W.S. Elev (ft)	1872.04	1867.51
Q Bridge (cfs)	51000	Crit W.S. (ft)	1867.71	1867.73
Q Weir (cfs)		Max Chl Dpth (ft)	14.43	9.9
Weir Sta Lft (ft)		Vel Total (ft/s)	11.91	17.83
Weir Sta Rgt (ft)		Flow Area (sq ft)	4280.75	2860.88
Weir Submerg		Froude # Chl	0.57	1.03
Weir Max Depth (ft)		Specif Force (cu ft)	48856.86	42078.95
Min Top Rd (ft)	1876.74	Hydr Depth (ft)		9.27
Min El Prs (ft)	1872.04	W.P. Total (ft)	730.21	372.76
Delta EG (ft)	4.17	Conv. Total (cfs)	1034032.4	827017.9
Delta WS (ft)	7.38	Top Width (ft)		308.65
BR Open Area (sq ft)	4280.75	Frctn Loss (ft)		
BR Open Vel (ft/s)	11.91	C & E Loss (ft)		
Coef of Q		Shear Total (lb/sq ft)	0.89	1.82
Br Sel Mthd	Press Only	Power Total (lb/ft s)	10.61	32.48

500 - Year Output - Existing Bridge - WB lanes

Plan: Sill River: RIVER-1 Reach:Reach-1 Riv Sta: 29.715 Profile: PF#1 Opening: Bridge #1

E.G. US. (ft)	1879.6	Element	Inside BR US	Inside BR DS
W.S. US. (ft)	1878.52	E.G. Elev (ft)	1879.6	1876.5
Q Total (cfs)	51000	W.S. Elev (ft)	1871	1871
Q Bridge (cfs)	51000	Crit W.S. (ft)	1867.8	1867.42
Q Weir (cfs)		Max Chl Dpth (ft)	15	15
Weir Sta Lft (ft)		Vel Total (ft/s)	14.03	13.62
Weir Sta Rgt (ft)		Flow Area (sq ft)	3634.73	3743.43
Weir Submerg		Froude # Chl	0.69	0.66
Weir Max Depth (ft)		Specif Force (cu ft)	48108.32	48546.76
Min Top Rd (ft)	1879.8	Hydr Depth (ft)		
Min El Prs (ft)	1871	W.P. Total (ft)	659.19	660.27
Delta EG (ft)	3.11	Conv. Total (cfs)	592139.6	860067.3
Delta WS (ft)	3.81	Top Width (ft)		
BR Open Area (sq ft)	3634.73	Frctn Loss (ft)		
BR Open Vel (ft/s)	14.03	C & E Loss (ft)		
Coef of Q		Shear Total (lb/sq ft)	2.55	1.24
Br Sel Mthd	Press Only	Power Total (lb/ft s)	35.83	16.96

100 - Year Output - New Bridge - EB Lanes

Hydraulic Design Data

Pier Scour

All piers have the same scour depth

Input Data

Pier Shape:	Round nose
Pier Width (ft):	7.28
Grain Size D50 (ft):	0.083
Depth Upstream (ft):	9.48
Velocity Upstream (ft/s):	12.24
K1 Nose Shape:	1
Pier Angle:	0
Pier Length (ft):	50
K2 Angle Coef:	1
K3 Bed Cond Coef:	1.1
Grain Size D90 (ft):	1
K4 Armouring Coef:	1

Results

Scour Depth Ys (ft):	15.07
Froude #:	0.7
Equation:	CSU equation

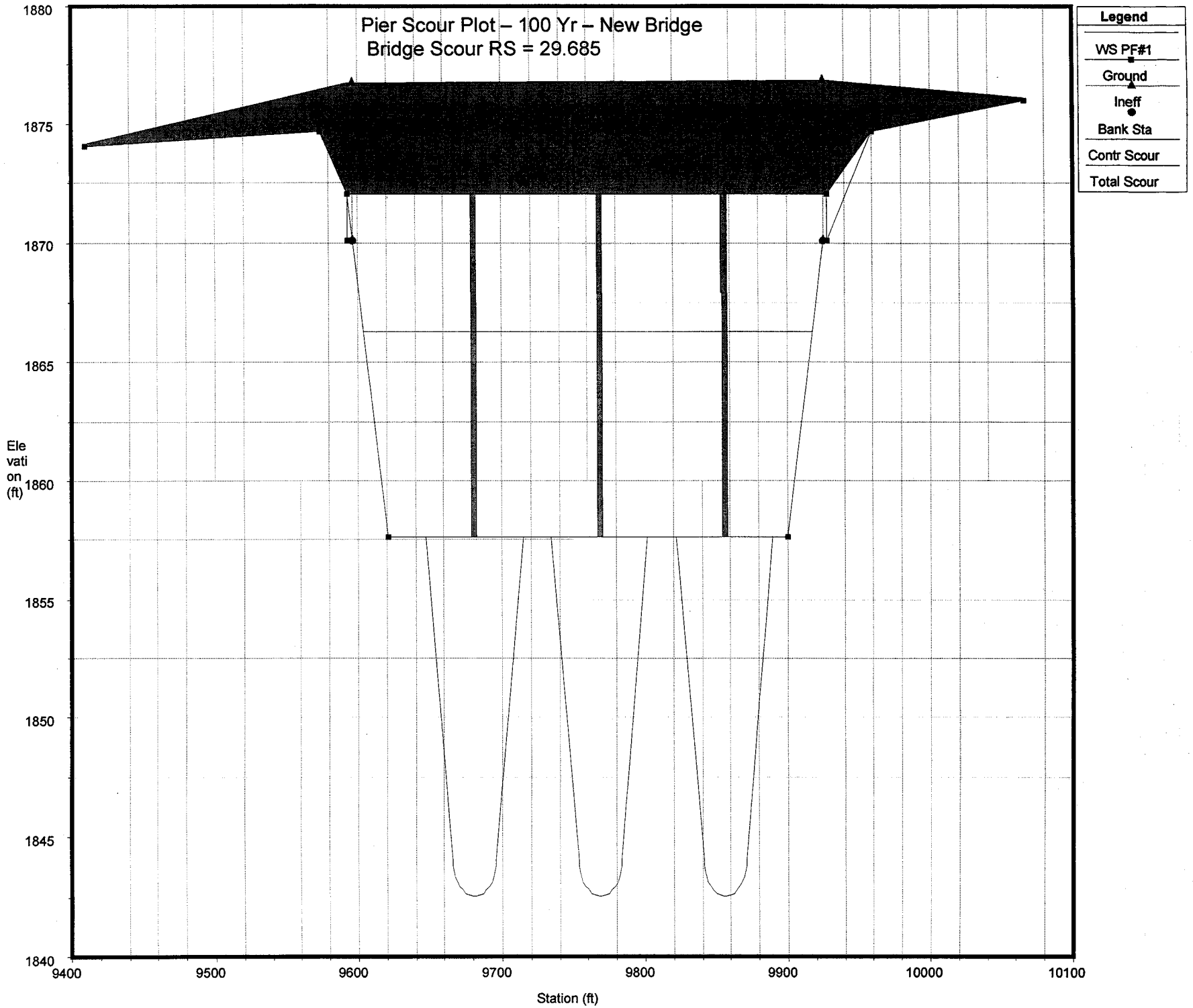
Pier Scour Plot – 100 Yr – New Bridge
Bridge Scour RS = 29.685
Legend
WS PF#1
Ground
Ineff
Bank Sta
Contr Scour
Total Scour
Elevation (ft)
1880
1875
1870
1865
1860
1855
1850
1845
1840
9400
9500
9600
9700
9800
9900
10000
10100
Station (ft)

500 - Year Output - New Bridge - EB Lanes

Hydraulic Design Data

Pier Scour

All piers have the same scour depth

Input Data

Pier Shape:	Round nose
Pier Width (ft):	7.28
Grain Size D50 (ft):	0.083
Depth Upstream (ft):	17.29
Velocity Upstream (ft/s):	9.78
K1 Nose Shape:	1
Pier Angle:	0
Pier Length (ft):	50
K2 Angle Coef:	1
K3 Bed Cond Coef:	1.1
Grain Size D90 (ft):	1
K4 Armouring Coef:	1

Results

Scour Depth Ys (ft):	14.84
Froude #:	0.41
Equation:	CSU equation

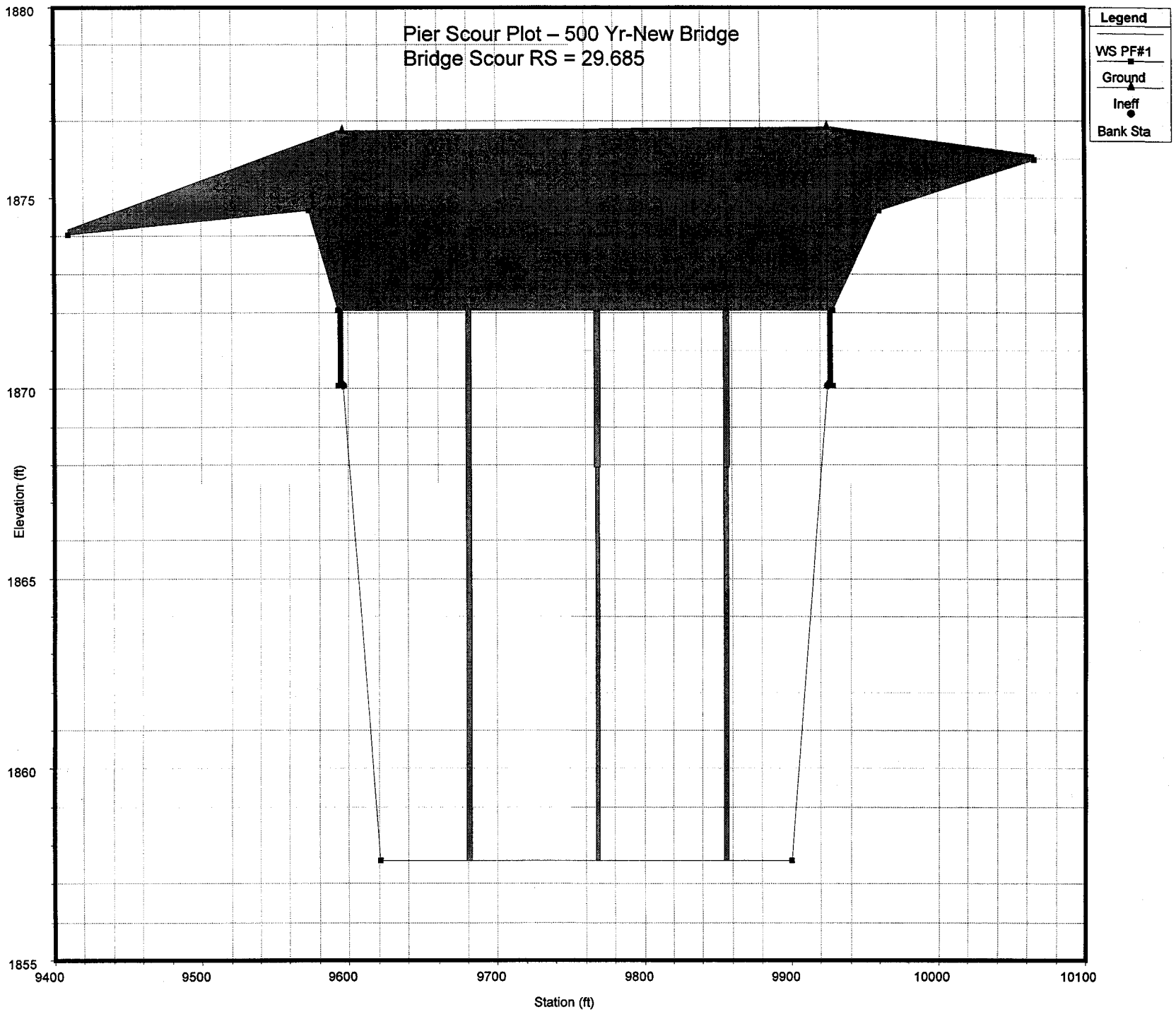
Pier Scour Plot – 500 Yr-New Bridge
Bridge Scour RS = 29.685
Legend
WS PF#1
Ground
Ineff
Bank Sta
Elevation (ft)
1880
1875
1870
1865
1860
1855
Station (ft)
9400
9500
9600
9700
9800
9900
10000
10100

EXCERPTS FROM THE HYDRAULIC OUTPUT ARE INCLUDED FOR THE FOLLOWING HEC-RAS PLANS

Plan	Description
New RR, Concrete SILL	Has new encroaching riprap under bridge and a concrete sill at elevation 1856. Used for re-check of riprap.
Partial Encroachment	used for bridge scour calcs with 500-year Q
Plan 07	used for bridge scour calcs with 100-year Q

Profile Output Table - Standard Table 2
HEC-RAS Plan: Sill River: RIVER-1 Reach: Reach-1

Reach	River Sta	E.G. Elev (ft)	W.S. Elev (ft)	Vel Head (ft)	Frctn Loss (ft)	C & E Loss (ft)	Q Left (cfs)	Q Channel (cfs)	Q Right (cfs)	Top Width (ft)
Reach-1	29.77	1871.18	1870.46	0.72	0.43	0.49	9400.19	24399.81		812.77
Reach-1	29.72	1870.26	1867.92	2.34	0.00	0.04		33800.00		276.30
Reach-1	29.715	Bridge								
Reach-1	29.71	1869.52	1865.63	3.89	2.97	1.33		33800.00		263.64

Profile Output Table - Standard Table 2
HEC-RAS Plan: No spurdike River: RIVER-1 Reach: Reach-1

Reach	River Sta	E.G. Elev (ft)	W.S. Elev (ft)	Vel Head (ft)	Frctn Loss (ft)	C & E Loss (ft)	Q Left (cfs)	Q Channel (cfs)	Q Right (cfs)	Top Width (ft)
Reach-1	29.77	1871.14	1870.42	0.73	0.43	0.38	9387.29	24412.71		811.28
Reach-1	29.72	1870.32	1868.32	2.01				33800.00		280.20
Reach-1	29.715	Bridge								
Reach-1	29.71	1869.18	1865.62	3.56	2.79	1.16		33800.00		269.96

PARTIAL ENCROACHMENT

Profile Output Table - Standard Table 2
HEC-RAS Plan: No spurdike River: RIVER-1 Reach: Reach-1

Reach	River Sta	E.G. Elev (ft)	W.S. Elev (ft)	Vel Head (ft)	Frctn Loss (ft)	C & E Loss (ft)	Q Left (cfs)	Q Channel (cfs)	Q Right (cfs)	Top Width (ft)
Reach-1	29.77	1878.39	1878.06	0.33	0.15	0.30	16104.25	29674.51	5221.24	1592.00
Reach-1	29.72	1877.94	1876.61	1.33				51000.00		2454.08
Reach-1	29.715	Bridge								
Reach-1	29.71	1872.84	1867.79	5.05	2.96	1.85		51000.00		278.21

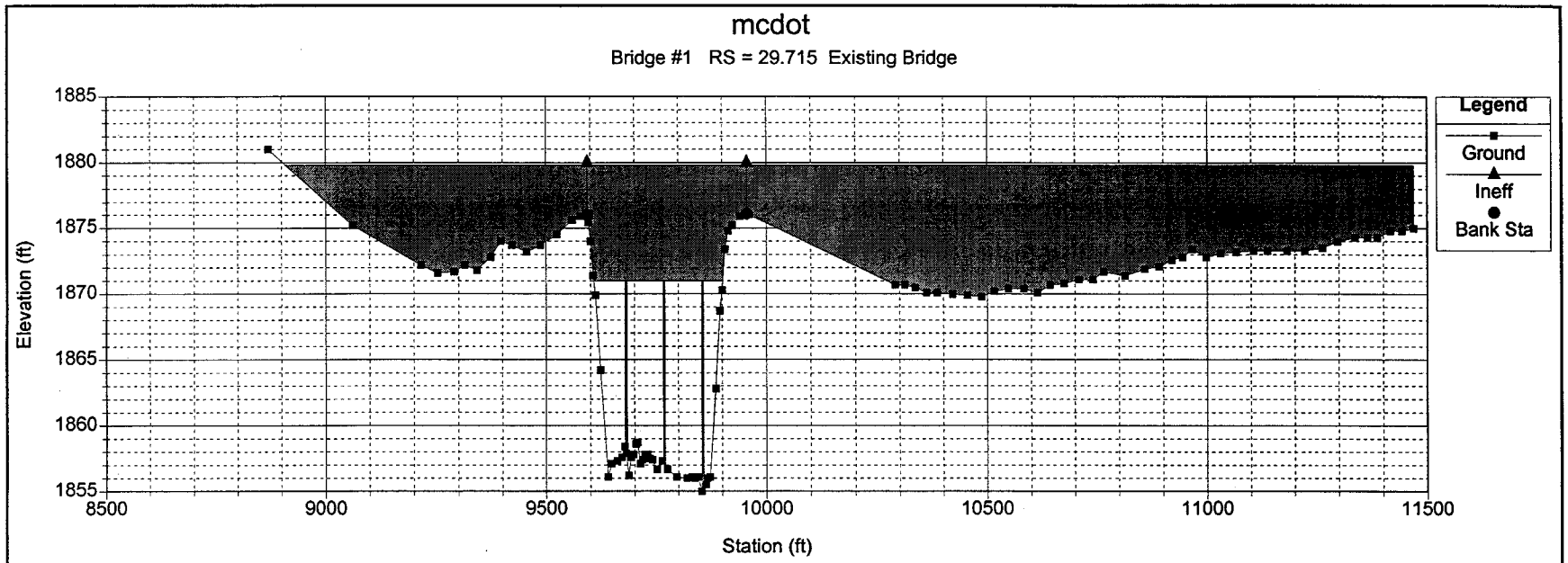
mcdot
Bridge #1 RS = 29.715 Existing Bridge
Elevation (ft)
1885
1880
1875
1870
1865
1860
1855
8500
9000
9500
10000
10500
11000
11500
Station (ft)
Legend
Ground
Ineff
Bank Sta

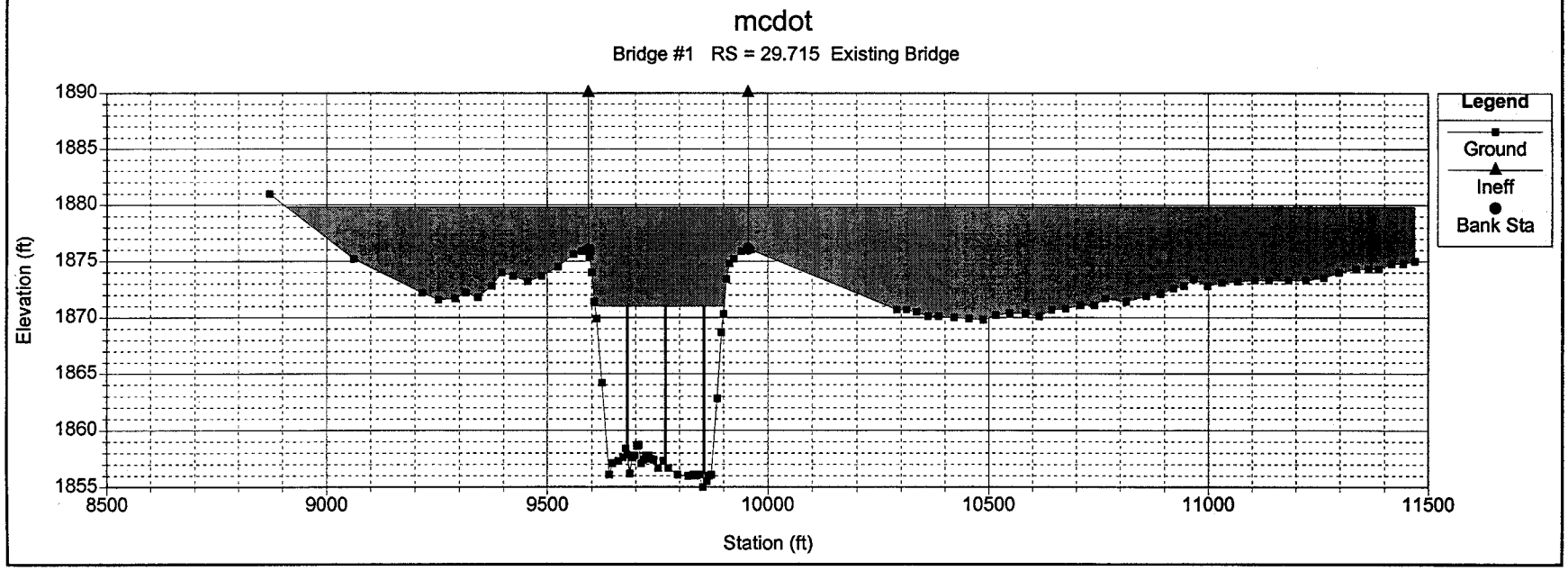
mcdot
Bridge #1 RS = 29.715 Existing Bridge
Elevation (ft)
1890
1885
1880
1875
1870
1865
1860
1855
8500
9000
9500
10000
10500
11000
11500
Station (ft)
Legend
Ground
Ineff
Bank Sta

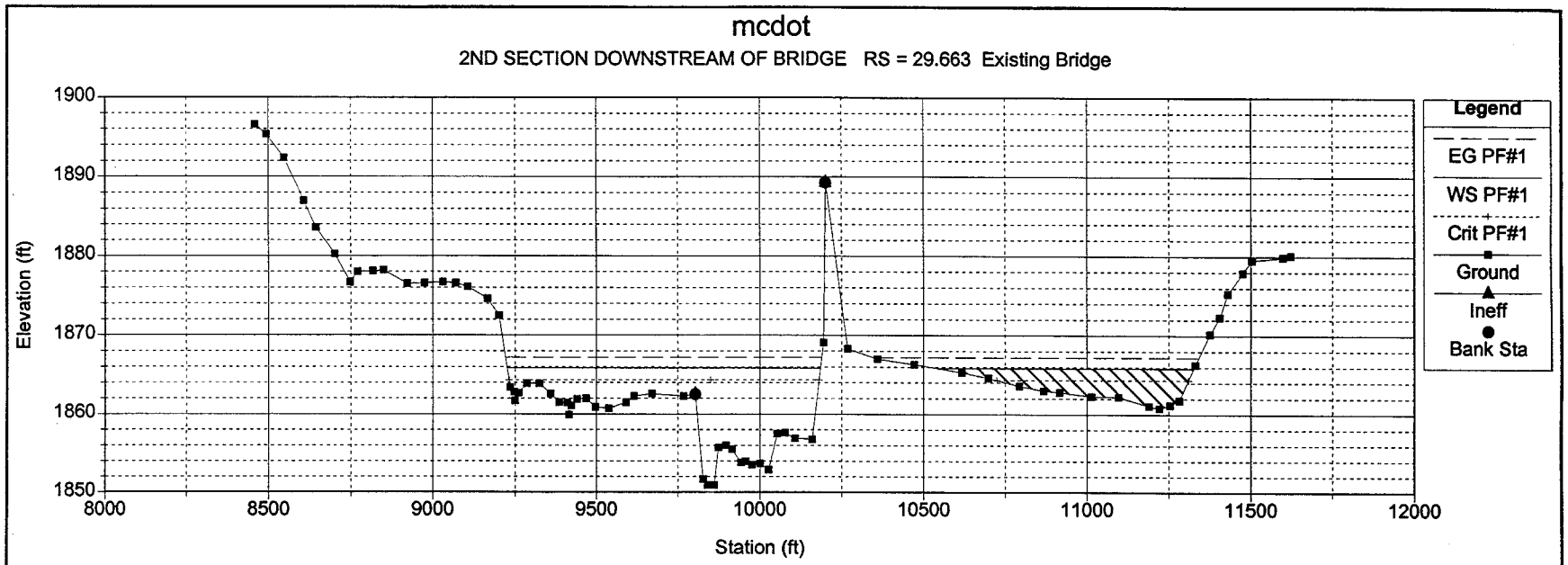
mcdot
2ND SECTION DOWNSTREAM OF BRIDGE RS = 29.663 Existing Bridge
Elevation (ft)
1900
1890
1880
1870
1860
1850
8000
8500
9000
9500
10000
10500
11000
11500
12000
Station (ft)
Legend
EG PF#1
WS PF#1
Crit PF#1
Ground
Ineff
Bank Sta

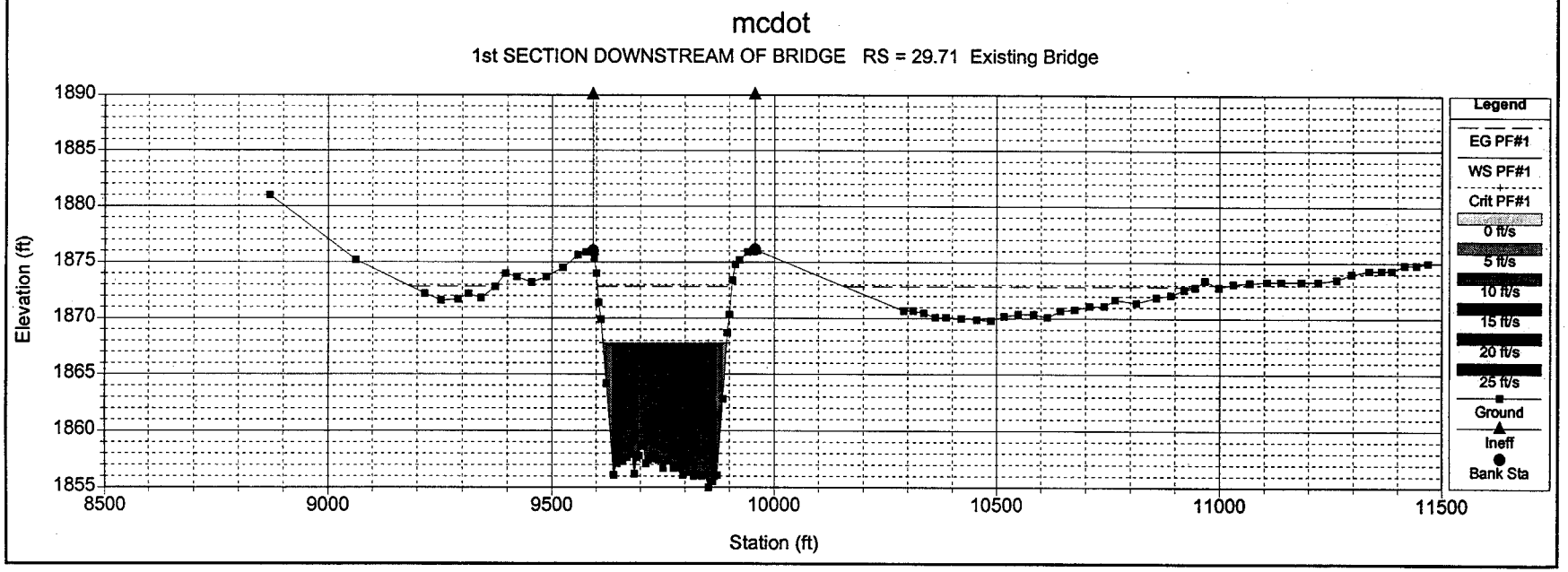
mcdot
1st SECTION DOWNSTREAM OF BRIDGE RS = 29.71 Existing Bridge
Elevation (ft)
1890
1885
1880
1875
1870
1865
1860
1855
8500
9000
9500
10000
10500
11000
11500
Station (ft)
Legend
EG PF#1
WS PF#1
Crit PF#1
0 ft/s
5 ft/s
10 ft/s
15 ft/s
20 ft/s
25 ft/s
Ground
Ineff
Bank Sta

WEST Consultants, Inc.
One East Camelback Road
Suite 550-24
Phoenix, AZ 85012

PROGRAM OUTPUT

ASCE Method

Input Parameters:

Run Name: MCDOT3 Description: Revised model data used

Local Depth Averaged Velocity, ft/sec	19.30
Unit Weight of Stone, lbs/cu ft	165.00
Cotangent of Sideslope	2.00

Output Results:

Computed D50, ft 2.73

*** Using FHWA Gradation ***

Gradation Class	1 ton
Layer Thickness, ft	4.28

Percent Smaller by Size	Rock Size, ft	Rock Size, lbs
D100	3.60	4,000
D50	2.85	2,000
D5	2.25	1,000

WEST Consultants, Inc.
One East Camelback Road
Suite 550-24
Phoenix, AZ 85012

PROGRAM OUTPUT

USBR Method

Input Parameters:

Run Name: MCDOT3 Description: Revised model data used

Average Channel Velocity, ft/sec 15.80

Output Results:

Computed D50, ft 3.59

*** Using FHWA Gradation ***

Gradation Class 2 ton
Layer Thickness, ft 5.40

Percent Smaller by Size	Rock Size, ft	Rock Size, lbs
D100	4.50	8,000
D50	3.60	4,000
D5	2.85	2,000

WEST Consultants, Inc.
One East Camelback Road
Suite 550-24
Phoenix, AZ 85012

PROGRAM OUTPUT

Isbash Method

Input Parameters:

Run Name: MCDOT3 Description: Revised model data used
Average Channel Velocity, ft/sec 15.80
Unit Weight of Stone, lbs/cu ft 165.00
Turbulence Level High

Output Results:

Computed D50, ft 3.19

*** Using FHWA Gradation ***

Gradation Class 2 ton
Layer Thickness, ft 5.40

Percent Smaller by Size	Rock Size, ft	Rock Size, lbs
D100	4.50	8,000
D50	3.60	4,000
D5	2.85	2,000

WEST Consultants, Inc.
One East Camelback Road
Suite 550-24
Phoenix, AZ 85012

PROGRAM OUTPUT

Cal B&SP Method

Input Parameters:

Run Name: MCDOT3 Description: Revised model data used

Local Depth Averaged Velocity, ft/sec	19.30
Unit Weight of Stone, lbs/cu ft	165.00
Cotangent of Sideslope	2.00

Output Results:

Computed W33, lb 1891.95

*** Using CalTrans Gradation - Placement Method B ***

Gradation Class	1 ton
Layer Thickness, ft	4.20

Percent Larger Than	Rock Size
0-5	2 Ton
50-100	1 Ton
95-100	1/4 Ton

WEST Consultants, Inc.
One East Camelback Road
Suite 550-24
Phoenix, AZ 85012

PROGRAM OUTPUT

HEC-11 Method

Input Parameters:

Run Name: MCDOT3 Description: Revised model data used

Average Channel Velocity, ft/sec	15.80
Average Flow Depth, ft	10.60
Unit Weight of Stone, lbs/cu ft	165.00
Material Angle of Repose, °	33.00
Cotangent of Sideslope	2.00
Safety Factor	1.30

Output Results:

Computed D50, ft 3.19

*** Using FHWA Gradation ***

Gradation Class 2 ton
Layer Thickness, ft 5.40

Percent Smaller by Size	Rock Size, ft	Rock Size, lbs
D100	4.50	8,000
D50	3.60	4,000
D5	2.85	2,000

F.H.W.A. REGION	STATE	PROJECT NO.	SHEET NO.	TOTAL SHEETS	RECORD DRAWING
9	AZ.	68935	1	2	

GENERAL NOTES

1. For Section A-A & B-B See Sht. 2 of 2.

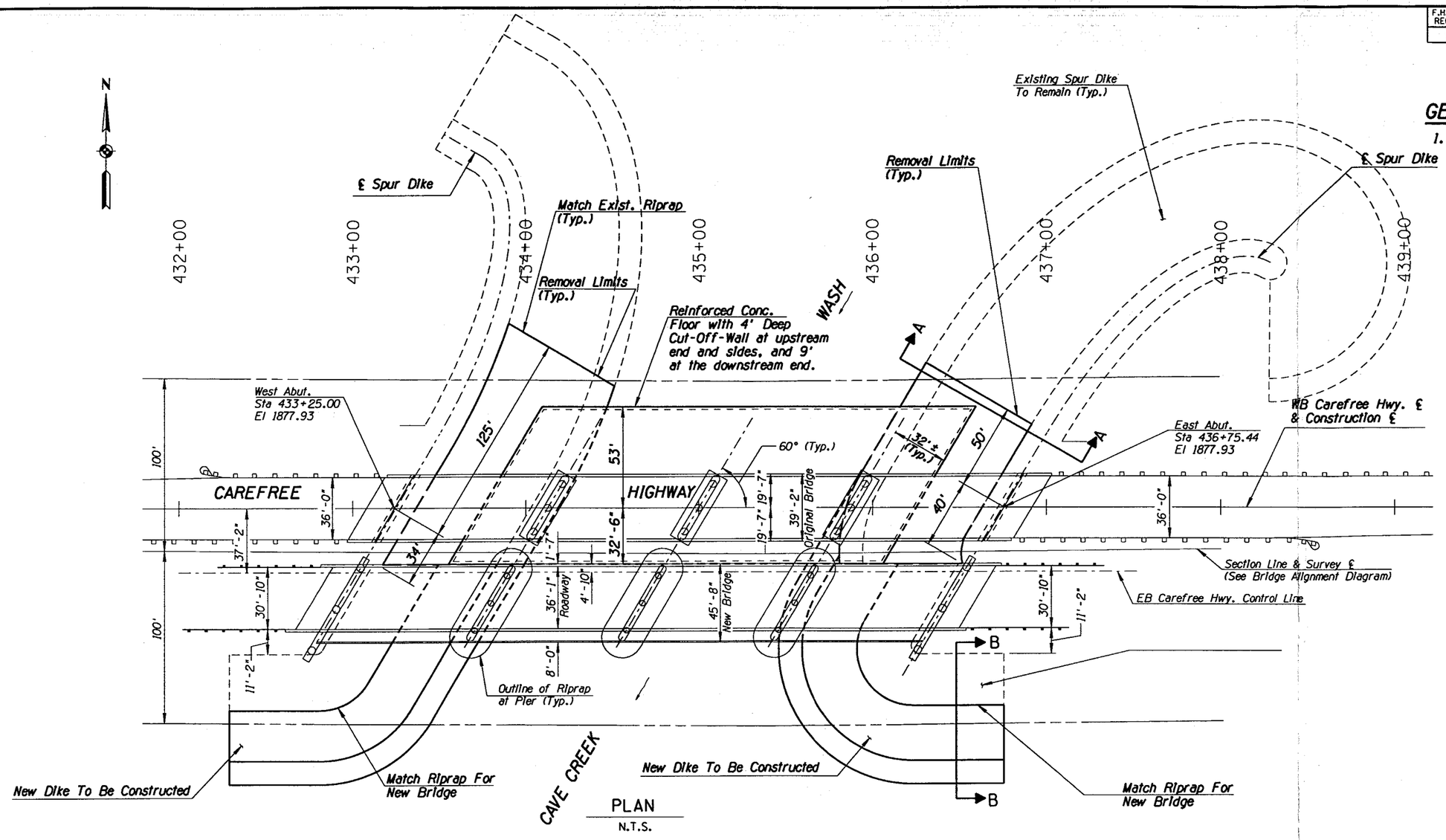

PLAN
N.T.S.

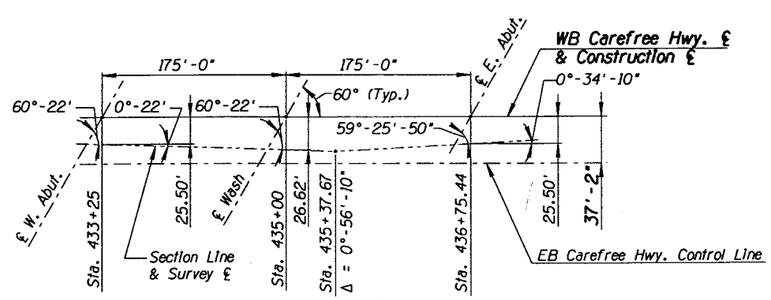

BRIDGE ALIGNMENT DIAGRAM
N.T.S.

ALTERNATIVE 1

NO.	REVISION	BY	DATE
3			
2			
1			

MARICOPA COUNTY
DEPARTMENT OF TRANSPORTATION
ENGINEERING DIVISION

CAREFREE HIGHWAY AT CAVE CREEK WASH
PROJECT NO. 68935

	BY	DATE
DESIGNED	R. DAVIES	8/98
DRAWN	L. LOPEZ, T. KING	8/98
CHECKED	R. BRUESCH, D. BURROWS	8/98

Baker
Michael Baker Jr., Inc.

GENERAL PLAN OF BRIDGE
STA 433+00.00 TO 437+00.00

SHEET 1 OF 2

TRACS NO.

\cavecrk\report\ccplp01.dgn Aug 17 1998 11:23:07 Michael Baker Jr. Inc.

F.H.W.A. REGION	STATE	PROJECT NO.	SHEET NO.	TOTAL SHEETS	RECORD DRAWING
9	AZ.	68935	2	2	

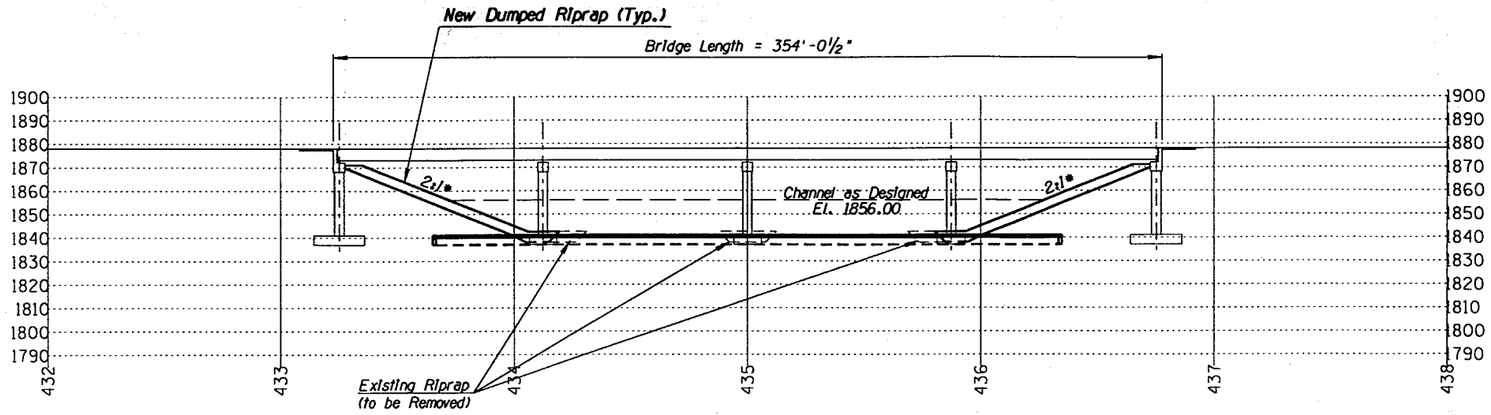

* 2:1 Slope Normal to Abutment ℄

PROFILE AT ORIGINAL CAREFREE HWY. BRIDGE ℄

N.T.S.

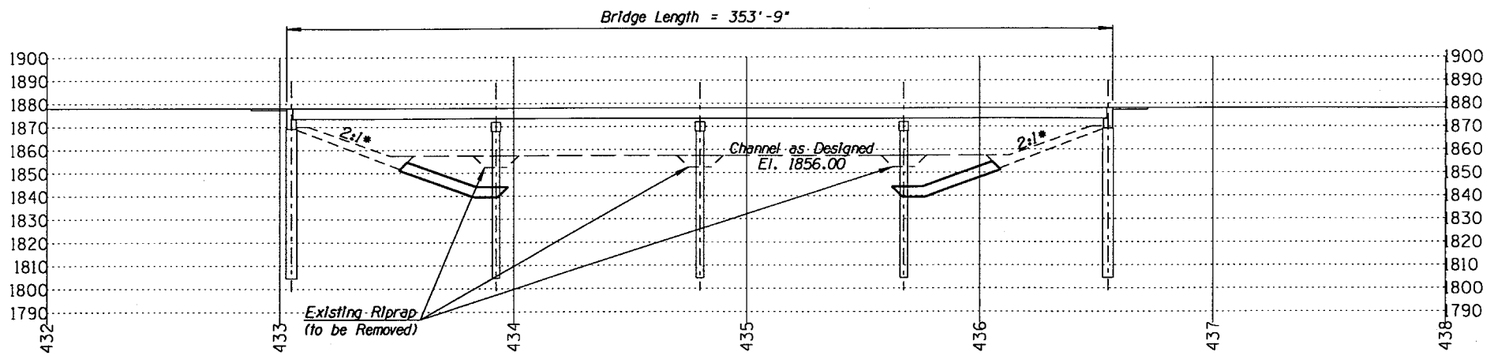

* 2:1 Slope Normal to Abutment ℄

PROFILE AT NEW CAREFREE HWY. BRIDGE CONTROL LINE

N.T.S.

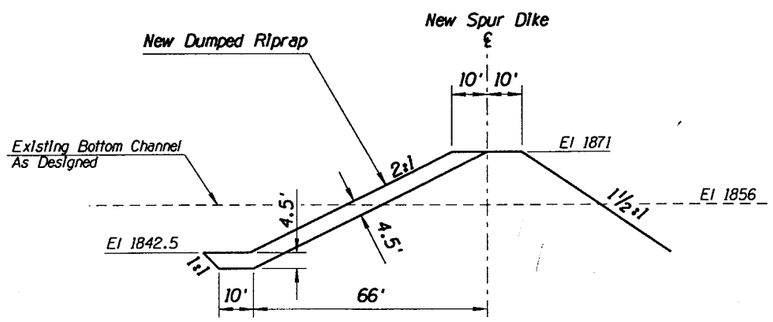

SECTION A-A

N.T.S.

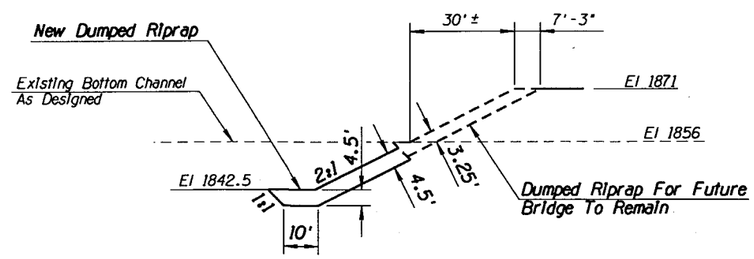

SECTION B-B

N.T.S.

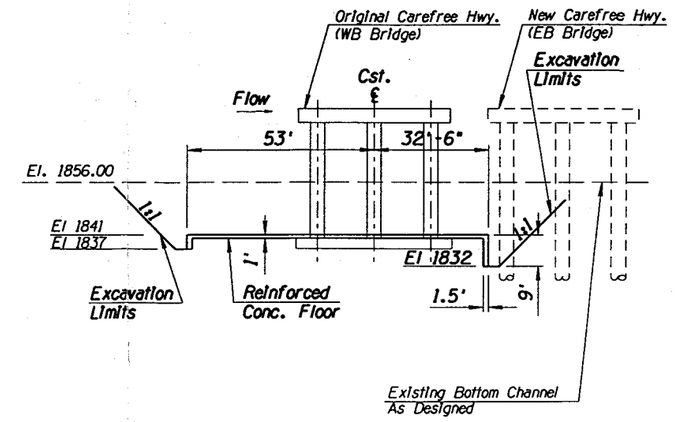

TYPICAL SECTION AT PIER

N.T.S.

GENERAL NOTES

1. All existing riprap meeting the specifications within the removal limits shall be salvaged for reuse.

ALTERNATIVE 1

NO.	REVISION	BY	DATE
3			
2			
1			

MARICOPA COUNTY
DEPARTMENT OF TRANSPORTATION
ENGINEERING DIVISION

CAREFREE HIGHWAY AT CAVE CREEK WASH
PROJECT NO. 68935

		BY	DATE
PRELIMINARY NOT FOR CONSTRUCTION	DESIGNED	R. DAVIES	8/98
	DRAWN	L. LOPEZ, T. KING	8/98
	CHECKED	R. BRUESCH, D. BURROWS	8/98

Baker
Michael Baker Jr., Inc.

PROFILE SHEET

SHEET 2 OF 2

TRACS NO.

\cavecpk\pepent\ccpp01.dgn Aug 17 1998 12:55:44 Michael Baker Jr. Inc.

F.H.W.A. REGION	STATE	PROJECT NO.	SHEET NO.	TOTAL SHEETS	RECORD DRAWING
9	AZ.	68935	1	2	

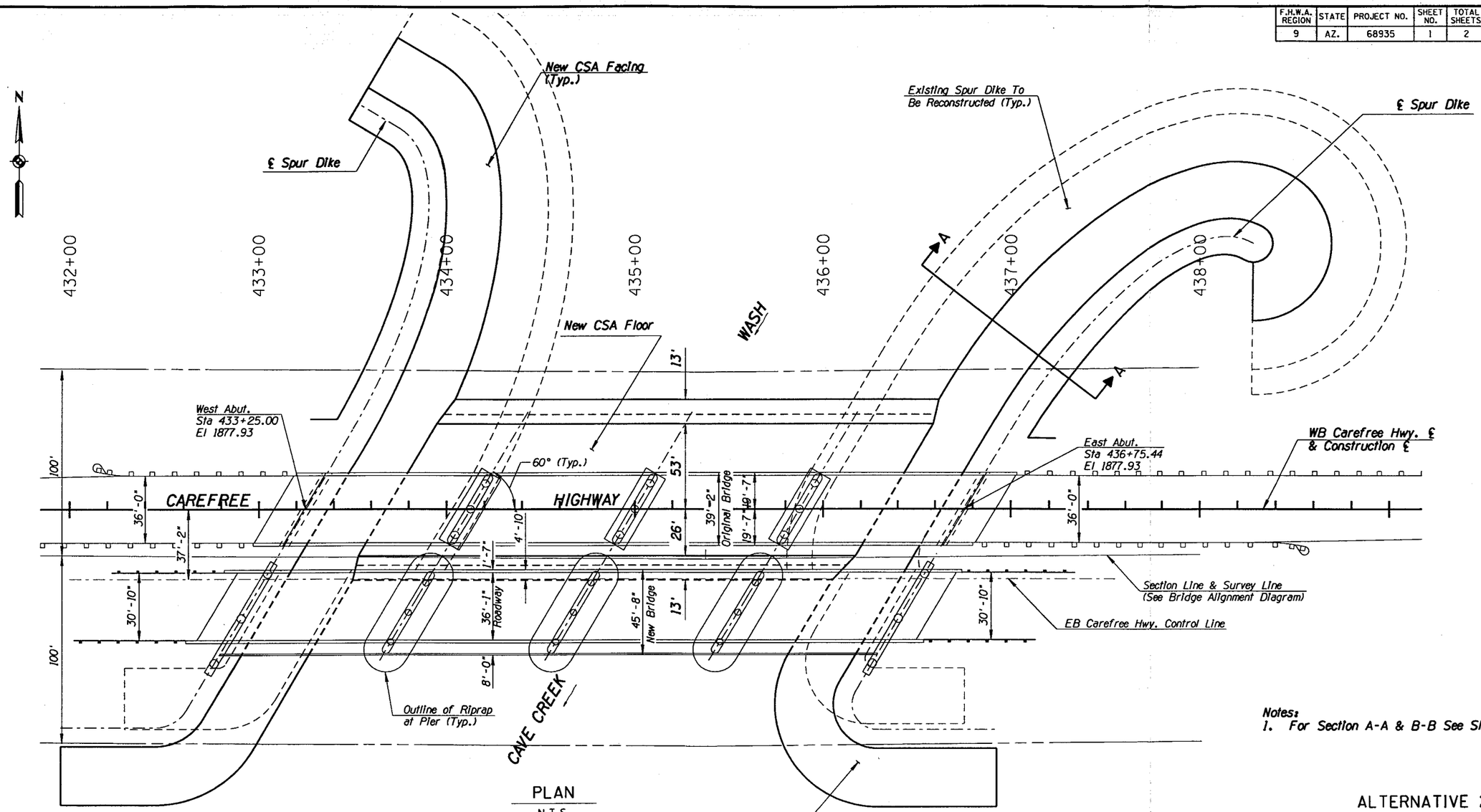

PLAN

N.T.S.

Notes:
1. For Section A-A & B-B See Sht. 2 of 2

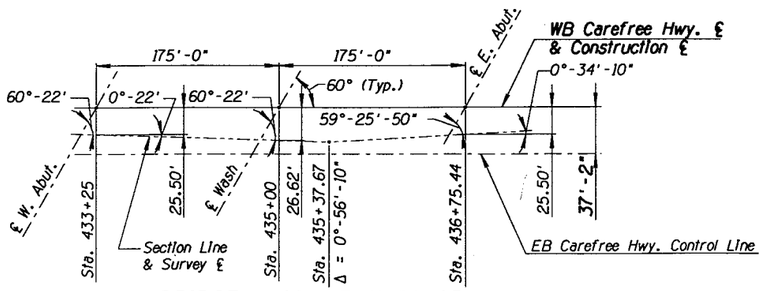

BRIDGE ALIGNMENT DIAGRAM

N.T.S.

ALTERNATIVE 2

NO.	REVISION	BY	DATE
3			
2			
1			

MARICOPA COUNTY
DEPARTMENT OF TRANSPORTATION
ENGINEERING DIVISION

CAREFREE HIGHWAY AT CAVE CREEK WASH
PROJECT NO. 68935

PRELIMINARY NOT FOR CONSTRUCTION

	BY	DATE
DESIGNED	R. DAVIES	5/98
DRAWN	L. LOPEZ, T. KING	5/98
CHECKED	R. BRUESCH, D. BURROWS	5/98

Baker
Michael Baker Jr., Inc.

GENERAL PLAN OF BRIDGE
STA 433+00.00 TO 437+00.00

SHEET 1 OF 2

TRACS NO.

%%n----DESIGN-FILE-NAME----%%n
%%n-SDATE-%%n %%TIM%%n

\mcdot\cadd\cavecrk\ccpln02.dgn Aug 17 1998 11:15:08 Michael Baker Jr. Inc.

F.H.W.A. REGION	STATE	PROJECT NO.	SHEET NO.	TOTAL SHEETS	RECORD DRAWING
9	AZ.	68935	2	2	

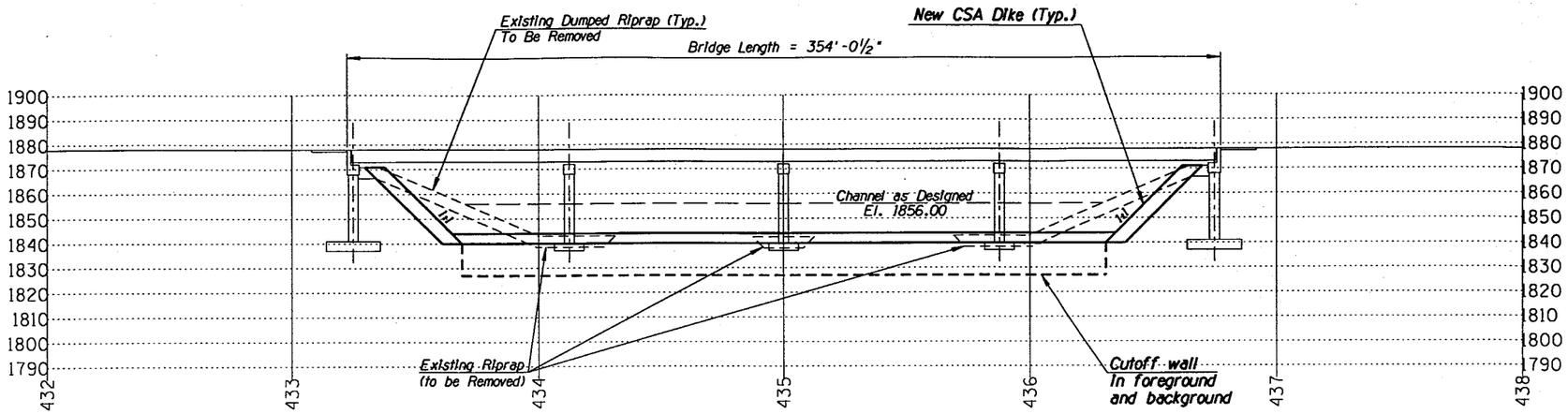

PROFILE AT ORIGINAL CAREFREE HWY. BRIDGE ℄

N.T.S.

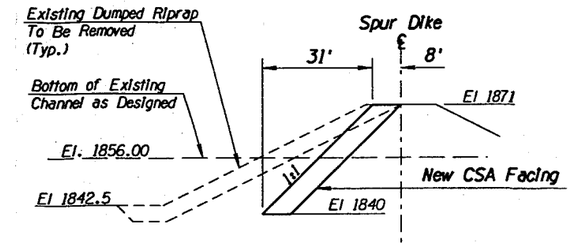

SECTION A-A

N.T.S.

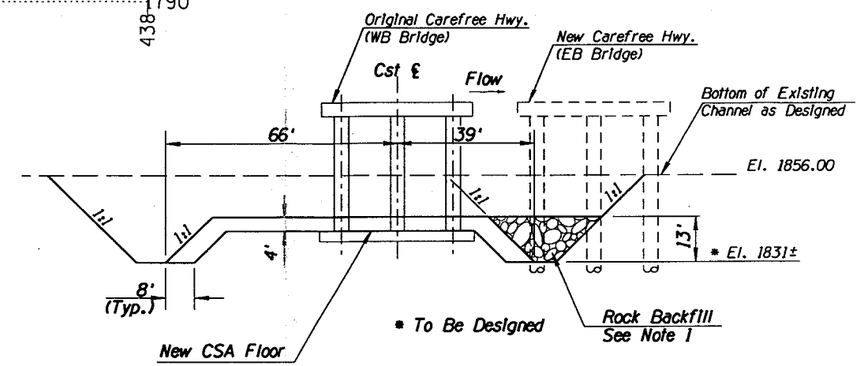

TYPICAL SECTION AT PIER

N.T.S.

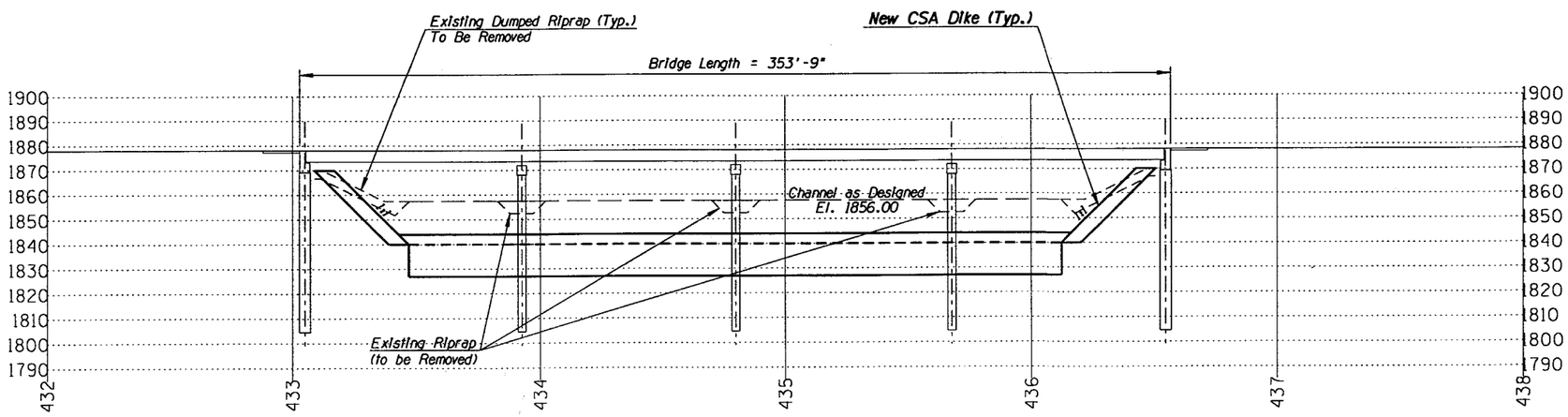

PROFILE AT NEW CAREFREE HWY. BRIDGE CONTROL LINE

N.T.S.

GENERAL NOTES

1. All existing riprap within the removal limits shall be salvaged for reuse as rock backfill.

ALTERNATIVE 2

NO.	REVISION	BY	DATE
3			
2			
1			

MARICOPA COUNTY
DEPARTMENT OF TRANSPORTATION
ENGINEERING DIVISION

CAREFREE HIGHWAY AT CAVE CREEK WASH
PROJECT NO. 68935

PRELIMINARY
NOT FOR
CONSTRUCTION

	BY	DATE
DESIGNED	R. DAVIES	5/98
DRAWN	L. LOPEZ , T. KING	5/98
CHECKED	R. BRUESCH, D. BURROWS	5/98

Baker
Michael Baker Jr., Inc.

PROFILE SHEET

SHEET 2 OF 2

TRACS NO.

%%n----DESIGN-FILE-NAME----%%n
%%n-SDATE-%%n %%TIME%%n

\mcdot\cadd\cavecrk\cccpp02.dgn Aug 17, 1998 11:17:12 Michael Baker Jr., Inc.