CASANDRO WASH DAM
OUTFALL STRUCTURE

FLOOD CONTROL DISTRICT OF MARICOPA COUNTY

PROJECT Casandro wash PAGE 1 OF
DETAIL In Let Structure COMPUTED KNH DATE 5/9
CHECKED BY DATE

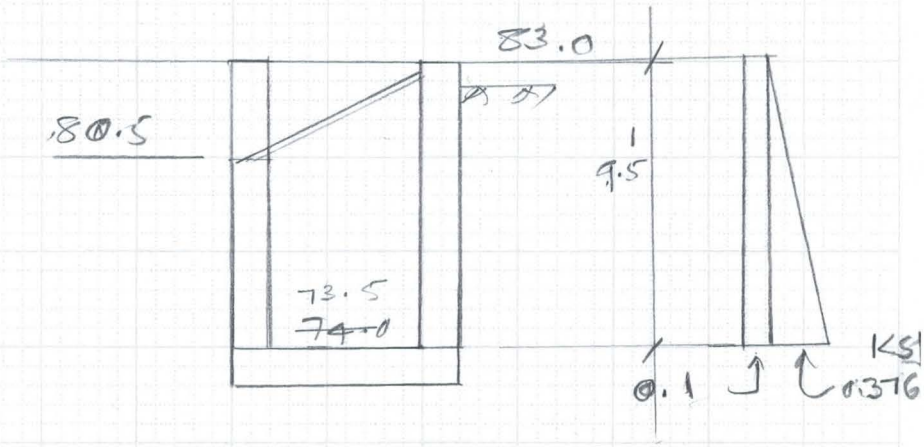

Case 1: Dry Backfill:

$Pr_1 = wkh = (0.12 \times 0.33 \times 9.5) = 0.376^{KSF}$

Pr_2 (Surch) $= (0.12 \times 0.33 \times 2) = 0.08^{KSF}$, say 0.1

$P_1 = \left(\frac{0.376}{2} \times 9.5\right) = 1.79^{K}$

$P_2 = (0.1 \times 9.5) = 0.95^{K}$

$M = \left(1.79 \times \frac{9.5}{3}\right) + \left(0.95 \times \frac{9.5}{2}\right) = 10.2^{K'/'}$

Using wall $t = 10''$ $d = (10 - 2 - 0.5) = 7.5''$

$A_s = \frac{10.2 \times 12}{24 \times 0.88 \times 7.5}$

$= 0.77 \text{ in}^2$

As there will not be pressure of a surcharge, Use #5 @ 6" at the Base & #5 @ 12 at the top

FLOOD CONTROL DISTRICT OF MARICOPA COUNTY

PROJECT Casandra wall PAGE 2 OF

DETAIL Inlet Structure COMPUTED KVH DATE 5/95

CHECKED BY DATE

Case 2: Saturated Condition

Using 80 psf pressure.

$p_r = (80 \times 9.5) = 760$ psf

$P = \left(\frac{760}{2} \times 9.5\right) = 3.61^K$

$M = \left(3.61 \times \frac{9.5}{3}\right) = 11.43^{K'}$

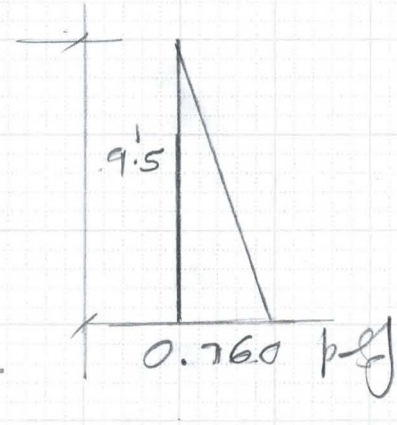

$A_s = \frac{11.43 \times 12}{24 \times 0.88 \times 7.5}$

$= 0.87 \text{ in}^2$

As the soil is only going to be partially saturated use #5 @ 6"

Check Steel at 2' from Base:

$H = (9.5 - 2) = 7.5'$

$p_r = 80 \times 7.5 = 600$ psf $\quad P = \frac{600}{2} \times 7.5 = 2.25^K$

$M = \left(2.25 \times \frac{7.5}{3}\right) = 5.63^{K'}$

$A_s = \frac{5.63 \times 12}{24 \times 0.88 \times 7.5} = 0.42$

Use Bar Cut off at 3'-0 & #5 @ 12"

FLOOD CONTROL DISTRICT OF MARICOPA COUNTY

PROJECT Galandro Wash PAGE 3 OF
DETAIL Inlet STR COMPUTED KVH DATE 5/95
CHECKED BY DATE

Rack Bars @ 4½" c/c:

$A = 0.018 \text{ sq}'' = 0.01 \times 16000$
$= 160 \text{ in}^2$
$(12.6'' \times 12.6'')$

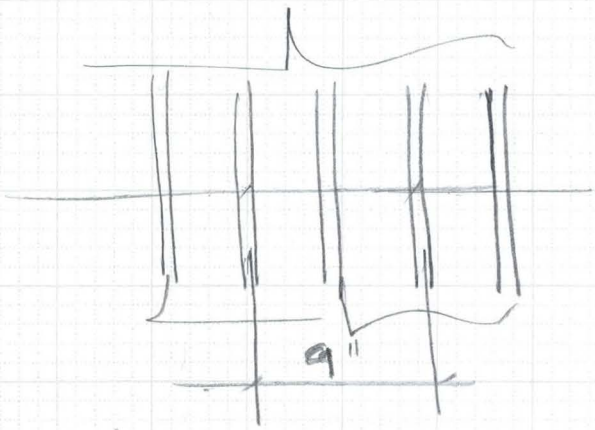

a) Wheel Load will be distributed mostly on 3 Rack bars, 75% on 3 Rack bars & 25% on 2 other bars.

$3/4 (16^K) = 12^K$

Per Rack Bar $= 12/3 = 4^K$

b) The Complete wheel Load by 3 Bars

$16/3 = 5.33^K$

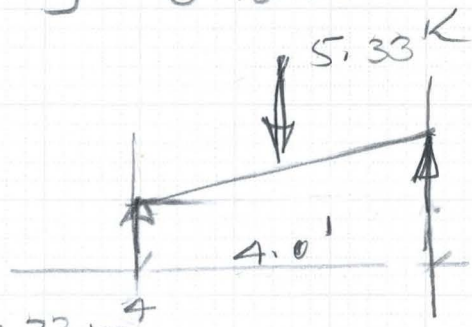

$M = \frac{PL}{4} = \frac{5.33 \times 4}{4}$
$= 5.33 \text{ kft}$

$M = fS$, $I = \left(\frac{0.5 \times 2^3}{12}\right) = 0.33 \text{ in}^4$

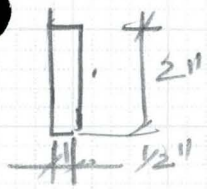

$S = I/y = \frac{0.33}{(2/2)} = 0.33 \text{ in}^3$

$f = \left(\frac{5.33 \times 12 \times 0}{0.33}\right) = 193 \text{ ksi}$

6910-153 4-90

FLOOD CONTROL DISTRICT OF MARICOPA COUNTY

PROJECT Cassandra wash PAGE 4 OF

DETAIL Inlet STR. COMPUTED KVH DATE 5/95

CHECKED BY DATE

$\cancel{\frac{L}{(r)} = \frac{1}{2.5}, \quad \frac{L}{12.6} = \frac{1}{2.5}}$

$\cancel{L = \frac{12.6}{2.5} = 6}$

Sect. 3.27.3.1 ;

width = $1\frac{1}{4}''$ (16 T) + (2 × 4.5" c/c) = 29"

Spacing @ $4\frac{1}{2}''$, $\frac{29}{4.5} = 6$ to 7 Rack bars

Load on Each Bar = $\frac{16^K}{7 \text{ Bars}} = 2.28^K$

Sect. 3.30 ; Contact Area = 0.01 × P

= 0.01 × 16000, 160 in², 12.65" Square

12.65" = 1.06'

3.28/1.06 = 2.15 K/ft

$R_A = R_B = \frac{2.15 \times 1.06}{2} = 1.14^K$

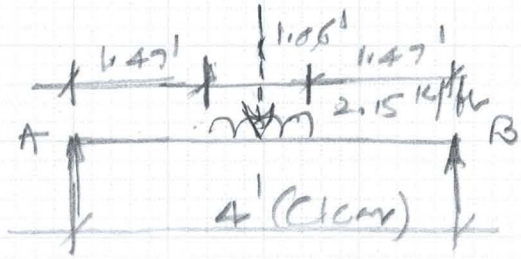

$M_S = (1.14 \times 2) - 2.15 \times 0.53 \times \frac{0.53}{2}$

= 1.98 K/ft

M = +S, (2" × $\frac{1}{2}$") Bars $S = \frac{bd^2}{6} = 0.33 \text{ in}^3$

$f = \left(\frac{1.98 \times 12}{0.33}\right) = 72$ Ksi >>> 24 Ksi Too High

∴ Increase the Bar Size & Decrease the Spg.

6910-153 4-90

FLOOD CONTROL DISTRICT OF MARICOPA COUNTY

PROJECT Casandra Wash PAGE 5 OF

DETAIL Inlet STR. COMPUTED KVH DATE 5/95

CHECKED BY DATE

Decrease the Spacing of Rack Bars to 3" c/c.

Sect. 3.27.3.1:

width = $(1\frac{1}{4} \times 16^T) + 2 \times 3.0 = 26''$

Spacing @ 3", $\frac{26}{3} \approx 8.7$, say 9 Bars

Load on Each Bar = $\frac{16^K}{9} = 1.78^K$

Contact Length = $12.65'' = 1.06'$

$1.78/1.06 = 1.68^K/ft$

$R_A = R_B = \frac{1.68 \times 1.06}{2} = 0.89^K$

$M_S = (0.89 \times 2) - (1.68 \times 0.53 \times \frac{0.53^2}{2}) = 1.54^{K/ft}$

Bars 3" x ½", $S = (\frac{0.5 \times 3^2}{6}) = 0.75$

$M = fS$, $f = \frac{1.54 \times 12}{0.75} = 24.6$ Ksi

Allow (f) = 24 Ksi ∴ OK

NOTE: If there is no Vehicular Loading on the Grate, we could use Rack Bars @ 4½" c to c as shown on Typical Panel Detail.

FLOOD CONTROL DISTRICT OF MARICOPA COUNTY

PROJECT Casandro Inlet PAGE 4 OF

DETAIL Trash Rack COMPUTED KVH DATE 4/95

CHECKED BY DATE

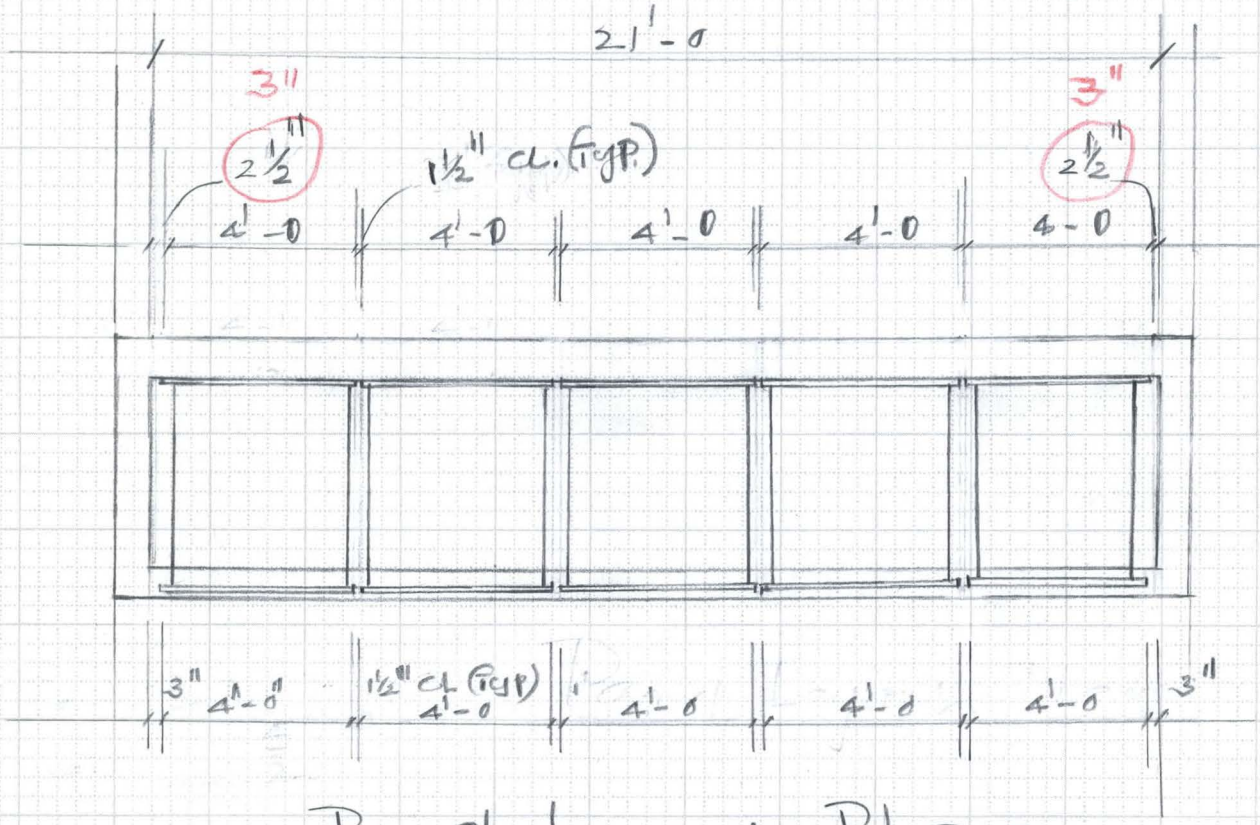

Panel Layout Plan

Scale 1/4" = 1'-0

(4'-1) 5 = 20'-5
(2½") 2 = 5
(½") 4 = 2
} 21'-0

(4'-0) 5 = 20'-0
(3") 2 = 6
(1½") 4 = 6
} 21'-0

FLOOD CONTROL DISTRICT OF MARICOPA COUNTY

PROJECT Gasandra Wash PAGE 2 OF 5 | 9

DETAIL Trapezoid STR. COMPUTED KVH DATE

CHECKED BY DATE

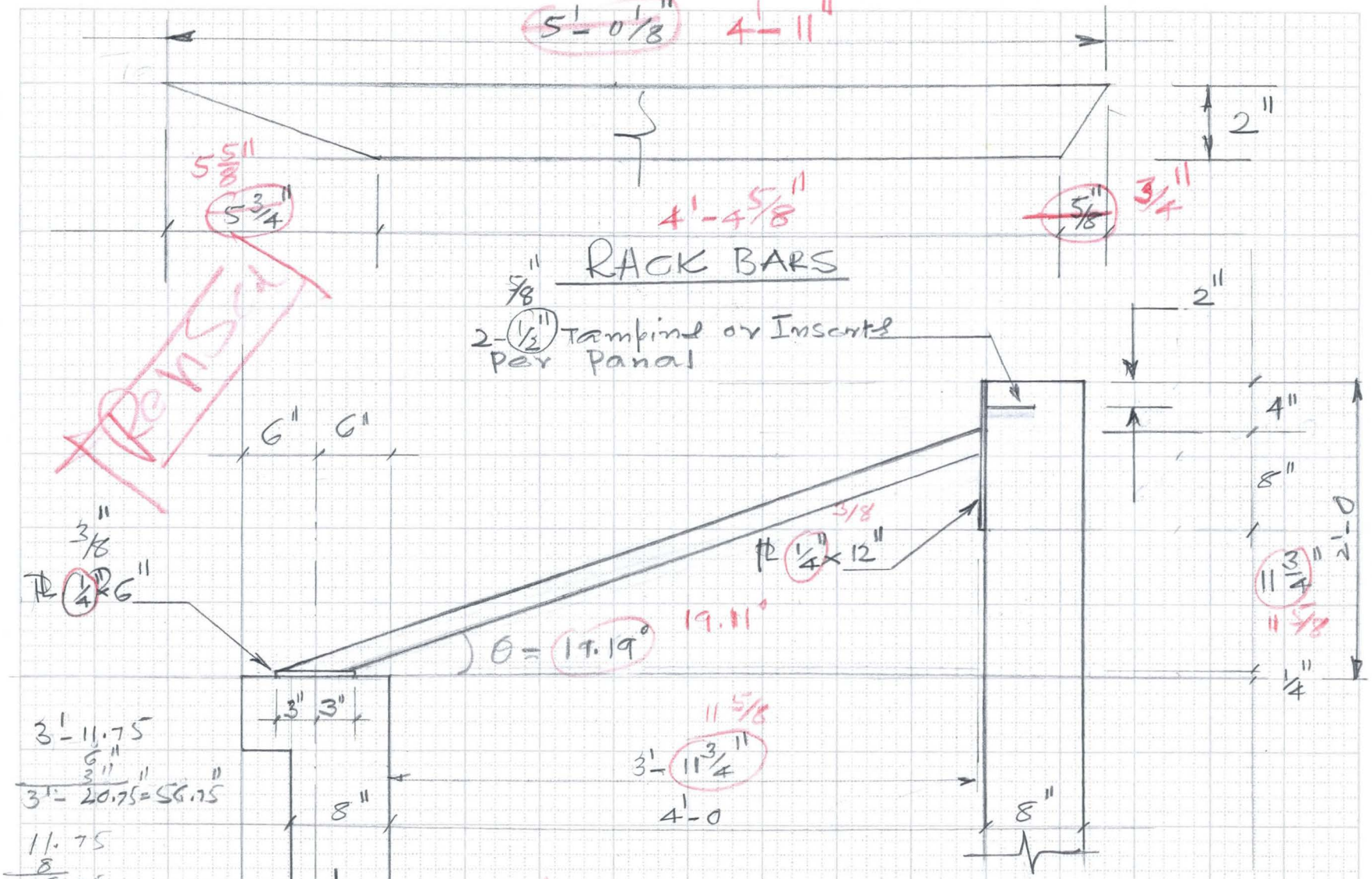

FLOOD CONTROL DISTRICT OF MARICOPA COUNTY

6910-153 4-90

FLOOD CONTROL DISTRICT OF MARICOPA COUNTY

PROJECT Gasandro Wash PAGE 8 OF

DETAIL Inlet Str. COMPUTED KVH DATE 5/95

CHECKED BY DATE

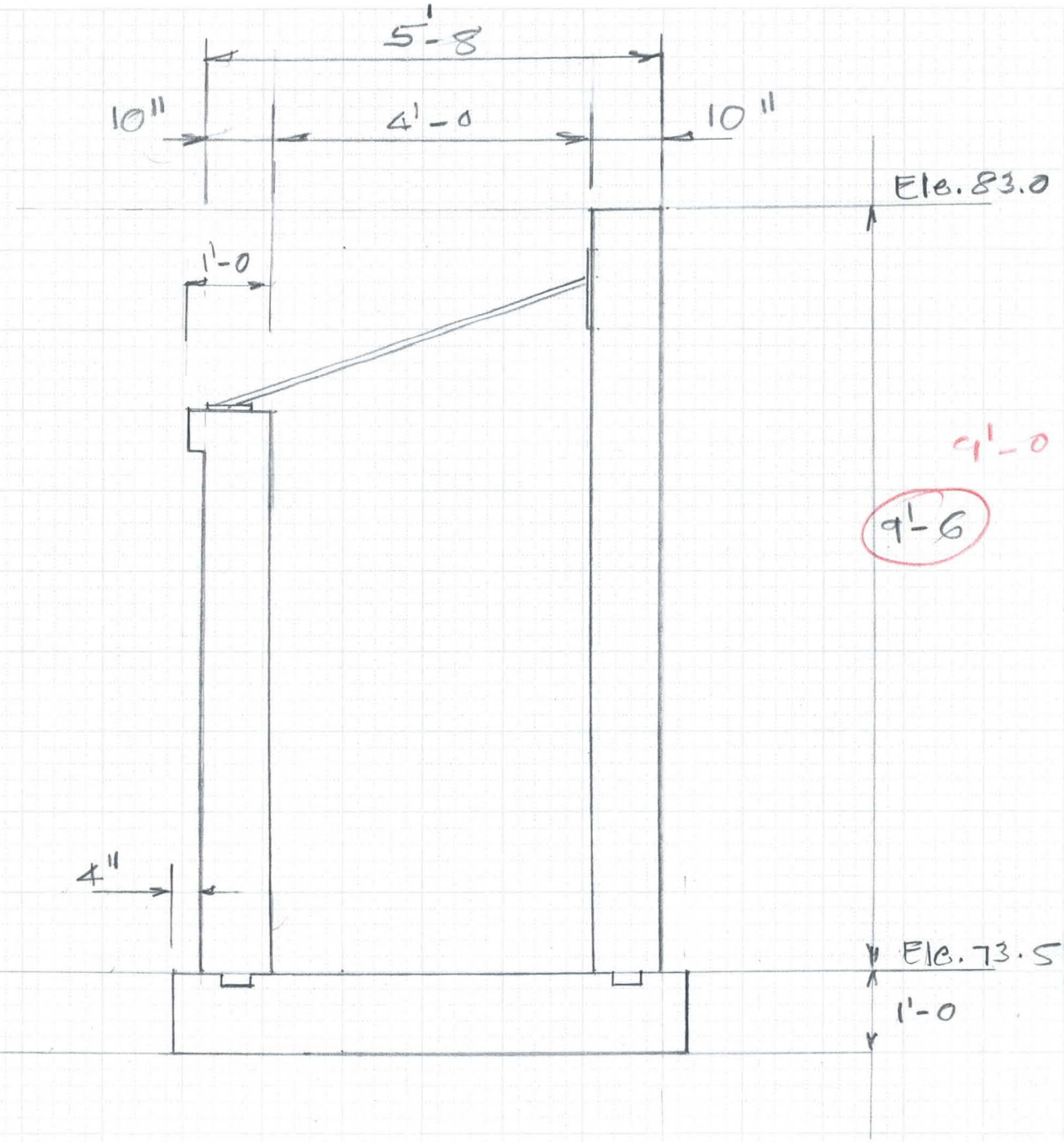

FLOOD CONTROL DISTRICT OF MARICOPA COUNTY

PROJECT Gasandro Wash PAGE 8(A) OF

DETAIL Inlet Str: COMPUTED KVH DATE 5/95

CHECKED BY DATE

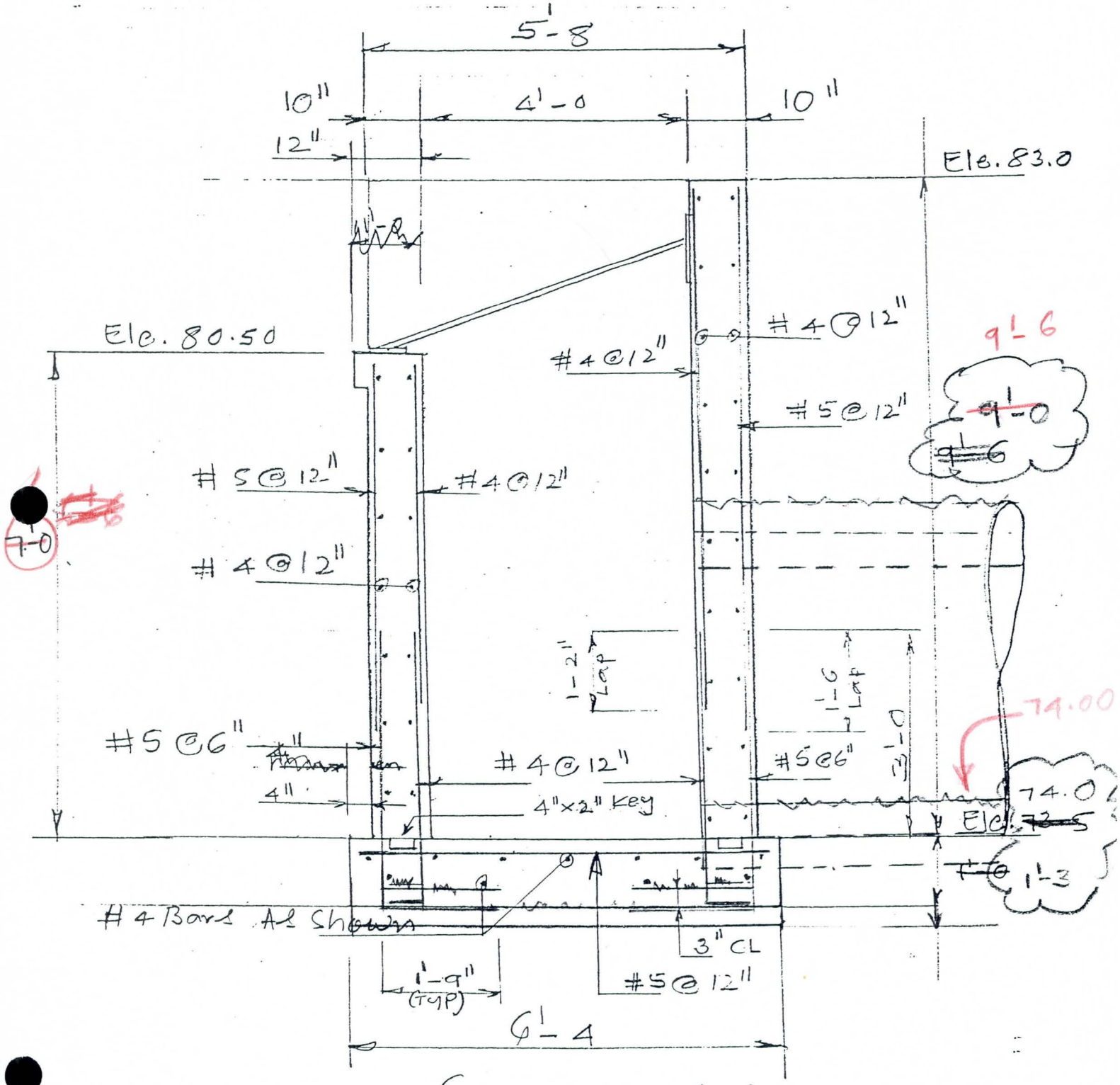

SECTION A-A

Scale: 1/2" = 1'-0

FLOOD CONTROL DISTRICT OF MARICOPA COUNTY

PROJECT Cabandro Wash

DETAIL Inlet STR.

COMPUTED KVH DATE 5/95

CHECKED BY DATE

PAGE 9 OF

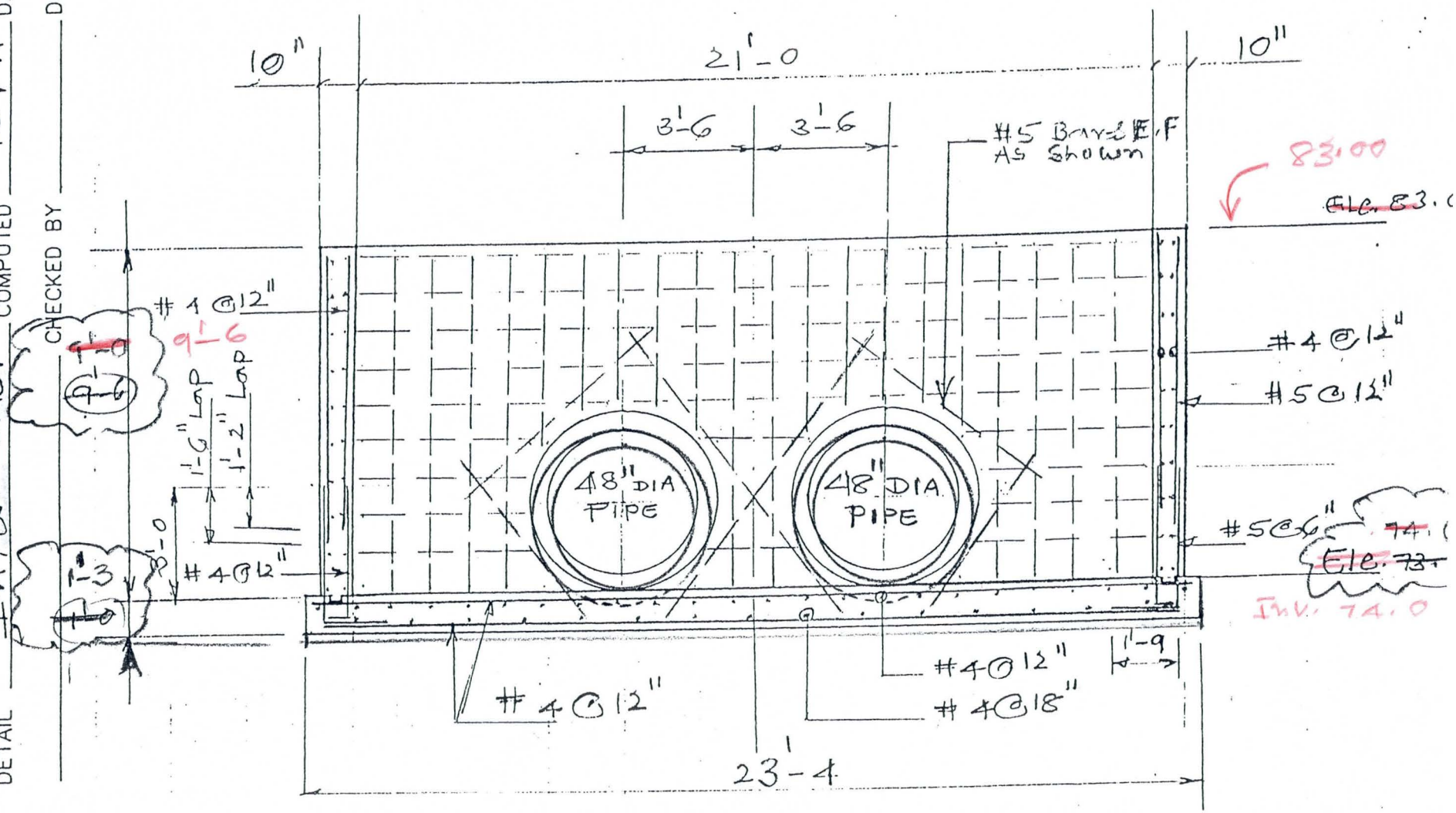

SECTION B-B

Scale: 1/4" = 1'-0

FLOOD CONTROL DISTRICT OF MARICOPA COUNTY

PROJECT Galandro Wash PAGE 10 OF

DETAIL Inlet Str: COMPUTED KVH DATE 5/95

CHECKED BY DATE

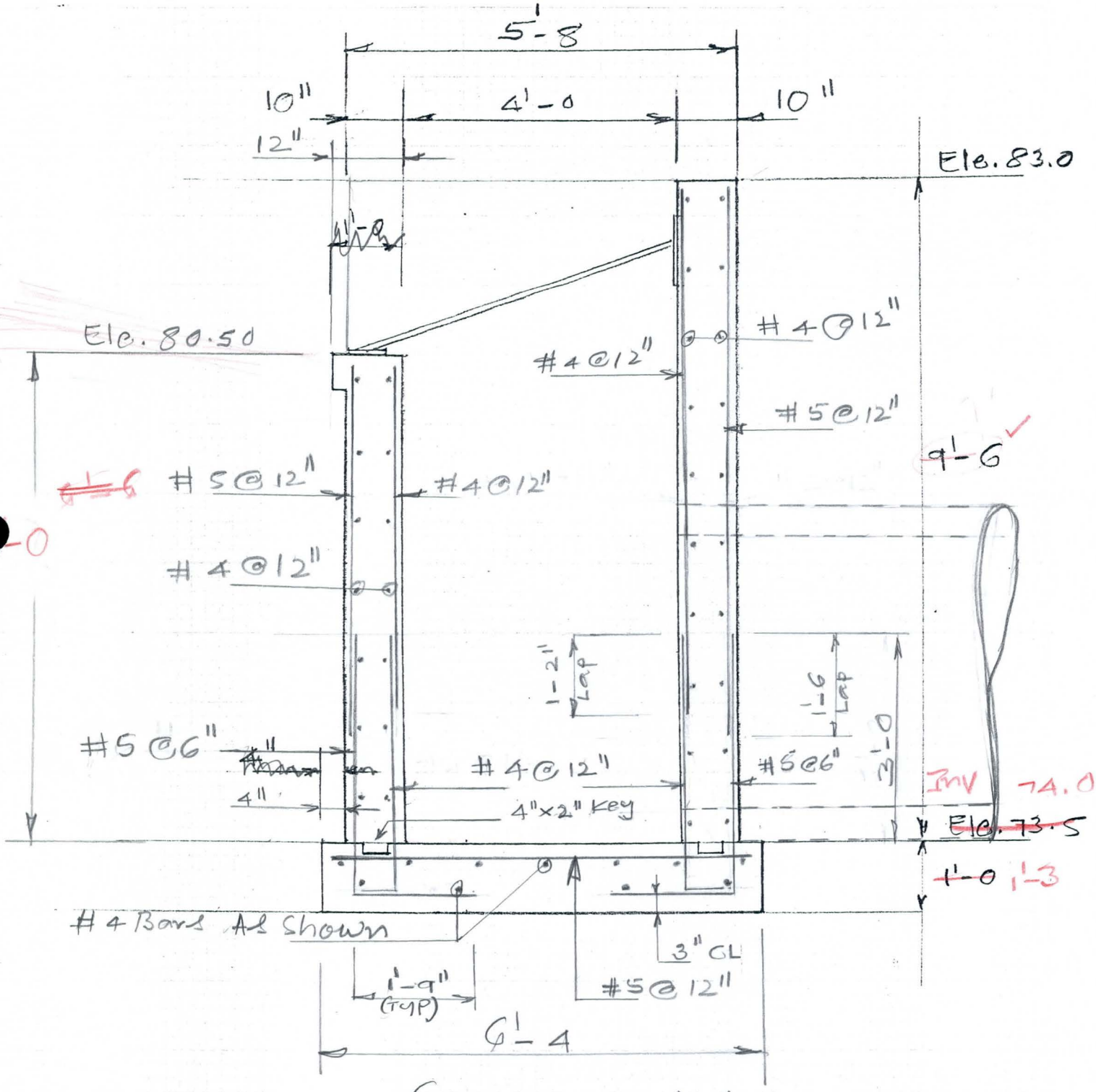

SECTION A-A

Scale: 1/2" = 1'-0

FLOOD CONTROL DISTRICT OF MARICOPA COUNTY

PROJECT Cascandro wash PAGE 10(A) OF

DETAIL Inlet Str. COMPUTED KVH DATE 6/95

CHECKED BY DATE

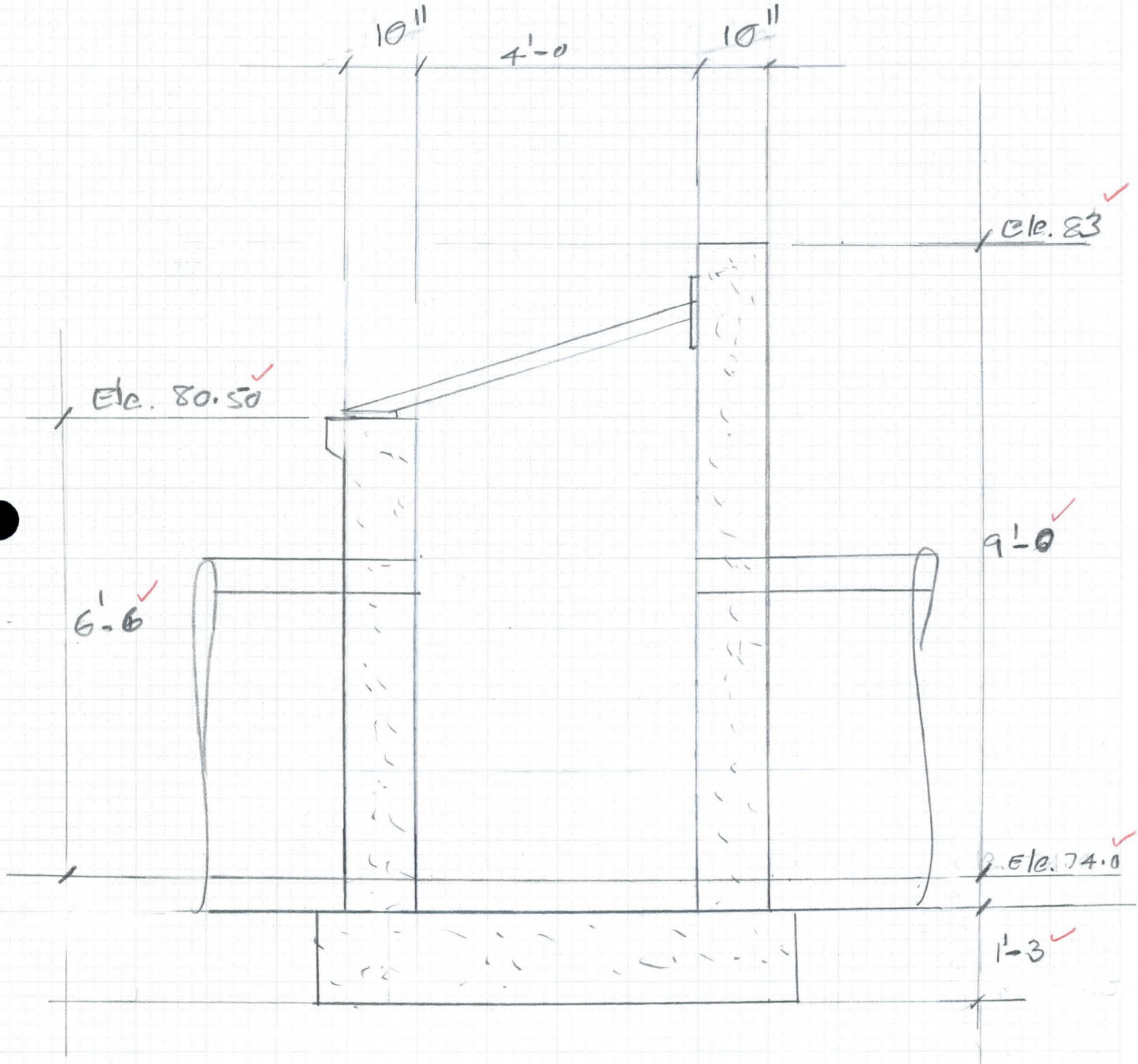

FLOOD CONTROL DISTRICT OF MARICOPA COUNTY

PROJECT Cabandro Wash PAGE 11 OF 5 | 95

DETAIL Inlet Str. COMPUTED KVH DATE

CHECKED BY DATE

VOID

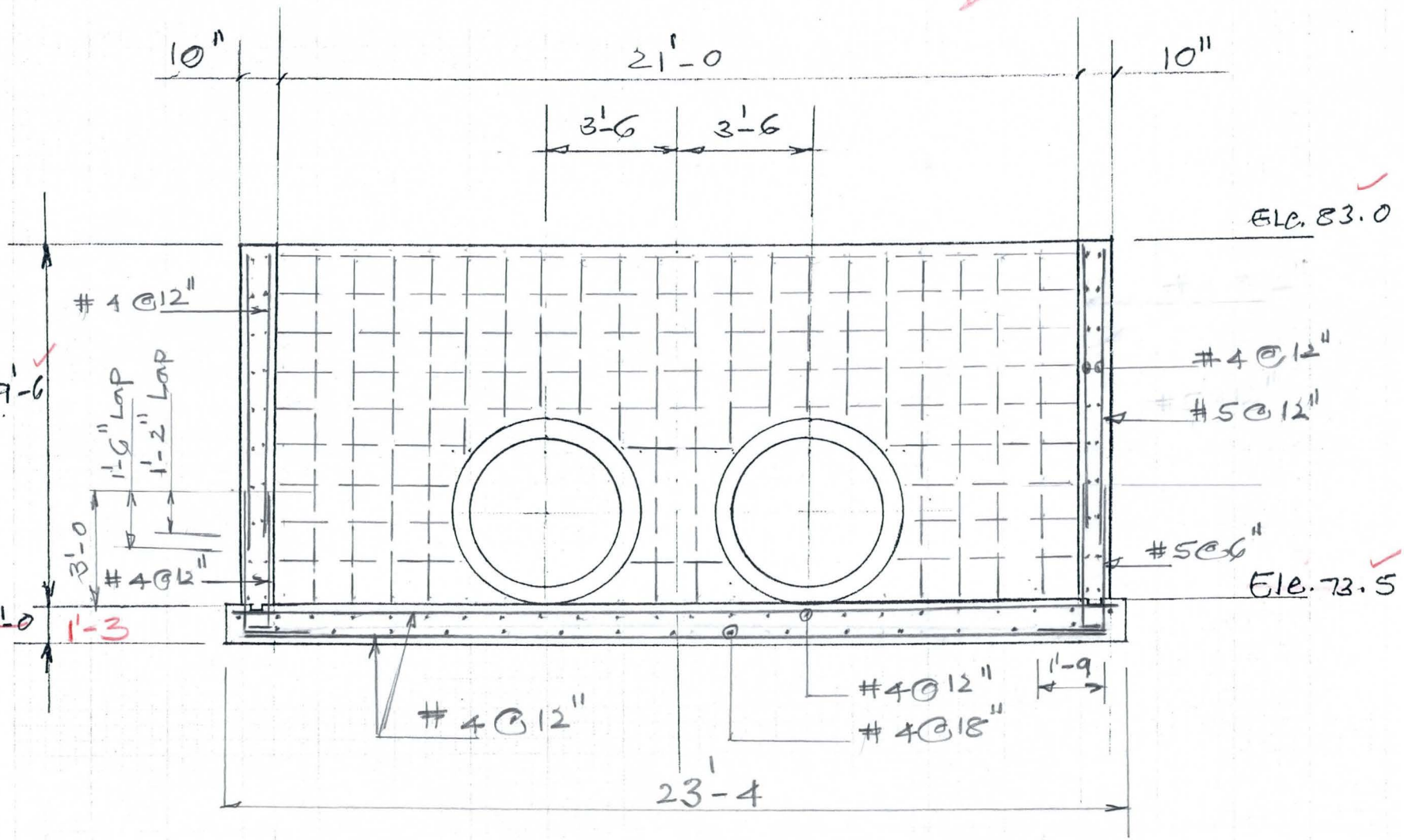

SECTION

Scale: 1/4" = 1'-0

FLOOD CONTROL DISTRICT OF MARICOPA COUNTY

PROJECT Galandro Wash PAGE 12 OF

DETAIL Inlet Structure COMPUTED KVH DATE 5/95

CHECKED BY DATE

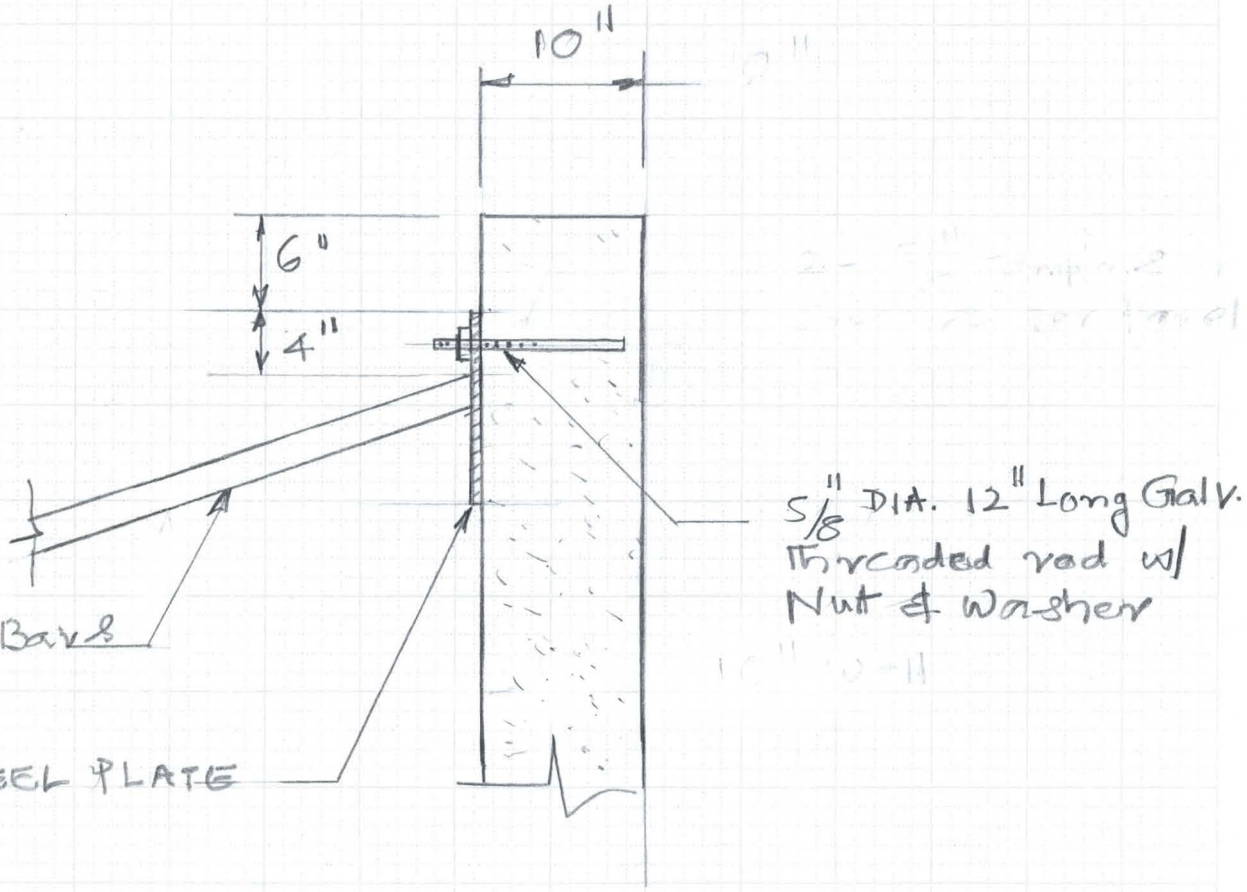

DETAIL - 1

Scale: 1" = 1'-0

FLOOD CONTROL DISTRICT OF MARICOPA COUNTY

PROJECT Gazandro Wash PAGE 13 OF ____

DETAIL Inlet Str. COMPUTED KVH DATE 5/95

CHECKED BY ____ DATE ____

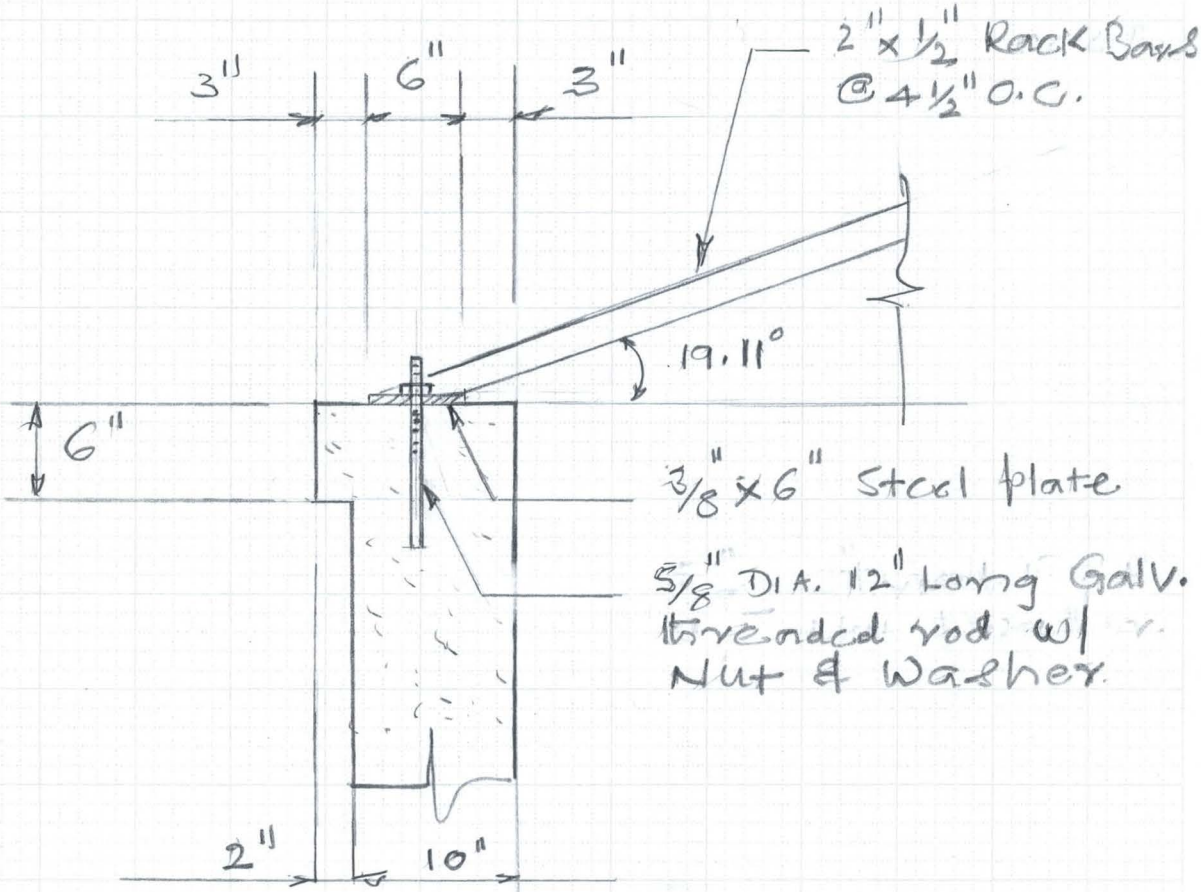

DETAIL-2

Scale: 1" = 1'-0

FLOOD CONTROL DISTRICT OF MARICOPA COUNTY

PROJECT Cassandra Wash PAGE 13(A) OF

DETAIL Inlet Str COMPUTED KVH DATE 6/95

CHECKED BY DATE

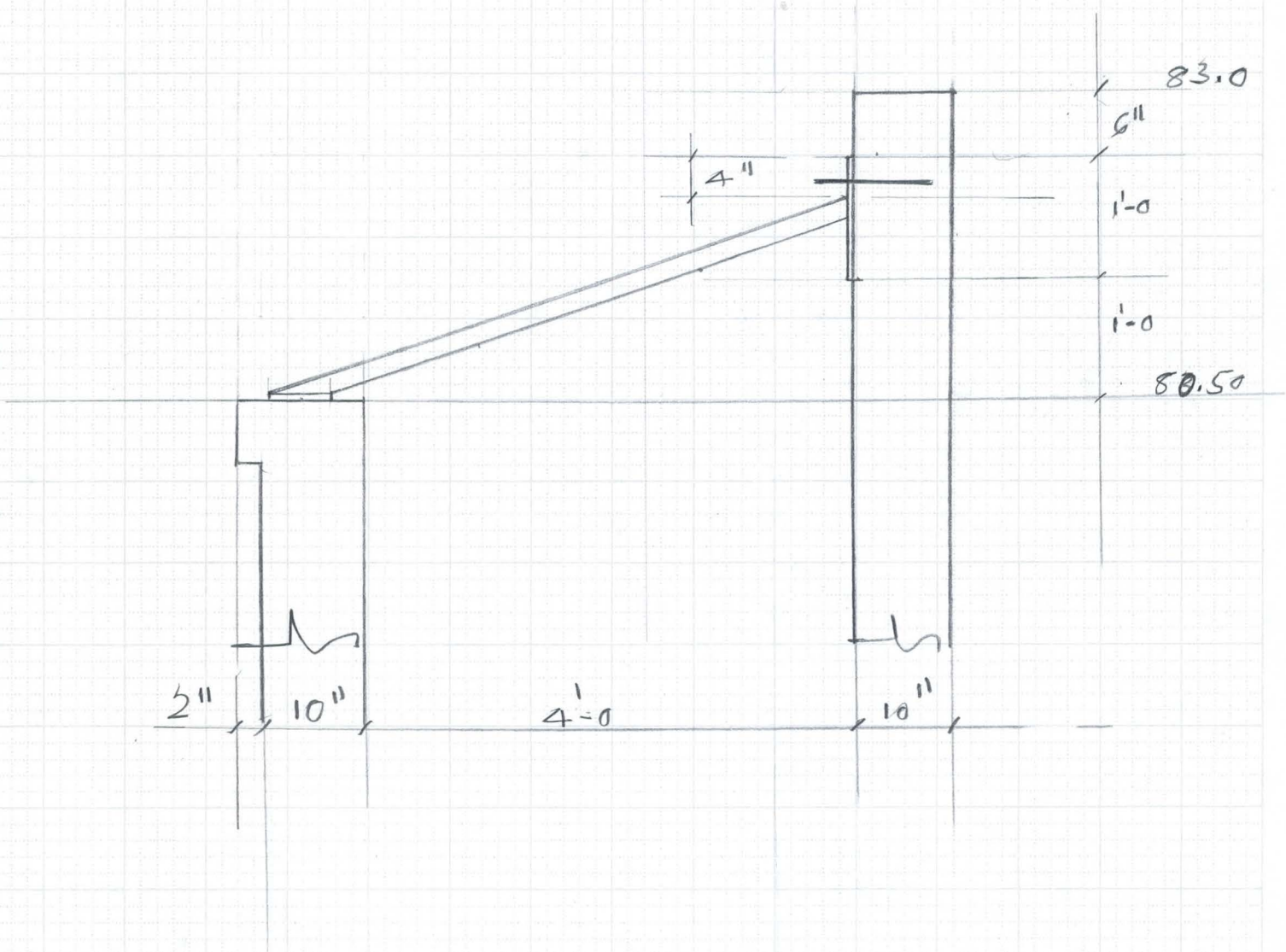

6910-153 4-90

FLOOD CONTROL DISTRICT OF MARICOPA COUNTY

PROJECT Galandro Inlet PAGE 14 OF ____

DETAIL Trash Rack COMPUTED KVH DATE 4/95

CHECKED BY ____ DATE ____

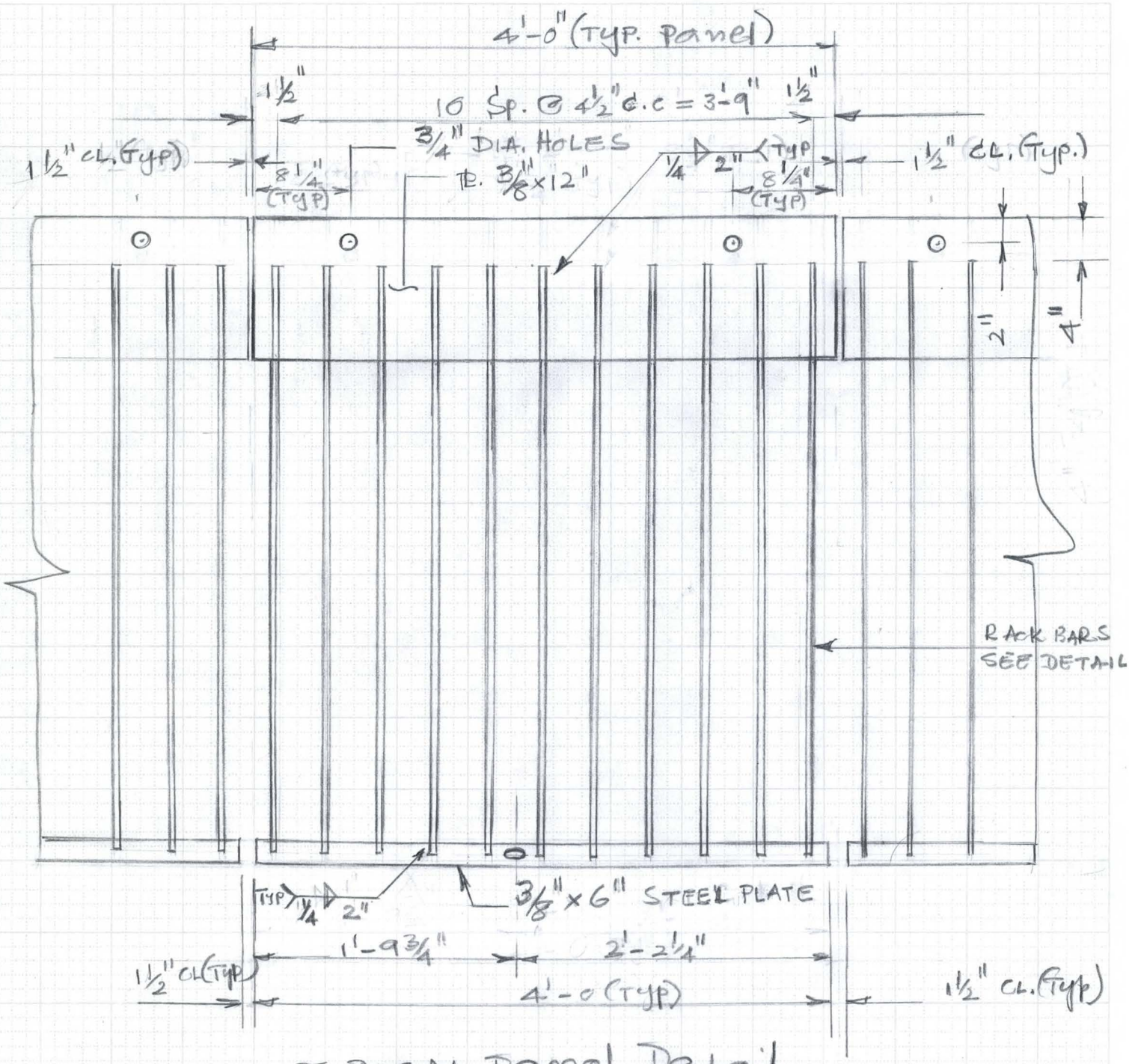

TYPICAL Panal Detail

Scale: 1" = 1'-0

6910-153 4-90

FLOOD CONTROL DISTRICT OF MARICOPA COUNTY

PROJECT Galandro Inlet PAGE 6 14(A) OF

DETAIL Trash Rack COMPUTED KNH DATE 4/95

CHECKED BY DATE

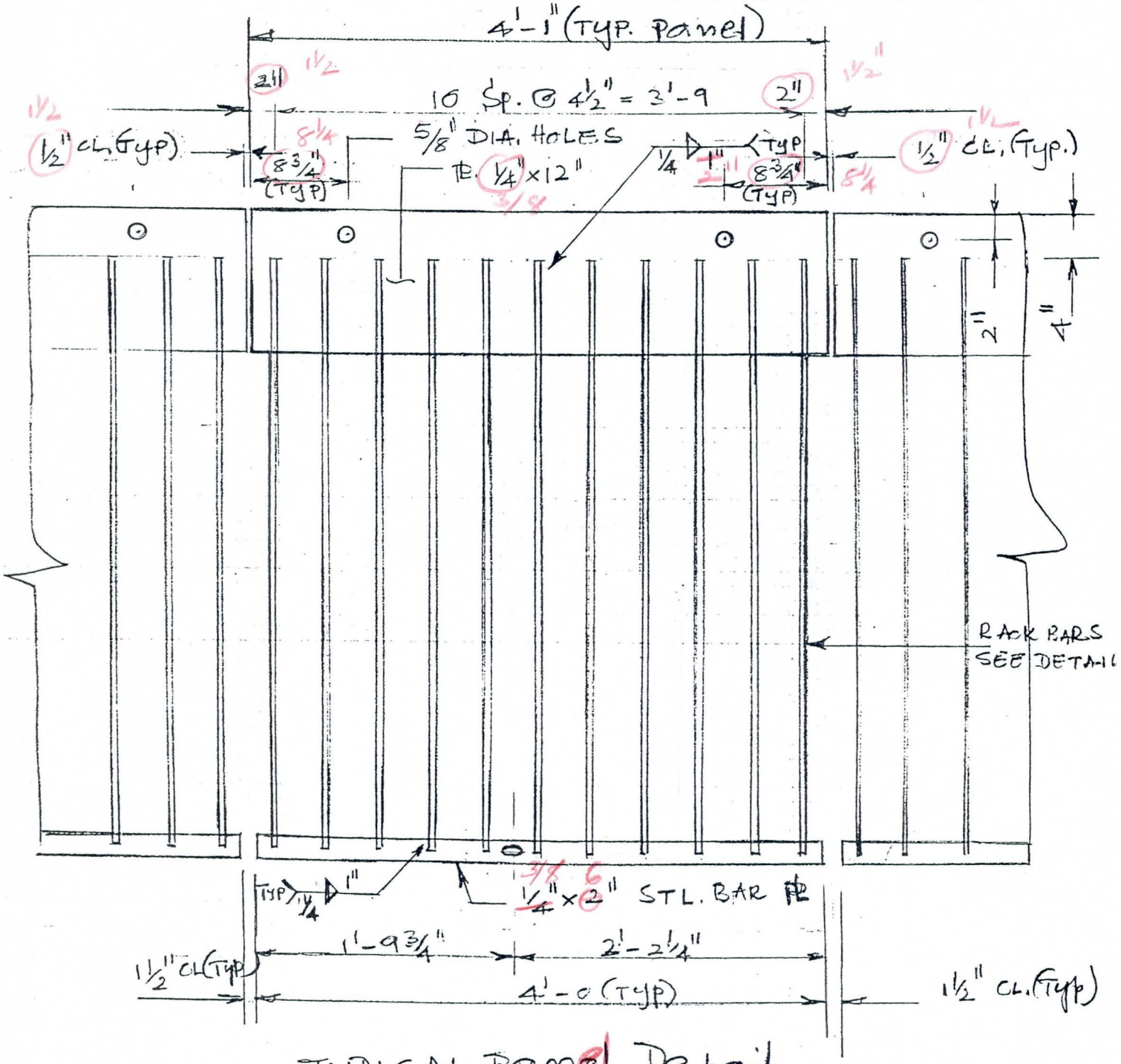

TYPICAL Panel Detail

Scale: 1" = 1'-0

FLOOD CONTROL DISTRICT OF MARICOPA COUNTY

PROJECT Cabandro Wash PAGE 15 OF

DETAIL Inlet Str. COMPUTED KVH DATE 5/95

CHECKED BY DATE

Retaining wall at Inlet Structure

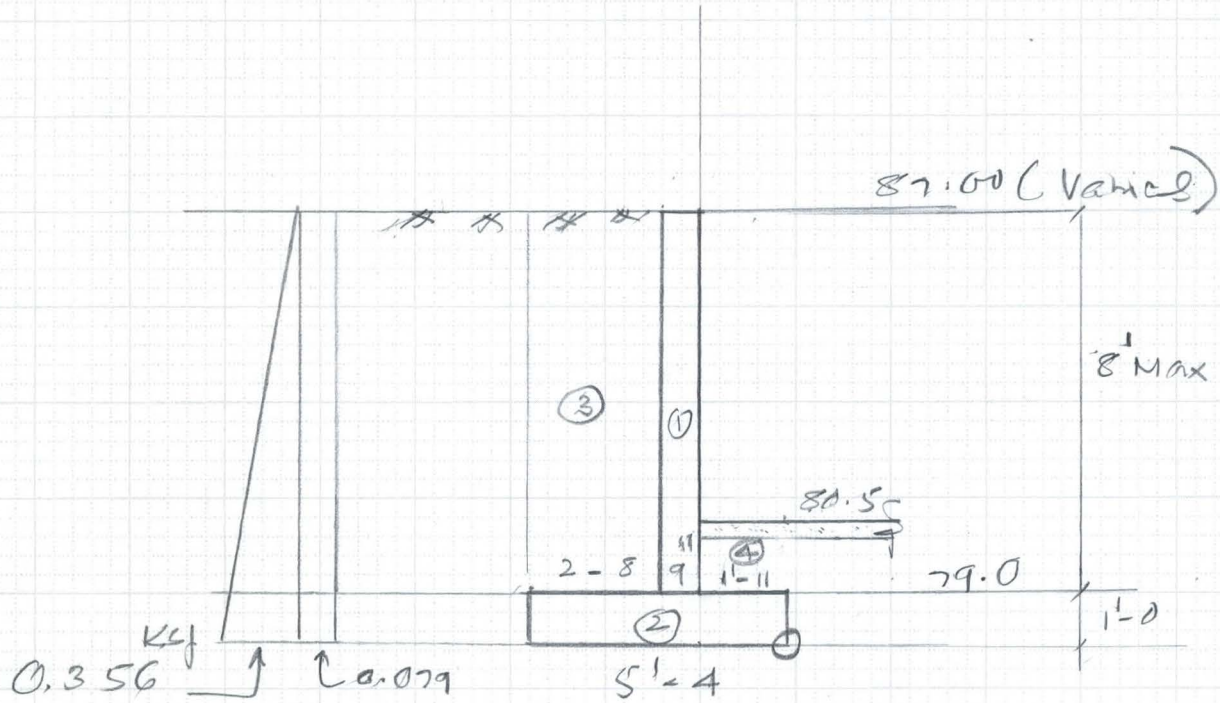

$P_{r1} = wkh = (0.12 \times 0.33 \times 9) = 0.356$ Kcf

P_{r2} (Sur ch. = 2') $= (0.12 \times 0.33 \times 2) = 0.079$

$P_1 = (0.079 \times 9) = 0.71^K$

$P_2 = (\frac{0.356}{2} \times 9) = 1.60^K$

$M_{OT} = (1.60 \times \frac{9}{3}) + (0.71 \times \frac{9}{2}) = (4.8 + 3.2) = 8.0^{Kft}$

Weights:

$W_1 = (0.75 \times 8)\ 0.15 = 0.9^K$

$W_2 = (5.33 \times 1.0)\ 0.15 = 0.8$

$W_3 = (2.67 \times 8.0)\ 0.12 = 2.56$

$W_4 = (1.92 \times 1.5)\ 0.12 = 0.35$

4.61

$M_{STB} = 0.9 \times (5.33 - 3.04) + (0.8 \times \frac{5.33}{2}) + (2.56 \times 4.0) + (0.35 \times \frac{1.92}{2})$

$= (2.06 + 2.13 + 10.24 + 0.34) = 14.77$

$F.S = \frac{14.77}{8.0} = 1.85$

As there will not be full surcharge M_{OT} will be less than 8.0 Kft & F.S will be greater than 1.85 ∴ OK

Distance of Resultant:

$x = (14.77 - 8.0)/4.61 = 1.47'$

$e = (\frac{5.33}{2} - 1.47) = 1.19, \quad \frac{b}{6} = \frac{5.33}{6} = 0.89'$

$e > \frac{b}{6}$

Check with Partial Surcharge:

Using 50 % of full surcharge

$M_{OT} = 4.8 + 0.5(3.2) = 6.4$ Kft

$x = (14.77 - 6.4)/4.61 = 1.82'$

$e = (\frac{5.33}{2} - 1.82) = 0.85 \simeq b/6 = 0.89$

FLOOD CONTROL DISTRICT OF MARICOPA COUNTY

PROJECT Casandra Wash PAGE 17 OF

DETAIL Inlet Str. COMPUTED KVH DATE 5/95

CHECKED BY DATE

Toe Design

$pr_1 = \left(1.71 \times \frac{3.42^2}{5.33}\right) = 1.10$

$P_1 = (1.10 \times 1.92) = 2.11^K$

$P_2 = \left(\frac{0.61}{2} \times 1.92\right) = 0.59^K$

P_3 (footing) $= (1.92 \times 1)\ 0.15 = 0.29^K$

$M_{yy} = \left(2.11 \times \frac{1.92}{2}\right) + \left(0.59 \times \frac{2}{3} \times 1.92\right) - \left(0.29 \times \frac{1.92}{2}\right)$

$= 2.5$ K-ft

$d_{eff} = (12 - 3 - 0.5) = 8.5''$

$A_s = \frac{2.5 \times 12}{24 \times 0.88 \times 8.5} = 0.17$

Min. Steel #4 @ 12"

Wall Design:

Ht = 8'

$pr_1 = 0.12 \times 0.33 \times 8 = 0.317$ K-ft

$pr_2 = 0.12 \times 0.33 \times 2 = 0.08$ K-ft

$P_1 = \left(\frac{0.317}{2}\right) 8 = 1.27^K$

$P_2 = 0.08 \times 8 = 0.64^K$

$M = \left(1.27 \times \frac{8}{3}\right) + \left(0.64 \times \frac{8}{2}\right)$

$= (3.4 + 2.6) = 6.0$ K-ft

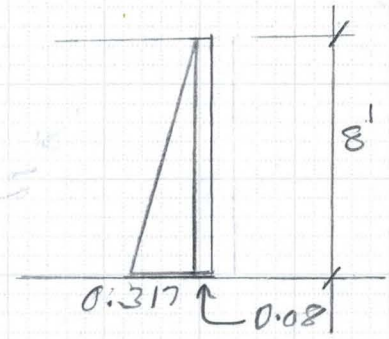

$d_{eff} = (9.0 - 2 - 0.5) = 6.5''$

$A_s = \frac{6.0 \times 12}{24 \times 0.88 \times 6.5}$

$= 0.54\ in^2$

Use #5 @ 6" at the Base &
#5 @ 12

FLOOD CONTROL DISTRICT OF MARICOPA COUNTY

PROJECT Cassandra wash PAGE 18 OF

DETAIL Inlet Str. COMPUTED KVH DATE 5/95

CHECKED BY DATE

Footing:

$$P_r = \frac{4.61}{5.33 \times 1}\left(1 \pm \frac{6 \times 0.85}{5.33}\right)$$

$p_{r\,max} = 0.87\,(1 + 0.96) = 1.71$ KSF

$p_{r\,min} = 0.87\,(1 - 0.96) = 0.04$ KSF, Say 0

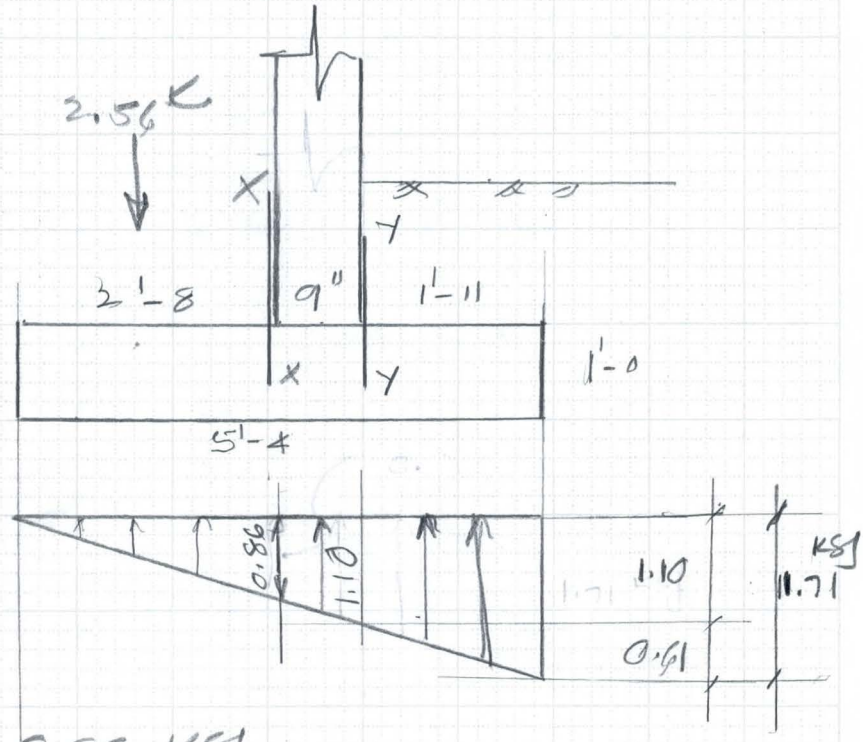

Heel Design:

$p_r = 1.71 \times \frac{2.67}{5.33} = 0.86$ KSF

$P = \left(\frac{0.86}{2} \times 2.67\right) = 1.15^K$

wt. of ftg $= (2.67 \times 1)\,0.15 = 0.4^K$

wt of soil $= 2.67 \times 8 \times 0.12 = 2.56^K$

$M_{xx} = \left(2.56 \times \frac{2.67}{2}\right) + \left(0.4 \times \frac{2.67}{2}\right) - \left(1.15 \times \frac{2.67}{3}\right) = 2.93^{K'}$

$d_{eff} = (12 - 2.5 - 0.5) = 9.0''$ $\quad A_s = \left(\frac{2.93 \times 12}{24 \times 0.88 \times 9.0}\right) = 0.18\ in^2$

Min Steel #5 @ 12"

FLOOD CONTROL DISTRICT OF MARICOPA COUNTY

PROJECT Casandra wash PAGE 19 OF

DETAIL Inlet Structure COMPUTED KVH DATE 5/95

CHECKED BY DATE

Check for Sliding:

using partial Surch.

$P_{horiz} = (1.27 + \frac{0.64}{2}) = 1.59^K$

$W(total) = 4.61^K$

Using a Coeff. of friction 0.4

force preventing sliding $= (0.4 \times 4.61) = 1.84$

$F.S = \frac{1.84}{1.59} = 1.16$

okay ok since there is Shotcrete Lining on the inside

FLOOD CONTROL DISTRICT OF MARICOPA COUNTY

PROJECT Cascandro Wash PAGE 20 OF

DETAIL Inlet Str. COMPUTED KVH DATE 5/95

CHECKED BY DATE

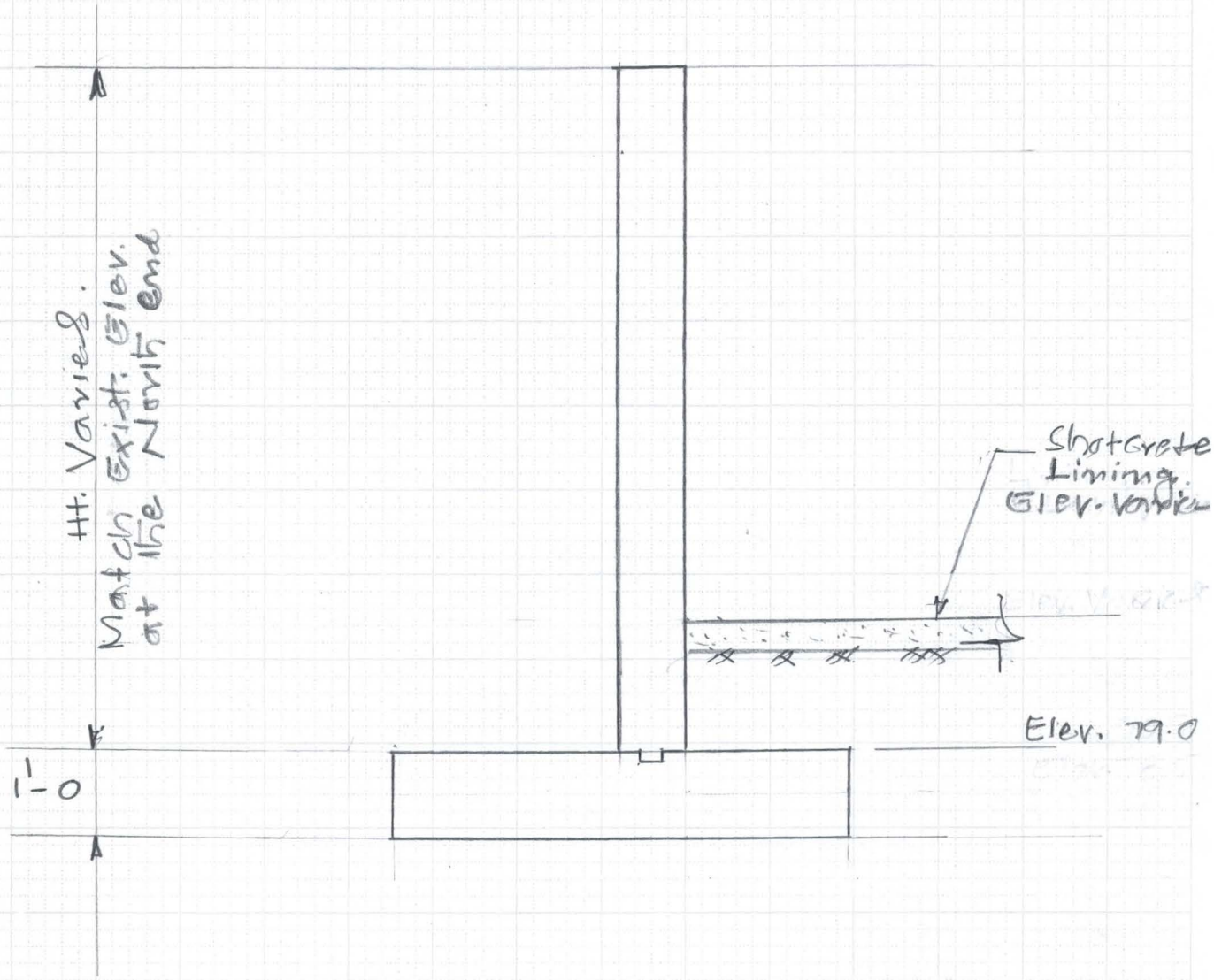

FLOOD CONTROL DISTRICT OF MARICOPA COUNTY

PROJECT Cosandro Wash PAGE 21 OF

DETAIL Inlet Str. COMPUTED KVH DATE 5/95

CHECKED BY DATE

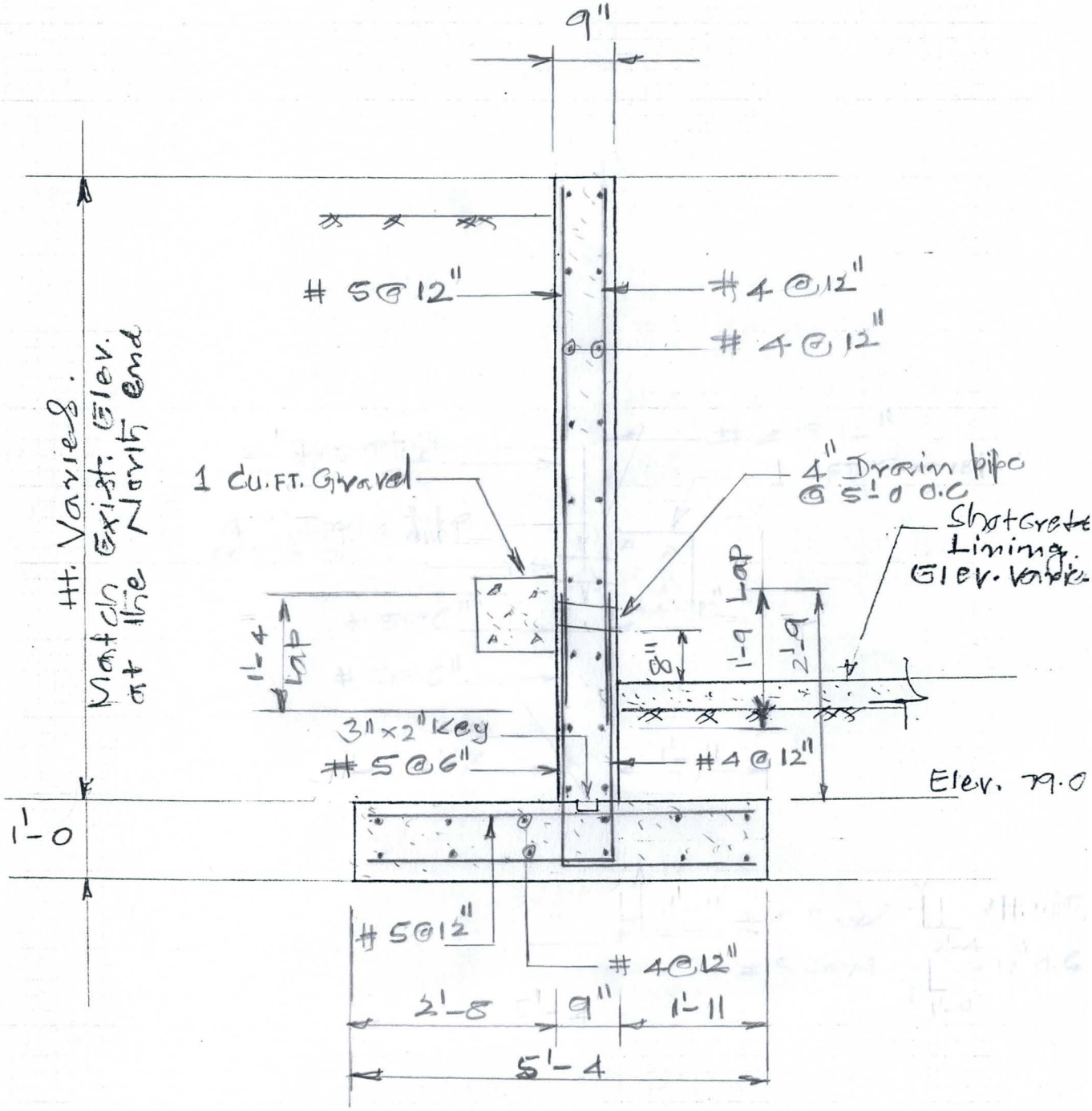

SECTION

Scale: 1/2" = 1'-0

FLOOD CONTROL DISTRICT OF MARICOPA COUNTY

PROJECT Cajalandro Wash PAGE 22 OF

DETAIL Inlet Str. COMPUTED KVH DATE 5/95

CHECKED BY DATE

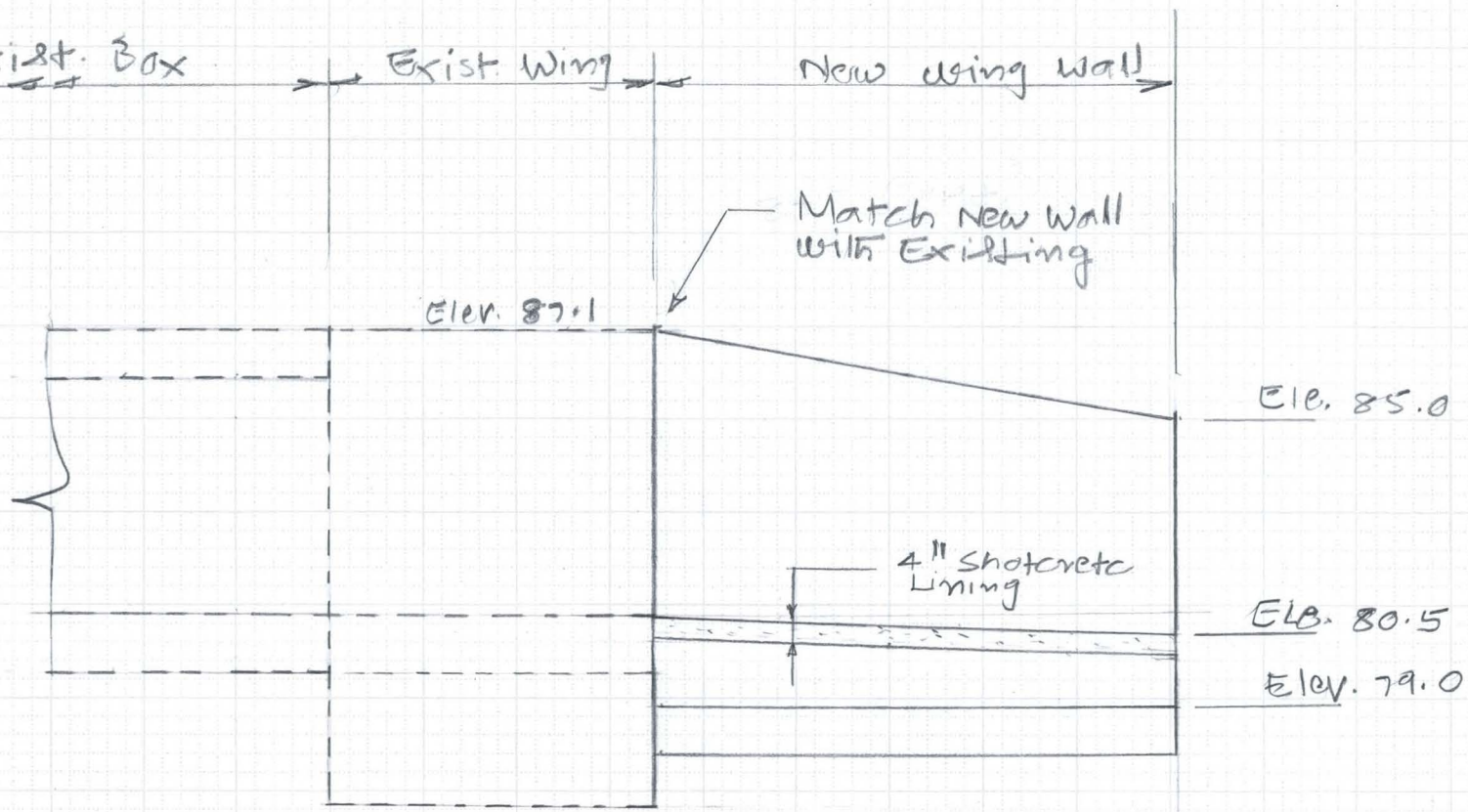

Elevation D-D

Scale: 1/4" = 1'-0

FLOOD CONTROL DISTRICT OF MARICOPA COUNTY

PROJECT Gasandro Wash PAGE 23 OF

DETAIL Inlet Str. COMPUTED EVH DATE 5/95

CHECKED BY DATE

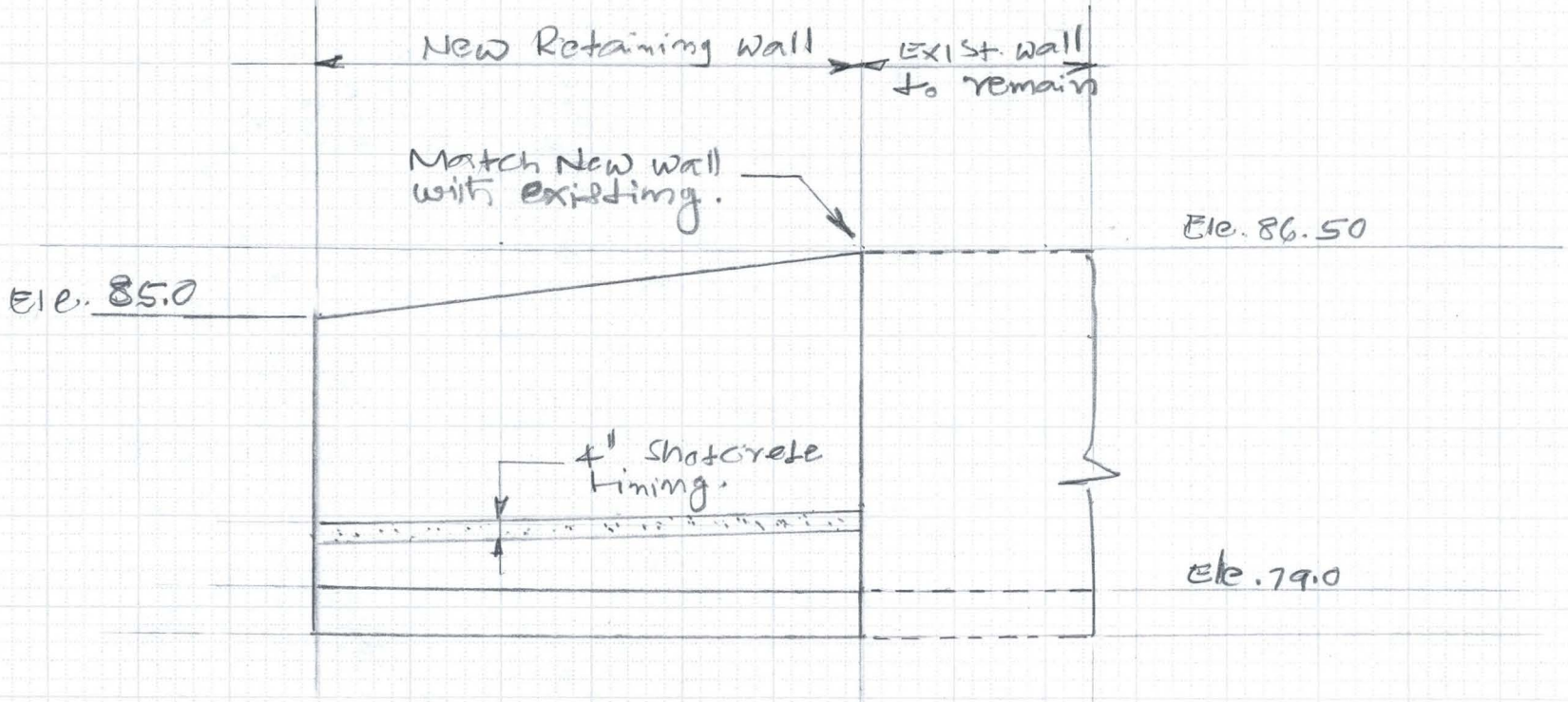

Elevation E-E

Scale: 1/4" = 1'-0

FLOOD CONTROL DISTRICT OF MARICOPA COUNTY

PROJECT Gasandra Wash PAGE 24 OF ____

DETAIL Outlet Str. COMPUTED KVH DATE 5/95

CHECKED BY ____ DATE ____

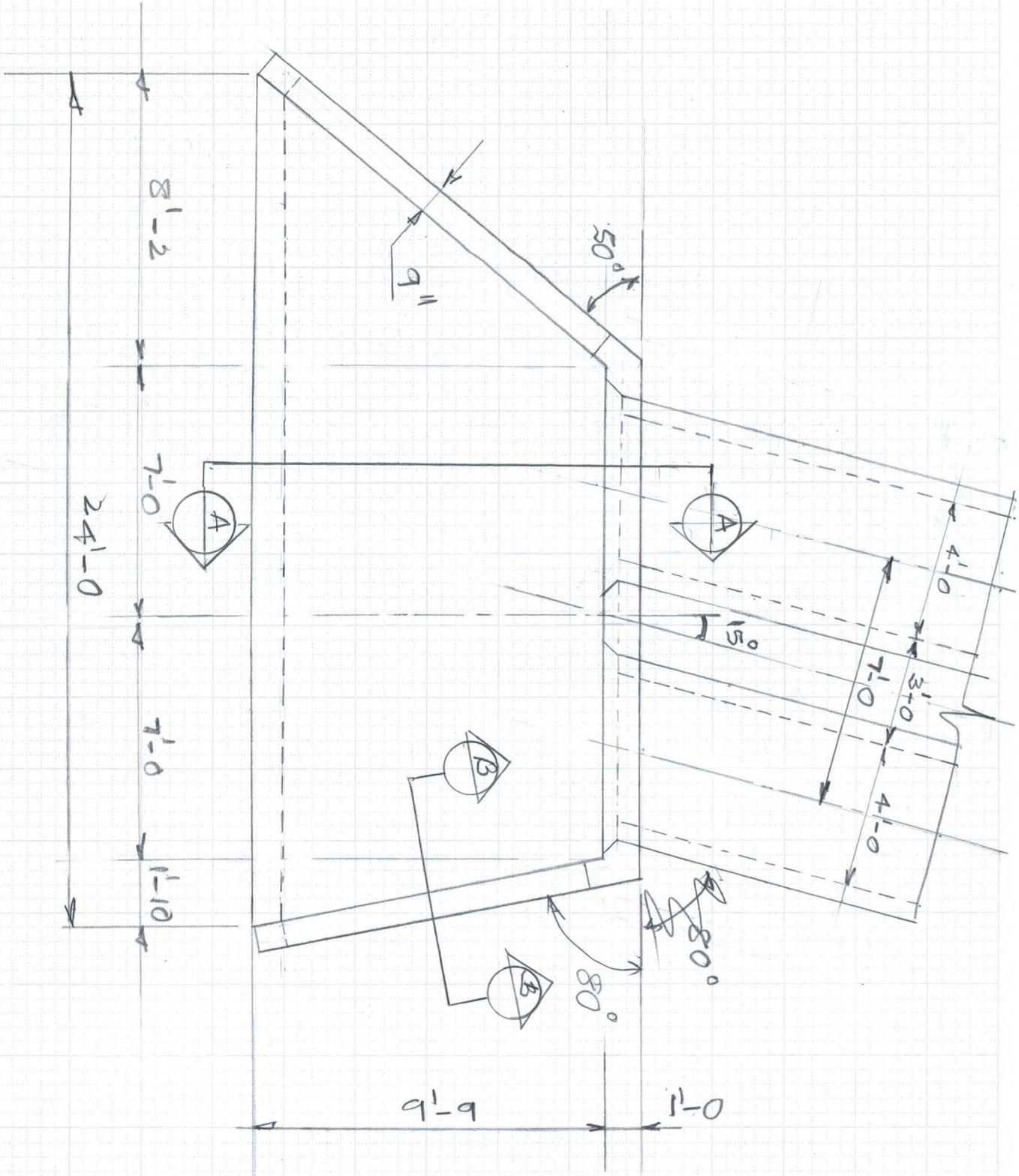

6910-158 4-90

P-25

CASANDRO
OUTLET

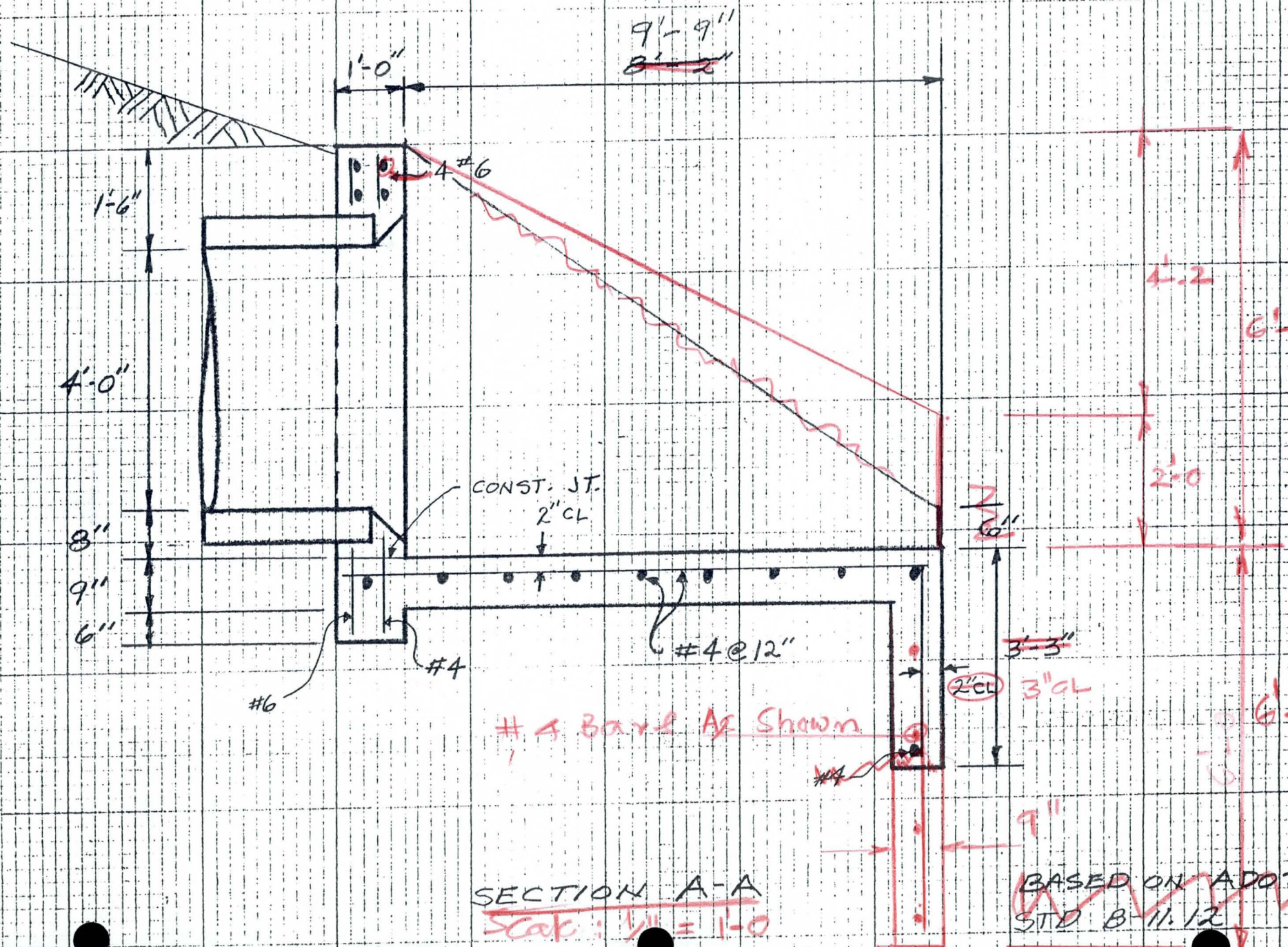

SECTION A-A
Scale: 1/4" = 1'-0

BASED ON ADOT
STD B-11.12

Pi-2.6

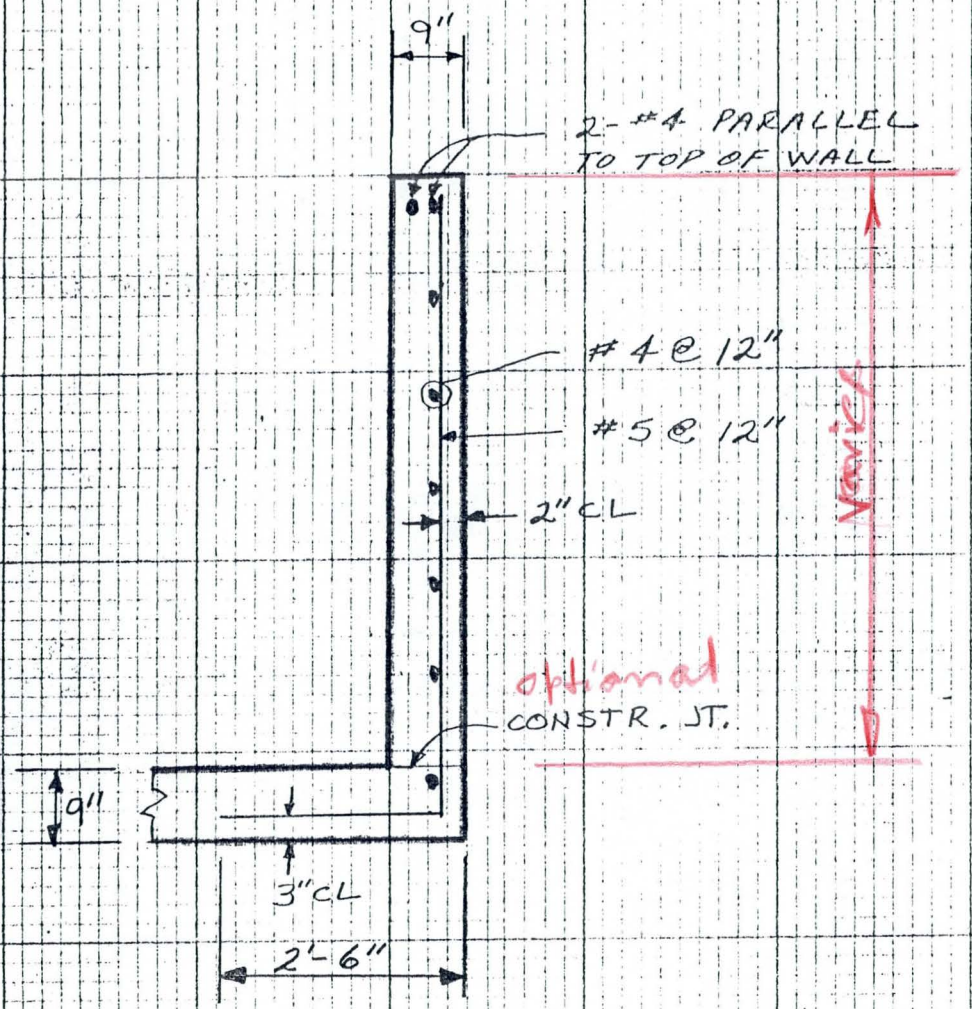

SECTION B-B

BASED ON ADOT STD B-11.12

Scale: 1/2" = 1'-0

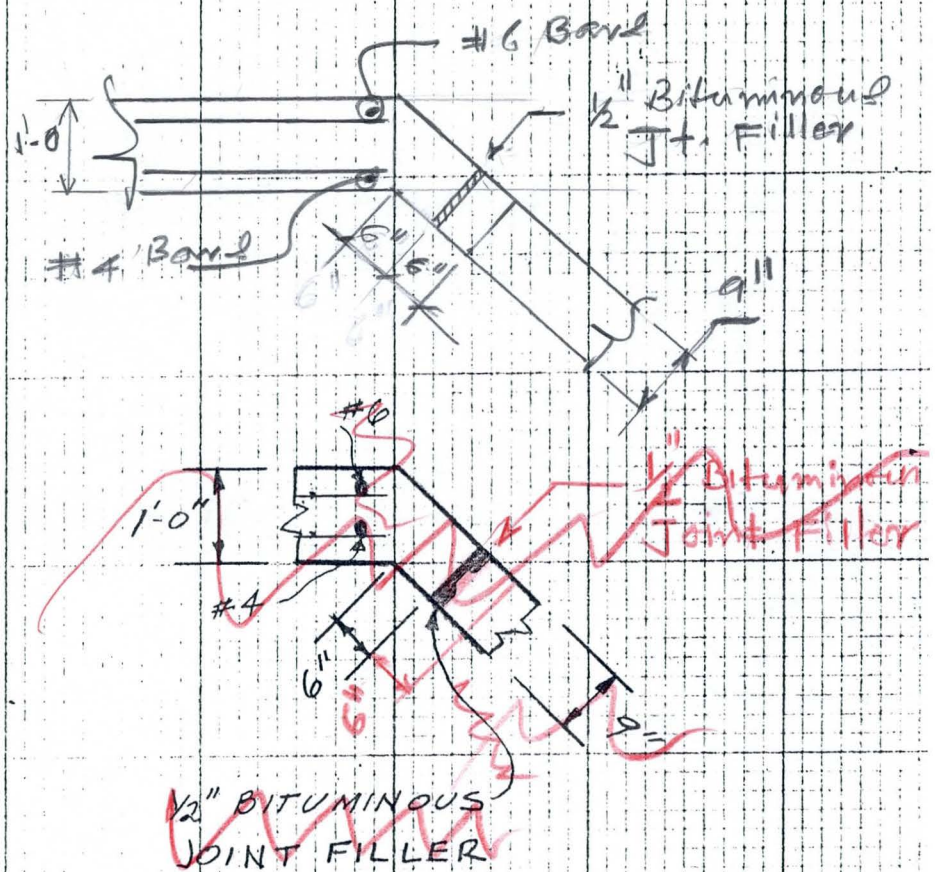

DETAIL A

Scale: 1/2" = 1'-0

CASANDRO
OUTLET

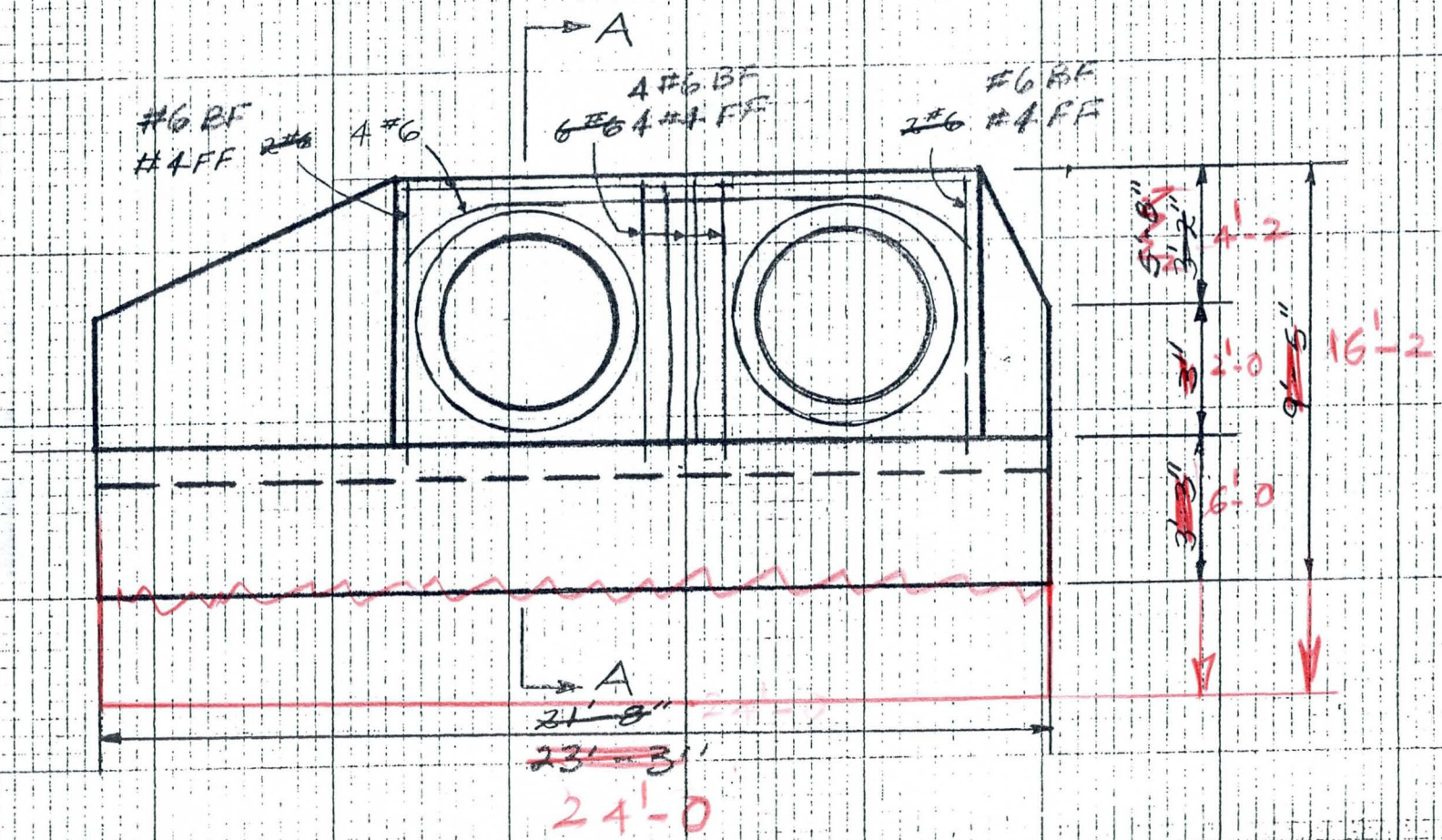

ELEVATION VIEW
Scale: 1/4" = 1'-0

BASED ON ADOT
STD B-11.12 &
STD B-16.10

FLOOD CONTROL DISTRICT OF MARICOPA COUNTY

PROJECT Cascandro Wash PAGE 28 OF

DETAIL Manholes COMPUTED KVH DATE 6/95

CHECKED BY DATE

Main Reinf parallel to traffic:
Sect. 3.24.3.2

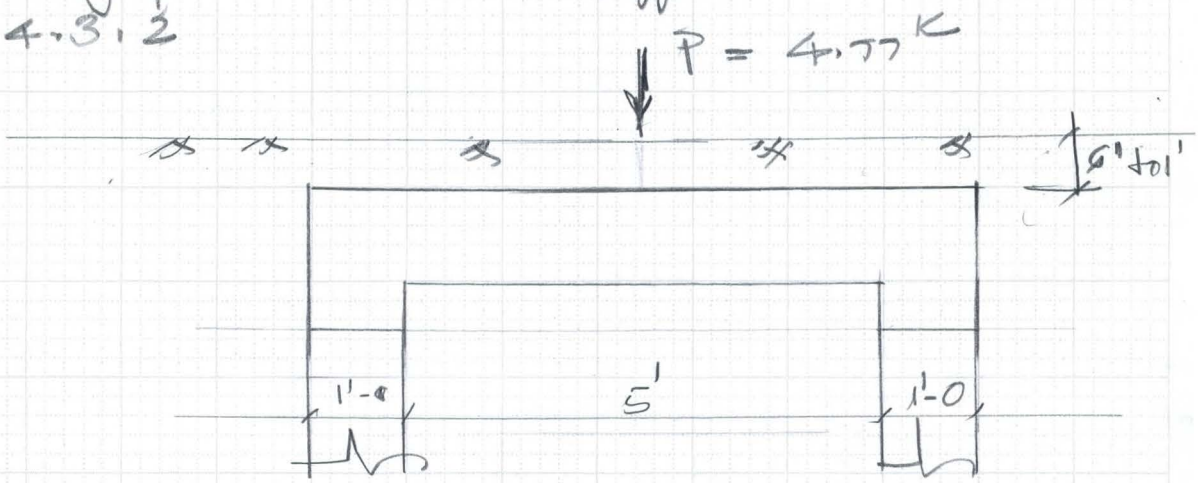

$P = 16^K$

$I = \frac{50}{L+125} = \frac{50}{6+125} = 0.38$ use 30% Max

$E = (4 + 0.06S) = (4 + 0.06 \times 6) = 4.36$

$P = 16 \times 1.3 = 20.8^K$, P per ft $= \frac{20.8}{4.36} = 4.77^K$

$M_S = (4.77 \times 6/4) = 7.16$ Kft

D.L (Conc) = 0.15
Soil 1 ft = 0.12
0.27

$M_{D.L} = \frac{0.27 \times 6^2}{8} = 1.22$ Kft

Check using simplified formula:
$LLM = 900S = (900 \times 6)1.3 = 7.02$ Kft
Impact
Close to 7.16 Kft

$M_{tot} = (7.16 + 1.22) = 8.38$

$d_{eff} = (12 - 2 - 0.5) = 9.5''$

$A_s = \frac{8.38 \times 12}{24 \times 0.88 \times 9.5}$
$= 0.50 \text{ in}^2$

use #5 @ 6", $A_s = 0.62$
or #7 @ 12", $A_s = 0.60$

6910-153 4-90

FLOOD CONTROL DISTRICT OF MARICOPA COUNTY

PROJECT Casandra Wash PAGE 29 OF

DETAIL Manholes COMPUTED KVH DATE 6/95

CHECKED BY DATE

$$I_{imp} = \frac{50}{L+125}$$

$$= \frac{50}{7.5+125}$$

$$= 0.38$$

Use Max 30% Impact

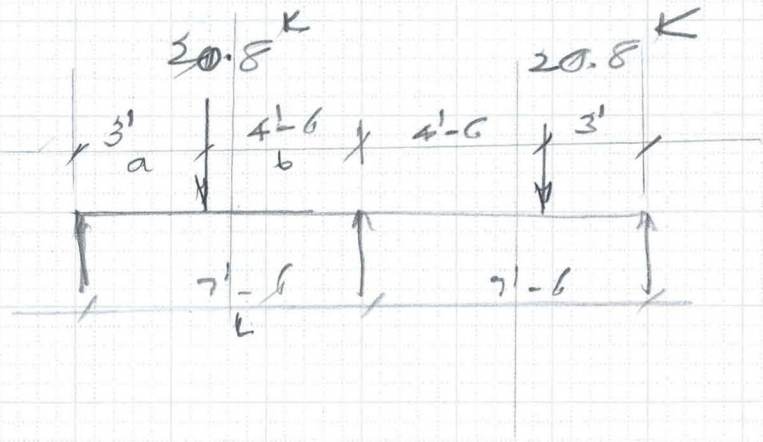

@ $0.4 \times 7.5 = 3'$

$P = 16 \times 1.3 = 20.8^K$

$$M_{Neg} = \frac{Pab}{4l^3}\left[4l^2 - a(l+a)\right]$$

$$= \frac{20.8 \times 3 \times 4.5}{4 \times 7.5^3}\left[4 \times 7.5^2 - 3(7.5+3)\right]$$

$$= 0.1664\left[193.5\right] = 32.2^{k'}$$

$$M_{Neg} = \frac{Pab}{4l^2}(l+a) = \frac{20.8 \times 3 \times 4.5}{4 \times 7.5^2}(7.5+3)$$

$$= 1.248(10.5) = 13.1^{k'}$$

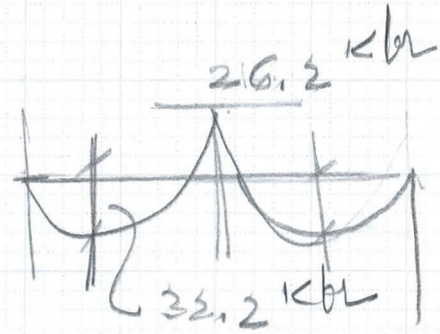

Using $f'_c = 3000$ psi $\quad n = 9, \; f_c = 1200$

$$K = \frac{f_c}{f_s/n + f_c} = \frac{1200}{\frac{24}{9} + 1.2} = \frac{1.20}{3.867} = 0.310$$

$$j = \left(1 - \frac{K}{3}\right) = \left(1 - \frac{0.31}{3}\right) = 0.89$$

$$R = \frac{f_c}{2} jK = \left(\frac{1.20}{2} \times 0.89 \times 0.310\right) = 0.165$$

$$M_{Allow} = Rbd^2$$

a) Check using $d = 12$, $d_{eff} = (12 - 2.5) = 9.5''$

$$M_{Allow} = 0.165 \times 12 \times 9.5^2 = 179 \text{ Kin} = 14.9 \text{ Kft}$$

b) Check using $d = 18$, $d_{eff} = 18 - 2.5 = 15.5$

$$M_{Allow} = 0.165 \times 12 \times 15.5^2 = 476 \text{ Kin}$$

$$= 39.7 \text{ Kft} > 32.2 \quad \text{O.K.}$$

Shear Check:

$V_{max} = 10.4 \; (1.2) = 12.5$

Mom. Infl.

$10.4 \times 0.8 = 8.3^K$

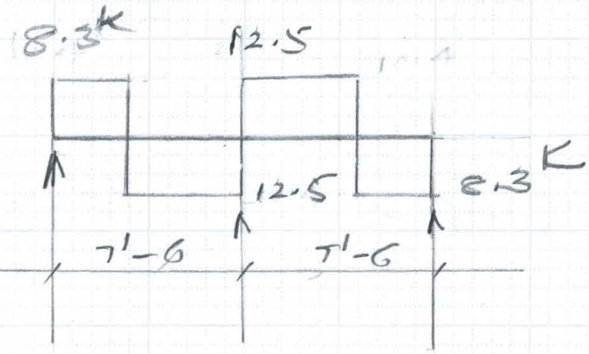

$b = 12$, $d = (18 - 1.5 - 0.5 - 0.5) = 15.5''$

$$v = \frac{12.5}{12 \times 15.5} = .67 \text{ psi}$$

$$v(Allow) = 0.9\sqrt{f'_c} = 0.9\sqrt{3000} = 49.3 \text{ psi}$$

FLOOD CONTROL DISTRICT OF MARICOPA COUNTY

PROJECT Cabandro Wash PAGE 31 OF

DETAIL Manhole COMPUTED KVH DATE 6/95

CHECKED BY DATE

$v_s = (v - v_c) = (67 - 49.3) = 17.7$ psi

$s = \frac{A_v f_s}{v_s b_w} = \left[\frac{(0.11 \times 2)\, 24\,000}{17.7 \times 12}\right] = 24.8''$

Min use #3 Stirrups @ 15" o.c

Steel

$M_{pos} = 32.2$ kft

$d_{eff} = (18 - 2 - 0.5 - 0.5) = 15''$

$A_s = \frac{32.2 \times 12}{24 \times 0.88 \times 15}$

$= 1.2$ in^2

use 2 or 3 #7 Bott.

M_{om} (Neg) $= 26.2$ kft

$A_s = \frac{26.2 \times 12}{24 \times 0.88 \times 15}$

$= 0.99$

use 2 #7 Top

FLOOD CONTROL DISTRICT OF MARICOPA COUNTY

PROJECT Calandra wash PAGE 32 OF ____

DETAIL Manhole COMPUTED KVH DATE 6/95

CHECKED BY ____ DATE ____

Loading Conditions:

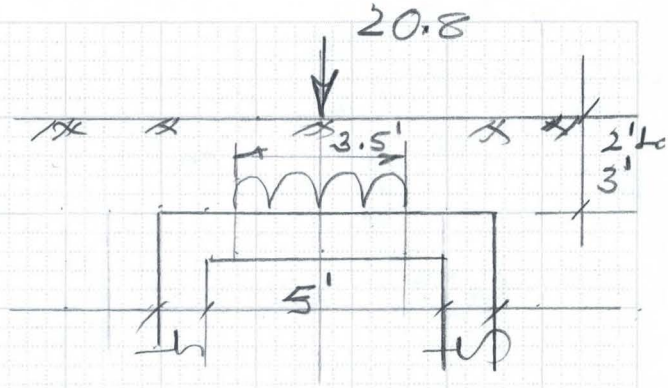

a) with 2' fill:

Sect. 6.4:

$(2 \times 1.75) = 3.5'$

$P = 16 \times 1.3 = 20.8^K$

$\frac{20.8}{3.5 \times 3.5} = 1.7$ KSF

b) with 3' fill, $(3 \times 1.75) = 5.25'$

$\frac{20.8}{5.25 \times 5.25} = 0.76$ KSF

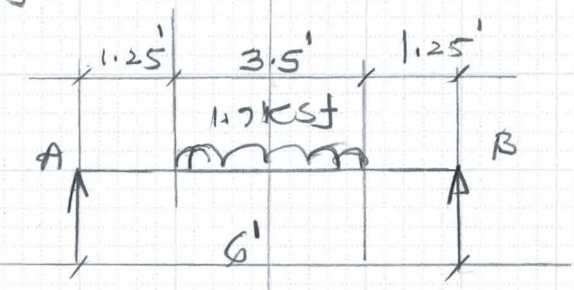

a) $R_A = R_B = \frac{1.7 \times 3.5}{2} = 2.98^K$

$M_{L.L} = (2.98 \times 3) - 1.7 \times 1.75 \times \frac{1.75}{2}$

$= 6.34$ Kft

D.L (Conc): $W_1 = 0.15$ KSF

D.L (Soil): $W_2 = 0.12 \times 2 = 0.24$

W (total) $= (0.15 + 0.24) = 0.39$ KSF

$M_{D.L} = \frac{0.39 \times 6^2}{8} = 1.76$ Kft

$M_{total} = (6.34 + 1.76) = 8.10$ Kft

$d_{eff} = (12 - 2 - 0.5) = 9.5''$ $\quad A_s = \frac{8.10 \times 12}{24 \times 0.85 \times 9.5} = 0.48$

6910-153 4-90

FLOOD CONTROL DISTRICT OF MARICOPA COUNTY

PROJECT Cassandra Wash PAGE 33 OF ____

DETAIL ____ COMPUTED KVH DATE 6/95

____ CHECKED BY ____ DATE ____

b) with 3' fill:

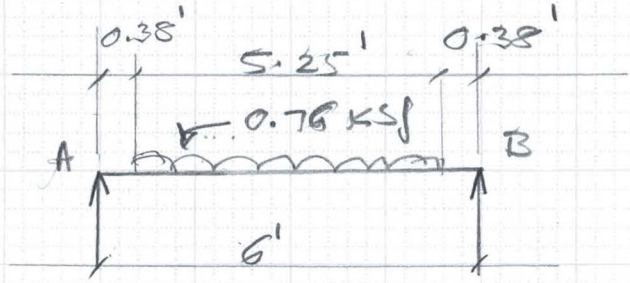

$R_A = R_B = 0.76 \times \frac{5.25}{2}$

$= 2.0^K$

$M_{LL} = (2.0 \times 3) - (0.76 \times \frac{5.25}{2} \times \frac{5.25}{4}) = 3.4^{K'}$

DL (Conc.) = 0.15

Soil = 3 x 0.12 = 0.36

W = 0.51 KSF

$M_{DL} = 0.51 \times 6^2/8 = 2.3^{K'}$

$M_{total} = (3.4 + 2.3) = 5.7^{K'} < 8.38^{K'}$

∴ Min fill on top of Conc. Slab Controls

FLOOD CONTROL DISTRICT OF MARICOPA COUNTY

PROJECT Casandro walls PAGE 3* OF

DETAIL Manholes COMPUTED KVH DATE 6/95

CHECKED BY DATE

Walls:

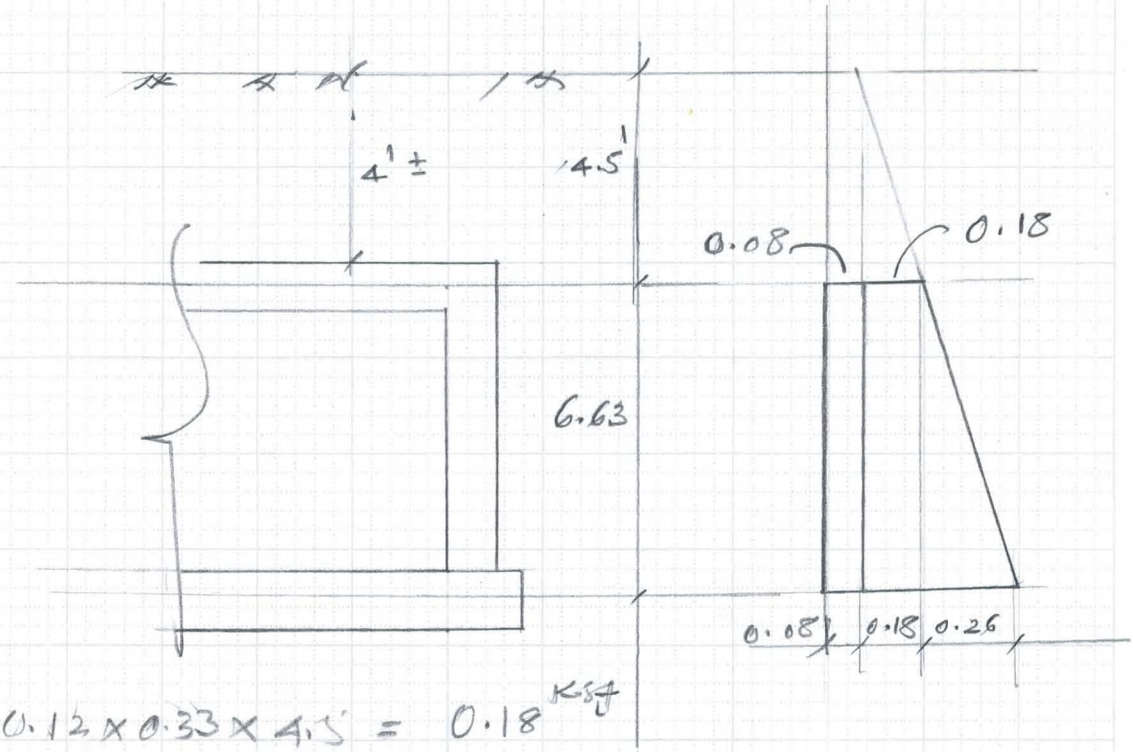

Soil pr: $0.12 \times 0.33 \times 4.5 = 0.18^{ksf}$

$0.12 \times 0.33 \times 11.13 = 0.44$

Surch: $(0.12 \times 0.33 \times 2) = 0.08$

$M_{usl} = \frac{0.26 \times 6.63^2}{8} = 1.43^{kft}$

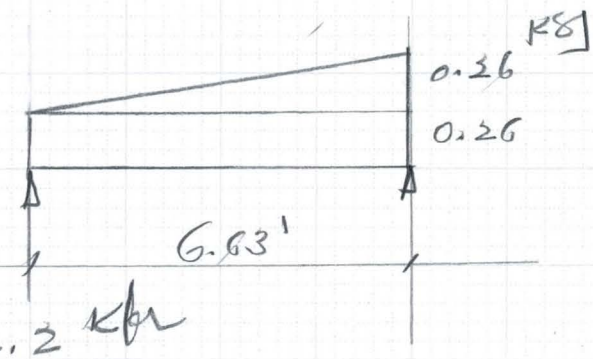

$M_{Triang.} = 0.1283\, WL$

$= 0.1283 \left(\frac{0.26}{2} \times 6.63\right) 6.63$

$= 0.73$

$M_{total} = (1.43 + 0.73) = 2.2^{kft}$

$d_{eff} = (12 - 2 - 0.5) = 9.5''$

$A_s = \frac{2.2 \times 12}{24 \times 0.88 \times 9.5} = 0.13$

Use Min Steel

(8)

FLOOD CONTROL DISTRICT OF MARICOPA COUNTY

PROJECT Cosanaro Wash PAGE 35 OF

DETAIL Manhole COMPUTED KYH DATE 6/95

CHECKED BY DATE

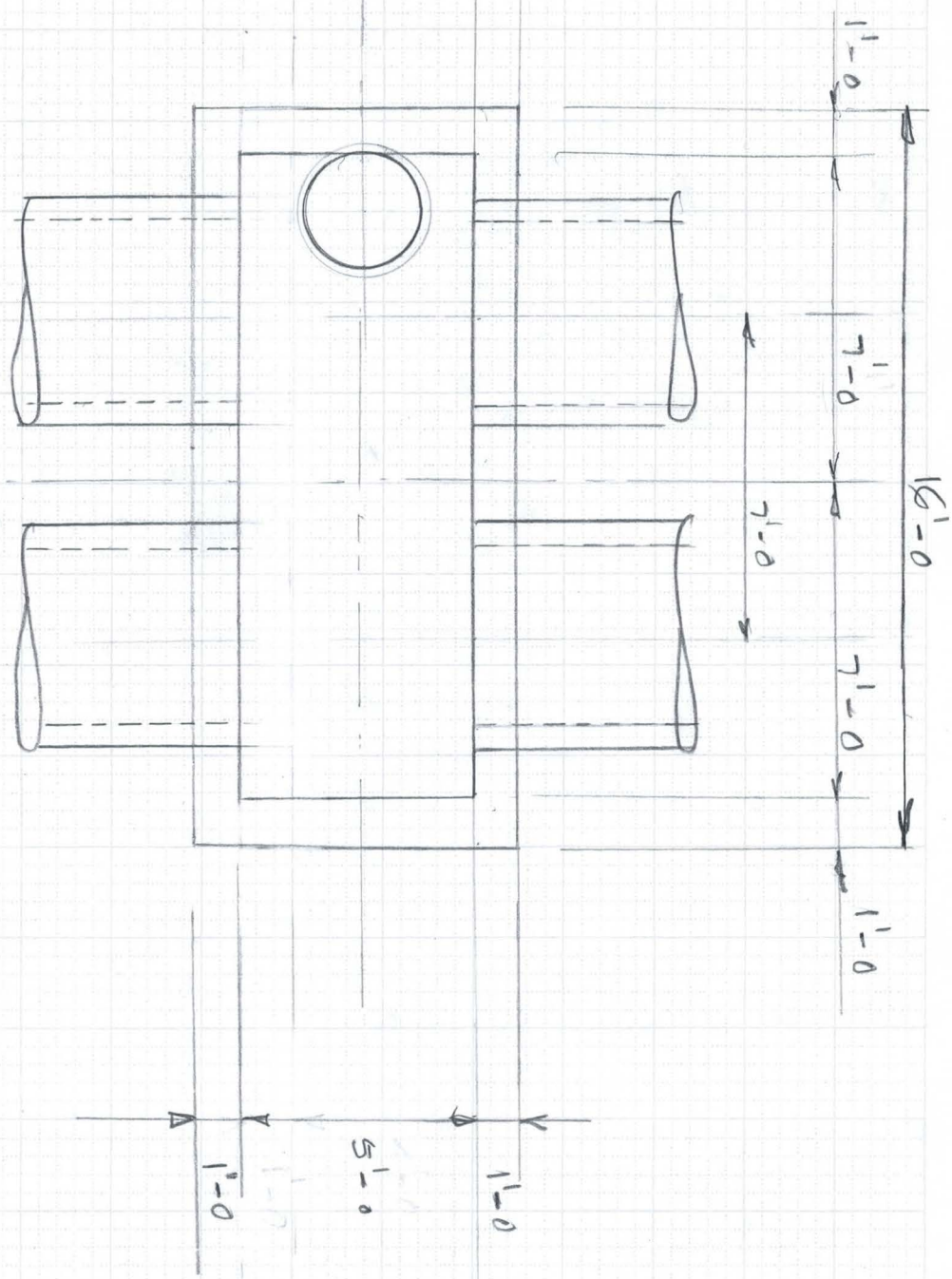

PLAN:
Scale: 1/4" = 1'-0

FLOOD CONTROL DISTRICT OF MARICOPA COUNTY

PROJECT Gardenia Wash PAGE 36 OF 95

DETAIL Manhole COMPUTED KWH DATE

CHECKED BY DATE

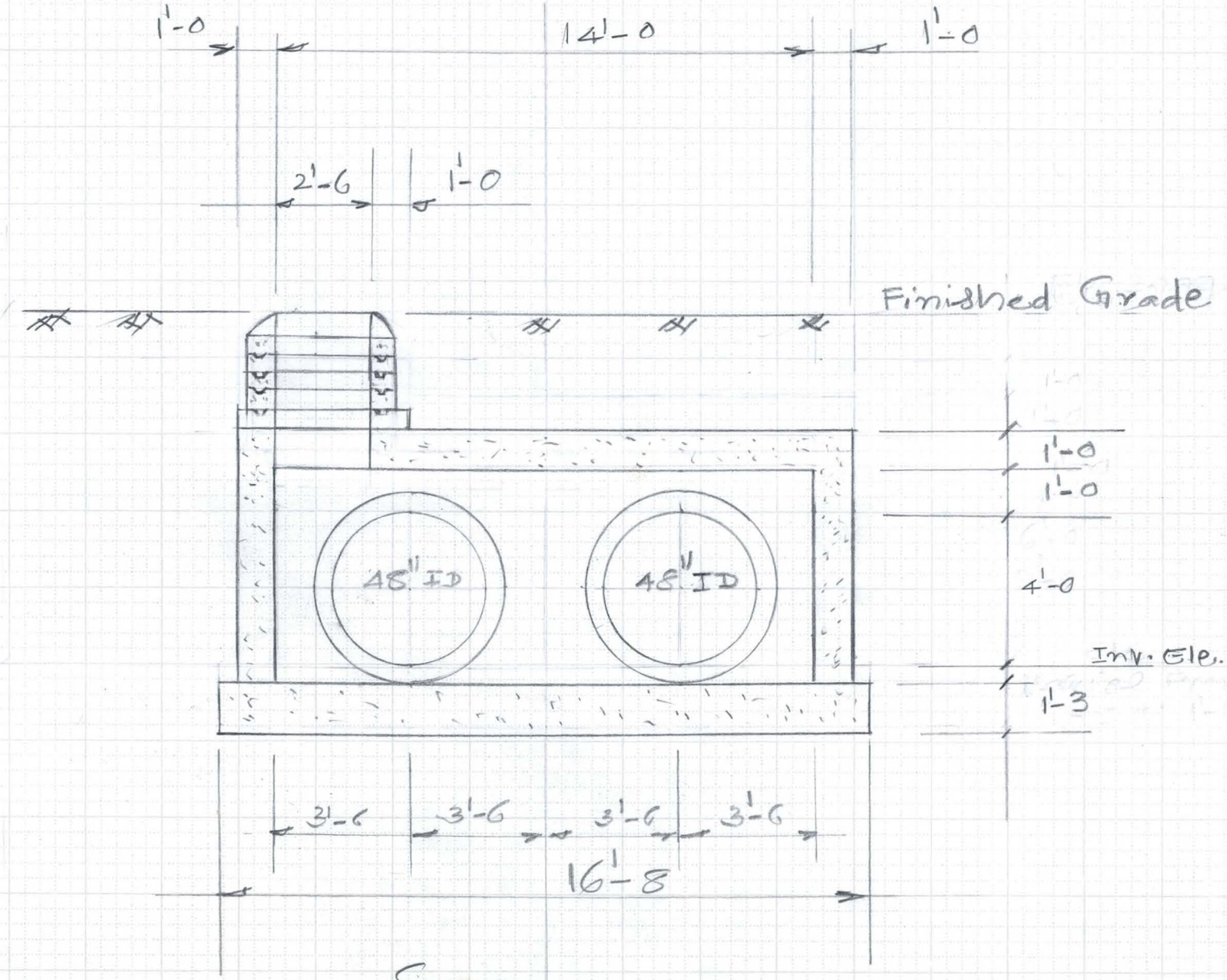

SECTION

Scale: 1/4" = 1'-0

FLOOD CONTROL DISTRICT OF MARICOPA COUNTY

PROJECT Casandra Wash PAGE 37 OF

DETAIL Man Holes COMPUTED KVH DATE 6/95

CHECKED BY DATE

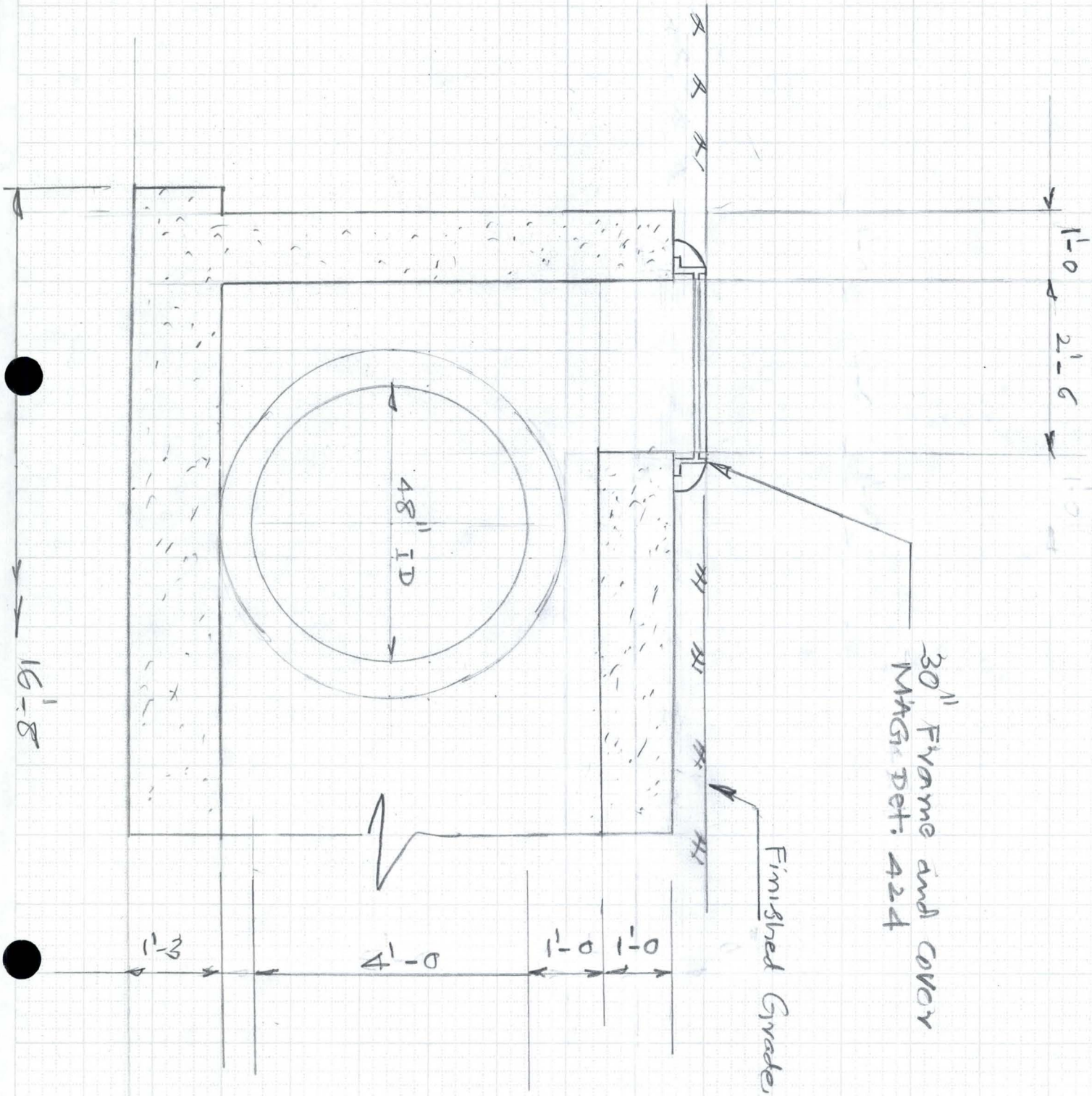

6910-153 4-90

FLOOD CONTROL DISTRICT OF MARICOPA COUNTY

PROJECT Casandro Wash PAGE 38 OF

DETAIL Manholes COMPUTED KNH DATE 6/95

CHECKED BY DATE

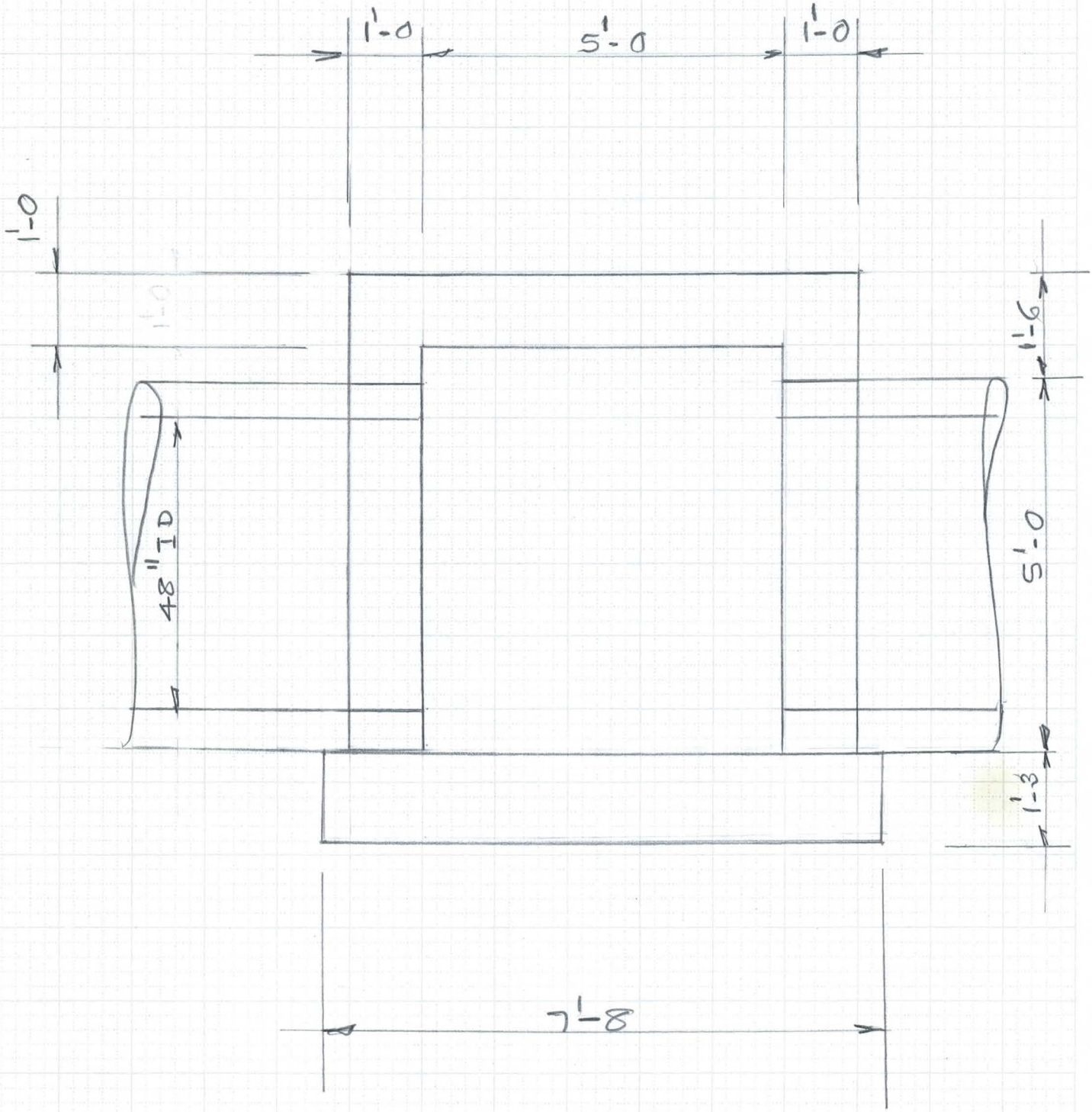

6910-153 4-90

FLOOD CONTROL DISTRICT OF MARICOPA COUNTY

PROJECT Casandro Wash PAGE 39 OF

DETAIL Manhole COMPUTED KNH DATE 6/95

CHECKED BY DATE

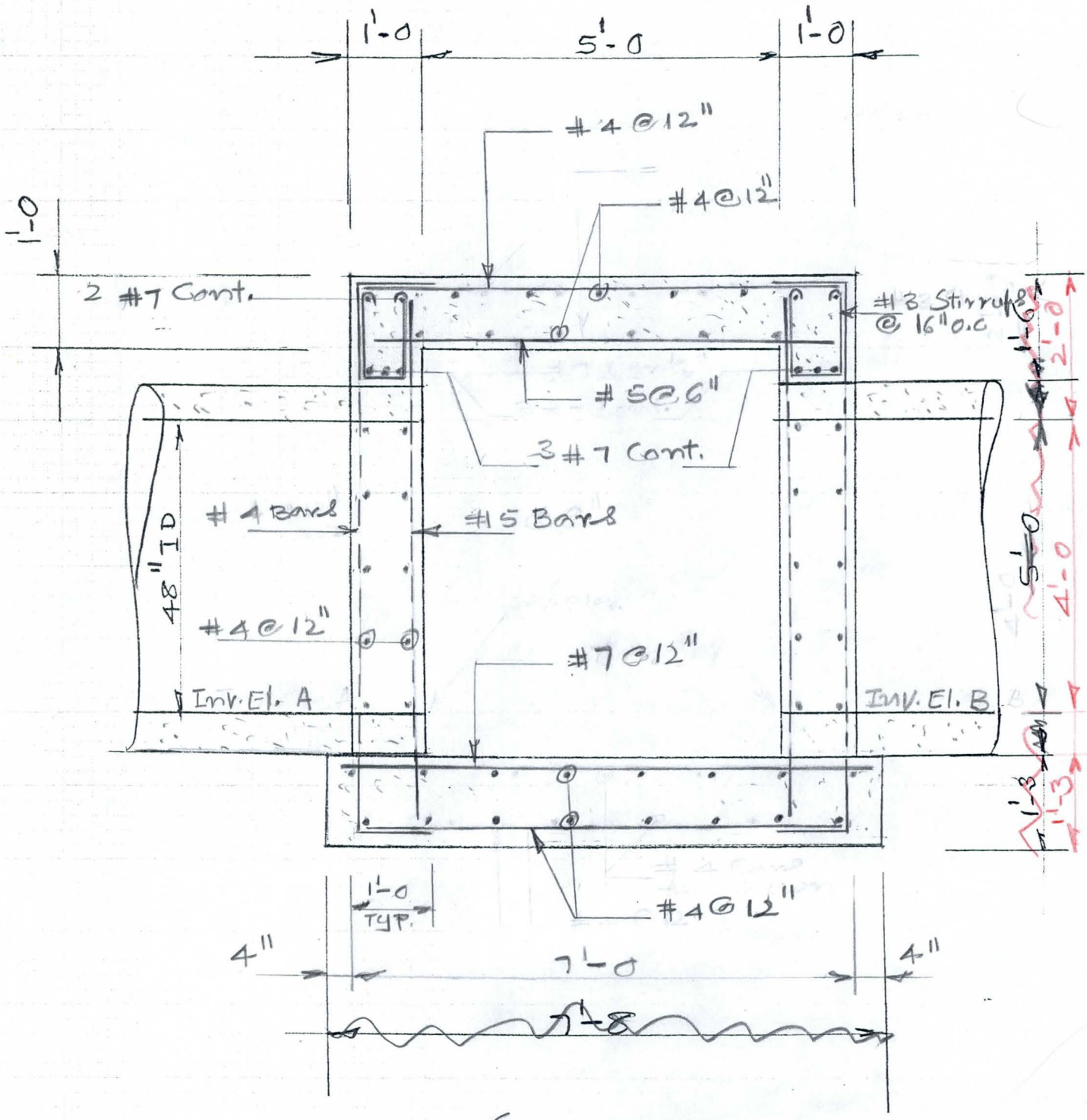

SECTION A-A

Scale: 1/2" = 1'-0

FLOOD CONTROL DISTRICT OF MARICOPA COUNTY

PROJECT Cabeondro Wash PAGE 40 OF

DETAIL Inlet Str. COMPUTED KVH DATE 6/95

CHECKED BY DATE

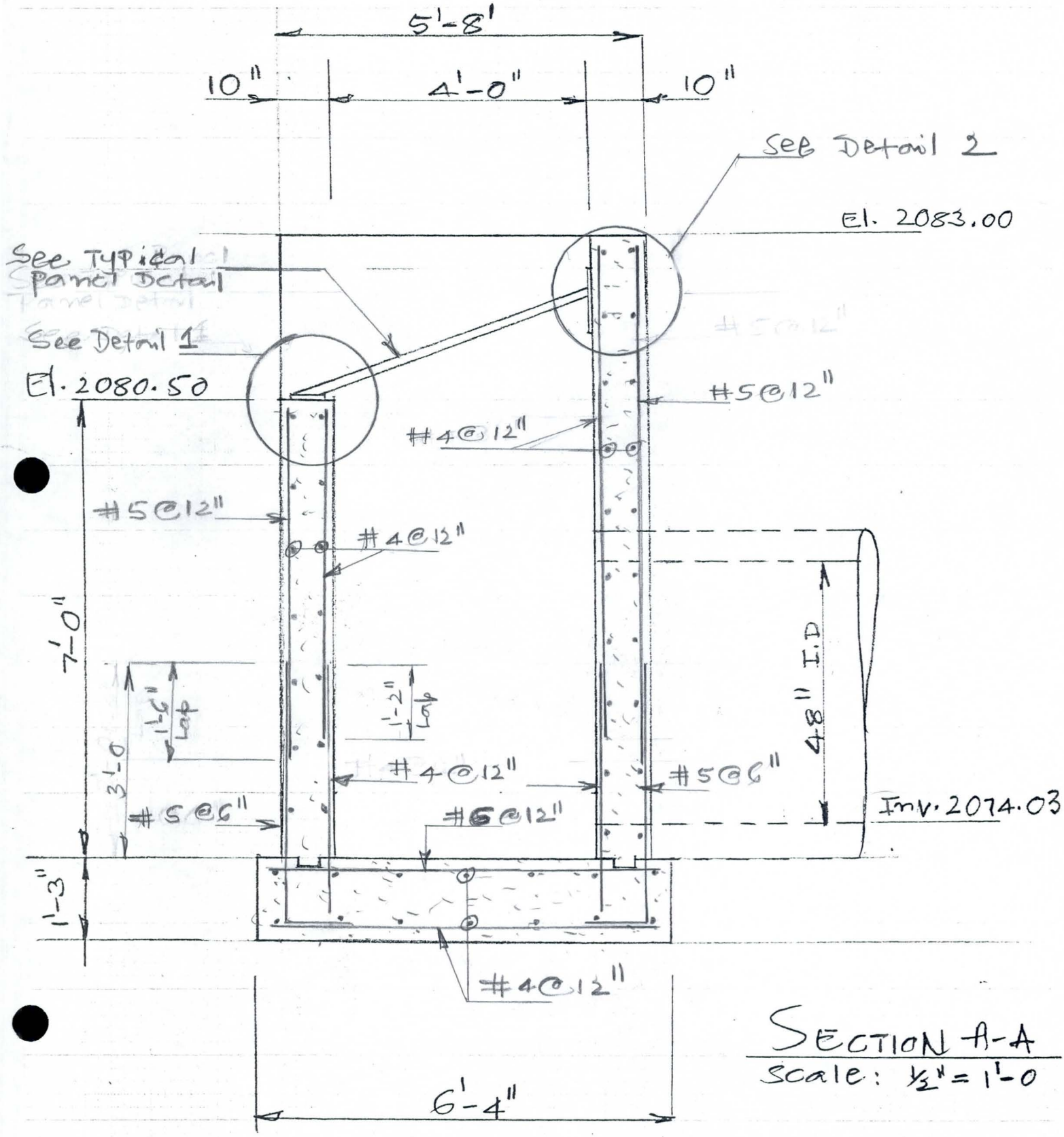

SECTION A-A

Scale: 1/2" = 1'-0

FLOOD CONTROL DISTRICT OF MARICOPA COUNTY

PROJECT Cobandro Wash PAGE 41 OF ____

DETAIL Inlet STR. COMPUTED KVH DATE 6/95

CHECKED BY ____ DATE ____

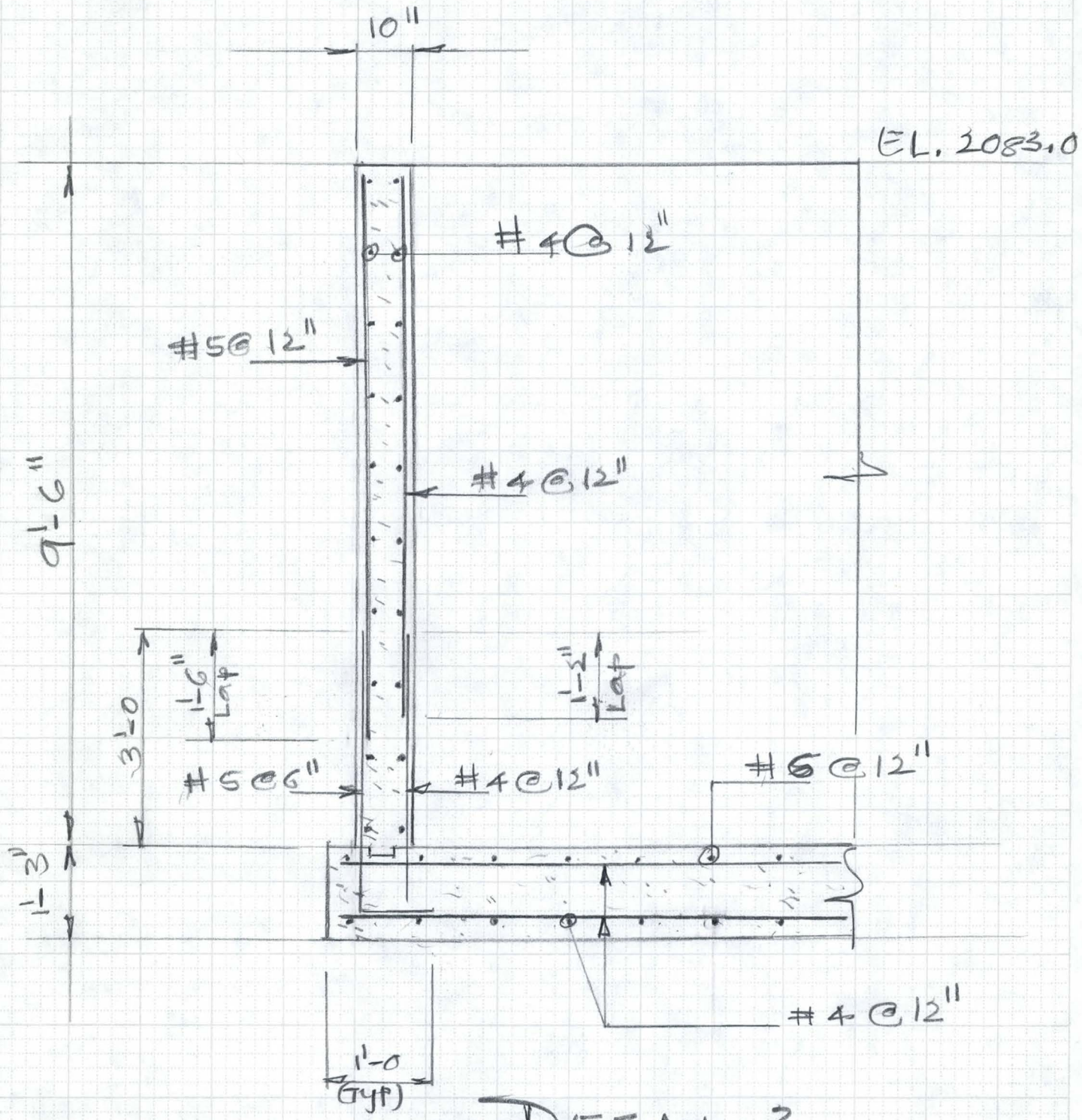

DETAIL 3

Scale 1/2" = 1'-0

6910-153 4-90

FLOOD CONTROL DISTRICT OF MARICOPA COUNTY

PROJECT Cobandro Wash PAGE 42 OF

DETAIL Inlet STR. COMPUTED KVH DATE 6/95

CHECKED BY DATE

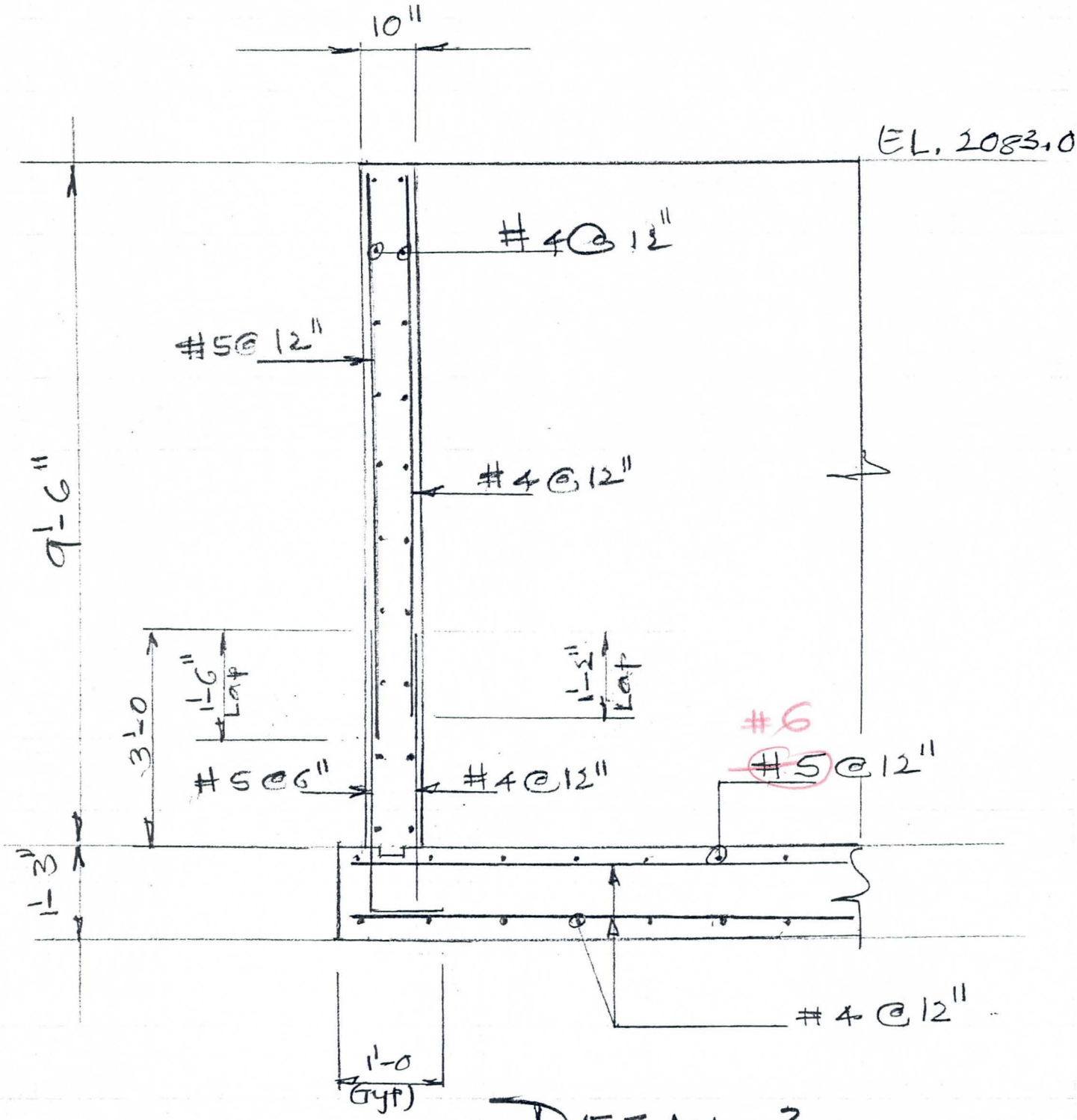

DETAIL 3

Scale 1/2" = 1'-0

FLOOD CONTROL DISTRICT OF MARICOPA COUNTY

PROJECT Calandro Wash PAGE 43 OF

DETAIL Inlet Str. COMPUTED KNH DATE 6/95

CHECKED BY DATE

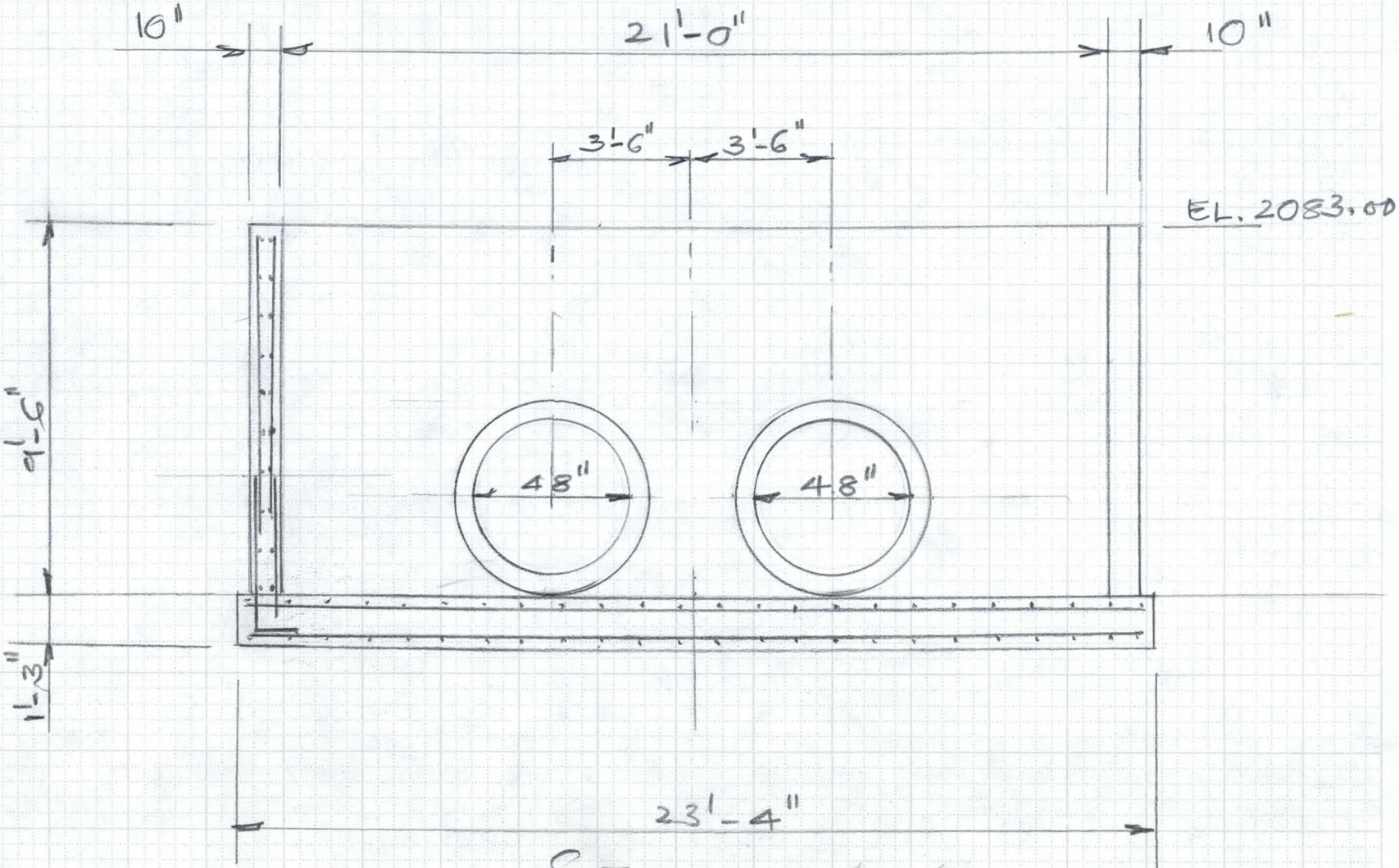

SECTION B-B

Scale: 1/4" = 1'-0

6910-163 4-90

FLOOD CONTROL DISTRICT OF MARICOPA COUNTY

PROJECT Calandro Wash PAGE 44 OF

DETAIL Inlet Str. COMPUTED KVH DATE 6/95

CHECKED BY DATE

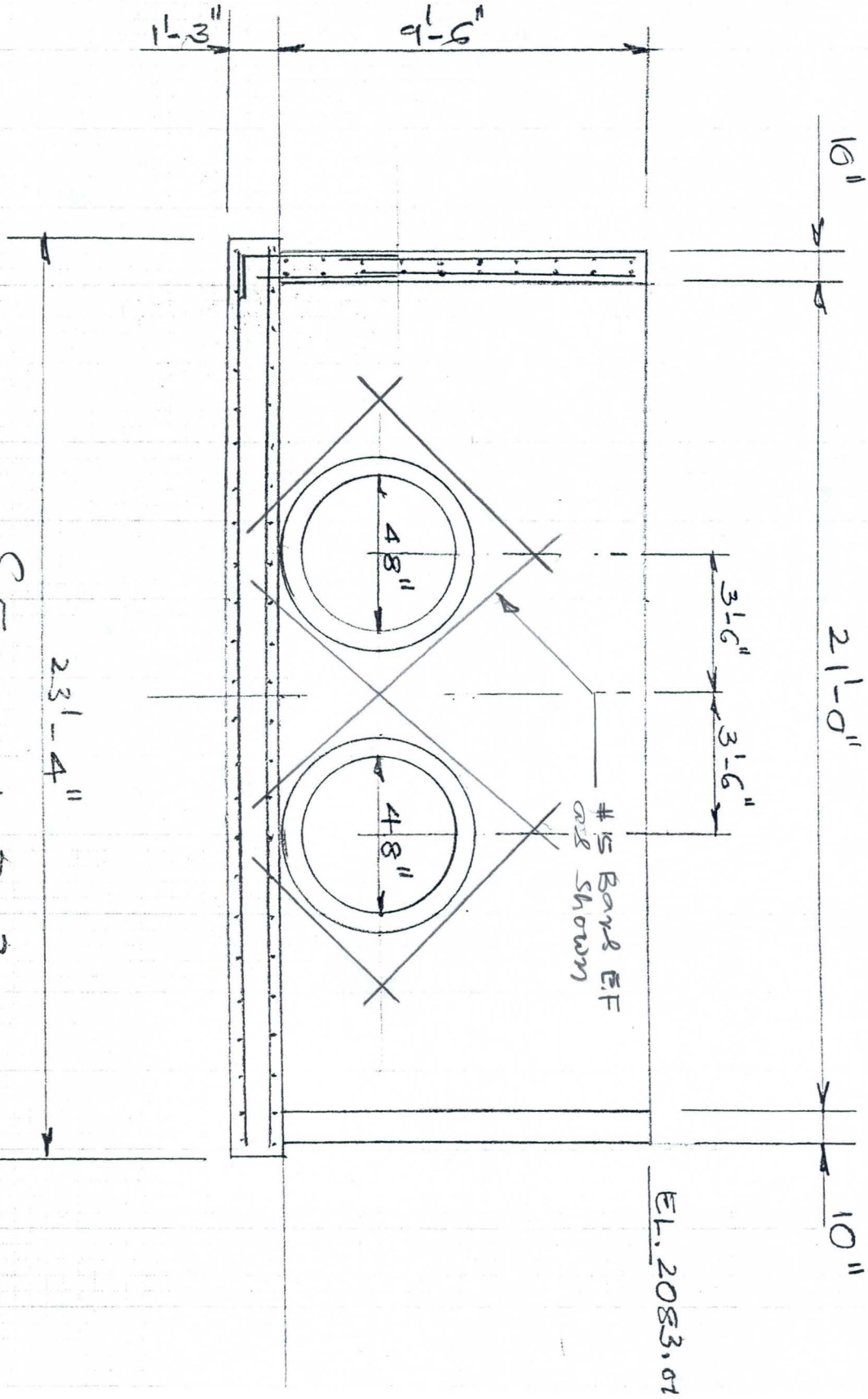

SECTION B-B

Scale: 1/4" = 1'-0

FLOOD CONTROL DISTRICT OF MARICOPA COUNTY

PROJECT Cosandro Wash PAGE 45 OF

DETAIL Rock Bars COMPUTED KVH DATE 6/95

CHECKED BY DATE

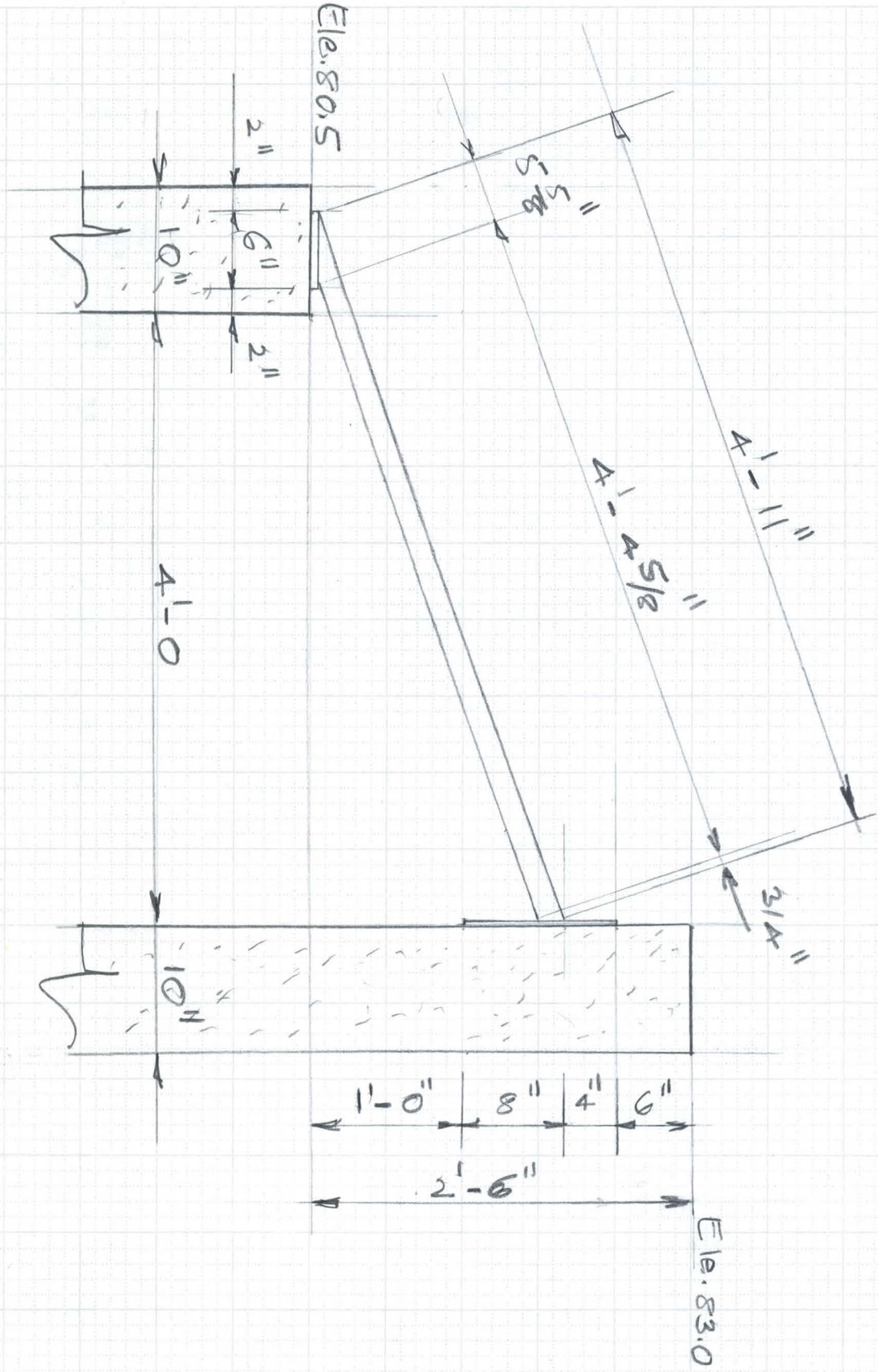

6910-153 4-90

FLOOD CONTROL DISTRICT OF MARICOPA COUNTY

PROJECT Cedandro Wash PAGE 46 OF ____

DETAIL Rock Bowl COMPUTED KVH DATE 6/95

CHECKED BY ____ DATE ____

$3/8'' = 0.375''$

$1'-8 = 20.00'' - 0.38 = 19.62''$

$4', \quad 48'' + 2 + 6 = 56'' - 0.375$
$= 55.63''$

$\tan\theta = \frac{19.62}{55.63}$

$\theta = 19.43°$

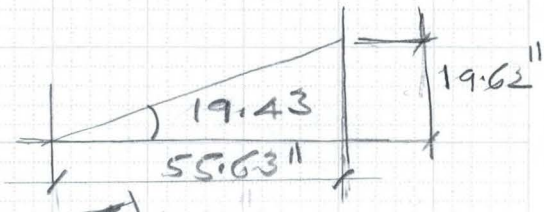

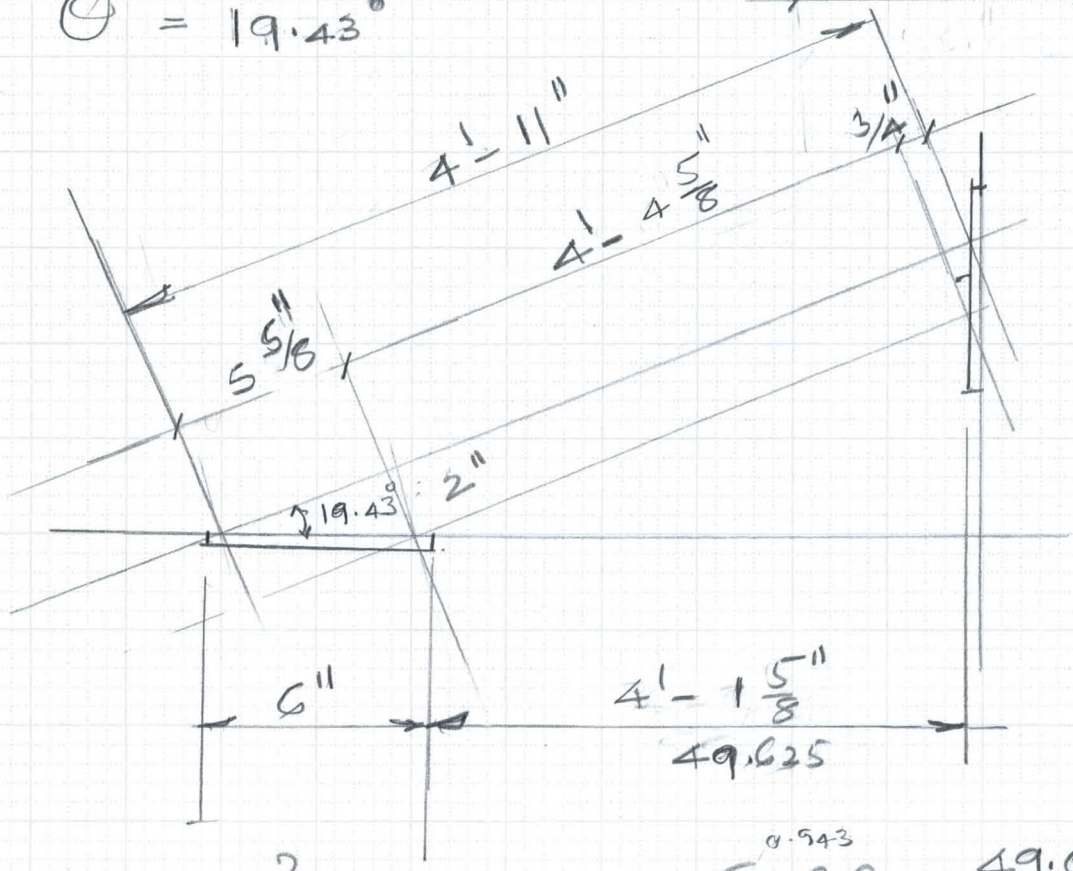

$\tan 19.43 = \frac{2}{Adj}$

$Adj = 5.57 \simeq 5\frac{5}{8}''$

$\tan 19.43 = \frac{opp}{2}$

$opp = 0.705'' \simeq 3/4''$

$\cos\theta = \frac{49.625}{Hyp}$ (0.943)

$Hyp = 52.62''$
$= 4'-4\frac{5}{8}''$

6910-153 4-90

FLOOD CONTROL DISTRICT OF MARICOPA COUNTY

PROJECT Cassamero wash PAGE 1 OF ____

DETAIL Conc. qtys. COMPUTED KVH DATE 7/95

CHECKED BY ____ DATE ____

Concrete qtys

Inlet Structure

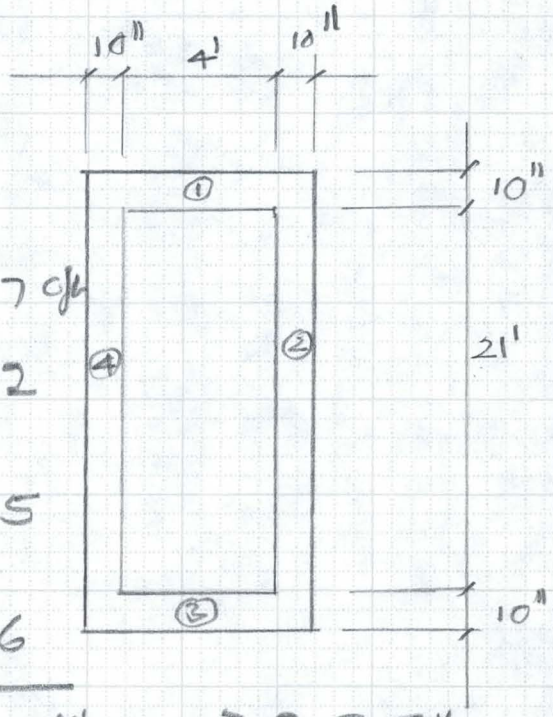

1) walls 1 & 3
Ht = 9.5'
$[(0.833 \times 5.67)\,9.5]\,2 = 89.7$ cft

2) wall-2
$(0.833 \times 21.0)\,9.5 = 166.2$

3) wall-4
$(0.833 \times 21 \times 7) = 122.5$

4) Base slab:
$(6.33 \times 23.33)\,1.25 = 184.6$

563 cft = 20.9 cy — 20.9 cy

Retaining walls:

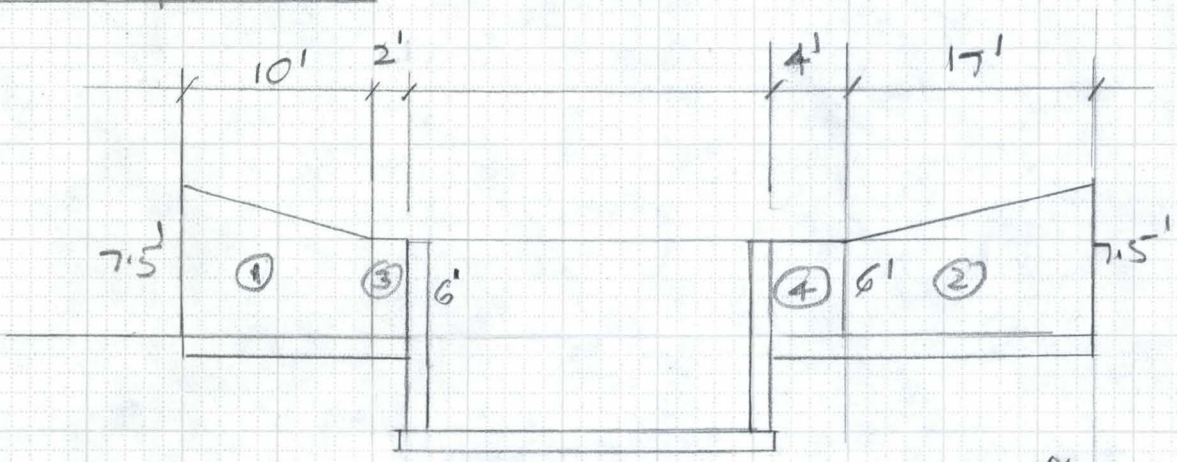

1) wall 1: $0.75 \times \left(\frac{6+7.5}{2}\right) 10 = 50.6$ cft
footing: $(5.33 \times 1.0)\,10 = 53.3$

2) wall 2: $0.75 \times \left(\frac{6+7.5}{2}\right) 17 = 86.1$
ftg: $(5.33 \times 1.0)\,17 = 90.6$

280.6 cft = 10.4 cy

6910-153 4-90

FLOOD CONTROL DISTRICT OF MARICOPA COUNTY

PROJECT Cabandro Wash PAGE 2 OF ____

DETAIL Concrete Qtys COMPUTED KVH DATE 7/95

CHECKED BY ____ DATE ____

Concrete Qtys (Contd)

3) Retaining walls ③ & ④ :

(0.75 x 6.0) 6 = 27 cfr

ftg: (5.33 x 1.0) 6 = 32

59 cfr = 2.2 CY

4) Conc. Apron Slab :

a) Triang: (1/2 x 17 x 3) 6/12 = 12.8 cfr

b) Trapz: [1/2 (17 + 23) 21.5] 6/12 = 215.0

c) Trapz: [1/2 (11 + 4) 16] 6/12 = 60.0

287.8 cfr = 10.7

Total Inlet Structure 44.2 CY

6910-153 4-90

FLOOD CONTROL DISTRICT OF MARICOPA COUNTY

PROJECT Concrete Qty's. PAGE 3 OF ____

DETAIL Manholes #1, 2, 3, 4 COMPUTED KVH DATE 7/95

CHECKED BY ____ DATE ____

Manholes #1, 2, 3, 4

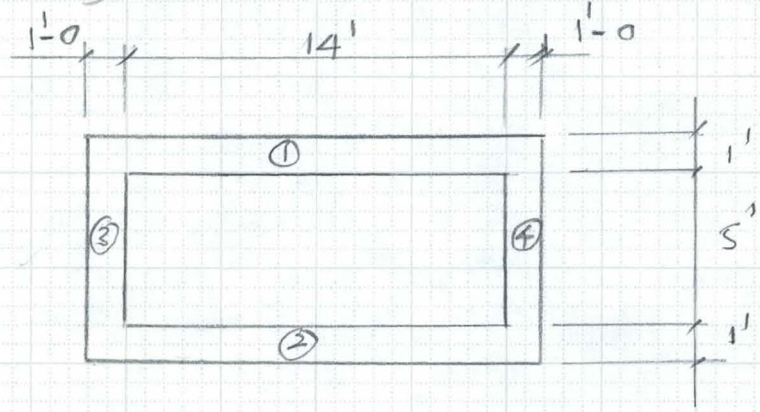

1) Walls ① & ②:
$\left[(16 \times 1.0 \times 6.5) - (3.14 \times \frac{5^2}{4})2\right]2$ = 129.5 cft

2) Walls ③ & ④
$(5.0 \times 1.0 \times 6.5)2$ = 65

3) Base Slab:
$(16.67 \times 1.25 \times 7.67)$ = 159.8

4) Top Slab:
$(14 \times 5.0 \times 1.0) - (3.14 \times \frac{2.5^2}{4})1 \times 2$ = 60.2

414.5 cft

= (15.4 cy) 4 — 61.6 cy

4 Manholes

Manhole #5

1) Walls ① & ②: $\left[(17 \times 1.0 \times 6.5) - (3.14 \times \frac{5^2}{4})2\right]2$ = 142.5 cft

2) Walls ③ & ④ $(5 \times 1.0 \times 6.5)2$ = 65.0

3) Base Slab: $(17.67 \times 7.67 \times 1.25)$ = 169.4

4) Top Slab: $(15 \times 5 \times 1.0) - (3.14 \times \frac{2.5^2}{4})1 \times 2$ = 65.2

442.1 cft — 16.4

Total for Man Holes — 78.0 cy

6910-153 4-90

FLOOD CONTROL DISTRICT OF MARICOPA COUNTY

PROJECT Cosandro Wash PAGE 4 OF

DETAIL Conc. Qty's COMPUTED KVH DATE 7/95

Outlet STR. CHECKED BY DATE

Outlet Structure.

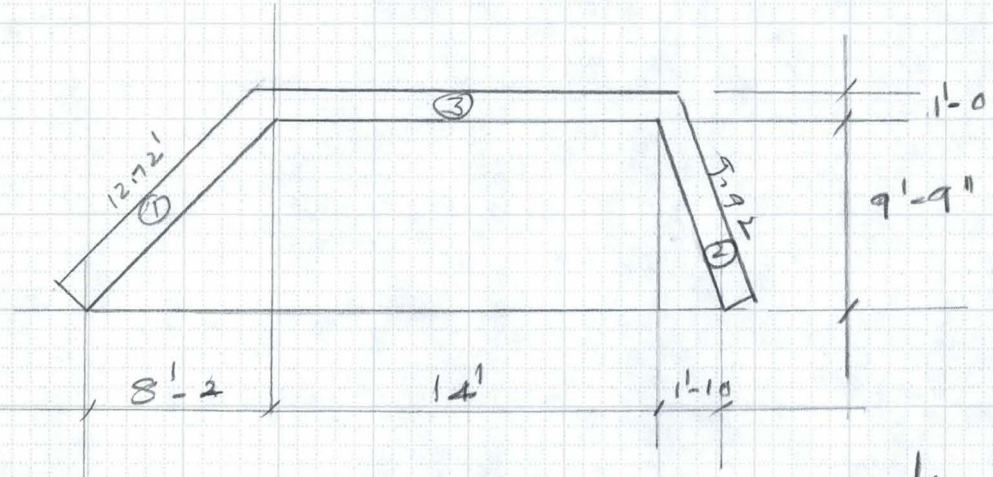

1) wing wall ①: $\left[0.75 \times \left(\frac{6.75+2.75}{2}\right)\right] 9.92 = 35.3$ cfr

2) wing wall ②: $(0.75 \times 4.75 \times 12.72) = 45.3$

3) Head wall: $(1.0 \times 7.5 \times 15) - \left(\frac{3.14 \times 5^2}{4}\right) 1 \times 2 = 73.3$

4) Apron Slab: $\left(\frac{24+14}{2}\right) 9.75 \times 0.75 = 139.0$

5) Toe Down: $(5.25 \times 0.75)\, 24 = 94.5$

387.4 cfr 14.4 cy

6910-153 4-90

FLOOD CONTROL DISTRICT OF MARICOPA COUNTY

PROJECT Concrete Qtys PAGE 5 OF

DETAIL Summary COMPUTED KVH DATE 7/95

CHECKED BY DATE

Concrete Qtys

1) Inlet Str.: = 20.9 CY
2) Retaining Walls: (10.4 + 2.2) = 12.6
3) Apron Slab: = 10.7

} 44.2 CY

5) Manholes: 78.0

6) Outlet Structure = 14.4

6910-153 4-90

FLOOD CONTROL DISTRICT OF MARICOPA COUNTY

PROJECT Cabeantro Wash PAGE 6 OF
DETAIL Qty's COMPUTED KVH DATE 7/95
Reinf. Steel CHECKED BY DATE

Retaining Wall:

Conc:
(0.75 x 7.5) 10 = 56.3 cft
(5.33 x 1.0) 10 = 53.3
109.6 / 27
= 4.06 cy

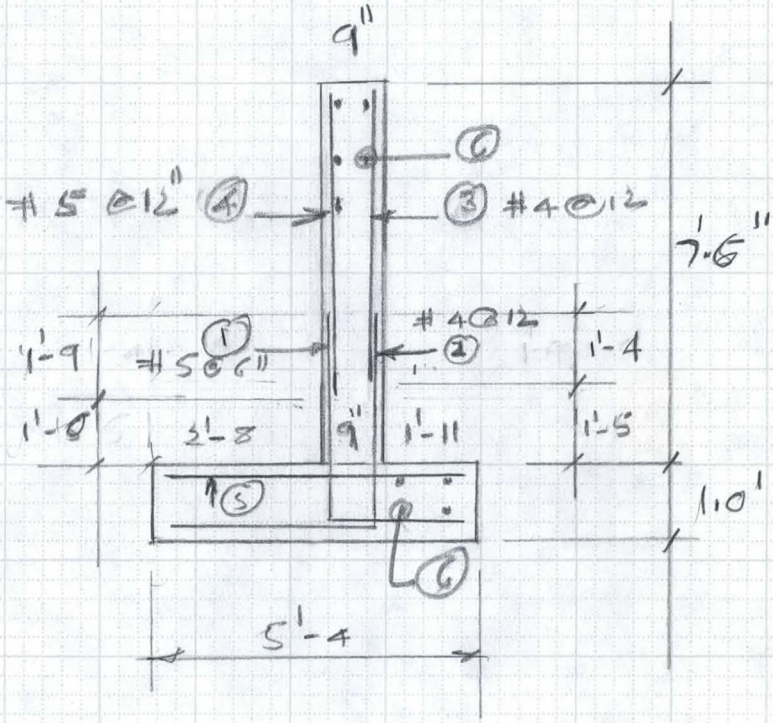

Qty's for 10' length

1) #5 @ 6" 3'-10 2'-4, L = 5'-10"	
21 Bars, (21 x 5.83) 1.043 lbs/ft	127.7 lbs
2) #4 @ 12" 3'-10 3-1, L = 6-7"	
11 Bars, (11 x 6.58) 0.668 lbs/ft	48.3
3) #4 @ 12 L = 5'-11, (11 x 5.92) 0.668	43.5
4) #5 @ 12, L = 6-9, (11 x 6.33) 1.043	72.6
5) #6 @ 12, L = 5'-1, (11 x 5.0) 1.502	82.6
6) #4 @ 12 L = 10.0 No. of Bars = (8x2)+(6x2) = 28 (28 x 10) 0.668	187.0
	561.7

Reinf Steel / cyd 561.7 / 4.06 = 138 lbs/cy

6910-153 4-90

CASANDRO
OUTLET

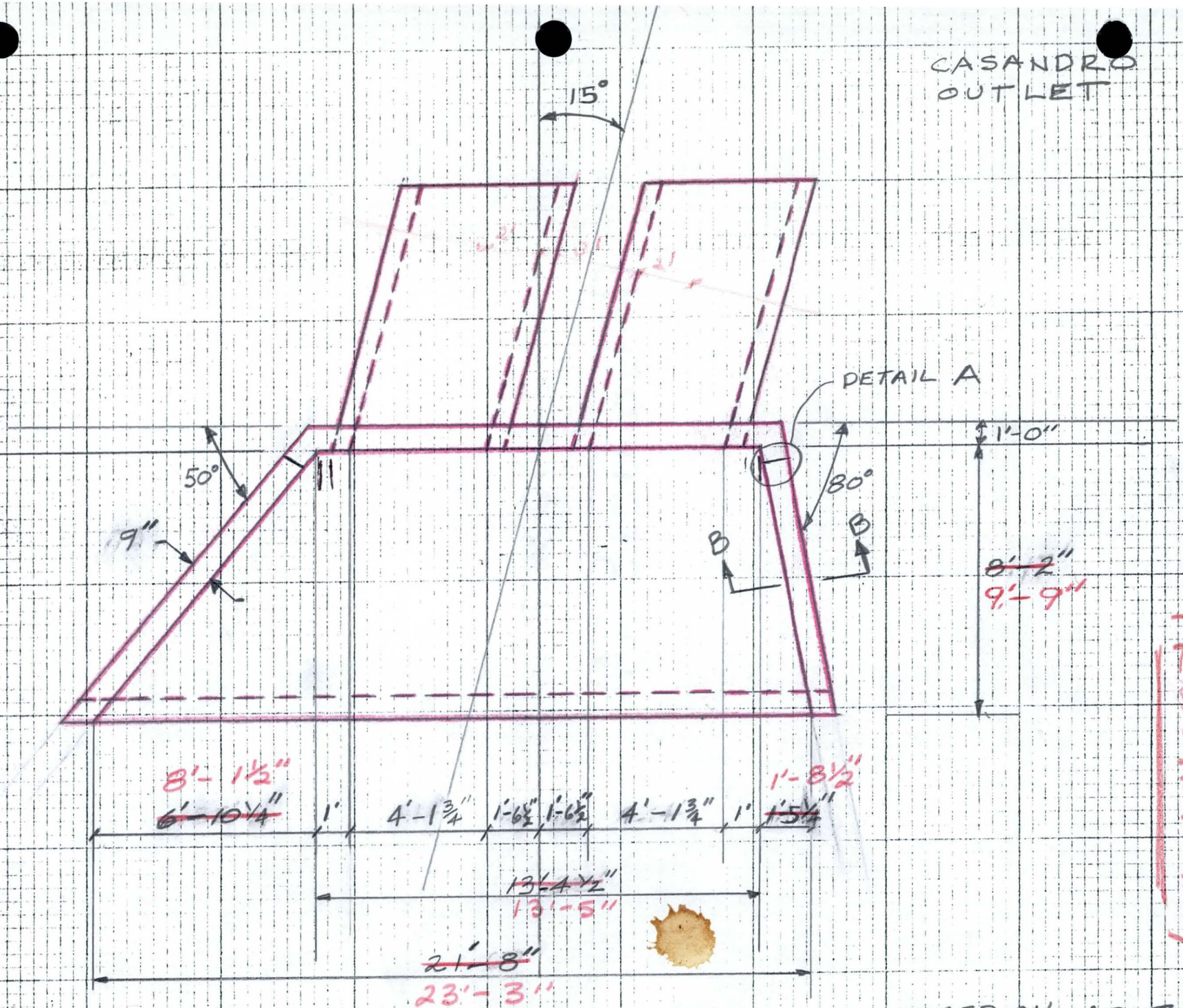

PLAN VIEW

BASED ON ADOT
STD B-11.13

PRELIMINARY

CASANDRO
OUTLET

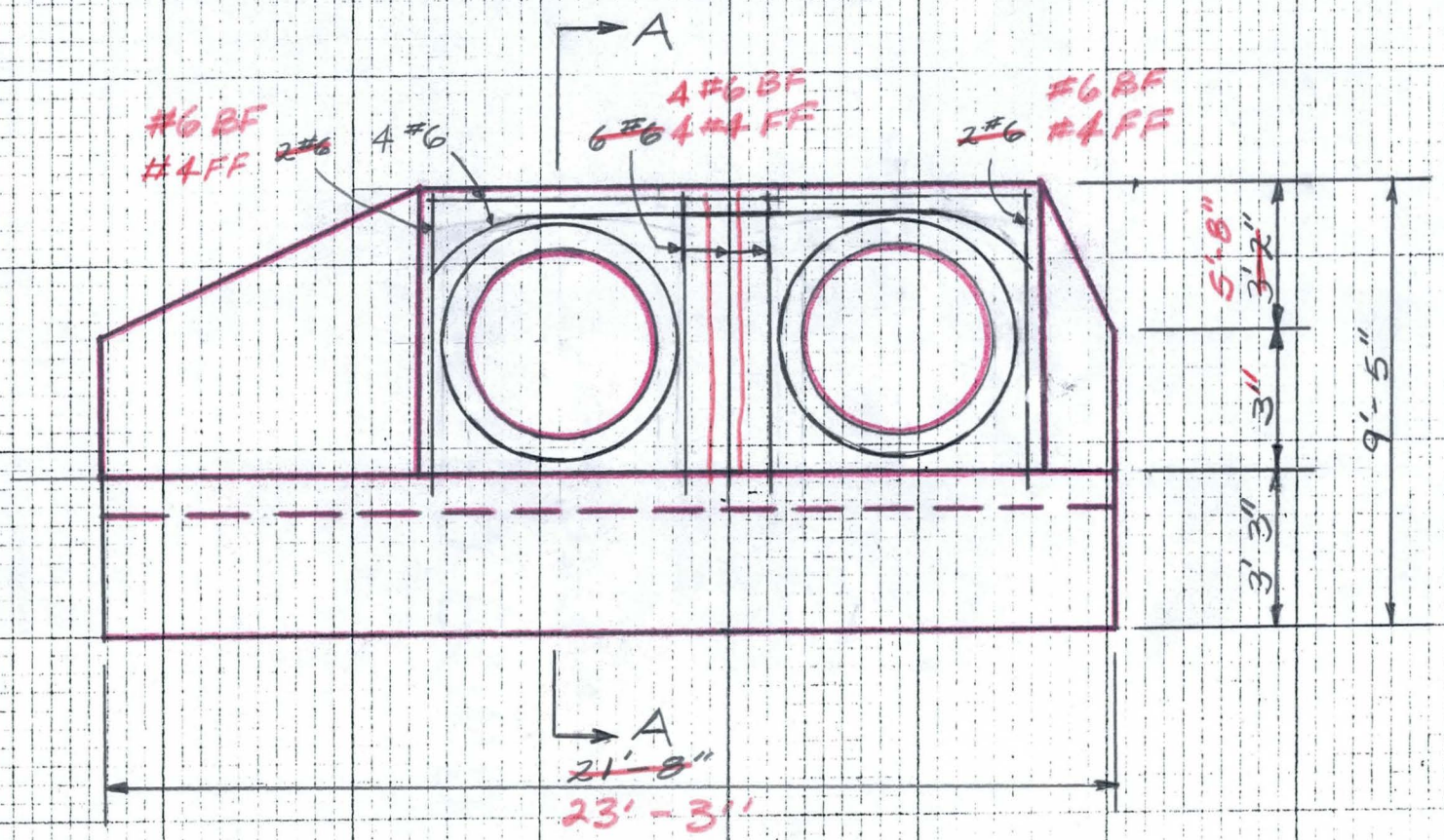

ELEVATION VIEW

BASED ON ADOT
STD B-11.12 &
STD B-16.10

CASANDRO
OUTLET

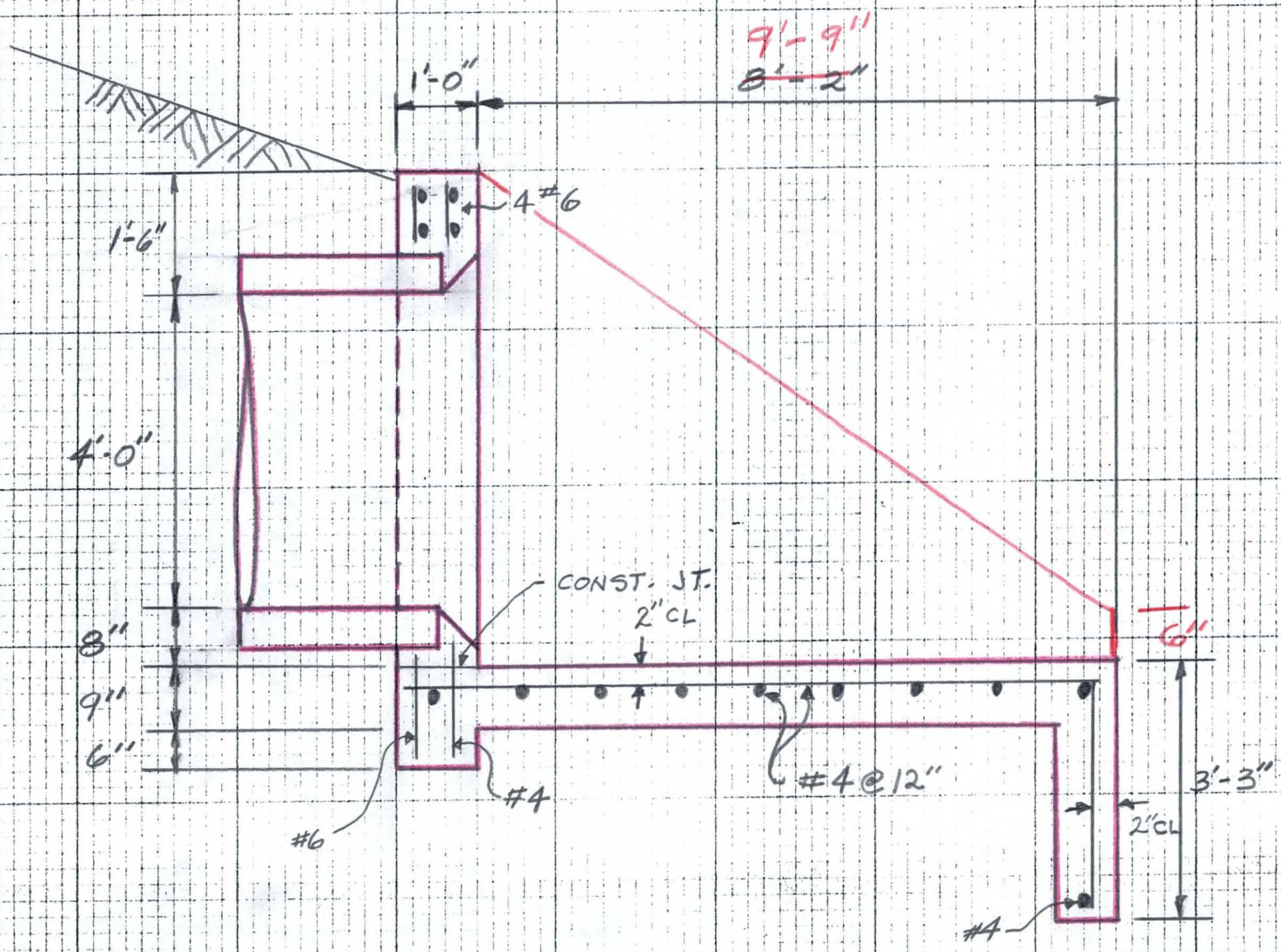

SECTION A-A

BASED ON ADOT
STD B-11.12

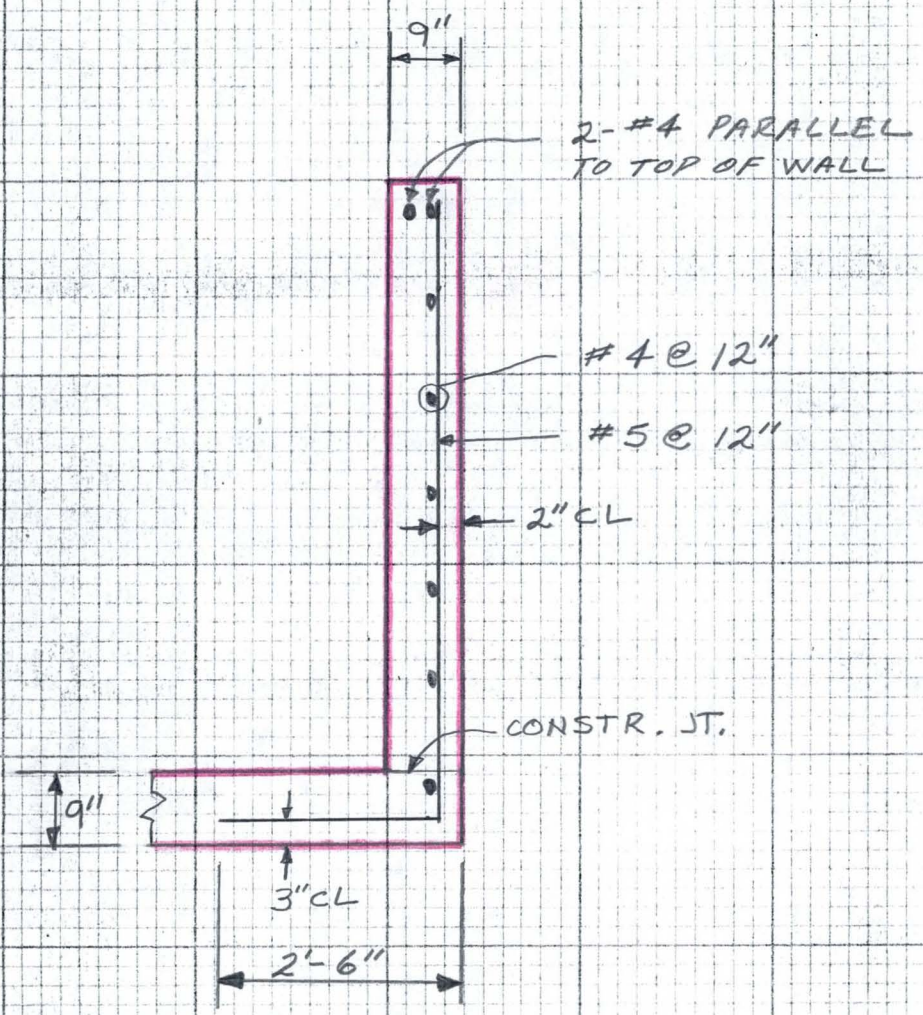

SECTION B-B

BASED ON ADOT
STD B-11.12

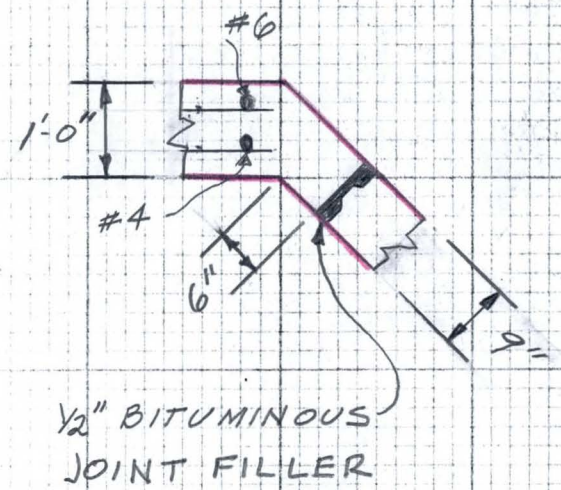

DETAIL A

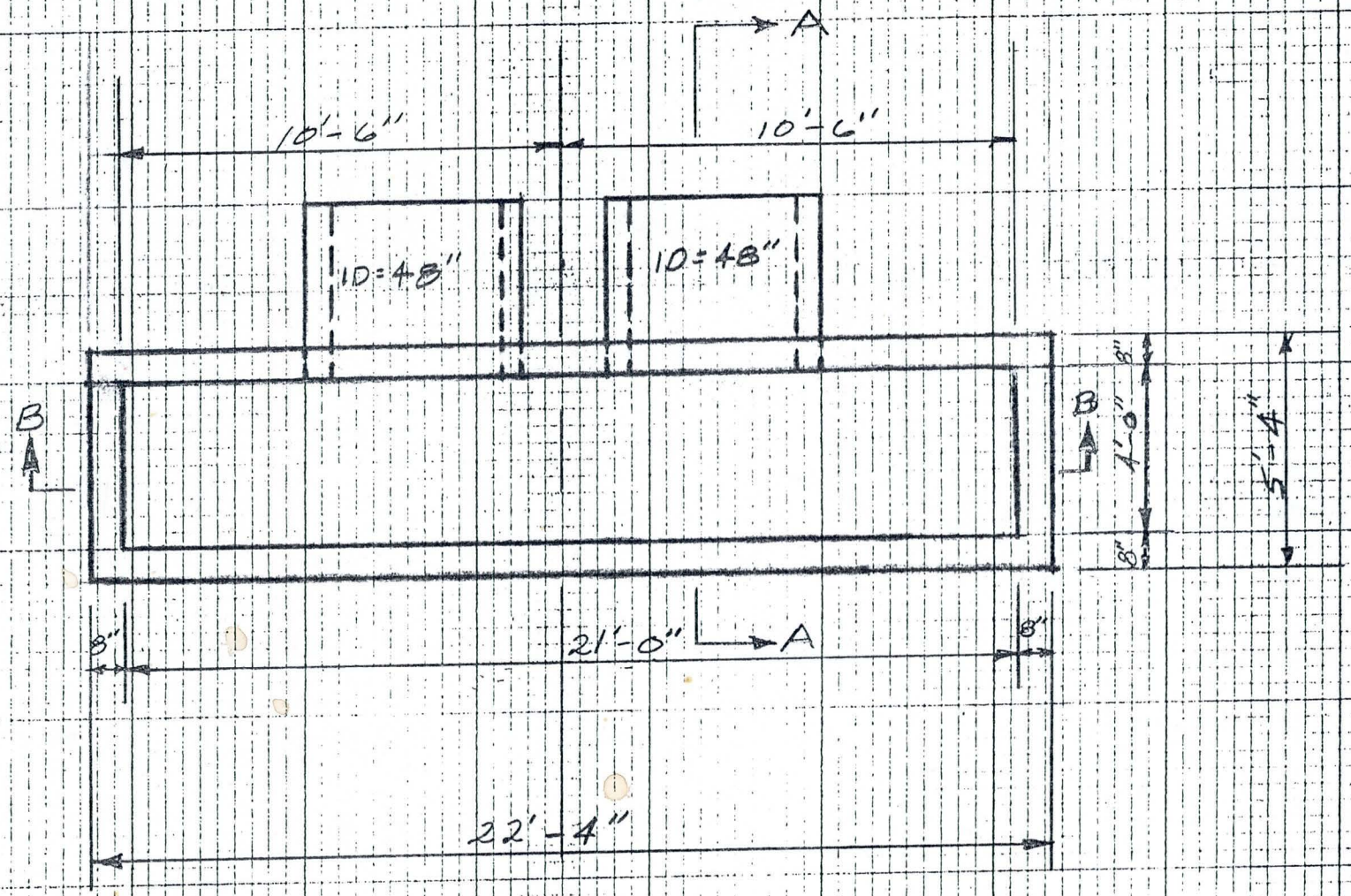

PLAN VIEW

BASED ON RAJU
CASANDRO
INLET

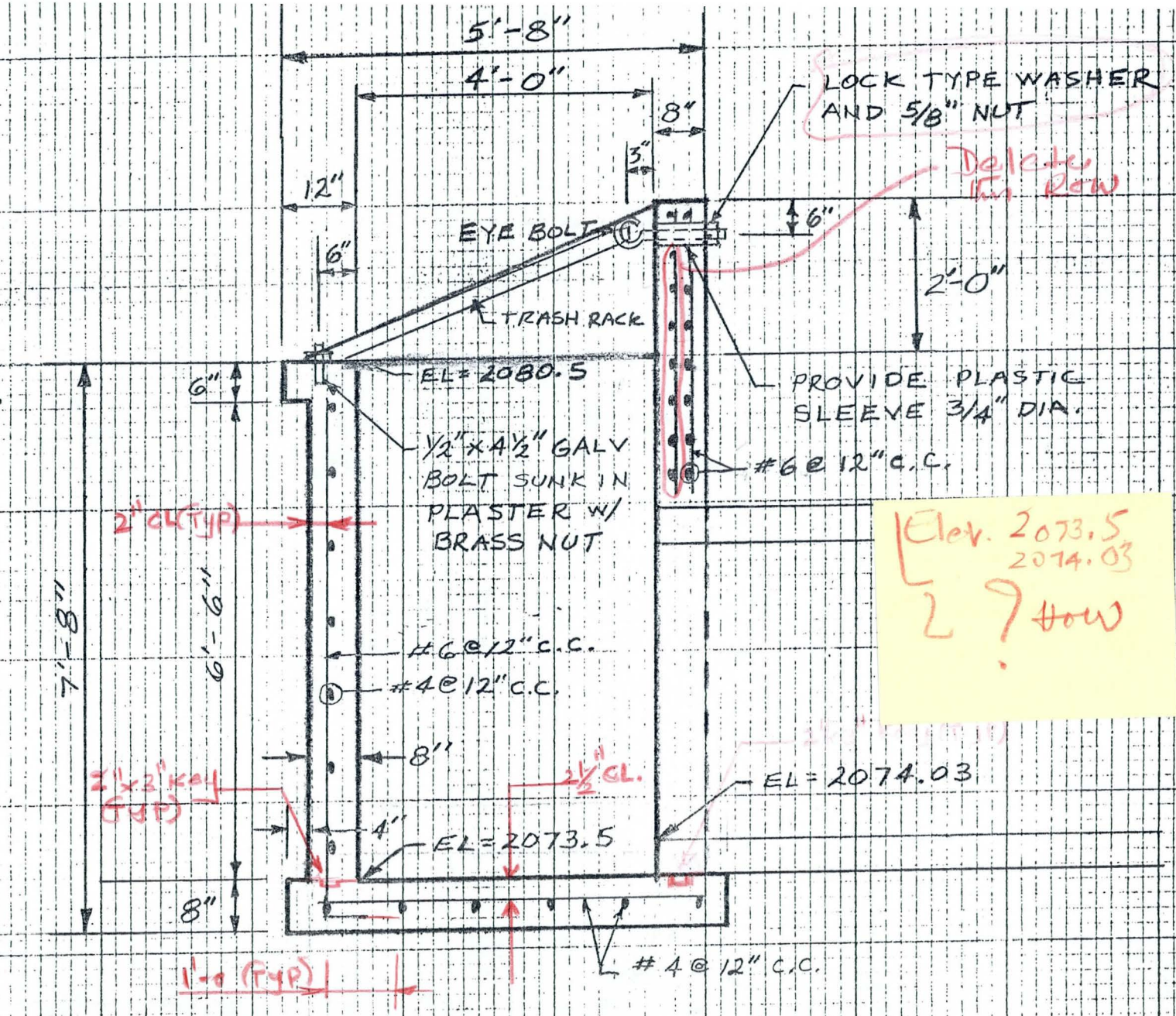

Elev. 2073.5
2074.03
? How

SECTION A-A

BASED ON RAJU CASANDRO INLET

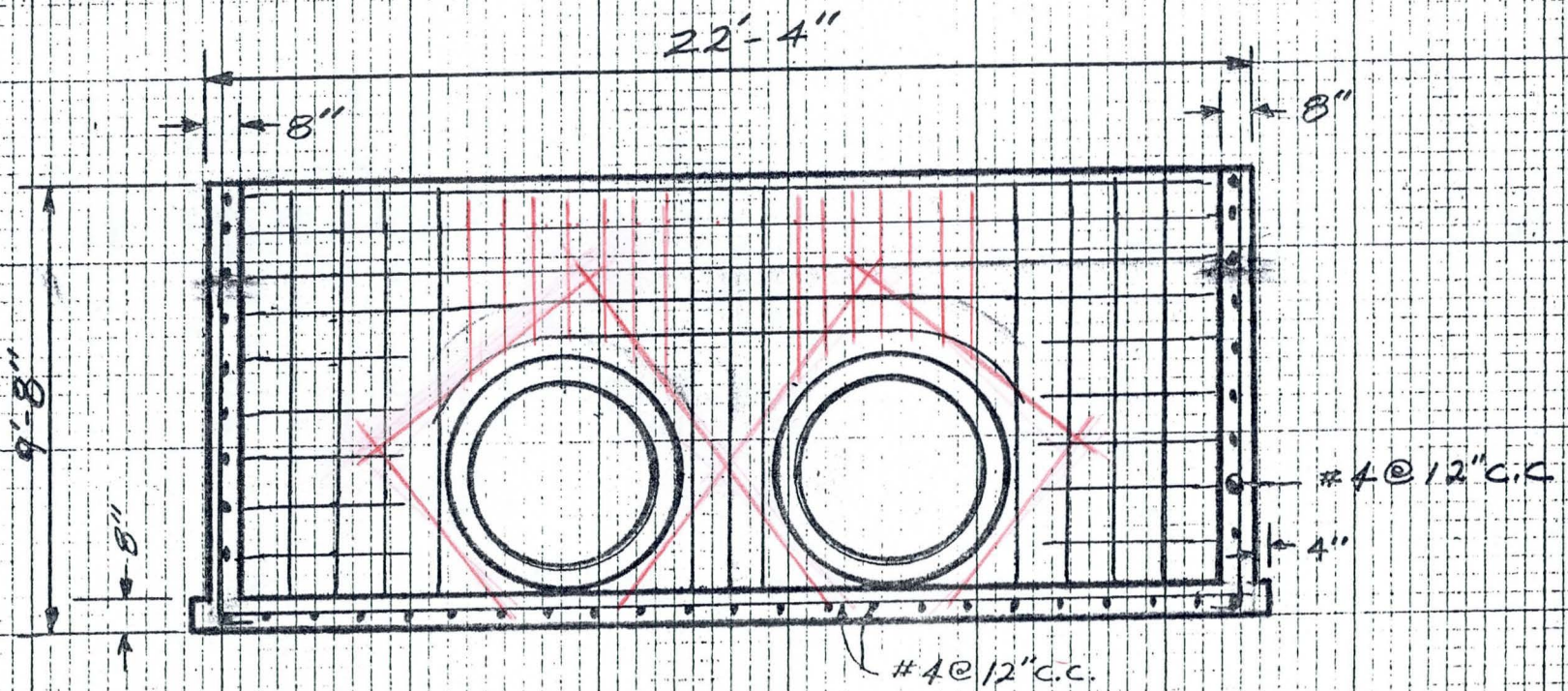

NOTE: ALL REBAR SHALL BE #6 @ 12" C.C UNLESS OTHERWISE STATED

SECTION B-B

BASED ON RAJU CASANDRO INLET

TRASH RACK
DETAIL TYPICAL

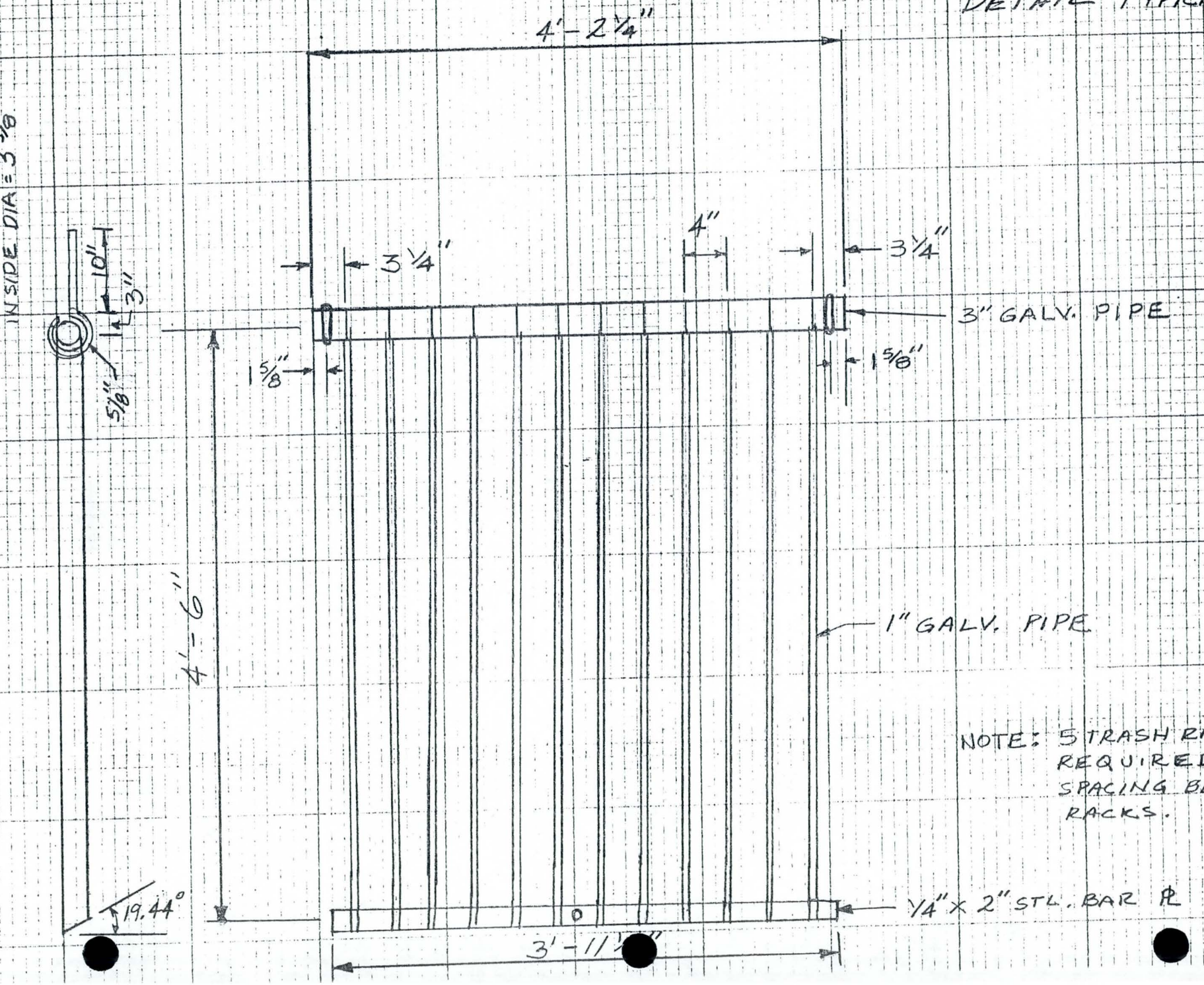

NOTE: 5 TRASH RACKS REQUIRED. 1/8" SPACING BETWEEN RACKS.

FLOOD CONTROL DISTRICT OF MARICOPA COUNTY

PROJECT Galandro Inlet PAGE 6 OF

DETAIL Trash Rack COMPUTED KNH DATE 4/95

CHECKED BY DATE

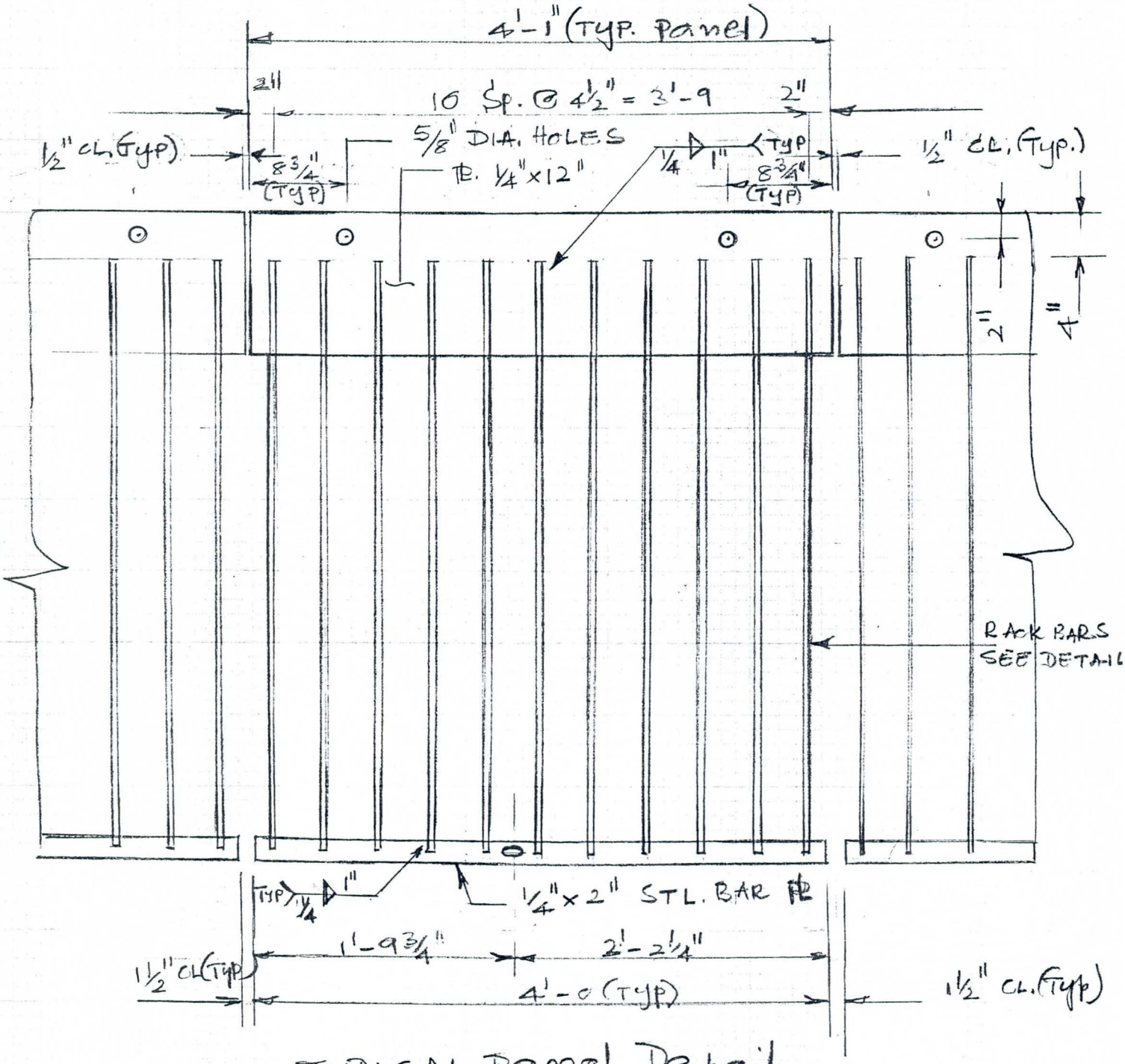

TYPICAL Panal Detail

Scale: 1" = 1'-0

FLOOD CONTROL DISTRICT OF MARICOPA COUNTY

PROJECT Cascandra Inlet PAGE 7 OF

DETAIL Inlet Structure COMPUTED KVH DATE 4/95

CHECKED BY DATE

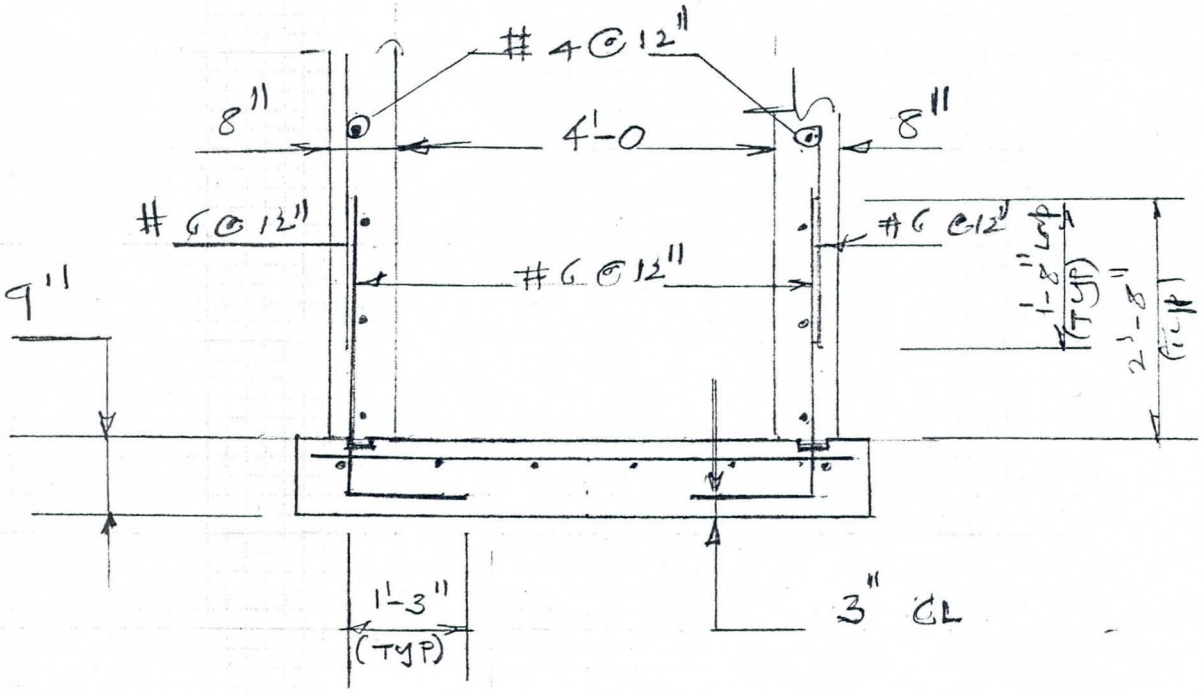

FLOOD CONTROL DISTRICT OF MARICOPA COUNTY

PROJECT _____ PAGE _____ OF _____

DETAIL _____ COMPUTED _____ DATE _____

CHECKED BY _____ DATE _____

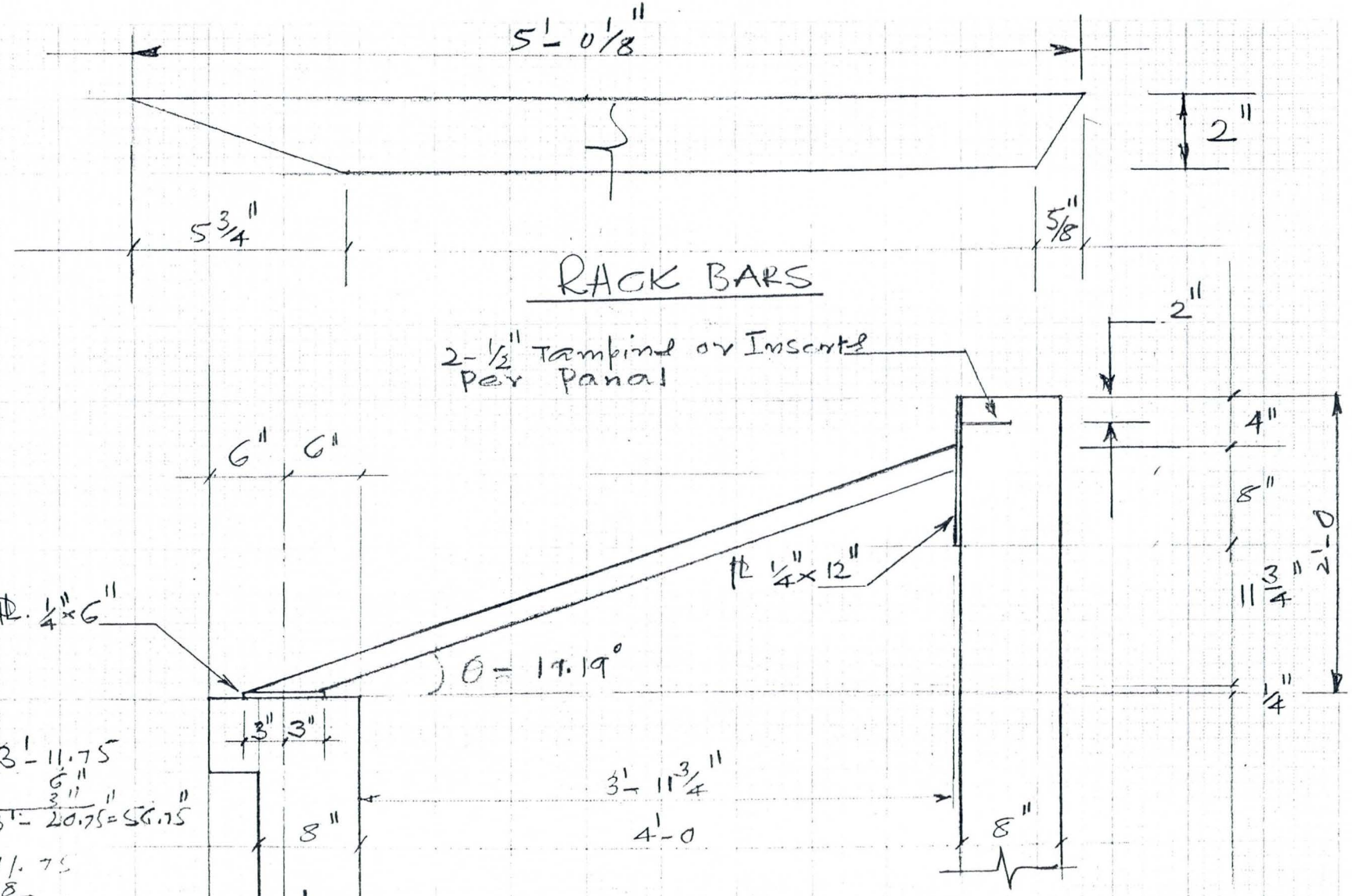

3'- 11.75
6"
3"
3'- 20.75 = 56.75"

11.75
8
19.75 =

Tan θ = 19.75 / 56.75, θ = 19.19°

Sin 19.19 = 2 / Hyp, Hyp = 6.1" say 6"

Tan 19.19 = 2 / Adj, Adj = 5.75" say 5 3/4"

(90 - 19.19) = 70.81, Tan 70.81 = 2 / Adj, Adj = 0.69" say 5/8"

3 - 11.75
3.00
14.75
36
50.75"

Cos 19.19 = 50.75 / Hyp

Hyp = 53.74" = 4.48', 4'- 5 3/4"

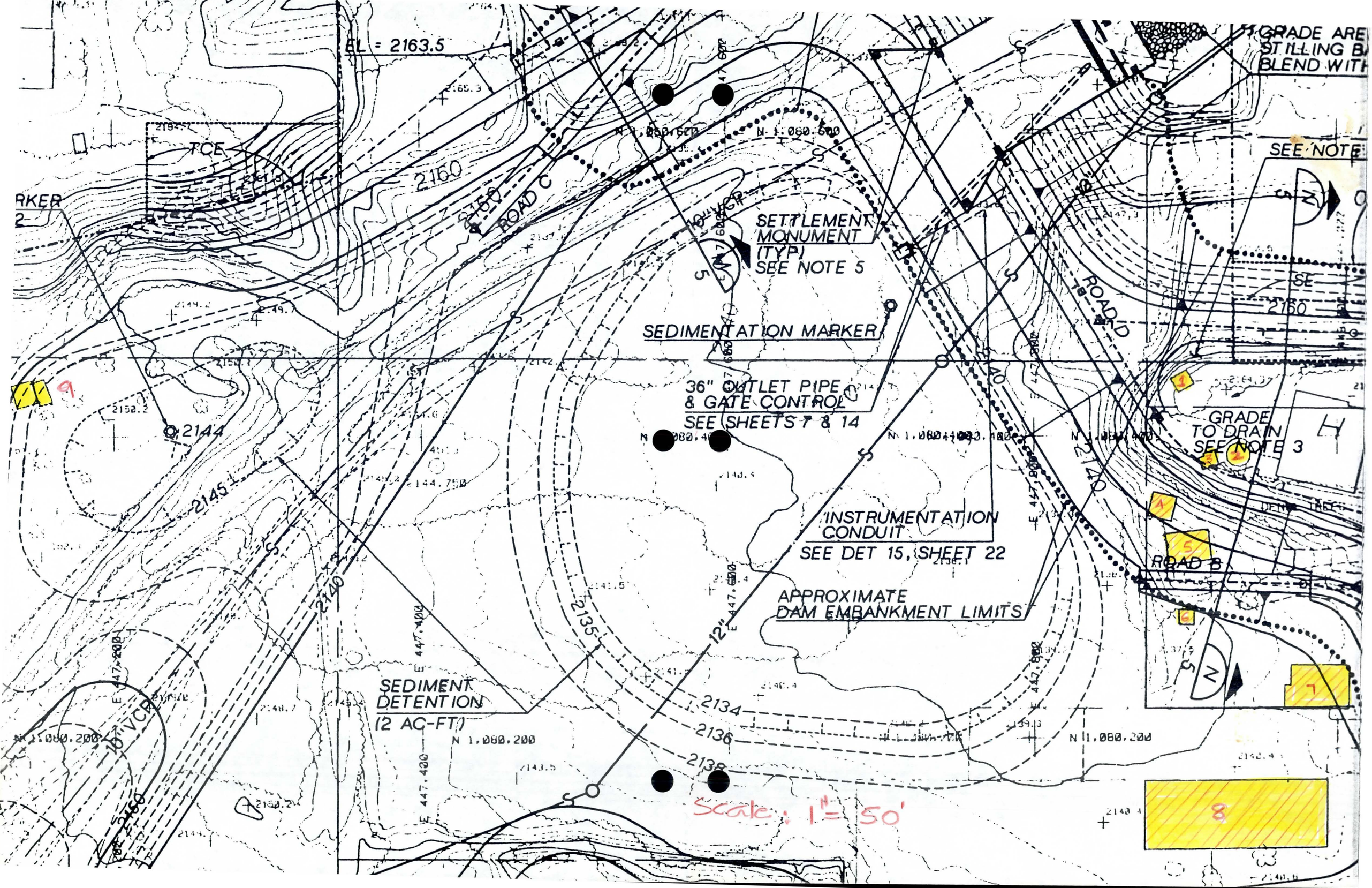
EL = 2163.5
TCE
2150
ROAD C
SETTLEMENT MONUMENT (TYP) SEE NOTE 5
SEDIMENTATION MARKER
36" OUTLET PIPE & GATE CONTROL SEE SHEETS 7 & 14
INSTRUMENTATION CONDUIT SEE DET 15, SHEET 22
APPROXIMATE DAM EMBANKMENT LIMITS
SEDIMENT DETENTION (2 AC-FT)
ROAD D
ROAD B
GRADE TO DRAIN SEE NOTE 3
SEE NOTE
2144
2145
2140
2135
2134
2136
2138
N 1,080,200
E 447,400
Scale: 1" = 50'

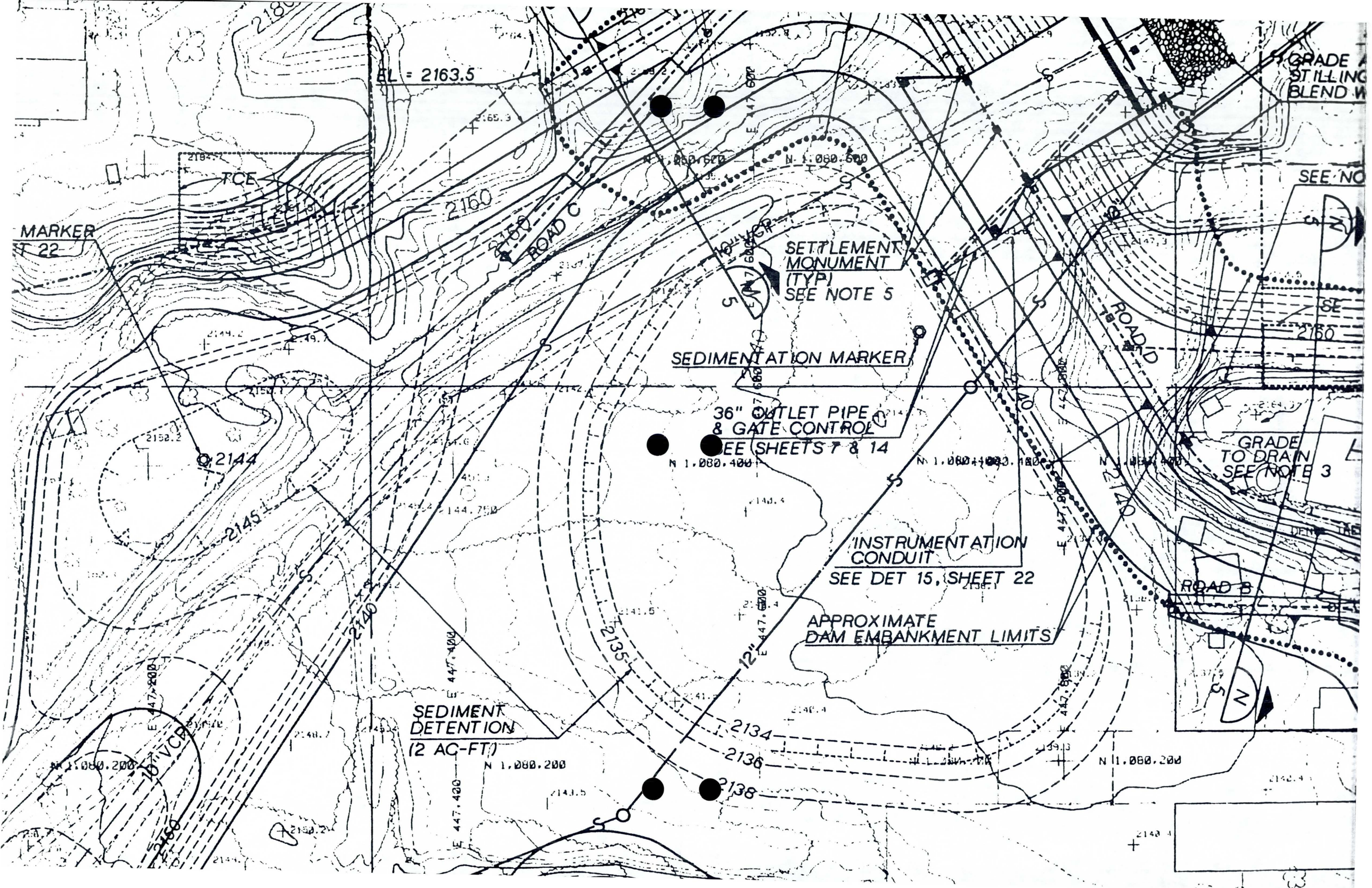
EL = 2163.5
TCE
MARKER
T 22
2160
ROAD C
SETTLEMENT
MONUMENT
(TYP)
SEE NOTE 5
SEDIMENTATION MARKER
36" OUTLET PIPE
& GATE CONTROL
SEE SHEETS 7 & 14
INSTRUMENTATION
CONDUIT
SEE DET 15, SHEET 22
APPROXIMATE
DAM EMBANKMENT LIMITS
ROAD D
GRADE
TO DRAIN
SEE NOTE 3
ROAD B
SEE NO
2144
2145
2140
2135
2134
2136
2138
12"
18" VCP
SEDIMENT
DETENTION
(2 AC-FT)
N 1,080,600
N 1,080,400
N 1,080,200
E 447,400
E 447,600
E 447,800

SUMMARY OF CONSTRUCTION COST OPINION

PROJECT: CASANDRO WASH DAM

ITEM NO.	DESCRIPTION	UNIT	APPROX. QUANTITY	UNIT COST	EXTENTED AMOUNT
107	NPDES Permits	LS	1	10,000.00	10,000
201	Clearing and Grubbing	LS	1	13,488.60	13,489
202	Mobilization	LS	1	47,479.28	47,479
204	Excavation for Dam	CY	40,800	1.87	76,378
210	Borrow Excavation	CY	65,100	2.17	141,246
211-1	Fill Construction Zone 1 Matl	CY	85,500	2.68	228,926
211-2	Fill Construction Zone 2 Matl	CY	2,900	19.21	55,720
211-3	Finish Grading	AC	15	626.54	9,398
220	Riprap	CY	427	47.56	20,306
* 301	Subgrade Preparation	SY	14,925	0.79	11,829
310	Aggregate Base Course (4-inch)	SY	3,525	1.70	5,984
350	Remove & Abondon Sewer	LS	1	6,203.49	6,203
405	Survey Monuments	EA	14	214.20	2,999
420	Chain Link Fence (6-foot)	LF	360	14.56	5,241
421	Wire Fence (4-foot)	LF	3,325	5.68	18,876
430	Landscaping	AC	15	1,242.75	18,641
505-1	Concrete Spillway & Stilling Bsn	CY	860	317.87	273,365
505-2	Inlet/Outlet Structure	CY	26	685.28	17,817
505-3	Miscellaneous Concrete	CY	5	364.14	1,821
515	Sedimentation Markers	EA	2	187.43	375
615	Sanitary Sewer (12-inch)	LF	1,442	43.81	63,174
618-1	Reinforced Conc Pipe (36-inch)	LF	148	114.89	17,003
618-2	PVC Drain Pipe (8-inch)	LF	365	26.30	9,598
621	CMP Culvert (24-inch)	LF	88	22.38	1,970
625-1	Stnd Manhole (MAG 420)	EA	3	2,677.50	8,033
625-2	Drop Manhole (MAG)	EA	1	3,748.50	3,749
635-1	Drain Pipe System (4-Inch)	LF	425	4.92	2,091
635-2	Drain Pipe System (12-Inch)	LF	260	14.89	3,872

TOTAL	1,075,584

Sections 204 and 210, and replace with suitable material from the excavation, as specified in Section 211.

Subsection 301.8 - Payment
Preparation of subgrade under the dam, earthfills, and roadway subgrade shall be paid for at the price bid per square yard.
ITEM 301 - SUBGRADE PREPARATION

SECTION 310 - UNTREATED BASE

Aggregate base course material for roadways shall conform to Section 310 of MAG Uniform Standard Specifications except as modified herein.

Subsection 310.3 - Deficiency:
Replace this section with the following:

When in the opinion of the Engineer there is reason to believe that a deficiency in thickness, or an excess of plasticity exists, additional aggregate base course material shall be placed. Such corrective measures shall be at no additional cost to the Owner.

Subsection 310.4 - Payment
Replace the section with the following:

Aggregate base course material shall be measured to the nearest linear foot of full depth (4-inch) base course material. Payment will made at the price bid per square yard, and shall be full compensation for the placement and compaction of the roadway base material complete.
ITEM 310 - AGGREGATE BASE COURSE (4-Inch)

SECTION 350 - REMOVAL OF EXISTING IMPROVEMENTS

Removals shall conform to Section 350 of the MAG Uniform Standard Specifications except as modified herein.

Subsection 350.1 - Description
Add the following:
The work under this section shall include abandonment of the existing 10-inch VCP sewerline and manholes as shown on the plans and as specified herein.

Subsection 350.2 - Construction Methods
Add the following:
Removal of Existing Sewer Pipe:

Where existing sewerline is to be removed, excavate soil over pipe and stockpile at least 10 feet away from side of trench. Remove pipe and underlying granular material down to undisturbed native soil. Use hand tools where required. Obtain Engineer's approval prior to placing concrete slurry. With top of slurry still soft, mix first lift of Zone 1 backfill. Place Zone 1 backfill

To: KVH

From: Kumar Hanumaiah:TALOS
Postmark: 03/03/95 08:18AM
Status: Previously read

Host: TALOS
Delivered: 03/03/95 08:18AM

Subject: Casandro wash Dam/Demolition

Message:

350.3 MISCELLANEOUS REMOVAL AND OTHER WORK:
Add the following:
(K) Demolish and remove the existing structures as shown on the demolition plan and transport all waste material to an approved dump site.

Payement for Demolition and Removal of existing structures will be made at the lumpsum price bid Item 350-2 Remove/Existing Strusures

SUMMARY OF CONSTRUCTION COST OPINION

PROJECT: CASANDRO WASH DAM

ITEM NO.	DESCRIPTION	UNIT	APPROX. QUANTITY	UNIT COST	EXTENTED AMOUNT
107	NPDES Permits	LS	1	10,000.00	10,000
201	Clearing and Grubbing	LS	1	13,488.60	13,489
202	Mobilization	LS	1	47,479.28	47,479
204	Excavation for Dam	CY	40,800	1.87	76,378
210	Borrow Excavation	CY	65,100	2.17	141,246
211-1	Fill Construction Zone 1 Matl	CY	85,500	2.68	228,926
211-2	Fill Construction Zone 2 Matl	CY	2,900	19.21	55,720
211-3	Finish Grading	AC	15	626.54	9,398
220	Riprap	CY	427	47.56	20,306
* 301	Subgrade Preparation	SY	14,925	0.79	11,829
310	Aggregate Base Course (4-inch)	SY	3,525	1.70	5,984
350	Remove & Abondon Sewer	LS	1	6,203.49	6,203
405	Survey Monuments	EA	14	214.20	2,999
420	Chain Link Fence (6-foot)	LF	360	14.56	5,241
421	Wire Fence (4-foot)	LF	3,325	5.68	18,876
430	Landscaping	AC	15	1,242.75	18,641
505-1	Concrete Spillway & Stilling Bsn	CY	860	317.87	273,365
505-2	Inlet/Outlet Structure	CY	26	685.28	17,817
505-3	Miscellaneous Concrete	CY	5	364.14	1,821
515	Sedimentation Markers	EA	2	187.43	375
615	Sanitary Sewer (12-inch)	LF	1,442	43.81	63,174
618-1	Reinforced Conc Pipe (36-inch)	LF	148	114.89	17,003
618-2	PVC Drain Pipe (8-inch)	LF	365	26.30	9,598
621	CMP Culvert (24-inch)	LF	88	22.38	1,970
625-1	Stnd Manhole (MAG 420)	EA	3	2,677.50	8,033
625-2	Drop Manhole (MAG)	EA	1	3,748.50	3,749
635-1	Drain Pipe System (4-Inch)	LF	425	4.92	2,091
635-2	Drain Pipe System (12-Inch)	LF	260	14.89	3,872

TOTAL	1,075,584

To: MAL
KVH

From: Kumar Hanumaiah:TALOS
Postmark: 02/28/95 08:06AM
Status: Previously read

Host: TALOS
Delivered: 02/28/95 08:06AM

Subject: casandro Wash Dam

Message:

The following are the 90% review comments for the Casandro Wash Dam:

1) Sht.6: Where it says Zone 1 and Zone 2, "Add a note to see special provisions" for Zone 1 and Zone 2 classifications.

2) Sht.15: Where is the Detail-1 referred to, back on sheet 5.

3) Sht.9: Wall section D-D shows the main wall steel #6 or #8 @6". Where are the #8 bars used here?

4) Spl.Provisions:
Subsection 210.1 states "Borrow material shall be obtained from the required excavation of the dam and detention basin as indicated on the plans"

Subsection 210.4 states "Quantities of borrow material from the detention basin will not be measured"

Subsection 210.5 states "Payment for borrow excavation from the detention basin will be made at the unit price bid"

Statements of Subsections 210.1,210.4 and 210.5 appears to be in conflict.

FLOOD CONTROL DISTRICT OF MARICOPA COUNTY
CONTRACT FCD 95-###
CASANDRO WASH DAM

SPECIAL PROVISIONS

SECTION 201 - CLEARING AND GRUBBING

Clearing and grubbing of the site shall conform to Section 201 of the MAG Uniform Standard Specifications, except as modified herein.

Subsection 201.1 - Description

Add the following:

All fill areas, waste disposal areas, borrow areas, and under structures shall be cleared and grubbed, as shown on the plans.

DEFINITIONS

Interfering or Objectionable Material: Trash, rubbish, and junk; vegetation and other organic matter, whether alive, dead, or decaying.

Clearing: Removal of interfering or objectionable material lying on or protruding above ground surface.

Grubbing: Removal of vegetation and other organic matter including roots greater than 1/2-inch caliper to a depth of 18 inches.

Project Limits: Areas, as shown or specified, within which work is to be performed. All work is to occur within the right-of-way and easements shown on the plans.

Subsection 201.3 - Construction Methods

Add the following:

Clear and grub the detention basin and damsite foundation to a line 10 feet outside the excavation limit on the toe of the dam and spillway, 5 feet outside the cut or fill limits on the detention basin perimeter and all borrow areas. Remove all rubbish, debris, and other objectionable matter regardless of depth. Remove all trees, stumps, trash, and roots larger than 1/2-inch in diameter to a depth of 18 inches. Remove all rubbish, trash, and objectionable material from the project limits, including building foundations and building debris.

Stake clearing and grubbing limits using the project benchmark and layout control lines, and obtain Engineer's approval prior to commencing clearing, grubbing, and stripping. Do not clear beyond approved limits. Provide stakes at 50-foot stations or closer as required to accurately define the limits of work.

Clear and grub only after adequate erosion and sediment controls are in place.

SUMMARY OF CONSTRUCTION COST OPINION

PROJECT: CASANDRO WASH DAM

ITEM NO.	DESCRIPTION	UNIT	APPROX. QUANTITY	UNIT COST	EXTENTED AMOUNT
107	NPDES Permits	LS	1	10,000.00	10,000
201	Clearing and Grubbing	LS	1	13,488.60	13,489
202	Mobilization	LS	1	47,479.28	47,479
204	Excavation for Dam	CY	40,800	1.87	76,378
210	Borrow Excavation	CY	65,100	2.17	141,246
211-1	Fill Construction Zone 1 Matl	CY	85,500	2.68	228,926
211-2	Fill Construction Zone 2 Matl	CY	2,900	19.21	55,720
211-3	Finish Grading	AC	15	626.54	9,398
220	Riprap	CY	427	47.56	20,306
* 301	Subgrade Preparation	SY	14,925	0.79	11,829
310	Aggregate Base Course (4-inch)	SY	3,525	1.70	5,984
350	Remove & Abondon Sewer	LS	1	6,203.49	6,203
405	Survey Monuments	EA	14	214.20	2,999
420	Chain Link Fence (6-foot)	LF	360	14.56	5,241
421	Wire Fence (4-foot)	LF	3,325	5.68	18,876
430	Landscaping	AC	15	1,242.75	18,641
505-1	Concrete Spillway & Stilling Bsn	CY	860	317.87	273,365
505-2	Inlet/Outlet Structure	CY	26	685.28	17,817
505-3	Miscellaneous Concrete	CY	5	364.14	1,821
515	Sedimentation Markers	EA	2	187.43	375
615	Sanitary Sewer (12-inch)	LF	1,442	43.81	63,174
618-1	Reinforced Conc Pipe (36-inch)	LF	148	114.89	17,003
618-2	PVC Drain Pipe (8-inch)	LF	365	26.30	9,598
621	CMP Culvert (24-inch)	LF	88	22.38	1,970
625-1	Stnd Manhole (MAG 420)	EA	3	2,677.50	8,033
625-2	Drop Manhole (MAG)	EA	1	3,748.50	3,749
635-1	Drain Pipe System (4-Inch)	LF	425	4.92	2,091
635-2	Drain Pipe System (12-Inch)	LF	260	14.89	3,872

TOTAL	1,075,584

CWD-6

EXECUTIVE SUMMARY

Property Identification:	The 4,800 square foot multi-tenant industrial building and 65,000 square feet of excess, usable land located at 860 Whipple Court in Wickenburg, Maricopa County, Arizona.
Location:	The subject property is located north of US Highway 60, west of Maricopa Road along the Casandro Wash in Wickenburg, Arizona.
Assessor's Parcel No.:	505-34-52E
Ownership:	According to the 1993 Maricopa County Assessor's records, ownership in the property is held by Harley Lewis. The property was acquired in June 1984 as recorded in Document 84-260978.
Land Data:	The subject site contains a total of 5.47 acres. Of the total land area, only 120,000 square feet is usable, which includes 55,000 square feet attributed to the building and 65,000 square feet of excess land. The remaining 2.72 acres are considered unusable.
Highest and Best Use:	Continued use as an industrial building with industrial storage.
Improvements:	The subject site is improved with a 4,800 square foot three tenant industrial building.

Value Indicators:	Income Approach:	$275,000
	Cost Approach:	$295,000
	Direct Sales Comparison Approach:	$325,000
	Correlated Value:	**$300,000**

Marketing Time:	Twelve months.

FLOOD CONTROL DISTRICT OF MARICOPA COUNTY

PROJECT Cagandro wash Dam PAGE ____ OF ____

DETAIL ____ COMPUTED ____ DATE ____

____ CHECKED BY ____ DATE ____

APPROXIMATE AREAS OF DEMOLITION:

1. 10'x12' Structure, 120 sq. ft.
2. Pool and Kool Deck, 400 sq. ft
3. 10'x12' Structure, 120 sq. ft
4. 16'x16' Structure, 260 sq. ft
5. 14'x26' Guest House, 370 sq. ft
6. 10'x10' Structure, 100 sq. ft
7. 23'x40' Storage Bldg. 920 sq. ft
8. 48'x100' Industrial Building, 4800 sq. ft.
9. 20'x15' Horse Corral, 300 sq. ft.

FLOOD CONTROL DISTRICT OF MARICOPA COUNTY

PROJECT Gasandro Wash Dam PAGE ____ OF ____

DETAIL ____ COMPUTED KVH DATE Feb/95

CHECKED BY ____ DATE ____

Demolition plan: (Approximate Areas)

1. (10'x12') Structure, A_1 = 120 Sq ft
2. Pool & Pool Deck 22' ± Dia., A_2 = 400
3. (10'x12') Structure. A_3 = 120
4. (16'x16') Structure. A_4 = 260
5. (20'x30') Structure A_5 = 600 Guest House.
6. (10'x10') Structure. A_6 = 100
7. (30'x44) Structure. A_7 = 1300 Ware House
8. (45'x120) Structure. A_8 = 5400 Multitenant Industrial Bldg
9. Trees to be Left in place.

6910-153 4-90

FLOOD CONTROL DISTRICT OF MARICOPA COUNTY

PROJECT Casandro Wash Dam PAGE ____ OF ____

DETAIL ____ COMPUTED KVH DATE Feb/95

CHECKED BY ____ DATE ____

APPROXIMATE AREAS OF DEMOLITION

Demolition plan: (~~Approximate Areas~~)

(1) (10'x12') Structure, ~~A_1~~ = 120 sq ft

(2) Pool & Pool Deck ~~22' ± Dia.~~, A_2 = 400 sq ft

(3) (10'x12') Structure. ~~A_3~~ = 120 sq. ft

(4) (16'x16') Structure. ~~A_4~~ = 260 sq ft

(5) (~~20'x30'~~ 14'x26') ~~Structure~~ Guest House ~~A_5 = 600~~ 364 ~~Guest House~~

(6) (10'x10') Structure, ~~A_6~~ = 100 sq ft

(7) (~~30'x44'~~ 23'x40) ~~Structure~~ Storage Building ~~A_7 = 1300~~ 920 ~~Storage Bldg~~ ~~Warehouse~~

(8) (~~45'x130'~~ 48'x100) ~~Structure~~ M.T.I. Bldg ~~A_8 = 5400~~ 4800 ~~Multi-tenant Industrial Bldg~~

~~9. Trees to be left in place.~~

(9) (20'x15') Horse Corral 300 sq. ft.
Remove Fence as required.

~~Note: Areas shown above are only approximate.~~

To: KVH

From: Kumar Hanumaiah:TALOS
Postmark: 02/08/95 03:33PM
Status: Previously read

Host: TALOS
Delivered: 02/08/95 03:33PM

Subject: Casandro WASH dam

Message:

SECTION 350 - REMOVAL OF EXISTING IMPROVEMENTS:

ITEM 350-1 Demolition of existing structures shall conform in its entirity to section 350. In addition to the items listed in the MAG Standard specifications Section 350-3 Miscellaneous Removal and other work, the following shall be included:

Demolition of Existing structures shall conform to the specificatioins as shown on the plans and as per the direction of Flood Control District of Maricopa County Land Management division.

Payement for this work shall be at the Lumpsum bid for Item 350-1 Demolition of Existing structures.

OR

No separate payement shall be made for Demolition of Existing Strustures and the cost thereof shall be included in the price bid for related items of work.

FLOOD CONTROL DISTRICT OF MARICOPA COUNTY

PROJECT _____ PAGE ____ OF ____

DETAIL _____ COMPUTED _____ DATE ____

_____ CHECKED BY _____ DATE ____

Section 350 - Removal of Existing Improvements.

Item 350-1 Demolition of Existing Structures shall conform in its entirety to Section 350. In addition to the items listed in the MAG Standard Specifications Section 350-3 Miscellaneous Removal and other work, the following shall be included:

Demolition of Existing Structures shall conform to the Specifications as shown on plans and as per the direction of the Land Management Division of Flood Control District of Maricopa County.

Payment for this work shall be at the lump sum bid for Item 350-1 Demolition of Existing Structures.

No separate payment shall be made for Demolition of Existing Structures and the cost thereof shall be included in the price bid for related items of work.

6910-153 4-90

EXECUTIVE SUMMARY

Property Type:	Vacant Land
Assessor's Parcel Number:	Portions of 505-36-020
Flood Control District ID#:	CWD-01
Owner:	William L. & Linda L. Johnson
Location:	450± feet north of Wickenburg Way (U.S. 60), 1,320± feet west of Mariposa Drive, Wickenburg, AZ
Purpose of Appraisal:	To estimate Fair Market Value of two vacant land parcels and an applicable annual rental rate for the property needed for a temporary construction easement.
Date of Value Estimate:	November 7, 1994
Interest Appraised:	Fee Simple
Improvements:	Horse Corral
Size of Larger Parcel:	9.12± Acres
Size of Parcels To Be Acquired:	
Parcel 1:	2.18± Acres
Parcel 2:	0.21± Acres
Interest to be Acquired:	
Parcel 1:	Fee Simple
Parcel 2:	Temporary Construction Easement
Zoning:	R1-12 (Minimum lot size = 12,000 sf)
Present Use:	
Larger Parcel:	Single-family residence
Parts to be Acquired:	Horse corral
Buyer Profile:	Single-family resident
Highest and Best Use:	Continued single-family residence
Appraisal Approach Used:	Direct Sales Comparison
Marketing Period:	One year or less

EXHIBIT D

FROM:

HOPKINS FENCE Co.
PO BOX 3195
Wickenburg Az 85358

PAGE NO. 1 OF 1 PAGES

DATE 10-25-94

PROPOSAL SUBMITTED TO:

Peterson Realty

Attn: Cindy Thrasher

PHONE (602) 684-5129

JOB NAME Bill Johnson Corral

ADDRESS

CITY/STATE/ZIP Wickenburg, Az

We hereby submit specifications and estimates for:

Replacement of 4 strand Barbed Wire fence, pipe panels, 1 wood shade and 1 pipe shade.

$1500.00

We hereby propose to furnish labor and materials - complete in accordance with the above specifications, for the sum of _____ dollars ($ _____) with payment to be made as follows.

All material is guaranteed to be as specified. All work to be completed in a workmanlike manner according to standard practices. Any alteration or deviation from above specifications involving extra costs will be executed only upon written orders, and will become an extra charge over and above the estimate. All agreements contingent upon strikes, accidents, or delays beyond our control. This proposal subject to acceptance within _____ days and is void thereafter at the option ~~of the~~ undersigned.

Authorized Signature Renee Hopkins

ACCEPTANCE OF PROPOSAL

The above prices, specifications and conditions are hereby accepted. You are authorized to do the work as specified. Payments will be made as outlined above.

ACCEPTED:

Signature

Date

Signature

CWD-01
EXHIBIT A

Larger Parcel - Looking east from near west property line

Part to be Acquired - Looking north from near south property line

FLOOD CONTROL DISTRICT OF MARICOPA COUNTY

PROJECT Casandro Wash Dam PAGE ____ OF ____

DETAIL ____ COMPUTED KVH DATE Feb 95

CHECKED BY ____ DATE ____

Demolition plan: (Approximate Areas)

1. (10'x12') Structure, ~~A_1~~ = 120 Sq ft
2. Pool & Kool Deck ~~22' ± Dia.~~, ~~A_2~~ = 400 Sq ft
3. (10'x12') Structure. ~~A_3~~ = 120 Sq. ft
4. (16'x16') Structure. ~~A_4~~ = 260 Sq ft
5. ~~(20'x30')~~ (14'x26') ~~Structure~~ Guest House A_5 = ~~600~~ 364 ~~Guest House~~
6. (10'x10') Structure, ~~A_6~~ = 100 Sq ft
7. ~~(30'x44')~~ (23'x40') ~~Structure~~ Storage Building A_7 = ~~1300~~ 920 ~~Storage Bldg~~ Ware House
8. ~~(45'x120)~~ (48'x100) ~~Structure~~ M.T.I. Bldg A_8 = ~~5400~~ 4800 ~~Multitenant Industrial Bldg~~

~~9. Trees to be Left in place.~~

CWD-9

EXECUTIVE SUMMARY

Property Identification: The residence, guest house and storage building located at 858 Wickenburg Way in Wickenburg, Maricopa County, Arizona.

Location: The subject property is located north of US Highway 60 (Wickenburg Way), west of Mariposa Drive along the Casandro Wash in Wickenburg, Arizona.

Assessor's Parcel Nos.: 504-34-050A and 060

Ownership: According to the 1993 Maricopa County Assessor's records, ownership in the property is held by David R. and Kelly A. Ryan. The property was acquired in May 1990 for $73,847 as recorded in Document 90-232381.

Land Data: The subject contains a total land area of 38,640 square feet.

Highest and Best Use: Continued use as a mixed-use property.

Improvements: The subject site is improved with a residence, guest house and storage building. The sizes of these buildings are as follows:

Residence	1,608 sq.ft.
Guest House	364 sq.ft.
Storage Building	923 sq.ft.
Total	2,895 sq.ft.

Value Indicators:

Cost Approach:	$140,000
Direct Sales Comparison Approach:	$135,000
Value Conclusion:	**$135,000**

Marketing Time: Twelve months.

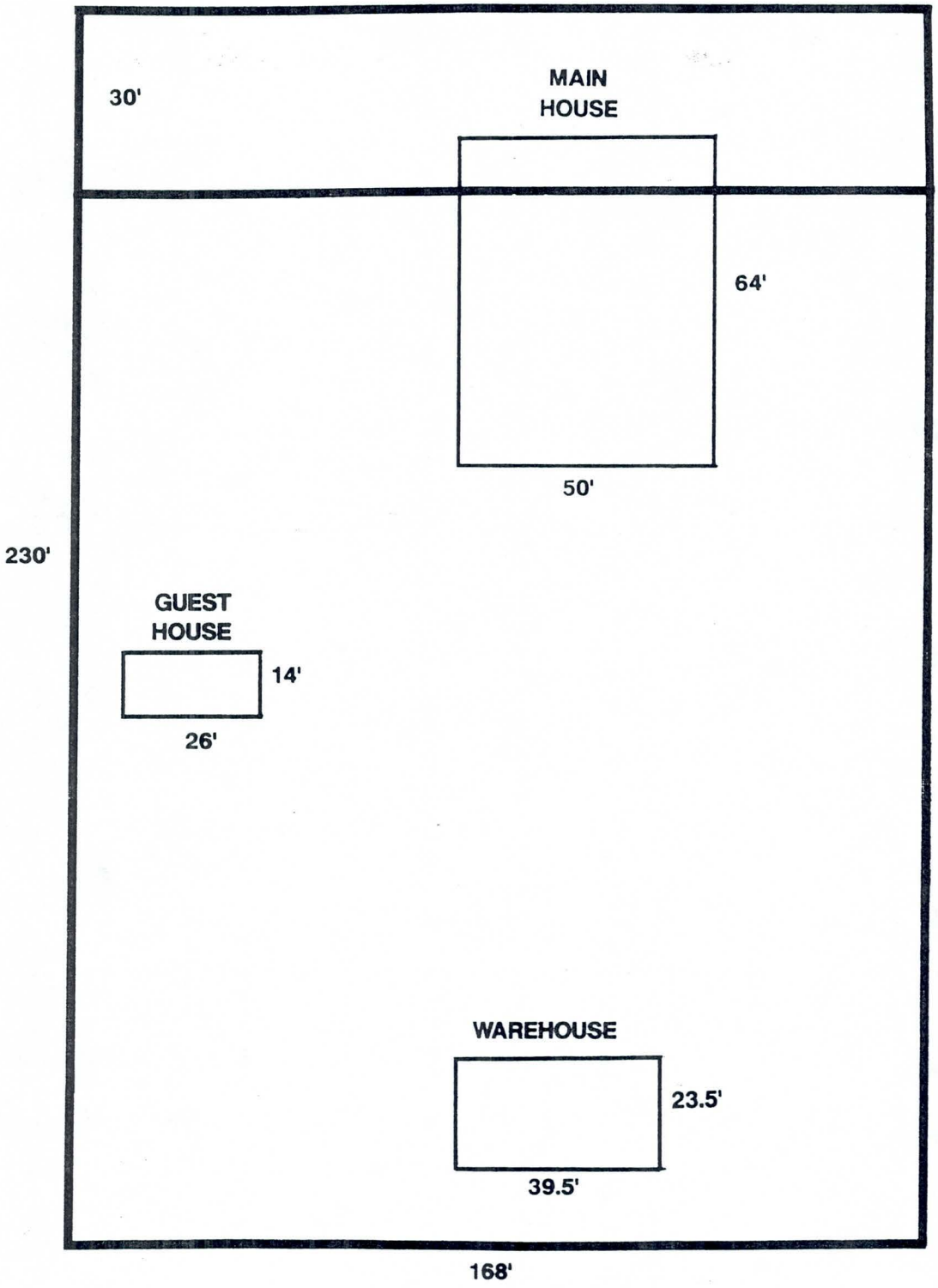
30'
MAIN
HOUSE
64'
50'
230'
GUEST
HOUSE
14'
26'
WAREHOUSE
23.5'
39.5'
168'

SITE PLAN

CWD-6

EXECUTIVE SUMMARY

Property Identification:	The 4,800 square foot multi-tenant industrial building and 65,000 square feet of excess, usable land located at 860 Whipple Court in Wickenburg, Maricopa County, Arizona.
Location:	The subject property is located north of US Highway 60, west of Maricopa Road along the Casandro Wash in Wickenburg, Arizona.
Assessor's Parcel No.:	505-34-52E
Ownership:	According to the 1993 Maricopa County Assessor's records, ownership in the property is held by Harley Lewis. The property was acquired in June 1984 as recorded in Document 84-260978.
Land Data:	The subject site contains a total of 5.47 acres. Of the total land area, only 120,000 square feet is usable, which includes 55,000 square feet attributed to the building and 65,000 square feet of excess land. The remaining 2.72 acres are considered unusable.
Highest and Best Use:	Continued use as an industrial building with industrial storage.
Improvements:	The subject site is improved with a 4,800 square foot three tenant industrial building.

Value Indicators:	Income Approach:	$275,000
	Cost Approach:	$295,000
	Direct Sales Comparison Approach:	$325,000
	Correlated Value:	**$300,000**

Marketing Time:	Twelve months.

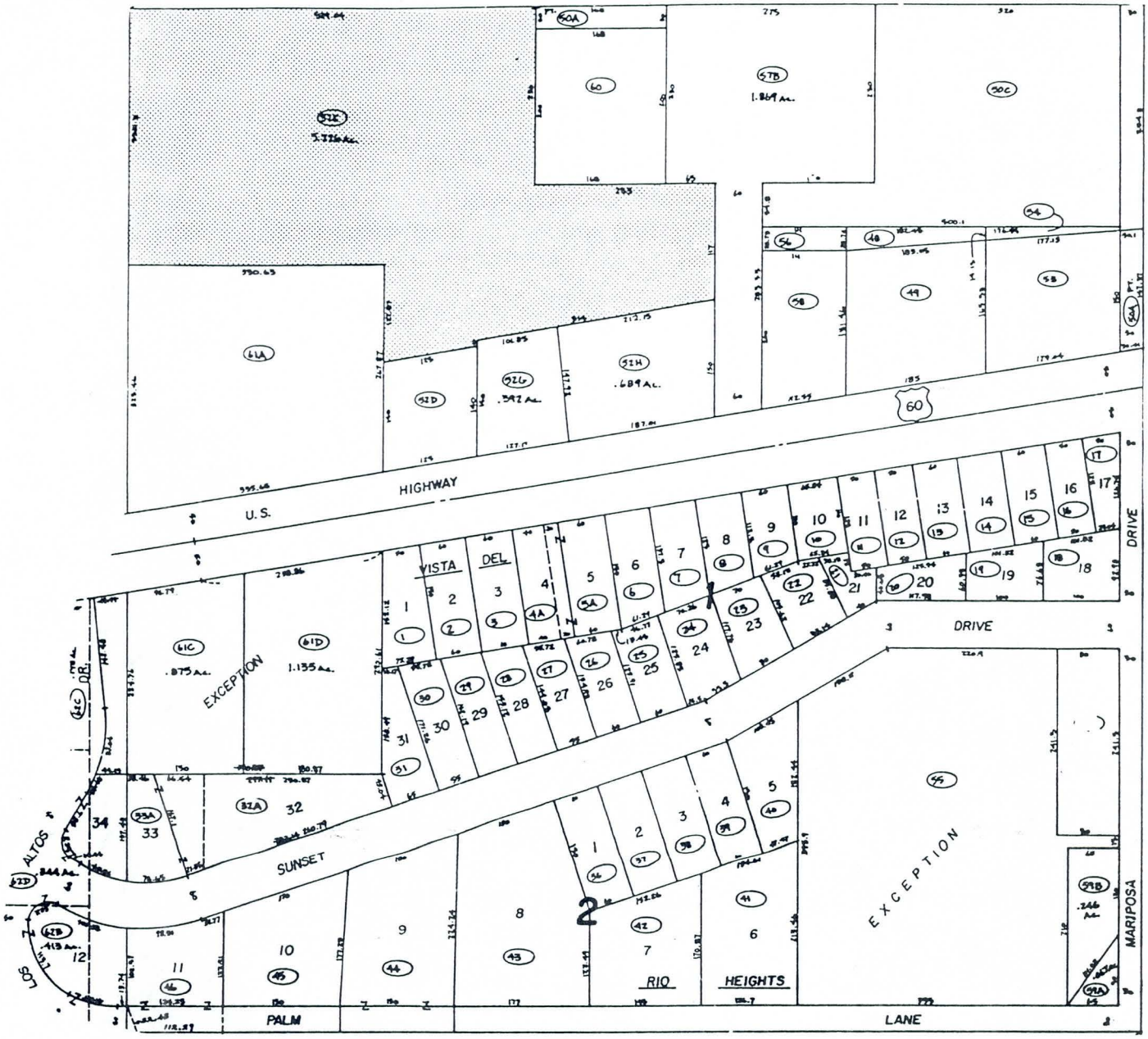
U.S.
HIGHWAY
60
VISTA
DEL
DRIVE
DRIVE
EXCEPTION
EXCEPTION
SUNSET
LOS
ALTOS
DR.
PALM
LANE
MARIPOSA
RIO
HEIGHTS
1.869 Ac.
5.326 Ac.
.689 Ac.
.597 Ac.
.875 Ac.
1.135 Ac.

PLAT MAP

BUILDING SKETCH

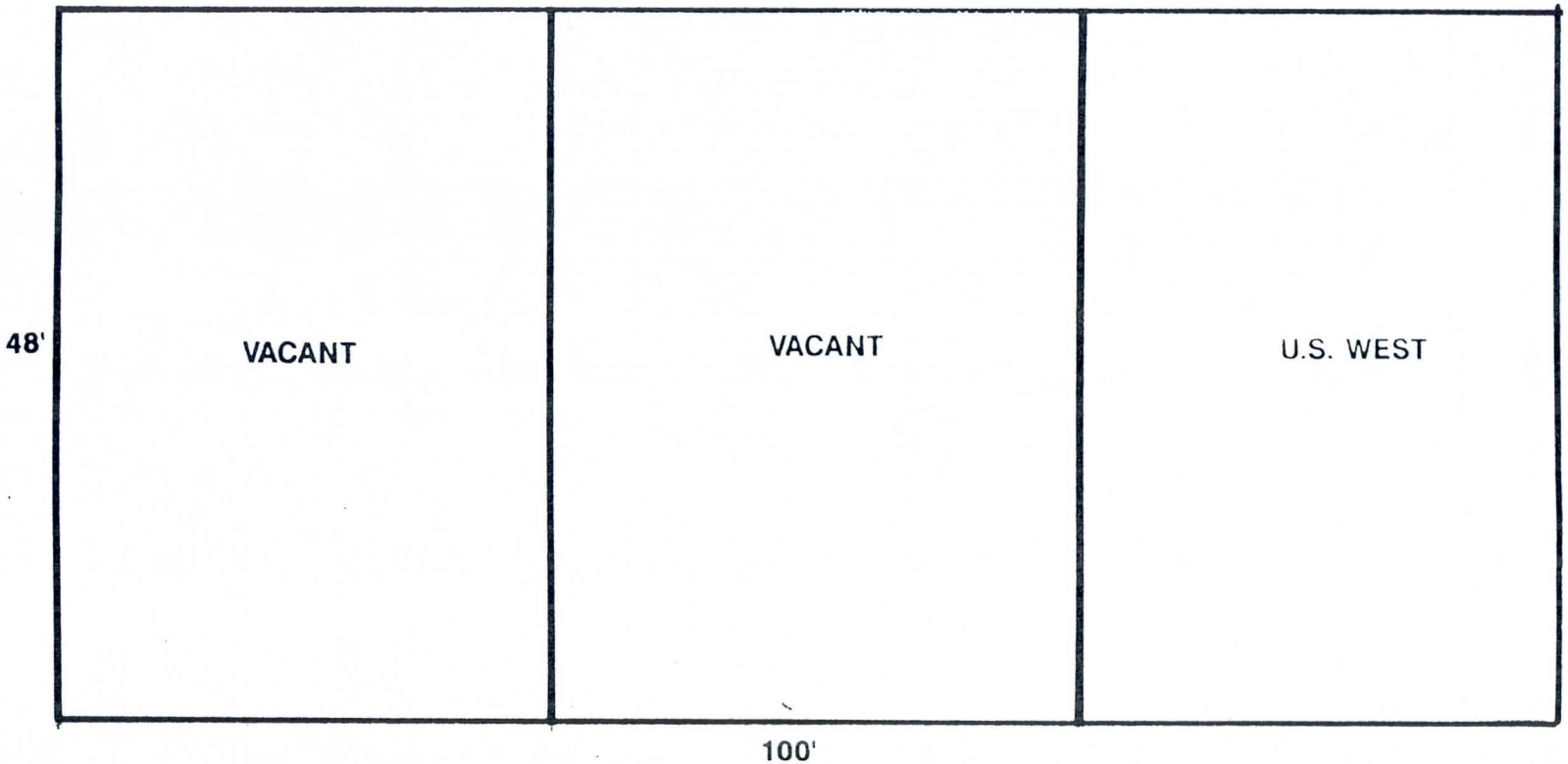

NOTE: NOT TO SCALE

CONSTRUCTION
SPECIAL PROVISIONS
FOR
CASANDRO WASH OUTFALL
CONTRACT FCD 95-11

TABLE OF CONTENTS

SECTION		PAGE
108	COMMENCEMENT,PROSECUTION AND PROGRESS	1
201	CLEARING AND GRUBBING	
202	MOBILIZATION	3
203	FIELD OFFICE	4
206	STRUCTURE EXCAVATION AND BACKFILL	6
220	RIPRAP CONSTRUCTION	7
225	WATERING	11
350	REMOVAL OF EXISTING IMPROVEMENTS	11
401	TRAFFIC CONTROL	12
405	MONUMENTS	13
505	CONCRETE STRUCTURES	14
601	TRENCH EXCAVATION, BACKFILL AND COMPACTION	15
602	ENCASEMENT OF WATER OR SEWER BY JACKING OR TUNNELING OPERATION	16
610	WATERLINE CONSTRUCTION	17
615	SEWERLINE CONSTRUCTION	19
618	STORM DRAIN CONSTRUCTION	19
625	MANHOLE CONSTRUCTION AND DROP SEWER CONNECTION	20
630	TAPPING SLEEVES, VALVES AND VALVE BOXES ON WATERLINES	21

SECTION 108 - COMMENCEMENT,PROSECUTION AND PROGRESS

108.5 - Limitations of Operations

In addition to the requirements of the Standard Specifications, the following paragraphs shall be added to Section 108.5 of the Standard Specifications:

Regular working hours shall be defined as one 8-1/2 hour shift per day, Monday through Friday, exclusive of City holidays.

Work in excess of regular working hours shall be defined as overtime. For overtime which becomes necessary, the Contractor shall make a written request to the Engineer at least eight (8) calendar days before the desired overtime. The request shall include the duration, dates, times, reason for overtime, and a statement of the consequences if overtime is not approved.

The Contractor shall not schedule any overtime work which requires inspection, survey, or material testing without written permission from the Engineer two (2) working days before the proposed overtime work. The Engineer reserves the right to deny the requested overtime. If an overtime request is denied, the Engineer may extend the contract time at no additional cost to the City, including extended overhead costs.

Unscheduled Overtime

Overtime that is not requested and approved in accordance with the above procedure shall be defined as unscheduled overtime. All costs (including appropriate overhead) shall be paid by the Contractor by deduction from the contract.

Emergency Overtime

An emergency is defined as work required for a situation that is not within the Contractor's control.

SECTION 201 - CLEARING AND GRUBBING

201.1 - Description

Replace Subsection 201.1 of the Standard Specifications with the following:

This work shall consist of clearing, grubbing, removing, and disposing of all trees, brush, stumps, roots, rubbish, debris and other items not covered under other contract items within the construction area. These items shall become the property of the Contractor and shall be disposed of off of the project right-of-way. Removal of miscellaneous structures and foundations is included under Section 350 - Removal of Existing Improvements of these Special Provisions. The Contractor is responsible for conducting a thorough site investigation to verify the number, size, and type of trees and other shrubs prior to submitting his bid. Work under this section includes all fill site areas indicated on the plans.

201.3 - Construction Methods

In addition to the requirements of the Standard Specifications, the following paragraphs shall be added to Section 201.3 of the Standard Specifications:

Work under this item shall be progressed on the basis that NO BURNING will be permitted on or off the contract site. All wood and brush shall be disposed of within seven (7) calendar days after cutting or felling unless otherwise approved. Additionally, the Contractor shall clear all trash, brush, stumps, and miscellaneous debris from the surfaces of areas which is within the drainage and temporary construction easements for this project.

The Contractor shall take care to confine his operations to the areas so specified. Cacti shall be removed by the Contractor. Removal of cacti by the contractor shall be in accordance with the "Arizona Native Plant Law" A.R.S. Chapter 7.

201.5 - Payment, Clearing and Grubbing

Replace Subsection 201.5 of the Standard Specifications with the following:

Payment for clearing and grubbing will be made on a lump sum basis under Item 201-1 in the Bid Schedule for work satisfactorily completed. Monthly payments will be made in proportion to the amount of work done as determined by the Engineer. Damages to existing facilities incurred during this work shall be repaired by the Contractor at no additional cost to the District.

201.6 - Measurement, Removal and Disposal of Trees

Replace Subsection 201.6 of the Standard Specifications with the following:

No measurement will be made for the removal and disposal of trees. The cost of this item shall be considered to be part of clearing and grubbing and shall be paid for as such under Item 201-1 in the bid Schedule.

SECTION 202 - MOBILIZATION

This Section shall be added to the Standard Specifications.

202.1 - Description

The work under this section shall consist of preparatory work and operations, including but not limited to, the movement of personnel, equipment, plant, supplies, and incidentals to the project site; the establishment of all offices, buildings, and other facilities necessary for work on the project; and for all other work and operations that must be performed and costs incurred prior to beginning work on the various items on the project. Included shall be the provision of an office, equipment, furniture and utility service for the Engineer and his representatives. These offices shall be as described in detail in Section 203 of these Special Provisions.

202.2 - Method of Measurement

Mobilization will be measured for payment by the lump sum as a single complete unit of work.

202.3 - Payment

Payment for mobilization will be made by the lump sum under Item 202 of the Bid Schedule and shall not exceed three percent (3%) of the total project bid amount exclusive of mobilization.

Unless provided for elsewhere, the cost of required insurance, bonds, and permits and/or any initiation of Contract work may be included in this work.

SECTION 203 - FIELD OFFICE

This Section shall be added to the Standard Specifications.

203.1 - Description

The work shall consist of providing and maintaining a furnished Field Office for the exclusive use of the Engineer and the Engineer's Staff.

The Contractor shall provide a field office for the duration of the project. The field office may be located on the project site or otherwise with the approval of the Engineer. The office may be in the same building or trailer as office space of the contractor, provided that such office is separated from the area used by the Contractor by a wall with a locking door. The office shall also have its own door to the outside.

The Contractor may furnish equivalent facilities in an existing building provided such facilities and buildings are located to provide convenient service.

203.2 - Facilities

The Contractor shall provide hookups and continuous service for electricity, telephone, air conditioning, heating and water service. All utility costs, except long distance calls made by the Engineer shall be the responsibility of the Contractor. Permits and hookup fees for the office are the responsibility of the Contractor. The field office shall have the following general requirements:

a. Lights: Electric lighting, non glare type to provide adequate illumination at desk height.
b. Heating and Cooling: Capable of maintaining an air temperature of 72 degrees.
c. Telephones: One telephone with a separate number linked with conference call capability for the exclusive use of the Engineer. Long distance phone calls made on these line will be paid for by the District.

d. Toilet: A commode and wash sink in a separately enclosed room within the building or mobile trailer, properly ventilated and complying with applicable sanitary codes. Contractor shall provide water services.
e. Electric Power: Contractor shall provide electric power.
f. Maintenance: The Contractor shall maintain all facilities and furnished equipment in good working condition.
g. 1- Office Desk with locking drawers and a padded swivel chair.
h. 4- Folding office chairs.
i. 2 - three by five foot tables.
j. 1- Dry erase board.
k. Copy machine that can accommodate sizes up to 11"x17" paper along with paper.
l. Plain paper FAX machine.

203.3 - Construction Details

The office shall be fully equipped and made available for the Engineer's use and occupancy prior to the start of any Contract work and not later than ten (10) days after the issuance of the Notice to Proceed (NTP). The Engineer will notify the Contractor, in writing, of the acceptability of the Field Office provided. The Contractor shall maintain the field office in operating condition until seven (7) days after acceptance of the Contract work.

All facilities shall be maintained in good operating condition and appearance by the contractor for the designated period, after which all portable buildings or trailers, fencing, surfacing, and utilities shall be removed from the site, the areas cleaned and seeded if required and left in a neat and acceptable condition.

203.4 - Payment

No separate payment shall be made for providing the engineers field office, the cost being included under Item 202 of the Bid Schedule. The cost in Item 202 shall include full compensation for the cost of all labor, materials, equipment, ground rental and utility charges (including monthly service charges, but excluding charges for long distance phone calls) necessary to complete the work. No additional payment will be made for occupancy and service during periods of Contract extension of time where engineering charges are assessed.

206 - STRUCTURE EXCAVATION AND BACKFILL

This Section shall be added to the Standard Specifications.

206.1- Description

Structure excavation and backfill is work necessary for the placement of concrete structures as defined in Section 505 - Concrete Structures of these special provisions. Structures include special concrete box manholes, inlet and outlet headwalls, and concrete retaining walls.

206.2 - Foundation Material Treatment

When the foundation material below the concrete structure is unsuitable, as determined by the Engineer, the Contractor shall over excavate the bottom of the trench as directed and replace the over excavation with compacted backfill, compacted to 95 percent of maximum density.

Where the original ground surface is below the base of the structure, all fill required for the structure foundation shall be placed as compacted backfill. All fill about the structure above the base of the structure to lateral dimensions one (1) foot outside the base of the structure and within slopes of one to one to the finished surfaces of adjacent earthwork shall be placed as compacted backfill.

206.4 - Structure Backfill

After the structure has been constructed, it shall be backfilled using suitable fill material free from concrete and debris per Section 601 of the Standard Specifications.

The maximum equipment loading allowed over any structure shall be HS-20 loading (16,000 pound wheel load) in accordance with the "Standard Specifications for Highway Bridges", AASHTO thirteenth Edition, 1983. Construction equipment that exerts a larger load on top of the structure shall not be allowed to travel over the structure at any time, until a method for protecting the structure from the larger load is approved by the Engineer.

206.5 - Payment

No separate payment will be made for structure excavation or backfill, the cost being considered incidental to items listed in Section 505 - Concrete Structures.

SECTION 225 - WATERING

225.1 - Description

Replace Section 225.1 of the Standard Specifications with the following:

The work under this section shall consist of furnishing and applying all water required for the control of dust, for the safety and convenience of the traveling public, and for the reduction of the dust nuisance to adjacent properties.

The Contractor shall obtain the necessary permits under the County Air Pollution Statues. It shall be the responsibility of the Contractor to keep the construction site moistened to prevent dust pollution to the air and adjacent properties.

Temporary Watering

The Contractor is responsible for locating the water supply line near Construction Centerline Station 143+60, terminating the line on the east side of the temporary construction easement (TCE) with a hose bib placed above ground, and providing water to the horse stalls on the west side of the trench until the trench has been backfilled, compacted, and accepted.

225.3 - Construction Equipment
The following paragraph shall be added to Section 225.3 of the Standard Specifications.

The use of pressure pumps and spray bars on all sprinkling equipment used for the application of water will be required. The use of gravity flow spray bars and splash plates will not be permitted.

SECTION 350 - REMOVAL OF EXISTING IMPROVEMENTS

350.2 - Construction Methods
The following paragraph shall be added to Section 350.2 of the Standard Specifications.

All materials, unless designated on the plans or by the Engineer as to be salvaged, reused or relocated, shall become the property of the Contractor and shall be immediately removed from the job site.

350.3 - Miscellaneous Removal and Other Work
The following items shall be added to but not limited to Section 350.3 of the Standard Specifications.

(1) Removal of retaining wall at approximately Sta.10+60.
(2) Removal concrete pad at approximately Sta. 10+25.
(3) Removal of sewer manholes.
(4) Removal of sewerlines.
(5) Removal of waterlines.

350.4 - Payment

Payment for removal of miscellaneous items shall be made at the contract unit price per each for Bid Item 350-1, 350-2, 350-3, 350-4, 350-5. Such payment shall be full compensation for the costs of labor, excavation, removal of obstructions, shoring, bracing, bedding, backfilling, compaction, testing, and all other work not specifically covered that is incidental.

shall be made at the contract unit price per

SECTION 401 - TRAFFIC CONTROL

The following paragraphs shall be added to the subsections of Section 401 of the Standard

Specifications:

401.1 - Description

The following shall be considered residential streets:

1. Navajo, Jackson, Mohave, Madison, Adams, and Jefferson.

401.2 - Traffic Control Devices

The number and kind of barricades, warning signs, informational signs, delineators, barriers, and all other traffic control devices and the approval of the Contractor's method of application of all traffic control measures shall not relieve the Contractor of the responsibility of protecting the work, the workmen, and the traveling public.

401.4 - Traffic Control Measures

At the time of the pre-construction conference, the contractor shall submit for review and approval a traffic control plan. The plan shall show all measures, including types of signs, barricades, and sand berms with their placement and spacing. This plan shall be professionally drawn on a 24" x 36" reproducible medium. Locations of all signs shall be coordinated with the Town of Wickenburg before placement.

Permission to restrict streets, sidewalks and alleys shall be requested from the Town of Wickenburg. The Contractor will be required to submit a traffic control plan for restriction or closure when requesting restriction permission.

The Contractor shall provide and maintain clean, safe, and adequate pedestrian walkways and sidewalks, free of mud, dust, debris, and equipment. Access to adjacent driveways shall be provided during all non-working hours.

When construction restricts the intersections, the Contractor shall provide off-duty police officers to assist with traffic control during construction hours.

The contractor shall provide safety fencing around all open trenches and excavations during non-working hours. Fencing shall securely anchored to approved posts located not more than six (6) feet on centers having a minimum height of sis (6) feet and shall consist of wire mesh fabric of sufficient weight and rigidity to adequately span the maximum supporting post separation.

401.6 - Measurement

No measurement for traffic control devices will me made or for protective fencing. Measurement for off duty officers will be by the hour.

401.7 - Payment

No payment for traffic control devices, for furnishing, installing, or maintaining the protective fencing; the cost of such shall be included in the unit price bid per linear foot for furnishing and laying pipe and shall be paid for as such under Item 618 in the bid Schedule. Payment for off-duty police officers shall be at the contract unit price per hour for Bid Item 401.

SECTION 405 - MONUMENTS

405.3 - Construction
Replace Section 405.3 of the Standard Specifications with the following:

Prior to removal of any existing survey marker, brass cap, the Contractor shall ensure that appropriate survey ties have been made by a Registered Land Surveyor for reestablishing the survey markers.

Brass caps shall be placed in the survey monuments before the concrete block has acquired its initial set and shall be firmly bedded in concrete. The concrete block shall be so located that the reference point will fall within a 1 inch circle in the center of the brass cap.

405.4 - Installation
Replace Section 405.4 of the Standard Specifications with the following:

Following installation of monuments, bench mark elevations, as appropriate, shall be set and marked per subsection 105.8.1 of the Supplementary General Conditions.

Survey monuments shall be set in position after all cleanup is complete and the roadways have been regraded.

The tops of the monument covers shall be set flush with the roadway surface.

405.5 - Payment

Payment for survey markers shall be at the contract unit price per each for Bid Item 405. Such payment shall be full compensation for removal, furnishing and installing the monuments, complete in place, cost of labor, Registered Land Surveyor, and all other work not specifically covered that is incidental.

SECTION 505 - CONCRETE STRUCTURES

The following paragraphs shall replace the subsections of Section 505 of the Standard Specifications:

505.1 - Description

The work under this section shall include constructing inlet/outlet headwalls, concrete aprons, concrete box manholes, retaining walls, concrete pads, wingwalls, and other concrete structures as shown on the plans and in conformance with the requirements of the Standard Specifications. Concrete for use in work constructed under this specification and testing thereof shall conform to the requirements of Section 725.

505.2 - Subgrade for Concrete Structures

Refer to Section 206 of these Special Provisions for structure excavation and backfill.

The surfaces on which concrete is to be placed shall be finely graded to the lines and grades shown on the project plans or established by the Engineer. The surfaces shall be thoroughly compacted and shall be uniformly moistened so that water will not be drawn from the freshly placed concrete.

505.3 - Forms

Forms shall be of plywood sheathing or other suitable material and shall be true to line and grade and sufficiently rigid to resist deflection during placement of the concrete.

505.8 - Curing

The concrete surfaces, shall be kept continuously moist for at least seven (7) days, beginning immediately after finishing, by means of either a water spray or fog system capable of being applied continuously or by liquid membrane forming compound or by polyethylene sheeting conforming to the requirements specified in ASTM C171 for Moisture Loss and for Thickness. If polyethylene sheeting is used, it shall be white opaque and adjoining sheets overlap at least twelve (12) inches and laps secured to provide an air tight and wind proof joint. If liquid membrane forming compound is used, it shall be Type I conforming to the requirements of ASTM C309 and the application rate shall be 100 square feet per gallon.

505.9 - Finishing Concrete

After the concrete has been placed as nearly as practicable to the required thickness and shape outlined by forms and ground wires, the surface shall be checked with a straightedge and any low spots or depressions shall be brought up to proper grade by placing additional concrete in such a manner that the finished surface shall be smooth and uniform.

Surfaces of existing concrete against which new concrete is to be placed shall be thoroughly cleaned and moistened immediately prior to placing the new concrete. Construction joints shall be constructed as shown on the plans.

505.10 - Payment

Payment for the concrete retaining walls, concrete box manholes, inlet and outlet concrete structures including aprons and wing walls shall be made at the contract unit price per each for Bid Item 505-1, 505-2, 505-3, 505-4. Such payment shall be full compensation for furnishing and installing the item, complete in place and all fittings, reinforcing steel, concrete, cost of labor, excavation, removal of obstructions, shoring, bracing, bedding, backfilling, compaction, testing, and all other work not specifically covered that is incidental.

SECTION 601 - TRENCH EXCAVATION, BACKFILLING AND COMPACTION

The following paragraphs shall be added to the subsections of Section 601 of the Standard Specifications:

601.1 - Description

The work under this section shall include the excavation of trenches, backfilling and compaction as necessary to allow for the placement of storm drain pipes, sewerlines, and manholes.

601.2.5 - Overexcavation:

When the foundation material below the bottom of the pipe is unsuitable, as determined by the Engineer, the Contractor shall overexcavate the bottom of the trench as directed and replace the overexcavation with compacted backfill, compacted to 95 percent of maximum density at no additional cost.

All fill about the pipe above the base of the pipe to lateral dimensions one (1) foot outside the base of the pipe and within slopes of one horizontal to one vertical (1:1) to the finished surfaces of adjacent earthwork shall be placed as compacted backfill.

601.3.4 - Permanent Pipe Supports

Where sanitary sewer lines (vitrified clay pipe 12-inches or smaller) cross the mainline construction, the Contractor has the option of permanently supporting the sanitary sewer line per MAG Detail 403-1, 403-2 or 403-3. Where DIP sewer option is used, it shall be lined per the following specification:

> All ductile iron pipe for conveying sewerage shall be in accordance with AWWA C-150:
>
> - 14" inside diameter and smaller shall be pressure Class 350
>
> Ductile iron pipe with a minimum wall thickness of Class 50 may be substituted in lieu of the above.
>
> The lining shall cover, at a minimum, the inner surfaces of the pipe and the fitting from the plain end or beveled spigot end to the rear of the gasket socket. If flanged fittings and pipe are included in the project, the lining must not be used on the face of the

flange, however full face gaskets must be used to protect the ends of the pipe. At the ends of the pipe and fittings, the lining thickness shall taper for a distance of 4 inches to a minimum thickness of 10 mils.

All ductile iron sewer pipe shall have a protective lining with a nominal thickness of 40 mils and a minimum thickness of 35 mils of **Protecto 401 (ceramic epoxy), Polythane (polyurethane), SewerCoat (calcium aluminate)**, or approved equal throughout the barrel area of the pipe. However, the lining in the bell area shall transition to a minimum thickness of 10 mils at the edge of the gasket socket. The 10 mil lining shall extend into the gasket socket area to a point where the gasket would overlap the lining when it is compressed due to pipe assembly during construction. The 10 mil lining shall also continue from inside the barrel area, around the spigot end of the pipe and along the outside of the pipe to a point where the center of the gasket of the next pipe section would contact the edge of the lining on the spigot end of the previous pipe section. The thickness of the linings shall be determined by using a dry film thickness magnetic gauge at four quadrants.

Each section of pipe and each fitting shall be tested and shall have an absence of holidays when tested by a suitable holiday detector. In all cases, the barrel area of the pipe shall be tested using a voltage of 7,500 volts and a dry conductive probe.

Holiday testing shall conform to ASTM G 62-87 and NACE Standards RP0274-74 and RP0188-90 (latest revision).

The pipe manufacturer shall be solely responsible for the quality of the lining and shall supply a certification as to compliance to the specification. The certification shall state specifically the following items:

1. All ductile sewer pipe and fittings have a protective lining of 40 mils (35 mils min.) in the barrel area, 10 mils in the bell area, and 10 mils minimum on the exterior of the spigot end.

2. Each section of pipe and each fitting have been tested for holidays utilizing a test voltage of 7,000 volts with a dry conductive probe in the barrel area and a test voltage of 67.5 volts with a wet sponge in both the bell area and the exterior of the spigot end, and no holidays were found.

3. The lining material used meets the current specifications and that the material was applied as required by the specification.

If the Contractor makes a field cut of the lined ductile pipe, the contractor shall comply with the recommendations of the pipe manufacturer in applying a field coating to the end of the pipe ends. In all cases, as a minimum, a 10 mils coating shall be applied to the pipe end and shall overlap the lining by four inches and extend around the pipe end and along the outside of the pipe a minimum of ten inches. The coating shall be allowed to dry before assembly. In addition, the overlapped surface of the lining shall

be roughed up to produce a 3 to 5 mil profile over the entire surface. The end result of this process is to secure proper adhesion of the field coating.

601.4.2 - Bedding

Special Bedding for Mainline Pipe
The Contractor shall utilize a cement-enriched slurry A.B.C. bedding for all mainline storm drain pipe. The slurry shall be per MAG Specification Section 728. The slurry shall be placed at a minimum from the outside bottom of the pipe to the springline of the pipe. The slurry shall have a minimum 8-inch slump, and a minimum of 25 psi compressive strength and a maximum of 100 psi based on a 28 day test. Slurry A.B.C. bedding is not required for connector pipes.

MAG Bedding
The initial granular bedding shall be a minimum of 6 inch thick and shall otherwise be in accordance with MAG Specifications. Bedding shall conform to section 601 of the MAG Specifications and shall be aggregate base, in accordance with Section 702, table 702.

Compaction of the bedding material shall be in accordance with MAG 601 and the following:

Bedding compaction should be accomplished by mechanical methods. Water jetting or flooding is prohibited.

601.4.3 - Backfill

After the pipe has been installed, the trench shall be backfilled using A.B.C. placed along both sides of the pipe in layers not exceeding six (6) inches in compacted depth. The compacted fill shall be brought up evenly on both sides of the pipe for the full length of pipe. Each layer shall be thoroughly compacted with mechanical tampers or vibrators in conformance with Section 601, Type III of the Standard Specifications.

Compaction of the backfill material shall be in accordance with MAG 601 and the following:

Backfill compaction should be accomplished by mechanical methods. Water jetting or flooding of loose, dumped backfill is prohibited.

The Contractor shall excavate holes in the compacted bedding and backfill material to the depths, and at the locations, designated by the Engineer. As determined by the Engineer, these holes shall be of such size as to allow the required density testing to be performed in a safe manner. This shall include shoring or any other trench wall support measures required by OSHA.

Slurry Alternate: At his option, the Contractor may utilize a cement-enriched slurry A.B.C. backfill for the precast concrete pipe. The slurry A.B.C. will consist of 1 bag of portland cement per cubic yard of A.B.C. The slurry shall be placed at a minimum from the outside bottom of the pipe to the springline of the pipe. The slurry must have a minimum of an 8 inch

slump. The slurry shall meet a minimum of 40 psi compressive strength at 7 days.

No separate measurement or payment shall be made for excavation and backfilling of the storm drain; the cost thereof, shall be included in the price bid for construction or installation of the storm drain pipe to which such work is incidental or appurtenant. Excavation shall be in accordance with MAG Standard Specifications and details, and the details shown in the plans. Backfill and excavation shall include the cost of all materials, labor and equipment to furnish, place and compact backfill to the roadway surface.
Backfill shall be placed to a minimum depth of thirty (30) inches above the top of the pipe before power operated hauling or rolling equipment is used over the pipe.

The maximum equipment loading allowed over the pipe shall be HS-20 loading (16,000 pound wheel load) in accordance with the "Standard Specifications for Highway Bridges", AASHTO Thirteenth Edition, 1983. Construction equipment that exerts a larger load on the top of the pipe shall not be allowed to travel over the pipe at any time, until a method for protecting the pipe from the larger load is approved by the Engineer.

601.6 - Payment

Pipe plugs and permanent pipe supports shall be paid for at the unit price bid for each unit installed regardless of dimensional or other differences occurring within particular type. The unit price bid shall be compensation in full for furnishing and placing pipe plugs and permanent pipe supports, including brick work, concrete, reinforcing steel, forming, vibrating, grouting, curing and any required earthwork. No pay item shall be included in the proposal for trench excavation, backfilling and compaction, the cost being considered incidental to the relevant items in the Bid Schedule for Bid Items 610, 615, and 618.

SECTION 602 ENCASEMENT OF WATER OR SEWER BY JACKING OR TUNNELING OPERATION

602.3 - Jacking Operation
Replace this subsection with the following paragraphs:

Casing and pipeline installations should be accomplished by dry boring, tunneling, jacking, or other approved methods. Jacking or tunneling construction methods under tracks will be permitted only under direct supervision of a Railway Company Representative. Tunneling procedures and equipment, as well as structural design, must have Railway Company approval prior to starting any work on Railway Company property. Generally, jacking or tunneling shall not be considered where less than six (6) feet of cover exists or where excessively sandy, loose or rocky soil are anticipated.

Rail elevations over the work must be monitored at intervals prescribed by the Railway Company to detect any track movement. Movements of over 1/4" vertically shall be immediately reported to the Railway Company. Due to the danger to rail traffic that is caused by only small amounts of track movement, Railway Company forces may have to be called to surface the track several times.

The following requirements shall apply to these construction methods:

1. The use of water under pressure (jetting) or puddling will not be permitted to facilitate boring, pushing or jacking operations. Some boring may require water to lubricate cutter and pipe and under such conditions, is considered dry boring.

2. Where unstable soil conditions exist, boring or tunneling operations shall be conducted in such a manner as not to be detrimental to the railroad being crossed.

3. If excessive voids or too large a bored hole is produced during casing or pipeline installations, or if it is necessary to abandon a bored or tunneled hole, prompt remedial action should be taken by the utility company.

4. All voids or abandoned holes caused by boring or jacking are to be filled by pressure grouting. The grout material should be a sand cement slurry with a minimum of two (2) sacks of cement per cubic yard and a minimum of water to assure satisfactory placement.

5. The hole diameter resulting from bored or tunneled installations shall not exceed the outside diameter of the utility pipe, cable or casing (including coating) by more than one and one-half (1½) inches for pipes with an inside diameter of twelve (12) inches or less, or, two (2) inches on pipes with an inside diameter greater than twelve (12) inches.

6. Pits for boring, tunneling or jacking should not be permitted within twenty five (25) feet of the track, or closer to the track than the toe of fill slopes in fill sections or toe of shoulder slopes in ditch sections when pipes are allowed on the railroad property.

SECTION 610 - WATERLINE CONSTRUCTION AND RELOCATION

The following paragraphs are in addition to the requirements of the Standard Specifications:

610.1 - Description

This work entails the following:

1. Removal of a 4 inch CIP that parallels the dual 48 inch Storm Drain and the construction of a new 4 inch waterline within the right-of-way of Jackson Street.

2. From Jackson Street to Madison Street a 2 inch waterline shall be removed and a new 2 inch waterline shall be constructed within the right-of-way of Mohave Street.

3. Just west of Adams Street a 1 inch waterline shall be removed and a new 1 inch waterline shall be constructed within the right-of-way of Mohave Street.

610.3 - Materials

Materials for new waterline construction and/or replacement shall be cast iron or ductile iron, in accordance with Section 610.3.

610.9 - Connection to Existing Mains

In the event of an unforeseen conflict between the storm drain construction not detailed on the plans and an existing waterline or as directed by the plans, the Contractor shall vertically and/or horizontally realign the waterline in accordance with MAG Standard Detail 370 and Section 610 of the MAG Standard Specifications.

In the event of ACP or plastic waterlines crossing over the storm drain construction, the Contractor shall replace the waterline with DIP in accordance with Section 610 of the MAG Standard Specifications: as modified herein.

The new waterline construction shall include, but not be limited to the following: excavation, backfill, compaction, pipe, fitting, offsets, couplings, sleeves, blocking, joint restraints, and hardware. The new waterline shall be visually inspected for leaks under line pressure prior to backfilling.

The Contractor shall arrange with the Town of Wickenburg to have the line shut down in order to perform this work. At no cost to the Contractor, representatives of the Town of Wickenburg Water Department will take the line out of services, provide necessary valve cut-ins, and flush the line prior to placing it back in service. The contractor shall notify the Town of Wickenburg prior to shut down of water lines.

All salvaged waterline valves shall be delivered to the Town of Wickenburg.

610.10 - Meter Service Connections

Direct taps will not be allowed on pipes less than 6 inches or for water service connections larger than 1 inch.

The Contractor shall reconnect existing water service lines as shown on the plans in accordance with Detail P-1342. The Engineer will determine when the existing lines are unsatisfactory and must be replaced. Generally, existing copper in good condition will be relocated.

Bedding and backfill shall be full depth aggregate base course. Payment for furnishing and compacting the aggregate base course shall be included in the bid item for relocating existing water services.

The water service shall include, but is not limited to the following: locating the present tap,

trenching, bedding, backfilling, furnishing and installing new service pipe, new appurtenant fittings, new curb stop and new meter coupling. The existing tapping saddle and corporation stop shall remain, but the Contractor shall not use any other salvaged service connection components. In the event there is no tapping saddle, the Contractor shall install one. The cost of the saddle and reinstallation of the corporation stop shall be considered incidental to the water service replacement.

The Contractor shall schedule his work so that no open trenches are left overnight.

Materials and fittings for water service connections shall conform to MAG Section 754. No salvaged service connection components shall be used. Joints in the copper tubing shall be made by the use of approved fittings, properly soldered or by means of approved compression fittings such as flared joints or pack joints.

Any water meter boxes and/or covers damaged by the Contractor during course of construction shall be replaced in kind at his expense.

When it becomes necessary to shut down existing water mains and services to conduct replacements, no main shall be left out of service for more than one (1) hour and no individual service will be disrupted for more than five (5) continuous hours. No main valves shall be operated without the approval of the Town of Wickenburg. Shutdowns will not begin before 8:00 a.m. and will not extend past 4:00 p.m.

When it becomes necessary to shut down an existing water service in order to construct a replacement, it shall be the Contractor's responsibility to notify all customers in advance that the water service will be turned off. The customers shall be notified in writing at least 24-hours in advance and also verbally the day the shutdown will occur. Initial notification shall include the reason for the shutdown, the date, the time and duration the water service will be shut off. A copy of the notification shall be given to the Engineer.

When any construction encroaches into an improved yard area, in or outside the right of way, the Contractor shall leave these areas in as good a condition or better after work is completed. All sprinkler systems disturbed during construction, shall be restored to an operational system covering the same area as before.

Measurement for extending and/or replacing water services will be made to the nearest linear foot from the point of connection to the existing line to the curb stop.

> Payment for extending and/or replacing water services will be made at the unit price bid per linear foot under the proposal items "WATER SERVICE (3/4-INCH AND 1-INCH)".

610.18 - Measurement and Payment

Measurement for vertical waterline realignments shall be by each, of the completed item in

place within the limits shown on the plans, inclusive of all fixtures and fittings, tapping sleeves, mechanical joints, strapping and thrust blocks necessary to connect to the existing waterline.

Payment for waterline realignments shall be made at the unit price bid per each for Bid Item 610-1. Such payment shall be full compensation for furnishing and installing the connections to the existing waterline, complete in place and all fittings, cost of labor, excavation, removal of obstructions, shoring, bracing, bedding, backfilling, compaction, testing, and all other work not specifically covered that is incidental.

Measurement of the pipe shall be by the linear foot of pipe installed, inclusive of all fixtures and fittings, tapping sleeves, mechanical joints, strapping and thrust blocks necessary to connect to the existing waterline. Measurement shall be to the nearest 0.1 foot.

Payment for new waterline construction shall be made at the unit price bid per linear foot for Bid Items 610-2, 610-3, and 610-4. Such payment shall be full compensation for furnishing and installing the connections to the existing waterline, complete in place and all fittings, cost of labor, excavation, removal of obstructions, shoring, bracing, bedding, backfilling, compaction, testing, and all other work not specifically covered that is incidental.

Measurement for reconnecting water services will be made to the nearest linear foot from the point of connection to the existing line to the curb stop.

Payment for extending and/or replacing water services will be made at the unit price bid per linear foot under the proposal items "WATER SERVICE (3/4-INCH AND 1-INCH)".

SECTION 615 - SEWERLINE CONSTRUCTION

In addition to the requirements of the Standard Specification:

615.1 - Description

This work entails the following:

1. Removal of a 10 inch sewerline and manhole at he south corner of Navajo Street and Jackson Street and the construction of a new 10 inch sewerline with manholes.

2. The construction of a 4 inch sewerline between Adams Street and Jefferson Street and provide sewer taps for the property owners on the south side of Mohave Street.

3. Removal of a 8 inch abandon sewerline from Jackson Street to Jefferson Street.

The work under this section shall consist of furnishing and installing Vitrified Clay Pipe at the locations and to the grades and slope indicated on the plans and shall conform to Section 743 of the Standard Specifications.

615.13 - Measurement and Payment

Measurement for sewerline construction shall be by the lineal foot for the completed bid item in place within the limits shown on the plans.

Payment for the sewerline construction shall be made at the contract unit price per lineal foot for Bid Item 615. Such payment shall be full compensation for furnishing and installing the connections to the existing sewerline, complete in place and all fittings, cost of labor, excavation, removal of obstructions, shoring, bracing, bedding, backfilling, compaction, testing, and all other work not specifically covered that is incidental. No separate measurement will be made for the removal of the existing 10 and 8 inch sewerlines. The cost being considered included under Section 350 - Removal of Existing Improvements.

SECTION 618 - STORM DRAIN CONSTRUCTION

In addition to the requirements of the Standard Specifications:

618.1 - Description

The work under this section shall consist of furnishing and installing Reinforced Concrete Pipe (RCP) at the locations and to the grades and slopes indicated on the plans. Storm drainage for this project entails dual 48 inch reinforced concrete pipe. Boring and Jacking is required at the location of the Rail Road.

618.2 - Materials

All storm drain pipe shall be constructed from reinforced concrete pipe manufactured in accordance with ASTM C-76, Class III.

618.3 - Construction Methods

Excavation, bedding, backfilling, and compaction or consolidation of backfill and bedding of trenches shall be accomplished in accordance with Section 601 of these Special Provisions.

The Contractor shall be responsible for all expenses, including, but not limited to, travel and per diem expenses, for required inspections by the Engineer and/or the cost of inspection and testing by an independent testing laboratory, as required by, and at the discretion of, the Engineer for any inspection of any pipe manufactured outside a fifty-mile radius from the Town limits of Wickenburg, Arizona.

All designs Shall consider the effects of earth load, live load, pipe weight, and water weight.

Corrections required on the shop drawings will not constitute valid reasons for delay in the project schedule.

618.5 - Measurement

Reinforced Concrete Pipe will be measured by the linear foot of pipe laid, for the completed item in place within the limits as shown on the plans, and measured along each of the pipes axis from the face of the inlet structure to the face of the outlet structure.

618.6 - Payment

Payment for the RCP storm drain pipe shall be at the contract unit price for Bid Item 618. Such payment shall be full compensation for furnishing and installing the storm drain pipe, complete in place and all fittings, cost of labor, excavation, removal of obstructions, shoring, bracing, bedding, backfilling, compaction, testing, and all other work not specifically covered that is incidental.

SECTION 625 - MANHOLE CONSTRUCTION

In addition to the requirements of the Standard Specifications:

625.1 - Description

The work under this section shall consist of furnishing, installing, and constructing Sewer Manholes, Drop Sewer Manholes, and Storm Drain Manholes as shown on the plans and in accordance with the Standard Specifications.

625.1.3 - Storm Drain Manhole

Construction shall consist of furnishing all materials and constructing storm drain manholes

complete in place, as detailed on the plans, including foundation walls, cast iron steps, manhole frames, covers, and any incidentals thereto, at locations shown on the plans.

625.2 - Materials

Bricks for manholes and plastic manhole steps shall not be permitted.

625.4 - Measurement

Measurement for sewer manholes, drop sewer manholes, and storm drain manholes shall be per each for the completed bid items in place within the limits shown on the plans.

625.5 - Payments

Payment for the sewer manholes shall be made at the contract unit price per each for Item 625-1 in the Bid Schedule. Such payment shall be full compensation for furnishing and installing the connections to existing sewerlines, complete in place and all fittings, cost of labor, excavation, removal of obstruction, shoring, bracing, bedding, backfilling, compaction, testing, and all other work not specifically covered that is incidental.

Payment for the drop sewer manhole shall be made at the contract unit price per each for Item 625-2 in the Bid Schedule. Such payment shall be full compensation for furnishing and installing the connections to existing sewerlines, complete in place and all fittings, cost of labor, excavation, removal of obstruction, shoring, bracing, bedding, backfilling, compaction, testing, and all other work not specifically covered that is incidental

Payment for the storm drain manhole shall be at the contract unit price per each for Item 625-3 in the Bid Schedule. Such payment shall be full compensation for furnishing and installing the connections to the new storm drain pipe, complete in place and all fittings, cost of labor, excavation, removal of obstruction, shoring, bracing, bedding, backfilling, compaction, testing, and all other work not specifically covered that is incidental.

SECTION 630 - TAPPING SLEEVE, VALVES AND VALVE BOXES ON WATERLINES

In addition to the requirements of the Standard Specifications:

630.1 - Description

All existing valves which are to be abandoned as a result of new waterline construction shall be salvaged, as directed by the Engineer.

All valve shutdown fees will be waived for work on water services and meters under these specification. When it becomes necessary to shut down existing water mains and services to construct replacements, no main shall be left out of service for more than one (1) hour, and no individual service will be disrupted for more than five (5) continuous hours. Main valves shall

be operated by representatives of the Town of Wickenburg Water Department. Shutdowns will not begin before 8:00 a.m. and will not extend past 4:00 p.m.

When it becomes necessary to shut down an existing water service in order to construct a replacement, it shall be the Contractor's responsibility to notify all customers, in advance, that the water service will be turned off. The customers shall be notified, in writing, at least 24 hours in advance and also, verbally, the day the shutdown will occur. Initial notification shall include the reason for the shutdown, the date, the time, and the duration the water service will be shut off. A copy of the notification shall be given to the Engineer.

During construction, the Contractor shall be responsible for maintaining continuous access to the valve operating nut for all water valves within the project boundaries. Failure by the Contractor to do so relieves the Town of Wickenburg Water Department of responsibility for any resultant claim and, also, shall be cause of canceling any request by the Contractor for water main shutdowns.

630.9 - Payment

No separate payment shall be made for this work as such; the cost thereof, shall be included in the price bid for construction or installation of the items to which such work is incidental or appurtenant.

Sections 204 and 210, and replace with suitable material from the excavation, as specified in Section 211.

Subsection 301.8 - Payment
Preparation of subgrade under the dam, earthfills, and roadway subgrade shall be paid for at the price bid per square yard.
ITEM 301 - SUBGRADE PREPARATION

SECTION 310 - UNTREATED BASE

Aggregate base course material for roadways shall conform to Section 310 of MAG Uniform Standard Specifications except as modified herein.

Subsection 310.3 - Deficiency:
Replace this section with the following:

When in the opinion of the Engineer there is reason to believe that a deficiency in thickness, or an excess of plasticity exists, additional aggregate base course material shall be placed. Such corrective measures shall be at no additional cost to the Owner.

Subsection 310.4 - Payment
Replace the section with the following:

Aggregate base course material shall be measured to the nearest linear foot of full depth (4-inch) base course material. Payment will made at the price bid per square yard, and shall be full compensation for the placement and compaction of the roadway base material complete.
ITEM 310 - AGGREGATE BASE COURSE (4-Inch)

SECTION 350 - REMOVAL OF EXISTING IMPROVEMENTS

Removals shall conform to Section 350 of the MAG Uniform Standard Specifications except as modified herein.

Subsection 350.1 - Description
Add the following:
The work under this section shall include abandonment of the existing 10-inch VCP sewerline and manholes as shown on the plans and as specified herein.

Subsection 350.2 - Construction Methods
Add the following:
Removal of Existing Sewer Pipe:

Where existing sewerline is to be removed, excavate soil over pipe and stockpile at least 10 feet away from side of trench. Remove pipe and underlying granular material down to undisturbed native soil. Use hand tools where required. Obtain Engineer's approval prior to placing concrete slurry. With top of slurry still soft, mix first lift of Zone 1 backfill. Place Zone 1 backfill

material as required for the overlying dam. Scarify sides of trench and mix with backfill. All pipe to be removed shall be disposed of offsite in accordance with state and local requirements.

Where sewerline is abandoned in place, install permanent concrete plugs in ends of pipe as shown on the plans. Plugs shall be watertight and capable of withstanding internal and external pressures without leakage. Backfill excavation with excavated material compacted to at least 93 percent relative compaction.

Manholes shall be abandoned as indicated on the plans. Remove the top 5 feet of manhole riser and cone. Backfill manhole with native soil moistened and tamped to minimize settlement. Manhole covers, cones, and castings shall be salvaged for reuse by the Town of Wickenburg. Contact the Town Public Works Department for pickup.

Subsection 350.4 - Payment

Payment for the abandonment of the existing 10-inch VCP sewer pipe and manholes as specified and shown on the plans, will be made at the lump sum price bid, and shall be full compensation for complete trench excavation, removal, backfill and other work as required.

ITEM 350 - REMOVE/ABANDON SEWER

350-1

Payement for Demolition and Removal of existing structures will be made at the lumpsum price bid Item 350-2 Remove/Existing Strusures

350.3 MISCELLANEOUS REMOVAL AND OTHER WORK:
Add the following:
(K) Demolish and remove the existing structures as shown on the demolition plan and transport all waste material to an approved dump site.

ITEM 405 - SURVEY MONUMENTS (MAG 120-2, Type B)

SECTION 420 - CHAIN LINK FENCE

Chain link fence shall conform to Section 420 of the MAG Uniform Standard Specifications except as modified herein:

Subsection 420.1 - Description

The work under this section consists of constructing new 6-foot chain link fence and gates on the perimeter of the concrete spillway and stilling basin as shown.

material as required for the overlying dam. Scarify sides of trench and mix with backfill. All pipe to be removed shall be disposed of offsite in accordance with state and local requirements.

Where sewerline is abandoned in place, install permanent concrete plugs in ends of pipe as shown on the plans. Plugs shall be watertight and capable of withstanding internal and external pressures without leakage. Backfill excavation with excavated material compacted to at least 93 percent relative compaction.

Manholes shall be abandoned as indicated on the plans. Remove the top 5 feet of manhole riser and cone. Backfill manhole with native soil moistened and tamped to minimize settlement. Manhole covers, cones, and castings shall be salvaged for reuse by the Town of Wickenburg. Contact the Town Public Works Department for pickup.

Subsection 350.4 - Payment

Payment for the abandonment of the existing 10-inch VCP sewer pipe and manholes as specified and shown on the plans, will be made at the lump sum price bid, and shall be full compensation for complete trench excavation, removal, backfill and other work as required.

ITEM 350 - REMOVE/ABANDON SEWER

SECTION 405 - MONUMENTS

Monuments shall conform to Section 405 of the MAG Uniform Standard Specifications except as modified herein.

Subsection 405.1 - Description

Add the following:

Survey monuments shall consist of brass caps in accordance with MAG Standard Details 120-1 and 120-2. Where survey monuments are placed on fill, installation shall be Type D. For monuments on concrete structures, the Contractor shall use the brass cap only (vertical rod not required). Place brass caps level and flush with the top of finished concrete surface. Contractor shall perform level survey within 10 days of completing installation of markers to nearest 0.01 foot using project benchmark. Survey notes shall be provided to Engineer.

Subsection 405.5 - Payment

Payment for survey monuments shall be made on the basis of the price bid for each.

ITEM 405 - SURVEY MONUMENTS (MAG 120-2, Type B)

SECTION 420 - CHAIN LINK FENCE

Chain link fence shall conform to Section 420 of the MAG Uniform Standard Specifications except as modified herein:

Subsection 420.1 - Description

The work under this section consists of constructing new 6-foot chain link fence and gates on the perimeter of the concrete spillway and stilling basin as shown.

SUMMARY OF CONSTRUCTION COST OPINION

PROJECT: CASANDRO WASH DAM

ITEM NO.	DESCRIPTION	UNIT	APPROX. QUANTITY	UNIT COST	EXTENTED AMOUNT
107	NPDES Permits	LS	1	10,000.00	10,000
201	Clearing and Grubbing	LS	1	13,488.60	13,489
202	Mobilization	LS	1	47,479.28	47,479
204	Excavation for Dam	CY	40,800	1.87	76,378
210	Borrow Excavation	CY	65,100	2.17	141,246
211-1	Fill Construction Zone 1 Matl	CY	85,500	2.68	228,926
211-2	Fill Construction Zone 2 Matl	CY	2,900	19.21	55,720
211-3	Finish Grading	AC	15	626.54	9,398
220	Riprap	CY	427	47.56	20,306
* 301	Subgrade Preparation	SY	14,925	0.79	11,829
310	Aggregate Base Course (4-inch)	SY	3,525	1.70	5,984
350 -1	Remove & Abondon Sewer	LS	1	6,203.49	6,203
405	Survey Monuments	EA	14	214.20	2,999
420	Chain Link Fence (6-foot)	LF	360	14.56	5,241
421	Wire Fence (4-foot)	LF	3,325	5.68	18,876
430	Landscaping	AC	15	1,242.75	18,641
505-1	Concrete Spillway & Stilling Bsn	CY	860	317.87	273,365
505-2	Inlet/Outlet Structure	CY	26	685.28	17,817
505-3	Miscellaneous Concrete	CY	5	364.14	1,821
515	Sedimentation Markers	EA	2	187.43	375
615	Sanitary Sewer (12-inch)	LF	1,442	43.81	63,174
618-1	Reinforced Conc Pipe (36-inch)	LF	148	114.89	17,003
618-2	PVC Drain Pipe (8-inch)	LF	365	26.30	9,598
621	CMP Culvert (24-inch)	LF	88	22.38	1,970
625-1	Stnd Manhole (MAG 420)	EA	3	2,677.50	8,033
625-2	Drop Manhole (MAG)	EA	1	3,748.50	3,749
635-1	Drain Pipe System (4-Inch)	LF	425	4.92	2,091
635-2	Drain Pipe System (12-Inch)	LF	260	14.89	3,872

350-2 Remove Existing Structures 2 LS

TOTAL	1,075,584

waterman INDUSTRIES, INC.

P.O. BOX 458 • EXETER, CALIFORNIA 93221
PHONE (209) 562-4000 • FAX (209) 562-2277

RED TOP WATER CONTROL GATES, VALVES and EQUIPMENT

WATER CONTROLS DIVISION
25500 Road 204
Exeter, California 93221

FOUNDRY DIVISION
515 South G Street
Exeter, California 93221

PATTERN DIVISION
130 East Maple
Exeter, California 93221

January 18, 1996

Contractors/Engineers
1402 So. 27th Avenue
Phoenix, AZ 85009

Reference: Wickenburg, AZ
PO#: 7305
Quote #: WQ95-D-272
Waterman Job #: B-8373

Gentlemen,

This is to advise you and the engineer of areas where our submittal drawings and proposed equipment deviate from the specification, where there is a possible problem, or where a clarification is required. Unless otherwise noted, hereafter, the proposed equipment meets the provision of the specification.

1. The specifications call for lifts to be sized for a 30 pound pull. As was stated in our bid proposal number WQ95-D-272, the lifts offered are sized for a 40 pound effort.

2. Please verify that the gate is to be non-self contained.

3. We request verification of the "H" (linear distance from gate center line to base of lift) dimension currently shown on our drawing as 1005 inches. Note that this dimension is critical and must be accurate to insure proper stem length and support. (1024) 1032

If you have any questions regarding this submittal, call me directly. In all future inquiries or responses, please reference our job #B-8373.

Sincerely,

Les Smutz
Project Manager
Waterman Industries, Inc.

cc: File

FLOOD CONTROL DISTRICT
RECEIVED
FEB 06 1996
ENGRG | R.E.M.
DEF | ASS.
ADMIN | INSPT.
FINANCE | F.A.E.
RMD | |
REMARKS

FLOOD CONTROL DISTRICT
OF
MARICOPA COUNTY

Interoffice memorandum

Date: MAR.15, 1996
TO: MAL
FROM: KVH
SUB: SLIDE GATES, CASANDRO WASH DAM

I spoke to Les Smutz, of waterman Industries, California, regarding the shop drawings of slide gate.

I mentioned to Les, that we are coming with a linear distance from gate center line to base of lift as 1032 inches, compared to his number of 1005 inches.He said there will be about 5 sections, they can go ahead with the first four sections and hold the last one for a field measurement and then complete.

Our drawing sht.11 shows the view of slide gate, with a rail on the top, which makes it as self contained.As the stem is so long, Les thinks we may not need a self contained one . Therefore a non -self contained gate is shown on the shop drawings.

FLOOD CONTROL DISTRICT OF MARICOPA COUNTY

PROJECT _____ PAGE _____ OF _____

DETAIL _____ COMPUTED _____ DATE _____

CHECKED BY _____ DATE _____

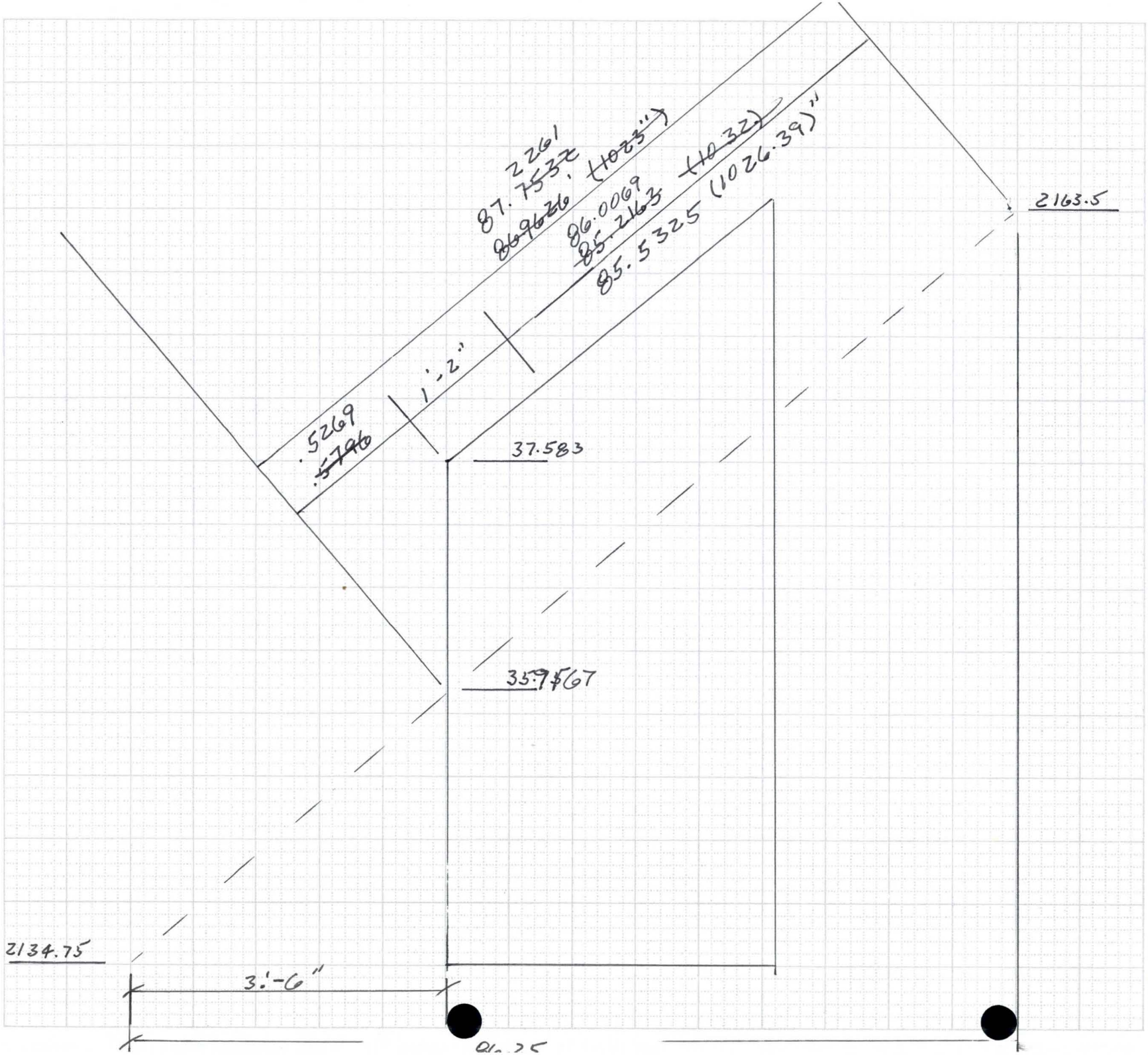

6910-153 4-90

FLOOD CONTROL DISTRICT OF MARICOPA COUNTY

PROJECT Cabandro Wash Dam PAGE ____ OF ____

DETAIL Slide Gates COMPUTED KVH DATE 3/96

CHECKED BY ____ DATE ____

25.917

2163.50 — Top of Dam
2134.75 — Base Elev.
28.75 × 3 = 86.25 = 86.25' × 12 = 1035"

~~(1-9) 3 = 5.25 × 12 = 63~~
~~(1-9") = 21~~

~~(1035 - 63 + 21) = 993"~~

~~Diff (1005 - 993) = 12"~~

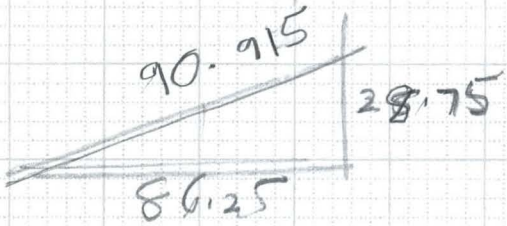

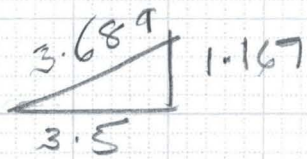

(90.915 - 3.689 - 1.167) = 86.059'
(Scal. 99) 1-2" Dim
Sht. 11
1032

Diff = 1032 - 1005 = 27"
Shop Dwgs

we are Coming up with about 27" Longer

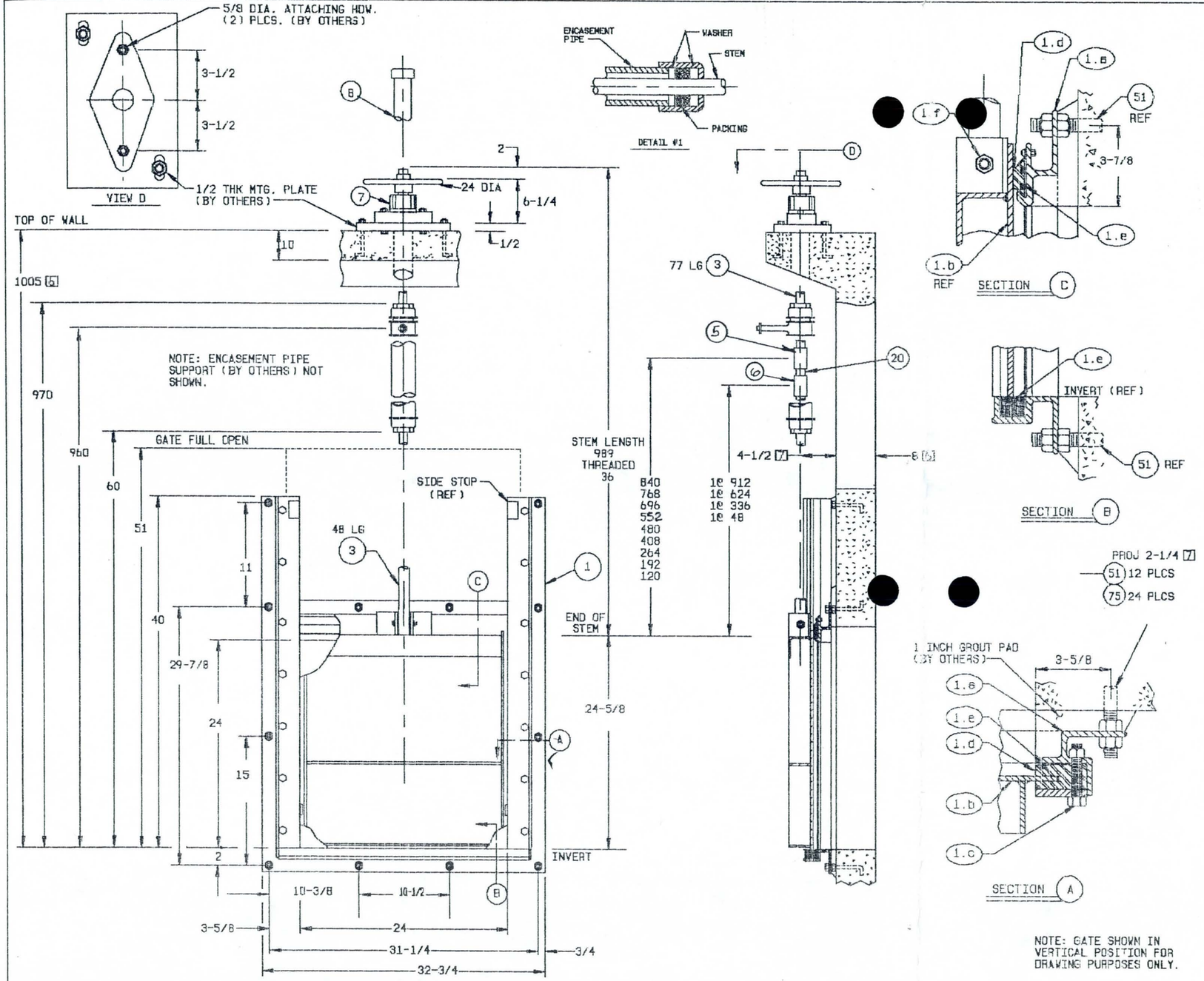

MATERIAL KEY	FINISH KEY	PAINT KEY
1.CAST IRON:ASTM A-126 CL. B 4.MANG. BRZ.:ASTM B-584 AL. C86500 9B.STN. STEEL:ASTM A-276 TY.316 9D.STN. STEEL:ASTM A-276 TY.316L 13.NEOPRENE RUBBER:ASTM D-2000 14.CLEAR PLASTIC BUTYRATE PIPE 15B.STN. STL.HDW.:ASTM F-593 & 594 TYPE 316 21.UHMW POLYETHYLENE 11.STEEL PIPE:ASTM A-53 TY E GR A	1. AS CAST 2. MILL 3. MACHINED 4. GALVANIZE-ASTM A-123 5. GALVANIZE-ASTM A-153 6. SEE PAINT KEY	6A STANDARD SHOPCOAT

ITEM DESCRIPTION	MATERIAL KEY	FIN KEY	PART NO.OR SIZE (FOR WATERMAN USE ONLY)	QTY/ GATE	TOTAL QTY
1. GATE ASSEMBLY	-	-	105359	1	1
a) FRAME WELDMENT	9B	2	105366	1	
b) COVER	9B	2		1	
c) ASSEMBLY HARDWARE	15B	2	1/2 NC	A/R	
d) SEATS & GUIDE	21	2	105078 & 105075	--	
e) SEAT & FLUSH SEAL	13	2	105160 & 105073	--	
f) STEM BOLT & NUT	15B	2	3/4 NC X 3-1/2 LG	1ea	
g) RETAINER BAR	9B	2	105074	1	
3. STEM (TOP & BOTTOM)	9B	2,3	1-1/2 DIA., 4TPI. LH [5]	1	1
4. LIMIT NUT	1	5	1-1/2 DIA., 4TPI. LH STD	1	1
5. STEM SLEEVE	9B	2,3	2-1/4 O.D. X 4 LG	9	9
6. STEM COUPLING	9B	2,3	2-1/4 O.D. X 8 LG	4	4
7. LIFT ASSEMBLY	1,4	6A	TYPE 2AB	1	1
d) HANDWHEEL	1,11	6A	24 DIA.	1	
e) BASEPLATE	1	6A	W-2057	1	
8. STEM COVER	14	2	REF. 102786 (3in); 28 LG.	1	1
17. OIL SEAL ASSEMBLY	1,12,34	2,3	FOR 1-1/2 DIA STEM TO 2-1/2 DIA PIPE	1	1
18. ENCASEMENT PIPE	11	4	2-1/2 DIA SCH'L 40 PIPE	1	1
19. PIPE TEE	11	4	2-1/2 DIA X 2-1/2 TEE W/PLUG	1	1
20. EXTENSION STEM (MIDDLE)	7	-	1-1/2 DIA	1	1
51. ANCHOR BOLT	9B	2,3	1/2 NC X 10 LG.	12	12
75. HEX NUT	15B	2	1/2 NC	24	24

NOTES: UNLESS OTHERWISE SPECIFIED.
1. (GATE CAPACITY) MAX. SEATING HD.= 10 FT.: MAX UNSEATING HD.= 10 FT.
2. OPERATING HEAD FROM ℄: SEATING= 10 FT.: UNSEATING= 10 FT. [5]
3. LIFT CAPACITY @ 40 LBS. PULL = 3130 LBS.
4. TURN HANDWHEEL CCW TO OPEN (LOWER) GATE.
[5] 29° MODIFIED STUB ACME THREADS.
[6] CONTRACTOR TO VERIFY OR SUPPLY.
[7] DIMENSION INCLUDES 1 INCH FOR GROUT PAD.

(1) GATE REQ'D

REF PLAN SHEET 11

REF: CONTRACT FC-D 95-02
CASANDRO WASH DAM
WICKENBURG, ARIZONA

CH2M HILL ENGINEERS

24 X 24 WATERMAN MODEL
SS-211
SLIDE GATE

FOR: CONTRACTORS/ENGINEERS
1402 SO. 27TH AVE
PHOENIX, AZ 85009

P.O. 7305

REV.NO.	DATE	BY	JOB NO.	PROJECT MANAGER
			B-8373-2	LES
REV.NO.	DATE	BY	QUOTE NO.	QUOTE ITEM NO.
			WQ95-D-272	1
REV.NO.	DATE	BY	DRAWN BY	CHECKED BY
			RS	SH
REV.NO.	DATE	BY	SCALE	DATE
			NONE	01-10-1996
REV.NO.	DATE	BY	DRAWING NO.	
			RB-96-0030	

WATERMAN INDUSTRIES INC. EXETER, CALIFORNIA 93221

FLOOD CONTROL DISTRICT
of
MARICOPA COUNTY

Interoffice memorandum

DATE: MAY.1, 1996

TO: HNS

FROM: KVH

SUB: CASANDRO WASH DAM

Shop drawing of fabricated steel outlet pipe for Casandro Wash Dam submitted recently is O.K. and is in accordance with the contract drawings.

FLOOD CONTROL DISTRICT OF MARICOPA COUNTY

PROJECT Cosandro Wash Dam PAGE ___ OF ___

DETAIL Out Let pipe COMPUTED KNH DATE 4/96

Shop Dwgs CHECKED BY ___ DATE ___

PC MK – P1

C.C: $\left(36 + \frac{0.25}{2} + \frac{0.25}{2}\right)$

$= 36.25''$

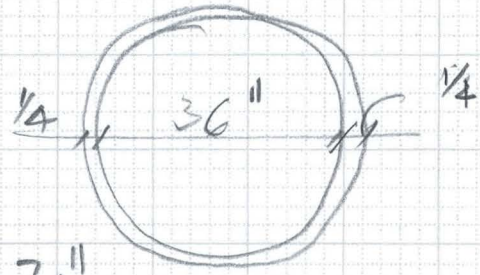

$\pi D = 3.14 \times 36.25$

Length $= 113.825 = 9'\,5\frac{7}{8}''$ Plate.

OK

PC MK P6

$\left(3\frac{3}{16} - \frac{1}{2} - \frac{1}{8}\right)$ $\left(\frac{8}{16} + \frac{2}{16}\right) = \frac{10}{16}$

$\left(2\frac{19}{16} - \frac{10}{16}\right) = 2\frac{9}{16}''$

$\left(36\frac{1}{2}'' + 2\frac{9}{16} + 2\frac{9}{16}\right) = \left(36\frac{1}{2}'' + 5\frac{1}{8}\right) = 41.625''$

$\pi D = (3.14 \times 41.625) = 130.702'' = 10'\text{-}10\frac{3}{4}''$

OK

PC MK. P4

$3\frac{3}{16} = \begin{array}{r} 36.50 \\ 3.19 \\ \hline 39.69'' \end{array}$

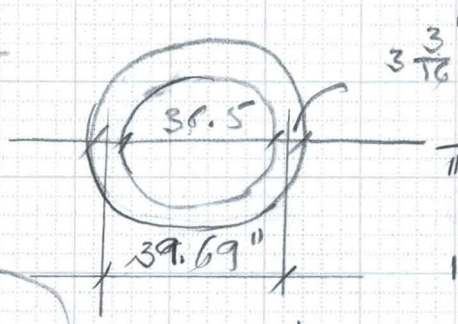

$\pi D = 3.14 \times 39.69$

$= 124.63$

$10' - 120$

$4.63'' = 4\frac{5}{8}''$

Length of P4 $= 10'\text{-}4\frac{5}{8}''$

PC MK. P5

$\begin{array}{r} 36.5 \\ 2.69 = 2\frac{11}{16}'' \\ 2.69 \\ 3.00 \\ \hline 44.88 \end{array}$

$3\frac{3}{16} - \frac{1}{2}'' = \left(2\frac{19}{16} - \frac{8}{16}\right)$

$= 2\frac{11}{16}$

$\pi D = 3.14 \times 44.88 = 140.92''$

$11' - 132$

$8.92 = 11'\text{-}8\frac{15}{16}''$

Length of P5 =

6910-153 4-90

FLOOD CONTROL DISTRICT
of
MARICOPA COUNTY

Interoffice memorandum

DATE: APR.18, 1995

TO: HNS

FROM: KVH

SUB: CASANDRO WASH DAM

Shop drawings of Casandro Wash Dam CR-1 thru CR-4 , which consists of Spillway details, Stilling basin, Inlet and Outlet structure have been reviewed and are O.K.

Shiva, if you have any of your own review comments on these shop drawings,we can discuss about those comments.

FLOOD CONTROL DISTRICT
of
MARICOPA COUNTY

Interoffice memorandum

DATE: APR.18, 1995

TO: HNS

FROM: KVH

SUB: CASANDRO WASH DAM

Shop drawings of Casandro Wash Dam CR-1 thru CR-4 , which consists of Spillway details, Stilling basin, Inlet and Outlet structure have been reviewed and are O.K.

Shiva, if you have any of your own review comments on these shop drawings,we can discuss about those comments.

FLOOD CONTROL DISTRICT OF MARICOPA COUNTY

PROJECT Cabandro Dam PAGE ___ OF ___

DETAIL Shop Drwgs. COMPUTED KVH DATE 4/96

CHECKED BY ___ DATE ___

40 - 16 = 24

2163.94
2152.80
11.14 x 3 = 33.42' + 6 = 40'

40 - 16 = 24

Tan 30 = x / 34, x = 20, (80 + 20 x 2) = 120

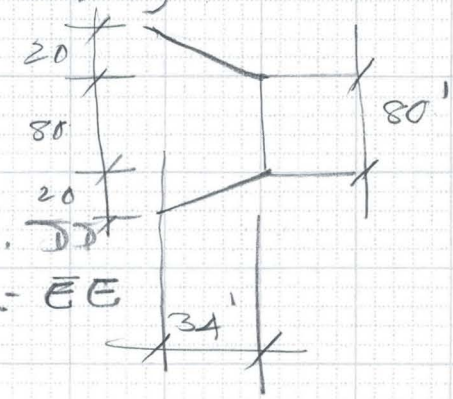

(80 - 17) = 63

2155.00
2124
31 x 3 = (93' - 6) = 87' Wall Sect. DD
36 Wall Sect. EE

6910-153 4-90

FLOOD CONTROL DISTRICT OF MARICOPA COUNTY

PROJECT _____ PAGE ____ OF ____

DETAIL _____ COMPUTED _____ DATE ____

CHECKED BY _____ DATE ____

$p\gamma_1 = 0.12 \times 0.33 \times 11 = 0.44$

Surch $= 0.12 \times 0.33 \times 2 = 0.1$

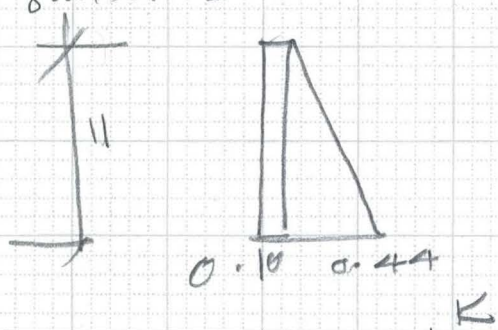

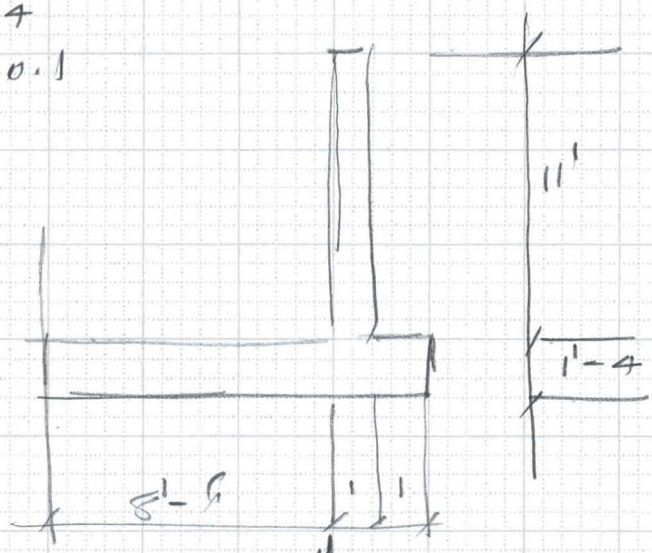

$P_1 = 0.1 \times 11 = 1.1^K$

$P_2 = \frac{0.44}{2} \times 11 = 2.42^K$

$M = (1.1 \times 5.5) + (2.42 \times \frac{11}{3}) = 14.9^{K'}$

$d = (12 - 2 - 0.5) = 9.5''$

$A_s = \frac{14.9 \times 12}{24 \times 0.88 \times 9.5} = 0.89 \text{ sq}''$

@ 80 pcf Submerged Soil

$p\gamma = (80 \times 11) = 0.88$

$P = (\frac{0.88}{2} \times 11) = 4.84^K$

$M = (4.84 \times \frac{11}{3}) = 17.7$

$A_s = \frac{17.7 \times 12}{(\quad)} = 1.1 \text{ sq}''$

#8 @ 6" = 1.58

#6 @ 6 = 0.88

$H_t = 13'$

$p\gamma = 80 \times 13 = 1040$

$P = (\frac{1.04}{2} \times 13) = 6.76^K$

$M = (6.76 \times \frac{13}{3}) = 29.3$

$d = (16 - 2 - 0.5) = 13.5$

$A_s = \frac{29.3 \times 12}{24 \times 0.88 \times 13.5}$

1.23

#8 @ 6"

6910-153 4-90

COPY

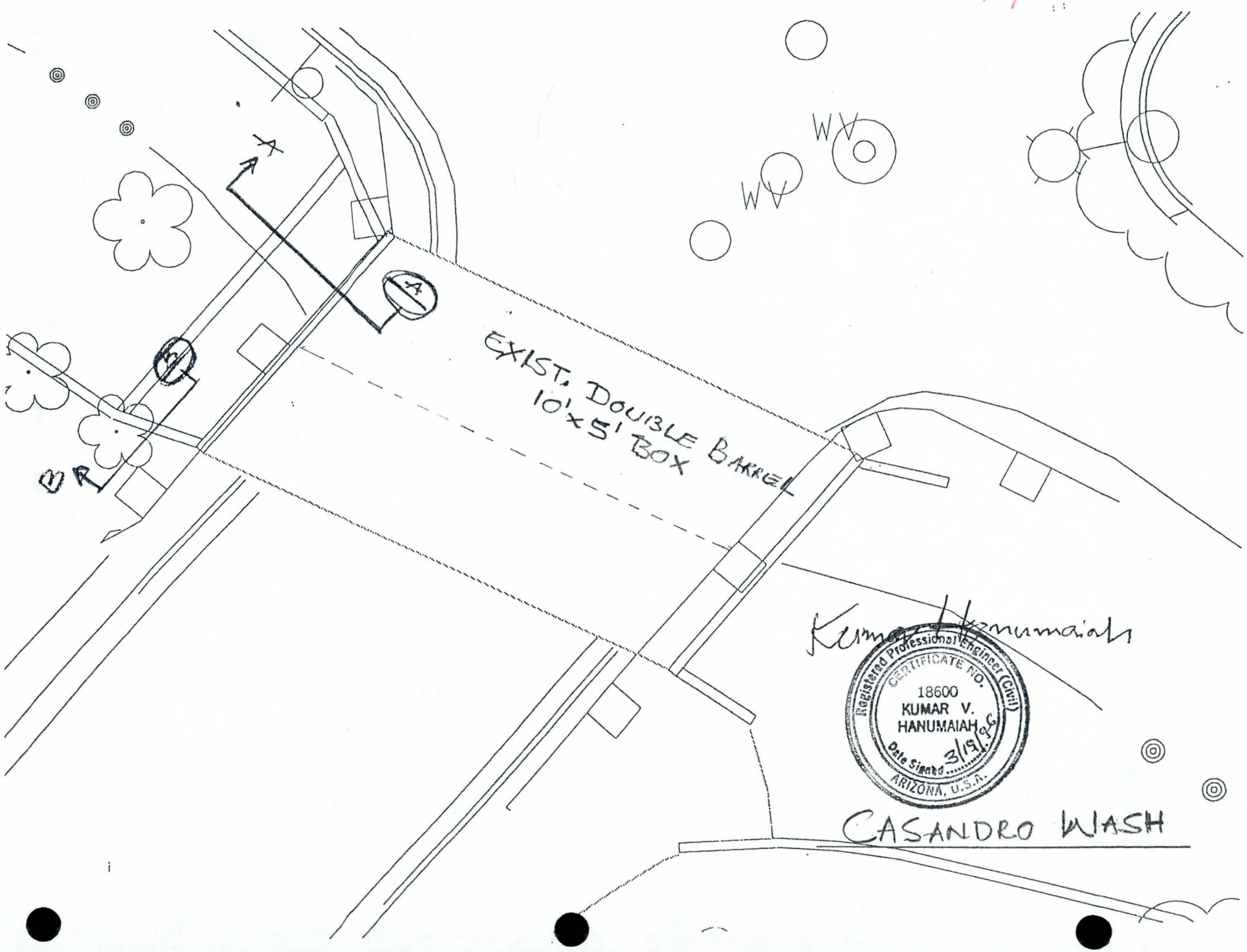
EXIST. DOUBLE BARREL
10'x5' BOX
CASANDRO WASH
Kumar Hanumaiah
Registered Professional Engineer (Civil)
CERTIFICATE NO.
18600
KUMAR V.
HANUMAIAH
Date Signed 3/19/96
ARIZONA, U.S.A.

FLOOD CONTROL DISTRICT OF MARICOPA COUNTY

PROJECT Casandra Nash PAGE 2 OF

DETAIL Wall & Slab COMPUTED KVH DATE 3/96

CHECKED BY DATE

General Notes

Concrete: f'_c = 3000 psi

Grade 60 Steel f_s = 24000 psi

All Reinf. Steel shall have 2" clear cover unless noted otherwise.

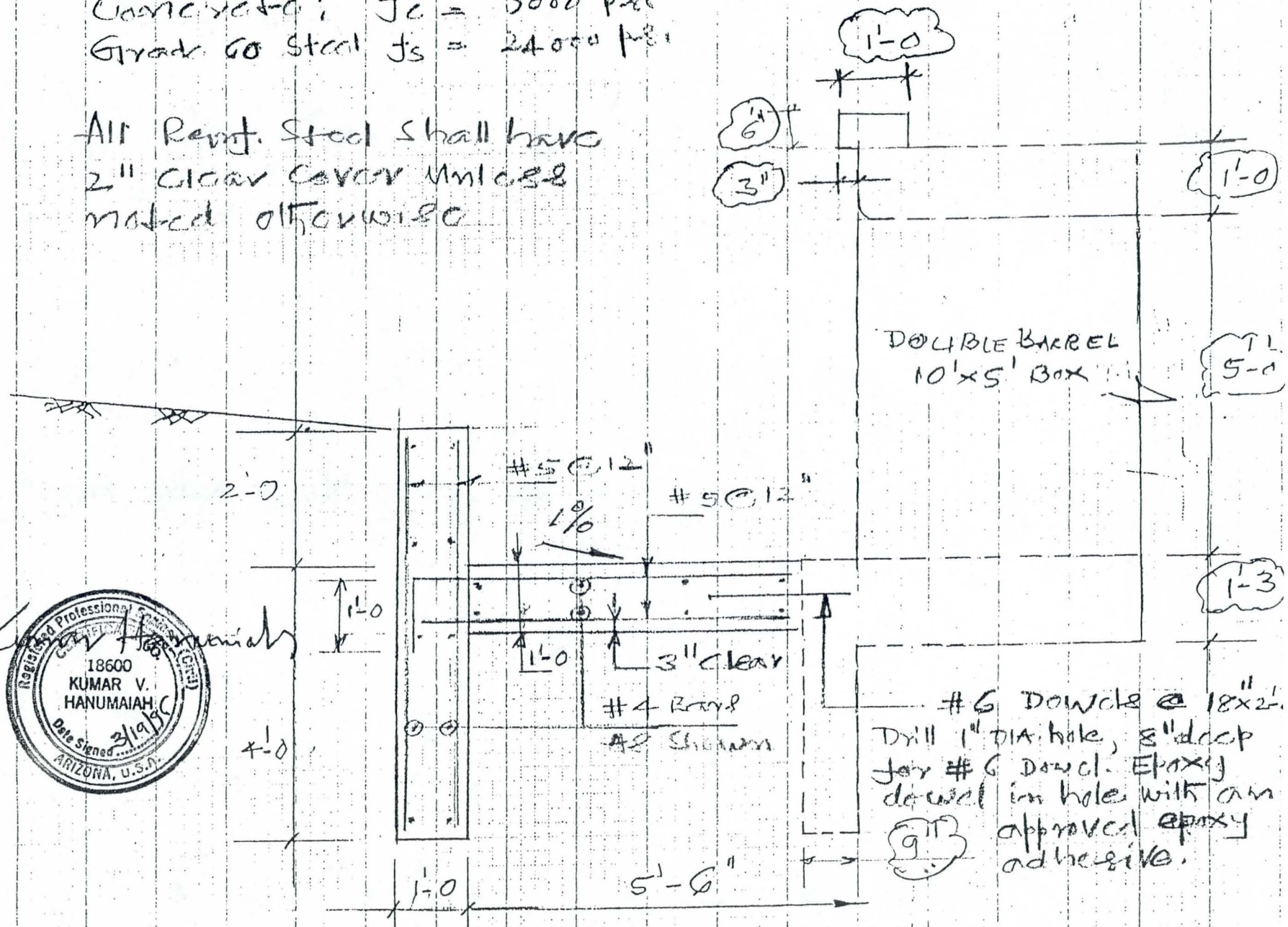

Registered Professional Engineer (Civil) 18600 KUMAR V. HANUMAIAH Date Signed 3/19/96 ARIZONA, U.S.A.

Kumar Hanumaiah

SECT. A-A

SCALE: 1/2" = 1'-0

FLOOD CONTROL DISTRICT OF MARICOPA COUNTY

7)

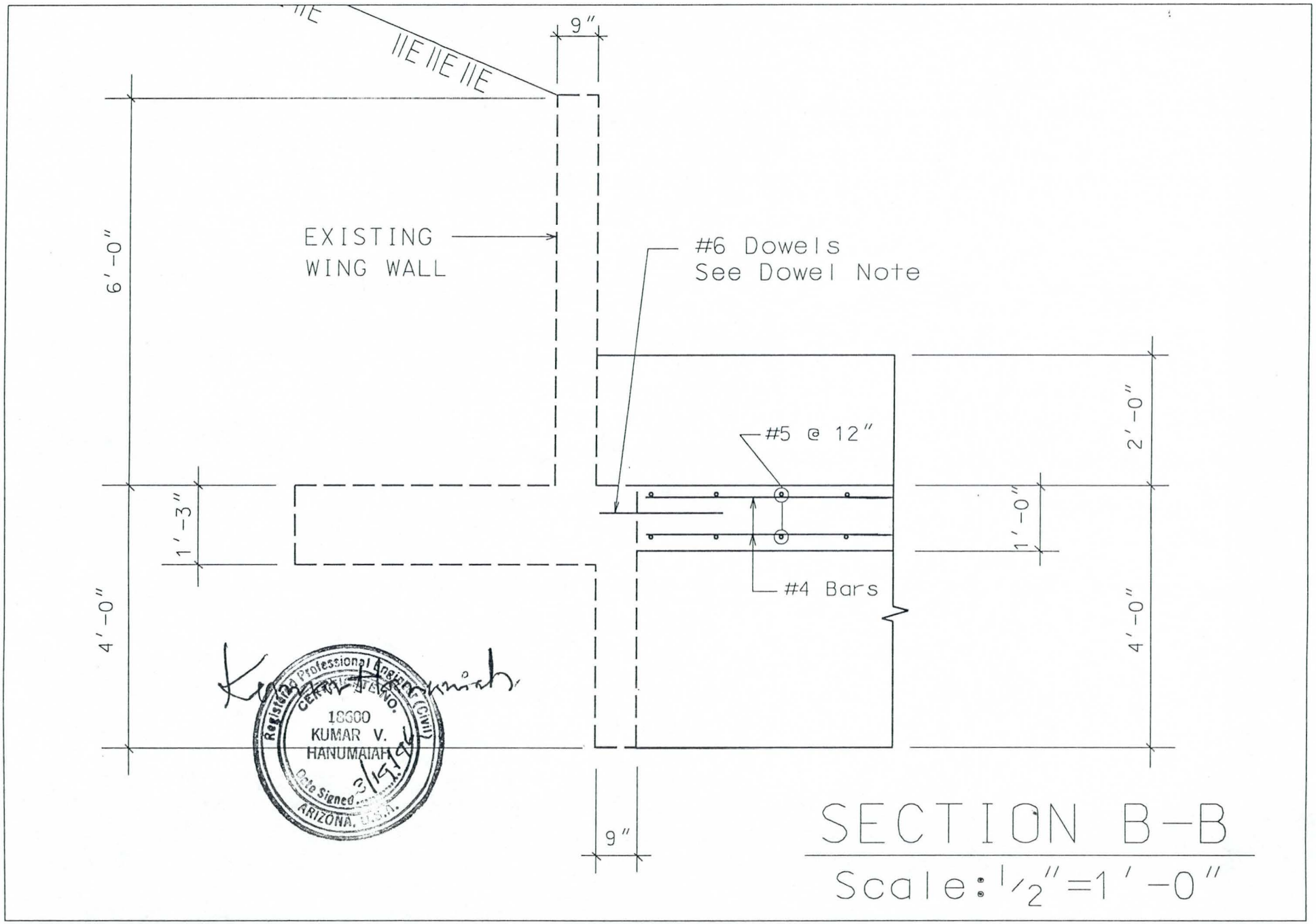

Kumar Hanumaiah

Registered Professional Engineer (Civil)
CERTIFICATE NO.
18600
KUMAR V.
HANUMAIAH
Date Signed 3/19/96
ARIZONA, U.S.A.

c:/practise.dgn Mar. 19, 1996 14:35:01

FLOOD CONTROL DISTRICT OF MARICOPA COUNTY

PROJECT Casandra wash PAGE 4 OF

DETAIL Out Fall Qtys COMPUTED KVH DATE 3/96

CHECKED BY DATE

Concrete Qtys:

wall: skew 15°, $X = \frac{20+3}{\cos 15}$ (Dble (10x5) wall thickness)

$= 23.8'$

$(6 \times 1.0 \times 23.8) = 142.8$ — 142.8

$\tan 25 = \frac{X_1}{4.75}$, $X_1 = 2.2$

$\tan 20 = \frac{X_2}{4.75}$, $X_2 = 1.7$

$W = (23.8 + 3.9)$

$= 27.7'$

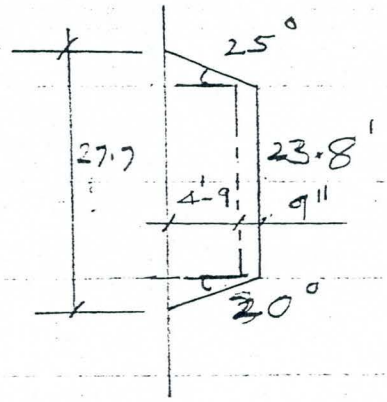

Slab: $\left(\frac{23.8+27.7}{2}\right) 4.75 \times 1.0 =$ 122.3

265.1 CY

$265.1 / 27 = 9.8$ CY

Say 10 CY

FLOOD CONTROL DISTRICT OF MARICOPA COUNTY

PROJECT Cassandra Wash PAGE 5 OF
DETAIL Ocr Fall COMPUTED KVH DATE 3/96
Qty's. CHECKED BY DATE

Reinf. Steel:

Wall

L = 5'-7, No = $\frac{24 \times 12}{12}$ = 25 Bars

(5.58 × 25) 2 × 1.043 = 291 lbs

#5 Bars

Both faces

Diff^n Bars: L = 24', No = 10

(24 × 10) × 0.668 = 160

#4 Bars

Slab: Top Bars: L = (4'-7) + 16" + 1'-0 = 6-7

No: (28 × $\frac{12}{12}$) = 29 Bars

(6.58 × 29) 1.043 = 199

Bottom Bars: L = (5-7) - 4" = 5-5

(5.42 × 29) 1.043 = 164

Diff^n Bars: L = 28' No = 8

(28 × 8) 0.668 = 150

964 lbs

#6 Dowels: L_1 = (24 + 7 + 7) = 38'

No = $\frac{38 \times 12"}{18}$ = 26 Bars

L = 2', (2 × 26) 1.502 = 78

1042 lbs

Wt/cyd = $\frac{1042}{9.8}$ = 106 lbs/cy

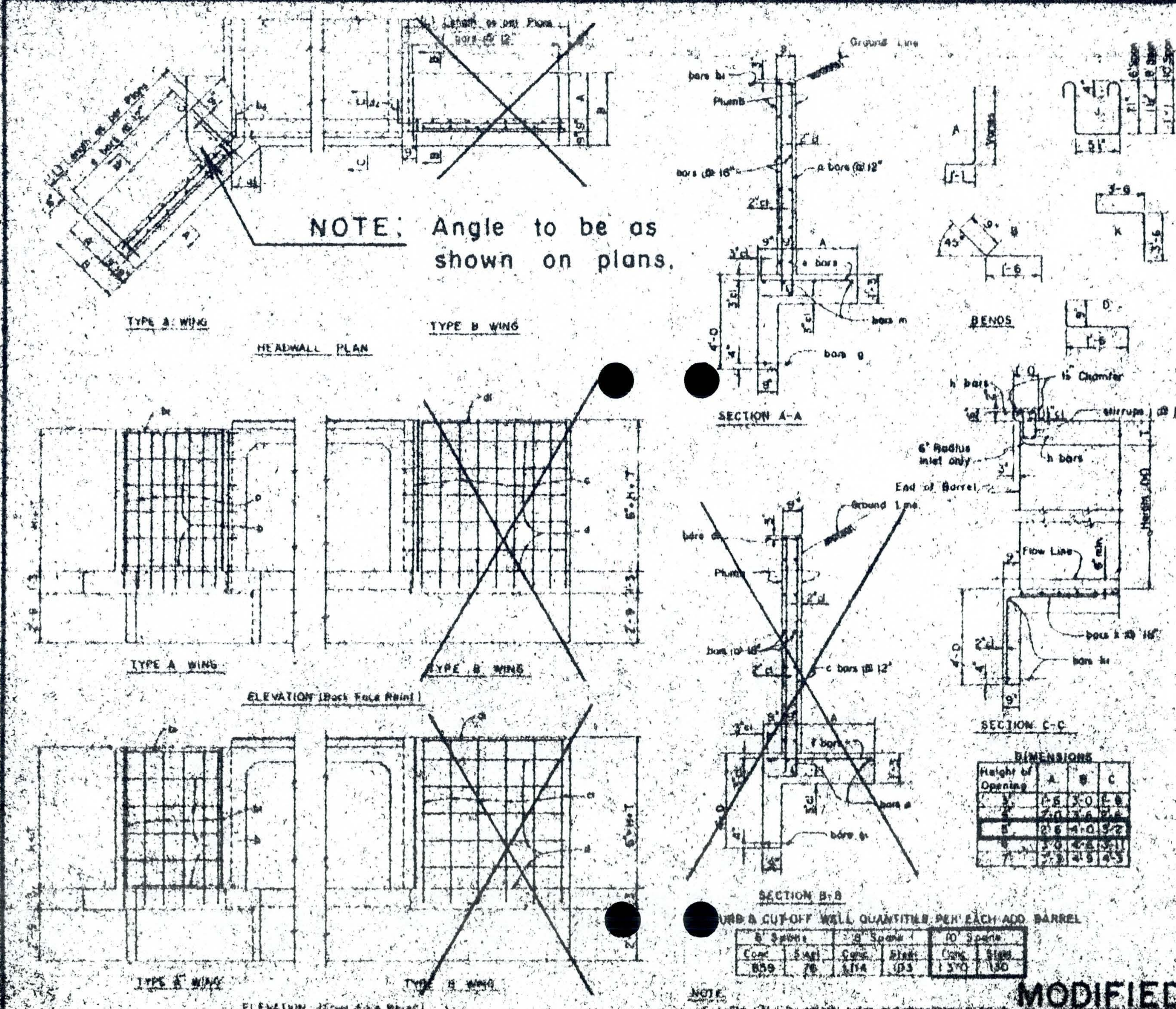

WINGS STEEL LIST (L = H + 2)

Mark	Type	3' Height No	Size	Lgth	4' Height No	Size	Lgth	5' Height No	Size	Lgth	6' Height No	Size	Lgth	7' Height No	Size	Lgth
TYPE A WING																
a	A	12	#5	5-6	14	#5	6-6	16	#5	7-6	18	#6	8-9	20	#7	9-6
a1	str	8	#4	4-6	8	#4	5-6	8	#4	6-6	10	#4	7-6	10	#4	8-6
b	L	8	✓	4-0	12	✓	5-0	12	✓	6-0	16	✓	7-0	20	✓	8-0
b1	L	4	#6	4-0	4	#6	5-0	4	#6	6-0	4	#6	7-0	4	#6	8-0
b2	B	6	#4	2-3	8	#4	2-3	8	#4	2-3	10	#4	2-3	12	#4	2-3
e	str	12	#5	2-6	14	#5	3-0	16	#5	3-6	18	#5	4-0	20	#5	4-3
g	B	2	#4	6-9	2	#4	7-9	2	#4	8-9	2	#4	9-9	2	#4	10-9
m	str	8	✓	5-0	8	✓	6-0	10	✓	7-0	10	✓	8-0	10	✓	9-0
TYPE B WING																
c	A	12	#5	6-0	14	#5	7-0	16	#5	8-0	18	#6	9-0	20	#7	10-0
c1	str	8	#4	5-0	8	#4	6-0	8	#4	7-0	10	#4	8-0	10	#4	9-0
d	L	8	✓	4-0	12	✓	5-0	12	✓	6-0	16	✓	7-0	20	✓	8-0
d1	L	4	#6	4-0	4	#6	5-0	4	#6	6-0	4	#6	7-0	4	#6	8-0
d2	D	6	#4	2-3	8	#4	2-3	8	#4	2-3	10	#4	2-3	12	#4	2-3
f	str	10	#5	2-6	12	#5	3-0	14	#5	3-6	16	#5	4-0	18	#5	4-3
g1	L	2	#4	6-3	2	#4	7-3	2	#4	8-3	2	#4	9-3	2	#4	10-3
n	L	8	✓	5-0	8	✓	6-0	10	✓	7-0	10	✓	8-0	10	✓	9-0

CURB & CUT-OFF WALL STEEL LIST

Mark	Type	Size	6' Spans 1 Barrel No	Lgth	○ No	◇ Lgth	8' Spans 1 Barrel No	Lgth	○ No	◇ Lgth	10' Spans 1 Barrel No	Lgth	○ No	◇ Lgth
TYPE A WING														
h	str	#6	4	7-0		6-8	4	9-0		8-9	4	11-3		10-10
i	J	#4	6	3-6	4		7	3-6	6		8	3-9	7	
k	K	✓	4	7-0	4		5	7-0	6		6	7-0	7	
h1	str	✓	2	4-6		6-8	2	6-9		8-9	2	9-0		10-10
TYPE B WING														
h	str	#6	4	7-0		6-8	4	9-0		8-9	4	11-3		10-10
i	J	#4	6	3-6	4		7	3-8	6		8	3-9	7	
k	K	✓	5	7-0	4		7	7-0	6		9	7-0	7	
h1	str	✓	2	7-3		6-8	2	9-3		8-9	2	11-6		10-10

○ Additional number of bars per each extra barrel
◇ Additional length of bars per each extra barrel

APPROXIMATE QUANTITIES*

Span	Height	Type A Wing Hdwl For L=H+2' Conc	Steel	Per each Add Ft Conc	Steel	Type B Wing Hdwl For L=H+2' Conc	Steel	Per each Add Ft Conc	Steel
6'	3'	4.18	297	.3149	19	4.32	308	.3310	20
	4'	5.52	375	.3655	23	5.60	382	.3819	23
	5'	7.07	456	.4164	26	7.07	467	.4329	26
	6'	8.86	635	.4673	33	8.75	802	.4838	34
	7'	10.58	864	.5087	41	10.42	886	.5231	43
8'	3'	4.47	319	.3197	19	4.61	336	.3382	20
	4'	5.80	397	.3666	23	5.88	405	.3851	23
	5'	7.35	477	.4176	25	7.37	494	.4340	26
	6'	9.14	658	.4685	33	9.04	679	.4849	34
	7'	10.88	868	.5096	41	10.75	913	.5295	43
10'	3'	4.61	344	.3190	19	4.94	358	.3346	20
	4'	6.13	423	.3660	23	6.21	441	.3854	23
	5'	7.66	503	.4210	25	7.69	527	.4373	26
	6'	9.46	683	.4721	33	9.39	712	.4886	34
	7'	11.19	911	.5129	41	11.09	948	.5290	43

*Includes curb and cut off wall quantities to ℄ of a single barrel.

DIMENSIONS

Height of Opening	A	B	C
3'	1-6	3-0	1-6
4'	2-0	3-6	2-6
5'	2-6	4-0	3-2
6'	3-0	4-6	3-11
7'	3-3	4-9	4-3

CURB & CUT-OFF WALL QUANTITIES PER EACH ADD. BARREL

6' Spans Conc.	Steel	8' Spans Conc.	Steel	10' Spans Conc.	Steel
.859	76	1.114	103	1.370	130

NOTE:
See Std. C-13.1 for general notes and miscellaneous details.

MODIFIED

STATE OF ARIZONA
DEPARTMENT OF TRANSPORTATION
DIVISION OF HIGHWAYS
STANDARD DRAWINGS

INLET OR OUTLET
LEVEL WINGS
HEIGHT 3' TO 7'

Design Approved: [signature]
Approved for Distribution: [signature]
7-76

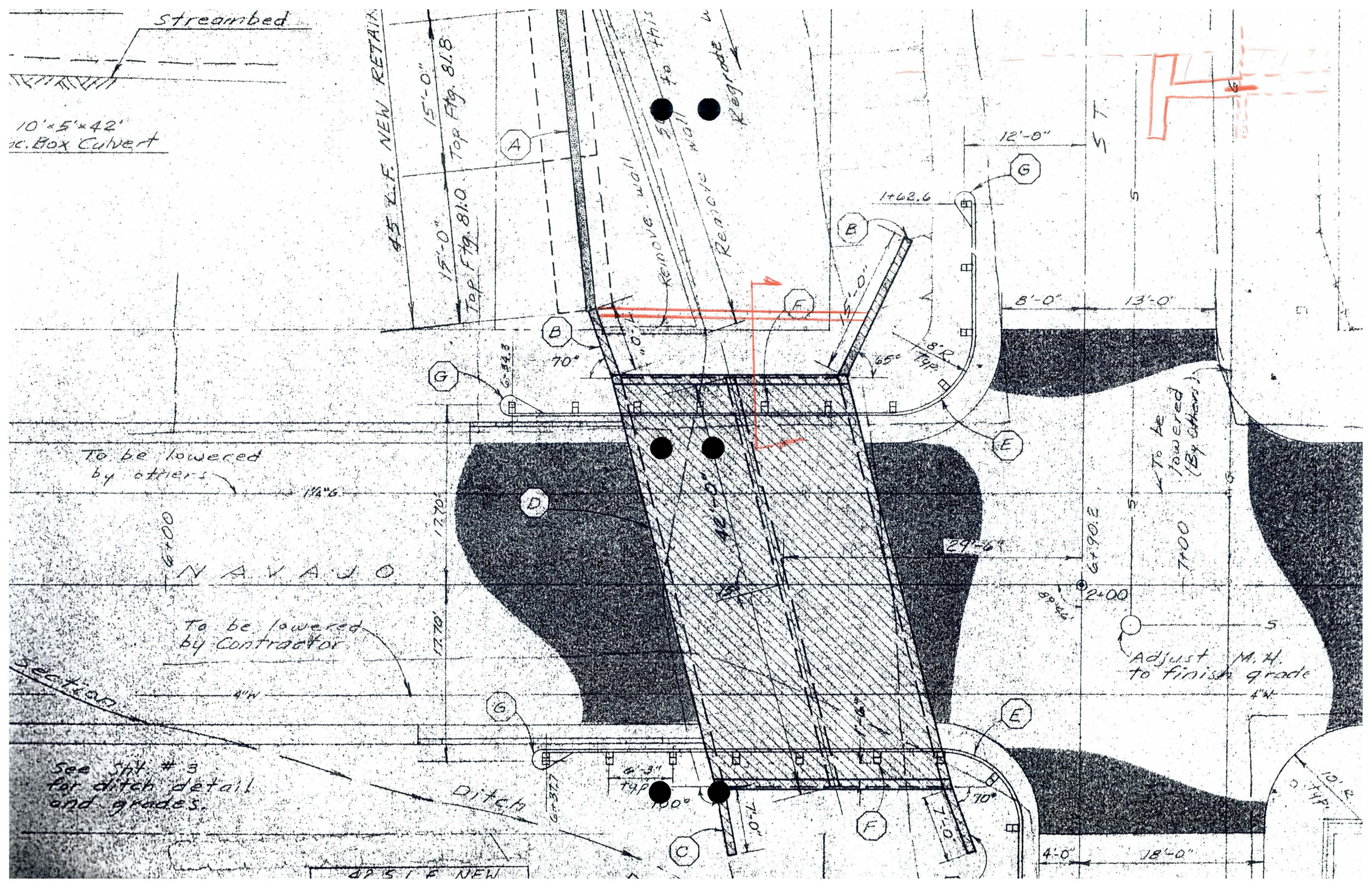
Streambed
10'×5'×42' Conc. Box Culvert
45 L.F. NEW RETAINING WALL
15'-0"
Top Ftg. 81.8
15'-0"
Top Ftg. 81.0
Remove wall
Remove wall to this grade
12'-0"
1+62.6
8'-0"
13'-0"
8' R Typ.
65°
70°
100°
To be lowered by others
To be lowered by Contractor
To be lowered (By Others)
6+00
7+00
2+00
NAVAJO
Adjust M.H. to finish grade
See Sht. #3 for ditch detail and grades.
Ditch
Section
46'-0"
29'-6"
7'-0"
4'-0"
18'-0"
10' R Typ.

1

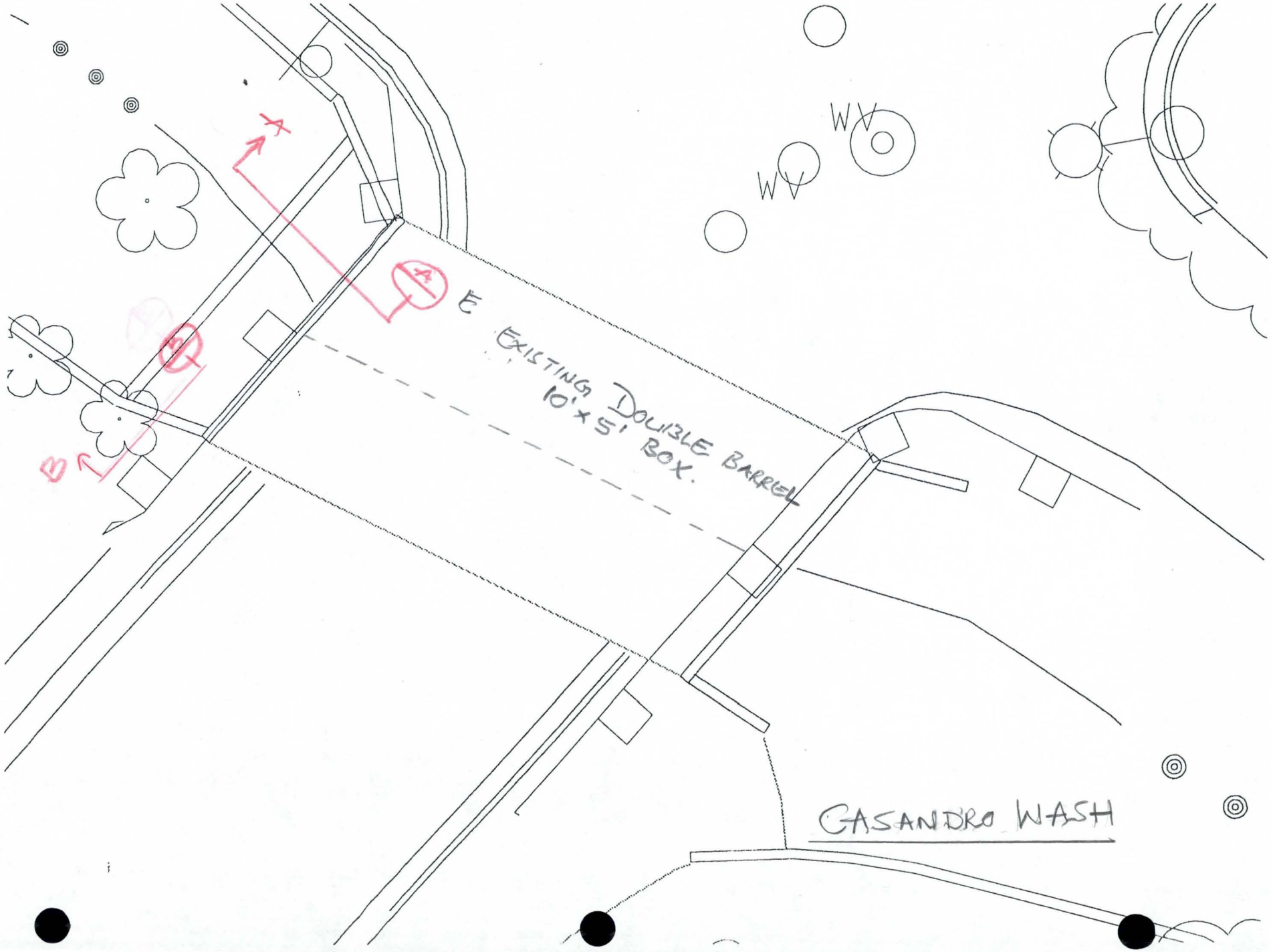

FLOOD CONTROL DISTRICT OF MARICOPA COUNTY

PROJECT _____ PAGE 2 OF _____

DETAIL _____ COMPUTED _____ DATE _____

CHECKED BY _____ DATE _____

General Notes

Concrete: f'_c = 3000 psi

Grade 60 Steel f_s = 24000 psi

All Reinf. Steel shall have 2" clear cover unless noted otherwise

Dowel Note:

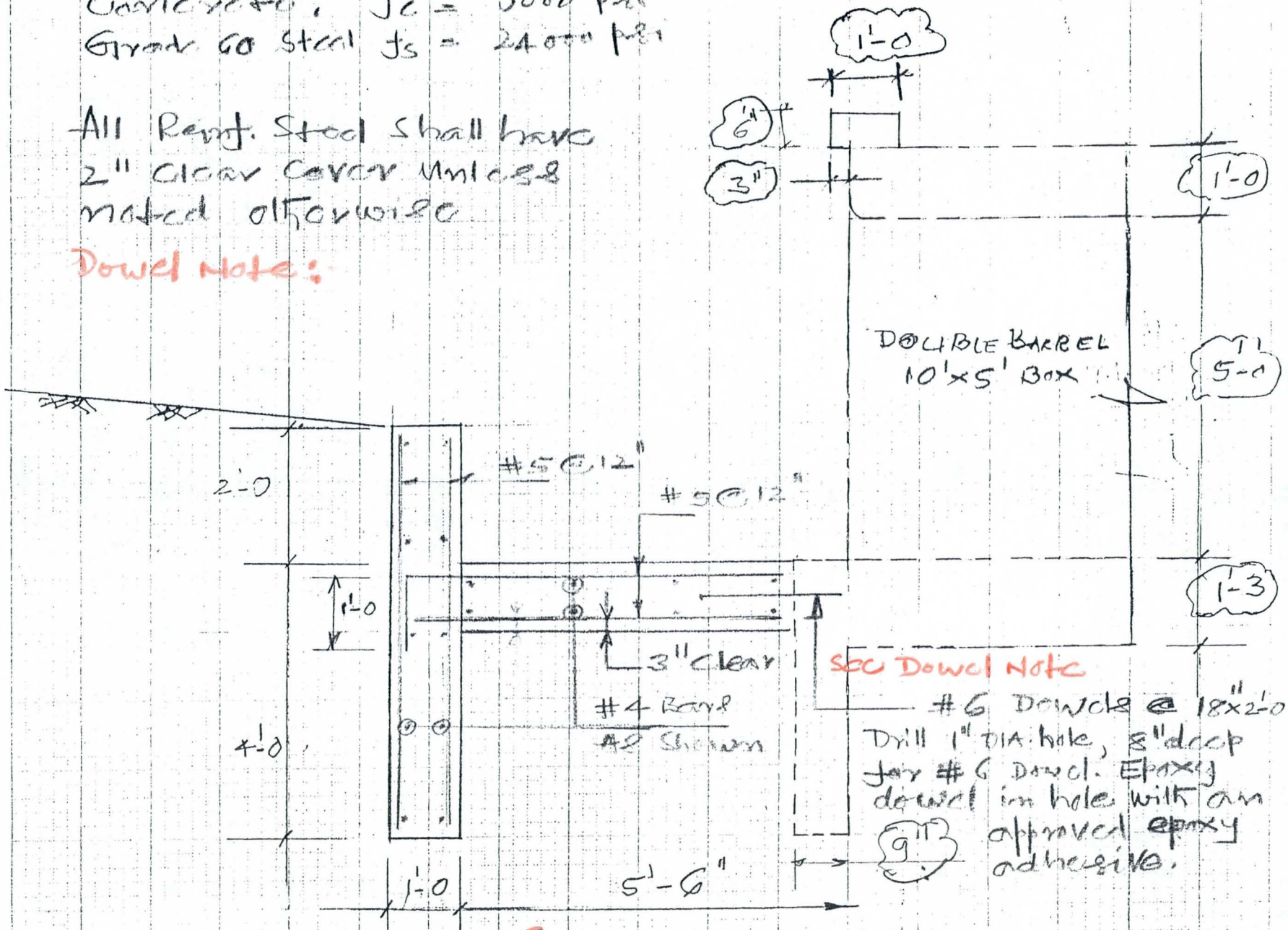

SECTION A-A

SCALE: 1/2" = 1'-0

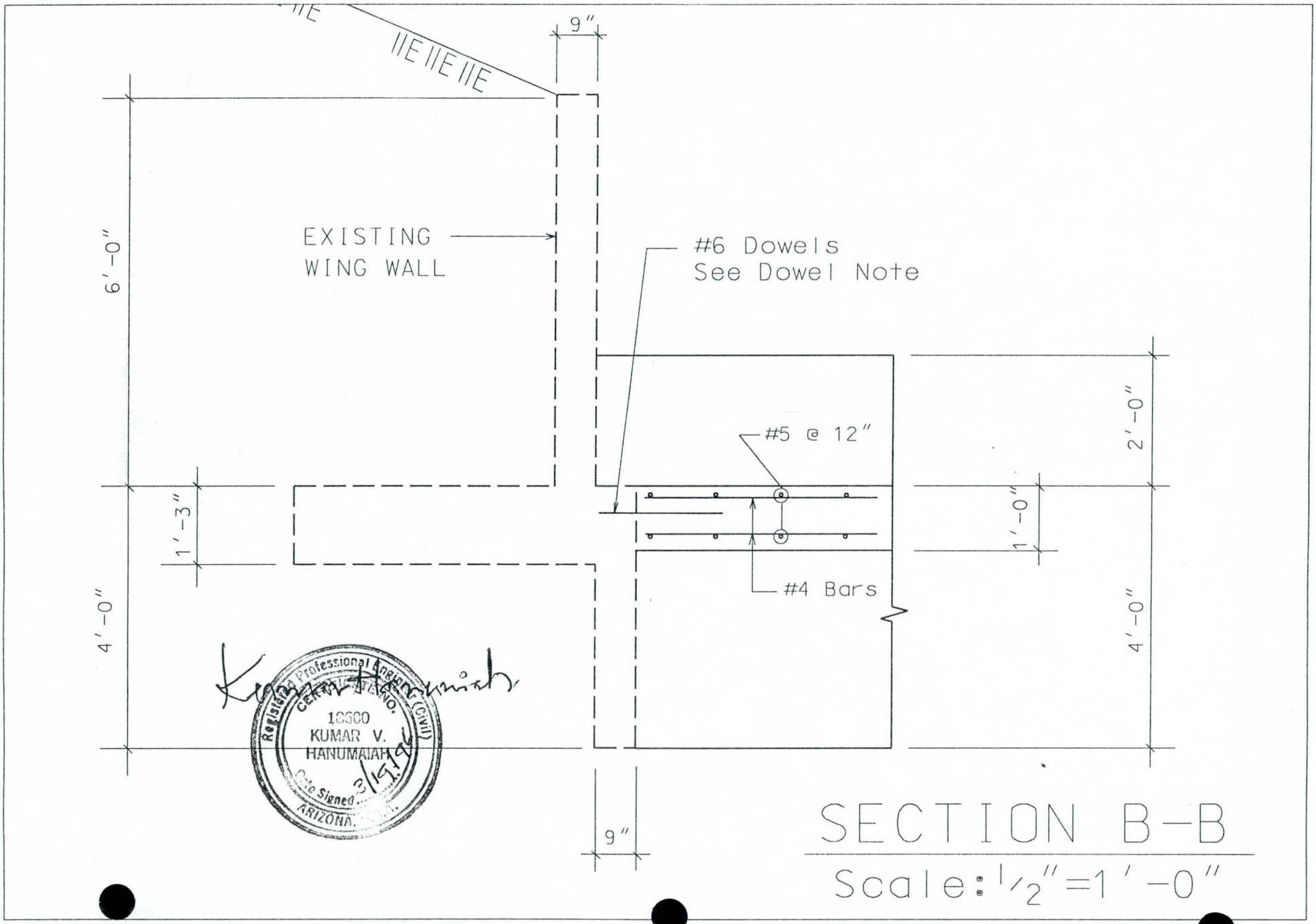

Mar 19 1996 14:35:01

FLOOD CONTROL DISTRICT OF MARICOPA COUNTY

PROJECT Casandra Wash PAGE 4 OF

DETAIL Out Fall COMPUTED KVH DATE 3/96

CHECKED BY DATE

Concrete Qty's:

wall: skew 15°, $x = \frac{20 + 3}{\cos 15}$ (20 = Dble (10x5); 3 = wall thickness)

$= 23.8'$

$(6 \times 1.0 \times 23.8) = 142.8$ — 142.8 cft

$\tan 25 = \frac{x_1}{4.75}$, $x_1 = 2.2$

$\tan 20 = \frac{x_2}{4.75}$, $x_2 = 1.7$

$w = (23.8 + 3.9)$

$= 27.7'$

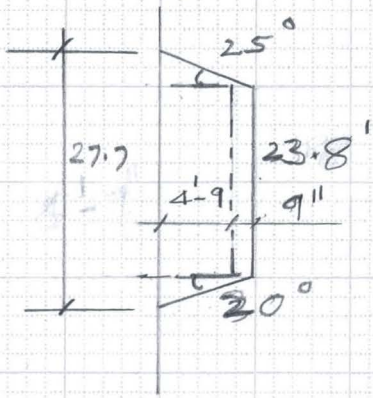

Slab: $\left(\frac{23.8 + 27.7}{2}\right) 4.75 \times 1.0 =$ 122.3

265.1 cft

$265.1 / 27 = 9.8$ CY

Say 10 CY

6910-153 4-90

FLOOD CONTROL DISTRICT OF MARICOPA COUNTY

PROJECT Casandra Wash PAGE 5 OF
DETAIL Out Fall COMPUTED KVH DATE 3/96
CHECKED BY DATE

Reinf. Steel:

Wall

L = 5'-7, No = $\frac{24 \times 12}{12}$ = 25 Bars

(5.58 × 25) 2 × 1.043 = 291 lbs

#5 Bars

Both faces

Distr Bars: L = 24', No = 10

(24 × 10) × 0.668 = 160

#4 Bars

Slab: Top Bars: L = (4'-9) + 18" + 1'-0 = 6-7

No: (28 × $\frac{12}{12}$) = 29 Bars

(6.58 × 29) 1.043 = 199

Bottom Bars: L = (5-9) - 4" = 5-5

(5.42 × 29) 1.043 = 164

Distr Bars: L = 28' No = 8

(28 × 8) 0.668 = 150

964 lbs

#6 Dowels: L_1 = (24 + 7 + 7) = 38'

No = $\frac{38 \times 12"}{18}$ = 26 Bars

L = 2', (2 × 26) 1.502 = 78

1042 lbs

Wt/cyd = $\frac{1042}{9.8}$ = 106 lbs/cy

6910-153 4-90

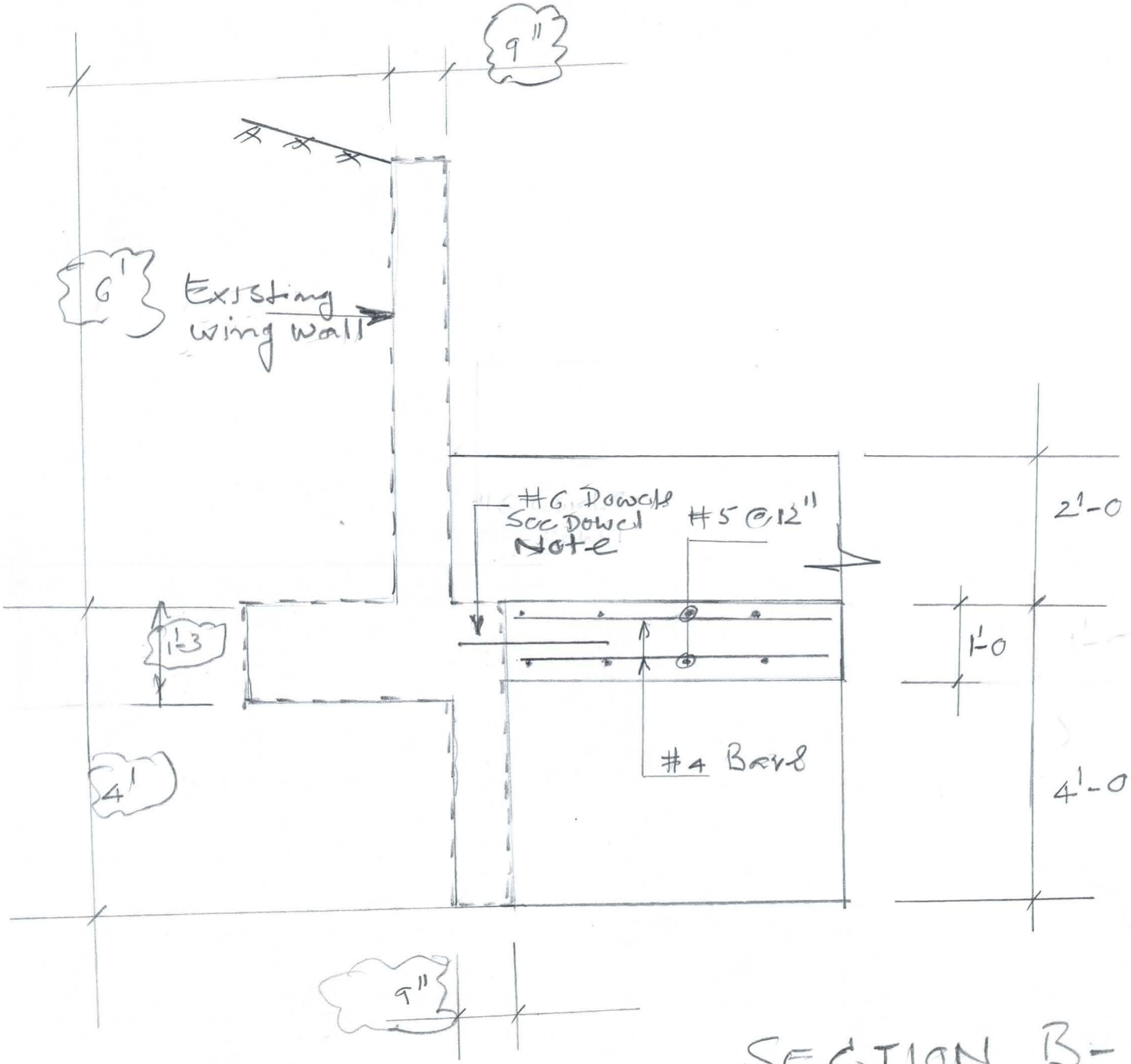

SECTION B-B

Scale ½" = 1'-0

FLOOD CONTROL DISTRICT
OF
MARICOPA COUNTY

Interoffice memorandum

DATE: **NOVEMBER 15, 1995**

TO: **MAL**

FROM: **KVH**

SUBJECT: CASANDRO WASH DAM

The following are the structural review comments for the Casandro wash Dam.

1. Revise wall section CC on sheet 9 of plan set to show 5'-0" extension of #8 @ 6" horizantal leg in addition to # 5 @ 12" of footing steel.

2. Sheets 1 and 3 of structural calculations: The approach used in calculating the distance of the resulant X from the toe is incorrect.The footing pressures will change slightly and the reinforcing may remain the same. However the computations shall be revised to show the correct numbers.

FLOOD CONTROL DISTRICT OF MARICOPA COUNTY

PROJECT _____ PAGE ____ OF ____

DETAIL _____ COMPUTED _____ DATE ____

_____ CHECKED BY _____ DATE ____

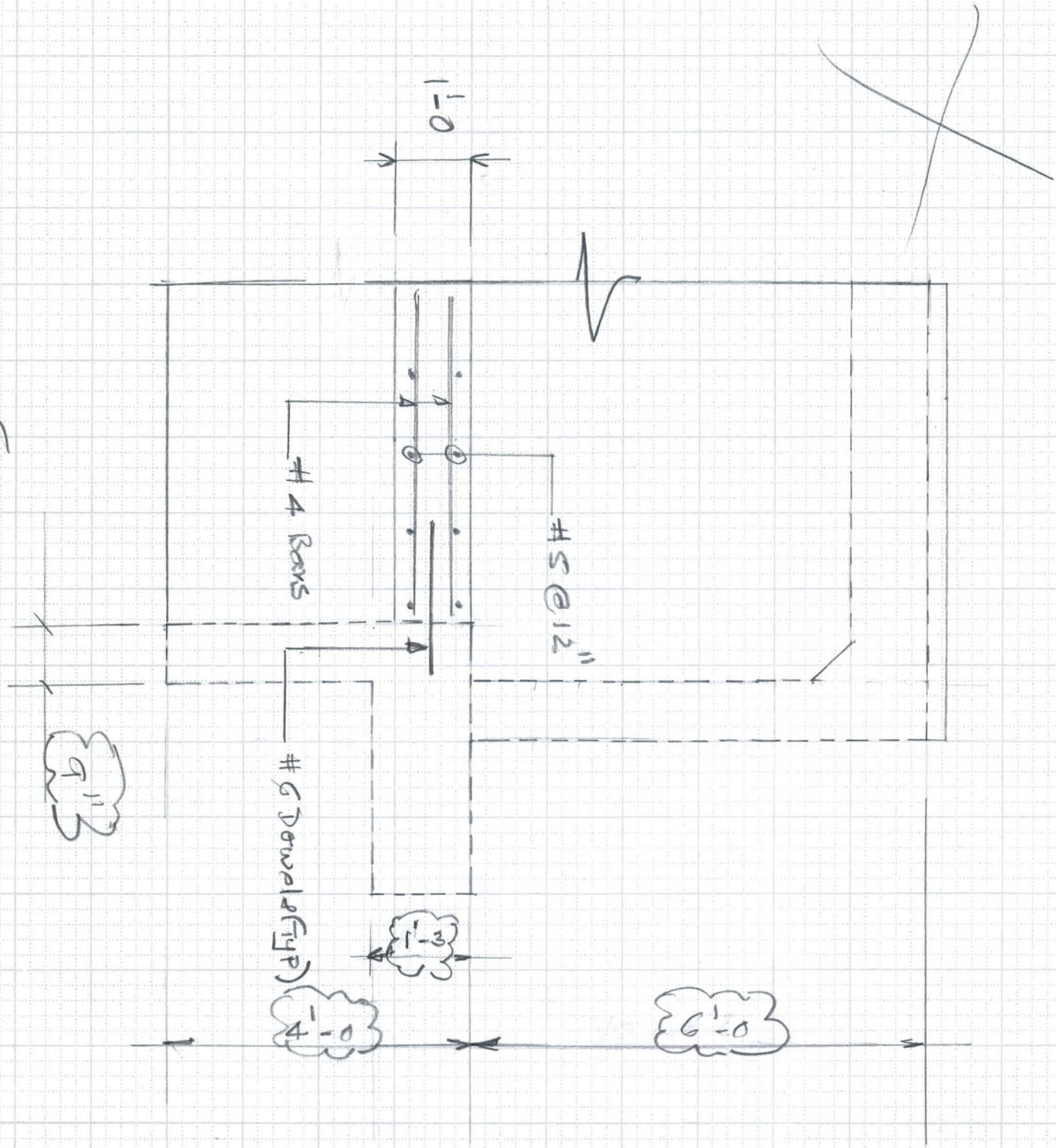

SECTION B-B
Scale 1/2" = 1'-0

6910-153 4-90

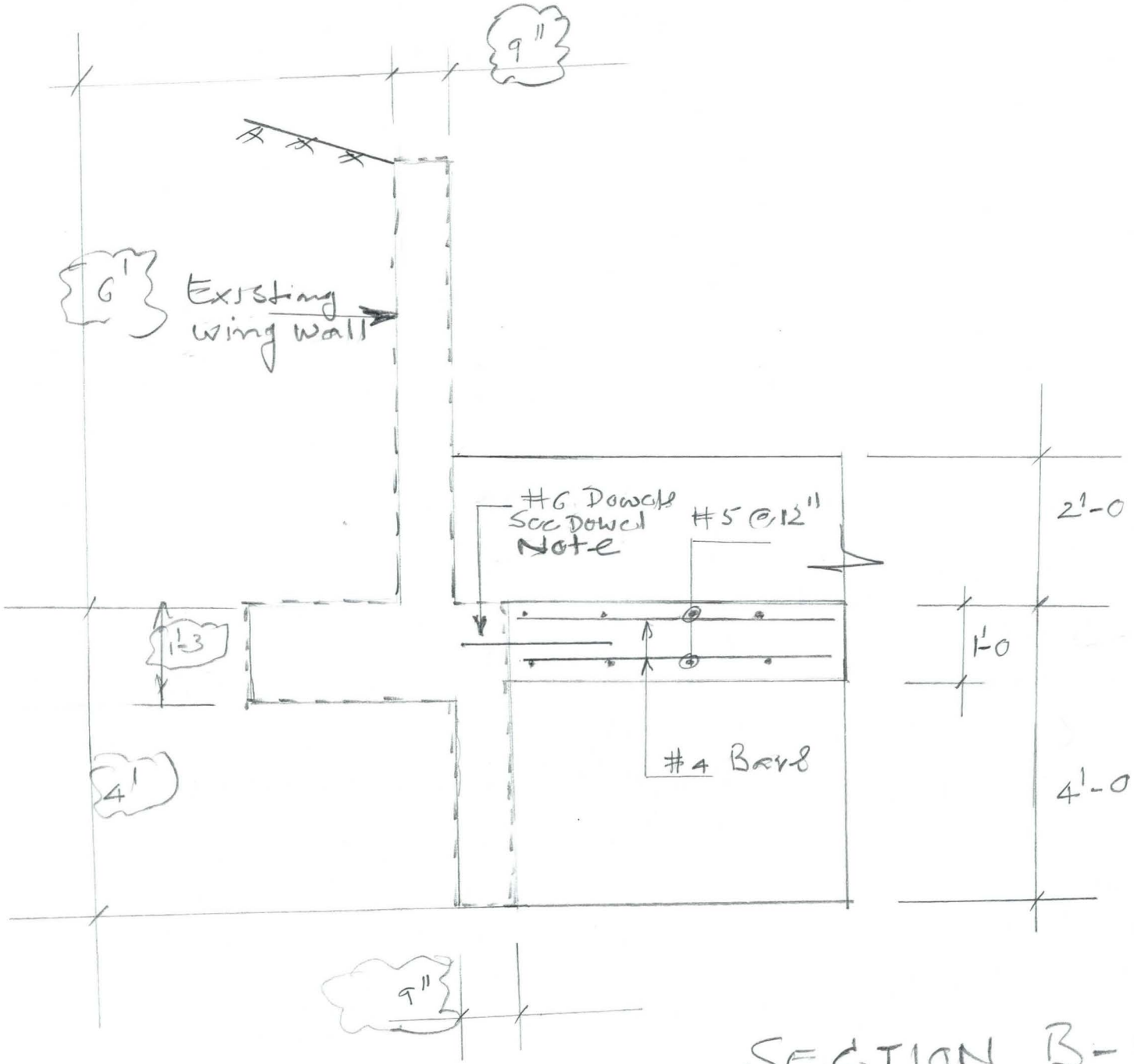

SECTION B-B

Scale ½" = 1'-0

T.o.W. varies from
87.1 TO 85.0
STA. 10+44.96
16.72 RT FROM ℄
T.o.wall
83.0
T.o.wall
80.5
T.o.wall
INV 2081.05
INV 2082.56
2087.12
2087.10
2087.19
2082.5
2080.5
2078.9
2083.9
2087.36

PLAN VIEW

FLOOD CONTROL DISTRICT OF MARICOPA COUNTY

PROJECT Cassandra Wash PAGE 24 OF

DETAIL Outlet Str. COMPUTED KVH DATE 5/95

CHECKED BY DATE

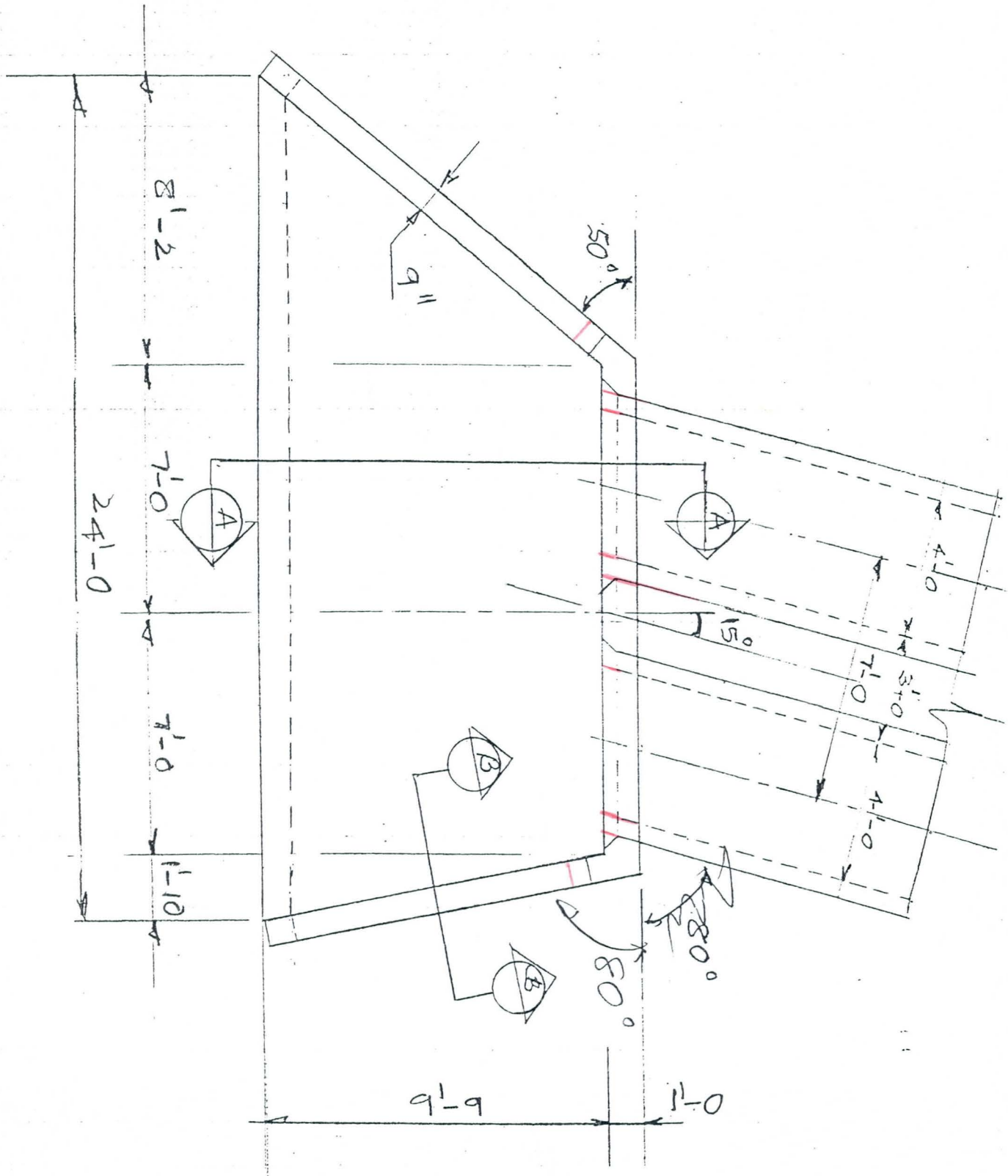

FLOOD CONTROL DISTRICT OF MARICOPA COUNTY

PROJECT Cajamarca

DETAIL Outlet

PAGE 1 OF

COMPUTED KVH DATE 7/95

CHECKED BY DATE

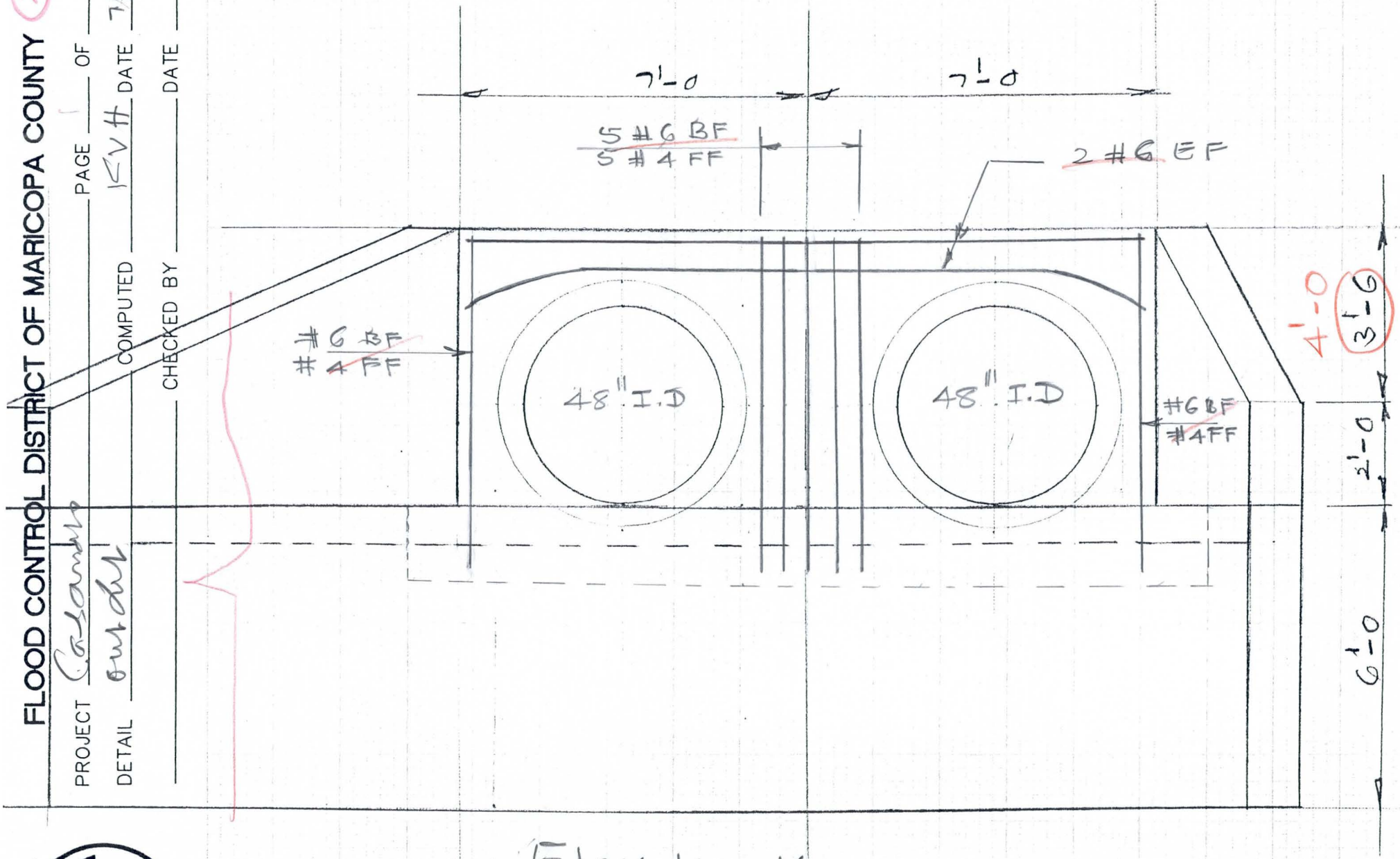

Elevation View
Showing Reinf.
Scale: 1/2" = 1'-0

3/8" = 1'-0

FLOOD CONTROL DISTRICT OF MARICOPA COUNTY

PROJECT Galandro Wash PAGE ____ OF ____

DETAIL Access Barrier COMPUTED KVH DATE 7/95

Outlet STR CHECKED BY ____ DATE ____

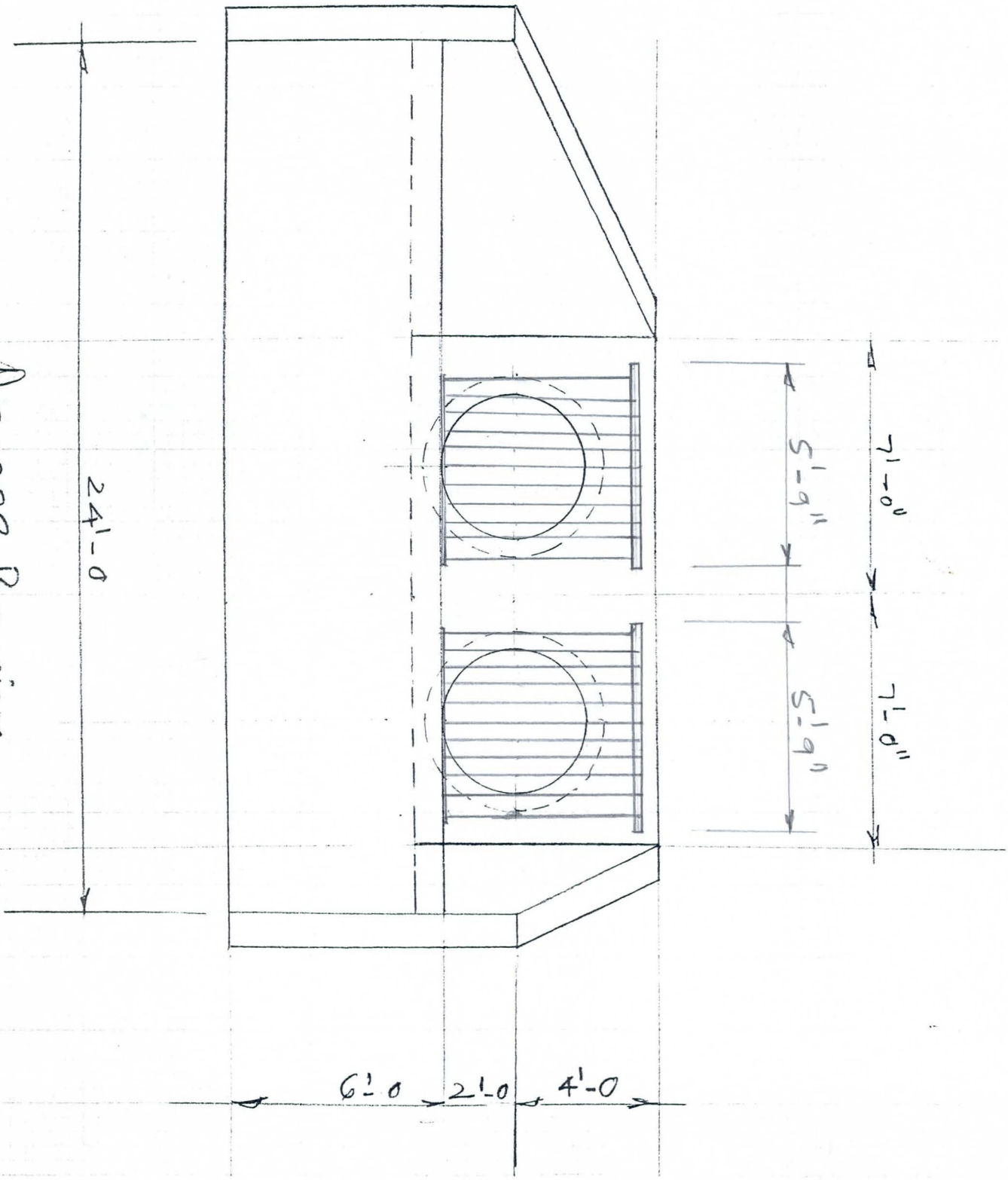

Access Barrier
Elevation View
Scale: 1/4" = 1'-0

FLOOD CONTROL DISTRICT OF MARICOPA COUNTY

PROJECT Cashman Ave Wash PAGE ____ OF ____

DETAIL Barrier Detail COMPUTED KWH DATE 7/95

Outlet STR CHECKED BY ____ DATE ____

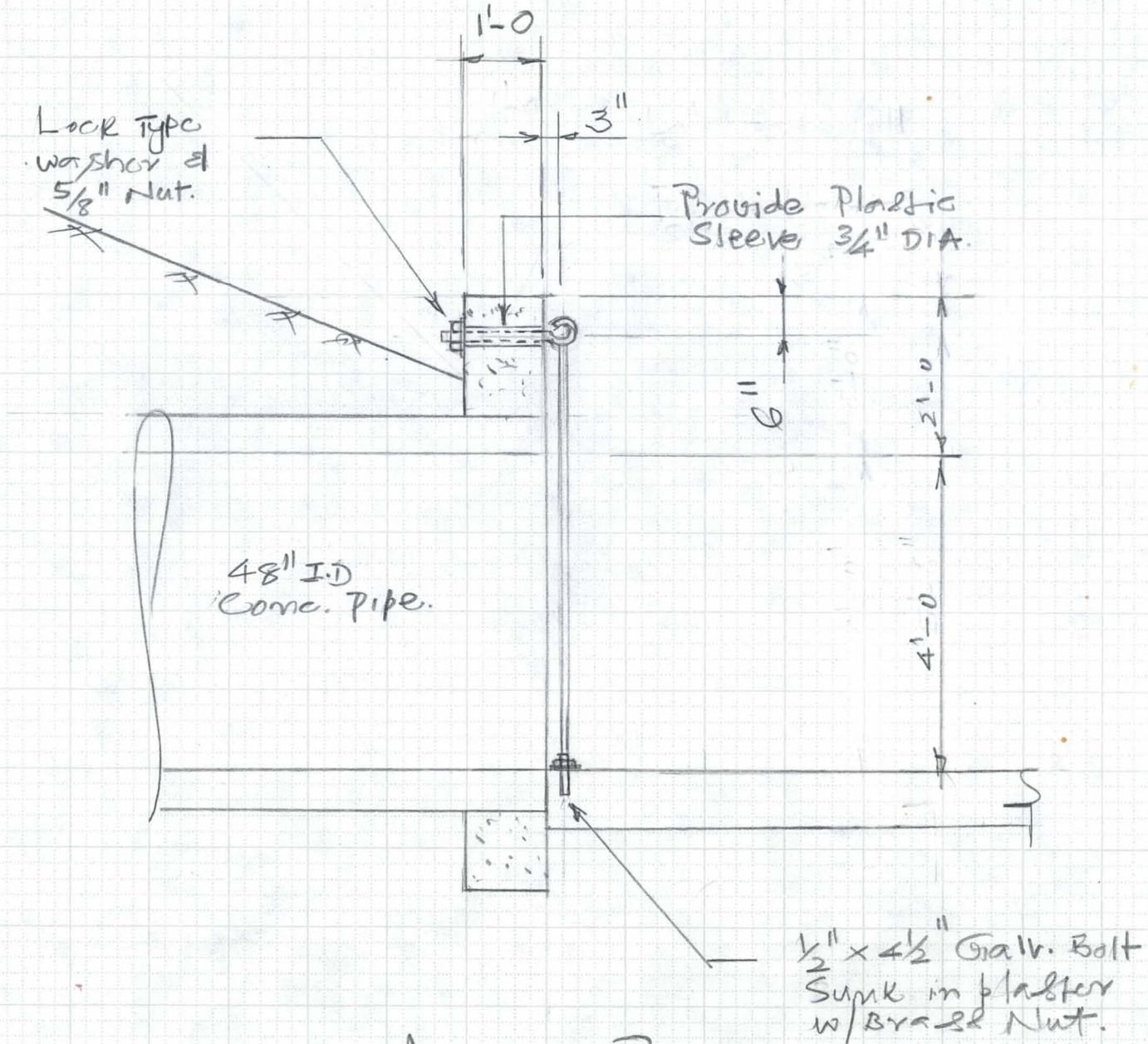

Access Barrier Detail

Scale: 1/2" = 1'-0

6910-153 4-90

(4)

FLOOD CONTROL DISTRICT OF MARICOPA COUNTY

PROJECT Casandre Wash PAGE ___ OF ___

DETAIL Out Lot Str COMPUTED KRH DATE 7/95

CHECKED BY ___ DATE ___

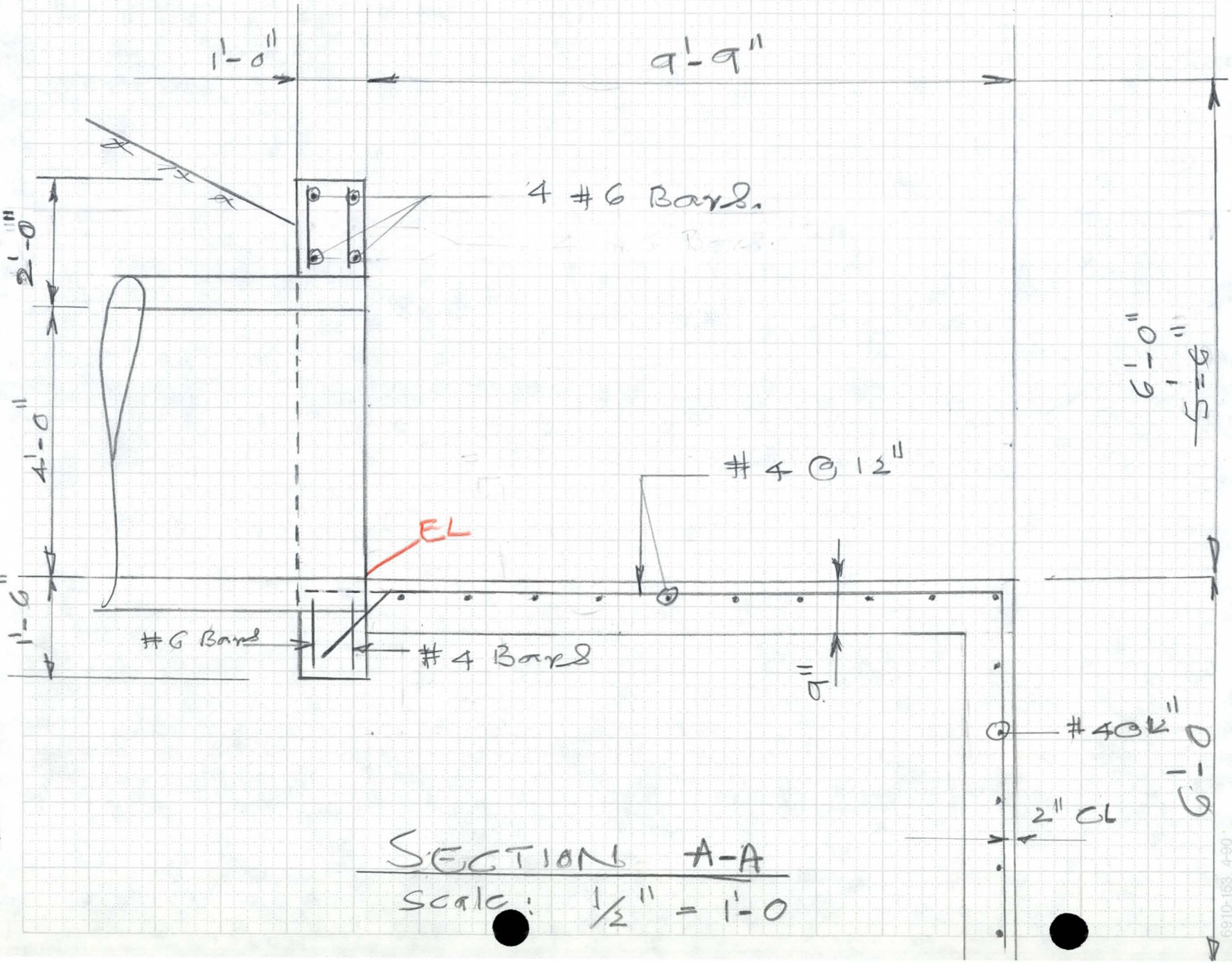

SECTION A-A

Scale: 1/2" = 1'-0

FLOOD CONTROL DISTRICT OF MARICOPA COUNTY

6910-153 4-90

FLOOD CONTROL DISTRICT OF MARICOPA COUNTY

PROJECT Cabandro Wash PAGE ___ OF ___

DETAIL Panel Detail COMPUTED KVH DATE 7/95

Culvert Str. CHECKED BY ___ DATE ___

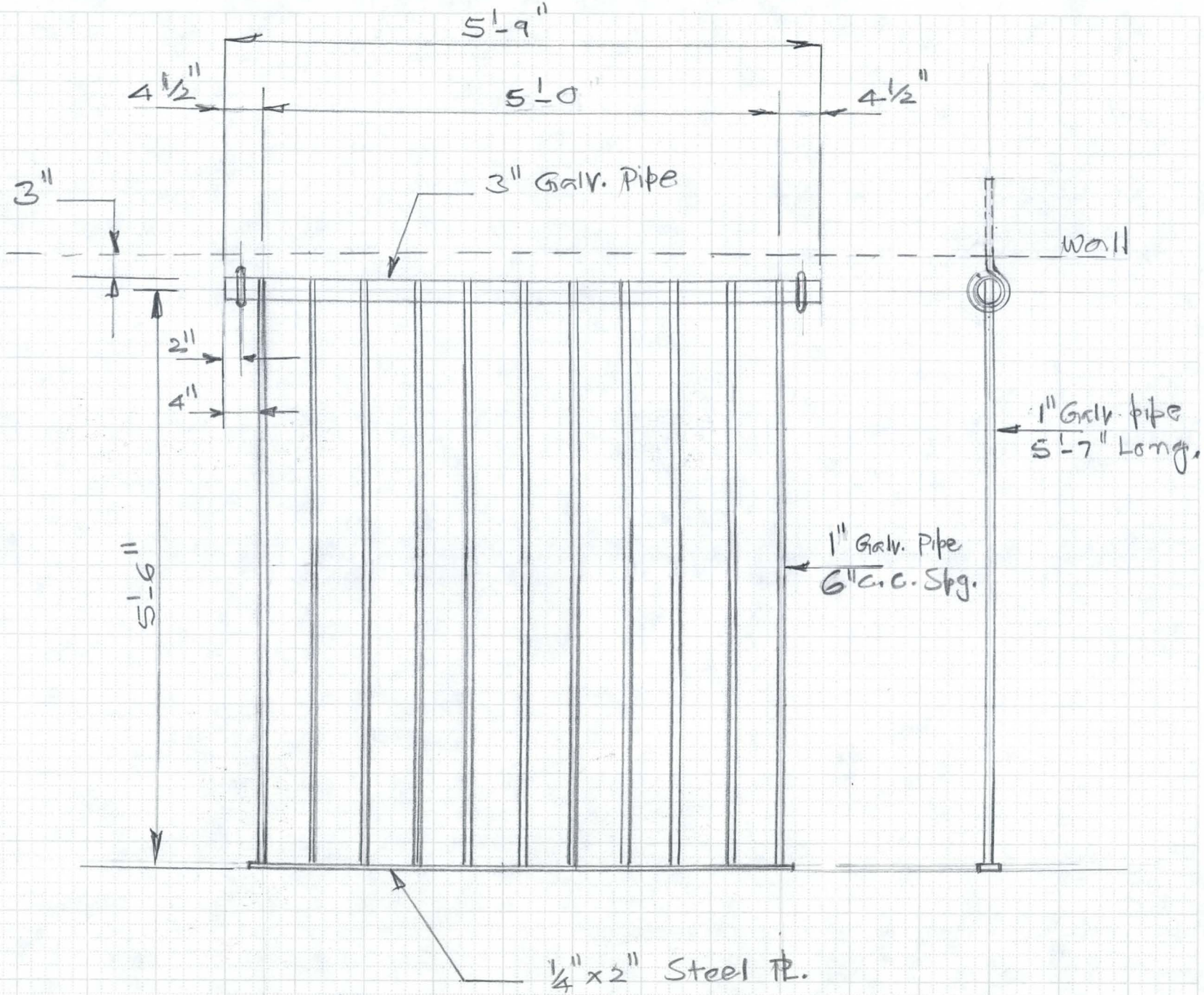

Panel Detail

Scale: 3/4" = 1'-0

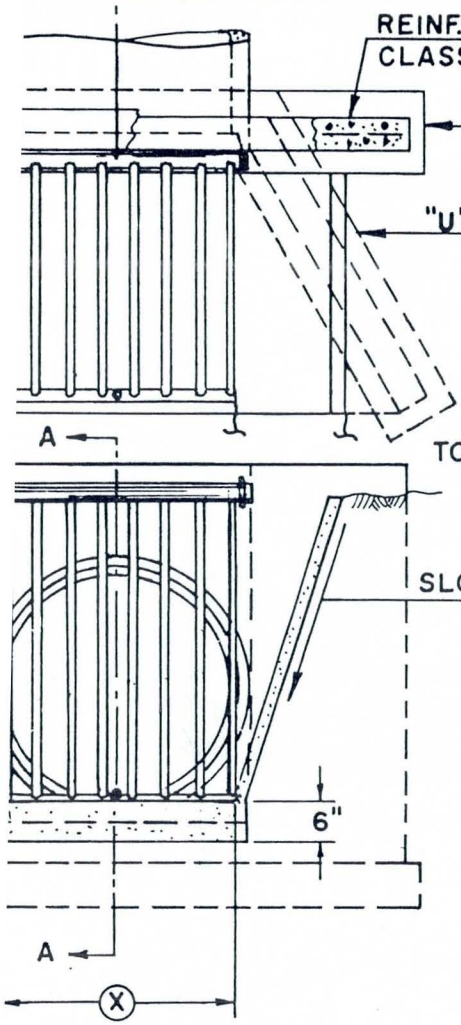

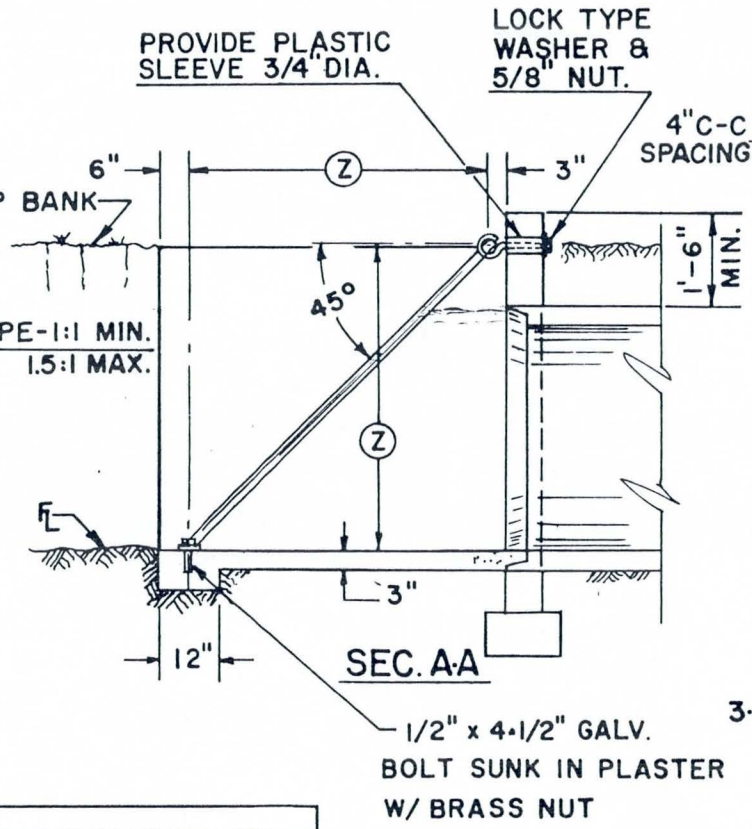

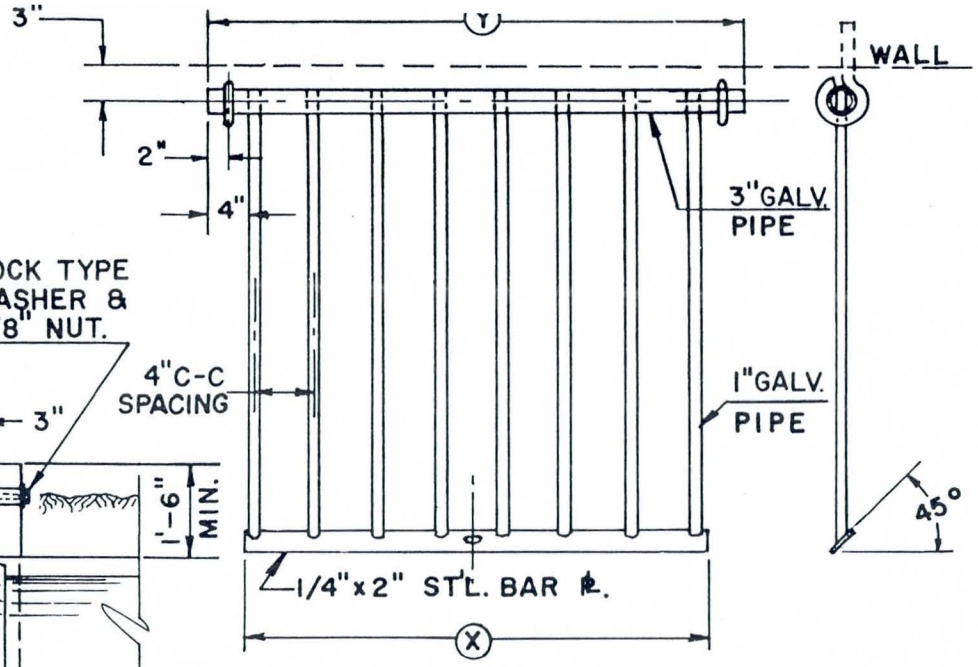

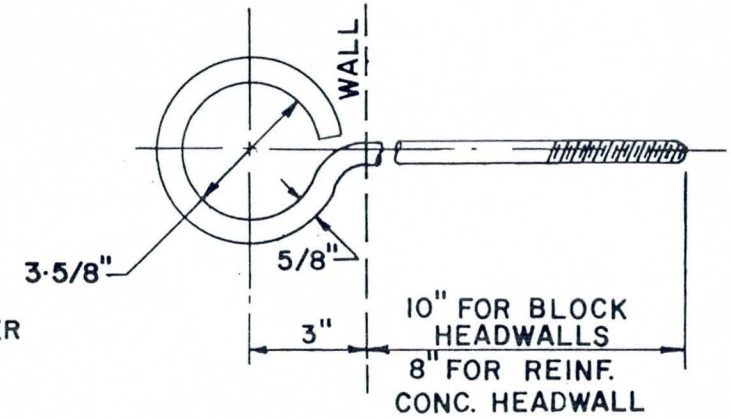

EYE BOLT

PE BASED ON PIPE SIZE

O. OF BARS	LENGTH OF BARS	DIMENSIONS X	Y	Z
6	3'-7"	1'-9"	2'-5"	2'-5"
8	3'-7"	2'-5"	3'-1"	2'-5"
10	4'-4-1/4"	3'-1"	3'-9"	2'-11-1/2"
10	5'-1-1/2"	3'-1"	3'-9"	3'-6"
12	5'-10-5/8"	3'-9"	4'-5"	4'-1/2"
14	6'-7-3/4"	4'-5"	5'-1"	4'-7"

TANDARD DETAIL	TRASH RACK		DETAIL NO. 502-2

FLOOD CONTROL DISTRICT OF MARICOPA COUNTY

PROJECT Cabandu Wash PAGE ____ OF ____

DETAIL Manhole COMPUTED KVH DATE 6/95

CHECKED BY ____ DATE ____

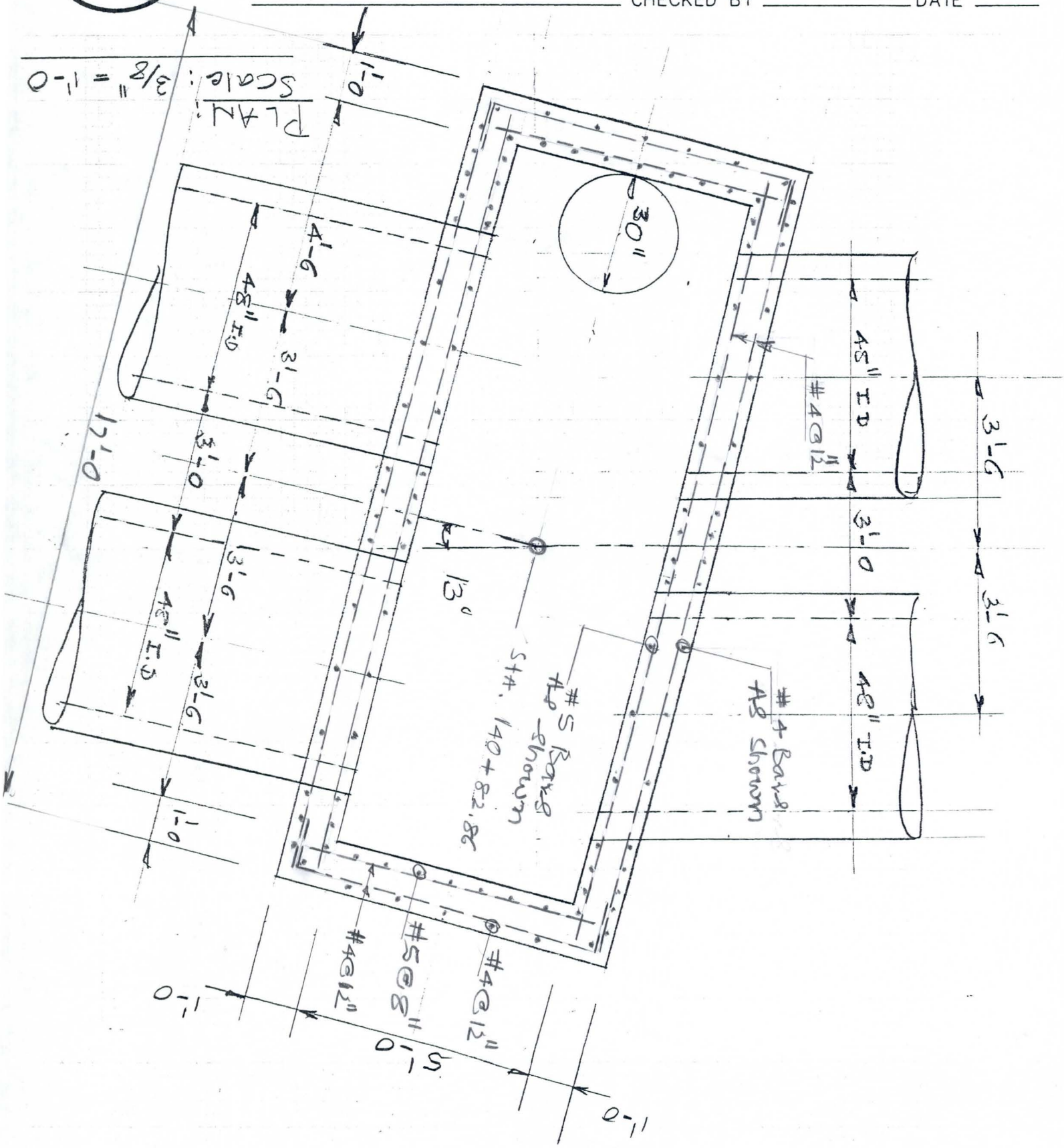

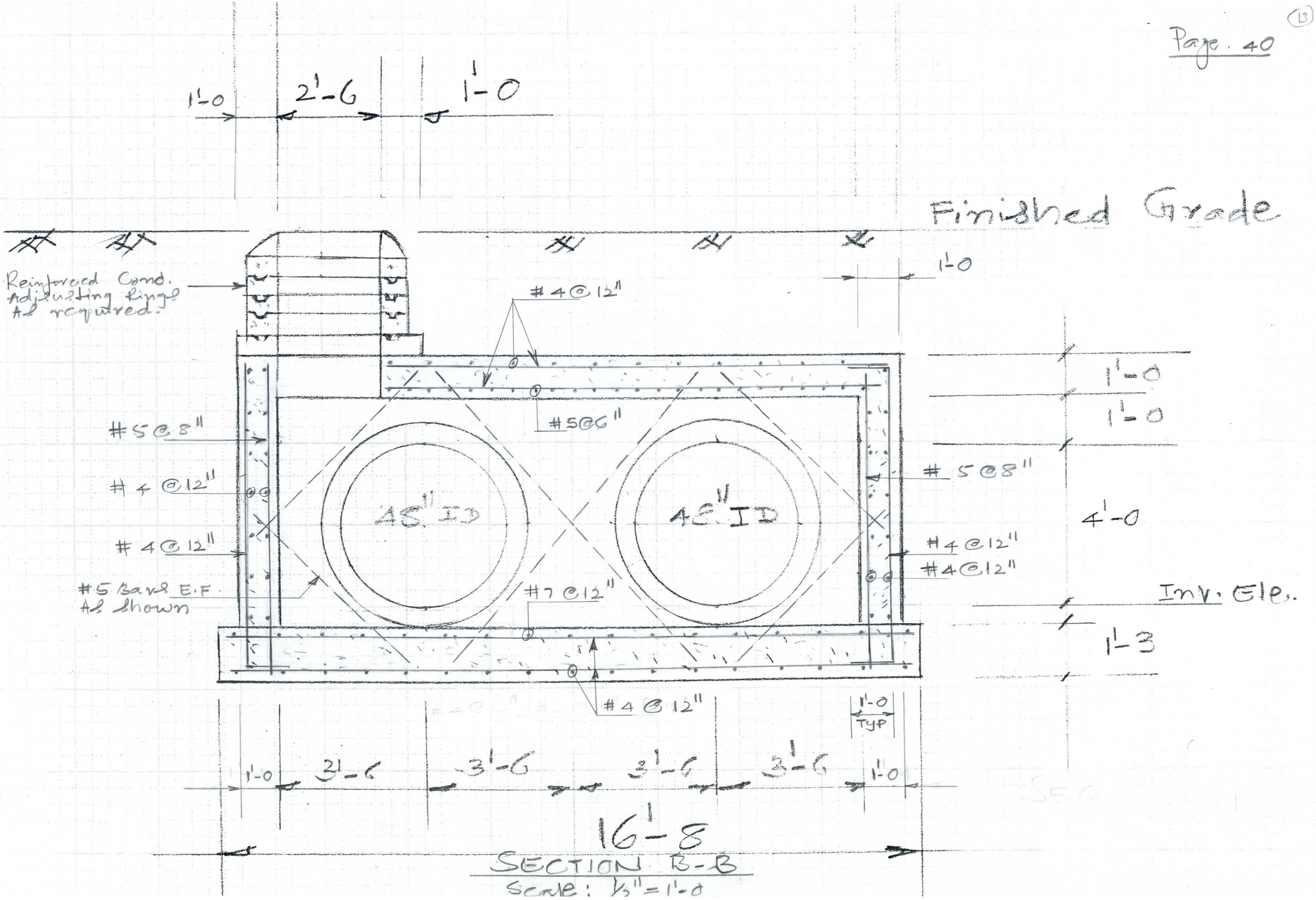

SECTION B-B
Scale: 1/3" = 1'-0

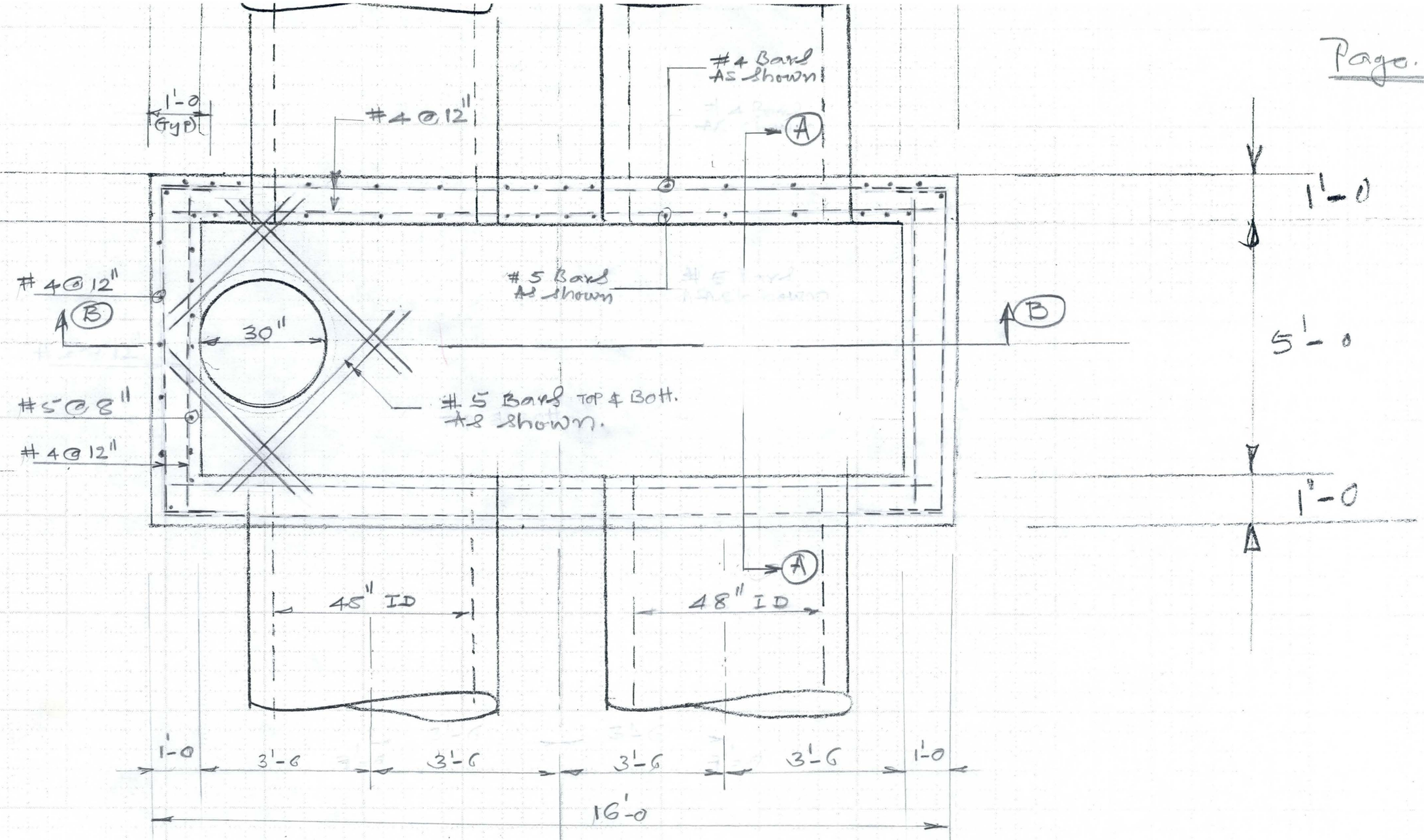

PLAN:

Scale: 1/2" = 1'-0

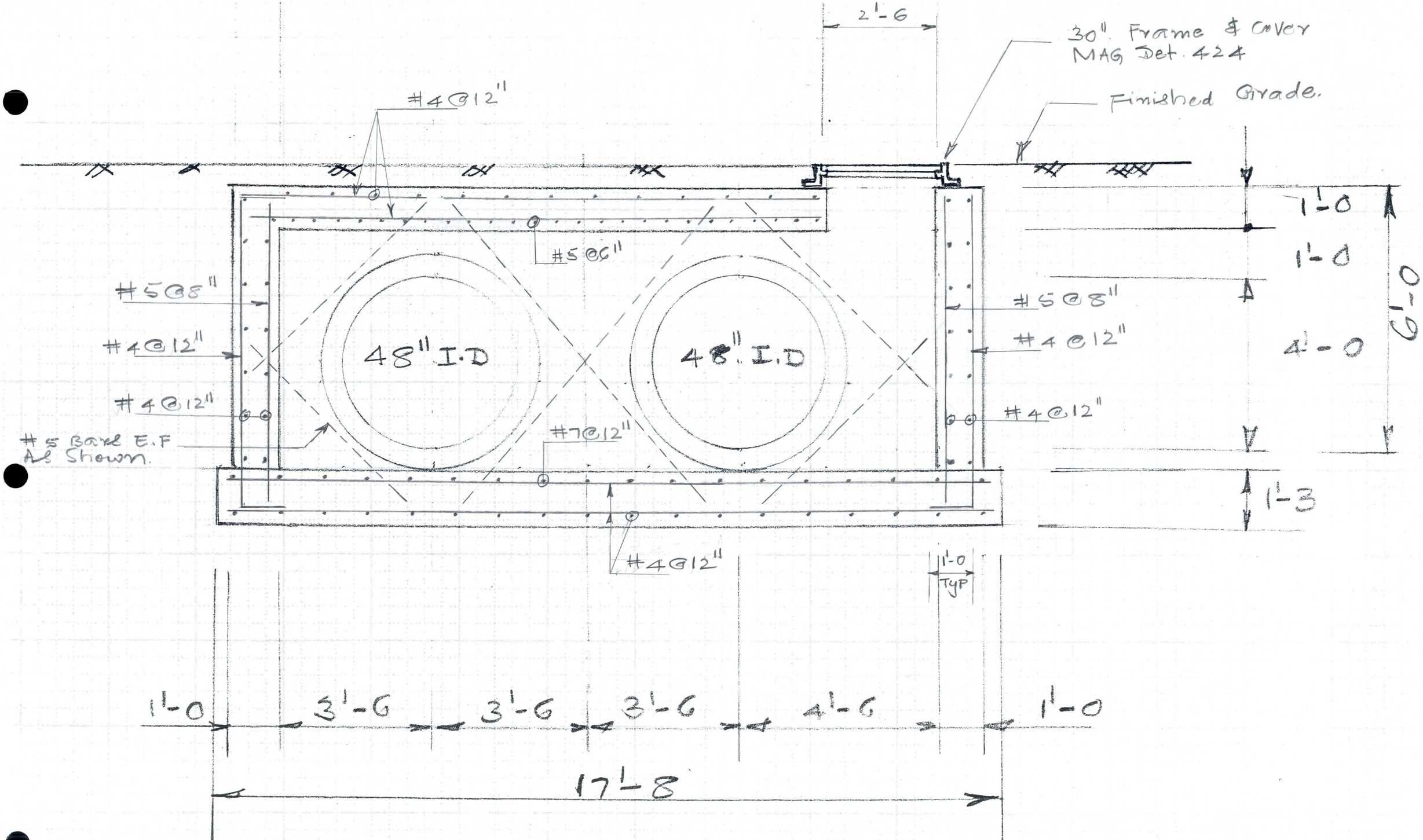

SECTION

Scale: ~~1/4"~~ 1/2" = 1'-0

FLOOD CONTROL DISTRICT OF MARICOPA COUNTY

PROJECT Cabandi Wash PAGE ____ OF ____

DETAIL Manholes COMPUTED KVH DATE 6/95

CHECKED BY ____ DATE ____

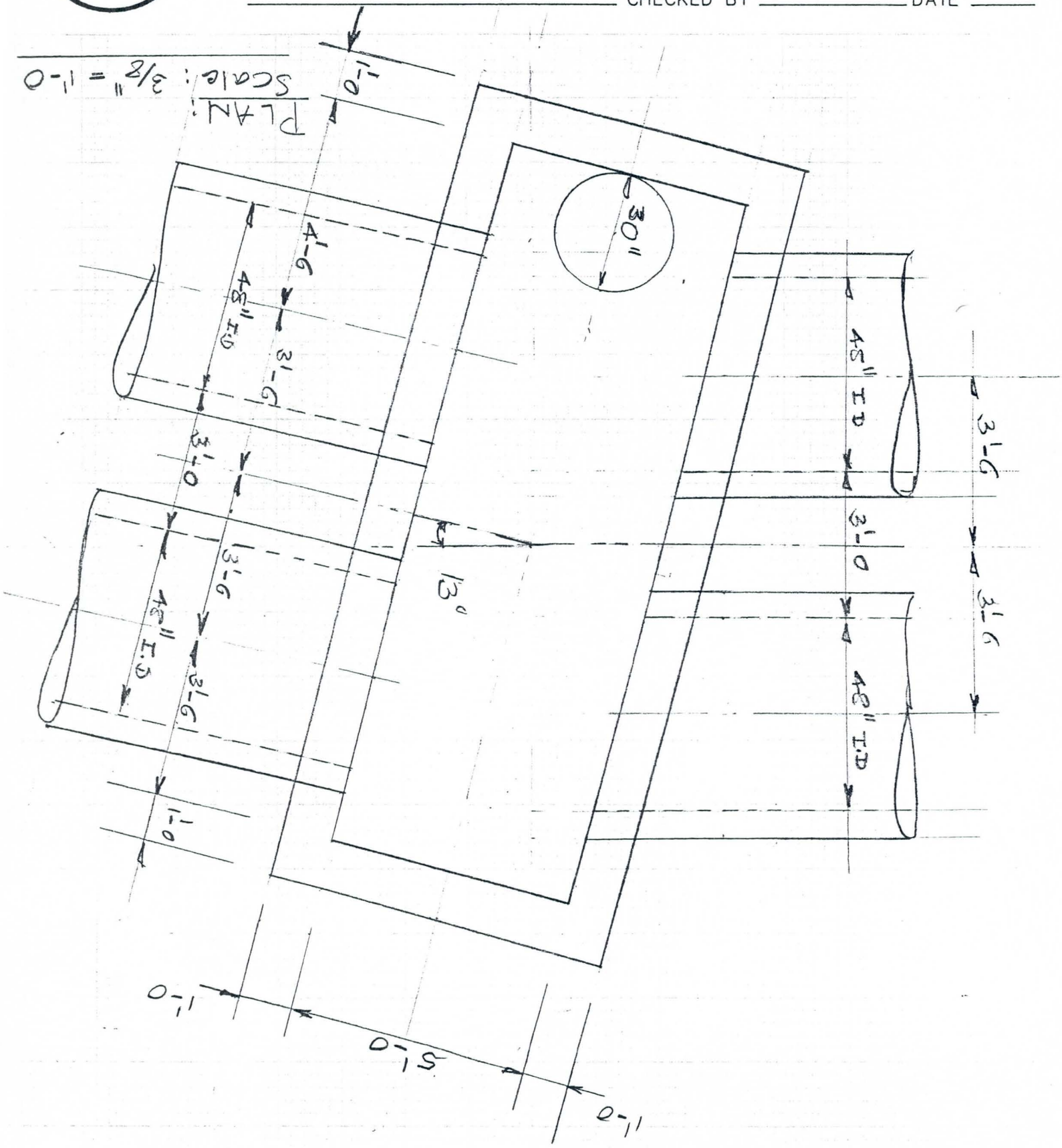

FLOOD CONTROL DISTRICT OF MARICOPA COUNTY

PROJECT Cabandu Wash PAGE ____ OF ____

DETAIL Manholes COMPUTED KVH DATE 6/95

CHECKED BY ____ DATE ____

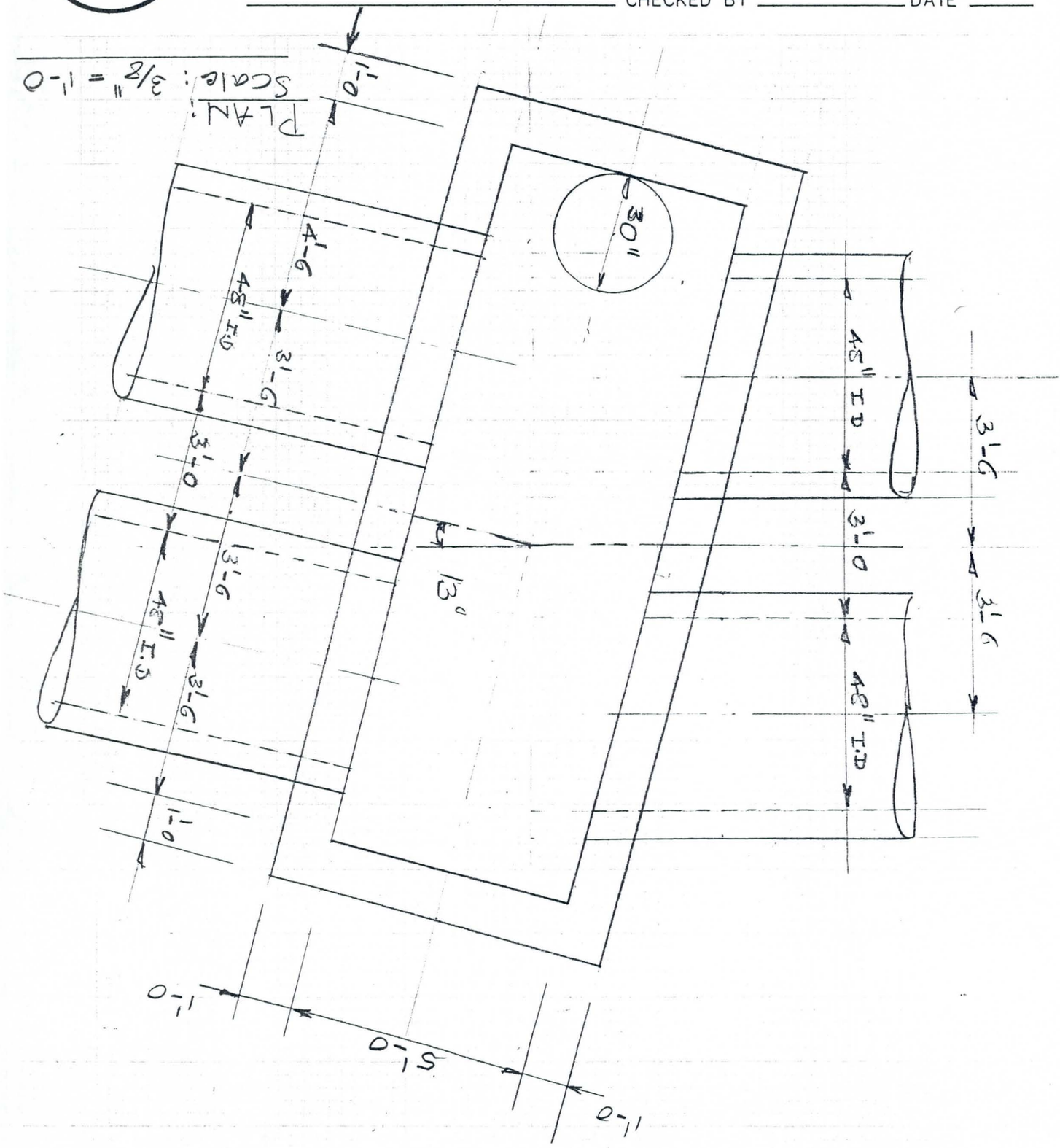

FLOOD CONTROL DISTRICT OF MARICOPA COUNTY

PROJECT Cabandu Wash PAGE ____ OF ____

DETAIL Manholes COMPUTED KVH DATE 6/95

CHECKED BY ____ DATE ____

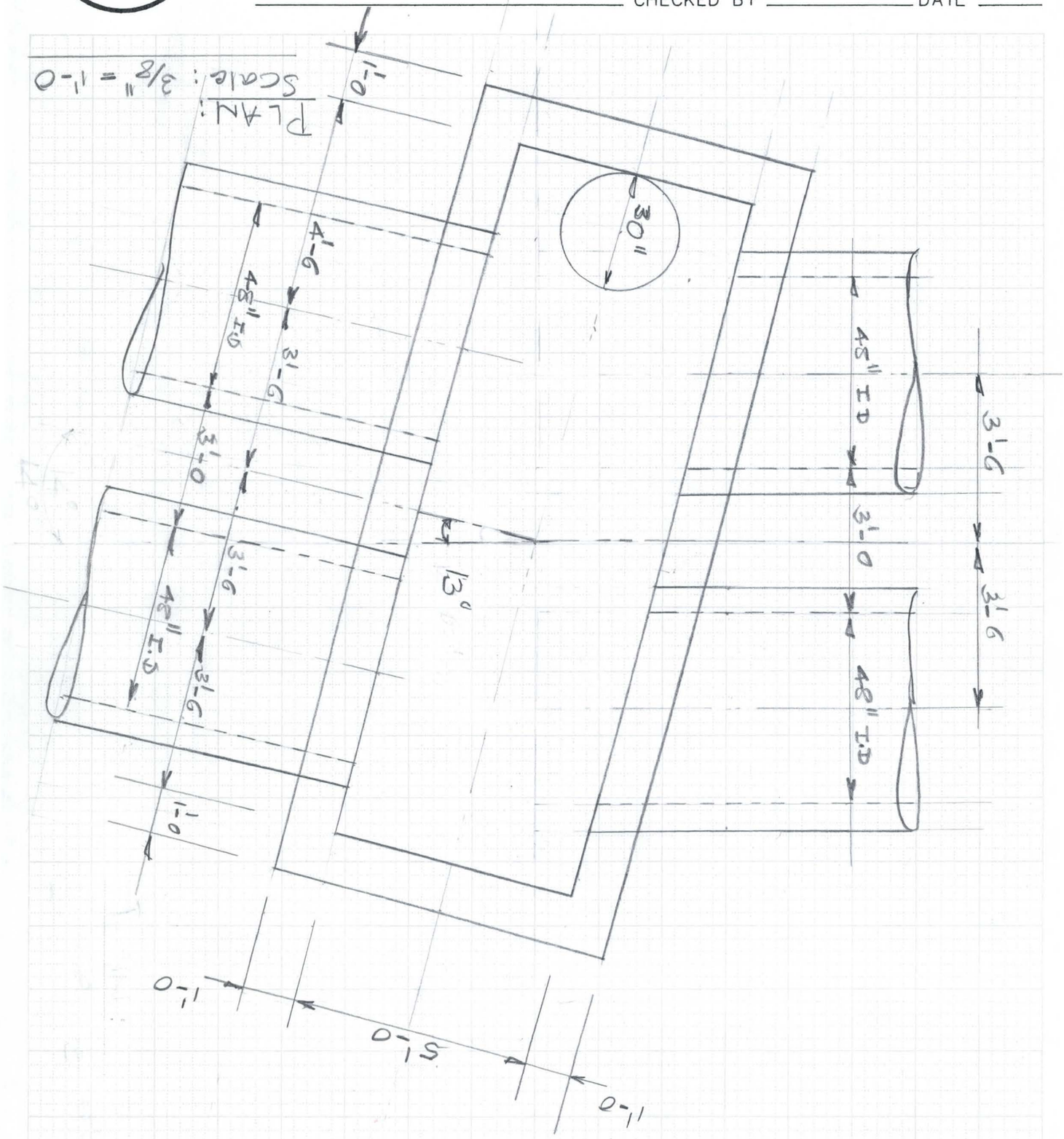

6910-153 4-90

FLOOD CONTROL DISTRICT OF MARICOPA COUNTY

PROJECT Cobandro Wash PAGE ____ OF ____

DETAIL Man Holes COMPUTED KMH DATE 6/95

CHECKED BY ____ DATE ____

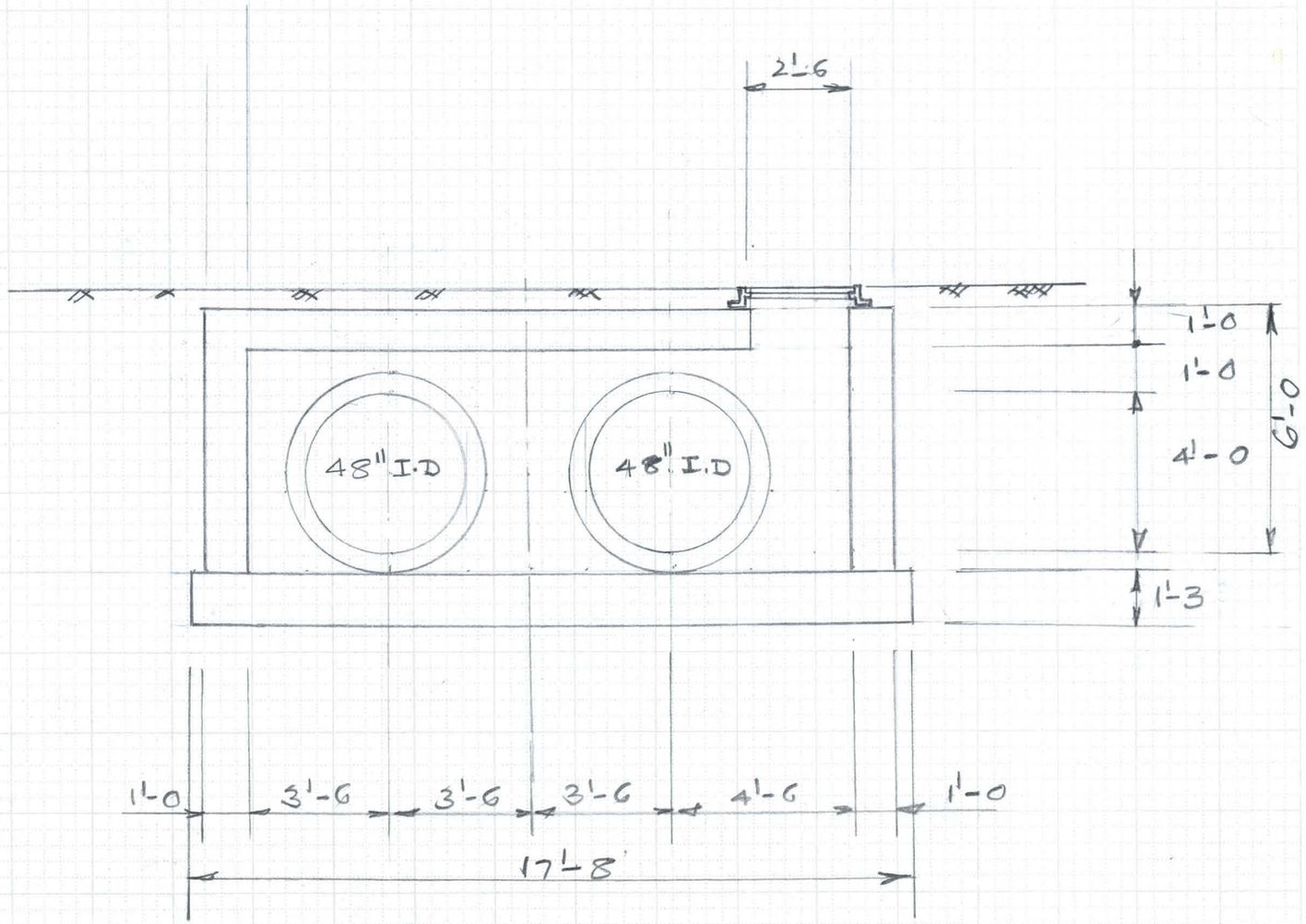

SECTION

Scale: 1/4" = 1'-0

6910-1503 4-90

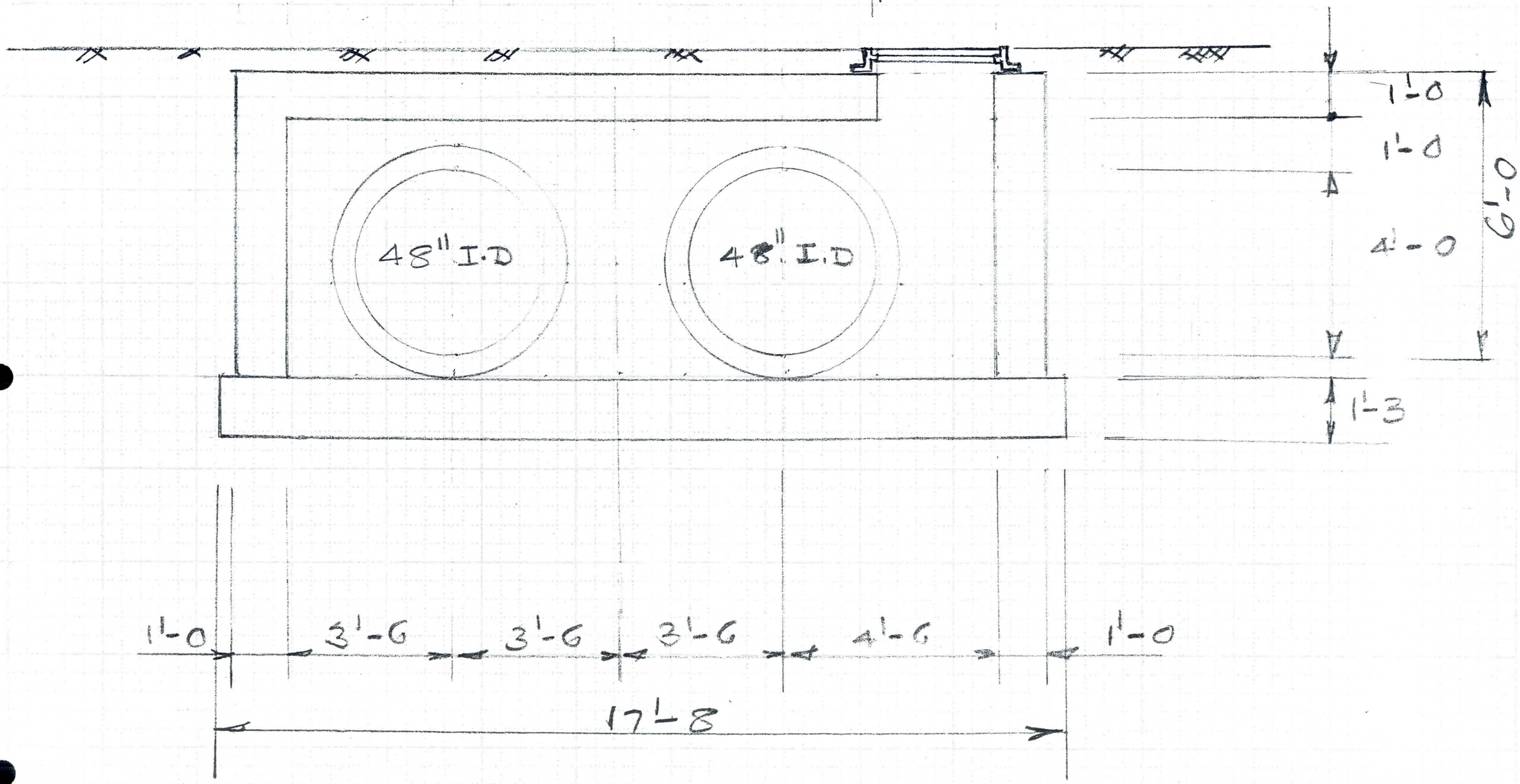

SECTION

Scale: 1/4" = 1'-0

FLOOD CONTROL DISTRICT OF MARICOPA COUNTY

PROJECT Cabandro wash PAGE ___ OF ___

DETAIL Manholes COMPUTED KVH DATE 8/95

CHECKED BY ___ DATE ___

Manhole Tabulation.

Manhole NO.	Location		Type	Inv. Elevs.		Finish Grade
	Sht. NO	Stat.		El. A	El. B	
1	6	25+60	1	2069.79	2069.69	2079.00
2	7	30+40	1	2063.00	2062.90	2071.90
3	8	35+40	2	2061.15	2061.05	2067.65
4	9	138+38	2	2058.31	2058.21	2064.81
5	9	140+83	3	2055.82	2055.72	2062.32

6910-153 4-90

FLOOD CONTROL DISTRICT OF MARICOPA COUNTY

PROJECT Casandra wash PAGE ____ OF ____

DETAIL Man Holes COMPUTED KVH DATE 7/95

CHECKED BY ____ DATE ____

Flotation Check:

Check Manhole #5:

Vol of water = (17 x 7 x 7.75) = 922 cf

wt. of Vol. of water displaced = 992 x 62.4 = 62 K

Buoyant Force = 62 K ↑

wt. of Conc.:

Top Slab: (15 x 5 x 1) 0.15 = 11.3 K

Walls: (6 x 1.0 x 17) 2 x 0.15 = 30.6 } 39.6
(6 x 1.0 x 5) 2 x 0.15 = 9.0 }

Base Slab: (17.67 x 7.67 x 1.25) 0.15 = 25.4

76.3 K

[(17 x 7) - (15 x 5)] 6 x 0.15
= 39.6 K
checks ok

wt. of Soil on Fty: [(17.67 x 7.67) - (17 x 7)] 6 x 0.12
= 11.9 K

Total wt (↓) = (76.3 + 11.9) = 88.2 K

$$F.S = \frac{88.2}{62} = 1.4$$

6910-153 4-90

FLOOD CONTROL DISTRICT OF MARICOPA COUNTY

PROJECT _____ PAGE ____ OF ____

DETAIL _____ COMPUTED _____ DATE _____

CHECKED BY _____ DATE _____

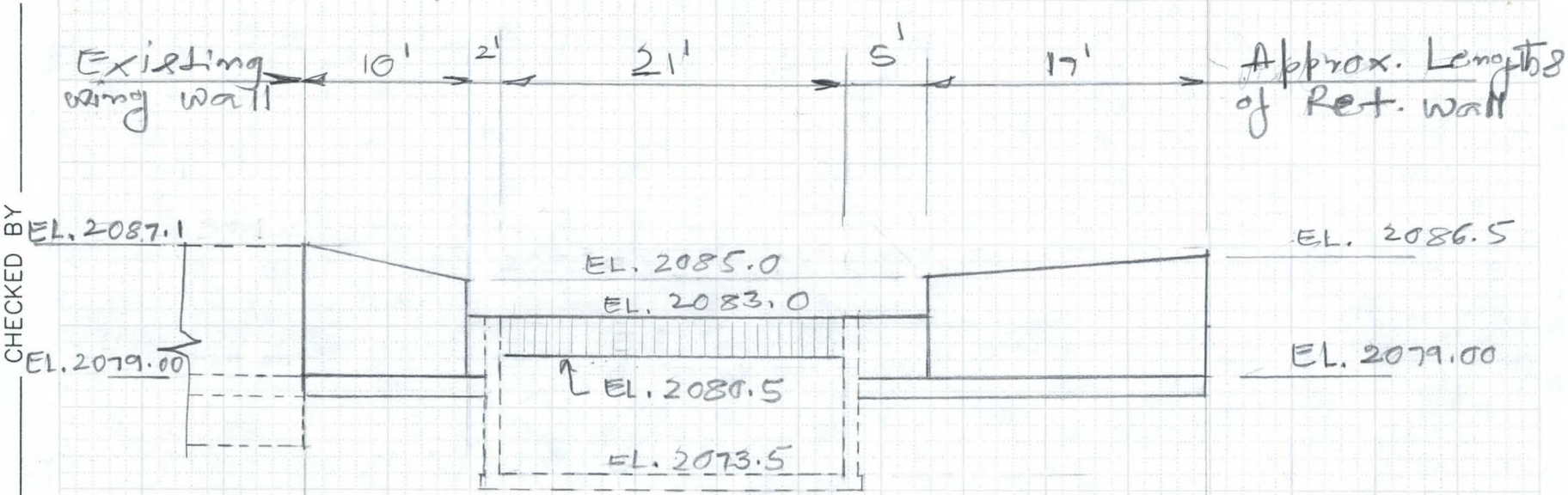

Elevation

Scale 1" = 10'-0"

FLOOD CONTROL DISTRICT OF MARICOPA COUNTY

6910-153 4-90

FLOOD CONTROL DISTRICT OF MARICOPA COUNTY

PROJECT _____ PAGE ____ OF ____

DETAIL _____ COMPUTED _____ DATE _____

CHECKED BY _____ DATE _____

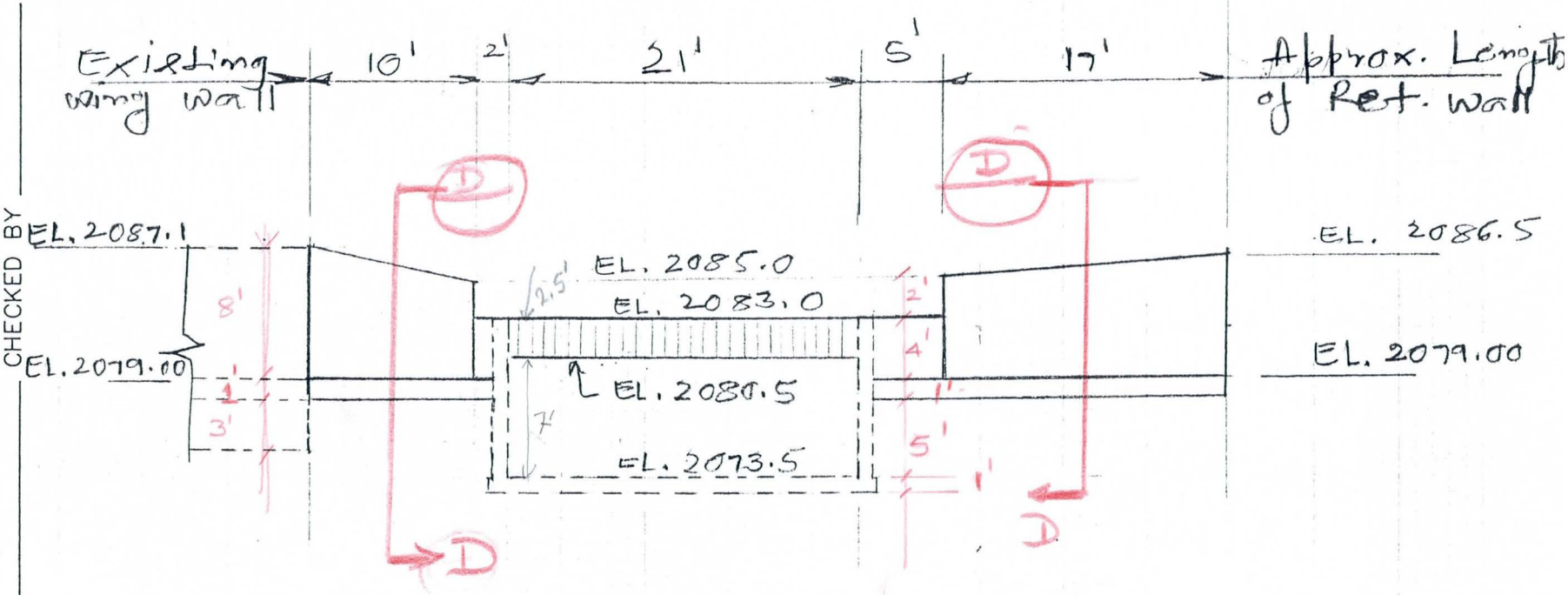

Elevation

Scale 1" = ~~10'~~ 5'-0"

C/15

FLOOD CONTROL DISTRICT OF MARICOPA COUNTY

FLOOD CONTROL DISTRICT OF MARICOPA COUNTY

PROJECT _____ PAGE ____ OF ____

DETAIL _____ COMPUTED _____ DATE ____

_____ CHECKED BY _____ DATE ____

VOID

VOID

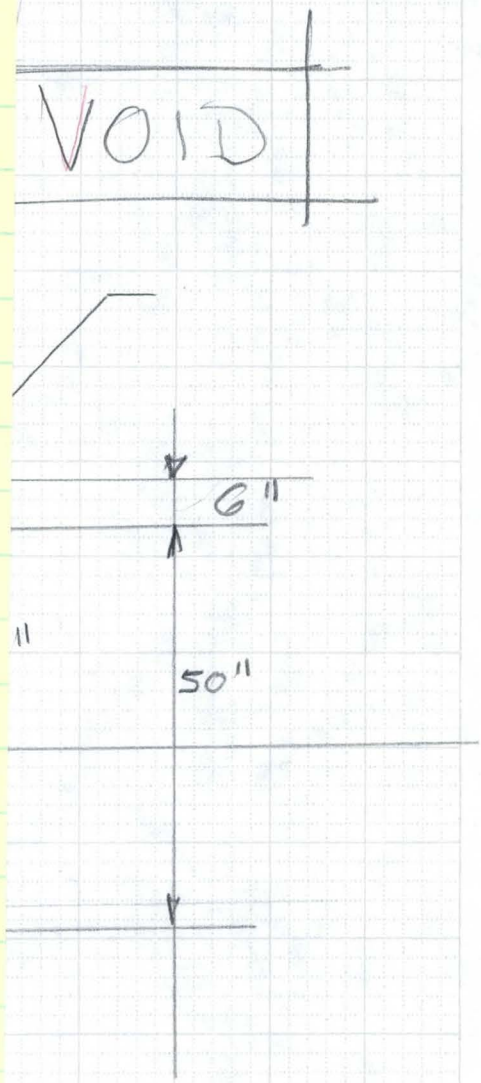

Scale: 1/2" = 1'-0

See ADOT Detail G-13.75

6910-153 4-90

FLOOD CONTROL DISTRICT OF MARICOPA COUNTY

PROJECT _____ PAGE ____ OF ____

DETAIL _____ COMPUTED _____ DATE ____

_____ CHECKED BY _____ DATE ____

VOID

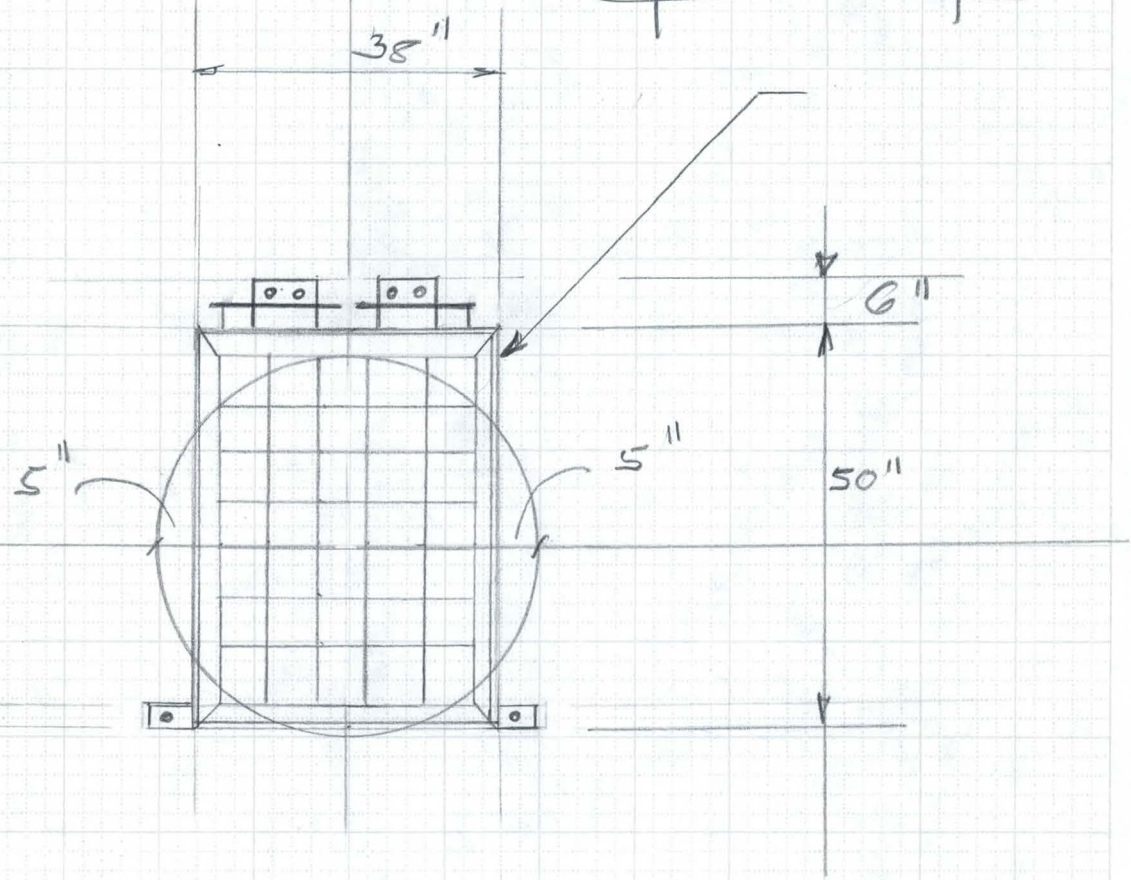

Scale: 1/2" = 1'-0

See ADOT Detail G-13.75

6910-153 4-90

	MADE BY	DATE
	PNB	7/94
	PNB	7/94
	PNB	7/94
	PNB	7/94

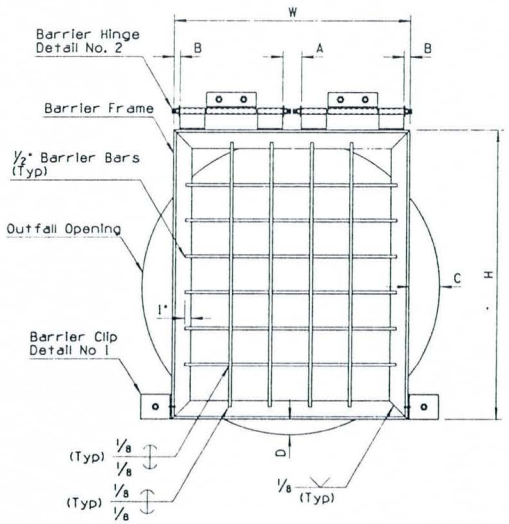

PIPE ACCESS BARRIER FRONT ELEVATION

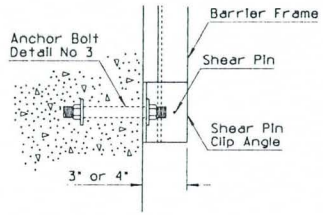

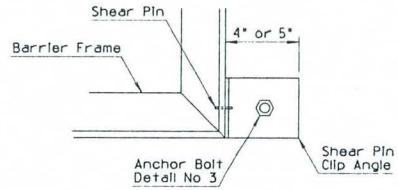

DETAIL NO. 1

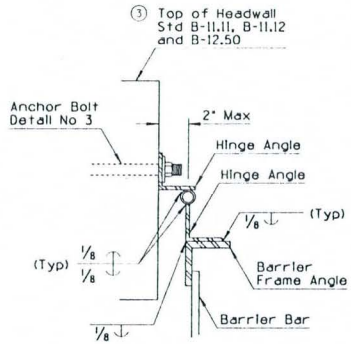

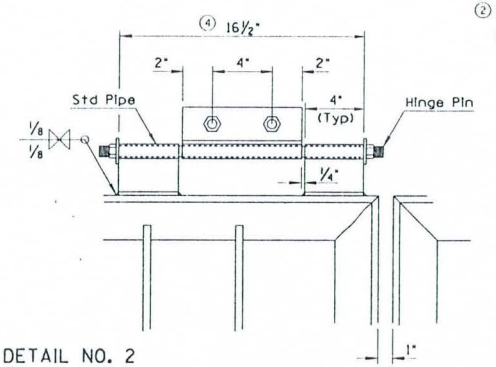

DETAIL NO. 2

GENERAL NOTES

1. All Shear pin angles shall fit snug and true to face. Cover with waterproof grease prior to installation of pin.
2. Shear pin holes in the angle shall be drilled for a tight fit of the pins.
3. Both ends of the shear pins shall be peened after installation.
4. Shear pin material shall be commercially pure aluminum wire alloy 1100, Temper 0, Federal Spec. QQ-A-411.
5. Galvanize all ferrous parts after fabrication.
6. ② Frame and hinge angles shall have the outstanding legs out.
7. All steel shall be in accordance with ASTM A36.
8. ②③ Barrier bars shall be equally spaced.
9. ③ Hinge pin material shall be bolt stock and threaded on both ends so nut and lock washer are flush with the lower angle. Cover pin with waterproof grease prior to installation. Upset or damage exposed threads after installation.

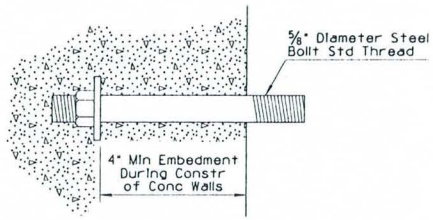

DETAIL NO. 3

①

ACCESS BARRIER GATE DIMENSION SCHEDULE

Size of Outfall Pipe	No. of Barrier Gates	Frame Angles	Shear Pin Clip Angles	Shear Pins	Hinge Pins	Hinge Angles	Hinge Standard Pipe	No. & Length Of Vert. Bars	No. & Length Of Horz. Bars	H (Out to Out of Frame Angles)	W (Out to Out of Frame Angles)	A	B	C	D	Str. Steel (lbs)
30"	1	2"x2"x¼"	4"x4"x¼"	2-⅛"•	½"•	2"x2"x¼"	¾"	4-31"	4-34"	33"	36"	3"	0"	-3"	2"	78.0
36"	1	2"x2"x¼"	4"x4"x¼"	2-⅛"•	½"•	2"x2"x¼"	¾"	4-31"	4-34"	33"	36"	3"	0"	0"	3.5"	78.0
42"	1	2"x2"x¼"	4"x4"x¼"	2-⅛"•	½"•	2"x2"x¼"	¾"	4-41"	5-34"	43"	36"	3"	0"	3"	0.5"	88.6
48"	1	3"x3"x7/16"	5"x3"x¼"	2-⅛"•	¾"•	2½"x2½"x¼"	1"	4-46"	6-34"	50"	38"	3"	1"	5"	1"	179.2
54"	1	3"x3"x7/16"	5"x3"x¼"	2-⅛"•	¾"•	2½"x2½"x¼"	1"	5-52"	7-40"	56"	44"	5"	3"	5"	2"	206.5
60"	1	3"x3"x7/16"	5"x3"x¼"	2-⅛"•	¾"•	2½"x2½"x¼"	1"	6-58"	8-46"	62"	50"	9"	4"	5"	3"	235.6
66"	1	3"x3"x7/16"	5"x3"x¼"	2-⅛"•	¾"•	2½"x2½"x¼"	1"	7-64"	9-52"	68"	56"	11"	6"	5"	4"	266.4
72"	2	3"x3"x7/16"	5"x3"x¼"	2-⅛"•	¾"•	2½"x2½"x¼"	1"	4-69"•	9-34"•	73"	38"	3"	1"	-2.5"	5"	443.6
78"	2	3"x3"x7/16"	5"x3"x¼"	2-⅛"•	¾"•	2½"x2½"x¼"	1"	4-75"•	10-34"•	79"	38"	3"	1"	0.5"	5"	468.4
84"	2	3"x3"x7/16"	5"x3"x¼"	2-⅛"•	¾"•	2½"x2½"x¼"	1"	4-81"•	11-34"•	85"	38"	3"	1"	3.5"	5"	493.2
90"	2	3"x3"x7/16"	5"x3"x¼"	2-⅛"•	¾"•	2½"x2½"x¼"	1"	4-87"•	12-36"•	91"	40"	3"	2"	4.5"	5"	527.0
96"	2	3"x3"x7/16"	5"x3"x¼"	2-⅛"•	¾"•	2½"x2½"x¼"	1"	5-93"•	13-39"•	97"	43"	4"	3"	4.5"	5"	579.0

• Per Gate

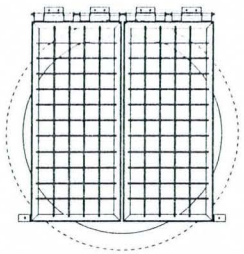

INSTALLATION DETAIL FOR DOUBLE GATES

DESIGN APPROVED
APPROVED FOR DISTRIBUTION

STATE OF ARIZONA
DEPARTMENT OF TRANSPORTATION
DIVISION OF HIGHWAYS
STANDARD DRAWINGS

REV. 7/94

STORM DRAIN
OUTLET DETAILS

DRAWING NO. C-13.75
Sheet 1 of 2

	PNB	7/94
	PNB	7/94
	PNB	7/94
	PNB	7/94

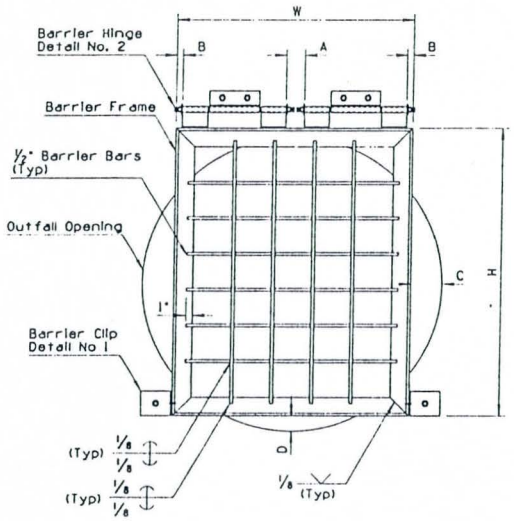

PIPE ACCESS BARRIER FRONT ELEVATION

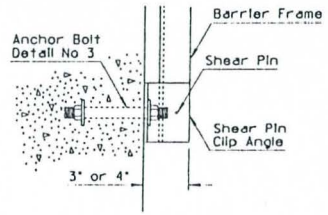

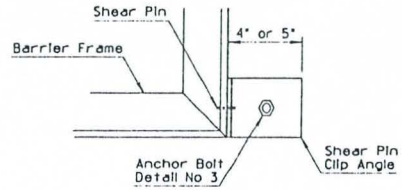

DETAIL NO. 1

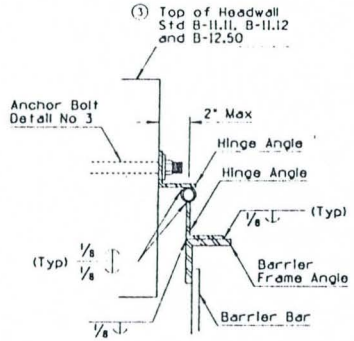

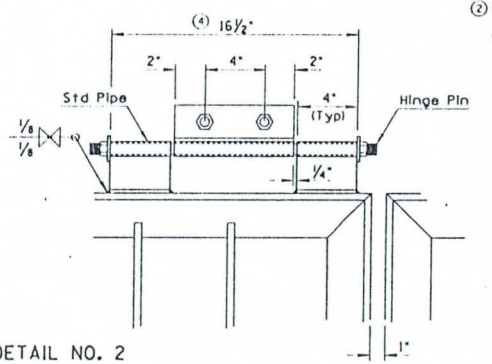

DETAIL NO. 2

GENERAL NOTES

1. All Shear pin angles shall fit snug and true to face. Cover with waterproof grease prior to installation of pin.
2. Shear pin holes in the angle shall be drilled for a tight fit of the pins.
3. Both ends of the shear pins shall be peened after installation.
4. Shear pin material shall be commercially pure aluminum wire alloy 1100, Temper O, Federal Spec. QQ-A-411.
5. Galvanize all ferrous parts after fabrication.
6. (2) Frame and hinge angles shall have the outstanding legs out.
7. All steel shall be in accordance with ASTM A36.
8. (2)(3) Barrier bars shall be equally spaced.
9. (3) Hinge pin material shall be bolt stock and threaded on both ends so nut and lock washer are flush with the lower angle. Cover pin with waterproof grease prior to installation. Upset or damage exposed threads after installation.

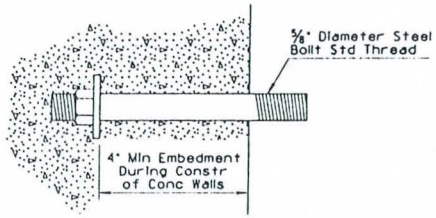

DETAIL NO. 3

(1)

ACCESS BARRIER GATE DIMENSION SCHEDULE

Size of Outfall Pipe	No. of Barrier Gates	Frame Angles	Shear Pin Clip Angles	Shear Pins	Hinge Pins	Hinge Angles	Hinge Standard Pipe	No. & Length Of Vert. Bars	No. & Length Of Horz. Bars	H (Out to Out of Frame Angles)	W (Out to Out of Frame Angles)	A	B	C	D	Str. Steel (lbs)
30"	1	2"x2"x1/4"	4"x4"x1/4"	2-1/8"•	1/2"•	2"x2"x1/4"	3/4"	4-31"	4-34"	33"	36"	3"	0"	-3"	2"	78.0
36"	1	2"x2"x1/4"	4"x4"x1/4"	2-1/8"•	1/2"•	2"x2"x1/4"	3/4"	4-31"	4-34"	33"	36"	3"	0"	0"	3.5"	78.0
42"	1	2"x2"x1/4"	4"x4"x1/4"	2-1/8"•	1/2"•	2"x2"x1/4"	3/4"	4-41"	5-34"	43"	36"	3"	0"	3"	0.5"	88.6
48"	1	3"x3"x7/16"	5"x3"x1/4"	2-1/8"•	3/4"•	2 1/2"x2 1/2"x1/4"	1"	4-46"	6-34"	50"	38"	3"	1"	5"	1"	179.2
54"	1	3"x3"x7/16"	5"x3"x1/4"	2-1/8"•	3/4"•	2 1/2"x2 1/2"x1/4"	1"	5-52"	7-40"	56"	44"	5"	3"	5"	2"	206.5
60"	1	3"x3"x7/16"	5"x3"x1/4"	2-1/8"•	3/4"•	2 1/2"x2 1/2"x1/4"	1"	6-58"	8-46"	62"	50"	9"	4"	5"	3"	235.6
66"	1	3"x3"x7/16"	5"x3"x1/4"	2-1/8"•	3/4"•	2 1/2"x2 1/2"x1/4"	1"	7-64"	9-52"	68"	56"	11"	6"	5"	4"	266.4
72"	2	3"x3"x7/16"	5"x3"x1/4"	2-1/8"•	3/4"•	2 1/2"x2 1/2"x1/4"	1"	4-69"•	9-34"•	73"	38"	3"	1"	-2.5"	5"	443.6
78"	2	3"x3"x7/16"	5"x3"x1/4"	2-1/8"•	3/4"•	2 1/2"x2 1/2"x1/4"	1"	4-75"•	10-34"•	79"	38"	3"	1"	0.5"	5"	468.4
84"	2	3"x3"x7/16"	5"x3"x1/4"	2-1/8"•	3/4"•	2 1/2"x2 1/2"x1/4"	1"	4-81"•	11-34"•	85"	38"	3"	1"	3.5"	5"	493.2
90"	2	3"x3"x7/16"	5"x3"x1/4"	2-1/8"•	3/4"•	2 1/2"x2 1/2"x1/4"	1"	4-87"•	12-36"•	91"	40"	3"	2"	4.5"	5"	527.0
96"	2	3"x3"x7/16"	5"x3"x1/4"	2-1/8"•	3/4"•	2 1/2"x2 1/2"x1/4"	1"	5-93"•	13-39"•	97"	43"	4"	3"	4.5"	5"	579.0

• Per Gate

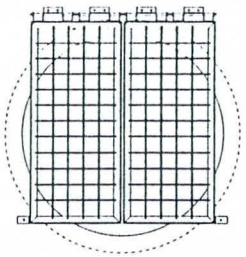

INSTALLATION DETAIL FOR DOUBLE GATES

DESIGN APPROVED	STATE OF ARIZONA DEPARTMENT OF TRANSPORTATION DIVISION OF HIGHWAYS STANDARD DRAWINGS	REV. 7/94
APPROVED FOR DISTRIBUTION	STORM DRAIN OUTLET DETAILS	DRAWING NO. C-13.75 Sheet 1 of 2

FLOOD CONTROL DISTRICT OF MARICOPA COUNTY

PROJECT Cassandra Wash PAGE ____ OF ____

DETAIL Out Lot STR COMPUTED KVH DATE 7/95

CHECKED BY ____ DATE ____

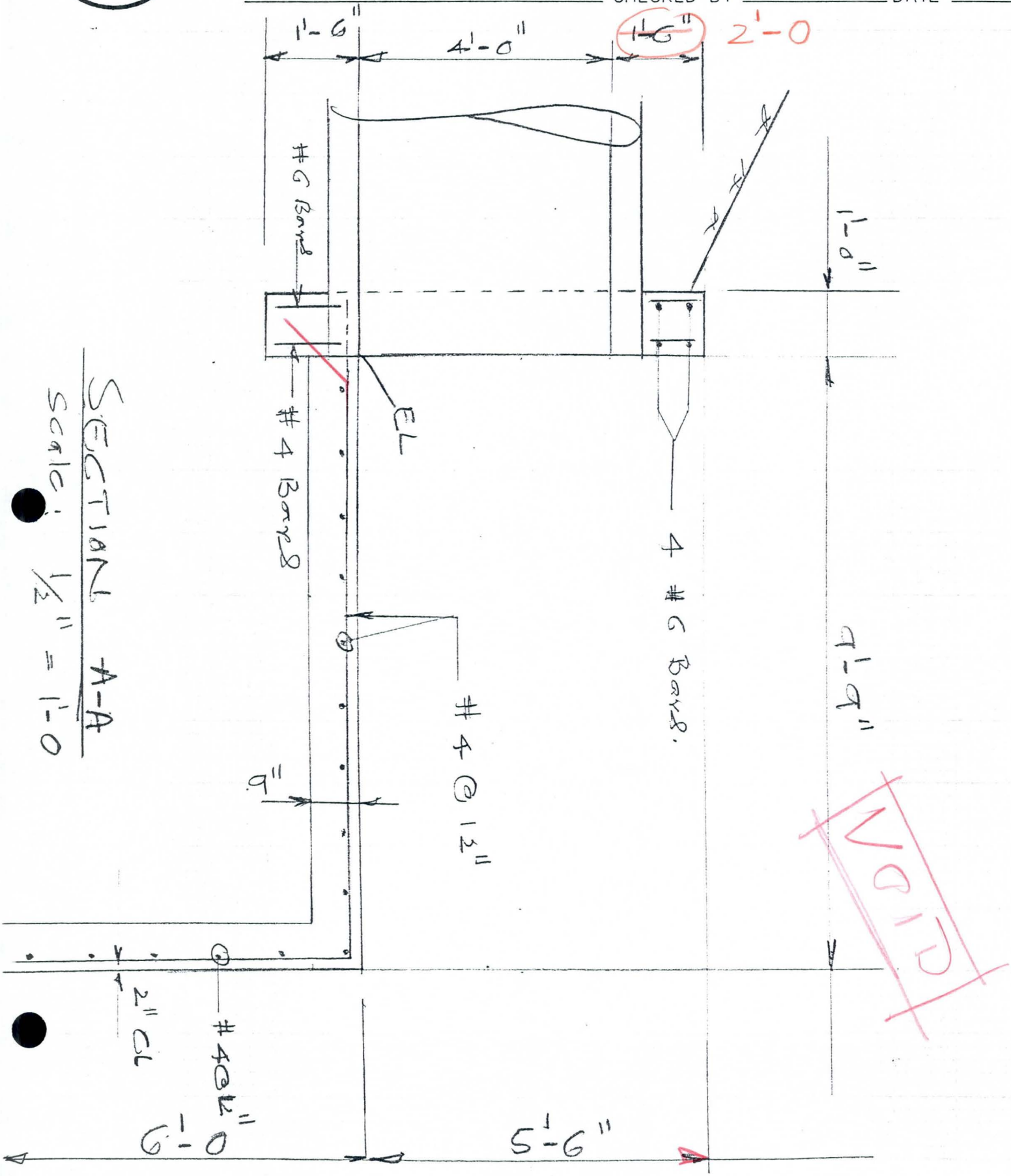

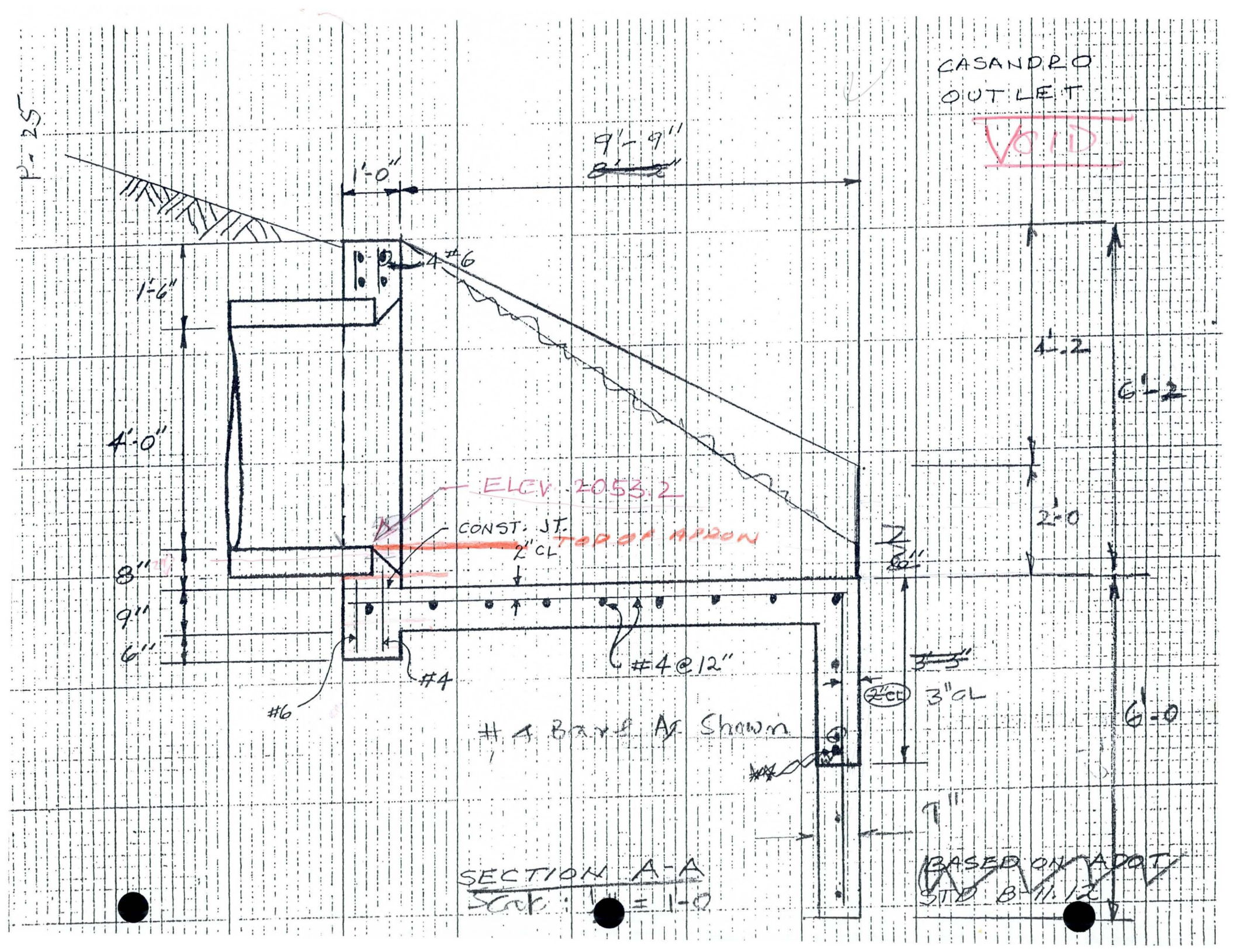
CASANDRO
OUTLET
VOID
P-25
1'-0"
9'-9"
~~8'-2"~~
#6
1'-6"
4'-0"
ELEV. 2053.2
CONST. JT.
TOP OF APRON
2" CL
8"
9"
6"
#4
#6
#4@12"
~~3'-3"~~
2" CL
3" CL
4'-2
6'-2
2'-0
6'-0
~~8'-1"~~
#4 Bars As Shown
7"
SECTION A-A
Scale: 1" = 1'-0
BASED ON ADOT
STD B-11.12

(5)

FLOOD CONTROL DISTRICT OF MARICOPA COUNTY

PROJECT Gardena Wash PAGE ____ OF ____

DETAIL Outlet Str. COMPUTED KVH DATE 7/95

CHECKED BY ____ DATE ____

VOID

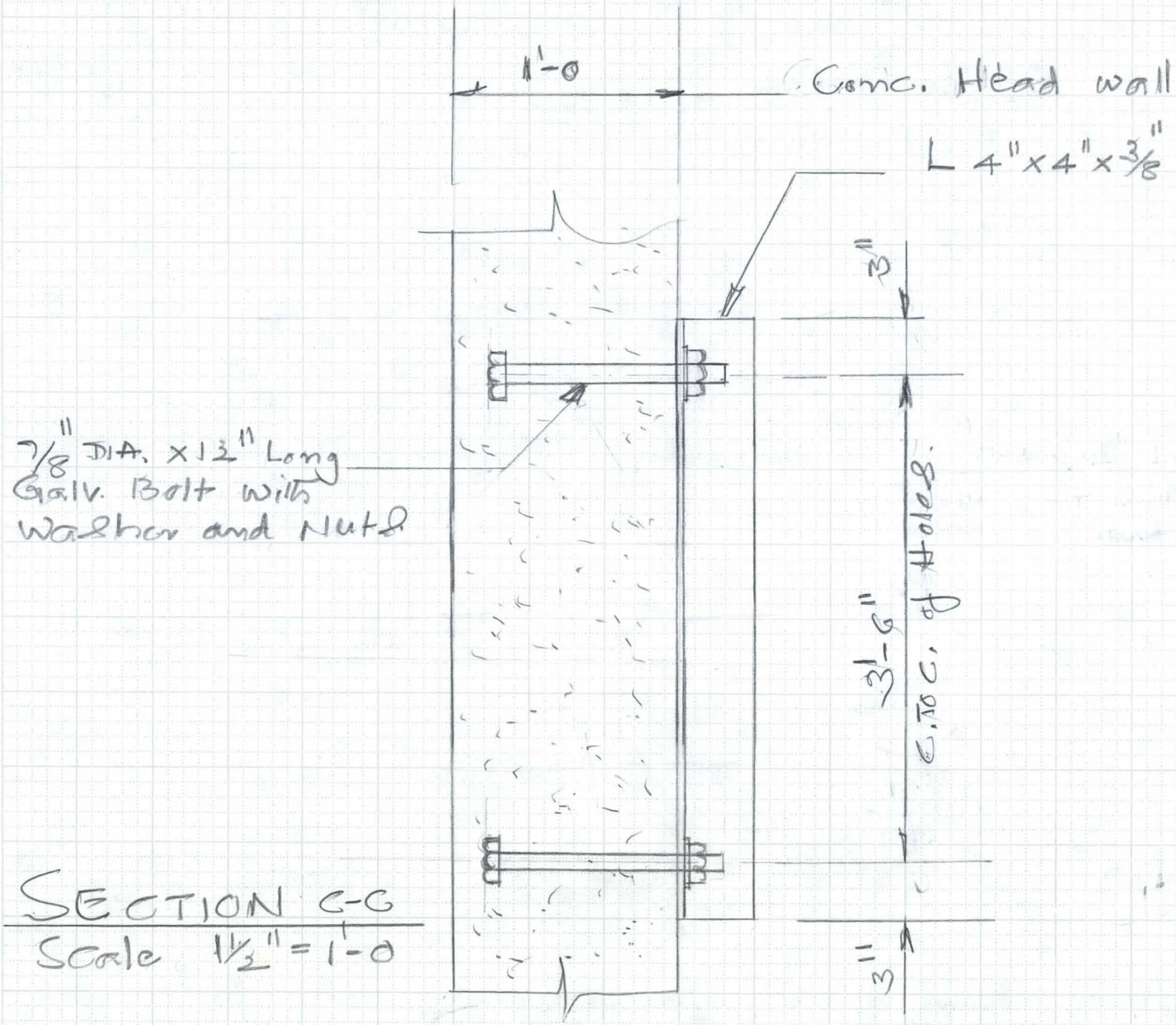

SECTION C-C

Scale 1½" = 1'-0

FLOOD CONTROL DISTRICT OF MARICOPA COUNTY

6910-153 4-90

FLOOD CONTROL DISTRICT OF MARICOPA COUNTY

PROJECT _____ PAGE ____ OF ____

DETAIL _____ COMPUTED _____ DATE _____

CHECKED BY _____ DATE _____

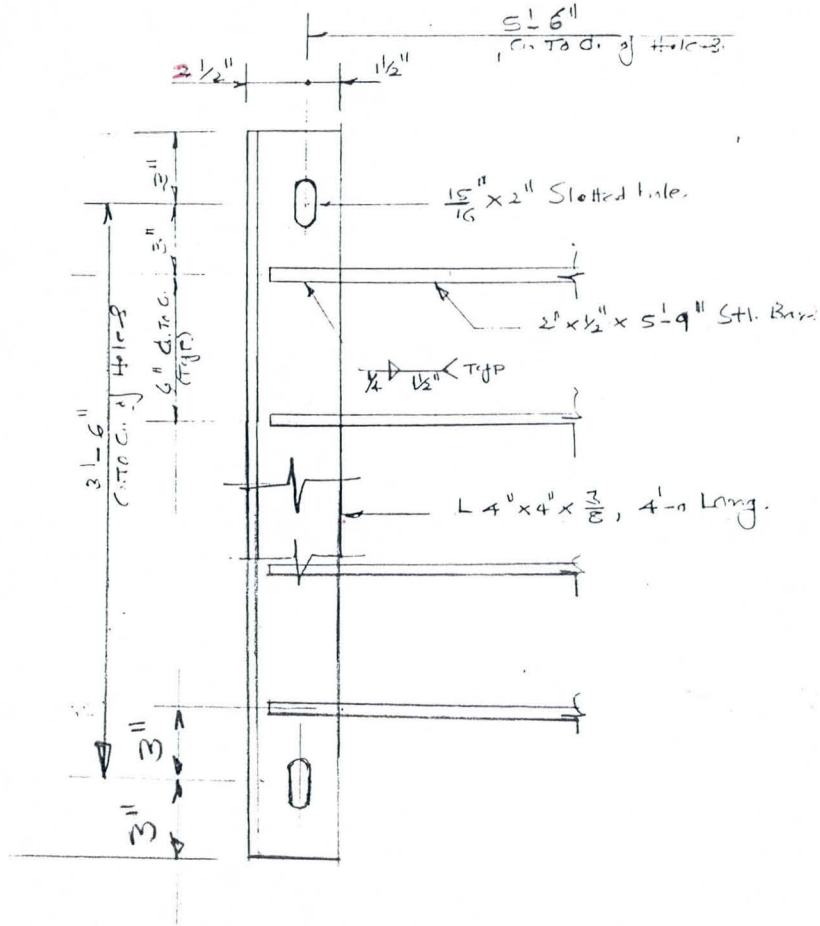

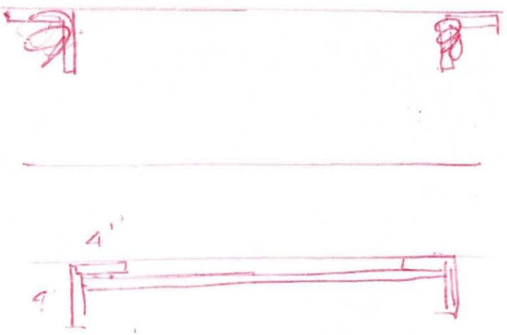

$\frac{7}{8} + \frac{1}{16} = \frac{15}{16}$"

$1\frac{1}{2}" = 1'-0$

DETAIL - 1

Scale $1\frac{1}{2}" = 1'-0$

FLOOD CONTROL DISTRICT OF MARICOPA COUNTY

PROJECT Cardamon Wash PAGE ____ OF ____

DETAIL Gate Str. COMPUTED KWH DATE 7/95

CHECKED BY ____ DATE ____

VOID

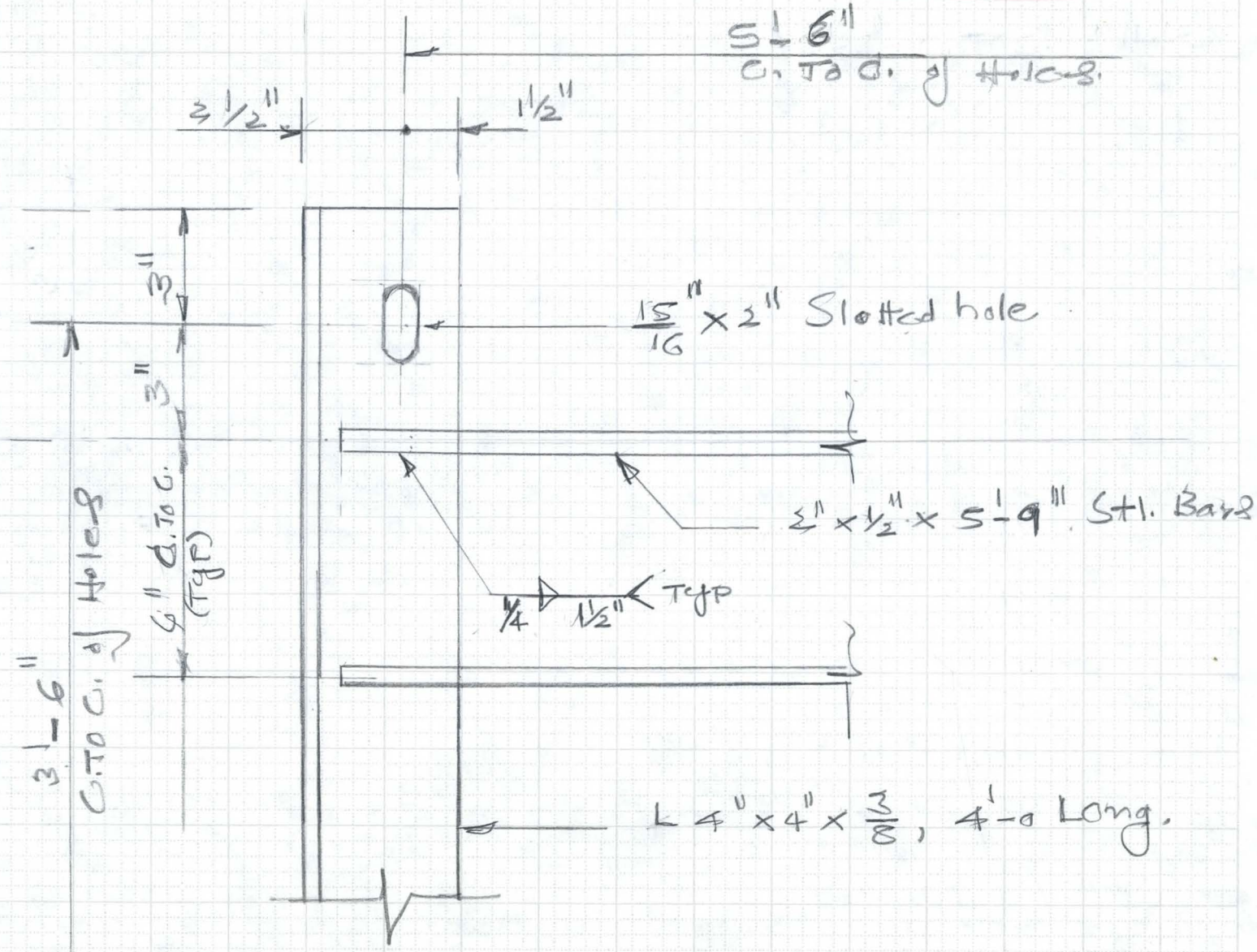

DETAIL - B

Scale: 3/4" = 1'-0
1 1/2"

FLOOD CONTROL DISTRICT OF MARICOPA COUNTY

69-10-153 4-90

FLOOD CONTROL DISTRICT OF MARICOPA COUNTY

PROJECT

DETAIL

PAGE ___ OF ___

COMPUTED KWH DATE 7/95

CHECKED BY ___ DATE ___

VOID

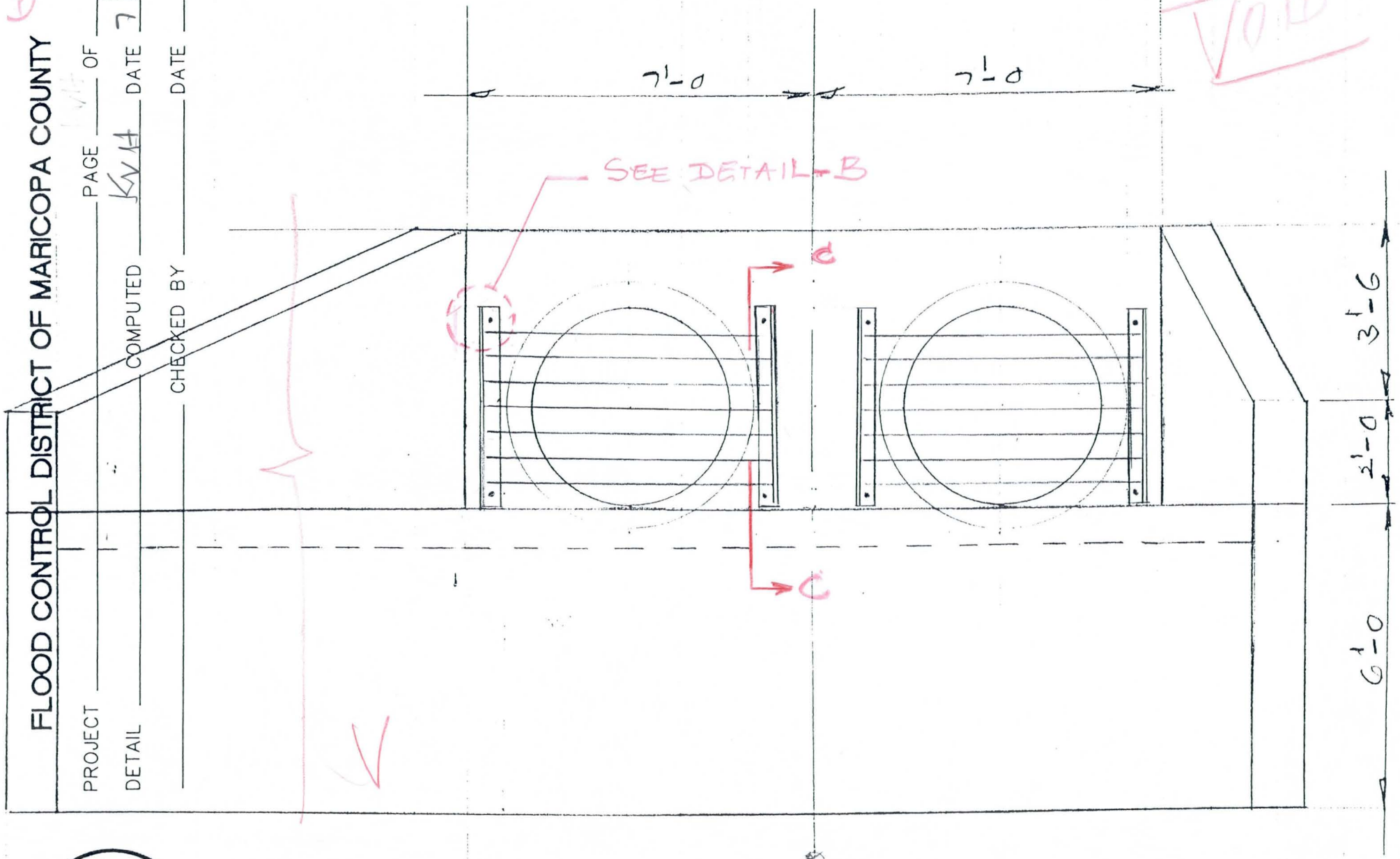

Accell Barrier

Elevation View

Showing Accell Barrier

Scale 1/2" = 1'-0

3/8" = 1'-0

FLOOD CONTROL DISTRICT OF MARICOPA COUNTY

PROJECT _____ PAGE ____ OF ____

DETAIL _____ COMPUTED _____ DATE ____

_____ CHECKED BY _____ DATE ____

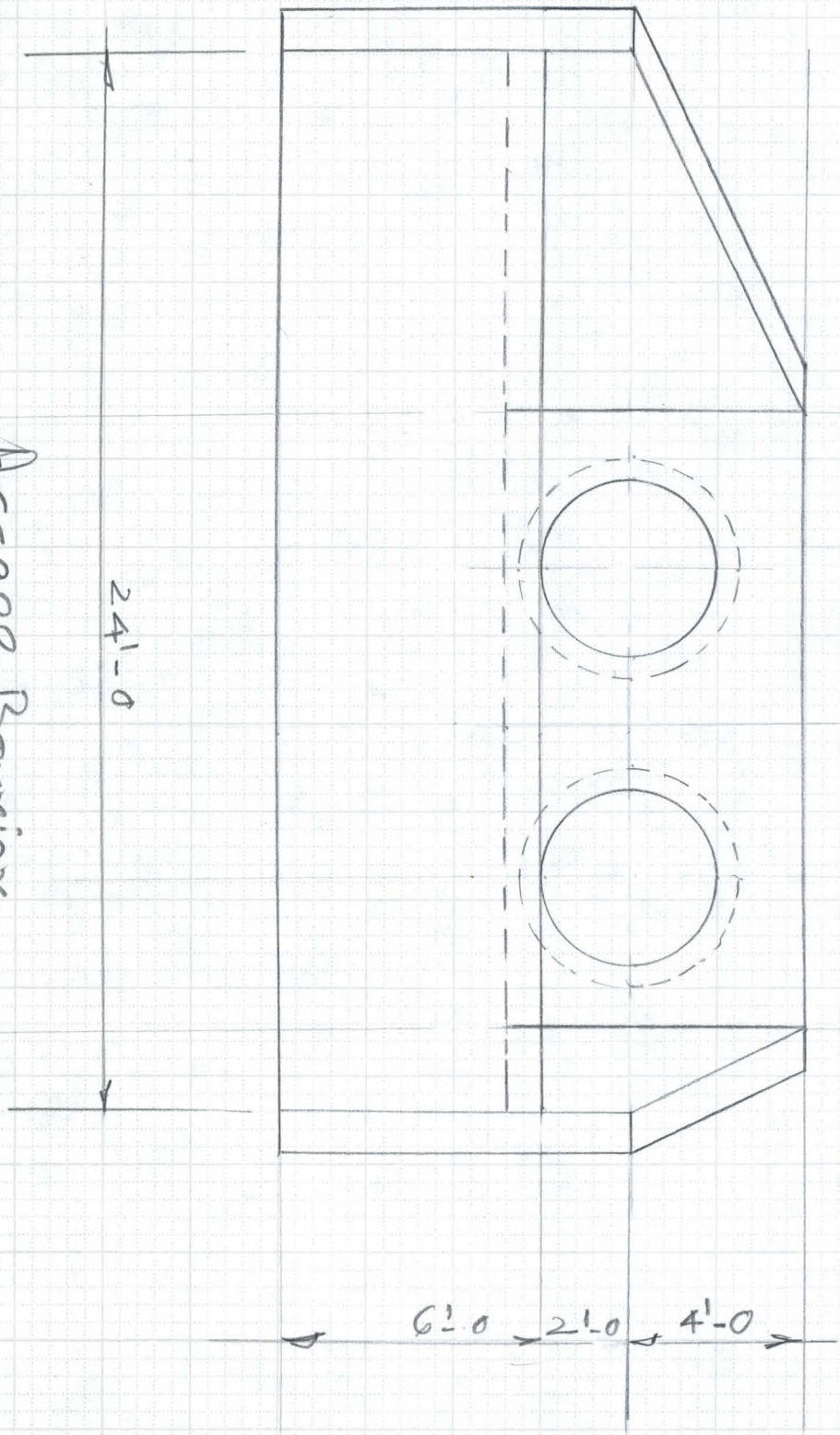

Access Barrier
Elevation View
Scale: 1/2" = 1'-0

6910-153 4-90

FLOOD CONTROL DISTRICT OF MARICOPA COUNTY

PROJECT _____ PAGE ____ OF ____

DETAIL _____ COMPUTED _____ DATE _____

CHECKED BY _____ DATE _____

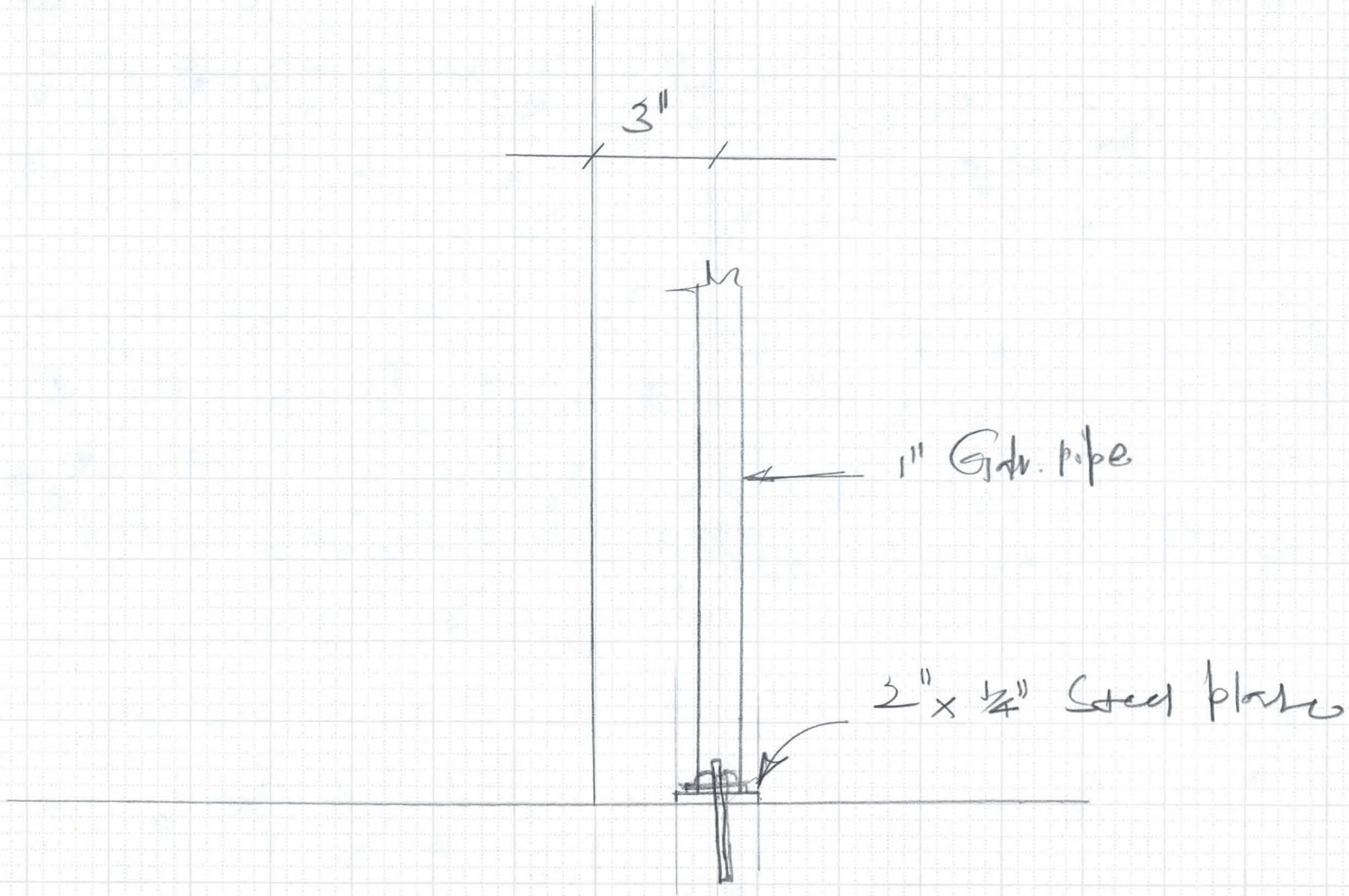

FLOOD CONTROL DISTRICT OF MARICOPA COUNTY
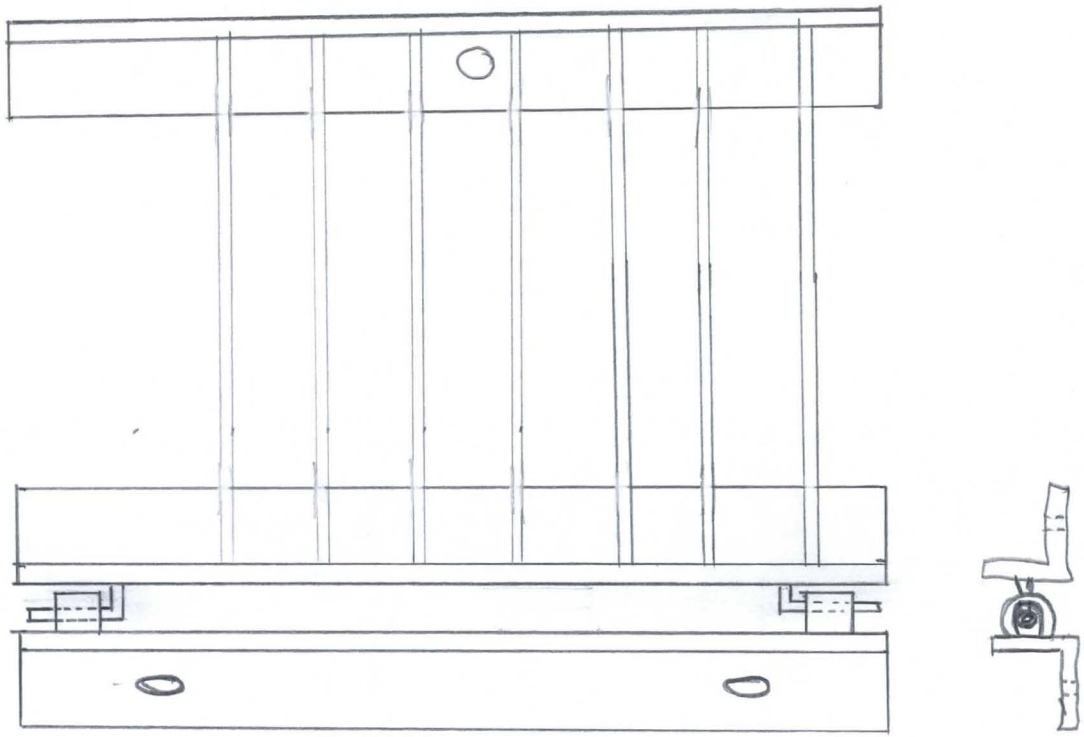
6910-159 4-90