FLOOD CONTROL DISTRICT OF MARICOPA COUNTY

CONTRACT FCD 2001C035

TASK 1

WITTMANN ADMP STRUCTURE SURVEYS

HIGHWAY 60-RAILROAD

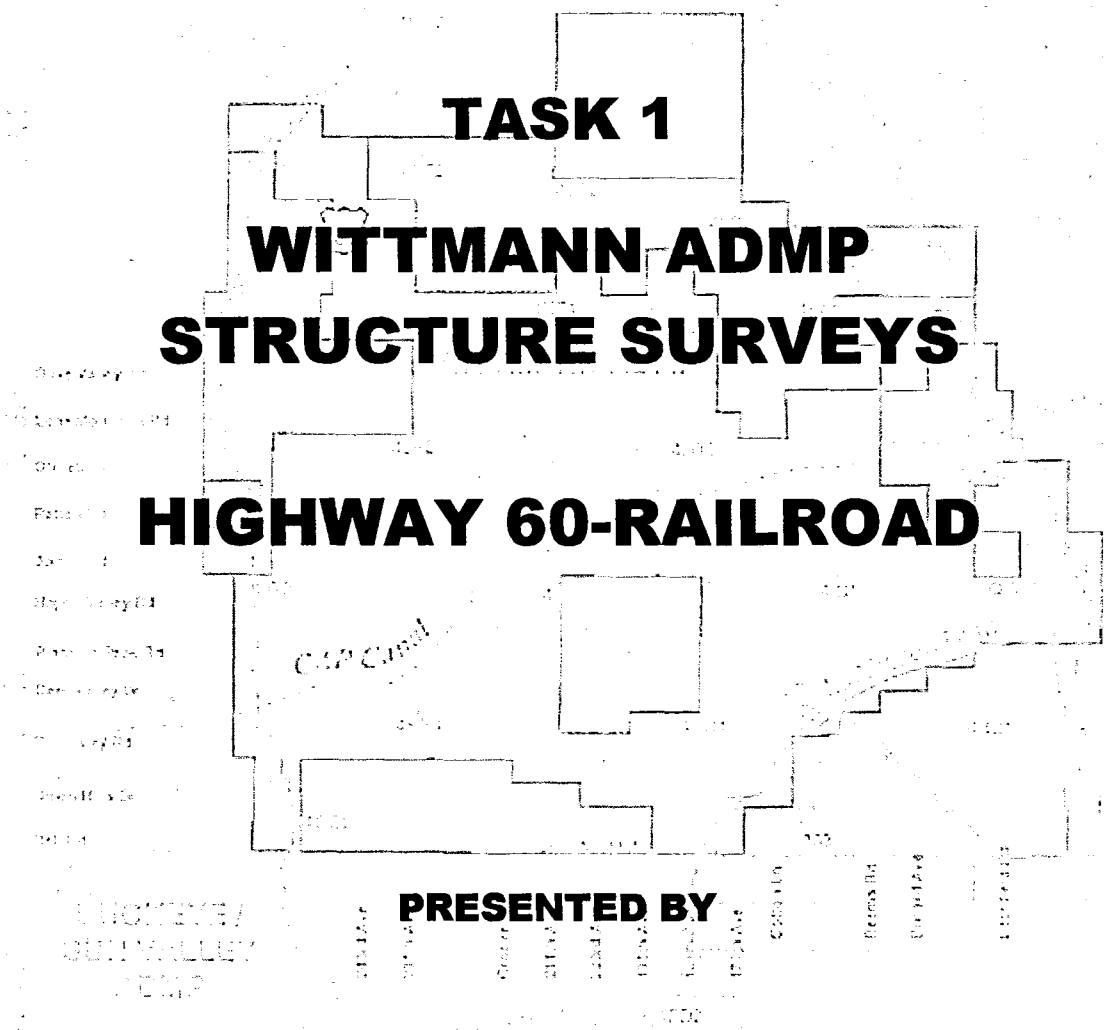

PRESENTED BY

DATABASED TERRAIN MAPPING, INC.
1075 E. Ft. Lowell Road, Suite A-1
Tucson, Arizona 95719-2159
Voice 520.292.2020
FAX 520.888.4393

1075 East Fort Lowell Road
Suite A-1
Tucson, Arizona USA 85719-2159
520.292.2020 Tel.
520.888.4393 Fax
DATABASED TERRAIN MAPPING, INC.

September 24, 200

Mr. John Stock
Survey Manager
FLOOD CONTROL DISTRICT OF MARICOPA COUNTY
2801 West Durango
Phoenix, Arizona 8509

RE: Contract FCD 2001C035
On-Call Surveying & Mapping Services - Task 1
Wittmann ADMP Structure Surveys
HIGHWAY 60 - RAILROAD - SURVEY REPORT
CERTIFICATION

Dear Mr. Stock:

The data contained on the CD delivered enclosed **(CD VOLUME LABEL 010924_1540)** has been collected according to the specification set forth under Contract FCD2001C035 for structure surveys along Railroad parallel to highway 60 in the Wittmann ADMP area. The survey data is based on Maricopa County GDACS points within the project area. Individual GDACS points are identified in the datasets and sketches included with the delivery. All data is NAD83 and NAVD 88 collected with RTK GPS methods and procedures using Ashtech2 GPS system and technology.

This survey was completed under the direct supervision of Mr. Lee Harbers, Arizona RLS # 26401

The data is intended for the exclusive use by the Flood Control District of Maricopa County. **Databased Terrain Mapping, Inc.** or Mr. Lee Harbers accept no responsibility for the use or distribution of the data beyond that specifically intended by the District.

Sincerely,

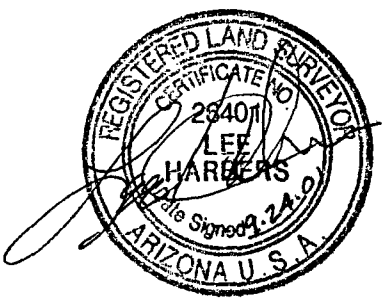

DATABASED TERRAIN MAPPING, INC.
Lee Harbers, RLS, Certified Photogrammetrist
President

Directory.txt

Contents of e:\RAILROAD\Field Data\

4ic1.asc ;
4ke1.asc ;
4lh2-qc.asc ;
562.asc ;
Hwy60-RR.xls ;

Contents of e:\RAILROAD\Photos\

150+54DS.JPG ;
150+54UP.JPG ;
150+6DS.JPG ;
150+6UP.JPG ;
150+7DN.JPG ;
150+7UP.JPG ;
151+0DN.JPG ;
151+0UP.JPG ;
151+16DN.JPG ;
151+16UP.JPG ;
151+1DN.JPG ;
151+1UP.JPG ;
151+25DN.JPG ;
151+25UP.JPG ;
151+64DN.JPG ;
151+64UP.JPG ;
151+77DN.JPG ;
151+77UP.JPG ;
151+91DN.JPG ;
151+91UP.JPG ;
152+05DN.JPG ;
152+05UP.JPG ;
152+19DN.JPG ;
152+19UP.JPG ;
152+37ADN.JPG ;
152+37AUP.JPG ;
152+37DN.JPG ;
152+37UP.JPG ;
152+55DN.JPG ;
152+55UP.JPG ;
152+7DN.JPG ;
152+7UP.JPG ;
153+0DN.JPG ;
153+0UP.JPG ;
153+15DN.JPG ;
153+15UP.JPG ;
153+17DN.JPG ;
153+17UP.JPG ;
153+26DS.JPG ;
153+26UP.JPG ;
153+34DN.JPG ;
153+34UP.JPG ;
153+40DN.JPG ;
153+40UP.JPG ;
153+44DN.JPG ;
153+44UP.JPG ;

153+5DN.JPG ;
153+5UP.JPG ;
153+64DN.JPG ;
153+64UP.JPG ;
153+7DN.JPG ;
153+7UP.JPG ;
153+9DN.JPG ;
153+9UP.JPG ;
154+0DN.JPG ;
154+0UP.JPG ;
154+1DN.JPG ;
154+1UP.JPG ;
154+2DN.JPG ;
154+2UP.JPG ;
154+4ADN.JPG ;
154+4AUP.JPG ;
154+4BDN.JPG ;
154+4BUP.JPG ;
154+4CDN.JPG ;
154+4CUP.JPG ;
154+4DDN.JPG ;
154+4DN.JPG ;
154+4DUP.JPG ;
154+4EDN.JPG ;
154+4EUP.JPG ;
154+4FUP.JPG ;
154+4UP.JPG ;
154+5DN.JPG ;
154+5UP.JPG ;
154+6DN.JPG ;
154+6UP.JPG ;
154+9DN.JPG ;
154+9UP.JPG ;
155+1DN.JPG ;
155+1UP.JPG ;
155+2DN.JPG ;
155+2UP.JPG ;
155+3DN.JPG ;
155+3UP.JPG ;
155+5DN.JPG ;
155+5UP.JPG ;
155+67DN.JPG ;
155+67UP.JPG ;
155+73DN.JPG ;
155+73UP.JPG ;
155+8DN.JPG ;
155+8UP.JPG ;
156+11DN.JPG ;

156+11UP.JPG ;
156+1DN.JPG ;
156+1UP.JPG ;
156+3DN.JPG ;
156+3UP.JPG ;
156+7ADN.JPG ;
156+7AUP.JPG ;
156+7BDN.JPG ;
156+7CDN.JPG ;
156+7DN.JPG ;
156+7UP.JPG ;
157+0ADN.JPG ;
157+0AUP.JPG ;
157+0DN.JPG ;
157+0UP.JPG ;
157+1DN.JPG ;
157+1UP.JPG ;
157+28DN.JPG ;
157+28UP.JPG ;
157+4DN.JPG ;
157+4UP.JPG ;
157+8DN.JPG ;
157+8UP.JPG ;
158+1ADN.JPG ;
158+1AUP.JPG ;
158+1BDN.JPG ;
158+1CDN.JPG ;
158+1DN.JPG ;
158+1UP.JPG ;
158+8ADN.JPG ;
158+8AUP.JPG ;
158+8BDN.JPG ;
158+8BUP.JPG ;
158+8CDN.JPG ;
158+8DDN.JPG ;
158+8DN.JPG ;
158+8UP.JPG ;
159+2DN.JPG ;
159+2UP.JPG ;
160+9ADN.JPG ;
160+9AUP.JPG ;
160+9BDN.JPG ;
160+9BUP.JPG ;
160+9CDN.JPG ;
160+9DN.JPG ;
160+9UP.JPG ;
161+3DN.JPG ;
161+3UP.JPG ;

161+4DN.JPG ;
161+4UP.JPG ;
161+6DN.JPG ;
161+6UP.JPG ;
161+8DN.JPG ;
161+8UP.JPG ;
162+7AUP.JPG ;
162+7DN.JPG ;
162+7UP.JPG ;
163+2DN.JPG ;
163+2UP.JPG ;
163+5DN.JPG ;
163+5UP.JPG ;
163+86DN.JPG ;
163+86UP.JPG ;
164+5ADN.JPG ;
164+5DN.JPG ;
164+5UP.JPG ;
164+9DN.JPG ;
164+9UP.JPG ;
165+7AUP.JPG ;
165+7BUP.JPG ;
165+7DN.JPG ;
165+7UP.JPG ;
166+0AUP.JPG ;
166+0DN.JPG ;
166+0UP.JPG ;
166+3DN.JPG ;
166+3UP.JPG ;
166+7DN.JPG ;
166+7UP.JPG ;
167+1DN.JPG ;
167+1UP.JPG ;
2501+00DN.JPG ;
2501+00UP.JPG ;

1075 East Fort Lowell Road
Suite A-1
Tucson, Arizona USA 85719-2159
520.292.2020 Tel.
520.888.4393 Fax
DATABASED TERRAIN MAPPING, INC.

September 24, 200 1

Mr. John Stock
Survey Manager
FLOOD CONTROL DISTRICT OF MARICOPA COUNTY
2801 West Durango
Phoenix, Arizona 8509

RE: Contract FCD 2001C035
On-Call Surveying & Mapping Services - Task 1
Wittmann ADMP Structure Surveys
HIGHWAY 60 RAILROAD - SURVEY REPORT

Dear Mr. Stock:

Databased Terrain Mapping, Inc. has completed all field work and QA/QC activities as documented in the following datasets. Field activities for data collection were completed between August 6, 2001 and August 15, 2001. All field survey and documentation was completed under the direct supervision of Mr. Lee Harbers, Arizona RLS # 26401.

The procedures for the field survey activities involved:

1. Review of project alignment and limits as provided by FCD
2. Research and reconnaissance to locate available GDACS control point near the project that met the requirements for valid RTK GPS data collection.
3. Development of a plan that successfully completed all reporting tasks, including structure location/elevation, documentation of each structure by field observation (sketch) and digital photography.

All data for the structure surveys have been collected in NAD83 Arizona State Plane Coordinate System (Central Zone) and NAVD88 vertical datum with English (International Foot) units of measure. Each data collection session involved locating a valid GDACS point to be occupied by the RTK GPS Base Station. Other GDACS points in the vicinity were then visited and occupied with the rover unit to validate orientation of the system.

All field data has been reviewed and cross-referenced to the sketches and photographs submitted with this report. The following notes are critical to a thorough understanding of this report and offered as support thereof:

1. All data collection files are submitted in both hardcopy and electronic form (***.ASC files.) These ASCII files are named according to the GDACS point initially used for a particular "Session" ***OR*** a random point set in the vicinity of the alignment from the GDACS points. They may cover more than one day of data collection. Format is "Data Collection Point number, North, East, Elevation, Description." In the description column, the Station values are followed by the letters "N", "S", or "C", and, in some cases "BC". The "N" identifies the North side of the structure (for the railroad, this is always the upstream side). The "S" identifies the South (downstream) side of the structure, and the ***"C" denotes the highest terrain elevation (potential dam) for each structure. This elevation is taken at the visual high point of the terrain along the approximate centerline profile of the structure.***
2. The individual structures have been identified by their Station location - ***railraod milepost***. (i.e.,150.54 station is identified as 150+54.)
3. Included at the front of the report (and electronically) is a file - Hwy60-RR.xls. This spreadsheet format is a collation of the data points collected on each structure. Table format is "North, East, Elevation, Description"
4. Each structure was surveyed at each end and sketched to provide interpretive data *AND identify the physical point(s) that were "shot" during the RTK process.* ***These sketches should be examined for that purpose.*** *In some cases, the point of occupation was the bottom of the structure instead of the top. Other aspects/features of the structure were measured by taping and critical dimensions noted on the sketeches.* When RTK "shots" were taken for each structure, the low-flow point (ground elevation or "structure "floor" elevation was calculated from on-site measurements and noted on the sketch. These elevations take into account any sediment fill in the structure. The "convention" for the sketches is "North(Upstream)" and South(Downstream)" side - looking downstream & upstream respectively.
5. The ends of each structure were photographed with a 35mm digital camera and images stored as .jpg files. The 8x10 images have been plotted and accompany the sketches

within this report. The naming convention for the images follows the "upstream" and "downstream" rule - **+**up *or* **+**dn, *the "up" referring to the upstream side - looking downstream and conversely for the downstream side.*

6. Whenever an existing bench mark was found on these structures, the monument was measured. The measured value is shown in the data tables/files. The "stamped-found" elevation, when available/readable, has been recorded on the sketches related to that structure.
7. A small number of structures could not be surveyed by RTK methods without destruction of flora in the area. In those cases, temporary points were set with RTK and the site was surveyed conventionally. The ASCII files and .xls spreadsheet denote these temporary points and the resultant data from the conventional work.
8. In addition to the structure data collection, the files identify random GDACS check points during the sessions.

Sincerely,

DATABASED TERRAIN MAPPING, INC.
Lee Harbers, RLS, Certified Photogrammetrist
President

REGISTERED LAND SURVEYOR
CERTIFICATE NO.
26401
LEE
HARBERS
Date Signed 9.24.09
ARIZONA U.S.A.

attachment

Highway 60 RAILROAD - Structures			
Descriptions (stationings) are cross-referenced to Rail Road Milepost Stationing			
Refer to sketches for point locations			
Point Descriptions:			
	The "N" and "S" extensions on the stationing refer to the North (upstream)		
	end of the structure. When found, the "BC" extension identifies a found		
	Brass Cap. The "C" extension identifies the "high terrain/*dam*" elevation		
	along the approximate centerline profile of the structure.		
	This table shows only the structure survey points. Refer to the associated		
	ASCII tables for control point and other found monument data.		

NORTH	EAST	ELEVATION	DESCRIPTION
1038287.705	485528.3786	1970.975579	2501 CHS RD
1038307.832	485550.7434	1973.400071	2501C
1038322.119	485561.1529	1970.863587	2501 CHS RD N
1038021.462	485797.3334	1968.497938	150.54S
1038049.175	485824.4466	1972.506767	150.54C
1038063.225	485835.6367	1969.208742	150.54N
1037673.915	486163.7438	1966.970962	150.6S
1037702.556	486191.1377	1971.240945	150.6C
1037711.958	486200.672	1968.331512	150.6N
1037314.857	486567.4225	1965.943229	150.7S
1037333.178	486582.0262	1969.67766	150.7C
1037342.573	486590.965	1966.68498	150.7N
1036355.213	487582.7145	1962.015547	151.0S
1036374.123	487597.1327	1965.760624	151.0C
1036383.484	487606.953	1962.503361	151.0N
1035896.503	488064.6001	1960.560848	151.1S
1035915.772	488082.2562	1963.676249	151.1C
1035926.241	488092.4284	1961.654311	151.1N
1035274.419	488714.0702	1957.032153	151.16S
1035298.005	488736.0104	1961.030104	151.16C
1035310.756	488748.8017	1957.468158	151.16N
1034998.334	489005.4005	1955.297055	151.25S
1035019.568	489030.5996	1959.23487	151.25C
1035190.982	489150.2085	1959.45049	151.25N
1033990.74	490056.3332	1944.37723	151.64S
1034021.201	490087.738	1954.382	151.64C
1034034.34	490099.412	1948.701276	151.64N
1033549.829	490537.9567	1949.648896	151.77S
1033573.578	490560.8192	1953.113443	151.77C
1033585.619	490573.0303	1950.446052	151.77N
1033035.963	491086.6216	1943.918923	151.91S
1033057.062	491107.3829	1950.551503	151.91C
1033067.407	491117.2021	1947.708076	151.91N
1032611.246	491565.9711	1944.691032	152.05S
1032617.539	491572.732	1946.920507	152.05C
1032628.41	491582.063	1944.693015	152.05N

1032060.019	492150.8	1937.0467	152.19S
1032065.539	492157.153	1940.821829	152.19C
1032074.878	492165.2858	1938.833013	152.19N
1031412.769	492840.7747	1933.933314	152.37S
1031364.556	492891.7839	1933.621223	152.37S
1031335.769	492922.4728	1933.449632	152.37S
1031376.627	492886.0858	1935.020822	152.37C
1031346.036	492932.3477	1933.449023	152.37N
1031375.104	492901.6786	1933.617615	152.37N
1031423.111	492850.7833	1933.901126	152.37N
1030750.087	493517.3908	1919.088398	152.55S
1030768.146	493530.0124	1930.478269	152.55C
1030800.078	493532.9061	1919.861004	152.55N
1030179.974	494113.6399	1912.233974	152.7S
1030202.148	494129.2109	1926.436388	152.7C
1030225.949	494147.3623	1913.63804	152.7N
1029218.029	495138.3429	1905.950763	153.0S
1029235.265	495152.5803	1917.109315	153.0C
1029253.543	495171.0295	1906.785428	153.0N
1028676.247	495722.5189	1903.950989	153.15S
1028687.228	495732.8406	1909.976472	153.15C
1028699.41	495744.2803	1906.179703	153.15N
1028514.617	495893.0901	1900.807249	153.17S
1028526.446	495903.0901	1908.456209	153.17C
1028541.099	495917.0874	1901.232124	153.17N
1028182.726	496245.4567	1894.159898	153.26S
1028193.738	496255.2685	1905.911024	153.26C
1028206.476	496268.0273	1901.739877	153.26N
1027890.61	496562.8563	1899.528885	153.34S
1027897.039	496569.4282	1903.410884	153.34C
1027907.638	496578.7261	1899.725117	153.34N
1027669.346	496788.4602	1895.658274	153.40S
1027681.395	496797.6624	1901.180003	153.40C
1027693.355	496810.0652	1896.449131	153.40N
1027515.408	496947.6614	1893.624561	153.44S
1027528.57	496959.4098	1899.534317	153.44C
1027545.175	496974.6166	1895.436217	153.44N
1027147.349	497338.7149	1888.341691	153.5S
1027159.399	497350.2397	1896.302126	153.5C
1027178.232	497360.1139	1889.435663	153.5N
1026820.008	497698.8821	1892.49667	153.64S
1026824.894	497704.4064	1893.923969	153.64C
1026834.612	497712.3842	1891.174322	153.64N
1026566.11	497963.655	1887.483726	153.7S
1026573.107	497971.2618	1891.692038	153.7C
1025848.952	498719.5625	1879.606935	153.9S
1025848.952	498719.5625	1879.606935	153.9S
1025858.623	498727.4526	1884.440021	153.9C
1025873.976	498734.7313	1880.454709	153.9N

1025617.836	498976.1741	1880.793465	154.0S
1025623.454	498970.0171	1880.801714	154.0S
1025629.496	498963.7727	1880.941261	154.0S
1025626.988	498972.6976	1881.945936	154.0C
1025639.35	498973.1182	1880.891406	154.0N
1025633.482	498979.4427	1880.812653	154.0N
1025627.574	498985.7293	1880.800127	154.0N
1025169.439	499442.9421	1874.893169	154.1S
1025176.619	499449.6081	1877.464889	154.1C
1025187.381	499459.8875	1875.33845	154.1N
1024716.597	499916.0618	1867.681962	154.2S
1024727.323	499925.1993	1872.568274	154.2C
1024740.014	499938.5897	1868.524404	154.2N
1024018.695	500668.6745	1864.69585	154.4S
1024027.991	500659.2787	1864.854389	154.4S
1024037.695	500648.8621	1864.922891	154.4S
1024047.266	500638.8346	1864.944614	154.4S
1024056.788	500628.4986	1865.132753	154.4S
1024066.444	500618.3809	1865.10979	154.4S
1024075.964	500608.2172	1865.248294	154.4S
1024085.647	500597.9454	1865.345468	154.4S
1024095.249	500587.7998	1865.500784	154.4S
1024104.791	500577.5933	1865.623605	154.4S
1024114.387	500567.5188	1865.681373	154.4S
1024124.005	500557.3393	1865.844279	154.4S
1024133.714	500547.2172	1866.000612	154.4S
1024143.197	500536.957	1866.034678	154.4S
1024152.836	500526.7852	1866.129459	154.4S
1024162.375	500516.6247	1866.228711	154.4S
1024172.012	500506.4388	1866.341409	154.4S
1024181.212	500496.749	1866.442765	154.4S
1024183.825	500500.6006	1867.299441	154.4CW
1024023.158	500670.7105	1865.628607	154.4CE
1024191.666	500506.424	1866.393623	154.4N
1024182.338	500516.0153	1866.283271	154.4N
1024172.771	500526.1997	1866.226911	154.4N
1024163.158	500536.2557	1866.117994	154.4N
1024153.447	500546.4618	1865.969755	154.4N
1024143.896	500556.6288	1865.879533	154.4N
1024134.296	500566.8015	1865.828508	154.4N
1024124.695	500577.0006	1865.704268	154.4N
1024114.85	500587.3356	1865.579433	154.4N
1024105.371	500597.4453	1865.51722	154.4N
1024095.758	500607.7069	1865.42138	154.4N
1024086.239	500617.7981	1865.285025	154.4N
1024076.442	500627.9268	1865.244659	154.4N
1024066.97	500638.047	1865.134644	154.4N
1024057.213	500648.3803	1865.050428	154.4N
1024047.677	500658.5316	1864.897399	154.4N
1024037.86	500668.7016	1864.795174	154.4N

1023676.643	501019.785	1854.651934	154.5S
1023686.304	501027.445	1860.807757	154.5C
1023698.16	501039.8392	1855.126266	154.5N
1023198.874	501529.093	1852.174603	154.6S
1023206.774	501534.9967	1854.596946	154.6C
1023216.618	501545.6424	1852.717863	154.6N
1022036.258	502749.3191	1827.097865	154.9S
1022047.077	502762.7101	1836.032286	154.9C
1022070.167	502769.41	1827.912851	154.9N
1021530.193	503288.1058	1824.802379	155.1S
1021540.656	503298.8449	1828.298621	155.1C
1021554.105	503311.2413	1825.249622	155.1N
1021232.948	503604.3929	1820.298307	155.2S
1021242.785	503614.229	1823.902904	155.2C
1021256.913	503626.4276	1820.653803	155.2N
1020797.819	504060.57	1809.646439	155.3S
1020811.846	504070.6077	1817.895733	155.3C
1020827.943	504084.1358	1809.965821	155.3N
1019921.038	504993.2556	1803.573941	155.5S
1019931.582	505002.9115	1807.12586	155.5C
1019944.185	505015.5979	1804.92894	155.5N
1019447.306	505493.0683	1792.903186	155.67S
1019459.247	505502.1661	1799.374788	155.67C
1019470.712	505515.2459	1795.300377	155.67N
1019231.991	505722.921	1790.666192	155.73S
1019241.108	505733.0963	1796.22418	155.73C
1019255.873	505744.2654	1791.807608	155.73N
1018825.068	506149.2693	1783.682626	155.8S
1018836.138	506161.8149	1791.128239	155.8C
1018856.348	506170.1848	1784.537319	155.8N
1017705.922	507335.1377	1766.330697	156.1S
1017717.498	507345.8648	1772.601822	156.1C
1017730.993	507359.3377	1766.576092	156.1N
1017671.565	507357.8249	1766.12487	156.11S
1017663.944	507365.6592	1766.035196	156.11S
1017685.687	507379.5234	1772.28456	156.11C
1017710.911	507395.61	1766.148222	156.11N
1017703.521	507403.155	1766.186434	156.11N
1017153.256	507929.2834	1765.459306	156.3S
1017160.614	507935.5638	1767.566693	156.3C
1017170.677	507945.8167	1765.907323	156.3N
1015774.999	509395.3416	1749.49974	156.7S
1015746.603	509425.1992	1749.09548	156.7S
1015718.193	509455.3238	1748.787079	156.7S
1015748.764	509429.6681	1750.282637	156.7C
1015728.248	509465.0413	1748.99227	156.7N
1015756.81	509435.0074	1749.100461	156.7N
1015785.089	509404.7333	1749.579516	156.7N

1014446.59	510801.3419	1730.961618	157.0S
1014436.933	510811.1687	1730.869847	157.0S
1014427.476	510821.3309	1730.726843	157.0S
1014417.798	510831.543	1730.680972	157.0S
1014408.242	510841.7997	1730.621245	157.0S
1014398.881	510851.4741	1730.578178	157.0S
1014423.584	510832.0292	1731.70217	157.0C
1014408.992	510861.336	1730.593821	157.0N
1014418.403	510851.4551	1730.599011	157.0N
1014428.02	510841.2538	1730.650454	157.0N
1014437.549	510831.0937	1730.845599	157.0N
1014447.09	510821.0882	1730.87952	157.0N
1014456.406	510811.2398	1730.964766	157.0N
1014190.094	511064.8648	1725.759514	157.1S
1014196.828	511071.857	1729.041444	157.1C
1014206.965	511081.388	1726.412878	157.1N
1013749.692	511529.6262	1720.322747	157.28S
1013757.097	511537.4822	1723.403643	157.28C
1013767.995	511547.9692	1720.794857	157.28N
1013084.415	512210.5876	1711.798064	157.4S
1013112.513	512196.506	1715.242559	157.4C RR CAR
1013115.292	512238.2383	1713.294327	157.4N
1011841.907	513526.603	1697.181588	157.8S
1011861.012	513544.2579	1700.568268	157.8C
1011870.94	513554.1573	1698.165233	157.8N
1010465.507	515011.1545	1685.66	158.1S
1010417.295	515061.9731	1685.059024	158.1S
1010369.628	515112.5848	1684.419677	158.1S
1010470.421	515015.5663	1686.295327	158.1CW
1010374.443	515117.4197	1685.099084	158.1CE
1010383.355	515125.4891	1684.442826	158.1N
1010431.194	515074.8803	1685.072322	158.1N
1010479.047	515024.0927	1685.688462	158.1N
1008053.436	517567.5127	1656.026712	158.8S
1008062.816	517557.43	1655.975275	158.8S
1008072.199	517547.46	1656.054214	158.8S
1008082.178	517536.9057	1656.088863	158.8S
1008091.213	517527.2051	1656.10426	158.8S
1008075.78	517550.2157	1656.812074	158.8C
1008101.604	517536.9132	1656.230918	158.8N
1008092.115	517546.8311	1656.129558	158.8N
1008082.724	517556.8823	1656.109958	158.8N
1008072.772	517567.2805	1656.006483	158.8N
1008063.729	517576.7746	1656.059809	158.8N
1006451.268	519253.7988	1637.116043	159.2S
1006459.219	519261.7297	1640.845134	159.2C
1006469.186	519271.7322	1637.68421	159.2N

1000346.416	525726.6705	1565.970005	160.9S
1000327.321	525746.8093	1565.647848	160.9S
1000308.072	525767.1349	1565.454652	160.9S
1000288.994	525787.4072	1565.120383	160.9S
1000269.942	525807.5155	1564.864685	160.9S
1000260.425	525817.6406	1564.776645	160.9S
1000349.933	525729.471	1567.10672	160.9CW
1000264.278	525820.0791	1565.864948	160.9CE
1000270.388	525827.0444	1564.806033	160.9N
1000280.003	525817.0584	1564.932015	160.9N
1000299.24	525796.6597	1565.175351	160.9N
1000318.484	525776.3586	1565.427745	160.9N
1000337.644	525756.077	1565.715991	160.9N
1000356.492	525735.9888	1565.976974	160.9N
998973.0719	527172.0853	1546.186929	161.3S
998980.8439	527178.5988	1549.834215	161.3C
998991.3439	527188.8041	1546.480705	161.3N
998576.1021	527600.8502	1544.907309	161.4S
998566.3679	527611.2221	1544.823636	161.4S
998556.1402	527622.1132	1544.761673	161.4S
998568.4309	527615.1482	1545.748957	161.4C
998585.7909	527610.5128	1544.908525	161.4N
998576.1416	527620.9774	1544.778978	161.4N
998566.1131	527631.4072	1544.760953	161.4N
998028.8578	528170.1079	1536.20547	161.6S
998037.471	528177.0522	1540.553677	161.6C
998046.3405	528187.1829	1538.013602	161.6N
997077.3246	529183.7482	1532.178761	161.8S
997055.6573	529206.8096	1532.224757	161.8S
997073.0585	529198.162	1532.555263	161.8C
997068.694	529220.3885	1532.149427	161.8N
997091.8705	529195.6936	1532.144846	161.8N
993987.2798	532458.9428	1499.836095	162.7S
993978.3116	532468.3458	1499.679698	162.7S
993968.6529	532478.5648	1499.599871	162.7S
993959.9944	532487.8906	1499.485401	162.7S
993977.6244	532475.2493	1500.144871	162.7C
993970.1531	532497.0485	1499.475079	162.7N
993979.0389	532487.6571	1499.544151	162.7N
993988.6779	532477.4818	1499.553528	162.7N
993997.3599	532468.1233	1499.642629	162.7N
992276.2889	534266.4204	1478.29542	163.2S
992268.2535	534274.8132	1478.146623	163.2S
992258.5756	534285.0501	1477.983533	163.2S
992272.3943	534280.6098	1478.773571	163.2C
992271.7905	534298.5577	1478.059208	163.2N
992281.116	534288.669	1478.152069	163.2N
992290.1138	534279.1703	1478.202748	163.2N
991189.7416	535412.6937	1465.882562	163.5S
991196.1946	535419.3972	1468.87601	163.5C
991206.3268	535429.4527	1466.296212	163.5N BM R97

989894.4642	536772.3718	1452.433767	163.86S
989908.1086	536783.5824	1456.327394	163.86C
989924.4675	536798.902	1453.44158	163.86N
987305.0677	539531.8628	1428.113834	164.5S
987295.174	539542.3487	1427.980334	164.5S
987285.5825	539552.4311	1427.85063	164.5S
987276.0049	539562.6976	1427.749032	164.5S
987266.9115	539572.4457	1427.719702	164.5S
987293.6247	539550.8496	1428.897171	164.5C
987276.8539	539582.2541	1427.681979	164.5N
987286.165	539572.4429	1427.754956	164.5N
987295.9274	539562.1714	1427.877505	164.5N
987305.3833	539551.9314	1427.89584	164.5N
987314.6992	539542.1768	1428.148208	164.5N
985989.3434	540917.961	1413.529831	164.9S
985996.3746	540923.7844	1415.776393	164.9C
986006.7899	540933.8881	1413.697588	164.9N
983118.273	543963.3283	1388.697695	165.7S
983109.1483	543973.2119	1388.601262	165.7S
983099.837	543983.5831	1388.529451	165.7S
983089.9	543993.6457	1388.362475	165.7S
983080.2513	544003.9807	1388.368173	165.7S
983070.6825	544014.097	1388.316482	165.7S
983061.1129	544023.9091	1388.233834	165.7S
983067.5938	544023.9409	1389.016573	165.7CE
983121.0286	543967.3628	1389.547783	165.7CW
983071.4873	544033.1826	1388.211668	165.7N
983080.4685	544023.386	1388.235315	165.7N
983090.3797	544013.1454	1388.363813	165.7N
983100.0743	544002.9626	1388.489596	165.7N
983109.5484	543992.7521	1388.606527	165.7N
983119.0924	543982.742	1388.666108	165.7N
983127.9817	543973.1354	1388.758301	165.7N
981960.7725	545187.9104	1378.191076	166.0S
981951.5713	545197.6131	1378.211973	166.0S
981941.8738	545207.929	1378.2194	166.0S
981932.4318	545217.9894	1378.254301	166.0S
981922.6368	545228.2278	1378.262622	166.0S
981913.6986	545237.6274	1378.257449	166.0S
981941.0716	545215.7696	1379.147057	166.0C
981923.9928	545247.4023	1378.284049	166.0N
981933.2671	545237.8667	1378.29997	166.0N
981942.9298	545227.6889	1378.273283	166.0N
981952.5465	545217.5429	1378.222026	166.0N
981962.1432	545207.2019	1378.321109	166.0N
981970.8568	545198.0353	1378.234906	166.0N
980780.2686	546430.5753	1369.219262	166.3S
980787.2363	546436.7041	1371.160739	166.3C
980797.8115	546446.4445	1369.949321	166.3N

979542.4491	547739.6553	1358.435746	166.7S
979549.3364	547746.5416	1361.064041	166.7C
979560.6538	547757.2562	1358.885599	166.7N
978100.009	549266.4698	1346.947152	167.1S
978106.9481	549273.3578	1349.867973	167.1C
978117.87	549283.3519	1347.346878	167.1N

```
  2,1023250.052412,517954.281361,  1819.404342,4KE1 08/07/01
 10,1042051.238028,488420.116140,  2026.886548,66+75LT BC
 11,1041866.843142,488327.641240,  2025.640287,65+80RT BC
 28,1041102.601202,492424.564758,  2039.605959,107+60N
 29,1041019.382675,492406.367287,  2039.035159,107+60S
 46,1040666.949393,494304.175916,  2044.654927,126+45N
 51,1040621.027255,494261.858922,  2043.607988,126+45S
 59,1040226.972191,496008.391969,  2062.510919,144+50S BC
 60,1040293.888901,496023.777128,  2063.854889,144+50N
106,1039053.526024,501309.354082,  2074.229127,198+80S BC
115,1038815.704222,502327.145850,  2066.608653,209+25S BC
126,1038592.807220,503327.097386,  2061.350387,219+50S BC
158,1043247.566235,482867.075467,  1978.842000,Base point
159,1038630.334234,502906.734167,  2068.780000,Base point
202,1038330.807908,504548.198963,  2058.305837,231+80S BC
305,1038060.262453,505692.761221,  2040.820315,243+45S
306,1038172.783527,505656.638870,  2046.542102,243+45N
319,1037395.216154,508719.941807,  2048.212649,274+75S
320,1037473.105214,508737.952103,  2048.976420,274+75N
323,1037158.616339,509729.604528,  2045.232204,285+15S
324,1037257.706245,509757.393877,  2048.054450,285+15N
342,1036697.682907,511816.239235,  2036.781783,306+38S
343,1036799.704743,511812.261834,  2038.327343,306+38N
348,1036366.178966,513383.946951,  2024.728144,322+43S BC
364,1036113.639307,514518.421165,  2021.946995,334+14.4 BC
398,1035225.512216,518490.304319,  2002.535670,374+85S BC
408,1035030.432183,519368.253833,  1998.247716,383+85S BC
415,1034847.663313,520214.194967,  1995.557840,392+40S BC
432,1034574.915640,521418.950812,  1991.849574,404+85S BC
443,1034276.988754,522719.330919,  1979.518070,417+90S
455,1033824.755659,524800.666796,  1966.026391,439+50S BC
476,1033366.156857,526860.056859,  1980.709441,460+45S BC
484,1033106.990553,527965.120620,  1974.761169,471+95S
500,1042051.245183,488420.114678,  2026.927991,10
501,1041866.816566,488327.652352,  2025.756108,11
502,1041102.601331,492424.414204,  2039.525809,28
503,1041019.333070,492406.282448,  2038.948873,29
504,1040667.031944,494304.132452,  2044.615966,46
505,1040621.025012,494261.740871,  2043.589829,51
506,1040226.996145,496008.397315,  2062.454113,59
507,1039053.529810,501309.325579,  2074.211663,106
508,1038815.692738,502327.170328,  2066.615719,115
509,1038592.801827,503327.073645,  2061.290675,126
510,1038330.756003,504548.205185,  2058.267637,202
511,1038060.207572,505692.790005,  2040.887613,305
512,1038172.739348,505656.534115,  2046.589193,306
513,1037395.062541,508719.865341,  2048.251305,319
514,1037158.590159,509729.616991,  2045.292079,323
```

515,1036697.882372,511816.380498, 2036.808498,342
516,1036366.132294,513384.188379, 2024.948589,348
517,1036113.552014,514518.716127, 2021.922851,364
518,1035225.576085,518490.355864, 2002.421994,398
519,1034847.693533,520214.214550, 1995.600752,415
520,1036581.839837,520311.602538, 2020.270453,182
521,1038287.704911,485528.378575, 1970.975579,2501 CHS RD
522,1038322.118564,485561.152906, 1970.863587,2501 CHS RD N
523,1038021.462222,485797.333350, 1968.497938,150.54S
524,1038063.224531,485835.636710, 1969.208742,150.54N
525,1037673.914501,486163.743844, 1966.970962,150.6S
526,1037711.957763,486200.671970, 1968.331512,150.6N
527,1037314.856816,486567.422516, 1965.943229,150.7S
528,1037342.573158,486590.964955, 1966.684980,150.7N
529,1036355.213328,487582.714549, 1962.015547,151.0S
530,1036383.483656,487606.952951, 1962.503361,151.0N
531,1035896.503308,488064.600139, 1960.560848,151.1S
532,1035926.241467,488092.428350, 1961.654311,151.1N
533,1035274.419306,488714.070164, 1957.032153,151.16S
534,1035310.756281,488748.801747, 1957.468158,151.16N
536,1034998.333889,489005.400490, 1955.297055,151.25S
537,1035190.981512,489150.208541, 1959.450490,151.25N
538,1033990.739811,490056.333200, 1944.377230,151.64S
539,1034034.339850,490099.412013, 1948.701276,151.64N
540,1033549.828946,490537.956651, 1949.648896,151.77S
541,1033585.618506,490573.030302, 1950.446052,151.77N
542,1033035.963284,491086.621560, 1943.918923,151.91S
543,1033067.406569,491117.202107, 1947.708076,151.91N
544,1032611.245660,491565.971088, 1944.691032,152.05S
545,1032628.410329,491582.062991, 1944.693015,152.05N
546,1032060.019361,492150.800041, 1937.046700,152.19S
547,1032074.877528,492165.285809, 1938.833013,152.19N
548,1031412.768693,492840.774697, 1933.933314,152.37S
549,1031364.556221,492891.783880, 1933.621223,152.37S
550,1031335.769370,492922.472823, 1933.449632,152.37S
551,1031346.035691,492932.347749, 1933.449023,152.37N
552,1031375.104155,492901.678598, 1933.617615,152.37N
553,1031423.111049,492850.783269, 1933.901126,152.37N
554,1030750.087396,493517.390780, 1919.088398,152.55S
555,1030800.078287,493532.906123, 1919.861004,152.55N
556,1030179.973933,494113.639936, 1912.233974,152.7S
557,1030225.949241,494147.362335, 1913.638040,152.7N
558,1029218.029369,495138.342890, 1905.950763,153.0S
559,1029253.543168,495171.029462, 1906.785428,153.0N
560,1028676.247384,495722.518919, 1903.950989,153.15S
561,1028699.410381,495744.280264, 1906.179703,153.15N
562,1028505.516407,495822.382068, 1901.557112,60D NAIL
563,1028505.500325,495822.386319, 1901.534717,60D NAIL

```
570,1041866.840556,488327.627644,  2025.762432,CK11 8\28/01
571,1038307.831974,485550.743442,  1973.400071,2501C
572,1038049.175412,485824.446636,  1972.506767,150.54C
573,1037702.555667,486191.137710,  1971.240945,150.6C
574,1037333.178110,486582.026174,  1969.677660,150.7C
575,1036374.123136,487597.132673,  1965.760624,151.0C
576,1035915.772012,488082.256188,  1963.676249,151.1C
577,1035298.004706,488736.010375,  1961.030104,151.16C
578,1035019.568169,489030.599564,  1959.234870,151.25C
579,1034021.201239,490087.737992,  1954.382000,151.64C
580,1033573.578380,490560.819151,  1953.113443,151.77C
581,1033057.062341,491107.382886,  1950.551503,151.91C
582,1032617.539045,491572.732001,  1946.920507,152.05C
583,1032065.539096,492157.153003,  1940.821829,152.19C
584,1031376.626513,492886.085804,  1935.020822,152.37C
585,1030768.145885,493530.012447,  1930.478269,152.55C
586,1030202.148394,494129.210912,  1926.436388,152.7C
587,1029235.265373,495152.580270,  1917.109315,153.0C
```

```
 1,  5000.000000,  5000.000000,   100.000000,START
 2,1023571.911734,482648.213676,  1844.759789,4KG2 08/08/01
 3,1029116.121461,495237.679960,  1907.342934,MP 153
 4,1028514.616581,495893.090057,  1900.807249,153.17S
 5,1028541.098814,495917.087436,  1901.232124,153.17N
 6,1028182.725835,496245.456727,  1894.159898,153.26S
 7,1028206.475846,496268.027340,  1901.739877,153.26N
 8,1027890.610447,496562.856261,  1899.528885,153.34S
 9,1027907.637800,496578.726067,  1899.725117,153.34N
10,1027669.346137,496788.460189,  1895.658274,153.40S
11,1027693.355277,496810.065172,  1896.449131,153.40N
12,1027515.408330,496947.661417,  1893.624561,153.44S
13,1027545.175168,496974.616614,  1895.436217,153.44N
14,1027147.349091,497338.714895,  1888.341691,153.5S
15,1027178.231687,497360.113883,  1889.435663,153.5N
16,1026820.008396,497698.882110,  1892.496670,153.64S
17,1026834.611548,497712.384207,  1891.174322,153.64N
18,1026566.109708,497963.655022,  1887.483726,153.7S
19,1025848.951657,498719.562528,  1879.606935,153.9S
20,1025873.976252,498734.731302,  1880.454709,153.9N
21,1025617.835799,498976.174083,  1880.793465,154.0S
22,1025623.453833,498970.017102,  1880.801714,154.0S
23,1025629.496022,498963.772661,  1880.941261,154.0S
24,1025639.349607,498973.118212,  1880.891406,154.0N
25,1025633.481585,498979.442675,  1880.812653,154.0N
26,1025627.573539,498985.729311,  1880.800127,154.0N
27,1025169.439316,499442.942091,  1874.893169,154.1S
28,1025187.381360,499459.887498,  1875.338450,154.1N
29,1024716.597239,499916.061824,  1867.681962,154.2S
30,1024740.013923,499938.589709,  1868.524404,154.2N
31,1024018.695177,500668.674470,  1864.695850,154.4S
32,1024027.990809,500659.278714,  1864.854389,154.4S
33,1024037.695189,500648.862070,  1864.922891,154.4S
34,1024047.265717,500638.834561,  1864.944614,154.4S
35,1024056.788356,500628.498590,  1865.132753,154.4S
36,1024066.443749,500618.380909,  1865.109790,154.4S
37,1024075.963798,500608.217229,  1865.248294,154.4S
38,1024085.647072,500597.945399,  1865.345468,154.4S
39,1024095.249091,500587.799796,  1865.500784,154.4S
40,1024104.791393,500577.593285,  1865.623605,154.4S
41,1024114.386819,500567.518764,  1865.681373,154.4S
42,1024124.004754,500557.339257,  1865.844279,154.4S
43,1024133.714419,500547.217151,  1866.000612,154.4S
44,1024143.197432,500536.956950,  1866.034678,154.4S
45,1024152.836403,500526.785230,  1866.129459,154.4S
46,1024162.375368,500516.624676,  1866.228711,154.4S
47,1024172.012159,500506.438805,  1866.341409,154.4S
48,1024181.212140,500496.749003,  1866.442765,154.4S
```

```
 49,1024191.665747,500506.423978,  1866.393623,154.4N
 50,1024182.338279,500516.015307,  1866.283271,154.4N
 51,1024172.770812,500526.199724,  1866.226911,154.4N
 52,1024163.158158,500536.255702,  1866.117994,154.4N
 53,1024153.447364,500546.461804,  1865.969755,154.4N
 54,1024143.895860,500556.628838,  1865.879533,154.4N
 55,1024134.295508,500566.801521,  1865.828508,154.4N
 56,1024124.695083,500577.000637,  1865.704268,154.4N
 57,1024114.849793,500587.335606,  1865.579433,154.4N
 58,1024105.371246,500597.445303,  1865.517220,154.4N
 59,1024095.758021,500607.706872,  1865.421380,154.4N
 60,1024086.238788,500617.798092,  1865.285025,154.4N
 61,1024076.442210,500627.926836,  1865.244659,154.4N
 62,1024066.970016,500638.047048,  1865.134644,154.4N
 63,1024057.213129,500648.380288,  1865.050428,154.4N
 64,1024047.677286,500658.531596,  1864.897399,154.4N
 65,1024037.860419,500668.701646,  1864.795174,154.4N
 66,1024029.022078,500678.153432,  1864.733157,154.4N
 67,1023676.643218,501019.785037,  1854.651934,154.5S
 68,1023698.160352,501039.839171,  1855.126266,154.5N
 69,1023198.874022,501529.093023,  1852.174603,154.6S
 70,1023216.617935,501545.642427,  1852.717863,154.6N
 71,1022036.257983,502749.319101,  1827.097865,154.9S
 72,1022070.166791,502769.410026,  1827.912851,154.9N
 73,1021530.193475,503288.105802,  1824.802379,155.1S
 74,1021554.105154,503311.241296,  1825.249622,155.1N
 75,1021232.948058,503604.392850,  1820.298307,155.2S
 76,1021256.912754,503626.427596,  1820.653803,155.2N
 77,1020797.819386,504060.570019,  1809.646439,155.3S
 78,1020827.943281,504084.135842,  1809.965821,155.3N
 79,1019921.038344,504993.255635,  1803.573941,155.5S
 80,1019944.184791,505015.597921,  1804.928940,155.5N
 81,1019447.305845,505493.068293,  1792.903186,155.67S
 82,1019470.711631,505515.245890,  1795.300377,155.67N
 83,1019231.991466,505722.920995,  1790.666192,155.73S
 84,1019255.873044,505744.265437,  1791.807608,155.73N
 85,1018825.068314,506149.269310,  1783.682626,155.8S
 86,1018856.348394,506170.184758,  1784.537319,155.8N
 87,1018856.347451,506170.144088,  1784.513672,155.8N
100,1028687.228146,495732.840560,  1909.976472,153.15C
101,1028526.445502,495903.090144,  1908.456209,153.17C
102,1028193.737929,496255.268452,  1905.911024,153.26C
103,1027897.038869,496569.428176,  1903.410884,153.34C
104,1027681.395000,496797.662372,  1901.180003,153.40C
105,1027528.570379,496959.409776,  1899.534317,153.44C
106,1027159.399492,497350.239689,  1896.302126,153.5C
107,1026824.893616,497704.406446,  1893.923969,153.64C
108,1026573.107082,497971.261751,  1891.692038,153.7C
```

```
109,1025858.622878,498727.452618,  1884.440021,153.9C
110,1025626.987643,498972.697563,  1881.945936,154.0C
111,1025176.619271,499449.608111,  1877.464889,154.1C
112,1024727.323076,499925.199271,  1872.568274,154.2C
113,1024183.825348,500500.600576,  1867.299441,154.4CW
114,1024023.157531,500670.710491,  1865.628607,154.4CE
115,1023686.303831,501027.444956,  1860.807757,154.5C
116,1023206.774072,501534.996729,  1854.596946,154.6C
117,1022047.076847,502762.710066,  1836.032286,154.9C
118,1021540.656119,503298.844946,  1828.298621,155.1C
119,1021242.784860,503614.228982,  1823.902904,155.2C
120,1020811.845806,504070.607678,  1817.895733,155.3C
121,1019931.582066,505002.911453,  1807.125860,155.5C
122,1019459.247483,505502.166082,  1799.374788,155.67C
123,1019241.108095,505733.096321,  1796.224180,155.73C
124,1018836.137982,506161.814939,  1791.128239,155.8C
550,1023571.870930,482648.266239,  1844.620021,4KG2 08/28/01
562,1028505.508447,495822.384909,  1901.550000,Base point
```

```
 1,  5000.000000,  5000.000000,   100.000000,START
 2,1036581.870976,520311.627632,  2020.182860,4LE2 08/09/01
 3,1017705.922430,507335.137660,  1766.330697,156.1S
 4,1017730.993070,507359.337689,  1766.576092,156.1N
 5,1017671.564927,507357.824945,  1766.124870,156.11S
 6,1017663.943843,507365.659234,  1766.035196,156.11S
 7,1017710.911145,507395.610008,  1766.148222,156.11N
 8,1017703.521438,507403.155002,  1766.186434,156.11N
 9,1017153.256230,507929.283440,  1765.459306,156.3S
10,1017170.677481,507945.816669,  1765.907323,156.3N
11,1015774.999318,509395.341628,  1749.499740,156.7S
12,1015746.602686,509425.199208,  1749.095480,156.7S
13,1015718.192751,509455.323790,  1748.787079,156.7S
14,1015728.248497,509465.041308,  1748.992270,156.7N
15,1015756.810143,509435.007425,  1749.100461,156.7N
16,1015785.089418,509404.733322,  1749.579516,156.7N
17,1014724.474549,510445.648324,  1729.162708,MP 157
18,1014446.590273,510801.341876,  1730.961618,157.0S
19,1014436.933208,510811.168699,  1730.869847,157.0S
20,1014427.476131,510821.330920,  1730.726843,157.0S
21,1014417.798041,510831.542955,  1730.680972,157.0S
22,1014408.241635,510841.799747,  1730.621245,157.0S
23,1014398.881040,510851.474143,  1730.578178,157.0S
24,1014408.991825,510861.335953,  1730.593821,157.0N
25,1014418.403405,510851.455125,  1730.599011,157.0N
26,1014428.020339,510841.253811,  1730.650454,157.0N
27,1014437.549081,510831.093673,  1730.845599,157.0N
28,1014447.089920,510821.088174,  1730.879520,157.0N
29,1014456.406095,510811.239765,  1730.964766,157.0N
30,1014190.093684,511064.864849,  1725.759514,157.1S
31,1014206.964894,511081.387957,  1726.412878,157.1N
32,1013749.691539,511529.626229,  1720.322747,157.28S
33,1013767.994642,511547.969200,  1720.794857,157.28N
34,1013084.415222,512210.587574,  1711.798064,157.4S
35,1013115.291911,512238.238279,  1713.294327,157.4N
36,1011841.907030,513526.603009,  1697.181588,157.8S
37,1011870.940220,513554.157277,  1698.165233,157.8N
38,1010465.506725,515011.154476,  1685.660000,158.1S
39,1010417.294593,515061.973071,  1685.059024,158.1S
40,1010369.627555,515112.584813,  1684.419677,158.1S
41,1010383.354803,515125.489105,  1684.442826,158.1S
42,1010431.193908,515074.880328,  1685.072322,158.1S
43,1010479.046713,515024.092749,  1685.688462,158.1S
44,1036581.847154,520311.635729,  2020.195564,4LE2 08/14/01
45,1008053.436222,517567.512670,  1656.026712,158.8S
46,1008062.815712,517557.429961,  1655.975275,158.8S
47,1008072.199215,517547.459957,  1656.054214,158.8S
48,1008082.177901,517536.905670,  1656.088863,158.8S
```

```
49,1008091.213302,517527.205123,  1656.104260,158.8S
50,1008101.603730,517536.913169,  1656.230918,158.8N
51,1008092.114723,517546.831087,  1656.129558,158.8N
52,1008082.724499,517556.882302,  1656.109958,158.8N
53,1008072.772137,517567.280474,  1656.006483,158.8N
54,1008063.729329,517576.774605,  1656.059809,158.8N
55,1006451.267555,519253.798783,  1637.116043,159.2S
56,1006469.185718,519271.732202,  1637.684210,159.2N
57,1003867.244721,521931.496054,  1608.532302,C&GS C-24
58,1000346.416387,525726.670479,  1565.970005,160.9S
59,1000327.321072,525746.809349,  1565.647848,160.9S
60,1000308.072026,525767.134894,  1565.454652,160.9S
61,1000288.993925,525787.407242,  1565.120383,160.9S
62,1000269.942216,525807.515470,  1564.864685,160.9S
63,1000260.424694,525817.640589,  1564.776645,160.9S
64,1000270.387564,525827.044390,  1564.806033,160.9N
65,1000280.003389,525817.058364,  1564.932015,160.9N
66,1000299.240488,525796.659695,  1565.175351,160.9N
67,1000318.484250,525776.358580,  1565.427745,160.9N
68,1000337.644494,525756.077002,  1565.715991,160.9N
69,1000356.491829,525735.988795,  1565.976974,160.9N
70,998973.071880,527172.085336,  1546.186929,161.3S
71,998991.343935,527188.804141,  1546.480705,161.3N
72,998986.285533,527193.071177,  1546.530903,RV99 BM?RVIT
73,998585.790915,527610.512835,  1544.908525,161.4N
74,998576.141625,527620.977444,  1544.778978,161.4N
75,998566.113109,527631.407234,  1544.760953,161.4N
76,998576.102092,527600.850176,  1544.907309,161.4S
77,998566.367915,527611.222126,  1544.823636,161.4S
78,998556.140210,527622.113155,  1544.761673,161.4S
79,998028.857785,528170.107873,  1536.205470,161.6S
80,998046.340541,528187.182914,  1538.013602,161.6N
81,997077.324604,529183.748186,  1532.178761,161.8S
82,997055.657287,529206.809630,  1532.224757,161.8S
83,997068.693950,529220.388463,  1532.149427,161.8N
84,997091.870479,529195.693636,  1532.144846,161.8N
85,993987.279845,532458.942830,  1499.836095,162.7S
86,993978.311627,532468.345752,  1499.679698,162.7S
87,993968.652899,532478.564782,  1499.599871,162.7S
88,993959.994427,532487.890593,  1499.485401,162.7S
89,993955.993679,532488.571127,  1499.407046,BOR BM RV-98A
90,993970.153105,532497.048502,  1499.475079,162.7N
91,993979.038918,532487.657050,  1499.544151,162.7N
92,993988.677892,532477.481790,  1499.553528,162.7N
93,993997.359916,532468.123253,  1499.642629,162.7N
94,992276.288903,534266.420402,  1478.295420,163.2S
95,992268.253508,534274.813237,  1478.146623,163.2S
96,992258.575647,534285.050112,  1477.983533,163.2S
```

```
 97,992271.790454,534298.557693,  1478.059208,163.2N
 98,992281.115951,534288.669033,  1478.152069,163.2N
 99,992290.113800,534279.170262,  1478.202748,163.2N
100,991189.741574,535412.693657,  1465.882562,163.5S
101,991206.326788,535429.452674,  1466.296212,163.5N BM R97
102,990089.216514,536515.795792,  1451.636638,3506-86 CP?
103,989982.309708,536604.063498,  1452.800882,USGS BM 1451
104,989894.464187,536772.371821,  1452.433767,163.86S
105,989924.467511,536798.902020,  1453.441580,163.86N
106,989476.792427,537163.377497,  1448.653190,C&GS A-24
107,989327.484445,537285.460135,  1448.285831,EARDSLEY 3SA
108,987305.067724,539531.862847,  1428.113834,164.5S
109,987295.174009,539542.348748,  1427.980334,164.5S
110,987285.582477,539552.431057,  1427.850630,164.5S
111,987276.004912,539562.697550,  1427.749032,164.5S
112,987266.911478,539572.445687,  1427.719702,164.5S
113,987276.853920,539582.254109,  1427.681979,164.5N
114,987286.164957,539572.442902,  1427.754956,164.5N
115,987295.927407,539562.171372,  1427.877505,164.5N
116,987305.383266,539551.931430,  1427.895840,164.5N
117,987314.699206,539542.176792,  1428.148208,164.5N
120,1036581.830237,520311.628875,  2020.179616,4LE2 08/29/01
121,1017717.497735,507345.864778,  1772.601822,156.1C
122,1017685.687358,507379.523402,  1772.284560,156.11C
123,1017160.613850,507935.563847,  1767.566693,156.3C
124,1015748.764172,509429.668056,  1750.282637,156.7C
125,1014423.584218,510832.029187,  1731.702170,157.0C
126,1014196.828084,511071.857026,  1729.041444,157.1C
127,1013757.097432,511537.482170,  1723.403643,157.28C
128,1013112.513404,512196.506027,  1715.242559,157.4C RR CAR
129,1011861.012014,513544.257898,  1700.568268,157.8C
130,1010470.420967,515015.566290,  1686.295327,158.1CW
131,1010374.442553,515117.419722,  1685.099084,158.1CE
132,1008075.779958,517550.215714,  1656.812074,158.8C
133,1006459.219243,519261.729687,  1640.845134,159.2C
134,1000349.932864,525729.471035,  1567.106720,160.9CW
135,1000264.278379,525820.079051,  1565.864948,160.9CE
136,998980.843872,527178.598768,  1549.834215,161.3C
137,998568.430859,527615.148183,  1545.748957,161.4C
138,998037.471006,528177.052197,  1540.553677,161.6C
139,997073.058465,529198.161993,  1532.555263,161.8C
140,993977.624373,532475.249328,  1500.144871,162.7C
141,993955.577833,532489.045757,  1499.372593,BM RV98A
142,992272.394304,534280.609794,  1478.773571,163.2C
143,991196.194563,535419.397234,  1468.876010,163.5C
144,989908.108613,536783.582384,  1456.327394,163.86C
145,989327.461379,537285.420340,  1448.302671,BEARBSLEY
146,987293.624651,539550.849604,  1428.897171,164.5C
```

172,1023250.030697,517954.285908, 1819.386000,Base point

```
  1,  5000.000000,  5000.000000,   100.000000,START
  2,989327.487855,537285.552720,  1448.290000,Base point
  3,985989.343361,540917.960980,  1413.529831,164.9S
  4,986006.789867,540933.888099,  1413.697588,164.9N
  5,983118.272972,543963.328322,  1388.697695,165.7S
  6,983109.148250,543973.211944,  1388.601262,165.7S
  7,983099.837038,543983.583127,  1388.529451,165.7S
  8,983089.899964,543993.645748,  1388.362475,165.7S
  9,983080.251262,544003.980650,  1388.368173,165.7S
 10,983070.682450,544014.096960,  1388.316482,165.7S
 11,983061.112939,544023.909120,  1388.233834,165.7S
 12,983071.487327,544033.182575,  1388.211668,165.7N
 13,983080.468533,544023.386039,  1388.235315,165.7N
 14,983090.379663,544013.145425,  1388.363813,165.7N
 15,983100.074338,544002.962623,  1388.489596,165.7N
 16,983109.548416,543992.752066,  1388.606527,165.7N
 17,983119.092394,543982.742041,  1388.666108,165.7N
 18,983127.981712,543973.135368,  1388.758301,165.7N
 19,981960.772497,545187.910354,  1378.191076,166.0S
 20,981951.571278,545197.613079,  1378.211973,166.0S
 21,981941.873848,545207.928965,  1378.219400,166.0S
 22,981932.431820,545217.989398,  1378.254301,166.0S
 23,981922.636776,545228.227792,  1378.262622,166.0S
 24,981913.698570,545237.627378,  1378.257449,166.0S
 25,981923.992777,545247.402321,  1378.284049,166.0N
 26,981933.267065,545237.866652,  1378.299970,166.0N
 27,981942.929822,545227.688880,  1378.273283,166.0N
 28,981952.546523,545217.542883,  1378.222026,166.0N
 29,981962.143170,545207.201863,  1378.321109,166.0N
 30,981970.856802,545198.035292,  1378.234906,166.0N
 31,980780.268578,546430.575319,  1369.219262,166.3S
 32,980797.811532,546446.444534,  1369.949321,166.3N
 33,979542.449145,547739.655278,  1358.435746,166.7S
 34,979560.653832,547757.256150,  1358.885599,166.7N
 35,978773.021087,548435.149030,  1352.150404,GSBM1351
 36,978739.385620,548525.835549,  1349.742322,843+25HWY
 37,978100.008992,549266.469791,  1346.947152,167.1S
 38,978117.870025,549283.351898,  1347.346878,167.1N
 39,977453.290469,549902.782072,  1338.281528,CANAL
 40,978773.065233,548435.110002,  1352.063795,CK 35 0829/01
 41,978106.948127,549273.357759,  1349.867973,167.1C
 42,979549.336445,547746.541612,  1361.064041,166.7C
 43,980787.236251,546436.704106,  1371.160739,166.3C
 44,981941.071570,545215.769552,  1379.147057,166.0C
 45,983067.593848,544023.940899,  1389.016573,165.7CE
 46,983121.028625,543967.362774,  1389.547783,165.7CW
 47,985996.374567,540923.784443,  1415.776393,164.9C
150,991524.654865,549957.219200,  1423.783000,Base point
```

FCDMC Contract 2000C035 Stucture Surveys
Wittmann/Tilby ADMP
WORKSHEET
DTM, INC. Project #21092

☐ Sun Valley Parkway
☒ US 60 RR
☐ Highway 74

Type of Structure: RR BRIDGE Date: 8.6.01
File Name: 4LH2.QC Description Name: 2501+00
Party Chief: KO GDAC Control Pt # 4LF2

2501+00UP NORTH FACE (UPSTREAM)
☒ Photo Taken

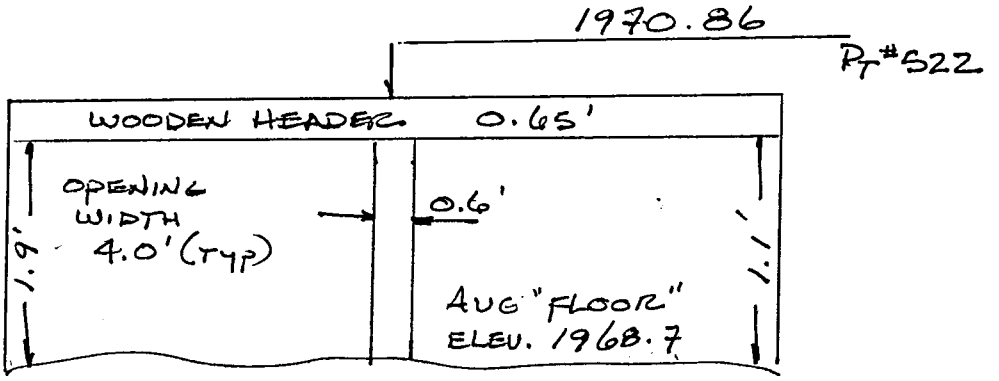

General Condition of Structure GOOD
BRIDGE @ INTERSECTION OF RR & CASTLE HOT SPRINGS ROAD

2501+00DN SOUTH FACE (DOWNSTREAM)
☒ Photo Taken

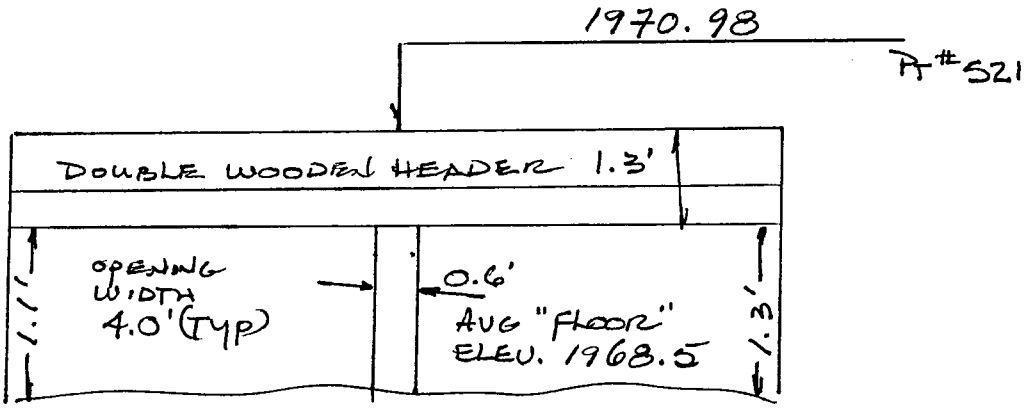

General Condition of Structure

↑ - INDICATES LOCATION OF RTK POINT

2501
NS

2501
SS

FCDMC Contract 2000C035 Stucture Surveys
Wittmann/Tilby ADMP
WORKSHEET
DTM, INC. Project #21092

☐ Sun Valley Parkway
☒ US 60 RR
☐ Highway 74

Type of Structure: Box Date: 8.6.01
File Name: 4LH2.QC Description Name: 150.54
Party Chief: JO GDAC Control Pt # 4LF2

150+54up
☒ Photo Taken

NORTH FACE (UPSTREAM)

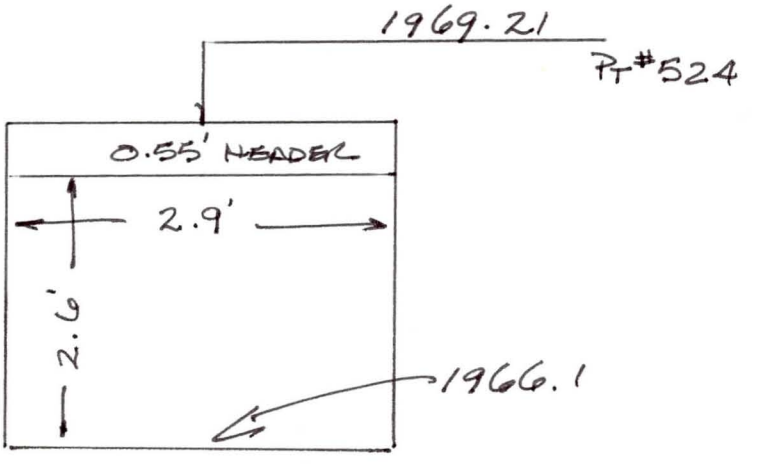

General Condition of Structure GOOD

150+54DN
☒ Photo Taken

SOUTH FACE (DOWNSTREAM)

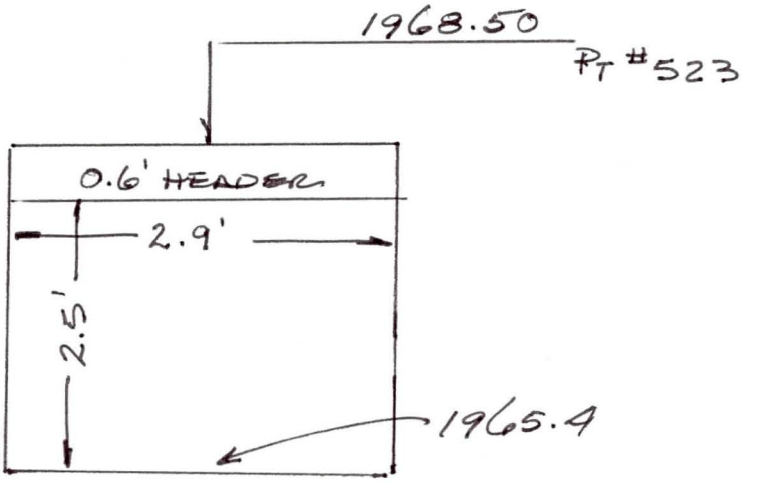

General Condition of Structure GOOD

↑ - INDICATES LOCATION OF RTK POINT

150.54
BOT
NS

150.54
BOX
S.S.
150.54

FCDMC Contract 2000C035 Stucture Surveys
Wittmann/Tilby ADMP
WORKSHEET
DTM, INC. Project #21092

☐ Sun Valley Parkway
☒ US 60 RR
☐ Highway 74

Type of Structure: Box Date: 8.6.01
File Name: 4LH2-QC Description Name: 150.6
Party Chief: XO GDAC Control Pt # 4LF2

150+6 up
☒ Photo Taken

NORTH FACE (UPSTREAM)

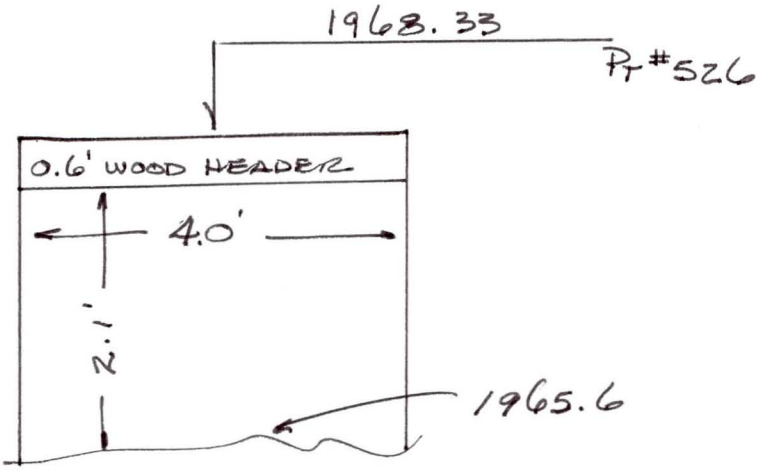

General Condition of Structure _____

150+6 DN
☒ Photo Taken

SOUTH FACE (DOWNSTREAM)

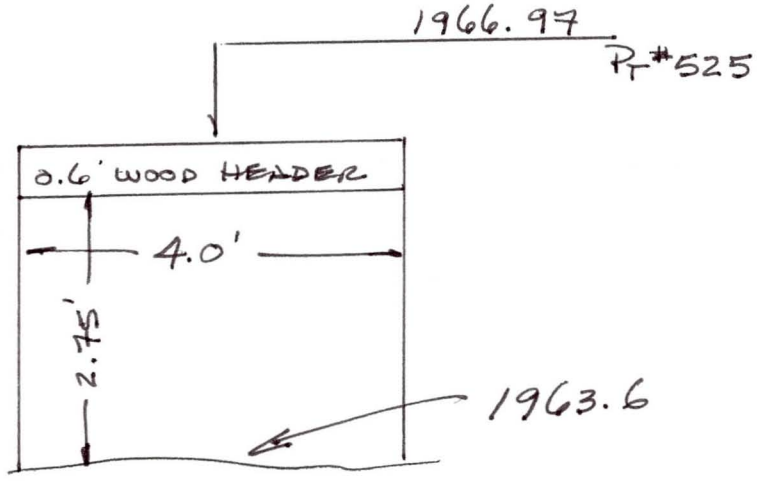

General Condition of Structure _____

↑ - INDICATES LOCATION OF RTK POINT

150.6
Box
NS

150.6
Box
SS
150.6

FCDMC Contract 2000C035 Stucture Surveys
Wittmann/Tilby ADMP
WORKSHEET
DTM, INC. Project #21092

☐ Sun Valley Parkway
☒ US 60 RR
☐ Highway 74

Type of Structure: CONCRETE BOX Date: 8.6.01
File Name: 4LH2-QC Description Name: 150.7
Party Chief: KO GDAC Control Pt # 4LF2

150+74P
☒ Photo Taken

NORTH FACE (UPSTREAM)

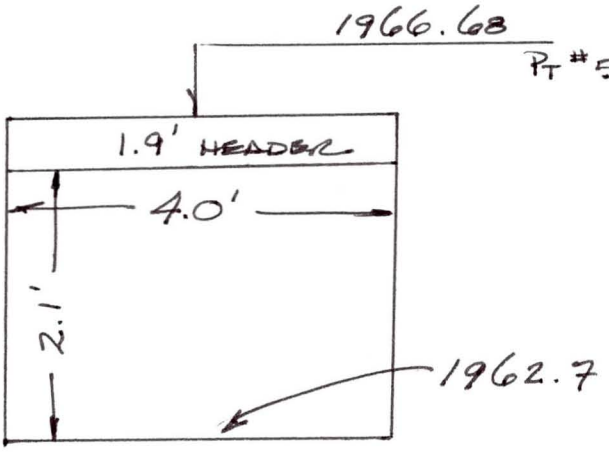

General Condition of Structure_____

150+7DN
☒ Photo Taken

SOUTH FACE (DOWNSTREAM)

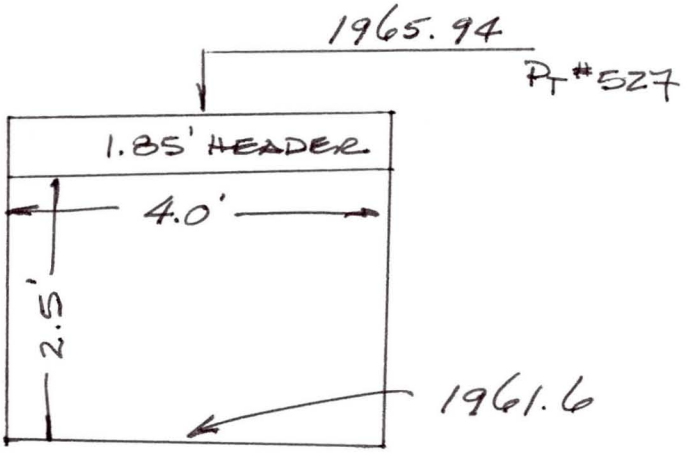

General Condition of Structure_____

⇑ - INDICATES LOCATION OF RTK POINT

150.7
BOX
NS

150.7
BOX
SS
150.7

FCDMC Contract 2000C035 Stucture Surveys
Wittmann/Tilby ADMP
WORKSHEET
DTM, INC. Project #21092

☐ Sun Valley Parkway
☒ US 60 RR
☐ Highway 74

Type of Structure: CONCRETE BOX Date: 8.7.01
File Name: 4LH2-QC Description Name: 151.0
Party Chief: RDS GDAC Control Pt # 4LF2

151+0 up
☑ Photo Taken

NORTH FACE (UPSTREAM)

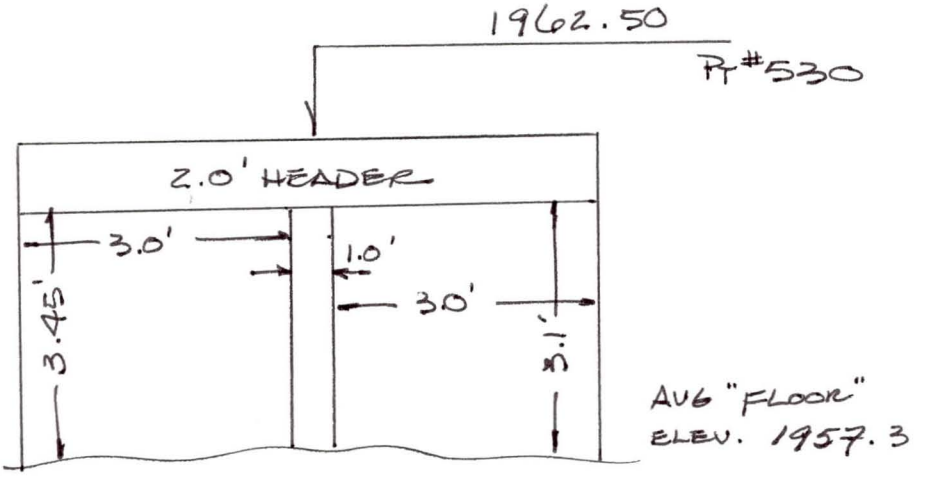

General Condition of Structure

151+0 DN
☑ Photo Taken

SOUTH FACE (DOWNSTREAM)

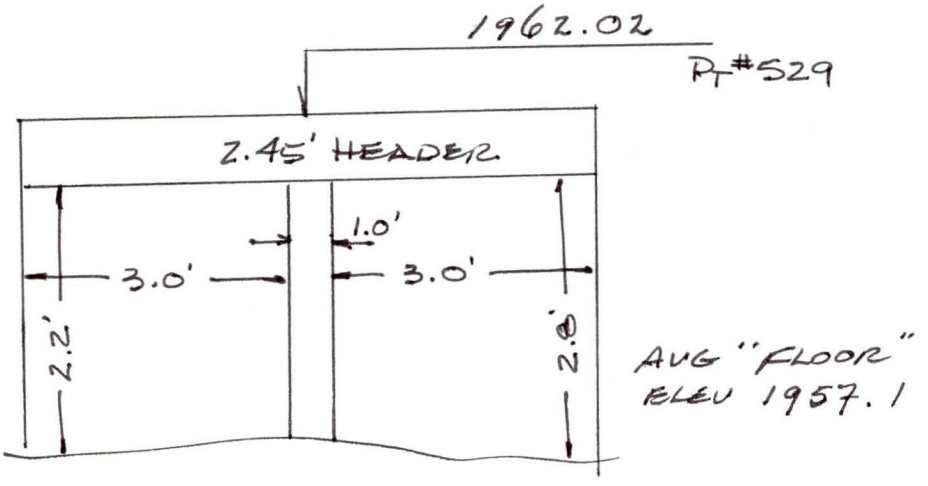

General Condition of Structure

⇑ - INDICATES LOCATION OF RTK POINT

151.0
2×BOX
N S

151.0
1927
151.0
2xBOX
SS

FCDMC Contract 2000C035 Stucture Surveys
Wittmann/Tilby ADMP
WORKSHEET
DTM, INC. Project #21092

☐ Sun Valley Parkway
☒ US 60 RR
☐ Highway 74

Type of Structure: RCP Date: 8.7.01
File Name: 4LH2-QC Description Name: 151.1
Party Chief: QS GDAC Control Pt # 4LF2

151+1 up
☒ Photo Taken

NORTH FACE (UPSTREAM)

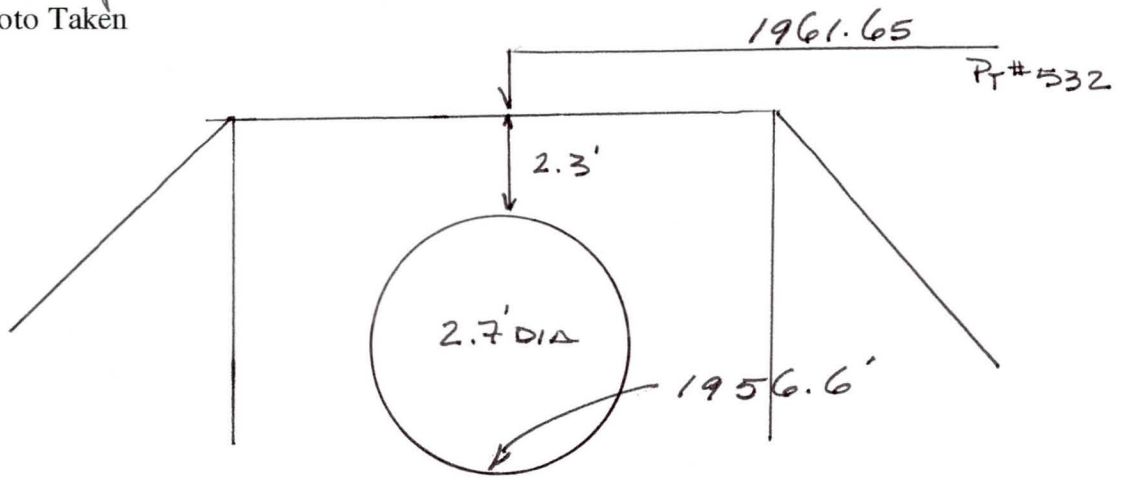

General Condition of Structure

151+1 DN
☒ Photo Taken

SOUTH FACE (DOWNSTREAM)

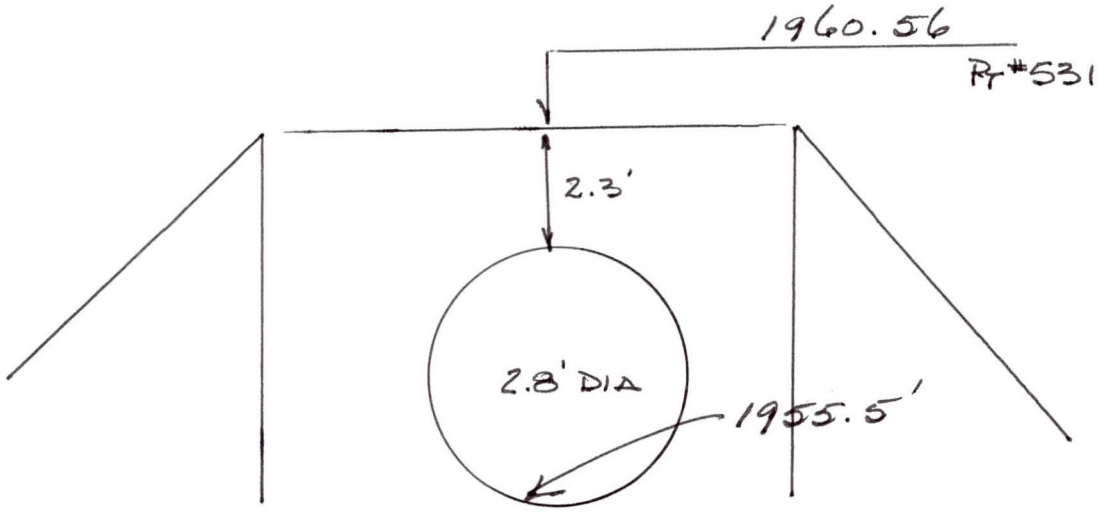

General Condition of Structure

⇑ - INDICATES LOCATION OF RTK POINT

151.1
RCP
NS

151.1
RCP
SS
151.1
1982

FCDMC Contract 2000C035 Stucture Surveys
Wittmann/Tilby ADMP
WORKSHEET
DTM, INC. Project #21092

☐ Sun Valley Parkway
☒ US 60 RR
☐ Highway 74

Type of Structure: CMP Date: 8.7.01
File Name: 4LH2-QC Description Name: 151.16
Party Chief: XO GDAC Control Pt # 4LF2

151+16up
☒ Photo Taken

NORTH FACE (UPSTREAM)

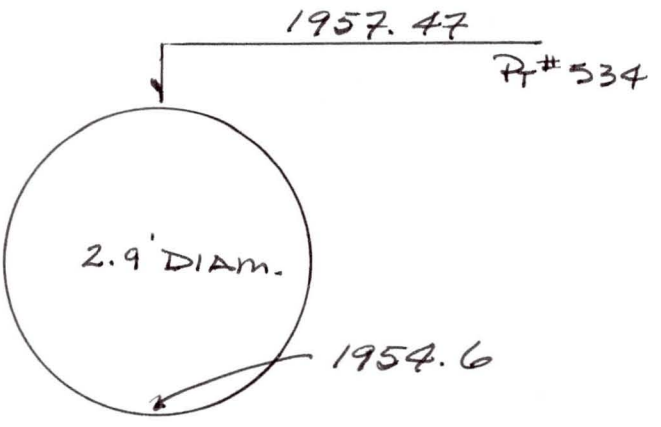

General Condition of Structure

151+16DN
☒ Photo Taken

SOUTH FACE (DOWNSTREAM)

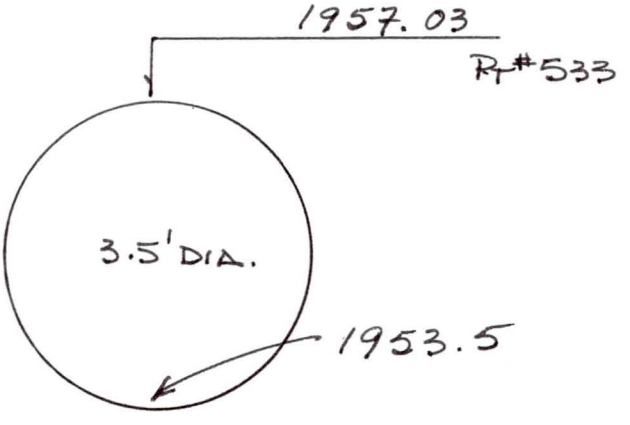

General Condition of Structure

⇑ - INDICATES LOCATION OF RTK POINT

151.16
CMP
NS

151.16
CMP
SS

FCDMC Contract 2000C035 Stucture Surveys
Wittmann/Tilby ADMP
WORKSHEET
DTM, INC. Project #21092

☐ Sun Valley Parkway
☒ US 60 RR
☐ Highway 74

Type of Structure: CMP Date: 8.7.01
File Name: 4LH2-QC Description Name: 151.25
Party Chief: KO GDAC Control Pt # 4LF2

151+25 UP
☒ Photo Taken

NORTH FACE (UPSTREAM)

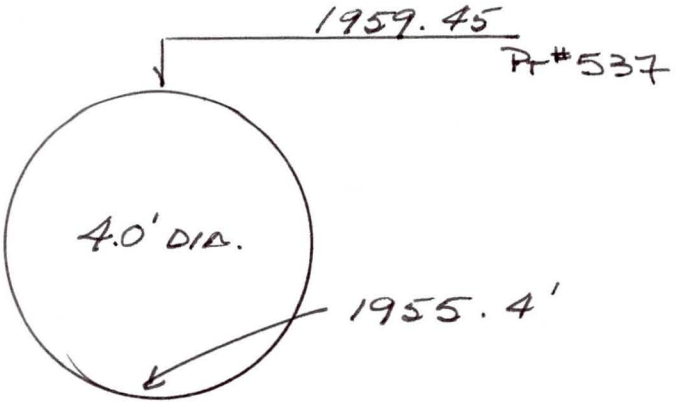

General Condition of Structure

151+25 DN
☒ Photo Taken

SOUTH FACE (DOWNSTREAM)

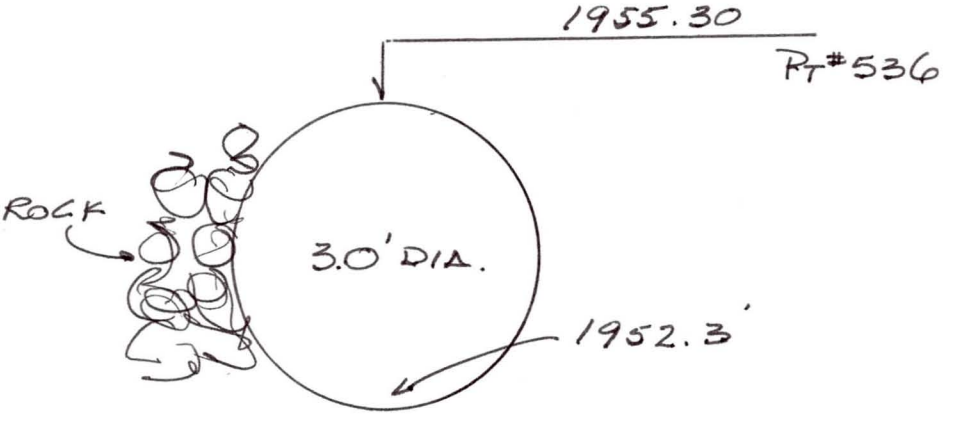

General Condition of Structure

↑ - INDICATES LOCATION OF RTK POINT

151.25
CMP
NS

151.25
CMP
SS

FCDMC Contract 2000C035 Stucture Surveys
Wittmann/Tilby ADMP
WORKSHEET
DTM, INC. Project #21092

☐ Sun Valley Parkway
☒ US 60 RR
☐ Highway 74

Type of Structure: CONCRETE CULVERT Date: 8.7.01
File Name: 4LH2-QC Description Name: 151.64
Party Chief: KCS GDAC Control Pt # 4LF2

NORTH FACE (UPSTREAM)

151+64 up
☒ Photo Taken

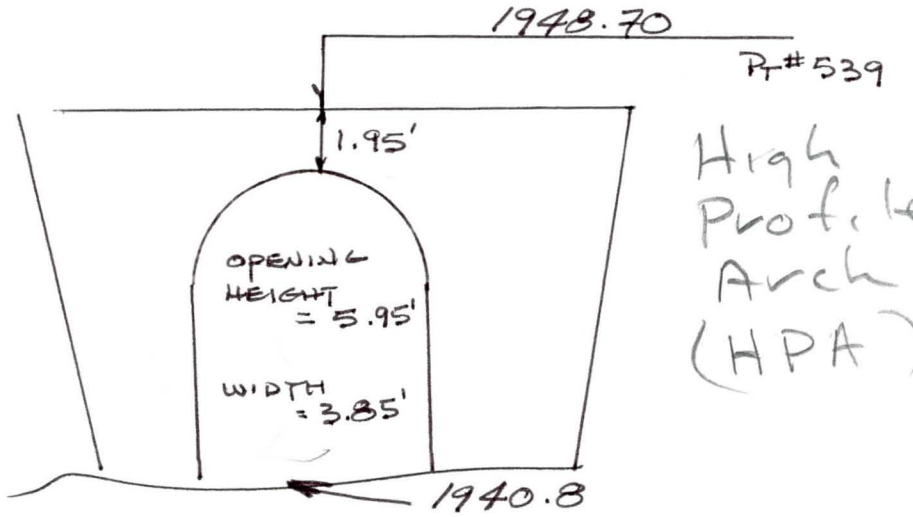

General Condition of Structure

SOUTH FACE (DOWNSTREAM)

151+64 DN
☒ Photo Taken

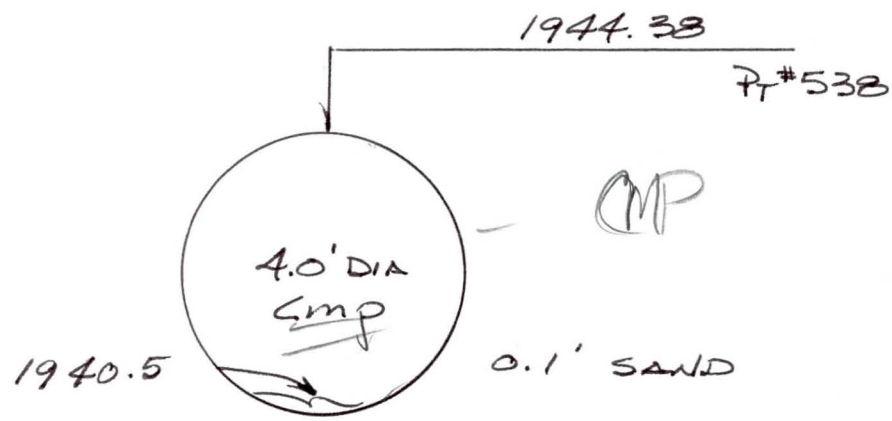

General Condition of Structure

⇑ - INDICATES LOCATION OF RTK POINT

151.64
CMP
NS

751.64
CMP
SS

FCDMC Contract 2000C035 Stucture Surveys
Wittmann/Tilby ADMP
WORKSHEET
DTM, INC. Project #21092

☐ Sun Valley Parkway
☒ US 60 RR
☐ Highway 74

Type of Structure: CMP Date: 8.7.01
File Name: 4LH2-QC Description Name: 151.77
Party Chief: RO GDAC Control Pt # 4LF2

151+77 UP
☒ Photo Taken

NORTH FACE (UPSTREAM)

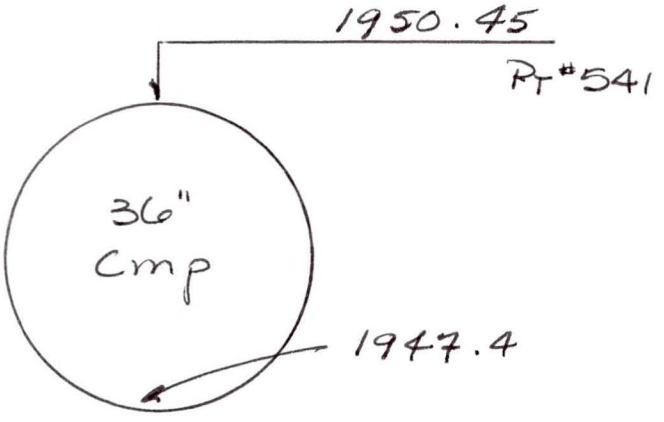

General Condition of Structure

151+77 DN
☒ Photo Taken

SOUTH FACE (DOWNSTREAM)

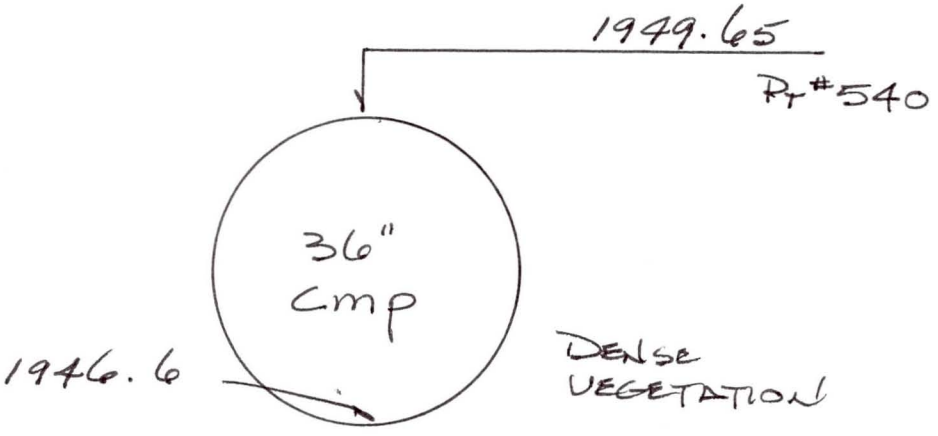

General Condition of Structure

↑ - INDICATES LOCATION OF RTK POINT

151.77
CMP
NS

151.77
CMP
SS

FCDMC Contract 2000C035 Stucture Surveys
Wittmann/Tilby ADMP
WORKSHEET
DTM, INC. Project #21092

☐ Sun Valley Parkway
☒ US 60 RR
☐ Highway 74

Type of Structure: CONCRETE / CMP Date: 8.7.01
File Name: 4LH2-QC Description Name: 151.91
Party Chief: KO GDAC Control Pt # 4LF2

NORTH FACE (UPSTREAM)

☒ Photo Taken 151+91 UP

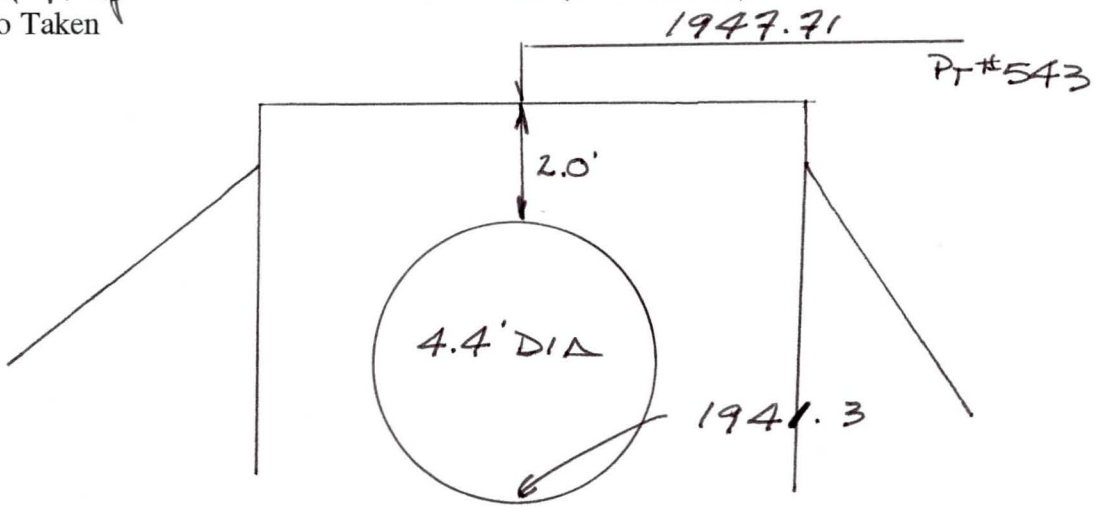

General Condition of Structure

SOUTH FACE (DOWNSTREAM)

☒ Photo Taken 151+91 DN

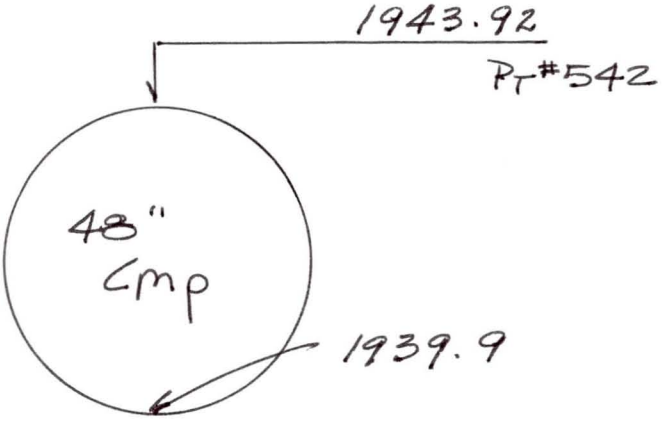

General Condition of Structure

⇑ - INDICATES LOCATION OF RTK POINT

1930
151.91
CMP
N S

151.91
CMP
SS

FCDMC Contract 2000C035 Stucture Surveys
Wittmann/Tilby ADMP
WORKSHEET
DTM, INC. Project #21092

☐ Sun Valley Parkway
☒ US 60 RR
☐ Highway 74

Type of Structure: CONCRETE CULVERT Date: 8·7·01
File Name: 4LH2·QC Description Name: 152.05
Party Chief: KO GDAC Control Pt # 4LF2

152+05 UP
☒ Photo Taken

NORTH FACE (UPSTREAM)

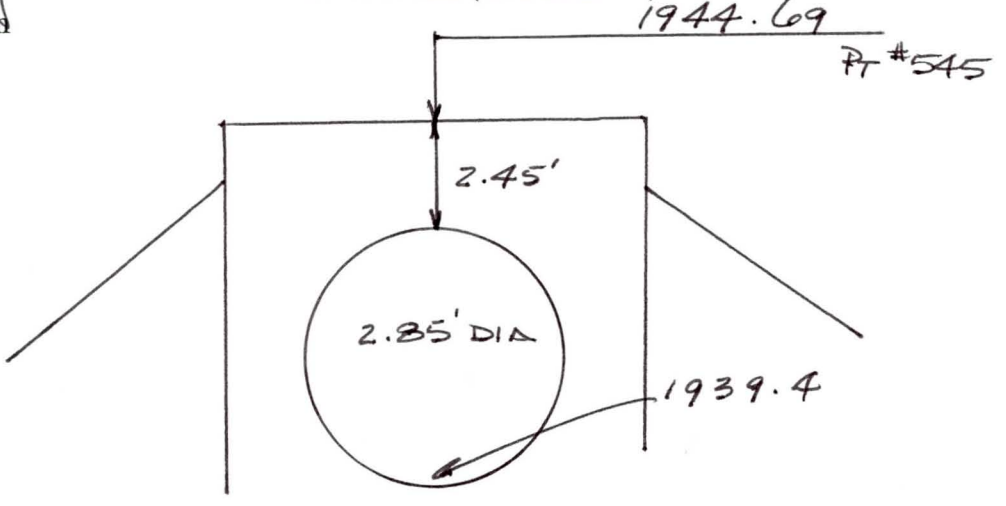

General Condition of Structure_____

152+05 DN
☒ Photo Taken

SOUTH FACE (DOWNSTREAM)

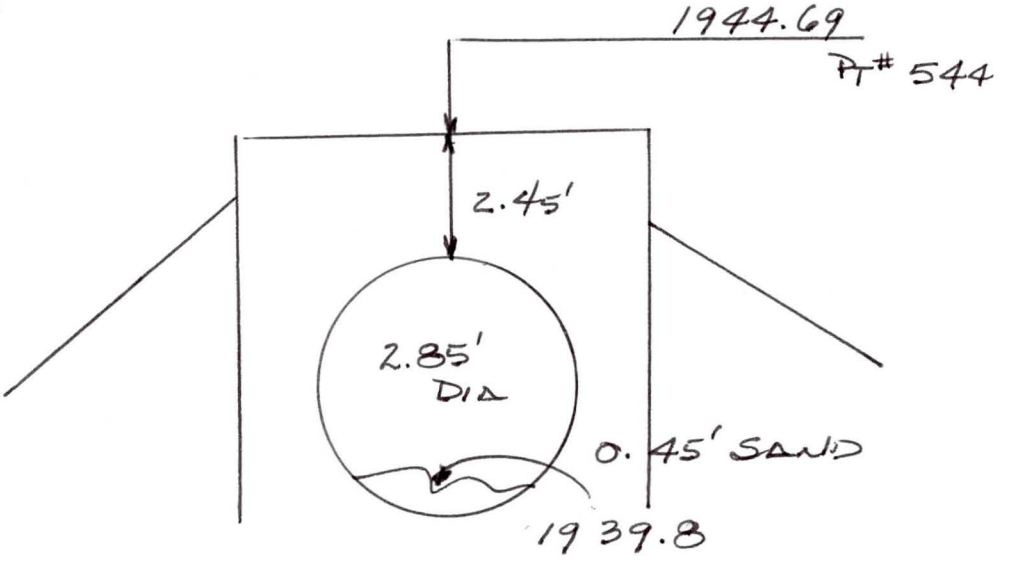

General Condition of Structure_____

⇑ - INDICATES LOCATION OF RTK POINT

152.05
RCP
1925

152.05
RCP
SS

FCDMC Contract 2000C035 Stucture Surveys
Wittmann/Tilby ADMP
WORKSHEET
DTM, INC. Project #21092

☐ Sun Valley Parkway
☒ US 60 RR
☐ Highway 74

Type of Structure: CONCRETE BOX Date: 8.7.01
File Name: 4LH2-QC Description Name: 152.19
Party Chief: XO GDAC Control Pt # 4LF2

152+19 UP
☒ Photo Taken

NORTH FACE (UPSTREAM)

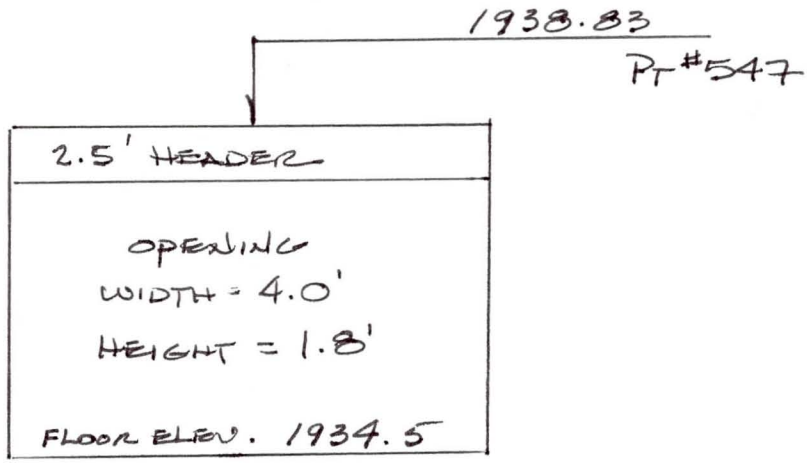

General Condition of Structure _____

152+19 DN
☒ Photo Taken

SOUTH FACE (DOWNSTREAM)

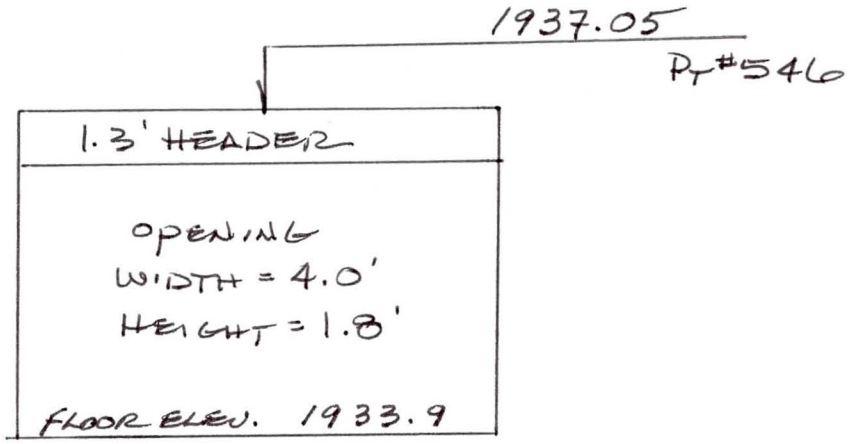

General Condition of Structure _____

⇑ - INDICATES LOCATION OF RTK POINT

152.19
W. BOX
N S

152.19
W. BOX
SS

FCDMC Contract 2000C035 Stucture Surveys
Wittmann/Tilby ADMP
WORKSHEET
DTM, INC. Project #21092

☐ Sun Valley Parkway
☒ US 60 RR
☐ Highway 74

Type of Structure: WOOD BRIDGE Date: 8.7.01
File Name: 4LH2-QC Description Name: 152.37
Party Chief: RDS GDAC Control Pt # 4LF2

152+37UP 152+37AUP NORTH FACE (UPSTREAM)
☒ Photo Taken

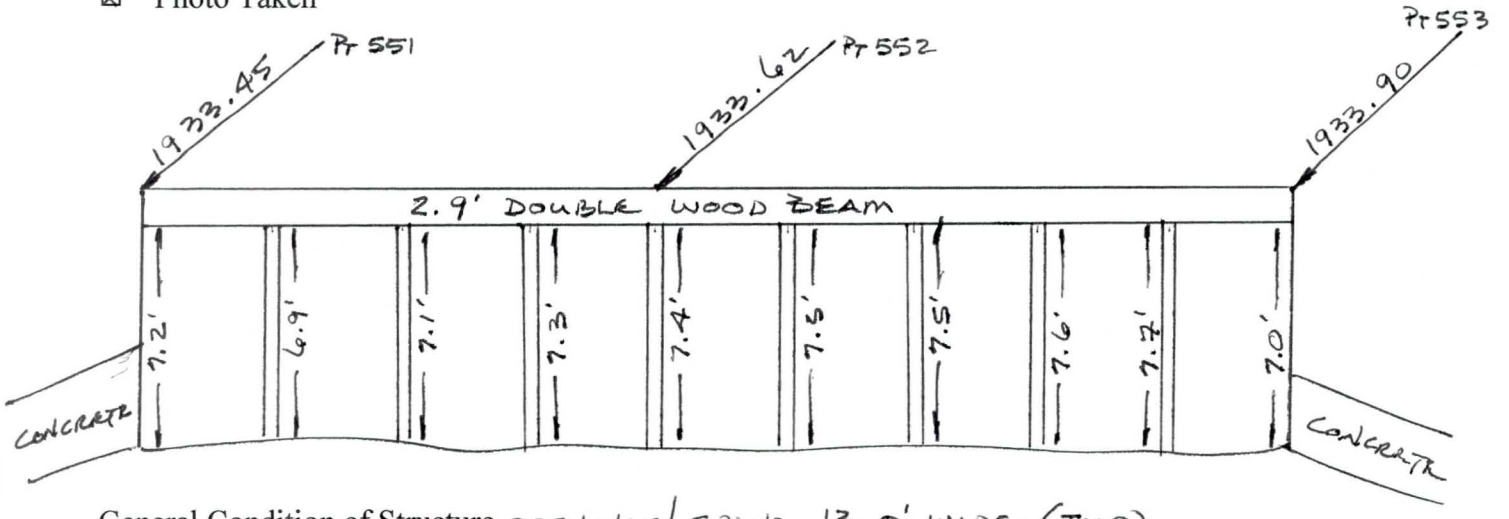

General Condition of Structure OPENINGS/SPANS 13.0' WIDE (TYP)
SUPPORTS - 1.0'x1.4' WOOD PILINGS ON CONCRETE "SKIDS"

152+37DN 152+37ADN SOUTH FACE (DOWNSTREAM)
☒ Photo Taken

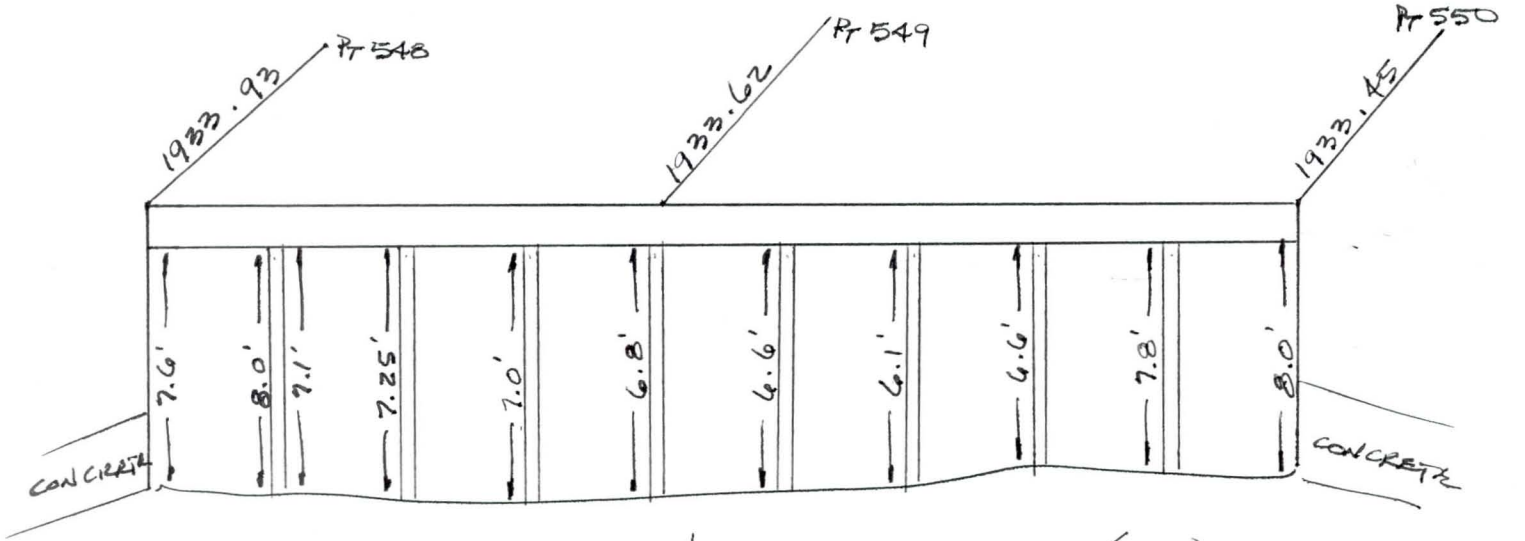

General Condition of Structure OPENINGS/SPANS 13.0' WIDE (TYP)
SUPPORTS - 1.0'x1.4' WOOD PILINGS ON CONCRETE "SKIDS"

⇑ - INDICATES LOCATION OF RTK POINT

15237
BRIDGE
NS

15237
BRIDGE
NS

15237
BRIDGE
SS

152.37
BRIDGE
SS

FCDMC Contract 2000C035 Stucture Surveys
Wittmann/Tilby ADMP
WORKSHEET
DTM, INC. Project #21092

☐ Sun Valley Parkway
☒ US 60 RR
☐ Highway 74

Type of Structure: Dome Box Date: 8.7.01
File Name: 4LH2-QC Description Name: 152.55
Party Chief: KO GDAC Control Pt # 4LF2

152+55 up
☒ Photo Taken

NORTH FACE (UPSTREAM)

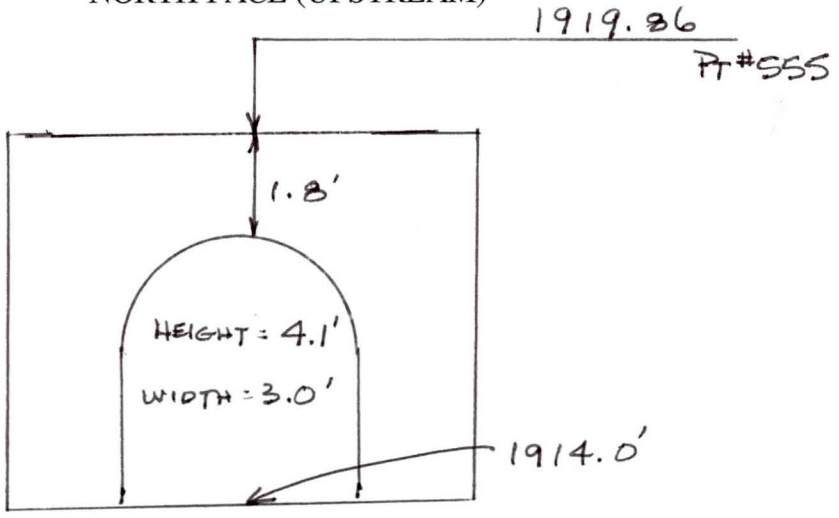

General Condition of Structure CONCRETE FLOOR

152+55 DN
☒ Photo Taken

SOUTH FACE (DOWNSTREAM)

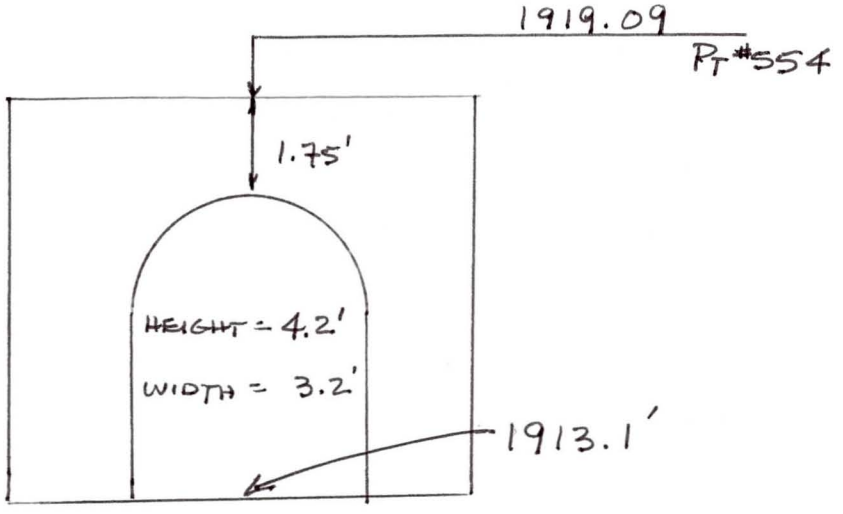

General Condition of Structure CONCRETE FLOOR

↑ - INDICATES LOCATION OF RTK POINT

15255
DOME BOX
CONCRETE
NS

15255
DOME BOX
CONCRETE
SS

FCDMC Contract 2000C035 Stucture Surveys
Wittmann/Tilby ADMP
WORKSHEET
DTM, INC. Project #21092

☐ Sun Valley Parkway
☒ US 60 RR
☐ Highway 74

Type of Structure: DOUBLE BOX Date: 8.7.01
File Name: 4LH2-QC Description Name: 152.7
Party Chief: XO GDAC Control Pt # 4LF2

152+74UP
☒ Photo Taken

NORTH FACE (UPSTREAM)

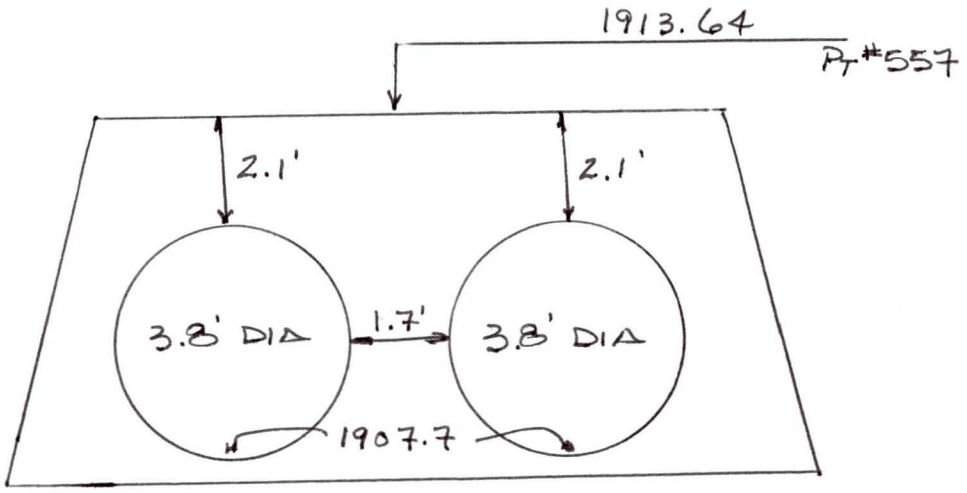

General Condition of Structure

152+7DN
☒ Photo Taken

SOUTH FACE (DOWNSTREAM)

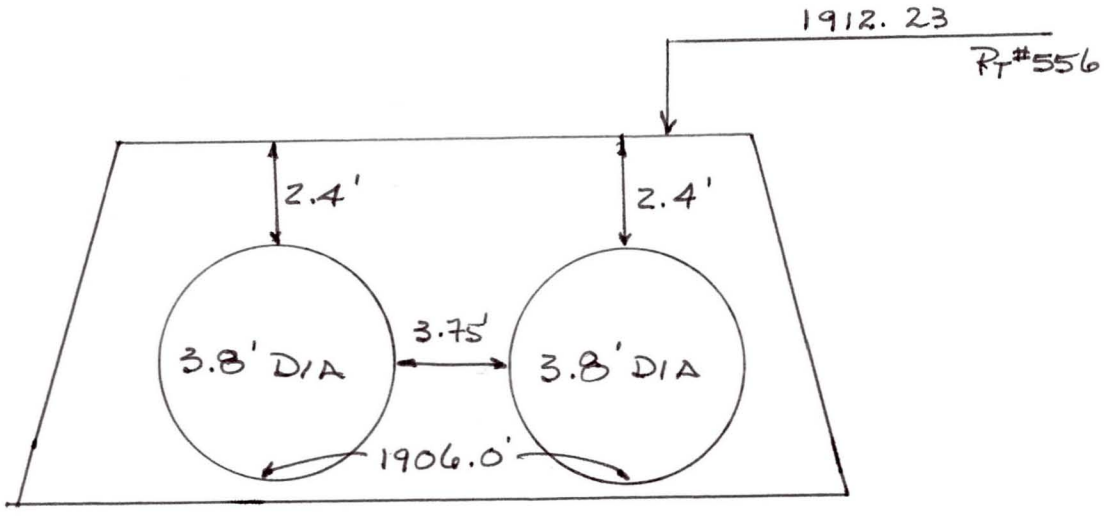

General Condition of Structure

⇑ - INDICATES LOCATION OF RTK POINT

1931
152.7
2-D Box
NS

152.7
2-D.Box
S

FCDMC Contract 2000C035 Stucture Surveys
Wittmann/Tilby ADMP
WORKSHEET
DTM, INC. Project #21092

☐ Sun Valley Parkway
☒ US 60 RR
☐ Highway 74

Type of Structure: Dome Box Date: 8.7.01
File Name: 4LH2-QC Description Name: 153.0
Party Chief: KO GDAC Control Pt # 4LF2

153+04 UP
☒ Photo Taken

NORTH FACE (UPSTREAM)

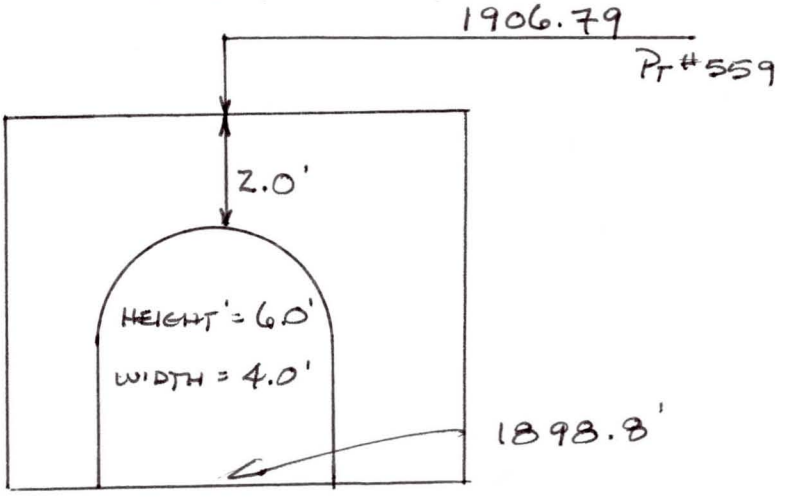

General Condition of Structure CONCRETE FLOOR

153+0 DN
☒ Photo Taken

SOUTH FACE (DOWNSTREAM)

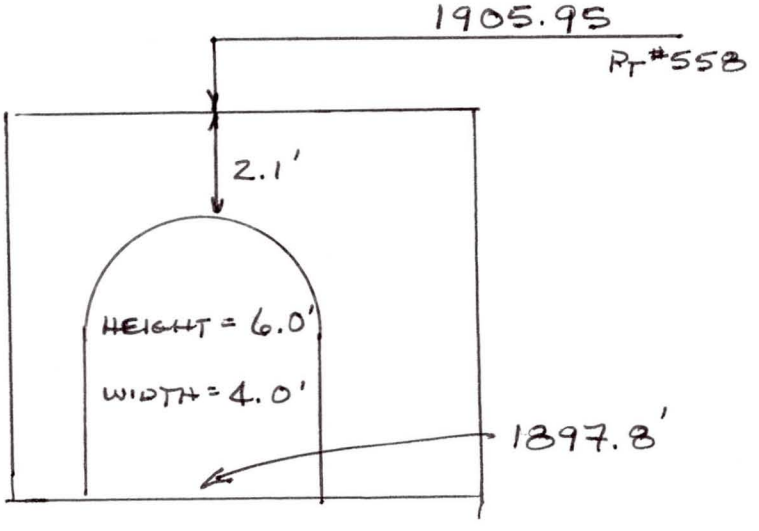

General Condition of Structure CONCRETE FLOOR

↑ - INDICATES LOCATION OF RTK POINT

153.0
D Box
N S

153.0
D. Box
55

FCDMC Contract 2000C035 Stucture Surveys
Wittmann/Tilby ADMP
WORKSHEET
DTM, INC. Project #21092

☐ Sun Valley Parkway
☐ US 60 RR
☐ Highway 74

Type of Structure: CONCRETE "PIPE" Date: 8.7.01
File Name: 4LH2-QC Description Name: 153.15
Party Chief: KO GDAC Control Pt # 4LF2

153+15 up
NORTH FACE (UPSTREAM)

☒ Photo Taken

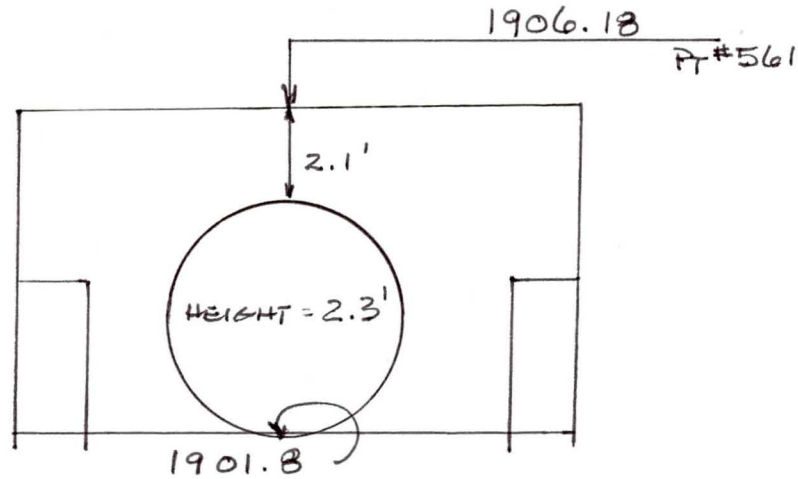

General Condition of Structure

153+15 DN
SOUTH FACE (DOWNSTREAM)

☒ Photo Taken

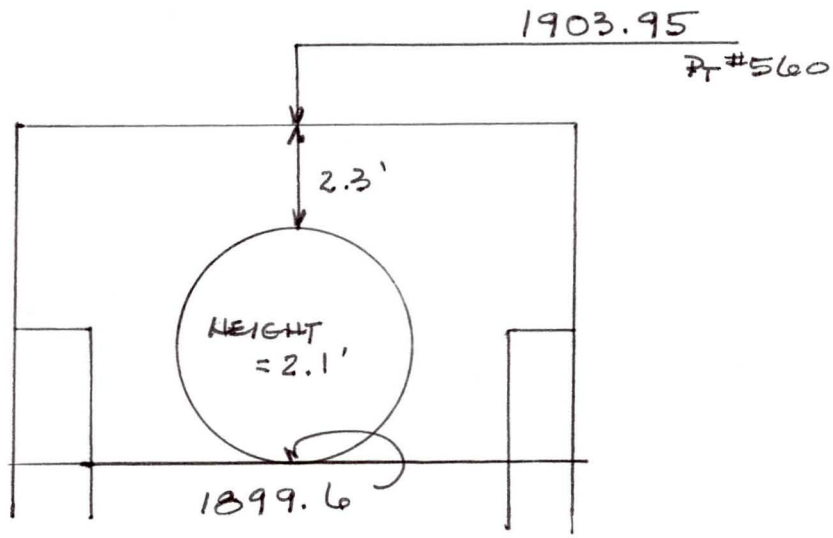

General Condition of Structure

⇑ - INDICATES LOCATION OF RTK POINT

153.15
RCP
NS
1931

153.15
RCP

FCDMC Contract 2000C035 Stucture Surveys
Wittmann/Tilby ADMP
WORKSHEET
DTM, INC. Project #21092

☐ Sun Valley Parkway
☒ US 60 RR
☐ Highway 74

Type of Structure: Dome Box Date: 8.8.01
File Name: 562 Description Name: 153.17
Party Chief: RDS GDAC Control Pt # 4KG2 - 562

153+17 4P
☒ Photo Taken

NORTH FACE (UPSTREAM)

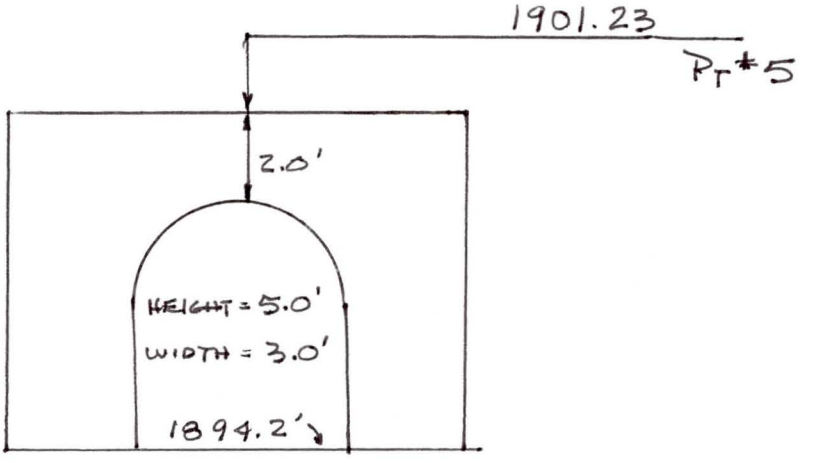

General Condition of Structure

153+17 DN
☒ Photo Taken

SOUTH FACE (DOWNSTREAM)

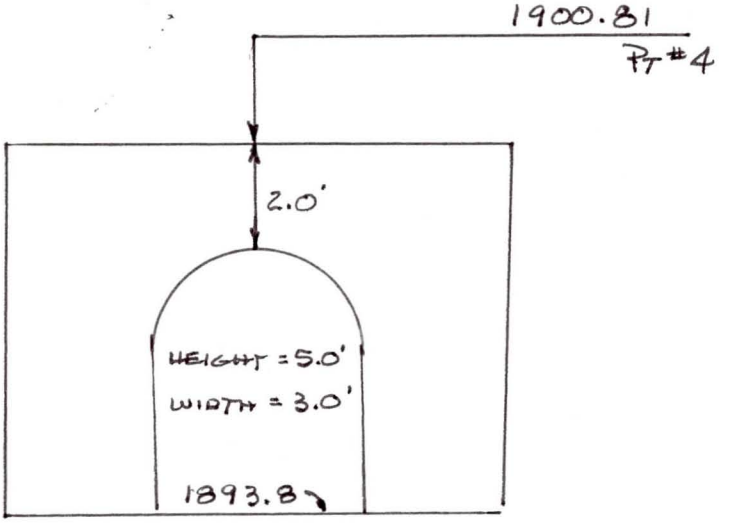

General Condition of Structure

⇑ - INDICATES LOCATION OF RTK POINT

153.17
D. BOX
N S

153.17
D. Box
55

FCDMC Contract 2000C035 Stucture Surveys
Wittmann/Tilby ADMP
WORKSHEET
DTM, INC. Project #21092

☐ Sun Valley Parkway
☒ US 60 RR
☐ Highway 74

Type of Structure: CONCRETE BOX Date: 8.8.01
File Name: 562 Description Name: 153.26
Party Chief: RDS GDAC Control Pt # 4KG2-562

153+26 UP
☒ Photo Taken

NORTH FACE (UPSTREAM)

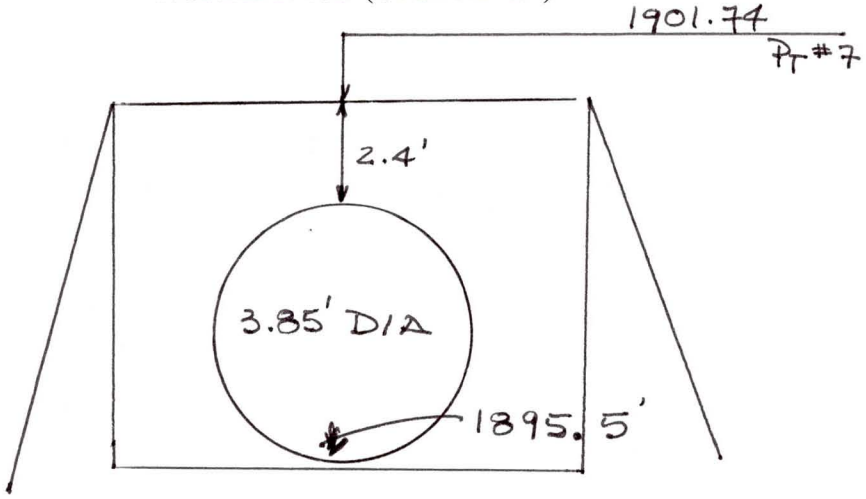

General Condition of Structure

153+26 DN
☒ Photo Taken

SOUTH FACE (DOWNSTREAM)

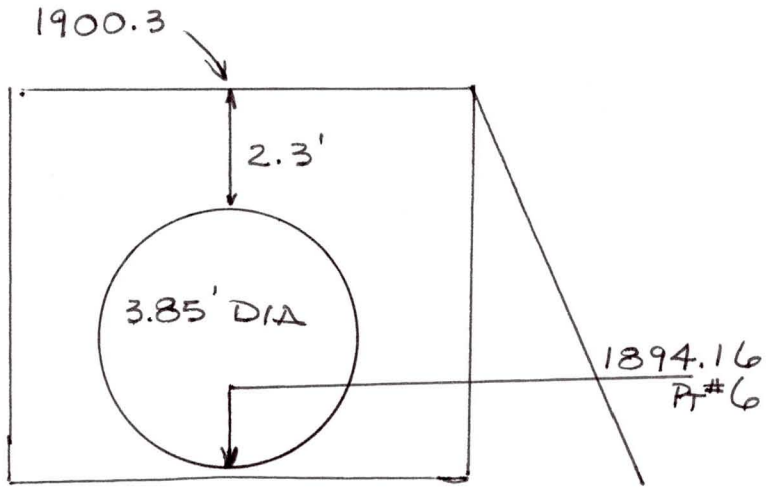

General Condition of Structure

↑ - INDICATES LOCATION OF RTK POINT

153.26
RCP
NS

1928
153.26
RCP
SS

FCDMC Contract 2000C035 Stucture Surveys
Wittmann/Tilby ADMP
WORKSHEET
DTM, INC. Project #21092

☐ Sun Valley Parkway
☐ US 60 RR
☐ Highway 74

Type of Structure: WOOD BOX Date: 8·8·01
File Name: 562 Description Name: 153.34
Party Chief: RDS GDAC Control Pt # 4KG2 - 562

153+34 up
☒ Photo Taken

NORTH FACE (UPSTREAM)

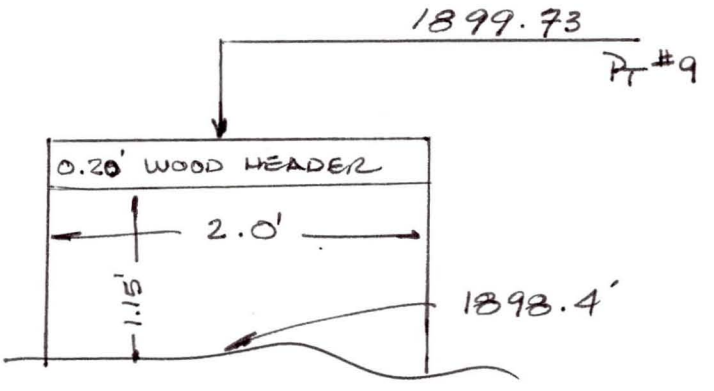

General Condition of Structure

153+34 DN
☒ Photo Taken

SOUTH FACE (DOWNSTREAM)

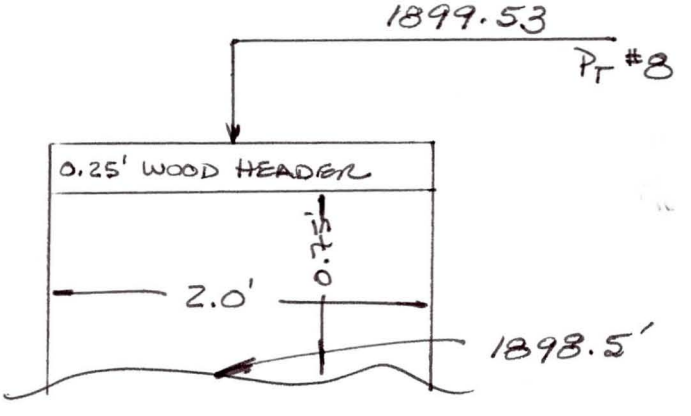

General Condition of Structure

⇑ - INDICATES LOCATION OF RTK POINT

153.34
W. BOX
US

153.34
153.34
W. BOX
SS

FCDMC Contract 2000C035 Stucture Surveys
Wittmann/Tilby ADMP
WORKSHEET
DTM, INC. Project #21092

☐ Sun Valley Parkway
☒ US 60 RR
☐ Highway 74

Type of Structure: CONCRETE "PIPE" Date: 8.8.01
File Name: 562 Description Name: 153.40
Party Chief: RDS GDAC Control Pt # 4KG2 - 562

NORTH FACE (UPSTREAM)

☒ Photo Taken 153+40 UP

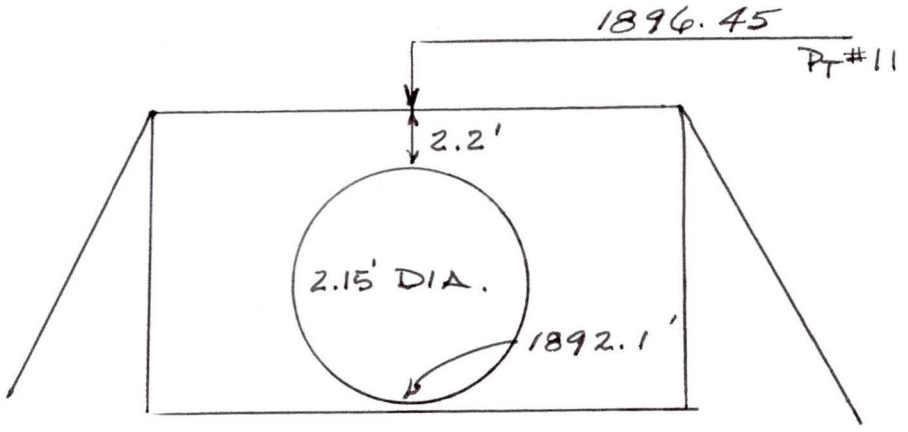

General Condition of Structure

SOUTH FACE (DOWNSTREAM)

☒ Photo Taken 153+40 DN

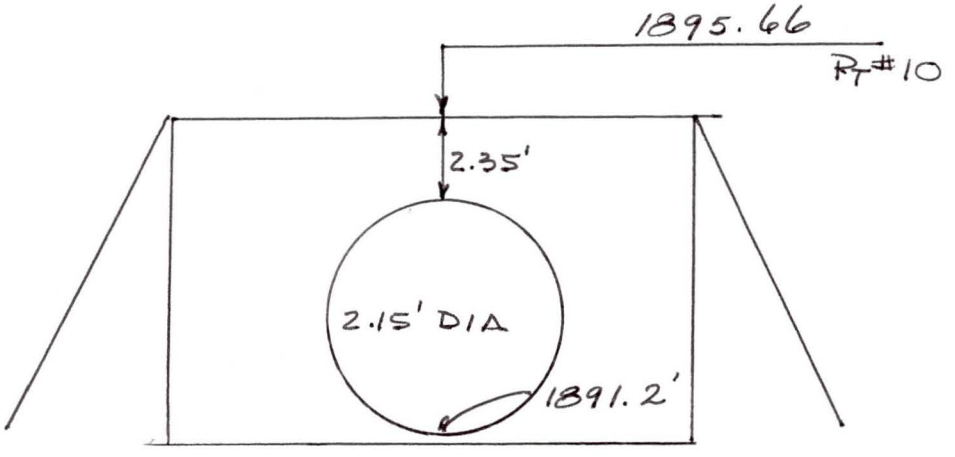

General Condition of Structure

⇑ - INDICATES LOCATION OF RTK POINT

15340
RCP
NS

1534O
RCP
SS

FCDMC Contract 2000C035 Stucture Surveys
Wittmann/Tilby ADMP
WORKSHEET
DTM, INC. Project #21092

☐ Sun Valley Parkway
☒ US 60 RR
☐ Highway 74

Type of Structure: CONCRETE "PIPE" Date: 8.8.01
File Name: 562 Description Name: 153.44
Party Chief: RDS GDAC Control Pt # 4KG2 - 562

153+44UP
☒ Photo Taken

NORTH FACE (UPSTREAM)

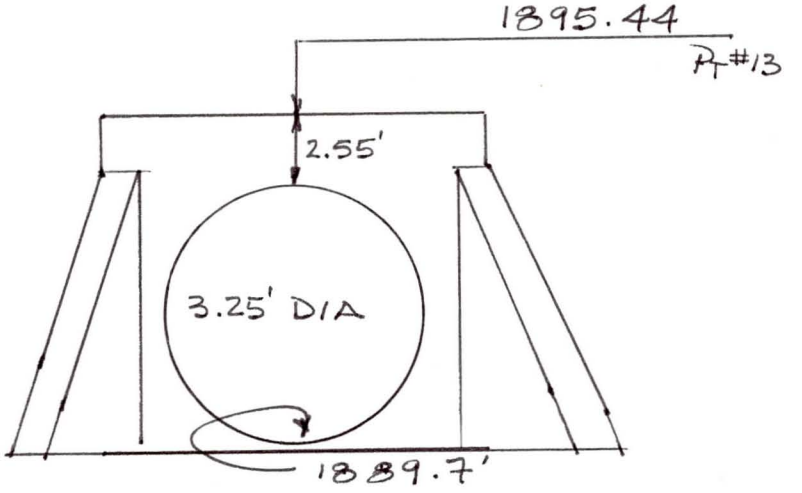

General Condition of Structure _____

153+44DN
☒ Photo Taken

SOUTH FACE (DOWNSTREAM)

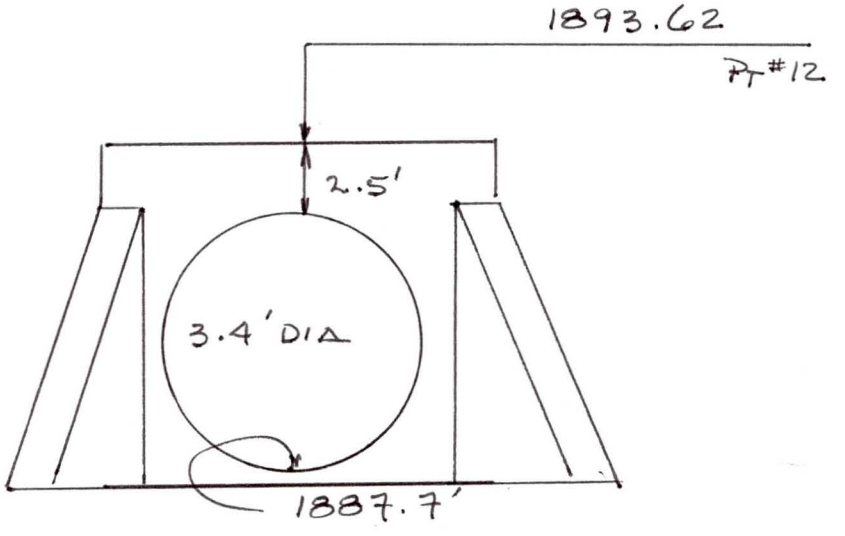

General Condition of Structure _____

⇑ - INDICATES LOCATION OF RTK POINT

1534
RCP
S

1965
153.44
15344
RCP
SS

FCDMC Contract 2000C035 Stucture Surveys
Wittmann/Tilby ADMP
WORKSHEET
DTM, INC. Project #21092

☐ Sun Valley Parkway
☒ US 60 RR
☐ Highway 74

Type of Structure: CONCRETE BOX Date: 8.8.01
File Name: 562 Description Name: 153.5
Party Chief: RDS GDAC Control Pt # 4KG2 - 562

NORTH FACE (UPSTREAM)

153+5UP
☒ Photo Taken

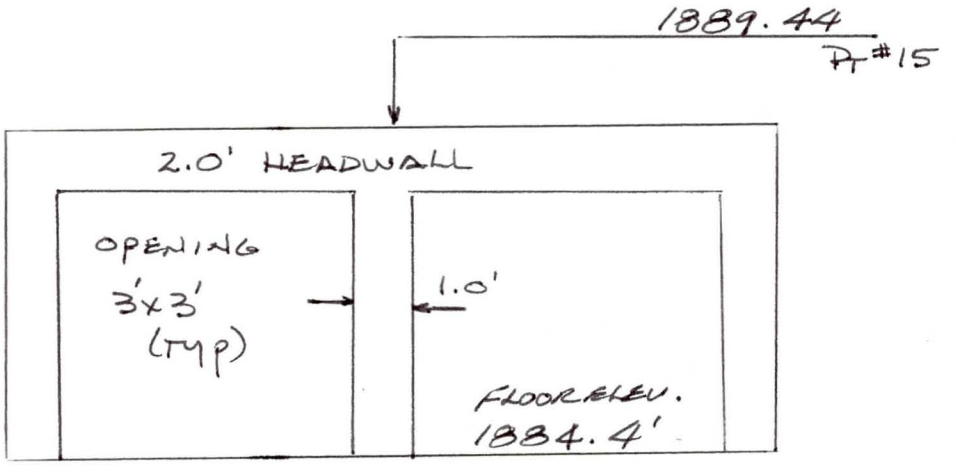

General Condition of Structure

SOUTH FACE (DOWNSTREAM)

153+5DN
☒ Photo Taken

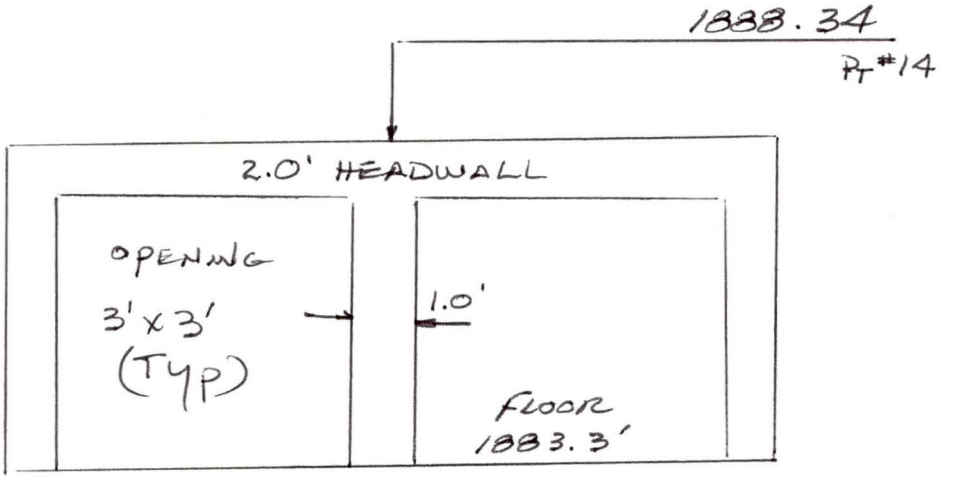

General Condition of Structure

⇑ - INDICATES LOCATION OF RTK POINT

153.5
D BOX
NS

153.5
153.5
D B07
SS

FCDMC Contract 2000C035 Stucture Surveys
Wittmann/Tilby ADMP
WORKSHEET
DTM, INC. Project #21092

☐ Sun Valley Parkway
☒ US 60 RR
☐ Highway 74

Type of Structure: WOODEN BOX Date: 8.8.01
File Name: 562 Description Name: 153.64
Party Chief: RDS GDAC Control Pt # 4KG2 - 562

153+64 UP
☒ Photo Taken

NORTH FACE (UPSTREAM)

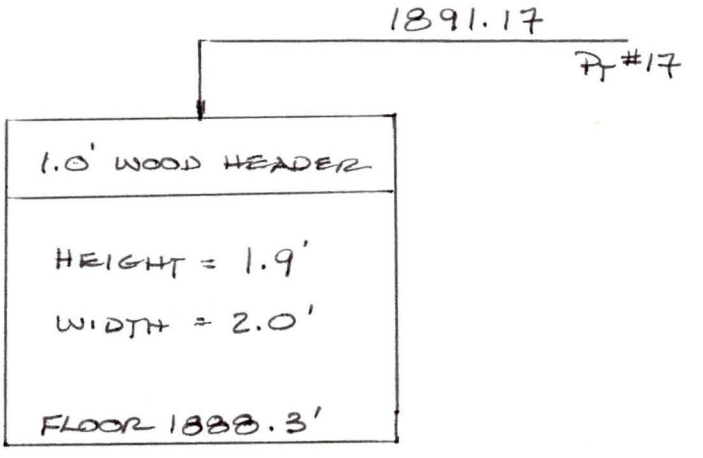

General Condition of Structure

153+64 DN
☒ Photo Taken

SOUTH FACE (DOWNSTREAM)

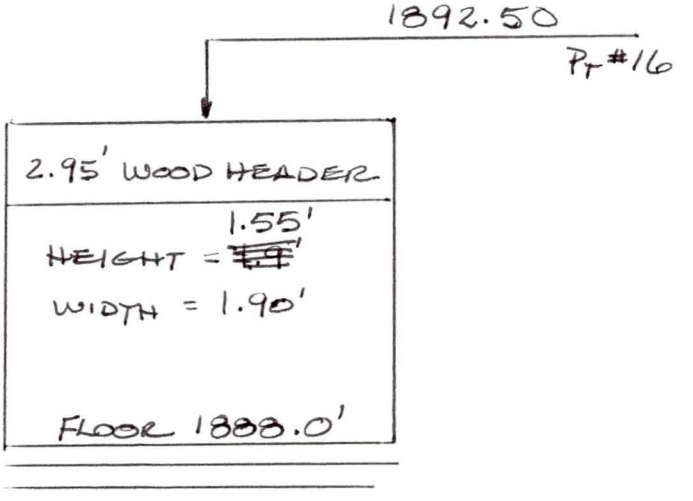

General Condition of Structure

↑ - INDICATES LOCATION OF RTK POINT

153.64
W. BOX
NS

153.64
W. BOX
SS

FCDMC Contract 2000C035 Stucture Surveys
Wittmann/Tilby ADMP
WORKSHEET
DTM, INC. Project #21092

☐ Sun Valley Parkway
☒ US 60 RR
☐ Highway 74

Type of Structure: WOODEN BOX Date: 8.8.01
File Name: 562 Description Name: 153.7
Party Chief: RDS GDAC Control Pt # 4KG2 - 562

153+7 up
☒ Photo Taken

NORTH FACE (UPSTREAM)

COMPLETELY BURIED

SEE PHOTO

General Condition of Structure

153+7DN
☒ Photo Taken

SOUTH FACE (DOWNSTREAM)

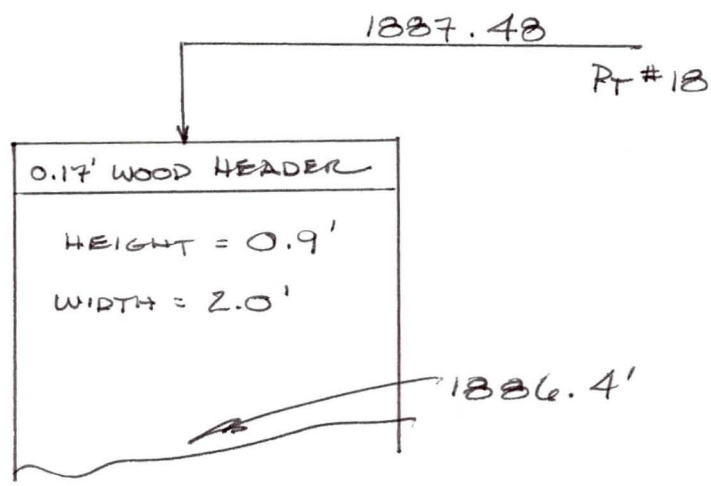

General Condition of Structure

↑ - INDICATES LOCATION OF RTK POINT

153.7
W. BOX
NS

153.7
153.7
W. Box
SS

FCDMC Contract 2000C035 Stucture Surveys
Wittmann/Tilby ADMP
WORKSHEET
DTM, INC. Project #21092

☐ Sun Valley Parkway
☒ US 60 RR
☐ Highway 74

Type of Structure: DOME CULVERT Date: 8.8.01
File Name: 562 Description Name: 153.9
Party Chief: RDS GDAC Control Pt # 4KG2 - 562

153+9 up
☑ Photo Taken

NORTH FACE (UPSTREAM)

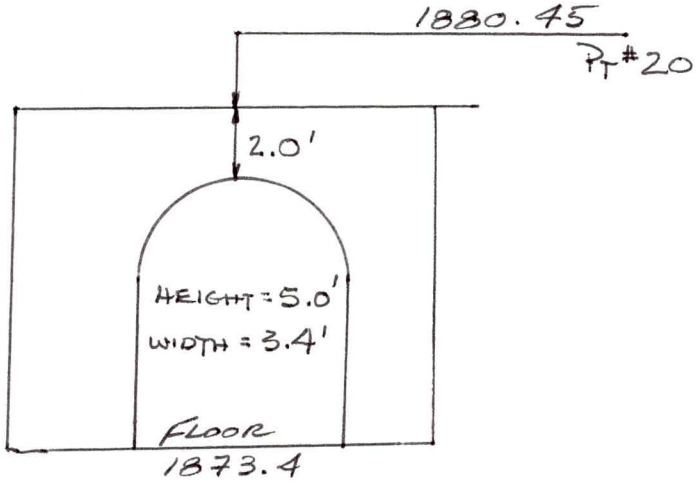

General Condition of Structure

153+9 DN
☒ Photo Taken

SOUTH FACE (DOWNSTREAM)

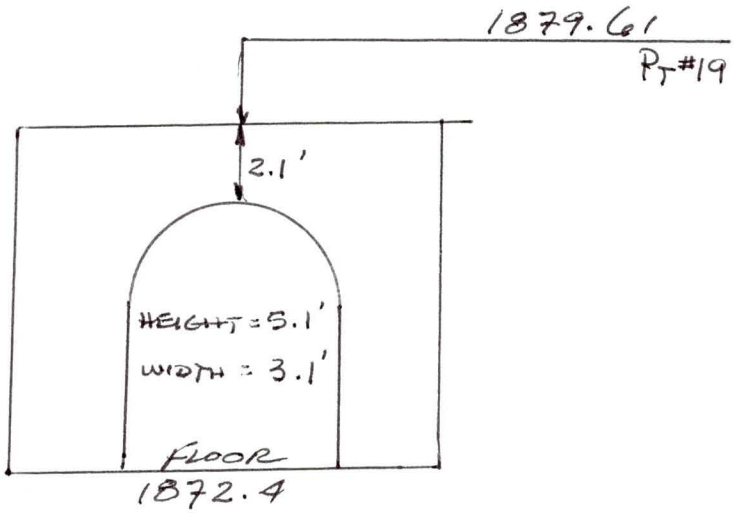

General Condition of Structure

⇑ - INDICATES LOCATION OF RTK POINT

153.9
D.BOZ
NS

1539
153.9
D BOX
SS

FCDMC Contract 2000C035 Stucture Surveys
Wittmann/Tilby ADMP
WORKSHEET
DTM, INC. Project #21092

☐ Sun Valley Parkway
☒ US 60 RR
☐ Highway 74

Type of Structure: BRIDGE (WOOD) Date: 8.8.01
File Name: 562 Description Name: 154.0
Party Chief: RDS GDAC Control Pt # 4KG2 - 562

154+0UP
☒ Photo Taken

NORTH FACE (UPSTREAM)

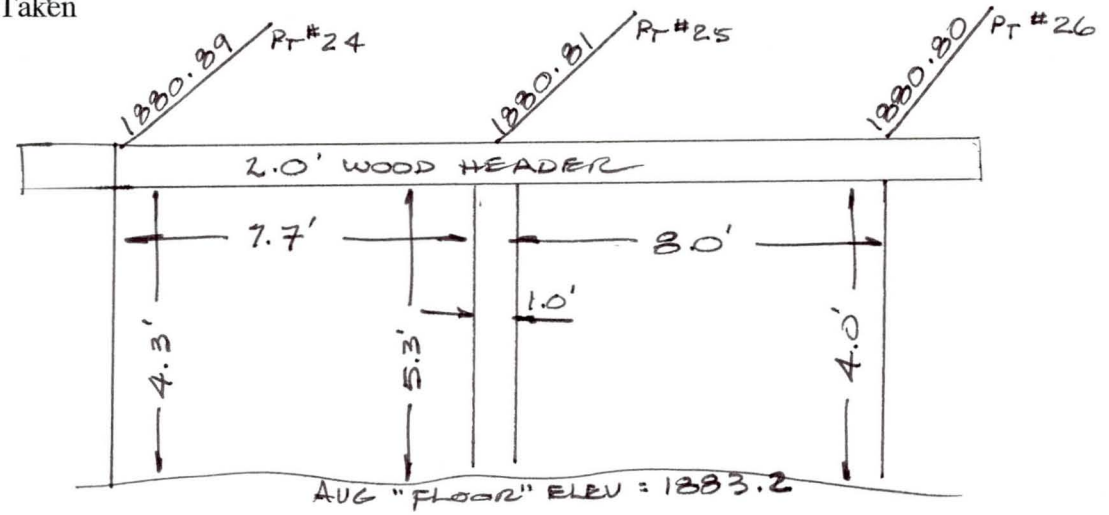

General Condition of Structure

154+0DN
☒ Photo Taken

SOUTH FACE (DOWNSTREAM)

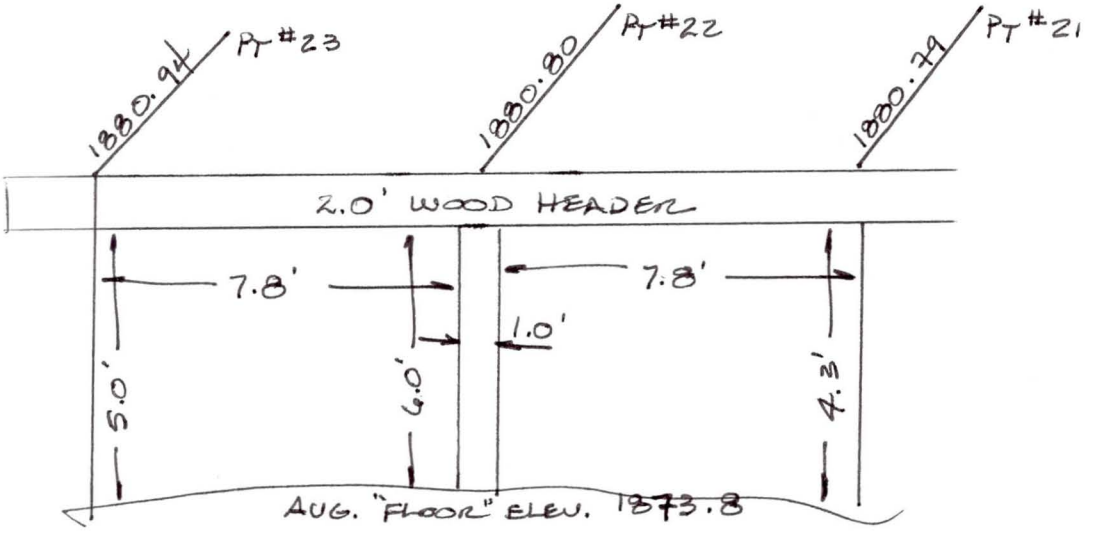

General Condition of Structure

↑ - INDICATES LOCATION OF RTK POINT

154.0
BRIDGE
NS

154.0
154.0
BRIDGE
SS

FCDMC Contract 2000C035 Stucture Surveys
Wittmann/Tilby ADMP
WORKSHEET
DTM, INC. Project #21092

☐ Sun Valley Parkway
☒ US 60 RR
☐ Highway 74

Type of Structure: RCP Date: 8.8.01
File Name: 562 Description Name: 154.1
Party Chief: RDS GDAC Control Pt # 4KG2 - 562

154+1 up
☒ Photo Taken

NORTH FACE (UPSTREAM)

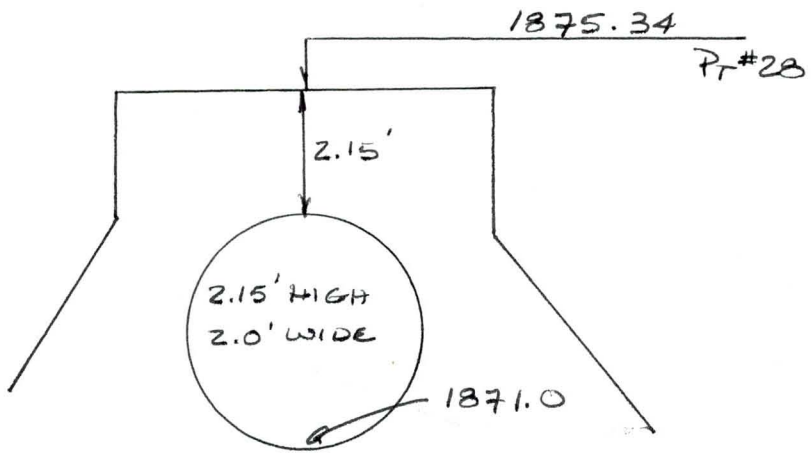

General Condition of Structure

154+1 DN
☑ Photo Taken

SOUTH FACE (DOWNSTREAM)

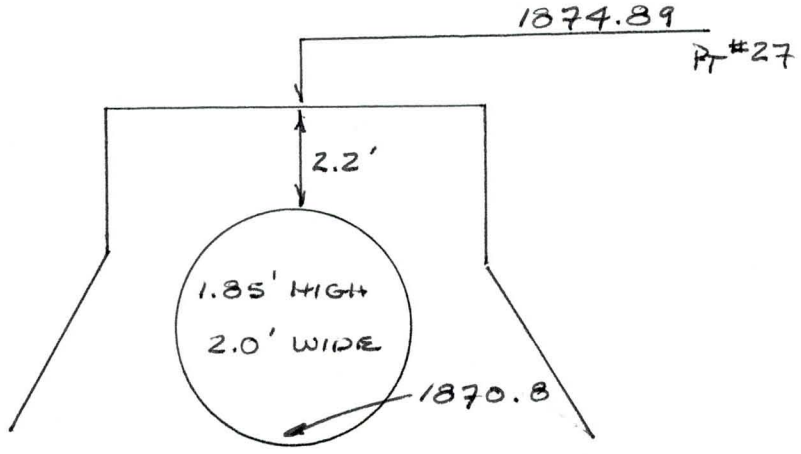

General Condition of Structure

⇑ - INDICATES LOCATION OF RTK POINT

154.1
RCP
NS
1925

154.1
RCP
SS
154.1

FCDMC Contract 2000C035 Stucture Surveys
Wittmann/Tilby ADMP
WORKSHEET
DTM, INC. Project #21092

☐ Sun Valley Parkway
☒ US 60 RR
☐ Highway 74

Type of Structure: CONCRETE "PIPE" Date: 8.8.01
File Name: 562 Description Name: 154.2
Party Chief: RDS GDAC Control Pt # 4KG2-562

154+2 UP
☒ Photo Taken

NORTH FACE (UPSTREAM)

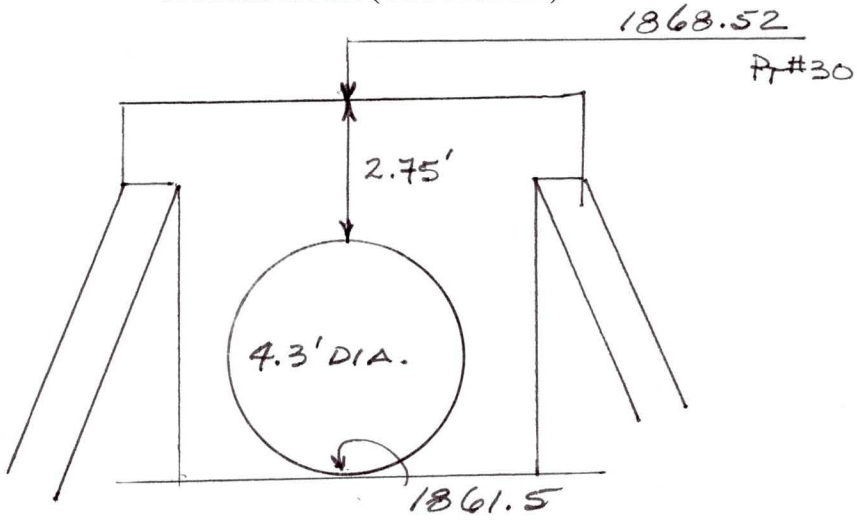

General Condition of Structure

154+2 DN
☒ Photo Taken

SOUTH FACE (DOWNSTREAM)

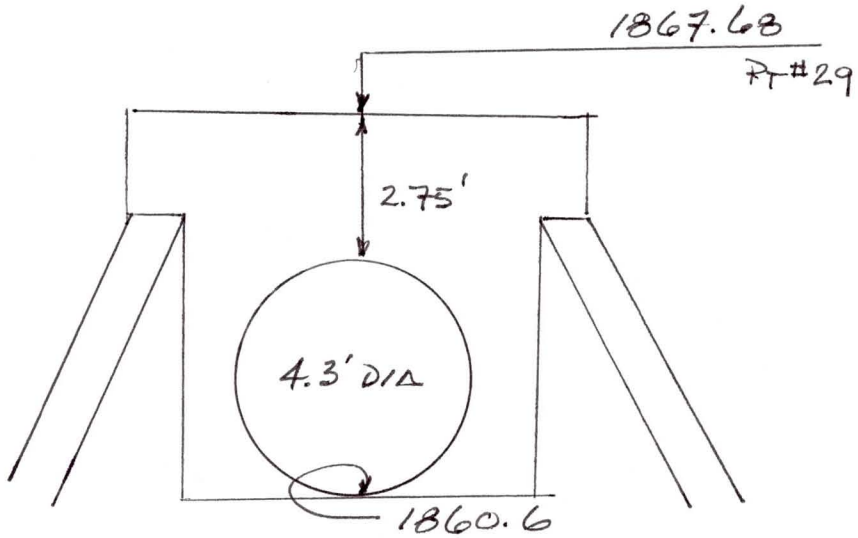

General Condition of Structure

⇑ - INDICATES LOCATION OF RTK POINT

154.2
RCP
NS

154-2
RCP

FCDMC Contract 2000C035 Stucture Surveys
Wittmann/Tilby ADMP
WORKSHEET
DTM, INC. Project #21092

☐ Sun Valley Parkway
☒ US 60 RR
☐ Highway 74

Type of Structure: WOODEN BRIDGE Date: 8.8.01
File Name: 562 Description Name: 154.4
Party Chief: RDS GDAC Control Pt # 4KG2-562

154+4UP AND A, B, C, D, E, F NORTH FACE (UPSTREAM)
☒ Photo Taken

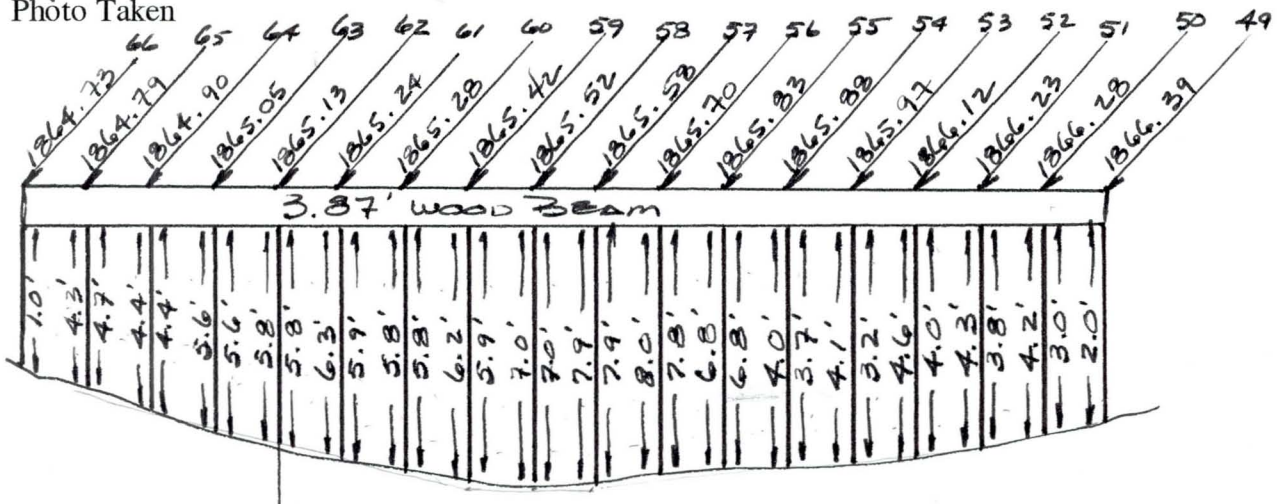

General Condition of Structure SUPPORTS - 1.0' THICK WOOD POLE CONSTRUCTION
OPENINGS 16.2' WIDE (TYP)

154+4DN AND A, B, C, D, E SOUTH FACE (DOWNSTREAM)
☒ Photo Taken

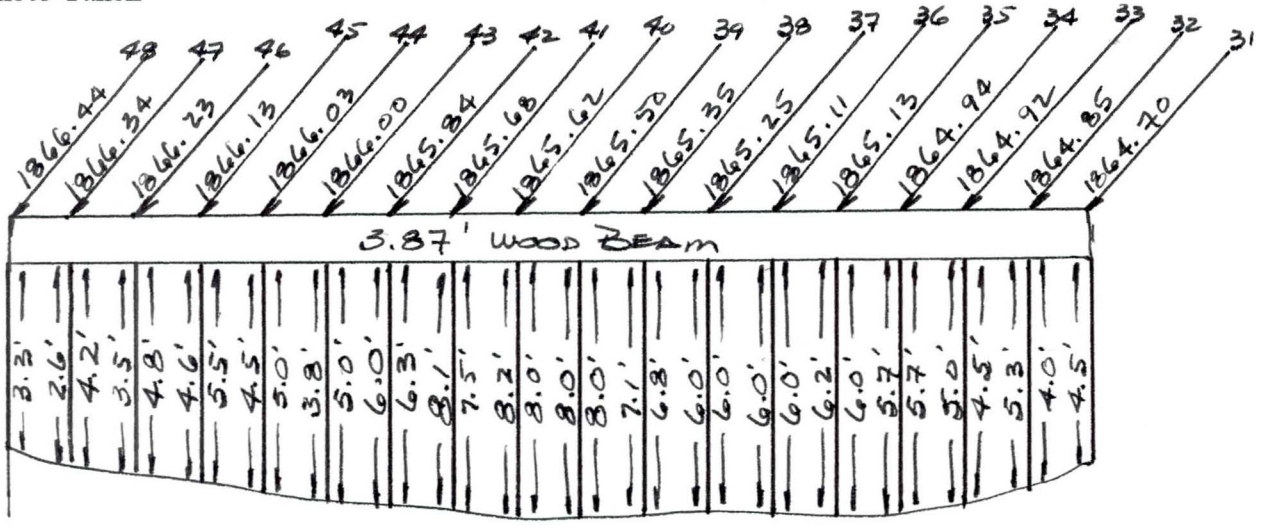

General Condition of Structure SUPPORTS 1.0' THICK WOOD POLE CONSTRUCTION
OPENINGS 16.2' WIDE (TYP)

↑ - INDICATES LOCATION OF RTK POINT

154.4
BRIDGE
NS

154.4
BRIDGE
NS

154.4
BRIDGE
NS

154.4
BRIDGE
NS

1644
BRIDGE
SS

154.4
BRIDG
SS

154.4
BRIDGE
SS

154.4
BRIDGE

FCDMC Contract 2000C035 Stucture Surveys
Wittmann/Tilby ADMP
WORKSHEET
DTM, INC. Project #21092

☐ Sun Valley Parkway
☒ US 60 RR
☐ Highway 74

Type of Structure: WOOD BOX Date: 8·8·01
File Name: 562 Description Name: 154.5
Party Chief: RDS GDAC Control Pt # 4KG2 - 562

154+5 up
☒ Photo Taken

NORTH FACE (UPSTREAM)

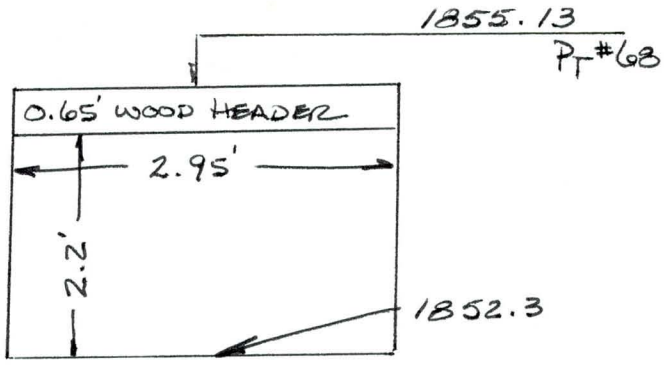

General Condition of Structure WOOD FRAME

154+5 DN
☒ Photo Taken

SOUTH FACE (DOWNSTREAM)

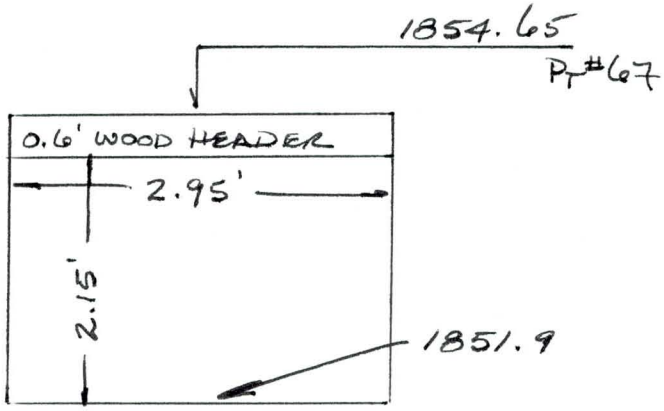

General Condition of Structure

⇑ - INDICATES LOCATION OF RTK POINT

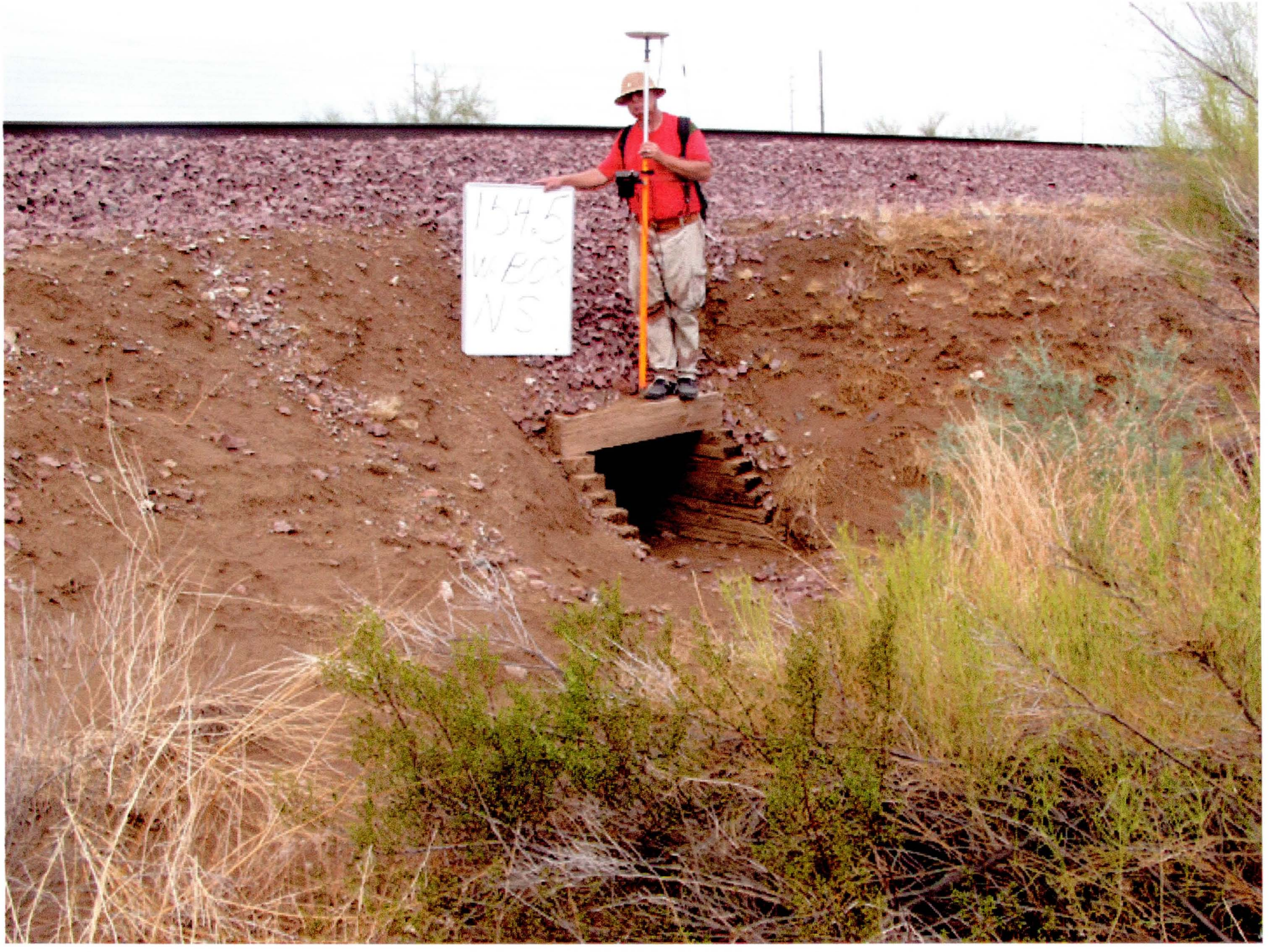
134.5
W
NS

154.5
W. BOX
SS

FCDMC Contract 2000C035 Stucture Surveys
Wittmann/Tilby ADMP
WORKSHEET
DTM, INC. Project #21092

☐ Sun Valley Parkway
☒ US 60 RR
☐ Highway 74

Type of Structure: RCP Date: 8·8·01
File Name: 562 Description Name: 154.6
Party Chief: RDS GDAC Control Pt # 4KG2 - 562

154+64 UP
☒ Photo Taken

NORTH FACE (UPSTREAM)

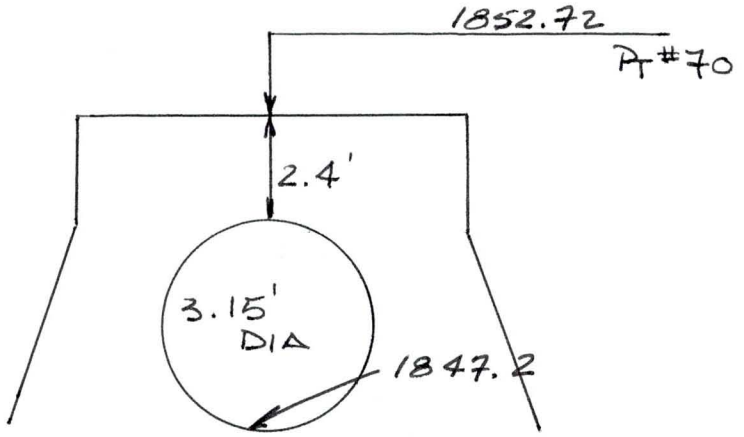

General Condition of Structure

154+6 DN
☒ Photo Taken

SOUTH FACE (DOWNSTREAM)

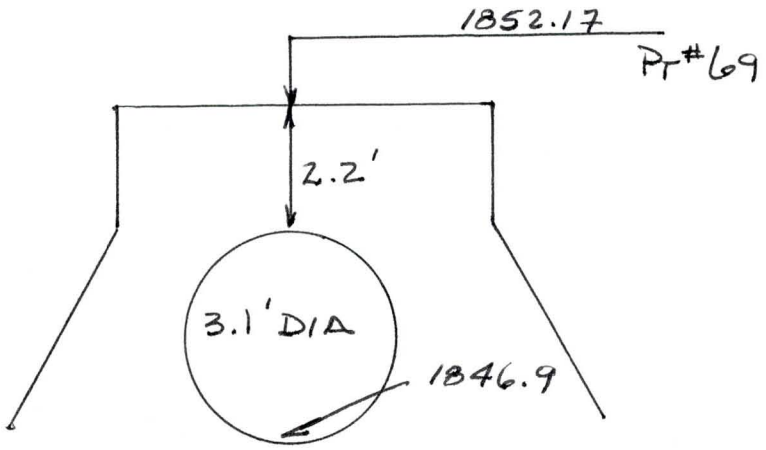

General Condition of Structure

⇑ - INDICATES LOCATION OF RTK POINT

NS
1925

154.6
PCP
SS

FCDMC Contract 2000C035 Stucture Surveys
Wittmann/Tilby ADMP
WORKSHEET
DTM, INC. Project #21092

☐ Sun Valley Parkway
☒ US 60 RR
☐ Highway 74

Type of Structure: CONCRETE "DOME" Date: 8·8·01
File Name: 562 Description Name: 154.9
Party Chief: RDS GDAC Control Pt # 4KG2 - 562

154+9 UP
☒ Photo Taken

NORTH FACE (UPSTREAM)

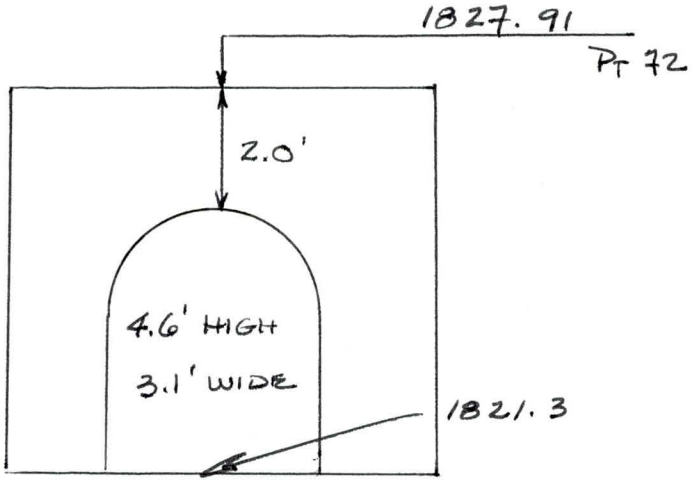

General Condition of Structure

154+9 DN
☒ Photo Taken

SOUTH FACE (DOWNSTREAM)

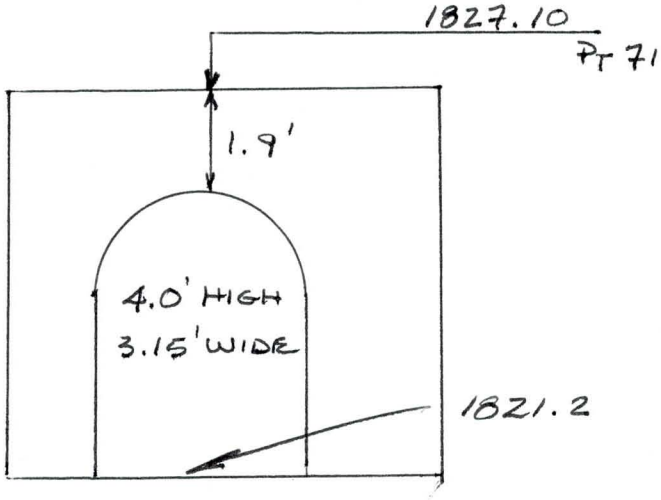

General Condition of Structure

⇑ - INDICATES LOCATION OF RTK POINT

154.9
D. BOX
N S

154.9
D.BOX
SS

FCDMC Contract 2000C035 Stucture Surveys
Wittmann/Tilby ADMP
WORKSHEET
DTM, INC. Project #21092

☐ Sun Valley Parkway
☒ US 60 RR
☐ Highway 74

Type of Structure: RCP Date: 8·8·01
File Name: 562 Description Name: 155.1
Party Chief: RDS GDAC Control Pt # 4KG2 - 562

NORTH FACE (UPSTREAM)

155+1 up
☒ Photo Taken

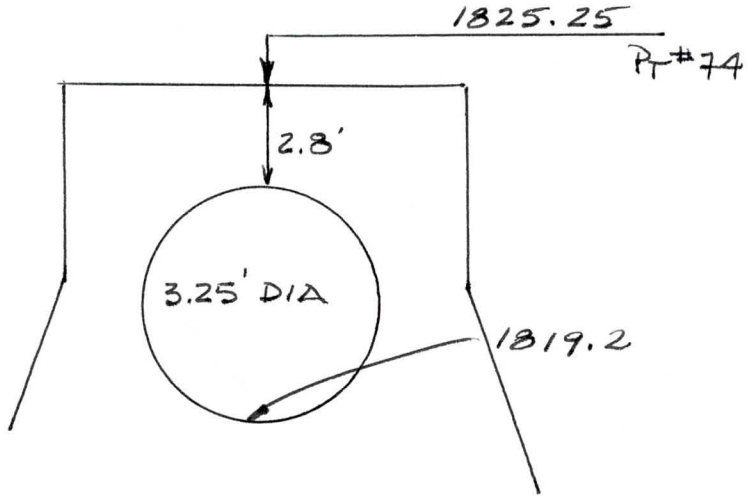

General Condition of Structure_____

SOUTH FACE (DOWNSTREAM)

155+1 DN
☒ Photo Taken

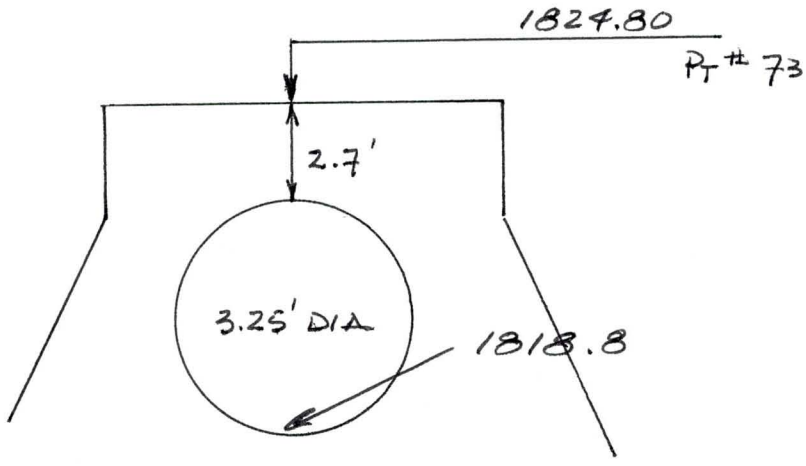

General Condition of Structure_____

⇑ - INDICATES LOCATION OF RTK POINT

155.1
D.BOX
N S
1924

155.1
D.BOX
SS

FCDMC Contract 2000C035 Stucture Surveys
Wittmann/Tilby ADMP
WORKSHEET
DTM, INC. Project #21092

☐ Sun Valley Parkway
☒ US 60 RR
☐ Highway 74

Type of Structure: RCP Date: 8·8·01
File Name: 562 Description Name: 155.2
Party Chief: RDS GDAC Control Pt # 4KG2 - 562

155+2 up
☒ Photo Taken

NORTH FACE (UPSTREAM)

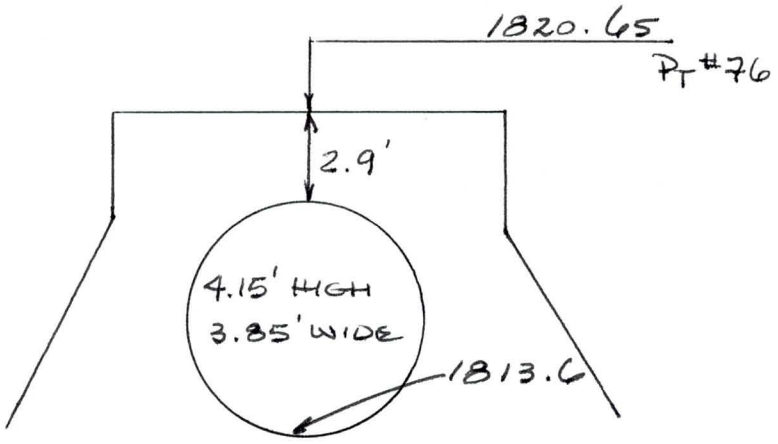

General Condition of Structure

155+2 DN
☒ Photo Taken

SOUTH FACE (DOWNSTREAM)

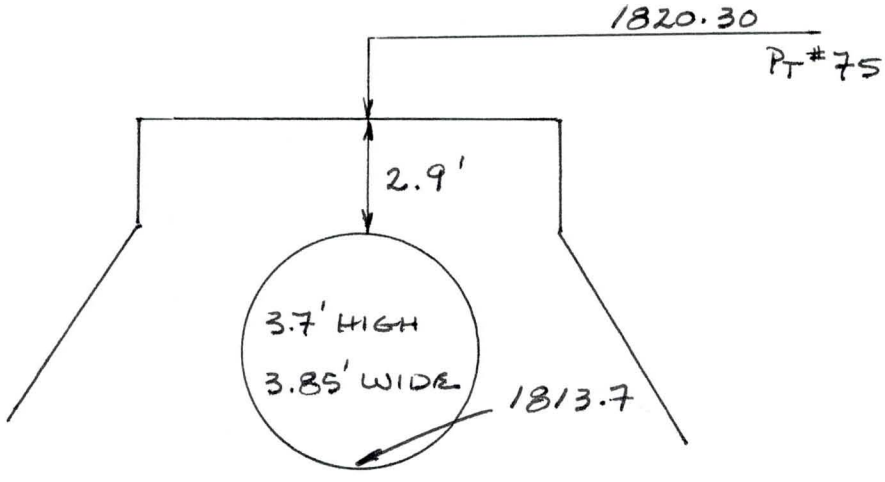

General Condition of Structure

↑ - INDICATES LOCATION OF RTK POINT

155.2
RCP
N S

155.2
155.2
RCP
SS

FCDMC Contract 2000C035 Stucture Surveys
Wittmann/Tilby ADMP
WORKSHEET
DTM, INC. Project #21092

☐ Sun Valley Parkway
☒ US 60 RR
☐ Highway 74

Type of Structure: CONCRETE BOX Date: 8.8.01
File Name: 562 Description Name: 155.3
Party Chief: RDS GDAC Control Pt # 4KG2 -562

NORTH FACE (UPSTREAM)

155+34P
☒ Photo Taken

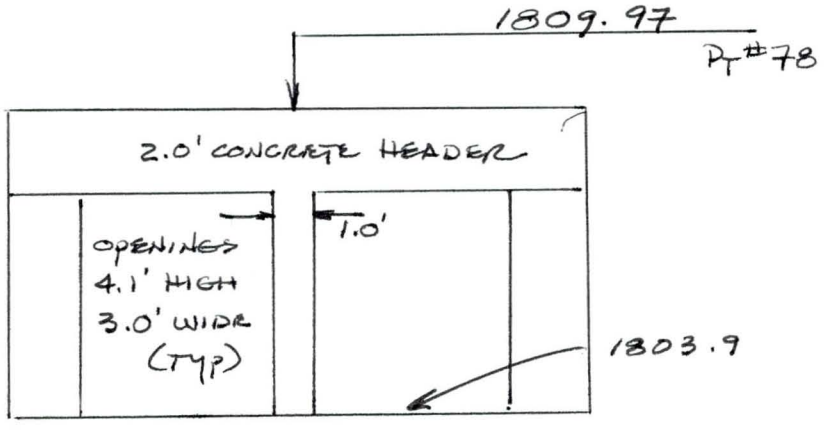

General Condition of Structure

SOUTH FACE (DOWNSTREAM)

155+3DN
☒ Photo Taken

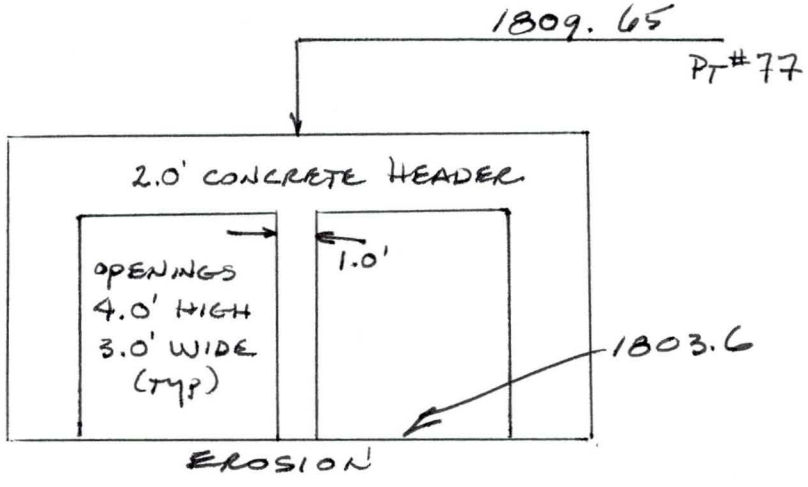

General Condition of Structure

⇑ - INDICATES LOCATION OF RTK POINT

155.3
2×BOX
N S

155.3
155.3
2-B-2
SS

FCDMC Contract 2000C035 Stucture Surveys
Wittmann/Tilby ADMP
WORKSHEET
DTM, INC. Project #21092

☐ Sun Valley Parkway
☒ US 60 RR
☐ Highway 74

Type of Structure: RCP Date: 8.8.01
File Name: 562 Description Name: 155.5
Party Chief: RDS GDAC Control Pt # 4KG2 - 562

155+5 up
☒ Photo Taken

NORTH FACE (UPSTREAM)

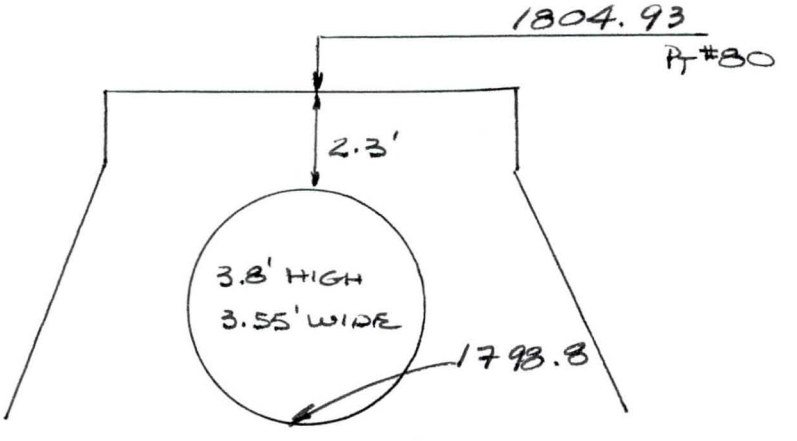

General Condition of Structure

155+5 DN
☒ Photo Taken

SOUTH FACE (DOWNSTREAM)

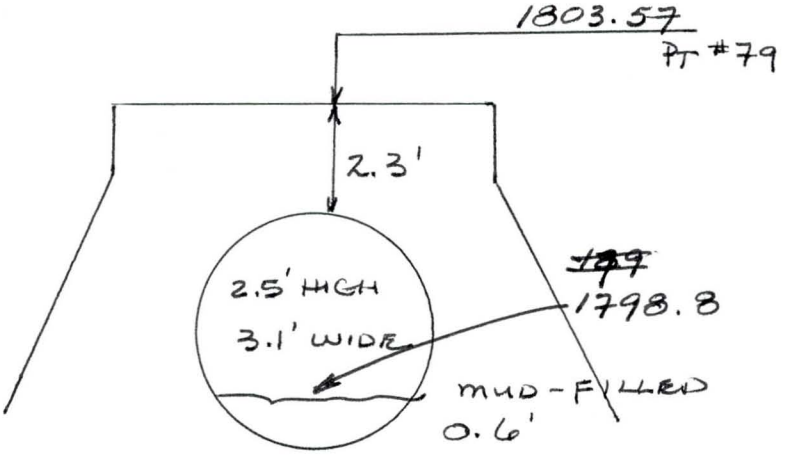

General Condition of Structure

⇑ - INDICATES LOCATION OF RTK POINT

155.5
RCP
NS

155.5
155.5
RCP
SS

FCDMC Contract 2000C035 Stucture Surveys
Wittmann/Tilby ADMP
WORKSHEET
DTM, INC. Project #21092

☐ Sun Valley Parkway
☒ US 60 RR
☐ Highway 74

Type of Structure: RCP Date: 8.8.01
File Name: 562 Description Name: 155.67
Party Chief: RDS GDAC Control Pt # 4KG2 - 562

155+67UP NORTH FACE (UPSTREAM)
☒ Photo Taken

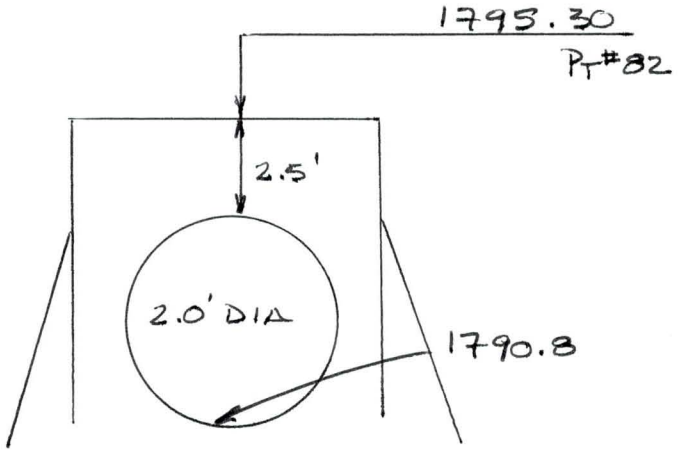

General Condition of Structure GOOD

155+67DN SOUTH FACE (DOWNSTREAM)
☒ Photo Taken

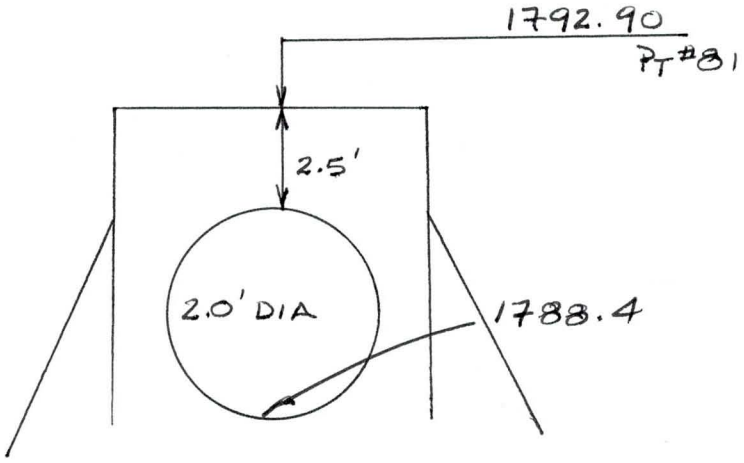

General Condition of Structure GOOD

↑ - INDICATES LOCATION OF RTK POINT

155.67
RCP
N S
1932

155.67
RCP
SS
1932

FCDMC Contract 2000C035 Stucture Surveys
Wittmann/Tilby ADMP
WORKSHEET
DTM, INC. Project #21092

☐ Sun Valley Parkway
☒ US 60 RR
☐ Highway 74

Type of Structure: RCP Date: 8.8.01
File Name: 562 Description Name: 155.73
Party Chief: RDS GDAC Control Pt # 4KG2 - 562

NORTH FACE (UPSTREAM)

155+73 4P
☒ Photo Taken

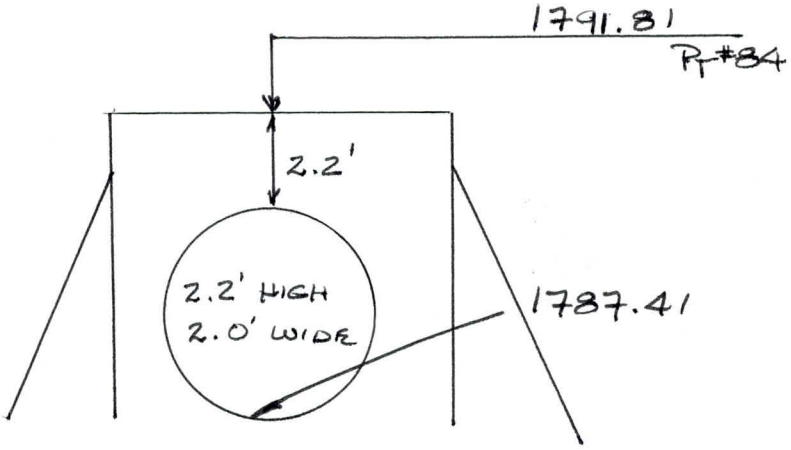

General Condition of Structure

SOUTH FACE (DOWNSTREAM)

155+73 DN
☒ Photo Taken

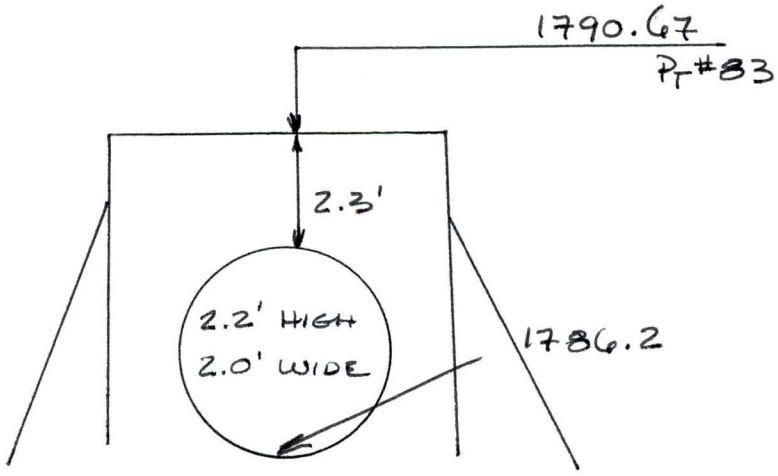

General Condition of Structure GOOD - CLEAN

↑ - INDICATES LOCATION OF RTK POINT

155.73
RCP
N3
1980

155.73
RCP
SS

FCDMC Contract 2000C035 Stucture Surveys
Wittmann/Tilby ADMP
WORKSHEET
DTM, INC. Project #21092

☐ Sun Valley Parkway
☒ US 60 RR
☐ Highway 74

Type of Structure: CONCRETE "DOME" Date: 8·8·01
File Name: 562 Description Name: 155.8
Party Chief: RDS GDAC Control Pt # 4KG2 - 562

155+84P
☒ Photo Taken

NORTH FACE (UPSTREAM)

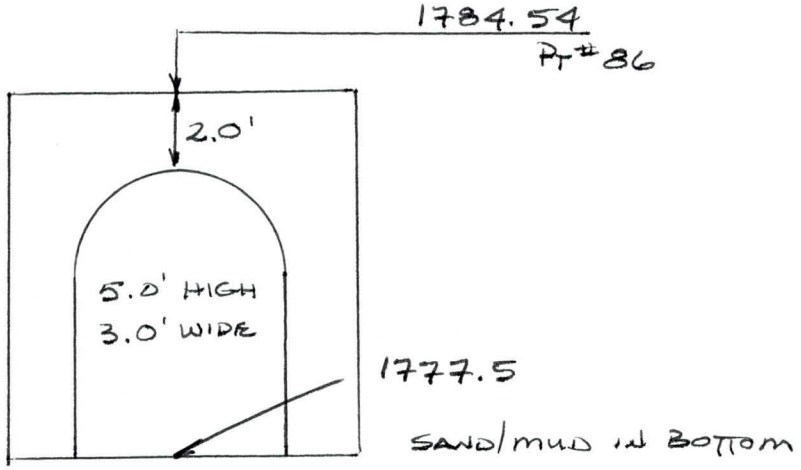

General Condition of Structure _____

155+8DN
☒ Photo Taken

SOUTH FACE (DOWNSTREAM)

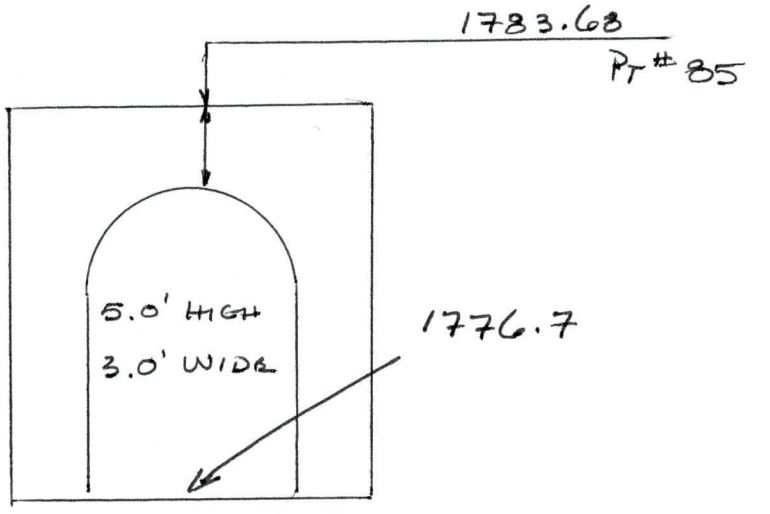

General Condition of Structure CLEAN

⥣ - INDICATES LOCATION OF RTK POINT

155.8
D. BOX
NS

155.8
155.8
D. BOX
SS

FCDMC Contract 2000C035 Stucture Surveys
Wittmann/Tilby ADMP
WORKSHEET
DTM, INC. Project #21092

☐ Sun Valley Parkway
☒ US 60 RR
☐ Highway 74

Type of Structure: CONCRETE "DOME" Date: 8·9·01
File Name: 4KE1 Description Name: 156.1
Party Chief: RDS GDAC Control Pt # 4KE1

156+1 up
☒ Photo Taken

NORTH FACE (UPSTREAM)

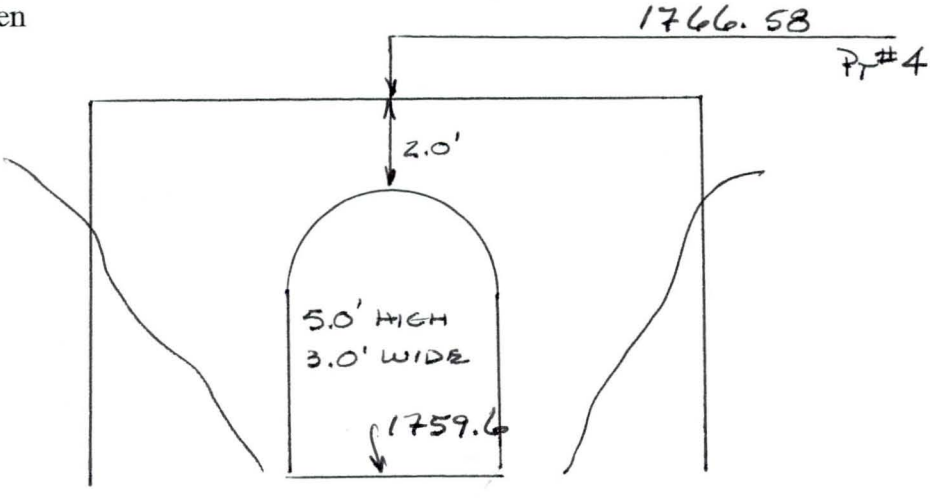

General Condition of Structure CLEAN

156+1 DN
☒ Photo Taken

SOUTH FACE (DOWNSTREAM)

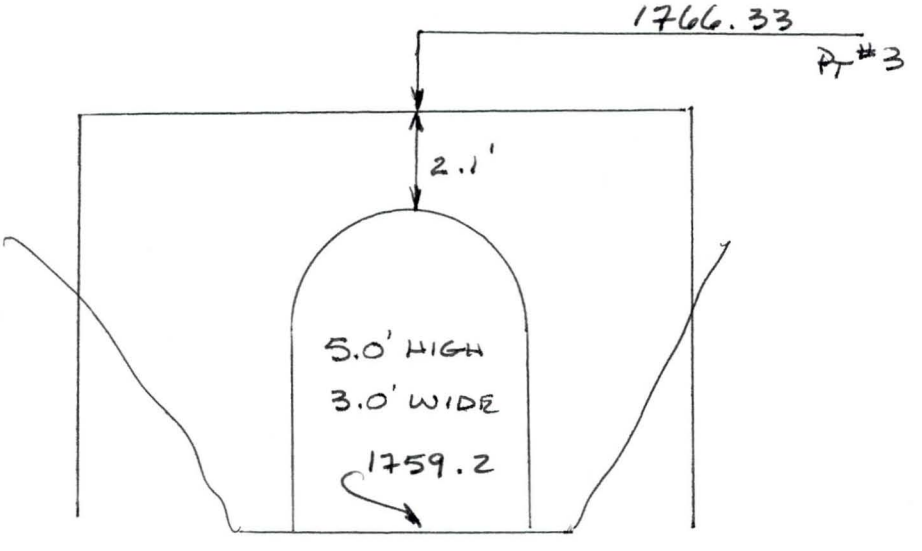

General Condition of Structure CLEAN

⇑ - INDICATES LOCATION OF RTK POINT

1561
D BOX
N S

156.1
156.1
DBOX
SS

FCDMC Contract 2000C035 Stucture Surveys
Wittmann/Tilby ADMP
WORKSHEET
DTM, INC. Project #21092

☐ Sun Valley Parkway
☒ US 60 RR
☐ Highway 74

Type of Structure: DOUBLE CMP Date: 8.9.01
File Name: 4KE1 Description Name: 156.11
Party Chief: RDS GDAC Control Pt # 4KE1

156+11 UP NORTH FACE (UPSTREAM)

☒ Photo Taken

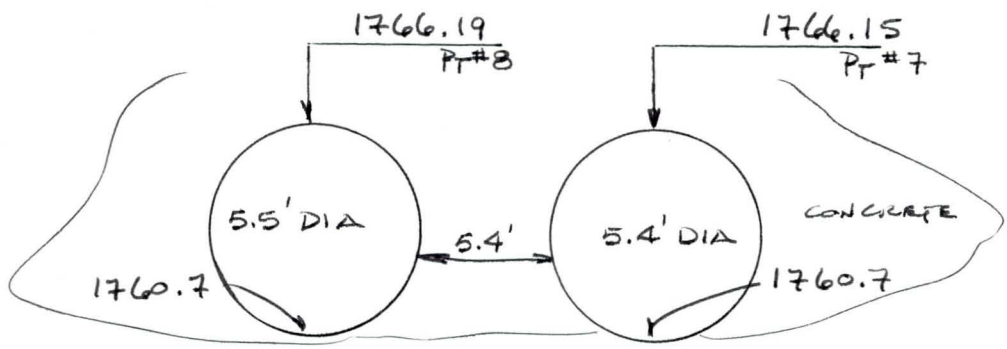

General Condition of Structure

156+11 DN SOUTH FACE (DOWNSTREAM)

☒ Photo Taken

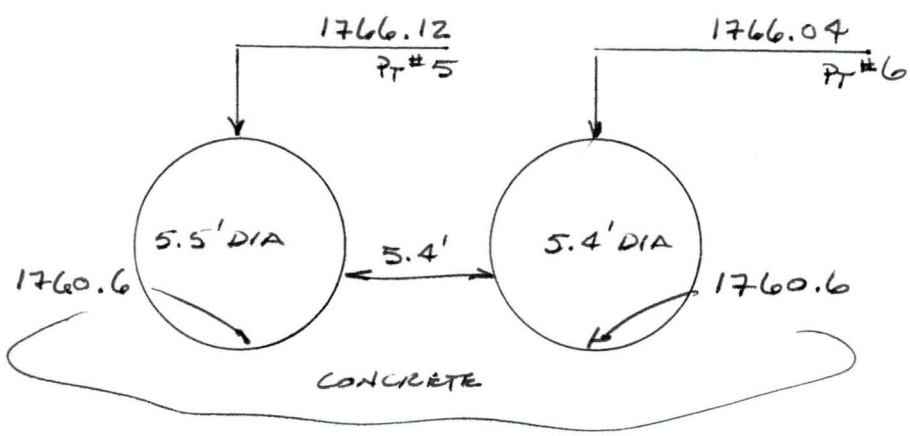

General Condition of Structure

⇑ - INDICATES LOCATION OF RTK POINT

1561
2xcm
N S

156.11
2XCMP
SS

FCDMC Contract 2000C035 Stucture Surveys
Wittmann/Tilby ADMP
WORKSHEET
DTM, INC. Project #21092

☐ Sun Valley Parkway
☒ US 60 RR
☐ Highway 74

Type of Structure: RCP Date: 8·9·01
File Name: 4KE1 Description Name: 156.3
Party Chief: RDS GDAC Control Pt # 4KE1

156+3 UP
☒ Photo Taken

NORTH FACE (UPSTREAM)

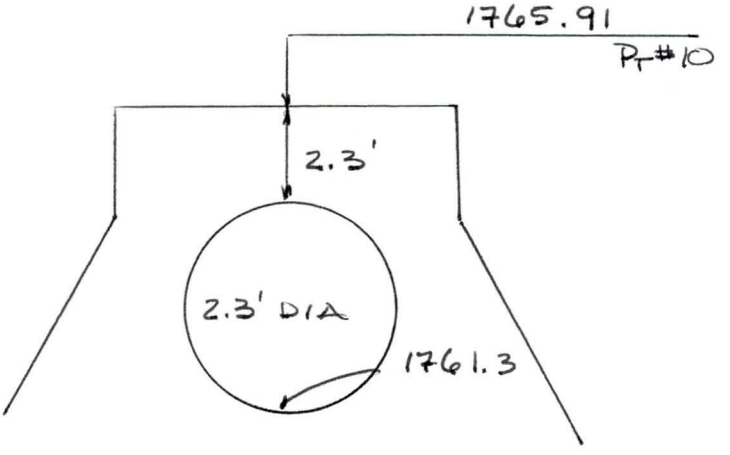

General Condition of Structure_____

156+3 DN
☒ Photo Taken

SOUTH FACE (DOWNSTREAM)

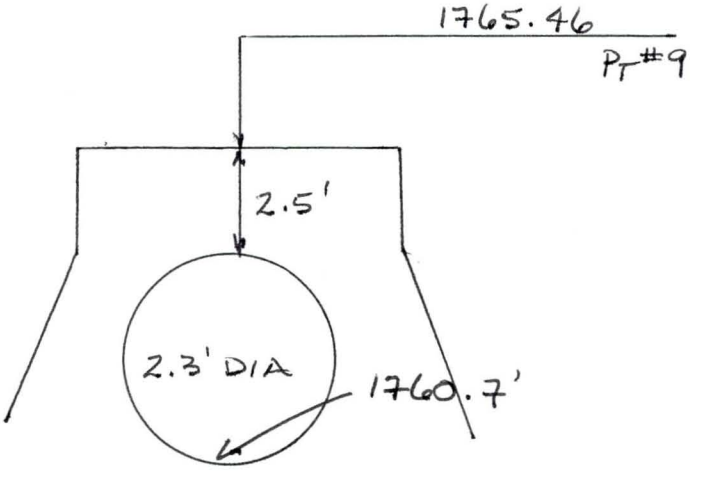

General Condition of Structure_____

⇑ - INDICATES LOCATION OF RTK POINT

156.3
RCP
NS

156.3

FCDMC Contract 2000C035 Stucture Surveys
Wittmann/Tilby ADMP
WORKSHEET
DTM, INC. Project #21092

☐ Sun Valley Parkway
☒ US 60 RR
☐ Highway 74

Type of Structure: WOOD BRIDGE Date: 8.9.01
File Name: 4KE1 Description Name: 156.7
Party Chief: RDS GDAC Control Pt # 4KE1

156+74UP AND 156+74UP NORTH FACE (UPSTREAM)
☒ Photo Taken

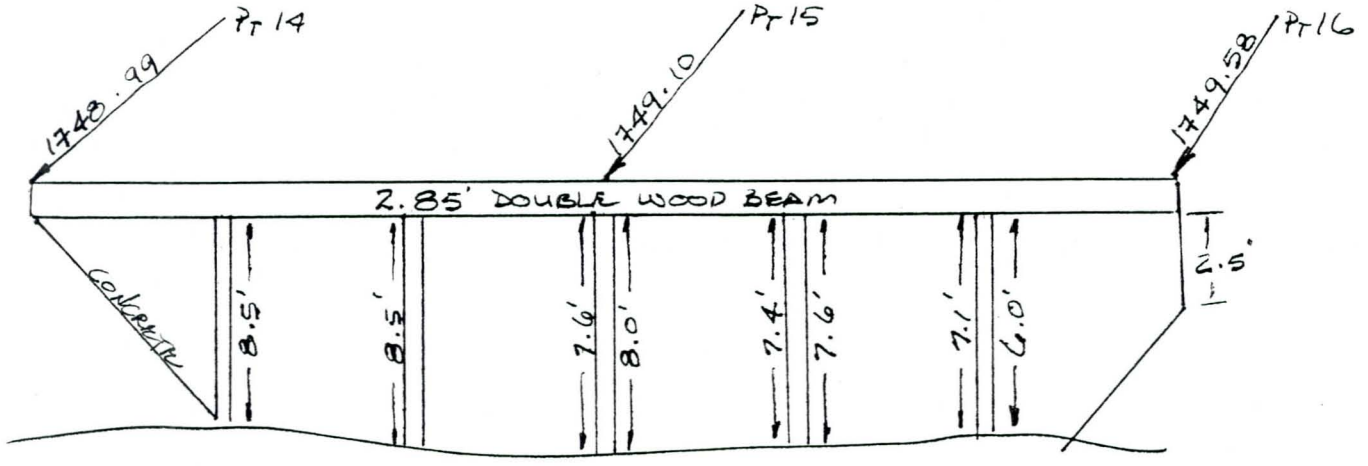

General Condition of Structure OPENINGS/SPANS 13.0' (TYP)
SUPPORTS - 1.0' WOOD PILINGS ON CONCRETE "SLEDS"

156+7DN, 156+7ADN, 156+7BDN, 157+6CDN SOUTH FACE (DOWNSTREAM)
☒ Photo Taken

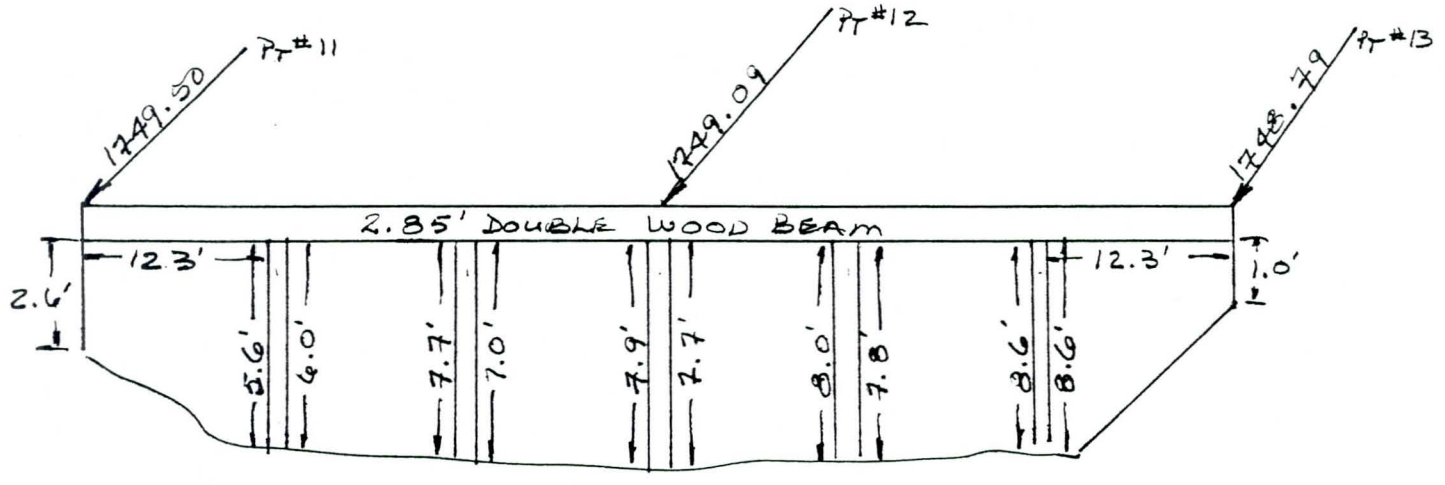

General Condition of Structure OPENINGS/SPANS 13.0' UNLESS OTHERWISE NOTED
SUPPORTS - 1.0' WOOD PILINGS ON CONCRETE "SLEDS"

⇑ - **INDICATES LOCATION OF RTK POINT**

156.7
BRIDGE
NS

156.7
BRIDGE
NS

1567

156.7
BRIDGE
SS

156.7
156.7
BRIDGE
SS

FCDMC Contract 2000C035 Stucture Surveys
Wittmann/Tilby ADMP
WORKSHEET
DTM, INC. Project #21092

☐ Sun Valley Parkway
☒ US 60 RR
☐ Highway 74

Type of Structure: WOOD BRIDGE Date: 8.9.01
File Name: 4KE1 Description Name: 157.0
Party Chief: RDS GDAC Control Pt # 4KE1

157+0UP 157+0AUP NORTH FACE (UPSTREAM)

☒ Photo Taken

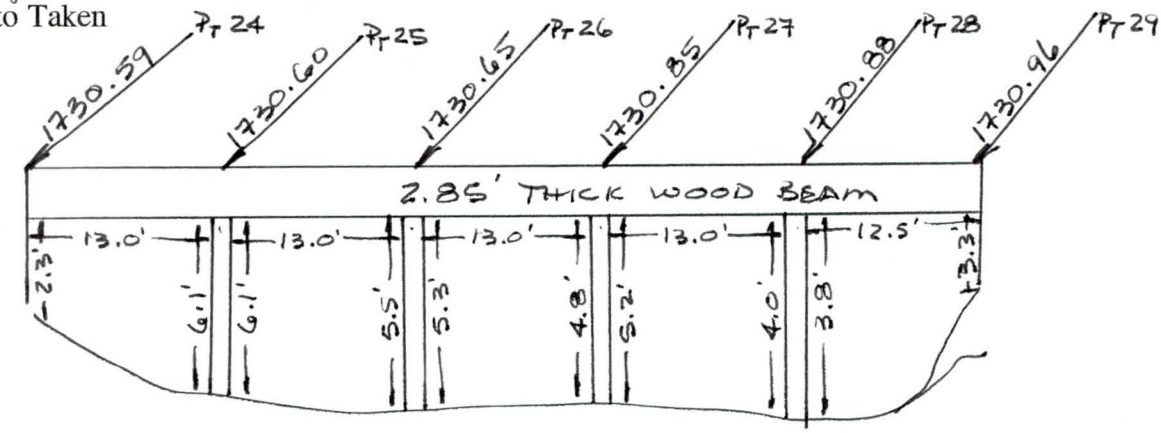

General Condition of Structure SUPPORT MEMBERS 1.0' THICK WOOD TIMBERS ON CONCRETE "SLEDS"

157+0 DN 157+0ADN SOUTH FACE (DOWNSTREAM)

☒ Photo Taken

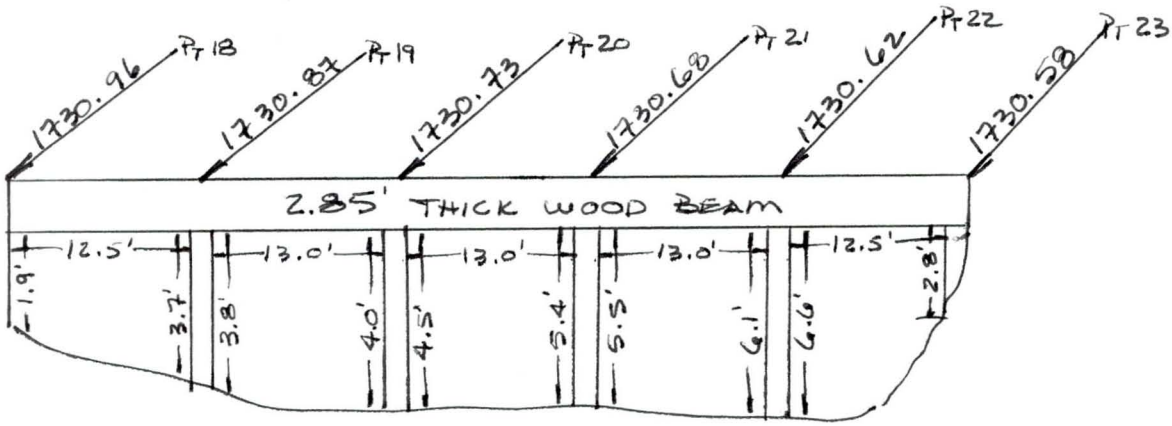

General Condition of Structure SUPPORT MEMBERS 1.0' THICK WOOD PILINGS ON CONCRETE "SLEDS"

⇑ - INDICATES LOCATION OF RTK POINT

157.0
BRIDGE
N S

157.0
BRIDG
N S

157.0
BRIDGE
SS

157.0
BRIDGE
SS

FCDMC Contract 2000C035 Stucture Surveys
Wittmann/Tilby ADMP
WORKSHEET
DTM, INC. Project #21092

☐ Sun Valley Parkway
☒ US 60 RR
☐ Highway 74

Type of Structure: WOOD BOX Date: 8.9.01
File Name: 4KE1 Description Name: 157.1
Party Chief: RDS GDAC Control Pt # 4KE1

NORTH FACE (UPSTREAM)

157+1 UP
☒ Photo Taken

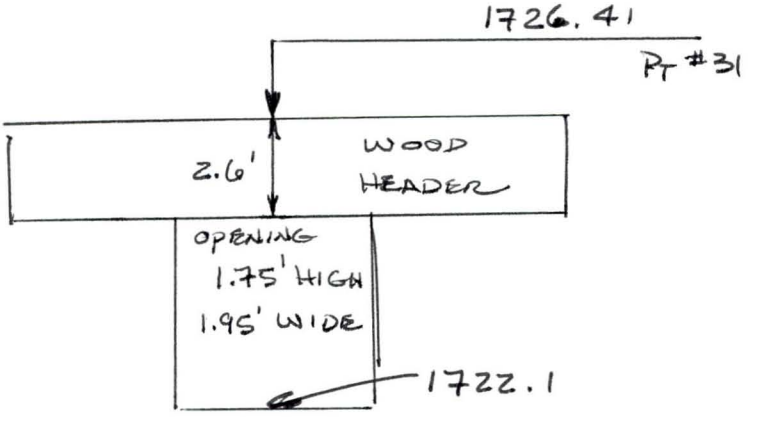

General Condition of Structure_____

SOUTH FACE (DOWNSTREAM)

157+1 DN
☒ Photo Taken

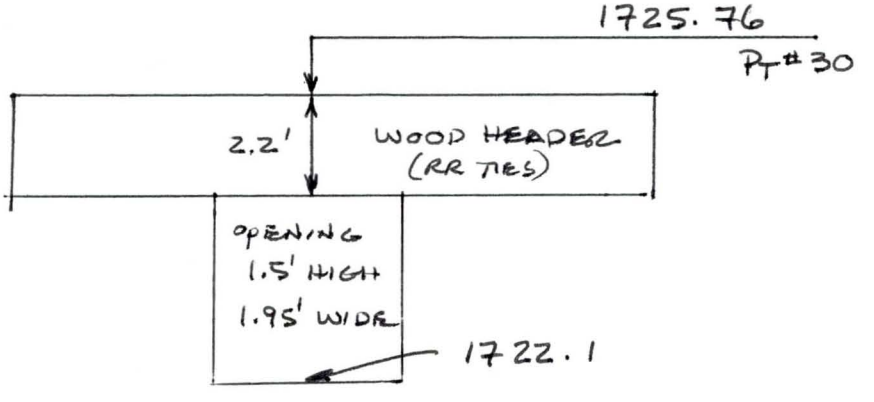

General Condition of Structure_____

↑ - INDICATES LOCATION OF RTK POINT

157.1
W BOX
SS

FCDMC Contract 2000C035 Stucture Surveys
Wittmann/Tilby ADMP
WORKSHEET
DTM, INC. Project #21092

☐ Sun Valley Parkway
☒ US 60 RR
☐ Highway 74

Type of Structure: RCP Date: 8·9·01
File Name: 4KE1 Description Name: 157.28
Party Chief: RDS GDAC Control Pt # 4KE1

157+28 up
☒ Photo Taken

NORTH FACE (UPSTREAM)

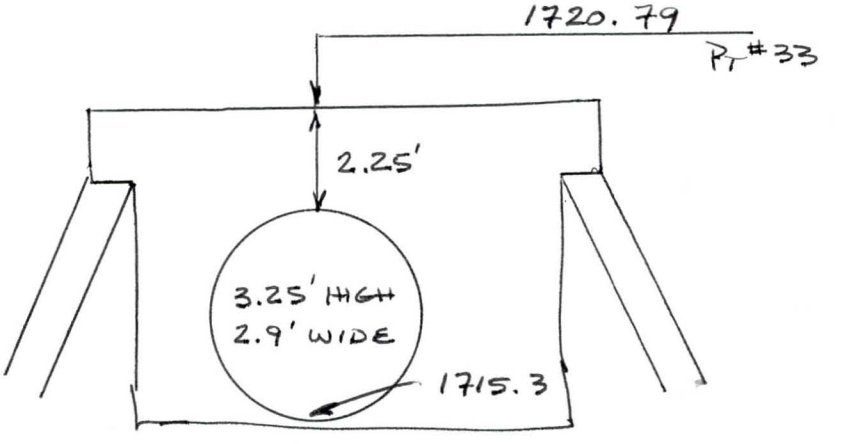

General Condition of Structure

157+28 DN
☒ Photo Taken

SOUTH FACE (DOWNSTREAM)

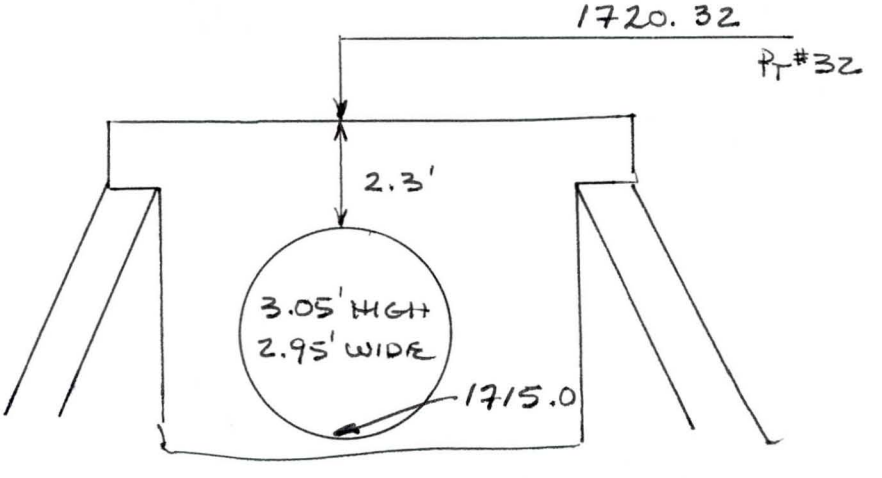

General Condition of Structure

↑ - INDICATES LOCATION OF RTK POINT

157.28
RCP
NS

157.28
RCP
SS

FCDMC Contract 2000C035 Stucture Surveys
Wittmann/Tilby ADMP
WORKSHEET
DTM, INC. Project #21092

☐ Sun Valley Parkway
☒ US 60 RR
☐ Highway 74

Type of Structure: RCP Date: 8.9.01
File Name: 4KE1 Description Name: 157.4
Party Chief: RDS GDAC Control Pt # 4KE1

157+4up
☒ Photo Taken

NORTH FACE (UPSTREAM)

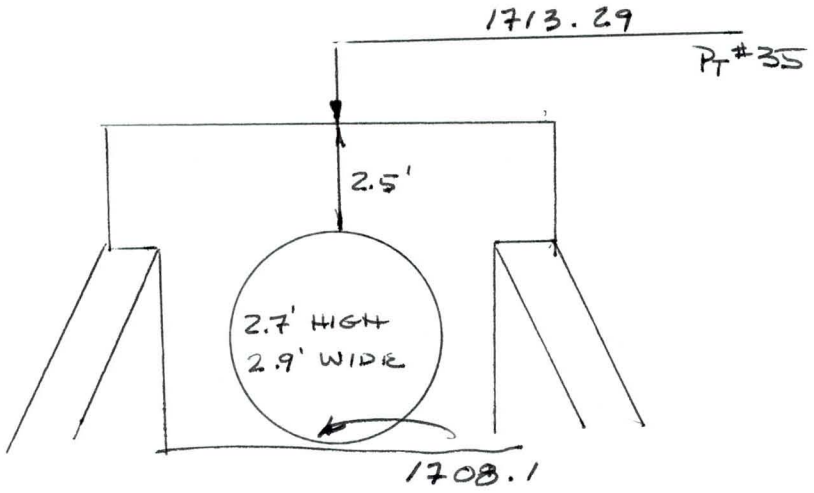

General Condition of Structure

157+4 DN
☒ Photo Taken

SOUTH FACE (DOWNSTREAM)

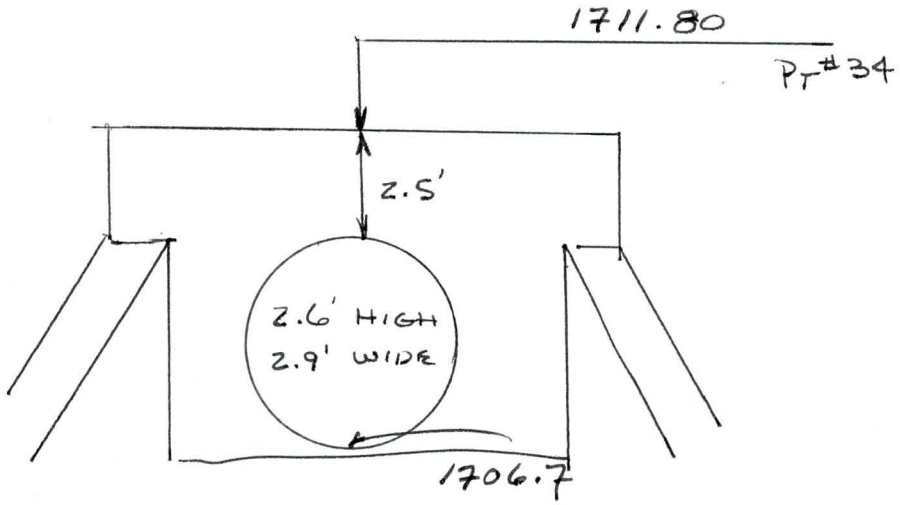

General Condition of Structure

⇑ - INDICATES LOCATION OF RTK POINT

157.4
RCP
NS
1824

157.4
RCP
SS

FCDMC Contract 2000C035 Stucture Surveys
Wittmann/Tilby ADMP
WORKSHEET
DTM, INC. Project #21092

☐ Sun Valley Parkway
☒ US 60 RR
☐ Highway 74

Type of Structure: RCP Date: 8·9·01
File Name: 4KE1 Description Name: 157.8
Party Chief: RDS GDAC Control Pt # 4KE1

NORTH FACE (UPSTREAM)

☒ Photo Taken 157+84 up

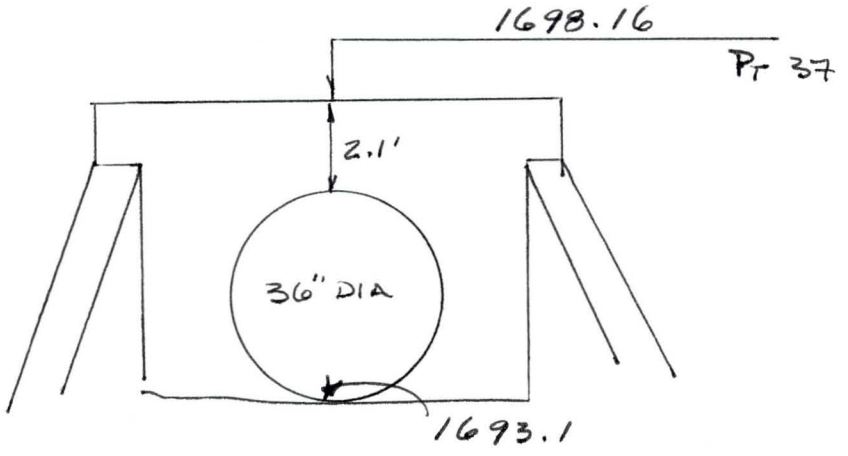

General Condition of Structure

SOUTH FACE (DOWNSTREAM)

☒ Photo Taken 157+8 DN

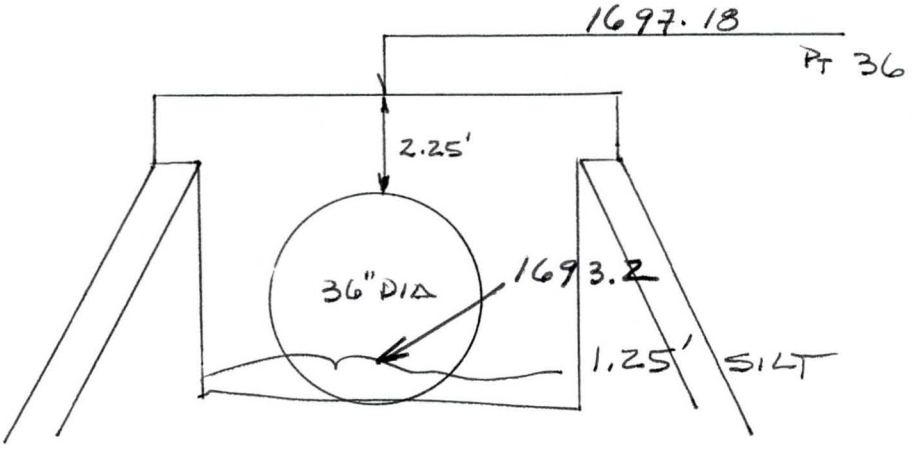

General Condition of Structure

⇑ - INDICATES LOCATION OF RTK POINT

157.8
RCP
NS

157.8
RCP
SS
157.8

FCDMC Contract 2000C035 Stucture Surveys
Wittmann/Tilby ADMP
WORKSHEET
DTM, INC. Project #21092

☐ Sun Valley Parkway
☒ US 60 RR
☐ Highway 74

Type of Structure: STEEL BRIDGE Date: 8.9.01
File Name: 4KE1 Description Name: 158.1
Party Chief: RDS GDAC Control Pt # 4KE1

158+14P 158+1A4P NORTH FACE (UPSTREAM)

☒ Photo Taken

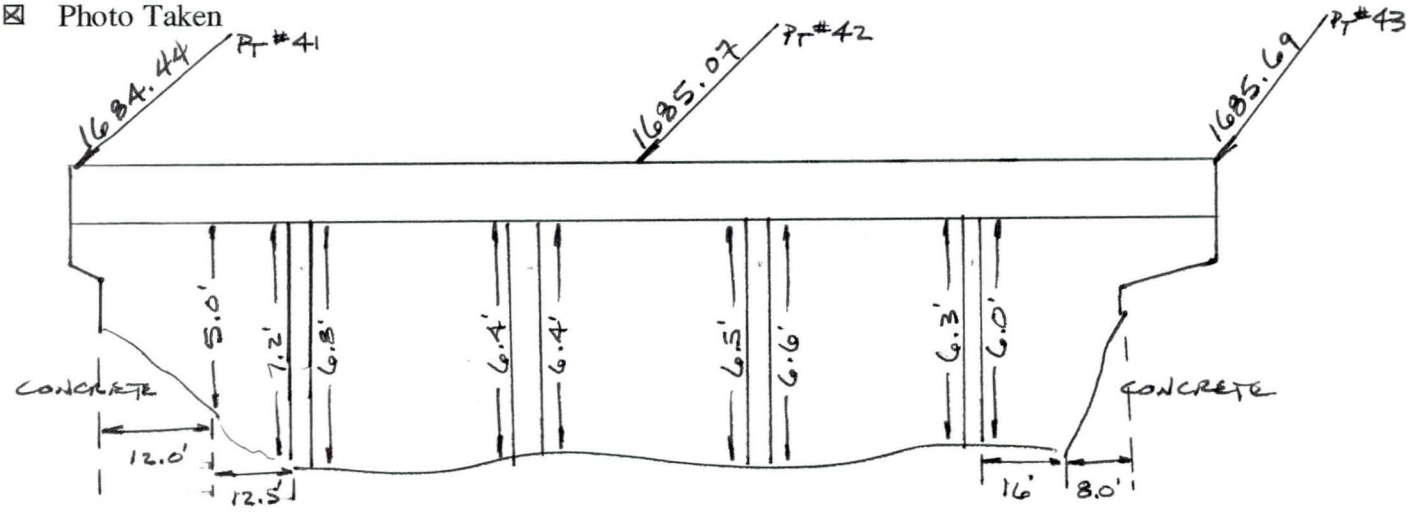

General Condition of Structure SUPPORTS 1.15' THICK STEEL I-BEAMS
OPENINGS/SPANS = 28.0' (TYP)

158+1BP 158+1ADN SOUTH FACE (DOWNSTREAM)
158+1BDN 158+1CDN

☒ Photo Taken

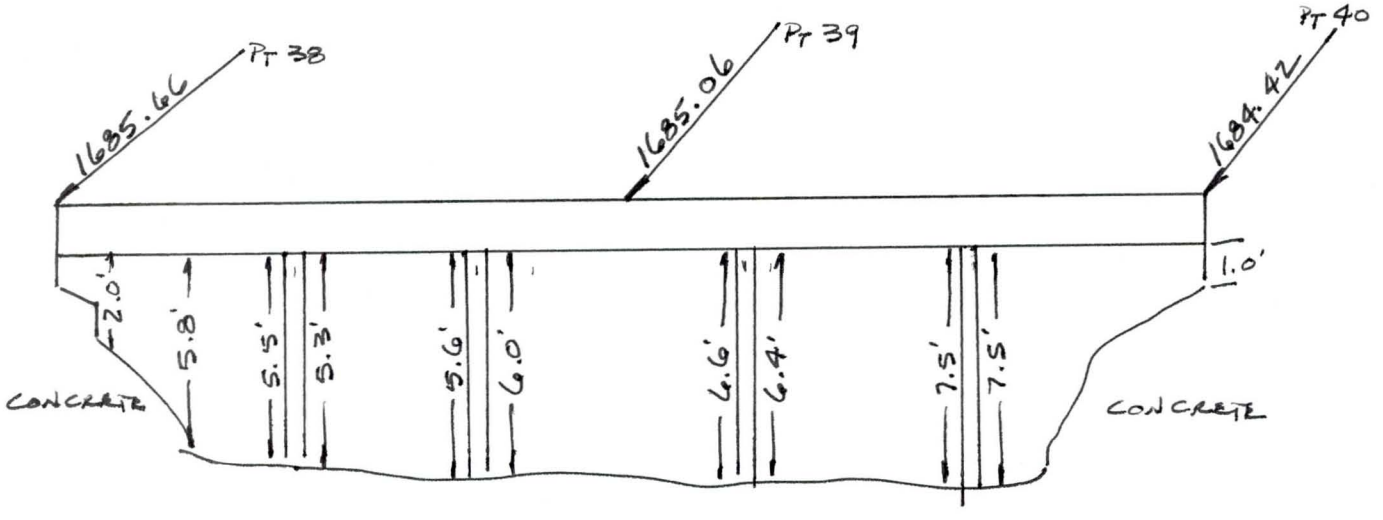

General Condition of Structure SUPPORTS 1.15' THICK STEEL I-BEAMS
OPENINGS/SPANS = 28.0' (TYP)

↑ - INDICATES LOCATION OF RTK POINT

Mark 05 Dewit
1581
SS

1581
S. BRIDGE
SS

1581
S.BRIDGE
SS

158.1
C Bridge
SS

1581
S.BRIDGE
N S

1581
S.BRIDGE
NS

FCDMC Contract 2000C035 Stucture Surveys
Wittmann/Tilby ADMP
WORKSHEET
DTM, INC. Project #21092

☐ Sun Valley Parkway
☒ US 60 RR
☐ Highway 74

Type of Structure: WOOD BRIDGE Date: 8.14.01
File Name: 4KE1 Description Name: 158.8
Party Chief: RDS GDAC Control Pt # 4KE1

158+84p 158+8A4p 158+8B4p NORTH FACE (UPSTREAM)

☒ Photo Taken

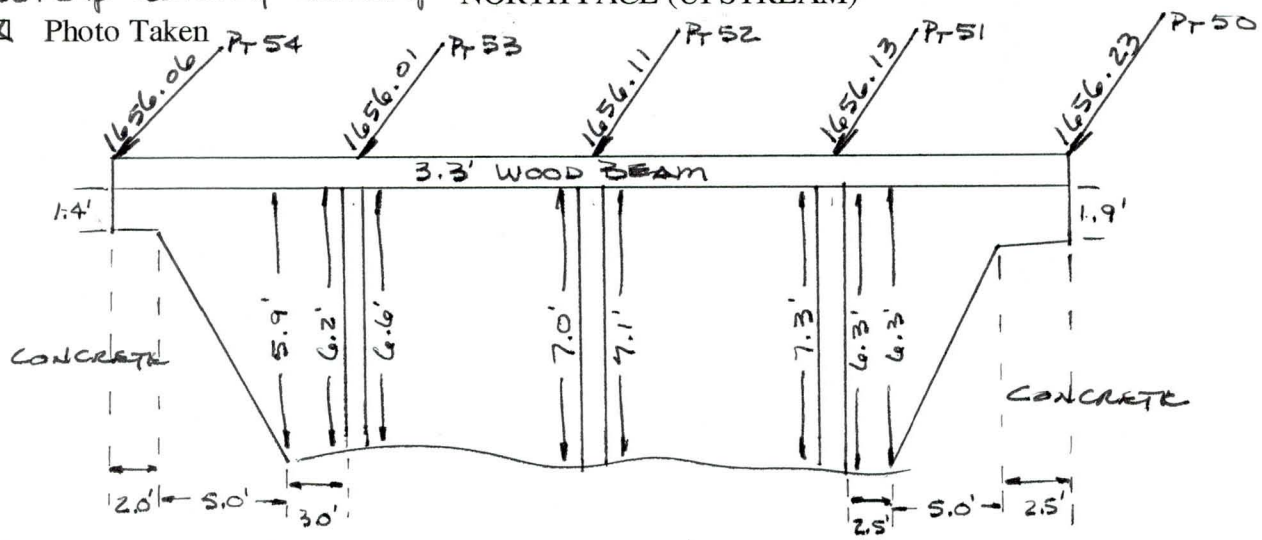

General Condition of Structure SUPPORTS – 1.0' THICK WOOD PILINGS
OPENINGS 13.0' (TYP)

158+8DN 158+8ADN 158+8BDN 158+8CDN 158+8DDN SOUTH FACE (DOWNSTREAM)

☒ Photo Taken

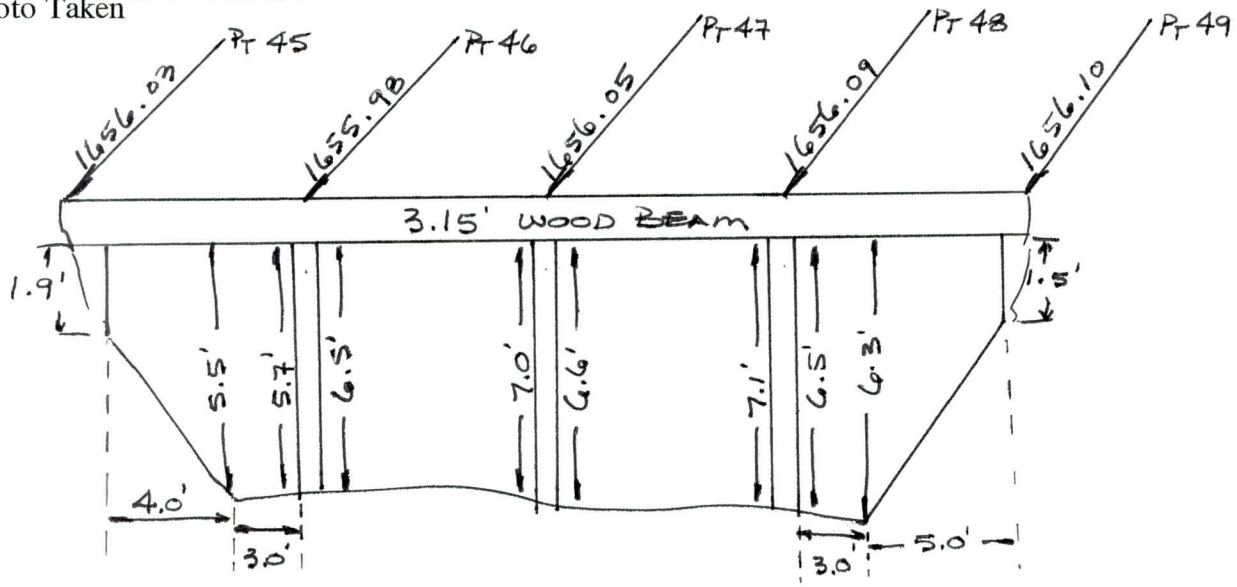

General Condition of Structure SUPPORTS 1.0' THICK WOOD PILINGS
OPENINGS 13.0' (TYP)

⇑ - INDICATES LOCATION OF RTK POINT

158.8
W. BRIDGE
N S

158.8
W. BRIDGE
N S

158.8
158.8
Wbridge
NS

158.8
W. BRIDGE
S S

1588
SS

158.8
158.8
W. BRIDGE

158.8
158.8
W Bridge
55

158.8
W-BRIDGE
SS

FCDMC Contract 2000C035 Stucture Surveys
Wittmann/Tilby ADMP
WORKSHEET
DTM, INC. Project #21092

☐ Sun Valley Parkway
☒ US 60 RR
☐ Highway 74

Type of Structure: DOUBLE RCP Date: 8.14.01
File Name: 4KE1 Description Name: 159.2
Party Chief: RDS GDAC Control Pt # 4KE1

159+2 UP
☒ Photo Taken

NORTH FACE (UPSTREAM)

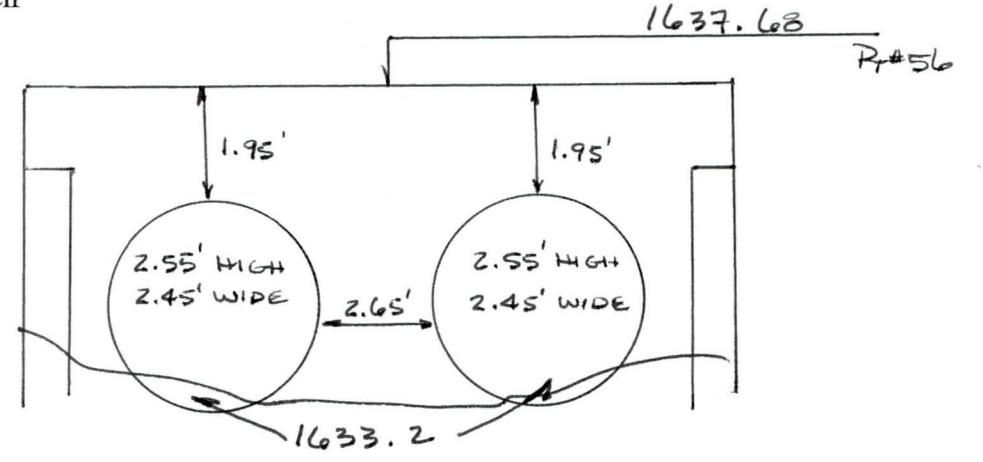

General Condition of Structure SOME BLOCKAGE FROM RR RUBBLE

159+2 DN
☒ Photo Taken

SOUTH FACE (DOWNSTREAM)

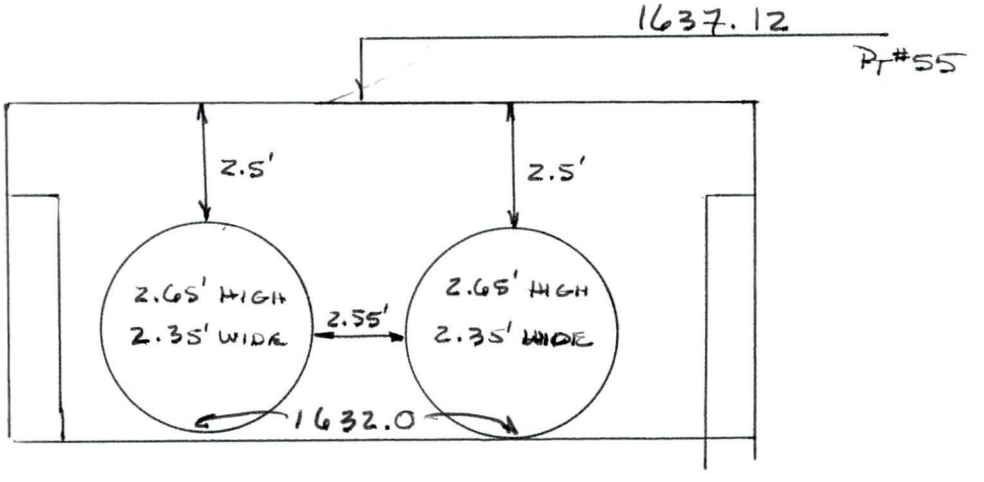

General Condition of Structure SOME BLOCKAGE FROM RR RUBBLE

↑ - INDICATES LOCATION OF RTK POINT

159.2
2×RCP
N S
1926

159.2
2-RCP
SS
159.2

FCDMC Contract 2000C035 Stucture Surveys
Wittmann/Tilby ADMP
WORKSHEET
DTM, INC. Project #21092

☐ Sun Valley Parkway
☒ US 60 RR
☐ Highway 74

Type of Structure: CONCRETE BRIDGE Date: 8.14.01
File Name: 4KE1 Description Name: 160.9
Party Chief: KDS GDAC Control Pt # 4KE1

160+94P -- 160+9A4P -- 160+9B4P

NORTH FACE (UPSTREAM)

☒ Photo Taken

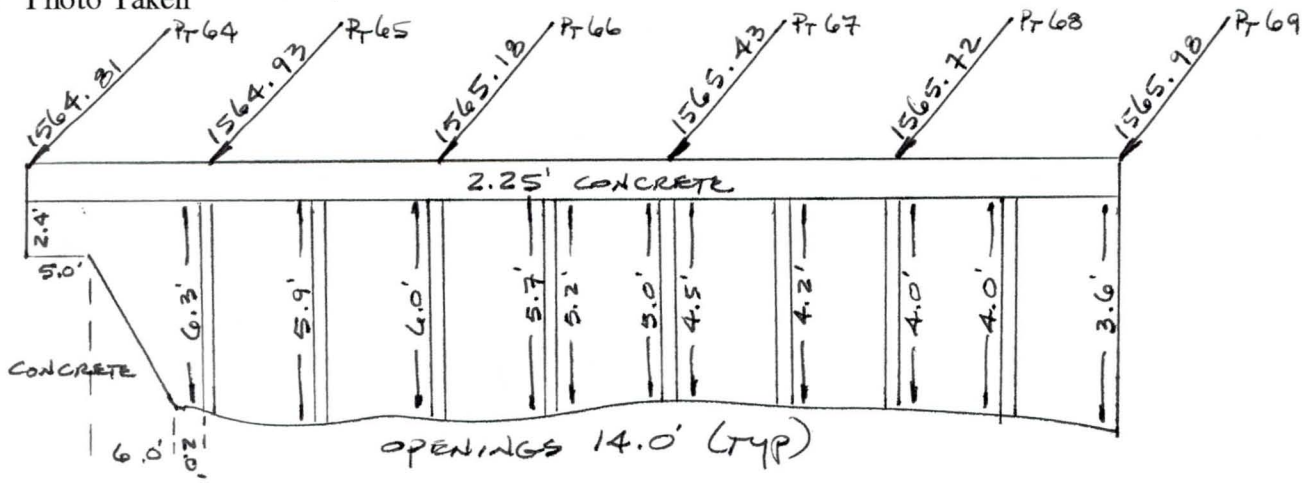

General Condition of Structure SUPPORT MEMBERS 1.0' DIA STEEL PILINGS

160+9DN -- 160+9ADN -- 160+9BDN -- 160+9CDN

SOUTH FACE (DOWNSTREAM)

☒ Photo Taken

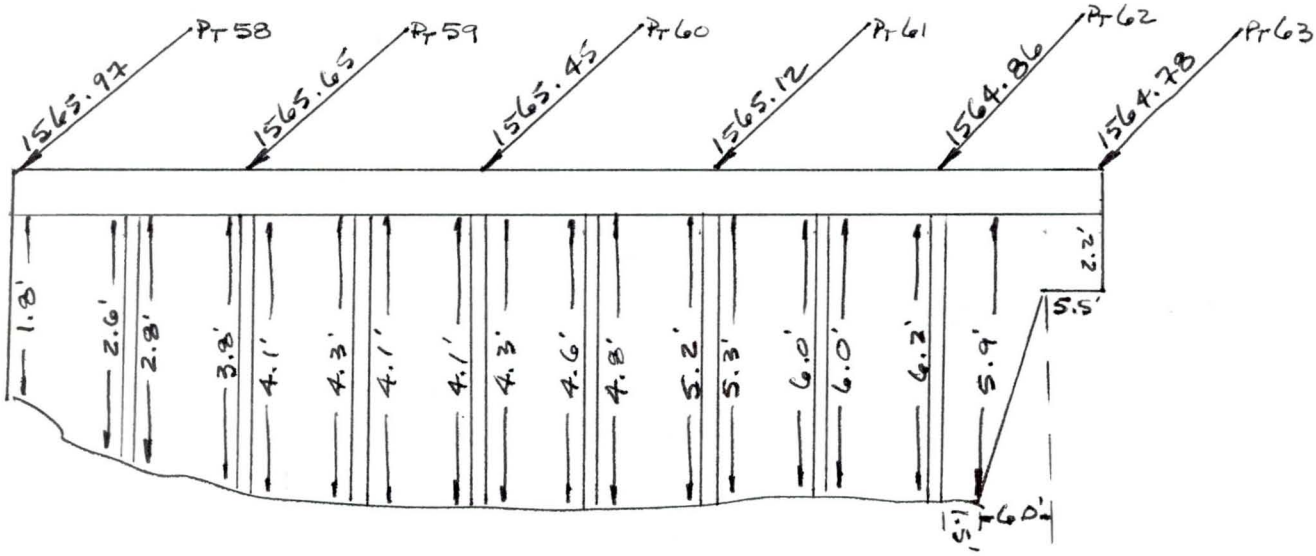

General Condition of Structure SUPPORT MEMBERS 1.0' DIA STEEL PILINGS

⇑ - INDICATES LOCATION OF RTK POINT

160.9
C. BRIDGE
NS

160.9
C.BRIDGE
NS

160.9
C.BRIDGE
NS

1609
C BRIDGE
SS

160.9
CBridge
SS

160.9
C. BRIDGE
SS

FCDMC Contract 2000C035 Stucture Surveys
Wittmann/Tilby ADMP
WORKSHEET
DTM, INC. Project #21092

☐ Sun Valley Parkway
☒ US 60 RR
☐ Highway 74

Type of Structure: DOUBLE RCP Date: 8.14.01
File Name: 4KE1 Description Name: 161.3
Party Chief: RDS GDAC Control Pt # 4KE1

161+34P
☒ Photo Taken

NORTH FACE (UPSTREAM)

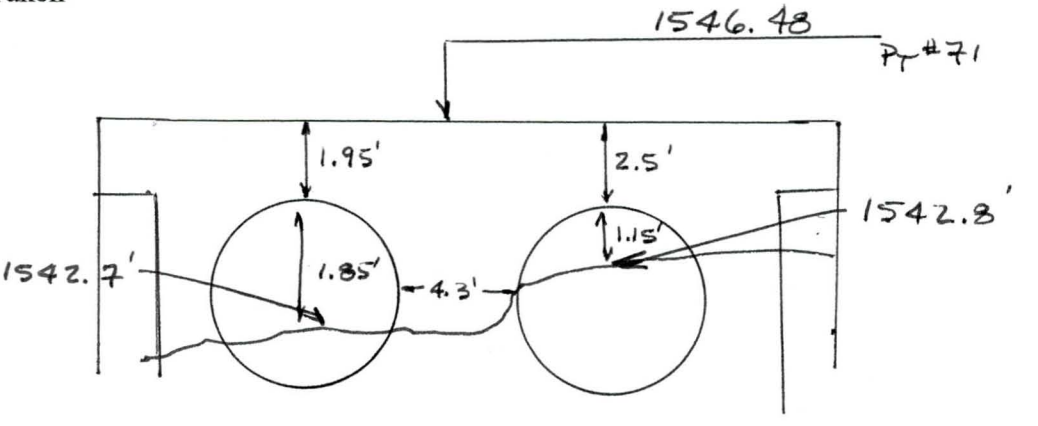

General Condition of Structure ± 75% BLOCKED. OPENING DIAMETER = ± 3.65'

161+3DN
☒ Photo Taken

SOUTH FACE (DOWNSTREAM)

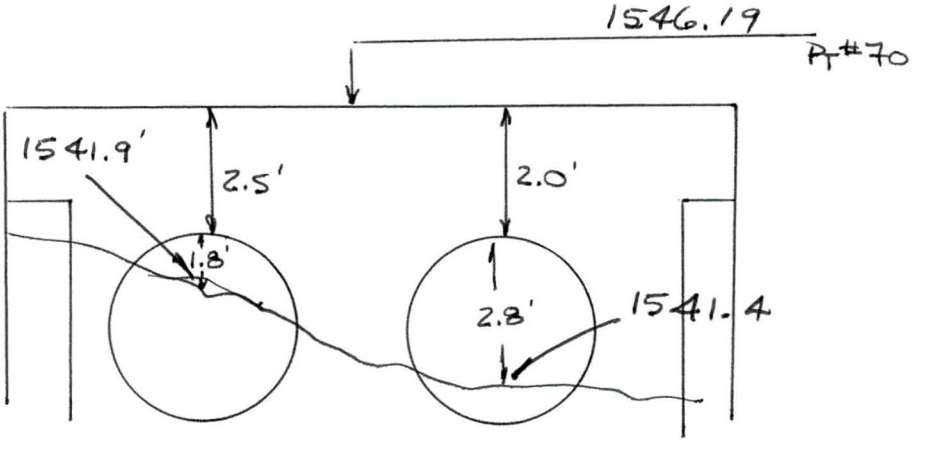

General Condition of Structure ± 50% BLOCKED OPENING DIAMETERS = ± 3.9'

⇑ - INDICATES LOCATION OF RTK POINT

761.3
2×RCP
NS

161.3
2×RCP
SS
161.3

FCDMC Contract 2000C035 Stucture Surveys
Wittmann/Tilby ADMP
WORKSHEET
DTM, INC. Project #21092

☐ Sun Valley Parkway
☒ US 60 RR
☐ Highway 74

Type of Structure: WOOD BRIDGE Date: 8.14.01
File Name: 4KE1 Description Name: 161.4
Party Chief: RDS GDAC Control Pt # 4KE1

161+4UP
☒ Photo Taken

NORTH FACE (UPSTREAM)

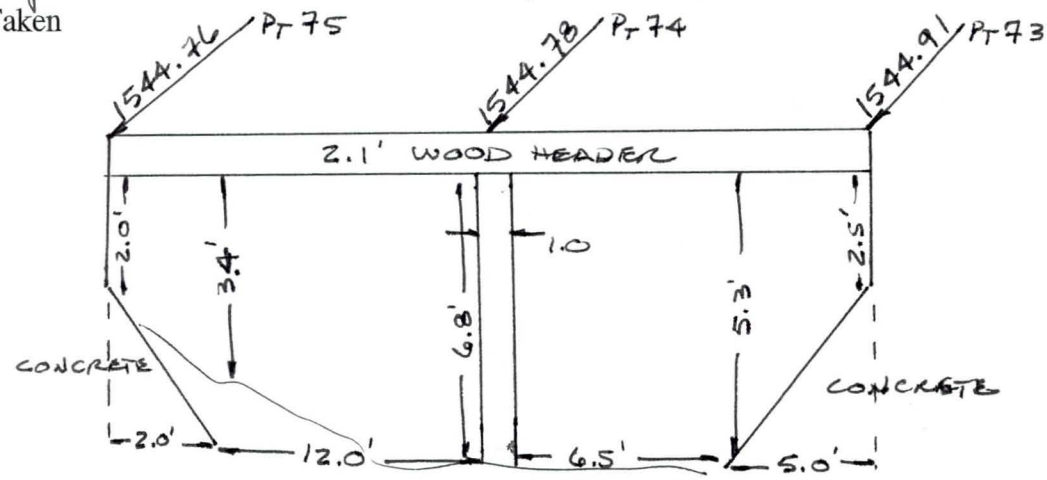

General Condition of Structure SUPPORTS - 1.0' THICK WOOD PILINGS

161+4DN
☒ Photo Taken

SOUTH FACE (DOWNSTREAM)

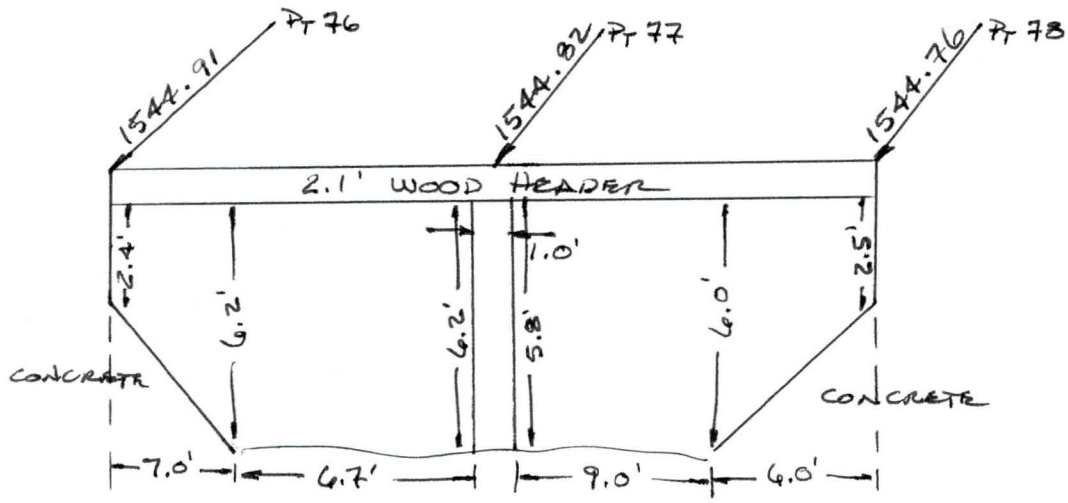

General Condition of Structure SUPPORTS - 1.0' THICK WOOD PILINGS

⇑ - INDICATES LOCATION OF RTK POINT

161.4
161.4
MBRIDGE
NS

161.4
N BRIDGE
S S

FCDMC Contract 2000C035 Stucture Surveys
Wittmann/Tilby ADMP
WORKSHEET
DTM, INC. Project #21092

☐ Sun Valley Parkway
☒ US 60 RR
☐ Highway 74

Type of Structure: RCP Date: 8.14.01
File Name: 4KE1 Description Name: 161.6
Party Chief: KDS GDAC Control Pt # 4KE1

NORTH FACE (UPSTREAM)

161+6 up
☒ Photo Taken

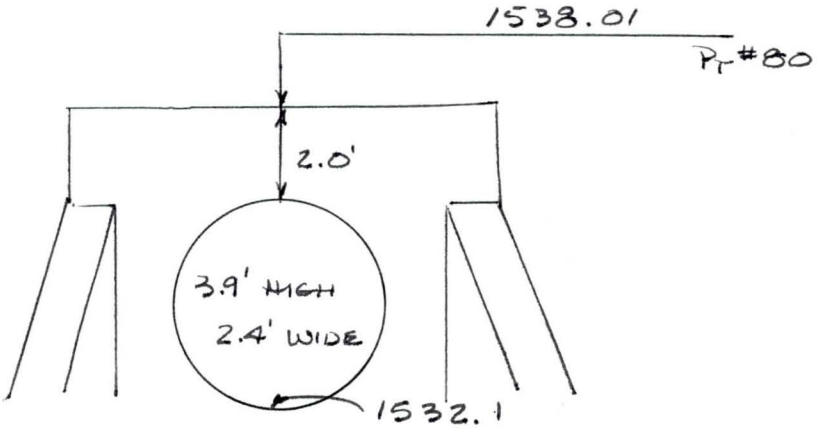

General Condition of Structure_____

SOUTH FACE (DOWNSTREAM)

161+6 DN
☒ Photo Taken

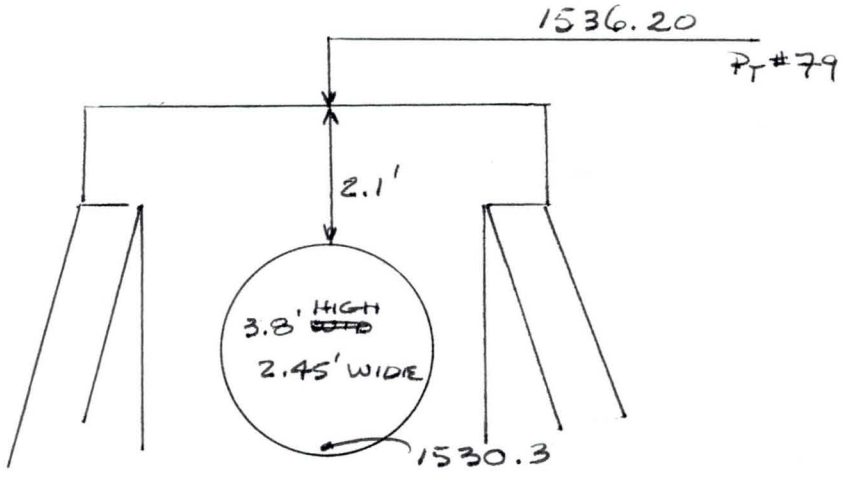

General Condition of Structure_____

⇑ - INDICATES LOCATION OF RTK POINT

161.6
RCP
N S
1830

161.6
RCP
SS

FCDMC Contract 2000C035 Stucture Surveys
Wittmann/Tilby ADMP
WORKSHEET
DTM, INC. Project #21092

☐ Sun Valley Parkway
☒ US 60 RR
☐ Highway 74

Type of Structure: CONCRETE BRIDGE Date: 8.14.01
File Name: 4KE1 Description Name: 161.8
Party Chief: RDS GDAC Control Pt # 4KE1

NORTH FACE (UPSTREAM)

161+84 UP
☒ Photo Taken

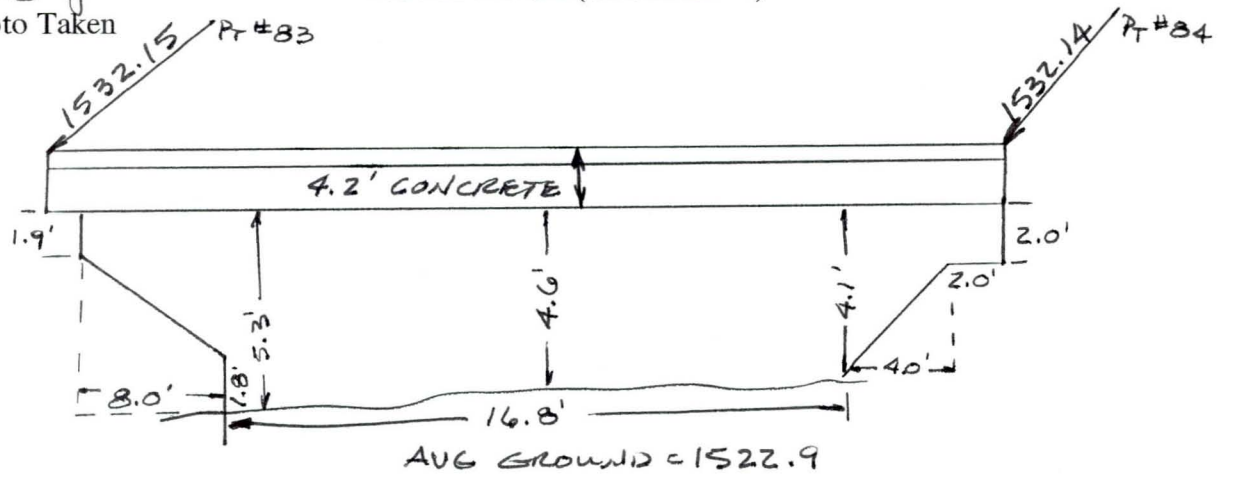

General Condition of Structure

SOUTH FACE (DOWNSTREAM)

161+8 DN
☒ Photo Taken

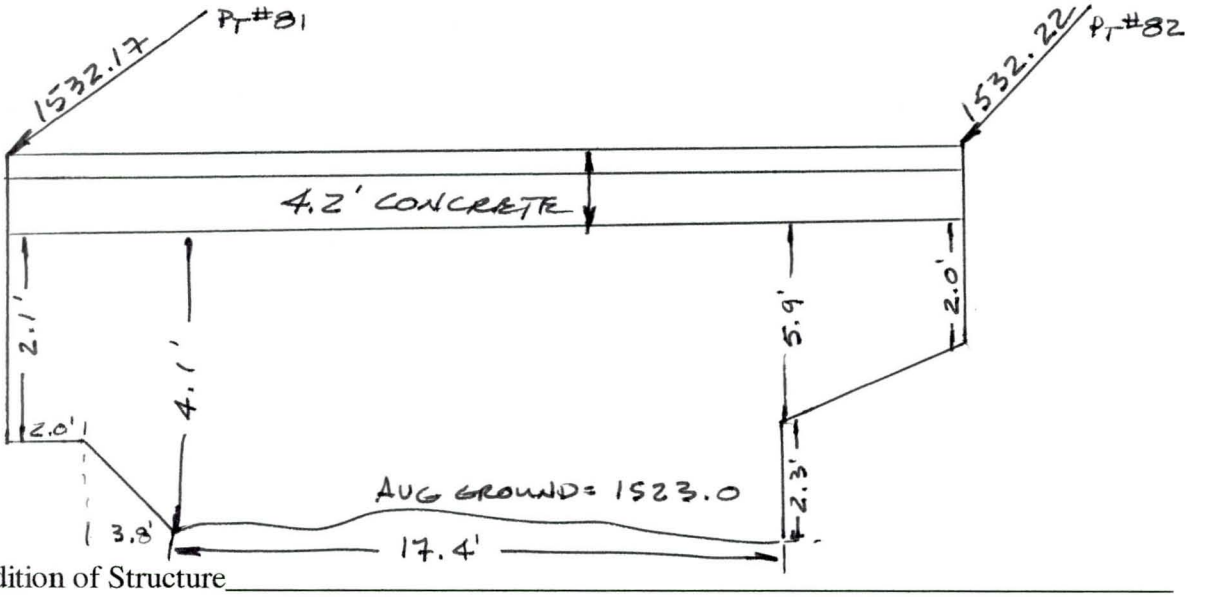

General Condition of Structure

↑ - INDICATES LOCATION OF RTK POINT

161.8
C. BRIDGE
N S

161.8
161.8
C.BRIDGE
S S

FCDMC Contract 2000C035 Stucture Surveys
Wittmann/Tilby ADMP
WORKSHEET
DTM, INC. Project #21092

☐ Sun Valley Parkway
☒ US 60 RR
☐ Highway 74

Type of Structure: CONCRETE / STEEL BRIDGE Date: 8.14.01
File Name: 4KE1 Description Name: 162.7
Party Chief: RDS GDAC Control Pt # 4KE1

162+74P & 162+74UP NORTH FACE (UPSTREAM)
☒ Photo Taken

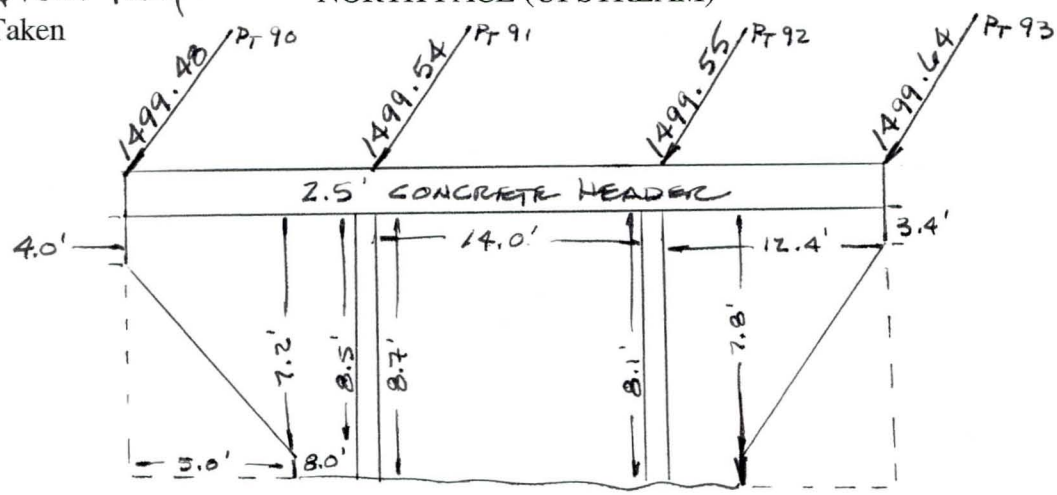

General Condition of Structure SUPPORT 1.0' DIAM COLUMNS - THREE PER SECTION

162+7DN SOUTH FACE (DOWNSTREAM)
☒ Photo Taken

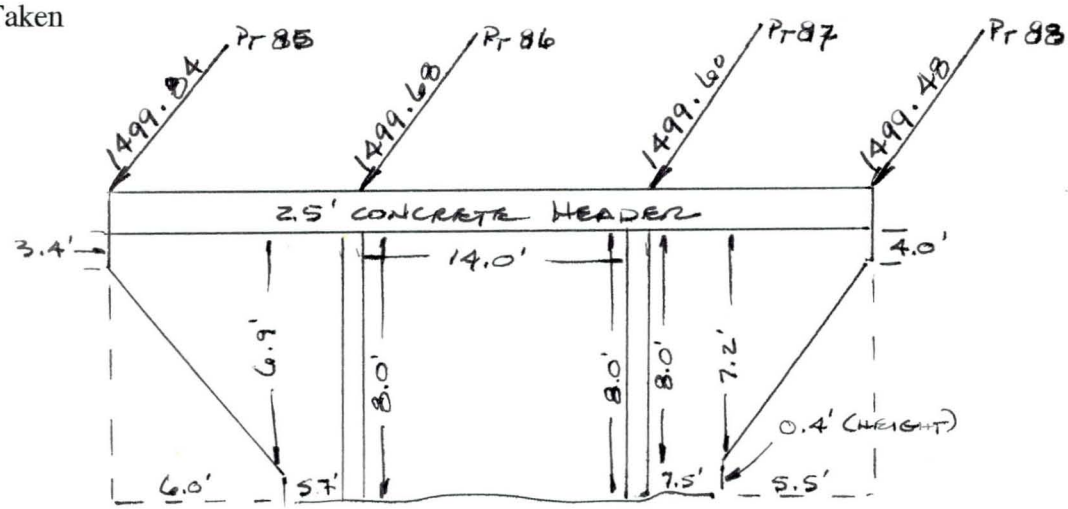

General Condition of Structure

⇑ - INDICATES LOCATION OF RTK POINT

162.7
C BRIDGE
N S

62.7
BRIDGE
N S

162.7
BRIDGE
SS

FCDMC Contract 2000C035 Stucture Surveys
Wittmann/Tilby ADMP
WORKSHEET
DTM, INC. Project #21092

☐ Sun Valley Parkway
☒ US 60 RR
☐ Highway 74

Type of Structure: STEEL / CONCRETE BRIDGE Date: 8.14.01
File Name: 4KE1 Description Name: 163.2
Party Chief: RDS GDAC Control Pt # 4KE1

163+2 UP
☒ Photo Taken

NORTH FACE (UPSTREAM)

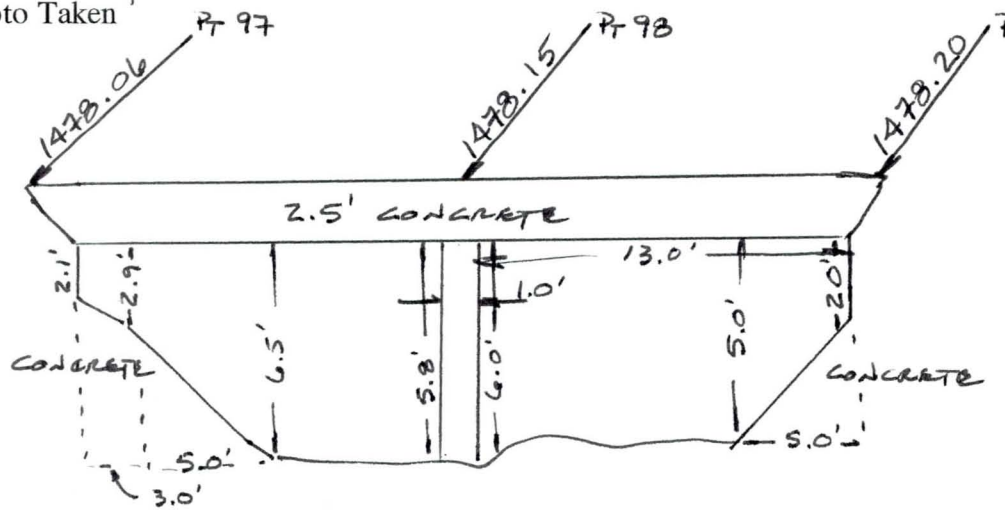

General Condition of Structure

163+2 DN
☒ Photo Taken

SOUTH FACE (DOWNSTREAM)

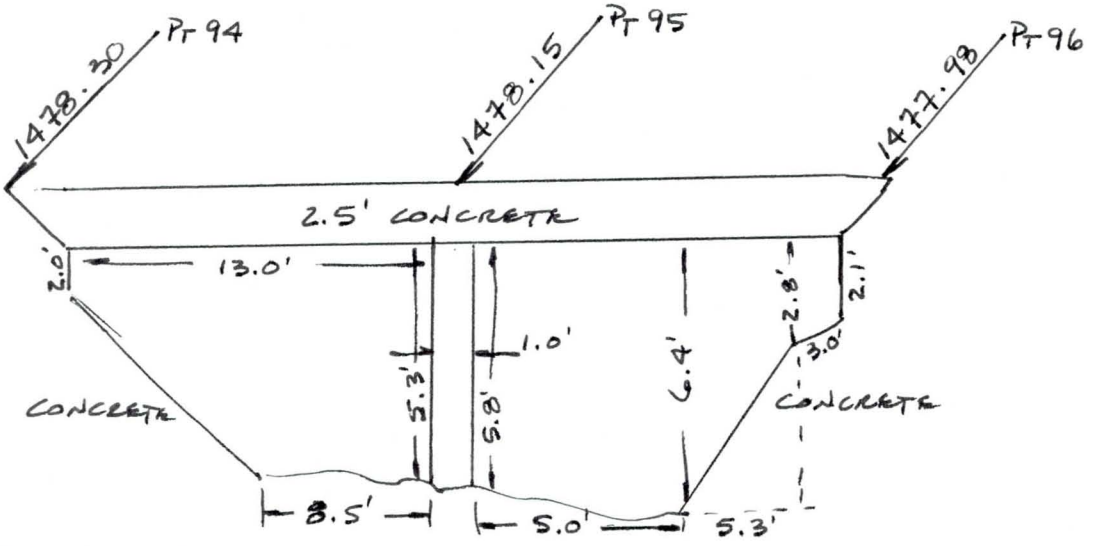

General Condition of Structure STEEL I-BEAM SUPPORT

⇑ - INDICATES LOCATION OF RTK POINT

163.2
BRIDGE
N S

163.2
BRIDGE
S.S

FCDMC Contract 2000C035 Stucture Surveys
Wittmann/Tilby ADMP
WORKSHEET
DTM, INC. Project #21092

☐ Sun Valley Parkway
☒ US 60 RR
☐ Highway 74

Type of Structure: DOUBLE RCP Date: 8.14.01
File Name: 4KE1 Description Name: 163.5
Party Chief: RDS GDAC Control Pt # 4KE1

NORTH FACE (UPSTREAM)

163+5 UP
☒ Photo Taken

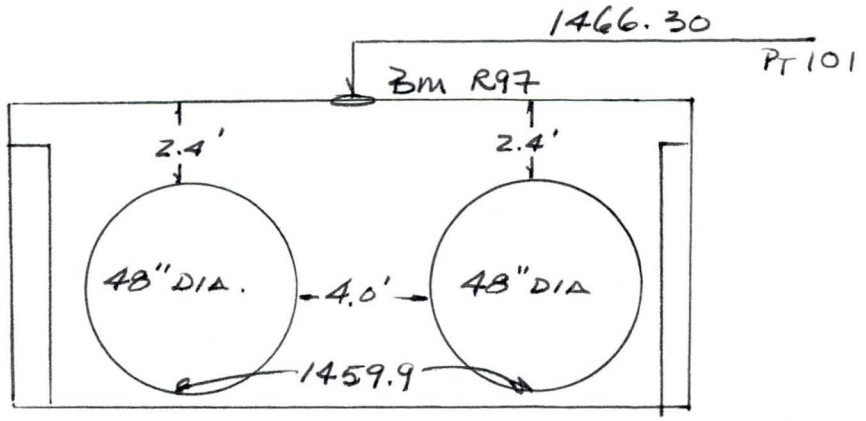

General Condition of Structure GOOD

SOUTH FACE (DOWNSTREAM)

163+5 DN
☒ Photo Taken

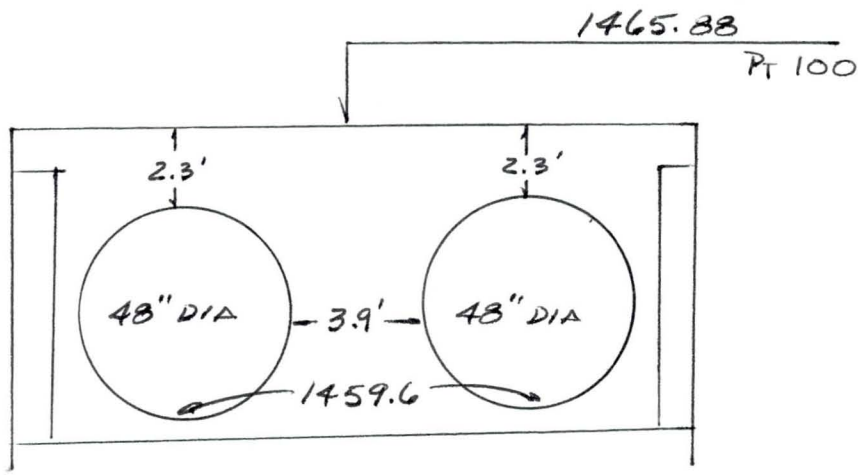

General Condition of Structure GOOD

⇑ - INDICATES LOCATION OF RTK POINT

163.5
2-RCP
N S
1927

163.5
2-RCP
SS
163.5

FCDMC Contract 2000C035 Stucture Surveys
Wittmann/Tilby ADMP
WORKSHEET
DTM, INC. Project #21092

☐ Sun Valley Parkway
☒ US 60 RR
☐ Highway 74

Type of Structure: CMP Date: 8.14.01
File Name: 4KE1 Description Name: 163.86
Party Chief: RDS GDAC Control Pt # 4KE1

163+86 UP
☒ Photo Taken

NORTH FACE (UPSTREAM)

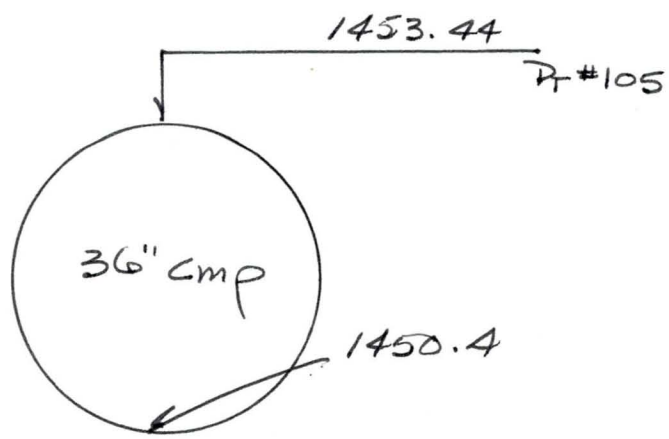

General Condition of Structure GOOD

163+86 DN
☒ Photo Taken

SOUTH FACE (DOWNSTREAM)

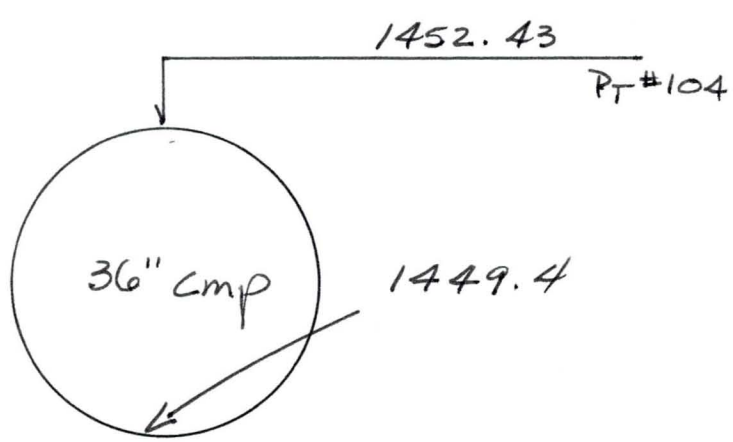

General Condition of Structure GOOD

⇑ - INDICATES LOCATION OF RTK POINT

16.3.86
CMP
N S

163.86
CMP
SS

FCDMC Contract 2000C035 Stucture Surveys
Wittmann/Tilby ADMP
WORKSHEET
DTM, INC. Project #21092

☐ Sun Valley Parkway
☒ US 60 RR
☐ Highway 74

Type of Structure: WOOD BRIDGE Date: 8.14.01
File Name: 4KE1 Description Name: 164.5
Party Chief: RDS GDAC Control Pt # 4KE1

164+5 UP NORTH FACE (UPSTREAM)
☒ Photo Taken

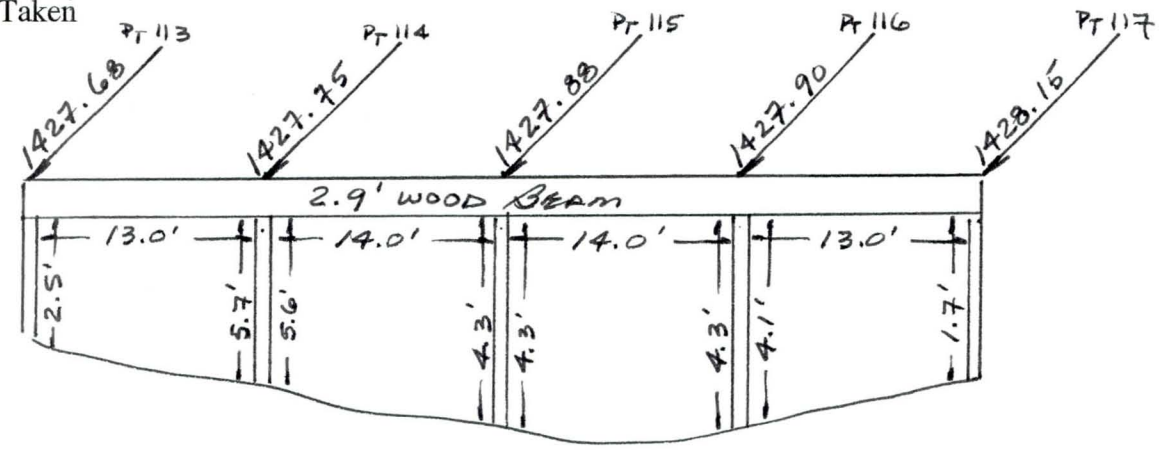

General Condition of Structure SUPPORTS 1.0' WOOD TIMBERS (TYP)

164+5DN AND 164+5ADN SOUTH FACE (DOWNSTREAM)
☐ Photo Taken

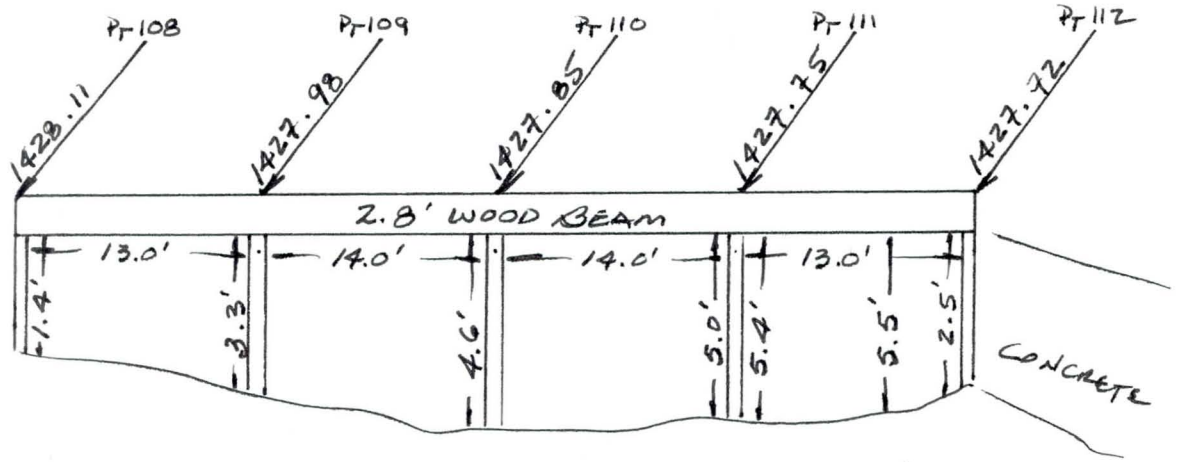

General Condition of Structure SUPPORTS - 1.0' WOOD TIMBERS (TYP)

⇑ - INDICATES LOCATION OF RTK POINT

1645
BRIDGE
N S

164.5
W. BRIDGE
SS

164.5
SS

FCDMC Contract 2000C035 Stucture Surveys
Wittmann/Tilby ADMP
WORKSHEET
DTM, INC. Project #21092

☐ Sun Valley Parkway
☒ US 60 RR
☐ Highway 74

Type of Structure: DOUBLE RCP Date: 8.14.01
File Name: 4IC1 Description Name: 164.9
Party Chief: RDS GDAC Control Pt # 4IC1

164+9 up
☒ Photo Taken

NORTH FACE (UPSTREAM)

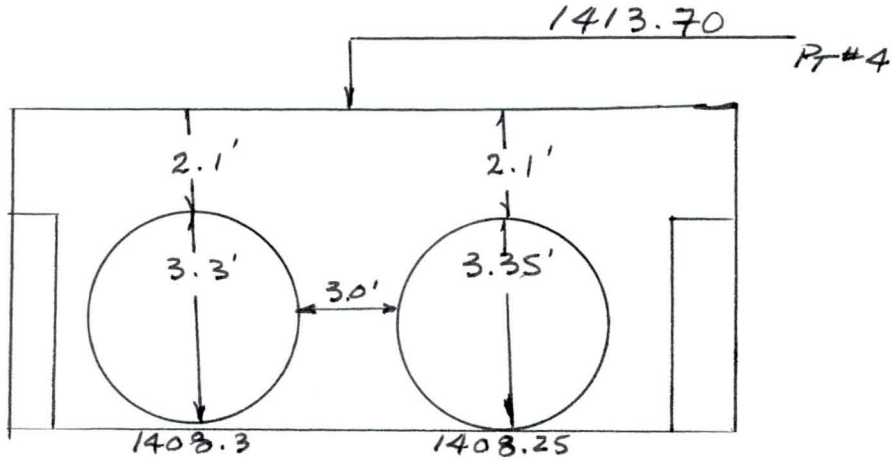

General Condition of Structure EACH TUBE 3.0' WIDE

164+9 DN
☒ Photo Taken

SOUTH FACE (DOWNSTREAM)

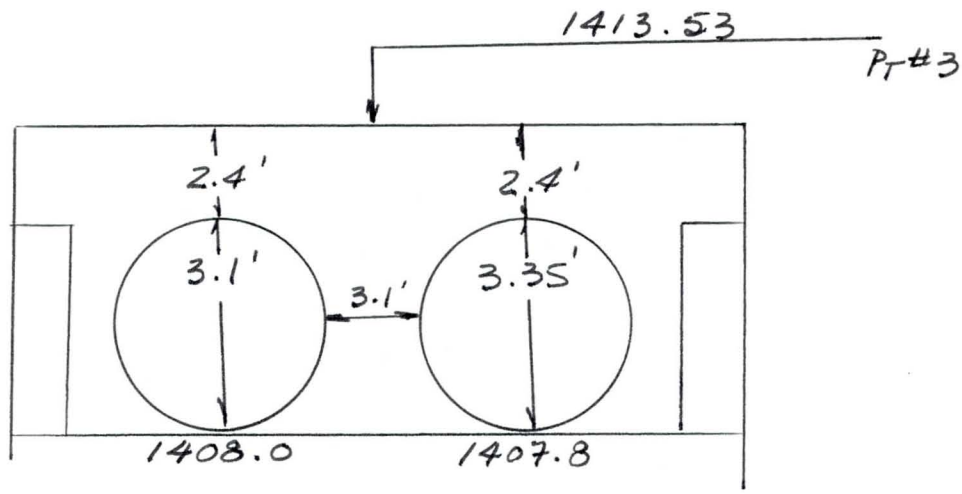

General Condition of Structure EACH TUBE 3.0' WIDE

↑ - INDICATES LOCATION OF RTK POINT

164.9
2xRCP
N S

164.9
2xRCP
SS
164.9

FCDMC Contract 2000C035 Stucture Surveys
Wittmann/Tilby ADMP
WORKSHEET
DTM, INC. Project #21092

☐ Sun Valley Parkway
☒ US 60 RR
☐ Highway 74

Type of Structure: WOODEN BRIDGE Date: 8.15.01
File Name: 4IC1 Description Name: 165.7
Party Chief: RDS GDAC Control Pt # 4IC1

165+74p – "A"4p & "B"4p NORTH FACE (UPSTREAM)
☐ Photo Taken

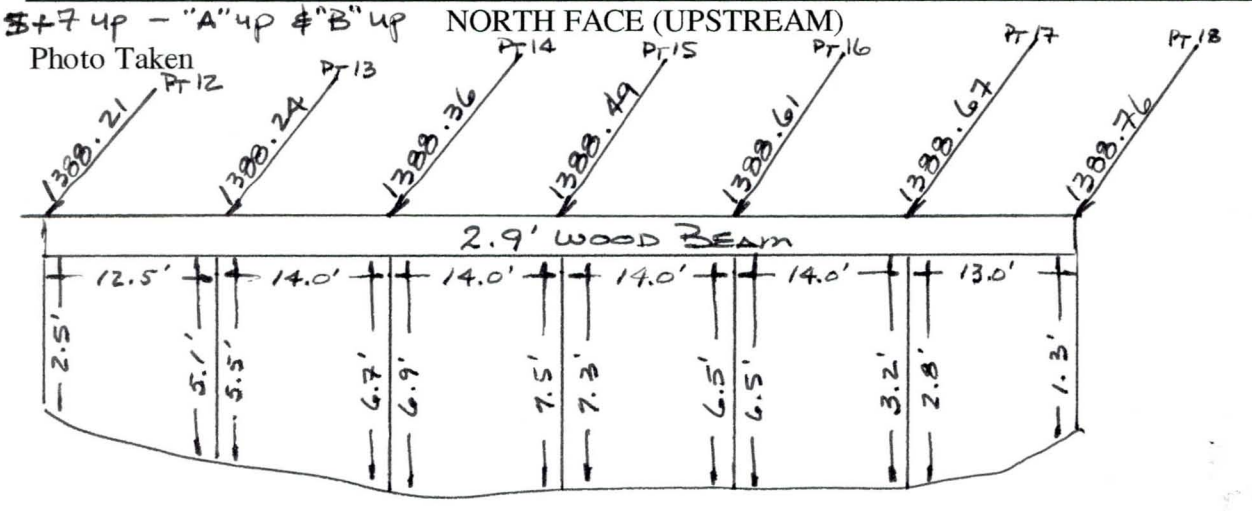

General Condition of Structure SUPPORTS 1.0' THICK POLE (TYP)

165+7 DN SOUTH FACE (DOWNSTREAM)
☒ Photo Taken

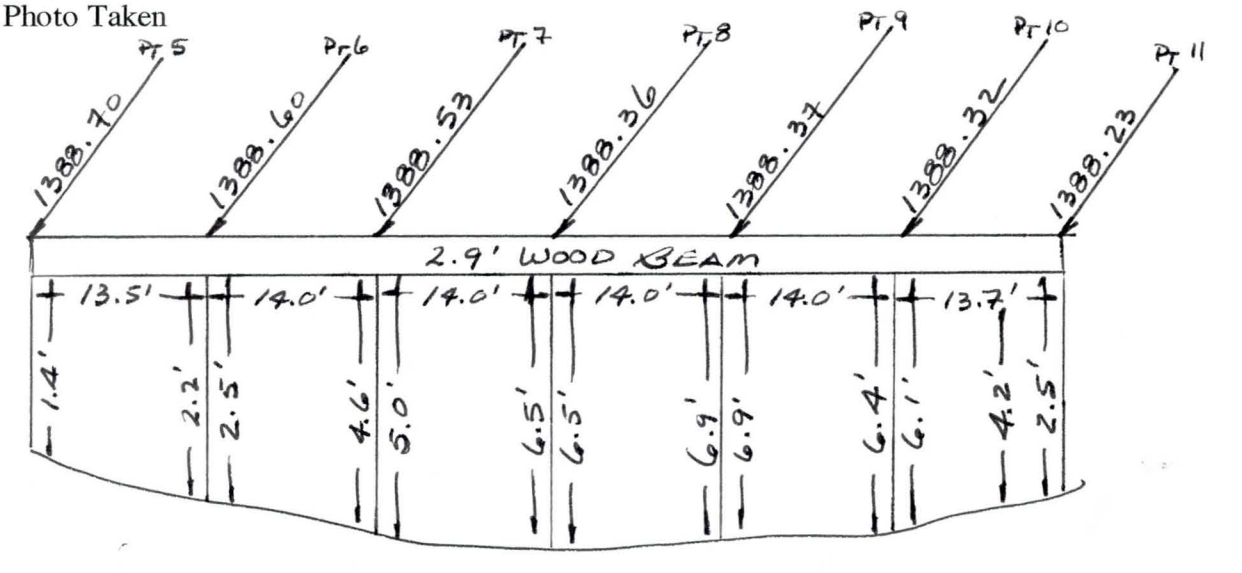

General Condition of Structure SUPPORTS 1.0' THICK WOOD POLE (TYP)

⇑ - INDICATES LOCATION OF RTK POINT

165.7
W. BRIDGE
NS

165.7
W.BRIDGE
NS

165.7
M.BRIDGE
NS

165.7
WILBRIDGE
SS

FCDMC Contract 2000C035 Stucture Surveys
Wittmann/Tilby ADMP
WORKSHEET
DTM, INC. Project #21092

☐ Sun Valley Parkway
☒ US 60 RR
☐ Highway 74

Type of Structure: WOOD BRIDGE Date: 8.15.01
File Name: 4IC1 Description Name: 166.0
Party Chief: DS GDAC Control Pt # 4IC1

166+0UP AND 166+0AUP NORTH FACE (UPSTREAM)
☒ Photo Taken

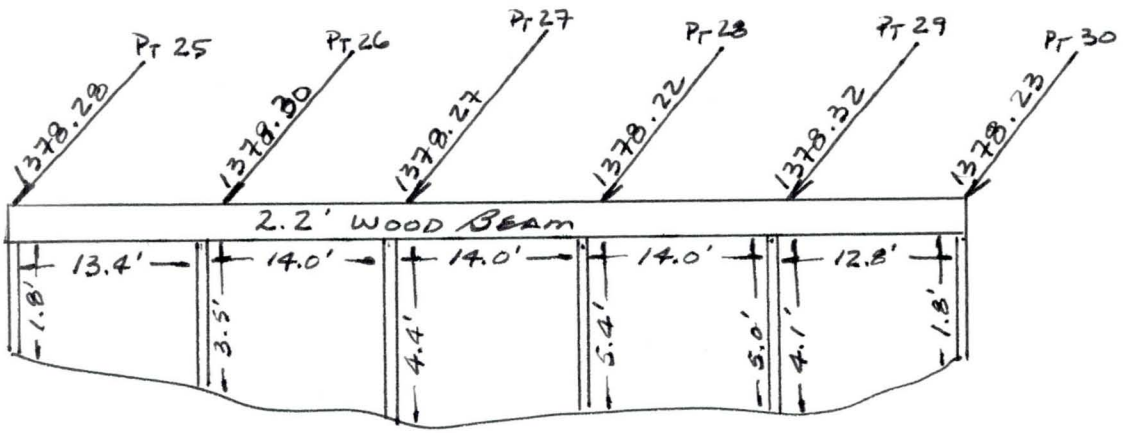

General Condition of Structure SUPPORTS - 1.0' WOOD POLE/BEAM (TYP)

166+0 DN SOUTH FACE (DOWNSTREAM)
☒ Photo Taken

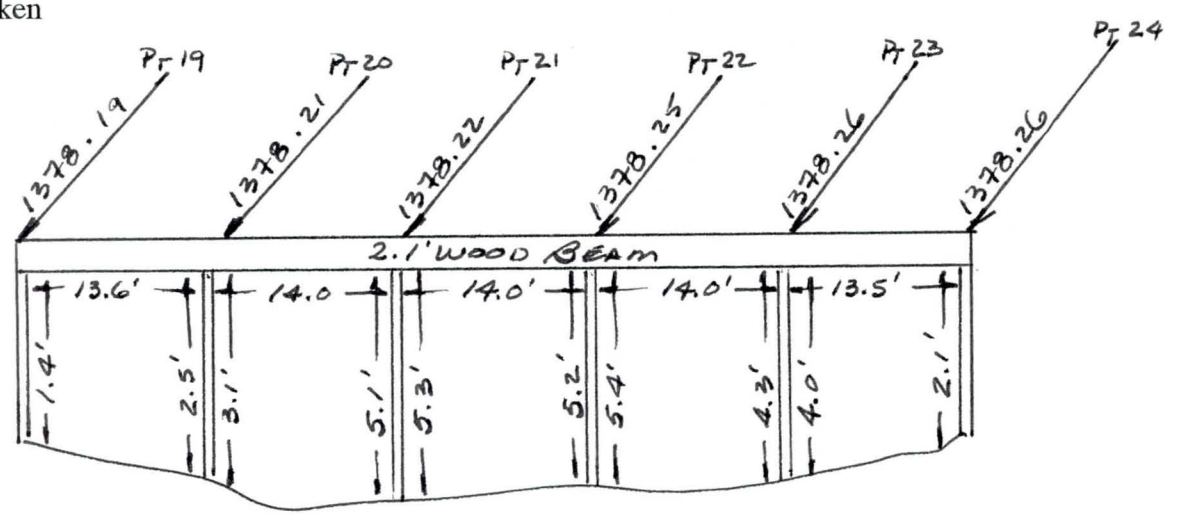

General Condition of Structure SUPPORTS - 1.0' WOOD BEAM (TYP)

↑ - INDICATES LOCATION OF RTK POINT

166.0
W. BRIDGE
N5

1660
W. BRIDGE
N S

1660
W. BRIDGE
SS

FCDMC Contract 2000C035 Stucture Surveys
Wittmann/Tilby ADMP
WORKSHEET
DTM, INC. Project #21092

☐ Sun Valley Parkway
☒ US 60 RR
☐ Highway 74

Type of Structure: RCP Date: 8.15.01
File Name: 4IC1 Description Name: 166.3
Party Chief: RDS GDAC Control Pt # 4IC1

166+34P
☒ Photo Taken

NORTH FACE (UPSTREAM)

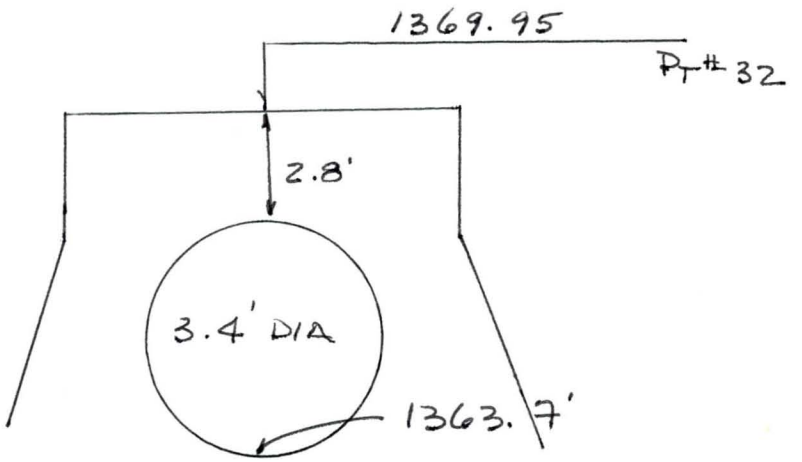

General Condition of Structure

166+30N
☒ Photo Taken

SOUTH FACE (DOWNSTREAM)

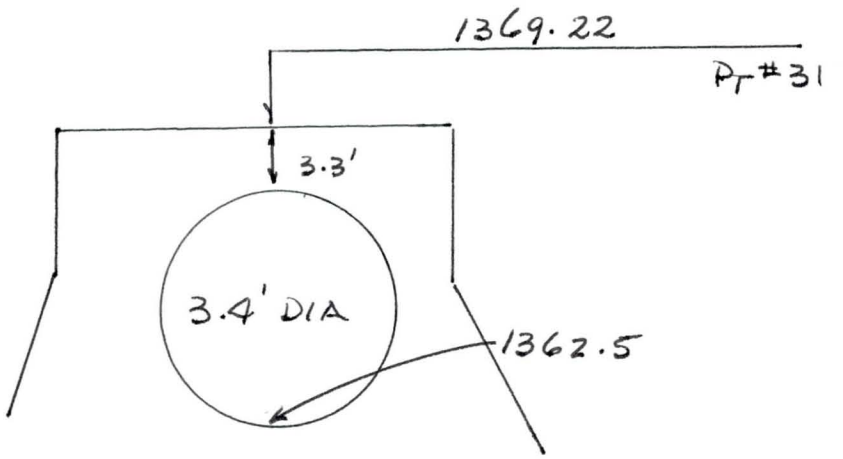

General Condition of Structure

↑ - INDICATES LOCATION OF RTK POINT

166.3
RCP
NS

1663
RCP
SS
1663

FCDMC Contract 2000C035 Stucture Surveys
Wittmann/Tilby ADMP
WORKSHEET
DTM, INC. Project #21092

☐ Sun Valley Parkway
☒ US 60 RR
☐ Highway 74

Type of Structure: RCP Date: 8.15.01
File Name: 4IC1 Description Name: 166.7
Party Chief: DS GDAC Control Pt # 4IC1

NORTH FACE (UPSTREAM)

☒ Photo Taken 166+7 up

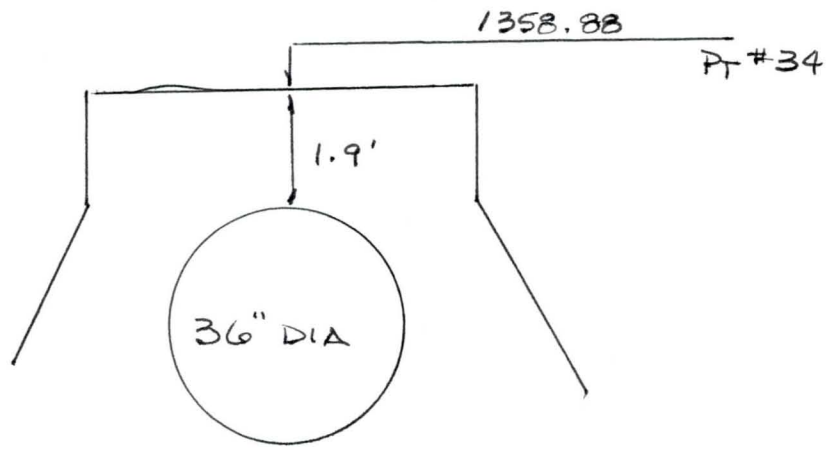

General Condition of Structure

SOUTH FACE (DOWNSTREAM)

☒ Photo Taken 166+7 DN

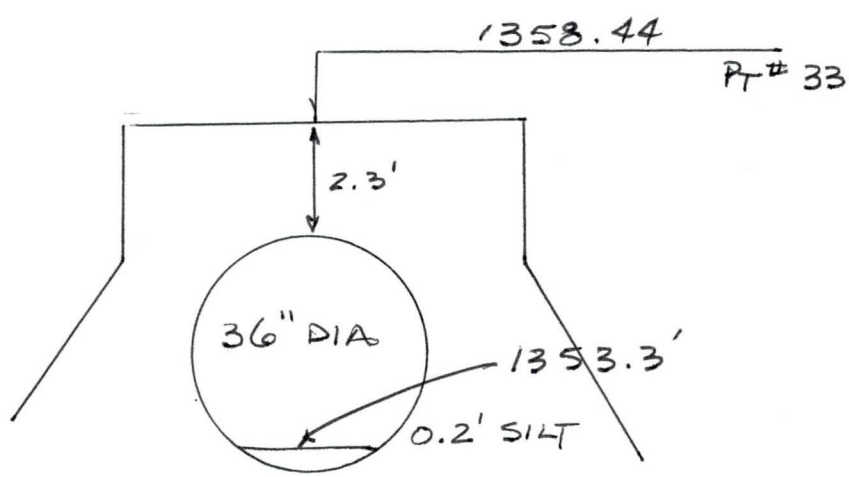

General Condition of Structure

↑ - INDICATES LOCATION OF RTK POINT

166.7
RCP
NS

1667
RCP
SS
166.7

FCDMC Contract 2000C035 Stucture Surveys
Wittmann/Tilby ADMP
WORKSHEET
DTM, INC. Project #21092

☐ Sun Valley Parkway
☒ US 60 RR
☐ Highway 74

Type of Structure: RCP Date: 8.15.01
File Name: 4IC1 Description Name: 167.1
Party Chief: RDS GDAC Control Pt # 4IC1

167+1 up
☒ Photo Taken

NORTH FACE (UPSTREAM)

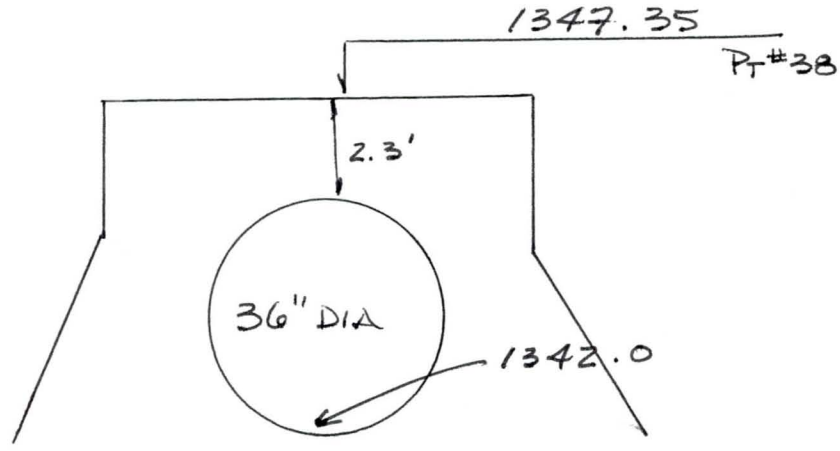

General Condition of Structure

167+1 DN
☒ Photo Taken

SOUTH FACE (DOWNSTREAM)

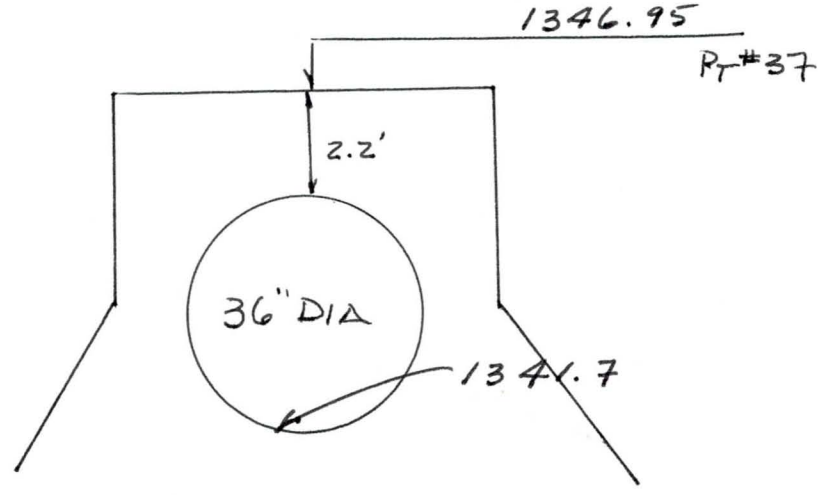

General Condition of Structure

⇑ - **INDICATES LOCATION OF RTK POINT**

167.1
RCP
NS

167.1
RCP
SS