Design Report

Property of
Flood Control District of MC Library
Please Return to
2801 W. Durango
Phoenix, AZ 85009

for the

NEW RIVER CHANNELIZATION

Bethany Home Road to Olive Avenue
FCD Contract No. 91-05

Prepared for:

FLOOD CONTROL DISTRICT
OF
MARICOPA COUNTY

July 31, 1992

Prepared by:

Coe & Van Loo Consultants, Inc.
4550 North 12th Street
Phoenix, Arizona 85014
(602-) 264-6831

Registered Professional Engineer (Civil)
CERTIFICATE NO.
6580
JOHN BREMER
NELSON
11-29-99
Date Signed
ARIZONA, U.S.A.

Design Report
for the
New River Channelization
Bethany Home Road to Olive Avenue

TABLE OF CONTENTS

Page

1 Introduction 1-1
- 1.1 General 1-1
- 1.2 Project Location 1-1
- 1.3 Background 1-2
- 1.4 Design Concept 1-3

2 Scope of Work 2-1
- 2.1 Data Collection 2-1
- 2.2 Surveys and Mapping 2-1
- 2.3 Right-of-Way 2-1
- 2.4 Materials Investigation 2-2
  - 2.4.1 Soil Cement Design 2-2
- 2.5 Utilities 2-2
- 2.6 Hydrology 2-2
  - 2.6.1 Major Drainage 2-2
  - 2.6.2 Interior Drainage 2-2
- 2.7 Hydraulic/Scour Analysis 2-3
- 2.8 Design Plans Preparation 2-3
- 2.9 Structures 2-3
- 2.10 Quantity and Cost Estimates 2-4
- 2.11 Special Provisions 2-4
- 2.12 Additional Services 2-4
- 2.13 FEMA Coordination 2-4
- 2.14 Mitigations for Areas 1, 2 & 3 2-4
- 2.15 99th Avenue Bridge - Storm Drain Outlets 2-5

3 Surveys and Mapping 3-1
- 3.1 Horizontal and Vertical Controls 3-1
- 3.2 Topographic Mapping 3-2
- 3.3 Horizontal Alignment 3-2
- 3.4 Cross Sections 3-2
- 3.5 Right-of-Way 3-3

4 Materials Investigation 4-1
- 4.1 Site Investigation & Sub-Surface Exploration 4-1
- 4.2 Environmental Investigation 4-1

5 Utilities 5-1
- 5.1 General 5-1
- 5.2 Existing Utilities 5-1
- 5.3 Proposed Utilities 5-2

TABLE OF CONTENTS

6 Hydrology 6-1
- 6.1 Major Drainage 6-1
  - 6.1.1 Basis for hydrology 6-1
  - 6.1.2 Watershed Changes 6-2
- 6.2 Local Drainage 6-2
  - 6.2.1 Introduction 6-2
  - 6.2.2 Hydrologic Analysis 6-3
  - 6.2.3 Side Drainage Analysis 6-3

7 Hydraulic/Sediment Transport Analyses 7-1
- 7.1 Purpose 7-1
- 7.2 Design Parameters 7-1
  - 7.2.1 Freeboard Requirements 7-2
- 7.3 Hydraulic Analyses 7-2
  - 7.3.1 Downstream Conditions 7-2
  - 7.3.2 Channel Design Conditions 7-3
- 7.4 Sediment Transport Analysis 7-4
  - 7.4.1 General 7-4
  - 7.4.2 General Scour 7-4
  - 7.4.3 Local Scour 7-5
- 7.5 Conclusions 7-6

8 Structures 8-1
- 8.1 General 8-1
- 8.2 Olive Avenue Bridge 8-1
- 8.3 99th Avenue Crossing 8-1
- 8.4 Glendale Avenue Bridge 8-2
- 8.5 Northern Avenue Crossing 8-2
- 8.6 Existing and Future ADOT Channels 8-2
- 8.7 SRP Grand Canal Drain 8-2

9 Design Constraints 9-1
- 9.1 Upstream Improvements 9-1
- 9.2 Downstream Improvements 9-1
- 9.3 Maintenance Vehicle Access 9-1
- 9.4 Landscape/Recreational Uses 9-2
- 9.5 Fencing 9-2
- 9.6 Mitigation Measures 9-2

10 References 10-1
- 10.1 Bibliography 10-1
- 10.2 Plan References 10-3

Registered Professional Engineer (Civil)
CERTIFICATE NO. 6580
JOHN BREMER NELSON
11-29-99
Date Signed
ARIZONA, U.S.A.

Appendices

I Hydrology and Side Drainage Analyses
- a) LADFHP model
- b) Side Drainage Pipe Capacity Computations

II Hydraulic Analyses
- a) Downstream Condition HEC-2 Input/Output
- b) Channel Design HEC-2 Input/Output
- c) FLUVIAL-12 Input/Output
- d) Superelevation and Local Scour Analyses

List Of Figures

1. Project Limits

2. Grid Reference

List Of Plates

1. Authorized Plan of Improvement

2. Original Concept Plan

3. Schematic Flow Diagram

4. Major Drainage Area Map

5. Local Drainage Area Map

6. Downstream Condition Cross Section Location Map

1 Introduction

1.1 General

The Flood Control District of Maricopa County (hereafter referred to as the "District") has contracted with *Coe & Van Loo Consultants, Inc. (CVL)* to provide engineering design services for the New River Channelization project. The purpose of the project is to construct flood control improvements sufficient to safely and efficiently convey the Standard Project Flood (SPF) along the New River from Olive Avenue south to Bethany Home Road.

In March of 1989, CVL completed design plans for the New River Channelization under FCD Contract No. 88-05. The design consisted of a trapezoidal channel of uniform dimensions with soil cement lined banks. Construction of that project was delayed and ultimately abandoned by the District as a result of environmental concerns. In response to environmental concerns, the District proposed several environmental mitigation measures, as documented in a report entitled *Mitigation Proposal for the New River Flood Control Project, Olive Avenue to Bethany Home Road*. One of the alternatives proposed in that report was accepted by the Corps and is now the basis for the revised channelization plans.

In 1989, the U.S. Army Corps of Engineers (Corps) completed construction of channel improvements along the New River from the Arizona Canal Diversion Channel (ACDC) south to Olive Avenue. Due to prior agreements concerning acquisition of SPF flowage easements downstream of Olive Avenue, the Corps' project provides for an SPF channel to approximately the Mountain View Road alignment (one-half mile north of Olive Avenue). Downstream from here, channel improvements have been designed to allow flow breakouts to return to natural channel conditions. The New River Channelization project, in addition to channel excavation and bank stabilization downstream of Olive Avenue, includes additional channel excavation north of Olive Avenue necessary to provide continuity with the Corps' improvements and to prevent the need for SPF flowage easement acquisition.

On the downstream end of the project, at Bethany Home Road, channel improvements have been designed to tie in with existing channel bank protection on the west bank adjacent to the Glendale Municipal Airport. The east bank of the New River is open agricultural land formerly planned as the master planned community of Camelback Ranch. A levee was originally proposed by Camelback Ranch so as to provide protection from the 100-year and SPF discharge events. That levee would have interconnected with the New River Channelization. Funding problems stemming from the real estate and banking business have resulted in the abandonment of plans for construction of a levee, resulting in a change in design philosophy at the downstream project limits.

1.2 Project Location

The New River Channelization project, consisting of a bank protected channel and levee system, extends from the Olive Avenue bridge south to approximately Bethany Home Road (Figure 1).

While the Corps has provided bank protection north of Olive Avenue, this contract includes improvements necessary to convey the SPF under the Olive Avenue bridge.

The channel right-of-way generally follows the natural channel flowline and banks of the New River. The right-of-way boundary is, in general,located 275 feet on either side of the established centerline.

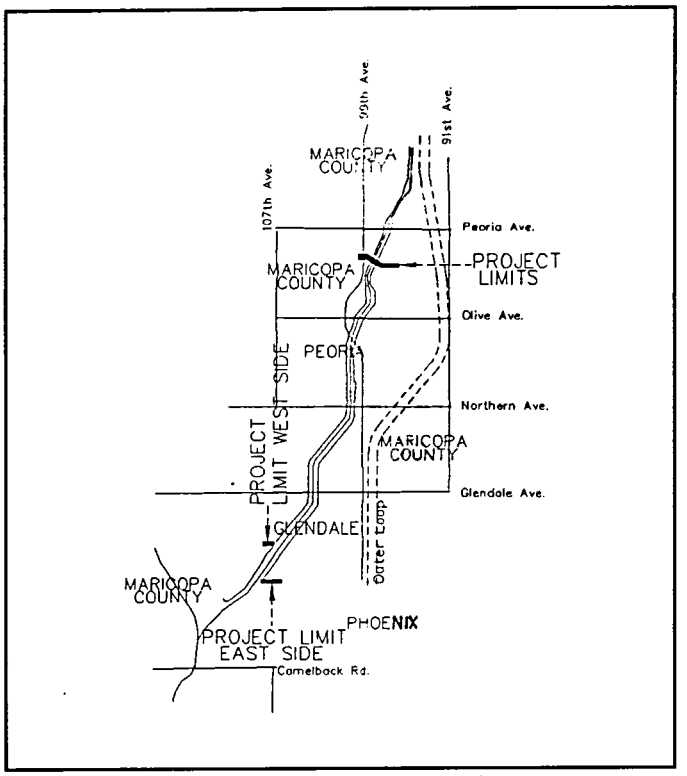

Figure 1: Project Limits

Within the project limits, there are currently two bridge crossings of the New River, one at Olive Avenue and the other at Glendale Avenue. A third bridged crossing, at Northern Avenue, is under construction and is nearing completion. Plans for construction of a bridge at 99th Avenue have already been completed by the City of Peoria. The 99th Avenue crossing will temporarily be relocated east of the New River with construction following after this project. There is not a road crossing at Bethany Home Road and there are not any plans for a future crossing, due to presence of the Glendale Municipal Airport.

The Outer Loop Freeway (Agua Fria Freeway), which is presently under construction by the Arizona Department of Transportation(ADOT), crosses Olive Avenue approximately one mile east of the New River and presently terminates south of Northern Avenue at 99th Avenue. Future plans will extend the freeway south to the Papago Freeway with a possible interchange for the Paradise Freeway at Bethany Home Road. A drainage channel constructed in conjunction with the Outer Loop Freeway presently outlets to the New River south of Northern Avenue. An additional drainage channel which would provide protection for the Paradise Freeway has been conceived and may outlet to the New River near Bethany Home Road. ADOT's plans for the Paradise Freeway are uncertain at this time due to a lack of available funds.

1.3 Background

Historically a flood hazard has existed in the metropolitan Phoenix area along Cave Creek, Skunk Creek, New River, the Agua Fria River, and downstream of the Arizona Canal. As a means to help mitigate potential flooding the Corps, in conjunction with the District and other municipalities, has implemented a comprehensive flood control plan consisting of both structural and non-structural improvements(Plate 1).

As a part of the overall plan, the Arizona Canal Diversion Channel(ACDC) has been designed to intercept 100-year flows from as far east as Cudia City Wash and convey them to an outlet at Skunk Creek, a tributary to the New and the Agua Fria Rivers. Under an agreement with the Corps and authorization by Federal legislation, the District plans to acquire flowage easements along Skunk Creek, New River,and along the Agua Fria River to the confluence with the Gila River.

Structural improvements have been made along the Agua Fria River and some easements acquired. However, due to schedule and cost constraints, flowage easement agreements have not yet been settled for a portion of the New River. To alleviate a potential flooding problem resulting from completion of the ACDC and the associated liability risk to the District, a decision to provide structural improvements to the New River has been approved by the Maricopa County Board of Supervisors. Improvements to handle the Standard Project Flood (SPF) are proposed to be in the form of channelization and bank protection of the New River from Bethany Home Road to Olive Avenue.

1.4 Design Concept

The original design concept, for which CVL previously designed the channelization plans and specifications for New River in August, 1988, is illustrated in Plate 2. The design was based on the District specification of a conventional trapezoidal channel section which was constrained by strict limitations on the availability of right-of-way.

During the initiation of design, the Corps was contacted for the design's acceptability in conjunction with their Section 404 permit requirements. Since the Corps was constructing an identically designed channel upstream of this project, their opinion about the District's project was very positive.

The Section 404 permit application, however, ended up coming under tremendous scrutiny by agencies such as the Environmental Protection Agency, Arizona Department of Water Quality, U.S. Fish and Wildlife Service, and the Arizona Game and Fish Department. A detailed alternative analysis together with numerous supplements were submitted to these agencies to satisfy their requirements. This analysis was presented in the District's report *Investigation of Alternatives and Mitigation Proposal for the New River Flood Control Project*, May, 1990. This analysis included the channel alternative "B-2". Finally in December, 1990, the Corps issued the permit, accepting the channel alternative "B-2" for the final design purpose, with several stipulations including some mitigation measures.

The main stipulation was to modify the trapezoidal cross-section of the river channel to include some undisturbed areas within the channel bottom. The modified channel cross-section, as defined in the alternative "B-2" has a major impact on the previous design for the following reasons:

1. The new channel configuration will result in an increase in the Manning's roughness factor due to the preservation and revitalization of native vegetation. This will cause the design water surface elevation to rise, resulting in higher levee top of bank elevations.

2. In the previous design, the overbank areas were also utilized to handle the side drainage. Due to a reduction in the overbank right-of-way, the result of higher levees and a wider channel section, new means to handle the side drainage were developed.

Once a workable channel cross-section was determined, a detailed hydraulic and sediment transport analysis were performed. Results of these analyses were utilized to establish adequate freeboard and toe downs for the soil cement banks. Based on the final design plans, quantities were prepared and cost analyses updated for the District's use.

2 Scope of Work

This report is submitted as the Final Design Submittal. The purpose of this report in fulfillment of the Contract Scope of Work, is to produce a Design Report to accompany the New River Channelization Design Plans.

The following is a brief description of the Contract Scope of Work.

2.1 Data Collection

The Consultant, based on available information, shall update all previously collected data pertinent to this project including, but not necessarily limited to:

a) Hydrologic data
b) Hydraulic analyses, floodplain studies
c) Bridge construction plans
d) Existing topographic mapping
e) Existing soils and geologic studies
f) Existing utilities
g) Proposed utilities
h) Storm drainage outlet structures
i) Present and future freeway drainage outfall concepts/design plans as they impact the project.

2.2 Surveys and Mapping

The Consultant shall utilize only existing survey and topographic data previously provided by Aerial Mapping Co., Inc. These maps will be used to prepare base maps of a sufficient accuracy to enable the preparation of design documents and earthwork quantity estimates.

Cross-sections shall be taken by Photogrammetric methods at approximately one hundred (100) foot intervals. The locations of these sections shall be selected after review of the base maps.

Consultant shall update the topographic data for the area in conjunction with the James Bond mining operation.

2.3 Right-of-Way

The Consultant shall review parcel ownership maps and alignment plans prepared by the District and make recommendations for any additional right-of-way needs in conjunction with the channel alignment. Following the establishment of additional right-of-way needs, the District will prepare the necessary right-of-way and parcel maps and documents for right-of-way acquisition. The consultant shall provide the District with the locations for any additional temporary construction easements, permanent drainage easements and slope easements.

2.4 Materials Investigation

A geotechnical investigation has previously been performed by Western Technologies, Inc. (WTI). No additional geotechnical investigations are anticipated in this scope of services.

2.4.1 Soil Cement Design

The grain size distribution of the materials available for the soil cement mix design are of major importance. Gradation tests and a soil cement mix design have already been performed by WTI during the previous design. CVL shall use that design for the purpose of this scope of services. No modifications are anticipated and therefore are not included in this scope of services.

2.5 Utilities

The Consultant shall obtain available utility maps and identify utilities within the general project limits to determine potential conflicts and relocations. This effort shall be coordinated with the relevant city, municipality or utility company. The locations of future planned utility crossings and their project schedule shall be discussed with the relevant agencies.

Plans shall be updated, as necessary, for the relocation of existing utilities. New utility plans shall be the responsibility of the appropriate agency. The Consultant shall coordinate the location of any proposed utilities.

2.6 Hydrology

2.6.1 Major Drainage

The Consultant shall prepare hydrologic analyses to address the effect resulting from the Standard Project Flood (SPF); consideration shall be given to all existing studies. The Corps has conducted an analysis of the effect of the ACDC upon the New River. Their findings shall be reviewed and incorporated into the study. The effects of proposed ADOT highway drainage outfalls, in conjunction with the Outer Loop Freeway and the Paradise Parkway, shall also be addressed. The results of the Corps' studies shall be used in the development of channel design discharges and shall be documented in a Drainage Report.

2.6.2 Interior Drainage

The Consultant shall review existing hydrologic and drainage studies and as-built plans of existing drainage facilities as they impact the project. The results of these studies shall be incorporated into a comprehensive drainage study of the interior or side drainage. This study shall be specific enough to quantify locations and quantities of

drainage inflows flows for the 10-year and 100-year frequency events. As detailed design progresses the Consultant shall check the effect of backwater resulting from the SPF on the interior drainage system. Results of this analysis shall be documented in the Initial and Final Drainage Reports.

2.7 Hydraulic/Scour Analysis

The Consultant shall prepare a detailed hydraulic scour analysis in conjunction with Alternative "B-2". Hydraulic properties of the channel section, drop structures and bridges shall be assessed utilizing the U.S. Army Corps of Engineers computer program, HEC-2 for back water surface profiles. The bank toe down and bed protection methods shall be assessed utilizing a sediment movement model, Fluvial-12 (Chang, 1986). The final design shall incorporate an appropriate factor of safety.

2.8 Design Plans Preparation

The Consultant shall prepare design plans and construction documents for channelization, storm drainage and bridge improvements including, but not necessarily limited to:

a) Cover sheet, Sheet Index and Horizontal Control
b) Details and Notes
c) Side Drainage Details
d) Plans and profiles including
    i) Levee/bank alignment
    ii) Bed profile
    iii) Access ramps
    iv) Bank protection and grade
    v) Lateral ditches/channels
    vi) Storm drainage outfalls
    vii) Fill Disposal Sites
    viii) Identify areas of non-disturbance
    ix) Landscape of remediation areas (included in Section 2.14)
e) Cross Sections
f) Utilities Relocation
g) Special Details
h) Quantities
i) Special Provisions

2.9 Structures

The Consultant shall assess the hydraulic effectiveness of existing bridge structures to convey the design discharge. Means to utilize and protect the existing bridge structures, shall be documented.

2.10 Quantity and Cost Estimates

The Consultant shall prepare cost estimates for construction of the project at the prefinal (95%) and final (100%) design submittals. The District will provide the estimated costs of right-of-way acquisition.

2.11 Special Provisions

The Consultant shall prepare special provisions for items, details and procedures not adequately addressed in the M.A.G. standard specifications or specifications of the District. It should be noted that CVL will prepare technical specifications for the mitigation areas in a separate drawing as discussed later in item 2.14.

2.12 Additional Services

The District will assemble the bid package. The Consultant shall attend a pre-bid conference at which time he shall answer any questions relative to the design documents.

2.13 FEMA Coordination

The District will be responsible for preparation and submittal of the CLOMR to the Federal Emergency Management Agency (FEMA).

Following completion of design plans, the Consultant shall assist the District in the preparation of the CLOMR submittal package as listed below:

a) Backwater surface profile analysis using HEC-2 for the 10-, 50-, 100- & 500-year flood events for the New River to account for the levee and channelization "in-place" condition.

Based on the hydraulic analysis furnished by the Consultant, the District will be responsible for preparation of the plan and profiles, submittal of the CLOMR to FEMA and all subsequent review operations.

2.14 Mitigations for Areas 1, 2 & 3

The District has proposed certain mitigation measures (FCDMC, May 1990) within the project site in conjunction with the Section 404 Permit No. 89-001-RD, Special Conditions.

On-Site Area 1. These areas are generally 50 to 100 feet in width and are located along the right-of-way on the outer sides of the channel maintenance road.

On-Site Area 2. A 20-acre parcel, contiguous with the project near Glendale Avenue, will be utilized for the mitigation purposes.

On-Site Area 3. In accordance with the Alternative "B-2", some portions of the natural bottom areas will be kept undisturbed and will be revegetated for the mitigation purposes.

For these areas 1, 2 & 3, CVL will perform the following services:

a. Perform a site visit to determine the opportunities and constraints of the sites.
b. Prepare a planting plan indicating areas to be seeded and areas to be planted to establish a self-perpetuating Desert vegetation habitat.
   Tree density shall be 15-20 per acre.
   Seeded area shall be 18 lbs. P.L.S./ac. (broadcast)
c. Prepare planting details for trees, shrubs, and seeded areas.
d. Prepare technical specifications of above.
e. Prepare cost and quantity estimates of above (one preliminary, one final).
f. Prepare irrigation plans for Area 3 only.
g. Coordinate and submit plans to District for review and approval.

All plans will be prepared suitable for bidding and construction. CVL will assist the District in the bidding process. Fees do not include observation during the construction phase.

2.15 99th Avenue Bridge - Storm Drain Outlets

Burgess and Niple Engineers (BNE) are in the process of preparing design plans for the 99th Avenue Bridge for the City of Peoria. As part of this design, at least two storm drain outlets are anticipated in the south bank. CVL will incorporate these outlets into the design plans including necessary coordination with BNE and the City of Peoria.

3 Surveys and Mapping

Topographic mapping at a scale of 1"=200' with a 2-foot contour interval was available from previous studies prepared by the Corps. This mapping was developed using photogrammetric techniques in 1982. This mapping was reviewed in the field and a large number of disturbances were noticed as a result of gravel mining operations, landfill, and natural erosion processes.

For the original channelization design, new aerial photogrammetry was selected as the best means to obtain topographic mapping with the accuracy necessary for a detailed design and earthwork analysis. Aerial Mapping Company (AMC), as subconsultant to CVL, performed the ground control survey and aerial photogrammetry.

At the onset of the current channelization design, it was discovered that more changes in the topography had occurred in the James Bond property. It was then determined that AMC would update the topographic modeling in that area.

3.1 Horizontal and Vertical Controls

The District requested that the base mapping for this project be consistent with that established by the Corps, for their project north of Olive Avenue. Vertical control has been tied to the existing Corps datum at Olive Avenue and equations have been established with the datums of other local municipalities and governmental agencies.

AMC used the northeast quarter corner of Section 18, T2N, R1E as the basis for the horizontal control. This location was assigned a grid reference mark of 10,000 feet North, 10,000 feet East. Following the establishment of the analytics, a grid correction factor of 0.9998475 was established, and using the Northeast corner of Section 5, T2N R1E, the field data was transformed to the State Plane coordinate grid system. The conversion between the true State Plane coordinate system and the reference system for this project is illustrated in Figure 2.

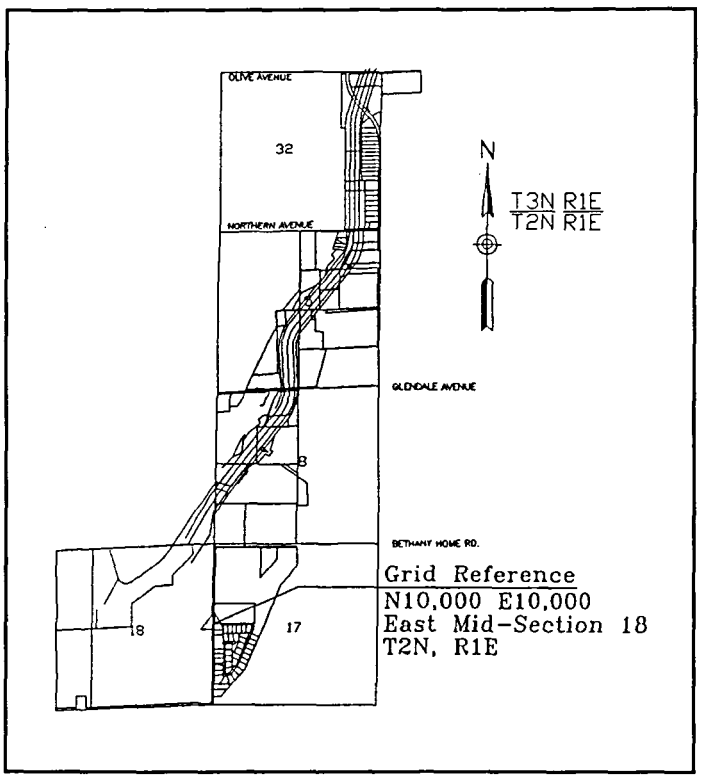

Figure 2: Grid Reference

3.2 Topographic Mapping

Topographic mapping at a scale of 1 inch=100 feet with a contour interval of 2-feet was prepared for design purposes as a part of the original design contract. Some flows have occurred within the new River since preparation of the topographic base map, in addition, gravel mining operations have occurred within the project limits. Additional design topography from other sources was provided for selected areas within the project limits. Topographic mapping was provided from the following sources:

1. Topographic mapping for the Design Plans from Olive Avenue downstream to Bethany Home was produced, at a scale of 1-inch = 100 feet with a 2 foot contour interval, by Aerial Mapping Company (AMC) from a flight dated March 14, 1988, except as noted.

2. Mapping along the channel from Northern Avenue, downstream for a distance of 4,100 feet was produced at a scale of 1-inch = 100 feet with a two foot contour interval by AMC from a flight dated June 26, 1991.

3. Topography and cross-sections north of Olive Avenue, commencing at approximately Station 213+00, were derived from topographic mapping prepared for Kaminski-Hubbard Engineers by Kenney Aerial Mapping, Inc. from a flight dated August 2, 1991, at a scale of 1" = 400' and contour intervals of 2 feet.

4. Topographic mapping for Fill Disposal Site 'B' was produced for the Corps of Engineers from a flight dated May 28, 1988, at a scale of 1" = 50' and contour intervals of 1 foot.

   Exact quantities of landfills within the project site are unknown prior to construction. Organic material is not usable for fills within the project and will need to be disposed of off-site, following approval of a site by the District.

3.3 Horizontal Alignment

A preliminary right-of-way alignment and channel centerline was established by District staff members. This digital information was transferred to the CVL computer system and the control points and curve information established. The alignment was reviewed and, following input from the District, a revised channel alignment developed. The proposed right-of-way remains the same as established by the District. The horizontal control line shown on the current design plans remains unchanged from the earlier design produced by CVL. However, the location of both the left and right banks has changed about this alignment.

3.4 Cross Sections

Using photogrammetric methods, digital cross sections of the natural ground were produced at 100-foot intervals along the established channel centerline. For the area of new topography,

natural ground cross-sections were produced from digital topography and a digitally produced Triangulation Network (TIN). From this information, design cross-sections were generated within the AutoCAD system, appropriate annotation and water surface levels were overlaid, and the back slopes modified to attain the most efficient section.

3.5 Right-of-Way

After adjusting the centerline alignment to accommodate the design constraints, offsets from the centerline were determined and established. The right-of-way was then converted into the base coordinate system for the project.

Right-of-way information was provided by the District. This information along with descriptions of the adjacent property parcels formulated the basis from which the District has prepared legal descriptions and parcel maps for property to be acquired within the right-of-way. CVL has provided the District with locations of local flooding outside the right-of-way for acquisition of inundation easements by the District. In addition, temporary construction easements, roadway right-of-way, and slope easement locations have been established.

4 Materials Investigation

Within the project limits, the New River channel has been subject to gravel mining and other activities. Preliminary site investigations have identified several locations along the channel alignment as possible existing waste sites. The location and size of these sites is important to the earthwork analysis and the recommended procedures for removal and placement of fill materials.

Western Technologies, Inc. (WTI) has provided geotechnical and environmental subconsulting services to CVL. WTI's findings and recommendations are presented in two reports titled *New River Channelization* (WTI, 1988) and *Evaluation of Landfills for the New River Project* (WTI, 1989). In addition, WTI assisted in the preparation of the Design Special Provisions for the original design contract. The following paragraphs briefly summarize the results of the sub-surface exploration and the environmental investigation. For detailed information, boring and test pit logs, and test results, refer to the aforementioned reports by WTI.

4.1 Site Investigation & Sub-Surface Exploration

A site investigation has been performed for the entire project area including 35 test pits and 66 borings. Laboratory test results indicate that the river bed material is primarily composed of a sandy gravel with cobbles.

During this investigation, groundwater was not encountered in any of the borings or test pits. Review of well records and groundwater data published by the Arizona Department of Water Resources indicates that the groundwater table within the project area exists at a depth greater than 140 feet below the ground surface. Based on the present recharge and discharge rate, it is anticipated that construction will not be affected by groundwater.

4.2 Environmental Investigation

The objective of the environmental investigation was to further identify and characterize wastes of five landfill areas located within the project site. These five areas were investigated for the presence of hazardous or toxic wastes. Three of these areas exhibited noxious odors during the geotechnical portion of this project. These areas were studied for the presence of volatile organic compounds (VOCs) using a soil gas analysis. None of the areas listed showed the presence of VOCs. Additionally, in two of these three areas, soil samples were obtained and analyzed for the presence of possible hazardous or toxic wastes. Neither of the samples obtained exhibited hazardous waste characteristics as defined by Arizona Administrative Code (A.A.C.) R9-8-1861.A (40 CFR Part 261).

Subsequent to the investigation by WTI, the District conducted a review of landfill areas by digging test pits and soils borings. The results of their tests were plotted onto the channel design cross-sections and were used to confirm earlier estimates by WTI.

5 Utilities

5.1 General

This project lies within the jurisdictional boundaries of unincorporated Maricopa County and the Cities of Glendale and Peoria. Additionally, the southern project limits are adjacent to the City of Phoenix. Major crossroads in the area are currently operated and maintained by the Maricopa County Highway Department (MCHD).

The Arizona Department of Transportation (ADOT) maintains right-of-way adjacent to and within the channel right-of-way. ADOT's right-of-way is for a drainage channel outlet from the Outer Loop Highway, south of Northern Avenue. Other agencies which maintain utility services within the area include Salt River Project (SRP) electric, SRP irrigation, Arizona Public Service (APS) electric, El Paso Natural Gas Company, Mountain Bell telephone and cable television services.

Initial utilities research work was performed under CVL's first design contract, and focused on the identification of all existing utilities through the use of City and agency quarter section mapping, construction or "as-built" plans, field survey and field observation. Further detailed coordination of utility location and/or relocation has been made with the City of Peoria, City of Glendale, SRP, and El Paso Natural Gas Company. Since completion of the first design, some utilities identified as proposed have been constructed.

5.2 Existing Utilities

The existing utilities identified within the project limits are as follows:

<u>OLIVE AVENUE AND VICINITY</u>

- 16" Water, City of Peoria
- 2-overhead electric lines, APS
- 14" ACP Force main sewer, Sun City
- 24" D.I.P. sewer, City of Peoria
- 10'x8' concrete box culvert at 99th Avenue and Olive Avenue intersection, MCHD.

The 16" waterline runs underneath the flowline of the existing New River channel. This line will be relocated as part of this project to allow for the lower channelized cross-section. The APS overhead powerlines and sewer lines have been relocated as part of the Corps' design project north of Olive Avenue.

<u>NORTHERN AVENUE AND VICINITY</u>

- 16" High pressure gas line, El Paso Natural Gas Co.
- 12" ACP water, City of Glendale

- 10" Sewer & pump station, City of Peoria
- Overhead electric lines
- 2" waterline
- 6" water stubbed east of New River centerline
- 2 sets of 2-24" storm drains, MCHD
- 2 - High voltage transmission line, SRP
- Storm drainage channel from the Outer Loop Highway, ADOT

All utilities through the Northern Avenue dip section have been relocated as a part of the bridge design plans prepared by BRW, Inc.

Glendale Avenue and Vicinity

- Overhead 69KV, Electric, APS
- 6" Gas line in 10" casing, Southwest Gas
- 12" D.I.P. water, City of Glendale
- 54" Storm drain, Glen Harbor Air Business Park
- 15" Sewer, City of Glendale
- "Grand Drain" drainage channel, SRP

Bethany Home Road and Vicinity

- 2-8" Force main sewer, City of Glendale

The 2-8" sewer force mains are constructed sufficiently deep that no conflict in vertical alignment will occur. The channel horizontal alignment has been adjusted to avoid a conflict where these lines return close to ground surface on the east bank.

The existing drainage features will be tied into the bank stabilization. These include the ADOT Outer Loop Drainage Channel, the Grand Drain, both 54" storm drains from the Glen Harbor Air Business Park Development, and the 10'x8' concrete box at Olive and 99th Avenue.

5.3 Proposed Utilities

The proposed utility items identified within the project limits are as follows:

- 54" RGRCP storm drain in Olive, MCHD
- 24" and 10" MJDIP sewer north of Olive Avenue, City of Peoria
- 12" Water in Northern, City of Peoria
- ADOT Paradise Freeway drainage channel north of Bethany Home Road (concept only)

The location and grade of these proposed utilities have been coordinated with the respective agencies.

6 Hydrology

6.1 Major Drainage

The Corps, as part of their plan to mitigate a regional flooding hazard in the metropolitan Phoenix area, has conducted exhaustive hydrologic analyses for both the present and future design peak discharges. The intent of this section is to summarize the results from the earlier hydrologic reports by the Corps (U. S. Army Corps of Engineers, 1974 & 1982), for the project limits. In these two reports the design peak discharges for the future conditions, with all upstream structural improvements in place, are given for both the 100-year and SPF conditions.

6.1.1 Basis for hydrology

The Corps developed a discharge-frequency analysis for the study area in order to determine peak discharge-frequency values for the authorized plan of improvement under future developed conditions. Details of the methods of analysis are included in the *Part 1 Hydrology Report* (U.S. Army Corps of Engineers, 1974). Following development of discharge-frequency relationships for the urban areas, and synthesis of the SPF from available flood records, the Corps developed a computer rainfall runoff model using the *Los Angeles District Flood Hydrograph Package* (U.S. Army Corps of Engineers, 1981). A schematic flow diagram of the model layout, as presented by the Corps is shown in Plate 3; the physical drainage boundaries as they impact this project are illustrated in Plate 4.

Two major concentration points, as indicated in Plate 4, are of significance to this project as follows:

Location	Peak Discharge (cfs) 100-year	SPF
New River Below Skunk Creek (CP #1029)	41,000	68,000
New River Above Agua Fria (CP #1039)	39,000	69,000

In the report *Hydrology Part 2* (U.S. Army Corps of Engineers, 1982) revisions were made to the peak discharges for the New River below New River Dam to account for potential redirection of natural drainage patterns by future development. This was necessary because the terrain below the dam is very flat and flow could easily be directed from the edge of the adjacent Agua Fria River basin and west from the Skunk Creek watershed, to the New River. To account for this potential diversion of an additional four square miles of watershed, an allowance of 2,000 cubic feet per second (cfs) is included in the above peak discharges.

For the purposes of this project, design discharges of 41,000 and 69,000 cfs, for the 100-year and SPF respectively, were used.

6.1.2 Watershed Changes

ADOT, as part of its plans for the future Paradise Freeway, has explored the possibility of providing a drainage interceptor channel along its alignment. This channel would be located on the north side of the freeway and would provide protection to the freeway for the 100-year peak discharge. The Paradise Freeway will eventually connect Interstate 17 (I-17) with the future Outer Loop freeway and will follow an alignment between Camelback Road and Bethany Home Road. If implemented, this plan would entail the interception of all drainage that reaches the freeway between 27th Avenue and the New River with an outfall to the New River at Bethany Home Road.

The WLB Group, Inc. (WLB), under contract to ADOT through Outer Loop Management Consultant, DeLeuw Cather, Inc., has conducted a hydrologic analysis of various alternatives as documented in a report by them (WLB, 1987, Parts A & B). Their recommendation, referred to as "Case B", would result in relocation of the existing "Grand Drain" to outfall to the Paradise Freeway channel along Bethany Home Road. The existing Grand Canal would remain on the south side of the channel and an existing sump basin at Bethany Home Road and 103rd Avenue would be relocated to the freeway interchange.

As part of their study, WLB analyzed the impact of the Paradise Freeway drainage diversion on the New River peak discharges for the 100-year event. WLB has closely matched the Corps' original hydrology for this stretch of the New River using the HEC-1 computer model (U.S. Army Corps of Engineers, 1981). Due to the uncertainty of the Paradise Freeway construction schedule, the resulting change in channel hydraulics has not been designed for in this project. If the Paradise Freeway interceptor channel is constructed and outfalls into the New River, ADOT will be responsible for evaluating the impact of the channel. If the result is an increase in discharge and hence water surface profiles, ADOT will need to upgrade the bank elevations so as to maintain the minimum freeboard requirements along the New River.

6.2 Local Drainage

6.2.1 Introduction

Under existing conditions, local runoff enters the unchannelized river at many locations through major concrete lined channels, unlined channels, storm drain pipes, and sheet flow. With this channelization project, levees will be formed at some locations along the river, resulting in a physical barrier to a free drainage outfall for land adjacent to the river. Wherever possible, the channel cross-section width was maximized so as to lower the design water surface and thus minimize the channel bank height and hence the levee situation. Where levees are shown, the use of runoff collection channels, drainage outlet structures, and backwater ponding areas is often unavoidable.

The Los Angeles District Flood Hydrograph Package (LADFHP) was used to evaluate local drainage for the final side drainage design. The Corps' model for the watershed was modified to allow closer evaluation of side drainage between Olive Avenue and Bethany Home Road.

6.2.2 Hydrologic Analysis

Based upon existing road and drainage features, in conjunction with the proposed channelization and levees, seventeen points of significant local flow concentration have been identified. Local watershed boundaries and concentration points are shown on Plate 5. The LADFHP computer model has been used to compute the 100-year hydrographs for the New River and the local drainage areas.

The LADFHP output for the 100-year event is included in Appendix Ia. The computed peak 100-year discharges indicated in the LADFHP output in Appendix Ia differ slightly from the design discharges established by the Corps, since the Corps' design discharge takes into account a potential flow diversion (approx. 2,000 cfs) from an adjacent watershed.

Additionally, ADOT has constructed a drainage interceptor channel that outlets to the New River approximately a quarter of a mile south of Northern Avenue. The effects of the ADOT outlet channel diversion are included in the hydrologic model. Not included is an evaluation of the Paradise Freeway interceptor channel that may outlet to the New River at approximately the Bethany Home Road alignment.

A hydrology report which summarizes the peak flows for the Outer Loop drainage channel outlet in the vicinity of Northern Avenue has been developed by Water Resources Associates, Inc. (WRA, 1987). Pertinent drainage discharge information from this report is included on Plate 5. Hydrology and drainage design concepts for the proposed major ADOT drainage channel in the vicinity of Bethany Home Road have been developed by WLB as detailed in a report by them (WLB, 1987). Due to the complexity and uncertainty of the drainage areas contributing to these channels, the watersheds delineated in these two reports overlap. This fact has been acknowledged and is the result of earlier decisions to provide for potential future drainage diversions. This has created a conservative design of the channels. The spillways from these channels into New River have been designed to the same conservative flows for which they were originally designed.

6.2.3 Side Drainage Analysis

The LADFHP computer model was used to compute the peak 100-year discharges for the sub-basins adjacent to the proposed New River Channel and the corresponding discharge within the New River Channel. The side drainage pipes and channels specified

in the New River Channelization Design Plans were sized for the 100-year side drainage event.

Where possible, the top of the channel has been kept below natural ground, or the ground behind the channel bank filled to the top of bank elevation. In locations where the runoff is relatively minor, it will be allowed to sheet flow over the channel bank. In instances where the natural ground behind the levee is lower than the top of bank elevation, collector channels along the land side of the levee will carry flow to a major point of concentration.

At these points the drainage will outlet into the New River through either culverts or storm drain pipes. The side drainage inflow points and collector channels are designed to accommodate the 100-year storm. Where required,. flap gates have been specified for the side drainage pipes to prevent backflow causing flooding in low lying areas. The side drainage outlet pipe computations are given in Appendix Ib.

7 Hydraulic/Sediment Transport Analyses

7.1 Purpose

Hydraulic and sediment analyses were used to develop the final channel configuration including bank alignment, bank height, toe down depths and areas of preserved nature vegetation. The HEC-2 and FLUVIAL-12 hydraulic computer models have been used to compute water surface profiles and to evaluate sediment transport characteristics of the proposed channelization. The New River study reach for the detailed hydraulic analyses extends from the confluence of the Agua Fria River and New River upstream to approximately one-half mile north of Olive Avenue.

7.2 Design Parameters

Hydraulic profiles have been computed for both the SPF and 100-year peak discharge conditions. The SPF water surface elevations and freeboard requirements have been used to determine the design top of bank elevations.

The following design parameters were used in establishing the final design channel configuration:

- Capacity for the SPF with freeboard (as defined below).
- Increase the capacity of the existing bridge structures at Glendale and Olive Avenues to convey the SPF.
- Minimize the impact of the channel improvements on major existing side drainage facilities.
- Incorporate animal ingress/egress ramps
- Include roughened, untrimmed soil cement face
- Incorporate areas of undisturbed native vegetation and areas of ponding
- Allow for reseeding and pole plantings of cottonwoods and willows
- Stands of trees not to be located within 500 feet of bridges.
- Minimize the height and extent of levee improvements by widening the channel width where feasible within existing right-of-way.
- Minimize the number of drop and grade control structures.

7.2.1 Freeboard Requirements

In the first design contract the following freeboard requirements were used:

- 2.0 feet minimum when the top of bank is below adjacent natural or fill elevations;
- 3.0 feet minimum when the top of bank is above adjacent natural or fill elevations.

The following minimum freeboard requirements were used to set top of bank elevations as designed:

- In straight portions of the channel, the freeboard requirement was set at 1 foot minimum above the SPF water surface elevation; or
- three feet above the 100-year water surface elevation and 4' above the 100-year water surface elevation near bridge, whichever is higher.
- In curved portions of the channel, the freeboard requirement for the outside bank was set at the minimum freeboard, as described above, plus additional freeboard to account for superelevated flow. The additional freeboard required for superelevated flow was computed for each curved reach using methods developed by the Corps (U.S. Army Corps of Engineers, 1970).

7.3 Hydraulic Analyses

7.3.1 Downstream Conditions

In conjunction with development plans for the Camelback Ranch project, channelization of the river and construction of levees was proposed. Under the original design contract for New River Channelization it was assumed that these levee improvements would be constructed from the confluence with the Agua Fria River, upstream to Bethany Home Road (downstream end of New River Channelization project). Economic conditions, and acquisition of the Camelback Ranch project by the Resolution Trust Corporation (RTC), have diminished the likelihood of the levee being constructed.

In order to account for the varying downstream conditions, a hydraulic analysis using the HEC-2 computer model (U.S. Army Corps of Engineers, 1991), was developed for the New River from its confluence with the Agua Fria River, upstream to Bethany Home Road. The following conditions were evaluated:

- Camelback Ranch levee in place

- Encroachment to 100-year Floodway
- Existing conditions

The water surface elevations, at the downstream project limits (Bethany Home Road approx.), were compared for each of the three scenarios (Appendix IIa). It was determined that the existing conditions model results in the highest water surface elevation and it was thus used as a basis for all subsequent upstream water surface computations.

7.3.2 Channel Design Conditions

An hydraulic analysis was conducted using the HEC-2 computer model (U.S. Army Corps of Engineers, 1991) to develop water surface profiles for the final channel configuration. All existing channel improvements by the U.S. Army Corps of Engineers and the Glendale Municipal Airport were modeled. The results of the HEC-2 analysis are included in Appendix IIb.

The proposed channel configuration was evaluated for the 10-year, 100-year, and the SPF design discharges of 13,500, 41,000, and 69,000 cfs, respectively. The computed SPF water surface elevations and specific freeboard requirements were used to establish the left and right top of bank elevations. After discussions with the Corps, the District recommended a reduced freeboard.

A major change from the original design will be the inclusion of native vegetation islands and supplemental seeding and plantings within the channel bottom. These contribute to an increase in Manning's 'n' roughness factor which was changed from 0.030 to 0.035. Areas of proposed vegetation were depicted conceptually in the District's report, *Mitigation Proposal for the New River Flood Control Project, Olive Avenue to Bethany Home Road.*

Following a detailed evaluation of the topography and existing vegetation, detailed boundary limits for vegetation preservation were identified. In general, low lying areas of the existing channel were identified as the best areas for preservation since they pose the least impact on the channel hydraulics. Following channel excavation, most of these low lying areas will appear as elevated "islands." In order to accommodate the increased channel roughness and loss of conveyance where possible, the channel banks were relocated closer to the right-of-way.

ADOT is considering the construction of an interceptor channel along the Paradise Freeway, from 27th Avenue to the New River. Due to its uncertainty, the current hydraulic models do not include a discharge from the Bethany Home ADOT channel. If ADOT proceeds with a channel, the backwater effect at Bethany Home Road may need to be re-analyzed and may have an effect on the design freeboard.

While the channel configuration has changed from the original design, the channel bed slope remains unchanged. The channel bed slope was based primarily upon the physical limitations of the existing bridge structures. Channel slopes have been maintained at a slope of approximately 0.25 percent based upon the centerline control. All flow is kept at subcritical flow conditions except at the Olive Avenue and Glendale bridges where it is necessary to allow supercritical flow conditions in order to pass the SPF under the bridges.

The "Special Bridge" option in HEC-2 has been used to model the existing bridges at Glendale and Olive Avenues, the new bridge at Northern Avenue and the future bridge at 99th Avenue. Construction of the bridges at Northern and 99th Avenues is not part of this project. Consistent with the Corps' practice, a debris loading factor of 2 feet on each side of each pier has been used.

The design plans indicate that there are three curved sections within the project. The minimum radius that is used is in the order of 1100 feet. Computations, using methods developed by the Corps (U.S. Army Corps of Engineers, 1970), indicate that with an average flow velocity of 12 to 14 feet per second, a rise in the water surface elevation due to superelevation of approximately one foot may be expected (see Appendix IId).

7.4 Sediment Transport Analysis

7.4.1 General

Based on general and local scour analyses, toe-down depths were varied for the soil cement banks on the New River Channelization Design Plans. In locations subject to high velocities and turbulence (such as along the outside of bends, downstream of drop structures, and in channel transitions), the toe-down depth has been specified as 15 to 20 feet below channel invert. Otherwise, the toe-down depth was specified as 10 feet below channel invert.

7.4.2 General Scour

The FLUVIAL-12 computer model was used to evaluate sediment transport and bed erosion characteristics of the proposed New River Channel. More specifically, the FLUVIAL-12 model was used to evaluate the general scour and deposition patterns of the proposed channel system and compute the general scour component of the total scour associated with the bends and the drop structures.

The FLUVIAL-12 data set is based on the HEC-2 geometric data set for the channel. However, the FLUVIAL-12 model also includes sediment gradation data, channel curvature data, and the SPF hydrograph. The sediment gradation information is based

on channel bottom borings. The SPF hydrograph is based on the hydrograph computed with the Corps' LADFHP hydrologic computer model.

The FLUVIAL-12 output for the SPF event is included in Appendix IIc. As indicated in the output, the computed bed changes range from minor deposition (less than one foot) to approximately four feet of scour, during a single SPF event. However, computed general scour depths greater than one foot only occur at specific locations. A summary of the computed general scour depth is given in Table 1.

Table 1: Summary of Computed Local & General Scour

Sta.	Feature	General Scour (ft)	Local Scour (ft)	Total Scour (ft)
53.0-60.0	Curve r = 3914'	1.5	0.2'	2
99.54	Drop Structure	2	15.0'	*17
91.0-99.60	Curve r = 1125'	2	3.9'	6
114.00-120.00	Curve r = 1079'	3	5.4'	8
147.00-158.00	Curve r = 1710'	4	2.6'	7
193.00-203.00	Curve r = 3557'	.5	0.5'	1
258.66	Drop Structure	3	16.0'	*19

* The computed scour depth is conservative since the erosion protection provided by the rip-rap placed at the drop structures is not accounted for in the General or Local scour computations

7.4.3 Local Scour

In addition to the general scour analysis using FLUVIAL 12, local scour depths were computed for bend scour, scour downstream of the two drop structures, and scour at the ADOT outlet channel. Local scour depths were computed using the HEC-2 water surface profile for the SPF and the following equations.

Bend Scour (ADWR, March 1985):

$$D_{BS} = \frac{0.685Y\ V^{.8}}{Yh^{0.4}\ Se^{0.3}} \left[2.1 \left(\frac{W}{4r_c}\right)^{0.2} - 1\right] \qquad \text{Eq. (1)}$$

Scour @ Drop Structures (Bureau of Reclamation, 1987):

$$Dg = (1.32\ H^{0.225}\ q^{0.54}) - Tw \qquad \text{Eq. (2)}$$

Where:

D_{BS} = Bend Scour Depth (ft)

Y = Max. Depth of upstream flow (ft)
Yh = Hydraulic Depth (ft)
Se = Upstream energy slope (ft/ft)
(Approximated with slope of the HGL)
W = Topwidth (ft)
r_c = radius of curvature along centerline (ft)
H = change in energy gradient elev. (ft)
Dg = local scour downstream of Drop Structure (ft)
q = Unit Discharge (cfs/ft)
Tw = Downstream Flow Depth (ft)

The results of the local scour analysis are summarized in Table 1. The completed local scour computations are given in Appendix IId.

7.5 Conclusions

The HEC-2 and FLUVIAL-12 hydraulic computer models were used to design and evaluate the proposed New River Channel. The HEC-2 computer model was used to compute water surface profiles and to establish top of bank elevations. The FLUVIAL-12 model was used to compute bed elevation changes during an SPF event and to establish toe-down depths for the soil cement banks. The results of the hydraulic analyses indicate that the proposed New River Channel can convey the SPF event and provide the required freeboard.

8 Structures

8.1 General

The following structures are within the project limits; (1) existing bridge crossings at Olive and Glendale Avenues, (2) new bridge construction at Northern Avenue, (3) a dip crossing at 99th Avenue, (4) the SRP Grand Canal Drain, and (5) existing and future ADOT drainage channels. Improvements associated with these structures have been coordinated with the appropriate agencies.

8.2 Olive Avenue Bridge

In the original design contract, CVL reviewed the hydraulic capacity of the existing Olive Avenue bridge and determined it was inadequate. The original design by the Corps was based upon the SPF discharge being allowed to overtop the channel banks and flow across Olive Avenue. After review of the hydraulics by CVL, it was determined that by increasing the soil cement bank protection toe down and construction of a grade control and drop structure, it would be possible to safely convey the SPF discharge through Olive Avenue bridge with no modifications to the structure. Based upon this analysis, the Corps increased the bank protection toe down, thereby allowing for additional excavation as a part of the New River Channelization project.

With channel capacity increased upstream due to the proposed channel excavation as proposed in the Design Plans, flow velocities will be significantly increased through the bridge. To accommodate the increased flow velocities and resultant erosion potential, a combination grade control and drop structure will be used. This structure, constructed from reinforced concrete, will control upstream channel degradation while eliminating the scour potential around the piers. The reduced bed roughness and transition from tranquil to rapid flow will help the bridge to be more hydraulically efficient. As a result, bridge lengthening will not be necessary, and widening of the existing traffic lanes is not anticipated at this time.

8.3 99th Avenue Crossing

Presently, 99th Avenue crosses the New River channel through a dip crossing. The City of Peoria contracted with Burgess and Niple Engineers to prepare construction plans for a bridge at 99th Avenue. Partial construction of the bridge approach embankments and storm drainage facilities is included as part of the New River project bid set. Before excavation for channelization occurs, 99th Avenue will be temporarily relocated to the east of the river. This new roadway, referred to as 99th Avenue realigned, will remain in service following completion of the 99th Avenue Bridge.

8.4 Glendale Avenue Bridge

Glendale Avenue presently crosses the New River over a bridge with two lanes in each direction. The City of Glendale contracted with Sverdrup Corporation to perform a traffic study and structural evaluation of the existing bridge structure. The proposed channel bed changes and bed protection plans were furnished to Sverdrup. In their report, Sverdrup concluded that the existing bridge has adequate traffic capacity. However, they recommended the jacking up of one of the bridge beams, due to the subsidence of the bridge piers, this work has been completed.

The Glendale Avenue bridge opening is wider than the Olive Avenue bridge and does not present the same hydraulic problems. No change in bed profile upstream of the bridge is necessary. In the original design, the existing footings were found to be shallow and would have been nearly exposed following channel excavation. For this reason, a reinforced concrete slab with toe-down was designed to protect the bed from further degradation. The Corps has constructed this concrete bed protection, along with a concrete grade control structure immediately downstream of the bridge.

8.5 Northern Avenue Crossing

Northern Avenue used to cross the New River through a dip crossing, protected from scour with concrete cutoff walls and nuisance flows handled through 2-24 inch pipes located on either side of the main channel. BRW Engineers and Planners has completed design plans to replace the dip crossing with a new bridge structure. Utility relocation has been completed and construction of the bridge is nearing completion. Included with their design plans, are soil cement banks through the bridge and upstream and downstream. The soil cement banks designed by CVL will tie into the bridge plan banks approximately 150 feet upstream and downstream of the Northern Avenue centerline.

8.6 Existing and Future ADOT Channels

The existing ADOT channel is located south of Northern Avenue at Station 144+65. The configuration of the proposed confluence of the proposed New River Channel and the existing ADOT channel has been coordinated with ADOT. The future ADOT channel confluence with the New River may be located just north of Bethany Home Road at Station 42+72. Since the east channel bank terminates just north of this, it will not interfere with future ADOT plans.

8.7 SRP Grand Canal Drain

Currently, the Grand Canal outlets to the New River north of Bethany Home Road. The proposed channelization includes bank improvements to the existing canal to approximately 820 feet upstream of the outlet, and construction of a 12' x 10' concrete box culvert to allow the drain to outlet through the soil cement bank. In the previous design, the Grand Drain was

shown to outlet at Sta 71+10. In order to simplify design, reduce construction costs and minimize right-of-way needs, the location of this outlet has been moved to Sta 78+48.22. The revised outlet location confines the Grand Drain to SRP's existing right-of-way. This change was possible due to a lowering of the channel freeboard requirement.

9 Design Constraints

9.1 Upstream Improvements

The upstream limit of bank stabilization for this project is Olive Avenue, channel excavation will continue approximately one half mile further upstream. The Corps' bank protection project for the New River extends from Olive Avenue upstream to the confluence of the Skunk Creek and the ACDC.

In order to pass the SPF underneath the Olive Avenue bridge, some channel excavation and a combination grade control and drop structure are required. From the hydraulic analysis performed under Contract No. 88-05, it was found that channel excavation between the Corps' designed soil cement bank stabilization and raising of the east bank would be necessary in order to contain the SPF. The required channel lowering would have resulted in a substantial decrease in the soil cement lining toe down in some places. As a result, design changes to increase the depth of soil cement toe down and increase the height of the east bank were submitted to the Corps by the District for their inclusion in the construction contract.

9.2 Downstream Improvements

Glendale Airport is located on the west bank of the New River between the confluence with the Agua Fria River and south of Glendale Avenue. Bank protection,in the form of gabion baskets, and some channel excavation has been provided along the west bank of the New River. Following completion of the New River channelization, this channel will be capable of handling the SPF with approximately 2.5 feet of freeboard.

The west bank of the New River soil cement bank protection will meet the existing gabion bank at the Glendale Airport. On the east bank, this project will terminate north of the Bethany Home Road alignment. At this time, plans for the construction of the Camelback Ranch levee have been abandoned. From this point south, flow will continue in a manner similar to that depicted on the FIRMs.

9.3 Maintenance Vehicle Access

In order to allow maintenance vehicles to access the new channel, a fifteen foot wide road will run continuously along the top of the bank. Vehicle access to the channel flowline is provided by ramps generally located at one half mile intervals on alternate sides of the east and west bank. The vehicle access road will have an aggregate base coarse on the east bank only. Each ramp is located approximately one quarter of a mile from the nearest major street.

9.4 Landscape/Recreational Uses

Plans developed by the Corps indicate that horse trails are proposed along the length of the New River. Future plans by the District may include the provision of park facilities to enhance the use of the New River as a linear park.

9.5 Fencing

Since it is planned that public access will be provided to the New River channel and banks, public safety is of importance. Fencing of the entire channel right-of-way is not planned. However, to protect the public, a pedestrian handrail is provided along the entire length of the channel banks and along the maintenance vehicle access ramps. To prevent direct public vehicle access to the channel from adjacent roads, gates have been provided at each major road crossing and at the access ramps.

9.6 Mitigation Measures

In conjunction with the 404 permit, several mitigation measures have been incorporated into the design. Among these are:

- Leave natural areas, including natural vegetation, within the bottom of the channel.
- Provide low ponding areas.
- Provide revegetation within the disturbed areas of channelization.
- Provide animal ramps at 500 feet intervals on alternating sides of the channel.
- Leave the soil cement face untrimmed to provide better animal access.
- Provide offsite habitat mitigation sites.

10 References

10.1 Bibliography

Arizona Department of Water Resources (ADWR), *Design Manual for Engineering Analysis of Fluvial Systems*, prepared by Simons, Li and Associates, Inc. Project AZDWR-05, March 1985.

Bureau of Reclamation, Design of Small Dams, U.S. Department of Interior, 1987.

Camp Dresser & McKee Inc., and James M. Montgomery, Consulting Engineers, Inc., *Glendale-Peoria Area Drainage Master Plan* & "Addendum to ...," Prepared for: Flood Control District of Maricopa County, May 1987.

Chang, Howard H., Ph.D, P.E., *Fluvial-12, Mathematical Model for Erodible Channels*, August, 1986.

Coe & Van Loo Consulting Engineers, Inc., *Design Report Supplement I, New River Channelization, Bethany Home Road to Olive Avenue for Submittal to the Arizona Department of Environment Quality*, Prepared for: Flood Control District of Maricopa County, February 1989.

Coe & Van Loo Consulting Engineers, Inc., *Design Report for the New River Channelization Bethany Home Road to Olive Avenue*, Prepared for: Flood Control District of Maricopa County, March, 1989.

Coe & Van Loo Consulting Engineers, Inc. *Alternative Investigation for the New River Flood Control Project, Bethany Home Road to Olive Avenue*, Prepared for: Flood Control District of Maricopa County, February, 1989.

Flood Control District of Maricopa County, *New River, Skunk Creek, Agua Fria River Flood Control Master Plan*, Draft, May, 1983.

Flood Control District of Maricopa County, *Mitigation Proposal for the New River Flood Control Project, Olive Avenue to Bethany Home Road*, May 1990.

Greiner Engineering Sciences, Inc., *Concept Drainage Design Report from Bell Road to Skunk Creek*, Prepared for: DeLeuw Cather and Company, Outer Loop Management Consultants, and Arizona Department of Transportation, September, 1987.

Simons, Li & Associates, Inc. *Final Sediment Transport Report for the New River and Skunk Creek* Prepared for: U.S. Army Corps of Engineers, Los Angeles District, January, 1985.

U.S. Department of Agriculture, Soil Conservation Service, *TR-20 Computer Program for Project Formulation-Hydrology*, May, 1982.

U.S. Army Corps of Engineers, Hydrologic Engineering Center, *HEC-1 Flood Hydrograph Package*, September, 1981.

U.S. Army Corps of Engineers, Los Angeles District, *Design Memorandum No. 3, Skunk Creek and the New and Agua Fria Rivers*, Pinal, May, 1986.

U.S. Army Corps of Engineers, Office of the Chief of Engineers, *Hydraulic Design of Flood Control Channels*, July 1970.

U.S. National Research Council, Washington, D.C., *A Levee Policy for the National Flood Insurance Program*, Prepared for: Federal Emergency Management Agency, Washington, D.C., U.S. Department of Commerce, NTIS, October, 1982.

U.S. Army Corps of Engineers, Los Angeles District, *New River and Phoenix City Streams Arizona, Design Memorandum No. 2, Hydrology Part 1*, October, 1974

U.S. Army Corps of Engineers, Hydrologic Engineering Center, *HEC-2 Water Surface Profiles*, Users Manual, September, 1990, Computer Program, May 1991.

U.S. Army Corps of Engineers, Los Angeles District, Design Memorandum No. 12, *Arizona Canal Diversion Channel*, Final, April, 1986.

U.S. Army Corps of Engineers, Los Angeles District, *New River and Phoenix City Streams Arizona, Design Memorandum No. 2, Hydrology Part 2*, April, 1982.

U.S. Army Corps of Engineers, Los Angeles District *Los Angeles District Flood Hydrograph Package*, November, 1981.

U.S. Army Corps of Engineers, Los Angeles District, *New River and Phoenix City Streams, Arizona, Design Memorandum No. 3, Skunk Creek and the New and Agua Rivers*, Draft July, 1985.

Water Resources Associates, Inc., *Outer Loop Drainage Study* Prepared for: Deleuw Cather and Company, Outer Loop Management Consultants and Arizona Department of Transportation, January 15, 1986.

Western Technologies Inc., *New River Channelization - Bethany Home Road to Olive Avenue*, prepared for Coe & Van Loo, Job No. 2128J068, Nov. 9, 1988.

Western Technologies Inc., *Evaluation of Landfills for the New River Project*, prepared for Coe & Van Loo and the Flood Control District of Maricopa County, Job No. 2178J440, Feb., 1989.

Willden Associates, *New River, Skunk Creek, Agua Fria River Flood Control Plan*, Prepared for: Flood Control District of Maricopa County, Draft, December, 1981.

WLB Group, Inc., *Offsite Drainage Concept Study Part A & B, Outer Loop Highway*, Revised December 10, 1987.

10.2 Plan References

BRW, Inc., *Northern Avenue Bridge Over the New River*, prepared for Flood Control District of Maricopa County, approved 6/17/91.

Burgess & Niple, Engineers & Architects, *99th Ave., Northern-Olive*, M-500-0(3)P, prepared for Arizona Dept. of Transportation, update 6/25/91.

Glendale, City of, *Glendale Municipal Airport*, prepared by Bucher Willis & Ratliff and Z & H Engineering, Inc. 12/22/84.

Glendale , City of, *Public Works-Engineering*, 3/25/85.

Glendale, City of, *Airport Sewage Lift Station and Force Main*, prepared by Malcolm Pirnie, Inc. 12/8/86.

Glendale, City of, *Engineering Department Water & Sewer Quarter-Section Map*, received 3/88.

Maricopa County, Flood Control District, *New River Improvements-Utility Relocations, Olive Ave. to Grand Ave.*, prepared by NBS/Lowry Engineers & Planners 11/13/87.

Maricopa County Highway Department, *99th Avenue: Northern Ave. to Olive Ave.*

Maricopa County Highway Department, *Northern Avenue: 107th Ave. to 99th Ave.*

Maricopa County Highway Department, *Glendale Avenue Bridge at New River*, prepared by Hoffman-Miller Engineers, 4/15/58.

Maricopa County Highway Department, *Northern Avenue-99th Ave. to 83rd Ave.*, 4/26/61.

Maricopa County Highway Department, *Plan and Profile of Proposed County Highway*, Olive Ave. Bridge and New River, Prepared by Earle V. Miller Engineers, 5/15/75.

Maricopa County Highway Department, *Plan and Profile of Proposed County Highway* Flood Damage Repair at Northern Avenue, 8/2/82.

Maricopa County Highway Department, *Olive Avenue Improvements* being prepared by Boyle Engineering Corp.

Peoria, City of, *Northern Ave. and New River-Sewer and Pump Back Plan* 2/10/82.

Peoria, City of, *City of Peoria Water Distribution System Improvements* prepared by Lowry and Associates Consulting Engineers, 1/18/84.

Peoria, City of, *City of Peoria Water Distribution System Improvements* prepared by NBS/Lowry Engineers and Planners 4/8/87.

Republic Cable TV/Camelback Cable T.V., Inc., Quartersection Maps, 8/25/80.
U.S. Army District, Corps of Engineers, Los Angeles, *New River Improvements-Grand Avenue to Olive Avenue*, 3/10/88.

Van Loo and Patel Consulting Engineers, Inc., *Water and Sewer Plans for Glen Harbor Air Business Park*, 4/86.

Van Loo and Patel Consulting Engineers, Inc, *Grading and Drainage Plans for Glen Harbor Air Business Park*, 7/21/86.

APPENDICES:

HYDROLOGY AND SIDE DRAINAGE ANALYSES

HYDRAULIC ANALYSES

APPENDIX I: HYDROLOGY AND SIDE DRAINAGE ANALYSES

a. LADFHP MODEL

```
****************************************
*                                      *
*        LOS ANGELES DISTRICT          *
*    HYDROLOGIC ENGINEERING SECTION    *
*  FLOOD HYDROGRAPH PACKAGE (LADFHP)   *
*         REVISED 14 APR 83            *
*   DATE MON, 21 NOV 1988     11:08:00 *
*                                      *
****************************************
```

```
****************************************
*                                      *
*     U.S. ARMY CORPS OF ENGINEERS     *
*        LOS ANGELES DISTRICT          *
*     300 NORTH LOS ANGELES STREET     *
*        LOS ANGELES,CA 90012          *
*   213-688-4753 OR (FTS) 798-4753     *
*                                      *
****************************************
```

```
X          X      XXXXXX    XXXXXXX   X     X   XXXXXX
X         X X     X     X   X         X     X   X     X
X        X   X    X     X   X         X     X   X     X
X       XXXXXXX   X     X   XXXX      XXXXXXX   XXXXXX
X       X     X   X     X   X         X     X   X
X       X     X   X     X   X         X     X   X
XXXXXXX X     X   XXXXXX    X         X     X   X
```

INPUT FILE = OUTPUT FILE =

WARNING --- 13 APR 83
THIS OUTPUT IS FROM A REVISED VERSION OF LADFHP.
LADFHP WAS REVISED TO REMOVE A FEW BUGS AND TO ADD
MORE AND BETTER ERROR MESSAGES. PLEASE REVIEW THIS
PRINTOUT CAREFULLY TO DETECT BOTH OBVIOUS AND HIDDEN
ERRORS. USE THIS PRINTOUT WITH CAUTION. NOTIFY
RICK LEIFIELD IF YOU FIND ANYTHING QUESTIONABLE.
SEE RICK LEIFIELD TO RUN THE OLDER VERSION OF LADFHP.

4 JUN 85 --- THE OPTION OF COMPUTING AN AVERAGE VALUE
UNIT HYDROGRAPH IS NO LONGER AVAILABLE.
ONLY END-OF-PERIOD UNIT GRAPHS ARE DERIVED.

```
A      NEW RIVER DOWNSTREAM SKUNK CREEK                    11-88
A      100-YR  FLOOD AT CP 1029 & 1039 (NR100D1)
A      FUTURE CONDITIONS WITH PROJECT(100-YR ACDC, NEW R. DAM, ADOBE DAM)
```

LADFHP - 100 YR EVENT (FUT-NR100D2.OUT)

Oxford Oxford Oxford Oxford Oxford

LADFHP INPUT

```
LINE          0......1.......2.......3.......4.......5.......6.......7.......8.......9......10
   1          A      NEW RIVER DOWNSTREAM SKUNK CREEK                    11-88
   2          A      100-YR  FLOOD AT CP 1029 & 1039 (NR100D1)
   3          A      FUTURE CONDITIONS WITH PROJECT(100-YR ACDC, NEW R. DAM, ADOBE DAM)
   4          B              5       1      10       2       1                       1
   5          B    101              .45                                   25
   6          C   4.91    3.95    1.87     222    .025      15
   7          F   99.5    4.98                    3.9
   8          H     40                    .38             1.00    2.00
   9          J      5       5       1     102
  10          J  .0833     .40
  11          B              5       1               2       1                       1
  12          B    102              .45               2                   25
  13          C   1.38    1.94    0.97     227    .028      15
  14          H     40                    .38             1.00    2.00
  15          J      5       5       2     103
  16          J  .0833     .40
  17          B              5       1               2       1                       1
  18          B    103              .45               2                   25
  19          C   1.37    1.19    0.45     298    .025      15
  20          H     45                    .38             1.00    2.00
  21          J      5       5       2     104
  22          J  .0833     .40
  23          B              5       1               2       1                       1
  24          B    104              .45               2                   25
  25          C   1.10    2.20    1.14     390    .030      15
  26          H     35                    .38             1.00    2.00
  27          J      5       5       1     105
  28          J  .0833     .40
  29          B              5       1               2       1                       1
  30          B    105              .45               2                   25
  31          C   1.18    2.24    0.91     393    .030      15
  32          H     35                    .38             1.00    2.00
  33          J      5       5       1     107
  34          J  .0833     .40
  35          B              5       1               2       1                       1
  36          B    107              .45               2                   25
  37          C   1.82    2.35    1.06     110    .030      15
  38          H     40                    .38             1.00    2.00
  39          J      5       5       1     108
  40          J  .0833     .40
  41          B              5       1               2       1                       1
  42          B    108              .45               2                   25
  43          C   2.74    3.28    1.49      80    .025      15
  44          H     50                    .38             1.00    2.00
  45          J      5       5       4     109
  46          J  .0833     .35
  47          B              5       1               2       1                       1
  48          B    109              .45               2                   25
  49          C   5.22    2.24    0.75     163    .025      15
  50          H     50                    .38             1.00    2.00
  51          J     15      15       1    1016
  52          J    .25     .35
  53          B             15       1      10       2       1                       1
  54          B   1010              .45              -1                   25
  55          C   4.51     4.0     1.6      48    .029      15
  56          F   99.5    4.98                    3.9
  57          H      5                    .38             1.00    2.00
  58          B             15       1               2       1                       1
  59          B   1011              .45               2                   25
```

Oxford

Oxford

Oxford

Oxford

Oxford

60	C	9.49	1.44	0.8	69	.030	15				
61	H	5			.38		1.00	2.00			
62	J	15	15	3	1013						
63	J	.25	.25		.006						
64	B		15	1		2	1			1	
65	B	1013		.45		-1		25			
66	C	12.98	7.4	3.6	34	.022	15				
67	H	45			.38		1.00	2.00			
68	B		15	1		2	1			1	
69	B	1013		.45		3		25			
70	C	3.09	5.0	2.64	34	.030	15				
71	H	40			.38		1.00	2.00			
72	J	15	15	2	1015						
73	J	.25	.30		.006						
74	B		15	1		2	1			1	
75	B	1015		.45		-1		25			
76	C	6.78	4.2	2.40	74	.028	15				
77	H	40			.38		1.00	2.00			
78	B		15	1		2	1			1	
79	B	1015		.45		3		25			
80	C	1.4	2.2	1.4	29	.030	15				
81	H	40			.38		1.00	2.00			
82	J	15	15	2	1016						
83	J	.25	.30		.006						
84	B		15	1		2	1			1	
85	B	1016		.45		3		25			
86	C	1.1	2.6	1.6	29	.025	15				
87	H	40			.38		1.00	2.00			
88	J	15	15	1	1018						
89	J	.25	.30								
90	B		15	-1		2	1			1	
91	B	1017		.45				25			
92	D	6									
93	2	1457	1381	1368	1065	678	497				
94	H	45			.38		1.00	2.00			
95	J	15	15	9	1018						
96	J	.25	0								
97	B		15	-1		2	1			1	
98	B	1018		.45		3		25			
99	D	12									
100	2	1175	1038	884	749	607	458	413	355	187	97
101	H	45			.38		1.00	2.00			
102	J	15	15	2	1019						
103	J	.25	.25								
104	B		15	-1		2	1			1	
105	B	1019		.45		2		30			
106	D	12									
107	2	1129	1065	1026	1007	987	955	903	729	620	516
108	2	413	284								
109	H	45			.38		1.00	2.00			
110	J	15	15	1	1022						
111	J	.25	.25								
112	B		15	1		2	1			1	
113	B	1020		.45				25			
114	C	6.3	3.6	1.7	33	.020	15				
115	H	40			.38		1.00	2.00			
116	J	15	15	2	1021						
117	J	.25	.30								
118	B		15	1		2	1			1	
119	B	1021		.45		2					
120	C	3.1	3.4	1.8	29	.020	15				
121	H	40			.38		1.00	2.00			
122	J	15	15	3	1022						
123	J	.25	.30								
124	B		15	1		2	1			1	
125	B	1022		.45		3		25			

Oxford

Oxford

Oxford

Oxford

Oxford

126	C	3.5	5.0	2.8	86	.020	15			
127	H	40			.38		1.00	2.00		
128	J	15	15	1	1026					
129	J	.25	.30							
130	B		15	1	10	2	1		1	
131	B	1023		.45				25		
132	C	2.34	2.8	1.3	57	.025	15			
133	F	139	4.31			4.15				
134	H	35			.38		1.00	2.00		
135	J	15	15	4	1024					
136	J	.25	.020							
137	B		15	1		2	1		1	
138	B	1024		.45		2		25		
139	C	1.4	3.5	1.8	89	.035	16			
140	H	10			.38		1.00	2.00		
141	J	15	15	3	1026					
142	J	.25	.30							
143	B		15	1		2	1		1	
144	B	1025		.45				25		
145	C	10.30	5.9	3.4	44	.023	15			
146	H	45			.38		1.00	2.00		
147	J	15	15	1	1026					
148	J	.25	.30							
149	B		15	1		2	1		1	
150	B	1026		.45		4		25		
151	C	11.68	6.0	3.6	40	.020	15			
152	H	45			.38		1.00	2.00		
153	J	15	15	1	50					
154	J	.25	.20							
155	B		15	1		2	1		1	
156	B	50		.45		2		25		
157	C	29.40	10.8	5.5	25	.025	15			
158	H	30			.38		1.00	2.00		
159	J	15	15	1	01					
160	J	.25	.20							
161	B		15	1		2	1		1	
162	B	01		.45		2		25		
163	C	.28	1.5	0.6	8	.035	15			
164	H	15			.38		1.00	2.00		
165	J	15	15	1	02					
166	J	.25	.20							
167	B		15	1		2	1		1	
168	B	02		.45		2		25		
169	C	3.56	4.0	1.9	15	.030	15			
170	H	20			.38		1.00	2.00		
171	J	15	15	1	03					
172	J	.25	.20							
173	B		15	1		2	1		1	
174	B	03		.45		2		25		
175	C	0.08	0.4	0.2	13	.040	15			
176	H	0			.38		1.00	2.00		
177	J	15	15	1	04					
178	J	.25	.20							
179	B		15	1		2	1		1	
180	B	04		.45		2		25		
181	C	0.10	0.5	0.3	20	.040	15			
182	H	0			.38		1.00	2.00		
183	J	15	15	1	05					
184	J	.25	.20							
185	B		15	1		2	1		1	
186	B	05		.45		2		25		
187	C	0.08	0.4	0.2	25	.025	15			
188	H	55			.38		1.00	2.00		
189	J	15	15	1	06					
190	J	.25	.20							
191	B		15	1		2	1		1	

Oxford

Oxford

Oxford

Oxford

Oxford

192	B	06		.45		2		25		
193	C	0.06	0.4	0.2	25	.025	15			
194	H	55			.38		1.00	2.00		
195	J	15	15	1	07					
196	J	.25	.20							
197	B		15	1		2	1		1	
198	B	07		.45		2		25		
199	C	0.58	1.2	0.6	30	.015	15			
200	H	45			.38		1.00	2.00		
201	J	15	15	1	08					
202	J	.25	.20							
203	B		15	1		2	1		1	
204	B	08		.45		2		25		
205	C	0.62	1.8	1.0	16	.050	15			
206	H	15			.38		1.00	2.00		
207	J	15	15	1	09					
208	J	.25	.20							
209	B		15	1		2	1		1	
210	B	09		.45		2		25		
211	C	0.04	0.2	0.1	35	.015	15			
212	H	20			.38		1.00	2.00		
213	J	15	15	1	18					
214	J	.25	.20							
215	B		15	1		2	1		1	
216	B	18		.45		2		25		
217	C	9.75	3.8	2.5	15	.025	15			
218	H	45			.38		1.00	2.00		
219	J	15	15	1	10					
220	J	.25	.20							
221	B		15	1		2	1		1	
222	B	10		.45		2		25		
223	C	0.10	0.5	0.3	20	.040	15			
224	H	0			.38		1.00	2.00		
225	J	15	15	1	11					
226	J	.25	.20							
227	B		15	1		2	1		1	
228	B	11		.45		2		25		
229	C	0.29	0.9	0.4	35	.015	15			
230	H	95			.38		1.00	2.00		
231	J	15	15	1	12					
232	J	.25	.20							
233	B		15	1		2	1		1	
234	B	12		.45		2		25		
235	C	0.03	0.3	0.01	35	.015	15			
236	H	80			.38		1.00	2.00		
237	J	15	15	1	13					
238	J	.25	.20							
239	B		15	1		2	1		1	
240	B	13		.45		2		25		
241	C	0.27	0.7	0.3	23	.020	15			
242	H	50			.38		1.00	2.00		
243	J	15	15	1	14					
244	J	.25	.20							
245	B		15	1		2	1		1	
246	B	14		.45		2		25		
247	C	0.19	0.6	0.3	15	.015	15			
248	H	90			.38		1.00	2.00		
249	J	15	15	1	15					
250	J	.25	.20							
251	B		15	1		2	1		1	
252	B	15		.45		2		25		
253	C	0.10	0.6	0.3	25	.030	15			
254	H	34			.38		1.00	2.00		
255	J	15	15	1	16					
256	J	.25	.20							
257	B		15	1		2	1		1	

Oxford

Oxford

Oxford

Oxford

Oxford

258	B	16		.45		2		25	
259	C	0.53	1.2	0.6	15	.045	15		
260	H	2			.38		1.00	2.00	
261	J	15	15	1	17				
262	J	.25	.20						
263	B		15	1		2	1		2
264	B	17		.45		2		25	
265	C	0.26	0.9	0.5	15	.040	15		
266	H	0			.38		1.00	2.00	
267	J	15	15	1	1039				
268	J	.25	.20						
269	A								
270	A								
271	A								
272	A								

Oxford Oxford Oxford Oxford Oxford

RUNOFF SUMMARY, AVERAGE CFS

		PEAK	6-HOUR	24-HOUR	72-HOUR	CFS-PERIOD	ACRE-FEET
HYDROGRAPH AT	101	3798.	845.	218.	209.***	62643.	431.
ROUTED TO	102	3781.	845.	218.	209.***	62645.	431.
HYDROGRAPH AT	102	1176.	238.	61.	59.***	17606.	121.
2 COMBINED AT	102	4781.	1082.	279.	268.***	80251.	553.
ROUTED TO	103	4736.	1082.	279.	268.***	80257.	553.
HYDROGRAPH AT	103	1243.	243.	63.	60.***	18002.	124.
2 COMBINED AT	103	5221.	1322.	341.	328.***	98260.	677.
ROUTED TO	104	5182.	1322.	341.	328.***	98276.	677.
HYDROGRAPH AT	104	914.	184.	47.	45.***	13614.	94.
2 COMBINED AT	104	5642.	1505.	389.	373.***	111890.	771.
ROUTED TO	105	5634.	1505.	389.	373.***	111898.	771.
HYDROGRAPH AT	105	1000.	198.	51.	49.***	14604.	101.
2 COMBINED AT	105	6136.	1702.	439.	422.***	126502.	871.
ROUTED TO	107	6122.	1701.	439.	422.***	126512.	871.
HYDROGRAPH AT	107	1443.	313.	81.	77.***	23220.	160.
2 COMBINED AT	107	7247.	2013.	520.	499.***	149732.	1031.
ROUTED TO	108	7225.	2013.	520.	499.***	149742.	1031.
HYDROGRAPH AT	108	2123.	498.	129.	124.***	37057.	255.
2 COMBINED AT	108	9048.	2508.	649.	623.***	186799.	1286.
ROUTED TO	109	8900.	2507.	649.	623.***	186845.	1287.
HYDROGRAPH AT	109	4557.	950.	245.	235.***	70586.	486.
2 COMBINED AT	109	10203.	3437.	894.	858.***	257431.	1773.
ROUTED TO	1016	9890.	3435.	895.	859.***	85891.	1775.
HYDROGRAPH AT	1011	2774.	627.	158.	151.***	15146.	313.
HYDROGRAPH AT	1011	383.	68.	17.	16.***	1644.	34.
2 COMBINED AT	1011	3107.	695.	175.	168.***	16790.	347.
ROUTED TO	1013	2631.	690.	174.	167.***	16693.	345.
HYDROGRAPH AT	1013	7423.	2276.	592.	568.***	56830.	1174.
HYDROGRAPH AT	1013	1735.	527.	137.	131.***	13135.	271.
3 COMBINED AT	1013	11407.	3487.	903.	867.***	86659.	1790.
ROUTED TO	1015	10650.	3459.	898.	862.***	86167.	1780.
HYDROGRAPH AT	1015	4354.	1162.	300.	288.***	28820.	595.
HYDROGRAPH AT	1015	989.	241.	62.	60.***	5951.	123.
3 COMBINED AT	1015	12821.	4833.	1260.	1209.***	120939.	2499.
ROUTED TO	1016	12380.	4797.	1253.	1203.***	120267.	2485.
HYDROGRAPH AT	1016	796.	189.	49.	47.***	4676.	97.
3 COMBINED AT	1016	20655.	8363.	2196.	2108.***	210834.	4356.
ROUTED TO	1018	20367.	8356.	2197.	2109.***	210938.	4358.
HYDROGRAPH AT	1017	5803.	1759.	456.	438.***	43756.	904.
ROUTED TO	1018	3846.	1717.	462.	443.***	44323.	916.
HYDROGRAPH AT	1018	4309.	1611.	422.	405.***	40477.	836.
3 COMBINED AT	1018	24956.	11540.	3081.	2957.***	295738.	6110.
ROUTED TO	1019	24284.	11518.	3085.	2962.***	296173.	6119.
HYDROGRAPH AT	1019	4356.	1776.	471.	377.***	45208.	934.
2 COMBINED AT	1019	26094.	13226.	3556.	2850.***	341940.	7065.
ROUTED TO	1022	25779.	13214.	3559.	2852.***	342209.	7070.
HYDROGRAPH AT	1020	4662.	1083.	279.	268.***	26780.	553.
ROUTED TO	1021	4134.	1081.	279.	268.***	26819.	554.
HYDROGRAPH AT	1021	2284.	533.	137.	132.***	13174.	272.
2 COMBINED AT	1021	5655.	1611.	417.	400.***	39993.	826.
ROUTED TO	1022	5138.	1606.	417.	401.***	40078.	828.
HYDROGRAPH AT	1022	2509.	602.	155.	149.***	14878.	307.
3 COMBINED AT	1022	28883.	15324.	4131.	3966.***	396606.	8194.
ROUTED TO	1026	28671.	15312.	4134.	3969.***	396911.	8201.
HYDROGRAPH AT	1023	1390.	324.	83.	80.***	7988.	165.
ROUTED TO	1024	965.	320.	83.	80.***	8015.	166.
HYDROGRAPH AT	1024	595.	160.	41.	39.***	3923.	81.
2 COMBINED AT	1024	1334.	481.	124.	119.***	11939.	247.
ROUTED TO	1026	1267.	480.	125.	120.***	11960.	247.
HYDROGRAPH AT	1025	5113.	1509.	393.	377.***	37682.	779.
ROUTED TO	[illegible]	[illegible]	[illegible]	[illegible]	[illegible]	[illegible]	[illegible]

Oxford

Oxford

Oxford

Oxford

Oxford

ROUTED TO	1026	4928.	1597.	595.	577.***	57693.	779.
HYDROGRAPH AT	1026	6026.	1713.	445.	427.***	42731.	883.
4 COMBINED AT	1026	31955.	18750.	5097.	4893.***	489295.	10109.
ROUTED TO	50	31773.	18730.	5100.	4896.***	489632.	10116.
HYDROGRAPH AT	50	10333.	3839.	1008.	968.***	96772.	1999.
2 COMBINED AT	50	39579.	22486.	6108.	5864.***	586404.	12116.
ROUTED TO	1	39245.	22460.	6112.	5867.***	586749.	12123.
HYDROGRAPH AT	1	155.	34.	9.	8.***	819.	17.
2 COMBINED AT	1	39255.	22492.	6120.	5876.***	587568.	12140.
ROUTED TO	2	38915.	22465.	6124.	5879.***	587913.	12147.
HYDROGRAPH AT	2	1570.	441.	113.	108.***	10847.	224.
2 COMBINED AT	2	39185.	22881.	6237.	5988.***	598760.	12371.
ROUTED TO	3	38859.	22852.	6241.	5991.***	599106.	12378.
HYDROGRAPH AT	3	51.	9.	2.	2.***	205.	4.
2 COMBINED AT	3	38859.	22859.	6243.	5993.***	599310.	12382.
ROUTED TO	4	38532.	22829.	6246.	5997.***	599656.	12390.
HYDROGRAPH AT	4	63.	11.	3.	3.***	255.	5.
2 COMBINED AT	4	38532.	22836.	6249.	5999.***	599911.	12395.
ROUTED TO	5	38242.	22805.	6253.	6003.***	600257.	12402.
HYDROGRAPH AT	5	57.	13.	3.	3.***	312.	6.
2 COMBINED AT	5	38242.	22809.	6256.	6006.***	600569.	12408.
ROUTED TO	6	37974.	22777.	6260.	6009.***	600918.	12416.
HYDROGRAPH AT	6	43.	9.	2.	2.***	234.	5.
2 COMBINED AT	6	37974.	22779.	6262.	6012.***	601152.	12420.
ROUTED TO	7	37705.	22747.	6266.	6015.***	601502.	12428.
HYDROGRAPH AT	7	394.	86.	22.	21.***	2122.	44.
2 COMBINED AT	7	37705.	22757.	6288.	6036.***	603624.	12472.
ROUTED TO	8	37436.	22724.	6292.	6040.***	603987.	12479.
HYDROGRAPH AT	8	280.	74.	19.	18.***	1813.	37.
2 COMBINED AT	8	37437.	22750.	6310.	6058.***	605800.	12517.
ROUTED TO	9	37169.	22718.	6314.	6062.***	606163.	12524.
HYDROGRAPH AT	9	28.	5.	1.	1.***	122.	3.
2 COMBINED AT	9	37169.	22718.	6315.	6063.***	606285.	12527.
ROUTED TO	18	36903.	22684.	6319.	6066.***	606648.	12534.
HYDROGRAPH AT	18	4831.	1428.	372.	357.***	35670.	737.
2 COMBINED AT	18	36903.	22937.	6691.	6423.***	642318.	13271.
ROUTED TO	10	36641.	22913.	6695.	6427.***	642692.	13279.
HYDROGRAPH AT	10	63.	11.	3.	3.***	255.	5.
2 COMBINED AT	10	36641.	22913.	6697.	6429.***	642946.	13284.
ROUTED TO	11	36381.	22889.	6701.	6433.***	643319.	13292.
HYDROGRAPH AT	11	219.	56.	15.	14.***	1416.	29.
2 COMBINED AT	11	36381.	22890.	6716.	6447.***	644735.	13321.
ROUTED TO	12	36125.	22863.	6720.	6451.***	645122.	13329.
HYDROGRAPH AT	12	23.	5.	1.	1.***	135.	3.
2 COMBINED AT	12	36125.	22863.	6721.	6453.***	645258.	13332.
ROUTED TO	13	35873.	22835.	6725.	6456.***	645647.	13340.
HYDROGRAPH AT	13	188.	41.	11.	10.***	1021.	21.
2 COMBINED AT	13	35873.	22835.	6736.	6467.***	646668.	13361.
ROUTED TO	14	35624.	22807.	6740.	6471.***	647065.	13369.
HYDROGRAPH AT	14	144.	36.	9.	9.***	904.	19.
2 COMBINED AT	14	35624.	22807.	6750.	6480.***	647969.	13388.
ROUTED TO	15	35379.	22777.	6754.	6484.***	648375.	13396.
HYDROGRAPH AT	15	67.	14.	4.	3.***	339.	7.
2 COMBINED AT	15	35379.	22777.	6757.	6487.***	648714.	13403.
ROUTED TO	16	35139.	22746.	6762.	6491.***	649122.	13412.
HYDROGRAPH AT	16	283.	57.	14.	14.***	1381.	29.
2 COMBINED AT	16	35139.	22746.	6776.	6505.***	650503.	13440.
ROUTED TO	17	34902.	22714.	6780.	6509.***	650910.	13449.
HYDROGRAPH AT	17	145.	28.	7.	7.***	664.	14.
2 COMBINED AT	17	34902.	22714.	6787.	6516.***	651574.	13462.
ROUTED TO	1039	34670.	22682.	6791.	6520.***	651982.	13471.

*** NUMBER IS ACTUALLY 25-HR AVERAGE

Oxford

Oxford

Oxford

Oxford

Oxford

APPENDIX I: HYDROLOGY AND SIDE DRAINAGE ANALYSES

b. SIDE DRAINAGE PIPE CAPACITY COMPUTATIONS

NEW RIVER CHANNELIZATION - SIDE DRAINAGE SUMMARY

Side Drainage			New River Channel			
No.	Sta.	100 Yr. Q Peak (cfs)	Approximate Corresponding Q (cfs)	Depth of Flow	WSEL	SPF WSEL ±
1	217+50 E	160*				
	212+40 E	Outlet extension for Olive Ave. storm drain				
2	208+25 W	1570	21,000 ≈ 25,000	9.4′	1079.3	1086.7
	211+65 W	Outlet extension for Olive Ave. storm drain				
3	201+50 W	50*				
	204+00 W	Outlet extension for 99th Ave. storm drain				
4	202+00 E	60*				
	197+30 E	24" Irrigation pipe outlet				
	199+30 E	Outlet extension for 99th Ave. storm drain				
5	184+50 W	60*				
6	177+00 W	40*				
7	161+00 W	390*				
8	161+30 E	280	5,000	3.7′	1062.4	1075.4
9	149+00 E	30	3,700 ≈ 5,000	3.2′	1059.2	1071.6
10	127+60 E	60	4,700 ≈ 5,000	3.5′	1055.4	1067.5
11	122+90 W	220	3,000 ≈ 5,000	3.5′	1054.5	1066.8
12	116+50 W	20*				
13	101+00 E	200	2,200 ≈ 2,500	1.8′	1048.4	1062.2
	112+80 E		2,200 ≈ 2,500	1.8′	1050.8	1065.3
14	101+00 W	140	1,900 ≈ 2,500	1.8′	1048.4	1062.2
	100+38 W		1,900 ≈ 2,500	1.8′	1048.3	1062.1
15	83+00 W	70	2,000 ≈ 2,500	3.1′	1041.9	1053.4
16	88+50 E	280*				
	86+62 E	18" Irrigation Pipe Outlet				
	9+00 (Grand Drain)	Side drainage into the Grand Drain				
17	46+00 E	150	2,000 ≈ 2,500	3.8′	1034.7	1043.9

* Pipe or culvert not required since channel is incised

Q:\1090\06\ADMIN\109006MI.042

PROJECT: New River Channelization

DESIGNER: J.M.

Side Drainage Point # 2

DATE: 12/91

HYDROLOGIC AND CHANNEL INFORMATION

Sun City Channel Outlet

Q_{100} = 1570 cfs

TW = 1079.3

Q_{100} DESIGN DISCHARGE

SKETCH

STATION: 208.25 W

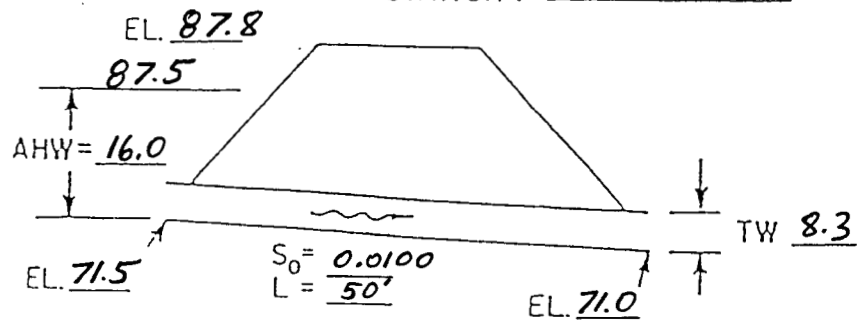

CULVERT DESCRIPTION (ENTRANCE TYPE)	Q	SIZE	HEADWATER COMPUTATION: INLET CONT.		OUTLET CONTROL $HW = H + h_o - LS_o + h_{fl}$									CONTROLLING H.W.	OUTLET VELOCITY	COST	COMMENTS
			$\frac{HW}{D}$	HW	K_e	H	d_c	$\frac{d_c+D}{2}$	TW	h_o	LS_o	h_{fl}*	HW				
10' x 10' CBC INLET HDWL	1570	10'x10' 100#	1.6	16.0'	0.2	5.0	9.2	9.6	8.3	9.6	0.5	–	14.1	16.0			

SUMMARY & RECOMMENDATIONS:

* head loss due to flapgate

PROJECT: New River Channelization

DESIGNER: J.M.

Side Drainage Point # 8

DATE: 12/91

HYDROLOGIC AND CHANNEL INFORMATION

Q_{100} = 280 cfs

TW = 1062.4

Q_{100} = DESIGN DISCHARGE

SKETCH

STATION: 161+30 E

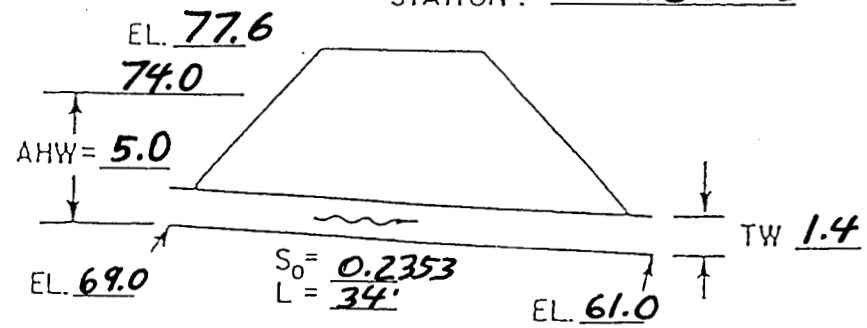

CULVERT DESCRIPTION (ENTRANCE TYPE)	Q	SIZE	HEADWATER COMPUTATION: INLET CONT.		OUTLET CONTROL $HW = H + h_o - LS_o + h_f$									CONTROLLING HW	OUTLET VELOCITY	COST	COMMENTS
			$\frac{HW}{D}$	HW	K_e	H	d_c	$\frac{d_c+D}{2}$	TW	h_o	LS_o	h_{fl}*	HW				
3-48" RCP w/ Drop Inlet	3@ 94	3@ 4'	1.25	5.0	0.5	1.3	2.9	3.5	1.4	3.5	8.0	—	—	5.0			

SUMMARY & RECOMMENDATIONS:

* head loss due to flapgate

PROJECT: New River Channelization

DESIGNER: J.M.

Side Drainage Point # 9

DATE: 12/91

HYDROLOGIC AND CHANNEL INFORMATION

Q_{100} = 30 cfs

TW = 1059.2

Q_{100} = DESIGN DISCHARGE

SKETCH

STATION: 149+00 E

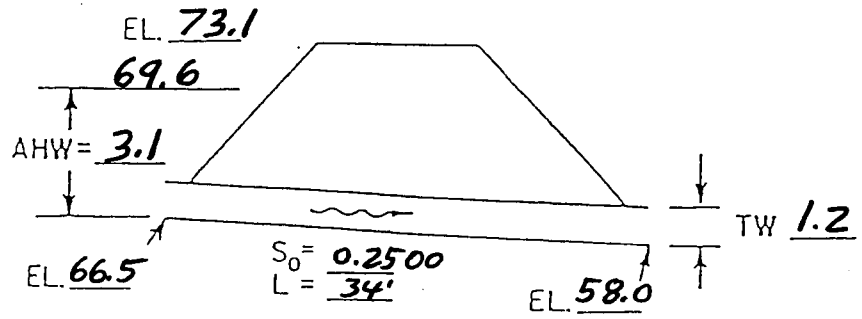

CULVERT DESCRIPTION (ENTRANCE TYPE)	Q	SIZE	HEADWATER COMPUTATION											CONTROLLING HW	OUTLET VELOCITY	COST	COMMENTS
			INLET CONT.		OUTLET CONTROL $HW = H + h_o - LS_o + h_f$												
			$\frac{HW}{D}$	HW	K_e	H	d_c	$\frac{d_c+D}{2}$	TW	h_o	LS_o	h_{fl}*	HW				
30" RCP w/ Drop Inlet	30	2.5'	1.25	3.1	0.5	1.1	1.9	2.2	1.2	2.2	8.5	0.5	–	3.1			

SUMMARY & RECOMMENDATIONS:

* head loss due to flapgate

PROJECT: New River Channelization

DESIGNER: J.M.

Side Drainage Point # 10

DATE: 12/91

HYDROLOGIC AND CHANNEL INFORMATION

Q_{100} = 60 cfs

TW = 1055.4

Q_{100} = DESIGN DISCHARGE

SKETCH

STATION: 127+60 E

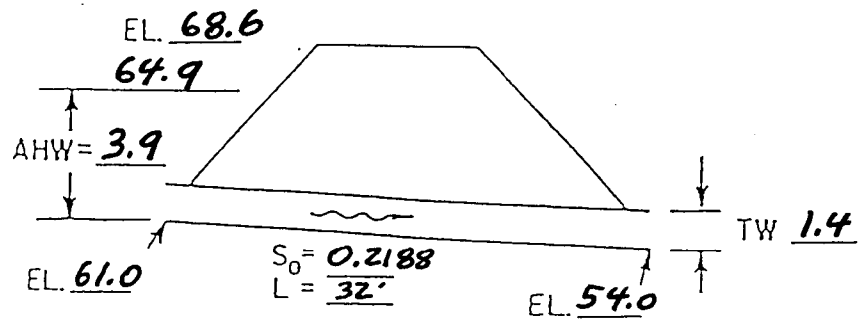

CULVERT DESCRIPTION (ENTRANCE TYPE)	Q	SIZE	HEADWATER COMPUTATION: INLET CONT.		OUTLET CONTROL $HW = H + h_o - LS_o + h_f$									CONTROLLING HW	OUTLET VELOCITY	COST	COMMENTS
			$\frac{HW}{D}$	HW	K_e	H	d_c	$\frac{d_c+D}{2}$	TW	h_o	LS_o	h_{fl}*	HW				
42" RCP w/ Drop Inlet	60	3.5'	1.12	3.9	0.5	1.0	2.4	3.0	1.4	3.0	7.0	0.5	—	3.9			

SUMMARY & RECOMMENDATIONS:

* head loss due to flapgate

PROJECT: New River Channelization

DESIGNER: J.M.

Side Drainage Point # 11

DATE: 12/91

HYDROLOGIC AND CHANNEL INFORMATION

Existing 54" Storm Drain Pipe from Glen Harbor

Q_{100} = 220 cfs

TW = 1054.5

Q_{100} = DESIGN DISCHARGE

SKETCH

STATION: 122+90 W

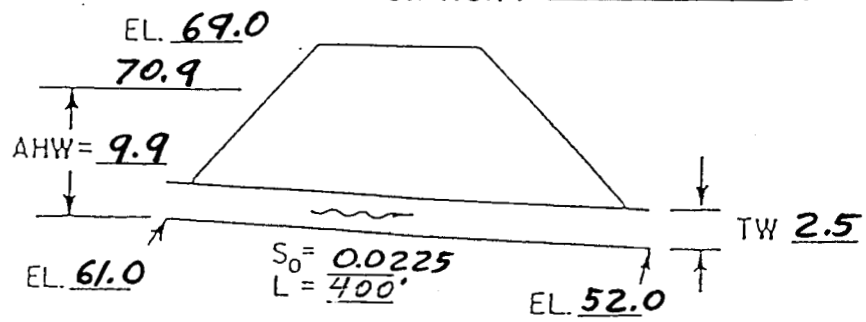

CULVERT DESCRIPTION (ENTRANCE TYPE)	Q	SIZE	HEADWATER COMPUTATION: INLET CONT. $\frac{HW}{D}$	HW	OUTLET CONTROL $HW = H + h_o - LS_o + h_f$: K_e	H	d_c	$\frac{d_c+D}{2}$	TW	h_o	LS_o	h_{fl}*	HW	CONTROLLING HW	OUTLET VELOCITY	COST	COMMENTS
54" RCP Inlet Hdwl.	220	4.5'	2.2	9.9	0.5	9.0	4.1	4.3	2.5	4.3	9.0	–	4.3	9.9			

SUMMARY & RECOMMENDATIONS: The pipe does not have the capacity
Approximately 50 cfs will overflow.
A drainage swale has been included for overflow.

* head loss due to flapgate

PROJECT: New River Channelization

DESIGNER: J.M.

Side Drainage Point # 13

DATE: 12/91

HYDROLOGIC AND CHANNEL INFORMATION

Note: Sub-basin 13 outlets through this pipe and the pipe at station 112+80 E. 130 cfs represents approximately 65% of the total drainage area.

Q_{100} = 130 cfs

TW = 1048.4

Q_{100} DESIGN DISCHARGE

SKETCH

STATION: 101+00 E

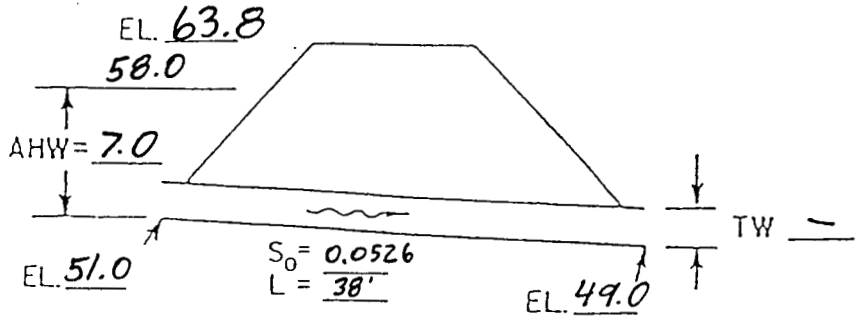

CULVERT DESCRIPTION (ENTRANCE TYPE)	Q	SIZE	HEADWATER COMPUTATION: INLET CONT. $\frac{HW}{D}$	HW	OUTLET CONTROL $HW = H + h_o - LS_o + h_f$: K_e	H	d_c	$\frac{d_c+D}{2}$	TW	h_o	LS_o	h_{fl}*	HW	CONTROLLING HW	OUTLET VELOCITY	COST	COMMENTS
48" RCP w/ Drop Inlet	130	4'	1.75	7.0	0.5	2.8	3.4	3.7	–	3.7	2.0	0.5	5.0	7.0			

SUMMARY & RECOMMENDATIONS:

* head loss due to flapgate

PROJECT: New River Channelization

DESIGNER: J.M.

Side Drainage Point # 13

DATE: 12/91

HYDROLOGIC AND CHANNEL INFORMATION

Note: Sub-basin 13 outlets through this pipe and the pipe at station 101+00 E. 70 cfs represents approximately 35% of the total drainage area.

Q_{100} = 70 cfs

TW = 1050.8

Q_{100} DESIGN DISCHARGE

SKETCH

STATION: 112+80 E

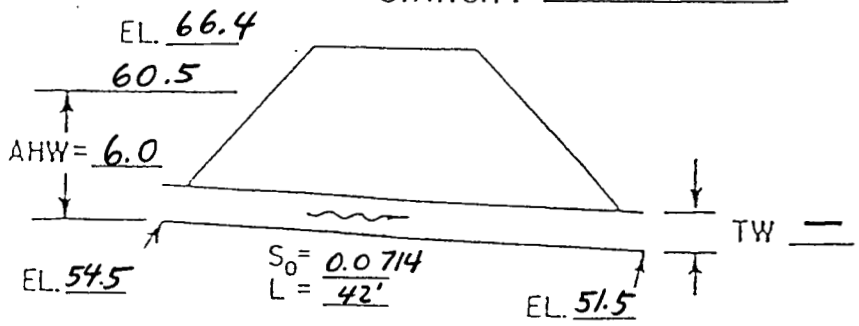

CULVERT DESCRIPTION (ENTRANCE TYPE)	Q	SIZE	HEADWATER COMPUTATION: INLET CONT. $\frac{HW}{D}$	HW	OUTLET CONTROL $HW=H+h_o-LS_o+h_f$: K_e	H	d_c	$\frac{d_c+D}{2}$	TW	h_o	LS_o	h_f *	HW	CONTROLLING HW	OUTLET VELOCITY	COST	COMMENTS
36" RCP w/Drop Inlet	70	3'	2.0	6.0	0.5	2.7	2.6	2.8	–	2.8	3.0	0.5	3.0	6.0			

SUMMARY & RECOMMENDATIONS:

* head loss due to flapgate

PROJECT: New River Channelization

DESIGNER: J.M.

Side Drainage Point # 14

DATE: 12/91

HYDROLOGIC AND CHANNEL INFORMATION

Note: Sub-basin 14 outlets @ Stations: 101+00 W & 100+38 W (see next sheet)

This flow (40cfs) represents about 30% of the area contributing to side drainage point #14

$Q_{100} =$ 40 cfs TW = 1048.4

Q_{100} = DESIGN DISCHARGE

SKETCH

STATION: 101+00 W

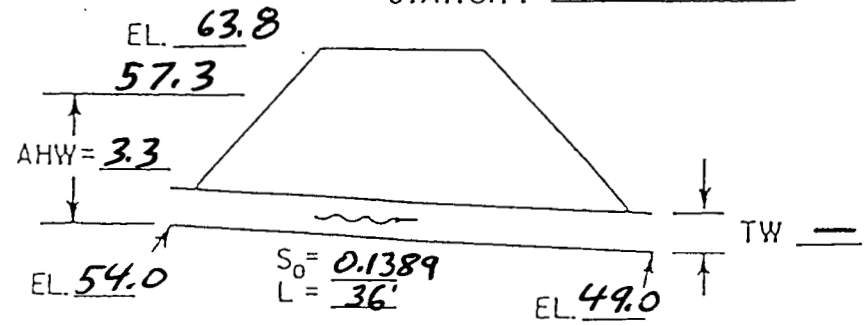

CULVERT DESCRIPTION (ENTRANCE TYPE)	Q	SIZE	HEADWATER COMPUTATION: INLET CONT. HW/D	HW	OUTLET CONTROL HW=H+h_o−LS_o+h_f: K_e	H	d_c	$\frac{d_c+D}{2}$	TW	h_o	LS_o	h_{fl}*	HW	CONTROLLING HW	OUTLET VELOCITY	COST	COMMENTS
36" RCP w/ Drop Inlet	40	3'	1.1	3.3	0.5	1.0	2.1	2.6	–	2.6	5.0	0.5	–	3.3			

SUMMARY & RECOMMENDATIONS:

* head loss due to flapgate

PROJECT: New River Channelization

DESIGNER: J.M.

Side Drainage Point # 14

DATE: 12/91

HYDROLOGIC AND CHANNEL INFORMATION

Existing 54" Storm Drain From Glen Harbor.

Note: Sub-basin 14 outlets through this pipe and at station 101+00 W. This flow (100 cfs) represents approximately 71% of the total drainage area.

Q_{100} = 100 cfs TW = 1048.3

Q_{100} DESIGN DISCHARGE

SKETCH

STATION: 100+38 W

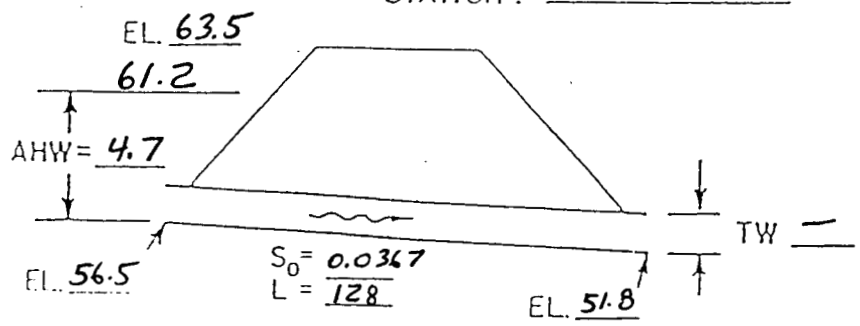

CULVERT DESCRIPTION (ENTRANCE TYPE)	Q	SIZE	HEADWATER COMPUTATION: INLET CONT. HW/D	HW	OUTLET CONTROL HW=H+h_o−LS_o+h_f: K_e	H	d_c	$\frac{d_c+D}{2}$	TW	h_o	LS_o	h_{fl}*	HW	CONTROLLING HW	OUTLET VELOCITY	COST	COMMENTS
54" RCP Inlet Hdwl.	100	4.5	1.05	4.7	0.5	1.2	2.9	3.7	—	3.7	4.7	—	0.2	4.7			

SUMMARY & RECOMMENDATIONS:

* head loss due to flapgate

PROJECT: New River Channelization

DESIGNER: J.M.

Side Drainage Point # 15

DATE: 12/91

HYDROLOGIC AND CHANNEL INFORMATION

Note: Sub-basin 15 outlets through this outlet and over the levee downstream. 35 cfs represents discharge from about 50% of the Sub-basin.

Q_{100} = 35 cfs

TW = 1041.9

Q_{100} DESIGN DISCHARGE

SKETCH

STATION: 83+00 W

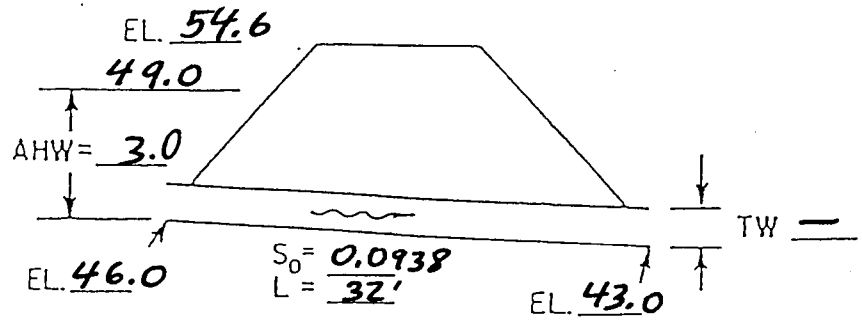

CULVERT DESCRIPTION (ENTRANCE TYPE)	Q	SIZE	HEADWATER COMPUTATION: INLET CONT. $\frac{HW}{D}$	HW	OUTLET CONTROL $HW = H + h_o - LS_o + h_f$: K_e	H	d_c	$\frac{d_c+D}{2}$	TW	h_o	LS_o	h_{fl}*	HW	CONTROLLING HW	OUTLET VELOCITY	COST	COMMENTS
36" RCP w/ Drop Inlet	35	3'	1.0	3.0	0.5	0.6	1.8	2.4	–	2.4	3.0	0.5	–	3.0			

SUMMARY & RECOMMENDATIONS:

* head loss due to flapgate

PROJECT: New River Channelization

DESIGNER: J.M.

Side Drainage Point # 16

DATE: 12/91

HYDROLOGIC AND CHANNEL INFORMATION

Note: Sub-basin 16 outlets through these pipes into the Grand Drain, over the bank into the Grand Drain, and over the New River Levee. 168 cfs represents discharge from about 60% of sub-basin 16.

Q_{100} = 168 cfs TW = —

Q_{100} DESIGN DISCHARGE

SKETCH

STATION: 9+00 Grand Drain

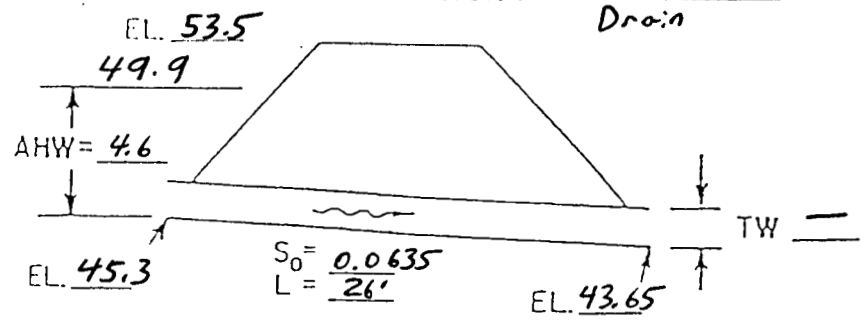

CULVERT DESCRIPTION (ENTRANCE TYPE)	Q	SIZE	HEADWATER COMPUTATION: INLET CONT. $\frac{HW}{D}$	HW	OUTLET CONTROL $HW = H + h_o - LS_o + h_f$: K_e	H	d_c	$\frac{d_c+D}{2}$	TW	h_o	LS_o	h_{fl}*	HW	CONTROLLING HW	OUTLET VELOCITY	COST	COMMENTS
2-48" RCP w/Drop Inlet	2@ 84	2@ 4'	1.15	4.6	0.5	1.1	2.8	3.4	—	3.4	1.65	0.5	3.35	4.6			

SUMMARY & RECOMMENDATIONS:

* head loss due to flapgate

PROJECT: New River Channelization

DESIGNER: J.M.

Side Drainage Point # 16

DATE: 12/91

HYDROLOGIC AND CHANNEL INFORMATION

Q_{100} = 1000 cfs

Q_{100} DESIGN DISCHARGE

TW = 1048.7

TW - assumes that 100-yr Q in New River is coincident with 100-yr Q in Grand Drain.

SKETCH

STATION: 78 + 48.15 E

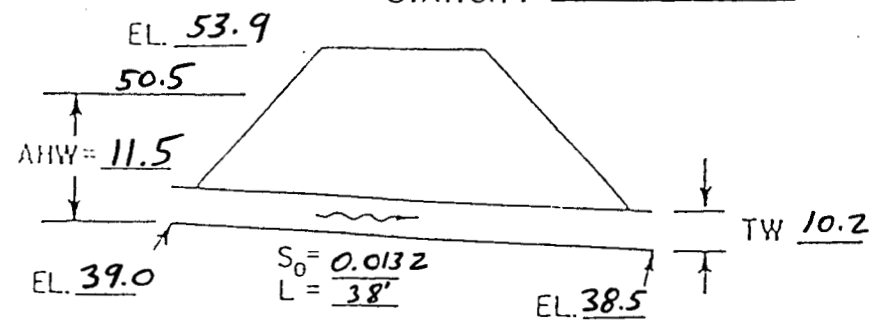

CULVERT DESCRIPTION (ENTRANCE TYPE)	Q	SIZE	HEADWATER COMPUTATION: INLET CONT. $\frac{HW}{D}$	HW	OUTLET CONTROL $HW = H + h_o - LS_o + h_f$: K_e	H	d_c	$\frac{d_c + D}{2}$	TW	h_o	LS_o	h_f *	HW	CONTROLLING HW	OUTLET VELOCITY	COST	COMMENTS
12'x10' CBC INLET HDWL	1000	12'x10' 120#	0.95	9.5	0.5	1.8	6.0	8.0	10.2	10.2	0.5	—	11.5	11.5			

SUMMARY & RECOMMENDATIONS:

* head loss due to flapgate

PROJECT: New River Channelization

DESIGNER: J.M.

Side Drainage Point #17

DATE: 12/91

HYDROLOGIC AND CHANNEL INFORMATION

Q_{100} = 150 cfs

TW = 1034.7

Q_{100} = DESIGN DISCHARGE

SKETCH

STATION: 46+00 E

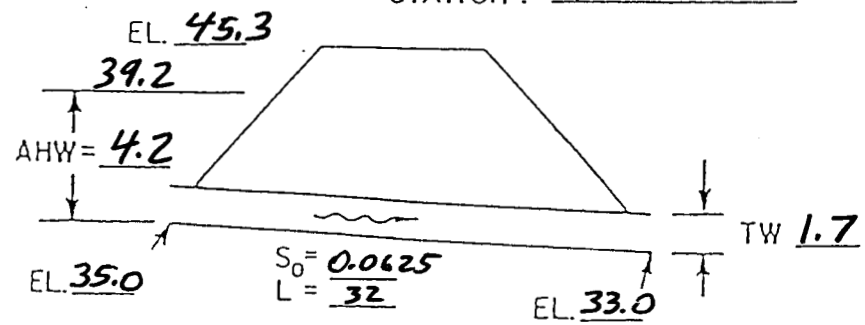

CULVERT DESCRIPTION (ENTRANCE TYPE)	Q	SIZE	HEADWATER COMPUTATION: INLET CONT.		OUTLET CONTROL $HW = H + h_o - LS_o + h_{fl}$									CONTROLLING HW	OUTLET VELOCITY	COST	COMMENTS
			$\frac{HW}{D}$	HW	K_e	H	d_c	$\frac{d_c+D}{2}$	TW	h_o	LS_o	h_{fl}*	HW				
2-48" RCP w/ Drop Inlet	2 @ 75	2 @ 4'	1.05	4.2	0.5	0.8	2.6	3.3	1.7	3.3	2.0	0.5	2.6	4.2			

SUMMARY & RECOMMENDATIONS:

* head loss due to flapgate

CHART 1

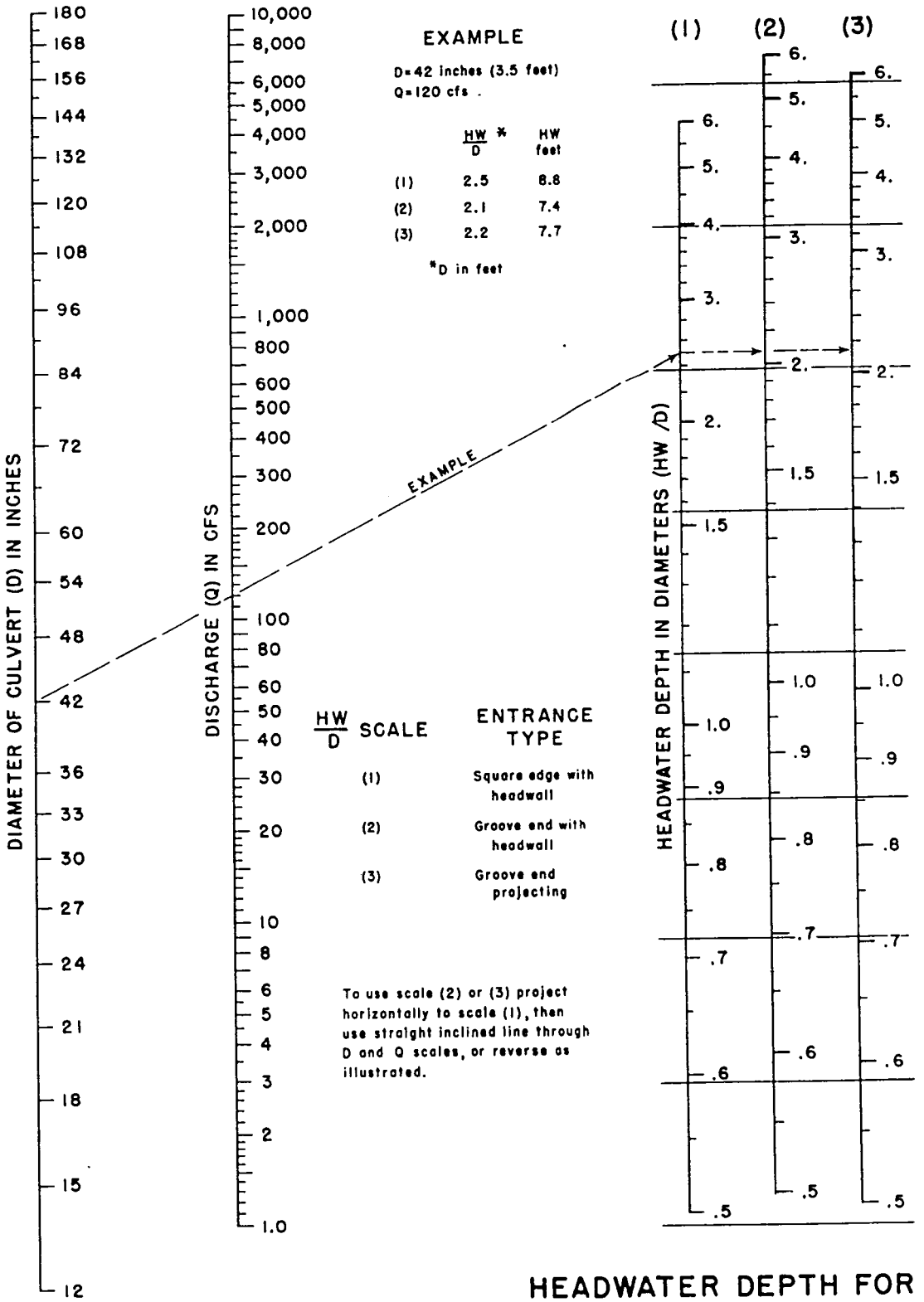

HEADWATER SCALES 2&3
REVISED MAY 1964

HEADWATER DEPTH FOR CONCRETE PIPE CULVERTS WITH INLET CONTROL

BUREAU OF PUBLIC ROADS JAN. 1963

CHART 5

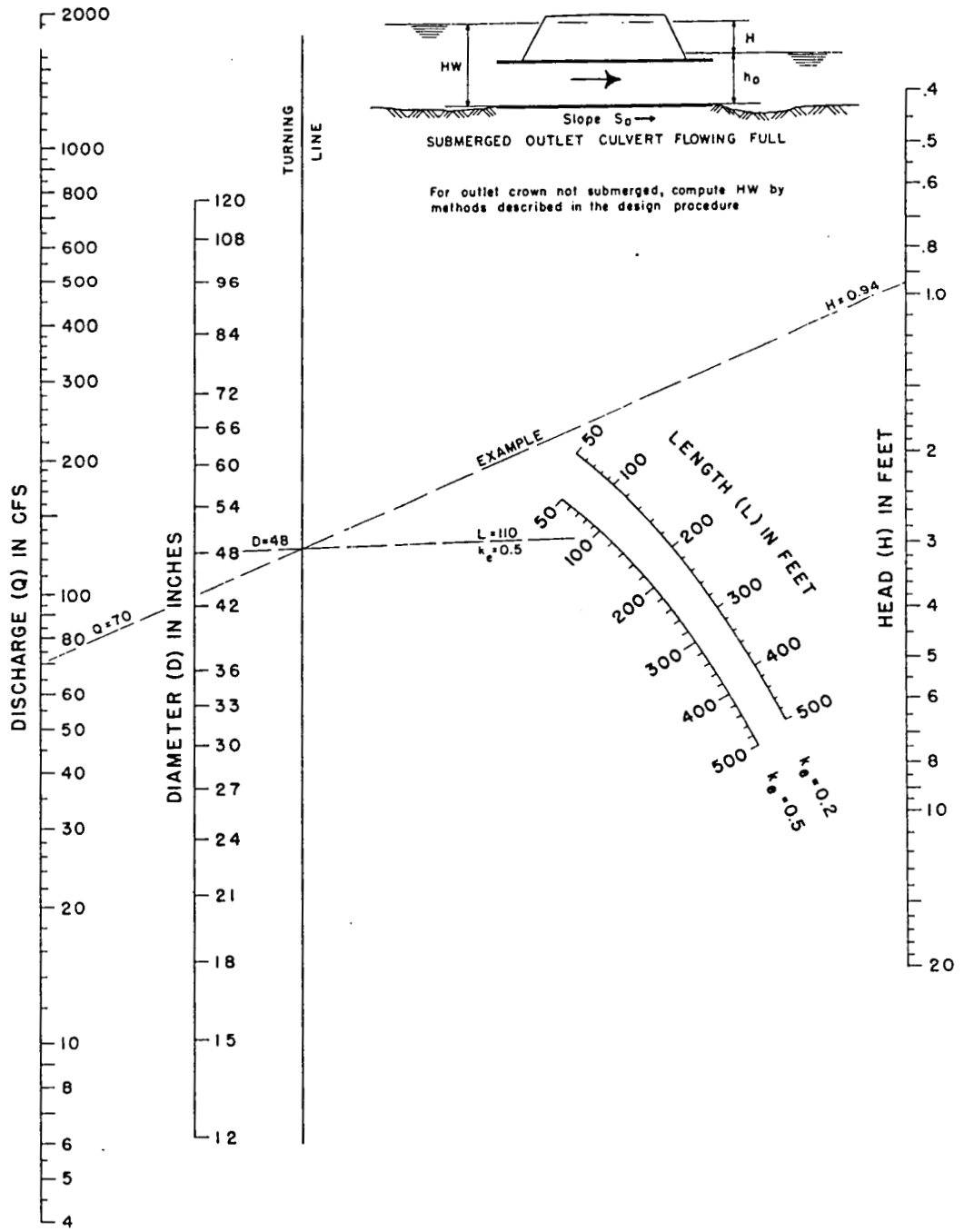

HEAD FOR
CONCRETE PIPE CULVERTS
FLOWING FULL
n = 0.012

BUREAU OF PUBLIC ROADS JAN. 1963

CHART 4

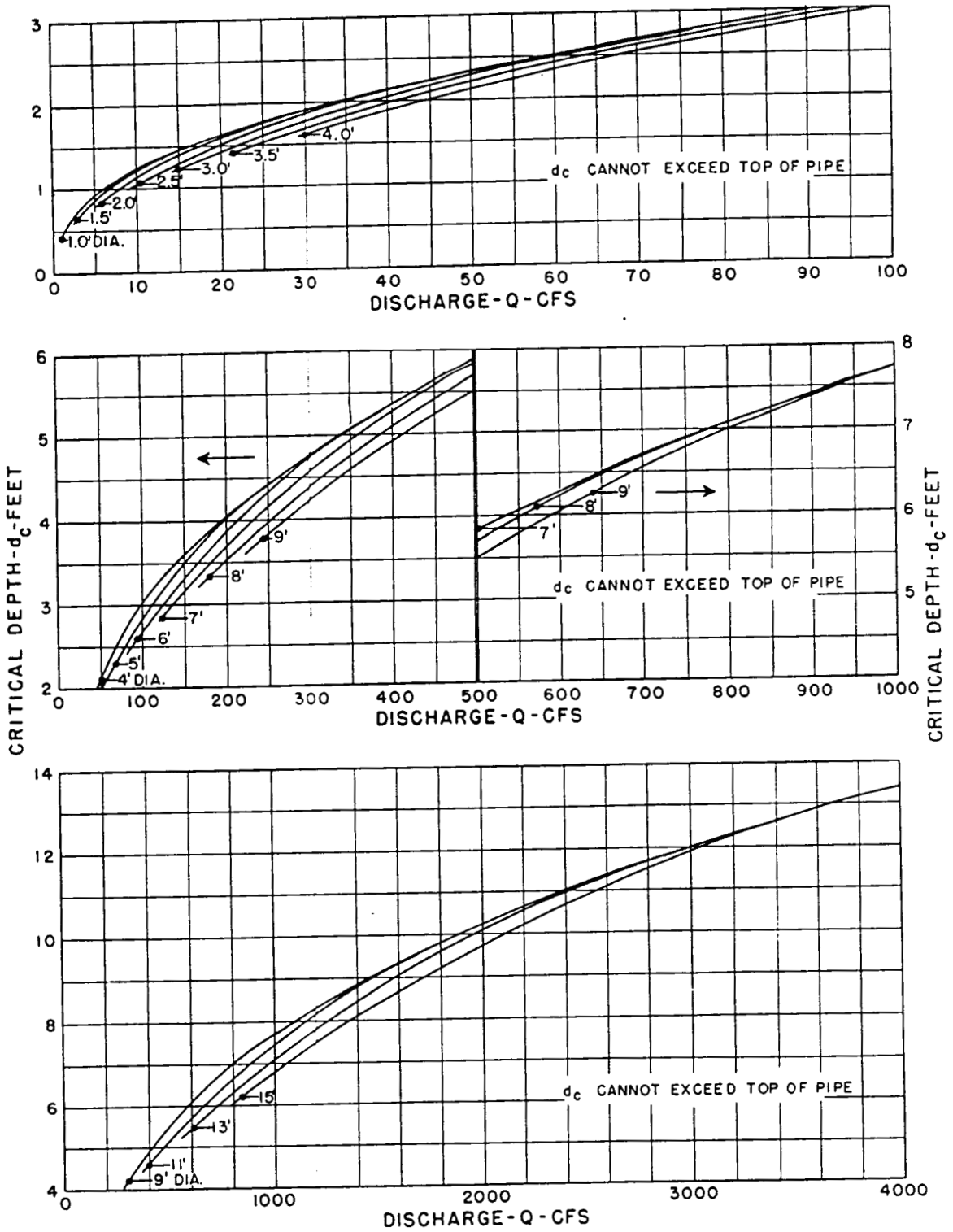

BUREAU OF PUBLIC ROADS

JAN. 1964

CRITICAL DEPTH
CIRCULAR PIPE

CHART 8

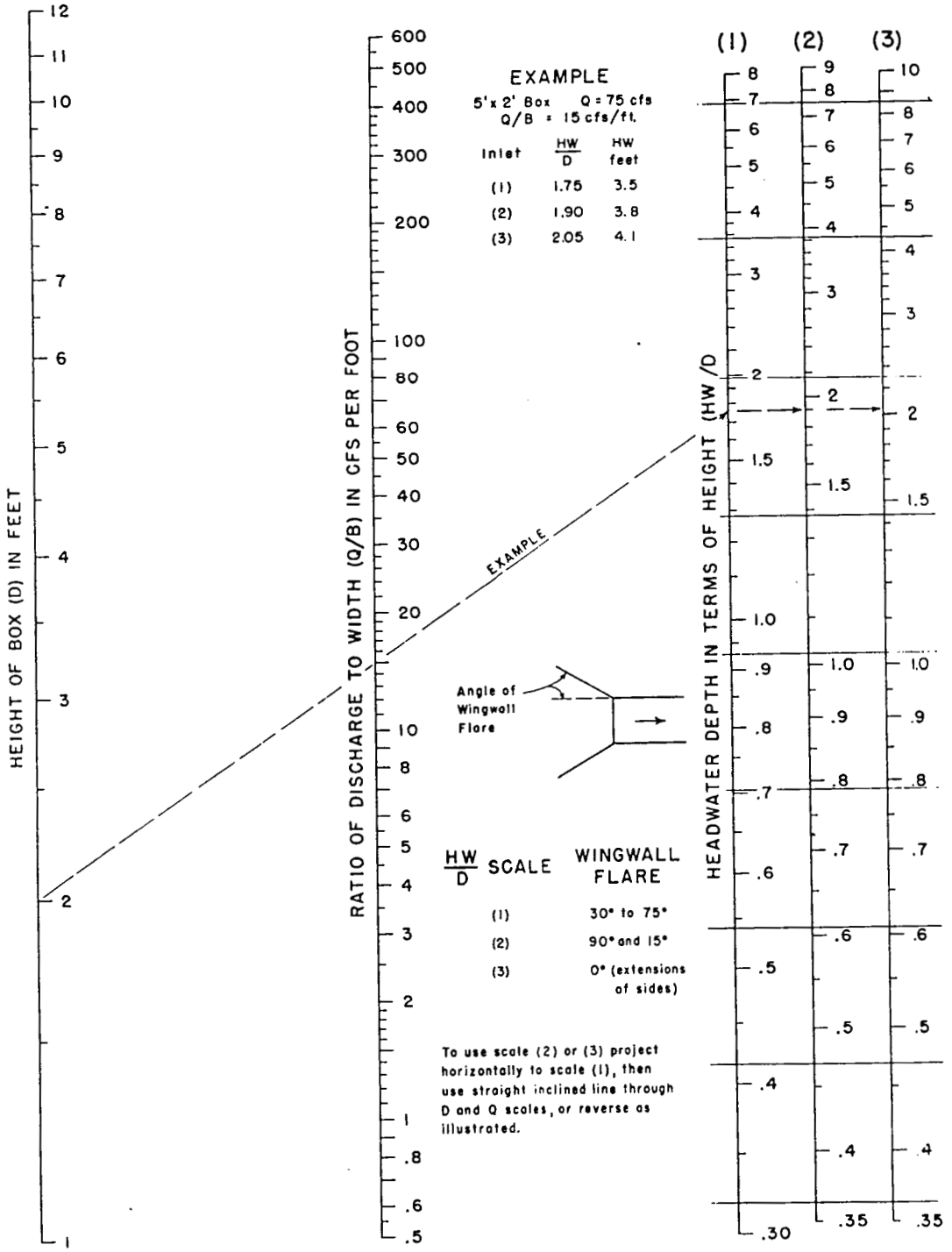

HEADWATER DEPTH FOR BOX CULVERTS WITH INLET CONTROL

BUREAU OF PUBLIC ROADS JAN. 1963

CHART 15

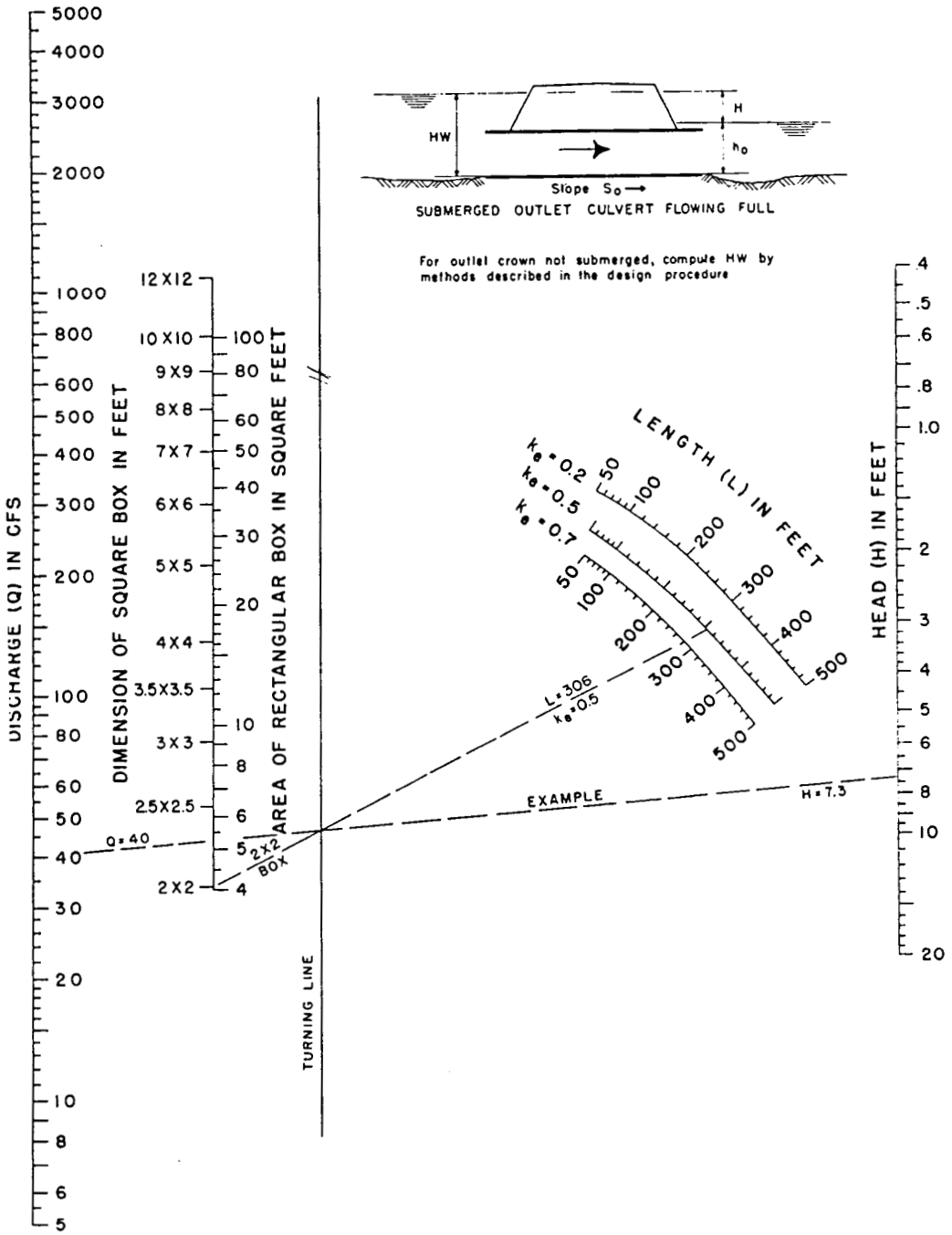

HEAD FOR
CONCRETE BOX CULVERTS
FLOWING FULL
n = 0.012

AU OF PUBLIC ROADS JAN. 1963

CHART 14

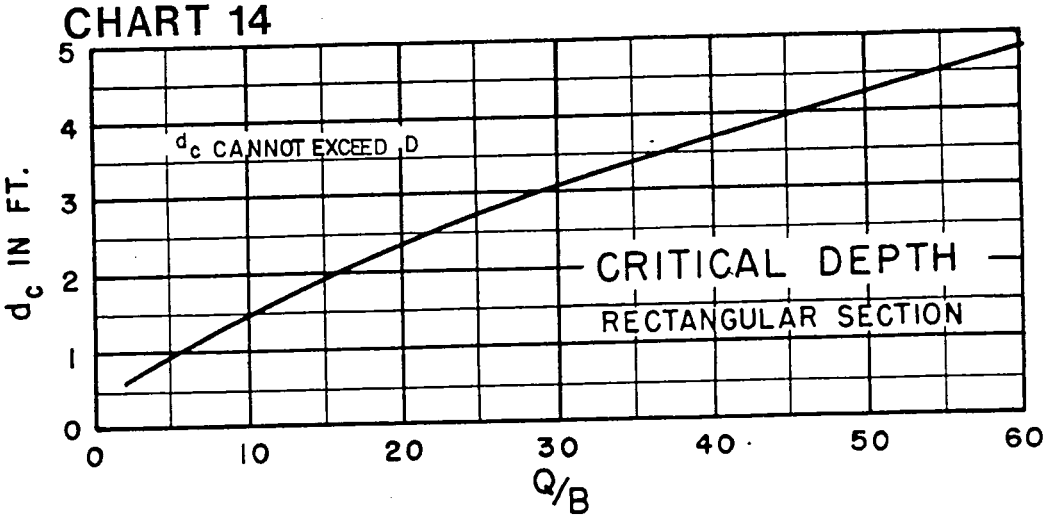

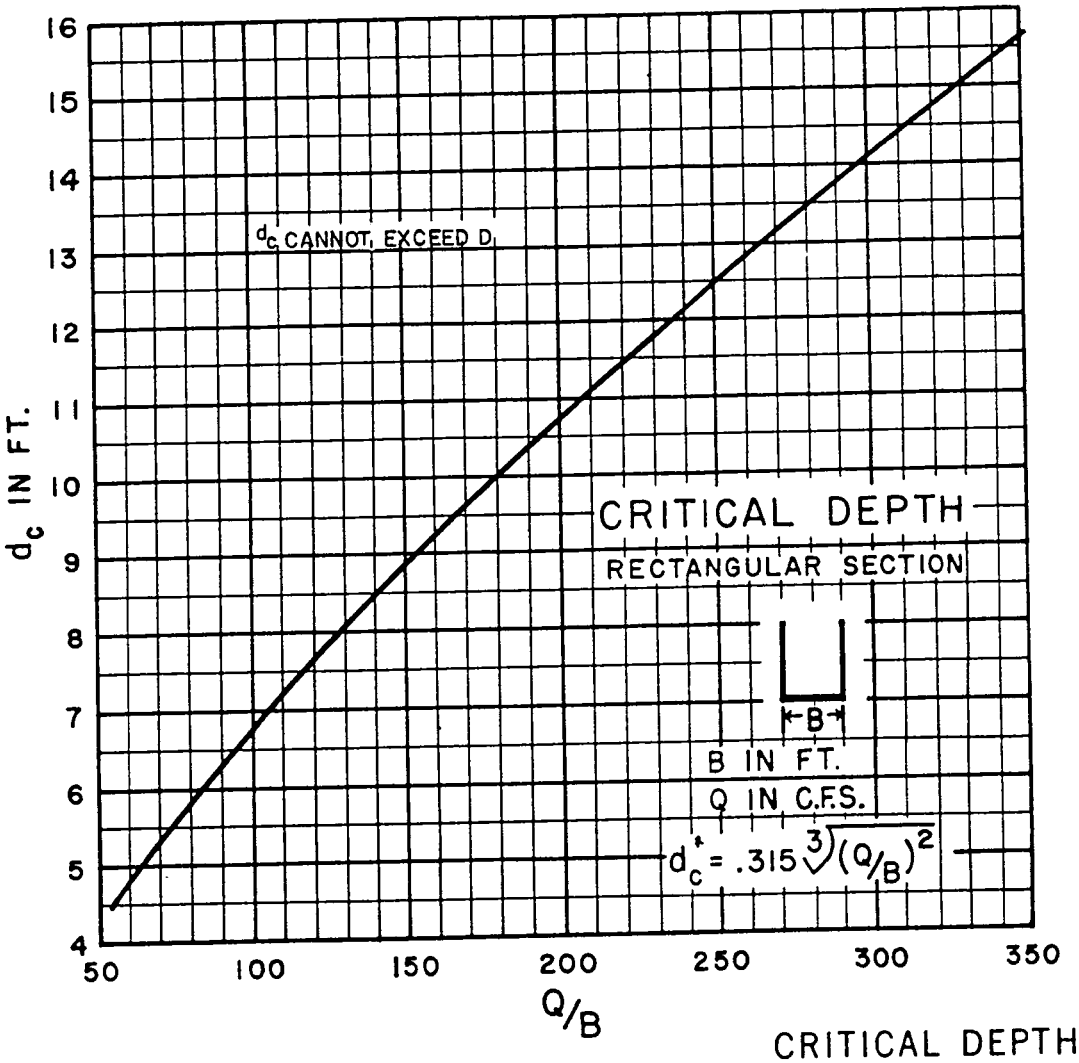

BUREAU OF PUBLIC ROADS JAN. 1963

CRITICAL DEPTH
RECTANGULAR SECTION

APPENDIX II: HYDRAULIC ANALYSES

a. DOWNSTREAM CONDITION HEC-2 INPUT/OUTPUT

```
*******************************************
*  HEC-2 WATER SURFACE PROFILES           *
*                                         *
*  Version   4.6.2;  May 1991             *
*                                         *
*  RUN DATE    30JUL92    TIME   13:57:44 *
*******************************************
```

```
****************************************
*  U.S. ARMY CORPS OF ENGINEERS        *
*  HYDROLOGIC ENGINEERING CENTER       *
*  609 SECOND STREET, SUITE D          *
*  DAVIS, CALIFORNIA 95616-4687        *
*          (916) 756-1104              *
****************************************
```

```
X     X  XXXXXXX   XXXXX              XXXXX
X     X  X        X     X            X     X
X     X  X        X                        X
XXXXXXX  XXXX     X         XXXXX   XXXXX
X     X  X        X                  X
X     X  X        X     X            X
X     X  XXXXXXX   XXXXX             XXXXXXX
```

THIS RUN EXECUTED 30JUL92 13:57:44

```
************************************
 HEC-2 WATER SURFACE PROFILES

 Version   4.6.2;  May 1991
************************************
```

SPLIT FLOW BEING PERFORMED

```
SF      SPLIT FLOW, FLOW BREAKS OUT TO THE EAST (BETWEEN SECTIONS 2 & 39)


JC      CAMELBACK RANCH UNDEVELOPED
JP     0       0       0       0       0

TW      WEIR FLOW BREAKOUT
WS     2       2       3      -1     2.7
WC     0  1028.3     310    1030

TW      WEIR FLOW BREAKOUT
WS     2       3     6.4      -1     2.7
WC     0    1030     820    1033

TW      WEIR FLOW BREAKOUT
WS     2     6.4    13.2      -1     2.7
WC     0    1033     740    1033

TW      WEIR FLOW BREAKOUT
WS     2    13.2    19.4      -1     2.7
WC     0    1033     660  1034.5

TW      WEIR FLOW BREAKOUT
WS     2    19.4    24.4      -1     2.7
WC     0  1034.5     470  1035.6

TW      WEIR FLOW BREAKOUT
WS     2    24.4    29.0      -1     2.7
WC     0  1035.6     480  1038.7

TW      WEIR FLOW BREAKOUT
WS     2    29.0    36.8      -1     2.7
WC     0  1038.7     750  1044.5

TW      WEIR FLOW BREAKOUT
WS     2    36.8    39.0      -1     2.7
WC     0  1044.5     290  1042.5
```

```
T1      NEW RIVER: EXISTING CONDITION RUN WITH WEIR FLOW BREAKOUT
T2      NEW RIVER: AGUA FRIA RIVER CONFLUENCE TO BETHANY HOME ROAD
T3        10 YR EVENT

J1  ICHECK    INQ      NINV     IDIR     STRT     METRIC   HVINS    Q        WSEL     FQ

      0        2                         0.001                                1027.5

J2  NPROF     IPLOT    PRFVS    XSECV    XSECH    FN       ALLDC    IBW      CHNIM    ITRACE

      1        0        -1                                -1                          0


J3  VARIABLE CODES FOR SUMMARY PRINTOUT

     38       43        1       26        8        4       53       54

NC    .045     .045     .035      0.1      0.3
QT       5    13500    31000    41000    75000    69000
ET       1      9.1      9.1      9.1      9.1      9.1                          8088    14959
X1       1     57.0   8510.0  10076.0        0        0        0
GR  1031.0   6847.0   1031.0   7088.0   1031.0   7403.0   1030.5   7660.0   1029.8   7951.0
GR  1029.5   8333.0   1028.3   8406.0   1027.3   8437.0   1027.5   8510.0   1021.9   8554.0
GR  1022.5   8676.0   1021.7   8807.0   1022.4   9013.0   1026.0   9039.0   1026.1   9157.0
GR  1024.3   9182.0   1025.7   9232.0   1025.8   9301.0   1022.2   9331.0   1021.5   9422.0
GR  1022.9   9533.0   1024.8   9768.0   1024.9   9955.0   1024.6  10000.0   1024.6  10051.0
GR  1028.0  10076.0   1028.5  10230.0   1028.6  10424.0   1028.8  10649.0   1027.8  10793.0
GR  1024.2  10816.0   1024.2  11100.0   1024.3  11439.0   1024.9  11746.0   1025.2  12071.0
GR  1027.1  12168.0   1025.2  12315.0   1027.1  12387.0   1026.4  12409.0   1027.3  12437.0
GR  1028.2  12666.0   1028.1  12817.0   1028.1  13108.0   1028.0  13353.0   1028.1  13570.0
GR  1028.1  13749.0   1028.1  13943.0   1028.5  14292.0   1028.8  14605.0   1029.7  14727.0
GR  1030.3  14757.0   1030.3  14799.0   1028.3  14806.0   1031.9  14825.0   1032.0  14847.0
GR  1030.9  14864.0   1032.2  14959.0

ET       2      9.1      9.1      9.1      9.1      9.1                          9729.9   10370
X1       2       27     9730    10260      700     1700     1000
GR    1035     6900     1024     6950   1024.7     7370   1024.8     8000   1025.2     8430
GR    1026     8470   1026.6     8600   1027.1     8700   1026.4     9050   1026.3     9070
GR    1028     9660   1028.3     9730     1028     9800   1027.7     9890     1026     9940
GR    1024     9960     1024    10050     1026    10230     1028    10260     1028    10370
GR    1028    10380   1029.8    10570   1028.5    10750     1030    11000     1030    11500
GR    1032    11510   1033.5    11630

ET       3      9.1      9.1      9.1      9.1      9.1                          9827    10374
X1       3       36     9846    10374      100      300      300
GR    1034     5200     1032     5345     1030     5430   1028.7     5460     1026     5770
GR  1024.9     6360   1025.4     6405   1025.3     7135   1025.5     8210     1027     8260
GR  1025.5     8290     1027     8580     1026     8600     1026     8605     1026     9050
GR    1026     9115     1028     9360   1030.0     9827   1030.0     9846   1029.0     9849
GR  1029.0     9872   1029.8     9900   1029.0     9914     1024     9930     1023     9955
GR  1022.2     9960   1022.4    10000   1022.5    10014   1022.8    10060   1023.4    10150
GR  1024.9    10369   1027.5    10374   1029.5    10414   1030.7    10800     1032    11300
GR  1033.5    11720
```

ET	6.4	9.1	9.1	9.1	9.1	9.1			9629.9	10445
X1	6.4	37	9630	10445	960	700	700			
GR	1034.3	5570	1034	5730	1032.3	5765	1032	5880	1030	6095
GR	1028	6170	1026	6460	1025.7	7160	1027.2	7220	1027.4	7530
GR	1027	7610	1027.2	7630	1028	7870	1028.3	8750	1028.4	8800
GR	1029.2	9100	1030	9460	1031.3	9500	1032	9600	1033	9630
GR	1032	9645	1030	9750	1029.3	9890	1028	9905	1026	9910
GR	1024	9960	1023.6	10025	1024.5	10165	1025.5	10310	1025.5	10378
GR	1024.5	10429	1028.5	10445	1029.5	10457	1030	10690	1031.2	10900
GR	1032	11060	1034	11360						
ET	13.2	9.1	9.1	9.1	9.1	9.1			9835.9	10443.1
X1	13.2	39	9836	10443	1000	680	680			
GR	1036	6023	1035.7	6123	1035.2	6278	1034	6443	1033	6523
GR	1032	6573	1030	6683	1030.2	6793	1030	7243	1030	7873
GR	1030.5	8043	1031	8203	1032	8703	1033.2	8743	1032	8783
GR	1032	9193	1032	9563	1033	9836	1032.5	9852	1031.5	9868
GR	1030.5	9888	1029.5	9909	1028.5	9929	1027.5	9951	1025.5	9989
GR	1024.9	10000	1026	10087	1026.5	10236	1027.5	10385	1027.6	10405
GR	1029.5	10409	1030.5	10424	1031.5	10443	1033.2	10583	1033.4	10753
GR	1033.6	10938	1033.8	11133	1034	11303	1035.3	11783		
ET	19.4	9.1	9.1	9.1	9.1	9.1			9747	10433.1
X1	19.4	49	9765	10433	660	580	620			
GR	1038	6220	1037.8	6355	1036	6500	1035	6850	1034	6960
GR	1032.3	7130	1032	7235	1032	7390	1032	8000	1033	8030
GR	1034	8060	1034.2	8280	1035	8700	1035	8870	1035.7	8895
GR	1035	8930	1034	9170	1034.1	9200	1034	9680	1035.1	9732
GR	1035.3	9747	1034.5	9750	1034.5	9758	1034.5	9765	1033.5	9844
GR	1032.5	9870	1031.5	9891	1030.5	9911	1029.5	9922	1028.5	9947
GR	1027.5	9974	1026.5	9994	1026.2	10000	1026.5	10047	1027.5	10197
GR	1028.5	10347	1027.5	10407	1028.5	10409	1032.5	10417	1036.5	10425
GR	1040.5	10433	1041.2	10520	1041.8	10720	1042.3	10870	1043.2	11175
GR	1043.8	11360	1044	11680	1044.5	11950	1045	12120		
ET	24.4	9.1	9.1	9.1	9.1	9.1			9787.9	10440.7
X1	24.4	42	9788	10440.6	440	500	500			
GR	1040.6	6263	1040	6433	1040	6435	1039.7	6643	1038	6736
GR	1038	6738	1036	7003	1034	7288	1033.8	7648	1034	7733
GR	1032.9	7753	1034.3	8028	1034.5	8308	1035.3	8613	1036	9008
GR	1035.8	9268	1035.5	9733	1035.6	9788	1034.5	9860	1033.5	9880
GR	1032.5	9900	1031.5	9920	1030.5	9940	1029.5	9960	1028.5	9980
GR	1027.5	10000	1027.2	10014	1028	10066	1029	10214	1030	10365
GR	1030.4	10419.4	1041	10440.6	1041.4	10528	1041.5	10533	1041.6	10558
GR	1041.6	10568	1041.7	10601	1041.7	10618	1044.2	11248	1044.4	11288
GR	1045.7	11868	1045.9	11998						
ET	29.0	9.1	9.1	9.1	9.1	9.1			9664.9	10426.1
X1	29	45	9665	10426	440	460	460			
GR	1042	6215	1043.2	6290	1042.3	6510	1042	6685	1042	6687
GR	1040	6715	1039.3	6820	1038	6865	1037.7	7020	1037.3	7215
GR	1036	7265	1035.7	7515	1034.6	7860	1034.7	8290	1035.5	8640
GR	1036	8800	1036.3	9140	1036.5	9350	1036.4	9440	1036.3	9545

GR	1038	9658	1038.7	9665	1038	9685	1036.8	9750	1036	9815
GR	1036.3	9828	1035.5	9848	1034.5	9868	1033.5	9888	1032.5	9908
GR	1031.5	9928	1030.5	9948	1029.5	9968	1028.5	9988	1028.3	10000
GR	1028.5	10038	1029.5	10178	1030.5	10337	1031	10405.4	1041.2	10426
GR	1041.4	10542	1041.5	10680	1041.9	10880	1042.2	11000	1043.1	11290
ET	36.8	9.1	9.1	9.1	9.1	9.1			9677	10443.3
X1	36.8	43	9685	10443.2	600	720	780			
GR	1042	6860	1040	6905	1039.7	7020	1038.5	7115	1038	7165
GR	1037.7	7315	1036	7390	1035.2	7645	1035	7955	1034.8	8110
GR	1034.7	8325	1036	8665	1036.5	8705	1037.4	8935	1037.8	9355
GR	1038	9505	1039.1	9525	1038	9540	1038	9600	1040	9605
GR	1041	9610	1041	9615	1041	9625	1041	9635	1041	9645
GR	1040	9665	1044.5	9677	1044.5	9685	1034.5	9720	1030	9755
GR	1028	9760	1027.4	9815	1027.5	9845	1029.5	9935	1029.8	10017
GR	1030.5	10116	1031.5	10265	1032.5	10415	1032.6	10422.4	1043	10443.2
GR	1043.5	10520	1043.8	10530	1044.5	10550				
ET	39.0	9.1	9.1	9.1	9.1	9.1			9585.9	10426.1
X1	39	55	9586	10426	270	200	220			
GR	1045	5696	1045.6	5736	1045.7	5821	1045	6091	1044	6506
GR	1042	6631	1041	6751	1040	6856	1038.7	6961	1038	7116
GR	1036.8	7206	1037.3	7556	1036.3	7896	1036.4	8191	1036.4	8366
GR	1036.5	8521	1037	8786	1037.7	8991	1038	9271	1039.2	9366
GR	1038	9436	1034	9443	1033.3	9481	1034	9511	1036	9516
GR	1038	9531	1040	9541	1042	9546	1042.5	9566	1042.5	9586
GR	1036	9593	1034	9599	1032	9606	1030	9621	1028	9646
GR	1029	9731	1030	9766	1030	9846	1032	9871	1034	9891
GR	1033.5	9911	1032.5	9950	1031.5	9973	1030.5	9994	1030.2	10000
GR	1030.5	10042	1031.5	10190	1032.5	10341	1032.9	10405.4	1043.2	10426
GR	1044.1	10946	1044.2	11256	1044.5	11511	1045	11571	1046	12881

SECNO	DEPTH	CWSEL	CRIWS	WSELK	EG	HV	HL	OLOSS	L-BANK ELEV
Q	QLOB	QCH	QROB	ALOB	ACH	AROB	VOL	TWA	R-BANK ELEV
TIME	VLOB	VCH	VROB	XNL	XNCH	XNR	WTN	ELMIN	SSTA
SLOPE	XLOBL	XLCH	XLOBR	ITRIAL	IDC	ICONT	CORAR	TOPWID	ENDST

*PROF 1

CRITICAL DEPTH TO BE CALCULATED AT ALL CROSS SECTIONS

CCHV= .100 CEHV= .300
*SECNO 1.000

3265 DIVIDED FLOW

3470 ENCROACHMENT STATIONS= 8088.0 14959.0 TYPE= 1 TARGET= 6871.000

1.000	4.69	1026.19	1024.55	1026.19	1026.27	.08	.00	.00	1027.50
13202.9	.0	10035.2	3167.7	.0	3989.9	2175.7	.0	.0	1028.00
.00	.00	2.52	1.46	.000	.035	.045	.000	1021.50	8520.29
.000989	0.	0.	0.	0	8	5	.00	2974.78	12352.52

*SECNO 2.000

3301 HV CHANGED MORE THAN HVINS

7185 MINIMUM SPECIFIC ENERGY
3720 CRITICAL DEPTH ASSUMED

3470 ENCROACHMENT STATIONS= 9729.9 10370.0 TYPE= 1 TARGET= 640.100

2.000	4.74	1028.74	1028.74	1028.74	1029.97	1.24	2.60	.35	1028.30
13202.9	.0	12966.0	237.0	.0	1441.6	81.2	106.4	53.9	1028.00
.03	.04	8.99	2.92	.045	.035	.045	.000	1024.00	9729.90
.011825	700.	1000.	1700.	0	5	0	.00	640.10	10370.00

*SECNO 3.000

3301 HV CHANGED MORE THAN HVINS

3302 WARNING: CONVEYANCE CHANGE OUTSIDE OF ACCEPTABLE RANGE, KRATIO = 3.72

3470 ENCROACHMENT STATIONS= 9827.0 10374.0 TYPE= 1 TARGET= 547.000

3.000	8.25	1030.45	1026.55	1030.45	1030.72	.27	.65	.10	1030.00
13448.9	4.7	13444.2	.0	8.4	3212.4	.0	122.7	57.9	100000.00
.05	.56	4.19	.00	.045	.035	.000	.000	1022.20	9827.00
.000885	100.	300.	300.	3	11	0	.00	547.00	10374.00

SECNO	DEPTH	CWSEL	CRIWS	WSELK	EG	HV	HL	OLOSS	L-BANK ELEV
Q	QLOB	QCH	QROB	ALOB	ACH	AROB	VOL	TWA	R-BANK ELEV
TIME	VLOB	VCH	VROB	XNL	XNCH	XNR	WTN	ELMIN	SSTA
SLOPE	XLOBL	XLCH	XLOBR	ITRIAL	IDC	ICONT	CORAR	TOPWID	ENDST

*SECNO 6.400

3470 ENCROACHMENT STATIONS= 9629.9 10445.0 TYPE= 1 TARGET= 815.100

6.400	7.53	1031.13	1027.39	1031.13	1031.34	.20	.61	.01	1033.00
13500.0	.0	13500.0	.0	.0	3733.6	.0	178.6	68.4	100000.00
.11	.00	3.62	.00	.000	.035	.000	.000	1023.60	9690.50
.000866	960.	700.	700.	2	14	0	.00	754.50	10445.00

*SECNO 13.200

3470 ENCROACHMENT STATIONS= 9835.9 10443.1 TYPE= 1 TARGET= 607.199

13.200	6.92	1031.82	1029.38	1031.82	1032.20	.38	.81	.05	1033.00
13500.0	.0	13500.0	.0	.0	2714.6	.0	228.9	78.9	1031.50
.15	.00	4.97	.01	.000	.035	.045	.000	1024.90	9862.88
.001756	1000.	680.	680.	2	14	0	.00	580.22	10443.10

*SECNO 19.400

3470 ENCROACHMENT STATIONS= 9747.0 10433.1 TYPE= 1 TARGET= 686.100

19.400	6.68	1032.88	1030.39	1032.88	1033.26	.38	1.06	.00	1034.50
13500.0	.0	13500.0	.0	.0	2717.8	.0	267.6	87.0	1040.50
.18	.00	4.97	.00	.000	.035	.000	.000	1026.20	9860.12
.001662	660.	620.	580.	2	14	0	.00	557.64	10417.76

*SECNO 24.400

3470 ENCROACHMENT STATIONS= 9787.9 10440.7 TYPE= 1 TARGET= 652.800

24.400	6.59	1033.79	1031.84	1033.79	1034.27	.47	.98	.03	1035.60
13500.0	.0	13500.0	.0	.0	2447.0	.0	297.2	93.3	1041.00
.21	.00	5.52	.00	.000	.035	.000	.000	1027.20	9874.13
.002324	440.	500.	500.	2	19	0	.00	552.05	10426.19

*SECNO 29.000

3470 ENCROACHMENT STATIONS= 9664.9 10426.1 TYPE= 1 TARGET= 761.199

29.000	6.52	1034.82	1032.57	1034.82	1035.24	.42	.97	.01	1038.70
13500.0	.0	13500.0	.0	.0	2593.6	.0	323.8	99.2	1041.20
.23	.00	5.21	.00	.000	.035	.000	.000	1028.30	9861.64
.001912	440.	460.	460.	2	14	0	.00	551.47	10413.11

SECNO	DEPTH	CWSEL	CRIWS	WSELK	EG	HV	HL	OLOSS	L-BANK ELEV
Q	QLOB	QCH	QROB	ALOB	ACH	AROB	VOL	TWA	R-BANK ELEV
TIME	VLOB	VCH	VROB	XNL	XNCH	XNR	WTN	ELMIN	SSTA
SLOPE	XLOBL	XLCH	XLOBR	ITRIAL	IDC	ICONT	CORAR	TOPWID	ENDST

*SECNO 36.800

3302 WARNING: CONVEYANCE CHANGE OUTSIDE OF ACCEPTABLE RANGE, KRATIO = 1.71

3470 ENCROACHMENT STATIONS= 9677.0 10443.3 TYPE= 1 TARGET= 766.300

36.800	8.50	1035.90	1032.45	1035.90	1036.08	.18	.81	.02	1044.50
13500.0	.0	13500.0	.0	.0	3965.0	.0	382.6	110.5	1043.00
.29	.00	3.40	.00	.000	.035	.000	.000	1027.40	9715.12
.000656	600.	780.	720.	3	19	0	.00	713.87	10428.99

*SECNO 39.000

3470 ENCROACHMENT STATIONS= 9585.9 10426.1 TYPE= 1 TARGET= 840.199

39.000	8.06	1036.06	1032.99	1036.06	1036.23	.17	.15	.00	1042.50
13500.0	.0	13500.0	.0	.0	4051.3	.0	402.8	114.4	1043.20
.31	.00	3.33	.00	.000	.035	.000	.000	1028.00	9592.94
.000733	270.	220.	200.	2	14	0	.00	818.78	10411.72

TW WEIR FLOW BREAKOUT

ASQ	QCOMP	ERRAC	TASQ	TCQ	TABER	NITER	DSWS	USWS	DSSNO	USSNO
245.96	245.97	.01	245.96	245.97	.01	5	1028.738	1030.446	2.000	3.000

TW WEIR FLOW BREAKOUT

ASQ	QCOMP	ERRAC	TASQ	TCQ	TABER	NITER	DSWS	USWS	DSSNO	USSNO
51.10	50.94	.32	297.06	296.91	.05	5	1030.446	1031.135	3.000	6.400

TW WEIR FLOW BREAKOUT

ASQ	QCOMP	ERRAC	TASQ	TCQ	TABER	NITER	DSWS	USWS	DSSNO	USSNO
.00	.00	.00	297.06	296.91	.05	5	1031.135	1031.820	6.400	13.200

TW WEIR FLOW BREAKOUT

ASQ	QCOMP	ERRAC	TASQ	TCQ	TABER	NITER	DSWS	USWS	DSSNO	USSNO
.00	.00	.00	297.06	296.91	.05	5	1031.820	1032.880	13.200	19.400

TW WEIR FLOW BREAKOUT

ASQ	QCOMP	ERRAC	TASQ	TCQ	TABER	NITER	DSWS	USWS	DSSNO	USSNO
.00	.00	.00	297.06	296.91	.05	5	1032.880	1033.793	19.400	24.400

TW WEIR FLOW BREAKOUT

ASQ	QCOMP	ERRAC	TASQ	TCQ	TABER	NITER	DSWS	USWS	DSSNO	USSNO
.00	.00	.00	297.06	296.91	.05	5	1033.793	1034.818	24.400	29.000

TW WEIR FLOW BREAKOUT

ASQ	QCOMP	ERRAC	TASQ	TCQ	TABER	NITER	DSWS	USWS	DSSNO	USSNO
.00	.00	.00	297.06	296.91	.05	5	1034.818	1035.896	29.000	36.800

TW WEIR FLOW BREAKOUT

ASQ	QCOMP	ERRAC	TASQ	TCQ	TABER	NITER	DSWS	USWS	DSSNO	USSNO
.00	.00	.00	297.06	296.91	.05	5	1035.896	1036.057	36.800	39.000

```
T1      NEW RIVER: CHANNELIZATION LEAVING MOST OF BOTTOM NATURAL
T2      NEW RIVER: AGUA FRIA RIVER CONFLUENCE TO GRAND AVE.
T3       100 YR EVENT

J1  ICHECK    INQ      NINV     IDIR     STRT     METRIC   HVINS    Q        WSEL     FQ

      0        4                        0.001                                1027.5

J2  NPROF     IPLOT    PRFVS    XSECV    XSECH    FN       ALLDC    IBW      CHNIM    ITRACE

      2        0        -1                                 -1                          0
```

SECNO	DEPTH	CWSEL	CRIWS	WSELK	EG	HV	HL	OLOSS	L-BANK ELEV
Q	QLOB	QCH	QROB	ALOB	ACH	AROB	VOL	TWA	R-BANK ELEV
TIME	VLOB	VCH	VROB	XNL	XNCH	XNR	WTN	ELMIN	SSTA
SLOPE	XLOBL	XLCH	XLOBR	ITRIAL	IDC	ICONT	CORAR	TOPWID	ENDST

*PROF 2

CRITICAL DEPTH TO BE CALCULATED AT ALL CROSS SECTIONS

CCHV= .100 CEHV= .300
*SECNO 1.000

3265 DIVIDED FLOW

3470 ENCROACHMENT STATIONS= 8088.0 14959.0 TYPE= 1 TARGET= 6871.000

1.000	5.76	1027.26	1025.35	1027.26	1027.39	.13	.00	.00	1027.50
25407.7	.0	17904.8	7502.8	.0	5651.9	3830.9	.0	.0	1028.00
.00	.00	3.17	1.96	.000	.035	.045	.000	1021.50	8511.87
.001000	0.	0.	0.	0	14	5	.00	3198.08	12435.82

*SECNO 2.000

3301 HV CHANGED MORE THAN HVINS

7185 MINIMUM SPECIFIC ENERGY
3720 CRITICAL DEPTH ASSUMED

3470 ENCROACHMENT STATIONS= 9729.9 10370.0 TYPE= 1 TARGET= 640.100

2.000	6.06	1030.06	1030.06	1030.06	1031.96	1.90	2.64	.53	1028.30
25407.7	.1	24153.9	1253.6	.2	2143.5	226.8	168.7	58.1	1028.00
.03	.72	11.27	5.53	.045	.035	.045	.000	1024.00	9729.90
.010937	700.	1000.	1700.	0	8	0	.00	640.10	10370.00

*SECNO 3.000

3301 HV CHANGED MORE THAN HVINS

3302 WARNING: CONVEYANCE CHANGE OUTSIDE OF ACCEPTABLE RANGE, KRATIO = 2.93

3470 ENCROACHMENT STATIONS= 9827.0 10374.0 TYPE= 1 TARGET= 547.000

3.000	10.14	1032.34	1028.43	1032.34	1033.02	.67	.93	.12	1030.00
27875.5	94.0	27781.5	.0	44.5	4215.5	.0	191.4	62.2	100000.00
.04	2.11	6.59	.00	.045	.035	.000	.000	1022.20	9827.00
.001535	100.	300.	300.	3	8	0	.00	547.00	10374.00

```
 SECNO     DEPTH     CWSEL     CRIWS     WSELK     EG        HV        HL        OLOSS     L-BANK ELEV
 Q         QLOB      QCH       QROB      ALOB      ACH       AROB      VOL       TWA       R-BANK ELEV
 TIME      VLOB      VCH       VROB      XNL       XNCH      XNR       WTN       ELMIN     SSTA
 SLOPE     XLOBL     XLCH      XLOBR     ITRIAL    IDC       ICONT     CORAR     TOPWID    ENDST


*SECNO 6.400

3470 ENCROACHMENT STATIONS=     9629.9   10445.0  TYPE=      1  TARGET=      815.100
    6.400      9.94   1033.54   1029.74   1033.54   1034.04       .49      1.00       .02   1033.00
  31902.4        .0   31902.4       .0        .1    5656.0        .0     271.2      73.2 100000.00
     .08       .01      5.64       .00      .045      .035      .000      .000   1023.60   9629.90
  .001346      960.      700.      700.         2        14         0       .00    815.10  10445.00


*SECNO 13.200

3470 ENCROACHMENT STATIONS=     9835.9   10443.1  TYPE=      1  TARGET=      607.199
   13.200      9.55   1034.45   1031.84   1034.45   1035.42       .97      1.24       .14   1033.00
  33939.0        .0   33938.8       .1        .1    4292.8        .3     348.9      84.3   1031.50
     .10       .34      7.91       .35      .045      .035      .045      .000   1024.90   9835.90
  .002558     1000.      680.      680.         2        19         0       .00    607.20  10443.10


*SECNO 19.400

3470 ENCROACHMENT STATIONS=     9747.0   10433.1  TYPE=      1  TARGET=      686.100
   19.400      9.83   1036.03   1033.15   1036.03   1037.00       .97      1.58       .00   1034.50
  37182.9      56.1   37126.8       .0      26.4    4691.8        .0     413.0      93.4   1040.50
     .12      2.13      7.91       .00      .045      .035      .000      .000   1026.20   9747.00
  .002548      660.      620.      580.         2        15         0       .00    677.06  10424.06


*SECNO 24.400

3470 ENCROACHMENT STATIONS=     9787.9   10440.7  TYPE=      1  TARGET=      652.800
   24.400     10.09   1037.29   1034.88   1037.29   1038.45      1.16      1.39       .06   1035.60
  39780.3        .1   39780.3       .0        .2    4596.3        .0     466.4     101.0   1041.00
     .14       .38      8.65       .00      .045      .035      .000      .000   1027.20   9787.90
  .003043      440.      500.      500.         2        15         0       .00    645.28  10433.18


*SECNO 29.000

3470 ENCROACHMENT STATIONS=     9664.9   10426.1  TYPE=      1  TARGET=      761.199
   29.000     10.51   1038.81   1035.63   1038.81   1039.77       .96      1.29       .02   1038.70
  40999.2        .0   40999.2       .0        .0    5217.3        .0     518.3     108.4   1041.20
     .15       .02      7.86       .00      .045      .035      .000      .000   1028.30   9664.90
  .002617      440.      460.      460.         2        15         0       .00    756.29  10421.19
```

SECNO	DEPTH	CWSEL	CRIWS	WSELK	EG	HV	HL	OLOSS	L-BANK ELEV
Q	QLOB	QCH	QROB	ALOB	ACH	AROB	VOL	TWA	R-BANK ELEV
TIME	VLOB	VCH	VROB	XNL	XNCH	XNR	WTN	ELMIN	SSTA
SLOPE	XLOBL	XLCH	XLOBR	ITRIAL	IDC	ICONT	CORAR	TOPWID	ENDST

*SECNO 36.800

3302 WARNING: CONVEYANCE CHANGE OUTSIDE OF ACCEPTABLE RANGE, KRATIO = 1.75

3470 ENCROACHMENT STATIONS= 9677.0 10443.3 TYPE= 1 TARGET= 766.300

36.800	13.00	1040.40	1034.96	1040.40	1040.90	.50	1.08	.05	1044.50
41000.0	.0	41000.0	.0	.0	7234.7	.0	629.7	121.8	1043.00
.19	.00	5.67	.00	.000	.035	.000	.000	1027.40	9699.36
.000855	600.	780.	720.	3	19	0	.00	738.63	10437.99

*SECNO 39.000

3470 ENCROACHMENT STATIONS= 9585.9 10426.1 TYPE= 1 TARGET= 840.199

39.000	12.66	1040.66	1035.37	1040.66	1041.08	.42	.18	.01	1042.50
41000.0	.0	41000.0	.0	.0	7850.3	.0	667.8	125.7	1043.20
.20	.00	5.22	.00	.000	.035	.000	.000	1028.00	9587.98
.000766	270.	220.	200.	2	11	0	.00	832.93	10420.92

TW WEIR FLOW BREAKOUT

ASQ	QCOMP	ERRAC	TASQ	TCQ	TABER	NITER	DSWS	USWS	DSSNO	USSNO
2467.87	2468.48	.02	2467.87	2468.48	.02	10	1030.062	1032.344	2.000	3.000

TW WEIR FLOW BREAKOUT

ASQ	QCOMP	ERRAC	TASQ	TCQ	TABER	NITER	DSWS	USWS	DSSNO	USSNO
4026.88	4026.90	.00	6494.76	6495.38	.01	10	1032.344	1033.542	3.000	6.400

TW WEIR FLOW BREAKOUT

ASQ	QCOMP	ERRAC	TASQ	TCQ	TABER	NITER	DSWS	USWS	DSSNO	USSNO
2036.58	2037.46	.04	8531.33	8532.84	.02	10	1033.542	1034.450	6.400	13.200

TW WEIR FLOW BREAKOUT

ASQ	QCOMP	ERRAC	TASQ	TCQ	TABER	NITER	DSWS	USWS	DSSNO	USSNO
3243.94	3245.52	.05	11775.27	11778.36	.03	10	1034.450	1036.032	13.200	19.400

TW WEIR FLOW BREAKOUT

ASQ	QCOMP	ERRAC	TASQ	TCQ	TABER	NITER	DSWS	USWS	DSSNO	USSNO
2597.40	2597.71	.01	14372.67	14376.08	.02	10	1036.032	1037.291	19.400	24.400

TW WEIR FLOW BREAKOUT

ASQ	QCOMP	ERRAC	TASQ	TCQ	TABER	NITER	DSWS	USWS	DSSNO	USSNO
1218.89	1218.85	.00	15591.56	15594.93	.02	10	1037.291	1038.811	24.400	29.000

TW WEIR FLOW BREAKOUT

ASQ	QCOMP	ERRAC	TASQ	TCQ	TABER	NITER	DSWS	USWS	DSSNO	USSNO
.79	.79	.06	15592.34	15595.71	.02	10	1038.811	1040.397	29.000	36.800

TW WEIR FLOW BREAKOUT

ASQ	QCOMP	ERRAC	TASQ	TCQ	TABER	NITER	DSWS	USWS	DSSNO	USSNO
.00	.00	.00	15592.34	15595.71	.02	10	1040.397	1040.658	36.800	39.000

```
T1      NEW RIVER: CHANNELIZATION LEAVING MOST OF BOTTOM NATURAL
T2      NEW RIVER: AGUA FRIA RIVER CONFLUENCE TO GRAND AVE.
T3       SPF

J1  ICHECK    INQ      NINV     IDIR     STRT     METRIC   HVINS    Q        WSEL     FQ

      0        6                        0.001                                1029.0

J2  NPROF     IPLOT    PRFVS    XSECV    XSECH    FN       ALLDC    IBW      CHNIM    ITRACE

      3        0        -1                                -1                         0
```

SECNO	DEPTH	CWSEL	CRIWS	WSELK	EG	HV	HL	OLOSS	L-BANK ELEV
Q	QLOB	QCH	QROB	ALOB	ACH	AROB	VOL	TWA	R-BANK ELEV
TIME	VLOB	VCH	VROB	XNL	XNCH	XNR	WTN	ELMIN	SSTA
SLOPE	XLOBL	XLCH	XLOBR	ITRIAL	IDC	ICONT	CORAR	TOPWID	ENDST

*PROF 3

CRITICAL DEPTH TO BE CALCULATED AT ALL CROSS SECTIONS

CCHV= .100 CEHV= .300
*SECNO 1.000

3265 DIVIDED FLOW

3470 ENCROACHMENT STATIONS= 8088.0 14959.0 TYPE= 1 TARGET= 6871.000

1.000	6.18	1027.68	1025.68	1027.69	1027.83	.14	.00	.00	1027.50
31025.8	10.0	21350.1	9665.7	22.9	6309.0	4540.4	.0	.0	1028.00
.00	.44	3.38	2.13	.045	.035	.045	.000	1021.50	8425.14
.000990	0.	0.	0.	0	11	4	.00	3389.17	12534.38

*SECNO 2.000

3301 HV CHANGED MORE THAN HVINS

7185 MINIMUM SPECIFIC ENERGY
3720 CRITICAL DEPTH ASSUMED

3470 ENCROACHMENT STATIONS= 9729.9 10370.0 TYPE= 1 TARGET= 640.100

2.000	6.60	1030.60	1030.60	1030.60	1032.75	2.16	2.62	.60	1028.30
31025.8	.2	29220.4	1805.3	.2	2427.1	285.7	194.6	60.8	1028.00
.03	.71	12.04	6.32	.045	.035	.045	.000	1024.00	9729.90
.010577	700.	1000.	1700.	0	8	0	.00	640.10	10370.00

*SECNO 3.000

3301 HV CHANGED MORE THAN HVINS

3302 WARNING: CONVEYANCE CHANGE OUTSIDE OF ACCEPTABLE RANGE, KRATIO = 2.71

3470 ENCROACHMENT STATIONS= 9827.0 10374.0 TYPE= 1 TARGET= 547.000

3.000	10.84	1033.04	1029.38	1033.04	1033.91	.88	1.03	.13	1030.00
34670.2	153.4	34516.8	.0	57.7	4580.2	.0	219.8	64.9	100000.00
.04	2.66	7.54	.00	.045	.035	.000	.000	1022.20	9827.00
.001800	100.	300.	300.	3	8	0	.00	547.00	10374.00

SECNO	DEPTH	CWSEL	CRIWS	WSELK	EG	HV	HL	OLOSS	L-BANK ELEV
Q	QLOB	QCH	QROB	ALOB	ACH	AROB	VOL	TWA	R-BANK ELEV
TIME	VLOB	VCH	VROB	XNL	XNCH	XNR	WTN	ELMIN	SSTA
SLOPE	XLOBL	XLCH	XLOBR	ITRIAL	IDC	ICONT	CORAR	TOPWID	ENDST

```
*SECNO 6.400
3280 CROSS SECTION      6.40 EXTENDED       .44 FEET


3470 ENCROACHMENT STATIONS=     9629.9   10445.0  TYPE=      1  TARGET=      815.100
     6.400     10.83   1034.43   1030.70   1034.43   1035.10       .68      1.17       .02   1033.00
   42184.5        .0   42184.5        .0        .1    6384.3        .0     308.6      75.9 100000.00
       .07       .27      6.61       .00      .045      .035      .000      .000   1023.60   9629.90
   .001574      960.      700.      700.         0        14         0       .00    815.10  10445.00


*SECNO 13.200
3280 CROSS SECTION     13.20 EXTENDED       .10 FEET


3301 HV CHANGED MORE THAN HVINS


3470 ENCROACHMENT STATIONS=     9835.9   10443.1  TYPE=      1  TARGET=      607.199
    13.200     10.50   1035.40   1033.10   1035.40   1036.87      1.48      1.53       .24   1033.00
   47502.6        .1   47502.3        .2        .2    4867.0        .4     396.4      87.0   1031.50
       .09       .40      9.76       .40      .045      .035      .045      .000   1024.90   9835.90
   .003297     1000.      680.      680.         2        15         0       .00    607.20  10443.10


*SECNO 19.400

3470 ENCROACHMENT STATIONS=     9747.0   10433.1  TYPE=      1  TARGET=      686.100
    19.400     11.18   1037.38   1034.88   1037.38   1038.88      1.50      2.00       .01   1034.50
   55116.1     179.1   54937.0        .0      50.5    5578.5        .0     471.1      96.1   1040.50
       .10      3.54      9.85       .00      .045      .035      .000      .000   1026.20   9747.00
   .003152      660.      620.      580.         2        15         0       .00    679.75  10426.75


*SECNO 24.400

3470 ENCROACHMENT STATIONS=     9787.9   10440.7  TYPE=      1  TARGET=      652.800
    24.400     11.64   1038.84   1036.70   1038.84   1040.74      1.90      1.74       .12   1035.60
   61910.2        .1   61910.0        .0        .3    5601.3        .0     535.5     103.8   1041.00
       .12       .43     11.05       .00      .045      .035      .000      .000   1027.20   9787.90
   .003839      440.      500.      500.         2        15         0       .00    648.39  10436.29
```

```
   SECNO     DEPTH     CWSEL     CRIWS     WSELK     EG        HV        HL        OLOSS     L-BANK ELEV
   Q         QLOB      QCH       QROB      ALOB      ACH       AROB      VOL       TWA       R-BANK ELEV
   TIME      VLOB      VCH       VROB      XNL       XNCH      XNR       WTN       ELMIN     SSTA
   SLOPE     XLOBL     XLCH      XLOBR     ITRIAL    IDC       ICONT     CORAR     TOPWID    ENDST


*SECNO 29.000

3470 ENCROACHMENT STATIONS=     9664.9   10426.1  TYPE=      1  TARGET=      761.199
    29.000     12.47   1040.77   1038.10   1040.77   1042.35      1.58      1.58       .03   1038.70
   67554.8        .1   67554.8       .0        .2    6700.0        .0     600.5     111.2   1041.20
       .13       .38     10.08       .00      .045      .035      .000      .000   1028.30   9664.90
   .003111      440.      460.      460.         2        15         0       .00    760.24  10425.14


*SECNO 36.800

3301 HV CHANGED MORE THAN HVINS


3302 WARNING:  CONVEYANCE CHANGE OUTSIDE OF ACCEPTABLE RANGE,  KRATIO =  1.68


3470 ENCROACHMENT STATIONS=     9677.0   10443.3  TYPE=      1  TARGET=      766.300
    36.800     15.51   1042.91   1036.93   1042.91   1043.80       .89      1.38       .07   1044.50
   68921.1        .0   68921.1       .0        .0    9109.6        .0     742.0     124.7   1043.00
       .16       .00      7.57       .00      .000      .035      .000      .000   1027.40   9690.56
   .001151      600.      780.      720.         3        15         0       .00    752.46  10443.02


*SECNO 39.000

3470 ENCROACHMENT STATIONS=     9585.9   10426.1  TYPE=      1  TARGET=      840.199
    39.000     15.32   1043.32   1037.11   1043.32   1044.05       .73       .23       .02   1042.50
   69000.0        .0   69000.0       .0        .1   10076.8        .0     790.5     128.8   1043.20
       .17       .01      6.85       .01      .045      .035      .045      .000   1028.00   9585.90
   .000956      270.      220.      200.         2        14         0       .00    840.20  10426.10
```

TW WEIR FLOW BREAKOUT

ASQ	QCOMP	ERRAC	TASQ	TCQ	TABER	NITER	DSWS	USWS	DSSNO	USSNO
3644.33	3652.73	.23	3644.33	3652.73	.23	10	1030.597	1033.035	2.000	3.000

TW WEIR FLOW BREAKOUT

ASQ	QCOMP	ERRAC	TASQ	TCQ	TABER	NITER	DSWS	USWS	DSSNO	USSNO
7514.37	7496.04	.24	11158.70	11148.77	.09	10	1033.035	1034.426	3.000	6.400

TW WEIR FLOW BREAKOUT

ASQ	QCOMP	ERRAC	TASQ	TCQ	TABER	NITER	DSWS	USWS	DSSNO	USSNO
5318.03	5320.08	.04	16476.73	16468.86	.05	10	1034.426	1035.396	6.400	13.200

TW WEIR FLOW BREAKOUT

ASQ	QCOMP	ERRAC	TASQ	TCQ	TABER	NITER	DSWS	USWS	DSSNO	USSNO
7613.54	7632.22	.25	24090.27	24101.08	.04	10	1035.396	1037.375	13.200	19.400

TW WEIR FLOW BREAKOUT

ASQ	QCOMP	ERRAC	TASQ	TCQ	TABER	NITER	DSWS	USWS	DSSNO	USSNO
6794.08	6793.35	.01	30884.35	30894.42	.03	10	1037.375	1038.843	19.400	24.400

TW WEIR FLOW BREAKOUT

ASQ	QCOMP	ERRAC	TASQ	TCQ	TABER	NITER	DSWS	USWS	DSSNO	USSNO
5644.65	5648.44	.07	36529.01	36542.86	.04	10	1038.843	1040.771	24.400	29.000

TW WEIR FLOW BREAKOUT

ASQ	QCOMP	ERRAC	TASQ	TCQ	TABER	NITER	DSWS	USWS	DSSNO	USSNO
1366.27	1367.01	.05	37895.28	37909.88	.04	10	1040.771	1042.912	29.000	36.800

TW WEIR FLOW BREAKOUT

ASQ	QCOMP	ERRAC	TASQ	TCQ	TABER	NITER	DSWS	USWS	DSSNO	USSNO
78.90	78.98	.09	37974.18	37988.85	.04	10	1042.912	1043.319	36.800	39.000

THIS RUN EXECUTED 30JUL92 13:58:03

****
HEC-2 WATER SURFACE PROFILES

Version 4.6.2; May 1991
****

NOTE- ASTERISK (*) AT LEFT OF CROSS-SECTION NUMBER INDICATES MESSAGE IN SUMMARY OF ERRORS LIST

10 YR EVENT

SUMMARY PRINTOUT

	SECNO	Q	CWSEL	VCH	DEPTH	TOPWID	SSTA	ENDST
	1.000	13202.94	1026.19	2.52	4.69	2974.78	8520.29	12352.52
	1.000	25407.65	1027.26	3.17	5.76	3198.08	8511.87	12435.82
	1.000	31025.83	1027.68	3.38	6.18	3389.17	8425.14	12534.38
*	2.000	13202.94	1028.74	8.99	4.74	640.10	9729.90	10370.00
*	2.000	25407.65	1030.06	11.27	6.06	640.10	9729.90	10370.00
*	2.000	31025.83	1030.60	12.04	6.60	640.10	9729.90	10370.00
*	3.000	13448.90	1030.45	4.19	8.25	547.00	9827.00	10374.00
*	3.000	27875.53	1032.34	6.59	10.14	547.00	9827.00	10374.00
*	3.000	34670.16	1033.04	7.54	10.84	547.00	9827.00	10374.00
	6.400	13500.00	1031.13	3.62	7.53	754.50	9690.50	10445.00
	6.400	31902.41	1033.54	5.64	9.94	815.10	9629.90	10445.00
	6.400	42184.53	1034.43	6.61	10.83	815.10	9629.90	10445.00
	13.200	13500.00	1031.82	4.97	6.92	580.22	9862.88	10443.10
	13.200	33938.99	1034.45	7.91	9.55	607.20	9835.90	10443.10
	13.200	47502.55	1035.40	9.76	10.50	607.20	9835.90	10443.10
	19.400	13500.00	1032.88	4.97	6.68	557.64	9860.12	10417.76
	19.400	37182.93	1036.03	7.91	9.83	677.06	9747.00	10424.06
	19.400	55116.09	1037.38	9.85	11.18	679.75	9747.00	10426.75
	24.400	13500.00	1033.79	5.52	6.59	552.05	9874.13	10426.19
	24.400	39780.32	1037.29	8.65	10.09	645.28	9787.90	10433.18
	24.400	61910.18	1038.84	11.05	11.64	648.39	9787.90	10436.29
	29.000	13500.00	1034.82	5.21	6.52	551.47	9861.64	10413.11
	29.000	40999.21	1038.81	7.86	10.51	756.29	9664.90	10421.19
	29.000	67554.83	1040.77	10.08	12.47	760.24	9664.90	10425.14

	SECNO	Q	CWSEL	VCH	DEPTH	TOPWID	SSTA	ENDST
*	36.800	13500.00	1035.90	3.40	8.50	713.87	9715.12	10428.99
*	36.800	41000.00	1040.40	5.67	13.00	738.63	9699.36	10437.99
*	36.800	68921.10	1042.91	7.57	15.51	752.46	9690.56	10443.02
	39.000	13500.00	1036.06	3.33	8.06	818.78	9592.94	10411.72
	39.000	41000.00	1040.66	5.22	12.66	832.93	9587.98	10420.92
	39.000	69000.00	1043.32	6.85	15.32	840.20	9585.90	10426.10

SUMMARY OF ERRORS AND SPECIAL NOTES

```
CAUTION SECNO=      2.000  PROFILE=  1  CRITICAL DEPTH ASSUMED
CAUTION SECNO=      2.000  PROFILE=  1  MINIMUM SPECIFIC ENERGY
CAUTION SECNO=      2.000  PROFILE=  2  CRITICAL DEPTH ASSUMED
CAUTION SECNO=      2.000  PROFILE=  2  MINIMUM SPECIFIC ENERGY
CAUTION SECNO=      2.000  PROFILE=  3  CRITICAL DEPTH ASSUMED
CAUTION SECNO=      2.000  PROFILE=  3  MINIMUM SPECIFIC ENERGY

WARNING SECNO=      3.000  PROFILE=  1  CONVEYANCE CHANGE OUTSIDE ACCEPTABLE RANGE
WARNING SECNO=      3.000  PROFILE=  2  CONVEYANCE CHANGE OUTSIDE ACCEPTABLE RANGE
WARNING SECNO=      3.000  PROFILE=  3  CONVEYANCE CHANGE OUTSIDE ACCEPTABLE RANGE

WARNING SECNO=     36.800  PROFILE=  1  CONVEYANCE CHANGE OUTSIDE ACCEPTABLE RANGE
WARNING SECNO=     36.800  PROFILE=  2  CONVEYANCE CHANGE OUTSIDE ACCEPTABLE RANGE
WARNING SECNO=     36.800  PROFILE=  3  CONVEYANCE CHANGE OUTSIDE ACCEPTABLE RANGE
```

<<<<<< Cross Section: 1: (FN = WEIR4.0) >>>>>>

Q1= 13202.9 WS1= 1026.19
Q2= 25407.7 WS2= 1027.26
Q3= 31025.8 WS3= 1027.68

Manning-n's: n-lob = .045 n-ch = .035 n-rob = .045

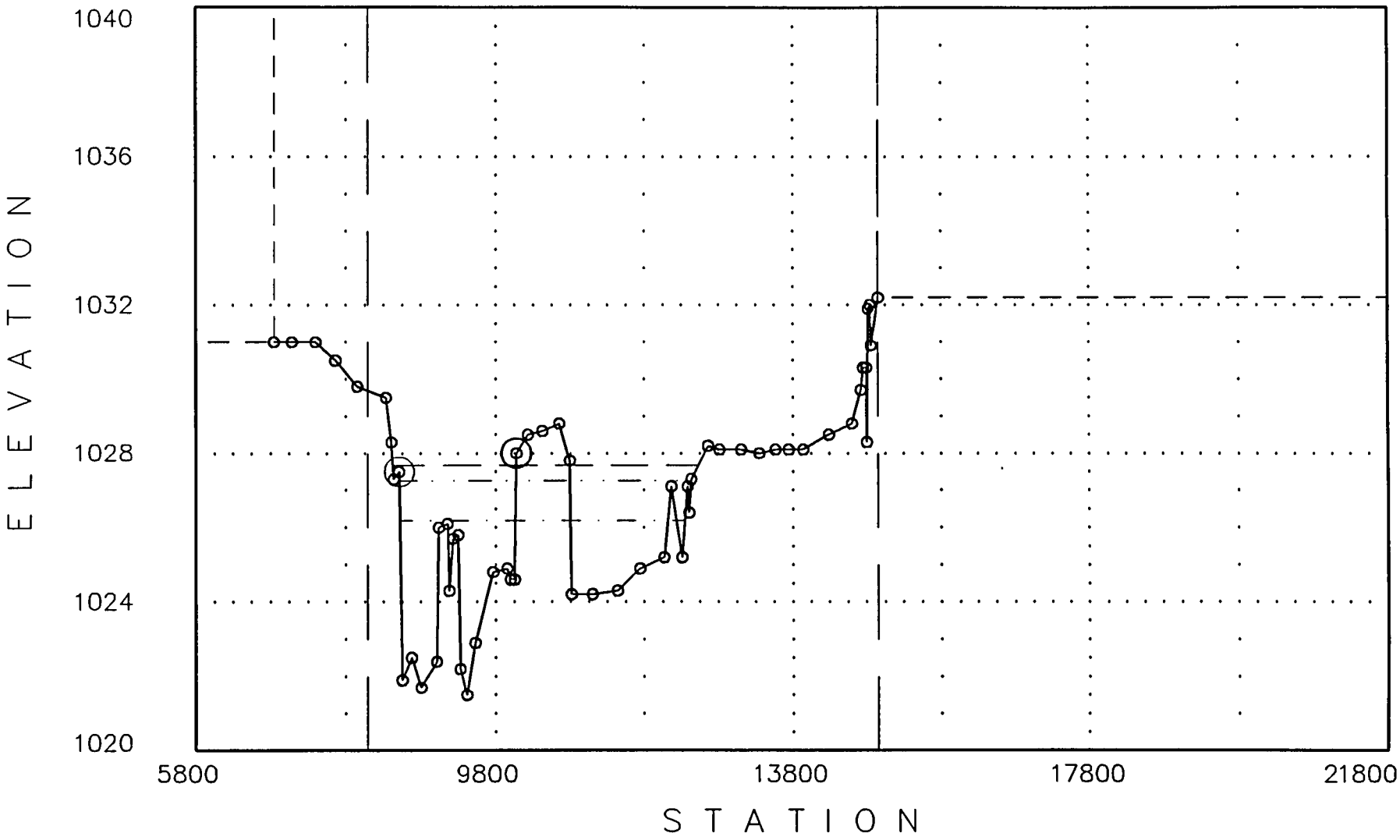

07-30-1992

<<<<<< Cross Section: 2: (FN = WEIR4.0) >>>>>>

Q1= 13202.9 WS1= 1028.74
Q2= 25407.7 WS2= 1030.06
Q3= 31025.8 WS3= 1030.6

Manning-n's: n-lob = .045 n-ch = .035 n-rob = .045

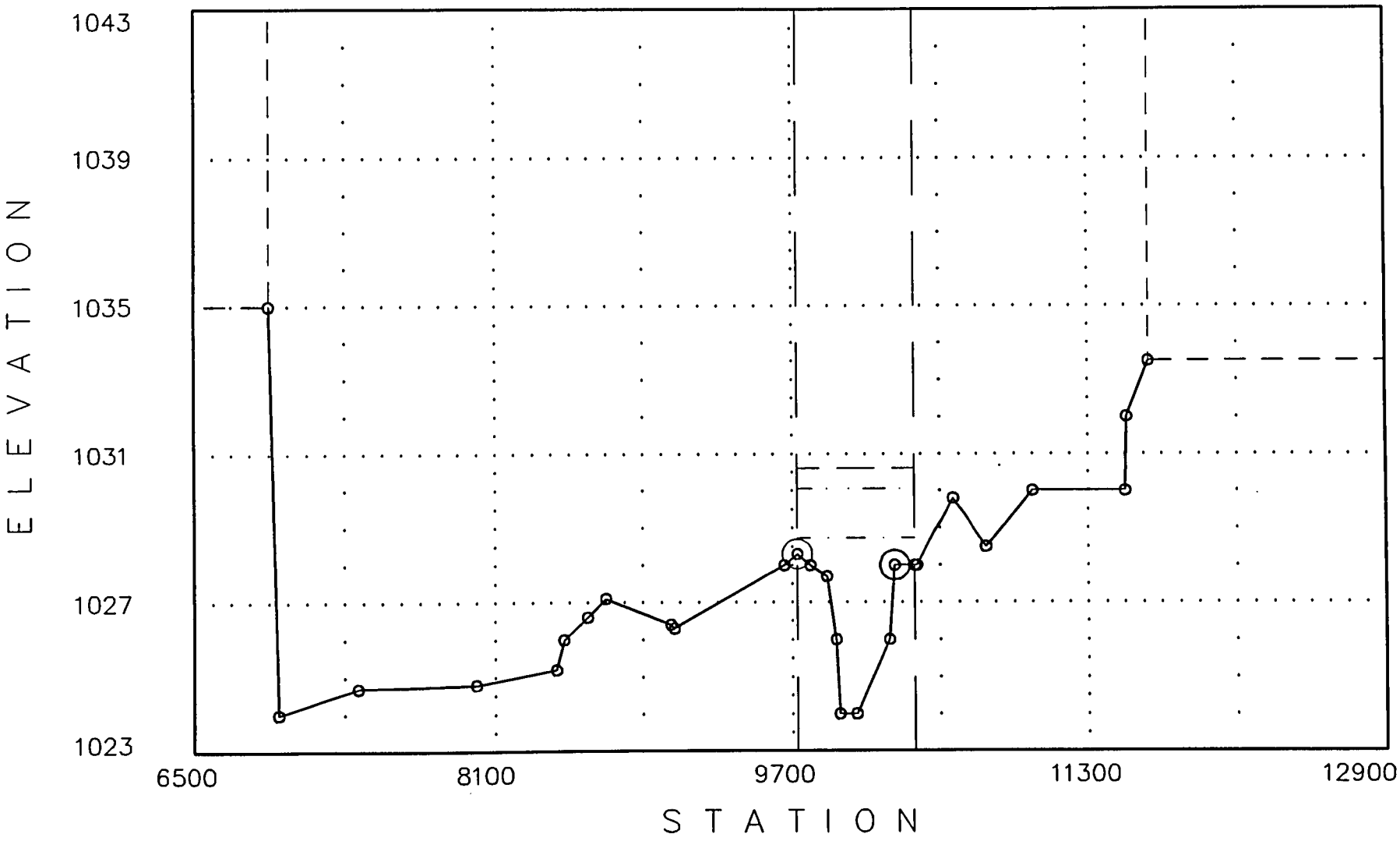

07-30-1992

<<<<<< Cross Section: 3: (FN = WEIR4.0) >>>>>>

Q1= 13448.9 WS1= 1030.45
Q2= 27875.5 WS2= 1032.34
Q3= 34670.2 WS3= 1033.04

Manning-n's: n-lob = .045 n-ch = .035 n-rob = .045

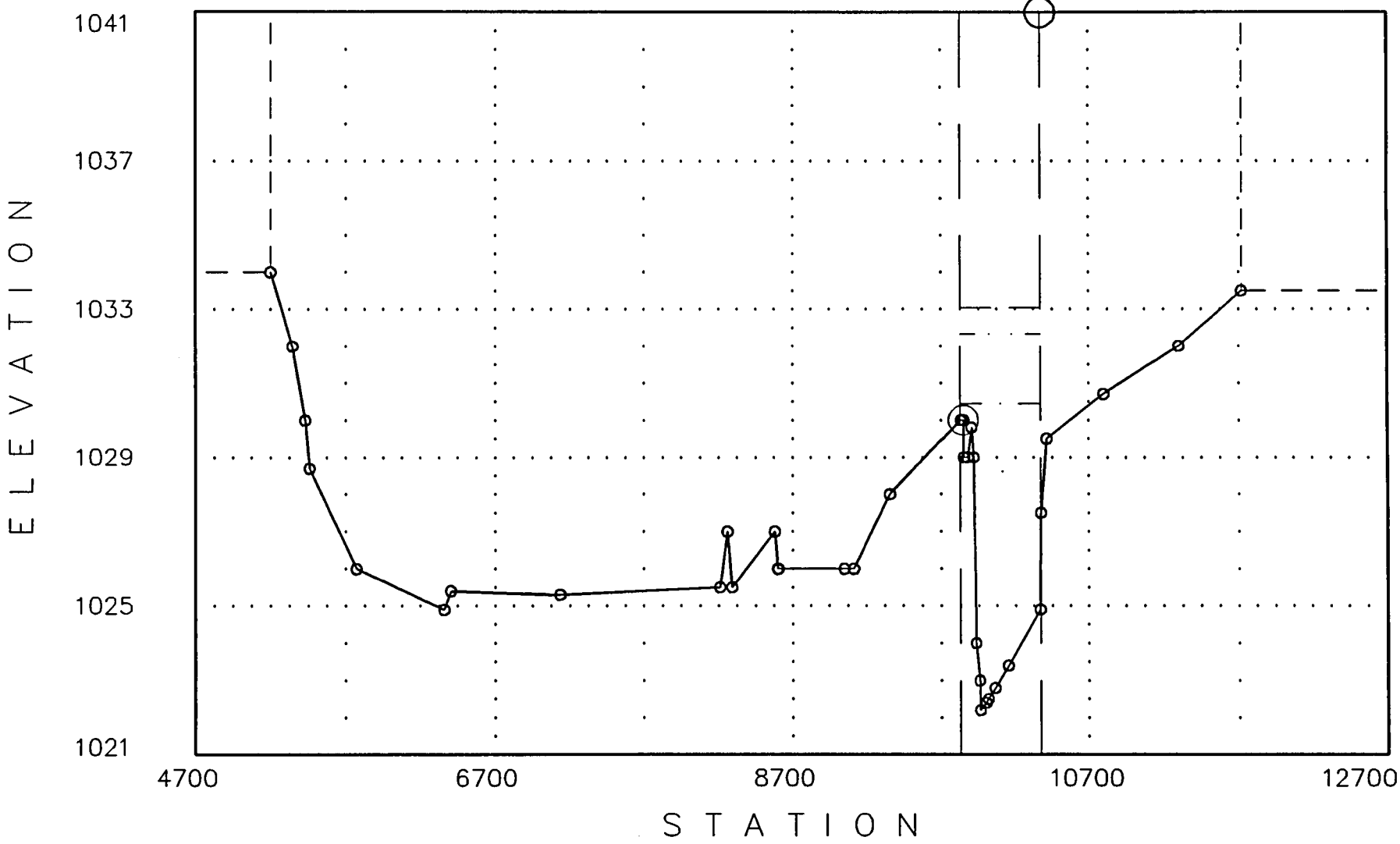

07-30-1992

<<<<<< Cross Section: 6.4: (FN = WEIR4.0) >>>>>>

Q1= 13500 WS1= 1031.13
Q2= 31902.4 WS2= 1033.54
Q3= 42184.5 WS3= 1034.43

Manning-n's: n-lob = .045 n-ch = .035 n-rob = .045

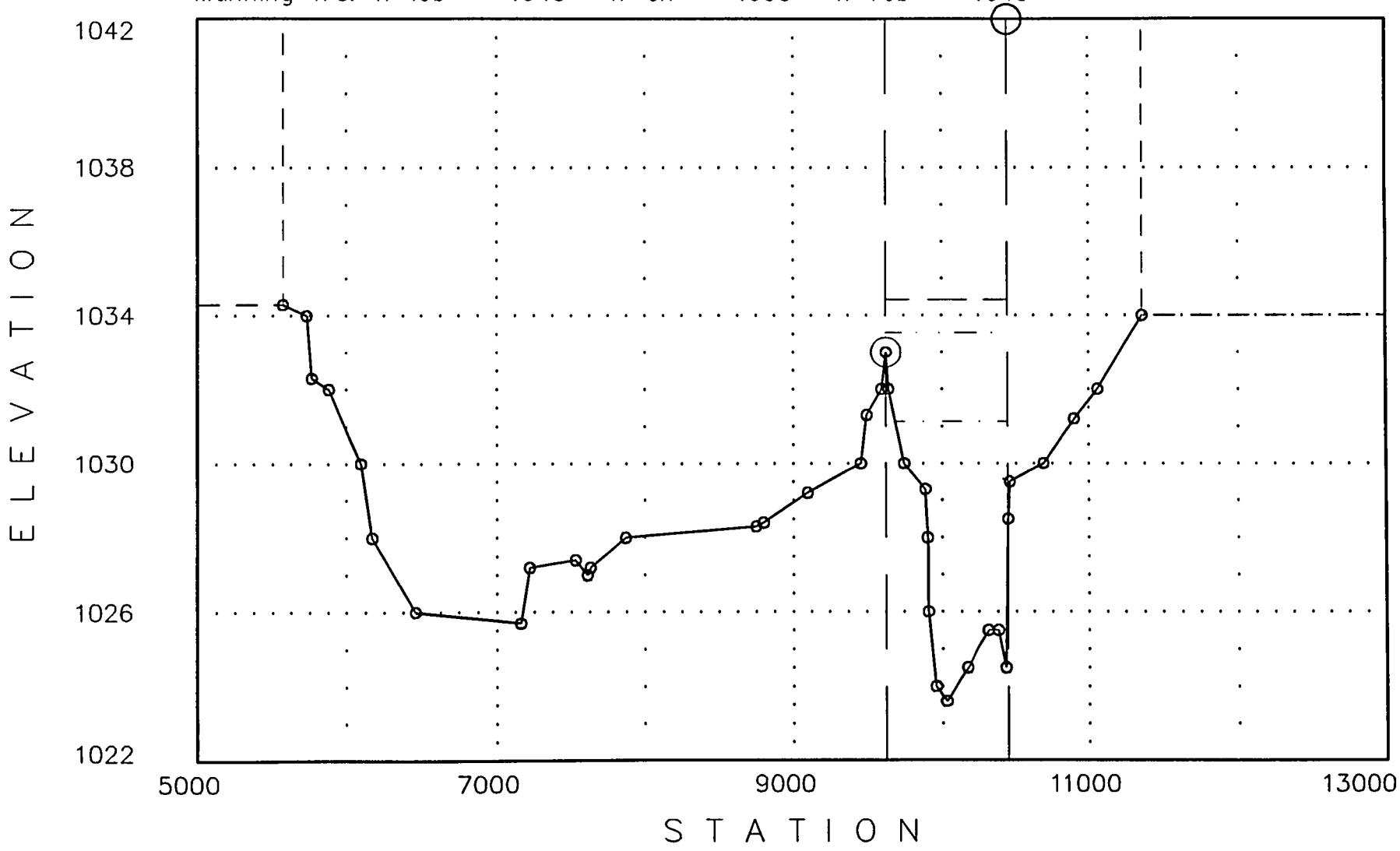

07-30-1992

<<<<<< Cross Section: 13.2: (FN = WEIR4.0) >>>>>>

Q1= 13500 WS1= 1031.82
Q2= 33939 WS2= 1034.45
Q3= 47502.6 WS3= 1035.4

Manning-n's: n-lob = .045 n-ch = .035 n-rob = .045

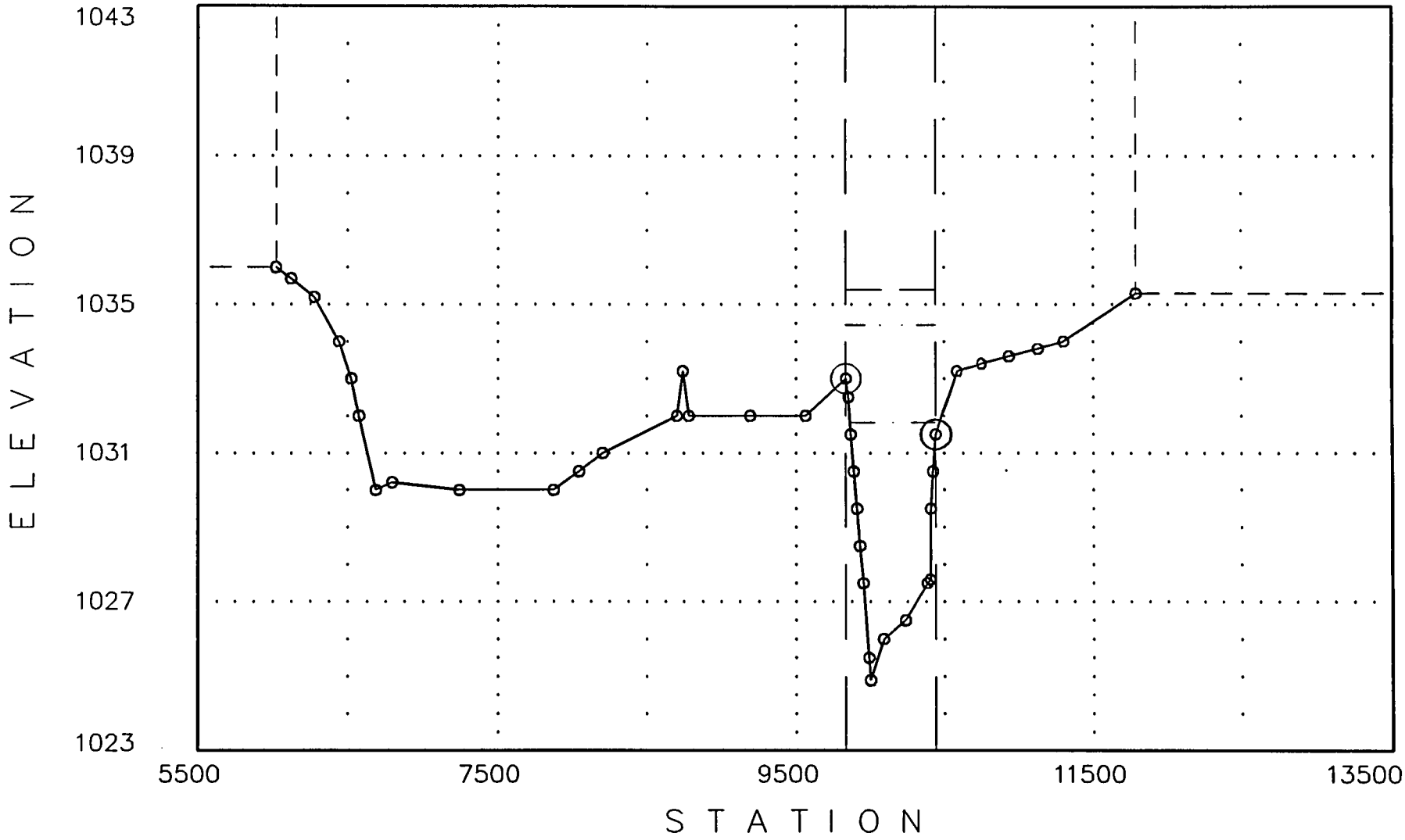

07-30-1992

<<<<<< Cross Section: 19.4: (FN = WEIR4.0) >>>>>>

Q1= 13500 WS1= 1032.88
Q2= 37182.9 WS2= 1036.03
Q3= 55116.1 WS3= 1037.38

Manning-n's: n-lob = .045 n-ch = .035 n-rob = .045

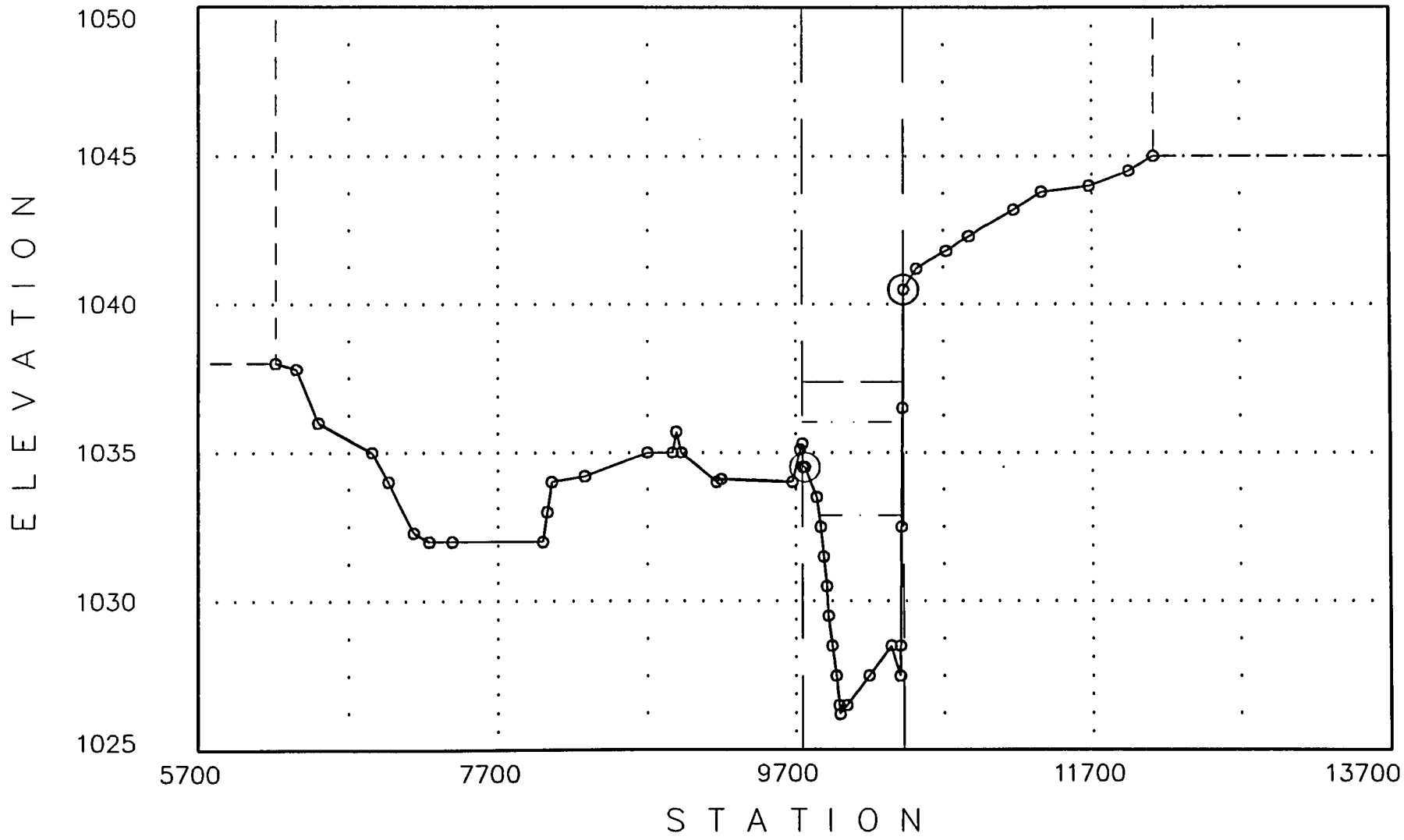

07-30-1992

<<<<<< Cross Section: 24.4: (FN = WEIR4.0) >>>>>>

Q1= 13500 WS1= 1033.79
Q2= 39780.3 WS2= 1037.29
Q3= 61910.2 WS3= 1038.84

Manning-n's: n-lob = .045 n-ch = .035 n-rob = .045

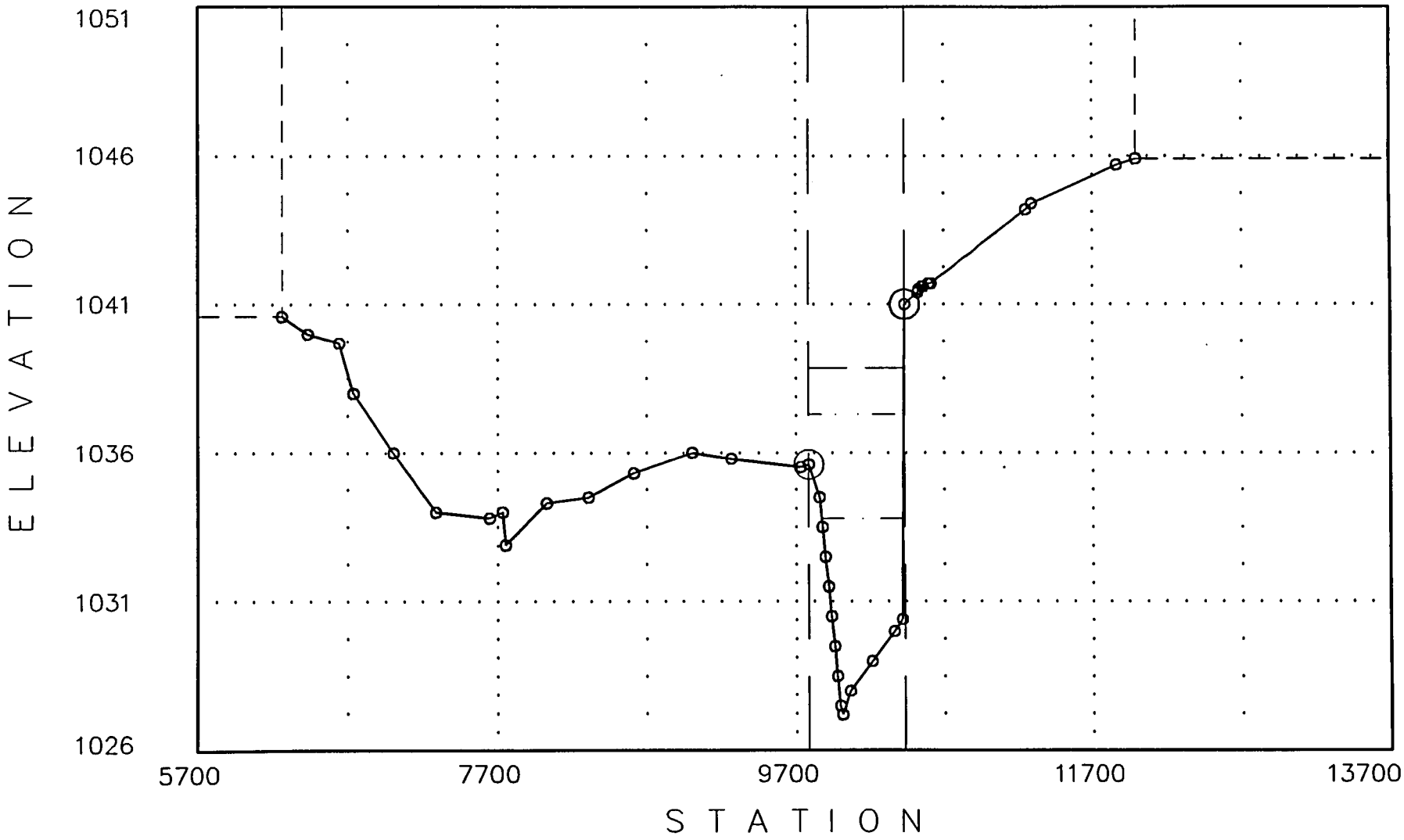

07-30-1992

<<<<<< Cross Section: 29: (FN = WEIR4.0) >>>>>>

Q1= 13500 WS1= 1034.82
Q2= 40999.2 WS2= 1038.81
Q3= 67554.8 WS3= 1040.77

Manning-n's: n-lob = .045 n-ch = .035 n-rob = .045

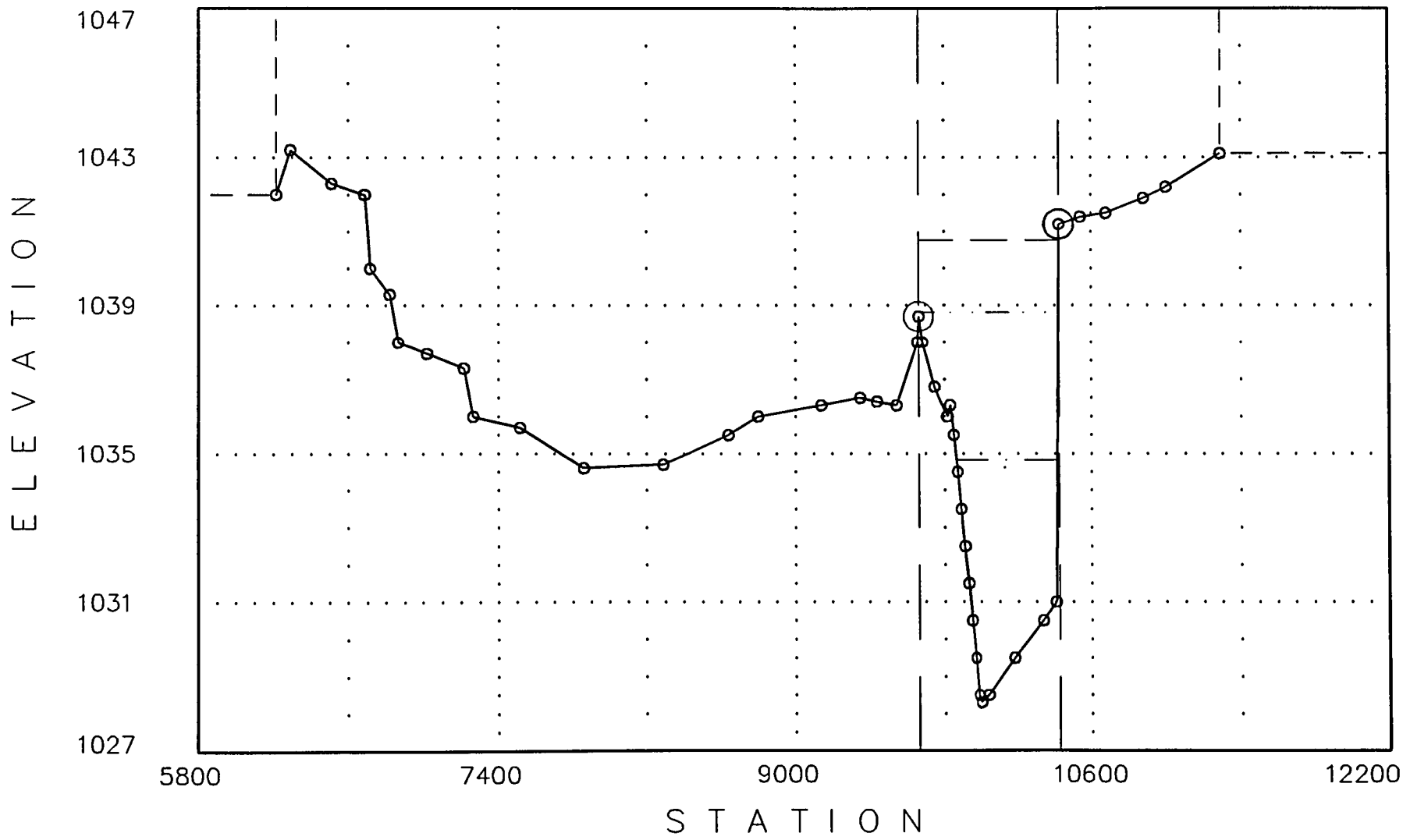

07-30-1992

<<<<<< Cross Section: 36.8: (FN = WEIR4.0) >>>>>>

Q1= 13500 WS1= 1035.9
Q2= 41000 WS2= 1040.4
Q3= 68921.1 WS3= 1042.91

Manning-n's: n-lob = .045 n-ch = .035 n-rob = .045

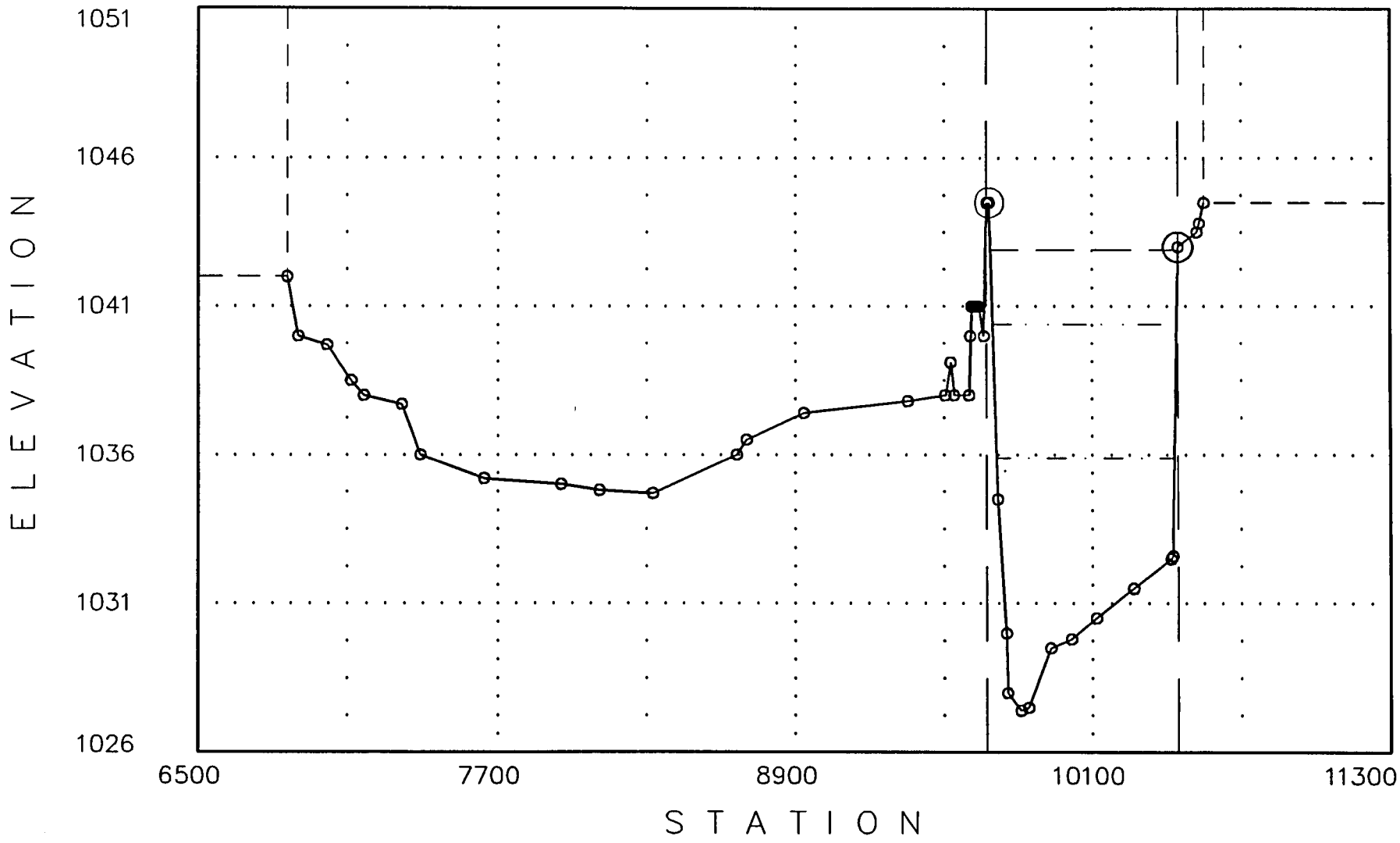

07-30-1992

<<<<<< Cross Section: 39: (FN = WEIR4.0) >>>>>>

Q1= 13500 WS1= 1036.06
Q2= 41000 WS2= 1040.66
Q3= 69000 WS3= 1043.32

Manning-n's: n-lob = .045 n-ch = .035 n-rob = .045

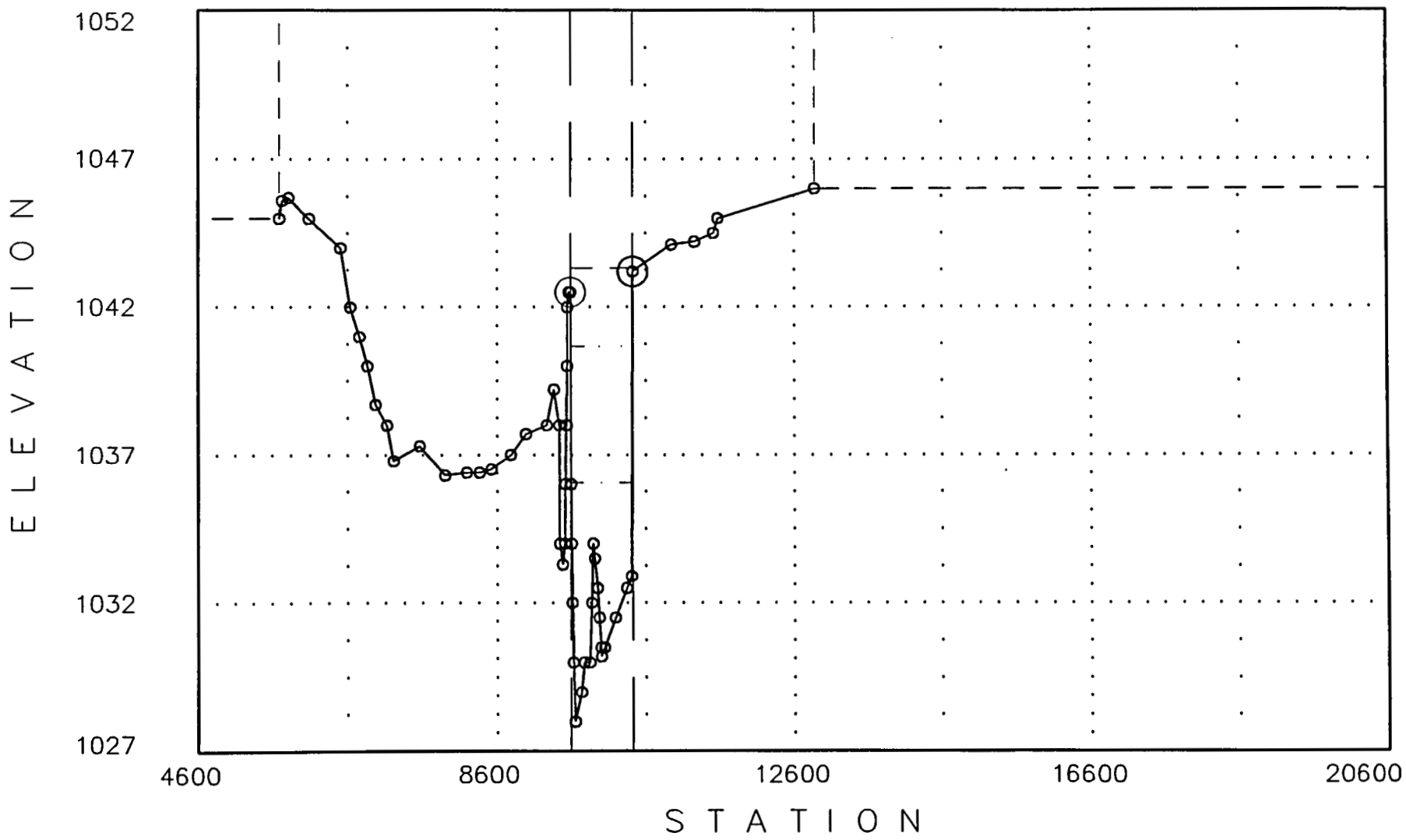

07-30-1992

APPENDIX II: HYDRAULIC ANALYSES

b. CHANNEL DESIGN HEC-2 INPUT/OUTPUT

```
*********************************************
*  HEC-2 WATER SURFACE PROFILES             *
*                                           *
*  Version   4.6.0;  February 1991          *
*                                           *
*  RUN DATE    30OCT91    TIME    11:33:37  *
*********************************************
```

```
****************************************
*  U.S. ARMY CORPS OF ENGINEERS        *
*  HYDROLOGIC ENGINEERING CENTER       *
*  609 SECOND STREET, SUITE D          *
*  DAVIS, CALIFORNIA 95616-4687        *
*          (916) 756-1104              *
****************************************
```

```
X     X  XXXXXXX   XXXXX              XXXXX
X     X  X       X     X            X     X
X     X  X       X                        X
XXXXXXX  XXXX     X         XXXXX  ·  XXXXX
X     X  X       X                  X
X     X  X       X     X            X
X     X  XXXXXXX   XXXXX             XXXXXXX
```

THIS RUN EXECUTED 30OCT91 11:33:37

```
************************************
 HEC-2 WATER SURFACE PROFILES

 Version   4.6.0;  February 1991
************************************


T2      NEW RIVER: BETHANY HOME ALIGNMENT TO GRAND AVENUE
T3      10-YEAR EVENT              NRO2A

J1  ICHECK    INQ       NINV      IDIR      STRT      METRIC    HVINS     Q         WSEL      FQ

      0        2                                                          1036.06

J2  NPROF     IPLOT     PRFVS     XSECV     XSECH     FN        ALLDC     IBW       CHNIM     ITRACE

     1        0        -1                                       -1                            0


J3  VARIABLE CODES FOR SUMMARY PRINTOUT

    38        43         1        26         8         4        53        54

NC    .045      .045      .035       0.1       0.3
QT       5     13500     31000     41000     70000     69000
ET    39.0       9.1       9.1       9.1       9.1       9.1                                  9585.9    10426.1
            BEGIN ANALYSIS NEAR THE BETHANY HOME ROAD ALIGNMENT.
            WATER SURFACE UTILIZED FOR THIS ANALYSIS IS BASED ON
            EXISTING CONDTIONS OUTPUT DATA WHICH INCLUDES THE
            GLENDALE MUNICIPAL AIRPORT CHANNELIZATION AND SIDEBANK
            PROTECTION.  CROSS SECTION 39.00 ASSUMES EXISTING CONDITIONS
            BOTTOM CONTOURS WITH EXISTING LEFT BANK NATURAL SIDESLOPE.
X1       39        55      9586     10426       270       200       220
GR     1045      5696    1045.6      5736    1045.7      5821      1045      6091      1044      6506
GR     1042      6631      1041      6751      1040      6856    1038.7      6961      1038      7116
GR   1036.8      7206    1037.3      7556    1036.3      7896    1036.4      8191    1036.4      8366
GR   1036.5      8521      1037      8786    1037.7      8991      1038      9271    1039.2      9366
GR     1038      9436      1034      9443    1033.3      9481      1034      9511      1036      9516
GR     1038      9531      1040      9541      1042      9546    1042.5      9566    1042.5      9586
GR     1036      9593      1034      9599      1032      9606      1030      9621      1028      9646
GR     1029      9731      1030      9766      1030      9846      1032      9871      1034      9891
GR   1033.5      9911    1032.5      9950    1031.5      9973    1030.5      9994    1030.2     10000
GR   1030.5     10042    1031.5     10190    1032.5     10341    1032.9   10405.4    1043.2     10426
GR   1044.1     10946    1044.2     11256    1044.5     11511      1045     11571      1046     12881

NC    .045      .045      .035       0.2       0.4
            BEGIN CHANNELIZATION AND SIDEBANK PROTECTION DEGIGN.
            LT CHNL BTM WDTH = 500 FEET - MATCH EXISTING DOWNSTREAM
            RT CHNL BTM WDTH PER GLENDALE AIRPORT "AS BUILTS" = 362+OR- FEET
X1    44.00        16    9485.8    10384.1       500       500       500
GR   1044.9    9485.8   1030.75     9514.1   1030.75      9573    1031.5      9575    1032.0      9625
GR   1032.0      9753    1032.0      9815    1034.0      9863    1034.0      9917    1032.0      9988
```

GR	1031.8	10000	1032.0	10033	1034.0	10233	1035.06	10362	1044.0	10383
GR	1045.1	10384.1								

```
X1    47.00      14      596     1357      300      300      300
GR   1045.0     596   1031.0      624   1031.0      682   1034.0      690   1034.0      740
GR   1034.0     835   1034.0      897   1032.9     1000   1034.0     1099   1034.0     1184
GR   1034.0    1194   1035.6     1336   1044.0     1356   1045.0     1357

          LT CHNL BTM WDTH = 225 FT
X1    51.50      13     760.8   1309.7      450      450      450
GR   1045.7   760.8   1031.4     789.4   1031.4    877.8   1034.0      883   1034.0      907
GR   1034.0     962   1034.0      985   1033.9     1000   1034.0     1042   1035.3     1205
GR   1036.0    1300   1040.0     1304   1045.7   1309.7

          STA. 53+12.97 IS P.O.C. OF CURVE TO THE RIGHT
X1    55.0       10      260     741.3      350      350      350
GR    1047      260   1031.9      290   1031.9      450   1036.6     472.   1036.2      500
GR   1036.0     525   1034.6      663   1034.3      716   1035.7      730   1047.0    741.3

          END GLENDALE MUNICIPAL AIRPORT GABION MATTRESS SIDESLOPE
          ALONG NEW RIVER RT BANK, GABION MATRESS TURNS CORNER AND
          CONTINUES NORTHWESTERLY A FEW HUNDRED FEET ALONG THE EAST
          BOUNDARY OF GLENDALE MUNICIPAL AIRPORT.
          MATCH EXISTING GABION MATTRESS-GROUT GABIONS AND CONSTRUCT
          TRANSITION FROM 2:1 TO 1:1 SIDESLOPE IN 75 FT TAPER.
X1    58.12      10      758     1163      662      662      662
GR   1049.1     758   1032.1      775   1032.1     1000   1032.1     1009   1036.6     1018
GR   1036.0    1110   1036.0     1126   1038.0     1148   1040.0     1154   1049.0     1163

          STA. 60+21.80 IS P.O.T.
X1    62.00      14     256.6     703.5      388      388      388
GR   1050.4   256.6   1032.9     291.6   1032.9      412   1038.0      422   1037.5      468
GR   1036.8     500   1036.0      531   1035.3     550.   1036.0      580   1038.0      600
GR   1039.0     627   1032.9      639   1032.9      686   1050.4    703.5

          LT CHNL BTM WDTH = 225 FT.
          RT CHNL BTM WDTH = 230 FT.
X1    66.0       14     257.2     747.8      400      400      400
GR   1051.8   257.2     1034     292.8     1034      397   1036.0      399   1035.6      430
GR   1036.0     470   1038.0      510   1038.0      527   1035.0      531   1035.0      670
GR   1038.0     676   1034.0      692   1034.0      730   1051.8    747.8

          GRAND DRAIN INLET PER A.D.O.T. PLANS
X1    71.0       16     258.5     746.1      500      500      500
GR   1051.5   258.5   1035.0     291.5     1035      310   1036.      342   1040.0      352
GR    1040     372     1039      420     1036      425     1036      445   1036.0      460
GR   1035.4     470   1035.4      525     1037      535   1035.4      545   1035.4      730
GR   1051.5   746.1

X1    75.0       13     258.4     746.6      400      400      400
GR   1053.1   258.4   1036.5     291.6   1036.5      395   1036.5      405   1036.5      460
GR   1036.5     465   1036.5      470   1036.5      635     1040      660     1040    690.5
GR   1036.5   697.5   1036.5      730   1053.1    746.6
```

```
                GRAND DRAIN LOW FLOW OUTLET PIPE AT LT SIDESLOPE
X1     78.0        24      258.9     746.1     300.      300.      300.
GR   1053.5     258.9     1037.4     291.1    1037.4      320    1037.4       355    1037.4       370
GR   1037.4       390     1037.4       415    1037.4      430    1037.4       460    1037.4       475
GR   1037.4       500     1037.4       528    1037.4    546.8      1039       550      1038       560
GR   1037.4       595     1037.4       606    1037.4    629.8    1038.5       632    1038.0       653
GR   1037.8       680     1037.4       681    1037.4      730    1053.5     746.1

X1     81.0        18        259       745       300      300       300
GR     1054       259       1038       290    1038.0      291    1038.0       320    1038.0       355
GR   1038.0       390     1038.0       400    1038.0      440    1038.0       450    1038.0       460
GR   1038.0       550     1038.0       565    1038.0      588    1040.0       626      1039       634
GR     1038       650       1038       730    1054.0      745

X1     84.0        21      259.5     745.4       300      300       300
GR   1054.5     259.5       1039     290.5      1039      320      1037       325      1037       355
GR     1039       360       1039       375      1039      385      1039       395      1039       415
GR     1039       450       1039       500      1039      530      1039       625    1039.5       626
GR   1039.0       639     1039.0       651    1039.0      688    1039.0       690      1039       730
GR   1054.5     745.4

X1     87.0        12      259.8     745.2       300      300       300
GR   1055.0     259.8     1039.8     290.2    1039.8      455    1039.8       470    1039.8       545
GR   1039.8       560     1039.8       610    1039.8      630    1039.8       650    1039.8       680
GR   1039.8       730     1055.0     745.2

X1     89.0        12        260       745       200      200       200
GR   1055.4       260     1040.4       290    1040.4      320    1040.4     323.2    1042.0       410
GR   1040.4     413.2     1040.4       500    1040.4      620    1040.4       690    1040.4       710
GR   1040.4       730     1055.4       745

                STA. 91+49.71 IS P.O.C. OF CURVE TO THE LEFT
X1     94.0        13      260.4     744.6       500      500       500
GR   1056.4     260.4     1041.8     289.6    1041.8      340    1044.0       344    1042.0       359
GR   1041.9       380     1042.0       405    1041.8      406    1041.8       500    1041.8       640
GR   1041.8       680     1041.8       730    1056.4    744.6

NC     .035      .035       .035       0.3       0.5
X1     97.0        16      260.5     744.5       300      300       300
GR   1057.1     260.5     1042.6     289.5    1042.6      320    1042.6       370    1042.6       380
GR   1042.6       405     1042.6       476    1044.0      479    1043.8       500    1044.0       545
GR   1046.0       555     1042.6       562    1042.6      650    1042.6       675    1042.6       730
GR   1057.1     744.5

NC     .035      .035       .035
                STA. 99+45.00 IS P.O.T.
                LT CHNL BTM WDTH = 157.9 FT.
                RT CHNL BTM WDTH = 157.9 FT.
X1     99.54       5.      325.1     674.9       254.      254.      254.
GR   1063.5     325.1     1043.2    325.15    1043.2      500.    1043.2    674.85    1063.5     674.9
```

```
NC    .025      .025      .025       0.3       0.5
            DOWNSTREAM BRIDGE SECTION - GLENDALE AVENUE
X1     99.6        5.     325.1     674.9        6.        6.        6.
GR   1063.8     325.1    1046.2    325.15    1046.2      500.    1046.2    674.85    1063.8     674.9

SB      0.9      1.56       2.9       358    349.74       32.    5378.3         0    1046.5    1046.2
            GLENDALE AVENUE BRIDGE - SPECIAL BRIDGE ANALYSIS
X1    100.4        5.     325.1     674.9       80.       80.       80.
X2                           1.    1063.4    1065.9                         1.33
GR   1063.6     325.1    1046.5    325.15    1046.5    500.00    1046.5    674.85    1063.6     674.9

NC    .035      .035      .035
            BEGIN CHANNEL BOTTOM TRANSITION
            LT CHNL BTM WDTH = 157.9 FT.
            RT CHNL BTM WDTH = 157.9 FT.
X1   100.90        5    308.15    691.85       50        50        50
GR   1063.6    308.15    1046.6    325.15    1046.6       500    1046.6    674.85    1063.6    691.85

X1   103.0        14     292.0     708.0      260.      260.      260.
GR   1065.4     292.0      1047     328.8      1047       370    1047.0       380    1047.0       382
GR   1047.0       490    1047.0       500    1047.0       553    1047.0       606    1047.0       640
GR   1047.0       657      1047       659      1047     689.6    1065.4     708.0

NC    .035      .035      .035       0.1       0.3
X1   106.0         8     246.2     753.6       300       300       300
GR   1066.4     246.4    1047.6     284.0    1047.6       412    1047.6       500    1047.6       685
GR   1047.6       710    1047.6     734.8    1066.4     753.6

            END CHANNEL BOTTOM TRANSITION
            LT CHNL BTM WDTH = 280 FT.
            RT CHNL BTM WDTH = 280 FT.
X1   109.0        11     201.3     798.7       300       300       300
GR   1066.9     201.3    1048.2     238.7    1048.2     451.4    1050.0       455    1048.2       480
GR   1050.0       503    1051.0       510    1050.0       515    1048.2     518.6    1048.2       780
GR   1066.9     798.7

X1   110.0        12     201.5     798.5       100       100       100
GR   1066.9     201.3    1048.4     238.7    1048.4     432.8      1051       438      1051       485
GR    1047       505    1048.4       515    1048.4       550    1048.4       565    1048.4       734
GR   1048.4       780    1066.9     798.5

X1   113.0        16     201.8     798.2       300       300       300
GR   1067.2     201.8      1049     238.2      1049       401    1051.3       404    1049.0       435
GR   1049.0       465    1050.0       473    1049.0       475    1049.0       500      1049       535
GR    1049       580    1049.0       595    1049.0       620    1049.0       685    1049.0       780
GR   1067.2     798.2

            BEGIN CHANNEL BOTTOM TRANSITION
```

```
                LT CHNL BTM WDTH = 280 FT.
                RT CHNL BTM WDTH = 280 FT.
X1    116.0       13     202.3     797.7       240       340       300
GR   1067.3    202.3    1049.6     237.7    1049.6     366.2    1054.0       375    1054.0       378
GR   1049.6    386.8    1049.6      500.    1049.6     579.2    1056.0       592    1058.0       603
GR   1049.6    619.8    1049.6       780    1067.3     797.7

                END CHANNEL BOTTOM TRANSITION
                LT CHNL BTM WDTH = 210 FT.
                RT CHNL BTM WDTH = 230 FT.
X1    120.0       10     273.3     746.7       327       497       400
GR   1067.1    273.3    1050.4     306.7    1050.4       500    1050.4     506.6    1056.7       520
GR   1057.8      600    1056.8       645    1050.4     658.6    1050.4       730    1067.1     746.7

X1    123.0       11     272.2     747.8       342       342       342
GR   1068.8    272.2     1051     307.8     1051       315     1051       370     1051       400
GR   1051.0      500     1051       610     1051       630     1051       680     1051       730
GR   1068.8    747.8

X1    127.0       10      273       747       400       400       400
GR   1068.8      273    1051.8       307    1051.8       345    1051.8       400    1051.8       450
GR   1051.8      500    1051.8       650    1051.8       665    1051.8       730    1068.8       747

X1    131.0       14     273.2     746.8       400       400       400
GR   1069.4    273.2    1052.6     306.8    1052.6       351     1050       356     1052       365
GR     1054      395     1054       430    1052.6       445     1054     497.2    1052.6       500
GR   1052.6      530    1052.6       666    1052.6       730    1069.4     746.8

X1   135.00       12     273.5     746.3       400       400       400
GR   1069.6    273.5    1053.4     306.5    1053.4       330    1058.4       340    1058.2       412
GR   1059.2      412    1053.4     423.6    1053.4       500    1053.4       502    1053.4       680
GR   1053.4      730    1069.9     746.3

X1    138.0       15     274.4     745.6       300       300       300
GR   1069.6    274.4     1054     305.6     1054       350     1059       360     1058       405
GR     1054      413     1054       440     1054       460     1054       475     1054       500
GR     1054      590     1054       615     1054       640     1054       730    1069.6     745.6

X1   141.00       15     273.6     746.4       300       300       300
GR   1071.0    273.6    1054.6     306.3    1054.6     328.8    1058.2       336    1058.7       370
GR   1054.6    379.4    1054.6       403    1060.0       415    1061.5       435    1060.0       454
GR   1054.6      474    1054.6       500    1054.6       560    1054.6       730    1071.0     746.4

                A.D.O.T. CHANNEL INLET LT. BANK, NORTHERN AVENUE CHANNEL
X1    145.0       10     273.4     746.6       400       400       400
GR     1072    273.4    1055.4     306.6    1055.4       320    1055.4       340    1055.4       370
GR   1055.4      505    1055.4       515    1055.4       525    1055.4       730    1077.0     746.6

                BEGIN CHANNEL BOTTOM TRANSITION
```

```
                LT CHNL BTM WDTH = 210 FT.
                RT CHNL BTM WDTH = 230 FT.
X1    147.0        13     273.4     746.6       200       200       200
GR   1072.4     273.4    1055.8     306.6    1055.8       340    1055.8       370    1055.8       430
GR   1055.8       440    1055.8       470    1055.8       500    1055.8       505    1055.8       560
GR   1055.8       635    1055.8       730    1072.4     746.6

                CHANNEL BOTTOM TAPERS
                LT CHNL BTM WDTH = 260 FT.
                RT CHNL BTM WDTH = 210 FT.
X1    150.0         6     223.4     726.6       350       260       300
GR     1073     223.4    1056.4     256.6    1056.4       355    1056.4       400    1056.4       710
GR     1073     726.6

                CHANNEL BOTTOM TAPERS
                LT CHNL BTM WDTH = 260 FT.
                RT CHNL BTM WDTH = 170 FT.
X1   155.00        15     224.1     685.9       585       460       500
GR   1073.3     224.1    1057.4     255.9    1057.4     382.8    1065.0       398    1064.0       404
GR   1062.0       412    1061.4       450    1062.0       488    1063.0       500    1064.0       505
GR   1066.0       511    1057.4     528.2    1057.4       600    1057.4       670    1073.3     685.9

NC     .035      .035      .035        .3        .5
                END CHANNEL BOTTOM TRANSITION
                LT CHNL BTM WDTH = 162.5 FT.
                RT CHNL BTM WDTH = 162.5 FT.
X1   158.00         5       319     679.5       360       265       300
GR   1076.5      319.    1058.0     356.0    1058.0       500    1058.0     662.5    1075.0     679.5

                DOWNSTREAM BRIDGE SECTION - NORTHERN AVENUE BRIDGE
X1   159.45        5.       319.      681.       245       245       245
GR   1076.8      319.    1058.3     337.5    1058.3      500.    1058.3     662.5    1076.8      681.

SB     1.05      1.56       2.9      388.      325.        28      6034      1.00   1058.46    1058.3
                NORTHERN AVENUE BRIDGE - SPECIAL BRIDGE ANALYSIS
X1   160.25        5.       319.      681.       80.       80.       80.
X2                          1.    1077.46     1082.                          1.33
GR    1077.      319.   1058.46     337.5   1058.46      500.   1058.46     662.5    1077.0      681.

                BEGIN CHANNEL BOTTOM TRANSITION
                LT CHNL BTM WDTH = 162.5 FT.
                RT CHNL BTM WDTH = 162.5 FT.
X1    162.0        12     319.3     680.7       175       175       175
GR   1077.0     319.3    1058.8     337.5    1058.8       350    1058.8       400    1058.8      420.
GR   1058.8       440    1058.8      460.    1058.8      480.    1058.8       500    1058.8       600
GR   1058.8     662.5    1077.0     680.7

                END CHANNEL BOTTOM TRANSITION
                LT CHNL BTM WDTH = 300 FT.
```

```
                RT CHNL BTM WDTH = 250 FT.
X1    165.00        10     189.2     769.4       300       300       300
GR    1078.8     189.2     1068.     210.8    1068.0     227.8    1068.0       245    1068.0       305
GR    1068.2       370    1059.4     387.6    1059.4       500    1059.4       750    1078.8     769.4

X1     168.0        12       190     768.9       300       300       300
GR    1079.0      190.      1069       210      1069     225.2      1069       243      1068       254
GR    1067.8       278      1068       295    1069.5       380    1060.1     398.8    1060.1       500
GR    1060.1       750    1079.0     768.9

NC      .035      .035      .035        .1        .3
                BEGIN CHANNEL BOTTOM TRANSITION
                LT CHNL BTM WDTH = 300 FT.
                RT CHNL BTM WDTH = 250 FT.
X1     170.0        12     190.8     768.6      200.      200.      200.
GR    1079.2     190.8     1070.     209.2      1070     240.2      1070       260      1069       262
GR    1068.4       295      1068       366    1070.0       377    1060.6     395.8    1060.6       500
GR    1060.6       750    1079.2     768.6

                END CHNL BTM TRANSITION RT.
                RT CHNL BTM WDTH = 157 FT.
X1     173.0        12     224.1     674.6       300       300       300
GR    1079.0     224.1     1072.     238.1      1072     268.8    1072.0       290      1070       302
GR      1068       312      1068       380      1069       385    1061.4     400.2    1061.4       500
GR    1061.4       657    1079.0     674.6

X1     176.0        12     265.9     674.4       300       300       300
GR    1079.6     265.9     1068.     289.1    1068.0       327     1068.       339      1068       404
GR    1062.2       416    1062.2       450    1062.2       475    1062.2       500    1062.2       550
GR    1062.2       657    1079.6     674.4

                BEGIN CHNL BTM TRANSITION RT.
                RT CHNL BTM WDTH = 157 FT.
X1    177.00         5     279.1     675.1       100       100       100
GR    1080.5     279.1    1062.4       297    1062.4      500.    1062.4       657    1080.5     675.1

                END CHNL BTM TRANSITION LT.
                LT CHNL BTM WDTH = 175 FT.
X1    179.00         5     306.8     726.7       200       200       200
GR    1081.0     306.8    1062.8     343.3    1062.8       500    1062.8     708.5    1081.0     726.7

                END CHNL BTM TRANSITION RT.
                RT CHNL BTM WDTH = 260 FT.
X1     181.0         5     306.7     778.3       200       200       200
GR    1081.6     306.7    1063.3     343.3    1063.3       500    1063.3       760    1081.6     778.3

NC      .035      .035      .035
X1     183.0        12     307.5     777.5       200       200       200
GR    1081.3     307.5    1063.8     342.5    1063.8     397.6      1073       416      1072       439
GR    1071.8       492    1071.5       500    1070.0       540    1071.0       599    1063.8     613.4
GR    1063.8       760    1081.3     777.5
```

```
X1   188.0      12      307      778      500.     500.     500.
GR   1083.0    307.     1065     343      1065     500      1065.0   513      1073     529
GR   1072.1     530     1072.7   575      1072.0   643      1070.5   660.     1065.0   671
GR   1065.0     760     1083.0   778

          STA. 192+60.12 IS P.O.C. OF CURVE TO THE RT.
X1   193.0      12      307.2    777.8    500.     500.     500.
GR   1084.0    307.2    1066.2   342.8    1066.2   489.4    1074     505      1072.0   540
GR   1071.4     560     1072.0   585      1074.0   620      1066.2   635.6    1066.2   700
GR   1066.2     760     1084.0   777.8

          BEGIN CHANNEL BOTTOM TRANSITION LEFT AND RIGHT
          TO MATCH PAST DEIGN CROSS SECTIONS.
X1   197.00     13      307.6    777.4    400      400      400
GR   1084.6    307.6    1067.2   342.4    1067.2   409.4    1074.0   423      1072.0   500
GR   1072.0     610     1074.0   613      1076.0   617      1076.0   627      1075.8   640
GR   1067.2    657.2    1067.2   760      1084.6   777.4

NC    .035     .035     .035     0.3      0.5
X1   199.00     5.      317.5    728.5    200      200      100.
GR   1086.2    317.5    1067.7   336      1067.7   500      1067.7   710.     1086.2   728.5

          DOWNSTREAM BRIDGE SECTION - 99TH AVENUE BRIDGE
X1   201.10     5.      324.5    675.5    210.     210.     210.
GR   1086.7    324.5    1068.2   343.     1068.2   500.     1068.2   657.     1086.7   675.5

SB    1.05     1.56     2.9      376.     314.     21.      5763     1.00     1068.4   1068.2
          99TH AVENUE BRIDGE - SPECIAL BRIDGE ANALYSIS
X1   201.90     5.      324.5    675.5    80.      80.      80.
X2                      1.       1086.7   1091.8                    1.33
GR   1086.9    324.5    1068.4   343.     1068.4   500.     1068.4   657.     1086.9   675.5

X1   204.00     5.      324.5    675.5    210.     210.     210.
GR   1087.4    324.5    1068.9   343.     1068.9   500.     1068.9   657.     1087.4   675.5

NC    .035     .035     .035     0.3      0.5
X1   209.30     5.      325.     675.     530.     530.     530.                9.59
GR   1078.6    325.     1060.6   343.     1060.6   500.     1060.6   657.     1078.6   675.

NC    .035     .035     .035     0.3      0.5
          DOWNSTREAM BRIDGE SECTION - OLIVE AVENUE BRIDGE
X1   212.6      5.      357.4    642.6    330.     330.     330.
GR   1089.6    357.4    1071.    376      1071.0   500.     1071.0   624      1089.6   642.6

SB    1.05     1.56     2.9      300.     248      18.5     4481.6   1.00     1071.5   1071.0
          OLIVE AVENUE BRIDGE - SPECIAL BRIDGE ANALYSIS
X1   213.5      5.      357.9    642.1    90.      90.      90.
X2                      1.       1089.6   1095.                     1.33
GR   1089.6    357.9    1071.5   376.     1071.5   500.     1071.5   624.     1089.6   642.1
```

```
NC    .045     .045     .035     0.1      0.3
X1    213.7    5.0      347.1    652.9    20.0     20.0     20.0
GR    1095.0   347.1    1073.0   369.1    1073.0   500.0    1073.0   630.9    1096.2   652.9

X1    217.5    5.       305.     690.     380.     380.     380.
GR    1096.0   305.     1074.2   326.8    1074.2   500.     1074.2   667.2    1097.0   690.

X1    221.1    5.0      295.0    695.0    360.0    360.0    360.0
GR    1096.6   295.0    1075.3   316.3    1075.3   500.0    1075.3   672.3    1098.0   695.0

X1    227.5    11       245.     755.     640      640      640
GR    1099.0   245.     1077.1   268.0    1077.1   334.0    1077.1   400.     1077.1   466.
GR    1077.1   500.     1077.1   532.     1077.1   598.     1077.1   664.     1077.1   733.
GR    1099.0   755.

X1    233.55   5        270.     730.     580.     580.     580.
GR    1101.7   270.     1079.0   292.7    1079.0   500.     1079.0   707.4    1101.6   730.0

X1    238.66   5        330      670      516      516      516
GR    1103.3   330      1080.6   352.9    1080.6   500      1080.6   646.7    1103.7   670

X1    238.69   5.0      325.0    665.0    3.0      3.0      3.0
GR    1103.4   325.0    1083.6   344.8    1083.6   500.0    1083.6   644.7    1103.9   665.0

NC    0.035    0.035    .035     .1       .3
X1    242.     5        325      675      331      331      331
GR    1104.    325.     1084.45  344.55   1084.45  500      1084.45  655.45   1104.0   675

X1    247.     5        325      675      500      500      500
GR    1104.5   325.     1085.67  343.83   1085.67  500      1085.67  656.17   1104.5   675.0

NC    .045     .045     .035     .1       .3
X1    270.5    46.      9793.    10175.   338.     338.     338.
CI    9955.    1086.5   555.035  1.       1.       -365.
X3    10.                       9750.
GR    1128.2   8815.    1120.    8816.    1120.    9304.    1106.2   9305.    1106.    9360.
GR    1106.3   9400.    1120.    9401.    1120.    9559.    1106.2   9560.    1105.8   9610.
GR    1105.7   9640.    1120.    9641.    1120.    9714.    1105.6   9715.    1106.    9775.
GR    1108.    9793.    1093.    9805.    1093.    9813.    1092.    9820.    1092.    9830.
GR    1092.    9850.    1095.    9863.    1093.    9873.    1089.    9885.    1097.    9895.
GR    1090.    9903.    1089.    9906.    1088.    9943.    1088.    9968.    1087.    9975.
GR    1088.    10012.   1087.    10028.   1086.    10035.   1085.3   10045.   1086.    10055.
GR    1087.    10085.   1089.    10115.   1085.    10132.   1090.    10142.   1091.    10158.
GR    1107.    10175.   1107.6   10192.   1106.    10200.   1107.2   10210.   1107.1   10213.
GR    1110.    10218.

X1    273.5    41.      9750.    10125.   315.     310.     310.
CI    9919.    1087.2   310.035  1.       1.       -375.
X3    10.                       9640.
GR    1108.3   9010.    1120.    9011.    1120.    9239.    1107.8   9240.    1107.1   9270.
GR    1107.5   9315.    1120.    9316.    1120.    9489.    1107.1   9490.    1106.7   9520.
GR    1106.1   9560.    1120.    9561.    1120.    9609.    1109.    9640.    1106.    9640.
GR    1106.1   9700.    1106.8   9730.    1106.6   9750.    1105.2   9760.    1105.2   9770.
```

```
GR    1106.     9805.     1105.     9815.     1100.     9825.     1095.     9840.     1092.     9846.
GR    1091.     9860.     1092.     9880.     1091.     9891.     1090.     9896.     1088.     9910.
GR   1087.6     9965.     1088.    10015.    1086.4    10065.     1088.    10083.     1090.    10087.
GR    1095.    10105.     1095.    10113.     1108.    10125.     1106.    10153.     1108.    10160.
GR    1111.    10160.

X1    277.9       39.     9910.    10137.      420.      420.      420.
CI    9927.    1088.3   420.035       1.        1.     -360.
X3      10.
GR   1109.3     9070.    1108.5     9120.    1109.3     9170.     1120.     9171.     1120.     9329.
GR    1109.     9330.    1108.1     9380.     1109.     9400.     1120.     9401.     1120.     9459.
GR    1109.     9460.     1108.     9500.    1107.1     9630.     1106.     9700.     1106.     9780.
GR    1107.     9810.     1106.     9857.     1106.     9858.     1106.     9859.     1106.     9860.
GR   1105.5     9888.    1105.5     9910.     1091.     9925.     1091.     9938.     1092.     9945.
GR    1091.     9973.     1090.     9976.     1089.     9982.     1088.     9985.     1089.    10005.
GR    1069.    10015.     1088.    10045.     1089.    10055.     1089.    10080.     1090.    10092.
GR    1090.    10116.    1108.5    10137.    1108.5    10155.     1112.    10155.

X1    281.8       29.     9888.    10117.      410.      410.      410.
CI    9932.    1089.2   410.035       1.        1.     -330.
X3      10.
GR   1113.6     9440.    1110.8     9440.     1110.     9455.     1120.     9456.     1120.     9550.
GR   1109.2     9551.    1108.5     9770.     1109.     9850.     1106.     9868.     1108.     9888.
GR    1092.     9904.    1091.2     9910.     1092.     9917.    1092.6     9965.     1092.    10005.
GR    1091.    10015.     1090.    10020.     1089.    10020.    1087.5    10033.     1089.    10037.
GR    1090.    10040.     1094.    10058.     1095.    10074.     1095.    10082.     1095.    10102.
GR   1109.7    10117.    1109.7    10135.    1109.7    10140.     1113.    10140.

NC                                     .3        .5
X1      288.     30.0     9873.    10145.      600.      600.      600.
CI    9988.    1092.2   600.035       1.        1.     -274.
X3      10.
X4     1.0      1112.    10145.
GR    1117.     9545.    1114.1     9545.     1114.     9550.    1110.6     9710.     1112.     9790.
GR    1114.     9835.     1113.     9845.     1111.     9855.     1111.     9873.     1098.     9886.
GR    1097.     9907.     1096.     9934.     1095.     9937.     1094.     9978.    1093.7    10017.
GR    1094.    10042.     1095.    10053.     1096.    10065.     1097.    10070.     1097.    10097.
GR   1096.8    10100.     1094.    10103.     1098.    10113.     1099.    10119.     1099.    10133.
GR   1109.5    10143.    1109.5    10158.     1112.    10160.     1112.    10175.     1112.    10200.

X1      290.      6.      9865.    10136.      220.      160.      200.
CI                                                     .01
X3      10.                                                     1117.8    1117.8
GR   1117.8     9865.    1108.8     9865.     1093      9865.    1093.3    10136.    1108.8    10136.
GR   1117.8    10136.

SB       .9     1.56       2.9                271.      10.5     4974.              1093.7    1093.3
X1      291.      6.      9865.    10136.       77.       77.       77.
X2                          1.     1114.1    1119.1
X3      10.                                                             1117.8    1117.8
BT       2.     9865.    1118.1    1112.8    10136.    1118.1    1112.8
GR    1116.     9865.    1108.8     9865.     1093.     9865.    1093.7    10136.    1108.8    10136.
GR    1116.    10136.
```

```
NC    .035      .035      .035      .1        .3
X1    293.      8.        9870.     10144.    200.      200.      200.
CI    10007.    1094.     200.035   1.        1.        -231.
GR    1115.6    9852.     1115.6    9870.     1094.     9892.     1094.     10123.    1115.     10144.
GR    1115.     10162.    1119.     10168.    1119.3    10258.

X1    297.      6.        9865.     10150.    400.      400.      400.
CI    10006.    1096.1    400.035   1.        1.        -246.
GR    1116.5    9847.     1116.     9865.     1096.     9885.     1096.     10131.    1115.     10150.
GR    1116.     10190.

X1    302.      6.        9882.     10118.    530.      530.      530:
CI    9999.     1098.2    530.035   1.        1.        -197.
GR    1117.     9830.     1116.     9882.     1098.2    9900.     1098.2    10097.    1119.5    10118.
GR    1119.     10136.

X1    305.      6.        9901.     10110.    280.      280.      280.
CI    9992.     1099.5    280.035   1.        1.        -188.
GR    1118.3    9818.     1116.     9901.     1099.5    9917.     1099.5    10090.    1119.5    10110.
GR    1119.2    10128.

X1    306.75    6.        9911.     10123.    215.      215.      215.
CI    9959.     1100.3    215.035   1.        1.        -289.
GR    1116.     9781.     1116.     9911.     1100.3    9927.     1100.3    10103.    1120.     10123.
GR    1129.     10175.

X1    310.      6.        9852.     10148.    320.      320.      320.
CI    9965.     1101.6    320.035   1.        1.        -330.
GR    1117.     9780.     1116.     9852.     1101.6    9866.     1101.6    10129.    1121.     10148.
GR    1118.     10185.

X1    313.2     6.        9820.     10180.    315.      315.      315.
CI    10000.    1103.     315.035   1.        1.        -330.
GR    1117.     9800.     1117.     9820.     1109.     9834.     1103.     10162.    1121.3    10180.
GR    1121.     10198.

X1    318.      6.        9820.     10180.    500.      500.      500.
CI    10000.    1105.1    500.035   1.        1.        -330.
GR    1123.     9800.     1120.     9820.     1105.1    9835.     1105.1    10162.    1123.     10180.
GR    1123.     10198.

X1    320.05    6.        9820.     10180.    290.      290.      290.
CI    10000.    1106.     290.035   1.        1.        -330.
GR    1125.     9800.     1125.     9820.     1106.     9839.     1106.     10161.    1125.     10180.
GR    1125.     10200.

X1    328.      6.        9823.     10173.    640.      640.      640.
CI    10000.    1109.1    640.035   1.        1.        -330.
GR    1127.     9800.     1127.     9823.     1109.1    9838.     1109.1    10162.    1127.     10173.
GR    1127.     10200.
```

```
X1     330.       6.     9820.    10180.      175.      175.      175.
CI   10000.    1110.1   175.035       1.        1.     -330.
GR   1127.5     9800.   1127.5     9820.    1110.1     9837.    1110.1    10163.    1127.5    10180.
GR   1127.5    10200.

X1     334.       6.     9820.    10180.      420.      420.      420.
CI   10000.     1112.   420.035       1.        1.     -330.
GR    1129.     9800.    1129.     9820.     1112.     9837.     1112.    10163.     1129.    10180.
GR    1129.    10200.

NC     .045      .045      .035       .2        .4
X1     343.       19.     9870.    10155.      900       900       900
CI   10025.    1115.7   900.035       1.        1.     -330.
X3      10.
GR    1132.     9861.    1135.2     9870.     1132.     9880.     1122.     9905.     1120.     9915.
GR    1120.     9950.    1119.1     9975.     1120.     9985.     1120.    10015.     1118.    10070.
GR     1116    10090.    1115.7    10100.     1116.    10110.     1118.    10122.     1132.    10147.
GR   1132.5    10155.     1132.    10160.     1132.    10345.     1134.    10365.

X1    344.9       4.     9823.    10178.      110.      260.      190.
CI                                                     .01
X3      10.
GR    1132.     9823.    1116.3     9835.    1116.3    10165.     1132.    10178.
```

SECNO	DEPTH	CWSEL	CRIWS	WSELK	EG	HV	HL	OLOSS	L-BANK ELEV
Q	QLOB	QCH	QROB	ALOB	ACH	AROB	VOL	TWA	R-BANK ELEV
TIME	VLOB	VCH	VROB	XNL	XNCH	XNR	WTN	ELMIN	SSTA
SLOPE	XLOBL	XLCH	XLOBR	ITRIAL	IDC	ICONT	CORAR	TOPWID	ENDST

*PROF 1

CRITICAL DEPTH TO BE CALCULATED AT ALL CROSS SECTIONS

CCHV= .100 CEHV= .300
*SECNO 39.000

3470 ENCROACHMENT STATIONS= 9585.9 10426.1 TYPE= 1 TARGET= 840.199
BEGIN ANALYSIS NEAR THE BETHANY HOME ROAD ALIGNMENT.
WATER SURFACE UTILIZED FOR THIS ANALYSIS IS BASED ON
EXISTING CONDTIONS OUTPUT DATA WHICH INCLUDES THE
GLENDALE MUNICIPAL AIRPORT CHANNELIZATION AND SIDEBANK
PROTECTION. CROSS SECTION 39.00 ASSUMES EXISTING CONDITIONS
BOTTOM CONTOURS WITH EXISTING LEFT BANK NATURAL SIDESLOPE.

39.000	8.06	1036.06	1033.00	.00	1036.23	.17	.00	.00	1042.50
13500.0	.0	13500.0	.0	.0	4052.5	.0	.0	.0	1043.20
.00	.00	3.33	.00	.000	.035	.000	.000	1028.00	9592.94
.000732	270.	220.	200.	0	13	0	.00	818.79	10411.72

CCHV= .200 CEHV= .400
*SECNO 44.000

3302 WARNING: CONVEYANCE CHANGE OUTSIDE OF ACCEPTABLE RANGE, KRATIO = .66

BEGIN CHANNELIZATION AND SIDEBANK PROTECTION DEGIGN.
LT CHNL BTM WDTH = 500 FEET - MATCH EXISTING DOWNSTREAM
RT CHNL BTM WDTH PER GLENDALE AIRPORT "AS BUILTS" = 362+OR- FEET

44.000	5.78	1036.53	1034.71	.00	1036.81	.27	.53	.04	1044.90
13500.0	.0	13500.0	.0	.0	3218.1	.0	41.7	9.7	1045.10
.03	.00	4.20	.00	.000	.035	.000	.000	1030.75	9502.54
.001693	500.	500.	500.	2	11	0	.00	862.92	10365.46

*SECNO 47.000

47.000	6.11	1037.11	1036.01	.00	1037.59	.48	.70	.08	1045.00
13500.0	.0	13500.0	.0	.0	2437.9	.0	61.2	15.1	1045.00
.05	.00	5.54	.00	.000	.035	.000	.000	1031.00	611.78
.003408	300.	300.	300.	2	10	0	.00	727.82	1339.60

SECNO	DEPTH	CWSEL	CRIWS	WSELK	EG	HV	HL	OLOSS	L-BANK ELEV
Q	QLOB	QCH	QROB	ALOB	ACH	AROB	VOL	TWA	R-BANK ELEV
TIME	VLOB	VCH	VROB	XNL	XNCH	XNR	WTN	ELMIN	SSTA
SLOPE	XLOBL	XLCH	XLOBR	ITRIAL	IDC	ICONT	CORAR	TOPWID	ENDST

*SECNO 51.500

LT CHNL BTM WDTH = 225 FT

51.500	7.04	1038.44	1036.76	.00	1038.98	.54	1.37	.02	1045.70
13500.0	.0	13500.0	.0	.0	2295.5	.0	85.7	21.6	1045.70
.07	.00	5.88	.00	.000	.035	.000	.000	1031.40	775.32
.002720	450.	450.	450.	2	15	0	.00	527.12	1302.44

*SECNO 55.000

STA. 53+12.97 IS P.O.C. OF CURVE TO THE RIGHT

55.000	7.40	1039.30	1037.03	.00	1039.79	.50	.81	.01	1047.00
13500.0	.0	13500.0	.0	.0	2384.8	.0	104.5	25.6	1047.00
.09	.00	5.66	.00	.000	.035	.000	.000	1031.90	275.30
.001993	350.	350.	350.	2	19	0	.00	458.29	733.60

*SECNO 58.120

END GLENDALE MUNICIPAL AIRPORT GABION MATTRESS SIDESLOPE
ALONG NEW RIVER RT BANK, GABION MATRESS TURNS CORNER AND
CONTINUES NORTHWESTERLY A FEW HUNDRED FEET ALONG THE EAST
BOUNDARY OF GLENDALE MUNICIPAL AIRPORT.
MATCH EXISTING GABION MATTRESS-GROUT GABIONS AND CONSTRUCT
TRANSITION FROM 2:1 TO 1:1 SIDESLOPE IN 75 FT TAPER.

58.120	8.31	1040.41	1037.01	.00	1040.84	.43	1.03	.01	1049.10
13500.0	.0	13500.0	.0	.0	2566.3	.0	142.1	32.0	1049.00
.12	.00	5.26	.00	.000	.035	.000	.000	1032.10	766.69
.001257	662.	662.	662.	2	17	0	.00	387.72	1154.41

*SECNO 62.000

STA. 60+21.80 IS P.O.T.

62.000	8.05	1040.95	1038.33	.00	1041.45	.50	.58	.03	1050.40
13500.0	.0	13500.0	.0	.0	2374.5	.0	164.1	35.6	1050.40
.14	.00	5.69	.00	.000	.035	.000	.000	1032.90	275.50
.001818	388.	388.	388.	2	14	0	.00	418.55	694.05

*SECNO 66.000

LT CHNL BTM WDTH = 225 FT.
RT CHNL BTM WDTH = 230 FT.

66.000	7.69	1041.69	1038.21	.00	1042.02	.33	.53	.03	1051.80
13500.0	.0	13500.0	.0	.0	2937.1	.0	188.5	39.6	1051.80
.16	.00	4.60	.00	.000	.035	.000	.000	1034.00	277.42
.001013	400.	400.	400.	2	11	0	.00	460.27	737.69

SECNO	DEPTH	CWSEL	CRIWS	WSELK	EG	HV	HL	OLOSS	L-BANK ELEV
Q	QLOB	QCH	QROB	ALOB	ACH	AROB	VOL	TWA	R-BANK ELEV
TIME	VLOB	VCH	VROB	XNL	XNCH	XNR	WTN	ELMIN	SSTA
SLOPE	XLOBL	XLCH	XLOBR	ITRIAL	IDC	ICONT	CORAR	TOPWID	ENDST

*SECNO 71.000

GRAND DRAIN INLET PER A.D.O.T. PLANS

71.000	7.23	1042.23	1039.00	.00	1042.62	.39	.58	.02	1051.50
13500.0	.0	13500.0	.0	.0	2709.9	.0	220.9	44.9	1051.50
.19	.00	4.98	.00	.000	.035	.000	.000	1035.00	277.04
.001317	500.	500.	500.	2	11	0	.00	459.79	736.83

*SECNO 75.000

75.000	6.27	1042.77	1039.82	.00	1043.17	.41	.55	.01	1053.10
13500.0	.0	13500.0	.0	.0	2642.9	.0	245.5	49.1	1053.10
.21	.00	5.11	.00	.000	.035	.000	.000	1036.50	279.07
.001416	400.	400.	400.	2	11	0	.00	457.20	736.27

*SECNO 78.000

GRAND DRAIN LOW FLOW OUTLET PIPE AT LT SIDESLOPE

78.000	5.80	1043.20	1040.60	.00	1043.64	.44	.45	.01	1053.50
13500.0	.0	13500.0	.0	.0	2538.3	.0	263.3	52.3	1053.50
.23	.00	5.32	.00	.000	.035	.000	.000	1037.40	279.50
.001613	300.	300.	300.	2	8	0	.00	456.29	735.80

*SECNO 81.000

81.000	5.69	1043.69	1041.19	.00	1044.14	.46	.50	.01	1054.00
13500.0	.0	13500.0	.0	.0	2490.6	.0	280.6	55.4	1054.00
.25	.00	5.42	.00	.000	.035	.000	.000	1038.00	278.98
.001716	300.	300.	300.	2	11	0	.00	456.35	735.33

*SECNO 84.000

84.000	7.21	1044.21	1041.89	.00	1044.70	.49	.55	.01	1054.50
13500.0	.0	13500.0	.0	.0	2397.9	.0	297.4	58.5	1054.50
.26	.00	5.63	.00	.000	.035	.000	.000	1037.00	280.08
.001942	300.	300.	300.	2	15	0	.00	455.10	735.18

*SECNO 87.000

87.000	5.02	1044.82	1042.87	.00	1045.38	.56	.65	.03	1055.00
13500.0	.0	13500.0	.0	.0	2244.4	.0	313.4	61.7	1055.00
.27	.00	6.01	.00	.000	.035	.000	.000	1039.80	280.17
.002412	300.	300.	300.	2	14	0	.00	454.85	735.02

```
   SECNO      DEPTH      CWSEL      CRIWS      WSELK      EG         HV         HL         OLOSS      L-BANK ELEV
   Q          QLOB       QCH        QROB       ALOB       ACH        AROB       VOL        TWA        R-BANK ELEV
   TIME       VLOB       VCH        VROB       XNL        XNCH       XNR        WTN        ELMIN      SSTA
   SLOPE      XLOBL      XLCH       XLOBR      ITRIAL     IDC        ICONT      CORAR      TOPWID     ENDST


*SECNO 89.000
   89.000      4.91    1045.31    1043.62       .00    1045.93       .63       .53       .03    1055.40
  13500.0       .0    13500.0        .0        .0     2122.8        .0     323.5      63.8    1055.40
      .28      .00       6.36       .00      .000       .035      .000      .000   1040.40     280.19
 .002906      200.       200.      200.         2         14         0       .00    454.72     734.91


*SECNO 94.000
            STA. 91+49.71 IS P.O.C. OF CURVE TO THE LEFT
   94.000      4.94    1046.74    1044.92       .00    1047.33       .60      1.39       .01    1056.40
  13500.0       .0    13500.0        .0        .0     2180.8        .0     348.2      69.0    1056.40
      .31      .00       6.19       .00      .000       .035      .000      .000   1041.80     279.73
 .002662      500.       500.      500.         2         14         0       .00    455.21     734.94


CCHV=     .300 CEHV=     .500
*SECNO 97.000
   97.000      4.96    1047.56    1045.93       .00    1048.20       .64       .85       .02    1057.10
  13500.0       .0    13500.0        .0        .0     2102.9        .0     362.9      72.1    1057.10
      .32      .00       6.42       .00      .000       .035      .000      .000   1042.60     279.56
 .003013      300.       300.      300.         0         14         0       .00    455.41     734.97


*SECNO 99.540
            STA. 99+45.00 IS P.O.T.
            LT CHNL BTM WDTH = 157.9 FT.
            RT CHNL BTM WDTH = 157.9 FT.
   99.540      5.09    1048.29    1046.79       .00    1049.19       .90       .86       .13    1063.50
  13500.0       .0    13500.0        .0        .0     1777.5        .0     374.2      74.5    1063.50
      .33      .00       7.60       .00      .000       .035      .000      .000   1043.20     325.14
 .003804      254.       254.      254.         0         15         0       .00    349.73     674.86


CCHV=     .300 CEHV=     .500
*SECNO 99.600

3301 HV CHANGED MORE THAN HVINS

7185 MINIMUM SPECIFIC ENERGY
3720 CRITICAL DEPTH ASSUMED
            DOWNSTREAM BRIDGE SECTION - GLENDALE AVENUE
   99.600      3.58    1049.78    1049.78       .00    1051.59      1.81       .03       .46    1063.80
  13500.0       .0    13500.0        .0        .0     1250.8        .0     374.4      74.5    1063.80
      .33      .00      10.79       .00      .000       .025      .000      .000   1046.20     325.14
 .006193        6.         6.        6.         0         19         0       .00    349.72     674.86
```

SECNO	DEPTH	CWSEL	CRIWS	WSELK	EG	HV	HL	OLOSS	L-BANK ELEV
Q	QLOB	QCH	QROB	ALOB	ACH	AROB	VOL	TWA	R-BANK ELEV
TIME	VLOB	VCH	VROB	XNL	XNCH	XNR	WTN	ELMIN	SSTA
SLOPE	XLOBL	XLCH	XLOBR	ITRIAL	IDC	ICONT	CORAR	TOPWID	ENDST

SPECIAL BRIDGE

5227 DOWNSTREAM ELEV IS 1049.04 , NOT 1049.78 HYDRAULIC JUMP OCCURS DOWNSTREAM (IF LOW FLOW CONTROLS)

SB	XK	XKOR	COFQ	RDLEN	BWC	BWP	BAREA	SS	ELCHU	ELCHD
	.90	1.56	2.90	358.00	349.74	32.00	5378.30	.00	1046.50	1046.20

*SECNO 100.400

3301 HV CHANGED MORE THAN HVINS

3302 WARNING: CONVEYANCE CHANGE OUTSIDE OF ACCEPTABLE RANGE, KRATIO = 1.78

CLASS B LOW FLOW

3420 BRIDGE W.S.= 1050.18 BRIDGE VELOCITY= 11.09 CALCULATED CHANNEL AREA= 1169.

EGPRS	EGLWC	H3	QWEIR	QLOW	BAREA	TRAPEZOID AREA	ELLC	ELTRD	WEIRLN
.00	1052.47	.00	0.	13500.	5378.	5370.	1063.40	1065.90	0.

GLENDALE AVENUE BRIDGE - SPECIAL BRIDGE ANALYSIS

100.400	5.07	1051.57	.00	.00	1052.47	.90	.88	.00	1063.60
13500.0	.0	13500.0	.0	.0	1772.3	.0	377.2	75.2	1063.60
.33	.00	7.62	.00	.000	.025	.000	.000	1046.50	325.14
.001960	80.	80.	80.	0	0	0	.00	349.73	674.86

*SECNO 100.900

BEGIN CHANNEL BOTTOM TRANSITION
LT CHNL BTM WDTH = 157.9 FT.
RT CHNL BTM WDTH = 157.9 FT.

100.900	5.17	1051.77	1050.16	.00	1052.61	.84	.13	.02	1063.60
13500.0	.0	13500.0	.0	.0	1835.2	.0	379.3	75.6	1063.60
.33	.00	7.36	.00	.000	.035	.000	.000	1046.60	319.98
.003476	50.	50.	50.	0	19	0	.00	360.04	680.02

*SECNO 103.000

103.000	5.78	1052.78	1050.49	.00	1053.40	.62	.72	.07	1065.40
13500.0	.0	13500.0	.0	.0	2134.6	.0	391.1	77.8	1065.40
.34	.00	6.32	.00	.000	.035	.000	.000	1047.00	317.24
.002236	260.	260.	260.	2	14	0	.00	378.13	695.38

```
 SECNO     DEPTH     CWSEL     CRIWS     WSELK     EG        HV        HL        OLOSS     L-BANK ELEV
 Q         QLOB      QCH       QROB      ALOB      ACH       AROB      VOL       TWA       R-BANK ELEV
 TIME      VLOB      VCH       VROB      XNL       XNCH      XNR       WTN       ELMIN     SSTA
 SLOPE     XLOBL     XLCH      XLOBR     ITRIAL    IDC       ICONT     CORAR     TOPWID    ENDST


CCHV=     .100 CEHV=     .300
*SECNO 106.000
 106.000     5.95   1053.55   1050.61       .00   1053.92       .38       .50       .02   1066.40
 13500.0       .0   13500.0       .0       .0    2733.2       .0     407.9      80.7   1066.40
     .36      .00      4.94       .00      .000      .035      .000      .000   1047.60    272.11
 .001303     300.      300.      300.        2        11         0       .00    468.64    740.75


*SECNO 109.000
            END CHANNEL BOTTOM TRANSITION
            LT CHNL BTM WDTH = 280 FT.
            RT CHNL BTM WDTH = 280 FT.
 109.000     5.79   1053.99   1051.01       .00   1054.29       .29       .35       .01   1066.90
 13500.0       .0   13500.0       .0       .0    3109.3       .0     428.0      84.2   1066.90
     .38      .00      4.34       .00      .000      .035      .000      .000   1048.20    227.11
 .001073     300.      300.      300.        2        14         0       .00    558.68    785.79


*SECNO 110.000
 110.000     7.09   1054.09   1051.29       .00   1054.41       .32       .11       .01   1066.90
 13500.0       .0   13500.0       .0       .0    2996.2       .0     435.0      85.5   1066.90
     .39      .00      4.51       .00      .000      .035      .000      .000   1047.00    227.19
 .001213     100.      100.      100.        2        19         0       .00    558.50    785.69


*SECNO 113.000
 113.000     5.46   1054.46   1051.75       .00   1054.78       .32       .37       .00   1067.20
 13500.0       .0   13500.0       .0       .0    2957.7       .0     455.5      89.4   1067.20
     .40      .00      4.56       .00      .000      .035      .000      .000   1049.00    227.28
 .001265     300.      300.      300.        2        18         0       .00    558.17    785.46


*SECNO 116.000

3265 DIVIDED FLOW

            BEGIN CHANNEL BOTTOM TRANSITION
            LT CHNL BTM WDTH = 280 FT.
            RT CHNL BTM WDTH = 280 FT.
 116.000     5.24   1054.84   1052.46       .00   1055.24       .40       .44       .02   1067.30
 13500.0       .0   13500.0       .0       .0    2675.8       .0     474.9      93.1   1067.30
     .42      .00      5.05       .00      .000      .035      .000      .000   1049.60    227.21
 .001698     240.      300.      340.        2        11         0       .00    538.41    785.24
```

SECNO	DEPTH	CWSEL	CRIWS	WSELK	EG	HV	HL	OLOSS	L-BANK ELEV
Q	QLOB	QCH	QROB	ALOB	ACH	AROB	VOL	TWA	R-BANK ELEV
TIME	VLOB	VCH	VROB	XNL	XNCH	XNR	WTN	ELMIN	SSTA
SLOPE	XLOBL	XLCH	XLOBR	ITRIAL	IDC	ICONT	CORAR	TOPWID	ENDST

*SECNO 120.000

3265 DIVIDED FLOW

3301 HV CHANGED MORE THAN HVINS

3302 WARNING: CONVEYANCE CHANGE OUTSIDE OF ACCEPTABLE RANGE, KRATIO = .51

END CHANNEL BOTTOM TRANSITION
LT CHNL BTM WDTH = 210 FT.
RT CHNL BTM WDTH = 230 FT.

120.000	4.94	1055.34	1054.56	.00	1056.73	1.38	1.19	.30	1067.10
13500.0	.0	13500.0	.0	.0	1429.8	.0	493.8	97.0	1067.10
.43	.00	9.44	.00	.000	.035	.000	.000	1050.40	296.81
.006512	327.	400.	497.	2	15	0	.00	307.15	734.94

*SECNO 123.000

3301 HV CHANGED MORE THAN HVINS

3302 WARNING: CONVEYANCE CHANGE OUTSIDE OF ACCEPTABLE RANGE, KRATIO = 2.28

123.000	6.27	1057.27	1054.14	.00	1057.65	.39	.83	.10	1068.80
13500.0	.0	13500.0	.0	.0	2702.7	.0	510.0	99.9	1068.80
.45	.00	5.00	.00	.000	.035	.000	.000	1051.00	295.28
.001249	342.	342.	342.	2	14	0	.00	440.99	736.26

*SECNO 127.000

127.000	5.98	1057.78	1054.94	.00	1058.20	.43	.54	.01	1068.80
13500.0	.0	13500.0	.0	.0	2578.4	.0	534.2	104.0	1068.80
.47	.00	5.24	.00	.000	.035	.000	.000	1051.80	295.06
.001460	400.	400.	400.	2	8	0	.00	440.91	735.97

*SECNO 131.000

131.000	8.39	1058.39	1055.91	.00	1058.88	.49	.65	.02	1069.40
13500.0	.0	13500.0	.0	.0	2410.6	.0	557.1	108.0	1069.40
.49	.00	5.60	.00	.000	.035	.000	.000	1050.00	295.22
.001832	400.	400.	400.	2	5	0	.00	440.56	735.79

```
   SECNO     DEPTH     CWSEL     CRIWS     WSELK     EG        HV        HL        OLOSS     L-BANK ELEV
   Q         QLOB      QCH       QROB      ALOB      ACH       AROB      VOL       TWA       R-BANK ELEV
   TIME      VLOB      VCH       VROB      XNL       XNCH      XNR       WTN       ELMIN     SSTA
   SLOPE     XLOBL     XLCH      XLOBR     ITRIAL    IDC       ICONT     CORAR     TOPWID    ENDST


*SECNO 135.000

3265 DIVIDED FLOW

   135.000     5.79   1059.19   1057.07       .00   1059.84       .65       .92       .05   1069.60
   13500.0       .0   13500.0       .0       .0    2093.3       .0     577.8     112.1   1069.90
       .51     .00      6.45       .00      .000      .035      .000      .000   1053.40    294.70
   .002956    400.      400.      400.         2        14         0       .00    441.02    735.72


*SECNO 138.000
   138.000     6.06   1060.06   1057.46       .00   1060.56       .50       .71       .01   1069.60
   13500.0       .0   13500.0       .0       .0    2384.9       .0     593.2     115.1   1069.60
       .52     .00      5.66       .00      .000      .035      .000      .000   1054.00    293.47
   .001916    300.      300.      300.         2        14         0       .00    442.59    736.06


*SECNO 141.000

3265 DIVIDED FLOW

   141.000     6.04   1060.64   1058.51       .00   1061.26       .62       .67       .04   1071.00
   13500.0       .0   13500.0       .0       .0    2134.9       .0     608.8     118.1   1071.00
       .54     .00      6.32       .00      .000      .035      .000      .000   1054.60    294.25
   .002595    300.      300.      300.         2        14         0       .00    419.48    736.04


*SECNO 145.000

3302 WARNING:  CONVEYANCE CHANGE OUTSIDE OF ACCEPTABLE RANGE,  KRATIO =  1.42

            A.D.O.T. CHANNEL INLET LT. BANK, NORTHERN AVENUE CHANNEL
   145.000     6.20   1061.60   1058.54       .00   1061.99       .39       .71       .02   1072.00
   13500.0       .0   13500.0       .0       .0    2678.3       .0     630.9     122.1   1077.00
       .56     .00      5.04       .00      .000      .035      .000      .000   1055.40    294.20
   .001288    400.      400.      400.         2        11         0       .00    440.56    734.76


*SECNO 147.000
            BEGIN CHANNEL BOTTOM TRANSITION
            LT CHNL BTM WDTH = 210 FT.
            RT CHNL BTM WDTH = 230 FT.
   147.000     6.05   1061.85   1058.95       .00   1062.27       .41       .27       .01   1072.40
   13500.0       .0   13500.0       .0       .0    2618.8       .0     643.1     124.1   1072.40
       .57     .00      5.16       .00      .000      .035      .000      .000   1055.80    294.49
   .001390    200.      200.      200.         2         8         0       .00    441.57    736.06
```

SECNO	DEPTH	CWSEL	CRIWS	WSELK	EG	HV	HL	OLOSS	L-BANK ELEV
Q	QLOB	QCH	QROB	ALOB	ACH	AROB	VOL	TWA	R-BANK ELEV
TIME	VLOB	VCH	VROB	XNL	XNCH	XNR	WTN	ELMIN	SSTA
SLOPE	XLOBL	XLCH	XLOBR	ITRIAL	IDC	ICONT	CORAR	TOPWID	ENDST

*SECNO 150.000

CHANNEL BOTTOM TAPERS
LT CHNL BTM WDTH = 260 FT.
RT CHNL BTM WDTH = 210 FT.

150.000	5.90	1062.30	1059.39	.00	1062.68	.38	.41	.00	1073.00
13500.0	.0	13500.0	.0	.0	2725.7	.0	661.5	127.2	1073.00
.59	.00	4.95	.00	.000	.035	.000	.000	1056.40	244.81
.001324	350.	300.	260.	2	8	0	.00	471.09	715.90

*SECNO 155.000

3265 DIVIDED FLOW

3301 HV CHANGED MORE THAN HVINS

3302 WARNING: CONVEYANCE CHANGE OUTSIDE OF ACCEPTABLE RANGE, KRATIO = .52

CHANNEL BOTTOM TAPERS
LT CHNL BTM WDTH = 260 FT.
RT CHNL BTM WDTH = 170 FT.

155.000	5.65	1063.05	1061.80	.00	1063.98	.93	1.14	.17	1073.30
13500.0	.0	13500.0	.0	.0	1740.8	.0	687.1	132.2	1073.30
.61	.00	7.75	.00	.000	.035	.000	.000	1057.40	244.60
.004808	585.	500.	460.	2	15	0	.00	400.68	675.65

CCHV= .300 CEHV= .500
*SECNO 158.000

3302 WARNING: CONVEYANCE CHANGE OUTSIDE OF ACCEPTABLE RANGE, KRATIO = 1.44

END CHANNEL BOTTOM TRANSITION
LT CHNL BTM WDTH = 162.5 FT.
RT CHNL BTM WDTH = 162.5 FT.

158.000	6.30	1064.30	1061.89	.00	1065.02	.71	.97	.07	1076.50
13500.0	.0	13500.0	.0	.0	1991.9	.0	700.0	134.7	1075.00
.62	.00	6.78	.00	.000	.035	.000	.000	1058.00	343.39
.002314	360.	300.	265.	2	14	0	.00	325.41	668.80

SECNO	DEPTH	CWSEL	CRIWS	WSELK	EG	HV	HL	OLOSS	L-BANK ELEV
Q	QLOB	QCH	QROB	ALOB	ACH	AROB	VOL	TWA	R-BANK ELEV
TIME	VLOB	VCH	VROB	XNL	XNCH	XNR	WTN	ELMIN	SSTA
SLOPE	XLOBL	XLCH	XLOBR	ITRIAL	IDC	ICONT	CORAR	TOPWID	ENDST

*SECNO 159.450

DOWNSTREAM BRIDGE SECTION - NORTHERN AVENUE BRIDGE

159.450	6.67	1064.97	1062.04	.00	1065.54	.58	.49	.04	1076.80
13500.0	.0	13500.0	.0	.0	2211.0	.0	711.8	136.6	1076.80
.63	.00	6.11	.00	.000	.035	.000	.000	1058.30	330.83
.001729	245.	245.	245.	2	14	0	.00	338.33	669.17

SPECIAL BRIDGE

SB	XK	XKOR	COFQ	RDLEN	BWC	BWP	BAREA	SS	ELCHU	ELCHD
	1.05	1.56	2.90	388.00	325.00	28.00	6034.00	1.00	1058.46	1058.30

*SECNO 160.250

CLASS A LOW FLOW

3420 BRIDGE W.S.= 1064.90 BRIDGE VELOCITY= 6.83 CALCULATED CHANNEL AREA= 1953.

EGPRS	EGLWC	H3	QWEIR	QLOW	BAREA	TRAPEZOID AREA	ELLC	ELTRD	WEIRLN
.00	1065.69	.14	0.	13500.	6034.	6004.	1077.46	1082.00	0.

NORTHERN AVENUE BRIDGE - SPECIAL BRIDGE ANALYSIS

160.250	6.64	1065.10	.00	.00	1065.69	.58	.14	.00	1077.00
13500.0	.0	13500.0	.0	.0	2202.7	.0	715.8	137.2	1077.00
.63	.00	6.13	.00	.000	.035	.000	.000	1058.46	330.87
.001751	80.	80.	80.	0	0	0	.00	338.26	669.13

*SECNO 162.000

BEGIN CHANNEL BOTTOM TRANSITION
LT CHNL BTM WDTH = 162.5 FT.
RT CHNL BTM WDTH = 162.5 FT.

162.000	6.61	1065.41	1062.55	.00	1066.00	.59	.31	.00	1077.00
13500.0	.0	13500.0	.0	.0	2190.7	.0	724.7	138.6	1077.00
.64	.00	6.16	.00	.000	.035	.000	.000	1058.80	330.89
.001782	175.	175.	175.	0	11	0	.00	338.21	669.11

*SECNO 165.000

END CHANNEL BOTTOM TRANSITION
LT CHNL BTM WDTH = 300 FT.
RT CHNL BTM WDTH = 250 FT.

```
   SECNO     DEPTH     CWSEL     CRIWS     WSELK     EG        HV        HL        OLOSS     L-BANK ELEV
   Q         QLOB      QCH       QROB      ALOB      ACH       AROB      VOL       TWA       R-BANK ELEV
   TIME      VLOB      VCH       VROB      XNL       XNCH      XNR       WTN       ELMIN     SSTA
   SLOPE     XLOBL     XLCH      XLOBR     ITRIAL    IDC       ICONT     CORAR     TOPWID    ENDST

  165.000      6.64   1066.04   1062.88       .00   1066.51       .46       .47       .04   1078.80
  13500.0        .0   13500.0       .0        .0    2473.9        .0     740.7     141.0   1078.80
      .66       .00      5.46       .00      .000      .035      .000      .000   1059.40    374.31
 .001391      300.      300.      300.         2        11         0       .00    382.33    756.64

*SECNO 168.000
  168.000      6.37   1066.47   1063.65       .00   1067.00       .54       .46       .04   1079.00
  13500.0        .0   13500.0       .0        .0    2297.1        .0     757.1     143.6   1079.00
      .67       .00      5.88       .00      .000      .035      .000      .000   1060.10    386.06
 .001706      300.      300.      300.         2        11         0       .00    370.30    756.37

CCHV=     .100 CEHV=     .300
*SECNO 170.000
            BEGIN CHANNEL BOTTOM TRANSITION
            LT CHNL BTM WDTH = 300 FT.
            RT CHNL BTM WDTH = 250 FT.
  170.000      6.21   1066.81   1064.13       .00   1067.36       .56       .35       .01   1079.20
  13500.0        .0   13500.0       .0        .0    2256.3        .0     767.6     145.3   1079.20
      .68       .00      5.98       .00      .000      .035      .000      .000   1060.60    383.39
 .001827      200.      200.      200.         2        11         0       .00    372.82    756.21

*SECNO 173.000

3301 HV CHANGED MORE THAN HVINS

3302 WARNING:  CONVEYANCE CHANGE OUTSIDE OF ACCEPTABLE RANGE,  KRATIO =   .64

            END CHNL BTM TRANSITION RT.
            RT CHNL BTM WDTH = 157 FT.
  173.000      5.76   1067.16   1065.76       .00   1068.37      1.21       .81       .20   1079.00
  13500.0        .0   13500.0       .0        .0    1530.1        .0     780.6     147.6   1079.00
      .69       .00      8.82       .00      .000      .035      .000      .000   1061.40    388.67
 .004440      300.      300.      300.         2        19         0       .00    274.09    662.76

*SECNO 176.000
  176.000      6.59   1068.79   1066.75       .00   1069.72       .93      1.32       .03   1079.60
  13500.0        .0   13500.0       .0        .0    1743.3        .0     791.9     149.8   1079.60
      .70       .00      7.74       .00      .000      .035      .000      .000   1062.20    287.53
 .004369      300.      300.      300.         2        11         0       .00    376.05    663.58
```

SECNO	DEPTH	CWSEL	CRIWS	WSELK	EG	HV	HL	OLOSS	L-BANK ELEV
Q	QLOB	QCH	QROB	ALOB	ACH	AROB	VOL	TWA	R-BANK ELEV
TIME	VLOB	VCH	VROB	XNL	XNCH	XNR	WTN	ELMIN	SSTA
SLOPE	XLOBL	XLCH	XLOBR	ITRIAL	IDC	ICONT	CORAR	TOPWID	ENDST

*SECNO 177.000

3301 HV CHANGED MORE THAN HVINS

3302 WARNING: CONVEYANCE CHANGE OUTSIDE OF ACCEPTABLE RANGE, KRATIO = 1.98

BEGIN CHNL BTM TRANSITION RT.
RT CHNL BTM WDTH = 157 FT.

177.000	7.16	1069.56	1065.90	.00	1069.97	.41	.20	.05	1080.50
13500.0	.0	13500.0	.0	.0	2629.1	.0	796.9	150.7	1080.50
.70	.00	5.13	.00	.000	.035	.000	.000	1062.40	289.92
.001110	100.	100.	100.	2	11	0	.00	374.24	664.16

*SECNO 179.000

END CHNL BTM TRANSITION LT.
LT CHNL BTM WDTH = 175 FT.

179.000	6.99	1069.79	1066.27	.00	1070.20	.41	.23	.00	1081.00
13500.0	.0	13500.0	.0	.0	2624.8	.0	809.0	152.4	1081.00
.72	.00	5.14	.00	.000	.035	.000	.000	1062.80	329.29
.001158	200.	200.	200.	2	11	0	.00	386.20	715.49

*SECNO 181.000

END CHNL BTM TRANSITION RT.
RT CHNL BTM WDTH = 260 FT.

181.000	6.78	1070.08	1066.47	.00	1070.42	.34	.21	.01	1081.60
13500.0	.0	13500.0	.0	.0	2893.8	.0	821.7	154.3	1081.60
.73	.00	4.67	.00	.000	.035	.000	.000	1063.30	329.74
.000984	200.	200.	200.	2	14	0	.00	437.04	766.78

*SECNO 183.000

3265 DIVIDED FLOW

3301 HV CHANGED MORE THAN HVINS

3302 WARNING: CONVEYANCE CHANGE OUTSIDE OF ACCEPTABLE RANGE, KRATIO = .37

SECNO	DEPTH	CWSEL	CRIWS	WSELK	EG	HV	HL	OLOSS	L-BANK ELEV
Q	QLOB	QCH	QROB	ALOB	ACH	AROB	VOL	TWA	R-BANK ELEV
TIME	VLOB	VCH	VROB	XNL	XNCH	XNR	WTN	ELMIN	SSTA
SLOPE	XLOBL	XLCH	XLOBR	ITRIAL	IDC	ICONT	CORAR	TOPWID	ENDST
183.000	5.70	1069.50	1068.82	.00	1071.27	1.77	.42	.43	1081.30
13500.0	.0	13500.0	.0	.0	1263.9	.0	831.2	155.9	1081.30
.73	.00	10.68	.00	.000	.035	.000	.000	1063.80	331.10
.007216	200.	200.	200.	2	15	0	.00	241.61	765.70

*SECNO 188.000

3265 DIVIDED FLOW

3301 HV CHANGED MORE THAN HVINS

3302 WARNING: CONVEYANCE CHANGE OUTSIDE OF ACCEPTABLE RANGE, KRATIO = 1.78

188.000	7.71	1072.71	1069.29	.00	1073.26	.56	1.87	.12	1083.00
13500.0	.0	13500.0	.0	.0	2257.8	.0	851.4	159.8	1083.00
.76	.00	5.98	.00	.000	.035	.000	.000	1065.00	327.61
.002289	500.	500.	500.	5	15	0	.00	438.64	767.70

*SECNO 193.000

3265 DIVIDED FLOW

STA. 192+60.12 IS P.O.C. OF CURVE TO THE RT.

193.000	7.59	1073.79	1070.36	.00	1074.28	.49	1.01	.01	1084.00
13500.0	.0	13500.0	.0	.0	2412.7	.0	878.2	164.8	1084.00
.78	.00	5.60	.00	.000	.035	.000	.000	1066.20	327.60
.001800	500.	500.	500.	2	11	0	.00	432.18	767.60

*SECNO 197.000

3265 DIVIDED FLOW

3302 WARNING: CONVEYANCE CHANGE OUTSIDE OF ACCEPTABLE RANGE, KRATIO = .67

BEGIN CHANNEL BOTTOM TRANSITION LEFT AND RIGHT
TO MATCH PAST DEIGN CROSS SECTIONS.

197.000	7.40	1074.60	1073.09	.00	1075.41	.81	1.03	.10	1084.60
13500.0	.0	13500.0	.0	.0	1863.6	.0	897.9	168.6	1084.60
.80	.00	7.24	.00	.000	.035	.000	.000	1067.20	327.59
.003999	400.	400.	400.	1	15	0	.00	411.62	767.40

SECNO	DEPTH	CWSEL	CRIWS	WSELK	EG	HV	HL	OLOSS	L-BANK ELEV
Q	QLOB	QCH	QROB	ALOB	ACH	AROB	VOL	TWA	R-BANK ELEV
TIME	VLOB	VCH	VROB	XNL	XNCH	XNR	WTN	ELMIN	SSTA
SLOPE	XLOBL	XLCH	XLOBR	ITRIAL	IDC	ICONT	CORAR	TOPWID	ENDST

CCHV= .300 CEHV= .500
*SECNO 199.000

3302 WARNING: CONVEYANCE CHANGE OUTSIDE OF ACCEPTABLE RANGE, KRATIO = 2.22

199.000	7.68	1075.38	1071.11	.00	1075.71	.33	.15	.15	1086.20
13500.0	.0	13500.0	.0	.0	2932.2	.0	903.4	169.6	1086.20
.80	.00	4.60	.00	.000	.035	.000	.000	1067.70	328.32
.000814	200.	100.	200.	2	14	0	.00	389.36	717.68

*SECNO 201.100
DOWNSTREAM BRIDGE SECTION - 99TH AVENUE BRIDGE

201.100	7.31	1075.51	1072.03	.00	1076.02	.51	.22	.09	1086.70
13500.0	.0	13500.0	.0	.0	2348.1	.0	916.1	171.3	1086.70
.81	.00	5.75	.00	.000	.035	.000	.000	1068.20	335.69
.001365	210.	210.	210.	2	8	0	.00	328.62	664.31

SPECIAL BRIDGE

SB	XK	XKOR	COFQ	RDLEN	BWC	BWP	BAREA	SS	ELCHU	ELCHD
	1.05	1.56	2.90	376.00	314.00	21.00	5763.00	1.00	1068.40	1068.20

*SECNO 201.900
CLASS A LOW FLOW

3420 BRIDGE W.S.= 1075.52 BRIDGE VELOCITY= 6.23 CALCULATED CHANNEL AREA= 2136.

EGPRS	EGLWC	H3	QWEIR	QLOW	BAREA	TRAPEZOID AREA	ELLC	ELTRD	WEIRLN
.00	1076.12	.08	0.	13500.	5763.	5697.	1086.70	1091.80	0.

99TH AVENUE BRIDGE - SPECIAL BRIDGE ANALYSIS

201.900	7.19	1075.59	.00	.00	1076.12	.53	.10	.00	1086.90
13500.0	.0	13500.0	.0	.0	2308.9	.0	920.4	171.9	1086.90
.82	.00	5.85	.00	.000	.035	.000	.000	1068.40	335.81
.001442	80.	80.	80.	0	0	0	.00	328.38	664.19

*SECNO 204.000

204.000	6.99	1075.89	1072.73	.00	1076.45	.56	.32	.02	1087.40
13500.0	.0	13500.0	.0	.0	2241.6	.0	931.3	173.5	1087.40
.83	.00	6.02	.00	.000	.035	.000	.000	1068.90	336.02
.001588	210.	210.	210.	0	11	0	.00	327.97	663.98

SECNO	DEPTH	CWSEL	CRIWS	WSELK	EG	HV	HL	OLOSS	L-BANK ELEV
Q	QLOB	QCH	QROB	ALOB	ACH	AROB	VOL	TWA	R-BANK ELEV
TIME	VLOB	VCH	VROB	XNL	XNCH	XNR	WTN	ELMIN	SSTA
SLOPE	XLOBL	XLCH	XLOBR	ITRIAL	IDC	ICONT	CORAR	TOPWID	ENDST

CCHV= .300 CEHV= .500
*SECNO 209.300

209.300	6.59	1076.78	1074.02	.00	1077.41	.63	.92	.04	1088.19
13500.0	.0	13500.0	.0	.0	2112.6	.0	957.8	177.5	1088.19
.85	.00	6.39	.00	.000	.035	.000	.000	1070.19	336.41
.001926	530.	530.	530.	2	11	0	.00	327.18	663.59

CCHV= .300 CEHV= .500
*SECNO 212.600

DOWNSTREAM BRIDGE SECTION - OLIVE AVENUE BRIDGE

212.600	6.39	1077.39	1075.47	.00	1078.46	1.07	.83	.22	1089.60
13500.0	.0	13500.0	.0	.0	1625.8	.0	972.0	179.7	1089.60
.86	.00	8.30	.00	.000	.035	.000	.000	1071.00	369.61
.003423	330.	330.	330.	2	14	0	.00	260.78	630.39

SPECIAL BRIDGE

SB	XK	XKOR	COFQ	RDLEN	BWC	BWP	BAREA	SS	ELCHU	ELCHD
	1.05	1.56	2.90	300.00	248.00	18.50	4481.60	1.00	1071.50	1071.00

*SECNO 213.500
CLASS A LOW FLOW

3420 BRIDGE W.S.= 1077.31 BRIDGE VELOCITY= 9.45 CALCULATED CHANNEL AREA= 1368.

EGPRS	EGLWC	H3	QWEIR	QLOW	BAREA	TRAPEZOID AREA	ELLC	ELTRD	WEIRLN
.00	1078.86	.35	0.	13500.	4482.	4482.	1089.60	1095.00	0.

OLIVE AVENUE BRIDGE - SPECIAL BRIDGE ANALYSIS

213.500	6.24	1077.74	.00	.00	1078.86	1.12	.40	.00	1089.60
13500.0	.0	13500.0	.0	.0	1586.6	.0	975.3	180.2	1089.60
.86	.00	8.51	.00	.000	.035	.000	.000	1071.50	369.76
.003706	90.	90.	90.	0	0	0	.00	260.48	630.24

CCHV= .100 CEHV= .300
*SECNO 213.700

3301 HV CHANGED MORE THAN HVINS

```
   SECNO      DEPTH      CWSEL      CRIWS      WSELK      EG         HV         HL         OLOSS      L-BANK ELEV
   Q          QLOB       QCH        QROB       ALOB       ACH        AROB       VOL        TWA        R-BANK ELEV
   TIME       VLOB       VCH        VROB       XNL        XNCH       XNR        WTN        ELMIN      SSTA
   SLOPE      XLOBL      XLCH       XLOBR      ITRIAL     IDC        ICONT      CORAR      TOPWID     ENDST

7185 MINIMUM SPECIFIC ENERGY
3720 CRITICAL DEPTH ASSUMED
   213.700     4.32    1077.32    1077.32       .00    1079.46       2.15        .12        .31    1095.00
   13500.0       .0    13500.0        .0        .0     1148.1         .0      975.9      180.4    1096.20
       .86     .00      11.76        .00      .000       .035       .000       .000    1073.00     364.78
   .011345     20.        20.        20.         0         19          0        .00     270.21     634.99

*SECNO 217.500

3301 HV CHANGED MORE THAN HVINS

3302 WARNING:  CONVEYANCE CHANGE OUTSIDE OF ACCEPTABLE RANGE,  KRATIO =  2.43

   217.500     6.29    1080.49    1077.84       .00    1081.08        .60       1.46        .16    1096.00
   13500.0       .0    13500.0        .0        .0     2179.3         .0      990.4      183.1    1097.00
       .88     .00       6.19        .00      .000       .035       .000       .000    1074.20     320.51
   .001916    380.       380.       380.         3         11          0        .00     352.97     673.49

*SECNO 221.100
   221.100     5.90    1081.20    1078.83       .00    1081.82        .62        .73        .01    1096.60
   13500.0       .0    13500.0        .0        .0     2138.1         .0     1008.3      186.1    1098.00
       .90     .00       6.31        .00      .000       .035       .000       .000    1075.30     310.39
   .002153    360.       360.       360.         2         11          0        .00     367.82     678.21

*SECNO 227.500
   227.500     5.50    1082.60    1080.06       .00    1083.02        .42       1.18        .02    1099.00
   13500.0       .0    13500.0        .0        .0     2587.4         .0     1043.0      192.3    1099.00
       .93     .00       5.22        .00      .000       .035       .000       .000    1077.10     262.23
   .001601    640.       640.       640.         2          8          0        .00     476.30     738.52

*SECNO 233.550

3302 WARNING:  CONVEYANCE CHANGE OUTSIDE OF ACCEPTABLE RANGE,  KRATIO =   .68

   233.550     4.69    1083.69    1082.20       .00    1084.42        .73       1.31        .09    1101.70
   13500.0       .0    13500.0        .0        .0     1965.3         .0     1073.3      198.2    1101.60
       .95     .00       6.87        .00      .000       .035       .000       .000    1079.00     288.01
   .003429    580.       580.       580.         0         11          0        .00     424.07     712.09
```

```
   SECNO     DEPTH     CWSEL     CRIWS     WSELK     EG        HV        HL        OLOSS     L-BANK ELEV
   Q         QLOB      QCH       QROB      ALOB      ACH       AROB      VOL       TWA       R-BANK ELEV
   TIME      VLOB      VCH       VROB      XNL       XNCH      XNR       WTN       ELMIN     SSTA
   SLOPE     XLOBL     XLCH      XLOBR     ITRIAL    IDC       ICONT     CORAR     TOPWID    ENDST


*SECNO 238.660

3301 HV CHANGED MORE THAN HVINS

  238.660      4.94   1085.54   1084.61       .00   1086.84      1.29      2.25       .17   1103.30
  13500.0        .0   13500.0       .0        .0    1478.5        .0    1093.7     202.6   1103.70
      .97       .00      9.13       .00      .000      .035      .000      .000   1080.60    347.91
  .005707      516.      516.      516.         2        11         0       .00    303.78    651.69


*SECNO 238.690

3301 HV CHANGED MORE THAN HVINS

7185 MINIMUM SPECIFIC ENERGY
3720 CRITICAL DEPTH ASSUMED
  238.690      3.95   1087.55   1087.55       .00   1089.51      1.97       .02       .20   1103.40
  13500.0        .0   13500.0       .0        .0    1198.7        .0    1093.8     202.6   1103.90
      .97       .00     11.26       .00      .000      .035      .000      .000   1083.60    340.85
  .011644        3.        3.        3.         0        15         0       .00    307.79    648.65


CCHV=     .100 CEHV=     .300
*SECNO 242.000

3301 HV CHANGED MORE THAN HVINS


3302 WARNING:  CONVEYANCE CHANGE OUTSIDE OF ACCEPTABLE RANGE,  KRATIO =  2.09

  242.000      6.02   1090.47   1088.31       .00   1091.25       .78      1.61       .12   1104.00
  13500.0        .0   13500.0       .0        .0    1907.0        .0    1105.6     205.0   1104.00
      .98       .00      7.08       .00      .000      .035      .000      .000   1084.45    338.53
  .002658      331.      331.      331.         3         8         0       .00    322.93    661.47


*SECNO 247.000
  247.000      6.12   1091.79   1089.51       .00   1092.54       .75      1.29       .00   1104.50
  13500.0        .0   13500.0       .0        .0    1946.7        .0    1127.7     208.7   1104.50
     1.00       .00      6.93       .00      .000      .035      .000      .000   1085.67    337.72
  .002499      500.      500.      500.         2        14         0       .00    324.57    662.28
```

```
 SECNO     DEPTH     CWSEL     CRIWS     WSELK     EG        HV        HL        OLOSS     L-BANK ELEV
 Q         QLOB      QCH       QROB      ALOB      ACH       AROB      VOL       TWA       R-BANK ELEV
 TIME      VLOB      VCH       VROB      XNL       XNCH      XNR       WTN       ELMIN     SSTA
 SLOPE     XLOBL     XLCH      XLOBR     ITRIAL    IDC       ICONT     CORAR     TOPWID    ENDST


CCHV=     .100 CEHV=     .300
*SECNO 270.500
CHIMP CLSTA=    9955.00 CELCH=    1086.50 BW=     365.00 STCHL=    9753.15 STCHR=   10175.00
EXCAVATION DATA
AEX=    1319.1SQ-FT     VEXR=        .0K*CU-YD     VEXT=        .0K*CU-YD


3470 ENCROACHMENT STATIONS=     9750.0   10218.0  TYPE=      1  TARGET=    -9750.000

3495 OVERBANK AREA ASSUMED NON-EFFECTIVE, ELLEA=      1105.85 ELREA=      1107.00

   270.500      6.61   1093.11   1089.97       .00   1093.58       .47      1.02       .03   1105.85
   13500.0        .0   13500.0       .0        .0    2458.0        .0    1155.8     213.2   1107.00
      1.03       .00      5.49       .00      .000      .035      .000      .000   1086.50   9765.89
   .001404      338.      555.      338.         2        11         0       .00    378.23  10144.11


*SECNO 273.500
CHIMP CLSTA=    9919.00 CELCH=    1087.20 BW=     375.00 STCHL=    9712.31 STCHR=   10127.15
EXCAVATION DATA
AEX=    2554.4SQ-FT     VEXR=      22.2K*CU-YD     VEXT=       22.2K*CU-YD


3470 ENCROACHMENT STATIONS=     9640.0   10160.0  TYPE=      1  TARGET=    -9640.000

3495 OVERBANK AREA ASSUMED NON-EFFECTIVE, ELLEA=      1106.39 ELREA=      1107.85

   273.500      6.36   1093.56   1090.60       .00   1094.04       .48       .45       .00   1106.39
   13500.0        .0   13500.0       .0        .0    2422.9        .0    1173.1     215.9   1107.85
      1.05       .00      5.57       .00      .000      .035      .000      .000   1087.20   9725.15
   .001523      315.      310.      310.         2        11         0       .00    387.71  10112.85


*SECNO 277.900
CHIMP CLSTA=    9927.00 CELCH=    1088.30 BW=     360.00 STCHL=    9729.30 STCHR=   10137.00
EXCAVATION DATA
AEX=    2900.7SQ-FT     VEXR=      42.4K*CU-YD     VEXT=       64.7K*CU-YD


3495 OVERBANK AREA ASSUMED NON-EFFECTIVE, ELLEA=      1106.00 ELREA=      1108.50

   277.900      5.92   1094.22   1091.80       .00   1094.82       .60       .75       .04   1106.00
   13500.0        .0   13500.0       .0        .0    2165.8        .0    1195.3     219.6   1108.50
      1.06       .00      6.23       .00      .000      .035      .000      .000   1088.30   9741.08
   .002093      420.      420.      420.         2        11         0       .00    371.84  10112.92
```

SECNO	DEPTH	CWSEL	CRIWS	WSELK	EG	HV	HL	OLOSS	L-BANK ELEV
Q	QLOB	QCH	QROB	ALOB	ACH	AROB	VOL	TWA	R-BANK ELEV
TIME	VLOB	VCH	VROB	XNL	XNCH	XNR	WTN	ELMIN	SSTA
SLOPE	XLOBL	XLCH	XLOBR	ITRIAL	IDC	ICONT	CORAR	TOPWID	ENDST

```
*SECNO 281.800
CHIMP CLSTA=    9932.00 CELCH=    1089.20 BW=     330.00 STCHL=    9747.63 STCHR=   10117.50
EXCAVATION DATA
AEX=    3280.4SQ-FT     VEXR=      46.9K*CU-YD     VEXT=      111.6K*CU-YD

3495 OVERBANK AREA ASSUMED NON-EFFECTIVE, ELLEA=      1108.57 ELREA=      1109.70

   281.800      5.88   1095.08   1092.90       .00   1095.80       .73       .95       .04   1108.57
   13500.0        .0   13500.0       .0        .0    1974.3        .0    1214.7     222.9   1109.70
      1.08       .00      6.84       .00      .000      .035      .000      .000   1089.20   9761.12
   .002550      410.      410.      410.         2        14         0       .00    341.76  10102.88

CCHV=     .300 CEHV=     .500
*SECNO 288.000
CHIMP CLSTA=    9988.00 CELCH=    1092.20 BW=     274.00 STCHL=    9829.45 STCHR=   10145.00
EXCAVATION DATA
AEX=    1602.9SQ-FT     VEXR=      54.3K*CU-YD     VEXT=      165.9K*CU-YD

3301 HV CHANGED MORE THAN HVINS

3302 WARNING:  CONVEYANCE CHANGE OUTSIDE OF ACCEPTABLE RANGE,  KRATIO =   .60

3495 OVERBANK AREA ASSUMED NON-EFFECTIVE, ELLEA=      1113.75 ELREA=      1112.00

   288.000      4.85   1097.05   1096.40       .00   1098.59      1.54      2.38       .41   1113.75
   13500.0        .0   13500.0       .0        .0    1353.5        .0    1237.7     227.2   1112.00
      1.10       .00      9.97       .00      .000      .035      .000      .000   1092.20   9846.15
   .006991      600.      600.      600.         2        15         0       .00    283.71  10129.85

*SECNO 290.000

3495 OVERBANK AREA ASSUMED NON-EFFECTIVE, ELLEA=      1117.80 ELREA=      1117.80

   290.000      5.54   1098.54   1097.39       .00   1099.86      1.32      1.21       .07   1117.80
   13500.0        .0   13500.0       .0        .0    1462.2        .0    1244.1     228.5   1117.80
      1.10       .00      9.23       .00      .000      .035      .000      .000   1093.00   9865.00
   .005256      220.      200.      160.         3        11         0       .00    271.00  10136.00
```

SECNO	DEPTH	CWSEL	CRIWS	WSELK	EG	HV	HL	OLOSS	L-BANK ELEV
Q	QLOB	QCH	QROB	ALOB	ACH	AROB	VOL	TWA	R-BANK ELEV
TIME	VLOB	VCH	VROB	XNL	XNCH	XNR	WTN	ELMIN	SSTA
SLOPE	XLOBL	XLCH	XLOBR	ITRIAL	IDC	ICONT	CORAR	TOPWID	ENDST

SPECIAL BRIDGE

SB	XK	XKOR	COFQ	RDLEN	BWC	BWP	BAREA	SS	ELCHU	ELCHD
	.90	1.56	2.90	.00	271.00	10.50	4974.00	.00	1093.70	1093.30

*SECNO 291.000
CLASS A LOW FLOW

3420 BRIDGE W.S.= 1098.41 BRIDGE VELOCITY= 10.56 CALCULATED CHANNEL AREA= 1227.

EGPRS	EGLWC	H3	QWEIR	QLOW	BAREA	TRAPEZOID AREA	ELLC	ELTRD	WEIRLN
.00	1100.10	.26	0.	13500.	4974.	5314.	1114.10	1119.10	0.

3495 OVERBANK AREA ASSUMED NON-EFFECTIVE, ELLEA= 1117.80 ELREA= 1117.80

291.000	5.80	1098.80	.00	.00	1100.10	1.30	.23	.00	1116.00
13500.0	.0	13500.0	.0	.0	1477.6	.0	1246.7	229.0	1116.00
1.11	.00	9.14	.00	.000	.035	.000	.000	1093.00	9865.00
.005077	77.	77.	77.	0	0	0	.00	271.00	10136.00

CCHV= .100 CEHV= .300
*SECNO 293.000
CHIMP CLSTA= 10007.00 CELCH= 1094.00 BW= 231.00 STCHL= 9869.90 STCHR= 10144.00
EXCAVATION DATA
AEX= -4.0SQ-FT VEXR= 5.9K*CU-YD VEXT= 171.8K*CU-YD

293.000	5.70	1099.70	1098.69	.00	1101.26	1.55	1.08	.08	1115.60
13500.0	.0	13500.0	.0	.0	1350.3	.0	1253.2	230.2	1115.00
1.11	.00	10.00	.00	.000	.035	.000	.000	1094.00	9885.79
.005763	200.	200.	200.	2	15	0	.00	242.41	10128.21

*SECNO 297.000
CHIMP CLSTA= 10006.00 CELCH= 1096.10 BW= 246.00 STCHL= 9863.04 STCHR= 10150.00
EXCAVATION DATA
AEX= -26.4SQ-FT VEXR= -.2K*CU-YD VEXT= 171.6K*CU-YD

297.000	5.94	1102.04	1100.59	.00	1103.30	1.27	2.02	.03	1116.05
13500.0	.0	13500.0	.0	.0	1495.7	.0	1266.3	232.4	1115.00
1.12	.00	9.03	.00	.000	.035	.000	.000	1096.10	9877.06
.004448	400.	400.	400.	2	15	0	.00	257.87	10134.94

SECNO	DEPTH	CWSEL	CRIWS	WSELK	EG	HV	HL	OLOSS	L-BANK ELEV
Q	QLOB	QCH	QROB	ALOB	ACH	AROB	VOL	TWA	R-BANK ELEV
TIME	VLOB	VCH	VROB	XNL	XNCH	XNR	WTN	ELMIN	SSTA
SLOPE	XLOBL	XLCH	XLOBR	ITRIAL	IDC	ICONT	CORAR	TOPWID	ENDST

*SECNO 302.000
CHIMP CLSTA= 9999.00 CELCH= 1098.20 BW= 197.00 STCHL= 9882.00 STCHR= 10118.78
EXCAVATION DATA
AEX= 3.1SQ-FT VEXR= -.2K*CU-YD VEXT= 171.3K*CU-YD

3301 HV CHANGED MORE THAN HVINS

302.000	6.20	1104.40	1103.40	.00	1106.18	1.78	2.72	.16	1116.00
13500.0	.0	13500.0	.0	.0	1259.4	.0	1283.0	235.3	1119.48
1.14	.00	10.72	.00	.000	.035	.000	.000	1098.20	9894.30
.006009	530.	530.	530.	2	11	0	.00	209.40	10103.70

*SECNO 305.000
CHIMP CLSTA= 9992.00 CELCH= 1099.50 BW= 188.00 STCHL= 9880.94 STCHR= 10110.00
EXCAVATION DATA
AEX= 244.7SQ-FT VEXR= 1.3K*CU-YD VEXT= 172.6K*CU-YD

305.000	6.55	1106.05	1104.86	.00	1107.79	1.74	1.61	.00	1116.56
13500.0	.0	13500.0	.0	.0	1274.7	.0	1291.2	236.6	1119.50
1.15	.00	10.59	.00	.000	.035	.000	.000	1099.50	9891.45
.005497	280.	280.	280.	3	11	0	.00	201.10	10092.55

*SECNO 306.750
CHIMP CLSTA= 9959.00 CELCH= 1100.30 BW= 289.00 STCHL= 9798.80 STCHR= 10123.24
EXCAVATION DATA
AEX= 1770.8SQ-FT VEXR= 8.0K*CU-YD VEXT= 180.6K*CU-YD

3301 HV CHANGED MORE THAN HVINS

3302 WARNING: CONVEYANCE CHANGE OUTSIDE OF ACCEPTABLE RANGE, KRATIO = 1.97

306.750	7.59	1107.89	1104.34	.00	1108.45	.56	.54	.12	1116.00
13500.0	.0	13500.0	.0	.0	2252.1	.0	1299.9	237.9	1120.04
1.16	.00	5.99	.00	.000	.035	.000	.000	1100.30	9806.91
.001420	215.	215.	215.	2	14	0	.00	304.19	10111.09

SECNO	DEPTH	CWSEL	CRIWS	WSELK	EG	HV	HL	OLOSS	L-BANK ELEV
Q	QLOB	QCH	QROB	ALOB	ACH	AROB	VOL	TWA	R-BANK ELEV
TIME	VLOB	VCH	VROB	XNL	XNCH	XNR	WTN	ELMIN	SSTA
SLOPE	XLOBL	XLCH	XLOBR	ITRIAL	IDC	ICONT	CORAR	TOPWID	ENDST

*SECNO 310.000
CHIMP CLSTA= 9965.00 CELCH= 1101.60 BW= 330.00 STCHL= 9784.66 STCHR= 10149.29
EXCAVATION DATA
AEX= 1007.5SQ-FT VEXR= 16.5K*CU-YD VEXT= 197.1K*CU-YD

310.000	6.79	1108.39	1105.31	.00	1108.93	.54	.48	.00	1116.94
13500.0	.0	13500.0	.0	.0	2287.8	.0	1316.6	240.2	1120.90
1.17	.00	5.90	.00	.000	.035	.000	.000	1101.60	9793.21
.001576	320.	320.	320.	2	11	0	.00	343.59	10136.79

*SECNO 313.200
CHIMP CLSTA= 10000.00 CELCH= 1103.00 BW= 330.00 STCHL= 9820.00 STCHR= 10183.25
EXCAVATION DATA
AEX= 1069.6SQ-FT VEXR= 12.1K*CU-YD VEXT= 209.2K*CU-YD

313.200	5.88	1108.88	1106.71	.00	1109.61	.73	.62	.06	1117.00
13500.0	.0	13500.0	.0	.0	1975.6	.0	1332.0	242.7	1121.25
1.18	.00	6.83	.00	.000	.035	.000	.000	1103.00	9829.12
.002545	315.	315.	315.	2	11	0	.00	341.76	10170.88

*SECNO 318.000
CHIMP CLSTA= 10000.00 CELCH= 1105.10 BW= 330.00 STCHL= 9820.00 STCHR= 10182.90
EXCAVATION DATA
AEX= 52.1SQ-FT VEXR= 10.4K*CU-YD VEXT= 219.6K*CU-YD

318.000	5.19	1110.29	1108.80	.00	1111.22	.94	1.55	.06	1120.00
13500.0	.0	13500.0	.0	.0	1738.4	.0	1353.3	246.6	1123.00
1.20	.00	7.77	.00	.000	.035	.000	.000	1105.10	9829.81
.003868	500.	500.	500.	2	14	0	.00	340.37	10170.19

*SECNO 320.050
CHIMP CLSTA= 10000.00 CELCH= 1106.00 BW= 330.00 STCHL= 9816.00 STCHR= 10184.00
EXCAVATION DATA
AEX= 152.0SQ-FT VEXR= 1.1K*CU-YD VEXT= 220.7K*CU-YD

320.050	5.41	1111.41	1109.72	.00	1112.27	.86	1.04	.01	1125.00
13500.0	.0	13500.0	.0	.0	1816.4	.0	1365.1	248.9	1125.00
1.21	.00	7.43	.00	.000	.035	.000	.000	1106.00	9829.58
.003350	290.	290.	290.	2	15	0	.00	340.83	10170.42

```
 SECNO     DEPTH     CWSEL     CRIWS     WSELK     EG        HV        HL        OLOSS     L-BANK ELEV
 Q         QLOB      QCH       QROB      ALOB      ACH       AROB      VOL       TWA       R-BANK ELEV
 TIME      VLOB      VCH       VROB      XNL       XNCH      XNR       WTN       ELMIN     SSTA
 SLOPE     XLOBL     XLCH      XLOBR     ITRIAL    IDC       ICONT     CORAR     TOPWID    ENDST


*SECNO 328.000
CHIMP CLSTA=   10000.00 CELCH=    1109.10 BW=     330.00 STCHL=    9817.10 STCHR=   10182.90
EXCAVATION DATA
AEX=     195.1SQ-FT     VEXR=       4.1K*CU-YD     VEXT=      224.8K*CU-YD

  328.000      4.76   1113.86   1112.81       .00   1114.97      1.11      2.63       .08   1127.00
  13500.0        .0   13500.0       .0        .0    1593.4        .0    1390.2     253.9   1127.00
     1.23       .00      8.47       .00      .000      .035      .000      .000   1109.10   9830.24
  .005138      640.      640.      640.         2        14         0       .00    339.52  10169.76


*SECNO 330.000
CHIMP CLSTA=   10000.00 CELCH=    1110.10 BW=     330.00 STCHL=    9817.60 STCHR=   10182.40
EXCAVATION DATA
AEX=      76.6SQ-FT     VEXR=        .9K*CU-YD     VEXT=      225.7K*CU-YD

  330.000      4.66   1114.76   1113.80       .00   1115.92      1.16       .93       .01   1127.50
  13500.0        .0   13500.0       .0        .0    1558.9        .0    1396.5     255.3   1127.50
     1.24       .00      8.66       .00      .000      .035      .000      .000   1110.10   9830.34
  .005530      175.      175.      175.         2        15         0       .00    339.32  10169.66


*SECNO 334.000
CHIMP CLSTA=   10000.00 CELCH=    1112.00 BW=     330.00 STCHL=    9818.00 STCHR=   10182.00
EXCAVATION DATA
AEX=      68.0SQ-FT     VEXR=       1.1K*CU-YD     VEXT=      226.8K*CU-YD

  334.000      4.99   1116.99   1115.70       .00   1118.00      1.01      2.06       .02   1129.00
  13500.0        .0   13500.0       .0        .0    1672.4        .0    1412.1     258.5   1129.00
     1.25       .00      8.07       .00      .000      .035      .000      .000   1112.00   9830.01
  .004391      420.      420.      420.         1        15         0       .00    339.98  10169.99


CCHV=     .200 CEHV=     .400
*SECNO 343.000
CHIMP CLSTA=   10025.00 CELCH=    1115.70 BW=     329.00 STCHL=    9861.00 STCHR=   10206.30
EXCAVATION DATA
AEX=    2385.5SQ-FT     VEXR=      40.9K*CU-YD     VEXT=      267.7K*CU-YD


3495 OVERBANK AREA ASSUMED NON-EFFECTIVE, ELLEA=      1132.00 ELREA=      1132.00

  343.000      5.14   1120.84   1119.42       .00   1121.82       .98      3.81       .01   1132.00
  13500.0        .0   13500.0       .0        .0    1703.1        .0    1447.0     265.5   1132.00
     1.28       .00      7.93       .00      .000      .035      .000      .000   1115.70   9861.00
  .004083      900.      900.      900.         2        15         0       .00    334.14  10195.14
```

SECNO	DEPTH	CWSEL	CRIWS	WSELK	EG	HV	HL	OLOSS	L-BANK ELEV
Q	QLOB	QCH	QROB	ALOB	ACH	AROB	VOL	TWA	R-BANK ELEV
TIME	VLOB	VCH	VROB	XNL	XNCH	XNR	WTN	ELMIN	SSTA
SLOPE	XLOBL	XLCH	XLOBR	ITRIAL	IDC	ICONT	CORAR	TOPWID	ENDST

*SECNO 344.900

3495 OVERBANK AREA ASSUMED NON-EFFECTIVE, ELLEA= 1132.00 ELREA= 1132.00

344.900	5.37	1121.67	1120.02	.00	1122.55	.88	.71	.02	1132.00
13500.0	.0	13500.0	.0	.0	1795.5	.0	1454.6	267.0	1132.00
1.29	.00	7.52	.00	.000	.035	.000	.000	1116.30	9830.89
.003455	110.	190.	260.	2	15	0	.00	338.55	10169.45

```
T1      NEW RIVER: FLOOD CONTROL DISTRICT CHANNELIZATION PROJECT
T2      NEW RIVER: BETHANY HOME ALIGNMENT TO GRAND AVE.
T3      100-YEAR EVENT            NRO2A

J1  ICHECK    INQ      NINV     IDIR     STRT     METRIC   HVINS    Q        WSEL     FQ

      0        4                                                          1040.66

J2  NPROF     IPLOT    PRFVS    XSECV    XSECH    FN       ALLDC    IBW      CHNIM    ITRACE

      2        0       -1                                  -1                          0
```

SECNO	DEPTH	CWSEL	CRIWS	WSELK	EG	HV	HL	OLOSS	L-BANK ELEV
Q	QLOB	QCH	QROB	ALOB	ACH	AROB	VOL	TWA	R-BANK ELEV
TIME	VLOB	VCH	VROB	XNL	XNCH	XNR	WTN	ELMIN	SSTA
SLOPE	XLOBL	XLCH	XLOBR	ITRIAL	IDC	ICONT	CORAR	TOPWID	ENDST

*PROF 2

CRITICAL DEPTH TO BE CALCULATED AT ALL CROSS SECTIONS

CCHV= .100 CEHV= .300
*SECNO 39.000

3470 ENCROACHMENT STATIONS= 9585.9 10426.1 TYPE= 1 TARGET= 840.199
BEGIN ANALYSIS NEAR THE BETHANY HOME ROAD ALIGNMENT.
WATER SURFACE UTILIZED FOR THIS ANALYSIS IS BASED ON
EXISTING CONDTIONS OUTPUT DATA WHICH INCLUDES THE
GLENDALE MUNICIPAL AIRPORT CHANNELIZATION AND SIDEBANK
PROTECTION. CROSS SECTION 39.00 ASSUMES EXISTING CONDITIONS
BOTTOM CONTOURS WITH EXISTING LEFT BANK NATURAL SIDESLOPE.

39.000	12.66	1040.66	1035.33	1036.06	1041.08	.42	.00	.00	1042.50
41000.0	.0	41000.0	.0	.0	7851.4	.0	.0	.0	1043.20
.00	.00	5.22	.00	.000	.035	.000	.000	1028.00	9587.98
.000765	270.	220.	200.	0	13	0	.00	832.94	10420.92

CCHV= .200 CEHV= .400
*SECNO 44.000
BEGIN CHANNELIZATION AND SIDEBANK PROTECTION DEGIGN.
LT CHNL BTM WDTH = 500 FEET - MATCH EXISTING DOWNSTREAM
RT CHNL BTM WDTH PER GLENDALE AIRPORT "AS BUILTS" = 362+OR- FEET

44.000	10.32	1041.07	1036.92	1036.53	1041.57	.51	.46	.03	1044.90
41000.0	.0	41000.0	.0	.0	7176.3	.0	86.2	9.8	1045.10
.02	.00	5.71	.00	.000	.035	.000	.000	1030.75	9493.46
.001114	500.	500.	500.	2	11	0	.00	882.65	10376.11

*SECNO 47.000

47.000	10.31	1041.31	1038.34	1037.11	1042.16	.85	.45	.14	1045.00
41000.0	.0	41000.0	.0	.0	5533.1	.0	130.0	15.5	1045.00
.04	.00	7.41	.00	.000	.035	.000	.000	1031.00	603.38
.002122	300.	300.	300.	2	19	0	.00	746.21	1349.59

*SECNO 51.500

3301 HV CHANGED MORE THAN HVINS

```
          LT CHNL BTM WDTH = 225 FT
   51.500    10.73   1042.14   1039.77   1038.44   1043.57      1.44      1.17       .23   1045.70
  41000.0       .0   41000.0       .0       .0    4264.7        .0     180.6      22.1   1045.70
      .05      .00      9.61       .00      .000      .035      .000      .000   1031.40    767.93
 .003291     450.      450.      450.         2        15         0       .00    538.21   1306.14


*SECNO 55.000
          STA. 53+12.97 IS P.O.C. OF CURVE TO THE RIGHT
   55.000    11.29   1043.19   1040.35   1039.30   1044.67      1.49      1.08       .02   1047.00
  41000.0       .0   41000.0       .0       .0    4191.3        .0     214.6      26.1   1047.00
      .06      .00      9.78       .00      .000      .035      .000      .000   1031.90    267.57
 .002921     350.      350.      350.         2        15         0       .00    469.92    737.49


*SECNO 58.120
          END GLENDALE MUNICIPAL AIRPORT GABION MATTRESS SIDESLOPE
          ALONG NEW RIVER RT BANK, GABION MATRESS TURNS CORNER AND
          CONTINUES NORTHWESTERLY A FEW HUNDRED FEET ALONG THE EAST
          BOUNDARY OF GLENDALE MUNICIPAL AIRPORT.
          MATCH EXISTING GABION MATTRESS-GROUT GABIONS AND CONSTRUCT
          TRANSITION FROM 2:1 TO 1:1 SIDESLOPE IN 75 FT TAPER.
   58.120    12.84   1044.94   1040.79   1040.41   1046.32      1.38      1.63       .02   1049.10
  41000.0       .0   41000.0       .0       .0    4342.1        .0     279.4      32.7   1049.00
      .08      .00      9.44       .00      .000      .035      .000      .000   1032.10    762.16
 .002096     662.      662.      662.         2        15         0       .00    396.78   1158.94


*SECNO 62.000
          STA. 60+21.80 IS P.O.T.
   62.000    12.95   1045.85   1041.92   1040.95   1047.16      1.31       .83       .01   1050.40
  41000.0       .0   41000.0       .0       .0    4462.3        .0     318.6      36.4   1050.40
      .09      .00      9.19       .00      .000      .035      .000      .000   1032.90    265.70
 .002162     388.      388.      388.         2        19         0       .00    433.26    698.95


*SECNO 66.000
          LT CHNL BTM WDTH = 225 FT.
          RT CHNL BTM WDTH = 230 FT.
   66.000    13.01   1047.01   1041.58   1041.69   1047.90       .89       .65       .09   1051.80
  41000.0       .0   41000.0       .0       .0    5430.7        .0     364.1      40.6   1051.80
      .10      .00      7.55       .00      .000      .035      .000      .000   1034.00    266.77
 .001272     400.      400.      400.         2        11         0       .00    476.25    743.02


*SECNO 71.000
          GRAND DRAIN INLET PER A.D.O.T. PLANS
   71.000    12.65   1047.65   1042.62   1042.23   1048.60       .95       .67       .03   1051.50
  41000.0       .0   41000.0       .0       .0    5244.6        .0     425.3      46.1   1051.50
      .12      .00      7.82       .00      .000      .035      .000      .000   1035.00    266.20
 .001421     500.      500.      500.         2        11         0       .00    476.04    742.25
```

SECNO	DEPTH	CWSEL	CRIWS	WSELK	EG	HV	HL	OLOSS	L-BANK ELEV
Q	QLOB	QCH	QROB	ALOB	ACH	AROB	VOL	TWA	R-BANK ELEV
TIME	VLOB	VCH	VROB	XNL	XNCH	XNR	WTN	ELMIN	SSTA
SLOPE	XLOBL	XLCH	XLOBR	ITRIAL	IDC	ICONT	CORAR	TOPWID	ENDST

*SECNO 75.000

75.000	11.71	1048.21	1043.26	1042.77	1049.18	.97	.58	.01	1053.10
41000.0	.0	41000.0	.0	.0	5177.0	.0	473.2	50.4	1053.10
.14	.00	7.92	.00	.000	.035	.000	.000	1036.50	268.18
.001469	400.	400.	400.	2	11	0	.00	473.53	741.71

*SECNO 78.000

GRAND DRAIN LOW FLOW OUTLET PIPE AT LT SIDESLOPE

78.000	11.24	1048.64	1043.94	1043.20	1049.66	1.02	.46	.02	1053.50
41000.0	.0	41000.0	.0	.0	5068.0	.0	508.5	53.7	1053.50
.15	.00	8.09	.00	.000	.035	.000	.000	1037.40	268.61
.001570	300.	300.	300.	0	11	0	.00	472.63	741.24

*SECNO 81.000

81.000	11.11	1049.11	1044.54	1043.69	1050.15	1.04	.48	.01	1054.00
41000.0	.0	41000.0	.0	.0	5001.6	.0	543.1	56.9	1054.00
.16	.00	8.20	.00	.000	.035	.000	.000	1038.00	268.50
.001636	300.	300.	300.	0	11	0	.00	471.90	740.40

*SECNO 84.000

84.000	12.59	1049.59	1045.23	1044.21	1050.68	1.09	.51	.02	1054.50
41000.0	.0	41000.0	.0	.0	4886.9	.0	577.2	60.2	1054.50
.17	.00	8.39	.00	.000	.035	.000	.000	1037.00	269.33
.001764	300.	300.	300.	0	19	0	.00	471.19	740.52

*SECNO 87.000

87.000	10.29	1050.09	1046.21	1044.82	1051.28	1.19	.57	.04	1055.00
41000.0	.0	41000.0	.0	.0	4686.7	.0	610.2	63.4	1055.00
.18	.00	8.75	.00	.000	.035	.000	.000	1039.80	269.61
.002019	300.	300.	300.	0	8	0	.00	470.69	740.30

*SECNO 89.000

89.000	10.07	1050.47	1046.95	1045.31	1051.75	1.28	.43	.04	1055.40
41000.0	.0	41000.0	.0	.0	4511.7	.0	631.3	65.6	1055.40
.18	.00	9.09	.00	.000	.035	.000	.000	1040.40	269.86
.002291	200.	200.	200.	0	14	0	.00	470.22	740.07

```
   SECNO     DEPTH     CWSEL     CRIWS     WSELK     EG        HV        HL        OLOSS     L-BANK ELEV
   Q         QLOB      QCH       QROB      ALOB      ACH       AROB      VOL       TWA       R-BANK ELEV
   TIME      VLOB      VCH       VROB      XNL       XNCH      XNR       WTN       ELMIN     SSTA
   SLOPE     XLOBL     XLCH      XLOBR     ITRIAL    IDC       ICONT     CORAR     TOPWID    ENDST


*SECNO 94.000
            STA. 91+49.71 IS P.O.C. OF CURVE TO THE LEFT
   94.000     9.82   1051.62   1048.25   1046.74   1052.94      1.32      1.18       .02   1056.40
  41000.0      .0   41000.0       .0       .0    4438.9        .0     682.6      71.0   1056.40
      .20     .00      9.24       .00      .000      .035      .000      .000   1041.80    269.96
  .002417    500.      500.      500.        2        14         0       .00    469.85    739.82


CCHV=     .300 CEHV=     .500
*SECNO 97.000
   97.000     9.74   1052.34   1049.26   1047.56   1053.75      1.41       .76       .04   1057.10
  41000.0      .0   41000.0       .0       .0    4304.9        .0     712.8      74.2   1057.10
      .21     .00      9.52       .00      .000      .035      .000      .000   1042.60    270.04
  .002680    300.      300.      300.        1        14         0       .00    469.69    739.73


*SECNO 99.540

3301 HV CHANGED MORE THAN HVINS

            STA. 99+45.00 IS P.O.T.
            LT CHNL BTM WDTH = 157.9 FT.
            RT CHNL BTM WDTH = 157.9 FT.
   99.540     9.53   1052.73   1050.70   1048.29   1055.08      2.35       .86       .47   1063.50
  41000.0      .0   41000.0       .0       .0    3334.2        .0     735.0      76.6   1063.50
      .21     .00     12.30       .00      .000      .035      .000      .000   1043.20    325.13
  .004453    254.      254.      254.        2        15         0       .00    349.75    674.87


CCHV=     .300 CEHV=     .500
*SECNO 99.600

3301 HV CHANGED MORE THAN HVINS

7185 MINIMUM SPECIFIC ENERGY
3720 CRITICAL DEPTH ASSUMED
            DOWNSTREAM BRIDGE SECTION - GLENDALE AVENUE
   99.600     7.50   1053.70   1053.70   1049.78   1057.49      3.79       .03       .72   1063.80
  41000.0      .0   41000.0       .0       .0    2623.1        .0     735.4      76.7   1063.80
      .21     .00     15.63       .00      .000      .025      .000      .000   1046.20    325.13
  .004980      6.        6.        6.        0        15         0       .00    349.74    674.87
```

SECNO	DEPTH	CWSEL	CRIWS	WSELK	EG	HV	HL	OLOSS	L-BANK ELEV
Q	QLOB	QCH	QROB	ALOB	ACH	AROB	VOL	TWA	R-BANK ELEV
TIME	VLOB	VCH	VROB	XNL	XNCH	XNR	WTN	ELMIN	SSTA
SLOPE	XLOBL	XLCH	XLOBR	ITRIAL	IDC	ICONT	CORAR	TOPWID	ENDST

SPECIAL BRIDGE

5227 DOWNSTREAM ELEV IS 1052.16 , NOT 1053.70 HYDRAULIC JUMP OCCURS DOWNSTREAM (IF LOW FLOW CONTROLS)

SB	XK	XKOR	COFQ	RDLEN	BWC	BWP	BAREA	SS	ELCHU	ELCHD
	.90	1.56	2.90	358.00	349.74	32.00	5378.30	.00	1046.50	1046.20

*SECNO 100.400

3301 HV CHANGED MORE THAN HVINS

3302 WARNING: CONVEYANCE CHANGE OUTSIDE OF ACCEPTABLE RANGE, KRATIO = 1.77

CLASS B LOW FLOW

3420 BRIDGE W.S.= 1054.38 BRIDGE VELOCITY= 16.08 CALCULATED CHANNEL AREA= 2503.

EGPRS	EGLWC	H3	QWEIR	QLOW	BAREA	TRAPEZOID AREA	ELLC	ELTRD	WEIRLN
.00	1059.02	.00	0.	41000.	5378.	5370.	1063.40	1065.90	0.

GLENDALE AVENUE BRIDGE - SPECIAL BRIDGE ANALYSIS

100.400	10.63	1057.13	.00	1051.57	1059.02	1.89	1.52	.00	1063.60
41000.0	.0	41000.0	.0	.0	3716.9	.0	741.3	77.3	1063.60
.21	.00	11.03	.00	.000	.025	.000	.000	1046.50	325.12
.001594	80.	80.	80.	0	0	0	.00	349.76	674.88

*SECNO 100.900

BEGIN CHANNEL BOTTOM TRANSITION
LT CHNL BTM WDTH = 157.9 FT.
RT CHNL BTM WDTH = 157.9 FT.

100.900	10.88	1057.48	1054.05	1051.77	1059.18	1.69	.10	.06	1063.60
41000.0	.0	41000.0	.0	.0	3925.0	.0	745.6	77.7	1063.60
.22	.00	10.45	.00	.000	.035	.000	.000	1046.60	314.26
.002695	50.	50.	50.	2	19	0	.00	371.47	685.74

*SECNO 103.000

103.000	11.50	1058.50	1054.28	1052.78	1059.88	1.38	.61	.09	1065.40
41000.0	.0	41000.0	.0	.0	4351.3	.0	770.3	80.0	1065.40
.22	.00	9.42	.00	.000	.035	.000	.000	1047.00	305.78
.002062	260.	260.	260.	2	14	0	.00	395.33	701.11

SECNO	DEPTH	CWSEL	CRIWS	WSELK	EG	HV	HL	OLOSS	L-BANK ELEV
Q	QLOB	QCH	QROB	ALOB	ACH	AROB	VOL	TWA	R-BANK ELEV
TIME	VLOB	VCH	VROB	XNL	XNCH	XNR	WTN	ELMIN	SSTA
SLOPE	XLOBL	XLCH	XLOBR	ITRIAL	IDC	ICONT	CORAR	TOPWID	ENDST

CCHV= .100 CEHV= .300

*SECNO 106.000

3301 HV CHANGED MORE THAN HVINS

106.000	11.96	1059.56	1053.89	1053.55	1060.39	.83	.46	.05	1066.40
41000.0	.0	41000.0	.0	.0	5608.1	.0	804.6	83.0	1066.40
.23	.00	7.31	.00	.000	.035	.000	.000	1047.60	260.07
.001163	300.	300.	300.	2	11	0	.00	486.69	746.76

*SECNO 109.000

END CHANNEL BOTTOM TRANSITION
LT CHNL BTM WDTH = 280 FT.
RT CHNL BTM WDTH = 280 FT.

109.000	11.91	1060.11	1053.94	1053.99	1060.71	.60	.30	.02	1066.90
41000.0	.0	41000.0	.0	.0	6582.8	.0	846.6	86.7	1066.90
.25	.00	6.23	.00	.000	.035	.000	.000	1048.20	214.88
.000855	300.	300.	300.	2	11	0	.00	577.03	791.91

*SECNO 110.000

110.000	13.18	1060.18	1054.20	1054.09	1060.81	.63	.09	.01	1066.90
41000.0	.0	41000.0	.0	.0	6453.4	.0	861.6	88.0	1066.90
.25	.00	6.35	.00	.000	.035	.000	.000	1047.00	214.88
.000913	100.	100.	100.	2	14	0	.00	576.90	791.78

*SECNO 113.000

113.000	11.45	1060.45	1054.66	1054.46	1061.10	.65	.28	.01	1067.20
41000.0	.0	41000.0	.0	.0	6354.5	.0	905.7	92.0	1067.20
.26	.00	6.45	.00	.000	.035	.000	.000	1049.00	215.31
.000959	300.	300.	300.	0	14	0	.00	576.14	791.45

*SECNO 116.000

BEGIN CHANNEL BOTTOM TRANSITION
LT CHNL BTM WDTH = 280 FT.
RT CHNL BTM WDTH = 280 FT.

116.000	11.11	1060.71	1055.51	1054.84	1061.44	.73	.32	.03	1067.30
41000.0	.0	41000.0	.0	.0	5968.8	.0	948.1	96.0	1067.30
.28	.00	6.87	.00	.000	.035	.000	.000	1049.60	215.47
.001192	240.	300.	340.	1	11	0	.00	575.65	791.12

SECNO	DEPTH	CWSEL	CRIWS	WSELK	EG	HV	HL	OLOSS	L-BANK ELEV
Q	QLOB	QCH	QROB	ALOB	ACH	AROB	VOL	TWA	R-BANK ELEV
TIME	VLOB	VCH	VROB	XNL	XNCH	XNR	WTN	ELMIN	SSTA
SLOPE	XLOBL	XLCH	XLOBR	ITRIAL	IDC	ICONT	CORAR	TOPWID	ENDST

*SECNO 120.000

3301 HV CHANGED MORE THAN HVINS

3302 WARNING: CONVEYANCE CHANGE OUTSIDE OF ACCEPTABLE RANGE, KRATIO = .49

END CHANNEL BOTTOM TRANSITION
LT CHNL BTM WDTH = 210 FT.
RT CHNL BTM WDTH = 230 FT.

120.000	10.22	1060.62	1059.08	1055.34	1062.70	2.08	.86	.40	1067.10
41000.0	.0	41000.0	.0	.0	3544.2	.0	991.8	100.7	1067.10
.29	.00	11.57	.00	.000	.035	.000	.000	1050.40	286.24
.004928	327.	400.	497.	2	15	0	.00	454.00	740.23

*SECNO 123.000

3301 HV CHANGED MORE THAN HVINS

3302 WARNING: CONVEYANCE CHANGE OUTSIDE OF ACCEPTABLE RANGE, KRATIO = 1.85

123.000	11.65	1062.65	1057.57	1057.27	1063.64	.99	.83	.11	1068.80
41000.0	.0	41000.0	.0	.0	5124.4	.0	1025.8	104.3	1068.80
.30	.00	8.00	.00	.000	.035	.000	.000	1051.00	284.49
.001447	342.	342.	342.	2	14	0	.00	457.16	741.65

*SECNO 127.000

127.000	11.42	1063.22	1058.37	1057.78	1064.25	1.03	.60	.01	1068.80
41000.0	.0	41000.0	.0	.0	5025.9	.0	1072.4	108.5	1068.80
.31	.00	8.16	.00	.000	.035	.000	.000	1051.80	284.16
.001543	400.	400.	400.	3	11	0	.00	457.26	741.42

*SECNO 131.000

131.000	13.82	1063.82	1059.33	1058.39	1064.93	1.11	.66	.02	1069.40
41000.0	.0	41000.0	.0	.0	4846.6	.0	1117.8	112.7	1069.40
.33	.00	8.46	.00	.000	.035	.000	.000	1050.00	284.37
.001746	400.	400.	400.	0	15	0	.00	456.85	741.22

```
   SECNO      DEPTH      CWSEL      CRIWS      WSELK      EG         HV         HL         OLOSS      L-BANK ELEV
   Q          QLOB       QCH        QROB       ALOB       ACH        AROB       VOL        TWA        R-BANK ELEV
   TIME       VLOB       VCH        VROB       XNL        XNCH       XNR        WTN        ELMIN      SSTA
   SLOPE      XLOBL      XLCH       XLOBR      ITRIAL     IDC        ICONT      CORAR      TOPWID     ENDST


*SECNO 135.000
  135.000     11.08    1064.48    1060.89    1059.19    1065.79       1.31        .80        .06    1069.60
  41000.0        .0    41000.0        .0         .0     4465.7         .0     1160.5      116.9    1069.90
      .34       .00       9.18        .00       .000       .035       .000       .000    1053.40     283.93
  .002309      400.       400.       400.          0         11          0        .00     457.01     740.94


*SECNO 138.000
  138.000     11.26    1065.26    1061.09    1060.06    1066.43       1.17        .63        .01    1069.60
  41000.0        .0    41000.0        .0         .0     4727.6         .0     1192.2      120.0    1069.60
      .35       .00       8.67        .00       .000       .035       .000       .000    1054.00     283.07
  .001909      300.       300.       300.          2         14          0        .00     458.19     741.26


*SECNO 141.000
  141.000     11.19    1065.79    1062.26    1060.64    1067.11       1.32        .63        .05    1071.00
  41000.0        .0    41000.0        .0         .0     4439.0         .0     1223.7      123.2    1071.00
      .36       .00       9.24        .00       .000       .035       .000       .000    1054.60     283.99
  .002358      300.       300.       300.          2         14          0        .00     457.20     741.19


*SECNO 145.000
            A.D.O.T. CHANNEL INLET LT. BANK, NORTHERN AVENUE CHANNEL
  145.000     11.46    1066.86    1061.98    1061.60    1067.89       1.03        .75        .03    1072.00
  41000.0        .0    41000.0        .0         .0     5036.2         .0     1267.2      127.3    1077.00
      .37       .00       8.14        .00       .000       .035       .000       .000    1055.40     283.67
  .001527      400.       400.       400.          2         11          0        .00     455.14     738.81


*SECNO 147.000
            BEGIN CHANNEL BOTTOM TRANSITION
            LT CHNL BTM WDTH = 210 FT.
            RT CHNL BTM WDTH = 230 FT.
  147.000     11.36    1067.16    1062.37    1061.85    1068.21       1.04        .31        .00    1072.40
  41000.0        .0    41000.0        .0         .0     5004.6         .0     1290.3      129.4    1072.40
      .38       .00       8.19        .00       .000       .035       .000       .000    1055.80     283.87
  .001566      200.       200.       200.          2         11          0        .00     457.49     741.36


*SECNO 150.000
            CHANNEL BOTTOM TAPERS
            LT CHNL BTM WDTH = 260 FT.
            RT CHNL BTM WDTH = 210 FT.
```

SECNO	DEPTH	CWSEL	CRIWS	WSELK	EG	HV	HL	OLOSS	L-BANK ELEV
Q	QLOB	QCH	QROB	ALOB	ACH	AROB	VOL	TWA	R-BANK ELEV
TIME	VLOB	VCH	VROB	XNL	XNCH	XNR	WTN	ELMIN	SSTA
SLOPE	XLOBL	XLCH	XLOBR	ITRIAL	IDC	ICONT	CORAR	TOPWID	ENDST
150.000	11.34	1067.74	1062.67	1062.30	1068.66	.92	.44	.01	1073.00
41000.0	.0	41000.0	.0	.0	5335.6	.0	1325.9	132.7	1073.00
.39	.00	7.68	.00	.000	.035	.000	.000	1056.40	233.92
.001375	350.	300.	260.	2	11	0	.00	487.43	721.34

*SECNO 155.000

3301 HV CHANGED MORE THAN HVINS

3302 WARNING: CONVEYANCE CHANGE OUTSIDE OF ACCEPTABLE RANGE, KRATIO = .65

CHANNEL BOTTOM TAPERS
LT CHNL BTM WDTH = 260 FT.
RT CHNL BTM WDTH = 170 FT.

155.000	10.85	1068.25	1065.62	1063.05	1069.89	1.64	1.01	.22	1073.30
41000.0	.0	41000.0	.0	.0	3985.6	.0	1379.4	138.1	1073.30
.40	.00	10.29	.00	.000	.035	.000	.000	1057.40	234.20
.003282	585.	500.	460.	2	19	0	.00	446.65	680.85

CCHV= .300 CEHV= .500
*SECNO 158.000

END CHANNEL BOTTOM TRANSITION
LT CHNL BTM WDTH = 162.5 FT.
RT CHNL BTM WDTH = 162.5 FT.

158.000	11.03	1069.03	1066.09	1064.30	1071.08	2.06	.99	.21	1076.50
41000.0	.0	41000.0	.0	.0	3562.0	.0	1405.4	140.8	1075.00
.41	.00	11.51	.00	.000	.035	.000	.000	1058.00	333.95
.003291	360.	300.	265.	2	15	0	.00	339.58	673.53

*SECNO 159.450

DOWNSTREAM BRIDGE SECTION - NORTHERN AVENUE BRIDGE

159.450	11.99	1070.29	1066.14	1064.97	1071.88	1.60	.66	.14	1076.80
41000.0	.0	41000.0	.0	.0	4040.8	.0	1426.8	142.7	1076.80
.41	.00	10.15	.00	.000	.035	.000	.000	1058.30	325.51
.002263	245.	245.	245.	2	15	0	.00	348.98	674.49

SECNO	DEPTH	CWSEL	CRIWS	WSELK	EG	HV	HL	OLOSS	L-BANK ELEV
Q	QLOB	QCH	QROB	ALOB	ACH	AROB	VOL	TWA	R-BANK ELEV
TIME	VLOB	VCH	VROB	XNL	XNCH	XNR	WTN	ELMIN	SSTA
SLOPE	XLOBL	XLCH	XLOBR	ITRIAL	IDC	ICONT	CORAR	TOPWID	ENDST

SPECIAL BRIDGE

SB	XK	XKOR	COFQ	RDLEN	BWC	BWP	BAREA	SS	ELCHU	ELCHD
	1.05	1.56	2.90	388.00	325.00	28.00	6034.00	1.00	1058.46	1058.30

*SECNO 160.250
CLASS A LOW FLOW

3420 BRIDGE W.S.= 1069.87 BRIDGE VELOCITY= 11.57 CALCULATED CHANNEL AREA= 3518.

EGPRS	EGLWC	H3	QWEIR	QLOW	BAREA	TRAPEZOID AREA	ELLC	ELTRD	WEIRLN
.00	1072.30	.50	0.	41000.	6034.	6004.	1077.46	1082.00	0.

NORTHERN AVENUE BRIDGE - SPECIAL BRIDGE ANALYSIS

160.250	12.33	1070.79	.00	1065.10	1072.30	1.51	.41	.00	1077.00
41000.0	.0	41000.0	.0	.0	4158.0	.0	1434.3	143.3	1077.00
.42	.00	9.86	.00	.000	.035	.000	.000	1058.46	325.20
.002064	80.	80.	80.	0	0	0	.00	349.60	674.80

*SECNO 162.000
BEGIN CHANNEL BOTTOM TRANSITION
LT CHNL BTM WDTH = 162.5 FT.
RT CHNL BTM WDTH = 162.5 FT.

162.000	12.36	1071.16	1066.61	1065.41	1072.66	1.50	.36	.00	1077.00
41000.0	.0	41000.0	.0	.0	4171.8	.0	1451.0	144.7	1077.00
.42	.00	9.83	.00	.000	.035	.000	.000	1058.80	325.13
.002043	175.	175.	175.	0	14	0	.00	349.73	674.87

*SECNO 165.000

3301 HV CHANGED MORE THAN HVINS

END CHANNEL BOTTOM TRANSITION
LT CHNL BTM WDTH = 300 FT.
RT CHNL BTM WDTH = 250 FT.

165.000	13.17	1072.57	1066.68	1066.04	1073.35	.79	.48	.21	1078.80
41000.0	.0	41000.0	.0	.0	5758.8	.0	1485.2	147.9	1078.80
.43	.00	7.12	.00	.000	.035	.000	.000	1059.40	201.65
.001288	300.	300.	300.	2	11	0	.00	561.53	763.18

```
 SECNO     DEPTH     CWSEL     CRIWS     WSELK     EG        HV        HL        OLOSS     L-BANK ELEV
 Q         QLOB      QCH       QROB      ALOB      ACH       AROB      VOL       TWA       R-BANK ELEV
 TIME      VLOB      VCH       VROB      XNL       XNCH      XNR       WTN       ELMIN     SSTA
 SLOPE     XLOBL     XLCH      XLOBR     ITRIAL    IDC       ICONT     CORAR     TOPWID    ENDST


*SECNO 168.000
 168.000     12.84   1072.94   1067.32   1066.47   1073.81       .86       .42       .04   1079.00
 41000.0       .0   41000.0       .0        .0    5504.6        .0    1524.0     151.7   1079.00
     .44       .00      7.45      .00      .000      .035      .000      .000   1060.10    202.11
 .001494     300.      300.      300.         2        11         0       .00    560.73    762.84


CCHV=     .100 CEHV=     .300
*SECNO 170.000
            BEGIN CHANNEL BOTTOM TRANSITION
            LT CHNL BTM WDTH = 300 FT.
            RT CHNL BTM WDTH = 250 FT.
 170.000     12.63   1073.23   1068.31   1066.81   1074.12       .88       .30       .01   1079.20
 41000.0       .0   41000.0       .0        .0    5436.4        .0    1549.1     154.3   1079.20
     .45       .00      7.54      .00      .000      .035      .000      .000   1060.60    202.74
 .001554     200.      200.      200.         1        14         0       .00    559.88    762.63


*SECNO 173.000

3301 HV CHANGED MORE THAN HVINS


3302 WARNING:  CONVEYANCE CHANGE OUTSIDE OF ACCEPTABLE RANGE,  KRATIO =   .64

            END CHNL BTM TRANSITION RT.
            RT CHNL BTM WDTH = 157 FT.
 173.000     11.85   1073.25   1070.52   1067.16   1075.10      1.85       .69       .29   1079.00
 41000.0       .0   41000.0       .0        .0    3754.0        .0    1580.8     157.7   1079.00
     .46       .00     10.92      .00      .000      .035      .000      .000   1061.40    235.59
 .003803     300.      300.      300.         2        15         0       .00    433.26    668.85


*SECNO 176.000
 176.000     12.20   1074.40   1071.30   1068.79   1076.11      1.71      1.00       .01   1079.60
 41000.0       .0   41000.0       .0        .0    3905.2        .0    1607.2     160.6   1079.60
     .47       .00     10.50      .00      .000      .035      .000      .000   1062.20    276.29
 .002938     300.      300.      300.         2        15         0       .00    392.92    669.21


*SECNO 177.000
```

SECNO	DEPTH	CWSEL	CRIWS	WSELK	EG	HV	HL	OLOSS	L-BANK ELEV
Q	QLOB	QCH	QROB	ALOB	ACH	AROB	VOL	TWA	R-BANK ELEV
TIME	VLOB	VCH	VROB	XNL	XNCH	XNR	WTN	ELMIN	SSTA
SLOPE	XLOBL	XLCH	XLOBR	ITRIAL	IDC	ICONT	CORAR	TOPWID	ENDST

3301 HV CHANGED MORE THAN HVINS

3302 WARNING: CONVEYANCE CHANGE OUTSIDE OF ACCEPTABLE RANGE, KRATIO = 1.41

BEGIN CHNL BTM TRANSITION RT.
RT CHNL BTM WDTH = 157 FT.

177.000	12.83	1075.23	1069.71	1069.56	1076.37	1.14	.20	.06	1080.50
41000.0	.0	41000.0	.0	.0	4785.2	.0	1617.1	161.5	1080.50
.47	.00	8.57	.00	.000	.035	.000	.000	1062.40	284.30
.001469	100.	100.	100.	2	14	0	.00	385.53	669.84

*SECNO 179.000
END CHNL BTM TRANSITION LT.
LT CHNL BTM WDTH = 175 FT.

179.000	12.79	1075.59	1070.03	1069.79	1076.67	1.08	.29	.01	1081.00
41000.0	.0	41000.0	.0	.0	4915.7	.0	1639.4	163.3	1081.00
.48	.00	8.34	.00	.000	.035	.000	.000	1062.80	317.65
.001415	200.	200.	200.	2	11	0	.00	403.63	721.29

*SECNO 181.000
END CHNL BTM TRANSITION RT.
RT CHNL BTM WDTH = 260 FT.

181.000	12.80	1076.10	1069.92	1070.08	1076.94	.84	.25	.02	1081.60
41000.0	.0	41000.0	.0	.0	5579.9	.0	1663.5	165.3	1081.60
.49	.00	7.35	.00	.000	.035	.000	.000	1063.30	317.70
.001085	200.	200.	200.	2	11	0	.00	455.10	772.80

*SECNO 183.000

3301 HV CHANGED MORE THAN HVINS

3302 WARNING: CONVEYANCE CHANGE OUTSIDE OF ACCEPTABLE RANGE, KRATIO = .50

183.000	11.93	1075.73	1073.82	1069.50	1077.65	1.91	.38	.32	1081.30
41000.0	.0	41000.0	.0	.0	3693.8	.0	1684.8	167.3	1081.30
.49	.00	11.10	.00	.000	.035	.000	.000	1063.80	318.63
.004312	200.	200.	200.	3	15	0	.00	453.30	771.93

SECNO	DEPTH	CWSEL	CRIWS	WSELK	EG	HV	HL	OLOSS	L-BANK ELEV
Q	QLOB	QCH	QROB	ALOB	ACH	AROB	VOL	TWA	R-BANK ELEV
TIME	VLOB	VCH	VROB	XNL	XNCH	XNR	WTN	ELMIN	SSTA
SLOPE	XLOBL	XLCH	XLOBR	ITRIAL	IDC	ICONT	CORAR	TOPWID	ENDST

*SECNO 188.000

3301 HV CHANGED MORE THAN HVINS

3302 WARNING: CONVEYANCE CHANGE OUTSIDE OF ACCEPTABLE RANGE, KRATIO = 1.44

188.000	12.93	1077.93	1074.01	1072.71	1079.16	1.23	1.45	.07	1083.00
41000.0	.0	41000.0	.0	.0	4605.7	.0	1732.4	172.6	1083.00
.51	.00	8.90	.00	.000	.035	.000	.000	1065.00	317.12
.002083	500.	500.	500.	2	15	0	.00	455.82	772.94

*SECNO 193.000

STA. 192+60.12 IS P.O.C. OF CURVE TO THE RT.

193.000	12.80	1079.00	1074.75	1073.79	1080.16	1.16	.99	.01	1084.00
41000.0	.0	41000.0	.0	.0	4743.0	.0	1786.1	177.8	1084.00
.52	.00	8.64	.00	.000	.035	.000	.000	1066.20	317.19
.001889	500.	500.	500.	2	14	0	.00	455.61	772.80

*SECNO 197.000

BEGIN CHANNEL BOTTOM TRANSITION LEFT AND RIGHT
TO MATCH PAST DEIGN CROSS SECTIONS.

197.000	12.48	1079.68	1076.87	1074.60	1081.23	1.55	.95	.12	1084.60
41000.0	.0	41000.0	.0	.0	4099.4	.0	1826.7	182.0	1084.60
.53	.00	10.00	.00	.000	.035	.000	.000	1067.20	317.45
.003072	400.	400.	400.	2	19	0	.00	455.03	772.48

CCHV= .300 CEHV= .500
*SECNO 199.000

3302 WARNING: CONVEYANCE CHANGE OUTSIDE OF ACCEPTABLE RANGE, KRATIO = 1.50

199.000	12.81	1080.51	1074.85	1075.38	1081.57	1.06	.20	.15	1086.20
41000.0	.0	41000.0	.0	.0	4956.9	.0	1837.1	183.0	1086.20
.54	.00	8.27	.00	.000	.035	.000	.000	1067.70	323.19
.001369	200.	100.	200.	2	11	0	.00	399.63	722.81

*SECNO 201.100

SECNO	DEPTH	CWSEL	CRIWS	WSELK	EG	HV	HL	OLOSS	L-BANK ELEV
Q	QLOB	QCH	QROB	ALOB	ACH	AROB	VOL	TWA	R-BANK ELEV
TIME	VLOB	VCH	VROB	XNL	XNCH	XNR	WTN	ELMIN	SSTA
SLOPE	XLOBL	XLCH	XLOBR	ITRIAL	IDC	ICONT	CORAR	TOPWID	ENDST

3301 HV CHANGED MORE THAN HVINS

DOWNSTREAM BRIDGE SECTION - 99TH AVENUE BRIDGE

201.100	12.40	1080.60	1076.19	1075.51	1082.20	1.59	.36	.26	1086.70
41000.0	.0	41000.0	.0	.0	4048.9	.0	1858.8	184.7	1086.70
.54	.00	10.13	.00	.000	.035	.000	.000	1068.20	330.60
.002166	210.	210.	210.	2	14	0	.00	338.81	669.40

SPECIAL BRIDGE

SB	XK	XKOR	COFQ	RDLEN	BWC	BWP	BAREA	SS	ELCHU	ELCHD
	1.05	1.56	2.90	376.00	314.00	21.00	5763.00	1.00	1068.40	1068.20

*SECNO 201.900
CLASS A LOW FLOW

3420 BRIDGE W.S.= 1080.36 BRIDGE VELOCITY= 11.14 CALCULATED CHANNEL AREA= 3647.

EGPRS	EGLWC	H3	QWEIR	QLOW	BAREA	TRAPEZOID AREA	ELLC	ELTRD	WEIRLN
.00	1082.53	.37	0.	41000.	5763.	5697.	1086.70	1091.80	0.

99TH AVENUE BRIDGE - SPECIAL BRIDGE ANALYSIS

201.900	12.58	1080.98	.00	1075.59	1082.53	1.55	.33	.00	1086.90
41000.0	.0	41000.0	.0	.0	4107.7	.0	1866.3	185.4	1086.90
.54	.00	9.98	.00	.000	.035	.000	.000	1068.40	330.42
.002068	80.	80.	80.	0	0	0	.00	339.16	669.58

*SECNO 204.000

204.000	12.51	1081.41	1076.89	1075.89	1082.97	1.56	.44	.01	1087.40
41000.0	.0	41000.0	.0	.0	4086.5	.0	1886.0	187.0	1087.40
.55	.00	10.03	.00	.000	.035	.000	.000	1068.90	330.48
.002103	210.	210.	210.	1	14	0	.00	339.03	669.52

CCHV= .300 CEHV= .500
*SECNO 209.300

209.300	12.34	1082.53	1078.18	1076.78	1084.14	1.61	1.14	.02	1088.19
41000.0	.0	41000.0	.0	.0	4023.5	.0	1935.4	191.1	1088.19
.56	.00	10.19	.00	.000	.035	.000	.000	1070.19	330.67
.002210	530.	530.	530.	1	14	0	.00	338.66	669.33

SECNO	DEPTH	CWSEL	CRIWS	WSELK	EG	HV	HL	OLOSS	L-BANK ELEV
Q	QLOB	QCH	QROB	ALOB	ACH	AROB	VOL	TWA	R-BANK ELEV
TIME	VLOB	VCH	VROB	XNL	XNCH	XNR	WTN	ELMIN	SSTA
SLOPE	XLOBL	XLCH	XLOBR	ITRIAL	IDC	ICONT	CORAR	TOPWID	ENDST

CCHV= .300 CEHV= .500
*SECNO 212.600

3301 HV CHANGED MORE THAN HVINS

DOWNSTREAM BRIDGE SECTION - OLIVE AVENUE BRIDGE

212.600	11.93	1082.93	1080.32	1077.39	1085.64	2.71	.96	.55	1089.60
41000.0	.0	41000.0	.0	.0	3101.6	.0	1962.3	193.4	1089.60
.57	.00	13.22	.00	.000	.035	.000	.000	1071.00	364.07
.003958	330.	330.	330.	2	15	0	.00	271.86	635.93

SPECIAL BRIDGE

SB	XK	XKOR	COFQ	RDLEN	BWC	BWP	BAREA	SS	ELCHU	ELCHD
	1.05	1.56	2.90	300.00	248.00	18.50	4481.60	1.00	1071.50	1071.00

*SECNO 213.500
CLASS A LOW FLOW

3420 BRIDGE W.S.= 1081.73 BRIDGE VELOCITY= 16.30 CALCULATED CHANNEL AREA= 2452.

EGPRS	EGLWC	H3	QWEIR	QLOW	BAREA	TRAPEZOID AREA	ELLC	ELTRD	WEIRLN
.00	1086.49	1.11	0.	41000.	4482.	4482.	1089.60	1095.00	0.

OLIVE AVENUE BRIDGE - SPECIAL BRIDGE ANALYSIS

213.500	12.54	1084.04	.00	1077.74	1086.49	2.44	.84	.00	1089.60
41000.0	.0	41000.0	.0	.0	3267.7	.0	1968.9	194.0	1089.60
.57	.00	12.55	.00	.000	.035	.000	.000	1071.50	363.46
.003353	90.	90.	90.	0	0	0	.00	273.08	636.54

CCHV= .100 CEHV= .300
*SECNO 213.700

3301 HV CHANGED MORE THAN HVINS

213.700	10.67	1083.67	1082.02	1077.32	1086.76	3.09	.08	.19	1095.00
41000.0	.0	41000.0	.0	.0	2907.0	.0	1970.3	194.1	1096.20
.57	.00	14.10	.00	.000	.035	.000	.000	1073.00	358.42
.005143	20.	20.	20.	2	15	0	.00	282.61	641.03

SECNO	DEPTH	CWSEL	CRIWS	WSELK	EG	HV	HL	OLOSS	L-BANK ELEV
Q	QLOB	QCH	QROB	ALOB	ACH	AROB	VOL	TWA	R-BANK ELEV
TIME	VLOB	VCH	VROB	XNL	XNCH	XNR	WTN	ELMIN	SSTA
SLOPE	XLOBL	XLCH	XLOBR	ITRIAL	IDC	ICONT	CORAR	TOPWID	ENDST

*SECNO 217.500

3301 HV CHANGED MORE THAN HVINS

3302 WARNING: CONVEYANCE CHANGE OUTSIDE OF ACCEPTABLE RANGE, KRATIO = 1.69

217.500	12.47	1086.67	1081.81	1080.49	1088.02	1.35	1.08	.17	1096.00
41000.0	.0	41000.0	.0	.0	4400.9	.0	2002.2	196.9	1097.00
.59	.00	9.32	.00	.000	.035	.000	.000	1074.20	314.33
.001809	380.	380.	380.	3	15	0	.00	365.34	679.67

*SECNO 221.100

221.100	12.06	1087.36	1082.69	1081.20	1088.68	1.32	.66	.00	1096.60
41000.0	.0	41000.0	.0	.0	4438.6	.0	2038.7	200.0	1098.00
.60	.00	9.24	.00	.000	.035	.000	.000	1075.30	304.24
.001849	360.	360.	360.	2	11	0	.00	380.12	684.36

*SECNO 227.500

227.500	11.73	1088.83	1083.28	1082.60	1089.67	.83	.94	.05	1099.00
41000.0	.0	41000.0	.0	.0	5596.8	.0	2112.5	206.4	1099.00
.62	.00	7.33	.00	.000	.035	.000	.000	1077.10	255.68
.001184	640.	640.	640.	2	11	0	.00	489.11	744.79

*SECNO 233.550

3301 HV CHANGED MORE THAN HVINS

233.550	10.40	1089.40	1085.68	1083.69	1090.73	1.34	.92	.15	1101.70
41000.0	.0	41000.0	.0	.0	4421.1	.0	2179.2	212.6	1101.60
.64	.00	9.27	.00	.000	.035	.000	.000	1079.00	282.30
.002228	580.	580.	580.	2	11	0	.00	435.50	717.80

*SECNO 238.660

3301 HV CHANGED MORE THAN HVINS

```
 SECNO     DEPTH     CWSEL     CRIWS     WSELK     EG        HV        HL        OLOSS     L-BANK ELEV
 Q         QLOB      QCH       QROB      ALOB      ACH       AROB      VOL       TWA       R-BANK ELEV
 TIME      VLOB      VCH       VROB      XNL       XNCH      XNR       WTN       ELMIN     SSTA
 SLOPE     XLOBL     XLCH      XLOBR     ITRIAL    IDC       ICONT     CORAR     TOPWID    ENDST


3302 WARNING:  CONVEYANCE CHANGE OUTSIDE OF ACCEPTABLE RANGE,  KRATIO =   .58

 238.660     9.25   1089.85   1088.94   1085.54   1093.16      3.32      1.84       .59   1103.30
 41000.0       .0   41000.0       .0       .0    2805.3        .0    2222.0     217.0   1103.70
     .65      .00     14.62       .00      .000      .035      .000      .000   1080.60    343.56
 .006557     516.      516.      516.         2        15         0       .00    312.47    656.03


*SECNO 238.690

3301 HV CHANGED MORE THAN HVINS

7185 MINIMUM SPECIFIC ENERGY
3720 CRITICAL DEPTH ASSUMED
 238.690     8.24   1091.84   1091.84   1087.55   1095.89      4.05       .02       .22   1103.40
 41000.0       .0   41000.0       .0       .0    2537.7        .0    2222.1     217.0   1103.90
     .65      .00     16.16       .00      .000      .035      .000      .000   1083.60    336.56
 .009278       3.        3.        3.         0        11         0       .00    316.37    652.94


CCHV=     .100 CEHV=     .300
*SECNO 242.000

3301 HV CHANGED MORE THAN HVINS


3302 WARNING:  CONVEYANCE CHANGE OUTSIDE OF ACCEPTABLE RANGE,  KRATIO =  1.75

 242.000    11.30   1095.75   1092.51   1090.47   1097.72      1.97      1.62       .21   1104.00
 41000.0       .0   41000.0       .0       .0    3639.7        .0    2245.6     219.5   1104.00
     .66      .00     11.26       .00      .000      .035      .000      .000   1084.45    333.25
 .003017     331.      331.      331.         3         8         0       .00    333.49    666.75


*SECNO 247.000
 247.000    11.65   1097.32   1093.72   1091.79   1099.16      1.83      1.42       .01   1104.50
 41000.0       .0   41000.0       .0       .0    3776.3        .0    2288.2     223.3   1104.50
     .67      .00     10.86       .00      .000      .035      .000      .000   1085.67    332.17
 .002694     500.      500.      500.         3        15         0       .00    335.65    667.83
```

```
   SECNO     DEPTH     CWSEL     CRIWS     WSELK     EG        HV        HL        OLOSS     L-BANK ELEV
   Q         QLOB      QCH       QROB      ALOB      ACH       AROB      VOL       TWA       R-BANK ELEV
   TIME      VLOB      VCH       VROB      XNL       XNCH      XNR       WTN       ELMIN     SSTA
   SLOPE     XLOBL     XLCH      XLOBR     ITRIAL    IDC       ICONT     CORAR     TOPWID    ENDST


CCHV=     .100 CEHV=     .300
*SECNO 270.500
CHIMP CLSTA=    9955.00 CELCH=    1086.50 BW=     365.00 STCHL=    9753.15 STCHR=   10175.00
EXCAVATION DATA
AEX=    1319.1SQ-FT     VEXR=        .0K*CU-YD     VEXT=        .0K*CU-YD


3301 HV CHANGED MORE THAN HVINS


3470 ENCROACHMENT STATIONS=     9750.0   10218.0  TYPE=      1  TARGET=    -9750.000

3495 OVERBANK AREA ASSUMED NON-EFFECTIVE, ELLEA=      1105.85 ELREA=      1107.00

   270.500     12.67   1099.17   1093.74   1093.11   1100.31      1.14      1.09       .07   1105.85
   41000.0       .0   41000.0       .0        .0    4787.1        .0    2342.7     228.0   1107.00
       .69      .00      8.56       .00      .000      .035      .000      .000   1086.50   9759.82
   .001488     338.      555.      338.         2        14         0       .00    390.35  10150.17


*SECNO 273.500
CHIMP CLSTA=    9919.00 CELCH=    1087.20 BW=     375.00 STCHL=    9712.31 STCHR=   10127.15
EXCAVATION DATA
AEX=    2554.4SQ-FT     VEXR=      22.2K*CU-YD     VEXT=      22.2K*CU-YD


3470 ENCROACHMENT STATIONS=     9640.0   10160.0  TYPE=      1  TARGET=    -9640.000

3495 OVERBANK AREA ASSUMED NON-EFFECTIVE, ELLEA=      1106.39 ELREA=      1107.85

   273.500     12.46   1099.66   1094.33   1093.56   1100.78      1.12       .46       .00   1106.39
   41000.0       .0   41000.0       .0        .0    4825.9        .0    2376.9     230.8   1107.85
       .70      .00      8.50       .00      .000      .035      .000      .000   1087.20   9719.04
   .001497     315.      310.      310.         2        11         0       .00    399.91  10118.96


*SECNO 277.900
CHIMP CLSTA=    9927.00 CELCH=    1088.30 BW=     360.00 STCHL=    9729.30 STCHR=   10137.00
EXCAVATION DATA
AEX=    2900.7SQ-FT     VEXR=      42.4K*CU-YD     VEXT=      64.7K*CU-YD
```

```
 SECNO     DEPTH     CWSEL     CRIWS     WSELK     EG        HV        HL        OLOSS     L-BANK ELEV
 Q         QLOB      QCH       QROB      ALOB      ACH       AROB      VOL       TWA       R-BANK ELEV
 TIME      VLOB      VCH       VROB      XNL       XNCH      XNR       WTN       ELMIN     SSTA
 SLOPE     XLOBL     XLCH      XLOBR     ITRIAL    IDC       ICONT     CORAR     TOPWID    ENDST


3495 OVERBANK AREA ASSUMED NON-EFFECTIVE, ELLEA=      1106.00 ELREA=      1108.50

   277.900     11.91   1100.21   1095.64   1094.22   1101.54      1.33       .70       .06   1106.00
   41000.0       .0   41000.0       .0        .0    4430.1        .0    2421.6     234.5   1108.50
       .71       .00      9.25      .00      .000      .035      .000      .000   1088.30   9735.09
   .001884     420.      420.      420.         2        11         0       .00    383.82  10118.91


*SECNO 281.800
CHIMP CLSTA=    9932.00 CELCH=    1089.20 BW=     330.00 STCHL=    9747.63 STCHR=   10117.50
EXCAVATION DATA
AEX=    3280.4SQ-FT     VEXR=      46.9K*CU-YD     VEXT=      111.6K*CU-YD


3495 OVERBANK AREA ASSUMED NON-EFFECTIVE, ELLEA=      1108.57 ELREA=      1109.70

   281.800     11.66   1100.86   1096.94   1095.08   1102.51      1.64       .87       .09   1108.57
   41000.0       .0   41000.0       .0        .0    3984.3        .0    2461.2     238.0   1109.70
       .72       .00     10.29      .00      .000      .035      .000      .000   1089.20   9755.34
   .002408     410.      410.      410.         2        14         0       .00    353.32  10108.66


CCHV=     .300 CEHV=     .500
*SECNO 288.000
CHIMP CLSTA=    9988.00 CELCH=    1092.20 BW=     274.00 STCHL=    9829.45 STCHR=   10145.00
EXCAVATION DATA
AEX=    1602.9SQ-FT     VEXR=      54.3K*CU-YD     VEXT=      165.9K*CU-YD


3301 HV CHANGED MORE THAN HVINS


3302 WARNING:  CONVEYANCE CHANGE OUTSIDE OF ACCEPTABLE RANGE,  KRATIO =   .64


3495 OVERBANK AREA ASSUMED NON-EFFECTIVE, ELLEA=      1113.75 ELREA=      1112.00

   288.000     10.01   1102.21   1100.93   1097.05   1105.44      3.23      2.14       .79   1113.75
   41000.0       .0   41000.0       .0        .0    2842.1        .0    2508.2     242.5   1112.00
       .73       .00     14.43      .00      .000      .035      .000      .000   1092.20   9840.99
   .005809     600.      600.      600.         2        15         0       .00    294.01  10135.01
```

SECNO	DEPTH	CWSEL	CRIWS	WSELK	EG	HV	HL	OLOSS	L-BANK ELEV
Q	QLOB	QCH	QROB	ALOB	ACH	AROB	VOL	TWA	R-BANK ELEV
TIME	VLOB	VCH	VROB	XNL	XNCH	XNR	WTN	ELMIN	SSTA
SLOPE	XLOBL	XLCH	XLOBR	ITRIAL	IDC	ICONT	CORAR	TOPWID	ENDST

*SECNO 290.000

3495 OVERBANK AREA ASSUMED NON-EFFECTIVE, ELLEA= 1117.80 ELREA= 1117.80

290.000	10.29	1103.29	1102.04	1098.54	1106.75	3.45	1.20	.11	1117.80
41000.0	.0	41000.0	.0	.0	2749.4	.0	2521.0	243.8	1117.80
.74	.00	14.91	.00	.000	.035	.000	.000	1093.00	9865.00
.006174	220.	200.	160.	2	11	0	.00	271.00	10136.00

SPECIAL BRIDGE

5227 DOWNSTREAM ELEV IS 1100.94 , NOT 1103.29 HYDRAULIC JUMP OCCURS DOWNSTREAM (IF LOW FLOW CONTROLS)

SB	XK	XKOR	COFQ	RDLEN	BWC	BWP	BAREA	SS	ELCHU	ELCHD
	.90	1.56	2.90	.00	271.00	10.50	4974.00	.00	1093.70	1093.30

*SECNO 291.000

3301 HV CHANGED MORE THAN HVINS

CLASS B LOW FLOW

3420 BRIDGE W.S.= 1102.66 BRIDGE VELOCITY= 17.18 CALCULATED CHANNEL AREA= 2334.

EGPRS	EGLWC	H3	QWEIR	QLOW	BAREA	TRAPEZOID AREA	ELLC	ELTRD	WEIRLN
.00	1107.45	.00	0.	41000.	4974.	5314.	1114.10	1119.10	0.

3495 OVERBANK AREA ASSUMED NON-EFFECTIVE, ELLEA= 1117.80 ELREA= 1117.80

291.000	11.68	1104.68	.00	1098.80	1107.45	2.77	.70	.00	1116.00
41000.0	.0	41000.0	.0	.0	3071.3	.0	2526.1	244.3	1116.00
.74	.00	13.35	.00	.000	.035	.000	.000	1093.00	9865.00
.004315	77.	77.	77.	0	0	0	.00	271.00	10136.00

CCHV= .100 CEHV= .300
*SECNO 293.000
CHIMP CLSTA= 10007.00 CELCH= 1094.00 BW= 231.00 STCHL= 9869.90 STCHR= 10144.00

SECNO	DEPTH	CWSEL	CRIWS	WSELK	EG	HV	HL	OLOSS	L-BANK ELEV
Q	QLOB	QCH	QROB	ALOB	ACH	AROB	VOL	TWA	R-BANK ELEV
TIME	VLOB	VCH	VROB	XNL	XNCH	XNR	WTN	ELMIN	SSTA
SLOPE	XLOBL	XLCH	XLOBR	ITRIAL	IDC	ICONT	CORAR	TOPWID	ENDST

EXCAVATION DATA
AEX= -4.0SQ-FT VEXR= 5.9K*CU-YD VEXT= 171.8K*CU-YD

3301 HV CHANGED MORE THAN HVINS

293.000	11.08	1105.08	1103.79	1099.70	1108.71	3.63	1.00	.26	1115.60
41000.0	.0	41000.0	.0	.0	2682.0	.0	2539.4	245.5	1115.00
.74	.00	15.29	.00	.000	.035	.000	.000	1094.00	9880.42
.005843	200.	200.	200.	3	11	0	.00	253.16	10133.58

*SECNO 297.000
CHIMP CLSTA= 10006.00 CELCH= 1096.10 BW= 246.00 STCHL= 9863.04 STCHR= 10150.00
EXCAVATION DATA
AEX= -26.4SQ-FT VEXR= -.2K*CU-YD VEXT= 171.6K*CU-YD

3301 HV CHANGED MORE THAN HVINS

297.000	11.84	1107.94	1105.49	1102.04	1110.74	2.80	1.95	.08	1116.05
41000.0	.0	41000.0	.0	.0	3052.3	.0	2565.7	247.9	1115.00
.75	.00	13.43	.00	.000	.035	.000	.000	1096.10	9871.16
.004131	400.	400.	400.	3	11	0	.00	269.68	10140.84

*SECNO 302.000
CHIMP CLSTA= 9999.00 CELCH= 1098.20 BW= 197.00 STCHL= 9882.00 STCHR= 10118.78
EXCAVATION DATA
AEX= 3.1SQ-FT VEXR= -.2K*CU-YD VEXT= 171.3K*CU-YD

3301 HV CHANGED MORE THAN HVINS

302.000	11.29	1109.49	1108.99	1104.40	1114.21	4.72	2.89	.58	1116.00
41000.0	.0	41000.0	.0	.0	2351.4	.0	2598.6	250.8	1119.48
.76	.00	17.44	.00	.000	.035	.000	.000	1098.20	9889.21
.007541	530.	530.	530.	3	11	0	.00	219.58	10108.79

*SECNO 305.000
CHIMP CLSTA= 9992.00 CELCH= 1099.50 BW= 188.00 STCHL= 9880.94 STCHR= 10110.00

SECNO	DEPTH	CWSEL	CRIWS	WSELK	EG	HV	HL	OLOSS	L-BANK ELEV
Q	QLOB	QCH	QROB	ALOB	ACH	AROB	VOL	TWA	R-BANK ELEV
TIME	VLOB	VCH	VROB	XNL	XNCH	XNR	WTN	ELMIN	SSTA
SLOPE	XLOBL	XLCH	XLOBR	ITRIAL	IDC	ICONT	CORAR	TOPWID	ENDST

EXCAVATION DATA
AEX= 244.7SQ-FT VEXR= 1.3K*CU-YD VEXT= 172.6K*CU-YD

3301 HV CHANGED MORE THAN HVINS

305.000	12.44	1111.94	1110.59	1106.05	1116.14	4.20	1.88	.05	1116.56
41000.0	.0	41000.0	.0	.0	2493.7	.0	2614.1	252.2	1119.50
.76	.00	16.44	.00	.000	.035	.000	.000	1099.50	9885.56
.006004	280.	280.	280.	4	5	0	.00	212.88	10098.44

*SECNO 306.750
CHIMP CLSTA= 9959.00 CELCH= 1100.30 BW= 289.00 STCHL= 9798.80 STCHR= 10123.24
EXCAVATION DATA
AEX= 1770.8SQ-FT VEXR= 8.0K*CU-YD VEXT= 180.6K*CU-YD

3301 HV CHANGED MORE THAN HVINS

3302 WARNING: CONVEYANCE CHANGE OUTSIDE OF ACCEPTABLE RANGE, KRATIO = 2.21

306.750	15.46	1115.76	1108.74	1107.89	1116.94	1.18	.50	.30	1116.00
41000.0	.0	41000.0	.0	.0	4708.1	.0	2631.9	253.5	1120.04
.77	.00	8.71	.00	.000	.035	.000	.000	1100.30	9799.04
.001229	215.	215.	215.	3	14	0	.00	319.93	10118.96

*SECNO 310.000
CHIMP CLSTA= 9965.00 CELCH= 1101.60 BW= 330.00 STCHL= 9784.66 STCHR= 10149.29
EXCAVATION DATA
AEX= 1007.5SQ-FT VEXR= 16.5K*CU-YD VEXT= 197.1K*CU-YD

310.000	14.72	1116.32	1109.34	1108.39	1117.33	1.01	.37	.02	1116.94
41000.0	.0	41000.0	.0	.0	5074.5	.0	2667.8	256.0	1120.90
.78	.00	8.08	.00	.000	.035	.000	.000	1101.60	9785.28
.001110	320.	320.	320.	2	8	0	.00	359.44	10144.72

*SECNO 313.200
CHIMP CLSTA= 10000.00 CELCH= 1103.00 BW= 330.00 STCHL= 9820.00 STCHR= 10183.25

```
 SECNO     DEPTH     CWSEL     CRIWS     WSELK     EG        HV        HL        OLOSS     L-BANK ELEV
 Q         QLOB      QCH       QROB      ALOB      ACH       AROB      VOL       TWA       R-BANK ELEV
 TIME      VLOB      VCH       VROB      XNL       XNCH      XNR       WTN       ELMIN     SSTA
 SLOPE     XLOBL     XLCH      XLOBR     ITRIAL    IDC       ICONT     CORAR     TOPWID    ENDST


EXCAVATION DATA
AEX=    1069.6SQ-FT     VEXR=      12.1K*CU-YD     VEXT=      209.2K*CU-YD

  313.200     13.59   1116.59   1110.74   1108.88   1117.78      1.20       .40       .06   1117.00
  41000.0       .0   41000.0       .0        .0    4668.4        .0    2703.1     258.6   1121.25
      .79       .00      8.78       .00      .000      .035      .000      .000   1103.00   9821.41
  .001449     315.     315.      315.         2        11         0       .00    357.17  10178.59


*SECNO 318.000
CHIMP CLSTA=   10000.00 CELCH=    1105.10 BW=     330.00 STCHL=    9820.00 STCHR=   10182.90
EXCAVATION DATA
AEX=      52.1SQ-FT     VEXR=      10.4K*CU-YD     VEXT=      219.6K*CU-YD

  318.000     12.13   1117.23   1112.85   1110.29   1118.75      1.52       .87       .10   1120.00
  41000.0       .0   41000.0       .0        .0    4148.9        .0    2753.7     262.7   1123.00
      .80       .00      9.88       .00      .000      .035      .000      .000   1105.10   9822.87
  .002114     500.     500.      500.         0        11         0       .00    354.25  10177.13


*SECNO 320.050
CHIMP CLSTA=   10000.00 CELCH=    1106.00 BW=     330.00 STCHL=    9816.00 STCHR=   10184.00
EXCAVATION DATA
AEX=     152.0SQ-FT     VEXR=       1.1K*CU-YD     VEXT=      220.7K*CU-YD

  320.050     11.81   1117.81   1113.74   1111.41   1119.41      1.60       .64       .03   1125.00
  41000.0       .0   41000.0       .0        .0    4037.6        .0    2780.9     265.1   1125.00
      .81       .00     10.15       .00      .000      .035      .000      .000   1106.00   9823.19
  .002308     290.     290.      290.         2        14         0       .00    353.63  10176.81


*SECNO 328.000
CHIMP CLSTA=   10000.00 CELCH=    1109.10 BW=     330.00 STCHL=    9817.10 STCHR=   10182.90
EXCAVATION DATA
AEX=     195.1SQ-FT     VEXR=       4.1K*CU-YD     VEXT=      224.8K*CU-YD


3301 HV CHANGED MORE THAN HVINS

  328.000     10.17   1119.27   1116.84   1113.86   1121.45      2.18      1.86       .17   1127.00
  41000.0       .0   41000.0       .0        .0    3459.6        .0    2836.0     270.2   1127.00
      .83       .00     11.85       .00      .000      .035      .000      .000   1109.10   9824.83
  .003790     640.     640.      640.         2        14         0       .00    350.34  10175.17
```

SECNO	DEPTH	CWSEL	CRIWS	WSELK	EG	HV	HL	OLOSS	L-BANK ELEV
Q	QLOB	QCH	QROB	ALOB	ACH	AROB	VOL	TWA	R-BANK ELEV
TIME	VLOB	VCH	VROB	XNL	XNCH	XNR	WTN	ELMIN	SSTA
SLOPE	XLOBL	XLCH	XLOBR	ITRIAL	IDC	ICONT	CORAR	TOPWID	ENDST

*SECNO 330.000
CHIMP CLSTA= 10000.00 CELCH= 1110.10 BW= 330.00 STCHL= 9817.60 STCHR= 10182.40
EXCAVATION DATA
AEX= 76.6SQ-FT VEXR= .9K*CU-YD VEXT= 225.7K*CU-YD

330.000	9.74	1119.84	1117.84	1114.76	1122.22	2.38	.71	.06	1127.50
41000.0	.0	41000.0	.0	.0	3309.2	.0	2849.6	271.6	1127.50
.83	.00	12.39	.00	.000	.035	.000	.000	1110.10	9825.26
.004383	175.	175.	175.	2	15	0	.00	349.48	10174.74

*SECNO 334.000
CHIMP CLSTA= 10000.00 CELCH= 1112.00 BW= 330.00 STCHL= 9818.00 STCHR= 10182.00
EXCAVATION DATA
AEX= 68.0SQ-FT VEXR= 1.1K*CU-YD VEXT= 226.8K*CU-YD

334.000	9.68	1121.68	1119.74	1116.99	1124.09	2.41	1.86	.01	1129.00
41000.0	.0	41000.0	.0	.0	3287.7	.0	2881.4	275.0	1129.00
.84	.00	12.47	.00	.000	.035	.000	.000	1112.00	9825.32
.004476	420.	420.	420.	2	15	0	.00	349.36	10174.68

CCHV= .200 CEHV= .400
*SECNO 343.000
CHIMP CLSTA= 10025.00 CELCH= 1115.70 BW= 329.00 STCHL= 9861.00 STCHR= 10206.30
EXCAVATION DATA
AEX= 2385.5SQ-FT VEXR= 40.9K*CU-YD VEXT= 267.7K*CU-YD

3495 OVERBANK AREA ASSUMED NON-EFFECTIVE, ELLEA= 1132.00 ELREA= 1132.00

343.000	9.96	1125.66	1123.48	1120.84	1128.02	2.36	3.91	.01	1132.00
41000.0	.0	41000.0	.0	.0	3328.0	.0	2949.7	282.1	1132.00
.86	.00	12.32	.00	.000	.035	.000	.000	1115.70	9861.00
.004221	900.	900.	900.	0	15	0	.00	338.96	10199.96

*SECNO 344.900

3495 OVERBANK AREA ASSUMED NON-EFFECTIVE, ELLEA= 1132.00 ELREA= 1132.00

344.900	10.39	1126.69	1124.05	1121.67	1128.80	2.11	.74	.05	1132.00
41000.0	.0	41000.0	.0	.0	3514.6	.0	2964.7	283.6	1132.00
.87	.00	11.67	.00	.000	.035	.000	.000	1116.30	9827.06
.003566	110.	190.	260.	2	15	0	.00	346.54	10173.60

```
T1      NEW RIVER: FLOOD CONTROL DISTRICT CHANNELIZATION PROJECT
T2      NEW RIVER: BETHANY HOME ALIGNMENT TO GRAND AVE.
T3      SPF EVENT                  NRO2A

J1  ICHECK    INQ       NINV      IDIR      STRT      METRIC    HVINS     Q         WSEL      FQ

       0        6                                                          1043.32

J2  NPROF     IPLOT     PRFVS     XSECV     XSECH     FN        ALLDC     IBW       CHNIM     ITRACE

      15        0        -1                                      -1                            0
```

SECNO	DEPTH	CWSEL	CRIWS	WSELK	EG	HV	HL	OLOSS	L-BANK ELEV
Q	QLOB	QCH	QROB	ALOB	ACH	AROB	VOL	TWA	R-BANK ELEV
TIME	VLOB	VCH	VROB	XNL	XNCH	XNR	WTN	ELMIN	SSTA
SLOPE	XLOBL	XLCH	XLOBR	ITRIAL	IDC	ICONT	CORAR	TOPWID	ENDST

*PROF 3

CRITICAL DEPTH TO BE CALCULATED AT ALL CROSS SECTIONS

CCHV= .100 CEHV= .300
*SECNO 39.000

3470 ENCROACHMENT STATIONS= 9585.9 10426.1 TYPE= 1 TARGET= 840.199
BEGIN ANALYSIS NEAR THE BETHANY HOME ROAD ALIGNMENT.
WATER SURFACE UTILIZED FOR THIS ANALYSIS IS BASED ON
EXISTING CONDTIONS OUTPUT DATA WHICH INCLUDES THE
GLENDALE MUNICIPAL AIRPORT CHANNELIZATION AND SIDEBANK
PROTECTION. CROSS SECTION 39.00 ASSUMES EXISTING CONDITIONS
BOTTOM CONTOURS WITH EXISTING LEFT BANK NATURAL SIDESLOPE.

39.000	15.32	1043.32	1037.11	1036.06	1044.05	.73	.00	.00	1042.50
69000.0	.0	69000.0	.0	.1	10077.5	.0	.0	.0	1043.20
.00	.01	6.85	.01	.045	.035	.045	.000	1028.00	9585.90
.000956	270.	220.	200.	0	13	0	.00	840.20	10426.10

CCHV= .200 CEHV= .400
*SECNO 44.000
BEGIN CHANNELIZATION AND SIDEBANK PROTECTION DEGIGN.
LT CHNL BTM WDTH = 500 FEET - MATCH EXISTING DOWNSTREAM
RT CHNL BTM WDTH PER GLENDALE AIRPORT "AS BUILTS" = 362+OR- FEET

44.000	13.06	1043.81	1038.61	1036.53	1044.61	.80	.54	.03	1044.90
69000.0	.0	69000.0	.0	.0	9609.3	.0	113.0	10.0	1045.10
.02	.00	7.18	.00	.000	.035	.000	.000	1030.75	9487.99
.001216	500.	500.	500.	1	11	0	.00	894.56	10382.54

*SECNO 47.000

47.000	12.99	1043.99	1040.25	1037.11	1045.29	1.30	.48	.20	1045.00
69000.0	.0	69000.0	.0	.0	7552.1	.0	172.1	15.6	1045.00
.03	.00	9.14	.00	.000	.035	.000	.000	1031.00	598.01
.002180	300.	300.	300.	2	19	0	.00	757.97	1355.99

*SECNO 51.500

3301 HV CHANGED MORE THAN HVINS

```
          LT CHNL BTM WDTH = 225 FT
   51.500     13.24   1044.64   1042.15   1038.44   1046.98      2.34      1.27       .42   1045.70
  69000.0       .0   69000.0       .0       .0    5621.1        .0    240.1      22.4   1045.70
      .04       .00     12.28       .00      .000      .035      .000      .000   1031.40    762.92
  .003796     450.      450.      450.         2        15         0       .00    545.71   1308.64


*SECNO 55.000
          STA. 53+12.97 IS P.O.C. OF CURVE TO THE RIGHT
   55.000     13.93   1045.83   1042.96   1039.30   1048.33      2.50      1.29       .06   1047.00
  69000.0       .0   69000.0       .0       .0    5443.1        .0    284.6      26.5   1047.00
      .05       .00     12.68       .00      .000      .035      .000      .000   1031.90    262.32
  .003556     350.      350.      350.         2        15         0       .00    477.81    740.13


*SECNO 58.120
          END GLENDALE MUNICIPAL AIRPORT GABION MATTRESS SIDESLOPE
          ALONG NEW RIVER RT BANK, GABION MATRESS TURNS CORNER AND
          CONTINUES NORTHWESTERLY A FEW HUNDRED FEET ALONG THE EAST
          BOUNDARY OF GLENDALE MUNICIPAL AIRPORT.
          MATCH EXISTING GABION MATTRESS-GROUT GABIONS AND CONSTRUCT
          TRANSITION FROM 2:1 TO 1:1 SIDESLOPE IN 75 FT TAPER.
   58.120     15.89   1047.99   1043.71   1040.41   1050.38      2.39      2.03       .02   1049.10
  69000.0       .0   69000.0       .0       .0    5562.1        .0    368.2      33.2   1049.00
      .06       .00     12.41       .00      .000      .035      .000      .000   1032.10    759.11
  .002675     662.      662.      662.         2        15         0       .00    402.88   1161.99


*SECNO 62.000
          STA. 60+21.80 IS P.O.T.
   62.000     16.47   1049.37   1044.73   1040.95   1051.42      2.05       .97       .07   1050.40
  69000.0       .0   69000.0       .0       .0    6005.6        .0    419.7      37.0   1050.40
      .07       .00     11.49       .00      .000      .035      .000      .000   1032.90    258.66
  .002364     388.      388.      388.         2        15         0       .00    443.81    702.47


*SECNO 66.000

3301 HV CHANGED MORE THAN HVINS

          LT CHNL BTM WDTH = 225 FT.
          RT CHNL BTM WDTH = 230 FT.
   66.000     16.88   1050.88   1044.16   1041.69   1052.27      1.39       .72       .13   1051.80
  69000.0       .0   69000.0       .0       .0    7294.0        .0    480.8      41.2   1051.80
      .08       .00      9.46       .00      .000      .035      .000      .000   1034.00    259.04
  .001400     400.      400.      400.         2        14         0       .00    487.84    746.88
```

SECNO	DEPTH	CWSEL	CRIWS	WSELK	EG	HV	HL	OLOSS	L-BANK ELEV
Q	QLOB	QCH	QROB	ALOB	ACH	AROB	VOL	TWA	R-BANK ELEV
TIME	VLOB	VCH	VROB	XNL	XNCH	XNR	WTN	ELMIN	SSTA
SLOPE	XLOBL	XLCH	XLOBR	ITRIAL	IDC	ICONT	CORAR	TOPWID	ENDST

*SECNO 71.000
3280 CROSS SECTION 71.00 EXTENDED .06 FEET

GRAND DRAIN INLET PER A.D.O.T. PLANS

71.000	16.56	1051.56	1045.20	1042.23	1053.02	1.45	.72	.03	1051.50
69000.0	.0	69000.0	.0	.0	7132.2	.0	563.6	46.8	1051.50
.10	.00	9.67	.00	.000	.035	.000	.000	1035.00	258.50
.001501	500.	500.	500.	2	14	0	.00	487.60	746.10

*SECNO 75.000

75.000	15.66	1052.16	1045.91	1042.77	1053.64	1.48	.61	.01	1053.10
69000.0	.0	69000.0	.0	.0	7065.5	.0	628.8	51.3	1053.10
.11	.00	9.77	.00	.000	.035	.000	.000	1036.50	260.30
.001534	400.	400.	400.	1	11	0	.00	485.35	745.65

*SECNO 78.000
GRAND DRAIN LOW FLOW OUTLET PIPE AT LT SIDESLOPE

78.000	15.20	1052.60	1046.58	1043.20	1054.12	1.52	.47	.02	1053.50
69000.0	.0	69000.0	.0	.0	6963.5	.0	677.1	54.6	1053.50
.12	.00	9.91	.00	.000	.035	.000	.000	1037.40	260.69
.001604	300.	300.	300.	1	11	0	.00	484.52	745.21

*SECNO 81.000

81.000	15.07	1053.07	1047.14	1043.69	1054.62	1.55	.49	.01	1054.00
69000.0	.0	69000.0	.0	.0	6899.5	.0	724.8	58.0	1054.00
.12	.00	10.00	.00	.000	.035	.000	.000	1038.00	260.80
.001648	300.	300.	300.	0	14	0	.00	483.33	744.13

*SECNO 84.000

84.000	16.55	1053.55	1047.86	1044.21	1055.15	1.61	.51	.02	1054.50
69000.0	.0	69000.0	.0	.0	6779.2	.0	771.9	61.3	1054.50
.13	.00	10.18	.00	.000	.035	.000	.000	1037.00	261.40
.001746	300.	300.	300.	1	19	0	.00	483.06	744.46

*SECNO 87.000

87.000	14.23	1054.03	1048.82	1044.82	1055.75	1.72	.55	.04	1055.00
69000.0	.0	69000.0	.0	.0	6563.2	.0	817.9	64.6	1055.00
.14	.00	10.51	.00	.000	.035	.000	.000	1039.80	261.74
.001936	300.	300.	300.	2	11	0	.00	482.50	744.23

```
   SECNO     DEPTH     CWSEL     CRIWS     WSELK     EG        HV        HL        OLOSS     L-BANK ELEV
   Q         QLOB      QCH       QROB      ALOB      ACH       AROB      VOL       TWA       R-BANK ELEV
   TIME      VLOB      VCH       VROB      XNL       XNCH      XNR       WTN       ELMIN     SSTA
   SLOPE     XLOBL     XLCH      XLOBR     ITRIAL    IDC       ICONT     CORAR     TOPWID    ENDST


*SECNO 89.000
   89.000    13.98   1054.38   1049.57   1045.31   1056.20      1.82       .41       .04   1055.40
  69000.0       .0  69000.0       .0       .0    6370.4        .0     847.5      66.8   1055.40
      .15      .00     10.83       .00      .000      .035      .000      .000   1040.40    262.05
  .002137     200.      200.      200.         2        14         0       .00    481.93    743.98


*SECNO 94.000
            STA. 91+49.71 IS P.O.C. OF CURVE TO THE LEFT
   94.000    13.64   1055.44   1050.87   1046.74   1057.33      1.89      1.10       .03   1056.40
  69000.0       .0  69000.0       .0       .0    6254.6        .0     920.0      72.4   1056.40
      .16      .00     11.03       .00      .000      .035      .000      .000   1041.80    262.33
  .002268     500.      500.      500.         2        14         0       .00    481.31    743.64


CCHV=     .300 CEHV=     .500
*SECNO 97.000
   97.000    13.50   1056.10   1051.88   1047.56   1058.09      1.99       .71       .05   1057.10
  69000.0       .0  69000.0       .0       .0    6094.5        .0     962.5      75.7   1057.10
      .17      .00     11.32       .00      .000      .035      .000      .000   1042.60    262.51
  .002474     300.      300.      300.         0        14         0       .00    480.99    743.50


*SECNO 99.540

3301 HV CHANGED MORE THAN HVINS

            STA. 99+45.00 IS P.O.T.
            LT CHNL BTM WDTH = 157.9 FT.
            RT CHNL BTM WDTH = 157.9 FT.
   99.540    12.93   1056.13   1053.81   1048.29   1059.74      3.61       .84       .81   1063.50
  69000.0       .0  69000.0       .0       .0    4522.3        .0     993.5      78.1   1063.50
      .17      .00     15.26       .00      .000      .035      .000      .000   1043.20    325.12
  .004678     254.      254.      254.         2        15         0       .00    349.76    674.88


CCHV=     .300 CEHV=     .500
*SECNO 99.600

3301 HV CHANGED MORE THAN HVINS

7185 MINIMUM SPECIFIC ENERGY
3720 CRITICAL DEPTH ASSUMED
```

```
          DOWNSTREAM BRIDGE SECTION - GLENDALE AVENUE
   99.600     10.61   1056.81   1056.81   1049.78   1062.18      5.37       .03       .88   1063.80
  69000.0        .0   69000.0        .0        .0    3711.5        .0     994.1      78.1   1063.80
     .17       .00     18.59       .00      .000      .025      .000      .000   1046.20    325.12
 .004536        6.        6.        6.         0        15         0       .00    349.76    674.88


SPECIAL BRIDGE

5227 DOWNSTREAM ELEV IS    1054.63 , NOT    1056.81 HYDRAULIC JUMP OCCURS DOWNSTREAM (IF LOW FLOW CONTROLS)

SB  XK        XKOR      COFQ      RDLEN     BWC       BWP       BAREA     SS        ELCHU     ELCHD
     .90      1.56      2.90     358.00    349.74     32.00    5378.30     .00    1046.50   1046.20

*SECNO 100.400

3301 HV CHANGED MORE THAN HVINS


3302 WARNING:  CONVEYANCE CHANGE OUTSIDE OF ACCEPTABLE RANGE,  KRATIO =  1.76

CLASS B LOW FLOW

3420 BRIDGE W.S.=    1057.70 BRIDGE VELOCITY=      19.12     CALCULATED CHANNEL AREA=      3560.

 EGPRS      EGLWC       H3       QWEIR      QLOW      BAREA   TRAPEZOID      ELLC      ELTRD     WEIRLN
                                                              AREA
  1060.80   1064.21      .00        0.    69000.     5378.     5370.     1063.40   1065.90        0.


          GLENDALE AVENUE BRIDGE - SPECIAL BRIDGE ANALYSIS
  100.400     15.04   1061.54       .00   1051.57   1064.21      2.67      2.03       .00   1063.60
  69000.0        .0   69000.0        .0        .0    5259.1        .0    1002.3      78.8   1063.60
     .17       .00     13.12       .00      .000      .025      .000      .000   1046.50    325.11
 .001465       80.       80.       80.         0         0         0       .00    349.79    674.89


*SECNO 100.900
          BEGIN CHANNEL BOTTOM TRANSITION
          LT CHNL BTM WDTH = 157.9 FT.
          RT CHNL BTM WDTH = 157.9 FT.
  100.900     15.51   1062.11   1057.10   1051.77   1064.41      2.30       .09       .11   1063.60
  69000.0        .0   69000.0        .0        .0    5666.6        .0    1008.6      79.2   1063.60
     .17       .00     12.18       .00      .000      .035      .000      .000   1046.60    309.63
 .002348       50.       50.       50.         2        19         0       .00    380.73    690.37


*SECNO 103.000
  103.000     16.17   1063.17   1057.25   1052.78   1065.07      1.91       .54       .12   1065.40
  69000.0        .0   69000.0        .0        .0    6228.4        .0    1044.1      81.6   1065.40
     .18       .00     11.08       .00      .000      .035      .000      .000   1047.00    296.45
 .001867      260.      260.      260.         2        14         0       .00    409.33    705.78
```

```
 SECNO     DEPTH     CWSEL     CRIWS     WSELK     EG        HV        HL        OLOSS     L-BANK ELEV
 Q         QLOB      QCH       QROB      ALOB      ACH       AROB      VOL       TWA       R-BANK ELEV
 TIME      VLOB      VCH       VROB      XNL       XNCH      XNR       WTN       ELMIN     SSTA
 SLOPE     XLOBL     XLCH      XLOBR     ITRIAL    IDC       ICONT     CORAR     TOPWID    ENDST


CCHV=     .100 CEHV=     .300
*SECNO 106.000

3301 HV CHANGED MORE THAN HVINS

 106.000     16.81   1064.41   1056.48   1053.55   1065.56      1.15       .41       .08   1066.40
 69000.0        .0   69000.0       .0        .0    8002.0        .0    1093.1      84.7   1066.40
     .19       .00      8.62       .00      .000      .035      .000      .000   1047.60    250.38
 .001056      300.      300.      300.         2        11         0       .00    501.23    751.61


*SECNO 109.000
            END CHANNEL BOTTOM TRANSITION
            LT CHNL BTM WDTH = 280 FT.
            RT CHNL BTM WDTH = 280 FT.
 109.000     16.83   1065.03   1056.24   1053.99   1065.86       .83       .27       .03   1066.90
 69000.0        .0   69000.0       .0        .0    9460.5        .0    1153.2      88.5   1066.90
     .20       .00      7.29       .00      .000      .035      .000      .000   1048.20    205.03
 .000753      300.      300.      300.         2        11         0       .00    591.80    796.83


*SECNO 110.000
 110.000     18.09   1065.09   1056.53   1054.09   1065.94       .85       .08       .01   1066.90
 69000.0        .0   69000.0       .0        .0    9323.8        .0    1174.8      89.8   1066.90
     .20       .00      7.40       .00      .000      .035      .000      .000   1047.00    204.95
 .000790      100.      100.      100.         2        11         0       .00    591.74    796.69


*SECNO 113.000
 113.000     16.32   1065.32   1056.95   1054.46   1066.19       .87       .24       .01   1067.20
 69000.0        .0   69000.0       .0        .0    9201.0        .0    1238.5      93.9   1067.20
     .22       .00      7.50       .00      .000      .035      .000      .000   1049.00    205.55
 .000823      300.      300.      300.         0        14         0       .00    590.78    796.33


*SECNO 116.000
            BEGIN CHANNEL BOTTOM TRANSITION
            LT CHNL BTM WDTH = 280 FT.
            RT CHNL BTM WDTH = 280 FT.
 116.000     15.93   1065.53   1057.93   1054.84   1066.49       .96       .27       .03   1067.30
 69000.0        .0   69000.0       .0        .0    8773.1        .0    1300.4      98.0   1067.30
     .23       .00      7.86       .00      .000      .035      .000      .000   1049.60    205.85
 .000973      240.      300.      340.         2         8         0       .00    590.08    795.93
```

SECNO	DEPTH	CWSEL	CRIWS	WSELK	EG	HV	HL	OLOSS	L-BANK ELEV
Q	QLOB	QCH	QROB	ALOB	ACH	AROB	VOL	TWA	R-BANK ELEV
TIME	VLOB	VCH	VROB	XNL	XNCH	XNR	WTN	ELMIN	SSTA
SLOPE	XLOBL	XLCH	XLOBR	ITRIAL	IDC	ICONT	CORAR	TOPWID	ENDST

*SECNO 120.000

3301 HV CHANGED MORE THAN HVINS

3302 WARNING: CONVEYANCE CHANGE OUTSIDE OF ACCEPTABLE RANGE, KRATIO = .56

END CHANNEL BOTTOM TRANSITION
LT CHNL BTM WDTH = 210 FT.
RT CHNL BTM WDTH = 230 FT.

120.000	14.82	1065.22	1061.74	1055.34	1067.53	2.31	.64	.40	1067.10
69000.0	.0	69000.0	.0	.0	5663.2	.0	1366.7	102.8	1067.10
.24	.00	12.18	.00	.000	.035	.000	.000	1050.40	277.04
.003068	327.	400.	497.	2	19	0	.00	467.79	744.83

*SECNO 123.000

3301 HV CHANGED MORE THAN HVINS

3302 WARNING: CONVEYANCE CHANGE OUTSIDE OF ACCEPTABLE RANGE, KRATIO = 1.45

123.000	15.83	1066.83	1060.26	1057.27	1068.31	1.48	.70	.08	1068.80
69000.0	.0	69000.0	.0	.0	7063.4	.0	1416.7	106.5	1068.80
.25	.00	9.77	.00	.000	.035	.000	.000	1051.00	276.12
.001468	342.	342.	342.	2	14	0	.00	469.72	745.84

*SECNO 127.000

127.000	15.60	1067.40	1061.08	1057.78	1068.93	1.52	.60	.01	1068.80
69000.0	.0	69000.0	.0	.0	6964.7	.0	1481.1	110.8	1068.80
.26	.00	9.91	.00	.000	.035	.000	.000	1051.80	275.80
.001538	400.	400.	400.	3	11	0	.00	469.81	745.60

*SECNO 131.000

131.000	17.99	1067.99	1062.02	1058.39	1069.59	1.61	.64	.02	1069.40
69000.0	.0	69000.0	.0	.0	6781.8	.0	1544.2	115.1	1069.40
.27	.00	10.17	.00	.000	.035	.000	.000	1050.00	276.01
.001684	400.	400.	400.	1	15	0	.00	469.39	745.40

```
   SECNO     DEPTH     CWSEL     CRIWS     WSELK     EG        HV        HL        OLOSS     L-BANK ELEV
   Q         QLOB      QCH       QROB      ALOB      ACH       AROB      VOL       TWA       R-BANK ELEV
   TIME      VLOB      VCH       VROB      XNL       XNCH      XNR       WTN       ELMIN     SSTA
   SLOPE     XLOBL     XLCH      XLOBR     ITRIAL    IDC       ICONT     CORAR     TOPWID    ENDST


*SECNO 135.000
  135.000    15.18   1068.58   1063.58   1059.19   1070.41      1.82       .75       .06   1069.60
  69000.0       .0   69000.0       .0       .0    6367.8        .0    1604.6     119.4   1069.90
      .28      .00     10.84       .00      .000      .035      .000      .000   1053.40    275.57
  .002090     400.      400.      400.         2        11         0       .00    469.43    745.00


*SECNO 138.000
  138.000    15.32   1069.32   1063.77   1060.06   1071.01      1.69       .59       .01   1069.60
  69000.0       .0   69000.0       .0       .0    6609.0        .0    1649.3     122.7   1069.60
      .29      .00     10.44       .00      .000      .035      .000      .000   1054.00    274.97
  .001844     300.      300.      300.         2        14         0       .00    470.35    745.32


*SECNO 141.000
  141.000    15.19   1069.79   1064.94   1060.64   1071.66      1.87       .60       .05   1071.00
  69000.0       .0   69000.0       .0       .0    6294.3        .0    1693.7     125.9   1071.00
      .29      .00     10.96       .00      .000      .035      .000      .000   1054.60    276.00
  .002172     300.      300.      300.         2        14         0       .00    469.19    745.19


*SECNO 145.000
            A.D.O.T. CHANNEL INLET LT. BANK, NORTHERN AVENUE CHANNEL
  145.000    15.47   1070.87   1064.65   1061.60   1072.43      1.56       .74       .03   1072.00
  69000.0       .0   69000.0       .0       .0    6880.9        .0    1754.2     130.2   1077.00
      .30      .00     10.03       .00      .000      .035      .000      .000   1055.40    275.66
  .001590     400.      400.      400.         2        14         0       .00    466.23    741.89


*SECNO 147.000
            BEGIN CHANNEL BOTTOM TRANSITION
            LT CHNL BTM WDTH = 210 FT.
            RT CHNL BTM WDTH = 230 FT.
  147.000    15.38   1071.18   1065.04   1061.85   1072.75      1.57       .32       .00   1072.40
  69000.0       .0   69000.0       .0       .0    6867.6        .0    1785.8     132.4   1072.40
      .31      .00     10.05       .00      .000      .035      .000      .000   1055.80    275.84
  .001610     200.      200.      200.         2        14         0       .00    469.55    745.38


*SECNO 150.000
            CHANNEL BOTTOM TAPERS
            LT CHNL BTM WDTH = 260 FT.
            RT CHNL BTM WDTH = 210 FT.
```

SECNO	DEPTH	CWSEL	CRIWS	WSELK	EG	HV	HL	OLOSS	L-BANK ELEV
Q	QLOB	QCH	QROB	ALOB	ACH	AROB	VOL	TWA	R-BANK ELEV
TIME	VLOB	VCH	VROB	XNL	XNCH	XNR	WTN	ELMIN	SSTA
SLOPE	XLOBL	XLCH	XLOBR	ITRIAL	IDC	ICONT	CORAR	TOPWID	ENDST
150.000	15.46	1071.86	1065.26	1062.30	1073.22	1.36	.45	.02	1073.00
69000.0	.0	69000.0	.0	.0	7366.7	.0	1834.8	135.7	1073.00
.32	.00	9.37	.00	.000	.035	.000	.000	1056.40	225.69
.001383	350.	300.	260.	2	11	0	.00	499.77	725.46

*SECNO 155.000

3301 HV CHANGED MORE THAN HVINS

CHANNEL BOTTOM TAPERS
LT CHNL BTM WDTH = 260 FT.
RT CHNL BTM WDTH = 170 FT.

155.000	14.82	1072.22	1068.33	1063.05	1074.43	2.21	.95	.25	1073.30
69000.0	.0	69000.0	.0	.0	5782.9	.0	1910.2	141.2	1073.30
.33	.00	11.93	.00	.000	.035	.000	.000	1057.40	226.26
.002802	585.	500.	460.	2	19	0	.00	458.56	684.82

CCHV= .300 CEHV= .500
*SECNO 158.000

3301 HV CHANGED MORE THAN HVINS

END CHANNEL BOTTOM TRANSITION
LT CHNL BTM WDTH = 162.5 FT.
RT CHNL BTM WDTH = 162.5 FT.

158.000	14.68	1072.68	1069.37	1064.30	1075.86	3.18	.95	.48	1076.50
69000.0	.0	69000.0	.0	.0	4822.3	.0	1946.8	144.0	1075.00
.34	.00	14.31	.00	.000	.035	.000	.000	1058.00	326.64
.003571	360.	300.	265.	2	15	0	.00	350.54	677.18

*SECNO 159.450

3301 HV CHANGED MORE THAN HVINS

DOWNSTREAM BRIDGE SECTION - NORTHERN AVENUE BRIDGE

159.450	16.00	1074.30	1069.32	1064.97	1076.79	2.48	.72	.21	1076.80
69000.0	.0	69000.0	.0	.0	5456.6	.0	1975.7	146.0	1076.80
.34	.00	12.65	.00	.000	.035	.000	.000	1058.30	321.50
.002455	245.	245.	245.	3	15	0	.00	357.00	678.50

SECNO	DEPTH	CWSEL	CRIWS	WSELK	EG	HV	HL	OLOSS	L-BANK ELEV
Q	QLOB	QCH	QROB	ALOB	ACH	AROB	VOL	TWA	R-BANK ELEV
TIME	VLOB	VCH	VROB	XNL	XNCH	XNR	WTN	ELMIN	SSTA
SLOPE	XLOBL	XLCH	XLOBR	ITRIAL	IDC	ICONT	CORAR	TOPWID	ENDST

SPECIAL BRIDGE

SB XK	XKOR	COFQ	RDLEN	BWC	BWP	BAREA	SS	ELCHU	ELCHD
1.05	1.56	2.90	388.00	325.00	28.00	6034.00	1.00	1058.46	1058.30

*SECNO 160.250
CLASS A LOW FLOW

3420 BRIDGE W.S.= 1073.52 BRIDGE VELOCITY= 14.60 CALCULATED CHANNEL AREA= 4701.

EGPRS	EGLWC	H3	QWEIR	QLOW	BAREA	TRAPEZOID AREA	ELLC	ELTRD	WEIRLN
.00	1077.44	.86	0.	69000.	6034.	6004.	1077.46	1082.00	0.

NORTHERN AVENUE BRIDGE - SPECIAL BRIDGE ANALYSIS

160.250	16.71	1075.17	.00	1065.10	1077.44	2.27	.65	.00	1077.00
69000.0	.0	69000.0	.0	.0	5708.2	.0	1985.9	146.6	1077.00
.34	.00	12.09	.00	.000	.035	.000	.000	1058.46	320.83
.002127	80.	80.	80.	0	0	0	.00	358.34	679.17

*SECNO 162.000
BEGIN CHANNEL BOTTOM TRANSITION
LT CHNL BTM WDTH = 162.5 FT.
RT CHNL BTM WDTH = 162.5 FT.

162.000	16.76	1075.56	1069.82	1065.41	1077.81	2.25	.37	.01	1077.00
69000.0	.0	69000.0	.0	.0	5730.6	.0	2008.9	148.1	1077.00
.35	.00	12.04	.00	.000	.035	.000	.000	1058.80	320.73
.002101	175.	175.	175.	0	14	0	.00	358.54	679.27

*SECNO 165.000

3301 HV CHANGED MORE THAN HVINS

3302 WARNING: CONVEYANCE CHANGE OUTSIDE OF ACCEPTABLE RANGE, KRATIO = 1.46

END CHANNEL BOTTOM TRANSITION
LT CHNL BTM WDTH = 300 FT.
RT CHNL BTM WDTH = 250 FT.

165.000	18.21	1077.61	1069.98	1066.04	1078.61	.99	.42	.38	1078.80
69000.0	.0	69000.0	.0	.0	8624.8	.0	2058.3	151.3	1078.80
.36	.00	8.00	.00	.000	.035	.000	.000	1059.40	191.58
.000990	300.	300.	300.	3	21	0	.00	576.63	768.21

```
 SECNO     DEPTH     CWSEL     CRIWS     WSELK     EG        HV        HL        OLOSS     L-BANK ELEV
 Q         QLOB      QCH       QROB      ALOB      ACH       AROB      VOL       TWA       R-BANK ELEV
 TIME      VLOB      VCH       VROB      XNL       XNCH      XNR       WTN       ELMIN     SSTA
 SLOPE     XLOBL     XLCH      XLOBR     ITRIAL    IDC       ICONT     CORAR     TOPWID    ENDST


*SECNO 168.000
 168.000    17.79   1077.89   1070.81   1066.47   1078.96      1.07       .31       .04   1079.00
 69000.0       .0   69000.0       .0       .0    8313.9        .0    2116.7     155.3   1079.00
     .37      .00      8.30       .00      .000      .035      .000      .000   1060.10    192.22
 .001116     300.      300.      300.         2        14         0       .00    575.57    767.79


CCHV=     .100 CEHV=     .300
*SECNO 170.000
            BEGIN CHANNEL BOTTOM TRANSITION
            LT CHNL BTM WDTH = 300 FT.
            RT CHNL BTM WDTH = 250 FT.
 170.000    17.50   1078.10   1071.26   1066.81   1079.20      1.10       .23       .01   1079.20
 69000.0       .0   69000.0       .0       .0    8199.5        .0    2154.6     157.9   1079.20
     .37      .00      8.42       .00      .000      .035      .000      .000   1060.60    193.00
 .001166     200.      200.      200.         0        14         0       .00    574.50    767.50


*SECNO 173.000

3301 HV CHANGED MORE THAN HVINS


3302 WARNING:  CONVEYANCE CHANGE OUTSIDE OF ACCEPTABLE RANGE,  KRATIO =   .66

            END CHNL BTM TRANSITION RT.
            RT CHNL BTM WDTH = 157 FT.
 173.000    16.42   1077.82   1073.77   1067.16   1080.04      2.22       .51       .34   1079.00
 69000.0       .0   69000.0       .0       .0    5765.4        .0    2202.7     161.4   1079.00
     .38      .00     11.97       .00      .000      .035      .000      .000   1061.40    226.45
 .002708     300.      300.      300.         2        19         0       .00    446.97    673.42


*SECNO 176.000
 176.000    16.30   1078.50   1074.30   1068.79   1080.91      2.41       .81       .06   1079.60
 69000.0       .0   69000.0       .0       .0    5540.7        .0    2241.6     164.3   1079.60
     .39      .00     12.45       .00      .000      .035      .000      .000   1062.20    268.09
 .002723     300.      300.      300.         2        15         0       .00    405.22    673.31


*SECNO 177.000
```

SECNO	DEPTH	CWSEL	CRIWS	WSELK	EG	HV	HL	OLOSS	L-BANK ELEV
Q	QLOB	QCH	QROB	ALOB	ACH	AROB	VOL	TWA	R-BANK ELEV
TIME	VLOB	VCH	VROB	XNL	XNCH	XNR	WTN	ELMIN	SSTA
SLOPE	XLOBL	XLCH	XLOBR	ITRIAL	IDC	ICONT	CORAR	TOPWID	ENDST

3301 HV CHANGED MORE THAN HVINS

BEGIN CHNL BTM TRANSITION RT.
RT CHNL BTM WDTH = 157 FT.

177.000	16.98	1079.38	1072.71	1069.56	1081.18	1.80	.21	.06	1080.50
69000.0	.0	69000.0	.0	.0	6400.2	.0	2255.3	165.3	1080.50
.39	.00	10.78	.00	.000	.035	.000	.000	1062.40	280.21
.001641	100.	100.	100.	2	14	0	.00	393.78	673.98

*SECNO 179.000

END CHNL BTM TRANSITION LT.
LT CHNL BTM WDTH = 175 FT.

179.000	17.05	1079.85	1072.97	1069.79	1081.51	1.67	.32	.01	1081.00
69000.0	.0	69000.0	.0	.0	6661.9	.0	2285.3	167.1	1081.00
.40	.00	10.36	.00	.000	.035	.000	.000	1062.80	309.11
.001529	200.	200.	200.	2	14	0	.00	416.43	725.55

*SECNO 181.000

END CHNL BTM TRANSITION RT.
RT CHNL BTM WDTH = 260 FT.

181.000	17.24	1080.54	1072.65	1070.08	1081.81	1.27	.26	.04	1081.60
69000.0	.0	69000.0	.0	.0	7632.1	.0	2318.1	169.2	1081.60
.40	.00	9.04	.00	.000	.035	.000	.000	1063.30	308.81
.001133	200.	200.	200.	2	11	0	.00	468.44	777.25

*SECNO 183.000

3301 HV CHANGED MORE THAN HVINS

3302 WARNING: CONVEYANCE CHANGE OUTSIDE OF ACCEPTABLE RANGE, KRATIO = .62

183.000	16.42	1080.22	1076.49	1069.50	1082.45	2.23	.34	.29	1081.30
69000.0	.0	69000.0	.0	.0	5758.1	.0	2348.8	171.3	1081.30
.41	.00	11.98	.00	.000	.035	.000	.000	1063.80	309.66
.002912	200.	200.	200.	2	19	0	.00	466.76	776.42

```
   SECNO     DEPTH     CWSEL     CRIWS     WSELK     EG        HV        HL        OLOSS     L-BANK ELEV
   Q         QLOB      QCH       QROB      ALOB      ACH       AROB      VOL       TWA       R-BANK ELEV
   TIME      VLOB      VCH       VROB      XNL       XNCH      XNR       WTN       ELMIN     SSTA
   SLOPE     XLOBL     XLCH      XLOBR     ITRIAL    IDC       ICONT     CORAR     TOPWID    ENDST


*SECNO 188.000
  188.000    16.91   1081.91   1076.68   1072.71   1083.69      1.78      1.20       .04   1083.00
  69000.0       .0   69000.0       .0       .0    6440.8        .0    2418.8     176.7   1083.00
      .42      .00     10.71       .00      .000      .035      .000      .000   1065.00    309.17
  .002009     500.      500.      500.         2        19         0       .00    467.74    776.91


*SECNO 193.000
            STA. 192+60.12 IS P.O.C. OF CURVE TO THE RT.
  193.000    16.75   1082.95   1077.45   1073.79   1084.67      1.72       .97       .01   1084.00
  69000.0       .0   69000.0       .0       .0    6565.4        .0    2493.5     182.0   1084.00
      .43      .00     10.51       .00      .000      .035      .000      .000   1066.20    309.29
  .001884     500.      500.      500.         2        14         0       .00    467.46    776.75


*SECNO 197.000
            BEGIN CHANNEL BOTTOM TRANSITION LEFT AND RIGHT
            TO MATCH PAST DEIGN CROSS SECTIONS.
  197.000    16.36   1083.56   1079.54   1074.60   1085.69      2.13       .90       .13   1084.60
  69000.0       .0   69000.0       .0       .0    5887.7        .0    2550.7     186.3   1084.60
      .44      .00     11.72       .00      .000      .035      .000      .000   1067.20    309.69
  .002708     400.      400.      400.         2        19         0       .00    466.67    776.36


CCHV=     .300 CEHV=     .500
*SECNO 199.000
  199.000    16.53   1084.23   1077.76   1075.38   1086.01      1.77       .21       .11   1086.20
  69000.0       .0   69000.0       .0       .0    6457.7        .0    2564.8     187.3   1086.20
      .45      .00     10.68       .00      .000      .035      .000      .000   1067.70    319.46
  .001660     200.      100.      200.         2        14         0       .00    407.07    726.54


*SECNO 201.100

3301 HV CHANGED MORE THAN HVINS

            DOWNSTREAM BRIDGE SECTION - 99TH AVENUE BRIDGE
  201.100    16.03   1084.23   1079.48   1075.51   1086.87      2.64       .43       .43   1086.70
  69000.0       .0   69000.0       .0       .0    5291.7        .0    2593.2     189.1   1086.70
      .45      .00     13.04       .00      .000      .035      .000      .000   1068.20    326.97
  .002613     210.      210.      210.         2        14         0       .00    346.07    673.03
```

SECNO	DEPTH	CWSEL	CRIWS	WSELK	EG	HV	HL	OLOSS	L-BANK ELEV
Q	QLOB	QCH	QROB	ALOB	ACH	AROB	VOL	TWA	R-BANK ELEV
TIME	VLOB	VCH	VROB	XNL	XNCH	XNR	WTN	ELMIN	SSTA
SLOPE	XLOBL	XLCH	XLOBR	ITRIAL	IDC	ICONT	CORAR	TOPWID	ENDST

SPECIAL BRIDGE

SB	XK	XKOR	COFQ	RDLEN	BWC	BWP	BAREA	SS	ELCHU	ELCHD
	1.05	1.56	2.90	376.00	314.00	21.00	5763.00	1.00	1068.40	1068.20

*SECNO 201.900
PRESSURE FLOW

EGPRS	EGLWC	H3	QWEIR	QPR	BAREA	TRAPEZOID AREA	ELLC	ELTRD	WEIRLN
1087.70	1087.44	.74	0.	69000.	5763.	5697.	1086.70	1091.80	0.

99TH AVENUE BRIDGE - SPECIAL BRIDGE ANALYSIS

201.900	16.96	1085.36	.00	1075.59	1087.70	2.35	.83	.00	1086.90
69000.0	.0	69000.0	.0	.0	5613.5	.0	2603.2	189.8	1086.90
.45	.00	12.29	.00	.000	.035	.000	.000	1068.40	326.04
.002167	80.	80.	80.	3	0	0	.00	347.92	673.96

*SECNO 204.000

204.000	16.91	1085.81	1080.17	1075.89	1088.17	2.36	.46	.01	1087.40
69000.0	.0	69000.0	.0	.0	5595.0	.0	2630.2	191.5	1087.40
.46	.00	12.33	.00	.000	.035	.000	.000	1068.90	326.09
.002190	210.	210.	210.	2	14	0	.00	347.82	673.91

CCHV= .300 CEHV= .500
*SECNO 209.300

209.300	16.77	1086.96	1081.46	1076.78	1089.37	2.40	1.18	.02	1088.19
69000.0	.0	69000.0	.0	.0	5547.9	.0	2698.0	195.7	1088.19
.47	.00	12.44	.00	.000	.035	.000	.000	1070.19	326.23
.002249	530.	530.	530.	0	14	0	.00	347.55	673.77

CCHV= .300 CEHV= .500
*SECNO 212.600

3301 HV CHANGED MORE THAN HVINS

DOWNSTREAM BRIDGE SECTION - OLIVE AVENUE BRIDGE

212.600	16.11	1087.11	1084.11	1077.39	1091.19	4.08	.98	.84	1089.60
69000.0	.0	69000.0	.0	.0	4254.7	.0	2735.1	198.1	1089.60
.47	.00	16.22	.00	.000	.035	.000	.000	1071.00	359.89
.004128	330.	330.	330.	2	15	0	.00	280.22	640.11

SECNO	DEPTH	CWSEL	CRIWS	WSELK	EG	HV	HL	OLOSS	L-BANK ELEV
Q	QLOB	QCH	QROB	ALOB	ACH	AROB	VOL	TWA	R-BANK ELEV
TIME	VLOB	VCH	VROB	XNL	XNCH	XNR	WTN	ELMIN	SSTA
SLOPE	XLOBL	XLCH	XLOBR	ITRIAL	IDC	ICONT	CORAR	TOPWID	ENDST

SPECIAL BRIDGE

5227 DOWNSTREAM ELEV IS 1081.76 , NOT 1087.11 HYDRAULIC JUMP OCCURS DOWNSTREAM (IF LOW FLOW CONTROLS)

SB	XK	XKOR	COFQ	RDLEN	BWC	BWP	BAREA	SS	ELCHU	ELCHD
	1.05	1.56	2.90	300.00	248.00	18.50	4481.60	1.00	1071.50	1071.00

*SECNO 213.500
3280 CROSS SECTION 213.50 EXTENDED .11 FEET

3301 HV CHANGED MORE THAN HVINS

PRESSURE FLOW

EGPRS	EGLWC	H3	QWEIR	QPR	BAREA	TRAPEZOID AREA	ELLC	ELTRD	WEIRLN
1092.85	1092.30	.00	0.	69000.	4482.	4482.	1089.60	1095.00	0.

OLIVE AVENUE BRIDGE - SPECIAL BRIDGE ANALYSIS

213.500	18.20	1089.70	.00	1077.74	1092.85	3.15	1.66	.00	1089.60
69000.0	.0	69000.0	.0	.0	4848.3	.0	2744.5	198.6	1089.60
.48	.00	14.23	.00	.000	.035	.000	.000	1071.50	357.90
.002742	90.	90.	90.	3	0	0	.00	284.20	642.10

CCHV= .100 CEHV= .300
*SECNO 213.700

213.700	16.51	1089.51	1085.67	1077.32	1093.02	3.51	.06	.11	1095.00
69000.0	.0	69000.0	.0	.0	4587.0	.0	2746.7	198.8	1096.20
.48	.00	15.04	.00	.000	.035	.000	.000	1073.00	352.59
.003424	20.	20.	20.	2	19	0	.00	293.96	646.55

*SECNO 217.500

3301 HV CHANGED MORE THAN HVINS

3302 WARNING: CONVEYANCE CHANGE OUTSIDE OF ACCEPTABLE RANGE, KRATIO = 1.51

217.500	18.05	1092.25	1084.89	1080.49	1094.02	1.77	.82	.17	1096.00
69000.0	.0	69000.0	.0	.0	6471.2	.0	2794.9	201.7	1097.00
.49	.00	10.66	.00	.000	.035	.000	.000	1074.20	308.75
.001497	380.	380.	380.	3	14	0	.00	376.51	685.25

```
 SECNO     DEPTH     CWSEL     CRIWS     WSELK     EG        HV        HL        OLOSS     L-BANK ELEV
 Q         QLOB      QCH       QROB      ALOB      ACH       AROB      VOL       TWA       R-BANK ELEV
 TIME      VLOB      VCH       VROB      XNL       XNCH      XNR       WTN       ELMIN     SSTA
 SLOPE     XLOBL     XLCH      XLOBR     ITRIAL    IDC       ICONT     CORAR     TOPWID    ENDST


*SECNO 221.100
 221.100     17.54   1092.84   1085.72   1081.20   1094.56      1.72       .54       .00   1096.60
 69000.0       .0   69000.0       .0        .0    6553.2        .0    2848.7     204.9   1098.00
     .50       .00     10.53       .00      .000      .035      .000      .000   1075.30    298.76
 .001506     360.      360.      360.         2        11         0       .00    391.09    689.84


*SECNO 227.500

3301 HV CHANGED MORE THAN HVINS

 227.500     17.21   1094.31   1085.82   1082.60   1095.38      1.07       .75       .06   1099.00
 69000.0       .0   69000.0       .0        .0    8306.0        .0    2957.9     211.4   1099.00
     .52       .00      8.31       .00      .000      .035      .000      .000   1077.10    249.93
 .000938     640.      640.      640.         2         8         0       .00    500.36    750.29


*SECNO 233.550

3301 HV CHANGED MORE THAN HVINS

 233.550     15.62   1094.62   1088.41   1083.69   1096.25      1.64       .70       .17   1101.70
 69000.0       .0   69000.0       .0        .0    6720.0        .0    3057.9     217.7   1101.60
     .53       .00     10.27       .00      .000      .035      .000      .000   1079.00    277.08
 .001632     580.      580.      580.         2        11         0       .00    445.93    723.02


*SECNO 238.660

3301 HV CHANGED MORE THAN HVINS


3302 WARNING:  CONVEYANCE CHANGE OUTSIDE OF ACCEPTABLE RANGE,  KRATIO =   .56

 238.660     13.57   1094.17   1092.36   1085.54   1098.42      4.24      1.38       .78   1103.30
 69000.0       .0   69000.0       .0        .0    4174.4        .0    3122.5     222.3   1103.70
     .54       .00     16.53       .00      .000      .035      .000      .000   1080.60    339.20
 .005191     516.      516.      516.         3        15         0       .00    321.19    660.39


*SECNO 238.690
```

```
 SECNO     DEPTH     CWSEL     CRIWS     WSELK     EG        HV        HL        OLOSS     L-BANK ELEV
 Q         QLOB      QCH       QROB      ALOB      ACH       AROB      VOL       TWA       R-BANK ELEV
 TIME      VLOB      VCH       VROB      XNL       XNCH      XNR       WTN       ELMIN     SSTA
 SLOPE     XLOBL     XLCH      XLOBR     ITRIAL    IDC       ICONT     CORAR     TOPWID    ENDST


3301 HV CHANGED MORE THAN HVINS

7185 MINIMUM SPECIFIC ENERGY
3720 CRITICAL DEPTH ASSUMED
   238.690     11.63   1095.23   1095.23   1087.55   1100.86      5.63       .02       .42   1103.40
   69000.0       .0   69000.0       .0       .0    3622.3        .0    3122.7     222.3   1103.90
       .54      .00     19.05       .00      .000      .035      .000      .000   1083.60    333.17
   .008343       3.        3.        3.         0        11         0       .00    323.16    656.33


CCHV=     .100 CEHV=     .300
*SECNO 242.000

3301 HV CHANGED MORE THAN HVINS


3302 WARNING:  CONVEYANCE CHANGE OUTSIDE OF ACCEPTABLE RANGE,  KRATIO =  1.64

   242.000     15.30   1099.75   1095.81   1090.47   1102.72      2.97      1.59       .27   1104.00
   69000.0       .0   69000.0       .0       .0    4988.8        .0    3155.4     224.8   1104.00
       .55      .00     13.83       .00      .000      .035      .000      .000   1084.45    329.26
   .003119      331.      331.      331.         3         8         0       .00    341.49    670.74


*SECNO 247.000
   247.000     15.79   1101.46   1096.99   1091.79   1104.21      2.76      1.47       .02   1104.50
   69000.0       .0   69000.0       .0       .0    5180.0        .0    3213.8     228.7   1104.50
       .56      .00     13.32       .00      .000      .035      .000      .000   1085.67    328.04
   .002781      500.      500.      500.         3        15         0       .00    343.91    671.96


CCHV=     .100 CEHV=     .300
*SECNO 270.500
CHIMP CLSTA=    9955.00 CELCH=    1086.50 BW=     365.00 STCHL=    9753.15 STCHR=   10175.00
EXCAVATION DATA
AEX=    1319.1SQ-FT     VEXR=        .0K*CU-YD     VEXT=        .0K*CU-YD


3301 HV CHANGED MORE THAN HVINS


3470 ENCROACHMENT STATIONS=     9750.0   10218.0  TYPE=      1  TARGET=    -9750.000
```

```
 SECNO     DEPTH     CWSEL     CRIWS     WSELK     EG        HV        HL        OLOSS     L-BANK ELEV
 Q         QLOB      QCH       QROB      ALOB      ACH       AROB      VOL       TWA       R-BANK ELEV
 TIME      VLOB      VCH       VROB      XNL       XNCH      XNR       WTN       ELMIN     SSTA
 SLOPE     XLOBL     XLCH      XLOBR     ITRIAL    IDC       ICONT     CORAR     TOPWID    ENDST


3495 OVERBANK AREA ASSUMED NON-EFFECTIVE, ELLEA=     1105.85 ELREA=     1107.00

 270.500     17.23   1103.73   1096.72   1093.11   1105.43      1.70      1.11       .11   1105.85
 69000.0       .0   69000.0       .0       .0    6588.4        .0    3288.8     233.5   1107.00
     .57      .00     10.47       .00      .000      .035      .000      .000   1086.50   9755.26
 .001516     338.      555.      338.         2        14         0       .00    399.47  10154.74


*SECNO 273.500
CHIMP CLSTA=    9919.00 CELCH=    1087.20 BW=     375.00 STCHL=    9712.31 STCHR=   10127.15
EXCAVATION DATA
AEX=    2554.4SQ-FT     VEXR=      22.2K*CU-YD     VEXT=       22.2K*CU-YD


3470 ENCROACHMENT STATIONS=     9640.0   10160.0  TYPE=      1  TARGET=    -9640.000

3495 OVERBANK AREA ASSUMED NON-EFFECTIVE, ELLEA=     1106.39 ELREA=     1107.85

 273.500     17.05   1104.25   1097.27   1093.56   1105.90      1.66       .47       .00   1106.39
 69000.0       .0   69000.0       .0       .0    6682.9        .0    3336.0     236.4   1107.85
     .58      .00     10.32       .00      .000      .035      .000      .000   1087.20   9714.45
 .001493     315.      310.      310.         2        11         0       .00    409.09  10123.55


*SECNO 277.900
CHIMP CLSTA=    9927.00 CELCH=    1088.30 BW=     360.00 STCHL=    9729.30 STCHR=   10137.00
EXCAVATION DATA
AEX=    2900.7SQ-FT     VEXR=      42.4K*CU-YD     VEXT=       64.7K*CU-YD


3495 OVERBANK AREA ASSUMED NON-EFFECTIVE, ELLEA=     1106.00 ELREA=     1108.50

 277.900     16.45   1104.75   1098.61   1094.22   1106.68      1.93       .69       .08   1106.00
 69000.0       .0   69000.0       .0       .0    6191.1        .0    3398.1     240.2   1108.50
     .59      .00     11.14       .00      .000      .035      .000      .000   1088.30   9730.55
 .001825     420.      420.      420.         2        14         0       .00    392.89  10123.45


*SECNO 281.800
CHIMP CLSTA=    9932.00 CELCH=    1089.20 BW=     330.00 STCHL=    9747.63 STCHR=   10117.50
```

```
 SECNO     DEPTH     CWSEL     CRIWS     WSELK     EG        HV        HL        OLOSS     L-BANK ELEV
 Q         QLOB      QCH       QROB      ALOB      ACH       AROB      VOL       TWA       R-BANK ELEV
 TIME      VLOB      VCH       VROB      XNL       XNCH      XNR       WTN       ELMIN     SSTA
 SLOPE     XLOBL     XLCH      XLOBR     ITRIAL    IDC       ICONT     CORAR     TOPWID    ENDST


EXCAVATION DATA
AEX=    3280.4SQ-FT     VEXR=      46.9K*CU-YD     VEXT=      111.6K*CU-YD


3495 OVERBANK AREA ASSUMED NON-EFFECTIVE, ELLEA=      1108.57 ELREA=      1109.70

  281.800     16.07   1105.27   1100.11   1095.08   1107.66      2.39       .85       .14   1108.57
  69000.0       .0   69000.0       .0       .0    5560.9        .0    3453.4     243.8   1109.70
      .60       .00     12.41       .00      .000      .035      .000      .000   1089.20   9750.93
  .002348     410.      410.      410.         2        14         0       .00    362.14  10113.07


CCHV=     .300 CEHV=     .500
*SECNO 288.000
CHIMP CLSTA=    9988.00 CELCH=    1092.20 BW=     274.00 STCHL=    9829.45 STCHR=   10145.00
EXCAVATION DATA
AEX=    1602.9SQ-FT     VEXR=      54.3K*CU-YD     VEXT=      165.9K*CU-YD


3301 HV CHANGED MORE THAN HVINS


3302 WARNING:  CONVEYANCE CHANGE OUTSIDE OF ACCEPTABLE RANGE,  KRATIO =   .66


3495 OVERBANK AREA ASSUMED NON-EFFECTIVE, ELLEA=      1113.75 ELREA=      1112.00

  288.000     14.04   1106.24   1104.50   1097.05   1110.76      4.52      2.04      1.06   1113.75
  69000.0       .0   69000.0       .0       .0    4044.6        .0    3519.5     248.4   1112.00
      .61       .00     17.06       .00      .000      .035      .000      .000   1092.20   9836.96
  .005332     600.      600.      600.         2        15         0       .00    302.08  10139.04


*SECNO 290.000

3301 HV CHANGED MORE THAN HVINS


3495 OVERBANK AREA ASSUMED NON-EFFECTIVE, ELLEA=      1117.80 ELREA=      1117.80

  290.000     14.06   1107.06   1105.73   1098.54   1112.26      5.21      1.16       .34   1117.80
  69000.0       .0   69000.0       .0       .0    3768.7        .0    3537.5     249.7   1117.80
      .61       .00     18.31       .00      .000      .035      .000      .000   1093.00   9865.00
  .006323     220.      200.      160.         2        11         0       .00    271.00  10136.00
```

SECNO	DEPTH	CWSEL	CRIWS	WSELK	EG	HV	HL	OLOSS	L-BANK ELEV
Q	QLOB	QCH	QROB	ALOB	ACH	AROB	VOL	TWA	R-BANK ELEV
TIME	VLOB	VCH	VROB	XNL	XNCH	XNR	WTN	ELMIN	SSTA
SLOPE	XLOBL	XLCH	XLOBR	ITRIAL	IDC	ICONT	CORAR	TOPWID	ENDST

SPECIAL BRIDGE

5227 DOWNSTREAM ELEV IS 1104.12 , NOT 1107.06 HYDRAULIC JUMP OCCURS DOWNSTREAM (IF LOW FLOW CONTROLS)

SB	XK	XKOR	COFQ	RDLEN	BWC	BWP	BAREA	SS	ELCHU	ELCHD
	.90	1.56	2.90	.00	271.00	10.50	4974.00	.00	1093.70	1093.30

*SECNO 291.000

3301 HV CHANGED MORE THAN HVINS

CLASS B LOW FLOW

3420 BRIDGE W.S.= 1106.46 BRIDGE VELOCITY= 20.43 CALCULATED CHANNEL AREA= 3324.

EGPRS	EGLWC	H3	QWEIR	QLOW	BAREA	TRAPEZOID AREA	ELLC	ELTRD	WEIRLN
.00	1113.23	.00	0.	69000.	4974.	5314.	1114.10	1119.10	0.

3495 OVERBANK AREA ASSUMED NON-EFFECTIVE, ELLEA= 1117.80 ELREA= 1117.80

291.000	16.24	1109.24	.00	1098.80	1113.23	3.99	.96	.00	1116.00
69000.0	.0	69000.0	.0	.0	4306.2	.0	3544.6	250.1	1116.00
.62	.00	16.02	.00	.000	.035	.000	.000	1093.00	9865.00
.004127	77.	77.	77.	0	0	0	.00	271.00	10136.00

CCHV= .100 CEHV= .300
*SECNO 293.000
CHIMP CLSTA= 10007.00 CELCH= 1094.00 BW= 231.00 STCHL= 9869.90 STCHR= 10144.00
EXCAVATION DATA
AEX= -4.0SQ-FT VEXR= 5.9K*CU-YD VEXT= 171.8K*CU-YD

3301 HV CHANGED MORE THAN HVINS

293.000	15.38	1109.38	1107.75	1099.70	1114.53	5.15	.95	.35	1115.60
69000.0	.0	69000.0	.0	.0	3789.2	.0	3563.2	251.4	1115.00
.62	.00	18.21	.00	.000	.035	.000	.000	1094.00	9876.12
.005555	200.	200.	200.	3	11	0	.00	261.76	10137.88

SECNO	DEPTH	CWSEL	CRIWS	WSELK	EG	HV	HL	OLOSS	L-BANK ELEV
Q	QLOB	QCH	QROB	ALOB	ACH	AROB	VOL	TWA	R-BANK ELEV
TIME	VLOB	VCH	VROB	XNL	XNCH	XNR	WTN	ELMIN	SSTA
SLOPE	XLOBL	XLCH	XLOBR	ITRIAL	IDC	ICONT	CORAR	TOPWID	ENDST

*SECNO 297.000
CHIMP CLSTA= 10006.00 CELCH= 1096.10 BW= 246.00 STCHL= 9863.04 STCHR= 10150.00
EXCAVATION DATA
AEX= -26.4SQ-FT VEXR= -.2K*CU-YD VEXT= 171.6K*CU-YD

3301 HV CHANGED MORE THAN HVINS

297.000	16.42	1112.52	1109.30	1102.04	1116.50	3.98	1.86	.12	1116.05
69000.0	.0	69000.0	.0	.0	4307.3	.0	3600.4	253.9	1115.00
.63	.00	16.02	.00	.000	.035	.000	.000	1096.10	9866.59
.003943	400.	400.	400.	3	11	0	.00	278.83	10145.42

*SECNO 302.000
CHIMP CLSTA= 9999.00 CELCH= 1098.20 BW= 197.00 STCHL= 9882.00 STCHR= 10118.78
EXCAVATION DATA
AEX= 3.1SQ-FT VEXR= -.2K*CU-YD VEXT= 171.3K*CU-YD

3301 HV CHANGED MORE THAN HVINS

7185 MINIMUM SPECIFIC ENERGY
3720 CRITICAL DEPTH ASSUMED

302.000	15.15	1113.35	1113.35	1104.40	1120.51	7.15	2.89	.95	1116.00
69000.0	.0	69000.0	.0	.0	3214.5	.0	3646.1	256.9	1119.48
.63	.00	21.47	.00	.000	.035	.000	.000	1098.20	9885.35
.008016	530.	530.	530.	0	11	0	.00	227.30	10112.65

*SECNO 305.000
CHIMP CLSTA= 9992.00 CELCH= 1099.50 BW= 188.00 STCHL= 9880.94 STCHR= 10110.00
EXCAVATION DATA
AEX= 244.7SQ-FT VEXR= 1.3K*CU-YD VEXT= 172.6K*CU-YD

3301 HV CHANGED MORE THAN HVINS

305.000	16.86	1116.36	1115.10	1106.05	1122.56	6.20	1.96	.09	1116.56
69000.0	.0	69000.0	.0	.0	3451.7	.0	3667.5	258.4	1119.50
.64	.00	19.99	.00	.000	.035	.000	.000	1099.50	9881.15
.006186	280.	280.	280.	3	8	0	.00	221.70	10102.85

SECNO	DEPTH	CWSEL	CRIWS	WSELK	EG	HV	HL	OLOSS	L-BANK ELEV
Q	QLOB	QCH	QROB	ALOB	ACH	AROB	VOL	TWA	R-BANK ELEV
TIME	VLOB	VCH	VROB	XNL	XNCH	XNR	WTN	ELMIN	SSTA
SLOPE	XLOBL	XLCH	XLOBR	ITRIAL	IDC	ICONT	CORAR	TOPWID	ENDST

*SECNO 306.750
CHIMP CLSTA= 9959.00 CELCH= 1100.30 BW= 289.00 STCHL= 9798.80 STCHR= 10123.24
EXCAVATION DATA
AEX= 1770.8SQ-FT VEXR= 8.0K*CU-YD VEXT= 180.6K*CU-YD

3280 CROSS SECTION 306.75 EXTENDED 5.85 FEET

3301 HV CHANGED MORE THAN HVINS

3302 WARNING: CONVEYANCE CHANGE OUTSIDE OF ACCEPTABLE RANGE, KRATIO = 2.37

306.750	21.56	1121.86	1112.18	1107.89	1123.49	1.63	.47	.46	1116.00
69000.0	394.8	68592.8	12.4	104.2	6675.1	9.5	3692.8	259.8	1120.04
.64	3.79	10.28	1.31	.035	.035	.035	.000	1100.30	9781.00
.001102	215.	215.	215.	3	19	0	.00	352.71	10133.71

*SECNO 310.000
CHIMP CLSTA= 9965.00 CELCH= 1101.60 BW= 330.00 STCHL= 9784.66 STCHR= 10149.29
EXCAVATION DATA
AEX= 1007.5SQ-FT VEXR= 16.5K*CU-YD VEXT= 197.1K*CU-YD

3280 CROSS SECTION 310.00 EXTENDED 5.48 FEET

310.000	20.88	1122.48	1112.54	1108.39	1123.84	1.36	.33	.03	1116.94
69000.0	62.4	68664.1	273.5	25.7	7310.4	108.3	3745.1	262.6	1120.90
.65	2.43	9.39	2.52	.035	.035	.035	.000	1101.60	9780.00
.000946	320.	320.	320.	2	8	0	.00	405.00	10185.00

*SECNO 313.200
CHIMP CLSTA= 10000.00 CELCH= 1103.00 BW= 330.00 STCHL= 9820.00 STCHR= 10183.25
EXCAVATION DATA
AEX= 1069.6SQ-FT VEXR= 12.1K*CU-YD VEXT= 209.2K*CU-YD

3280 CROSS SECTION 313.20 EXTENDED 5.69 FEET

313.200	19.69	1122.69	1113.91	1108.88	1124.22	1.53	.33	.05	1117.00
69000.0	441.3	68517.1	41.7	113.8	6873.3	23.1	3797.4	265.5	1121.25
.66	3.88	9.97	1.80	.035	.035	.035	.000	1103.00	9800.00
.001147	315.	315.	315.	2	11	0	.00	398.00	10198.00

SECNO	DEPTH	CWSEL	CRIWS	WSELK	EG	HV	HL	OLOSS	L-BANK ELEV
Q	QLOB	QCH	QROB	ALOB	ACH	AROB	VOL	TWA	R-BANK ELEV
TIME	VLOB	VCH	VROB	XNL	XNCH	XNR	WTN	ELMIN	SSTA
SLOPE	XLOBL	XLCH	XLOBR	ITRIAL	IDC	ICONT	CORAR	TOPWID	ENDST

*SECNO 318.000
CHIMP CLSTA= 10000.00 CELCH= 1105.10 BW= 330.00 STCHL= 9820.00 STCHR= 10182.90
EXCAVATION DATA
AEX= 52.1SQ-FT VEXR= 10.4K*CU-YD VEXT= 219.6K*CU-YD

3280 CROSS SECTION 318.00 EXTENDED .12 FEET

318.000	18.02	1123.12	1116.02	1110.29	1124.99	1.88	.67	.10	1120.00
69000.0	74.4	68924.9	.7	32.3	6265.7	1.8	3873.7	270.0	1123.00
.67	2.30	11.00	.40	.035	.035	.035	.000	1105.10	9800.00
.001580	500.	500.	500.	2	11	0	.00	398.00	10198.00

*SECNO 320.050
CHIMP CLSTA= 10000.00 CELCH= 1106.00 BW= 330.00 STCHL= 9816.00 STCHR= 10184.00
EXCAVATION DATA
AEX= 152.0SQ-FT VEXR= 1.1K*CU-YD VEXT= 220.7K*CU-YD

320.050	17.52	1123.52	1116.91	1111.41	1125.51	2.00	.48	.04	1125.00
69000.0	.0	69000.0	.0	.0	6085.8	.0	3915.0	272.6	1125.00
.68	.00	11.34	.00	.000	.035	.000	.000	1106.00	9817.49
.001764	290.	290.	290.	0	14	0	.00	365.03	10182.51

*SECNO 328.000
CHIMP CLSTA= 10000.00 CELCH= 1109.10 BW= 330.00 STCHL= 9817.10 STCHR= 10182.90
EXCAVATION DATA
AEX= 195.1SQ-FT VEXR= 4.1K*CU-YD VEXT= 224.8K*CU-YD

3301 HV CHANGED MORE THAN HVINS

328.000	15.36	1124.46	1120.01	1113.86	1127.09	2.63	1.39	.19	1127.00
69000.0	.0	69000.0	.0	.0	5305.6	.0	3998.7	277.9	1127.00
.69	.00	13.01	.00	.000	.035	.000	.000	1109.10	9819.64
.002722	640.	640.	640.	2	14	0	.00	360.73	10180.36

*SECNO 330.000
CHIMP CLSTA= 10000.00 CELCH= 1110.10 BW= 330.00 STCHL= 9817.60 STCHR= 10182.40
EXCAVATION DATA
AEX= 76.6SQ-FT VEXR= .9K*CU-YD VEXT= 225.7K*CU-YD

```
 SECNO     DEPTH     CWSEL     CRIWS     WSELK     EG        HV        HL        OLOSS     L-BANK ELEV
 Q         QLOB      QCH       QROB      ALOB      ACH       AROB      VOL       TWA       R-BANK ELEV
 TIME      VLOB      VCH       VROB      XNL       XNCH      XNR       WTN       ELMIN     SSTA
 SLOPE     XLOBL     XLCH      XLOBR     ITRIAL    IDC       ICONT     CORAR     TOPWID    ENDST

 330.000     14.70   1124.80   1121.05   1114.76   1127.68      2.88       .51       .08   1127.50
 69000.0       .0   69000.0       .0        .0    5065.9        .0    4019.5     279.4   1127.50
     .70       .00     13.62       .00      .000      .035      .000      .000   1110.10   9820.30
 .003160     175.      175.      175.         2        15         0       .00    359.39  10179.70

*SECNO 334.000
CHIMP CLSTA=   10000.00 CELCH=    1112.00 BW=     330.00 STCHL=    9818.00 STCHR=   10182.00
EXCAVATION DATA
AEX=      68.0SQ-FT     VEXR=       1.1K*CU-YD     VEXT=      226.8K*CU-YD

 334.000     14.02   1126.02   1122.92   1116.99   1129.20      3.17      1.43       .09   1129.00
 69000.0       .0   69000.0       .0        .0    4827.4        .0    4067.2     282.8   1129.00
     .71       .00     14.29       .00      .000      .035      .000      .000   1112.00   9820.97
 .003686     420.      420.      420.         0        15         0       .00    358.06  10179.03

CCHV=     .200 CEHV=     .400
*SECNO 343.000
CHIMP CLSTA=   10025.00 CELCH=    1115.70 BW=     329.00 STCHL=    9861.00 STCHR=   10206.30
EXCAVATION DATA
AEX=    2385.5SQ-FT     VEXR=      40.9K*CU-YD     VEXT=      267.7K*CU-YD

3495 OVERBANK AREA ASSUMED NON-EFFECTIVE, ELLEA=      1132.00 ELREA=      1132.00

 343.000     13.67   1129.37   1126.69   1120.84   1132.88      3.51      3.55       .13   1132.00
 69000.0       .0   69000.0       .0        .0    4591.7        .0    4164.5     290.1   1132.00
     .72       .00     15.03       .00      .000      .035      .000      .000   1115.70   9861.00
 .004228     900.      900.      900.         2        15         0       .00    342.67  10203.67

*SECNO 344.900

3495 OVERBANK AREA ASSUMED NON-EFFECTIVE, ELLEA=      1132.00 ELREA=      1132.00

 344.900     14.28   1130.58   1127.23   1121.67   1133.69      3.10       .73       .08   1132.00
 69000.0       .0   69000.0       .0        .0    4879.7        .0    4185.1     291.6   1132.00
     .73       .00     14.14       .00      .000      .035      .000      .000   1116.30   9824.07
 .003510     110.      190.      260.         2        15         0       .00    352.76  10176.84
```

THIS RUN EXECUTED 30OCT91 11:34:07

****
HEC-2 WATER SURFACE PROFILES

Version 4.6.0; February 1991
****

NOTE- ASTERISK (*) AT LEFT OF CROSS-SECTION NUMBER INDICATES MESSAGE IN SUMMARY OF ERRORS LIST

10-YEAR EVENT

SUMMARY PRINTOUT

	SECNO	Q	CWSEL	VCH	DEPTH	TOPWID	SSTA	ENDST
	39.000	13500.00	1036.06	3.33	8.06	818.79	9592.94	10411.72
	39.000	41000.00	1040.66	5.22	12.66	832.94	9587.98	10420.92
	39.000	69000.00	1043.32	6.85	15.32	840.20	9585.90	10426.10
*	44.000	13500.00	1036.53	4.20	5.78	862.92	9502.54	10365.46
	44.000	41000.00	1041.07	5.71	10.32	882.65	9493.46	10376.11
	44.000	69000.00	1043.81	7.18	13.06	894.56	9487.99	10382.54
	47.000	13500.00	1037.11	5.54	6.11	727.82	611.78	1339.60
	47.000	41000.00	1041.31	7.41	10.31	746.21	603.38	1349.59
	47.000	69000.00	1043.99	9.14	12.99	757.97	598.01	1355.99
	51.500	13500.00	1038.44	5.88	7.04	527.12	775.32	1302.44
	51.500	41000.00	1042.14	9.61	10.73	538.21	767.93	1306.14
	51.500	69000.00	1044.64	12.28	13.24	545.71	762.92	1308.64
	55.000	13500.00	1039.30	5.66	7.40	458.29	275.30	733.60
	55.000	41000.00	1043.19	9.78	11.29	469.92	267.57	737.49
	55.000	69000.00	1045.83	12.68	13.93	477.81	262.32	740.13
	58.120	13500.00	1040.41	5.26	8.31	387.72	766.69	1154.41
	58.120	41000.00	1044.94	9.44	12.84	396.78	762.16	1158.94
	58.120	69000.00	1047.99	12.41	15.89	402.88	759.11	1161.99
	62.000	13500.00	1040.95	5.69	8.05	418.55	275.50	694.05
	62.000	41000.00	1045.85	9.19	12.95	433.26	265.70	698.95
	62.000	69000.00	1049.37	11.49	16.47	443.81	258.66	702.47
	66.000	13500.00	1041.69	4.60	7.69	460.27	277.42	737.69
	66.000	41000.00	1047.01	7.55	13.01	476.25	266.77	743.02
	66.000	69000.00	1050.88	9.46	16.88	487.84	259.04	746.88

	SECNO	Q	CWSEL	VCH	DEPTH	TOPWID	SSTA	ENDST
	71.000	13500.00	1042.23	4.98	7.23	459.79	277.04	736.83
	71.000	41000.00	1047.65	7.82	12.65	476.04	266.20	742.25
	71.000	69000.00	1051.56	9.67	16.56	487.60	258.50	746.10
	75.000	13500.00	1042.77	5.11	6.27	457.20	279.07	736.27
	75.000	41000.00	1048.21	7.92	11.71	473.53	268.18	741.71
	75.000	69000.00	1052.16	9.77	15.66	485.35	260.30	745.65
	78.000	13500.00	1043.20	5.32	5.80	456.29	279.50	735.80
	78.000	41000.00	1048.64	8.09	11.24	472.63	268.61	741.24
	78.000	69000.00	1052.60	9.91	15.20	484.52	260.69	745.21
	81.000	13500.00	1043.69	5.42	5.69	456.35	278.98	735.33
	81.000	41000.00	1049.11	8.20	11.11	471.90	268.50	740.40
	81.000	69000.00	1053.07	10.00	15.07	483.33	260.80	744.13
	84.000	13500.00	1044.21	5.63	7.21	455.10	280.08	735.18
	84.000	41000.00	1049.59	8.39	12.59	471.19	269.33	740.52
	84.000	69000.00	1053.55	10.18	16.55	483.06	261.40	744.46
	87.000	13500.00	1044.82	6.01	5.02	454.85	280.17	735.02
	87.000	41000.00	1050.09	8.75	10.29	470.69	269.61	740.30
	87.000	69000.00	1054.03	10.51	14.23	482.50	261.74	744.23
	89.000	13500.00	1045.31	6.36	4.91	454.72	280.19	734.91
	89.000	41000.00	1050.47	9.09	10.07	470.22	269.86	740.07
	89.000	69000.00	1054.38	10.83	13.98	481.93	262.05	743.98
	94.000	13500.00	1046.74	6.19	4.94	455.21	279.73	734.94
	94.000	41000.00	1051.62	9.24	9.82	469.85	269.96	739.82
	94.000	69000.00	1055.44	11.03	13.64	481.31	262.33	743.64
	97.000	13500.00	1047.56	6.42	4.96	455.41	279.56	734.97
	97.000	41000.00	1052.34	9.52	9.74	469.69	270.04	739.73
	97.000	69000.00	1056.10	11.32	13.50	480.99	262.51	743.50
	99.540	13500.00	1048.29	7.60	5.09	349.73	325.14	674.86
	99.540	41000.00	1052.73	12.30	9.53	349.75	325.13	674.87
	99.540	69000.00	1056.13	15.26	12.93	349.76	325.12	674.88
*	99.600	13500.00	1049.78	10.79	3.58	349.72	325.14	674.86
*	99.600	41000.00	1053.70	15.63	7.50	349.74	325.13	674.87
*	99.600	69000.00	1056.81	18.59	10.61	349.76	325.12	674.88
*	100.400	13500.00	1051.57	7.62	5.07	349.73	325.14	674.86
*	100.400	41000.00	1057.13	11.03	10.63	349.76	325.12	674.88
*	100.400	69000.00	1061.54	13.12	15.04	349.79	325.11	674.89
	100.900	13500.00	1051.77	7.36	5.17	360.04	319.98	680.02
	100.900	41000.00	1057.48	10.45	10.88	371.47	314.26	685.74
	100.900	69000.00	1062.11	12.18	15.51	380.73	309.63	690.37

	SECNO	Q	CWSEL	VCH	DEPTH	TOPWID	SSTA	ENDST
	103.000	13500.00	1052.78	6.32	5.78	378.13	317.24	695.38
	103.000	41000.00	1058.50	9.42	11.50	395.33	305.78	701.11
	103.000	69000.00	1063.17	11.08	16.17	409.33	296.45	705.78
	106.000	13500.00	1053.55	4.94	5.95	468.64	272.11	740.75
	106.000	41000.00	1059.56	7.31	11.96	486.69	260.07	746.76
	106.000	69000.00	1064.41	8.62	16.81	501.23	250.38	751.61
	109.000	13500.00	1053.99	4.34	5.79	558.68	227.11	785.79
	109.000	41000.00	1060.11	6.23	11.91	577.03	214.88	791.91
	109.000	69000.00	1065.03	7.29	16.83	591.80	205.03	796.83
	110.000	13500.00	1054.09	4.51	7.09	558.50	227.19	785.69
	110.000	41000.00	1060.18	6.35	13.18	576.90	214.88	791.78
	110.000	69000.00	1065.09	7.40	18.09	591.74	204.95	796.69
	113.000	13500.00	1054.46	4.56	5.46	558.17	227.28	785.46
	113.000	41000.00	1060.45	6.45	11.45	576.14	215.31	791.45
	113.000	69000.00	1065.32	7.50	16.32	590.78	205.55	796.33
	116.000	13500.00	1054.84	5.05	5.24	538.41	227.21	785.24
	116.000	41000.00	1060.71	6.87	11.11	575.65	215.47	791.12
	116.000	69000.00	1065.53	7.86	15.93	590.08	205.85	795.93
*	120.000	13500.00	1055.34	9.44	4.94	307.15	296.81	734.94
*	120.000	41000.00	1060.62	11.57	10.22	454.00	286.24	740.23
*	120.000	69000.00	1065.22	12.18	14.82	467.79	277.04	744.83
*	123.000	13500.00	1057.27	5.00	6.27	440.99	295.28	736.26
*	123.000	41000.00	1062.65	8.00	11.65	457.16	284.49	741.65
*	123.000	69000.00	1066.83	9.77	15.83	469.72	276.12	745.84
	127.000	13500.00	1057.78	5.24	5.98	440.91	295.06	735.97
	127.000	41000.00	1063.22	8.16	11.42	457.26	284.16	741.42
	127.000	69000.00	1067.40	9.91	15.60	469.81	275.80	745.60
	131.000	13500.00	1058.39	5.60	8.39	440.56	295.22	735.79
	131.000	41000.00	1063.82	8.46	13.82	456.85	284.37	741.22
	131.000	69000.00	1067.99	10.17	17.99	469.39	276.01	745.40
	135.000	13500.00	1059.19	6.45	5.79	441.02	294.70	735.72
	135.000	41000.00	1064.48	9.18	11.08	457.01	283.93	740.94
	135.000	69000.00	1068.58	10.84	15.18	469.43	275.57	745.00
	138.000	13500.00	1060.06	5.66	6.06	442.59	293.47	736.06
	138.000	41000.00	1065.26	8.67	11.26	458.19	283.07	741.26
	138.000	69000.00	1069.32	10.44	15.32	470.35	274.97	745.32
	141.000	13500.00	1060.64	6.32	6.04	419.48	294.25	736.04
	141.000	41000.00	1065.79	9.24	11.19	457.20	283.99	741.19
	141.000	69000.00	1069.79	10.96	15.19	469.19	276.00	745.19

	SECNO	Q	CWSEL	VCH	DEPTH	TOPWID	SSTA	ENDST
*	145.000	13500.00	1061.60	5.04	6.20	440.56	294.20	734.76
	145.000	41000.00	1066.86	8.14	11.46	455.14	283.67	738.81
	145.000	69000.00	1070.87	10.03	15.47	466.23	275.66	741.89
	147.000	13500.00	1061.85	5.16	6.05	441.57	294.49	736.06
	147.000	41000.00	1067.16	8.19	11.36	457.49	283.87	741.36
	147.000	69000.00	1071.18	10.05	15.38	469.55	275.84	745.38
	150.000	13500.00	1062.30	4.95	5.90	471.09	244.81	715.90
	150.000	41000.00	1067.74	7.68	11.34	487.43	233.92	721.34
	150.000	69000.00	1071.86	9.37	15.46	499.77	225.69	725.46
*	155.000	13500.00	1063.05	7.75	5.65	400.68	244.60	675.65
*	155.000	41000.00	1068.25	10.29	10.85	446.65	234.20	680.85
	155.000	69000.00	1072.22	11.93	14.82	458.56	226.26	684.82
*	158.000	13500.00	1064.30	6.78	6.30	325.41	343.39	668.80
	158.000	41000.00	1069.03	11.51	11.03	339.58	333.95	673.53
	158.000	69000.00	1072.68	14.31	14.68	350.54	326.64	677.18
	159.450	13500.00	1064.97	6.11	6.67	338.33	330.83	669.17
	159.450	41000.00	1070.29	10.15	11.99	348.98	325.51	674.49
	159.450	69000.00	1074.30	12.65	16.00	357.00	321.50	678.50
	160.250	13500.00	1065.10	6.13	6.64	338.26	330.87	669.13
	160.250	41000.00	1070.79	9.86	12.33	349.60	325.20	674.80
	160.250	69000.00	1075.17	12.09	16.71	358.34	320.83	679.17
	162.000	13500.00	1065.41	6.16	6.61	338.21	330.89	669.11
	162.000	41000.00	1071.16	9.83	12.36	349.73	325.13	674.87
	162.000	69000.00	1075.56	12.04	16.76	358.54	320.73	679.27
	165.000	13500.00	1066.04	5.46	6.64	382.33	374.31	756.64
	165.000	41000.00	1072.57	7.12	13.17	561.53	201.65	763.18
*	165.000	69000.00	1077.61	8.00	18.21	576.63	191.58	768.21
	168.000	13500.00	1066.47	5.88	6.37	370.30	386.06	756.37
	168.000	41000.00	1072.94	7.45	12.84	560.73	202.11	762.84
	168.000	69000.00	1077.89	8.30	17.79	575.57	192.22	767.79
	170.000	13500.00	1066.81	5.98	6.21	372.82	383.39	756.21
	170.000	41000.00	1073.23	7.54	12.63	559.88	202.74	762.63
	170.000	69000.00	1078.10	8.42	17.50	574.50	193.00	767.50
*	173.000	13500.00	1067.16	8.82	5.76	274.09	388.67	662.76
*	173.000	41000.00	1073.25	10.92	11.85	433.26	235.59	668.85
*	173.000	69000.00	1077.82	11.97	16.42	446.97	226.45	673.42
	176.000	13500.00	1068.79	7.74	6.59	376.05	287.53	663.58
	176.000	41000.00	1074.40	10.50	12.20	392.92	276.29	669.21
	176.000	69000.00	1078.50	12.45	16.30	405.22	268.09	673.31

	SECNO	Q	CWSEL	VCH	DEPTH	TOPWID	SSTA	ENDST
*	177.000	13500.00	1069.56	5.13	7.16	374.24	289.92	664.16
*	177.000	41000.00	1075.23	8.57	12.83	385.53	284.30	669.84
	177.000	69000.00	1079.38	10.78	16.98	393.78	280.21	673.98
	179.000	13500.00	1069.79	5.14	6.99	386.20	329.29	715.49
	179.000	41000.00	1075.59	8.34	12.79	403.63	317.65	721.29
	179.000	69000.00	1079.85	10.36	17.05	416.43	309.11	725.55
	181.000	13500.00	1070.08	4.67	6.78	437.04	329.74	766.78
	181.000	41000.00	1076.10	7.35	12.80	455.10	317.70	772.80
	181.000	69000.00	1080.54	9.04	17.24	468.44	308.81	777.25
*	183.000	13500.00	1069.50	10.68	5.70	241.61	331.10	765.70
*	183.000	41000.00	1075.73	11.10	11.93	453.30	318.63	771.93
*	183.000	69000.00	1080.22	11.98	16.42	466.76	309.66	776.42
*	188.000	13500.00	1072.71	5.98	7.71	438.64	327.61	767.70
*	188.000	41000.00	1077.93	8.90	12.93	455.82	317.12	772.94
	188.000	69000.00	1081.91	10.71	16.91	467.74	309.17	776.91
	193.000	13500.00	1073.79	5.60	7.59	432.18	327.60	767.60
	193.000	41000.00	1079.00	8.64	12.80	455.61	317.19	772.80
	193.000	69000.00	1082.95	10.51	16.75	467.46	309.29	776.75
*	197.000	13500.00	1074.60	7.24	7.40	411.62	327.59	767.40
	197.000	41000.00	1079.68	10.00	12.48	455.03	317.45	772.48
	197.000	69000.00	1083.56	11.72	16.36	466.67	309.69	776.36
*	199.000	13500.00	1075.38	4.60	7.68	389.36	328.32	717.68
*	199.000	41000.00	1080.51	8.27	12.81	399.63	323.19	722.81
	199.000	69000.00	1084.23	10.68	16.53	407.07	319.46	726.54
	201.100	13500.00	1075.51	5.75	7.31	328.62	335.69	664.31
	201.100	41000.00	1080.60	10.13	12.40	338.81	330.60	669.40
	201.100	69000.00	1084.23	13.04	16.03	346.07	326.97	673.03
	201.900	13500.00	1075.59	5.85	7.19	328.38	335.81	664.19
	201.900	41000.00	1080.98	9.98	12.58	339.16	330.42	669.58
	201.900	69000.00	1085.36	12.29	16.96	347.92	326.04	673.96
	204.000	13500.00	1075.89	6.02	6.99	327.97	336.02	663.98
	204.000	41000.00	1081.41	10.03	12.51	339.03	330.48	669.52
	204.000	69000.00	1085.81	12.33	16.91	347.82	326.09	673.91
	209.300	13500.00	1076.78	6.39	6.59	327.18	336.41	663.59
	209.300	41000.00	1082.53	10.19	12.34	338.66	330.67	669.33
	209.300	69000.00	1086.96	12.44	16.77	347.55	326.23	673.77
	212.600	13500.00	1077.39	8.30	6.39	260.78	369.61	630.39
	212.600	41000.00	1082.93	13.22	11.93	271.86	364.07	635.93
	212.600	69000.00	1087.11	16.22	16.11	280.22	359.89	640.11

	SECNO	Q	CWSEL	VCH	DEPTH	TOPWID	SSTA	ENDST
	213.500	13500.00	1077.74	8.51	6.24	260.48	369.76	630.24
	213.500	41000.00	1084.04	12.55	12.54	273.08	363.46	636.54
*	213.500	69000.00	1089.70	14.23	18.20	284.20	357.90	642.10
*	213.700	13500.00	1077.32	11.76	4.32	270.21	364.78	634.99
	213.700	41000.00	1083.67	14.10	10.67	282.61	358.42	641.03
	213.700	69000.00	1089.51	15.04	16.51	293.96	352.59	646.55
*	217.500	13500.00	1080.49	6.19	6.29	352.97	320.51	673.49
*	217.500	41000.00	1086.67	9.32	12.47	365.34	314.33	679.67
*	217.500	69000.00	1092.25	10.66	18.05	376.51	308.75	685.25
	221.100	13500.00	1081.20	6.31	5.90	367.82	310.39	678.21
	221.100	41000.00	1087.36	9.24	12.06	380.12	304.24	684.36
	221.100	69000.00	1092.84	10.53	17.54	391.09	298.76	689.84
	227.500	13500.00	1082.60	5.22	5.50	476.30	262.23	738.52
	227.500	41000.00	1088.83	7.33	11.73	489.11	255.68	744.79
	227.500	69000.00	1094.31	8.31	17.21	500.36	249.93	750.29
*	233.550	13500.00	1083.69	6.87	4.69	424.07	288.01	712.09
	233.550	41000.00	1089.40	9.27	10.40	435.50	282.30	717.80
	233.550	69000.00	1094.62	10.27	15.62	445.93	277.08	723.02
	238.660	13500.00	1085.54	9.13	4.94	303.78	347.91	651.69
*	238.660	41000.00	1089.85	14.62	9.25	312.47	343.56	656.03
*	238.660	69000.00	1094.17	16.53	13.57	321.19	339.20	660.39
*	238.690	13500.00	1087.55	11.26	3.95	307.79	340.85	648.65
*	238.690	41000.00	1091.84	16.16	8.24	316.37	336.56	652.94
*	238.690	69000.00	1095.23	19.05	11.63	323.16	333.17	656.33
*	242.000	13500.00	1090.47	7.08	6.02	322.93	338.53	661.47
*	242.000	41000.00	1095.75	11.26	11.30	333.49	333.25	666.75
*	242.000	69000.00	1099.75	13.83	15.30	341.49	329.26	670.74
	247.000	13500.00	1091.79	6.93	6.12	324.57	337.72	662.28
	247.000	41000.00	1097.32	10.86	11.65	335.65	332.17	667.83
	247.000	69000.00	1101.46	13.32	15.79	343.91	328.04	671.96
	270.500	13500.00	1093.11	5.49	6.61	378.23	9765.89	10144.11
	270.500	41000.00	1099.17	8.56	12.67	390.35	9759.82	10150.17
	270.500	69000.00	1103.73	10.47	17.23	399.47	9755.26	10154.74
	273.500	13500.00	1093.56	5.57	6.36	387.71	9725.15	10112.85
	273.500	41000.00	1099.66	8.50	12.46	399.91	9719.04	10118.96
	273.500	69000.00	1104.25	10.32	17.05	409.09	9714.45	10123.55
	277.900	13500.00	1094.22	6.23	5.92	371.84	9741.08	10112.92
	277.900	41000.00	1100.21	9.25	11.91	383.82	9735.09	10118.91
	277.900	69000.00	1104.75	11.14	16.45	392.89	9730.55	10123.45

	SECNO	Q	CWSEL	VCH	DEPTH	TOPWID	SSTA	ENDST
	281.800	13500.00	1095.08	6.84	5.88	341.76	9761.12	10102.88
	281.800	41000.00	1100.86	10.29	11.66	353.32	9755.34	10108.66
	281.800	69000.00	1105.27	12.41	16.07	362.14	9750.93	10113.07
*	288.000	13500.00	1097.05	9.97	4.85	283.71	9846.15	10129.85
*	288.000	41000.00	1102.21	14.43	10.01	294.01	9840.99	10135.01
*	288.000	69000.00	1106.24	17.06	14.04	302.08	9836.96	10139.04
	290.000	13500.00	1098.54	9.23	5.54	271.00	9865.00	10136.00
	290.000	41000.00	1103.29	14.91	10.29	271.00	9865.00	10136.00
	290.000	69000.00	1107.06	18.31	14.06	271.00	9865.00	10136.00
	291.000	13500.00	1098.80	9.14	5.80	271.00	9865.00	10136.00
*	291.000	41000.00	1104.68	13.35	11.68	271.00	9865.00	10136.00
*	291.000	69000.00	1109.24	16.02	16.24	271.00	9865.00	10136.00
	293.000	13500.00	1099.70	10.00	5.70	242.41	9885.79	10128.21
	293.000	41000.00	1105.08	15.29	11.08	253.16	9880.42	10133.58
	293.000	69000.00	1109.38	18.21	15.38	261.76	9876.12	10137.88
	297.000	13500.00	1102.04	9.03	5.94	257.87	9877.06	10134.94
	297.000	41000.00	1107.94	13.43	11.84	269.68	9871.16	10140.84
	297.000	69000.00	1112.52	16.02	16.42	278.83	9866.59	10145.42
	302.000	13500.00	1104.40	10.72	6.20	209.40	9894.30	10103.70
	302.000	41000.00	1109.49	17.44	11.29	219.58	9889.21	10108.79
*	302.000	69000.00	1113.35	21.47	15.15	227.30	9885.35	10112.65
	305.000	13500.00	1106.05	10.59	6.55	201.10	9891.45	10092.55
	305.000	41000.00	1111.94	16.44	12.44	212.88	9885.56	10098.44
	305.000	69000.00	1116.36	19.99	16.86	221.70	9881.15	10102.85
*	306.750	13500.00	1107.89	5.99	7.59	304.19	9806.91	10111.09
*	306.750	41000.00	1115.76	8.71	15.46	319.93	9799.04	10118.96
*	306.750	69000.00	1121.86	10.28	21.56	352.71	9781.00	10133.71
	310.000	13500.00	1108.39	5.90	6.79	343.59	9793.21	10136.79
	310.000	41000.00	1116.32	8.08	14.72	359.44	9785.28	10144.72
	310.000	69000.00	1122.48	9.39	20.88	405.00	9780.00	10185.00
	313.200	13500.00	1108.88	6.83	5.88	341.76	9829.12	10170.88
	313.200	41000.00	1116.59	8.78	13.59	357.17	9821.41	10178.59
	313.200	69000.00	1122.69	9.97	19.69	398.00	9800.00	10198.00
	318.000	13500.00	1110.29	7.77	5.19	340.37	9829.81	10170.19
	318.000	41000.00	1117.23	9.88	12.13	354.25	9822.87	10177.13
	318.000	69000.00	1123.12	11.00	18.02	398.00	9800.00	10198.00
	320.050	13500.00	1111.41	7.43	5.41	340.83	9829.58	10170.42
	320.050	41000.00	1117.81	10.15	11.81	353.63	9823.19	10176.81
	320.050	69000.00	1123.52	11.34	17.52	365.03	9817.49	10182.51

SECNO	Q	CWSEL	VCH	DEPTH	TOPWID	SSTA	ENDST
328.000	13500.00	1113.86	8.47	4.76	339.52	9830.24	10169.76
328.000	41000.00	1119.27	11.85	10.17	350.34	9824.83	10175.17
328.000	69000.00	1124.46	13.01	15.36	360.73	9819.64	10180.36
330.000	13500.00	1114.76	8.66	4.66	339.32	9830.34	10169.66
330.000	41000.00	1119.84	12.39	9.74	349.48	9825.26	10174.74
330.000	69000.00	1124.80	13.62	14.70	359.39	9820.30	10179.70
334.000	13500.00	1116.99	8.07	4.99	339.98	9830.01	10169.99
334.000	41000.00	1121.68	12.47	9.68	349.36	9825.32	10174.68
334.000	69000.00	1126.02	14.29	14.02	358.06	9820.97	10179.03
343.000	13500.00	1120.84	7.93	5.14	334.14	9861.00	10195.14
343.000	41000.00	1125.66	12.32	9.96	338.96	9861.00	10199.96
343.000	69000.00	1129.37	15.03	13.67	342.67	9861.00	10203.67
344.900	13500.00	1121.67	7.52	5.37	338.55	9830.89	10169.45
344.900	41000.00	1126.69	11.67	10.39	346.54	9827.06	10173.60
344.900	69000.00	1130.58	14.14	14.28	352.76	9824.07	10176.84

SUMMARY OF ERRORS AND SPECIAL NOTES

```
WARNING SECNO=     44.000  PROFILE=  1  CONVEYANCE CHANGE OUTSIDE ACCEPTABLE RANGE

CAUTION SECNO=     99.600  PROFILE=  1  CRITICAL DEPTH ASSUMED
CAUTION SECNO=     99.600  PROFILE=  1  MINIMUM SPECIFIC ENERGY
CAUTION SECNO=     99.600  PROFILE=  2  CRITICAL DEPTH ASSUMED
CAUTION SECNO=     99.600  PROFILE=  2  MINIMUM SPECIFIC ENERGY
CAUTION SECNO=     99.600  PROFILE=  3  CRITICAL DEPTH ASSUMED
CAUTION SECNO=     99.600  PROFILE=  3  MINIMUM SPECIFIC ENERGY

CAUTION SECNO=    100.400  PROFILE=  1  HYDRAULIC JUMP D.S.
WARNING SECNO=    100.400  PROFILE=  1  CONVEYANCE CHANGE OUTSIDE ACCEPTABLE RANGE
CAUTION SECNO=    100.400  PROFILE=  2  HYDRAULIC JUMP D.S.
WARNING SECNO=    100.400  PROFILE=  2  CONVEYANCE CHANGE OUTSIDE ACCEPTABLE RANGE
CAUTION SECNO=    100.400  PROFILE=  3  HYDRAULIC JUMP D.S.
WARNING SECNO=    100.400  PROFILE=  3  CONVEYANCE CHANGE OUTSIDE ACCEPTABLE RANGE

WARNING SECNO=    120.000  PROFILE=  1  CONVEYANCE CHANGE OUTSIDE ACCEPTABLE RANGE
WARNING SECNO=    120.000  PROFILE=  2  CONVEYANCE CHANGE OUTSIDE ACCEPTABLE RANGE
WARNING SECNO=    120.000  PROFILE=  3  CONVEYANCE CHANGE OUTSIDE ACCEPTABLE RANGE

WARNING SECNO=    123.000  PROFILE=  1  CONVEYANCE CHANGE OUTSIDE ACCEPTABLE RANGE
WARNING SECNO=    123.000  PROFILE=  2  CONVEYANCE CHANGE OUTSIDE ACCEPTABLE RANGE
WARNING SECNO=    123.000  PROFILE=  3  CONVEYANCE CHANGE OUTSIDE ACCEPTABLE RANGE

WARNING SECNO=    145.000  PROFILE=  1  CONVEYANCE CHANGE OUTSIDE ACCEPTABLE RANGE

WARNING SECNO=    155.000  PROFILE=  1  CONVEYANCE CHANGE OUTSIDE ACCEPTABLE RANGE
WARNING SECNO=    155.000  PROFILE=  2  CONVEYANCE CHANGE OUTSIDE ACCEPTABLE RANGE

WARNING SECNO=    158.000  PROFILE=  1  CONVEYANCE CHANGE OUTSIDE ACCEPTABLE RANGE

WARNING SECNO=    165.000  PROFILE=  3  CONVEYANCE CHANGE OUTSIDE ACCEPTABLE RANGE

WARNING SECNO=    173.000  PROFILE=  1  CONVEYANCE CHANGE OUTSIDE ACCEPTABLE RANGE
WARNING SECNO=    173.000  PROFILE=  2  CONVEYANCE CHANGE OUTSIDE ACCEPTABLE RANGE
WARNING SECNO=    173.000  PROFILE=  3  CONVEYANCE CHANGE OUTSIDE ACCEPTABLE RANGE

WARNING SECNO=    177.000  PROFILE=  1  CONVEYANCE CHANGE OUTSIDE ACCEPTABLE RANGE
WARNING SECNO=    177.000  PROFILE=  2  CONVEYANCE CHANGE OUTSIDE ACCEPTABLE RANGE

WARNING SECNO=    183.000  PROFILE=  1  CONVEYANCE CHANGE OUTSIDE ACCEPTABLE RANGE
WARNING SECNO=    183.000  PROFILE=  2  CONVEYANCE CHANGE OUTSIDE ACCEPTABLE RANGE
WARNING SECNO=    183.000  PROFILE=  3  CONVEYANCE CHANGE OUTSIDE ACCEPTABLE RANGE

WARNING SECNO=    188.000  PROFILE=  1  CONVEYANCE CHANGE OUTSIDE ACCEPTABLE RANGE
WARNING SECNO=    188.000  PROFILE=  2  CONVEYANCE CHANGE OUTSIDE ACCEPTABLE RANGE

WARNING SECNO=    197.000  PROFILE=  1  CONVEYANCE CHANGE OUTSIDE ACCEPTABLE RANGE

WARNING SECNO=    199.000  PROFILE=  1  CONVEYANCE CHANGE OUTSIDE ACCEPTABLE RANGE
```

WARNING SECNO= 199.000 PROFILE= 2 CONVEYANCE CHANGE OUTSIDE ACCEPTABLE RANGE

```
CAUTION SECNO=    213.500  PROFILE=  3  HYDRAULIC JUMP D.S.

CAUTION SECNO=    213.700  PROFILE=  1  CRITICAL DEPTH ASSUMED
CAUTION SECNO=    213.700  PROFILE=  1  MINIMUM SPECIFIC ENERGY

WARNING SECNO=    217.500  PROFILE=  1  CONVEYANCE CHANGE OUTSIDE ACCEPTABLE RANGE
WARNING SECNO=    217.500  PROFILE=  2  CONVEYANCE CHANGE OUTSIDE ACCEPTABLE RANGE
WARNING SECNO=    217.500  PROFILE=  3  CONVEYANCE CHANGE OUTSIDE ACCEPTABLE RANGE

WARNING SECNO=    233.550  PROFILE=  1  CONVEYANCE CHANGE OUTSIDE ACCEPTABLE RANGE

WARNING SECNO=    238.660  PROFILE=  2  CONVEYANCE CHANGE OUTSIDE ACCEPTABLE RANGE
WARNING SECNO=    238.660  PROFILE=  3  CONVEYANCE CHANGE OUTSIDE ACCEPTABLE RANGE

CAUTION SECNO=    238.690  PROFILE=  1  CRITICAL DEPTH ASSUMED
CAUTION SECNO=    238.690  PROFILE=  1  MINIMUM SPECIFIC ENERGY
CAUTION SECNO=    238.690  PROFILE=  2  CRITICAL DEPTH ASSUMED
CAUTION SECNO=    238.690  PROFILE=  2  MINIMUM SPECIFIC ENERGY
CAUTION SECNO=    238.690  PROFILE=  3  CRITICAL DEPTH ASSUMED
CAUTION SECNO=    238.690  PROFILE=  3  MINIMUM SPECIFIC ENERGY

WARNING SECNO=    242.000  PROFILE=  1  CONVEYANCE CHANGE OUTSIDE ACCEPTABLE RANGE
WARNING SECNO=    242.000  PROFILE=  2  CONVEYANCE CHANGE OUTSIDE ACCEPTABLE RANGE
WARNING SECNO=    242.000  PROFILE=  3  CONVEYANCE CHANGE OUTSIDE ACCEPTABLE RANGE

WARNING SECNO=    288.000  PROFILE=  1  CONVEYANCE CHANGE OUTSIDE ACCEPTABLE RANGE
WARNING SECNO=    288.000  PROFILE=  2  CONVEYANCE CHANGE OUTSIDE ACCEPTABLE RANGE
WARNING SECNO=    288.000  PROFILE=  3  CONVEYANCE CHANGE OUTSIDE ACCEPTABLE RANGE

CAUTION SECNO=    291.000  PROFILE=  2  HYDRAULIC JUMP D.S.
CAUTION SECNO=    291.000  PROFILE=  3  HYDRAULIC JUMP D.S.

CAUTION SECNO=    302.000  PROFILE=  3  CRITICAL DEPTH ASSUMED
CAUTION SECNO=    302.000  PROFILE=  3  MINIMUM SPECIFIC ENERGY

WARNING SECNO=    306.750  PROFILE=  1  CONVEYANCE CHANGE OUTSIDE ACCEPTABLE RANGE
WARNING SECNO=    306.750  PROFILE=  2  CONVEYANCE CHANGE OUTSIDE ACCEPTABLE RANGE
WARNING SECNO=    306.750  PROFILE=  3  CONVEYANCE CHANGE OUTSIDE ACCEPTABLE RANGE
```

APPENDIX II: HYDRAULIC ANALYSES

c. FLUVIAL-12 INPUT/OUTPUT

```
*********************************************************
*     FLUVIAL-12   SIMULATION OF RIVER HYDRAULICS,      *
*     SEDIMENT TRANSPORT AND RIVER CHANNEL CHANGES      *
*********************************************************
```

THIS PROGRAM IS DEVELOPED AND FURNISHED BY HOWARD H. CHANG AND IS ACCEPTED AND USED BY THE RECIPIENT UPON THE EXPRESS UNDERSTANDING THAT THE DEVELOPER MAKES NO WARRANTIES, EXPRESS OR IMPLIED, CONCERNING THE ACCURACY, COMPLETENESS, RELIABILITY, USABILITY, OR SUITABILITY FOR ANY PARTICULAR PURPOSE OF THE INFORMATION AND DATA CONTAINED IN THIS PROGRAM OR FURNISHED IN CONNECTION THEREWITH, AND THE DEVELOPER SHALL BE UNDER NO LIABILITY WHATSOEVER TO ANY PERSON BY REASON OF ANY USE MADE THEREOF.

```
T1      NEW RIVER: FLOOD CONTROL DISTRICT CHANNELIZATION PROJECT
T2      NEW RIVER: BETHANY HOME ALIGNMENT TO GRAND AVENUE
T3      NRST8A*********FLUVIAL 12 ANALYSIS: STANDARD PROJECT FLOOD**************
G1      0.50     11.00    600.00      3.00      0.50      0.00      0.04      6.30     10.50     25.00
G2     84.00     10.00      0.00      0.00      0.00      0.00      0.00      0.00      0.00      0.00
G2   7800.00      0.00  16600.00      4.00  27600.00      5.00  68200.00      6.00  69000.00      6.30
G2  65000.00      6.75  42000.00      8.00  34000.00      9.00   6200.00     10.50   3900.00     11.00
G3      0.00      1.00      1.00      0.00      0.00     30.00      0.00      0.00      0.00     18.00
G4      5.00     27.00     47.00     54.00      0.00      0.00      0.00      0.00      0.00      0.00
G5    200.00      0.00      0.00      0.00      0.00      1.00      0.00      0.00      0.00     40.00
GS      0.55      0.43      5.50      0.24     30.00      0.21     75.00      0.12    125.00      0.10
GS      0.55      0.17      5.50      0.22     30.00      0.30     75.00      0.21    200.00      0.09
GB     10.00      0.00      0.00      0.00      0.00      0.00      0.00      0.00      0.00      0.00
GB   1034.60      0.00   1036.50      4.00   1038.20      5.00   1043.10      6.00   1043.30      6.30
GB   1042.80      6.80   1040.20      8.00   1039.20      9.00   1034.20     10.50   1033.50     11.00
X1     39.00     12.00   9586.00  10426.00    270.00    200.00    220.00      0.00      0.00      0.00
XF   9593.00  10405.40      0.00      0.00   9646.00      0.00      0.00      1.00      0.00      0.10
X3                                                                                                18.00
GR   1038.00   9531.00   1042.00   9546.00   1042.50   9586.00   1036.00   9593.00   1032.00   9606.00
GR   1028.00   9646.00   1028.50   9676.00   1029.00   9706.00   1029.50   9736.00   1030.00   9766.00
GR   1030.00   9792.67   1030.00   9819.33   1030.00   9846.00   1032.00   9868.50   1034.00   9891.00
GR   1033.17   9918.33   1032.33   9945.67   1031.50   9973.00   1031.63  10012.31   1031.75  10051.62
GR   1031.88  10090.93   1032.01  10130.24   1032.14  10169.55   1032.26  10208.86   1032.39  10248.17
GR   1032.52  10287.48   1032.65  10326.79   1032.77  10366.10   1032.90  10405.40   1043.20  10426.00
X1     44.00     11.00   9485.80  10384.10    500.00    500.00    500.00      0.00      0.00      0.00
XF   9514.10  10362.00      0.00      0.00   9573.00      0.00      0.00      1.00      0.00      0.00
X3                                                                                                19.00
GR   1044.90   9485.80   1030.75   9514.10   1031.17   9551.07   1031.58   9588.03   1032.00   9625.00
GR   1032.00   9657.00   1032.00   9689.00   1032.00   9721.00   1032.00   9753.00   1032.67   9789.67
GR   1033.33   9826.33   1034.00   9863.00   1033.50   9894.25   1033.00   9925.50   1032.50   9956.75
GR   1032.00   9988.00   1032.00  10010.50   1032.00  10033.00   1032.33  10066.33   1032.67  10099.67
GR   1033.00  10133.00   1033.33  10166.33   1033.67  10199.67   1034.00  10233.00   1034.27  10265.25
GR   1034.53  10297.50   1034.80  10329.75   1035.06  10362.00   1044.00  10383.00   1045.10  10384.10
X1     47.00     11.00    596.00   1357.00    300.00    300.00    300.00      0.00      0.00      0.00
XF    624.00   1336.00      0.00      0.00    624.00      0.00      0.00      1.00      0.00      0.00
X3                                                                                                15.00
GR   1045.00    596.00   1031.00    624.00   1031.00    653.00   1031.00    682.00   1034.00    690.00
GR   1034.00    726.25   1034.00    762.50   1034.00    798.75   1034.00    835.00   1033.78    868.00
GR   1033.56    901.00   1033.34    934.00   1033.12    967.00   1032.90   1000.00   1033.12   1036.80
GR   1033.34   1073.60   1033.56   1110.40   1033.78   1147.20   1034.00   1184.00   1034.00   1194.00
GR   1034.40   1229.50   1034.80   1265.00   1035.20   1300.50   1035.60   1336.00   1044.00   1356.00
GR   1045.00   1357.00
X1     51.50     13.00    760.80   1309.70    450.00    450.00    450.00      0.00      0.00      0.00
XF    789.40   1300.00      0.00      0.00    789.40      0.00      0.00      1.00      0.00      0.00
X3                                                                                                10.00
GR   1045.70    760.80   1031.40    789.40   1031.40    818.87   1031.40    848.33   1031.40    877.80
GR   1034.00    883.00   1034.00    907.00   1034.00    934.50   1034.00    962.00   1034.00    985.00
GR   1033.90   1000.00   1033.95   1021.00   1034.00   1042.00   1034.26   1074.60   1034.52   1107.20
GR   1034.78   1139.80   1035.04   1172.40   1035.30   1205.00   1035.53   1236.67   1035.77   1268.33
GR   1036.00   1300.00   1040.00   1304.00   1045.70   1309.70
X1     55.00     10.00    260.00    741.30    350.00    350.00    350.00      0.00      0.00      0.00
XF    290.00    730.00   3914.40      0.00    290.00      0.00      0.00      1.00      0.00      0.00
X3                                                                                                 8.00
GR   1047.00    260.00   1031.90    290.00   1031.90    322.00   1031.90    354.00   1031.90    386.00
GR   1031.90    418.00   1031.90    450.00   1036.60    472.00   1036.20    500.00   1036.00    525.00
```

GR	1035.65	559.50	1035.30	594.00	1034.95	628.50	1034.60	663.00	1034.45	689.50
GR	1034.30	716.00	1035.70	730.00	1047.00	741.30				
X1	58.12	10.00	758.00	1163.00	662.00	662.00	662.00	0.00	0.00	0.00
XF	775.00	1154.00	3914.40	0.00	775.00	0.00	0.00	1.00	0.00	0.00
X3										7.00
GR	1049.10	758.00	1032.10	775.00	1032.10	812.50	1032.10	850.00	1032.10	887.50
GR	1032.10	925.00	1032.10	962.50	1032.10	1000.00	1032.10	1009.00	1036.60	1018.00
GR	1036.40	1048.67	1036.20	1079.33	1036.00	1110.00	1036.00	1126.00	1038.00	1148.00
GR	1040.00	1154.00	1049.00	1163.00						
X1	62.00	14.00	256.60	703.50	388.00	388.00	388.00	0.00	0.00	0.00
XF	291.60	1154.00	0.00	0.00	412.00	0.00	0.00	1.00	0.00	0.00
X3										5.00
GR	1050.40	256.60	1032.90	291.60	1032.90	321.70	1032.90	351.80	1032.90	381.90
GR	1032.90	412.00	1038.00	422.00	1037.75	445.00	1037.50	468.00	1036.80	500.00
GR	1036.00	531.00	1035.30	550.00	1036.00	580.00	1038.00	600.00	1039.00	627.00
GR	1032.90	639.00	1032.90	662.50	1032.90	686.00	1050.40	703.50		
X1	66.00	14.00	257.20	747.80	400.00	400.00	400.00	0.00	0.00	0.00
XF	292.80	730.00	0.00	0.00	292.80	0.00	0.00	1.00	0.00	0.00
X3										5.00
GR	1051.80	257.20	1034.00	292.80	1034.00	327.53	1034.00	362.27	1034.00	397.00
GR	1036.00	399.00	1035.60	430.00	1036.00	470.00	1038.00	510.00	1038.00	527.00
GR	1035.00	531.00	1035.00	565.75	1035.00	600.50	1035.00	635.25	1035.00	670.00
GR	1038.00	676.00	1034.00	692.00	1034.00	730.00	1051.80	747.80		
X1	71.00	16.00	258.50	746.10	500.00	500.00	500.00	0.00	0.00	0.00
XF	291.50	730.00	0.00	0.00	310.00	0.00	0.00	1.00	0.00	0.00
X3										6.00
GR	1051.50	258.50	1035.00	291.50	1035.00	310.00	1036.00	342.00	1040.00	352.00
GR	1040.00	372.00	1039.50	396.00	1039.00	420.00	1036.00	425.00	1036.00	445.00
GR	1036.00	460.00	1035.40	470.00	1035.40	497.50	1035.40	525.00	1037.00	535.00
GR	1035.40	545.00	1035.40	582.00	1035.40	619.00	1035.40	656.00	1035.40	693.00
GR	1035.40	730.00	1051.50	746.10						
X1	75.00	13.00	258.40	746.60	400.00	400.00	400.00	0.00	0.00	0.00
XF	291.60	730.00	0.00	0.00	470.00	0.00	0.00	1.00	0.00	0.00
X3										7.00
GR	1053.10	258.40	1036.50	291.60	1036.50	326.07	1036.50	360.53	1036.50	395.00
GR	1036.50	405.00	1036.50	432.50	1036.50	460.00	1036.50	465.00	1036.50	470.00
GR	1036.50	503.00	1036.50	536.00	1036.50	569.00	1036.50	602.00	1036.50	635.00
GR	1040.00	660.00	1040.00	690.50	1036.50	697.50	1036.50	730.00	1053.10	746.60
X1	78.00	24.00	258.90	746.10	300.00	300.00	300.00	0.00	0.00	0.00
XF	291.10	730.00	0.00	0.00	500.00	0.00	0.00	1.00	0.00	0.00
X3										1.00
GR	1053.50	258.90	1037.40	291.10	1037.40	320.00	1037.40	355.00	1037.40	370.00
GR	1037.40	390.00	1037.40	415.00	1037.40	430.00	1037.40	460.00	1037.40	475.00
GR	1037.40	500.00	1037.40	528.00	1037.40	546.80	1039.00	550.00	1038.00	560.00
GR	1037.40	595.00	1037.40	606.00	1037.40	629.80	1038.50	632.00	1038.00	653.00
GR	1037.80	680.00	1037.40	681.00	1037.40	705.50	1037.40	730.00	1053.50	746.10
X1	81.00	18.00	259.00	745.00	300.00	300.00	300.00	0.00	0.00	0.00
XF	290.00	730.00	0.00	0.00	460.00	0.00	0.00	1.00	0.00	0.00
X3										4.00
GR	1054.00	259.00	1038.00	290.00	1038.00	291.00	1038.00	320.00	1038.00	355.00
GR	1038.00	390.00	1038.00	400.00	1038.00	440.00	1038.00	450.00	1038.00	460.00
GR	1038.00	490.00	1038.00	520.00	1038.00	550.00	1038.00	565.00	1038.00	588.00
GR	1040.00	626.00	1039.00	634.00	1038.00	650.00	1038.00	676.67	1038.00	703.33
GR	1038.00	730.00	1054.00	745.00						
X1	84.00	21.00	259.50	745.40	300.00	300.00	300.00	0.00	0.00	0.00
XF	290.50	730.00	0.00	0.00	355.00	0.00	0.00	1.00	0.00	0.00
X3										3.00
GR	1054.50	259.50	1039.00	290.50	1039.00	320.00	1037.00	325.00	1037.00	355.00
GR	1039.00	360.00	1039.00	375.00	1039.00	385.00	1039.00	395.00	1039.00	415.00
GR	1039.00	450.00	1039.00	475.00	1039.00	500.00	1039.00	530.00	1039.00	561.67
GR	1039.00	593.33	1039.00	625.00	1039.50	626.00	1039.00	639.00	1039.00	651.00
GR	1039.00	688.00	1039.00	690.00	1039.00	730.00	1054.50	745.40		
X1	87.00	12.00	259.80	745.20	300.00	300.00	300.00	0.00	0.00	0.00
XF	290.20	730.00	0.00	0.00	470.00	0.00	0.00	1.00	0.00	0.00
X3										7.00
GR	1055.00	259.80	1039.80	290.20	1039.80	323.16	1039.80	356.12	1039.80	389.08

GR	1039.80	422.04	1039.80	455.00	1039.80	470.00	1039.80	507.50	1039.80	545.00
GR	1039.80	560.00	1039.80	585.00	1039.80	610.00	1039.80	630.00	1039.80	650.00
GR	1039.80	680.00	1039.80	705.00	1039.80	730.00	1055.00	745.20		
X1	89.00	12.00	260.00	745.00	200.00	200.00	200.00	0.00	0.00	0.00
XF	290.00	730.00	0.00	0.00	500.00	0.00	0.00	1.00	0.00	0.00
X3										8.00
GR	1055.40	260.00	1040.40	290.00	1040.40	320.00	1040.40	323.20	1040.93	352.13
GR	1041.47	381.07	1042.00	410.00	1040.40	413.20	1040.40	442.13	1040.40	471.07
GR	1040.40	500.00	1040.40	530.00	1040.40	560.00	1040.40	590.00	1040.40	620.00
GR	1040.40	655.00	1040.40	690.00	1040.40	710.00	1040.40	730.00	1055.40	745.00
X1	94.00	13.00	260.40	744.60	500.00	500.00	500.00	0.00	0.00	0.00
XF	289.60	730.00	-1125.67	0.00	289.60	0.00	0.00	1.00	0.00	0.00
X3										7.00
GR	1056.40	260.40	1041.80	289.60	1041.80	314.80	1041.80	340.00	1044.00	344.00
GR	1042.00	359.00	1041.90	380.00	1042.00	405.00	1041.80	406.00	1041.80	437.33
GR	1041.80	468.67	1041.80	500.00	1041.80	535.00	1041.80	570.00	1041.80	605.00
GR	1041.80	640.00	1041.80	680.00	1041.80	705.00	1041.80	730.00	1056.40	744.60
X1	97.00	16.00	260.50	744.50	300.00	300.00	300.00	0.00	0.00	0.00
XF	289.50	730.00	-1125.67	0.00	289.50	0.00	0.00	1.00	0.00	0.00
X3										6.00
GR	1057.10	260.50	1042.60	289.50	1042.60	320.00	1042.60	345.00	1042.60	370.00
GR	1042.60	380.00	1042.60	405.00	1042.60	440.50	1042.60	476.00	1044.00	479.00
GR	1043.80	500.00	1043.90	522.50	1044.00	545.00	1046.00	555.00	1042.60	562.00
GR	1042.60	591.33	1042.60	620.67	1042.60	650.00	1042.60	675.00	1042.60	702.50
GR	1042.60	730.00	1057.10	744.50						
X1	99.54	5.00	325.10	674.90	254.00	254.00	254.00	0.00	0.00	0.00
XF	325.15	674.85	-1125.67	0.00	325.15	0.00	0.00	1.00	0.00	0.00
X3										8.00
GR	1063.50	325.10	1043.20	325.15	1043.20	360.12	1043.20	395.09	1043.20	430.06
GR	1043.20	465.03	1043.20	500.00	1043.20	534.97	1043.20	569.94	1043.20	604.91
GR	1043.20	639.88	1043.20	674.85	1063.50	674.90				
X1	99.60	5.00	325.10	674.90	6.00	6.00	6.00	0.00	0.00	0.00
XF	325.15	674.85	0.00	0.02	500.00	1.00	0.00	1.00	0.00	0.00
X3										8.00
GR	1063.80	325.10	1046.20	325.15	1046.20	360.12	1046.20	395.09	1046.20	430.06
GR	1046.20	465.03	1046.20	500.00	1046.20	534.97	1046.20	569.94	1046.20	604.91
GR	1046.20	639.88	1046.20	674.85	1063.80	674.90				
X1	100.90	5.00	308.15	691.85	130.00	130.00	130.00	0.00	0.00	0.00
XF	325.15	674.85	0.00	0.00	500.00	0.00	0.00	1.00	0.00	0.00
X3										8.00
GR	1063.60	308.15	1046.60	325.15	1046.60	360.12	1046.60	395.09	1046.60	430.06
GR	1046.60	465.03	1046.60	500.00	1046.60	534.97	1046.60	569.94	1046.60	604.91
GR	1046.60	639.88	1046.60	674.85	1063.60	691.85				
X1	103.00	14.00	292.00	708.00	260.00	260.00	260.00	0.00	0.00	0.00
XF	328.80	689.60	0.00	0.00	500.00	0.00	0.00	1.00	0.00	0.00
X3										5.00
GR	1065.40	292.00	1047.00	328.80	1047.00	349.40	1047.00	370.00	1047.00	380.00
GR	1047.00	382.00	1047.00	418.00	1047.00	454.00	1047.00	490.00	1047.00	500.00
GR	1047.00	526.50	1047.00	553.00	1047.00	579.50	1047.00	606.00	1047.00	640.00
GR	1047.00	657.00	1047.00	659.00	1047.00	689.60	1065.40	708.00		
X1	106.00	8.00	246.20	753.60	300.00	300.00	300.00	0.00	0.00	0.00
XF	284.00	734.80	0.00	0.00	500.00	0.00	0.00	1.00	0.00	0.00
X3										9.00
GR	1066.40	246.40	1047.60	284.00	1047.60	316.00	1047.60	348.00	1047.60	380.00
GR	1047.60	412.00	1047.60	441.33	1047.60	470.67	1047.60	500.00	1047.60	537.00
GR	1047.60	574.00	1047.60	611.00	1047.60	648.00	1047.60	685.00	1047.60	710.00
GR	1047.60	734.80	1066.40	753.60						
X1	109.00	11.00	201.30	798.70	300.00	300.00	300.00	0.00	0.00	0.00
XF	238.70	780.00	0.00	0.00	518.60	0.00	0.00	1.00	0.00	0.00
X3										11.00
GR	1066.90	201.30	1048.20	238.70	1048.20	274.15	1048.20	309.60	1048.20	345.05
GR	1048.20	380.50	1048.20	415.95	1048.20	451.40	1050.00	455.00	1048.20	480.00
GR	1050.00	503.00	1051.00	510.00	1050.00	515.00	1048.20	518.60	1048.20	555.94
GR	1048.20	593.29	1048.20	630.63	1048.20	667.97	1048.20	705.31	1048.20	742.66
GR	1048.20	780.00	1066.90	798.70						
X1	110.00	12.00	201.50	798.50	100.00	100.00	100.00	0.00	0.00	0.00

XF	238.70	780.00	0.00	0.00	505.00	0.00	0.00	1.00	0.00	0.00
X3										10.00
GR	1066.90	201.30	1048.40	238.70	1048.40	277.52	1048.40	316.34	1048.40	355.16
GR	1048.40	393.98	1048.40	432.80	1051.00	438.00	1051.00	461.50	1051.00	485.00
GR	1047.00	505.00	1048.40	515.00	1048.40	550.00	1048.40	565.00	1048.40	598.80
GR	1048.40	632.60	1048.40	666.40	1048.40	700.20	1048.40	734.00	1048.40	757.00
GR	1048.40	780.00	1066.90	798.50						
X1	113.00	16.00	201.80	798.20	300.00	300.00	300.00	0.00	0.00	0.00
XF	238.20	780.00	0.00	0.00	500.00	0.00	0.00	1.00	0.00	0.00
X3										8.00
GR	1067.20	201.80	1049.00	238.20	1049.00	270.76	1049.00	303.32	1049.00	335.88
GR	1049.00	368.44	1049.00	401.00	1051.30	404.00	1049.00	435.00	1049.00	465.00
GR	1050.00	473.00	1049.00	475.00	1049.00	500.00	1049.00	535.00	1049.00	557.50
GR	1049.00	580.00	1049.00	595.00	1049.00	620.00	1049.00	652.50	1049.00	685.00
GR	1049.00	716.67	1049.00	748.33	1049.00	780.00	1067.20	798.20		
X1	116.00	13.00	202.30	797.70	240.00	340.00	300.00	0.00	0.00	0.00
XF	237.70	780.00	1078.71	0.00	780.00	0.00	0.00	1.00	0.00	0.00
X3										10.00
GR	1067.30	202.30	1049.60	237.70	1049.60	269.83	1049.60	301.95	1049.60	334.08
GR	1049.60	366.20	1054.00	375.00	1054.00	378.00	1049.60	386.80	1049.60	424.53
GR	1049.60	462.27	1049.60	500.00	1049.60	539.60	1049.60	579.20	1056.00	592.00
GR	1058.00	603.00	1049.60	619.80	1049.60	651.84	1049.60	683.88	1049.60	715.92
GR	1049.60	747.96	1049.60	780.00	1067.30	797.70				
X1	120.00	10.00	273.30	746.70	327.00	497.00	400.00	0.00	0.00	0.00
XF	306.70	730.00	1078.71	0.00	730.00	0.00	0.00	1.00	0.00	0.00
X3										8.00
GR	1067.10	273.30	1050.40	306.70	1050.40	345.36	1050.40	384.02	1050.40	422.68
GR	1050.40	461.34	1050.40	500.00	1050.40	506.60	1056.70	520.00	1057.07	546.67
GR	1057.43	573.33	1057.80	600.00	1057.30	622.50	1056.80	645.00	1050.40	658.60
GR	1050.40	694.30	1050.40	730.00	1067.10	746.70				
X1	123.00	11.00	272.20	747.80	342.00	342.00	342.00	0.00	0.00	0.00
XF	307.80	730.00	0.00	0.00	500.00	0.00	0.00	1.00	0.00	0.00
X3										7.00
GR	1068.80	272.20	1051.00	307.80	1051.00	315.00	1051.00	342.50	1051.00	370.00
GR	1051.00	400.00	1051.00	433.33	1051.00	466.67	1051.00	500.00	1051.00	536.67
GR	1051.00	573.33	1051.00	610.00	1051.00	630.00	1051.00	655.00	1051.00	680.00
GR	1051.00	705.00	1051.00	730.00	1068.80	747.80				
X1	127.00	10.00	273.00	747.00	400.00	400.00	400.00	0.00	0.00	0.00
XF	307.00	730.00	0.00	0.00	500.00	0.00	0.00	1.00	0.00	0.00
X3										7.00
GR	1068.80	273.00	1051.80	307.00	1051.80	345.00	1051.80	372.50	1051.80	400.00
GR	1051.80	425.00	1051.80	450.00	1051.80	475.00	1051.80	500.00	1051.80	537.50
GR	1051.80	575.00	1051.80	612.50	1051.80	650.00	1051.80	665.00	1051.80	697.50
GR	1051.80	730.00	1068.80	747.00						
X1	131.00	14.00	273.20	746.80	400.00	400.00	400.00	0.00	0.00	0.00
XF	306.80	730.00	0.00	0.00	356.00	0.00	0.00	1.00	0.00	0.00
X3										6.00
GR	1069.40	273.20	1052.60	306.80	1052.60	328.90	1052.60	351.00	1050.00	356.00
GR	1052.00	365.00	1054.00	395.00	1054.00	430.00	1052.60	445.00	1053.30	471.10
GR	1054.00	497.20	1052.60	500.00	1052.60	530.00	1052.60	564.00	1052.60	598.00
GR	1052.60	632.00	1052.60	666.00	1052.60	698.00	1052.60	730.00	1069.40	746.80
X1	135.00	12.00	273.50	746.30	400.00	400.00	400.00	0.00	0.00	0.00
XF	306.50	730.00	0.00	0.00	500.00	0.00	0.00	1.00	0.00	0.00
X3										7.00
GR	1069.60	273.50	1053.40	306.50	1053.40	330.00	1058.40	340.00	1058.30	376.00
GR	1058.20	412.00	1059.20	412.00	1053.40	423.60	1053.40	461.80	1053.40	500.00
GR	1053.40	502.00	1053.40	537.60	1053.40	573.20	1053.40	608.80	1053.40	644.40
GR	1053.40	680.00	1053.40	705.00	1053.40	730.00	1069.90	746.30		
X1	138.00	15.00	274.40	745.60	300.00	300.00	300.00	0.00	0.00	0.00
XF	305.60	730.00	0.00	0.00	500.00	0.00	0.00	1.00	0.00	0.00
X3										6.00
GR	1069.60	274.40	1054.00	305.60	1054.00	327.80	1054.00	350.00	1059.00	360.00
GR	1058.50	382.50	1058.00	405.00	1054.00	413.00	1054.00	440.00	1054.00	460.00
GR	1054.00	475.00	1054.00	500.00	1054.00	530.00	1054.00	560.00	1054.00	590.00
GR	1054.00	615.00	1054.00	640.00	1054.00	670.00	1054.00	700.00	1054.00	730.00
GR	1069.60	745.60								

X1	141.00	15.00	273.60	746.40	300.00	300.00	300.00	0.00	0.00	0.00
XF	306.30	730.00	0.00	0.00	500.00	0.00	0.00	1.00	0.00	0.00
X3										5.00
GR	1071.00	273.60	1054.60	306.30	1054.60	328.80	1058.20	336.00	1058.70	370.00
GR	1054.60	379.40	1054.60	403.00	1060.00	415.00	1061.50	435.00	1060.00	454.00
GR	1054.60	474.00	1054.60	500.00	1054.60	530.00	1054.60	560.00	1054.60	594.00
GR	1054.60	628.00	1054.60	662.00	1054.60	696.00	1054.60	730.00	1071.00	746.40
X1	145.00	10.00	273.40	746.60	400.00	400.00	400.00	0.00	0.00	0.00
XF	306.60	730.00	0.00	0.00	505.00	0.00	0.00	1.00	0.00	0.00
X3										8.00
GR	1072.00	273.40	1055.40	306.60	1055.40	320.00	1055.40	340.00	1055.40	370.00
GR	1055.40	403.75	1055.40	437.50	1055.40	471.25	1055.40	505.00	1055.40	515.00
GR	1055.40	525.00	1055.40	559.17	1055.40	593.33	1055.40	627.50	1055.40	661.67
GR	1055.40	695.83	1055.40	730.00	1077.00	746.60				
X1	147.00	13.00	273.40	746.60	200.00	200.00	200.00	0.00	0.00	0.00
XF	306.60	730.00	-1709.76	0.00	306.60	0.00	0.00	1.00	0.00	0.00
X3										5.00
GR	1072.40	273.40	1055.80	306.60	1055.80	340.00	1055.80	370.00	1055.80	400.00
GR	1055.80	430.00	1055.80	440.00	1055.80	470.00	1055.80	500.00	1055.80	505.00
GR	1055.80	532.50	1055.80	560.00	1055.80	597.50	1055.80	635.00	1055.80	666.67
GR	1055.80	698.33	1055.80	730.00	1072.40	746.60				
X1	150.00	6.00	223.40	726.60	350.00	260.00	300.00	0.00	0.00	0.00
XF	256.60	710.00	-1709.76	0.00	256.60	0.00	0.00	1.00	0.00	0.00
X3										10.00
GR	1073.00	223.40	1056.40	256.60	1056.40	289.40	1056.40	322.20	1056.40	355.00
GR	1056.40	377.50	1056.40	400.00	1056.40	438.75	1056.40	477.50	1056.40	516.25
GR	1056.40	555.00	1056.40	593.75	1056.40	632.50	1056.40	671.25	1056.40	710.00
GR	1073.00	726.60								
X1	155.00	15.00	224.10	685.90	585.00	460.00	500.00	0.00	0.00	0.00
XF	255.90	670.00	-1709.76	0.00	255.90	0.00	0.00	1.00	0.00	0.00
X3										5.00
GR	1073.30	224.10	1057.40	255.90	1057.40	287.62	1057.40	319.35	1057.40	351.08
GR	1057.40	382.80	1065.00	398.00	1064.00	404.00	1062.00	412.00	1061.40	450.00
GR	1062.00	488.00	1063.00	500.00	1064.00	505.00	1066.00	511.00	1057.40	528.20
GR	1057.40	564.10	1057.40	600.00	1057.40	635.00	1057.40	670.00	1073.30	685.90
X1	158.00	5.00	319.00	679.50	360.00	265.00	300.00	0.00	0.00	0.00
XF	356.00	662.50	-1709.76	0.00	356.00	0.00	0.00	1.00	0.00	0.00
X3										7.00
GR	1076.50	319.00	1058.00	356.00	1058.00	392.00	1058.00	428.00	1058.00	464.00
GR	1058.00	500.00	1058.00	532.50	1058.00	565.00	1058.00	597.50	1058.00	630.00
GR	1058.00	662.50	1075.00	679.50						
X1	159.45	5.00	319.00	681.00	245.00	245.00	245.00	0.00	0.00	0.00
XF	337.50	662.50	0.00	0.00	500.00	0.00	0.00	1.00	0.00	0.00
X3										8.00
GR	1076.80	319.00	1058.30	337.50	1058.30	370.00	1058.30	402.50	1058.30	435.00
GR	1058.30	467.50	1058.30	500.00	1058.30	532.50	1058.30	565.00	1058.30	597.50
GR	1058.30	630.00	1058.30	662.50	1076.80	681.00				
X1	160.25	5.00	319.00	681.00	80.00	80.00	80.00	0.00	0.00	0.00
XF	337.50	662.50	0.00	0.00	500.00	0.00	0.00	1.00	0.00	0.00
X3										8.00
GR	1077.00	319.00	1058.46	337.50	1058.46	370.00	1058.46	402.50	1058.46	435.00
GR	1058.46	467.50	1058.46	500.00	1058.46	532.50	1058.46	565.00	1058.46	597.50
GR	1058.46	630.00	1058.46	662.50	1077.00	681.00				
X1	162.00	12.00	319.30	680.70	175.00	175.00	175.00	0.00	0.00	0.00
XF	337.50	662.50	0.00	0.00	500.00	0.00	0.00	1.00	0.00	0.00
X3										4.00
GR	1077.00	319.30	1058.80	337.50	1058.80	350.00	1058.80	375.00	1058.80	400.00
GR	1058.80	420.00	1058.80	440.00	1058.80	460.00	1058.80	480.00	1058.80	500.00
GR	1058.80	533.33	1058.80	566.67	1058.80	600.00	1058.80	631.25	1058.80	662.50
GR	1077.00	680.70								
X1	165.00	10.00	189.20	769.40	300.00	300.00	300.00	0.00	0.00	0.00
XF	210.80	750.00	0.00	0.00	500.00	0.00	0.00	1.00	0.00	0.00
X3										10.00
GR	1078.80	189.20	1068.00	210.80	1068.00	227.80	1068.00	245.00	1068.00	275.00
GR	1068.00	305.00	1068.10	337.50	1068.20	370.00	1059.40	387.60	1059.40	425.07
GR	1059.40	462.53	1059.40	500.00	1059.40	535.71	1059.40	571.43	1059.40	607.14

GR	1059.40	642.86	1059.40	678.57	1059.40	714.29	1059.40	750.00	1078.80	769.40
X1	168.00	12.00	190.00	768.90	300.00	300.00	300.00	0.00	0.00	0.00
XF	210.00	750.00	0.00	0.00	500.00	0.00	0.00	1.00	0.00	0.00
X3										10.00
GR	1079.00	190.00	1069.00	210.00	1069.00	225.20	1069.00	243.00	1068.00	254.00
GR	1067.80	278.00	1068.00	295.00	1068.50	323.33	1069.00	351.67	1069.50	380.00
GR	1060.10	398.80	1060.10	432.53	1060.10	466.27	1060.10	500.00	1060.10	535.71
GR	1060.10	571.43	1060.10	607.14	1060.10	642.86	1060.10	678.57	1060.10	714.29
GR	1060.10	750.00	1079.00	768.90						
X1	170.00	12.00	190.80	768.60	200.00	200.00	200.00	0.00	0.00	0.00
XF	209.20	750.00	0.00	0.00	395.80	0.00	0.00	1.00	0.00	0.00
X3										9.00
GR	1079.20	190.80	1070.00	209.20	1070.00	240.20	1070.00	260.00	1069.00	262.00
GR	1068.40	295.00	1068.20	330.50	1068.00	366.00	1070.00	377.00	1060.60	395.80
GR	1060.60	430.53	1060.60	465.27	1060.60	500.00	1060.60	535.71	1060.60	571.43
GR	1060.60	607.14	1060.60	642.86	1060.60	678.57	1060.60	714.29	1060.60	750.00
GR	1079.20	768.60								
X1	173.00	12.00	224.10	674.60	300.00	300.00	300.00	0.00	0.00	0.00
XF	238.10	657.00	0.00	0.00	400.20	0.00	0.00	1.00	0.00	0.00
X3										6.00
GR	1079.00	224.10	1072.00	238.10	1072.00	268.80	1072.00	290.00	1070.00	302.00
GR	1068.00	312.00	1068.00	346.00	1068.00	380.00	1069.00	385.00	1061.40	400.20
GR	1061.40	433.47	1061.40	466.73	1061.40	500.00	1061.40	539.25	1061.40	578.50
GR	1061.40	617.75	1061.40	657.00	1079.00	674.60				
X1	176.00	12.00	265.90	674.40	300.00	300.00	300.00	0.00	0.00	0.00
XF	289.10	657.00	0.00	0.00	416.00	0.00	0.00	1.00	0.00	0.00
X3										4.00
GR	1079.60	265.90	1068.00	289.10	1068.00	327.00	1068.00	339.00	1068.00	371.50
GR	1068.00	404.00	1062.20	416.00	1062.20	450.00	1062.20	475.00	1062.20	500.00
GR	1062.20	525.00	1062.20	550.00	1062.20	585.67	1062.20	621.33	1062.20	657.00
GR	1079.60	674.40								
X1	177.00	5.00	279.10	675.10	100.00	100.00	100.00	0.00	0.00	0.00
XF	297.00	657.00	0.00	0.00	500.00	0.00	0.00	1.00	0.00	0.00
X3										8.00
GR	1080.50	279.10	1062.40	297.00	1062.40	330.83	1062.40	364.67	1062.40	398.50
GR	1062.40	432.33	1062.40	466.17	1062.40	500.00	1062.40	539.25	1062.40	578.50
GR	1062.40	617.75	1062.40	657.00	1080.50	675.10				
X1	179.00	5.00	306.80	726.70	200.00	200.00	200.00	0.00	0.00	0.00
XF	343.30	708.50	0.00	0.00	500.00	0.00	0.00	1.00	0.00	0.00
X3										8.00
GR	1081.00	306.80	1062.80	343.30	1062.80	382.47	1062.80	421.65	1062.80	460.82
GR	1062.80	500.00	1062.80	534.75	1062.80	569.50	1062.80	604.25	1062.80	639.00
GR	1062.80	673.75	1062.80	708.50	1081.00	726.70				
X1	181.00	5.00	306.70	778.30	200.00	200.00	200.00	0.00	0.00	0.00
XF	343.30	760.00	0.00	0.00	500.00	0.00	0.00	1.00	0.00	0.00
X3										9.00
GR	1081.60	306.70	1063.30	343.30	1063.30	382.47	1063.30	421.65	1063.30	460.82
GR	1063.30	500.00	1063.30	537.14	1063.30	574.29	1063.30	611.43	1063.30	648.57
GR	1063.30	685.71	1063.30	722.86	1063.30	760.00	1081.60	778.30		
X1	183.00	12.00	307.50	777.50	200.00	200.00	200.00	0.00	0.00	0.00
XF	342.50	760.00	0.00	0.00	613.40	0.00	0.00	1.00	0.00	0.00
X3										6.00
GR	1081.30	307.50	1063.80	342.50	1063.80	370.05	1063.80	397.60	1073.00	416.00
GR	1072.00	439.00	1071.90	465.50	1071.80	492.00	1071.50	500.00	1070.00	540.00
GR	1070.50	569.50	1071.00	599.00	1063.80	613.40	1063.80	650.05	1063.80	686.70
GR	1063.80	723.35	1063.80	760.00	1081.30	777.50				
X1	188.00	12.00	307.00	778.00	500.00	500.00	500.00	0.00	0.00	0.00
XF	343.00	760.00	0.00	0.00	513.00	0.00	0.00	1.00	0.00	0.00
X3										7.00
GR	1083.00	307.00	1065.00	343.00	1065.00	382.25	1065.00	421.50	1065.00	460.75
GR	1065.00	500.00	1065.00	513.00	1073.00	529.00	1072.10	530.00	1072.40	552.50
GR	1072.70	575.00	1072.35	609.00	1072.00	643.00	1070.50	660.00	1065.00	671.00
GR	1065.00	700.67	1065.00	730.33	1065.00	760.00	1083.00	778.00		
X1	193.00	12.00	307.20	777.80	500.00	500.00	500.00	0.00	0.00	0.00
XF	342.80	760.00	3556.73	0.00	760.00	0.00	0.00	1.00	0.00	0.00
X3										5.00

GR	1084.00	307.20	1066.20	342.80	1066.20	379.45	1066.20	416.10	1066.20	452.75
GR	1066.20	489.40	1074.00	505.00	1072.00	540.00	1071.40	560.00	1072.00	585.00
GR	1074.00	620.00	1066.20	635.60	1066.20	667.80	1066.20	700.00	1066.20	730.00
GR	1066.20	760.00	1084.00	777.80						
X1	197.00	13.00	307.60	777.40	400.00	400.00	400.00	0.00	0.00	0.00
XF	342.40	760.00	3556.73	0.00	760.00	0.00	0.00	1.00	0.00	0.00
X3										6.00
GR	1084.60	307.60	1067.20	342.40	1067.20	375.90	1067.20	409.40	1074.00	423.00
GR	1073.00	461.50	1072.00	500.00	1072.00	536.67	1072.00	573.33	1072.00	610.00
GR	1074.00	613.00	1076.00	617.00	1076.00	627.00	1075.80	640.00	1067.20	657.20
GR	1067.20	691.47	1067.20	725.73	1067.20	760.00	1084.60	777.40		
X1	199.00	5.00	317.50	728.50	200.00	200.00	100.00	0.00	0.00	0.00
XF	336.00	710.00	3556.73	0.00	710.00	0.00	0.00	1.00	0.00	0.00
X3										9.00
GR	1086.20	317.50	1067.70	336.00	1067.70	368.80	1067.70	401.60	1067.70	434.40
GR	1067.70	467.20	1067.70	500.00	1067.70	535.00	1067.70	570.00	1067.70	605.00
GR	1067.70	640.00	1067.70	675.00	1067.70	710.00	1086.20	728.50		
X1	201.10	5.00	324.50	675.50	210.00	210.00	210.00	0.00	0.00	0.00
XF	343.00	657.00	3556.73	0.00	657.00	0.00	0.00	1.00	0.00	0.00
X3										6.00
GR	1086.70	324.50	1068.20	343.00	1068.20	382.25	1068.20	421.50	1068.20	460.75
GR	1068.20	500.00	1068.20	539.25	1068.20	578.50	1068.20	617.75	1068.20	657.00
GR	1086.70	675.50								
X1	201.90	5.00	324.50	675.50	80.00	80.00	80.00	0.00	0.00	0.00
XF	343.00	657.00	3556.73	0.00	657.00	0.00	0.00	1.00	0.00	0.00
X3										6.00
GR	1086.90	324.50	1068.40	343.00	1068.40	382.25	1068.40	421.50	1068.40	460.75
GR	1068.40	500.00	1068.40	539.25	1068.40	578.50	1068.40	617.75	1068.40	657.00
GR	1086.90	675.50								
X1	204.00	5.00	324.50	675.50	210.00	210.00	210.00	0.00	0.00	0.00
XF	343.00	657.00	0.00	0.00	500.00	0.00	0.00	1.00	0.00	0.00
X3										6.00
GR	1087.40	324.50	1068.90	343.00	1068.90	382.25	1068.90	421.50	1068.90	460.75
GR	1068.90	500.00	1068.90	539.25	1068.90	578.50	1068.90	617.75	1068.90	657.00
GR	1087.40	675.50								
X1	209.30	5.00	325.00	675.00	530.00	530.00	530.00	0.00	9.59	0.00
XF	343.00	657.00	0.00	0.00	500.00	0.00	0.00	1.00	0.00	0.00
X3										6.00
GR	1088.19	325.00	1070.19	343.00	1070.19	382.25	1070.19	421.50	1070.19	460.75
GR	1070.19	500.00	1070.19	539.25	1070.19	578.50	1070.19	617.75	1070.19	657.00
GR	1088.19	675.00								
X1	212.60	5.00	357.40	642.60	330.00	330.00	330.00	0.00	0.00	0.00
XF	376.00	624.00	0.00	0.02	500.00	1.00	0.00	1.00	0.00	0.00
X3										6.00
GR	1089.60	357.40	1071.00	376.00	1071.00	407.00	1071.00	438.00	1071.00	469.00
GR	1071.00	500.00	1071.00	531.00	1071.00	562.00	1071.00	593.00	1071.00	624.00
GR	1089.60	642.60								
X1	213.50	5.00	357.90	642.10	90.00	90.00	90.00	0.00	0.00	0.00
XF	376.00	624.00	0.00	0.02	500.00	1.00	0.00	1.00	0.00	0.00
X3										6.00
GR	1089.60	357.90	1071.50	376.00	1071.50	407.00	1071.50	438.00	1071.50	469.00
GR	1071.50	500.00	1071.50	531.00	1071.50	562.00	1071.50	593.00	1071.50	624.00
GR	1089.60	642.10								
X1	213.70	5.00	347.10	652.90	20.00	20.00	20.00	0.00	0.00	0.00
XF	369.10	630.90	0.00	0.02	500.00	1.00	0.00	1.00	0.00	0.00
X3										6.00
GR	1095.00	347.10	1073.00	369.10	1073.00	401.83	1073.00	434.55	1073.00	467.28
GR	1073.00	500.00	1073.00	532.72	1073.00	565.45	1073.00	598.17	1073.00	630.90
GR	1096.20	652.90								
X1	217.50	5.00	305.00	690.00	380.00	380.00	380.00	0.00	0.00	0.00
XF	326.80	667.20	300.00	0.00	326.80	0.00	0.00	1.00	0.00	0.00
X3										8.00
GR	1096.00	305.00	1074.20	326.80	1074.20	361.44	1074.20	396.08	1074.20	430.72
GR	1074.20	465.36	1074.20	500.00	1074.20	533.44	1074.20	566.88	1074.20	600.32
GR	1074.20	633.76	1074.20	667.20	1097.00	690.00				
X1	221.10	5.00	295.00	695.00	360.00	360.00	360.00	0.00	0.00	0.00

XF	316.30	672.30	-1184.27	0.00	316.30	0.00	0.00	1.00	0.00	0.00
X3										8.00
GR	1096.60	295.00	1075.30	316.30	1075.30	353.04	1075.30	389.78	1075.30	426.52
GR	1075.30	463.26	1075.30	500.00	1075.30	534.46	1075.30	568.92	1075.30	603.38
GR	1075.30	637.84	1075.30	672.30	1098.00	695.00				
X1	227.50	11.00	245.00	755.00	640.00	640.00	640.00	0.00	0.00	0.00
XF	268.00	733.00	-1341.44	0.00	268.00	0.00	0.00	1.00	0.00	0.00
X3										6.00
GR	1099.00	245.00	1077.10	268.00	1077.10	301.00	1077.10	334.00	1077.10	367.00
GR	1077.10	400.00	1077.10	433.00	1077.10	466.00	1077.10	500.00	1077.10	532.00
GR	1077.10	565.00	1077.10	598.00	1077.10	631.00	1077.10	664.00	1077.10	698.50
GR	1077.10	733.00	1099.00	755.00						
X1	233.55	5.00	270.00	730.00	580.00	580.00	580.00	0.00	0.00	0.00
XF	292.70	707.40	-983.42	0.00	292.70	0.00	0.00	1.00	0.00	0.00
X3										10.00
GR	1101.70	270.00	1079.00	292.70	1079.00	327.25	1079.00	361.80	1079.00	396.35
GR	1079.00	430.90	1079.00	465.45	1079.00	500.00	1079.00	534.57	1079.00	569.13
GR	1079.00	603.70	1079.00	638.27	1079.00	672.83	1079.00	707.40	1101.60	730.00
X1	238.66	5.00	330.00	670.00	516.00	516.00	516.00	0.00	0.00	0.00
XF	352.90	646.70	1553.14	0.00	646.70	0.00	0.00	1.00	0.00	0.00
X3										6.00
GR	1103.30	330.00	1080.60	352.90	1080.60	389.67	1080.60	426.45	1080.60	463.22
GR	1080.60	500.00	1080.60	536.67	1080.60	573.35	1080.60	610.02	1080.60	646.70
GR	1103.70	670.00								
X1	238.69	5.00	325.00	665.00	3.00	3.00	3.00	0.00	0.00	0.00
XF	344.80	644.70	1553.14	0.02	644.70	1.00	0.00	1.00	0.00	0.00
X3										6.00
GR	1103.40	325.00	1083.60	344.80	1083.60	383.60	1083.60	422.40	1083.60	461.20
GR	1083.60	500.00	1083.60	536.17	1083.60	572.35	1083.60	608.52	1083.60	644.70
GR	1103.90	665.00								
X1	242.00	5.00	325.00	675.00	331.00	331.00	331.00	0.00	0.00	0.00
XF	344.55	655.45	1553.14	0.00	655.45	0.00	0.00	1.00	0.00	0.00
X3										6.00
GR	1104.00	325.00	1084.45	344.55	1084.45	383.41	1084.45	422.27	1084.45	461.14
GR	1084.45	500.00	1084.45	538.86	1084.45	577.72	1084.45	616.59	1084.45	655.45
GR	1104.00	675.00								
X1	247.00	5.00	325.00	675.00	500.00	500.00	500.00	0.00	0.00	0.00
XF	343.83	656.17	1553.14	0.00	656.17	0.00	0.00	1.00	0.00	0.00
X3										6.00
GR	1104.50	325.00	1085.67	343.83	1085.67	382.87	1085.67	421.92	1085.67	460.96
GR	1085.67	500.00	1085.67	539.04	1085.67	578.08	1085.67	617.13	1085.67	656.17
GR	1104.50	675.00								
X1	270.50	5.00	9749.70	10151.30	555.00	555.00	555.00	0.00	0.00	0.00
XF	9768.00	10133.00	1000.00	0.00	9768.00	0.00	0.00	1.00	0.00	0.00
X3										8.00
GR	1104.80	9749.70	1086.50	9768.00	1086.50	9804.40	1086.50	9840.80	1086.50	9877.20
GR	1086.50	9913.60	1086.50	9950.00	1086.50	9986.60	1086.50	10023.20	1086.50	10059.80
GR	1086.50	10096.40	1086.50	10133.00	1104.80	10151.30				
X1	273.50	5.00	9714.20	10124.10	315.00	310.00	310.00	0.00	0.00	0.00
XF	9732.00	10107.00	-2540.87	0.00	9732.00	0.00	0.00	1.00	0.00	0.00
X3										8.00
GR	1104.30	9714.90	1087.20	9732.00	1087.20	9769.40	1087.20	9806.80	1087.20	9844.20
GR	1087.20	9881.60	1087.20	9919.00	1087.20	9956.60	1087.20	9994.20	1087.20	10031.80
GR	1087.20	10069.40	1087.20	10107.00	1104.30	10124.10				
X1	277.90	5.00	9729.50	10124.50	420.00	420.00	420.00	0.00	0.00	0.00
XF	9747.00	10107.00	0.00	0.00	9927.00	0.00	0.00	1.00	0.00	0.00
X3										8.00
GR	1105.80	9729.50	1088.30	9747.00	1088.30	9783.00	1088.30	9819.00	1088.30	9855.00
GR	1088.30	9891.00	1088.30	9927.00	1088.30	9963.00	1088.30	9999.00	1088.30	10035.00
GR	1088.30	10071.00	1088.30	10107.00	1105.80	10124.50				
X1	281.80	5.00	9750.90	10113.10	410.00	410.00	410.00	0.00	0.00	0.00
XF	9767.00	10097.00	0.00	0.00	9932.00	0.00	0.00	1.00	0.00	0.00
X3										8.00
GR	1105.30	9750.90	1089.20	9767.00	1089.20	9800.00	1089.20	9833.00	1089.20	9866.00
GR	1089.20	9899.00	1089.20	9932.00	1089.20	9965.00	1089.20	9998.00	1089.20	10031.00
GR	1089.20	10064.00	1089.20	10097.00	1105.30	10113.10				

```
X1   288.00     5.00  9836.90 10139.10   600.00   600.00   600.00     0.00     0.00     0.00
XF  9851.00 10125.00     0.00     0.00  9988.00     0.00     0.00     1.00     0.00     0.00
X3                                                                                        6.00
GR  1106.30  9836.90  1092.20  9851.00  1092.20  9885.25  1092.20  9919.50  1092.20  9953.75
GR  1092.20  9988.00  1092.20 10022.25  1092.20 10056.50  1092.20 10090.75  1092.20 10125.00
GR  1106.30 10139.10
X1   290.00     7.00  9864.98 10136.02   220.00   160.00   200.00     0.00     0.00     0.00
XF  9865.00 10136.00  1000.00     0.00 10136.00     0.00     0.00     1.00     0.00     0.00
X3                                                                                        6.00
GR  1117.80  9864.98  1108.80  9864.99  1093.00  9865.00  1093.05  9898.75  1093.10  9932.50
GR  1093.15  9966.25  1093.20 10000.00  1093.22 10034.00  1093.25 10068.00  1093.28 10102.00
GR  1093.30 10136.00  1108.80 10136.01  1117.80 10136.02
X1   291.00     7.00  9864.98 10136.02    77.00    77.00    77.00     0.00     0.00     0.00
XF  9865.00 10136.00     0.00     0.00  9865.00     0.00     0.00     1.00     0.00     0.00
X3                                                                                        6.00
GR  1116.00  9864.98  1108.80  9864.99  1093.00  9865.00  1093.10  9898.75  1093.20  9932.50
GR  1093.30  9966.25  1093.40 10000.00  1093.47 10034.00  1093.55 10068.00  1093.62 10102.00
GR  1093.70 10136.00  1108.80 10136.01  1116.00 10136.02
X1   293.00     5.00  9874.60 10139.40   200.00   200.00   200.00     0.00     0.00     0.00
XF  9891.00 10123.00 -1000.00     0.00  9891.00     0.00     0.00     1.00     0.00     0.00
X3                                                                                        4.00
GR  1110.40  9874.60  1094.00  9891.00  1094.00  9929.67  1094.00  9968.33  1094.00 10007.00
GR  1094.00 10045.67  1094.00 10084.33  1094.00 10123.00  1110.40 10139.40
X1   297.00     5.00  9865.50 10146.40   400.00   400.00   400.00     0.00     0.00     0.00
XF  9883.00 10129.00  3000.00     0.00 10129.00     0.00     0.00     1.00     0.00     0.00
X3                                                                                        6.00
GR  1113.50  9865.50  1096.10  9883.00  1096.10  9913.75  1096.10  9944.50  1096.10  9975.25
GR  1096.10 10006.00  1096.10 10036.75  1096.10 10067.50  1096.10 10098.25  1096.10 10129.00
GR  1113.50 10146.40
X1   302.00     5.00  9885.00 10114.00   530.00   530.00   530.00     0.00     0.00     0.00
XF  9901.00 10098.00  1600.00     0.00 10098.00     0.00     0.00     1.00     0.00     0.00
X3                                                                                        4.00
GR  1114.20  9885.00  1098.20  9901.00  1098.20  9933.67  1098.20  9966.33  1098.20  9999.00
GR  1098.20 10032.00  1098.20 10065.00  1098.20 10098.00  1114.20 10114.00
X1   305.00     5.00  9880.00 10104.00   280.00   280.00   280.00     0.00     0.00     0.00
XF  9898.00 10086.00     0.00     0.00 10000.00     0.00     0.00     1.00     0.00     0.00
X3                                                                                        4.00
GR  1117.50  9880.00  1099.50  9898.00  1099.50  9931.00  1099.50  9964.00  1099.50  9997.00
GR  1099.50 10026.67  1099.50 10056.33  1099.50 10086.00  1117.50 10104.00
X1   306.75     5.00  9792.50 10126.50   215.00   215.00   215.00     0.00     0.00     0.00
XF  9815.00 10104.00 -2500.00     0.00  9815.00     0.00     0.00     1.00     0.00     0.00
X3                                                                                        6.00
GR  1122.80  9792.50  1100.30  9815.00  1100.30  9851.00  1100.30  9887.00  1100.30  9923.00
GR  1100.30  9959.00  1100.30  9995.25  1100.30 10031.50  1100.30 10067.75  1100.30 10104.00
GR  1122.80 10126.50
X1   310.00     5.00  9778.10 10151.90   320.00   320.00   320.00     0.00     0.00     0.00
XF  9800.00 10130.00 -1787.99     0.00  9800.00     0.00     0.00     1.00     0.00     0.00
X3                                                                                        8.00
GR  1123.50  9778.10  1101.60  9800.00  1101.60  9833.00  1101.60  9866.00  1101.60  9899.00
GR  1101.60  9932.00  1101.60  9965.00  1101.60  9998.00  1101.60 10031.00  1101.60 10064.00
GR  1101.60 10097.00  1101.60 10130.00  1123.70 10151.90
X1   313.20     5.00  9814.30 10185.70   315.00   315.00   315.00     0.00     0.00     0.00
XF  9835.00 10165.00     0.00     0.00 10000.00     0.00     0.00     1.00     0.00     0.10
X3                                                                                        8.00
GR  1123.70  9814.30  1103.00  9835.00  1103.00  9868.00  1103.00  9901.00  1103.00  9934.00
GR  1103.00  9967.00  1103.00 10000.00  1103.00 10033.00  1103.00 10066.00  1103.00 10099.00
GR  1103.00 10132.00  1103.00 10165.00  1123.70 10185.70
X1   318.00     5.00  9816.00 10184.00   500.00   500.00   500.00     0.00     0.00     0.00
XF  9835.00 10165.00     0.00     0.00 10000.00     0.00     0.00     1.00     0.00     0.10
X3                                                                                        8.00
GR  1124.10  9816.00  1105.10  9835.00  1105.10  9868.00  1105.10  9901.00  1105.10  9934.00
GR  1105.10  9967.00  1105.10 10000.00  1105.10 10033.00  1105.10 10066.00  1105.10 10099.00
GR  1105.10 10132.00  1105.10 10165.00  1124.10 10184.00
EJ     0.00     0.00     0.00     0.00     0.00     0.00     0.00     0.00     0.00     0.00
```

TI INITIAL BED MATERIAL COMPOSITION

SECTION	SIZE MM	FRACTION	SIZE MM	FRACTION	SIZE MM	FRACTION	SIZE MM	FRACTION	SIZE MM	FRACTION
39.00	0.55	0.391	5.50	0.218	30.00	0.191	75.00	0.109	125.00	0.091
44.00	0.55	0.387	5.50	0.218	30.00	0.193	75.00	0.111	126.11	0.091
47.00	0.55	0.385	5.50	0.218	30.00	0.194	75.00	0.112	126.78	0.091
51.50	0.55	0.382	5.50	0.218	30.00	0.196	75.00	0.114	127.80	0.091
55.00	0.55	0.379	5.50	0.218	30.00	0.197	75.00	0.115	128.59	0.091
58.12	0.55	0.374	5.50	0.218	30.00	0.200	75.00	0.117	130.11	0.091
62.00	0.55	0.371	5.50	0.218	30.00	0.201	75.00	0.119	131.00	0.091
66.00	0.55	0.368	5.50	0.218	30.00	0.203	75.00	0.120	131.93	0.091
71.00	0.55	0.364	5.50	0.218	30.00	0.205	75.00	0.122	133.11	0.091
75.00	0.55	0.361	5.50	0.218	30.00	0.206	75.00	0.123	134.05	0.091
78.00	0.55	0.359	5.50	0.218	30.00	0.208	75.00	0.124	134.77	0.091
81.00	0.55	0.356	5.50	0.218	30.00	0.209	75.00	0.125	135.48	0.091
84.00	0.55	0.354	5.50	0.218	30.00	0.210	75.00	0.126	136.20	0.091
87.00	0.55	0.352	5.50	0.219	30.00	0.211	75.00	0.128	136.93	0.091
89.00	0.55	0.350	5.50	0.219	30.00	0.212	75.00	0.128	137.42	0.091
94.00	0.55	0.346	5.50	0.219	30.00	0.214	75.00	0.130	138.64	0.091
97.00	0.55	0.344	5.50	0.219	30.00	0.215	75.00	0.131	139.38	0.091
99.54	0.55	0.342	5.50	0.219	30.00	0.216	75.00	0.132	140.00	0.091
99.60	0.55	0.342	5.50	0.219	30.00	0.216	75.00	0.132	140.02	0.091
100.90	0.55	0.341	5.50	0.219	30.00	0.217	75.00	0.133	140.34	0.091
103.00	0.55	0.339	5.50	0.219	30.00	0.218	75.00	0.134	140.99	0.091
106.00	0.55	0.336	5.50	0.219	30.00	0.219	75.00	0.135	141.74	0.091
109.00	0.55	0.334	5.50	0.219	30.00	0.220	75.00	0.136	142.49	0.091
110.00	0.55	0.333	5.50	0.219	30.00	0.221	75.00	0.136	142.75	0.091
113.00	0.55	0.331	5.50	0.219	30.00	0.222	75.00	0.137	143.51	0.091
116.00	0.55	0.328	5.50	0.219	30.00	0.223	75.00	0.138	144.27	0.091
120.00	0.55	0.325	5.50	0.219	30.00	0.225	75.00	0.140	145.29	0.091
123.00	0.55	0.323	5.50	0.219	30.00	0.226	75.00	0.141	146.18	0.091
127.00	0.55	0.319	5.50	0.219	30.00	0.228	75.00	0.143	147.22	0.091
131.00	0.55	0.316	5.50	0.219	30.00	0.230	75.00	0.144	148.26	0.091

135.00	0.55	0.313	5.50	0.219	30.00	0.231	75.00	0.146	149.31	0.091
138.00	0.55	0.311	5.50	0.219	30.00	0.232	75.00	0.147	150.11	0.091
141.00	0.55	0.308	5.50	0.219	30.00	0.234	75.00	0.148	150.91	0.091
145.00	0.55	0.305	5.50	0.219	30.00	0.235	75.00	0.150	151.98	0.091
147.00	0.55	0.303	5.50	0.219	30.00	0.236	75.00	0.150	152.52	0.091
150.00	0.55	0.301	5.50	0.219	30.00	0.237	75.00	0.151	153.33	0.091
155.00	0.55	0.297	5.50	0.219	30.00	0.240	75.00	0.153	154.70	0.091
158.00	0.55	0.294	5.50	0.219	30.00	0.241	75.00	0.154	155.52	0.091
159.45	0.55	0.292	5.50	0.219	30.00	0.242	75.00	0.155	156.19	0.091
160.25	0.55	0.292	5.50	0.219	30.00	0.242	75.00	0.156	156.42	0.091
162.00	0.55	0.290	5.50	0.219	30.00	0.243	75.00	0.156	156.90	0.091
165.00	0.55	0.288	5.50	0.219	30.00	0.244	75.00	0.158	157.74	0.091
168.00	0.55	0.285	5.50	0.219	30.00	0.245	75.00	0.159	158.58	0.091
170.00	0.55	0.284	5.50	0.219	30.00	0.246	75.00	0.160	159.14	0.091
173.00	0.55	0.281	5.50	0.219	30.00	0.248	75.00	0.161	159.99	0.091
176.00	0.55	0.279	5.50	0.219	30.00	0.249	75.00	0.162	160.84	0.091
177.00	0.55	0.278	5.50	0.219	30.00	0.249	75.00	0.162	161.12	0.091
179.00	0.55	0.276	5.50	0.219	30.00	0.250	75.00	0.163	161.69	0.091
181.00	0.55	0.275	5.50	0.219	30.00	0.251	75.00	0.164	162.27	0.091
183.00	0.55	0.273	5.50	0.219	30.00	0.252	75.00	0.165	162.84	0.091
188.00	0.55	0.269	5.50	0.219	30.00	0.254	75.00	0.167	164.29	0.092
193.00	0.55	0.265	5.50	0.219	30.00	0.256	75.00	0.168	165.75	0.092
197.00	0.55	0.261	5.50	0.219	30.00	0.258	75.00	0.170	166.93	0.092
199.00	0.55	0.260	5.50	0.219	30.00	0.258	75.00	0.170	167.22	0.092
201.10	0.55	0.259	5.50	0.219	30.00	0.259	75.00	0.171	167.85	0.092
201.90	0.55	0.258	5.50	0.219	30.00	0.260	75.00	0.172	168.08	0.092
204.00	0.55	0.256	5.50	0.219	30.00	0.261	75.00	0.172	168.71	0.092
209.30	0.55	0.252	5.50	0.219	30.00	0.263	75.00	0.175	170.30	0.092
212.60	0.55	0.249	5.50	0.219	30.00	0.264	75.00	0.176	171.30	0.092
213.50	0.55	0.248	5.50	0.219	30.00	0.265	75.00	0.176	171.57	0.092
213.70	0.55	0.248	5.50	0.219	30.00	0.265	75.00	0.176	171.63	0.092
217.50	0.55	0.245	5.50	0.219	30.00	0.266	75.00	0.178	172.79	0.092
221.10	0.55	0.242	5.50	0.219	30.00	0.268	75.00	0.179	173.90	0.092

227.50	0.55	0.236	5.50	0.219	30.00	0.271	75.00	0.182	175.88	0.092
233.55	0.55	0.231	5.50	0.220	30.00	0.273	75.00	0.184	177.69	0.092
238.66	0.55	0.227	5.50	0.220	30.00	0.276	75.00	0.186	179.32	0.092
238.69	0.55	0.227	5.50	0.220	30.00	0.276	75.00	0.186	179.33	0.092
242.00	0.55	0.224	5.50	0.220	30.00	0.277	75.00	0.188	180.38	0.092
247.00	0.55	0.219	5.50	0.220	30.00	0.280	75.00	0.190	181.99	0.092
270.50	0.55	0.215	5.50	0.220	30.00	0.282	75.00	0.192	183.78	0.092
273.50	0.55	0.212	5.50	0.220	30.00	0.283	75.00	0.193	184.80	0.092
277.90	0.55	0.208	5.50	0.220	30.00	0.285	75.00	0.195	186.17	0.092
281.80	0.55	0.205	5.50	0.220	30.00	0.287	75.00	0.197	187.53	0.092
288.00	0.55	0.199	5.50	0.220	30.00	0.290	75.00	0.199	189.53	0.092
290.00	0.55	0.197	5.50	0.220	30.00	0.291	75.00	0.200	190.21	0.092
291.00	0.55	0.197	5.50	0.220	30.00	0.291	75.00	0.200	190.46	0.092
293.00	0.55	0.195	5.50	0.220	30.00	0.292	75.00	0.201	191.14	0.092
297.00	0.55	0.191	5.50	0.220	30.00	0.294	75.00	0.203	192.50	0.092
302.00	0.55	0.187	5.50	0.220	30.00	0.296	75.00	0.205	194.31	0.092
305.00	0.55	0.184	5.50	0.220	30.00	0.298	75.00	0.206	195.28	0.092
306.75	0.55	0.182	5.50	0.220	30.00	0.299	75.00	0.207	196.02	0.092
310.00	0.55	0.179	5.50	0.220	30.00	0.300	75.00	0.209	197.14	0.092
313.20	0.55	0.177	5.50	0.220	30.00	0.302	75.00	0.210	198.24	0.092
318.00	0.55	0.172	5.50	0.220	30.00	0.304	75.00	0.212	200.00	0.092

THE ENGELUND-HANSEN SEDIMENT FORMULA IS USED

TIME = 0.50 HRS DT = 200 SECS TIME STEP = 0

SECTION	W.S.ELEV. FT	WIDTH FT	DEPTH FT	Q CFS	V FPS	SLOPE	D50 MM	QS/Q 1000 PPM	FR	SED. YIELD C. Y.
39.00	1034.84	812.5	6.84	8900	3.25	0.00116	5.34	0.47	0.31	0.188E+02
44.00	1035.56	858.7	4.81	8900	3.78	0.00207	5.63	1.16	0.40	0.466E+02
47.00	1036.26	724.1	5.26	8900	4.69	0.00338	5.86	1.41	0.51	0.566E+02
51.50	1037.55	524.4	6.15	8900	4.87	0.00251	6.04	1.17	0.46	0.468E+02
55.00	1038.32	455.4	6.42	8900	4.59	0.00171	6.13	0.84	0.39	0.338E+02
58.12	1039.26	383.9	7.16	8900	4.20	0.00102	6.28	0.60	0.31	0.242E+02
62.00	1039.70	414.8	6.80	8900	4.80	0.00177	6.58	0.79	0.40	0.315E+02
66.00	1040.38	456.4	6.38	8900	3.81	0.00093	6.50	0.45	0.30	0.182E+02
71.00	1040.89	455.8	5.89	8900	4.24	0.00133	6.77	0.81	0.35	0.326E+02
75.00	1041.43	453.2	4.93	8900	4.37	0.00145	6.85	0.94	0.36	0.377E+02
78.00	1041.87	452.3	4.47	8900	4.60	0.00171	7.04	1.22	0.39	0.491E+02
81.00	1042.39	452.6	4.39	8900	4.68	0.00181	7.05	1.34	0.40	0.539E+02
84.00	1042.94	451.3	5.94	8900	4.88	0.00208	6.91	1.68	0.43	0.672E+02
87.00	1043.59	451.2	3.79	8900	5.26	0.00266	7.35	2.51	0.48	0.101E+03
89.00	1044.13	451.2	3.73	8900	5.59	0.00326	7.73	2.78	0.52	0.111E+03
94.00	1045.67	452.0	3.87	8900	5.24	0.00263	7.47	2.42	0.48	0.972E+02
97.00	1046.49	452.2	3.89	8900	5.51	0.00312	8.15	3.19	0.51	0.128E+03
99.54	1047.21	349.6	4.01	8900	6.34	0.00360	8.15	3.01	0.56	0.121E+03
99.60	1049.01	349.6	2.81	8900	9.05	0.00308	8.04	2.93	0.95	0.117E+03
100.90	1050.16	356.8	3.56	8900	7.08	0.00525	9.90	3.24	0.67	0.130E+03
103.00	1051.47	374.2	4.47	8900	5.42	0.00229	8.51	1.06	0.46	0.424E+02
106.00	1052.22	464.7	4.62	8900	4.21	0.00132	8.42	0.59	0.35	0.237E+02
109.00	1052.65	554.7	4.45	8900	3.76	0.00115	8.38	0.52	0.32	0.208E+02
110.00	1052.76	554.5	5.76	8900	3.95	0.00134	8.55	0.67	0.34	0.269E+02
113.00	1053.17	554.3	4.17	8900	3.97	0.00137	8.42	0.69	0.35	0.276E+02
116.00	1053.59	525.0	3.99	8900	4.43	0.00185	7.86	1.16	0.40	0.465E+02
120.00	1054.43	300.5	4.03	8900	7.73	0.00563	10.59	3.76	0.70	0.151E+03
123.00	1056.16	437.7	5.16	8900	4.01	0.00104	9.11	0.50	0.31	0.200E+02
127.00	1056.59	437.4	4.79	8900	4.32	0.00132	9.18	0.74	0.35	0.297E+02
131.00	1057.16	436.9	7.16	8900	4.76	0.00183	9.41	1.25	0.41	0.501E+02
135.00	1057.91	361.4	4.51	8900	5.71	0.00262	10.06	1.78	0.48	0.716E+02
138.00	1058.76	427.2	4.76	8900	4.92	0.00199	10.31	1.43	0.42	0.574E+02
141.00	1059.36	395.1	4.76	8900	5.51	0.00263	10.50	1.16	0.48	0.467E+02
145.00	1060.32	437.0	4.92	8900	4.20	0.00121	10.37	0.61	0.34	0.246E+02
147.00	1060.56	437.7	4.76	8900	4.34	0.00135	10.55	0.69	0.35	0.278E+02
150.00	1060.99	467.2	4.59	8900	4.22	0.00133	9.75	0.68	0.35	0.272E+02
155.00	1061.89	362.0	4.49	8900	6.89	0.00492	11.82	2.84	0.64	0.114E+03
158.00	1063.16	322.0	5.16	8900	5.49	0.00196	11.32	1.22	0.43	0.491E+02
159.45	1063.68	335.8	5.38	8900	5.00	0.00153	11.27	1.04	0.38	0.419E+02
160.25	1063.80	335.7	5.34	8900	5.04	0.00157	11.80	1.08	0.39	0.435E+02
162.00	1064.08	335.6	5.28	8900	5.11	0.00163	11.59	0.89	0.39	0.357E+02
165.00	1064.62	378.1	5.22	8900	4.61	0.00135	11.32	0.77	0.36	0.311E+02
168.00	1065.02	366.0	4.92	8900	5.04	0.00175	11.69	1.20	0.40	0.483E+02
170.00	1065.37	368.5	4.77	8900	5.16	0.00191	11.30	1.37	0.42	0.550E+02
173.00	1065.88	270.2	4.48	8900	7.54	0.00448	12.53	2.44	0.64	0.980E+02
176.00	1067.11	256.1	4.91	8900	7.29	0.00373	13.94	1.95	0.59	0.782E+02
177.00	1068.01	371.2	5.61	8900	4.34	0.00109	12.54	0.53	0.33	0.212E+02
179.00	1068.23	381.5	5.43	8900	4.39	0.00117	12.61	0.48	0.34	0.191E+02
181.00	1068.51	432.3	5.21	8900	4.02	0.00103	9.49	0.43	0.31	0.173E+02
183.00	1068.42	234.1	4.62	8900	8.84	0.00637	15.17	4.70	0.75	0.189E+03
188.00	1071.05	306.5	6.05	8900	5.25	0.00161	12.99	1.11	0.39	0.445E+02
193.00	1071.93	350.7	5.73	8900	5.30	0.00198	13.07	1.41	0.43	0.567E+02
197.00	1072.98	359.4	5.78	8900	7.27	0.00585	16.03	2.56	0.69	0.103E+03
199.00	1073.99	386.6	6.29	8900	3.72	0.00069	13.07	0.23	0.26	0.914E+01
201.10	1074.07	325.7	5.87	8900	4.74	0.00123	13.86	0.67	0.35	0.267E+02
201.90	1074.16	325.5	5.76	8900	4.83	0.00131	13.69	0.74	0.36	0.295E+02
204.00	1074.43	325.1	5.53	8900	5.04	0.00150	13.98	0.92	0.38	0.368E+02
209.30	1075.28	324.2	5.09	8900	5.48	0.00198	14.65	1.22	0.43	0.491E+02
212.60	1075.40	256.8	4.40	8900	8.02	0.00136	13.97	1.13	0.68	0.453E+02
213.50	1075.23	255.5	3.73	8900	9.49	0.00237	14.91	1.76	0.87	0.708E+02

213.70	1076.33	268.3	3.33	8900	10.09	0.00310	14.92	1.76	0.98	0.708E+02
217.50	1078.80	349.6	4.60	8900	5.61	0.00236	15.77	1.76	0.46	0.708E+02
221.10	1079.68	364.8	4.38	8900	5.64	0.00253	15.64	1.16	0.48	0.467E+02
227.50	1081.25	473.5	4.15	8900	4.57	0.00177	14.84	0.87	0.40	0.348E+02
233.55	1082.55	421.8	3.55	8900	5.99	0.00374	17.18	3.16	0.56	0.127E+03
238.66	1084.56	301.8	3.96	8900	7.55	0.00522	17.87	2.32	0.67	0.930E+02
238.69	1086.66	306.0	3.06	8900	9.61	0.00313	16.87	1.39	0.97	0.559E+02
242.00	1088.74	319.5	4.29	8900	6.58	0.00357	17.43	1.39	0.56	0.559E+02
247.00	1090.40	321.8	4.73	8900	5.93	0.00255	17.77	0.97	0.48	0.390E+02
270.50	1091.71	375.4	5.21	8900	4.62	0.00136	17.94	0.60	0.36	0.241E+02
273.50	1092.14	384.9	4.94	8900	4.75	0.00153	17.70	0.72	0.38	0.287E+02
277.90	1092.82	369.0	4.52	8900	5.40	0.00223	18.25	1.34	0.45	0.539E+02
281.80	1093.74	339.1	4.54	8900	5.86	0.00262	16.57	1.83	0.49	0.734E+02
288.00	1095.90	281.4	3.70	8900	8.66	0.00750	20.81	6.25	0.80	0.251E+03
290.00	1097.42	270.7	4.42	8900	7.75	0.00504	20.97	4.73	0.66	0.190E+03
291.00	1097.91	270.7	4.91	8900	7.25	0.00405	16.64	4.22	0.60	0.169E+03
293.00	1098.63	241.3	4.63	8900	8.12	0.00497	20.32	5.70	0.67	0.229E+03
297.00	1100.66	255.1	4.56	8900	7.79	0.00465	23.11	5.45	0.65	0.219E+03
302.00	1103.11	206.8	4.91	8900	8.97	0.00566	21.12	2.74	0.72	0.110E+03
305.00	1104.67	198.3	5.17	8900	8.92	0.00526	23.87	2.52	0.70	0.101E+03
306.75	1106.35	301.1	6.05	8900	4.98	0.00131	21.12	0.57	0.36	0.231E+02
310.00	1106.81	340.4	5.21	8900	5.10	0.00166	20.21	0.77	0.40	0.308E+02
313.20	1107.36	338.7	4.36	8900	6.10	0.00299	20.59	2.02	0.52	0.809E+02
318.00	1109.02	337.8	3.92	8900	6.79	0.00425	22.56	3.53	0.61	0.142E+03

TIME = 4.17 HRS DT = 600 SECS TIME STEP = 25

SECTION	W.S.ELEV. FT	WIDTH FT	DEPTH FT	Q CFS	V FPS	SLOPE	D50 MM	QS/Q 1000 PPM	FR	SED. YIELD C. Y.
39.00	1036.79	820.9	8.59	18450	4.38	0.00121	1.72	1.24	0.34	0.347E+04
44.00	1037.46	866.6	6.55	18450	4.76	0.00172	2.53	1.82	0.40	0.581E+04
47.00	1037.95	730.0	7.15	18450	5.80	0.00264	11.42	2.20	0.49	0.763E+04
51.50	1039.04	528.6	7.94	18450	6.86	0.00301	14.63	2.44	0.54	0.711E+04
55.00	1040.01	460.4	8.26	18450	6.67	0.00229	11.84	2.18	0.48	0.594E+04
58.12	1041.34	389.6	9.24	18450	6.31	0.00153	6.53	1.91	0.41	0.488E+04
62.00	1041.97	421.1	9.45	18450	6.44	0.00184	12.68	1.84	0.44	0.502E+04
66.00	1042.79	463.3	8.34	18450	5.50	0.00122	2.16	1.73	0.36	0.414E+04
71.00	1043.41	463.1	8.17	18450	5.78	0.00144	2.72	2.12	0.39	0.574E+04
75.00	1043.98	460.6	7.34	18450	5.88	0.00151	2.98	2.24	0.40	0.684E+04
78.00	1044.43	459.8	6.94	18450	6.03	0.00164	3.82	2.10	0.41	0.762E+04
81.00	1044.92	459.9	6.81	18450	6.08	0.00168	6.23	2.02	0.42	0.807E+04
84.00	1045.41	458.7	8.11	18450	6.33	0.00192	6.82	1.89	0.44	0.826E+04
87.00	1045.98	458.3	6.24	18450	6.61	0.00220	13.44	1.86	0.47	0.861E+04
89.00	1046.38	455.3	6.23	18450	6.97	0.00260	11.73	1.93	0.51	0.845E+04
94.00	1047.71	458.2	6.24	18450	7.02	0.00269	12.50	1.94	0.52	0.816E+04
97.00	1048.52	458.1	5.90	18450	7.22	0.00295	20.50	1.92	0.54	0.807E+04
99.54	1049.08	347.5	6.77	18450	8.38	0.00343	35.34	1.64	0.59	0.779E+04
99.60	1050.88	349.7	4.52	18450	11.70	0.00279	35.40	1.42	0.97	0.711E+04
100.90	1052.44	359.0	5.94	18450	8.97	0.00442	53.33	1.80	0.66	0.736E+04
103.00	1053.83	380.1	6.94	18450	7.25	0.00234	29.30	1.53	0.49	0.510E+04
106.00	1054.77	472.3	7.19	18450	5.56	0.00129	7.87	1.23	0.37	0.374E+04
109.00	1055.26	562.3	6.79	18450	4.95	0.00111	2.33	1.26	0.34	0.369E+04
110.00	1055.35	562.0	8.18	18450	5.10	0.00122	2.50	1.43	0.35	0.443E+04
113.00	1055.72	561.8	6.48	18450	5.22	0.00131	2.41	1.61	0.37	0.510E+04
116.00	1056.10	547.8	7.55	18450	5.79	0.00182	5.92	1.92	0.42	0.660E+04
120.00	1056.57	314.1	8.24	18450	8.94	0.00373	41.72	2.42	0.61	0.894E+04
123.00	1058.27	444.0	7.16	18450	5.94	0.00149	4.53	1.92	0.40	0.551E+04
127.00	1058.86	444.1	6.96	18450	6.11	0.00163	5.61	1.94	0.41	0.612E+04
131.00	1059.52	443.9	9.01	18450	6.40	0.00191	9.42	2.01	0.44	0.675E+04
135.00	1060.29	442.5	7.34	18450	6.94	0.00249	22.06	2.17	0.50	0.720E+04
138.00	1061.07	445.4	6.80	18450	6.52	0.00204	12.14	2.12	0.46	0.623E+04
141.00	1061.67	443.5	7.53	18450	6.91	0.00247	23.77	2.18	0.50	0.630E+04
145.00	1062.68	443.5	7.14	18450	5.96	0.00150	3.90	2.06	0.40	0.519E+04
147.00	1062.98	445.0	7.16	18450	6.03	0.00157	4.17	2.15	0.41	0.586E+04
150.00	1063.48	474.6	6.73	18450	5.96	0.00164	3.58	2.18	0.41	0.641E+04
155.00	1064.34	420.4	7.94	18450	7.73	0.00335	31.74	2.64	0.57	0.933E+04
158.00	1065.19	328.1	7.55	18450	7.86	0.00253	22.67	2.55	0.52	0.765E+04
159.45	1065.93	340.3	7.69	18450	7.23	0.00202	14.33	2.37	0.47	0.694E+04
160.25	1066.10	340.3	7.74	18450	7.19	0.00199	16.26	2.33	0.46	0.684E+04
162.00	1066.46	340.3	7.78	18450	7.16	0.00196	14.66	2.26	0.46	0.671E+04
165.00	1067.18	386.1	8.31	18450	6.47	0.00164	6.04	2.17	0.42	0.644E+04
168.00	1067.64	374.6	8.49	18450	6.86	0.00192	9.01	2.26	0.45	0.709E+04
170.00	1068.02	380.3	8.33	18450	7.11	0.00221	12.48	2.26	0.48	0.751E+04
173.00	1068.56	349.6	8.31	18450	8.81	0.00402	38.52	2.48	0.63	0.862E+04
176.00	1069.92	376.0	9.26	18450	7.68	0.00280	39.75	1.99	0.54	0.705E+04
177.00	1070.50	376.2	7.95	18450	6.30	0.00146	5.09	2.01	0.40	0.549E+04
179.00	1070.81	389.2	7.78	18450	6.28	0.00151	4.53	2.04	0.40	0.579E+04
181.00	1071.13	439.7	6.72	18450	6.40	0.00187	6.77	2.17	0.44	0.646E+04
183.00	1071.17	347.8	8.40	18450	9.34	0.00495	44.58	2.74	0.69	0.101E+05
188.00	1073.68	442.9	8.42	18450	6.78	0.00231	16.86	2.11	0.48	0.686E+04
193.00	1074.83	442.7	8.38	18450	6.52	0.00203	13.08	2.12	0.45	0.649E+04
197.00	1075.64	417.5	10.24	18450	7.46	0.00296	37.26	2.16	0.54	0.711E+04
199.00	1076.20	391.3	8.09	18450	6.07	0.00136	2.34	2.24	0.38	0.555E+04
201.10	1076.36	330.4	8.11	18450	7.08	0.00182	10.75	2.35	0.44	0.680E+04
201.90	1076.49	330.1	8.02	18450	7.15	0.00187	10.73	2.32	0.45	0.690E+04
204.00	1076.88	329.9	7.95	18450	7.21	0.00193	13.17	2.30	0.46	0.703E+04
209.30	1077.90	327.2	8.10	18450	7.37	0.00204	16.19	2.23	0.47	0.718E+04
212.60	1077.67	261.2	6.57	18450	11.03	0.00154	13.21	2.21	0.77	0.702E+04
213.50	1077.49	260.0	5.99	18450	12.13	0.00210	14.91	2.13	0.88	0.721E+04

213.70	1078.39	272.3	5.39	18450	12.82	0.00268	14.92	2.13	0.98	0.721E+04
217.50	1081.60	355.2	7.39	18450	7.18	0.00209	18.22	2.13	0.47	0.721E+04
221.10	1082.38	370.1	7.33	18450	7.10	0.00213	19.17	2.11	0.47	0.705E+04
227.50	1083.88	479.0	6.59	18450	6.01	0.00171	4.23	2.18	0.42	0.660E+04
233.55	1084.95	426.4	5.89	18450	7.48	0.00304	18.18	3.07	0.55	0.981E+04
238.66	1086.37	301.9	7.21	18450	9.61	0.00441	39.21	3.58	0.67	0.107E+05
238.69	1088.57	309.8	4.97	18450	12.19	0.00268	22.83	3.23	0.97	0.906E+04
242.00	1091.02	323.4	6.79	18450	8.79	0.00362	33.98	3.26	0.61	0.909E+04
247.00	1092.83	325.6	7.61	18450	7.95	0.00261	21.18	2.99	0.52	0.772E+04
270.50	1094.39	380.8	7.57	18450	6.53	0.00167	2.73	3.10	0.42	0.721E+04
273.50	1094.91	390.6	7.24	18450	6.64	0.00183	2.36	3.59	0.44	0.923E+04
277.90	1095.66	374.7	6.92	18450	7.27	0.00234	3.90	4.30	0.49	0.117E+05
281.80	1096.57	344.7	6.66	18450	8.22	0.00314	9.80	5.30	0.57	0.146E+05
288.00	1098.45	282.7	6.87	18450	10.18	0.00490	27.24	3.89	0.71	0.187E+05
290.00	1099.42	269.2	7.20	18450	10.24	0.00481	35.37	3.54	0.70	0.180E+05
291.00	1099.83	271.0	6.90	18450	10.18	0.00484	23.55	3.32	0.69	0.175E+05
293.00	1100.59	245.0	7.16	18450	11.12	0.00551	38.47	5.19	0.75	0.176E+05
297.00	1102.94	259.8	7.17	18450	10.44	0.00483	38.97	4.72	0.71	0.166E+05
302.00	1105.21	206.5	9.13	18450	11.65	0.00512	42.89	4.70	0.74	0.159E+05
305.00	1106.69	190.4	10.45	18450	11.12	0.00391	40.49	4.33	0.66	0.138E+05
306.75	1108.60	305.8	8.17	18450	7.72	0.00219	6.10	3.91	0.49	0.119E+05
310.00	1109.39	345.7	7.36	18450	7.41	0.00224	5.72	3.84	0.49	0.127E+05
313.20	1110.07	343.9	6.87	18450	7.97	0.00284	11.93	4.01	0.54	0.144E+05
318.00	1111.52	342.8	6.42	18450	8.54	0.00354	22.56	4.29	0.60	0.156E+05

ID
54 SECTION 199.00 TIME = 4.17 HRS WS =1076.20 WIDTH = 391.3

Z	DZ	TDZ	Y	Z	DZ	TDZ	Y	Z	DZ	TDZ	Y
1086.20	0.00	0.00	317.5	1068.35	0.02	0.65	335.3	1068.31	0.01	0.61	368.8
1068.31	0.01	0.61	401.6	1068.31	0.01	0.61	434.4	1068.31	0.01	0.61	467.2
1068.31	0.01	0.61	500.0	1068.31	0.01	0.61	535.0	1068.31	0.01	0.61	570.0
1068.31	0.01	0.61	605.0	1068.30	0.01	0.60	640.0	1068.22	0.00	0.52	675.0
1068.13	0.01	0.43	710.8	1086.20	0.00	0.00	728.5				

Y	V	Y	V	Y	V	Y	V	Y	V	Y	V
335.3	5.99	368.8	5.99	401.6	5.98	434.4	5.96	467.2	5.95	500.0	5.93
535.0	5.92	570.0	5.90	605.0	5.89	640.0	5.88	675.0	5.89	710.8	5.90

ID
47 SECTION 177.00 TIME = 4.17 HRS WS =1070.50 WIDTH = 376.2

Z	DZ	TDZ	Y	Z	DZ	TDZ	Y	Z	DZ	TDZ	Y
1080.50	0.00	0.00	279.1	1062.56	0.00	0.16	296.8	1062.56	0.00	0.16	330.8
1062.56	0.00	0.16	364.7	1062.56	0.00	0.16	398.5	1062.56	0.00	0.16	432.3
1062.56	0.00	0.16	466.2	1062.56	0.00	0.16	500.0	1062.56	0.00	0.16	539.2
1062.56	0.00	0.16	578.5	1062.56	0.00	0.16	617.7	1062.56	0.00	0.16	657.2
1080.50	0.00	0.00	675.1								

ID
27 SECTION 120.00 TIME = 4.17 HRS WS =1056.57 WIDTH = 314.1

Z	DZ	TDZ	Y	Z	DZ	TDZ	Y	Z	DZ	TDZ	Y
1067.10	0.00	0.00	273.3	1051.70	0.11	1.30	307.5	1050.09	-0.02	-0.32	345.4
1049.67	-0.03	-0.73	384.0	1049.39	-0.05	-1.01	422.7	1049.15	-0.06	-1.25	461.3
1048.95	-0.07	-1.45	500.0	1048.92	-0.07	-1.48	506.6	1056.70	0.00	0.00	520.0
1057.07	0.00	0.00	546.7	1057.43	0.00	0.00	573.3	1057.80	0.00	0.00	600.0
1057.30	0.00	0.00	622.5	1056.80	0.00	0.00	645.0	1048.35	-0.09	-2.05	658.6
1048.24	-0.09	-2.16	694.3	1050.40	0.00	0.00	730.0	1067.10	0.00	0.00	746.7

ID
5 SECTION 55.00 TIME = 4.17 HRS WS =1040.01 WIDTH = 460.4

Z	DZ	TDZ	Y	Z	DZ	TDZ	Y	Z	DZ	TDZ	Y
1047.00	0.00	0.00	260.0	1031.90	0.00	0.00	290.0	1031.73	-0.02	-0.17	322.0
1031.73	-0.02	-0.17	354.0	1031.74	-0.01	-0.16	386.0	1031.87	0.00	-0.04	418.0
1033.83	0.02	1.93	450.0	1034.80	-0.02	-1.80	472.0	1035.37	-0.02	-0.83	500.0
1035.54	-0.02	-0.46	525.0	1035.50	-0.01	-0.15	559.5	1035.25	-0.01	-0.05	594.0
1034.91	0.00	-0.04	628.5	1034.57	0.00	-0.03	663.0	1034.43	0.00	-0.02	689.5
1034.29	0.00	-0.01	716.0	1035.69	0.00	-0.01	730.0	1047.00	0.00	0.00	741.3

Y	V	Y	V	Y	V	Y	V	Y	V	Y	V
290.0	7.19	322.0	7.23	354.0	7.22	386.0	7.20	418.0	7.14	450.0	6.40
472.0	5.98	500.0	5.71	525.0	5.61	559.5	5.62	594.0	5.73	628.5	5.87
663.0	6.01	689.5	6.06	716.0	6.11	730.0	5.47				

TIME = 6.32 HRS DT = 428 SECS TIME STEP = 45

SECTION	W.S.ELEV. FT	WIDTH FT	DEPTH FT	Q CFS	V FPS	SLOPE	D50 MM	QS/Q 1000 PPM	FR	SED. YIELD C. Y.
39.00	1043.28	895.0	14.73	68831	7.28	0.00128	1.12	3.81	0.39	0.255E+05
44.00	1043.90	894.8	12.27	68831	7.67	0.00152	1.32	4.77	0.43	0.329E+05
47.00	1044.10	758.2	12.83	68831	9.26	0.00229	5.92	5.67	0.52	0.437E+05
51.50	1044.63	545.3	13.87	68831	11.95	0.00346	18.91	6.08	0.65	0.479E+05
55.00	1045.68	476.7	14.70	68831	12.33	0.00323	20.69	5.96	0.63	0.457E+05
58.12	1047.62	402.1	16.29	68831	12.29	0.00259	16.85	5.53	0.58	0.414E+05
62.00	1048.98	442.4	17.09	68831	11.36	0.00227	19.82	4.91	0.54	0.375E+05
66.00	1050.41	486.4	15.55	68831	9.67	0.00149	5.11	4.36	0.45	0.338E+05
71.00	1051.12	486.5	15.97	68831	9.91	0.00163	5.61	3.97	0.46	0.326E+05
75.00	1051.77	484.2	15.51	68831	9.91	0.00161	8.90	3.70	0.46	0.320E+05
78.00	1052.20	483.3	14.88	68831	10.14	0.00173	8.31	3.66	0.48	0.312E+05
81.00	1052.70	482.2	14.60	68831	10.25	0.00179	10.32	3.65	0.48	0.310E+05
84.00	1053.18	482.0	15.56	68831	10.49	0.00193	9.80	3.44	0.50	0.309E+05
87.00	1053.71	481.5	13.96	68831	10.74	0.00208	15.64	3.43	0.52	0.314E+05
89.00	1054.06	480.5	14.01	68831	10.99	0.00223	15.55	2.89	0.54	0.310E+05
94.00	1055.19	480.6	13.65	68831	11.08	0.00230	20.95	2.66	0.54	0.303E+05
97.00	1055.78	480.1	13.31	68831	11.58	0.00265	34.18	2.74	0.58	0.292E+05
99.54	1055.95	349.8	15.53	68831	13.20	0.00292	50.44	2.71	0.60	0.292E+05
99.60	1057.65	349.8	10.77	68831	18.40	0.00228	51.84	2.68	0.99	0.259E+05
100.90	1061.15	377.1	14.64	68831	13.39	0.00314	63.11	2.72	0.64	0.266E+05
103.00	1062.80	408.0	16.07	68831	11.29	0.00199	38.10	2.71	0.51	0.229E+05
106.00	1064.27	500.8	16.69	68831	8.67	0.00108	5.74	2.42	0.38	0.189E+05
109.00	1064.91	591.4	16.10	68831	7.54	0.00084	1.41	2.57	0.34	0.190E+05
110.00	1064.95	591.1	15.89	68831	7.76	0.00092	1.24	2.86	0.35	0.211E+05
113.00	1065.19	590.3	15.22	68831	7.97	0.00101	1.23	3.34	0.37	0.241E+05
116.00	1065.40	589.5	14.88	68831	8.58	0.00128	2.16	4.03	0.41	0.300E+05
120.00	1065.41	466.4	17.75	68831	11.28	0.00238	38.10	4.67	0.55	0.392E+05
123.00	1066.61	469.2	15.43	68831	9.99	0.00158	4.82	4.62	0.46	0.344E+05
127.00	1067.22	469.3	15.26	68831	10.11	0.00165	5.83	4.64	0.47	0.353E+05
131.00	1067.84	468.9	15.49	68831	10.33	0.00177	9.05	4.64	0.48	0.364E+05
135.00	1068.47	467.2	16.22	68831	10.76	0.00201	17.97	4.68	0.51	0.371E+05
138.00	1069.15	469.8	14.67	68831	10.54	0.00189	13.46	4.65	0.50	0.361E+05
141.00	1069.65	467.2	15.77	68831	10.82	0.00205	19.83	4.65	0.52	0.360E+05
145.00	1070.66	465.8	15.28	68831	10.16	0.00166	6.68	4.68	0.47	0.344E+05
147.00	1070.99	469.0	16.27	68831	10.20	0.00170	5.81	4.81	0.47	0.346E+05
150.00	1071.58	498.9	15.69	68831	10.04	0.00174	4.85	4.97	0.48	0.350E+05
155.00	1072.14	457.5	16.93	68831	11.88	0.00272	26.51	5.53	0.59	0.409E+05
158.00	1072.38	346.5	17.18	68831	13.68	0.00300	36.56	5.53	0.63	0.403E+05
159.45	1073.50	355.4	16.05	68831	12.82	0.00256	31.53	5.22	0.58	0.370E+05
160.25	1073.79	355.6	16.18	68831	12.63	0.00244	31.39	5.03	0.57	0.357E+05
162.00	1074.35	356.1	16.58	68831	12.33	0.00225	29.73	5.06	0.55	0.346E+05
165.00	1076.27	572.7	15.98	68831	9.10	0.00151	2.50	4.93	0.44	0.320E+05
168.00	1076.67	572.0	15.67	68831	9.35	0.00164	3.54	5.14	0.46	0.353E+05
170.00	1076.91	571.1	15.24	68831	9.79	0.00192	7.28	5.20	0.49	0.377E+05
173.00	1076.86	432.6	17.31	68831	12.42	0.00291	36.17	5.59	0.61	0.425E+05
176.00	1077.69	391.5	18.64	68831	12.39	0.00254	33.78	5.47	0.58	0.403E+05
177.00	1078.39	391.8	16.25	68831	11.35	0.00194	9.87	5.48	0.51	0.379E+05
179.00	1078.92	413.7	16.13	68831	11.01	0.00186	8.23	5.40	0.50	0.375E+05
181.00	1079.41	464.9	14.43	68831	10.77	0.00201	10.98	5.33	0.51	0.377E+05
183.00	1079.52	462.9	16.75	68831	11.97	0.00286	37.79	5.51	0.60	0.431E+05
188.00	1081.13	465.3	15.21	68831	11.26	0.00234	15.90	5.37	0.55	0.390E+05
193.00	1082.32	465.3	14.03	68831	11.16	0.00226	12.64	5.38	0.54	0.385E+05
197.00	1083.11	462.0	17.88	68831	11.82	0.00272	19.97	5.67	0.59	0.405E+05
199.00	1083.33	405.4	15.08	68831	11.93	0.00238	10.28	5.61	0.56	0.391E+05
201.10	1083.42	344.4	16.00	68831	13.26	0.00275	30.57	5.81	0.60	0.411E+05
201.90	1083.60	344.0	16.28	68831	13.37	0.00281	27.18	5.71	0.61	0.401E+05
204.00	1084.25	344.7	16.03	68831	13.23	0.00273	29.19	5.58	0.60	0.392E+05
209.30	1085.78	342.5	17.68	68831	12.92	0.00245	30.80	5.25	0.58	0.370E+05
212.60	1085.80	277.6	14.79	68831	17.71	0.00144	13.91	4.92	0.83	0.339E+05
213.50	1085.19	275.4	13.69	68831	19.21	0.00187	14.91	4.99	0.94	0.340E+05

213.70	1085.79	286.7	12.79	68831	19.62	0.00210	14.92	4.99	0.99	0.340E+05
217.50	1091.86	374.3	17.63	68831	11.10	0.00169	12.45	4.99	0.48	0.340E+05
221.10	1092.65	390.6	17.96	68831	10.66	0.00157	7.63	5.09	0.46	0.342E+05
227.50	1094.17	500.2	15.61	68831	9.10	0.00127	1.23	5.43	0.41	0.351E+05
233.55	1094.63	446.0	14.74	68831	10.84	0.00196	6.57	6.98	0.51	0.515E+05
238.66	1094.79	299.4	18.08	68831	14.25	0.00290	40.37	7.34	0.63	0.594E+05
238.69	1095.59	323.5	11.93	68831	18.94	0.00217	24.68	7.24	1.00	0.558E+05
242.00	1099.81	341.2	15.95	68831	13.75	0.00305	35.17	7.37	0.63	0.566E+05
247.00	1101.66	341.7	17.85	68831	12.85	0.00242	21.88	7.17	0.57	0.538E+05
270.50	1103.73	399.5	16.72	68831	10.76	0.00166	2.87	6.95	0.47	0.516E+05
273.50	1104.18	408.8	15.79	68831	11.08	0.00189	3.25	7.53	0.50	0.550E+05
277.90	1104.77	393.0	15.19	68831	12.00	0.00234	6.05	7.63	0.55	0.611E+05
281.80	1105.35	361.8	14.90	68831	13.57	0.00315	12.94	7.76	0.64	0.684E+05
288.00	1106.67	301.8	15.32	68831	15.66	0.00405	28.23	7.31	0.72	0.777E+05
290.00	1107.30	265.6	18.09	68831	16.01	0.00381	29.26	7.80	0.70	0.747E+05
291.00	1106.87	271.1	14.45	68831	17.73	0.00569	40.49	9.48	0.83	0.735E+05
293.00	1107.75	256.5	17.52	68831	18.17	0.00529	36.43	6.77	0.83	0.710E+05
297.00	1110.05	273.9	15.55	68831	18.06	0.00570	42.81	8.36	0.85	0.677E+05
302.00	1112.32	212.2	20.91	68831	19.18	0.00507	55.07	7.69	0.82	0.640E+05
305.00	1115.04	217.0	22.58	68831	16.98	0.00347	51.01	6.72	0.69	0.545E+05
306.75	1118.26	325.2	18.49	68831	12.43	0.00208	11.19	6.16	0.53	0.473E+05
310.00	1119.30	365.4	17.06	68831	11.57	0.00189	7.09	5.97	0.51	0.471E+05
313.20	1119.76	363.4	16.38	68831	12.12	0.00219	12.45	5.99	0.54	0.494E+05
318.00	1120.73	361.3	15.63	68831	12.74	0.00256	22.56	6.01	0.58	0.515E+05

ID
83 SECTION 313.20 TIME = 6.32 HRS WS =1119.76 WIDTH = 363.4

Z	DZ	TDZ	Y	Z	DZ	TDZ	Y	Z	DZ	TDZ	Y
1123.70	0.00	0.00	9814.3	1103.38	0.00	0.38	9835.0	1103.38	0.00	0.38	9868.0
1103.38	0.00	0.38	9901.0	1103.38	0.00	0.38	9934.0	1103.38	0.00	0.38	9967.0
1103.38	0.00	0.38	10000.0	1103.38	0.00	0.38	10033.0	1103.38	0.00	0.38	10066.0
1103.38	0.00	0.38	10099.0	1103.38	0.00	0.38	10132.0	1103.38	0.00	0.38	10165.0
1123.70	0.00	0.00	10185.7								

ID
82 SECTION 310.00 TIME = 6.32 HRS WS =1119.30 WIDTH = 365.4

Z	DZ	TDZ	Y	Z	DZ	TDZ	Y	Z	DZ	TDZ	Y
1123.50	0.00	0.00	9778.1	1102.24	0.00	0.64	9798.9	1102.24	0.00	0.64	9833.0
1102.24	0.00	0.64	9866.0	1102.24	0.00	0.64	9899.0	1102.24	0.00	0.64	9932.0
1102.24	0.00	0.64	9965.0	1102.24	0.00	0.64	9998.0	1102.24	0.00	0.64	10031.0
1102.24	0.00	0.64	10064.0	1102.24	0.00	0.64	10097.0	1102.24	0.00	0.64	10131.1
1123.70	0.00	0.00	10151.9								

ID
81 SECTION 306.75 TIME = 6.32 HRS WS =1118.26 WIDTH = 325.2

Z	DZ	TDZ	Y	Z	DZ	TDZ	Y	Z	DZ	TDZ	Y
1122.80	0.00	0.00	9792.5	1100.30	0.00	0.00	9814.0	1099.69	-0.09	-0.61	9851.0
1099.89	-0.07	-0.41	9887.0	1100.07	-0.06	-0.23	9923.0	1100.18	-0.05	-0.12	9959.0
1100.29	-0.04	-0.01	9995.2	1100.43	-0.03	0.13	10031.5	1100.55	-0.01	0.25	10067.7
1100.93	0.00	0.63	10104.8	1122.80	0.00	0.00	10126.5				

Y	V	Y	V	Y	V	Y	V	Y	V	Y	V
9814.0	12.08	9851.0	12.27	9887.0	12.25	9923.0	12.24	9959.0	12.24	9995.2	12.25
10031.5	12.25	10067.7	12.25	10104.8	12.18						

ID
80 SECTION 305.00 TIME = 6.32 HRS WS =1115.04 WIDTH = 217.0

Z	DZ	TDZ	Y	Z	DZ	TDZ	Y	Z	DZ	TDZ	Y

1117.50	0.00	0.00	9880.0	1103.99	-0.40	4.49	9903.4	1092.38	-0.21	-7.12	9931.0
1092.56	0.00	-6.94	9964.0	1092.46	0.00	-7.04	9997.0	1092.54	0.00	-6.96	10026.7
1092.42	-0.29	-7.08	10056.3	1098.32	-0.66	-1.18	10084.6	1117.50	0.00	0.00	10104.0

ID
79 SECTION 302.00 TIME = 6.32 HRS WS =1112.32 WIDTH = 212.2

Z	DZ	TDZ	Y	Z	DZ	TDZ	Y	Z	DZ	TDZ	Y
1114.20	0.00	0.00	9885.0	1109.78	-1.26	11.58	9910.8	1093.18	-0.72	-5.02	9933.7
1091.60	0.00	-6.60	9966.3	1091.77	0.00	-6.43	9999.0	1091.90	0.00	-6.30	10032.0
1091.42	0.00	-6.78	10065.0	1098.20	0.00	0.00	10098.0	1114.20	0.00	0.00	10114.0

ID
78 SECTION 297.00 TIME = 6.32 HRS WS =1110.05 WIDTH = 273.9

Z	DZ	TDZ	Y	Z	DZ	TDZ	Y	Z	DZ	TDZ	Y
1113.50	0.00	0.00	9865.5	1098.40	1.07	2.30	9883.2	1096.05	-0.07	-0.05	9913.7
1095.47	-0.13	-0.62	9944.5	1095.13	-0.19	-0.97	9975.2	1094.88	-0.28	-1.22	10006.0
1094.46	-0.32	-1.64	10036.7	1094.17	-0.41	-1.93	10067.5	1094.03	-0.47	-2.07	10098.2
1095.97	0.00	-0.12	10129.5	1113.50	0.00	0.00	10146.4				

Y	V	Y	V	Y	V	Y	V	Y	V	Y	V
9883.2	16.30	9913.7	17.47	9944.5	17.70	9975.2	17.81	10006.0	17.89	10036.7	18.03
10067.5	18.11	10098.2	18.13	10129.5	17.20						

ID
77 SECTION 293.00 TIME = 6.32 HRS WS =1107.75 WIDTH = 256.5

Z	DZ	TDZ	Y	Z	DZ	TDZ	Y	Z	DZ	TDZ	Y
1110.40	0.00	0.00	9874.6	1094.00	0.00	0.00	9891.0	1091.22	0.99	-2.78	9929.7
1091.22	0.76	-2.78	9968.3	1091.22	0.50	-2.78	10007.0	1091.22	0.21	-2.78	10045.7
1091.33	0.00	-2.67	10084.3	1100.47	0.00	6.47	10118.2	1110.40	0.00	0.00	10139.4

ID
76 SECTION 291.00 TIME = 6.32 HRS WS =1106.87 WIDTH = 271.1

Z	DZ	TDZ	Y	Z	DZ	TDZ	Y	Z	DZ	TDZ	Y
1116.00	0.00	0.00	9865.0	1108.80	0.00	0.00	9865.2	1093.10	0.00	0.10	9865.4
1089.61	-2.81	-3.49	9898.7	1090.02	-2.40	-3.18	9932.5	1090.43	-1.99	-2.87	9966.2
1090.84	-1.58	-2.56	10000.0	1091.25	-1.17	-2.22	10034.0	1091.66	-0.76	-1.89	10068.0
1092.31	-0.35	-1.31	10102.0	1093.23	0.04	-0.47	10136.0	1093.90	0.00	-14.90	10136.2
1116.00	0.00	0.00	10136.4								

ID
75 SECTION 290.00 TIME = 6.32 HRS WS =1107.30 WIDTH = 265.6

Z	DZ	TDZ	Y	Z	DZ	TDZ	Y	Z	DZ	TDZ	Y
1117.80	0.00	0.00	9865.0	1108.80	0.00	0.00	9865.2	1106.60	0.00	13.60	9873.3
1090.87	0.13	-2.18	9898.7	1090.87	0.41	-2.23	9932.5	1090.87	0.67	-2.28	9966.2
1090.87	0.93	-2.33	10000.0	1090.87	1.18	-2.35	10034.0	1090.87	1.42	-2.38	10068.0
1090.87	1.66	-2.40	10102.0	1093.14	0.00	-0.16	10136.0	1093.12	0.00	-15.68	10136.2
1117.80	0.00	0.00	10136.4								

ID
74 SECTION 288.00 TIME = 6.32 HRS WS =1106.67 WIDTH = 301.8

Z	DZ	TDZ	Y	Z	DZ	TDZ	Y	Z	DZ	TDZ	Y
1106.88	0.00	0.00	9836.9	1091.66	0.08	-0.54	9851.2	1091.43	0.08	-0.77	9885.2

1091.43	0.08	-0.77	9919.5	1091.43	0.08	-0.77	9953.7	1091.43	0.08	-0.77	9988.0
1091.43	0.08	-0.77	10022.2	1091.43	0.08	-0.77	10056.5	1091.43	0.08	-0.77	10090.7
1091.66	0.08	-0.54	10124.8	1106.88	0.00	0.00	10139.1				

ID
73 SECTION 281.80 TIME = 6.32 HRS WS =1105.35 WIDTH = 361.8

Z	DZ	TDZ	Y	Z	DZ	TDZ	Y	Z	DZ	TDZ	Y
1105.55	0.00	0.00	9750.9	1091.45	-0.03	2.25	9765.4	1090.73	-0.04	1.53	9800.0
1090.64	-0.04	1.44	9833.0	1090.56	-0.05	1.36	9866.0	1090.47	-0.06	1.27	9899.0
1090.39	-0.06	1.19	9932.0	1090.47	-0.06	1.27	9965.0	1090.56	-0.05	1.36	9998.0
1090.64	-0.04	1.44	10031.0	1090.73	-0.04	1.53	10064.0	1091.45	-0.03	2.25	10098.6
1105.55	0.00	0.00	10113.1								

ID
72 SECTION 277.90 TIME = 6.32 HRS WS =1104.77 WIDTH = 393.0

Z	DZ	TDZ	Y	Z	DZ	TDZ	Y	Z	DZ	TDZ	Y
1105.80	0.00	0.00	9729.5	1089.68	0.02	1.38	9745.3	1089.63	0.02	1.33	9783.0
1089.62	0.02	1.32	9819.0	1089.61	0.02	1.31	9855.0	1089.61	0.02	1.31	9891.0
1089.60	0.02	1.30	9927.0	1089.61	0.02	1.31	9963.0	1089.61	0.02	1.31	9999.0
1089.62	0.02	1.32	10035.0	1089.63	0.02	1.33	10071.0	1089.68	0.02	1.38	10108.7
1105.80	0.00	0.00	10124.5								

ID
71 SECTION 273.50 TIME = 6.32 HRS WS =1104.18 WIDTH = 408.8

Z	DZ	TDZ	Y	Z	DZ	TDZ	Y	Z	DZ	TDZ	Y
1104.39	0.00	0.00	9714.9	1088.40	0.01	1.20	9730.7	1088.40	0.01	1.20	9769.4
1088.40	0.01	1.20	9806.8	1088.40	0.01	1.20	9844.2	1088.40	0.01	1.20	9881.6
1088.40	0.01	1.20	9919.0	1088.40	0.01	1.20	9956.6	1088.40	0.01	1.20	9994.2
1088.40	0.01	1.20	10031.8	1088.40	0.01	1.20	10069.4	1088.40	0.01	1.20	10108.3
1104.39	0.00	0.00	10124.1								

ID
70 SECTION 270.50 TIME = 6.32 HRS WS =1103.73 WIDTH = 399.5

Z	DZ	TDZ	Y	Z	DZ	TDZ	Y	Z	DZ	TDZ	Y
1104.80	0.00	0.00	9749.7	1087.07	0.06	0.57	9767.5	1087.07	0.06	0.57	9804.4
1087.07	0.06	0.57	9840.8	1087.07	0.06	0.57	9877.2	1087.07	0.06	0.57	9913.6
1087.07	0.06	0.57	9950.0	1087.07	0.06	0.57	9986.6	1087.07	0.06	0.57	10023.2
1087.07	0.06	0.57	10059.8	1087.07	0.06	0.57	10096.4	1087.07	0.06	0.57	10133.5
1104.80	0.00	0.00	10151.3								

ID
69 SECTION 247.00 TIME = 6.32 HRS WS =1101.66 WIDTH = 341.7

Z	DZ	TDZ	Y	Z	DZ	TDZ	Y	Z	DZ	TDZ	Y
1104.50	0.00	0.00	325.0	1093.24	0.66	7.57	348.5	1085.21	-0.07	-0.46	382.9
1084.68	-0.10	-0.99	421.9	1084.41	-0.12	-1.26	461.0	1084.21	-0.12	-1.46	500.0
1084.03	-0.13	-1.64	539.0	1083.83	-0.12	-1.84	578.1	1083.68	-0.12	-1.99	617.1
1085.67	0.00	0.00	656.2	1104.50	0.00	0.00	675.0				

Y	V	Y	V	Y	V	Y	V	Y	V	Y	V
348.5	9.98	382.9	12.88	421.9	12.96	461.0	12.95	500.0	12.93	539.0	12.90
578.1	12.88	617.1	12.84	656.2	12.20						

ID
68 SECTION 242.00 TIME = 6.32 HRS WS =1099.81 WIDTH = 341.2

Z	DZ	TDZ	Y	Z	DZ	TDZ	Y	Z	DZ	TDZ	Y
1104.00	0.00	0.00	325.0	1086.35	0.94	1.90	346.0	1084.62	0.01	0.17	383.4
1084.45	0.00	0.00	422.3	1084.41	0.00	-0.04	461.1	1084.41	0.00	-0.04	500.0
1084.39	0.00	-0.06	538.9	1084.22	-0.01	-0.23	577.7	1083.82	-0.04	-0.63	616.6
1084.45	0.00	0.00	655.5	1104.00	0.00	0.00	675.0				

Y	V	Y	V	Y	V	Y	V	Y	V	Y	V
346.0	13.33	383.4	13.88	422.3	13.85	461.1	13.77	500.0	13.68	538.9	13.60
577.7	13.58	616.6	13.64	655.5	13.35						

ID
67 SECTION 238.69 TIME = 6.32 HRS WS =1095.59 WIDTH = 323.5

Z	DZ	TDZ	Y	Z	DZ	TDZ	Y	Z	DZ	TDZ	Y
1103.40	0.00	0.00	325.0	1084.40	0.07	0.80	344.8	1084.04	0.05	0.44	383.6
1084.01	0.04	0.41	422.4	1083.99	0.04	0.39	461.2	1083.97	0.04	0.38	500.0
1083.95	0.04	0.35	536.2	1083.89	0.04	0.29	572.3	1083.66	0.01	0.06	608.5
1083.91	0.04	0.31	644.7	1103.90	0.00	0.00	665.0				

Y	V	Y	V	Y	V	Y	V	Y	V	Y	V
344.8	18.72	383.6	18.82	422.4	18.72	461.2	18.61	500.0	18.50	536.2	18.41
572.3	18.35	608.5	18.38	644.7	18.14						

ID
66 SECTION 238.66 TIME = 6.32 HRS WS =1094.79 WIDTH = 299.4

Z	DZ	TDZ	Y	Z	DZ	TDZ	Y	Z	DZ	TDZ	Y
1103.30	0.00	0.00	330.0	1094.79	0.01	14.18	361.7	1077.67	0.03	-2.93	389.7
1077.38	-0.01	-3.22	426.4	1077.23	-0.02	-3.37	463.2	1077.10	-0.03	-3.50	500.0
1076.81	-0.03	-3.79	536.7	1076.63	-0.08	-3.97	573.3	1076.77	-0.05	-3.83	610.0
1080.60	0.00	0.00	646.7	1103.70	0.00	0.00	670.0				

Y	V	Y	V	Y	V	Y	V	Y	V	Y	V
361.7	0.00	389.7	14.23	426.4	14.24	463.2	14.20	500.0	14.17	536.7	14.17
573.3	14.15	610.0	14.04	646.7	12.72						

ID
65 SECTION 233.55 TIME = 6.32 HRS WS =1094.63 WIDTH = 446.0

Z	DZ	TDZ	Y	Z	DZ	TDZ	Y	Z	DZ	TDZ	Y
1101.70	0.00	0.00	270.0	1079.96	0.03	0.96	291.7	1079.92	0.03	0.92	327.2
1079.92	0.03	0.92	361.8	1079.92	0.03	0.92	396.3	1079.93	0.03	0.93	430.9
1079.93	0.03	0.93	465.4	1079.93	0.03	0.93	500.0	1079.94	0.03	0.94	534.6
1079.94	0.03	0.94	569.1	1079.95	0.03	0.95	603.7	1079.95	0.03	0.95	638.3
1079.96	0.03	0.96	672.8	1079.96	0.03	0.96	708.4	1101.60	0.00	0.00	730.0

ID
64 SECTION 227.50 TIME = 6.32 HRS WS =1094.17 WIDTH = 500.2

Z	DZ	TDZ	Y	Z	DZ	TDZ	Y	Z	DZ	TDZ	Y
1099.00	0.00	0.00	245.0	1077.91	-0.65	0.81	266.2	1077.68	-0.88	0.58	301.0
1078.91	0.35	1.81	334.0	1078.32	-0.25	1.22	367.0	1078.94	0.37	1.84	400.0
1078.88	0.32	1.78	433.0	1078.85	0.29	1.75	466.0	1078.84	0.28	1.74	500.0
1078.81	0.25	1.71	532.0	1078.79	0.23	1.69	565.0	1078.77	0.21	1.67	598.0
1078.76	0.20	1.66	631.0	1078.74	0.18	1.64	664.0	1078.73	0.17	1.63	698.5
1079.00	0.44	1.90	735.0	1099.00	0.00	0.00	755.0				

Y	V	Y	V	Y	V	Y	V	Y	V	Y	V

266.2	8.86	301.0	8.96	334.0	8.74	367.0	8.92	400.0	8.83	433.0	8.90
466.0	8.96	500.0	9.02	532.0	9.08	565.0	9.14	598.0	9.20	631.0	9.27
664.0	9.34	698.5	9.41	735.0	9.42						

ID
63 SECTION 221.10 TIME = 6.32 HRS WS =1092.65 WIDTH = 390.6

Z	DZ	TDZ	Y	Z	DZ	TDZ	Y	Z	DZ	TDZ	Y
1096.60	0.00	0.00	295.0	1075.30	0.00	0.00	316.3	1074.55	-0.14	-0.75	353.0
1075.26	-0.03	-0.04	389.8	1075.66	0.09	0.36	426.5	1075.61	0.12	0.31	463.3
1075.60	0.06	0.30	500.0	1075.50	0.07	0.20	534.5	1075.42	0.05	0.12	568.9
1075.41	0.03	0.11	603.4	1075.37	0.04	0.07	637.8	1075.74	0.11	0.44	672.3
1098.00	0.00	0.00	695.0								

Y	V	Y	V	Y	V	Y	V	Y	V	Y	V
316.3	10.20	353.0	10.44	389.8	10.35	426.5	10.33	463.3	10.42	500.0	10.50
534.5	10.61	568.9	10.70	603.4	10.79	637.8	10.89	672.3	10.89		

ID
62 SECTION 217.50 TIME = 6.32 HRS WS =1091.86 WIDTH = 374.3

Z	DZ	TDZ	Y	Z	DZ	TDZ	Y	Z	DZ	TDZ	Y
1096.00	0.00	0.00	305.0	1074.24	0.00	0.04	326.8	1074.24	0.00	0.04	361.4
1074.24	0.00	0.04	396.1	1074.24	0.00	0.04	430.7	1074.24	0.00	0.04	465.4
1074.24	0.00	0.04	500.0	1074.24	0.00	0.04	533.4	1074.24	0.00	0.04	566.9
1074.24	0.00	0.04	600.3	1074.24	0.00	0.04	633.8	1077.56	0.03	3.36	665.2
1097.00	0.00	0.00	690.0								

ID
61 SECTION 213.70 TIME = 6.32 HRS WS =1085.79 WIDTH = 286.7

Z	DZ	TDZ	Y	Z	DZ	TDZ	Y	Z	DZ	TDZ	Y
1095.00	0.00	0.00	347.1	1073.00	0.00	0.00	369.1	1073.00	0.00	0.00	401.8
1073.00	0.00	0.00	434.6	1073.00	0.00	0.00	467.3	1073.00	0.00	0.00	500.0
1073.00	0.00	0.00	532.7	1073.00	0.00	0.00	565.4	1073.00	0.00	0.00	598.2
1073.00	0.00	0.00	630.9	1096.20	0.00	0.00	652.9				

ID
60 SECTION 213.50 TIME = 6.32 HRS WS =1085.19 WIDTH = 275.4

Z	DZ	TDZ	Y	Z	DZ	TDZ	Y	Z	DZ	TDZ	Y
1089.60	0.00	0.00	357.9	1071.50	0.00	0.00	376.0	1071.50	0.00	0.00	407.0
1071.50	0.00	0.00	438.0	1071.50	0.00	0.00	469.0	1071.50	0.00	0.00	500.0
1071.50	0.00	0.00	531.0	1071.50	0.00	0.00	562.0	1071.50	0.00	0.00	593.0
1071.50	0.00	0.00	624.0	1089.60	0.00	0.00	642.1				

ID
59 SECTION 212.60 TIME = 6.32 HRS WS =1085.80 WIDTH = 277.6

Z	DZ	TDZ	Y	Z	DZ	TDZ	Y	Z	DZ	TDZ	Y
1089.60	0.00	0.00	357.4	1071.03	0.02	0.03	376.0	1071.03	0.02	0.03	407.0
1071.03	0.02	0.03	438.0	1071.03	0.02	0.03	469.0	1071.03	0.02	0.03	500.0
1071.03	0.02	0.03	531.0	1071.03	0.02	0.03	562.0	1071.03	0.02	0.03	593.0
1071.03	0.02	0.03	624.0	1089.60	0.00	0.00	642.6				

ID
58 SECTION 209.30 TIME = 6.32 HRS WS =1085.78 WIDTH = 342.5

Z	DZ	TDZ	Y	Z	DZ	TDZ	Y	Z	DZ	TDZ	Y

1088.19	0.00	0.00	325.0	1075.02	0.45	4.83	346.4	1068.44	-0.17	-1.75	382.2
1068.24	-0.17	-1.95	421.5	1068.07	-0.17	-2.12	460.7	1067.93	-0.17	-2.26	500.0
1068.07	-0.17	-2.12	539.2	1068.24	-0.17	-1.95	578.5	1068.44	-0.17	-1.75	617.7
1075.02	0.45	4.83	653.6	1088.19	0.00	0.00	675.0				

ID
57 SECTION 204.00 TIME = 6.32 HRS WS =1084.25 WIDTH = 344.7

Z	DZ	TDZ	Y	Z	DZ	TDZ	Y	Z	DZ	TDZ	Y
1087.40	0.00	0.00	324.5	1068.89	0.00	-0.01	343.0	1068.43	-0.05	-0.47	382.2
1068.34	-0.06	-0.56	421.5	1068.24	-0.06	-0.66	460.7	1068.15	-0.07	-0.75	500.0
1068.24	-0.06	-0.66	539.2	1068.34	-0.06	-0.56	578.5	1068.43	-0.05	-0.47	617.7
1068.89	0.00	-0.01	657.0	1087.40	0.00	0.00	675.5				

ID
56 SECTION 201.90 TIME = 6.32 HRS WS =1083.60 WIDTH = 344.0

Z	DZ	TDZ	Y	Z	DZ	TDZ	Y	Z	DZ	TDZ	Y
1086.90	0.00	0.00	324.5	1069.83	-0.01	1.43	343.9	1068.16	-0.03	-0.24	382.2
1067.97	-0.04	-0.43	421.5	1067.77	-0.06	-0.63	460.7	1067.57	-0.08	-0.83	500.0
1067.42	-0.07	-0.98	539.2	1067.33	-0.06	-1.07	578.5	1067.27	-0.05	-1.13	617.7
1068.38	0.00	-0.02	657.0	1086.90	0.00	0.00	675.5				

ID
55 SECTION 201.10 TIME = 6.32 HRS WS =1083.42 WIDTH = 344.4

Z	DZ	TDZ	Y	Z	DZ	TDZ	Y	Z	DZ	TDZ	Y
1086.70	0.00	0.00	324.5	1068.30	0.00	0.10	342.9	1067.72	-0.08	-0.48	382.2
1067.55	-0.09	-0.65	421.5	1067.42	-0.08	-0.78	460.7	1067.36	-0.08	-0.84	500.0
1067.43	0.00	-0.77	539.2	1067.43	0.00	-0.77	578.5	1067.42	0.00	-0.78	617.7
1068.29	0.00	0.09	657.1	1086.70	0.00	0.00	675.5				

ID
54 SECTION 199.00 TIME = 6.32 HRS WS =1083.33 WIDTH = 405.4

Z	DZ	TDZ	Y	Z	DZ	TDZ	Y	Z	DZ	TDZ	Y
1086.20	0.00	0.00	317.5	1068.97	0.07	1.27	334.6	1068.78	0.07	1.08	368.8
1068.71	0.06	1.01	401.6	1068.69	0.06	0.99	434.4	1068.67	0.06	0.97	467.2
1068.66	0.06	0.96	500.0	1068.66	0.06	0.96	535.0	1068.65	0.06	0.95	570.0
1068.56	0.05	0.86	605.0	1068.40	0.04	0.70	640.0	1068.31	0.05	0.61	675.0
1068.71	0.06	1.01	711.3	1086.20	0.00	0.00	728.5				

Y	V	Y	V	Y	V	Y	V	Y	V	Y	V
334.6	11.91	368.8	11.95	401.6	11.95	434.4	11.94	467.2	11.92	500.0	11.90
535.0	11.88	570.0	11.86	605.0	11.86	640.0	11.89	675.0	11.90	711.3	11.75

ID
53 SECTION 197.00 TIME = 6.32 HRS WS =1083.11 WIDTH = 462.0

Z	DZ	TDZ	Y	Z	DZ	TDZ	Y	Z	DZ	TDZ	Y
1084.60	0.00	0.00	307.6	1076.04	0.86	8.85	347.9	1067.35	0.02	0.15	375.9
1070.13	-0.08	2.93	409.4	1070.89	-0.10	-3.11	423.0	1071.24	-0.12	-1.76	461.5
1070.10	-0.15	-1.90	500.0	1069.93	-0.15	-2.07	536.7	1072.31	-0.18	0.31	573.3
1073.33	-0.19	1.33	610.0	1073.37	-0.11	-0.63	613.0	1073.24	-0.19	-2.76	617.0
1072.73	-0.13	-3.27	627.0	1071.02	-0.29	-4.77	640.0	1065.45	0.01	-1.75	657.2
1065.22	-0.01	-1.98	691.5	1065.23	0.00	-1.97	725.7	1067.20	0.00	0.00	760.0
1084.60	0.00	0.00	777.4								

Y	V	Y	V	Y	V	Y	V	Y	V	Y	V

347.9	9.17	375.9	12.52	409.4	11.58	423.0	11.30	461.5	11.14	500.0	11.51
536.7	11.54	573.3	10.65	610.0	10.22	613.0	10.20	617.0	10.26	627.0	10.45
640.0	11.08	657.2	12.83	691.5	12.87	725.7	12.84	760.0	12.24		

ID
52 SECTION 193.00 TIME = 6.32 HRS WS =1082.32 WIDTH = 465.3

Z	DZ	TDZ	Y	Z	DZ	TDZ	Y	Z	DZ	TDZ	Y
1084.00	0.00	0.00	307.2	1068.67	0.20	2.47	340.2	1068.55	0.19	2.35	379.4
1068.53	0.19	2.33	416.1	1068.58	0.19	2.38	452.7	1068.53	0.20	2.33	490.1
1068.61	0.20	-5.39	505.0	1067.88	-0.75	-4.12	539.3	1067.84	-0.75	-3.56	559.9
1068.65	0.19	-3.35	585.7	1068.62	0.19	-5.38	620.0	1068.62	0.19	2.42	634.9
1068.53	0.20	2.33	667.8	1068.52	0.19	2.32	700.0	1068.49	0.19	2.29	730.0
1067.98	-0.75	1.78	763.0	1084.00	0.00	0.00	777.8				

Y	V	Y	V	Y	V	Y	V	Y	V	Y	V
340.2	11.21	379.4	11.22	416.1	11.20	452.7	11.15	490.1	11.14	505.0	11.10
539.3	11.30	559.9	11.30	585.7	11.02	620.0	11.01	634.9	11.00	667.8	11.00
700.0	10.98	730.0	10.97	763.0	11.10						

ID
51 SECTION 188.00 TIME = 6.32 HRS WS =1081.13 WIDTH = 465.3

Z	DZ	TDZ	Y	Z	DZ	TDZ	Y	Z	DZ	TDZ	Y
1083.00	0.00	0.00	307.0	1065.96	0.00	0.96	342.1	1065.96	0.00	0.96	382.2
1065.95	0.00	0.95	421.5	1065.95	0.00	0.95	460.7	1065.95	0.00	0.95	500.0
1065.92	0.00	0.92	513.7	1070.67	0.00	-2.33	529.0	1070.20	0.00	-1.90	529.9
1070.37	0.00	-2.03	552.6	1070.85	0.00	-1.85	575.0	1070.34	0.00	-2.01	608.9
1069.81	0.00	-2.19	642.9	1067.48	0.00	-3.02	659.5	1065.96	0.00	0.96	671.0
1065.96	0.00	0.96	700.7	1065.96	0.00	0.96	730.3	1065.96	0.00	0.96	760.9
1083.00	0.00	0.00	778.0								

ID
50 SECTION 183.00 TIME = 6.32 HRS WS =1079.52 WIDTH = 462.9

Z	DZ	TDZ	Y	Z	DZ	TDZ	Y	Z	DZ	TDZ	Y
1081.30	0.00	0.00	307.5	1067.56	0.48	3.76	345.7	1062.97	0.00	-0.83	370.0
1062.96	0.00	-0.84	397.6	1072.44	-0.09	-0.56	416.0	1071.16	-0.11	-0.84	439.0
1070.95	-0.13	-0.95	465.5	1070.72	-0.14	-1.08	492.0	1070.26	-0.15	-1.24	500.0
1065.32	-0.26	-4.68	540.0	1067.98	-0.23	-2.52	569.5	1068.96	-0.22	-2.04	599.0
1062.77	0.00	-1.03	613.4	1062.83	0.00	-0.97	650.1	1062.90	0.00	-0.90	686.7
1062.87	0.00	-0.93	723.4	1065.93	0.25	2.13	757.1	1081.30	0.00	0.00	777.5

ID
49 SECTION 181.00 TIME = 6.32 HRS WS =1079.41 WIDTH = 464.9

Z	DZ	TDZ	Y	Z	DZ	TDZ	Y	Z	DZ	TDZ	Y
1081.60	0.00	0.00	306.7	1065.01	0.04	1.71	341.3	1065.01	0.04	1.71	382.5
1065.01	0.04	1.71	421.6	1065.01	0.04	1.71	460.8	1065.01	0.04	1.71	500.0
1065.01	0.04	1.71	537.1	1065.01	0.04	1.71	574.3	1065.01	0.04	1.71	611.4
1065.01	0.04	1.71	648.6	1065.01	0.04	1.71	685.7	1065.01	0.04	1.71	722.9
1065.01	0.04	1.71	762.0	1081.60	0.00	0.00	778.3				

ID
48 SECTION 179.00 TIME = 6.32 HRS WS =1078.92 WIDTH = 413.7

Z	DZ	TDZ	Y	Z	DZ	TDZ	Y	Z	DZ	TDZ	Y
1081.00	0.00	0.00	306.8	1063.11	0.00	0.31	342.7	1062.86	-0.02	0.06	382.5
1062.83	-0.02	0.03	421.6	1062.80	-0.02	0.00	460.8	1062.76	-0.02	-0.04	500.0

1062.79	-0.02	-0.01	534.7	1062.82	-0.02	0.02	569.5	1062.85	-0.02	0.05	604.2
1062.88	-0.02	0.08	639.0	1062.91	-0.01	0.11	673.7	1063.11	0.00	0.31	709.1
1081.00	0.00	0.00	726.7								

ID
47 SECTION 177.00 TIME = 6.32 HRS WS =1078.39 WIDTH = 391.8

Z	DZ	TDZ	Y	Z	DZ	TDZ	Y	Z	DZ	TDZ	Y
1080.50	0.00	0.00	279.1	1062.57	0.00	0.17	296.8	1062.30	-0.02	-0.10	330.8
1062.26	-0.02	-0.14	364.7	1062.22	-0.03	-0.18	398.5	1062.18	-0.03	-0.22	432.3
1062.14	-0.03	-0.26	466.2	1062.10	-0.04	-0.30	500.0	1062.15	-0.03	-0.25	539.2
1062.20	-0.03	-0.21	578.5	1062.24	-0.03	-0.16	617.7	1062.57	0.00	0.17	657.2
1080.50	0.00	0.00	675.1								

ID
46 SECTION 176.00 TIME = 6.32 HRS WS =1077.69 WIDTH = 391.5

Z	DZ	TDZ	Y	Z	DZ	TDZ	Y	Z	DZ	TDZ	Y
1079.60	0.00	0.00	265.9	1075.09	0.69	7.09	293.7	1065.58	-0.44	-2.42	327.0
1065.49	-0.46	-2.51	339.0	1065.22	-0.51	-2.78	371.5	1064.96	-0.56	-3.04	404.0
1059.14	0.00	-3.06	416.0	1059.12	0.00	-3.08	450.0	1059.07	0.00	-3.13	475.0
1059.14	0.00	-3.06	500.0	1059.06	0.00	-3.14	525.0	1059.13	0.00	-3.07	550.0
1059.13	-0.16	-3.07	585.7	1059.35	-0.21	-2.85	621.3	1074.13	1.17	11.93	649.2
1079.60	0.00	0.00	674.4								

ID
45 SECTION 173.00 TIME = 6.32 HRS WS =1076.86 WIDTH = 432.6

Z	DZ	TDZ	Y	Z	DZ	TDZ	Y	Z	DZ	TDZ	Y
1079.00	0.00	0.00	224.1	1076.86	0.54	4.86	241.1	1071.07	-0.19	-0.93	268.8
1071.02	-0.20	-0.98	290.0	1069.60	-0.25	-0.40	302.5	1066.53	-0.33	-1.47	312.2
1065.95	-0.37	-2.05	346.0	1065.81	-0.39	-2.19	380.0	1067.05	-0.36	-1.95	385.0
1059.55	0.00	-1.85	400.2	1059.67	0.00	-1.73	433.5	1059.75	0.00	-1.65	466.7
1059.82	0.00	-1.58	500.0	1059.87	0.00	-1.53	539.2	1059.93	0.00	-1.47	578.5
1060.06	0.00	-1.34	617.7	1069.22	0.59	7.82	651.9	1079.00	0.00	0.00	674.6

ID
44 SECTION 170.00 TIME = 6.32 HRS WS =1076.91 WIDTH = 571.1

Z	DZ	TDZ	Y	Z	DZ	TDZ	Y	Z	DZ	TDZ	Y
1079.20	0.00	0.00	190.8	1070.01	0.04	0.01	208.6	1070.01	0.04	0.01	240.2
1070.01	0.04	0.01	260.0	1069.64	0.04	0.64	261.6	1069.30	0.04	0.90	295.0
1069.44	0.04	1.24	330.5	1068.30	0.04	0.30	366.2	1070.01	0.04	0.01	377.0
1061.72	0.06	1.12	392.2	1061.80	0.06	1.20	430.5	1061.81	0.06	1.21	465.3
1061.81	0.06	1.21	500.0	1061.82	0.06	1.22	535.7	1061.82	0.06	1.22	571.4
1061.83	0.06	1.23	607.1	1061.83	0.06	1.23	642.9	1061.84	0.06	1.24	678.6
1061.84	0.06	1.24	714.3	1061.84	0.06	1.24	751.3	1079.20	0.00	0.00	768.6

ID
43 SECTION 168.00 TIME = 6.32 HRS WS =1076.67 WIDTH = 572.0

Z	DZ	TDZ	Y	Z	DZ	TDZ	Y	Z	DZ	TDZ	Y
1079.00	0.00	0.00	190.0	1068.85	0.00	-0.15	209.9	1068.85	0.00	-0.15	225.2
1068.85	0.00	-0.15	243.0	1067.63	0.00	-0.37	253.7	1067.59	0.00	-0.21	278.0
1067.63	0.00	-0.37	295.2	1068.31	0.00	-0.19	323.4	1068.85	0.00	-0.15	351.7
1068.48	0.00	-1.02	380.0	1061.01	0.01	0.91	396.0	1061.01	0.01	0.91	432.5
1061.01	0.01	0.91	466.3	1061.01	0.01	0.91	500.0	1061.01	0.01	0.91	535.7
1061.01	0.01	0.91	571.4	1061.01	0.01	0.91	607.1	1061.01	0.01	0.91	642.9
1061.01	0.01	0.91	678.6	1061.01	0.01	0.91	714.3	1061.01	0.01	0.91	751.0
1079.00	0.00	0.00	768.9								

ID
42 SECTION 165.00 TIME = 6.32 HRS WS =1076.27 WIDTH = 572.7

Z	DZ	TDZ	Y	Z	DZ	TDZ	Y	Z	DZ	TDZ	Y
1078.80	0.00	0.00	189.2	1067.91	0.02	-0.09	210.7	1067.91	0.02	-0.09	227.8
1067.91	0.02	-0.09	245.0	1067.91	0.02	-0.09	275.0	1067.91	0.02	-0.09	305.0
1067.88	0.02	-0.22	337.5	1067.78	0.02	-0.42	370.0	1060.31	0.02	0.91	385.5
1060.31	0.02	0.91	425.1	1060.31	0.02	0.91	462.5	1060.31	0.02	0.91	500.0
1060.31	0.02	0.91	535.7	1060.31	0.02	0.91	571.4	1060.31	0.02	0.91	607.1
1060.31	0.02	0.91	642.9	1060.31	0.02	0.91	678.6	1060.31	0.02	0.91	714.3
1060.31	0.02	0.91	751.0	1078.80	0.00	0.00	769.4				

ID
41 SECTION 162.00 TIME = 6.32 HRS WS =1074.35 WIDTH = 356.1

Z	DZ	TDZ	Y	Z	DZ	TDZ	Y	Z	DZ	TDZ	Y
1077.00	0.00	0.00	319.3	1058.80	0.00	0.00	337.5	1057.92	-0.03	-0.88	350.0
1057.88	-0.03	-0.92	375.0	1057.84	-0.03	-0.95	400.0	1057.82	-0.03	-0.98	420.0
1057.79	-0.03	-1.01	440.0	1057.77	-0.03	-1.03	460.0	1057.75	-0.03	-1.05	480.0
1057.73	-0.03	-1.07	500.0	1057.77	-0.03	-1.03	533.3	1057.80	-0.03	-1.00	566.7
1057.84	-0.03	-0.95	600.0	1057.89	-0.03	-0.91	631.2	1058.80	0.00	0.00	662.5
1077.00	0.00	0.00	680.7								

ID
40 SECTION 160.25 TIME = 6.32 HRS WS =1073.79 WIDTH = 355.6

Z	DZ	TDZ	Y	Z	DZ	TDZ	Y	Z	DZ	TDZ	Y
1077.00	0.00	0.00	319.0	1058.47	0.01	0.01	337.5	1057.73	0.01	-0.73	370.0
1057.70	0.01	-0.76	402.5	1057.67	0.01	-0.79	435.0	1057.65	0.01	-0.81	467.5
1057.63	0.01	-0.83	500.0	1057.65	0.01	-0.81	532.5	1057.67	0.01	-0.79	565.0
1057.70	0.01	-0.76	597.5	1057.73	0.01	-0.73	630.0	1058.47	0.01	0.01	662.5
1077.00	0.00	0.00	681.0								

ID
39 SECTION 159.45 TIME = 6.32 HRS WS =1073.50 WIDTH = 355.4

Z	DZ	TDZ	Y	Z	DZ	TDZ	Y	Z	DZ	TDZ	Y
1076.80	0.00	0.00	319.0	1058.30	0.00	0.00	337.5	1057.72	-0.06	-0.58	370.0
1057.63	-0.06	-0.67	402.5	1057.54	-0.07	-0.76	435.0	1057.45	-0.08	-0.85	467.5
1057.36	-0.09	-0.94	500.0	1057.45	-0.08	-0.85	532.5	1057.54	-0.07	-0.76	565.0
1057.63	-0.06	-0.67	597.5	1057.72	-0.06	-0.58	630.0	1058.30	0.00	0.00	662.5
1076.80	0.00	0.00	681.0								

ID
38 SECTION 158.00 TIME = 6.32 HRS WS =1072.38 WIDTH = 346.5

Z	DZ	TDZ	Y	Z	DZ	TDZ	Y	Z	DZ	TDZ	Y
1076.50	0.00	0.00	319.0	1058.00	0.00	0.00	356.0	1054.97	-0.24	-3.03	392.0
1055.21	-0.24	-2.79	428.0	1055.49	-0.22	-2.51	464.0	1055.78	-0.19	-2.22	500.0
1056.04	-0.17	-1.96	532.5	1056.31	-0.15	-1.69	565.0	1056.60	-0.12	-1.40	597.5
1056.89	-0.10	-1.11	630.0	1066.16	0.95	8.16	657.4	1075.00	0.00	0.00	679.5

ID
37 SECTION 155.00 TIME = 6.32 HRS WS =1072.14 WIDTH = 457.5

Z	DZ	TDZ	Y	Z	DZ	TDZ	Y	Z	DZ	TDZ	Y
1073.30	0.00	0.00	224.1	1057.40	0.00	0.00	255.9	1055.14	-0.08	-2.26	287.6
1055.14	-0.07	-2.26	319.4	1055.49	-0.06	-1.91	351.1	1056.11	-0.04	-1.29	382.8
1061.62	-0.10	-3.38	398.0	1062.74	-0.10	-1.26	404.0	1063.41	-0.05	1.41	412.0
1063.74	-0.03	2.34	450.0	1063.18	-0.03	1.18	488.0	1062.88	-0.14	-0.12	500.0

1062.56	-0.11	-1.44	505.0	1062.03	-0.01	-3.97	511.0	1060.16	-0.04	2.76	528.2
1056.40	0.01	-1.00	564.1	1056.16	-0.04	-1.24	600.0	1056.76	0.00	-0.64	635.0
1062.81	0.54	5.41	666.4	1073.30	0.00	0.00	685.9				

Y	V	Y	V	Y	V	Y	V	Y	V	Y	V
255.9	11.79	287.6	12.52	319.4	12.56	351.1	12.51	382.8	12.38	398.0	10.52
404.0	10.07	412.0	9.80	450.0	9.70	488.0	10.00	500.0	10.14	505.0	10.28
511.0	10.51	528.2	11.26	564.1	12.58	600.0	12.72	635.0	12.59	666.4	10.41

ID
36 SECTION 150.00 TIME = 6.32 HRS WS =1071.58 WIDTH = 498.9

Z	DZ	TDZ	Y	Z	DZ	TDZ	Y	Z	DZ	TDZ	Y
1073.00	0.00	0.00	223.4	1057.90	0.82	1.50	255.4	1056.51	0.63	0.11	289.4
1057.49	0.67	1.09	322.2	1057.19	-0.13	0.79	355.0	1057.29	-0.07	0.89	377.5
1057.20	-0.08	0.80	400.0	1057.14	-0.10	0.74	438.7	1057.14	-0.09	0.74	477.5
1057.31	-0.13	0.91	516.2	1057.35	-0.12	0.95	555.0	1057.31	-0.12	0.91	593.7
1057.28	-0.12	0.88	632.5	1057.29	-0.12	0.89	671.2	1057.58	-0.06	1.18	711.9
1073.00	0.00	0.00	726.6								

Y	V	Y	V	Y	V	Y	V	Y	V	Y	V
255.4	9.55	289.4	9.96	322.2	9.75	355.0	9.87	377.5	9.88	400.0	9.93
438.7	10.00	477.5	10.06	516.2	10.07	555.0	10.12	593.7	10.19	632.5	10.26
671.2	10.32	711.9	10.31								

ID
35 SECTION 147.00 TIME = 6.32 HRS WS =1070.99 WIDTH = 469.0

Z	DZ	TDZ	Y	Z	DZ	TDZ	Y	Z	DZ	TDZ	Y
1072.40	0.00	0.00	273.4	1055.95	0.00	0.15	306.0	1055.94	1.21	0.13	340.0
1055.94	0.68	0.13	370.0	1055.94	0.00	0.13	400.0	1055.94	-0.24	0.13	430.0
1055.94	-0.21	0.14	440.0	1055.94	-0.09	0.14	470.0	1055.94	-0.10	0.14	500.0
1055.94	-0.09	0.13	505.0	1055.94	-0.05	0.13	532.5	1055.94	-0.04	0.14	560.0
1055.94	-0.06	0.14	597.5	1055.94	-0.07	0.14	635.0	1055.94	-0.07	0.14	666.7
1055.94	-0.10	0.14	698.3	1055.94	-0.56	0.14	731.6	1072.40	0.00	0.00	746.6

Y	V	Y	V	Y	V	Y	V	Y	V	Y	V
306.0	9.87	340.0	9.92	370.0	9.96	400.0	10.00	430.0	10.04	440.0	10.06
470.0	10.10	500.0	10.14	505.0	10.15	532.5	10.19	560.0	10.23	597.5	10.29
635.0	10.35	666.7	10.40	698.3	10.46	731.6	10.51				

ID
34 SECTION 145.00 TIME = 6.32 HRS WS =1070.66 WIDTH = 465.8

Z	DZ	TDZ	Y	Z	DZ	TDZ	Y	Z	DZ	TDZ	Y
1072.00	0.00	0.00	273.4	1055.61	0.02	0.21	306.0	1055.48	0.02	0.08	320.0
1055.47	0.02	0.07	340.0	1055.46	0.02	0.06	370.0	1055.44	0.02	0.04	403.7
1055.43	0.02	0.03	437.5	1055.41	0.02	0.01	471.2	1055.39	0.02	-0.01	505.0
1055.40	0.02	0.00	515.0	1055.40	0.02	0.00	525.0	1055.42	0.02	0.02	559.2
1055.44	0.02	0.04	593.3	1055.45	0.02	0.05	627.5	1055.47	0.02	0.07	661.7
1055.48	0.02	0.08	695.8	1055.61	0.02	0.21	730.6	1077.00	0.00	0.00	746.6

ID
33 SECTION 141.00 TIME = 6.32 HRS WS =1069.65 WIDTH = 467.2

Z	DZ	TDZ	Y	Z	DZ	TDZ	Y	Z	DZ	TDZ	Y
1071.00	0.00	0.00	273.6	1057.78	0.28	3.18	308.7	1053.89	0.00	-0.71	328.8
1056.39	-0.20	-1.81	336.0	1056.81	-0.22	-1.90	370.0	1053.91	0.00	-0.69	379.4
1053.94	0.00	-0.66	403.0	1058.24	-0.22	-1.76	415.0	1060.06	-0.19	-1.44	435.0

1058.05	-0.24	-1.95	454.0	1053.94	0.00	-0.66	474.0	1053.94	0.00	-0.66	500.0
1053.95	0.00	-0.65	530.0	1053.95	0.00	-0.65	560.0	1053.94	0.00	-0.66	594.0
1053.92	0.00	-0.68	628.0	1053.88	0.00	-0.72	662.0	1053.92	0.00	-0.68	696.0
1058.89	0.38	4.29	726.9	1071.00	0.00	0.00	746.4				

ID
32 SECTION 138.00 TIME = 6.32 HRS WS =1069.15 WIDTH = 469.8

Z	DZ	TDZ	Y	Z	DZ	TDZ	Y	Z	DZ	TDZ	Y
1069.60	0.00	0.00	274.4	1054.53	0.00	0.53	305.0	1054.50	0.00	0.50	327.8
1054.48	0.00	0.48	350.1	1055.66	0.00	-3.34	360.0	1054.88	0.00	-3.62	382.4
1054.63	0.00	-3.37	405.0	1054.49	0.00	0.49	413.0	1054.48	0.00	0.48	440.0
1054.48	0.00	0.48	460.0	1054.48	0.00	0.48	475.0	1054.48	0.00	0.48	500.0
1054.48	0.00	0.48	530.0	1054.48	0.00	0.48	560.0	1054.49	0.00	0.49	590.0
1054.49	0.00	0.49	615.0	1054.49	0.00	0.49	640.0	1054.50	0.00	0.50	670.0
1054.50	0.00	0.50	700.0	1054.53	0.00	0.53	730.6	1069.60	0.00	0.00	745.6

ID
31 SECTION 135.00 TIME = 6.32 HRS WS =1068.47 WIDTH = 467.2

Z	DZ	TDZ	Y	Z	DZ	TDZ	Y	Z	DZ	TDZ	Y
1069.60	0.00	0.00	273.5	1057.35	0.34	3.95	309.2	1052.55	-0.06	-0.85	330.0
1057.97	-0.05	-0.43	340.0	1057.81	-0.06	-0.49	376.0	1057.88	-0.07	-0.32	412.0
1058.02	-0.07	-1.18	412.2	1052.33	-0.07	-1.07	423.6	1052.26	-0.07	-1.14	461.8
1052.18	-0.07	-1.22	500.0	1052.19	-0.07	-1.21	502.0	1052.25	-0.07	-1.15	537.6
1052.33	-0.07	-1.07	573.2	1052.40	-0.07	-1.00	608.8	1052.48	-0.06	-0.92	644.4
1052.57	-0.06	-0.83	680.0	1052.63	-0.06	-0.77	705.0	1058.95	0.47	5.55	726.4
1069.90	0.00	0.00	746.3								

ID
30 SECTION 131.00 TIME = 6.32 HRS WS =1067.84 WIDTH = 468.9

Z	DZ	TDZ	Y	Z	DZ	TDZ	Y	Z	DZ	TDZ	Y
1069.40	0.00	0.00	273.2	1052.66	0.00	0.06	306.8	1052.65	0.00	0.05	328.9
1052.65	0.00	0.05	351.0	1052.36	0.00	2.36	356.0	1052.36	0.00	0.36	365.0
1054.03	0.00	0.03	395.0	1054.03	0.00	0.03	430.0	1052.66	0.00	0.06	445.0
1053.35	0.00	0.05	471.1	1054.04	0.00	0.04	497.2	1052.67	0.00	0.07	500.0
1052.67	0.00	0.07	530.0	1052.67	0.00	0.07	564.0	1052.68	0.00	0.08	598.0
1052.68	0.00	0.08	632.0	1052.69	0.00	0.09	666.0	1052.69	0.00	0.09	698.0
1052.70	0.00	0.10	730.0	1069.40	0.00	0.00	746.8				

ID
29 SECTION 127.00 TIME = 6.32 HRS WS =1067.22 WIDTH = 469.3

Z	DZ	TDZ	Y	Z	DZ	TDZ	Y	Z	DZ	TDZ	Y
1068.80	0.00	0.00	273.0	1051.97	0.00	0.17	306.8	1051.96	0.00	0.16	345.0
1051.96	0.00	0.16	372.5	1051.96	0.00	0.16	400.0	1051.96	0.00	0.16	425.0
1051.96	0.00	0.16	450.0	1051.96	0.00	0.16	475.0	1051.96	0.00	0.16	500.0
1051.96	0.00	0.16	537.5	1051.96	0.00	0.16	575.0	1051.96	0.00	0.16	612.5
1051.96	0.00	0.16	650.0	1051.96	0.00	0.16	665.0	1051.97	0.00	0.17	697.5
1051.97	0.00	0.17	730.2	1068.80	0.00	0.00	747.0				

ID
28 SECTION 123.00 TIME = 6.32 HRS WS =1066.61 WIDTH = 469.2

Z	DZ	TDZ	Y	Z	DZ	TDZ	Y	Z	DZ	TDZ	Y
1068.80	0.00	0.00	272.2	1051.18	0.00	0.18	306.9	1051.18	0.00	0.18	315.0
1051.18	0.00	0.18	342.5	1051.18	0.00	0.18	370.0	1051.18	0.00	0.18	400.0
1051.18	0.00	0.18	433.3	1051.18	0.00	0.18	466.7	1051.18	0.00	0.18	500.0
1051.18	0.00	0.18	536.7	1051.18	0.00	0.18	573.3	1051.18	0.00	0.18	610.0
1051.18	0.00	0.18	630.0	1051.18	0.00	0.18	655.0	1051.18	0.00	0.18	680.0

1051.18	0.00	0.18	705.0	1051.18	0.00	0.18	730.9	1068.80	0.00	0.00	747.8

ID
27 SECTION 120.00 TIME = 6.32 HRS WS =1065.41 WIDTH = 466.4

Z	DZ	TDZ	Y	Z	DZ	TDZ	Y	Z	DZ	TDZ	Y
1067.10	0.00	0.00	273.3	1055.93	0.44	5.53	310.2	1049.49	-0.05	-0.91	345.4
1049.02	0.00	-1.38	384.0	1048.67	0.00	-1.73	422.7	1048.40	0.00	-2.00	461.3
1048.30	0.00	-2.10	500.0	1048.26	0.00	-2.14	506.6	1055.89	-0.12	-0.81	520.0
1056.27	-0.13	-0.80	546.7	1056.65	-0.13	-0.79	573.3	1057.03	-0.13	-0.77	600.0
1056.39	-0.15	-0.91	622.5	1055.73	-0.16	-1.07	645.0	1047.79	0.00	-2.62	658.6
1047.66	0.00	-2.74	694.3	1050.40	0.00	0.00	730.0	1067.10	0.00	0.00	746.7

ID
26 SECTION 116.00 TIME = 6.32 HRS WS =1065.40 WIDTH = 589.5

Z	DZ	TDZ	Y	Z	DZ	TDZ	Y	Z	DZ	TDZ	Y
1067.30	0.00	0.00	202.3	1051.69	0.11	2.09	235.5	1051.59	0.05	1.99	269.8
1051.60	0.06	2.00	302.0	1051.60	0.06	2.00	334.1	1051.57	0.05	1.97	366.4
1051.66	0.11	-2.34	375.0	1051.66	0.08	-2.34	378.0	1051.69	0.11	2.09	386.6
1051.67	0.11	2.07	424.5	1051.62	0.05	2.02	462.3	1051.10	0.15	1.50	500.0
1051.19	0.23	1.59	539.6	1051.33	-0.22	1.73	580.8	1051.64	0.65	-4.36	592.7
1051.26	0.22	-6.74	603.0	1051.30	0.25	1.70	617.6	1051.34	0.31	1.74	651.8
1051.48	0.34	1.88	683.9	1050.95	-0.08	1.35	715.9	1049.56	-0.97	-0.04	748.0
1051.59	0.06	1.99	782.2	1067.30	0.00	0.00	797.7				

Y	V	Y	V	Y	V	Y	V	Y	V	Y	V
235.5	9.09	269.8	9.03	302.0	8.94	334.1	8.86	366.4	8.79	375.0	8.75
378.0	8.74	386.6	8.71	424.5	8.63	462.3	8.56	500.0	8.61	539.6	8.51
580.8	8.40	592.7	8.31	603.0	8.38	617.6	8.34	651.8	8.28	683.9	8.19
715.9	8.26	748.0	8.51	782.2	8.01						

ID
25 SECTION 113.00 TIME = 6.32 HRS WS =1065.19 WIDTH = 590.3

Z	DZ	TDZ	Y	Z	DZ	TDZ	Y	Z	DZ	TDZ	Y
1067.20	0.00	0.00	201.8	1050.04	0.07	1.04	237.0	1050.04	0.07	1.04	270.8
1050.04	0.07	1.04	303.3	1050.04	0.07	1.04	335.9	1050.04	0.07	1.04	368.4
1050.04	0.07	1.04	401.0	1050.04	0.07	-1.26	404.0	1050.04	0.07	1.04	435.0
1050.04	0.07	1.04	465.0	1050.04	0.07	0.04	473.0	1050.04	0.07	1.04	475.0
1050.04	0.07	1.04	500.0	1050.04	0.07	1.04	535.0	1050.04	0.07	1.04	557.5
1050.04	0.07	1.04	580.0	1050.04	0.07	1.04	595.0	1050.04	0.07	1.04	620.0
1050.04	0.07	1.04	652.5	1050.04	0.07	1.04	685.0	1050.04	0.07	1.04	716.7
1050.04	0.07	1.04	748.3	1050.04	0.07	1.04	781.2	1067.20	0.00	0.00	798.2

ID
24 SECTION 110.00 TIME = 6.32 HRS WS =1064.95 WIDTH = 591.1

Z	DZ	TDZ	Y	Z	DZ	TDZ	Y	Z	DZ	TDZ	Y
1066.90	0.00	0.00	201.3	1049.15	0.08	0.75	238.7	1049.15	0.08	0.75	277.5
1049.15	0.08	0.75	316.3	1049.15	0.08	0.75	355.2	1049.15	0.08	0.75	394.0
1049.15	0.08	0.75	432.8	1051.17	0.00	0.17	438.0	1051.17	0.00	0.17	461.5
1051.17	0.00	0.17	485.0	1049.15	0.08	2.15	505.0	1049.15	0.08	0.75	515.0
1049.15	0.08	0.75	550.0	1049.15	0.08	0.75	565.0	1049.15	0.08	0.75	598.8
1049.15	0.08	0.75	632.6	1049.15	0.08	0.75	666.4	1049.15	0.08	0.75	700.2
1049.15	0.08	0.75	734.0	1049.15	0.08	0.75	757.0	1049.15	0.08	0.75	780.0
1066.90	0.00	0.00	798.5								

ID
23 SECTION 109.00 TIME = 6.32 HRS WS =1064.91 WIDTH = 591.4

Z	DZ	TDZ	Y	Z	DZ	TDZ	Y	Z	DZ	TDZ	Y
1066.90	0.00	0.00	201.3	1048.86	0.05	0.66	238.0	1048.86	0.05	0.66	274.1
1048.86	0.05	0.66	309.6	1048.86	0.05	0.66	345.1	1048.86	0.05	0.66	380.5
1048.86	0.05	0.66	416.0	1048.86	0.05	0.66	451.4	1048.86	0.05	-1.14	455.0
1048.86	0.05	0.66	480.0	1048.86	0.05	-1.14	503.0	1048.86	0.05	-2.14	510.0
1048.86	0.05	-1.14	515.0	1048.86	0.05	0.66	518.6	1048.86	0.05	0.66	555.9
1048.86	0.05	0.66	593.3	1048.86	0.05	0.66	630.6	1048.86	0.05	0.66	668.0
1048.86	0.05	0.66	705.3	1048.86	0.05	0.66	742.7	1048.86	0.05	0.66	780.7
1066.90	0.00	0.00	798.7								

ID
22 SECTION 106.00 TIME = 6.32 HRS WS =1064.27 WIDTH = 500.8

Z	DZ	TDZ	Y	Z	DZ	TDZ	Y	Z	DZ	TDZ	Y
1066.40	0.00	0.00	246.4	1047.62	0.00	0.02	284.0	1047.60	0.02	0.00	316.0
1047.60	0.02	0.00	348.0	1047.60	0.02	0.00	380.0	1047.60	0.02	0.00	412.0
1047.60	0.02	0.00	441.3	1047.60	0.02	0.00	470.7	1047.60	0.02	0.00	500.0
1047.60	0.02	0.00	537.0	1047.60	0.02	0.00	574.0	1047.60	0.02	0.00	611.0
1047.60	0.02	0.00	648.0	1047.60	0.02	0.00	685.0	1047.60	0.02	0.00	710.0
1047.62	0.00	0.02	734.8	1066.40	0.00	0.00	753.6				

ID
21 SECTION 103.00 TIME = 6.32 HRS WS =1062.80 WIDTH = 408.0

Z	DZ	TDZ	Y	Z	DZ	TDZ	Y	Z	DZ	TDZ	Y
1065.40	0.00	0.00	292.0	1047.50	0.33	0.50	329.5	1046.93	0.00	-0.07	349.4
1046.92	0.00	-0.07	370.0	1046.92	0.00	-0.08	380.0	1046.92	0.00	-0.08	382.0
1046.91	0.00	-0.09	418.0	1046.90	0.00	-0.10	454.0	1046.89	0.00	-0.11	490.0
1046.89	0.00	-0.11	500.0	1046.90	0.00	-0.10	526.5	1046.90	0.00	-0.10	553.0
1046.91	0.00	-0.09	579.5	1046.92	0.00	-0.08	606.0	1046.93	0.00	-0.07	640.0
1046.93	0.00	-0.07	657.0	1046.93	0.00	-0.07	659.0	1047.11	0.38	0.11	688.7
1065.40	0.00	0.00	708.0								

ID
20 SECTION 100.90 TIME = 6.32 HRS WS =1061.15 WIDTH = 377.1

Z	DZ	TDZ	Y	Z	DZ	TDZ	Y	Z	DZ	TDZ	Y
1063.60	0.00	0.00	308.1	1049.29	-0.15	2.69	327.1	1046.54	0.00	-0.06	360.1
1046.53	0.00	-0.07	395.1	1046.52	0.00	-0.08	430.1	1046.51	0.00	-0.08	465.0
1046.51	0.00	-0.09	500.0	1046.51	0.00	-0.08	535.0	1046.52	0.00	-0.08	569.9
1046.53	0.00	-0.07	604.9	1046.54	0.00	-0.06	639.9	1049.29	-0.15	2.69	672.9
1063.60	0.00	0.00	691.8								

ID
19 SECTION 99.60 TIME = 6.32 HRS WS =1057.65 WIDTH = 349.8

Z	DZ	TDZ	Y	Z	DZ	TDZ	Y	Z	DZ	TDZ	Y
1063.80	0.00	0.00	325.1	1047.06	0.03	0.86	325.3	1047.03	0.03	0.83	360.1
1047.00	0.03	0.80	395.1	1046.97	0.03	0.77	430.1	1046.94	0.03	0.74	465.0
1046.91	0.03	0.71	500.0	1046.94	0.03	0.74	535.0	1046.97	0.03	0.77	569.9
1047.00	0.03	0.80	604.9	1047.03	0.03	0.83	639.9	1047.06	0.03	0.86	674.8
1063.80	0.00	0.00	675.0								

ID
18 SECTION 99.54 TIME = 6.32 HRS WS =1055.95 WIDTH = 349.8

Z	DZ	TDZ	Y	Z	DZ	TDZ	Y	Z	DZ	TDZ	Y
1063.50	0.00	0.00	325.1	1043.21	0.00	0.01	325.3	1040.87	-0.14	-2.33	360.1
1041.09	-0.13	-2.11	395.1	1040.95	-0.12	-2.25	430.1	1041.04	-0.11	-2.16	465.0
1040.32	-0.10	-2.88	500.0	1040.45	-0.09	-2.75	535.0	1040.62	-0.07	-2.58	569.9

1041.21	-0.06	-1.99	604.9	1041.00	-0.04	-2.20	639.9	1041.67	1.06	-1.53	674.2
1063.50	0.00	0.00	675.0								

ID
17 SECTION 97.00 TIME = 6.32 HRS WS =1055.78 WIDTH = 480.1

Z	DZ	TDZ	Y	Z	DZ	TDZ	Y	Z	DZ	TDZ	Y
1057.10	0.00	0.00	260.5	1042.84	0.00	0.24	288.7	1042.42	-0.05	-0.18	320.0
1042.67	-0.02	0.07	345.0	1042.80	0.00	0.20	370.0	1042.80	0.00	0.20	380.0
1042.82	-0.01	0.22	405.0	1042.84	0.00	0.24	440.5	1042.89	0.00	0.29	476.0
1042.90	0.00	-1.10	479.0	1042.95	-0.01	-0.85	500.0	1042.97	0.00	-0.93	522.5
1043.01	0.00	-0.99	545.0	1043.03	0.00	-2.97	555.0	1043.04	0.00	0.44	562.0
1043.03	0.00	0.43	591.3	1042.90	0.00	0.30	620.7	1042.84	0.00	0.24	650.0
1042.86	0.00	0.26	675.0	1042.97	0.01	0.37	702.5	1043.33	0.03	0.73	730.7
1057.10	0.00	0.00	744.5								

Y	V	Y	V	Y	V	Y	V	Y	V	Y	V
288.7	11.10	320.0	11.30	345.0	11.26	370.0	11.27	380.0	11.28	405.0	11.33
440.5	11.39	476.0	11.44	479.0	11.45	500.0	11.47	522.5	11.51	545.0	11.55
555.0	11.56	562.0	11.57	591.3	11.64	620.7	11.76	650.0	11.85	675.0	11.90
702.5	11.94	730.7	11.87								

ID
16 SECTION 94.00 TIME = 6.32 HRS WS =1055.19 WIDTH = 480.6

Z	DZ	TDZ	Y	Z	DZ	TDZ	Y	Z	DZ	TDZ	Y
1056.40	0.00	0.00	260.4	1041.96	0.00	0.16	289.4	1041.57	0.04	-0.23	314.8
1041.62	-0.01	-0.18	340.0	1041.64	0.00	-2.36	344.0	1041.65	0.00	-0.35	359.0
1041.66	0.00	-0.24	380.0	1041.67	0.00	-0.33	405.0	1041.67	0.00	-0.13	406.0
1041.67	0.00	-0.13	437.3	1041.68	0.00	-0.12	468.7	1041.69	0.00	-0.11	500.0
1041.70	0.00	-0.10	535.0	1041.71	0.00	-0.09	570.0	1041.72	0.00	-0.08	605.0
1041.73	0.00	-0.07	640.0	1041.74	0.00	-0.06	680.0	1041.75	0.00	-0.05	705.0
1041.87	0.03	0.07	730.8	1056.40	0.00	0.00	744.6				

Y	V	Y	V	Y	V	Y	V	Y	V	Y	V
289.4	10.47	314.8	10.64	340.0	10.67	344.0	10.68	359.0	10.70	380.0	10.75
405.0	10.80	406.0	10.80	437.3	10.87	468.7	10.94	500.0	11.01	535.0	11.09
570.0	11.18	605.0	11.27	640.0	11.36	680.0	11.48	705.0	11.55	730.8	11.59

ID
15 SECTION 89.00 TIME = 6.32 HRS WS =1054.06 WIDTH = 480.5

Z	DZ	TDZ	Y	Z	DZ	TDZ	Y	Z	DZ	TDZ	Y
1055.40	0.00	0.00	260.0	1041.34	-0.02	0.94	290.7	1040.16	-0.02	-0.24	320.0
1040.16	-0.02	-0.24	323.2	1040.69	-0.02	-0.24	352.1	1041.23	-0.02	-0.23	381.1
1041.77	-0.02	-0.23	410.0	1040.08	-0.03	-0.32	413.2	1040.06	-0.03	-0.34	442.1
1040.03	-0.03	-0.37	471.1	1040.01	-0.03	-0.39	500.0	1040.04	-0.03	-0.36	530.0
1040.06	-0.03	-0.34	560.0	1040.09	-0.03	-0.31	590.0	1040.11	-0.03	-0.29	620.0
1040.14	-0.02	-0.26	655.0	1040.17	-0.02	-0.23	690.0	1040.19	-0.02	-0.21	710.0
1041.86	-0.02	1.46	729.0	1055.40	0.00	0.00	745.0				

ID
14 SECTION 87.00 TIME = 6.32 HRS WS =1053.71 WIDTH = 481.5

Z	DZ	TDZ	Y	Z	DZ	TDZ	Y	Z	DZ	TDZ	Y
1055.00	0.00	0.00	259.8	1039.78	-0.07	-0.02	290.2	1039.73	-0.08	-0.07	323.2
1039.71	-0.08	-0.09	356.1	1039.69	-0.09	-0.11	389.1	1039.67	-0.10	-0.13	422.0
1039.64	-0.11	-0.16	455.0	1039.63	-0.11	-0.17	470.0	1039.66	-0.10	-0.14	507.5
1039.68	-0.09	-0.12	545.0	1039.69	-0.09	-0.11	560.0	1039.71	-0.08	-0.09	585.0
1039.73	-0.08	-0.07	610.0	1039.74	-0.07	-0.06	630.0	1039.75	-0.07	-0.05	650.0

1039.77	-0.06	-0.03	680.0	1039.79	-0.06	-0.01	705.0	1039.82	-0.05	0.02	730.0
1055.00	0.00	0.00	745.2								

ID
13 SECTION 84.00 TIME = 6.32 HRS WS =1053.18 WIDTH = 482.0

Z	DZ	TDZ	Y	Z	DZ	TDZ	Y	Z	DZ	TDZ	Y
1054.50	0.00	0.00	259.5	1039.08	0.00	0.08	290.4	1039.04	0.00	0.04	320.0
1037.62	0.00	0.62	325.0	1037.62	0.00	0.62	355.0	1039.03	0.00	0.03	360.0
1039.03	0.00	0.03	375.0	1039.04	0.00	0.04	385.0	1039.04	0.00	0.04	395.0
1039.04	0.00	0.04	415.0	1039.04	0.00	0.04	450.0	1039.04	0.00	0.04	475.0
1039.05	0.00	0.05	500.0	1039.05	0.00	0.05	530.0	1039.05	0.00	0.05	561.7
1039.06	0.00	0.06	593.3	1039.06	0.00	0.06	625.0	1038.96	0.00	-0.54	626.0
1039.06	0.00	0.06	639.0	1039.06	0.00	0.06	651.0	1039.07	0.00	0.07	688.0
1039.07	0.00	0.07	690.0	1039.08	0.00	0.08	730.1	1054.50	0.00	0.00	745.4

ID
12 SECTION 81.00 TIME = 6.32 HRS WS =1052.70 WIDTH = 482.2

Z	DZ	TDZ	Y	Z	DZ	TDZ	Y	Z	DZ	TDZ	Y
1054.00	0.00	0.00	259.0	1038.17	-0.02	0.17	289.8	1038.12	-0.02	0.12	291.0
1038.11	-0.03	0.11	320.0	1038.10	-0.03	0.10	355.0	1038.09	-0.03	0.09	390.0
1038.08	-0.03	0.08	400.0	1038.07	-0.04	0.07	440.0	1038.06	-0.04	0.06	450.0
1038.06	-0.04	0.06	460.0	1038.07	-0.03	0.07	490.0	1038.08	-0.03	0.08	520.0
1038.09	-0.03	0.09	550.0	1038.10	-0.03	0.10	565.0	1038.11	-0.03	0.11	588.0
1038.32	-0.02	-1.68	626.0	1038.12	-0.02	-0.88	634.0	1038.13	-0.02	0.13	650.0
1038.14	-0.02	0.14	676.7	1038.15	-0.02	0.15	703.3	1038.18	-0.02	0.18	730.2
1054.00	0.00	0.00	745.0								

ID
11 SECTION 78.00 TIME = 6.32 HRS WS =1052.20 WIDTH = 483.3

Z	DZ	TDZ	Y	Z	DZ	TDZ	Y	Z	DZ	TDZ	Y
1053.50	0.00	0.00	258.9	1037.40	0.00	0.00	291.1	1037.39	0.00	-0.01	320.0
1037.38	0.00	-0.02	355.0	1037.37	0.00	-0.03	370.0	1037.36	0.00	-0.04	390.0
1037.35	0.00	-0.05	415.0	1037.35	0.00	-0.05	430.0	1037.33	0.00	-0.07	460.0
1037.33	0.00	-0.07	475.0	1037.32	0.00	-0.08	500.0	1037.33	0.00	-0.07	528.0
1037.34	0.00	-0.06	546.8	1038.95	0.00	-0.05	550.0	1037.95	0.00	-0.05	560.0
1037.36	0.00	-0.04	595.0	1037.36	0.00	-0.04	606.0	1037.37	0.00	-0.03	629.8
1038.47	0.00	-0.03	632.0	1037.98	0.00	-0.02	653.0	1037.79	0.00	-0.01	680.0
1037.39	0.00	-0.01	681.0	1037.40	0.00	0.00	705.5	1037.41	0.00	0.01	730.0
1053.50	0.00	0.00	746.1								

ID
10 SECTION 75.00 TIME = 6.32 HRS WS =1051.77 WIDTH = 484.2

Z	DZ	TDZ	Y	Z	DZ	TDZ	Y	Z	DZ	TDZ	Y
1053.10	0.00	0.00	258.4	1036.49	0.00	-0.01	291.6	1036.38	0.00	-0.12	326.1
1036.35	0.00	-0.15	360.5	1036.32	0.00	-0.18	395.0	1036.31	0.00	-0.19	405.0
1036.29	-0.01	-0.21	432.5	1036.27	-0.01	-0.23	460.0	1036.26	-0.01	-0.24	465.0
1036.26	-0.01	-0.24	470.0	1036.28	-0.01	-0.22	503.0	1036.31	0.00	-0.19	536.0
1036.34	0.00	-0.16	569.0	1036.37	0.00	-0.13	602.0	1036.39	0.00	-0.11	635.0
1039.93	0.00	-0.07	660.0	1039.95	0.00	-0.05	690.5	1036.45	0.00	-0.05	697.5
1036.49	0.00	-0.01	730.0	1053.10	0.00	0.00	746.6				

ID
9 SECTION 71.00 TIME = 6.32 HRS WS =1051.12 WIDTH = 486.5

Z	DZ	TDZ	Y	Z	DZ	TDZ	Y	Z	DZ	TDZ	Y
1051.50	0.00	0.00	258.5	1035.15	0.00	0.15	291.3	1035.15	-0.04	0.15	310.0
1035.59	-0.05	-0.41	342.0	1039.51	-0.03	-0.49	352.0	1039.52	-0.03	-0.48	372.0

1039.06	-0.03	-0.44	396.0	1038.60	-0.03	-0.40	420.0	1035.67	-0.04	-0.33	425.0
1035.69	-0.04	-0.31	445.0	1035.70	-0.03	-0.30	460.0	1035.35	-0.03	-0.05	470.0
1035.37	-0.03	-0.03	497.5	1035.39	-0.03	-0.01	525.0	1036.75	-0.02	-0.25	535.0
1035.41	-0.02	0.01	545.0	1035.44	-0.02	0.04	582.0	1035.47	-0.02	0.07	619.0
1035.50	-0.01	0.10	656.0	1035.54	-0.01	0.14	693.0	1035.57	-0.01	0.17	730.2
1051.50	0.00	0.00	746.1								

ID
8 SECTION 66.00 TIME = 6.32 HRS WS =1050.41 WIDTH = 486.4

Z	DZ	TDZ	Y	Z	DZ	TDZ	Y	Z	DZ	TDZ	Y
1051.80	0.00	0.00	257.2	1035.26	0.00	1.26	291.3	1034.99	-0.07	0.99	327.5
1035.02	-0.06	1.01	362.3	1034.97	-0.06	0.97	397.0	1034.98	-0.06	-1.02	399.0
1034.90	-0.05	-0.70	430.0	1034.92	-0.04	-1.08	470.0	1034.87	-0.04	-3.13	510.0
1034.83	-0.04	-3.17	527.0	1034.94	-0.04	-0.06	531.0	1034.94	-0.03	-0.06	565.7
1034.96	-0.03	-0.04	600.5	1034.98	-0.02	-0.02	635.2	1035.00	-0.01	0.00	670.0
1034.97	-0.01	-3.03	676.0	1035.22	-0.01	1.22	692.0	1035.26	0.00	1.26	731.5
1051.80	0.00	0.00	747.8								

ID
7 SECTION 62.00 TIME = 6.32 HRS WS =1048.98 WIDTH = 442.4

Z	DZ	TDZ	Y	Z	DZ	TDZ	Y	Z	DZ	TDZ	Y
1050.40	0.00	0.00	256.6	1032.75	-0.08	-0.15	292.2	1031.99	-0.06	-0.91	321.7
1031.94	-0.06	-0.96	351.8	1031.89	-0.06	-1.01	381.9	1031.84	-0.06	-1.06	412.0
1037.12	-0.08	-0.88	422.0	1036.89	-0.07	-0.86	445.0	1036.66	-0.07	-0.84	468.0
1035.96	-0.07	-0.84	500.0	1035.15	-0.07	-0.85	531.0	1034.44	-0.07	-0.86	550.0
1035.29	-0.06	-0.71	580.0	1037.50	-0.04	-0.50	600.0	1038.62	-0.04	-0.38	627.0
1032.29	-0.04	-0.61	639.0	1032.35	-0.04	-0.55	662.5	1034.55	-0.04	1.65	684.7
1050.40	0.00	0.00	703.5								

ID
6 SECTION 58.12 TIME = 6.32 HRS WS =1047.62 WIDTH = 402.1

Z	DZ	TDZ	Y	Z	DZ	TDZ	Y	Z	DZ	TDZ	Y
1049.10	0.00	0.00	758.0	1032.11	0.00	0.01	775.0	1031.25	-0.09	-0.85	812.5
1031.31	-0.08	-0.79	850.0	1031.38	-0.07	-0.72	887.5	1031.44	-0.07	-0.66	925.0
1031.52	-0.06	-0.58	962.5	1031.59	-0.06	-0.51	1000.0	1031.61	-0.05	-0.49	1009.0
1036.04	-0.06	-0.56	1018.0	1035.92	-0.05	-0.48	1048.7	1035.80	-0.04	-0.40	1079.3
1035.68	-0.03	-0.32	1110.0	1035.73	-0.03	-0.27	1126.0	1037.55	-0.02	-0.45	1148.2
1040.00	0.00	0.00	1154.0	1049.00	0.00	0.00	1163.0				

ID
5 SECTION 55.00 TIME = 6.32 HRS WS =1045.68 WIDTH = 476.7

Z	DZ	TDZ	Y	Z	DZ	TDZ	Y	Z	DZ	TDZ	Y
1047.00	0.00	0.00	260.0	1031.90	0.00	0.00	290.0	1030.91	-0.07	-0.99	322.0
1030.90	-0.08	-1.00	354.0	1030.94	-0.07	-0.97	386.0	1031.34	-0.05	-0.56	418.0
1033.19	-0.08	1.29	450.0	1034.15	-0.08	-2.45	472.0	1034.73	-0.06	-1.47	500.0
1034.94	-0.06	-1.06	525.0	1034.99	-0.05	-0.67	559.5	1034.83	-0.04	-0.47	594.0
1034.59	-0.03	-0.36	628.5	1034.33	-0.03	-0.27	663.0	1034.20	-0.02	-0.25	689.5
1034.56	0.38	0.26	716.0	1038.24	-0.15	2.54	728.1	1047.00	0.00	0.00	741.3

Y	V	Y	V	Y	V	Y	V	Y	V	Y	V
290.0	12.91	322.0	13.23	354.0	13.21	386.0	13.17	418.0	13.00	450.0	12.29
472.0	11.90	500.0	11.64	525.0	11.53	559.5	11.49	594.0	11.53	628.5	11.60
663.0	11.68	689.5	11.71	716.0	11.55	728.1	9.87				

ID
4 SECTION 51.50 TIME = 6.32 HRS WS =1044.63 WIDTH = 545.3

Z	DZ	TDZ	Y	Z	DZ	TDZ	Y	Z	DZ	TDZ	Y
1045.70	0.00	0.00	760.8	1031.40	0.00	0.00	789.4	1030.74	-0.03	-0.66	818.9
1030.76	-0.03	-0.64	848.3	1030.79	-0.02	-0.61	877.8	1033.39	-0.03	-0.61	883.0
1033.42	-0.03	-0.58	907.0	1033.44	-0.03	-0.56	934.5	1033.47	-0.02	-0.53	962.0
1033.49	-0.02	-0.51	985.0	1033.40	-0.02	-0.50	1000.0	1033.48	-0.02	-0.47	1021.0
1033.55	-0.02	-0.45	1042.0	1033.86	-0.02	-0.40	1074.6	1034.17	-0.02	-0.35	1107.2
1034.48	-0.01	-0.30	1139.8	1034.78	-0.01	-0.26	1172.4	1035.08	-0.01	-0.22	1205.0
1035.36	-0.01	-0.17	1236.7	1035.63	-0.01	-0.13	1268.3	1038.41	0.16	2.41	1299.4
1039.83	-0.05	-0.17	1301.3	1045.70	0.00	0.00	1309.7				

ID
3 SECTION 47.00 TIME = 6.32 HRS WS =1044.10 WIDTH = 758.2

Z	DZ	TDZ	Y	Z	DZ	TDZ	Y	Z	DZ	TDZ	Y
1045.00	0.00	0.00	596.0	1031.49	0.03	0.49	624.0	1031.30	0.03	0.30	653.0
1031.31	0.03	0.31	682.0	1034.29	0.03	0.29	690.0	1034.30	0.03	0.30	726.2
1034.30	0.03	0.30	762.5	1034.31	0.03	0.31	798.7	1034.32	0.03	0.32	835.0
1034.10	0.03	0.32	868.0	1033.89	0.03	0.33	901.0	1033.67	0.03	0.33	934.0
1033.46	0.03	0.34	967.0	1033.25	0.03	0.35	1000.0	1033.48	0.03	0.36	1036.8
1033.71	0.03	0.37	1073.6	1033.93	0.03	0.37	1110.4	1034.16	0.03	0.38	1147.2
1034.38	0.03	0.38	1184.0	1034.39	0.03	0.39	1194.0	1034.79	0.03	0.39	1229.5
1035.19	0.02	0.39	1265.0	1035.58	0.02	0.38	1300.5	1037.44	0.02	1.84	1335.1
1044.01	0.00	0.01	1356.0	1045.00	0.00	0.00	1357.0				

ID
2 SECTION 44.00 TIME = 6.32 HRS WS =1043.90 WIDTH = 894.8

Z	DZ	TDZ	Y	Z	DZ	TDZ	Y	Z	DZ	TDZ	Y
1044.90	0.00	0.00	9485.8	1031.68	0.05	0.93	9514.1	1032.08	0.05	0.91	9551.1
1032.48	0.05	0.89	9588.0	1032.88	0.05	0.88	9625.0	1032.88	0.05	0.88	9657.0
1032.88	0.05	0.88	9689.0	1032.88	0.05	0.88	9721.0	1032.88	0.05	0.88	9753.0
1033.51	0.05	0.85	9789.7	1034.15	0.05	0.82	9826.3	1034.78	0.04	0.78	9863.0
1034.31	0.05	0.81	9894.2	1033.83	0.05	0.83	9925.5	1033.35	0.05	0.85	9956.7
1032.88	0.05	0.88	9988.0	1032.88	0.05	0.88	10010.5	1032.88	0.05	0.88	10033.0
1033.20	0.05	0.86	10066.3	1033.51	0.05	0.85	10099.7	1033.83	0.05	0.83	10133.0
1034.15	0.05	0.82	10166.3	1034.47	0.05	0.80	10199.7	1034.78	0.04	0.78	10233.0
1035.03	0.04	0.77	10265.2	1035.28	0.04	0.75	10297.5	1035.53	0.04	0.74	10329.7
1035.78	0.04	0.72	10362.0	1044.00	0.00	0.00	10383.0	1045.10	0.00	0.00	10384.1

ID
1 SECTION 39.00 TIME = 6.32 HRS WS =1043.28 WIDTH = 895.0

Z	DZ	TDZ	Y	Z	DZ	TDZ	Y	Z	DZ	TDZ	Y
1038.00	0.00	0.00	9531.0	1042.05	0.01	0.05	9546.0	1042.53	0.01	0.03	9586.0
1036.25	0.03	0.25	9593.0	1032.47	0.04	0.47	9606.0	1028.60	0.05	0.60	9646.0
1029.08	0.05	0.58	9676.0	1029.57	0.05	0.57	9706.0	1030.05	0.04	0.55	9736.0
1030.54	0.04	0.54	9766.0	1030.54	0.04	0.54	9792.7	1030.54	0.04	0.54	9819.3
1030.54	0.04	0.54	9846.0	1032.47	0.04	0.47	9868.5	1034.38	0.04	0.38	9891.0
1033.59	0.04	0.42	9918.3	1032.79	0.04	0.45	9945.7	1031.99	0.04	0.49	9973.0
1032.11	0.04	0.48	10012.3	1032.23	0.04	0.48	10051.6	1032.35	0.04	0.47	10090.9
1032.48	0.04	0.47	10130.2	1032.60	0.04	0.46	10169.5	1032.72	0.04	0.46	10208.9
1032.84	0.04	0.45	10248.2	1032.97	0.04	0.45	10287.5	1033.09	0.04	0.44	10326.8
1033.21	0.04	0.44	10366.1	1033.33	0.04	0.43	10405.4	1043.20	0.00	0.00	10426.0

TIME = 6.62 HRS DT = 198 SECS TIME STEP = 50

SECTION	W.S.ELEV. FT	WIDTH FT	DEPTH FT	Q CFS	V FPS	SLOPE	D50 MM	QS/Q 1000 PPM	FR	SED. YIELD C. Y.
39.00	1042.98	894.5	14.33	66194	7.27	0.00134	1.07	4.09	0.40	0.306E+05
44.00	1043.63	893.5	11.91	66194	7.65	0.00158	1.42	4.75	0.43	0.389E+05
47.00	1043.87	757.2	12.55	66194	9.17	0.00232	6.81	5.14	0.52	0.504E+05
51.50	1044.45	544.6	13.76	66194	11.65	0.00335	19.94	5.32	0.64	0.549E+05
55.00	1045.47	475.9	14.68	66194	11.99	0.00309	22.20	5.14	0.62	0.525E+05
58.12	1047.33	401.6	16.18	66194	11.97	0.00249	18.73	4.77	0.57	0.477E+05
62.00	1048.62	441.2	16.86	66194	11.12	0.00221	21.88	4.29	0.53	0.431E+05
66.00	1049.98	485.1	15.20	66194	9.53	0.00149	6.19	3.85	0.44	0.389E+05
71.00	1050.69	485.2	15.59	66194	9.79	0.00164	6.53	3.52	0.46	0.373E+05
75.00	1051.34	482.9	15.13	66194	9.80	0.00163	9.96	3.29	0.46	0.364E+05
78.00	1051.78	482.0	14.47	66194	10.05	0.00176	8.93	3.27	0.48	0.353E+05
81.00	1052.29	481.1	14.23	66194	10.14	0.00181	10.34	3.24	0.49	0.351E+05
84.00	1052.78	480.7	15.17	66194	10.38	0.00195	10.47	3.36	0.50	0.351E+05
87.00	1053.33	480.4	13.71	66194	10.56	0.00206	16.06	3.28	0.52	0.354E+05
89.00	1053.67	479.2	13.69	66194	10.86	0.00225	16.65	2.99	0.54	0.349E+05
94.00	1054.79	479.4	13.28	66194	11.00	0.00235	21.43	2.84	0.55	0.340E+05
97.00	1055.41	479.0	13.03	66194	11.48	0.00271	34.92	2.90	0.58	0.330E+05
99.54	1055.66	349.5	15.46	66194	12.86	0.00279	50.96	2.90	0.59	0.330E+05
99.60	1057.46	349.8	10.55	66194	18.13	0.00228	51.86	2.81	0.99	0.296E+05
100.90	1060.82	375.9	14.32	66194	13.26	0.00318	66.11	3.05	0.64	0.304E+05
103.00	1062.50	407.0	15.61	66194	11.10	0.00197	38.39	2.78	0.51	0.263E+05
106.00	1063.92	499.8	16.28	66194	8.55	0.00108	4.76	2.55	0.38	0.221E+05
109.00	1064.54	590.3	15.59	66194	7.49	0.00086	1.28	2.76	0.34	0.224E+05
110.00	1064.58	589.8	15.33	66194	7.74	0.00096	1.13	3.13	0.36	0.249E+05
113.00	1064.83	589.2	14.70	66194	7.95	0.00105	1.15	3.57	0.37	0.285E+05
116.00	1065.06	588.4	15.99	66194	8.54	0.00133	2.18	4.13	0.41	0.352E+05
120.00	1065.13	464.4	17.47	66194	11.08	0.00234	37.21	4.59	0.54	0.451E+05
123.00	1066.29	468.3	15.11	66194	9.82	0.00157	4.90	4.52	0.46	0.401E+05
127.00	1066.90	468.3	14.93	66194	9.94	0.00164	5.93	4.55	0.46	0.411E+05
131.00	1067.51	467.9	15.15	66194	10.18	0.00177	9.02	4.56	0.48	0.421E+05
135.00	1068.15	465.2	16.00	66194	10.60	0.00200	17.41	4.63	0.51	0.430E+05
138.00	1068.81	468.8	14.33	66194	10.39	0.00190	12.72	4.68	0.50	0.419E+05
141.00	1069.32	465.2	15.44	66194	10.68	0.00205	18.39	4.73	0.52	0.420E+05
145.00	1070.31	464.8	14.88	66194	10.04	0.00168	6.04	4.83	0.47	0.405E+05
147.00	1070.65	468.1	14.94	66194	10.10	0.00172	5.25	5.03	0.48	0.409E+05
150.00	1071.22	497.9	14.95	66194	9.99	0.00180	4.78	5.21	0.48	0.415E+05
155.00	1071.84	455.9	16.78	66194	11.71	0.00271	26.89	5.62	0.59	0.480E+05
158.00	1072.15	342.9	17.46	66194	13.26	0.00281	36.82	5.64	0.61	0.474E+05
159.45	1073.18	354.8	15.93	66194	12.49	0.00246	32.94	5.52	0.57	0.439E+05
160.25	1073.40	354.8	15.84	66194	12.44	0.00243	31.46	5.32	0.57	0.424E+05
162.00	1073.96	355.3	16.26	66194	12.11	0.00223	28.18	5.30	0.54	0.412E+05
165.00	1075.78	571.2	15.46	66194	9.10	0.00158	2.56	5.12	0.45	0.385E+05
168.00	1076.21	570.7	15.17	66194	9.34	0.00172	3.76	5.18	0.47	0.419E+05
170.00	1076.45	569.7	14.68	66194	9.86	0.00206	7.98	5.30	0.51	0.444E+05
173.00	1076.49	424.9	16.94	66194	12.24	0.00285	35.90	5.55	0.60	0.495E+05
176.00	1077.29	373.4	18.24	66194	12.21	0.00240	32.87	5.47	0.57	0.472E+05
177.00	1077.97	391.0	15.90	66194	11.19	0.00194	10.17	5.43	0.51	0.447E+05
179.00	1078.48	412.4	15.71	66194	10.90	0.00188	8.46	5.41	0.50	0.443E+05
181.00	1078.93	463.4	13.88	66194	10.79	0.00212	11.38	5.43	0.52	0.445E+05
183.00	1079.08	460.3	16.31	66194	11.92	0.00294	36.36	5.55	0.61	0.500E+05
188.00	1080.74	464.1	14.82	66194	11.16	0.00238	15.70	5.52	0.55	0.460E+05
193.00	1081.95	464.3	14.06	66194	11.09	0.00232	12.29	5.57	0.54	0.456E+05
197.00	1082.78	457.7	17.57	66194	11.64	0.00269	20.34	5.79	0.58	0.478E+05
199.00	1082.97	404.6	14.65	66194	11.84	0.00243	11.26	5.68	0.56	0.463E+05
201.10	1083.14	343.9	15.78	66194	12.92	0.00265	31.94	5.77	0.59	0.484E+05
201.90	1083.32	343.4	16.10	66194	13.02	0.00270	29.40	5.68	0.60	0.472E+05
204.00	1083.93	344.1	15.86	66194	12.92	0.00265	30.45	5.61	0.59	0.463E+05
209.30	1085.38	340.1	17.66	66194	12.70	0.00241	30.12	5.48	0.57	0.438E+05
212.60	1085.40	276.8	14.36	66194	17.56	0.00147	12.94	5.49	0.84	0.406E+05
213.50	1084.84	274.7	13.34	66194	18.99	0.00188	14.91	5.52	0.94	0.407E+05

213.70	1085.44	286.0	12.44	66194	19.43	0.00214	14.92	5.52	0.99	0.407E+05
217.50	1091.41	373.0	17.17	66194	11.01	0.00172	10.64	5.52	0.48	0.407E+05
221.10	1092.20	389.6	17.93	66194	10.59	0.00161	6.05	5.67	0.47	0.412E+05
227.50	1093.72	499.3	16.39	66194	9.14	0.00135	1.22	5.88	0.42	0.424E+05
233.55	1094.24	445.2	14.28	66194	10.77	0.00201	6.94	6.71	0.51	0.600E+05
238.66	1094.50	298.6	18.00	66194	13.87	0.00278	39.77	6.98	0.61	0.684E+05
238.69	1095.40	323.0	11.77	66194	18.66	0.00217	24.88	6.92	0.99	0.647E+05
242.00	1099.52	340.3	15.75	66194	13.55	0.00305	35.98	7.06	0.63	0.656E+05
247.00	1101.39	339.6	17.77	66194	12.55	0.00234	20.95	6.80	0.56	0.624E+05
270.50	1103.34	398.7	16.19	66194	10.68	0.00170	2.95	6.84	0.48	0.602E+05
273.50	1103.79	408.0	15.21	66194	11.06	0.00197	3.08	7.50	0.51	0.641E+05
277.90	1104.41	392.2	14.62	66194	12.01	0.00246	5.20	8.18	0.56	0.713E+05
281.80	1105.10	361.3	14.68	66194	13.29	0.00309	12.95	8.37	0.63	0.798E+05
288.00	1106.37	301.0	15.36	66194	15.55	0.00409	27.18	9.53	0.73	0.899E+05
290.00	1107.11	264.6	17.26	66194	15.64	0.00368	34.14	8.87	0.69	0.871E+05
291.00	1107.72	271.2	16.57	66194	15.08	0.00353	30.78	9.05	0.66	0.846E+05
293.00	1107.27	251.8	17.40	66194	18.07	0.00534	42.36	9.53	0.84	0.828E+05
297.00	1109.90	272.7	16.40	66194	17.31	0.00516	45.23	8.98	0.81	0.783E+05
302.00	1111.98	214.3	20.99	66194	18.37	0.00467	55.66	7.99	0.79	0.739E+05
305.00	1114.24	215.2	22.02	66194	16.70	0.00343	49.68	7.28	0.69	0.635E+05
306.75	1117.15	323.0	17.56	66194	12.72	0.00233	11.98	6.94	0.56	0.558E+05
310.00	1118.27	363.4	16.03	66194	11.87	0.00216	7.66	6.79	0.53	0.553E+05
313.20	1118.81	361.4	15.42	66194	12.41	0.00247	12.89	6.79	0.57	0.577E+05
318.00	1119.95	359.7	14.85	66194	12.92	0.00281	22.56	6.82	0.60	0.598E+05

ID
54 SECTION 199.00 TIME = 6.62 HRS WS =1082.97 WIDTH = 404.6

Z	DZ	TDZ	Y	Z	DZ	TDZ	Y	Z	DZ	TDZ	Y
1086.20	0.00	0.00	317.5	1069.00	0.01	1.30	334.6	1068.81	0.01	1.11	368.8
1068.76	0.01	1.06	401.6	1068.73	0.01	1.03	434.4	1068.71	0.01	1.01	467.2
1068.71	0.01	1.01	500.0	1068.71	0.02	1.01	535.0	1068.68	0.01	0.98	570.0
1068.57	0.00	0.87	605.0	1068.41	0.01	0.71	640.0	1068.33	0.01	0.63	675.0
1068.74	0.01	1.04	711.3	1086.20	0.00	0.00	728.5				

Y	V	Y	V	Y	V	Y	V	Y	V	Y	V
334.6	11.77	368.8	11.81	401.6	11.80	434.4	11.79	467.2	11.77	500.0	11.75
535.0	11.73	570.0	11.72	605.0	11.73	640.0	11.76	675.0	11.76	711.3	11.61

ID
47 SECTION 177.00 TIME = 6.62 HRS WS =1077.97 WIDTH = 391.0

Z	DZ	TDZ	Y	Z	DZ	TDZ	Y	Z	DZ	TDZ	Y
1080.50	0.00	0.00	279.1	1062.57	0.00	0.17	296.8	1062.28	0.00	-0.12	330.8
1062.24	0.00	-0.16	364.7	1062.19	0.00	-0.21	398.5	1062.15	0.00	-0.25	432.3
1062.11	0.00	-0.29	466.2	1062.06	-0.01	-0.34	500.0	1062.11	0.00	-0.29	539.2
1062.16	0.00	-0.24	578.5	1062.21	0.00	-0.19	617.7	1062.57	0.00	0.17	657.2
1080.50	0.00	0.00	675.1								

ID
27 SECTION 120.00 TIME = 6.62 HRS WS =1065.13 WIDTH = 464.4

Z	DZ	TDZ	Y	Z	DZ	TDZ	Y	Z	DZ	TDZ	Y
1067.10	0.00	0.00	273.3	1056.78	0.20	6.38	310.7	1049.39	-0.02	-1.01	345.4
1048.91	-0.03	-1.49	384.0	1048.56	-0.03	-1.84	422.7	1048.29	-0.03	-2.11	461.3
1048.19	-0.03	-2.21	500.0	1048.15	-0.03	-2.25	506.6	1055.75	-0.03	-0.94	520.0
1056.12	-0.03	-0.94	546.7	1056.50	-0.03	-0.94	573.3	1056.88	-0.03	-0.92	600.0
1056.22	-0.04	-1.08	622.5	1055.54	-0.04	-1.26	645.0	1047.77	0.00	-2.63	658.6
1047.66	0.00	-2.74	694.3	1050.40	0.00	0.00	730.0	1067.10	0.00	0.00	746.7

ID
5 SECTION 55.00 TIME = 6.62 HRS WS =1045.47 WIDTH = 475.9

Z	DZ	TDZ	Y	Z	DZ	TDZ	Y	Z	DZ	TDZ	Y
1047.00	0.00	0.00	260.0	1031.90	0.00	0.00	290.0	1030.79	-0.03	-1.11	322.0
1030.77	-0.03	-1.13	354.0	1030.81	-0.03	-1.09	386.0	1031.25	-0.02	-0.65	418.0
1033.05	-0.03	1.15	450.0	1034.01	-0.03	-2.59	472.0	1034.62	-0.03	-1.58	500.0
1034.84	-0.02	-1.16	525.0	1034.90	-0.02	-0.75	559.5	1034.76	-0.02	-0.54	594.0
1034.53	-0.01	-0.42	628.5	1034.28	-0.01	-0.32	663.0	1034.17	-0.01	-0.28	689.5
1034.77	0.00	0.47	716.0	1038.61	0.15	2.91	727.7	1047.00	0.00	0.00	741.3

Y	V	Y	V	Y	V	Y	V	Y	V	Y	V
290.0	12.54	322.0	12.90	354.0	12.88	386.0	12.84	418.0	12.66	450.0	11.99
472.0	11.60	500.0	11.34	525.0	11.23	559.5	11.18	594.0	11.21	628.5	11.28
663.0	11.36	689.5	11.38	716.0	11.12	727.7	9.35				

TIME = 9.66 HRS DT = 600 SECS TIME STEP = 75

SECTION	W.S.ELEV. FT	WIDTH FT	DEPTH FT	Q CFS	V FPS	SLOPE	D50 MM	QS/Q 1000 PPM	FR	SED. YIELD C. Y.
39.00	1036.98	820.6	8.31	21678	5.41	0.00196	2.19	2.71	0.43	0.665E+05
44.00	1038.07	867.1	6.32	21678	5.84	0.00273	4.05	1.95	0.50	0.753E+05
47.00	1038.81	716.7	7.61	21678	6.17	0.00255	15.31	1.43	0.49	0.873E+05
51.50	1039.78	525.9	9.35	21678	6.58	0.00209	30.32	1.36	0.46	0.913E+05
55.00	1040.45	458.3	10.05	21678	6.58	0.00175	29.81	1.29	0.43	0.873E+05
58.12	1041.50	389.9	10.52	21678	6.56	0.00141	17.15	1.33	0.40	0.804E+05
62.00	1042.07	418.7	10.84	21678	6.68	0.00165	17.68	1.66	0.42	0.747E+05
66.00	1042.81	462.9	7.92	21678	6.20	0.00146	4.74	1.85	0.40	0.690E+05
71.00	1043.55	463.4	8.12	21678	6.45	0.00168	5.81	2.13	0.42	0.685E+05
75.00	1044.22	461.4	7.68	21678	6.59	0.00178	5.79	2.30	0.43	0.680E+05
78.00	1044.74	460.8	7.34	21678	6.73	0.00191	6.96	2.39	0.45	0.685E+05
81.00	1045.31	460.8	7.19	21678	6.76	0.00194	8.14	2.41	0.45	0.688E+05
84.00	1045.88	460.1	7.34	21678	6.93	0.00210	10.38	2.36	0.47	0.691E+05
87.00	1046.51	460.3	7.01	21678	6.96	0.00212	17.53	2.32	0.47	0.695E+05
89.00	1046.89	454.4	7.05	21678	7.39	0.00254	17.93	2.29	0.51	0.686E+05
94.00	1048.19	459.2	7.16	21678	7.47	0.00268	26.46	2.28	0.52	0.677E+05
97.00	1048.98	448.4	7.89	21678	7.54	0.00267	39.28	2.19	0.53	0.669E+05
99.54	1049.63	349.1	8.77	21678	7.17	0.00170	40.91	2.07	0.43	0.661E+05
99.60	1052.53	349.7	5.31	21678	12.42	0.00275	75.05	2.20	0.98	0.630E+05
100.90	1054.73	359.6	8.22	21678	7.82	0.00225	59.24	2.13	0.50	0.635E+05
103.00	1055.51	384.1	8.71	21678	6.79	0.00155	12.45	2.15	0.42	0.586E+05
106.00	1056.15	476.2	7.98	21678	5.85	0.00125	1.29	2.42	0.37	0.545E+05
109.00	1056.60	565.8	6.92	21678	5.64	0.00139	0.93	2.91	0.38	0.576E+05
110.00	1056.72	564.1	7.01	21678	5.77	0.00149	1.13	2.94	0.39	0.631E+05
113.00	1057.16	565.5	6.64	21678	5.88	0.00159	1.52	2.96	0.41	0.684E+05
116.00	1057.63	563.3	10.75	21678	6.39	0.00208	4.13	2.77	0.46	0.772E+05
120.00	1058.32	414.7	11.44	21678	7.14	0.00204	24.30	2.49	0.46	0.879E+05
123.00	1059.12	446.9	7.74	21678	6.43	0.00158	3.15	2.57	0.41	0.830E+05
127.00	1059.75	446.9	7.57	21678	6.57	0.00169	3.73	2.75	0.43	0.851E+05
131.00	1060.42	446.3	7.89	21678	6.80	0.00189	6.10	2.92	0.45	0.875E+05
135.00	1061.16	431.1	8.77	21678	7.02	0.00202	9.33	2.99	0.46	0.894E+05
138.00	1061.79	447.4	7.19	21678	6.98	0.00207	8.56	3.06	0.47	0.891E+05
141.00	1062.38	417.5	8.33	21678	7.03	0.00193	7.12	3.02	0.46	0.896E+05
145.00	1063.20	444.8	7.48	21678	6.72	0.00181	3.38	3.15	0.44	0.891E+05
147.00	1063.57	447.4	8.25	21678	6.77	0.00187	4.03	3.16	0.45	0.909E+05
150.00	1064.14	476.0	8.94	21678	7.01	0.00227	6.97	3.06	0.48	0.926E+05
155.00	1065.22	412.0	11.44	21678	7.71	0.00258	25.36	2.93	0.52	0.100E+06
158.00	1065.88	310.8	9.98	21678	7.57	0.00168	9.63	2.77	0.44	0.994E+05
159.45	1066.33	340.7	9.00	21678	7.57	0.00191	9.23	3.20	0.46	0.970E+05
160.25	1066.47	340.7	8.73	21678	7.63	0.00196	7.45	3.41	0.47	0.959E+05
162.00	1066.82	341.0	8.57	21678	7.64	0.00197	5.25	3.55	0.47	0.952E+05
165.00	1067.45	386.7	7.59	21678	7.76	0.00243	6.80	4.10	0.51	0.939E+05
168.00	1068.26	453.2	7.48	21678	7.92	0.00320	11.66	4.40	0.57	0.964E+05
170.00	1068.87	407.0	8.21	21678	7.85	0.00269	15.14	3.93	0.53	0.984E+05
173.00	1069.62	355.7	8.92	21678	7.80	0.00221	10.90	3.86	0.49	0.103E+06
176.00	1070.27	335.8	8.73	21678	7.70	0.00197	5.41	3.86	0.47	0.102E+06
177.00	1070.53	377.7	7.90	21678	7.53	0.00215	4.39	4.20	0.48	0.100E+06
179.00	1070.96	390.0	7.50	21678	7.63	0.00232	6.66	4.22	0.50	0.101E+06
181.00	1071.40	427.1	7.13	21678	7.99	0.00303	16.61	4.21	0.56	0.103E+06
183.00	1071.95	397.3	9.18	21678	8.26	0.00310	32.44	4.09	0.57	0.109E+06
188.00	1073.61	441.7	7.81	21678	7.99	0.00320	15.76	3.78	0.57	0.104E+06
193.00	1075.20	443.2	7.13	21678	7.52	0.00262	12.18	3.50	0.52	0.104E+06
197.00	1076.21	411.7	10.14	21678	7.51	0.00237	16.88	3.34	0.50	0.106E+06
199.00	1076.47	391.5	8.09	21678	7.36	0.00208	10.99	3.27	0.47	0.105E+06
201.10	1076.85	331.3	9.00	21678	7.52	0.00180	9.22	3.20	0.45	0.107E+06
201.90	1076.99	329.9	9.13	21678	7.54	0.00181	7.72	3.32	0.45	0.106E+06
204.00	1077.36	329.3	9.29	21678	7.64	0.00187	8.43	3.48	0.46	0.106E+06
209.30	1078.29	297.9	10.58	21678	7.68	0.00166	3.40	3.83	0.44	0.105E+06
212.60	1077.60	260.7	6.24	21678	13.66	0.00253	8.60	6.55	0.98	0.105E+06
213.50	1078.25	261.4	6.70	21678	12.71	0.00200	5.75	5.30	0.88	0.106E+06

213.70	1078.95	273.4	5.95	21678	13.63	0.00267	14.92	5.24	1.00	0.106E+06
217.50	1082.38	351.9	8.08	21678	7.97	0.00235	5.91	5.24	0.51	0.106E+06
221.10	1083.29	372.6	9.34	21678	7.75	0.00231	4.11	5.26	0.50	0.107E+06
227.50	1085.02	481.3	10.30	21678	7.40	0.00276	2.67	5.32	0.53	0.109E+06
233.55	1086.53	422.6	7.30	21678	7.75	0.00271	11.06	4.49	0.53	0.127E+06
238.66	1087.64	288.0	9.98	21678	8.03	0.00186	29.24	4.35	0.46	0.136E+06
238.69	1089.64	310.5	6.04	21678	13.07	0.00273	29.61	4.56	1.00	0.133E+06
242.00	1092.52	325.4	9.11	21678	8.44	0.00257	18.03	4.30	0.53	0.134E+06
247.00	1093.78	304.3	9.22	21678	8.18	0.00212	4.88	4.46	0.49	0.131E+06
270.50	1095.15	382.7	7.38	21678	7.97	0.00263	3.51	5.65	0.53	0.133E+06
273.50	1095.98	392.3	7.11	21678	8.13	0.00290	4.20	4.95	0.55	0.142E+06
277.90	1097.17	377.9	7.06	21678	8.28	0.00294	7.32	4.73	0.55	0.151E+06
281.80	1098.28	338.1	8.03	21678	8.73	0.00299	13.67	4.47	0.57	0.161E+06
288.00	1099.95	289.7	8.75	21678	9.18	0.00293	23.09	4.62	0.57	0.173E+06
290.00	1100.39	255.9	9.14	21678	9.81	0.00316	19.79	3.10	0.59	0.170E+06
291.00	1100.72	271.2	8.73	21678	9.59	0.00325	27.91	2.86	0.59	0.169E+06
293.00	1101.20	223.0	10.53	21678	10.04	0.00282	17.37	2.60	0.57	0.168E+06
297.00	1102.26	227.6	10.98	21678	10.90	0.00374	28.65	6.13	0.65	0.166E+06
302.00	1104.09	199.5	11.95	21678	11.02	0.00329	25.50	5.74	0.62	0.161E+06
305.00	1104.94	200.1	10.28	21678	11.48	0.00384	17.99	6.74	0.66	0.151E+06
306.75	1106.20	289.9	8.60	21678	10.69	0.00481	24.27	6.50	0.71	0.145E+06
310.00	1107.97	340.4	7.16	21678	10.28	0.00522	24.62	6.54	0.73	0.143E+06
313.20	1109.68	343.1	6.67	21678	9.80	0.00453	25.08	6.06	0.68	0.143E+06
318.00	1111.94	343.7	6.84	21678	9.40	0.00396	22.56	5.77	0.64	0.144E+06

ID
54 SECTION 199.00 TIME = 9.66 HRS WS =1076.47 WIDTH = 391.5

Z	DZ	TDZ	Y	Z	DZ	TDZ	Y	Z	DZ	TDZ	Y
1086.20	0.00	0.00	317.5	1069.26	0.00	1.56	334.6	1069.06	0.00	1.36	368.8
1068.96	0.00	1.26	401.6	1068.91	-0.01	1.21	434.4	1068.88	-0.01	1.18	467.2
1068.86	-0.01	1.16	500.0	1068.83	-0.01	1.13	535.0	1068.75	-0.01	1.05	570.0
1068.60	-0.02	0.90	605.0	1068.41	-0.02	0.71	640.0	1068.36	-0.02	0.66	675.0
1068.98	0.00	1.28	711.3	1086.20	0.00	0.00	728.5				

Y	V	Y	V	Y	V	Y	V	Y	V	Y	V
334.6	7.10	368.8	7.16	401.6	7.18	434.4	7.18	467.2	7.18	500.0	7.17
535.0	7.16	570.0	7.17	605.0	7.21	640.0	7.26	675.0	7.26	711.3	7.02

ID
47 SECTION 177.00 TIME = 9.66 HRS WS =1070.53 WIDTH = 377.7

Z	DZ	TDZ	Y	Z	DZ	TDZ	Y	Z	DZ	TDZ	Y
1080.50	0.00	0.00	279.1	1063.09	0.00	0.69	295.0	1062.83	0.00	0.43	330.8
1062.79	0.00	0.39	364.7	1062.75	0.00	0.35	398.5	1062.71	0.00	0.31	432.3
1062.67	0.00	0.27	466.2	1062.63	0.00	0.23	500.0	1062.67	0.00	0.27	539.2
1062.72	0.00	0.32	578.5	1062.77	0.00	0.37	617.7	1063.09	0.00	0.69	659.0
1080.50	0.00	0.00	675.1								

ID
27 SECTION 120.00 TIME = 9.66 HRS WS =1058.32 WIDTH = 414.7

Z	DZ	TDZ	Y	Z	DZ	TDZ	Y	Z	DZ	TDZ	Y
1067.10	0.00	0.00	273.3	1061.33	0.00	10.93	313.5	1051.24	0.13	0.84	346.7
1048.36	-0.01	-2.04	384.0	1047.97	-0.01	-2.43	422.7	1047.63	-0.01	-2.77	461.3
1047.46	-0.01	-2.94	500.0	1047.42	-0.01	-2.98	506.6	1054.97	-0.01	-1.73	520.0
1055.31	-0.01	-1.75	546.7	1055.66	-0.01	-1.77	573.3	1056.03	-0.01	-1.77	600.0
1055.26	-0.01	-2.04	622.5	1054.46	-0.01	-2.34	645.0	1046.95	-0.01	-3.45	658.6
1046.87	-0.01	-3.53	694.3	1050.40	0.00	0.00	730.0	1067.10	0.00	0.00	746.7

ID
5 SECTION 55.00 TIME = 9.66 HRS WS =1040.45 WIDTH = 458.3

Z	DZ	TDZ	Y	Z	DZ	TDZ	Y	Z	DZ	TDZ	Y
1047.00	0.00	0.00	260.0	1031.90	0.00	0.00	290.0	1030.43	0.01	-1.48	322.0
1030.43	0.03	-1.48	354.0	1030.45	0.00	-1.45	386.0	1031.21	0.01	-0.69	418.0
1032.58	0.00	0.68	450.0	1033.42	0.00	-3.19	472.0	1034.12	0.00	-2.08	500.0
1034.45	0.00	-1.55	525.0	1034.58	0.00	-1.08	559.5	1034.50	0.00	-0.81	594.0
1034.32	0.00	-0.64	628.5	1034.12	0.00	-0.49	663.0	1034.05	0.00	-0.40	689.5
1035.68	0.00	1.38	716.0	1037.76	-0.10	2.06	727.4	1047.00	0.00	0.00	741.3

Y	V	Y	V	Y	V	Y	V	Y	V	Y	V
290.0	6.81	322.0	7.23	354.0	7.21	386.0	7.19	418.0	6.95	450.0	6.52
472.0	6.23	500.0	5.97	525.0	5.84	559.5	5.78	594.0	5.79	628.5	5.85
663.0	5.91	689.5	5.93	716.0	5.27	727.4	4.21				

TIME = 10.66 HRS DT = 600 SECS TIME STEP = 81

SECTION	W.S.ELEV. FT	WIDTH FT	DEPTH FT	Q CFS	V FPS	SLOPE	D50 MM	QS/Q 1000 PPM	FR	SED. YIELD C. Y.
39.00	1033.97	783.5	5.48	5441	3.37	0.00241	3.42	1.10	0.41	0.684E+05
44.00	1035.38	789.1	3.74	5441	3.75	0.00347	5.33	0.67	0.49	0.765E+05
47.00	1036.19	690.0	4.99	5441	3.24	0.00178	16.32	0.23	0.37	0.880E+05
51.50	1036.81	499.9	6.37	5441	3.07	0.00097	30.50	0.16	0.29	0.919E+05
55.00	1037.12	444.9	6.67	5441	3.05	0.00081	27.52	0.15	0.27	0.879E+05
58.12	1037.61	379.2	6.56	5441	3.05	0.00066	11.88	0.18	0.25	0.811E+05
62.00	1037.91	392.2	6.62	5441	3.57	0.00118	11.33	0.46	0.32	0.756E+05
66.00	1038.43	449.3	3.51	5441	3.67	0.00153	4.02	0.84	0.36	0.703E+05
71.00	1039.23	419.5	3.78	5441	3.93	0.00177	5.42	0.99	0.38	0.699E+05
75.00	1039.96	417.4	3.41	5441	4.03	0.00190	5.72	1.06	0.39	0.696E+05
78.00	1040.56	448.2	3.16	5441	4.11	0.00222	7.14	1.08	0.42	0.701E+05
81.00	1041.22	448.9	3.11	5441	4.03	0.00209	8.82	1.03	0.41	0.704E+05
84.00	1041.87	448.0	3.34	5441	4.16	0.00230	11.12	0.93	0.43	0.707E+05
87.00	1042.55	448.6	3.07	5441	4.11	0.00223	20.47	0.85	0.42	0.710E+05
89.00	1043.01	439.1	3.23	5441	4.49	0.00289	18.71	0.68	0.48	0.700E+05
94.00	1044.47	447.5	3.51	5441	4.44	0.00286	28.25	0.63	0.47	0.691E+05
97.00	1045.28	425.6	4.18	5441	4.28	0.00237	40.23	0.52	0.44	0.683E+05
99.54	1045.77	348.9	4.79	5441	3.32	0.00080	31.72	0.42	0.27	0.673E+05
99.60	1049.57	349.6	2.35	5441	7.66	0.00339	81.44	0.64	0.95	0.643E+05
100.90	1050.74	350.0	4.23	5441	4.03	0.00150	50.93	0.55	0.36	0.647E+05
103.00	1051.14	369.6	4.21	5441	3.63	0.00114	3.50	0.69	0.32	0.599E+05
106.00	1051.54	462.1	3.23	5441	3.69	0.00162	1.04	1.57	0.36	0.564E+05
109.00	1052.14	551.9	2.49	5441	4.00	0.00268	1.03	2.36	0.45	0.601E+05
110.00	1052.41	550.2	2.76	5441	3.94	0.00255	1.38	2.04	0.44	0.655E+05
113.00	1053.13	553.0	2.72	5441	3.70	0.00206	2.23	1.48	0.40	0.707E+05
116.00	1053.83	549.9	6.95	5441	4.12	0.00295	6.65	0.83	0.47	0.790E+05
120.00	1054.50	279.1	7.02	5441	3.48	0.00069	12.05	0.25	0.26	0.892E+05
123.00	1054.82	434.1	3.41	5441	3.72	0.00153	2.73	1.02	0.36	0.846E+05
127.00	1055.46	434.0	3.27	5441	3.88	0.00176	3.65	1.17	0.38	0.869E+05
131.00	1056.21	433.5	3.68	5441	4.08	0.00208	6.47	0.95	0.41	0.894E+05
135.00	1056.89	330.2	4.50	5441	4.01	0.00137	7.67	0.75	0.35	0.913E+05
138.00	1057.43	433.1	2.93	5441	4.53	0.00293	10.42	1.33	0.48	0.911E+05
141.00	1058.18	390.3	4.14	5441	3.97	0.00164	5.70	0.99	0.37	0.915E+05
145.00	1058.91	432.8	3.19	5441	4.06	0.00203	3.62	1.23	0.41	0.911E+05
147.00	1059.32	434.9	4.08	5441	4.04	0.00202	6.22	1.15	0.41	0.929E+05
150.00	1060.04	462.9	4.95	5441	4.59	0.00334	9.46	0.99	0.50	0.944E+05
155.00	1061.30	341.1	7.80	5441	4.26	0.00175	27.83	0.47	0.39	0.102E+06
158.00	1061.76	296.9	5.58	5441	3.51	0.00076	4.47	0.37	0.27	0.101E+06
159.45	1061.96	331.9	4.48	5441	4.03	0.00140	5.08	0.88	0.35	0.989E+05
160.25	1062.06	331.5	4.16	5441	4.16	0.00156	4.19	1.10	0.37	0.980E+05
162.00	1062.34	332.4	3.87	5441	4.30	0.00174	4.03	1.30	0.39	0.975E+05
165.00	1062.97	372.1	3.19	5441	4.97	0.00326	7.78	1.69	0.51	0.966E+05
168.00	1063.92	361.9	3.41	5441	4.83	0.00286	13.10	1.42	0.48	0.990E+05
170.00	1064.47	342.2	3.87	5441	4.62	0.00230	14.94	1.27	0.44	0.101E+06
173.00	1065.12	323.4	4.38	5441	4.44	0.00187	9.99	1.21	0.40	0.106E+06
176.00	1065.68	323.6	3.91	5441	4.38	0.00178	4.20	1.38	0.39	0.104E+06
177.00	1065.86	369.0	3.27	5441	4.77	0.00282	6.14	1.75	0.48	0.103E+06
179.00	1066.44	376.6	3.07	5441	4.80	0.00297	12.57	1.61	0.49	0.104E+06
181.00	1067.08	377.7	3.17	5441	5.41	0.00441	27.89	1.35	0.58	0.105E+06
183.00	1067.84	317.0	5.00	5441	4.89	0.00251	32.21	0.97	0.46	0.111E+06
188.00	1069.27	306.3	3.65	5441	5.59	0.00375	19.45	1.16	0.55	0.107E+06
193.00	1071.21	430.8	3.14	5441	4.72	0.00334	14.60	0.96	0.51	0.106E+06
197.00	1072.32	397.0	6.25	5441	4.10	0.00189	19.07	0.58	0.40	0.108E+06
199.00	1072.53	383.8	4.17	5441	3.81	0.00141	12.64	0.51	0.35	0.106E+06
201.10	1072.80	323.2	4.86	5441	3.55	0.00089	5.91	0.44	0.29	0.109E+06
201.90	1072.86	321.2	4.84	5441	3.65	0.00096	4.51	0.53	0.30	0.108E+06
204.00	1073.06	319.4	4.93	5441	3.84	0.00114	5.23	0.68	0.32	0.108E+06
209.30	1073.63	269.8	5.29	5441	4.06	0.00108	2.40	0.87	0.32	0.107E+06
212.60	1073.70	253.1	2.69	5441	8.32	0.00289	16.23	3.29	0.91	0.110E+06
213.50	1074.00	253.0	2.50	5441	8.70	0.00335	6.38	2.82	0.97	0.110E+06

213.70	1075.40	266.5	2.39	5441	8.61	0.00347	14.37	2.83	0.99	0.110E+06
217.50	1077.62	337.9	3.35	5441	5.06	0.00305	6.90	2.72	0.50	0.110E+06
221.10	1078.74	363.6	4.86	5441	4.83	0.00289	5.44	2.62	0.48	0.111E+06
227.50	1081.04	472.5	6.72	5441	4.98	0.00453	4.32	2.46	0.58	0.113E+06
233.55	1082.92	402.1	3.75	5441	4.15	0.00198	10.57	1.08	0.40	0.130E+06
238.66	1083.64	279.0	5.78	5441	3.57	0.00074	19.44	1.09	0.27	0.139E+06
238.69	1086.34	303.9	2.74	5441	7.98	0.00321	35.03	1.50	0.94	0.136E+06
242.00	1088.07	315.9	4.65	5441	4.76	0.00229	17.47	1.30	0.44	0.137E+06
247.00	1089.10	290.0	4.35	5441	4.50	0.00169	4.64	1.25	0.39	0.134E+06
270.50	1090.48	373.5	3.01	5441	5.40	0.00434	5.30	2.14	0.58	0.137E+06
273.50	1091.78	383.2	3.16	5441	5.06	0.00361	5.59	1.82	0.53	0.144E+06
277.90	1093.18	369.9	3.14	5441	4.76	0.00281	8.59	1.38	0.48	0.153E+06
281.80	1094.23	316.4	3.93	5441	4.78	0.00231	13.55	1.20	0.44	0.163E+06
288.00	1095.57	281.7	4.30	5441	4.94	0.00222	15.09	1.27	0.44	0.175E+06
290.00	1095.98	250.9	4.56	5441	5.17	0.00223	16.08	1.33	0.44	0.173E+06
291.00	1096.13	271.1	4.47	5441	5.48	0.00304	24.91	1.36	0.51	0.172E+06
293.00	1096.66	211.6	5.35	5441	5.14	0.00174	13.34	1.15	0.40	0.171E+06
297.00	1097.38	200.6	5.83	5441	5.78	0.00237	17.24	1.72	0.47	0.170E+06
302.00	1098.75	192.0	5.34	5441	6.51	0.00335	21.41	3.00	0.55	0.165E+06
305.00	1099.72	189.9	4.41	5441	7.15	0.00451	13.50	2.09	0.63	0.155E+06
306.75	1100.87	235.5	4.76	5441	7.67	0.00751	32.95	1.68	0.78	0.150E+06
310.00	1103.39	309.8	3.36	5441	7.95	0.01220	36.58	3.84	0.94	0.147E+06
313.20	1106.16	336.0	3.20	5441	5.29	0.00353	22.57	1.88	0.53	0.147E+06
318.00	1108.04	335.9	2.94	5441	5.56	0.00415	22.56	2.42	0.57	0.147E+06

ID
83 SECTION 313.20 TIME = 10.66 HRS WS =1106.16 WIDTH = 336.0

Z	DZ	TDZ	Y	Z	DZ	TDZ	Y	Z	DZ	TDZ	Y
1123.70	0.00	0.00	9814.3	1103.19	0.01	0.19	9835.0	1103.14	0.01	0.14	9868.0
1103.10	0.01	0.10	9901.0	1103.06	0.01	0.06	9934.0	1103.02	0.01	0.02	9967.0
1102.97	0.01	-0.03	10000.0	1103.02	0.01	0.02	10033.0	1103.06	0.01	0.06	10066.0
1103.10	0.01	0.10	10099.0	1103.14	0.01	0.14	10132.0	1103.19	0.01	0.19	10165.0
1123.70	0.00	0.00	10185.7								

ID
82 SECTION 310.00 TIME = 10.66 HRS WS =1103.39 WIDTH = 309.8

Z	DZ	TDZ	Y	Z	DZ	TDZ	Y	Z	DZ	TDZ	Y
1123.50	0.00	0.00	9778.1	1102.31	0.00	0.71	9798.9	1099.92	-0.11	-1.68	9833.0
1100.23	-0.09	-1.37	9866.0	1100.53	-0.07	-1.07	9899.0	1100.82	-0.05	-0.78	9932.0
1101.09	-0.04	-0.51	9965.0	1101.35	-0.03	-0.25	9998.0	1101.60	-0.02	0.00	10031.0
1101.83	-0.01	0.23	10064.0	1102.24	0.04	0.64	10096.9	1105.75	0.00	4.15	10129.1
1123.70	0.00	0.00	10151.9								

ID
81 SECTION 306.75 TIME = 10.66 HRS WS =1100.87 WIDTH = 235.5

Z	DZ	TDZ	Y	Z	DZ	TDZ	Y	Z	DZ	TDZ	Y
1122.80	0.00	0.00	9792.5	1100.39	0.00	0.09	9814.1	1096.41	0.30	-3.89	9851.0
1096.51	0.00	-3.79	9887.0	1097.00	0.00	-3.30	9923.0	1097.74	0.00	-2.56	9959.0
1098.59	0.00	-1.71	9995.2	1099.67	0.12	-0.63	10031.3	1102.17	0.00	1.87	10066.6
1106.81	0.00	6.51	10101.4	1122.80	0.00	0.00	10126.5				

Y	V	Y	V	Y	V	Y	V	Y	V	Y	V
9814.1	3.52	9851.0	8.41	9887.0	8.37	9923.0	8.02	9959.0	7.40	9995.2	6.57
10031.3	5.13	10066.6	0.00	10101.4	0.00						

ID
80 SECTION 305.00 TIME = 10.66 HRS WS =1099.72 WIDTH = 189.9

Z	DZ	TDZ	Y	Z	DZ	TDZ	Y	Z	DZ	TDZ	Y

1117.50	0.00	0.00	9880.0	1096.58	0.00	-2.92	9899.1	1095.32	0.01	-4.18	9931.0
1095.32	0.01	-4.18	9964.0	1095.32	0.01	-4.18	9997.0	1095.32	0.01	-4.18	10026.7
1095.32	0.01	-4.18	10056.3	1098.10	-0.14	-1.40	10084.7	1117.50	0.00	0.00	10104.0

ID
79 SECTION 302.00 TIME = 10.66 HRS WS =1098.75 WIDTH = 192.0

Z	DZ	TDZ	Y	Z	DZ	TDZ	Y	Z	DZ	TDZ	Y
1114.20	0.00	0.00	9885.0	1095.71	-0.13	-2.49	9910.5	1095.58	-0.13	-2.62	9933.7
1093.44	0.02	-4.76	9966.3	1093.44	0.02	-4.76	9999.0	1093.44	0.02	-4.76	10032.0
1093.44	0.02	-4.76	10065.0	1098.20	0.00	0.00	10098.0	1114.20	0.00	0.00	10114.0

ID
78 SECTION 297.00 TIME = 10.66 HRS WS =1097.38 WIDTH = 200.6

Z	DZ	TDZ	Y	Z	DZ	TDZ	Y	Z	DZ	TDZ	Y
1113.50	0.00	0.00	9865.5	1107.04	0.00	10.94	9888.2	1100.58	0.00	4.48	9916.5
1093.81	-0.10	-2.29	9944.2	1093.08	0.00	-3.02	9975.2	1091.68	0.00	-4.42	10006.0
1091.63	0.07	-4.47	10036.7	1091.63	0.07	-4.47	10067.5	1091.63	0.07	-4.47	10098.2
1096.40	0.00	0.30	10129.4	1113.50	0.00	0.00	10146.4				

Y	V	Y	V	Y	V	Y	V	Y	V	Y	V
9888.2	0.00	9916.5	0.00	9944.2	4.93	9975.2	5.28	10006.0	5.88	10036.7	5.88
10067.5	5.87	10098.2	5.85	10129.4	2.93						

ID
77 SECTION 293.00 TIME = 10.66 HRS WS =1096.66 WIDTH = 211.6

Z	DZ	TDZ	Y	Z	DZ	TDZ	Y	Z	DZ	TDZ	Y
1110.40	0.00	0.00	9874.6	1093.30	0.00	-0.70	9891.0	1091.33	0.02	-2.67	9929.7
1091.33	0.02	-2.67	9968.3	1091.33	0.02	-2.67	10007.0	1091.33	0.02	-2.67	10045.7
1091.33	0.02	-2.67	10090.9	1106.31	0.00	12.31	10114.7	1110.40	0.00	0.00	10139.4

ID
76 SECTION 291.00 TIME = 10.66 HRS WS =1096.13 WIDTH = 271.1

Z	DZ	TDZ	Y	Z	DZ	TDZ	Y	Z	DZ	TDZ	Y
1116.00	0.00	0.00	9865.0	1093.16	0.00	-15.64	9865.2	1093.15	0.00	0.15	9865.4
1091.63	-0.03	-1.47	9898.7	1091.88	-0.02	-1.32	9932.5	1092.13	-0.02	-1.17	9966.2
1092.36	-0.01	-1.04	10000.0	1092.59	-0.01	-0.88	10034.0	1092.82	0.00	-0.73	10068.0
1093.04	0.00	-0.59	10102.0	1093.23	0.00	-0.47	10136.0	1093.90	0.00	-14.90	10136.2
1116.00	0.00	0.00	10136.4								

ID
75 SECTION 290.00 TIME = 10.66 HRS WS =1095.98 WIDTH = 250.9

Z	DZ	TDZ	Y	Z	DZ	TDZ	Y	Z	DZ	TDZ	Y
1117.80	0.00	0.00	9865.0	1108.80	0.00	0.00	9865.2	1106.70	0.00	13.70	9873.4
1093.58	0.00	0.53	9888.0	1091.46	0.00	-1.64	9932.5	1091.45	0.00	-1.70	9966.2
1091.44	0.00	-1.76	10000.0	1091.44	0.00	-1.79	10034.0	1091.43	0.00	-1.82	10068.0
1091.42	0.00	-1.85	10102.0	1093.14	0.00	-0.16	10136.0	1093.16	0.00	-15.64	10136.2
1117.80	0.00	0.00	10136.4								

ID
74 SECTION 288.00 TIME = 10.66 HRS WS =1095.57 WIDTH = 281.7

Z	DZ	TDZ	Y	Z	DZ	TDZ	Y	Z	DZ	TDZ	Y
1106.88	0.00	0.00	9836.9	1093.28	0.00	1.08	9849.2	1091.52	0.00	-0.68	9885.2

1091.35	0.00	-0.85	9919.5	1091.27	0.00	-0.93	9953.7	1091.27	0.00	-0.93	9988.0
1091.27	0.00	-0.93	10022.2	1091.35	0.00	-0.85	10056.5	1091.52	0.00	-0.68	10090.7
1093.28	0.00	1.08	10126.8	1106.88	0.00	0.00	10139.1				

ID
73 SECTION 281.80 TIME = 10.66 HRS WS =1094.23 WIDTH = 316.4

Z	DZ	TDZ	Y	Z	DZ	TDZ	Y	Z	DZ	TDZ	Y
1105.55	0.00	0.00	9750.9	1095.15	0.00	5.95	9767.6	1090.33	0.00	1.13	9800.0
1090.31	0.00	1.11	9833.0	1090.30	0.00	1.10	9866.0	1090.30	0.00	1.10	9899.0
1090.30	0.00	1.10	9932.0	1090.30	0.00	1.10	9965.0	1090.30	0.00	1.10	9998.0
1090.31	0.00	1.11	10031.0	1090.33	0.00	1.13	10064.0	1095.15	0.00	5.95	10096.4
1105.55	0.00	0.00	10113.1								

ID
72 SECTION 277.90 TIME = 10.66 HRS WS =1093.18 WIDTH = 369.9

Z	DZ	TDZ	Y	Z	DZ	TDZ	Y	Z	DZ	TDZ	Y
1105.80	0.00	0.00	9729.5	1090.12	0.00	1.82	9745.1	1090.07	0.00	1.77	9783.0
1090.06	0.00	1.76	9819.0	1090.05	0.00	1.75	9855.0	1090.04	0.00	1.74	9891.0
1090.04	0.00	1.74	9927.0	1090.04	0.00	1.74	9963.0	1090.05	0.00	1.75	9999.0
1090.06	0.00	1.76	10035.0	1090.07	0.00	1.77	10071.0	1090.12	0.00	1.82	10108.9
1105.80	0.00	0.00	10124.5								

ID
71 SECTION 273.50 TIME = 10.66 HRS WS =1091.78 WIDTH = 383.2

Z	DZ	TDZ	Y	Z	DZ	TDZ	Y	Z	DZ	TDZ	Y
1104.39	0.00	0.00	9714.9	1088.88	0.00	1.68	9730.3	1088.60	-0.02	1.40	9769.4
1088.68	-0.01	1.48	9806.8	1088.76	-0.01	1.56	9844.2	1088.83	-0.01	1.63	9881.6
1088.91	-0.01	1.71	9919.0	1088.98	-0.01	1.78	9956.6	1089.06	-0.01	1.86	9994.2
1089.13	0.00	1.93	10031.8	1089.20	0.00	2.00	10069.4	1089.75	0.02	2.55	10108.4
1104.39	0.00	0.00	10124.1								

ID
70 SECTION 270.50 TIME = 10.66 HRS WS =1090.48 WIDTH = 373.5

Z	DZ	TDZ	Y	Z	DZ	TDZ	Y	Z	DZ	TDZ	Y
1104.80	0.00	0.00	9749.7	1088.05	0.00	1.55	9766.1	1087.46	-0.01	0.96	9804.4
1087.53	-0.01	1.03	9840.8	1087.59	-0.01	1.09	9877.2	1087.66	-0.01	1.16	9913.6
1087.72	-0.01	1.22	9950.0	1087.79	0.00	1.29	9986.6	1087.85	0.00	1.35	10023.2
1087.92	0.00	1.42	10059.8	1087.98	0.00	1.48	10096.4	1088.16	0.02	1.66	10134.8
1104.80	0.00	0.00	10151.3								

ID
69 SECTION 247.00 TIME = 10.66 HRS WS =1089.10 WIDTH = 290.0

Z	DZ	TDZ	Y	Z	DZ	TDZ	Y	Z	DZ	TDZ	Y
1104.50	0.00	0.00	325.0	1097.94	0.00	12.26	351.3	1084.78	0.01	-0.89	378.5
1084.78	0.01	-0.89	421.9	1084.78	0.01	-0.89	461.0	1084.78	0.01	-0.89	500.0
1084.78	0.01	-0.89	539.0	1084.76	0.01	-0.91	578.1	1084.77	0.01	-0.90	617.1
1085.80	0.01	0.13	656.2	1104.50	0.00	0.00	675.0				

Y	V	Y	V	Y	V	Y	V	Y	V	Y	V
351.3	0.00	378.5	4.40	421.9	4.37	461.0	4.35	500.0	4.32	539.0	4.29
578.1	4.27	617.1	4.24	656.2	3.79						

ID
68 SECTION 242.00 TIME = 10.66 HRS WS =1088.07 WIDTH = 315.9

Z	DZ	TDZ	Y	Z	DZ	TDZ	Y	Z	DZ	TDZ	Y
1104.00	0.00	0.00	325.0	1085.81	-0.03	1.36	345.6	1084.95	0.01	0.50	383.4
1084.58	0.01	0.13	422.3	1084.50	0.01	0.05	461.1	1084.50	0.01	0.05	500.0
1084.38	0.01	-0.07	538.9	1083.91	0.01	-0.54	577.7	1083.43	0.01	-1.02	616.6
1084.42	-0.03	-0.03	655.5	1104.00	0.00	0.00	675.0				

Y	V	Y	V	Y	V	Y	V	Y	V	Y	V
345.6	3.89	383.4	4.38	422.3	4.54	461.1	4.56	500.0	4.53	538.9	4.56
577.7	4.74	616.6	4.93	655.5	4.46						

ID
67 SECTION 238.69 TIME = 10.66 HRS WS =1086.34 WIDTH = 303.9

Z	DZ	TDZ	Y	Z	DZ	TDZ	Y	Z	DZ	TDZ	Y
1103.40	0.00	0.00	325.0	1085.48	0.00	1.88	344.2	1084.72	0.00	1.12	383.6
1084.40	0.00	0.80	422.4	1084.16	0.00	0.56	461.2	1083.92	0.00	0.32	500.0
1083.60	0.00	0.00	536.2	1083.60	0.00	0.00	572.3	1083.60	0.00	0.00	608.5
1083.60	0.00	0.00	644.7	1103.90	0.00	0.00	665.0				

Y	V	Y	V	Y	V	Y	V	Y	V	Y	V
344.2	5.30	383.6	6.74	422.4	7.20	461.2	7.48	500.0	7.74	536.2	8.08
572.3	8.04	608.5	7.99	644.7	7.95						

ID
66 SECTION 238.66 TIME = 10.66 HRS WS =1083.64 WIDTH = 279.0

Z	DZ	TDZ	Y	Z	DZ	TDZ	Y	Z	DZ	TDZ	Y
1103.30	0.00	0.00	330.0	1090.09	0.00	9.49	361.7	1077.87	0.01	$\boxed{-2.73}$	378.9
1077.87	0.01	-2.73	426.4	1077.87	0.01	-2.73	463.2	1077.87	0.01	-2.73	500.0
1077.87	0.01	-2.73	536.7	1077.87	0.01	-2.73	573.3	1077.87	0.01	-2.73	610.0
1080.60	0.00	0.00	646.7	1103.70	0.00	0.00	670.0				

$D_s = 3$

Y	V	Y	V	Y	V	Y	V	Y	V	Y	V
361.7	0.00	378.9	3.56	426.4	3.53	463.2	3.51	500.0	3.49	536.7	3.47
573.3	3.45	610.0	3.44	646.7	2.66						

ID
65 SECTION 233.55 TIME = 10.66 HRS WS =1082.92 WIDTH = 402.1

Z	DZ	TDZ	Y	Z	DZ	TDZ	Y	Z	DZ	TDZ	Y
1101.70	0.00	0.00	270.0	1079.95	0.00	0.95	291.7	1079.17	0.00	0.17	327.2
1079.25	0.00	0.25	361.8	1079.33	0.00	0.33	396.3	1079.41	0.00	0.41	430.9
1079.48	0.00	0.48	465.4	1079.56	0.00	0.56	500.0	1079.64	0.00	0.64	534.6
1079.73	0.00	0.73	569.1	1079.81	0.00	0.81	603.7	1079.90	0.00	0.90	638.3
1079.93	-0.02	0.93	672.9	1085.32	0.00	6.32	705.3	1101.60	0.00	0.00	730.0

ID
64 SECTION 227.50 TIME = 10.66 HRS WS =1081.04 WIDTH = 472.5

Z	DZ	TDZ	Y	Z	DZ	TDZ	Y	Z	DZ	TDZ	Y
1099.00	0.00	0.00	245.0	1078.80	0.00	1.70	265.9	1074.29	-0.03	-2.81	301.0
1075.24	-0.03	-1.86	334.0	1077.07	-0.02	-0.03	367.0	1078.47	-0.02	1.37	400.0
1079.33	-0.01	2.23	433.0	1079.79	-0.02	2.69	466.0	1079.97	-0.02	2.87	500.0
1079.95	0.00	2.85	532.0	1079.76	0.00	2.66	565.0	1079.53	0.01	2.43	598.0
1079.43	0.00	2.33	631.0	1079.49	0.00	2.39	664.0	1079.70	0.00	2.60	698.5
1080.90	0.01	3.80	735.9	1099.00	0.00	0.00	755.0				

Y	V	Y	V	Y	V	Y	V	Y	V	Y	V

1088.19	0.00	0.00	325.0	1079.01	0.00	8.82	348.9	1068.39	0.04	-1.80	381.0
1068.39	0.04	-1.80	421.5	1068.39	0.04	-1.80	460.7	1068.39	0.04	-1.80	500.0
1068.39	0.04	-1.80	539.2	1068.39	0.04	-1.80	578.5	1068.39	0.04	-1.80	619.0
1079.01	0.00	8.82	651.1	1088.19	0.00	0.00	675.0				

ID
57 SECTION 204.00 TIME = 10.66 HRS WS =1073.06 WIDTH = 319.4

Z	DZ	TDZ	Y	Z	DZ	TDZ	Y	Z	DZ	TDZ	Y
1087.40	0.00	0.00	324.5	1070.11	0.01	1.21	343.6	1068.52	0.00	-0.38	382.2
1068.39	0.00	-0.51	421.5	1068.26	0.00	-0.64	460.7	1068.13	0.00	-0.77	500.0
1068.26	0.00	-0.64	539.2	1068.39	0.00	-0.51	578.5	1068.52	0.00	-0.38	617.7
1070.11	0.01	1.21	656.4	1087.40	0.00	0.00	675.5				

ID
56 SECTION 201.90 TIME = 10.66 HRS WS =1072.86 WIDTH = 321.2

Z	DZ	TDZ	Y	Z	DZ	TDZ	Y	Z	DZ	TDZ	Y
1086.90	0.00	0.00	324.5	1069.67	-0.04	1.27	343.8	1068.04	0.02	-0.36	382.2
1068.04	0.02	-0.36	421.5	1068.04	0.02	-0.36	460.7	1068.04	0.02	-0.36	500.0
1068.04	0.02	-0.36	539.2	1068.04	0.02	-0.36	578.5	1068.04	0.02	$\boxed{-0.36}$	617.7
1068.37	-0.04	-0.03	657.0	1086.90	0.00	0.00	675.5				

$D_s = .5'$

ID
55 SECTION 201.10 TIME = 10.66 HRS WS =1072.80 WIDTH = 323.2

Z	DZ	TDZ	Y	Z	DZ	TDZ	Y	Z	DZ	TDZ	Y
1086.70	0.00	0.00	324.5	1068.33	0.00	0.13	342.9	1067.95	0.00	-0.25	382.2
1067.95	0.00	-0.25	421.5	1067.95	0.00	-0.25	460.7	1067.95	0.00	-0.25	500.0
1067.95	0.00	-0.25	539.2	1067.95	0.00	-0.25	578.5	1067.95	0.00	-0.25	617.7
1068.32	0.00	0.12	657.1	1086.70	0.00	0.00	675.5				

Y	V	Y	V	Y	V	Y	V	Y	V	Y	V
342.9	3.36	382.2	3.46	421.5	3.45	460.7	3.44	500.0	3.44	539.2	3.43
578.5	3.42	617.7	3.41	657.1	3.30						

ID
54 SECTION 199.00 TIME = 10.66 HRS WS =1072.53 WIDTH = 383.8

Z	DZ	TDZ	Y	Z	DZ	TDZ	Y	Z	DZ	TDZ	Y
1086.20	0.00	0.00	317.5	1069.04	0.00	1.34	334.5	1068.84	0.00	1.13	368.8
1068.99	0.00	1.29	401.6	1068.93	0.00	1.23	434.4	1068.90	0.00	1.20	467.2
1068.87	0.00	1.17	500.0	1068.84	0.00	1.14	535.0	1068.75	0.00	1.05	570.0
1068.59	0.00	0.89	605.0	1068.40	0.00	0.70	640.0	1068.35	-0.01	0.65	675.0
1069.02	0.00	1.32	711.3	1086.20	0.00	0.00	728.5				

Y	V	Y	V	Y	V	Y	V	Y	V	Y	V
334.5	3.63	368.8	3.70	401.6	3.63	434.4	3.65	467.2	3.65	500.0	3.65
535.0	3.66	570.0	3.68	605.0	3.73	640.0	3.79	675.0	3.80	711.3	3.54

ID
53 SECTION 197.00 TIME = 10.66 HRS WS =1072.32 WIDTH = 397.0

Z	DZ	TDZ	Y	Z	DZ	TDZ	Y	Z	DZ	TDZ	Y
1084.60	0.00	0.00	307.6	1077.74	0.00	10.54	353.5	1069.23	0.00	2.03	376.5
1069.89	0.01	2.69	409.4	1070.25	0.00	-3.75	423.0	1070.27	-0.01	-2.73	461.5
1068.99	0.02	-3.01	500.0	1070.53	0.02	-1.47	536.7	1071.04	-0.03	-0.96	573.3
1070.40	-0.03	-1.60	610.0	1070.17	0.13	-3.83	613.0	1070.10	-0.05	-5.90	617.0

265.9	4.11	301.0	6.36	334.0	6.03	367.0	5.23	400.0	4.44	433.0	3.81
466.0	3.39	500.0	3.21	532.0	3.25	565.0	3.49	598.0	3.74	631.0	3.87
664.0	3.84	698.5	3.64	735.9	1.51						

ID
63 SECTION 221.10 TIME = 10.66 HRS WS =1078.74 WIDTH = 363.6

Z	DZ	TDZ	Y	Z	DZ	TDZ	Y	Z	DZ	TDZ	Y
1096.60	0.00	0.00	295.0	1075.61	0.00	0.31	315.7	1073.87	0.00	-1.43	353.0
1074.75	0.00	-0.55	389.8	1075.72	-0.01	0.42	426.5	1076.16	-0.01	0.86	463.3
1076.17	0.00	0.87	500.0	1076.00	0.00	0.70	534.5	1075.88	0.00	0.58	568.9
1075.83	0.00	0.53	603.4	1075.86	0.00	0.56	637.8	1076.35	0.00	1.05	673.9
1098.00	0.00	0.00	695.0								

Y	V	Y	V	Y	V	Y	V	Y	V	Y	V
315.7	4.43	353.0	5.30	389.8	4.94	426.5	4.47	463.3	4.23	500.0	4.26
534.5	4.39	568.9	4.50	603.4	4.57	637.8	4.59	673.9	4.31		

ID
62 SECTION 217.50 TIME = 10.66 HRS WS =1077.62 WIDTH = 337.9

Z	DZ	TDZ	Y	Z	DZ	TDZ	Y	Z	DZ	TDZ	Y
1096.00	0.00	0.00	305.0	1074.28	0.00	0.08	326.8	1074.28	0.00	0.08	361.4
1074.28	0.00	0.08	396.1	1074.28	0.00	0.08	430.7	1074.29	0.00	0.09	465.4
1074.29	0.00	0.09	500.0	1074.29	0.00	0.09	533.4	1074.29	0.00	0.09	566.9
1074.30	0.00	0.10	600.3	1074.30	0.00	0.10	633.8	1078.04	0.00	3.84	664.8
1097.00	0.00	0.00	690.0								

ID
61 SECTION 213.70 TIME = 10.66 HRS WS =1075.40 WIDTH = 266.5

Z	DZ	TDZ	Y	Z	DZ	TDZ	Y	Z	DZ	TDZ	Y
1095.00	0.00	0.00	347.1	1073.00	0.00	0.00	369.1	1073.00	0.00	0.00	401.8
1073.00	0.00	0.00	434.6	1073.00	-0.01	0.00	467.3	1073.00	0.00	0.00	500.0
1073.00	-0.01	0.00	532.7	1073.00	0.00	0.00	565.4	1073.00	0.00	0.00	598.2
1073.00	0.00	0.00	630.9	1096.20	0.00	0.00	652.9				

ID
60 SECTION 213.50 TIME = 10.66 HRS WS =1074.00 WIDTH = 253.0

Z	DZ	TDZ	Y	Z	DZ	TDZ	Y	Z	DZ	TDZ	Y
1089.60	0.00	0.00	357.9	1071.51	0.00	0.01	376.0	1071.50	0.00	0.00	407.0
1071.50	0.00	0.00	438.0	1071.50	0.00	0.00	469.0	1071.50	0.00	0.00	500.0
1071.50	0.00	0.00	531.0	1071.50	0.00	0.00	562.0	1071.50	0.00	0.00	593.0
1071.51	0.00	0.01	624.0	1089.60	0.00	0.00	642.1				

ID
59 SECTION 212.60 TIME = 10.66 HRS WS =1073.70 WIDTH = 253.1

Z	DZ	TDZ	Y	Z	DZ	TDZ	Y	Z	DZ	TDZ	Y
1089.60	0.00	0.00	357.4	1071.16	-0.01	0.16	376.0	1071.11	-0.01	0.11	407.0
1071.07	-0.02	0.07	438.0	1071.02	-0.02	0.02	469.0	1071.00	-0.01	0.00	500.0
1071.02	-0.02	0.02	531.0	1071.07	-0.02	0.07	562.0	1071.11	-0.01	0.11	593.0
1071.16	-0.01	0.16	624.0	1089.60	0.00	0.00	642.6				

ID
58 SECTION 209.30 TIME = 10.66 HRS WS =1073.63 WIDTH = 269.8

Z	DZ	TDZ	Y	Z	DZ	TDZ	Y	Z	DZ	TDZ	Y

1069.82	-0.02	-6.18	627.0	1068.46	0.00	-7.34	640.0	1066.14	0.00	-1.06	657.2
1066.07	0.00	-1.13	691.5	1066.08	0.00	-1.11	725.7	1067.20	0.00	0.00	760.0
1084.60	0.00	0.00	777.4								

$D_s = 1.'$

Y	V	Y	V	Y	V	Y	V	Y	V	Y	V
353.5	0.00	376.5	3.60	409.4	3.26	423.0	3.06	461.5	3.05	500.0	3.67
536.7	2.87	573.3	2.52	610.0	2.94	613.0	3.07	617.0	3.11	627.0	3.25
640.0	3.85	657.2	4.62	691.5	4.63	725.7	4.61	760.0	4.26		

ID
52 SECTION 193.00 TIME = 10.66 HRS WS =1071.21 WIDTH = 430.8

Z	DZ	TDZ	Y	Z	DZ	TDZ	Y	Z	DZ	TDZ	Y
1084.00	0.00	0.00	307.2	1068.84	0.01	2.64	340.2	1068.67	0.00	2.47	379.4
1068.63	0.00	2.43	416.1	1068.66	0.00	2.46	452.7	1068.62	0.00	2.42	490.1
1068.52	0.00	-5.48	505.0	1068.07	0.00	-3.93	539.3	1068.43	-0.01	-2.97	559.9
1068.57	-0.01	-3.43	585.7	1068.64	-0.01	-5.36	620.0	1068.64	-0.01	2.44	634.9
1068.55	-0.01	2.35	667.8	1068.36	-0.01	2.16	700.0	1068.13	-0.01	1.93	730.0
1068.11	0.00	1.91	763.0	1084.00	0.00	0.00	777.8				

Y	V	Y	V	Y	V	Y	V	Y	V	Y	V
340.2	4.34	379.4	4.45	416.1	4.47	452.7	4.43	490.1	4.45	505.0	4.51
539.3	4.78	559.9	4.55	585.7	4.45	620.0	4.39	634.9	4.40	667.8	4.45
700.0	4.56	730.0	4.68	763.0	4.69						

ID
51 SECTION 188.00 TIME = 10.66 HRS WS =1069.27 WIDTH = 306.3

Z	DZ	TDZ	Y	Z	DZ	TDZ	Y	Z	DZ	TDZ	Y
1083.00	0.00	0.00	307.0	1066.25	0.00	1.25	342.3	1065.76	0.00	0.76	382.2
1065.73	-0.01	0.73	421.5	1065.69	-0.01	0.69	460.7	1065.66	-0.01	0.66	500.0
1065.61	-0.01	0.62	513.7	1070.58	0.00	-2.42	529.0	1070.10	0.00	-2.00	529.9
1070.28	0.00	-2.12	552.6	1070.78	0.00	-1.92	575.0	1070.26	0.00	-2.09	608.9
1069.73	0.00	-2.27	642.9	1067.34	0.00	-3.16	659.5	1065.78	0.00	0.78	671.0
1065.81	0.00	0.81	700.7	1065.83	0.00	0.83	730.3	1066.60	0.01	1.60	760.5
1083.00	0.00	0.00	778.0								

ID
50 SECTION 183.00 TIME = 10.66 HRS WS =1067.84 WIDTH = 317.0

Z	DZ	TDZ	Y	Z	DZ	TDZ	Y	Z	DZ	TDZ	Y
1081.30	0.00	0.00	307.5	1075.06	0.00	11.26	350.7	1065.46	-0.02	1.66	371.7
1062.96	0.00	-0.84	397.7	1070.76	0.00	-2.24	416.0	1068.49	0.00	-3.51	438.9
1067.86	0.00	-4.04	465.5	1067.17	-0.07	-4.63	492.0	1066.38	-0.02	-5.12	500.0
1064.18	0.03	-5.82	540.0	1064.24	0.03	-6.26	569.5	1064.23	0.03	-6.77	599.0
1062.87	0.00	-0.93	613.4	1062.88	0.04	-0.92	650.1	1062.90	0.00	-0.90	686.7
1062.88	0.00	-0.92	723.5	1071.49	0.00	7.69	753.3	1081.30	0.00	0.00	777.5

ID
49 SECTION 181.00 TIME = 10.66 HRS WS =1067.08 WIDTH = 377.7

Z	DZ	TDZ	Y	Z	DZ	TDZ	Y	Z	DZ	TDZ	Y
1081.60	0.00	0.00	306.7	1068.58	0.00	5.28	343.6	1064.39	0.00	1.09	382.5
1064.16	-0.02	0.86	421.6	1064.02	-0.02	0.72	460.8	1063.88	-0.02	0.59	500.0
1064.02	-0.02	0.72	537.1	1064.15	-0.02	0.85	574.3	1064.28	-0.01	0.98	611.4
1064.40	-0.01	1.10	648.6	1064.53	-0.01	1.23	685.7	1065.13	0.02	1.83	722.6
1070.68	0.00	7.38	758.7	1081.60	0.00	0.00	778.3				

ID
48 SECTION 179.00 TIME = 10.66 HRS WS =1066.44 WIDTH = 376.6

Z	DZ	TDZ	Y	Z	DZ	TDZ	Y	Z	DZ	TDZ	Y
1081.00	0.00	0.00	306.8	1063.45	0.00	0.65	342.0	1063.38	-0.01	0.58	382.5
1063.37	-0.01	0.57	421.6	1063.36	-0.01	0.56	460.8	1063.35	-0.01	0.55	500.0
1063.36	-0.01	0.56	534.7	1063.37	-0.01	0.57	569.5	1063.38	-0.01	0.58	604.2
1063.39	-0.01	0.59	639.0	1063.40	-0.01	0.60	673.7	1063.45	0.00	0.65	709.8
1081.00	0.00	0.00	726.7								

ID
47 SECTION 177.00 TIME = 10.66 HRS WS =1065.86 WIDTH = 369.0

Z	DZ	TDZ	Y	Z	DZ	TDZ	Y	Z	DZ	TDZ	Y
1080.50	0.00	0.00	279.1	1063.23	0.06	0.83	295.0	1062.80	-0.01	0.40	330.8
1062.75	-0.01	0.35	364.7	1062.70	-0.01	0.30	398.5	1062.66	-0.02	0.26	432.3
1062.61	-0.02	0.21	466.2	1062.56	-0.02	0.16	500.0	1062.62	-0.02	0.22	539.2
1062.67	-0.02	0.27	578.5	1062.73	-0.01	0.33	617.7	1063.21	0.05	0.81	659.0
1080.50	0.00	0.00	675.1								

ID
46 SECTION 176.00 TIME = 10.66 HRS WS =1065.68 WIDTH = 323.6

Z	DZ	TDZ	Y	Z	DZ	TDZ	Y	Z	DZ	TDZ	Y
1079.60	0.00	0.00	265.9	1076.93	0.00	8.93	294.8	1061.79	0.01	-6.21	318.1
1061.79	0.01	-6.22	339.0	1061.79	0.01	-6.21	371.5	1061.79	0.01	-6.22	404.0
1061.79	0.01	-0.41	416.0	1061.79	0.01	-0.41	450.0	1061.79	0.01	-0.41	475.0
1061.79	0.01	-0.41	500.0	1061.79	0.01	-0.41	525.0	1061.79	0.01	-0.41	550.0
1061.79	0.01	-0.41	585.7	1061.79	0.01	-0.41	630.2	1073.91	0.00	11.72	647.3
1079.60	0.00	0.00	674.4								

ID
45 SECTION 173.00 TIME = 10.66 HRS WS =1065.12 WIDTH = 323.4

Z	DZ	TDZ	Y	Z	DZ	TDZ	Y	Z	DZ	TDZ	Y
1079.00	0.00	0.00	224.1	1076.86	0.00	4.86	241.1	1074.80	0.00	2.80	271.3
1066.08	0.00	-5.92	288.0	1065.97	0.00	-4.03	302.5	1063.26	-0.02	-4.74	312.1
1062.41	0.04	-5.59	346.0	1061.98	0.04	-6.02	380.0	1063.38	-0.02	-5.62	385.0
1060.75	0.00	-0.65	400.2	1060.75	0.00	-0.65	433.5	1060.75	0.00	-0.65	466.7
1060.75	0.00	-0.65	500.0	1060.75	0.00	-0.65	539.2	1060.75	0.00	-0.65	578.5
1060.75	0.00	-0.65	619.9	1074.57	0.00	13.17	648.4	1079.00	0.00	0.00	674.6

ID
44 SECTION 170.00 TIME = 10.66 HRS WS =1064.47 WIDTH = 342.2

Z	DZ	TDZ	Y	Z	DZ	TDZ	Y	Z	DZ	TDZ	Y
1079.20	0.00	0.00	190.8	1072.66	0.00	2.66	210.2	1071.61	0.00	1.61	241.2
1070.27	0.00	0.27	260.3	1069.36	0.00	0.36	261.6	1068.94	0.00	0.54	295.0
1069.05	0.00	0.85	330.5	1067.75	0.00	-0.25	366.3	1069.66	0.00	-0.34	377.0
1060.55	-0.05	-0.05	392.2	1060.68	0.01	0.08	430.5	1060.72	0.01	0.13	465.3
1060.78	0.01	0.18	500.0	1060.85	0.01	0.25	535.7	1060.92	0.01	0.32	571.4
1061.00	0.01	0.40	607.1	1061.09	0.01	0.49	642.9	1061.20	0.01	0.60	678.6
1061.52	-0.05	0.92	714.2	1068.54	0.00	7.94	747.2	1079.20	0.00	0.00	768.6

ID
43 SECTION 168.00 TIME = 10.66 HRS WS =1063.92 WIDTH = 361.9

Z	DZ	TDZ	Y	Z	DZ	TDZ	Y	Z	DZ	TDZ	Y
1079.00	0.00	0.00	190.0	1069.71	0.00	0.71	210.4	1069.07	0.00	0.07	225.3
1068.82	0.00	-0.18	243.0	1067.85	0.00	-0.15	253.9	1067.52	0.00	-0.28	278.0
1067.56	0.00	-0.44	295.2	1068.26	0.00	-0.24	323.4	1068.81	0.00	-0.19	351.7
1068.43	0.00	-1.07	380.0	1061.09	0.01	0.99	396.3	1060.59	-0.01	0.49	432.5

1060.55	-0.01	0.45	466.3	1060.50	-0.01	0.40	500.0	1060.55	-0.01	0.45	535.7
1060.60	-0.01	0.50	571.4	1060.65	-0.01	0.55	607.1	1060.70	-0.01	0.60	642.9
1060.75	-0.01	0.65	678.6	1060.80	0.00	0.70	714.3	1062.70	0.03	2.60	750.4
1079.00	0.00	0.00	768.9								

ID
42 SECTION 165.00 TIME = 10.66 HRS WS =1062.97 WIDTH = 372.1

Z	DZ	TDZ	Y	Z	DZ	TDZ	Y	Z	DZ	TDZ	Y
1078.80	0.00	0.00	189.2	1068.84	0.00	0.84	211.2	1068.10	0.00	0.10	227.9
1067.88	0.00	-0.12	245.0	1067.87	0.00	-0.13	275.0	1067.86	0.00	-0.14	305.0
1067.83	0.00	-0.27	337.5	1067.72	0.00	-0.48	370.0	1060.17	0.01	0.78	385.7
1059.87	-0.01	0.47	425.1	1059.82	-0.01	0.42	462.5	1059.77	-0.01	0.37	500.0
1059.82	-0.01	0.42	535.7	1059.87	-0.01	0.47	571.4	1059.91	-0.01	0.51	607.1
1059.96	-0.01	0.56	642.9	1060.00	-0.01	0.60	678.6	1060.05	0.00	0.65	714.3
1061.46	0.02	2.06	750.2	1078.80	0.00	0.00	769.4				

ID
41 SECTION 162.00 TIME = 10.66 HRS WS =1062.34 WIDTH = 332.4

Z	DZ	TDZ	Y	Z	DZ	TDZ	Y	Z	DZ	TDZ	Y
1077.00	0.00	0.00	319.3	1058.72	0.01	-0.08	337.4	1058.48	0.01	-0.32	350.0
1058.48	0.01	-0.32	375.0	1058.48	0.01	-0.32	400.0	1058.48	0.01	-0.32	420.0
1058.48	0.01	-0.32	440.0	1058.48	0.01	-0.32	460.0	1058.48	0.01	-0.32	480.0
1058.48	0.01	-0.32	500.0	1058.48	0.01	-0.32	533.3	1058.48	0.01	-0.32	566.7
1058.48	0.01	-0.32	600.0	1058.48	0.01	-0.32	631.2	1058.72	0.01	-0.08	662.6
1077.00	0.00	0.00	680.7								

ID
40 SECTION 160.25 TIME = 10.66 HRS WS =1062.06 WIDTH = 331.5

Z	DZ	TDZ	Y	Z	DZ	TDZ	Y	Z	DZ	TDZ	Y
1077.00	0.00	0.00	319.0	1058.87	0.01	0.41	337.5	1058.08	0.01	-0.38	370.0
1058.03	0.01	-0.43	402.5	1057.98	0.01	-0.48	435.0	1057.94	0.01	-0.52	467.5
1057.91	0.01	-0.55	500.0	1057.94	0.01	-0.52	532.5	1057.98	0.01	-0.48	565.0
1058.03	0.01	-0.43	597.5	1058.08	0.01	-0.38	630.0	1058.87	0.01	0.41	662.5
1077.00	0.00	0.00	681.0								

ID
39 SECTION 159.45 TIME = 10.66 HRS WS =1061.96 WIDTH = 331.9

Z	DZ	TDZ	Y	Z	DZ	TDZ	Y	Z	DZ	TDZ	Y
1076.80	0.00	0.00	319.0	1058.67	0.01	0.37	337.4	1057.97	0.01	-0.33	370.0
1057.85	0.01	-0.45	402.5	1057.73	0.01	-0.57	435.0	1057.61	0.01	-0.69	467.5
1057.49	0.01	-0.81	500.0	1057.61	0.01	-0.69	532.5	1057.73	0.01	-0.57	565.0
1057.85	0.01	-0.45	597.5	1057.97	0.01	-0.33	630.0	1058.67	0.01	0.37	662.6
1076.80	0.00	0.00	681.0								

ID
38 SECTION 158.00 TIME = 10.66 HRS WS =1061.76 WIDTH = 296.9

Z	DZ	TDZ	Y	Z	DZ	TDZ	Y	Z	DZ	TDZ	Y
1076.50	0.00	0.00	319.0	1059.69	0.00	1.69	354.3	1056.19	0.01	-1.81	392.0
1056.19	0.01	-1.81	428.0	1056.19	0.01	-1.81	464.0	1056.19	0.01	-1.81	500.0
1056.19	0.01	-1.81	532.5	1056.19	0.01	-1.81	565.0	1056.19	0.01	-1.81	597.5
1056.21	0.01	-1.79	639.2	1067.25	0.00	9.25	654.5	1075.00	0.00	0.00	679.5

ID
37 SECTION 155.00 TIME = 10.66 HRS WS =1061.30 WIDTH = 341.1

Z	DZ	TDZ	Y	Z	DZ	TDZ	Y	Z	DZ	TDZ	Y

1073.30	0.00	0.00	224.1	1057.40	0.00	0.00	255.9	1053.60	-0.06	-3.80	287.6
1053.44	-0.06	-3.96	319.4	1053.88	-0.06	-3.52	351.1	1054.53	-0.06	-2.87	382.8
1058.85	-0.07	-6.15	398.0	1059.62	-0.12	-4.38	404.0	1060.10	-0.12	-1.90	412.0
1060.89	-0.06	-0.51	450.0	1061.28	0.00	-0.72	488.0	1061.39	0.00	-1.61	500.0
1061.58	0.00	-2.42	505.0	1061.58	0.00	-4.42	511.0	1061.73	0.00	4.33	528.2
1060.19	-0.27	2.79	564.1	1056.46	0.39	-0.94	600.0	1059.28	-0.06	1.88	633.0
1068.57	0.00	11.17	663.0	1073.30	0.00	0.00	685.9				

$D_s = 4'$

Y	V	Y	V	Y	V	Y	V	Y	V	Y	V
255.9	3.39	287.6	4.44	319.4	4.50	351.1	4.42	382.8	4.28	398.0	2.89
404.0	2.49	412.0	2.19	450.0	1.44	488.0	0.46	500.0	0.00	505.0	0.00
511.0	0.00	528.2	0.00	564.1	2.17	600.0	3.88	633.0	2.77	663.0	0.00

ID
36 SECTION 150.00 TIME = 10.66 HRS WS =1060.04 WIDTH = 462.9

Z	DZ	TDZ	Y	Z	DZ	TDZ	Y	Z	DZ	TDZ	Y
1073.00	0.00	0.00	223.4	1057.65	0.00	1.25	255.0	1055.07	-0.01	-1.33	289.4
1055.48	-0.02	-0.92	322.2	1056.54	-0.01	0.14	355.0	1057.17	-0.01	0.77	377.5
1057.57	-0.01	1.17	400.0	1057.86	-0.01	1.46	438.7	1057.94	0.00	1.54	477.5
1057.96	0.00	1.56	516.2	1057.97	0.00	1.57	555.0	1057.97	0.00	1.57	593.7
1057.95	0.00	1.55	632.5	1058.01	0.00	1.61	671.2	1058.98	0.01	2.58	711.9
1073.00	0.00	0.00	726.6								

Y	V	Y	V	Y	V	Y	V	Y	V	Y	V
255.0	4.05	289.4	5.42	322.2	5.27	355.0	4.77	377.5	4.43	400.0	4.19
438.7	4.01	477.5	3.98	516.2	3.99	555.0	4.00	593.7	4.03	632.5	4.06
671.2	4.04	711.9	3.16								

ID
35 SECTION 147.00 TIME = 10.66 HRS WS =1059.32 WIDTH = 434.9

Z	DZ	TDZ	Y	Z	DZ	TDZ	Y	Z	DZ	TDZ	Y
1072.40	0.00	0.00	273.4	1055.99	0.00	0.19	306.0	1055.24	0.00	-0.56	340.0
1055.40	0.00	-0.40	370.0	1055.76	0.00	-0.04	400.0	1056.21	-0.01	0.41	430.0
1056.34	-0.01	0.54	440.0	1056.57	-0.01	0.77	470.0	1056.62	-0.01	0.82	500.0
1056.60	0.00	0.80	505.0	1056.45	0.00	0.65	532.5	1056.32	0.00	0.52	560.0
1056.28	0.00	0.48	597.5	1056.29	0.00	0.48	635.0	1056.31	0.00	0.51	666.7
1056.48	0.00	0.68	698.3	1056.76	0.00	0.96	731.9	1072.40	0.00	0.00	746.6

Y	V	Y	V	Y	V	Y	V	Y	V	Y	V
306.0	3.84	340.0	4.18	370.0	4.13	400.0	3.99	430.0	3.80	440.0	3.75
470.0	3.65	500.0	3.64	505.0	3.65	532.5	3.74	560.0	3.82	597.5	3.86
635.0	3.88	666.7	3.89	698.3	3.82	731.9	3.69				

ID
34 SECTION 145.00 TIME = 10.66 HRS WS =1058.91 WIDTH = 432.8

Z	DZ	TDZ	Y	Z	DZ	TDZ	Y	Z	DZ	TDZ	Y
1072.00	0.00	0.00	273.4	1055.93	0.00	0.53	306.0	1055.80	0.00	0.40	320.0
1055.79	0.00	0.39	340.0	1055.78	0.00	0.38	370.0	1055.76	0.00	0.36	403.7
1055.75	0.00	0.35	437.5	1055.73	0.00	0.33	471.2	1055.71	0.00	0.31	505.0
1055.72	0.00	0.32	515.0	1055.72	0.00	0.32	525.0	1055.74	0.00	0.34	559.2
1055.76	0.00	0.36	593.3	1055.77	0.00	0.37	627.5	1055.79	0.00	0.39	661.7
1055.81	0.00	0.41	695.8	1055.93	0.00	0.53	730.6	1077.00	0.00	0.00	746.6

ID
33 SECTION 141.00 TIME = 10.66 HRS WS =1058.18 WIDTH = 390.3

Z	DZ	TDZ	Y	Z	DZ	TDZ	Y	Z	DZ	TDZ	Y
1071.00	0.00	0.00	273.6	1060.64	0.00	6.04	310.8	1054.23	0.01	-0.37	328.6
1054.75	0.01	-3.45	336.0	1054.95	0.00	-3.75	370.0	1054.23	0.01	-0.37	379.4
1054.23	0.01	-0.37	403.0	1056.27	-0.04	-3.73	415.0	1058.26	0.00	-3.24	435.0
1055.83	-0.03	-4.17	454.0	1054.23	0.01	-0.37	474.0	1054.05	0.01	-0.55	500.0
1054.05	0.01	-0.55	530.0	1054.05	0.01	-0.55	560.0	1054.05	0.01	-0.55	594.0
1054.05	0.01	-0.55	628.0	1054.05	0.01	-0.55	662.0	1054.05	0.01	-0.55	696.3
1062.85	0.00	8.25	724.1	1071.00	0.00	0.00	746.4				

ID
32 SECTION 138.00 TIME = 10.66 HRS WS =1057.43 WIDTH = 433.1

Z	DZ	TDZ	Y	Z	DZ	TDZ	Y	Z	DZ	TDZ	Y
1069.60	0.00	0.00	274.4	1054.91	0.01	0.91	305.2	1054.56	-0.01	0.56	327.8
1054.53	-0.01	0.53	350.1	1055.72	0.00	-3.28	360.0	1054.93	-0.01	-3.57	382.4
1054.67	-0.01	-3.33	405.0	1054.52	-0.01	0.53	413.0	1054.51	-0.01	0.52	440.0
1054.51	-0.01	0.51	460.0	1054.50	-0.01	0.50	475.0	1054.49	-0.01	0.49	500.0
1054.50	-0.01	0.50	530.0	1054.51	-0.01	0.52	560.0	1054.53	-0.01	0.53	590.0
1054.53	-0.01	0.54	615.0	1054.54	-0.01	0.54	640.0	1054.55	-0.01	0.56	670.0
1054.57	0.00	0.57	700.0	1054.98	0.01	0.98	730.4	1069.60	0.00	0.00	745.6

ID
31 SECTION 135.00 TIME = 10.66 HRS WS =1056.89 WIDTH = 330.2

Z	DZ	TDZ	Y	Z	DZ	TDZ	Y	Z	DZ	TDZ	Y
1069.60	0.00	0.00	273.5	1057.57	0.00	4.17	309.4	1052.48	-0.01	-0.92	330.0
1057.94	0.00	-0.46	340.0	1057.77	0.00	-0.53	376.0	1057.84	0.00	-0.36	412.0
1057.98	0.00	-1.22	412.2	1052.38	-0.01	-1.02	423.6	1052.45	0.02	-0.95	461.8
1052.45	0.02	-0.95	500.0	1052.45	0.02	-0.95	502.0	1052.45	0.02	-0.95	537.6
1052.45	0.02	-0.95	573.2	1052.45	0.02	-0.95	608.8	1052.49	0.02	-0.91	644.4
1052.55	-0.01	-0.85	680.0	1052.57	-0.01	-0.83	705.0	1059.26	0.00	5.86	726.2
1069.90	0.00	0.00	746.3								

ID
30 SECTION 131.00 TIME = 10.66 HRS WS =1056.21 WIDTH = 433.5

Z	DZ	TDZ	Y	Z	DZ	TDZ	Y	Z	DZ	TDZ	Y
1069.40	0.00	0.00	273.2	1052.83	0.00	0.23	306.8	1052.81	-0.01	0.21	328.9
1052.81	-0.01	0.21	351.0	1052.52	0.00	2.52	356.0	1052.52	0.00	0.52	365.0
1054.18	0.00	0.18	395.0	1054.19	0.00	0.19	430.0	1052.82	0.00	0.22	445.0
1053.51	0.00	0.21	471.1	1054.20	0.00	0.20	497.2	1052.83	0.00	0.23	500.0
1052.84	0.00	0.24	530.0	1052.84	0.00	0.24	564.0	1052.85	0.00	0.25	598.0
1052.85	0.00	0.25	632.0	1052.86	0.00	0.26	666.0	1052.86	0.00	0.26	698.0
1052.89	0.01	0.29	730.0	1069.40	0.00	0.00	746.8				

ID
29 SECTION 127.00 TIME = 10.66 HRS WS =1055.46 WIDTH = 434.0

Z	DZ	TDZ	Y	Z	DZ	TDZ	Y	Z	DZ	TDZ	Y
1068.80	0.00	0.00	273.0	1052.22	0.01	0.42	306.4	1052.19	0.00	0.39	345.0
1052.19	0.00	0.39	372.5	1052.19	0.00	0.39	400.0	1052.19	0.00	0.39	425.0
1052.19	-0.01	0.39	450.0	1052.19	-0.01	0.39	475.0	1052.18	-0.01	0.38	500.0
1052.19	-0.01	0.39	537.5	1052.19	0.00	0.39	575.0	1052.19	0.00	0.39	612.5
1052.19	0.00	0.39	650.0	1052.19	0.00	0.39	665.0	1052.19	0.00	0.39	697.5
1052.23	0.01	0.43	730.6	1068.80	0.00	0.00	747.0				

ID
28 SECTION 123.00 TIME = 10.66 HRS WS =1054.82 WIDTH = 434.1

Z	DZ	TDZ	Y	Z	DZ	TDZ	Y	Z	DZ	TDZ	Y

1068.80	0.00	0.00	272.2	1051.42	0.00	0.42	306.9	1051.42	0.00	0.42	315.0
1051.42	0.00	0.42	342.5	1051.42	0.00	0.42	370.0	1051.42	0.00	0.42	400.0
1051.42	0.00	0.42	433.3	1051.42	0.00	0.42	466.7	1051.42	0.00	0.42	500.0
1051.42	0.00	0.42	536.7	1051.42	0.00	0.42	573.3	1051.42	0.00	0.42	610.0
1051.42	0.00	0.42	630.0	1051.42	0.00	0.42	655.0	1051.42	0.00	0.42	680.0
1051.42	0.00	0.42	705.0	1051.42	0.00	0.42	730.9	1068.80	0.00	0.00	747.8

ID
27 SECTION 120.00 TIME = 10.66 HRS WS =1054.50 WIDTH = 279.1

Z	DZ	TDZ	Y	Z	DZ	TDZ	Y	Z	DZ	TDZ	Y
1067.10	0.00	0.00	273.3	1061.33	0.00	10.93	313.5	1051.16	-0.02	0.76	346.6
1048.36	0.00	-2.04	384.0	1047.96	0.00	-2.44	422.7	1047.63	0.00	-2.77	461.3
1047.54	0.06	-2.86	500.0	1047.54	0.06	-2.86	506.6	1054.83	0.00	-1.87	520.0
1055.17	0.00	-1.89	546.7	1055.47	0.00	-1.96	573.4	1055.94	0.00	-1.86	600.0
1055.07	0.00	-2.23	622.5	1054.23	-0.04	-2.57	645.0	1047.54	0.06	-2.86	658.6
1047.54	0.06	-2.86	694.3	1050.40	0.00	0.00	730.0	1067.10	0.00	0.00	746.7

$D_s = 2.9'$

ID
26 SECTION 116.00 TIME = 10.66 HRS WS =1053.83 WIDTH = 549.9

Z	DZ	TDZ	Y	Z	DZ	TDZ	Y	Z	DZ	TDZ	Y
1067.30	0.00	0.00	202.3	1053.51	0.00	3.91	235.9	1051.98	0.00	2.38	269.8
1051.91	0.00	2.32	302.0	1052.00	0.00	2.40	334.1	1052.07	0.00	2.48	366.4
1052.07	0.00	-1.93	375.0	1052.07	0.00	-1.93	378.0	1052.10	0.00	2.50	386.6
1052.24	-0.01	2.64	424.5	1052.31	0.00	2.71	462.3	1052.41	0.00	2.81	500.0
1052.49	-0.01	2.89	539.6	1052.39	-0.02	2.79	580.8	1052.28	-0.01	-3.72	592.7
1052.15	-0.01	-5.85	603.0	1051.90	-0.02	2.30	617.6	1051.00	-0.02	1.40	651.8
1049.81	-0.01	0.21	683.9	1048.00	0.00	-1.60	715.9	1046.88	0.00	-2.72	748.0
1051.25	0.00	1.65	782.6	1067.30	0.00	0.00	797.7				

$D_s = 2.7'$

Y	V	Y	V	Y	V	Y	V	Y	V	Y	V
235.9	1.84	269.8	3.59	302.0	3.60	334.1	3.51	366.4	3.42	375.0	3.42
378.0	3.41	386.6	3.38	424.5	3.24	462.3	3.16	500.0	3.05	539.6	2.95
580.8	3.01	592.7	3.09	603.0	3.18	617.6	3.34	651.8	3.86	683.9	4.39
715.9	5.05	748.0	5.38	782.6	3.63						

ID
25 SECTION 113.00 TIME = 10.66 HRS WS =1053.13 WIDTH = 553.0

Z	DZ	TDZ	Y	Z	DZ	TDZ	Y	Z	DZ	TDZ	Y
1067.20	0.00	0.00	201.8	1050.54	0.00	1.54	236.6	1050.46	-0.01	1.46	270.8
1050.45	-0.01	1.45	303.3	1050.44	-0.01	1.44	335.9	1050.44	-0.01	1.44	368.4
1050.43	-0.01	1.43	401.0	1050.43	-0.01	-0.87	404.0	1050.42	-0.01	1.42	435.0
1050.41	-0.01	1.41	465.0	1050.41	-0.01	0.41	473.0	1050.41	-0.01	1.41	475.0
1050.41	-0.01	1.41	500.0	1050.41	-0.01	1.41	535.0	1050.42	-0.01	1.42	557.5
1050.42	-0.01	1.42	580.0	1050.43	-0.01	1.43	595.0	1050.43	-0.01	1.43	620.0
1050.44	-0.01	1.44	652.5	1050.45	-0.01	1.45	685.0	1050.46	-0.01	1.46	716.7
1050.46	-0.01	1.46	748.3	1050.54	0.00	1.54	781.6	1067.20	0.00	0.00	798.2

ID
24 SECTION 110.00 TIME = 10.66 HRS WS =1052.41 WIDTH = 550.2

Z	DZ	TDZ	Y	Z	DZ	TDZ	Y	Z	DZ	TDZ	Y
1066.90	0.00	0.00	201.3	1049.67	-0.01	1.27	238.7	1049.67	-0.01	1.27	277.5
1049.66	-0.01	1.26	316.3	1049.66	-0.01	1.26	355.2	1049.65	-0.01	1.25	394.0
1049.65	-0.01	1.25	432.8	1051.62	-0.01	0.62	438.0	1051.62	-0.01	0.62	461.5
1051.62	-0.01	0.62	485.0	1049.64	-0.01	2.64	505.0	1049.64	-0.01	1.24	515.0
1049.65	-0.01	1.25	550.0	1049.65	-0.01	1.25	565.0	1049.65	-0.01	1.25	598.8
1049.66	-0.01	1.26	632.6	1049.66	-0.01	1.26	666.4	1049.66	-0.01	1.26	700.2
1049.67	-0.01	1.27	734.0	1049.67	-0.01	1.27	757.0	1049.67	-0.01	1.27	780.0

1066.90 0.00 0.00 798.5

ID
23 SECTION 109.00 TIME = 10.66 HRS WS =1052.14 WIDTH = 551.9

Z	DZ	TDZ	Y	Z	DZ	TDZ	Y	Z	DZ	TDZ	Y
1066.90	0.00	0.00	201.3	1049.75	0.03	1.55	237.1	1049.65	-0.01	1.45	274.1
1049.65	-0.01	1.45	309.6	1049.64	-0.01	1.44	345.1	1049.64	-0.01	1.44	380.5
1049.64	-0.01	1.44	416.0	1049.63	-0.01	1.43	451.4	1049.63	-0.01	-0.37	455.0
1049.63	-0.01	1.43	480.0	1049.63	-0.01	-0.37	503.0	1049.63	-0.01	-1.37	510.0
1049.63	-0.01	-0.37	515.0	1049.63	-0.01	1.43	518.6	1049.63	-0.01	1.43	555.9
1049.63	-0.01	1.43	593.3	1049.64	-0.01	1.44	630.6	1049.64	-0.01	1.44	668.0
1049.64	-0.01	1.44	705.3	1049.65	-0.01	1.45	742.7	1049.76	0.04	1.56	781.6
1066.90	0.00	0.00	798.7								

ID
22 SECTION 106.00 TIME = 10.66 HRS WS =1051.54 WIDTH = 462.1

Z	DZ	TDZ	Y	Z	DZ	TDZ	Y	Z	DZ	TDZ	Y
1066.40	0.00	0.00	246.4	1048.33	0.01	0.73	283.3	1048.33	0.01	0.73	316.0
1048.33	0.01	0.73	348.0	1048.33	0.01	0.73	380.0	1048.33	0.01	0.73	412.0
1048.33	0.01	0.73	441.3	1048.33	0.01	0.73	470.7	1048.33	0.01	0.73	500.0
1048.33	0.01	0.73	537.0	1048.33	0.01	0.73	574.0	1048.33	0.01	0.73	611.0
1048.33	0.01	0.73	648.0	1048.33	0.01	0.73	685.0	1048.33	0.01	0.73	710.0
1048.33	0.01	0.73	735.5	1066.40	0.00	0.00	753.6				

ID
21 SECTION 103.00 TIME = 10.66 HRS WS =1051.14 WIDTH = 369.6

Z	DZ	TDZ	Y	Z	DZ	TDZ	Y	Z	DZ	TDZ	Y
1065.40	0.00	0.00	292.0	1047.63	-0.02	0.63	329.6	1046.98	0.02	-0.02	349.4
1047.01	0.02	0.01	370.0	1047.00	0.02	0.00	380.0	1047.00	0.02	0.00	382.0
1046.98	0.02	-0.02	418.0	1046.97	0.02	-0.03	454.0	1046.95	0.02	-0.05	490.0
1046.95	0.02	-0.05	500.0	1046.96	0.02	-0.04	526.5	1046.97	0.02	-0.03	553.0
1046.98	0.02	-0.02	579.5	1046.99	0.02	0.00	606.0	1047.01	0.02	0.01	640.0
1046.96	0.02	-0.04	657.0	1046.96	0.02	-0.03	659.0	1047.95	-0.02	0.95	688.2
1065.40	0.00	0.00	708.0								

ID
20 SECTION 100.90 TIME = 10.66 HRS WS =1050.74 WIDTH = 350.0

Z	DZ	TDZ	Y	Z	DZ	TDZ	Y	Z	DZ	TDZ	Y
1063.60	0.00	0.00	308.1	1050.01	0.02	3.41	326.0	1046.54	0.00	-0.06	360.1
1046.53	0.00	-0.07	395.1	1046.52	0.00	-0.08	430.1	1046.52	0.00	-0.08	465.0
1046.51	0.00	-0.09	500.0	1046.52	0.00	-0.08	535.0	1046.52	0.00	-0.08	569.9
1046.53	0.00	-0.07	604.9	1046.54	0.00	-0.06	639.9	1050.01	0.02	3.41	674.0
1063.60	0.00	0.00	691.8								

ID
19 SECTION 99.60 TIME = 10.66 HRS WS =1049.57 WIDTH = 349.6

Z	DZ	TDZ	Y	Z	DZ	TDZ	Y	Z	DZ	TDZ	Y
1063.80	0.00	0.00	325.1	1047.85	0.00	1.65	325.3	1047.73	0.00	1.53	360.1
1047.60	0.00	1.40	395.1	1047.48	0.00	1.28	430.1	1047.35	0.00	1.15	465.0
1047.22	0.00	1.02	500.0	1047.35	0.00	1.15	535.0	1047.48	0.00	1.28	569.9
1047.60	0.00	1.40	604.9	1047.73	0.00	1.53	639.9	1047.85	0.00	1.65	674.8
1063.80	0.00	0.00	675.0								

ID
18 SECTION 99.54 TIME = 10.66 HRS WS =1045.77 WIDTH = 348.9

Z	DZ	TDZ	Y	Z	DZ	TDZ	Y	Z	DZ	TDZ	Y
1063.50	0.00	0.00	325.1	1041.46	0.01	-1.74	325.3	1040.99	0.01	-2.21	360.1
1040.99	0.01	-2.21	395.1	1040.99	0.01	-2.21	430.1	1040.99	0.01	-2.21	465.0
1040.99	0.01	-2.21	500.0	1040.99	0.01	-2.21	535.0	1040.99	0.01	-2.21	569.9
1041.07	0.01	-2.13	604.9	1040.99	0.01	-2.21	639.9	1042.09	0.01	-1.11	674.0
1063.50	0.00	0.00	675.0								

$D_s = 2'$

ID
17 SECTION 97.00 TIME = 10.66 HRS WS =1045.28 WIDTH = 425.6

Z	DZ	TDZ	Y	Z	DZ	TDZ	Y	Z	DZ	TDZ	Y
1057.10	0.00	0.00	260.5	1042.87	0.00	0.27	288.7	1041.09	0.00	-1.51	320.0
1041.15	0.00	-1.45	345.0	1041.50	0.00	-1.10	370.0	1041.63	0.00	-0.97	380.0
1041.87	0.00	-0.73	405.0	1042.04	0.00	-0.56	440.5	1042.19	0.00	-0.41	476.0
1042.20	0.00	-1.80	479.0	1042.29	0.00	-1.51	500.0	1042.40	0.00	-1.50	522.5
1042.50	0.00	-1.50	545.0	1042.54	0.00	-3.46	555.0	1042.56	0.00	-0.04	562.0
1042.63	0.00	0.03	591.3	1042.67	0.00	0.07	620.7	1042.73	0.00	0.13	650.0
1042.87	0.00	0.27	675.0	1043.63	0.01	1.03	703.0	1049.54	0.00	6.94	727.1
1057.10	0.00	0.00	744.5								

$D_s = 1.5'$

Y	V	Y	V	Y	V	Y	V	Y	V	Y	V
288.7	3.62	320.0	4.52	345.0	4.52	370.0	4.39	380.0	4.34	405.0	4.24
440.5	4.19	476.0	4.15	479.0	4.14	500.0	4.12	522.5	4.08	545.0	4.04
555.0	4.03	562.0	4.02	591.3	4.01	620.7	4.02	650.0	4.01	675.0	3.95
703.0	3.43	727.1	0.00								

ID
16 SECTION 94.00 TIME = 10.66 HRS WS =1044.47 WIDTH = 447.5

Z	DZ	TDZ	Y	Z	DZ	TDZ	Y	Z	DZ	TDZ	Y
1056.40	0.00	0.00	260.4	1041.95	0.00	0.15	289.4	1040.96	0.00	-0.84	314.8
1041.15	0.00	-0.65	340.0	1041.22	0.00	-2.78	344.0	1041.48	-0.01	-0.52	359.0
1041.67	0.00	-0.23	380.0	1041.70	0.00	-0.30	405.0	1041.70	0.00	-0.10	406.0
1041.65	0.00	-0.15	437.3	1041.67	0.00	-0.13	468.7	1041.70	0.00	-0.10	500.0
1041.73	0.00	-0.07	535.0	1041.75	0.00	-0.05	570.0	1041.77	0.00	-0.03	605.0
1041.79	0.00	-0.01	640.0	1041.85	0.00	0.05	680.0	1041.98	0.00	0.18	705.0
1043.03	0.01	1.23	730.3	1056.40	0.00	0.00	744.6				

Y	V	Y	V	Y	V	Y	V	Y	V	Y	V
289.4	3.97	314.8	4.54	340.0	4.46	344.0	4.43	359.0	4.30	380.0	4.21
405.0	4.21	406.0	4.21	437.3	4.27	468.7	4.28	500.0	4.29	535.0	4.31
570.0	4.34	605.0	4.36	640.0	4.38	680.0	4.39	705.0	4.33	730.3	3.52

ID
15 SECTION 89.00 TIME = 10.66 HRS WS =1043.01 WIDTH = 439.1

Z	DZ	TDZ	Y	Z	DZ	TDZ	Y	Z	DZ	TDZ	Y
1055.40	0.00	0.00	260.0	1042.13	0.01	1.73	291.2	1040.04	0.00	-0.36	320.0
1040.04	0.00	-0.36	323.2	1040.56	0.00	-0.37	352.1	1041.10	0.00	-0.37	381.1
1041.64	0.00	-0.37	410.0	1039.90	0.00	-0.50	413.2	1039.86	0.00	-0.54	442.1
1039.82	0.00	-0.58	471.1	1039.78	0.00	-0.62	500.0	1039.82	0.00	-0.58	530.0
1039.86	0.00	-0.54	560.0	1039.90	0.00	-0.50	590.0	1039.95	0.00	-0.45	620.0
1040.00	0.00	-0.40	655.0	1040.06	0.00	-0.34	690.0	1040.10	0.01	-0.30	710.0
1043.04	0.00	2.64	728.3	1055.40	0.00	0.00	745.0				

ID
14 SECTION 87.00 TIME = 10.66 HRS WS =1042.55 WIDTH = 448.6

Z	DZ	TDZ	Y	Z	DZ	TDZ	Y	Z	DZ	TDZ	Y

1055.00	0.00	0.00	259.8	1039.93	0.00	0.13	289.7	1039.58	0.00	-0.22	323.2
1039.53	0.00	-0.27	356.1	1039.49	0.00	-0.31	389.1	1039.49	0.00	-0.32	422.0
1039.48	0.00	-0.32	455.0	1039.48	0.00	-0.32	470.0	1039.48	0.00	-0.32	507.5
1039.49	0.00	-0.31	545.0	1039.49	0.00	-0.31	560.0	1039.53	0.00	-0.27	585.0
1039.57	0.00	-0.23	610.0	1039.60	0.00	-0.20	630.0	1039.63	0.00	-0.17	650.0
1039.68	0.00	-0.12	680.0	1039.72	0.00	-0.08	705.0	1039.91	0.00	0.11	730.5
1055.00	0.00	0.00	745.2								

ID
13 SECTION 84.00 TIME = 10.66 HRS WS =1041.87 WIDTH = 448.0

Z	DZ	TDZ	Y	Z	DZ	TDZ	Y	Z	DZ	TDZ	Y
1054.50	0.00	0.00	259.5	1039.08	0.00	0.08	290.4	1038.87	0.00	-0.13	320.0
1038.52	0.00	1.52	325.0	1038.52	0.00	1.52	355.0	1038.86	0.00	-0.14	360.0
1038.87	0.00	-0.13	375.0	1038.87	0.00	-0.13	385.0	1038.88	0.00	-0.13	395.0
1038.88	0.00	-0.12	415.0	1038.90	0.00	-0.10	450.0	1038.91	0.00	-0.09	475.0
1038.92	0.00	-0.08	500.0	1038.94	0.00	-0.06	530.0	1038.95	0.00	-0.05	561.7
1038.97	0.00	-0.03	593.3	1038.98	0.00	-0.02	625.0	1038.88	0.00	-0.62	626.0
1038.99	0.00	-0.01	639.0	1039.00	0.00	0.00	651.0	1039.01	0.00	0.01	688.0
1039.01	0.00	0.01	690.0	1039.08	0.00	0.08	730.1	1054.50	0.00	0.00	745.4

ID
12 SECTION 81.00 TIME = 10.66 HRS WS =1041.22 WIDTH = 448.9

Z	DZ	TDZ	Y	Z	DZ	TDZ	Y	Z	DZ	TDZ	Y
1054.00	0.00	0.00	259.0	1038.26	0.00	0.25	289.8	1038.20	0.00	0.20	291.0
1038.19	0.00	0.19	320.0	1038.17	0.00	0.17	355.0	1038.15	0.00	0.15	390.0
1038.14	0.00	0.14	400.0	1038.12	0.00	0.12	440.0	1038.12	0.00	0.12	450.0
1038.11	0.00	0.11	460.0	1038.13	0.00	0.13	490.0	1038.14	0.00	0.14	520.0
1038.16	0.00	0.16	550.0	1038.17	0.00	0.17	565.0	1038.18	0.00	0.18	588.0
1038.40	0.00	-1.60	626.0	1038.20	0.00	-0.80	634.0	1038.22	0.00	0.21	650.0
1038.23	0.00	0.23	676.7	1038.24	0.00	0.24	703.3	1038.28	0.00	0.28	730.2
1054.00	0.00	0.00	745.0								

ID
11 SECTION 78.00 TIME = 10.66 HRS WS =1040.56 WIDTH = 448.2

Z	DZ	TDZ	Y	Z	DZ	TDZ	Y	Z	DZ	TDZ	Y
1053.50	0.00	0.00	258.9	1037.51	0.01	0.11	291.1	1037.47	0.00	0.07	320.0
1037.46	0.00	0.06	355.0	1037.45	0.00	0.05	370.0	1037.44	0.00	0.04	390.0
1037.43	0.00	0.03	415.0	1037.43	0.00	0.03	430.0	1037.41	0.00	0.01	460.0
1037.41	0.00	0.01	475.0	1037.40	0.00	0.00	500.0	1037.41	0.00	0.01	528.0
1037.42	0.00	0.02	546.8	1039.02	0.00	0.02	550.0	1038.02	0.00	0.02	560.0
1037.44	0.00	0.04	595.0	1037.44	0.00	0.04	606.0	1037.45	0.00	0.05	629.8
1038.55	0.00	0.05	632.0	1038.06	0.00	0.06	653.0	1037.87	0.00	0.07	680.0
1037.48	0.00	0.07	681.0	1037.49	0.00	0.09	705.5	1037.51	0.01	0.11	730.0
1053.50	0.00	0.00	746.1								

ID
10 SECTION 75.00 TIME = 10.66 HRS WS =1039.96 WIDTH = 417.4

Z	DZ	TDZ	Y	Z	DZ	TDZ	Y	Z	DZ	TDZ	Y
1053.10	0.00	0.00	258.4	1036.62	0.00	0.12	291.6	1036.54	0.00	0.04	326.1
1036.54	0.00	0.04	360.5	1036.54	0.00	0.04	395.0	1036.54	0.00	0.04	405.0
1036.54	0.00	0.04	432.5	1036.54	0.00	0.04	460.0	1036.54	0.00	0.04	465.0
1036.54	0.00	0.04	470.0	1036.54	0.00	0.04	503.0	1036.54	0.00	0.04	536.0
1036.54	0.00	0.04	569.0	1036.54	0.00	0.04	602.0	1036.54	0.00	0.04	635.0
1040.02	0.00	0.02	660.0	1040.04	0.00	0.04	690.5	1036.55	0.00	0.05	697.5
1036.62	0.00	0.12	730.0	1053.10	0.00	0.00	746.6				

ID
9 SECTION 71.00 TIME = 10.66 HRS WS =1039.23 WIDTH = 419.5

Z	DZ	TDZ	Y	Z	DZ	TDZ	Y	Z	DZ	TDZ	Y
1051.50	0.00	0.00	258.5	1035.45	0.00	0.45	291.3	1035.45	0.00	0.45	310.0
1035.45	0.00	-0.55	342.0	1039.41	0.00	-0.59	352.0	1039.43	0.00	-0.57	372.0
1038.97	0.00	-0.53	396.0	1038.51	0.00	-0.49	420.0	1035.56	0.00	-0.44	425.0
1035.59	0.00	-0.41	445.0	1035.61	0.00	-0.39	460.0	1035.45	0.00	0.05	470.0
1035.45	0.00	0.05	497.5	1035.45	0.00	0.05	525.0	1036.69	0.00	-0.31	535.0
1035.45	0.00	0.05	545.0	1035.45	0.00	0.05	582.0	1035.45	0.00	0.05	619.0
1035.49	0.00	0.09	656.0	1035.54	0.00	0.14	693.0	1035.62	0.00	0.22	730.2
1051.50	0.00	0.00	746.1								

ID
8 SECTION 66.00 TIME = 10.66 HRS WS =1038.43 WIDTH = 449.3

Z	DZ	TDZ	Y	Z	DZ	TDZ	Y	Z	DZ	TDZ	Y
1051.80	0.00	0.00	257.2	1035.47	0.00	1.47	291.3	1035.00	0.00	1.00	327.5
1035.04	0.00	1.04	362.3	1035.01	0.00	1.01	397.0	1035.02	0.00	-0.98	399.0
1034.96	0.00	-0.64	430.0	1034.99	0.00	-1.01	470.0	1034.96	0.00	-3.04	510.0
1034.93	0.00	-3.07	527.0	1035.05	0.00	0.04	531.0	1035.06	0.00	0.05	565.7
1035.09	0.00	0.09	600.5	1035.13	0.00	0.13	635.2	1035.17	0.00	0.17	670.0
1035.14	0.00	-2.86	676.0	1035.39	0.00	1.39	692.0	1035.48	0.01	1.48	731.5
1051.80	0.00	0.00	747.8								

ID
7 SECTION 62.00 TIME = 10.66 HRS WS =1037.91 WIDTH = 392.2

Z	DZ	TDZ	Y	Z	DZ	TDZ	Y	Z	DZ	TDZ	Y
1050.40	0.00	0.00	256.6	1032.95	0.01	0.05	292.6	1031.46	0.01	-1.44	321.7
1031.38	0.01	-1.51	351.8	1031.32	0.01	-1.59	381.9	1031.29	0.01	-1.61	412.0
1036.58	0.00	-1.42	422.0	1036.36	0.00	-1.39	445.0	1036.15	0.00	-1.35	468.0
1035.46	0.00	-1.34	500.0	1034.68	0.00	-1.32	531.0	1033.97	0.00	-1.33	550.0
1034.89	0.00	-1.11	580.0	1037.20	0.00	-0.80	600.0	1038.38	0.00	-0.62	627.0
1031.93	0.01	-0.97	639.0	1032.03	0.01	-0.87	662.5	1036.00	0.00	3.10	683.7
1050.40	0.00	0.00	703.5								

ID
6 SECTION 58.12 TIME = 10.66 HRS WS =1037.61 WIDTH = 379.2

Z	DZ	TDZ	Y	Z	DZ	TDZ	Y	Z	DZ	TDZ	Y
1049.10	0.00	0.00	758.0	1032.12	0.00	0.02	774.9	1031.05	0.00	-1.05	812.5
1031.05	0.00	-1.05	850.0	1031.05	0.00	-1.05	887.5	1031.13	0.00	-0.97	925.0
1031.23	0.00	-0.87	962.5	1031.34	0.00	-0.75	1000.0	1031.37	0.00	-0.73	1009.0
1035.79	0.00	-0.81	1018.0	1035.71	0.00	-0.69	1048.7	1035.63	0.00	-0.57	1079.3
1035.56	0.00	-0.44	1110.0	1035.64	0.00	-0.36	1126.0	1037.42	-0.01	-0.57	1148.2
1039.93	0.00	-0.07	1154.0	1049.00	0.00	0.00	1163.0				

ID
5 SECTION 55.00 TIME = 10.66 HRS WS =1037.12 WIDTH = 444.9

Z	DZ	TDZ	Y	Z	DZ	TDZ	Y	Z	DZ	TDZ	Y
1047.00	0.00	0.00	260.0	1031.91	0.00	0.01	290.0	1030.46	0.00	$\boxed{-1.44}$	322.0
1030.46	0.00	-1.44	354.0	1030.46	0.00	-1.44	386.0	1031.25	0.00	-0.65	418.0
1032.60	0.00	0.70	450.0	1033.42	0.00	-3.18	472.0	1034.12	0.00	-2.09	500.0
1034.44	0.00	-1.56	525.0	1034.58	0.00	-1.08	559.5	1034.50	0.00	-0.80	594.0
1034.32	0.00	-0.63	628.5	1034.12	0.00	-0.48	663.0	1034.05	0.00	-0.40	689.5
1035.68	0.00	1.38	716.0	1037.62	0.00	1.92	727.5	1047.00	0.00	0.00	741.3

$D_5 = 1.5'$

Y	V	Y	V	Y	V	Y	V	Y	V	Y	V
290.0	3.13	322.0	3.44	354.0	3.43	386.0	3.43	418.0	3.26	450.0	2.93
472.0	2.71	500.0	2.49	525.0	2.38	559.5	2.33	594.0	2.35	628.5	2.41

663.0 2.47 689.5 2.48 716.0 1.85 727.5 0.00

ID
4 SECTION 51.50 TIME = 10.66 HRS WS =1036.81 WIDTH = 499.9

Z	DZ	TDZ	Y	Z	DZ	TDZ	Y	Z	DZ	TDZ	Y
1045.70	0.00	0.00	760.8	1031.36	0.00	-0.04	789.4	1030.44	0.00	-0.96	818.9
1030.47	0.00	-0.93	848.3	1030.51	0.00	-0.89	877.8	1032.87	0.00	-1.13	883.0
1032.92	0.00	-1.08	907.0	1032.97	0.00	-1.03	934.5	1033.02	0.00	-0.98	962.0
1033.06	0.00	-0.94	985.0	1032.98	0.00	-0.92	1000.0	1033.08	0.00	-0.87	1021.0
1033.17	0.00	-0.83	1042.0	1033.52	0.00	-0.74	1074.6	1033.86	0.00	-0.66	1107.2
1034.21	0.00	-0.57	1139.8	1034.55	0.00	-0.49	1172.4	1034.89	0.00	-0.41	1205.0
1035.20	0.00	-0.34	1236.7	1035.34	0.00	-0.43	1268.4	1039.89	0.00	3.89	1299.4
1040.04	0.00	0.04	1299.6	1045.70	0.00	0.00	1309.7				

ID
3 SECTION 47.00 TIME = 10.66 HRS WS =1036.19 WIDTH = 690.0

Z	DZ	TDZ	Y	Z	DZ	TDZ	Y	Z	DZ	TDZ	Y
1045.00	0.00	0.00	596.0	1031.31	0.00	0.31	624.0	1031.21	0.00	0.21	653.0
1031.22	0.00	0.22	682.0	1034.02	0.00	0.02	690.0	1034.04	0.00	0.04	726.2
1034.06	0.00	0.06	762.5	1034.08	0.00	0.08	798.7	1034.11	0.00	0.11	835.0
1033.90	0.00	0.12	868.0	1033.70	0.00	0.14	901.0	1033.49	0.00	0.15	934.0
1033.29	0.00	0.17	967.0	1033.09	0.00	0.19	1000.0	1033.34	0.00	0.22	1036.8
1033.59	0.00	0.25	1073.6	1033.84	0.00	0.28	1110.4	1034.09	0.00	0.31	1147.2
1034.34	0.00	0.34	1184.0	1034.34	0.00	0.34	1194.0	1034.77	0.00	0.37	1229.5
1035.19	0.00	0.39	1265.0	1035.75	0.00	0.55	1300.4	1039.85	0.00	4.25	1333.7
1044.01	0.00	0.01	1356.0	1045.00	0.00	0.00	1357.0				

ID
2 SECTION 44.00 TIME = 10.66 HRS WS =1035.38 WIDTH = 789.1

Z	DZ	TDZ	Y	Z	DZ	TDZ	Y	Z	DZ	TDZ	Y
1044.90	0.00	0.00	9485.8	1031.63	-0.01	0.88	9514.1	1032.03	-0.01	0.87	9551.1
1032.45	-0.01	0.86	9588.0	1032.86	-0.01	0.86	9625.0	1032.87	0.00	0.87	9657.0
1032.88	0.00	0.88	9689.0	1032.88	0.00	0.88	9721.0	1032.89	0.00	0.89	9753.0
1033.55	0.00	0.88	9789.7	1034.20	0.00	0.87	9826.3	1034.85	0.00	0.85	9863.0
1034.37	0.00	0.87	9894.2	1033.89	0.00	0.89	9925.5	1033.42	0.00	0.91	9956.7
1032.94	0.00	0.94	9988.0	1032.94	0.00	0.94	10010.5	1032.94	0.00	0.95	10033.0
1033.27	0.00	0.94	10066.3	1033.60	0.00	0.93	10099.7	1033.93	0.00	0.93	10133.0
1034.25	0.00	0.92	10166.3	1034.57	0.00	0.91	10199.7	1034.89	0.00	0.89	10233.0
1035.15	0.00	0.88	10265.2	1035.40	0.00	0.87	10297.5	1035.65	0.00	0.86	10329.7
1035.90	0.00	0.84	10362.0	1044.00	0.00	0.00	10383.0	1045.10	0.00	0.00	10384.1

ID
1 SECTION 39.00 TIME = 10.66 HRS WS =1033.97 WIDTH = 783.5

Z	DZ	TDZ	Y	Z	DZ	TDZ	Y	Z	DZ	TDZ	Y
1038.00	0.00	0.00	9531.0	1042.08	0.00	0.08	9546.0	1042.55	0.00	0.05	9586.0
1036.34	0.00	0.34	9593.0	1032.47	0.00	0.47	9606.0	1028.48	-0.01	0.48	9646.0
1028.99	-0.01	0.49	9676.0	1029.50	-0.01	0.50	9706.0	1030.01	-0.01	0.51	9736.0
1030.51	0.00	0.51	9766.0	1030.52	0.00	0.52	9792.7	1030.52	0.00	0.52	9819.3
1030.53	0.00	0.53	9846.0	1032.50	0.00	0.50	9868.5	1034.45	0.00	0.45	9891.0
1033.65	0.00	0.48	9918.3	1032.84	0.00	0.51	9945.7	1032.03	0.00	0.53	9973.0
1032.16	0.00	0.54	10012.3	1032.30	0.00	0.54	10051.6	1032.43	0.00	0.54	10090.9
1032.56	0.00	0.55	10130.2	1032.69	0.00	0.55	10169.5	1032.82	0.00	0.55	10208.9
1032.94	0.00	0.55	10248.2	1033.07	0.00	0.55	10287.5	1033.20	0.00	0.56	10326.8
1033.33	0.00	0.56	10366.1	1033.46	0.00	0.55	10405.4	1043.20	0.00	0.00	10426.0

********** SECTION 116.000 : FN = NRST8A.0 **********

T= 0.00 Q= 0.

T= 6.32 Q= 68831.

T= 10.66 Q= 5441.

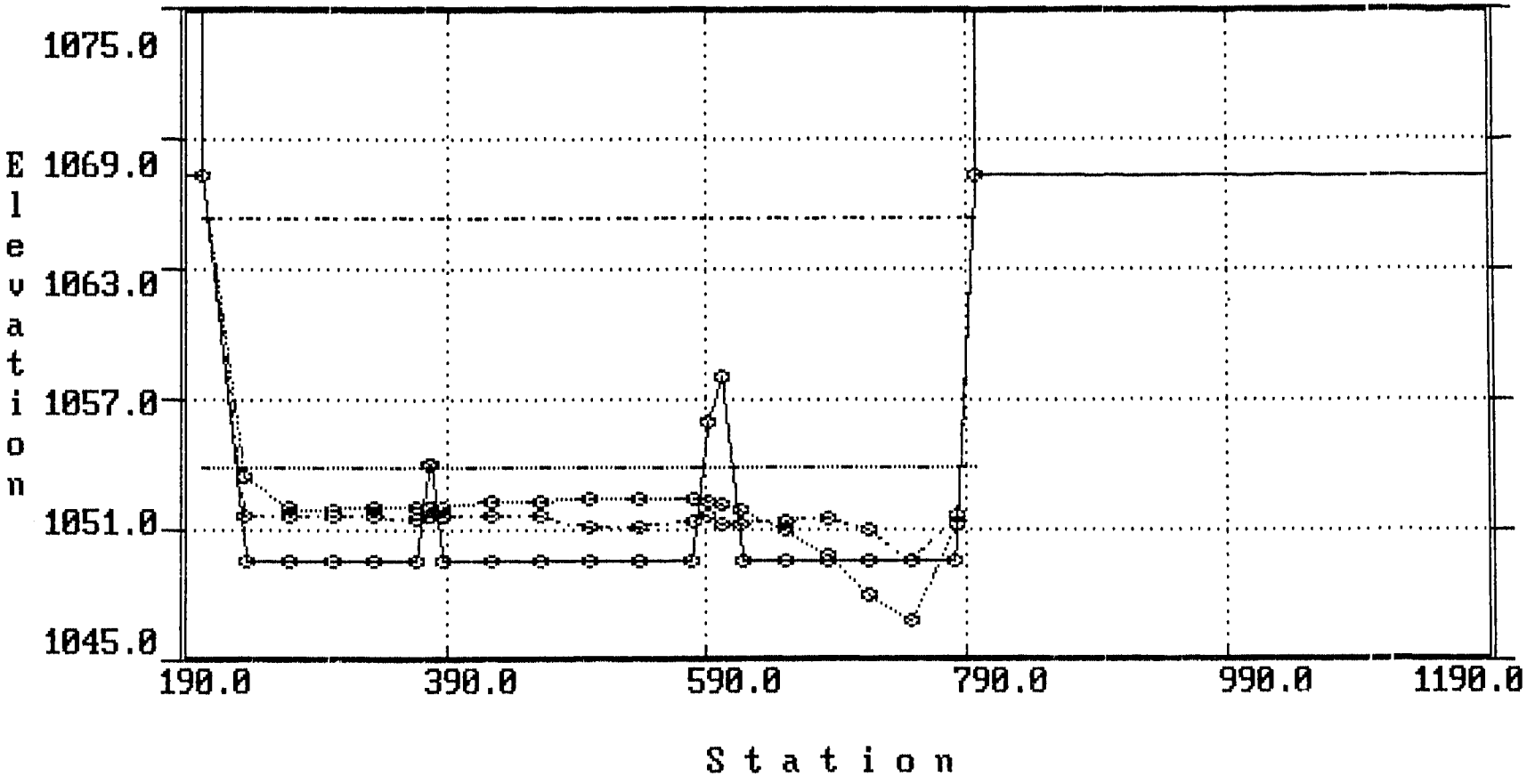

********** SECTION 150.000 : FN = NRST8A.0 **********

T= 0.00 Q= 0.

T= 6.32 Q= 68831.

T= 10.66 Q= 5441.

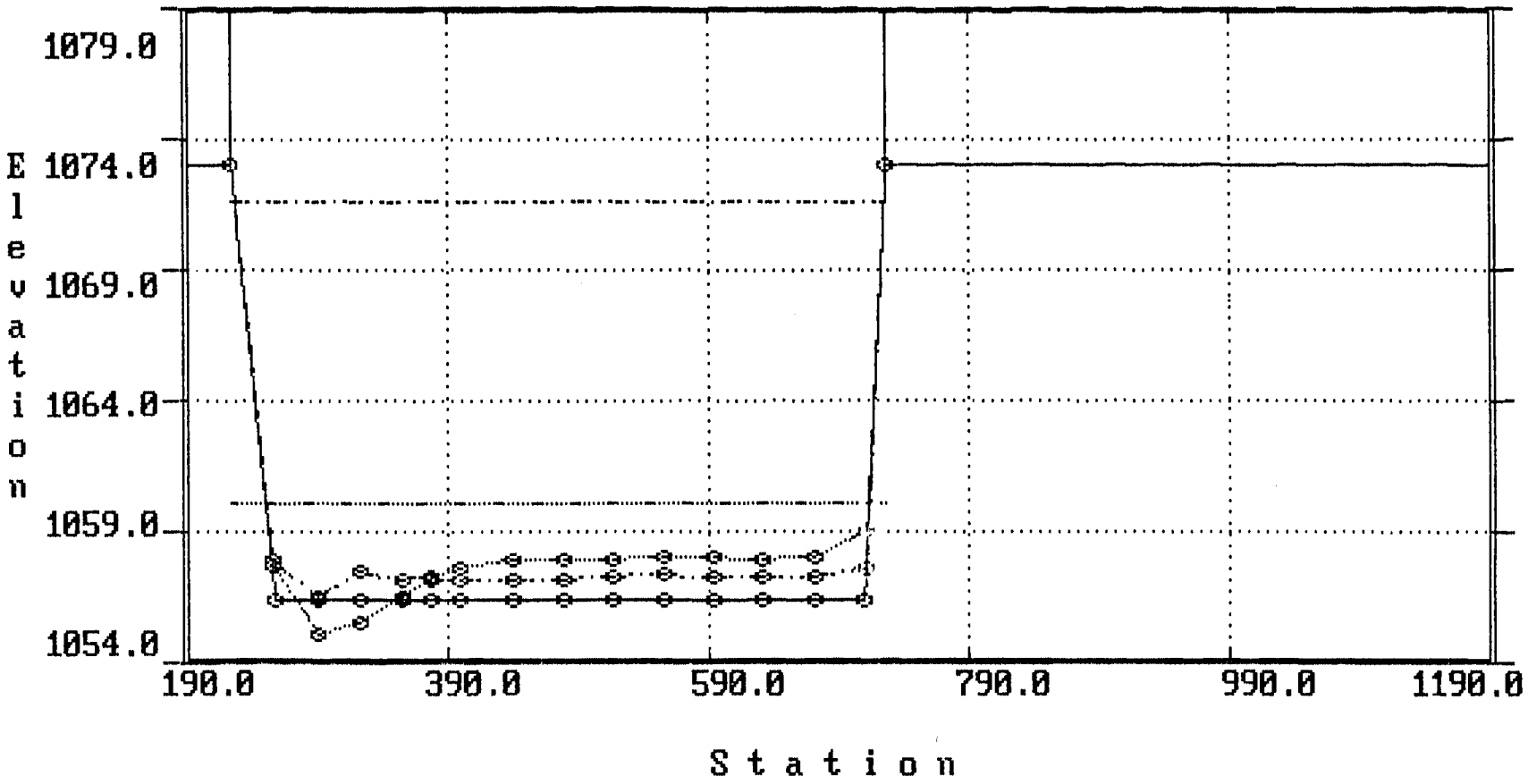

********** SECTION 155.000 : FN = NRST8A.0 **********

T= 0.00 Q= 0.

T= 6.32 Q= 68831.

T= 10.66 Q= 5441.

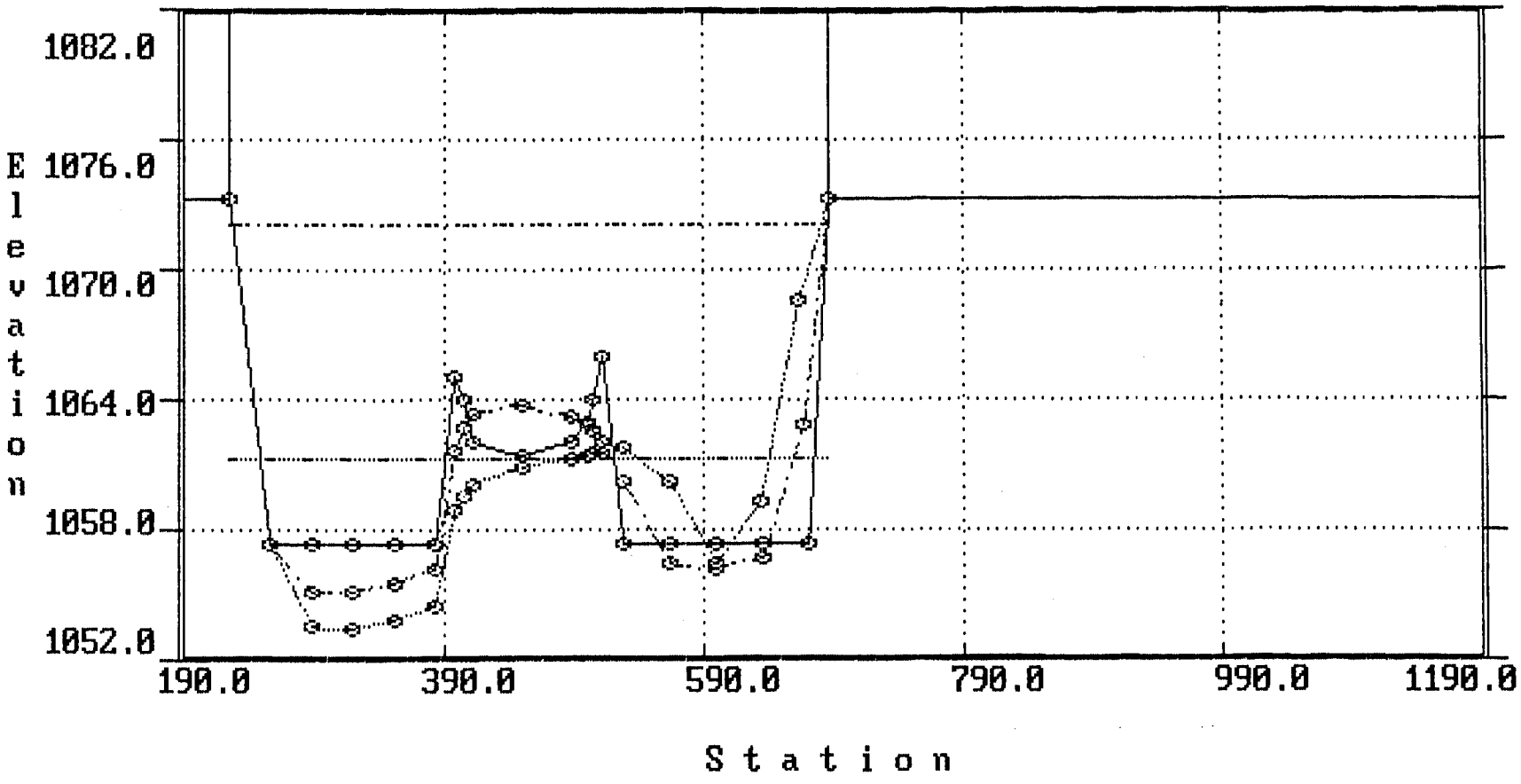

********** SECTION 238.660 : FN = NRST8A.0 **********

T= 0.00 Q= 0.

T= 6.32 Q= 68831.

T= 10.66 Q= 5441.

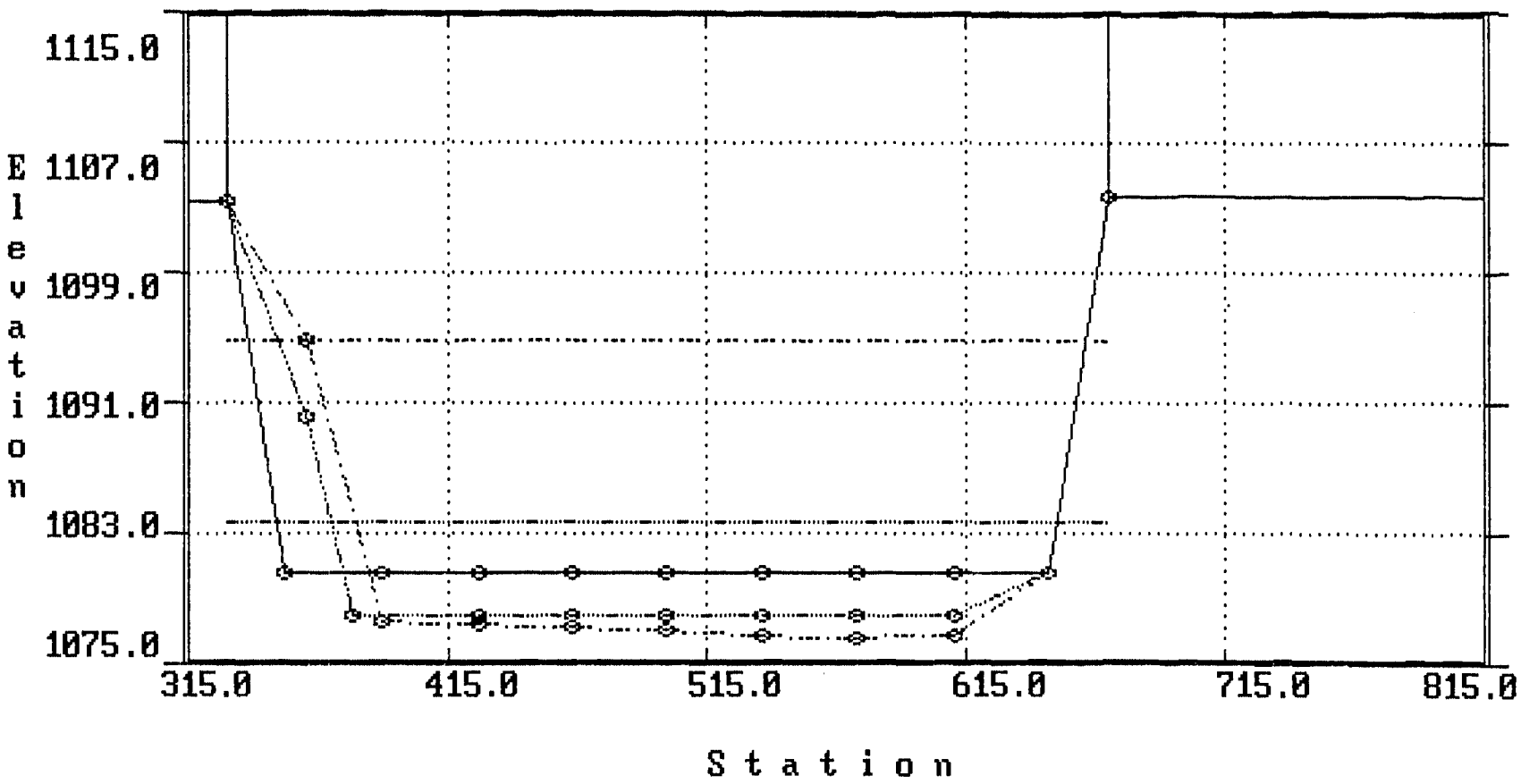

********** VEL.(fps) & FROUDE NO. vs DISTANCE(mi): FN = NRST8A.0 **********

T= 6.32 Q= 68831. -·-·-·-·-·-

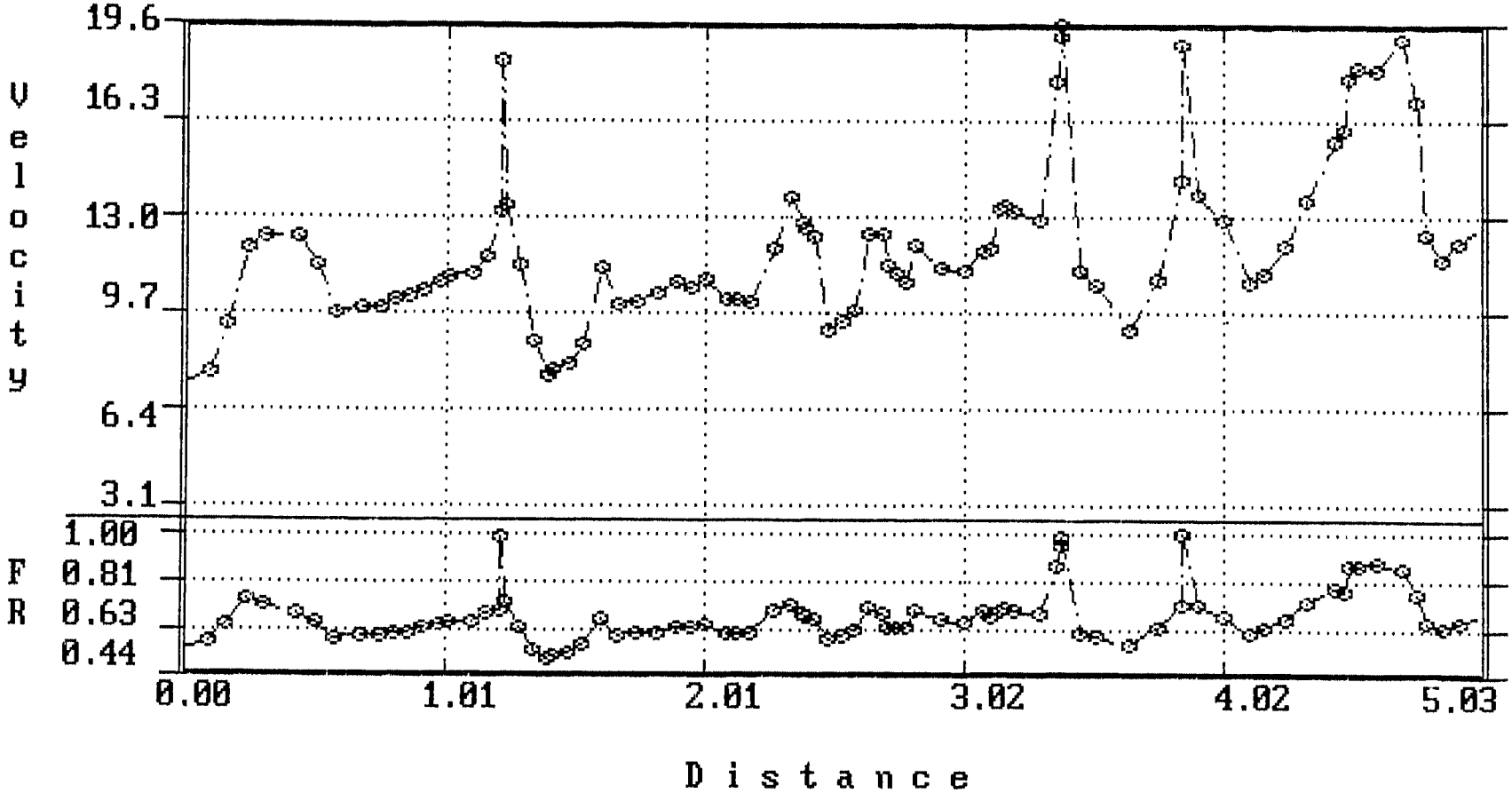

***** ***** WS ELEV. & BED ELEV. vs DISTANCE(mi) : FN = NRST8A.O *********

T= 0.50 Q= 8900.

T= 6.32 Q= 68831.

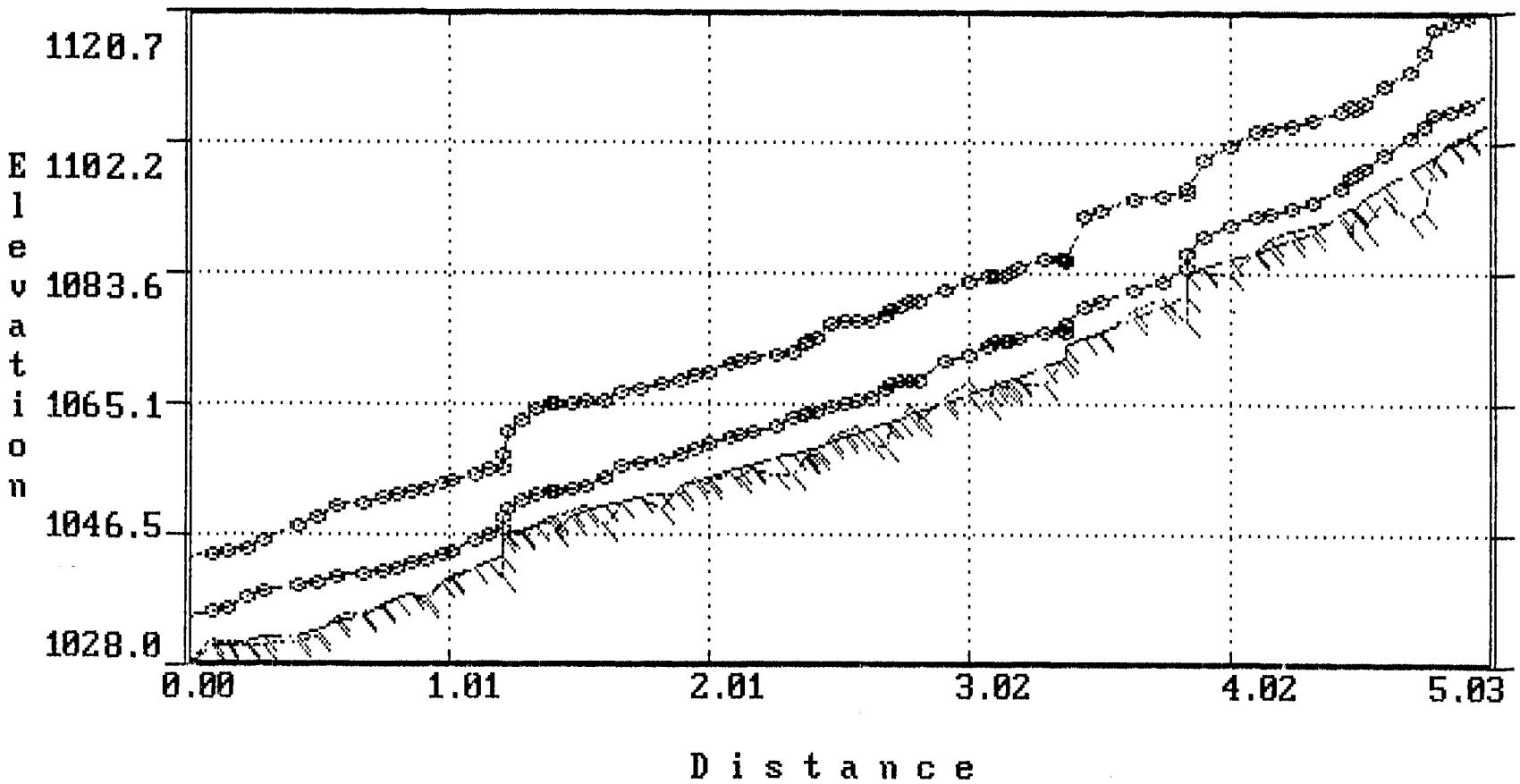

********** SED. YIELD (10^3 CY) vs DISTANCE(mi) : FN = NRST8A.0 **********

T= 0.50 Q= 8900.
T= 4.17 Q= 18450.
T= 6.32 Q= 68831.
T= 6.62 Q= 66194.
T= 9.66 Q= 21678.
T= 10.66 Q= 5441.

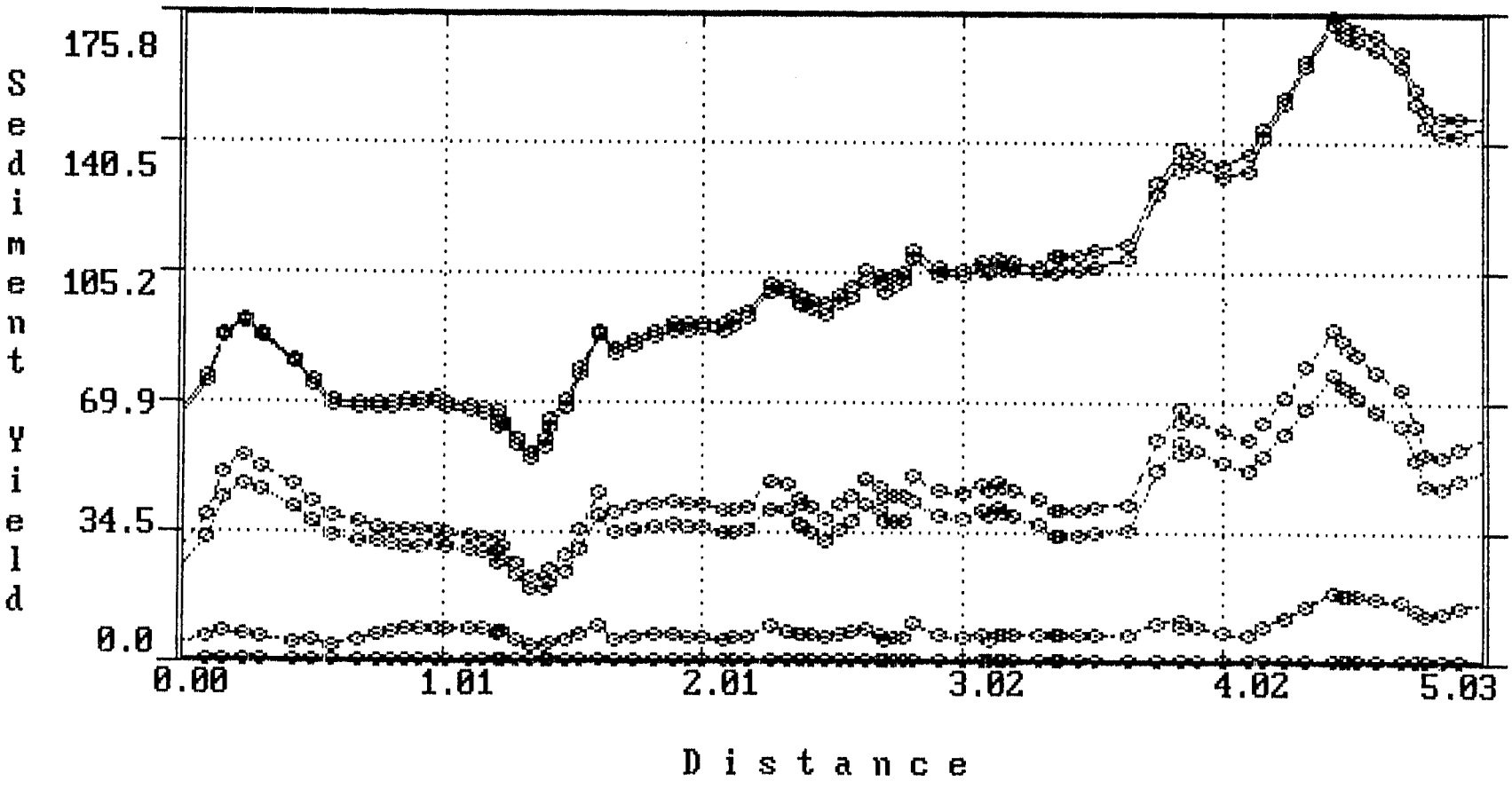

********** SECTION 99.540 : FN = NRST8A.0 **********

T= 0.00 Q= 0.

T= 6.32 Q= 68831.

T= 10.66 Q= 5441.

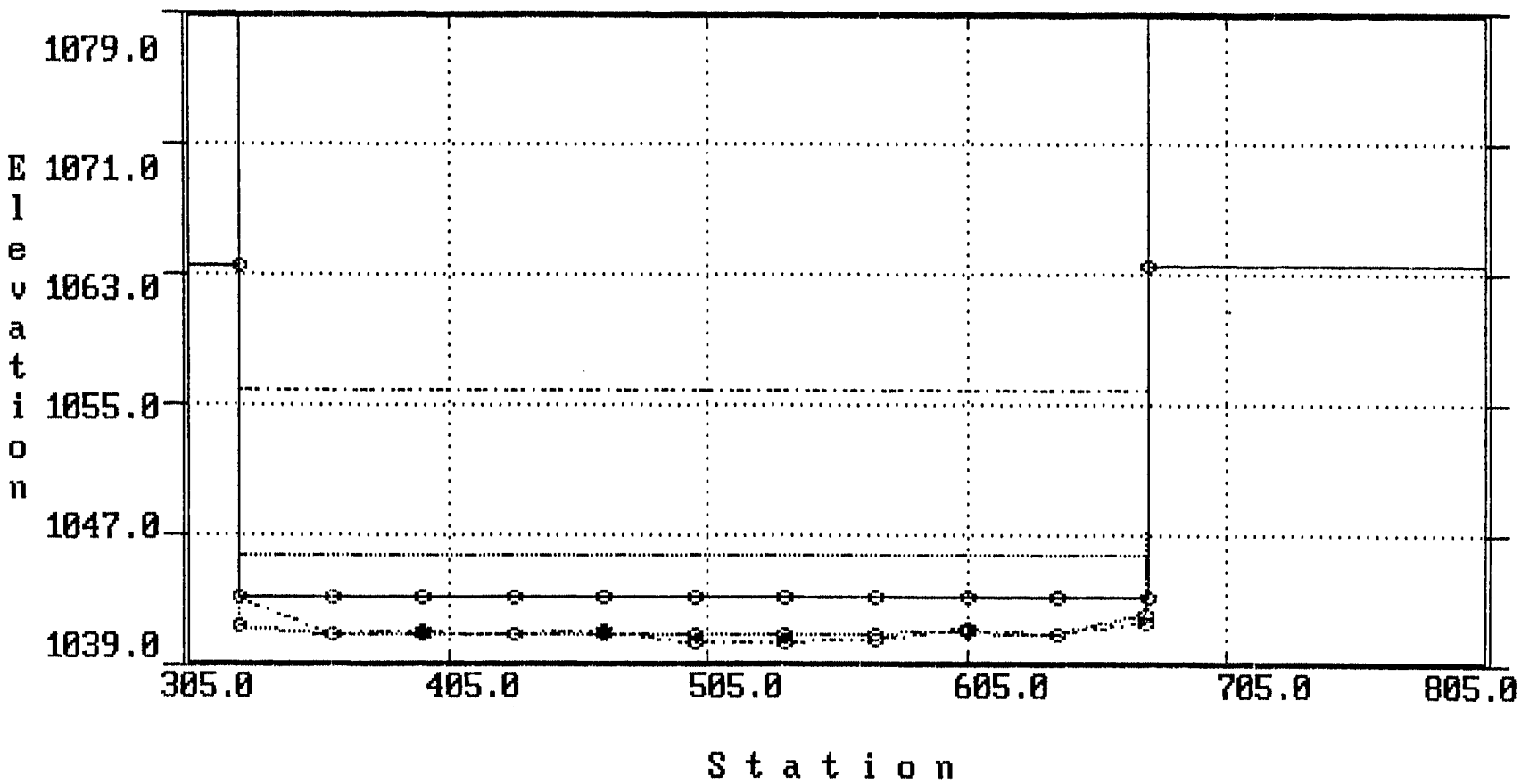

COE & VAN LOO
PLANNING • ENGINEERING
LANDSCAPE ARCHITECTURE

Project NEW RIVER CHANNELIZATION
Project No. 1090-060
Sheet No. 1 of 8
Calculated by SWU Date 10/25/91
Checked by _____ Date _____

SUPERELEVATION CALCULATIONS

• FLOW CHARACTERISTICS (FROM HEC-2 - 10/9/91)

STA	VELOCITY (fps)	FLOW WIDTH	RADIUS	C	Δy (ft.)
94.00	11.03	481.31	1125.67	0.5	0.81 ✓
116.00	7.86	590.08	1078.21	0.5	0.53 ✓
120.00	12.18	467.79	1078.21	0.5	1.00 ✓
147.00	10.05	469.55	1709.76	0.5	0.43 ✓
150.00	9.37	499.77	1709.76	0.5	0.40
197.00	11.72	466.67	3556.73	0.5	0.28 ✓
301.00	13.04	346.07	3556.73	0.5	0.26

$$\Delta Y = \frac{C V^2 W}{g R}$$ per C.O.E. : EM 1110-2-1601 July 1970

V = velocity (fps)
W = Top width (ft)
R = Radius (ft)
g = gravity (32.2 ft/s²)

COE & VAN LOO
PLANNING • ENGINEERING
LANDSCAPE ARCHITECTURE

Project New River Channelization
Project No. 1090-060
Sheet No. 2 of 8
Calculated by DWD Date 11-24-91
Checked by _____ Date _____

Bend Scour Computations:

$$\Delta Z_{bs} = \frac{0.685\, Y V^{0.8}}{Y_h^{0.4}\, S_e^{0.3}} \left[2.1 \left[\frac{\sin^2(\alpha/2)}{\cos \alpha} \right]^{0.2} - 1 \right] \qquad Eq(1)$$

$$\frac{\sin^2(\alpha/2)}{\cos \alpha} = \frac{W}{4 r_c} \quad \text{(For Circular Curves)} \qquad Eq(2)$$

∴ Substituting Eq(2) into Eq(1):

$$\therefore \Delta Z_{bs} = \frac{0.685\, Y V^{0.8}}{Y_h^{0.4}\, S_e^{0.3}} \left[2.1 \left(\frac{W}{4 r_c} \right)^{0.2} - 1 \right] \qquad Eq(3)$$

Where

ΔZ_{bs} = Bend Scour Depth (ft)
Y = Maximum Depth of U/S Flow (ft)
Y_h = Hydraulic Depth of U/S Flow (ft)
S_e = Upstream Energy Slope (ft/ft)
α = Angle formed by the projection the ℄ to a pt. which meets a line tangent to the outer bank (degrees)
V = mean velocity of U/S flow (fps)
W = Topwidth (ft)
r_c = radius of curvature along centerline (ft)

Source: ADWR, "Design Manual for Engineering Analysis of Fluvial Systems," Prepared by Simons, Li & Assoc. Inc., Project# AZ DWR-05, March 1985.

COE & VAN LOO
PLANNING • ENGINEERING
LANDSCAPE ARCHITECTURE

Project New River
Project No. 1090-060
Sheet No. 3 of 8
Calculated by JWD Date 11/91
Checked by _____ Date _____

Longitudinal Distance of Secondary Currents:

$$X = 2.3 \left(\frac{C}{\sqrt{g}}\right) Y \qquad \text{Eq (4)}$$

$$C = \frac{1.486}{n} R^{1/6} \qquad \text{Eq (5)}$$

$$\therefore \; X = 2.3 \left(\frac{1.486}{n\, g^{.5}} R^{1/6}\right) Y \qquad \text{Eq (6)}$$

X = distance from end of curve (P.T.) to the D/S point where secondary currents are negligible (ft)

C = Chezy Coef.
g = 32.2 ft/s²
Y = Max. Depth of Flow (ft)

Source: (ADWR, 1985)

NEW RIVER CHANNELIZATION: BEND SCOUR CALCULATIONS
DESIGN EVENT: SPF Q = 69,000 cfs

BEND SCOUR DEPTH

CURVE	STA	MEAN V (fps)	Ymax (ft)	AREA (sq ft)	TOPWIDTH (ft)	HYD DEPTH (ft)	SLOPE (ft/ft)	RADIUS (ft)	SCOUR (ft)
1	58.12	12.4	15.9	5562.1	402.9	13.8	0.0027	3914.4	0.17
2	99.60	18.6	10.6	3711.5	349.8	10.6	0.0045	1125.6	3.85
3	120.00	12.2	14.8	5663.2	467.8	12.1	0.0031	1078.7	5.44
4	158.00	14.3	14.7	4822.3	350.5	13.8	0.0036	1709.8	2.55
5	199.00	10.7	16.5	6457.7	407.1	15.9	0.0017	3556.7	0.54

"X": Distance from the end of channel curvature to the D/S point at whch secondary currents have dissipated

CURVE	APPROX. PERIMETER (ft)	MANNING n-VALUE	HYDRAULIC RADIUS (ft)	CHEZY COEF.	X (ft)
1	434.7	0.035	12.8	64.9	418.2
2	371.0	0.035	10.0	62.3	267.8
3	497.4	0.035	11.4	63.7	382.0
4	379.9	0.035	12.7	64.8	385.8
5	440.1	0.035	14.7	66.4	445.1

4/8

COE & VAN LOO
PLANNING • ENGINEERING
LANDSCAPE ARCHITECTURE

Project New River
Project No. 1090-060
Sheet No. 5 of 8
Calculated by DWD Date 11/92
Checked by _____ Date _____

Scour @ Drop Structures

$$D_s = \left(1.32\, H^{.225}\, q^{0.54}\right) - T_w \qquad Eq(7)$$

D_s = Depth of local scour (ft)

H = U/s energy gradient elevation − D/s energy gradient elev.
= $Egl_u - Egl_D$ (ft)

q = unit discharge (cfs/ft)

T_w = Tail water Depth (ft)

Source: Bureau of Reclamation, Design of Small Dams, U.S. Department of Interior, 1987.

COE & VAN LOO
PLANNING • ENGINEERING
LANDSCAPE ARCHITECTURE

Project New River Channelization
Project No. 1090-060
Sheet No. 6 of 8
Calculated by DWD Date 11/91
Checked by _____ Date _____

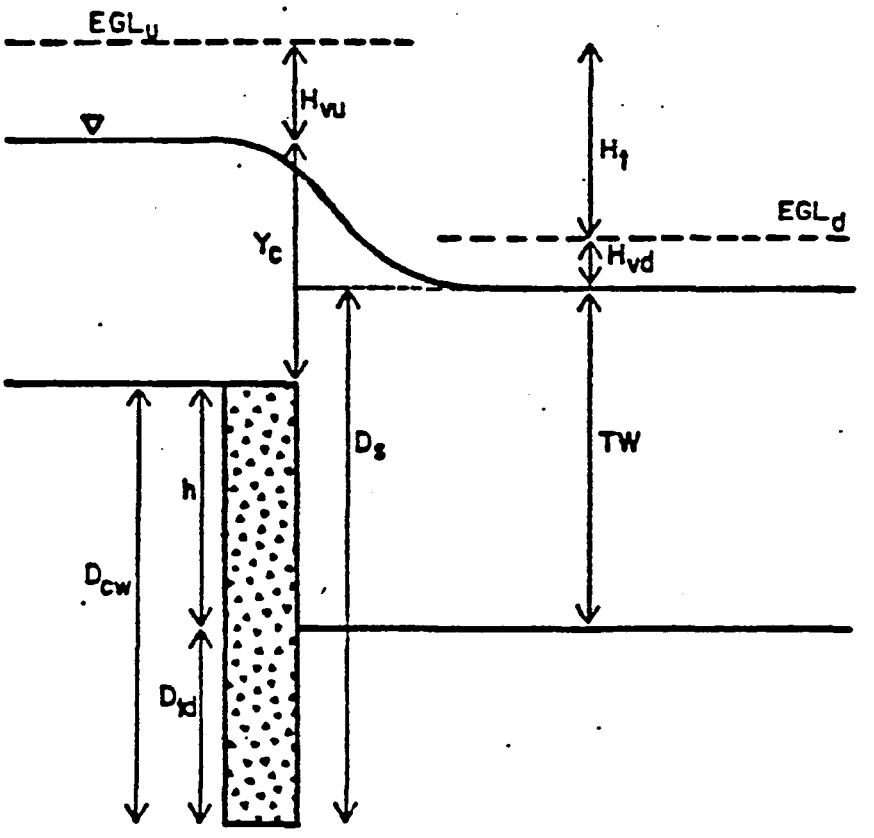

Figure 3-V: Depth Of Scour For Flow Over A Cut-off Wall

EGL_u = Energy grade line upstream
EGL_d = Energy grade line downstream
H_{vu} = Velocity head upstream
H_{vd} = Velocity head downstream
H_t = Total head differental between upstream and downstream sections at cut-off wall
h = Height of drop
TW = Tailwater
Y_c = Critical depth (assumed at brink)
D_s = Depth of Scour
D_{td} = Ultimate length of toe down
D_{cw} = Total depth of cut-off wall

LOCAL SCOUR AT THE DROP STRUCTURES
DESIGN EVENT: QSPF = 69000 cfs

SEC # D/S	DEPTH (Tw) (ft)	ENERGY GR D/S (ft)	q (cfs/ft)	SEC # U/S	ENERGY GR U/S (ft)	SCOUR DEPTH(ft)
99.54	12.9	1059.7	197.3	99.60	1062.2	15.1
238.66	13.6	1098.4	214.8	238.69	1100.9	15.7

ADOT Channel Spillway: Q100 = 4630 cfs
Assumptions: a) Non-coincidental flow in the New River.
b) Note: second drop of a two stage drop structure.
c) Normal depth flow in New River for Q = 4630 cfs.
d) U/S flow characteristics based on "critical depth" at station 13+44 of the ADOT channel.

144.65	2.6	1058.5	68.1	1344.00	1065.0	17.1

TRAPEZOIDAL CHANNEL ANALYSIS
CRITICAL DEPTH COMPUTATION

January 13, 1992
CRITICAL DEPTH - ADOT CHANNEL STA. 1344 TO 1401

==========

PROGRAM INPUT DATA:

DESCRIPTION	VALUE
Flow Rate (cubic feet per second).....	4630.0
Manning's Roughness Coefficient (n-value).....	0.0150
Channel Side Slope - Left Side (horizontal/vertical)....	0.00
Channel Side Slope - Right Side (horizontal/vertical)...	0.00
Channel Bottom Width (feet).....	68.0

==========

PROGRAM RESULTS:

DESCRIPTION	VALUE
Critical Depth (feet).....	5.24
Critical Slope (feet per foot).....	0.0023
Flow Velocity (feet per second).....	12.99
Froude Number.....	1.000
Velocity Head (feet).....	2.62
Energy Head (feet).....	7.86 ⇒ Energy Gradient
Cross-Sectional Area of Flow (square feet).....	356.40
Top Width of Flow (feet).....	68.00

7.86 + 1057.15 = 1065.01

==========

TRAPEZOIDAL CHANNEL ANALYSIS COMPUTER PROGRAM, Version 1.3 (c) 1986
Dodson & Associates, Inc., 7015 W. Tidwell, #107, Houston, TX 77092
(713) 895-8322. A manual with equations & flow chart is available.

Critical Depth calculations for ADOT channel - Note calculations are for the second or D/S most drop structure

LIST OF PLATES

1. AUTHORIZED PLAN OF IMPROVEMENT
2. ORIGINAL CONCEPT PLAN
3. SCHEMATIC FLOW DIAGRAM
4. MAJOR DRAINAGE AREA MAP
5. LOCAL DRAINAGE AREA MAP
6. DOWNSTREAM CONDITION CROSS SECTION LOCATION MAP

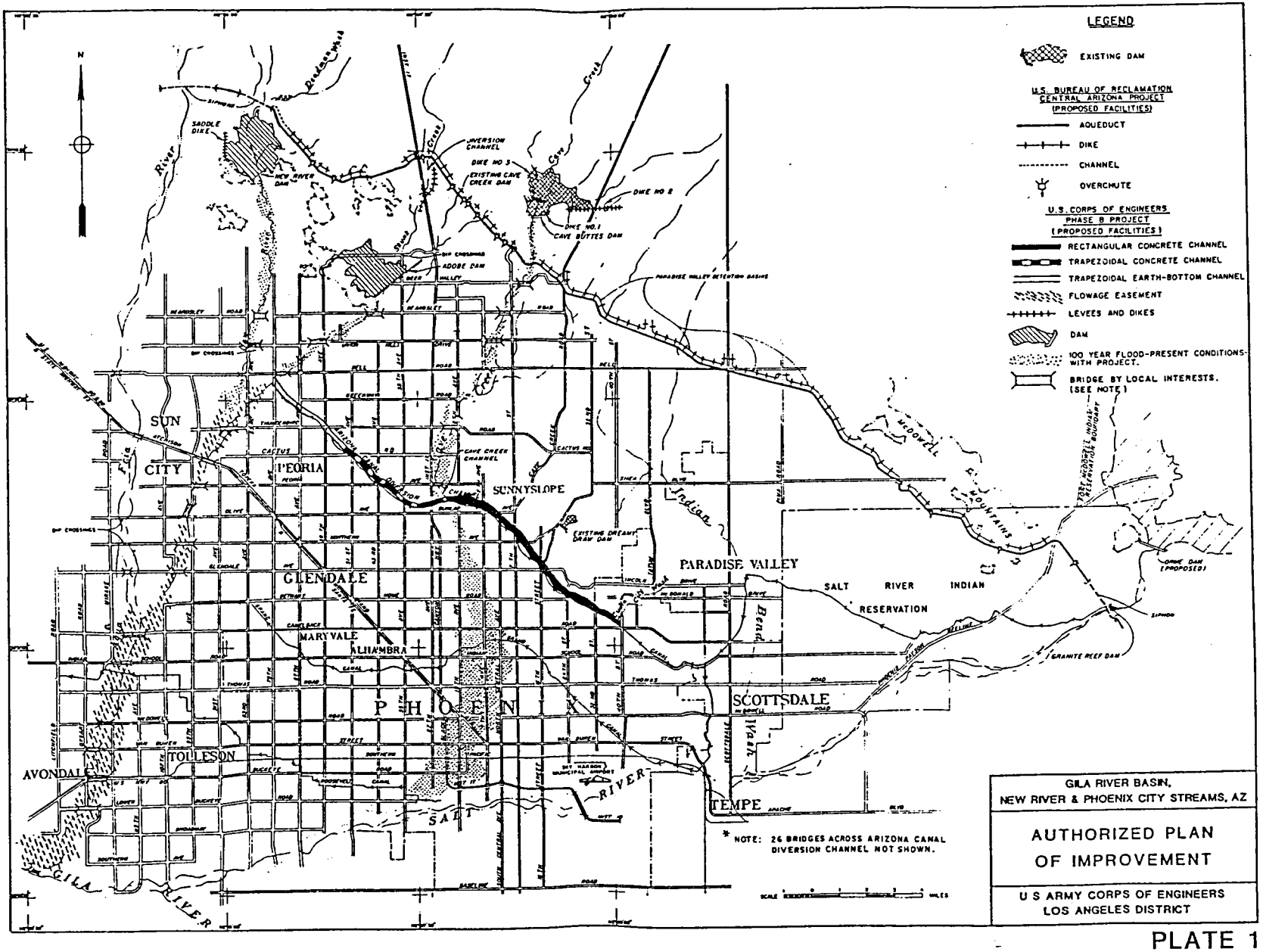

GILA RIVER BASIN,
NEW RIVER & PHOENIX CITY STREAMS, AZ

AUTHORIZED PLAN
OF IMPROVEMENT

U S ARMY CORPS OF ENGINEERS
LOS ANGELES DISTRICT

PLATE 1

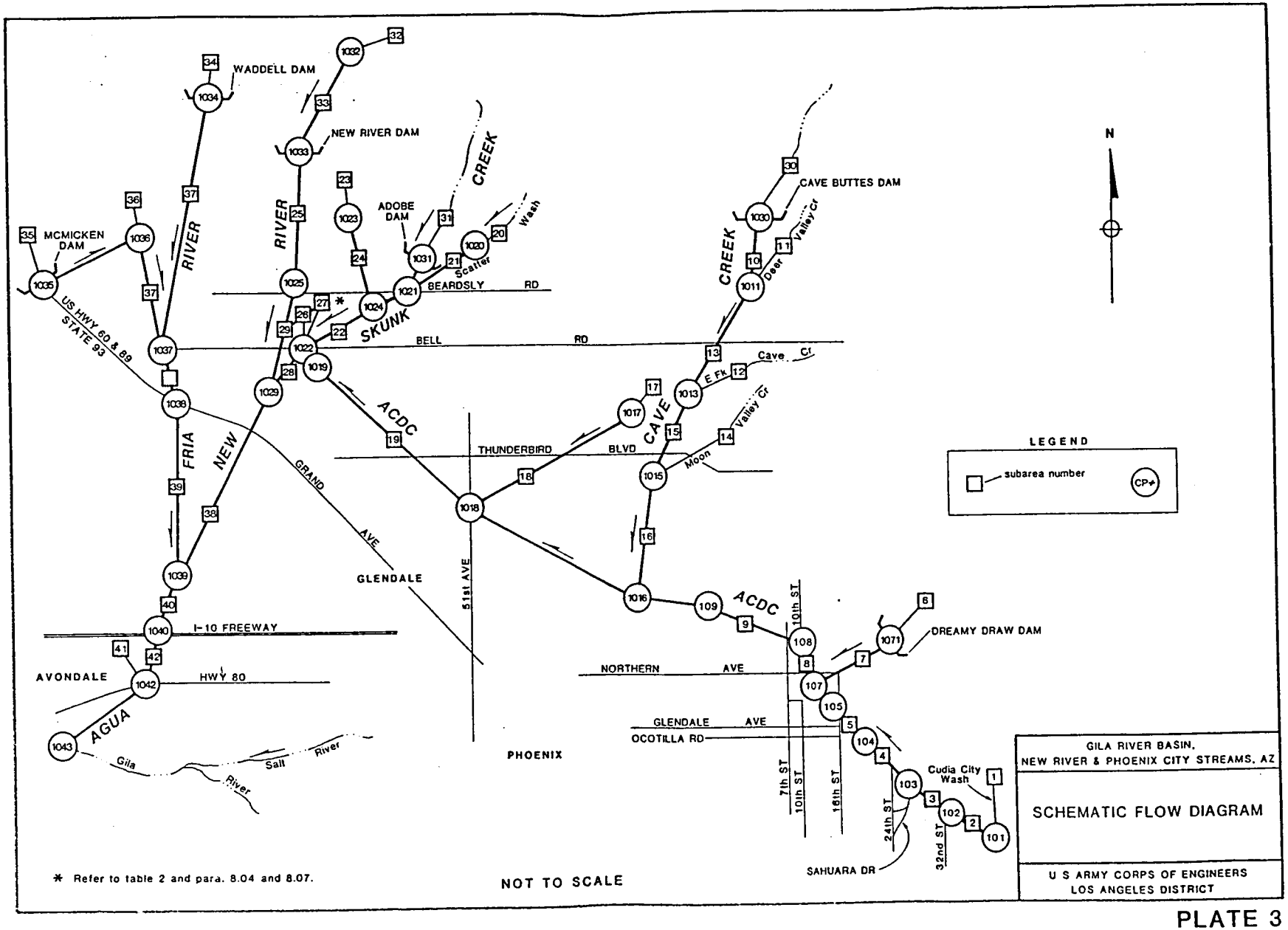

GILA RIVER BASIN,
NEW RIVER & PHOENIX CITY STREAMS, AZ

SCHEMATIC FLOW DIAGRAM

U S ARMY CORPS OF ENGINEERS
LOS ANGELES DISTRICT

PLATE 3

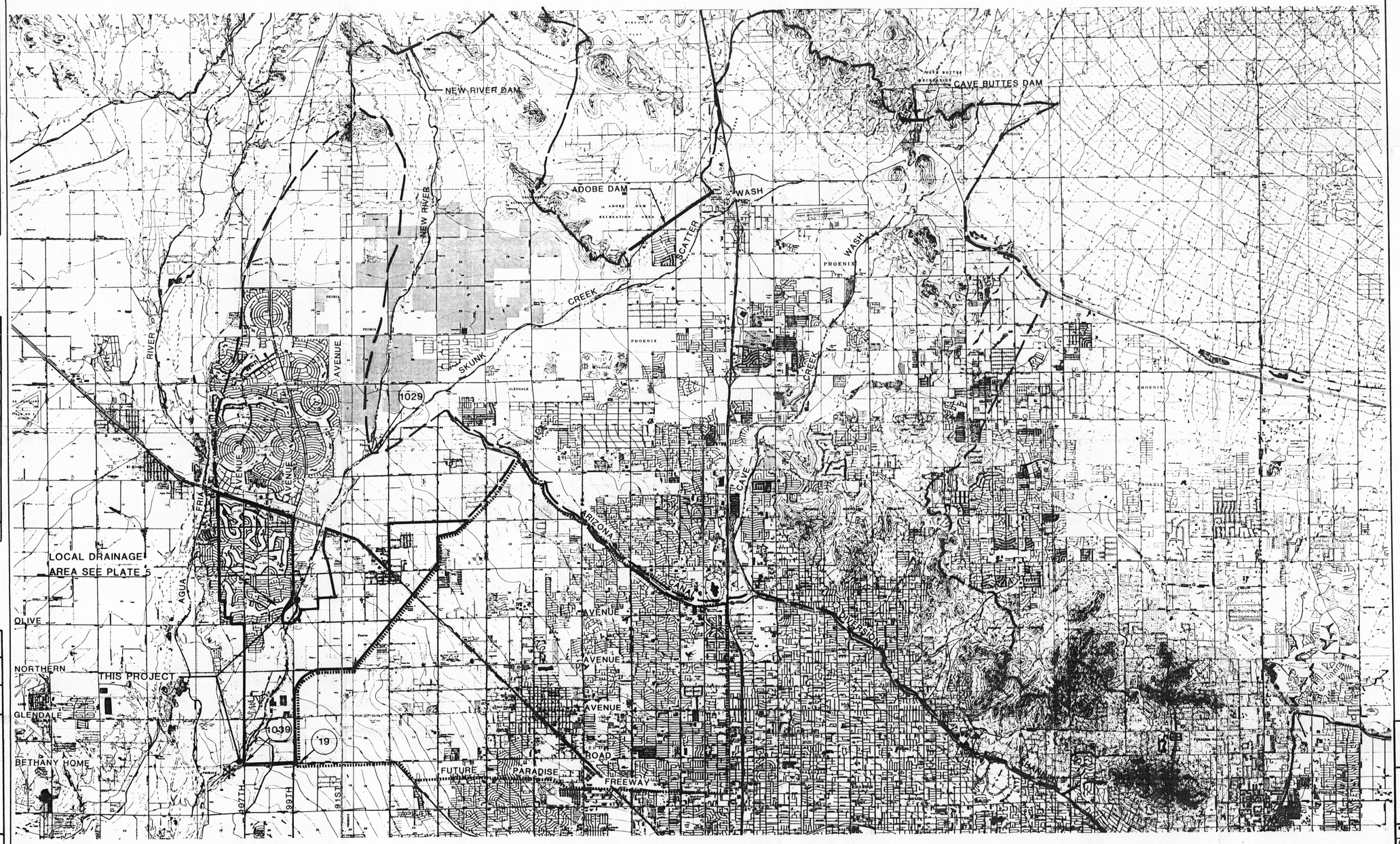

SUMMARY OF PEAK DISCHARGES (CUBIC FEET PER SECOND)

CONCENTRATION POINT NO.	DRAINAGE AREA	RECURRENCE 100-YEAR	INTERNAL SPF
1029	123.6	41,000	68,000
1039	159.7	39,000	69,000
19	37.27	10,899	N/A
*	1970 ±	46,000 ±	N/A

*REPRESENTS FLOW RESULTING FROM DIVERSION OF DRAINAGE FROM THE PARADISE FREEWAY.

LEGEND

LOCAL DRAINAGE AREA BOUNDARY

MAJOR DRAINAGE AREA BOUNDARY (DEVELOPED BY CORPS OF ENGINEERS) SEE PLATE 2

PROPOSED FUTURE DRAINAGE AREA BOUNDARY FOLLOWING CONSTRUCTION OF PARADISE FREEWAY SEE PLATE 2

N

0 1 2
APPROX. SCALE: 1" = 1 MILE

FLOOD CONTROL DISTRICT OF MARICOPA COUNTY

NEW RIVER CHANNELIZATION
INITIAL DESIGN
MAJOR DRAINAGE AREA MAP
BETHANY HOME ROAD TO OLIVE AVENUE

RECOMMENDED BY:
APPROVED BY: DATE:
CHIEF ENGINEER & GENERAL MANAGER:

SHEET OF

DES.	DR.	CK.	CVL JOB NO.
DATE	DATE	DATE	1090-03-01

COE & VAN LOO
CONSULTING ENGINEERING INC.
PHOENIX ARIZONA

REVISION BY				
NO	DESCRIPTION	REV BY	CKD BY	DATE

REVISION BY				
NO	DESCRIPTION	REV BY	CKD BY	DATE

REVISION BY				
NO	DESCRIPTION	REV. BY	CKD BY	DATE

PLATE 4

GLENDALE MUNICIPAL AIRPORT
CHANNELIZATION COMPLETED FOR GLENDALE AIRPORT WAS REDUCED & SPLICED ONTO THIS MAP TO SHOW NEW RIGHT BANK ALIGNMENT. ORIGINAL C.O.E. CONTROL LINE WAS USED WITH UPDATED CHANNELIZATION.

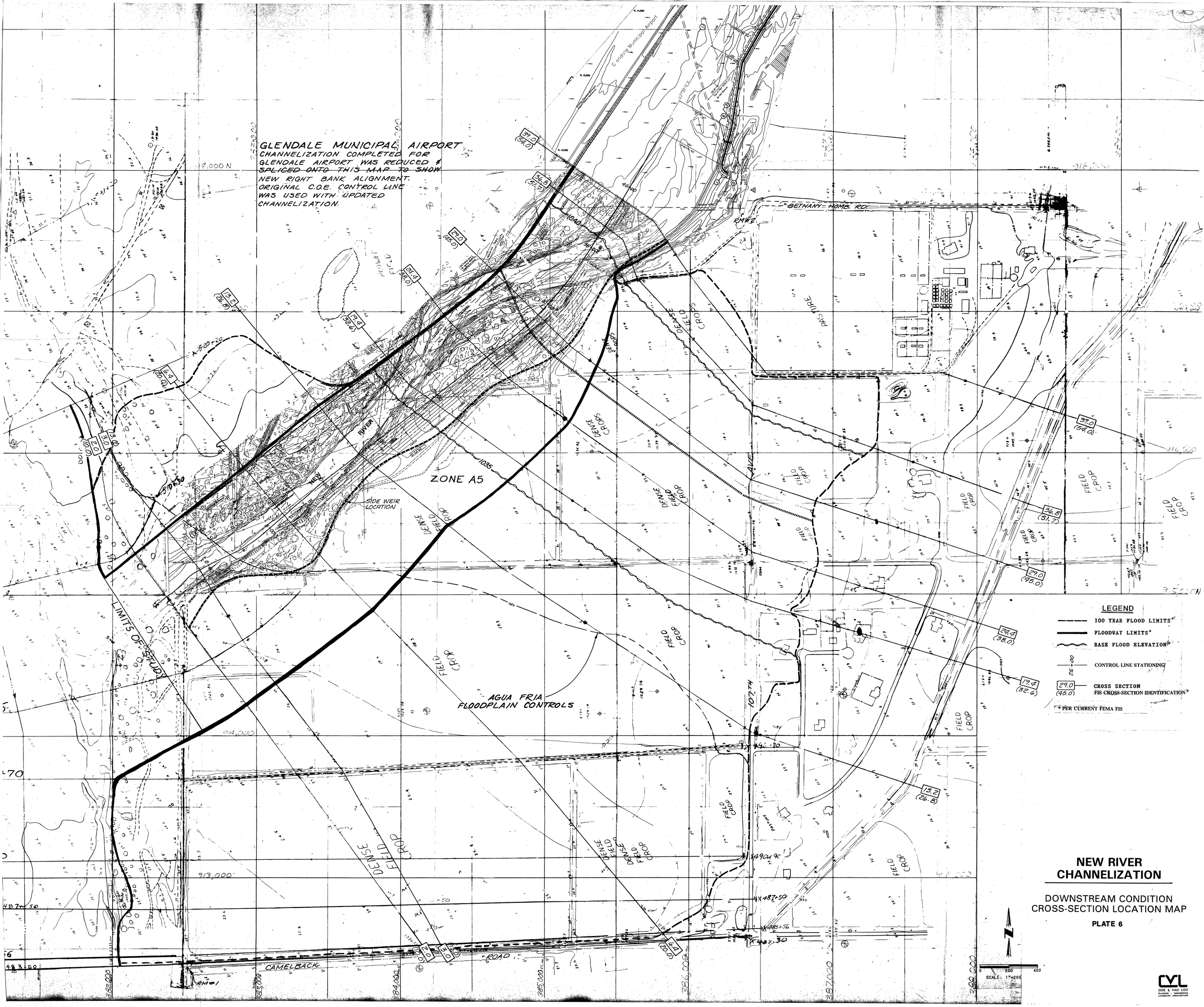

NEW RIVER CHANNELIZATION

DOWNSTREAM CONDITION
CROSS-SECTION LOCATION MAP

PLATE 6

COE & VAN LOO
PLANNING • ENGINEERING
LANDSCAPE ARCHITECTURE

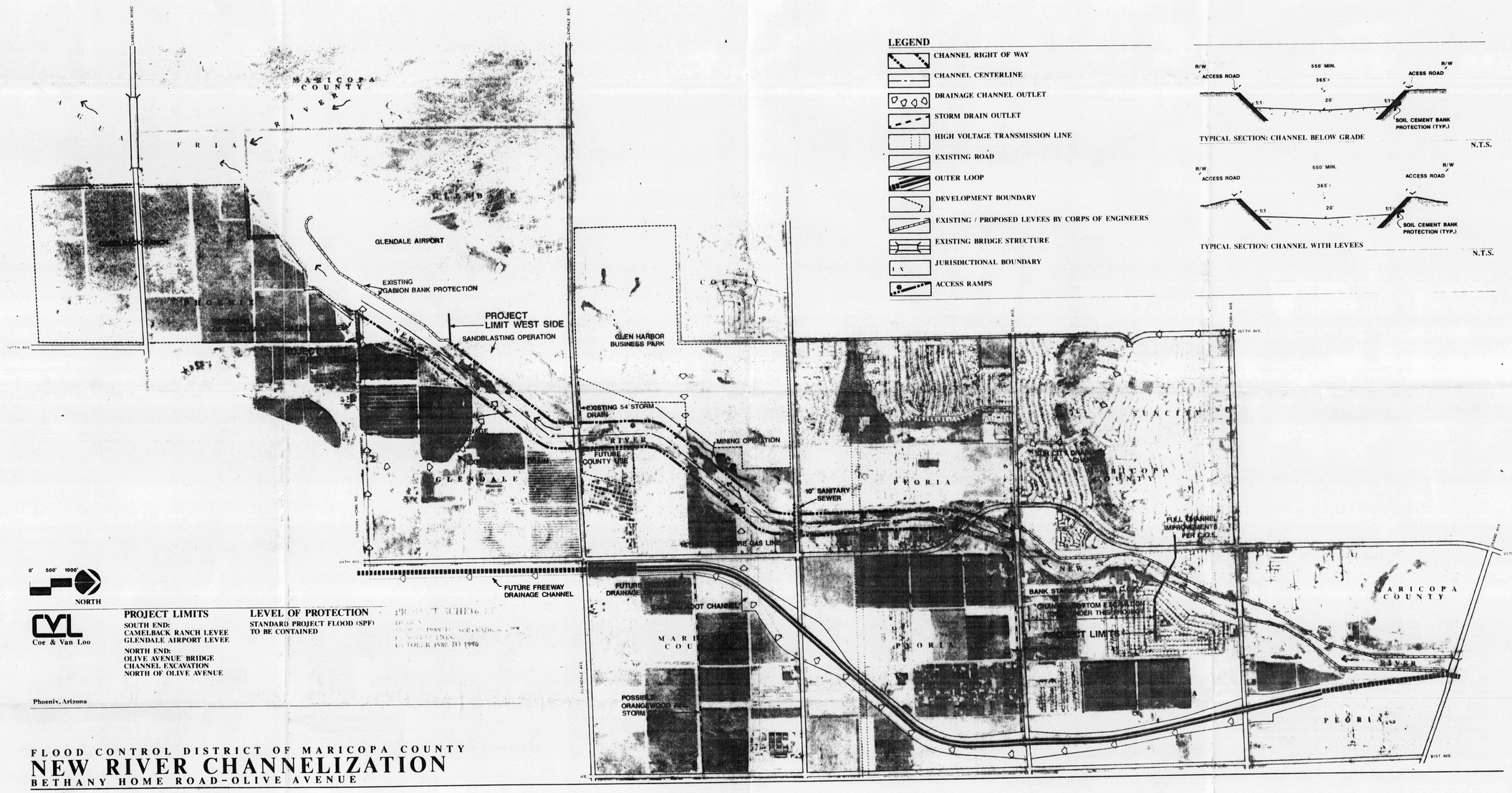

LEGEND

- CHANNEL RIGHT OF WAY
- CHANNEL CENTERLINE
- DRAINAGE CHANNEL OUTLET
- STORM DRAIN OUTLET
- HIGH VOLTAGE TRANSMISSION LINE
- EXISTING ROAD
- OUTER LOOP
- DEVELOPMENT BOUNDARY
- EXISTING / PROPOSED LEVEES BY CORPS OF ENGINEERS
- EXISTING BRIDGE STRUCTURE
- JURISDICTIONAL BOUNDARY
- ACCESS RAMPS

TYPICAL SECTION: CHANNEL BELOW GRADE

N.T.S.

TYPICAL SECTION: CHANNEL WITH LEVEES

N.T.S.

Coe & Van Loo

Phoenix, Arizona

PROJECT LIMITS

SOUTH END:
CAMELBACK RANCH LEVEE
GLENDALE AIRPORT LEVEE

NORTH END:
OLIVE AVENUE BRIDGE
CHANNEL EXCAVATION
NORTH OF OLIVE AVENUE

LEVEL OF PROTECTION

STANDARD PROJECT FLOOD (SPF)
TO BE CONTAINED

PROJECT SCHEDULE
DESIGN
CONSTRUCTION
OCTOBER 1982 TO 1990

FLOOD CONTROL DISTRICT OF MARICOPA COUNTY

NEW RIVER CHANNELIZATION

BETHANY HOME ROAD–OLIVE AVENUE

PLATE 2 – ORIGINAL CONCEPT PLAN

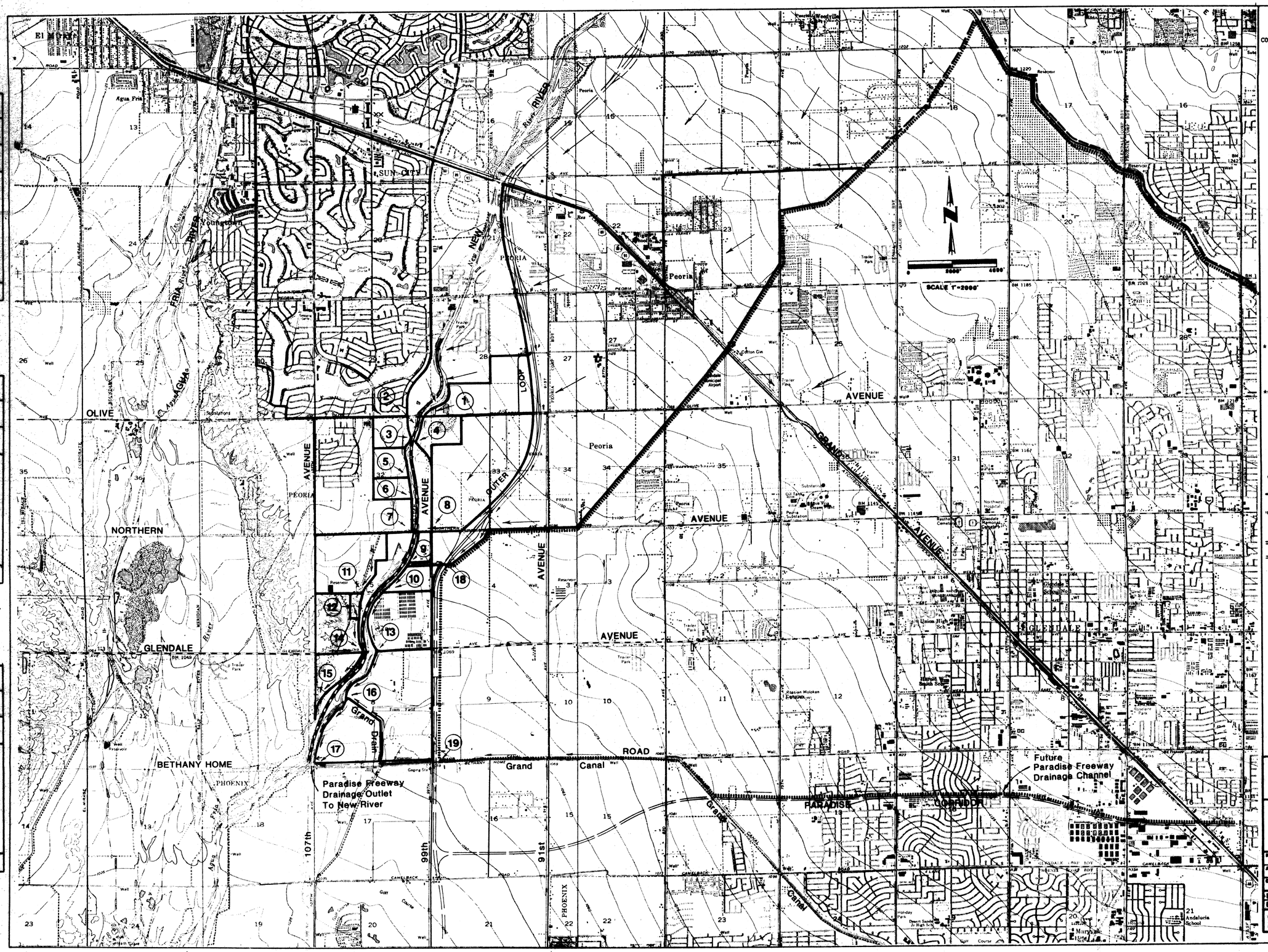

SUMMARY OF PEAK DISCHARGES
Cubic Feet Per Second

CONCENTRATION POINT NO.	DRAINAGE AREA (SQ.MI)	100-YEAR DISCHARGES(cfs)
1	0.28	160.
2	3.56	1570.
3	0.08	50.
4	0.10	60.
5	0.08	60.
6	0.06	40.
7	0.58	390.
8	0.62	280.
9	0.04	30.
10	0.10	60.
11	0.28	220.
12	0.02	20.
13	0.26	200.
14	0.17	140.
15	0.10	70.
16	0.53	280.
17	0.26	150.
18	* 9.75	-- 50yr 3980.00 100yr 4630.00
19	** 37.27	-- 50yr 8731.00 100yr 10899.00

* DRAINAGE AREA DELINEATED BY WATER RESOURCES ASSOCIATES (WRA,1986) IS LARGER THAN THAT SHOWN DUE TO CONSERVATIVE ASSUMPTIONS MADE BY THEM REGARDING POSSIBLE FUTURE FLOW DIVERSIONS AS SHOWN IN THE GLENDALE-PEORIA MASTER DRAINAGE STUDY (CAMP DRESSER ET.AL., 1987).

**DESIGN DISCHARGES PREPARED BY THE VLB GROUP (VLB, 1987A) FOR CASE B, DRAINAGE DIVERSION ALONG THE FUTURE PARADISE FREEWAY FROM 27TH AVENUE WITH GRAND AVENUE AS A LOW LEVEL FACILITY.

LEGEND

- LOCAL DRAINAGE AREA BOUNDARY
- MAJOR DRAINAGE AREA BOUNDARY (DEVELOPED BY CORPS OF ENGINEERS) SEE PLATE 4
- PROPOSED FUTURE DRAINAGE AREA BOUNDARY FOLLOWING CONSTRUCTION OF PARADISE FREEWAY SEE PLATE 4
- FULL CHANNEL IMPROVEMENTS UNDER THIS PROJECT
- CHANNEL REGRADING ONLY UNDER THIS PROJECT

FLOOD CONTROL DISTRICT OF MARICOPA COUNTY

NEW RIVER CHANNELIZATION
INITIAL DESIGN
LOCAL DRAINAGE AREA MAP
BETHANY HOME ROAD TO OLIVE AVENUE

RECOMMENDED BY: | SHEET OF
APPROVED BY: DATE:
CHIEF ENGINEER & GENERAL MANAGER:

DES.	DR.	CK.	CVL JOB NO.
DATE	DATE	DATE	1090-09-01

COE & VAN LOO CONSULTING ENGINEERING INC. PHOENIX ARIZONA

REVISION BY	DESCRIPTION	REV. BY/CK.BY	DATE
NO			

REVISION BY	DESCRIPTION	REV. BY/CK.BY	DATE
NO			

REVISION BY	DESCRIPTION	REV. BY/CK.BY	DATE
NO			

PLATE 5