Phoenix, AZ

FINAL DRAINAGE REPORT
PINNACLE PEAK ROAD BRIDGE
OVER SKUNK CREEK
BR-922765

WOOD/PATEL ASSOCIATES

Civil Engineers
Hydrologists
Land Surveyors

Property of
Flood Control District of MC Library
Please Return to
2801 W. Durango
Phoenix, AZ 85009

FINAL DRAINAGE REPORT
PINNACLE PEAK ROAD BRIDGE
OVER SKUNK CREEK
BR-922765

July 13, 1994

Prepared for:

CITY OF PHOENIX
Street Transportation Department
1034 East Madison Street
Phoenix, AZ 85034
(602) 495-2050

Registered Professional Engineer (Civil)
CERTIFICATE NO.
23170
JEFFREY J.
HOLZMEISTER
Date Signed 7/13/94
ARIZONA, U.S.A.

In Association With:

ALPHA ENGINEERING GROUP, INC.
2929 East Camelback Road
Suite 215
Phoenix, AZ 85016
(602) 954-0436

WOOD, PATEL & ASSOCIATES, INC.
1550 East Missouri
Suite 203
Phoenix, AZ 85014
(602) 234-1344

EXECUTIVE SUMMARY

The City of Phoenix Pinnacle Peak Road Bridge project was envisioned to provide all weather access (100-year event) across Skunk Creek. Funding limitations required that the project be constructed in two phases. The first phase was designed to provide the crossing with a 10-year minimum level of service. The improvements may provide a significantly higher level of service for the crossing, but they do not conform to Federal Emergency Management Agency (FEMA) standards. Therefore, they will not be recognized in the 100-year floodplain/floodway delineation.

The ultimate or fully channelized facility will conform to FEMA standards and will complete the channelization of Skunk Creek from east of I-17 to the Adobe Dam Reservoir.

It is recommended that the ultimate or fully channelized facility be constructed as soon as funds are available to provide the area residents with an 100-year crossing of Skunk Creek.

Registered Professional Engineer (Civil)
CERTIFICATE NO.
23170
JEFFREY J.
HOLZMEISTER
Date Signed 7/13/94
ARIZONA, U.S.A.

TABLE 1 (Continued)

DESIGN PEAK DISCHARGES
FUTURE CONDITIONS WITH PROJECT

CP	LOCATION	DRAINAGE AREA (mi^2)	SPF (ft^3/s)	100-YEAR FLOOD (ft^3/s)
	ACDC			
1016U	Above Cave Creek	19.7	15,000[6]	15,000[2]
1016D	Below Cave Creek	61.1[8]	25,000[6]	25,000[5,8]
1018	Near 51st Ave.	70.3	26,000[6]	26,000[5]
1019	Above Skunk Creek	85.4	29,000[6]	29,000[5]
	SKUNK CREEK			
1031U	Inflow - Adobe Dam	89.6	66,000[9]	39,000[2]
1031D	Outflow - Adobe Dam	0	1890[9]	1730[9]
1021U	Above Scatter Wash	0.9	4500[9]	2800[9]
1021D	Below Scatter Wash	9.4[5]	21,000[5]	10,000[5]
1022U	Above ACDC	24.9[10]	26,000[5,10]	13,000[5,10]
1022D	Below ACDC	110.3[11]	55,000[5,11]	35,000[5,11]
1029	Above New River	111.2[11]	55,000[5,11]	35,000[5,11]
	NEW RIVER			
1033U	Inflow - New River Dam	164	76,000[3]	53,000[2]
1033D	Outflow - New River Dam	0	2665[5]	2350[5]
1025	Above Beardsley Rd.	10.3	24,000[7]	12,000[7]
1029U	Above Skunk Creek	20.7[12]	38,000[5,12]	19,000[5,12]
1029D	Below Skunk Creek	123.6	68,000[5,13]	41,000[5,13]
1039	Above Agua Fria River	159.7	69,000[5,13]	39,000[5,13]
	AGUA FRIA RIVER[14]			
1034U	Inflow - Waddell Dam	1459	158,000[5]	135,000[5]
1034D	Outflow - Waddell Dam	1459	158,000[5]	135,000[5]
1037	At Bell Rd.	1870	151,000[5]	115,000[5]

TABLE OF CONTENTS

PAGE

1.0 INTRODUCTION 1
- 1.1 Background 1
- 1.2 Design Overview 3

2.0 DATA COLLECTION 8

3.0 MAPPING 9

4.0 GEOTECHNICAL 10

5.0 HYDROLOGY 11

6.0 FLOODPLAIN ANALYSES 12
- 6.1 Existing Condition Floodplain Analyses 12
  - 6.1.1 Hydraulic Roughness and Energy Loss Coefficients 12
  - 6.1.2 Effective Flow Areas 13
  - 6.1.3 Flow Continuity 14

7.0 INTERIM AND FUTURE DESIGN CONDITION FLOODPLAIN DESCRIPTION 15
- 7.1 Bridge Structure 15
- 7.2 Drop Structure 17
- 7.3 Future Condition Floodplain Description 18

8.0 SEDIMENT TRANSPORT ANALYSES 19
- 8.1 Incipient Motion Analysis 19
  - 8.1.1 Allowable Velocity Approach 19
  - 8.1.2 Tractive Stress Analysis 21
- 8.2 Scour Analyses 22
  - 8.2.1 Morphology 23
  - 8.2.2 Contraction Scour 23
  - 8.2.3 Pier Scour 24
  - 8.2.4 Abutment Scour 25
  - 8.2.5 Total Scour 26
- 8.3 Bank Protection Evaluation 27

9.0 MULTIPLE USE RECREATION TRAIL (MURT) 28

10.0 404 PERMIT STATEMENT 29

11.0 QUANTITY AND COST ESTIMATES 30

12.0 CONCLUSIONS 32

13.0 REFERENCES 34

Registered Professional Engineer (Civil)
CERTIFICATE NO. 23170
JEFFREY J. HOLZMEISTER
Date Signed 7/13/94
ARIZONA, U.S.A.

PAGE

TABLES

TABLE 1 Skunk Creek Peak Discharge Values 10

TABLE 2 Allowable Velocity Approach For Skunk Creek 19

TABLE 3 Calculated Scour Values 25

TABLE 4 Skunk Creek Bank Protection Cost Evaluation 30

FIGURES

FIGURE 1 Vicinity Map 2

FIGURE 2 Recommended Alternative 4

FIGURE 3 Typical Section 7

PLATES

PLATE 1 Existing Floodplain Delineation . . . . . (in pocket)

APPENDICES

APPENDIX A

2-, 5-, 10-, 50-, 100-year Existing Condition HEC-2 Computer Files

APPENDIX B

10-, 100-, 500-year Interim Condition HEC-2 Computer Files

APPENDIX C

Drop Structure Design Calculations

1) 100-year HEC-2 Computer Files
2) 10-year; 100-year stopped spillway drop structure calculations
3) Weighted creep method uplift calculations for drop structure.

APPENDIX D

10-, 50-, 100-, 500-year Ultimate Condition HEC-2 Computer Files

APPENDIX E

Local Scour Analyses Calculations

APPENDIX F

401 & 404 Permit Reply Letters

Registered Professional Engineer (Civil)
CERTIFICATE NO.
23170
JEFFREY J.
HOLZMEISTER
Date Signed 7/13/94
ARIZONA, U.S.A.

1.0 INTRODUCTION

The City of Phoenix (the City) has contracted with Alpha•Wood/Patel to provide engineering services required for the design of the Pinnacle Peak Road bridge over Skunk Creek. Wood/Patel shall provide the City with the hydrologic/hydraulic analyses, sediment transport analyses, and construction plans and specifications for the flood control facilities for the study reach of Skunk Creek (approximately 1,000 feet south of Pinnacle Peak Road to the southern boundary of the Skunk Creek Landfill). Figure 1 shows the project location.

Presently, there is an at-grade crossing (dip section) of Skunk Creek within the project limits. The crossing is located on Pinnacle Peak Road west of the 35th Avenue intersection.

1.1 Background

Historically, a flood hazard has existed in the metropolitan Phoenix area along Cave Creek, Skunk Creek, New River, Agua Fria River, and downstream of the Arizona Canal. As a means to help mitigate potential flooding the COE, in conjunction with the Flood Control District of Maricopa County (the District) and other governmental agencies, implemented a comprehensive flood control plan consisting of both structural and non-structural improvements.

As part of the overall plan, Adobe Dam was designed to intercept flows from Skunk Creek, a tributary of New River, which in turn is a tributary of the Agua Fria River. In addition, the COE channelized Skunk Creek from the Central Arizona Project (CAP) aqueduct to just north of Happy Valley Road, passing underneath the I-17 freeway. The City of Phoenix recently extended the channelization through the Skunk Creek Landfill.

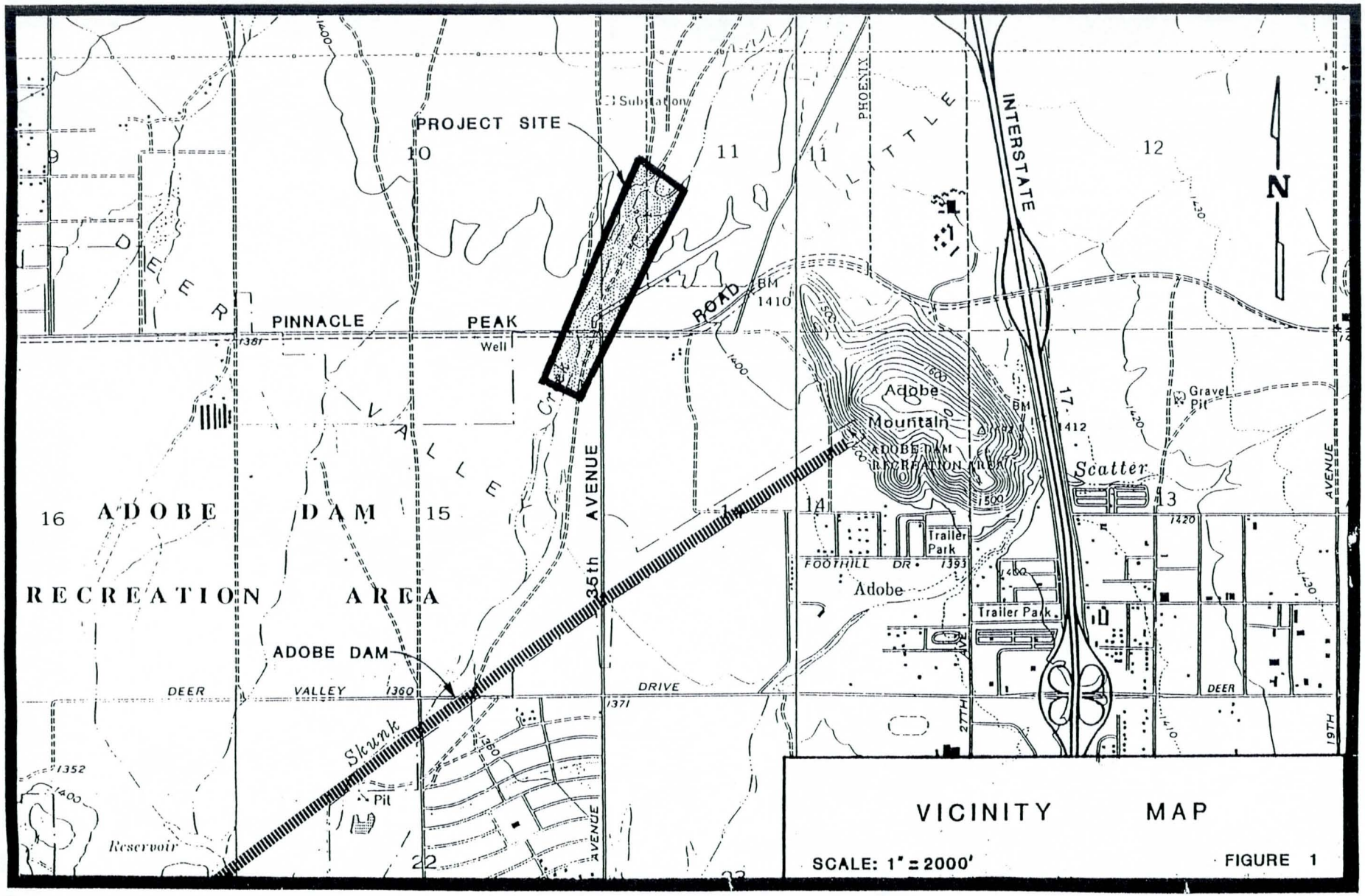

VICINITY MAP

SCALE: 1" = 2000'

FIGURE 1

1.2 Design Overview

Wood/Patel prepared a design option report that investigated alternative designs and levels of service for the project. An addendum to the report was prepared to describe the selected alternative. The selected alternative is comprised of the Pinnacle Peak Road bridge crossing, channelization of Skunk Creek, and a interim drop structure located upstream of Pinnacle Peak Road.

The proposed design combines a 100-year bridge crossing at Pinnacle Peak Road and a unique interim channel system. The channel from the bridge upstream to the interim drop structure was designed for the 100-year event. The area from the drop structure to the channelized landfill section was left in its natural state. This area will be improved in the future. A guide bank was designed to direct flows that naturally "break-out" to the southeast of the channelized section. The guide bank is capable of routing flows in the range of the 50-year to 100-year event through the bridge. However, the guide banks do not include the three feet minimum freeboard required by Federal Emergency Management Agency (FEMA) for flood control structures. Therefore, they will not be recognized in future Flood Insurance Rate Maps (FIRM). The channel downstream of the bridge was also designed to pass the 100-year event. The proposed design consists of the following features as shown on Figure 2:

1) **A cast-in-place post tensioned concrete box girder bridge crossing at Pinnacle Peak Road.** The ultimate design bridge (100-year crossing) will be constructed at Pinnacle Peak Road. In accordance with Federal Highway Administration (FHWA) and Arizona Department of Transportation (ADOT) policies, the bridge is designed to survive the forces generated by the 500-year event.

2) **An incised, earth-lined channel with a 100-year capacity downstream of Pinnacle Peak Road.** The channel will be excavated to the ultimate cross-section (250-feet bottom width) and 4:1 side slopes. A portion of the excess material will be placed along 35th Avenue (buffer area) to

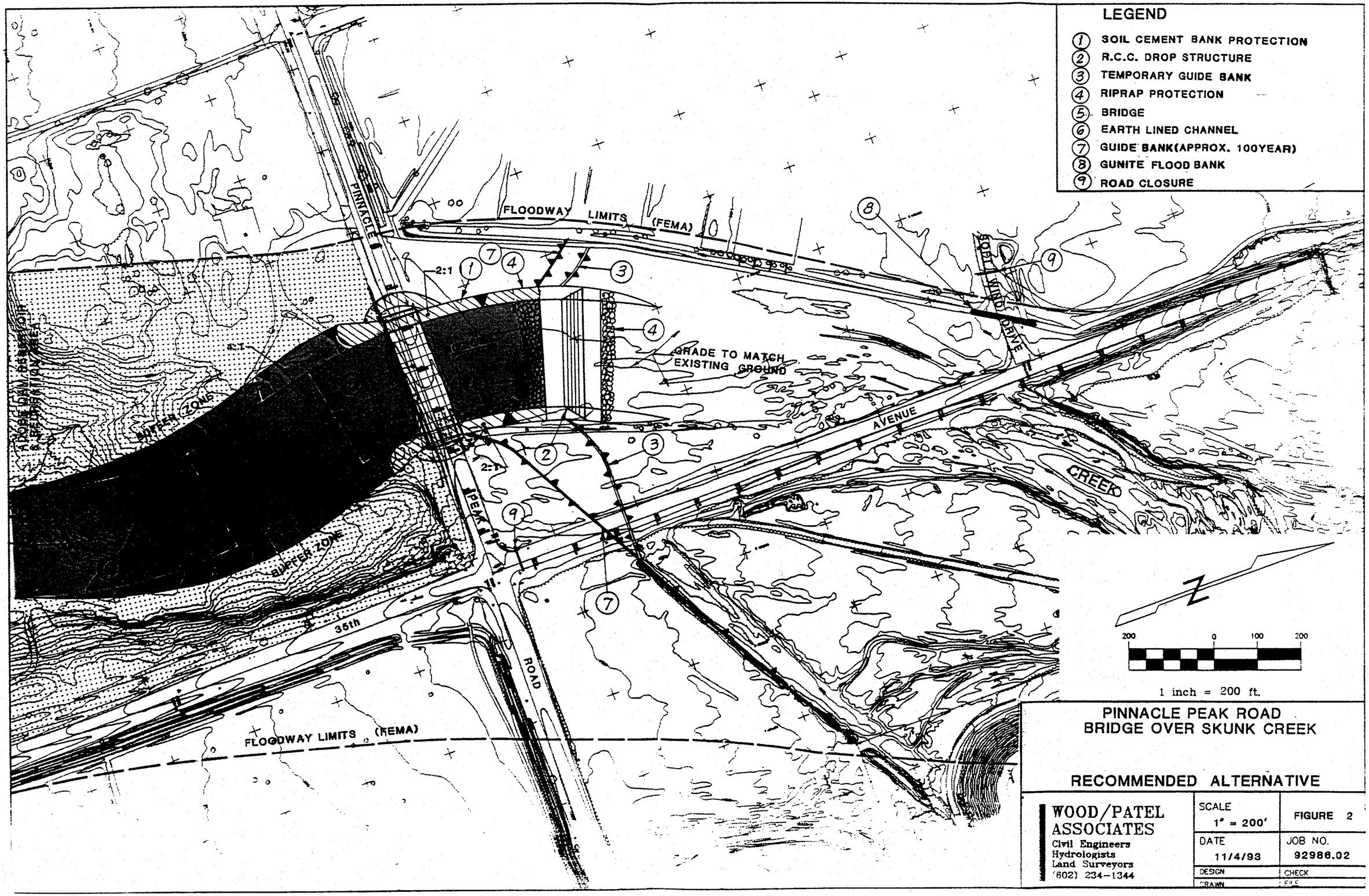

PINNACLE PEAK ROAD
BRIDGE OVER SKUNK CREEK

RECOMMENDED ALTERNATIVE

WOOD/PATEL ASSOCIATES
Civil Engineers
Hydrologists
Land Surveyors
(602) 234-1344

SCALE 1" = 200'	FIGURE 2
DATE 11/4/93	JOB NO. 92986.02
DESIGN	CHECK
DRAWN	

protect the roadway from erosion. The future ultimate design will provide embankment protection for this portion of the drainage channel.

3) **An incised channel with soil cement bank protection upstream of Pinnacle Peak Road to the proposed drop structure.** Soil cement bank lining will be constructed from the bridge at Pinnacle Peak Road to the interim drop structure. Bank protection will be designed for the 100-year event (a toedown depth of 10 feet). A minimum freeboard allowance of 1.5 feet is proposed for the soil cement bank protection in the incised channel section. The soil cement will be placed in 8-foot-wide, 6"- 9" inch thick lifts throughout the reach.

Soil cement toedown for the east embankment is extended an additional 6 feet (16 feet below the channel invert) between the drop structure and Pinnacle Peak Road to help protect the structure from scour due to weir flow over the embankment during the interim condition. Additional soil cement protection is provided at the top of the embankment to prevent damage from lateral flows during large flood events. Figure 3 shows the typical section for channel lining on the east bank.

4) **A roller compacted concrete (RCC) interim drop structure west of 35th Avenue.** The stepped RCC drop structure proposed for this project has been analyzed using procedures and methodologies outlined in technical papers written by Chamani (1993), Rajaratnam (1990), and the Federal Highway Administration publication entitled Hydraulic Design of Energy Dissipators for Culverts and Channels, (HEC-14). The proposed structure is designed to convey the portion of the 100-year event that would pass over it (approximately 22,000 cfs). The remainder of the 100-year flow will flow over the east and west channel embankments or the guide bank east of 35th Avenue.

The drop structure consists of six concrete steps (approximately 6.42 feet horizontal to 2.14 feet vertical) extending across the incised channel. The structure includes a concrete stilling basin to induce a controlled hydraulic jump, upstream and downstream concrete cutoff

walls to mitigate undermining of the structure, a network of perforated pipe (weep holes) to relieve uplift forces, and riprap channel protection upstream and downstream of the structure. The drop structure will be removed when the ultimate condition channel is constructed.

5) **500-year (superflood) scour protection for the bridge.** The bridge will be designed to survive forces created by the 500-year event in accordance with procedures outlined by FHWA and ADOT. Procedures and methodologies outlined in HEC-18 will be utilized to quantify scour parameters for bridge design.

6) **Structural guide bank east of 35th Avenue.** A guide bank will be constructed to redirect stormwater to the drainage channel. The guide bank will consist of an earthen levee (approximately 3 to 4 feet high) constructed with a concrete cutoff wall core and protected by riprap. Figure 3 shows a typical section of the guide bank.

7) **Temporary guide bank to redirect the 10-year runoff into the drop structure.** In order to redirect flows up to and including the 10-year event directly over the drop structure and into the downstream incised channel, temporary "sugar" dikes are proposed at the crest of the drop structure. These dikes are composed of (compacted) fill material from onsite and are intended to serve as a temporary means of redirecting minor flows into the channelized portion of Skunk Creek. It is anticipated that flows in excess of the 10-year event, may cause failure of these "sugar" dikes. Flows would then be directed into the channelized reach by the structural guide bank.

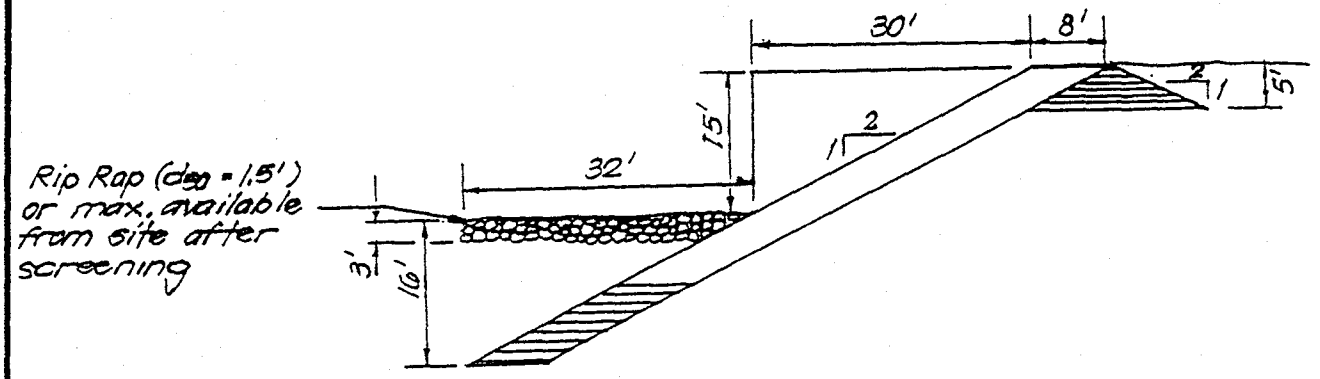

SOIL CEMENT SECTION
FOR EAST EMBANKMENT

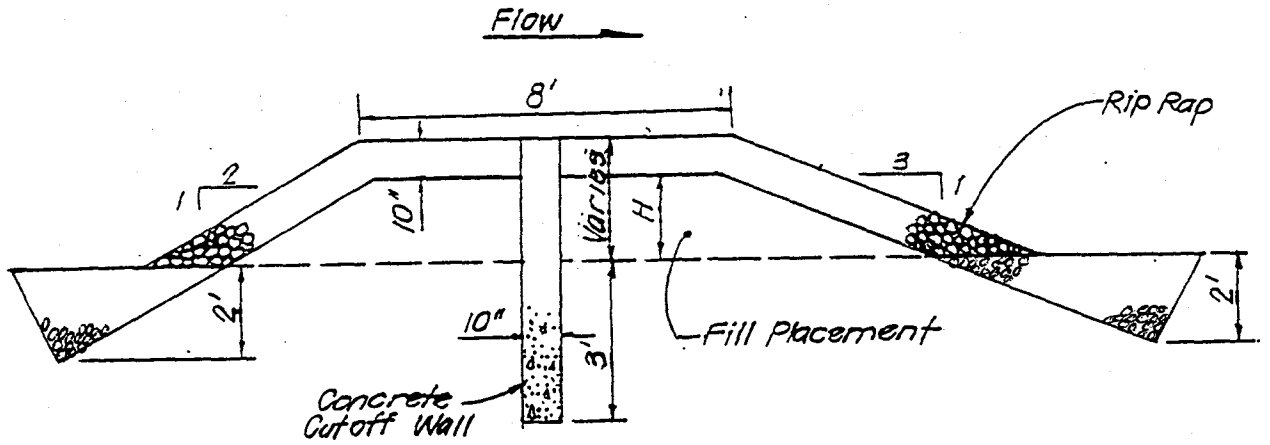

Scale	Design	Drawn
NTS	JH	JB
Date	Job #	Chk.
7/5/94	93986	RH

scale feet

WOOD/PATEL ASSOCIATES
Civil Engineers
Hydrologists
Land Surveyors
(602) 234-1344

TYPICAL SECTIONS

FIGURE 3

2.0 DATA COLLECTION

The following data was collected in conjunction with this study:

Reports:

Simons, Li & Associates, Inc., *Final Sediment Transport Report for the New River and Skunk Creek*, Phoenix, Arizona, January, 1985.

Harza Engineering, Inc., *Skunk Creek Channel, Hydraulic Analysis of Proposed Channel Improvement,* Phoenix, Arizona, July, 1986.

Coe & Van Loo Consultants, Inc., *New River/Skunk Creek SPF Delineation (including data on HEC-2 input/output)*, December, 1989.

Coe & Van Loo Consultants, Inc., *Skunk Creek Floodplain Delineation Study, Adobe Dam to Central Arizona Project (CAP)*, November, 1990.

Parsons, Brinckerhoff, Quade, & Douglas, Inc., *Skunk Creek and Buchanan Wash, Hydraulic Evaluation of Flood Flows*, February 1991.

SHB Agra, Inc., *Preliminary Geotechnical Investigation Report for Pinnacle Peak Bridge over Skunk Creek, Phoenix, Arizona*, June, 1993.

Simons, Li & Associates, Inc., *Skunk Creek Hydraulic Analysis Results*, City of Phoenix Index No. SA-930222, February 23, 1994.

Plans:

City of Phoenix, *Skunk Creek Channel Improvements*, Index Number SA-884080, April, 1992.

City of Phoenix, File Number 12115, *Adobe Mountain - Pinnacle Peak Road Paving*, May, 1986.

3.0 MAPPING

Digital cross-sections in HEC-2 format were utilized from the previous study by the Flood Control District of Maricopa County.

Aerial Mapping Company, Inc. prepared base maps at a scale of one-inch equals 40-feet (1" = 40′) for the study reach.

Alpha•Wood/Patel performed field surveys to verify the topographic mapping and to locate utilities.

4.0 GEOTECHNICAL

Geotechnical analyses for the project was provided by SHB-Agra, Inc. Grain-size analysis and Atterburg limits tests were performed on selected samples to aid in soil classification and to provide data for engineering analyses. The report recommends 0.5:1 to 1:1 side slopes for soil cement; 2:1 side slopes for cut slopes in native soils; and 2.5:1 side slopes for fill slopes.

Detailed results are included in a report entitled *Preliminary Geotechnical Investigation Report, Pinnacle Peak Road Bridge Over Skunk Creek*.

5.0 HYDROLOGY

The existing hydrology for the project area was obtained from the Coe & Van Loo report entitled Skunk Creek Floodplain Delineation Study, Adobe Dam to CAP, November 1990. Gage data from the USGS was used in conjunction with the COE's HECWRC computer program (Log-Pearson Type III methodology) to update the hydrologic analysis for the project. The following table shows the existing and revised peak flow values.

Table 1
Skunk Creek Peak Discharge Values

Recurrence Interval (yrs)	Existing Peak Discharge (cfs)	Revised (Recommended) Peak Discharge (cfs)
2-year	*	1200
5-year	*	4450
10-year	15,000	8650
50-year	29,000	27,500
100-year	39,000	41,500
500-year	*	70,550

*data not available

6.0 FLOODPLAIN ANALYSES

6.1 Existing Condition Floodplain Analyses

The existing 100-year floodplain (revised by Wood/Patel) is confined by a soil cement lined channel through the Skunk Creek Landfill area. The floodplain then widens to approximately 1,900 feet as it crosses Pinnacle Peak Road. The majority of flow crosses Pinnacle Peak Road near the 35th Avenue intersection and continues south into the storage reservoir of Adobe Dam.

The floodplain/floodway delineation for the subject area is defined by Flood Insurance Rate Map (FIRM), panel 1185 of 4350, revised September 4, 1991. The corresponding HEC-2 model was not available for use in the study. The existing condition HEC-2 analysis for the project was developed by Wood/Patel and was based on the Coe & Van Loo Consultants, Inc. (CVL) report entitled Skunk Creek Floodplain Delineation Study, Adobe Dam to CAP, November 1990. Peak flow values in the CVL hydraulic model were revised based on the updated hydrology displayed in Table 1. Cross section data adjacent to Pinnacle Peak Road was digitized from topographic mapping performed by Aerial Mapping Company for this project. Note that the FIRM was prepared prior to the encroachment of the landfill into the Skunk Creek floodway. Wood/Patel's hydraulic model reflects the latest topographic information for the subject reach and does not correspond directly with the floodplain/floodway delineations on the FIRM. Therefore, a comparison of FIRM water surface elevations to design condition water surface elevations may not be appropriate. The 2-, 10-, 50-, and 100-year existing condition floodplains are delineated on Plate 1. The 2-, 5-, 10-, 50- and 100-year existing condition HEC-2 computer models are shown in Appendix A. The following procedures and methodologies were utilized to develop the HEC-2 models for the project:

6.1.1 Hydraulic Roughness and Energy Loss Coefficients

The reach of Skunk Creek extending through the study area is characterized by a confined soil cement lined channel through the landfill

that transitions to a wide unconfined channel at Pinnacle Peak Road. The banks of the channel are vegetated with varying density of grasses, weeds, and brush. During construction of the embankment protection for the landfill, native vegetation adjacent to Skunk Creek was removed. It is anticipated that this vegetation will re-establish along the banks of Skunk Creek in a short time period.

Downstream of the landfill Skunk Creek is composed of a small sand bed channel with vegetated overbanks. This results in higher Manning's roughness coefficients in the overbank areas.

Manning's "n" values were selected on the basis of engineering judgement and photographic references presented in Roughness Coefficients for Stream Channels in Arizona, USGS (Aldridge & Garrett) 1973. The low flow channel through the project was considered to have a Manning's "n" value of 0.035, while the overbank areas were modeled with Manning's "n" values ranging from 0.045 to 0.055. The higher Manning's "n" values were used to maintain flow continuity between sections and in areas where there was slow moving, less effective flow.

Energy losses due to flow expansion and contraction were simulated by varying the loss coefficients at different locations along the creek. Coefficients of 0.1/0.3 (contraction/expansion) were used for gradual transitions. Coefficients of 0.3/0.5 (contraction/expansion) were used to model additional energy losses that are anticipated at abrupt transitions, bridges, and sharp channel bends.

6.1.2 Effective Flow Areas

Depending upon site-specific conditions, not all of the area of a wash cross-section may effectively convey water. The contraction and expansion of flow through bridge and other natural floodplain constrictions and/or expansions must be recognized in order to eliminate non-effective flow areas from the river cross-sections.

Based on engineering judgement and HEC-2 modeling guidelines, which recommend a 1:1 contraction and 4:1 expansion ratio, effective flow boundaries were determined for the study area.

6.1.3 Flow Continuity

One-dimensional models such as HEC-2 have no capability to ensure flow continuity within the segments of adjacent wash cross-sections; the model will simply fill the cross-section on the basis of available calculated conveyance. This limitation often leads to significant transfers of water between the overbanks and channel of adjacent cross-sections. Quite often, there is no physical basis for justifying these transfers. In such cases, it is prudent to refine the model parameters to "force" more realistic flow continuity from one cross-section to the next.

For those locations where flow discontinuities seemed excessive, adjustments were made in the model to force a more reasonable transfer of flow through the system. These adjustments were in the form of "n" value modifications and/or establishment of effective flow areas to force more water into or out of an overbank or channel.

Refining the HEC-2 model parameters to achieve more realistic flow continuity is largely dependent upon engineering judgement. Although such refining may improve flow continuity, it is difficult to quantify its impact on the accuracy of the water surface profile.

7.0 INTERIM AND FUTURE DESIGN CONDITION FLOODPLAIN DESCRIPTION

The interim facility will provide a crossing of Skunk Creek capable of passing between the 50-year and 100-year storm event. A portion of flow from the 100-year storm may overtop the guide banks and flow to the intersection of 35th Avenue and Pinnacle Peak Road. This breakout ensures that the residential/industrial area located west of Skunk Creek will not be adversely impacted by the proposed improvements during the 100-year event. 35th Avenue will be closed north of Pinnacle Peak Road, and Soft Wind Drive will be closed at 35th Avenue. Flows in excess of the 10-year event may cause some damage to the guide banks. A maintenance program needs to be implemented to repair damage to the drainage facilities.

The interim design consists of the construction of a 100-year bridge structure across Skunk Creek at Pinnacle Peak Road and a 100-year capacity earth-lined channel south of Pinnacle Peak Road. Upstream of Pinnacle Peak Road, a 100-year capacity soil cement lined channel will be constructed to the drop structure located west of 35th Avenue and approximately 300 feet north of the bridge. The drop structure will be constructed of roller compacted concrete (RCC) with 6.42-foot horizontal to 2.14-foot vertical steps. Guide banks will be constructed to redirect stormwater into the channel. Minor grading will be required adjacent to the drainage facilities to provide a smooth transition to natural ground.

The proposed interim design can be easily expanded to provide the ultimate crossing of Skunk Creek (100-year). The only major component of the design that is not reusable is the drop structure. In the ultimate design, the drop structure will be excavated to the design invert of Skunk Creek. The remaining components of the project may be incorporated into the 100-year design. The 10-, 100- and 500-year interim condition HEC-2 computer models are shown in Appendix B.

7.1 Bridge Structure

The existing "at grade" crossing is to be replaced by a bridge structure. The proposed bridge will operate in a non-pressure mode (i.e., free water surface condition) for the 100-year discharge. The bridge is a four span, concrete

girder bridge with both abutments and the bridge deck supported on drilled shafts. Three sets of 5-foot diameter piers will support the interior portion of the bridge span and the abutments will be spaced approximately 305 feet apart.

The piers are to be aligned parallel to the incoming flow path. To model debris blockage, 2 feet of debris was assumed to extend from each side of the pier. This provides an effective pier diameter of 9 feet for use in the scour calculations.

According to general Federal Emergency Management Agency (FEMA) criteria, any encroachment on the floodplain (i.e. bridges, etc.) should not cause more than a one-foot increase in the existing condition 100-year water surface elevation. This criteria is subject to change as part of local floodplain regulatory agency policies. Discussions with officials of both the City of Phoenix and the Arizona Department of Water Resources indicate that both agencies adhere to the one-foot rise criteria when establishing floodplain limits.

Several HEC-2 models were created to simulate floodplain boundaries and water surface profiles that would be representative of the existing condition and the proposed design alternative. Results from these models were compared to identify any locations that would be adversely impacted (i.e., subject to an increase in water surface elevation greater than one-foot above existing conditions) by the proposed improvement.

In order to create a format that would provide for easy comparison of the water surface profiles for the existing condition verses design condition, identical cross-section locations (except for bridge locations) were used in the models.

7.2 Drop Structure

As part of the interim design, Wood/Patel reviewed and analyzed various types of drop structures including vertical hard basin, sloping concrete, stepped stilling basin, baffle chute, and stepped drop structures. After reviewing cost feasibility, and hazard considerations and per direction of the City of Phoenix, a stepped drop structure was determined to best represent technical needs and, therefore, recommended for the interim design.

The hydraulic design for a stepped drop structure was adjusted to account for considerations of public hazard. Accordingly, the following modifications have been incorporated into the interim design:

1) Provided a stepped drop to enhance safety during low and nuisance flows;

2) Provided a 3H:1V slope for the drop in lieu of 1H:1V which was initially considered for its better hydraulic performance. The 3H:1V slope provides a somewhat inferior hydraulic performance, but enhances safety during low flows. The steps were selected to have a 2.14-foot vertical height and a 6.42-foot horizontal length for landing areas. This feature will also improve safety during dry conditions.

3) The drop structure was designed for the 10-year event and analyzed for the portion of the 100-year event that passes over the drop structure.

Scour protection for the drop structure consists of three independent elements. First, a stilling basin was designed downstream of the drop structure to contain the hydraulic jump generated by the 100-year event. Second, a cutoff wall was designed to prevent local scour from undermining the stilling basin. Third, a riprap blanket was designed along the downstream edge of the stilling basin to minimize the formation of a scour hole adjacent to the structure. The redundant nature of this design helps ensure that the scour potential is reduced

for the area adjacent to the drop structure. Appendix C contains the hydraulic and uplift calculations for the drop structure.

7.3 Future Condition Floodplain Description

In the future, the entire flow will be contained within a soil cement lined channel from the Skunk Creek Landfill to the Adobe Dam reservoir. This will provide a 100-year level of service for the subject reach of Skunk Creek. A drop structure will be located just south of the landfill and a soil cement lined channel will continue through the bridge to the storage reservoir of Adobe Dam. The hydraulic models for the ultimate condition are shown in Appendix D.

8.0 SEDIMENT TRANSPORT ANALYSES

8.1 Incipient Motion Analysis

Sediment transport analyses were performed using the Allowable Velocity Approach outlined in SCS publication entitled, *Design of Open Channels, (TR-25)*, October 1977 and Allowable Stress procedures outlined in the *Design Manual for Engineering Analysis of Fluvial Systems*, Arizona Department of Water Resources, March 1985.

8.1.1 Allowable Velocity Approach

Figure 1, "Allowable Velocities for Unlined Earth Channels" reproduced from *Design of Open Channels*, SCS TR-25, was used for the purpose of estimating allowable velocities for the study reach. Basic parameters used for this analysis are listed below:

1. Consider only straight alignment portion within the study limits.

2. Estimate D_{75} size from the soil gradation data from SHB-Agra, Inc. Soil Report.

3. Assume bank slope to be 2 horizontal to 1 vertical (2:1).

The data for estimating D_{75} was based upon samples from four test pits within the project limits. This data was used for all gradation analyses. The D_{75} ranged from 20 mm to 40 mm. A value of 25.4 mm was selected for the analysis. Based on this value, it was concluded the allowable velocity was about 5.4 fps for sediment free flow and about 7.5 fps for sediment laden flows.

Table 2
Allowable Velocity Approach for Skunk Creek

D_{75} (mm)	Basic Velocity (cfs)	Factors			Allowable Velocity (cfs)	Flow Condition
		D	A	B		
25.4	5.0	1.25	1.0	0.86	5.38	Sediment Free Flow
25.4	7.0*	1.25	1.0	0.86	7.53	Sediment Laden Flow

8.1.2 Tractive Stress Analysis

When the water flows in a channel, a force is developed that acts in the direction of flow on the channel bed. This force is simply the pull of water on the wetted area and is known as the tractive force.

Tractive Force:

The average value of the tractive force per unit wetted area is also called unit tractive force or shear stress. For this analysis, channel boundary shear stress has been computed using the HEC-2 computer program with the equation:

$$\tau_{ch} = \gamma D_{ch} S$$

where,

γ	=	specific weight of water (62.4 lb/ft^3)
D_{ch}	=	average depth of water in the channel (feet)
S	=	slope of the energy grade line (ft/ft)
τ_{ch}	=	channel boundary shear stress (lb/ft^2)

Allowable Tractive Force:

The allowable tractive force for the channel bed and sidebanks has been calculated using Shield's Equation.

$$\tau = 0.047\ D_c\ (\gamma_s - \gamma)$$

where,

τ	=	Allowable shear stress (lbs/ft^2)
D_c	=	Particle size (ft)
γ_s	=	Specific weight of soil (lb/ft^3)
γ	=	Specific weight of water (lb/ft^3)

The allowable velocity (non-erosive velocity) for Skunk Creek based on a D_{75} = 25.4 mm was approximately 5.4 ft/sec. It is anticipated that sediment transport will occur through the project reach. Sediment from Skunk Creek will be deposited in the storage pool of the Adobe Dam reservoir. If feasible, cobbles and boulders screened from the excavation may be placed in the invert of the channel to minimize erosion.

The channelized section upstream of the project (Skunk Creek Landfill) has velocities in the 10 to 13 fps range. If the project reach was designed to resist erosion (based on a D_{75} = 25.4 mm) the velocities would have to be reduced to approximately 5 fps for clear water and 7.5 fps for sediment laden flow. This reduction in velocity would result in aggradation through the design section which would reduce conveyance through the bridge and increase the design water surface elevation.

The proposed channelization was designed to maintain or slightly accelerate velocities from the upstream section which enables the design reach to operate in equilibrium or as a sediment supply reach rather than a sediment deposition reach. It is appropriate to provide additional freeboard in the system to account for unforeseen sediment deposition and, in addition, a maintenance program should be in place to monitor the channel invert at regular intervals. This will assist City personnel in monitoring the structural stability of the bridge and in determining the need for channel maintenance. It is suggested that an annual or semi-annual inspection be performed to ensure proper operation of the flood control facilities.

8.2 Scour Analyses

Scour analyses for the project were performed in accordance with procedures and methodologies described in the FHWA publication entitled Evaluating Scour at Bridges, (HEC-18), the ADWR publication entitled Engineering Analysis of Fluvial Systems, and ADOT internal memorandums. HEC-18 scour component categories analyzed for the project included contraction, abutment, and pier scour.

8.2.1 Morphology

The first step in the scour analysis was to review the general morphology of Skunk Creek. It was difficult to analyze the natural morphology of Skunk Creek because numerous flood control projects have been constructed near the project location. These include construction of the Adobe Dam, channelization of Skunk Creek from I-17 to Happy Valley Road, channelization of Skunk Creek through the landfill, and semi-annual grading of Skunk Creek adjacent to the intersection of Pinnacle Peak Road and 35th Avenue.

The geomorphic analyses for Skunk Creek was based on design information from the construction plans of the adjacent improvements. The channel geometry was configured to provide sediment continuity through the bridge section. Sediment deposition will occur downstream of the bridge in the storage reservoir of Adobe Dam. The recommended longitudinal slope is 0.0025 ft/ft.

8.2.2 Contraction Scour

Contraction scour occurs in response to constriction of the cross-sectional area of a watercourse (i.e., bridge crossings). The increased flow velocity which results causes an increase in the shear forces which enables the river to transport more sediment out of the constricted section than is flowing into it. Therefore, the section degrades until a new equilibrium slope is reached.

Contraction scour was calculated using Laursen's Equation (Case 2, contraction scour, no overbank flow, live-bed scour) described in HEC-18 and listed below.

$$\frac{Y_2}{Y_1} = \left(\frac{W_{c1}}{W_{c2}}\right)^{K_1}$$

Y_1	=	average depth in the main channel
Y_2	=	average depth in the contracted section
W_{c1}	=	bottom width of main channel
W_{c2}	=	bottom width of bridge opening
K_1	=	Coefficients

The 100- and 500-year contraction scour values were 0.59 feet and 0.79 feet, respectively. Contraction scour calculations are shown in Appendix E.

8.2.3 Pier Scour

Local scour occurs in response to objects being placed in the path of flowing water. Objects, such as bridge piers, deflect the velocity vectors down towards the bottom of the pier and around the sides of the pier. Local scour then occurs when these deflected currents result in a capacity to remove bed material around the pier at a rate greater than that at which upstream bed material can be supplied.

Numerous scour prediction formulas are published in the technical literature. Some formulas only address the case of clear water scour (i.e., the upstream shear forces are at or below the critical shear force required for incipient motion) while others focus on live-bed scour, which occurs when upstream bed material is being transported into the scour hole. Live-bed scour equations were applicable for local scour analyses for the subject reach of Skunk Creek.

Local (pier) scour was calculated using the following Colorado State University equation described in HEC-18 in conjunction with ADOT standard design procedures.

$$\frac{Y_s}{Y_1}=2.0K_1K_2\left(\frac{a}{Y_1}\right)^{0.65}Fr_1^{0.43}$$

Y_s	=	scour depth
Y_1	=	flow depth just upstream of the pier
K_1	=	correction for pier nose shape
K_2	=	correction for angle of attack of flow
a	=	effective pier width
Fr_1	=	Froude Number $V_1 / (gY_1)^{0.5}$

ADOT design procedures recommend that a square nose pier shape ($K_1 = 1.1$), a minimum angle of attack of 15 degrees, and debris blockage of four feet be utilized for determination of pier scour. These assumptions may significantly increase the scour depth and consequently influence the foundation design. The 100 and 500-year pier scour depths were calculated to be 19.42 feet and 22.13 feet, respectively. Calculation sheets for pier scour are contained in Appendix E.

8.2.4 Abutment Scour

Abutment scour is a special case of contraction scour. Because the 100-year design storm will be contained within the ultimate uniform channel section; the channel will not experience abutment scour. Abutment scour was calculated for the interim condition using Laursen's abutment scour equation from HEC-18 and listed below. It should be noted that scour depths determined utilizing Laursen's equation include contraction scour. Also, HEC-18 recommends that the maximum value of Y_s / Y_1 ratio in Laursen's equation be taken as 4 because his equation is open ended and field data did not exceed 4 Y_1. The abutment scour value for the 100-year event was 12.5 feet. The 500-year event would cause the guide bank to fail. This would help limit the abutment scour depth by allowing a significant portion of the discharge to outfall through the breached guide bank. It is anticipated that the roadways would recieve significant damage during the 500-year event, but the bridge structure would remain stable.

$$\frac{Q_o}{q_{mc} Y_o} = 2.75 \frac{Y_s}{Y_o} [(\frac{Y_s}{4.1 Y_o}+1)^{7/6} - 1]$$

Q_o	=	overbank flow discharge, cfs;
q_{mc}	=	unit discharge in main channel, Q_w/W, cfs/ft;
Y_o	=	overbank flow depth, ft.;
Y_s	=	equilibrium depth of scour, ft.

8.2.5 Total Scour

The scour depths for the proposed bridge and abutments are summarized in Table 3 below.

TABLE 3
Calculated Scour Values

EVENT	PIER*	CONTRACTION*	ABUTMENT
100-Year	19.42	0.59	12.5
500-Year	22.13	0.79	n/a

* A safety factor of 30 percent will be applied to pier and contraction scour.

Previous sections of this report have quantified scour depths for the different bed adjustment mechanisms that are expected to occur at the Pinnacle Peak Road Bridge. Due to the numerous assumptions and equations that are used to quantify some of the scour processes, it is very difficult to identify a "correct" combination of procedures that will assure an accurate assessment of the total scour depth. Any interpretation of the results from Table 3 must recognize the assumptions that were used in computing these values.

Assuming a two columns per bent, 5-foot diameter drilled shafts at 16.33-feet center-to-center, a 320-foot bridge structure, and 4-feet of

debris (2-feet per side), yielded a pier scour of 19.42 feet for the 100-year event and 22.13 feet for the 500-year event. Contraction scour, due to the contraction of the main channel and pier and debris blockout, was approximately 0.59 feet for the 100-year event and 0.79 feet for the 500-year event. This yields a total combined scour depth of 20 feet for the 100-year event and 22.9 feet for the 500-year event. A safety factor of 30 percent was applied to these scour depths which yielded 26 feet for the 100-year and 29.8 feet for the 500-year event. No allowance was made for long term degradation or gravel mining.

8.3 Bank Protection Evaluation

Initially, the channel embankment protection was designed for the ultimate (fully channelized) condition. The toedown elevation was established at ten feet below the thalweg of the wash. Due to the weir flow that occurs during the interim condition, the toedown elevation was increased to 16 feet along the east embankment. In addition, large boulders and cobbles from the channel excavation should be placed along the embankment to assist in the mitigation of scour. Calculations for determination of the toedown elevations are shown in Appendix E.

9.0 MULTIPLE USE RECREATION TRAIL (MURT)

Since the project is located adjacent to the Adobe Dam Recreational Area, joint-use facilities (hiking, biking, and equestrian trails) may be incorporated into the design at a future date. These facilities are routed around and physically separated from the proposed drop structure. A linear park environment may be created from Happy Valley Road to the Adobe Dam Recreational Area. The City of Phoenix's Park Department may propose additional amenities to be included in the design.

10.0 404 PERMIT STATEMENT

Skunk Creek has undergone substantial development adjacent to the project site. The construction of the Adobe Dam downstream and channelization upstream have significantly altered the hydraulic parameters of the watercourse. Construction of the proposed project will provide a complete flood control system for the area by linking the upstream and downstream improvements.

The Corps of Engineers and Arizona Department of Environmental Quality have approved the 404 Permit Application (Nationwide 26) and Conditional State 401 Water Quality Certification for the project, respectively. A copy of the Corps of Engineers and Arizona Department of Environmental Quality documents are included in Appendix F. If required, additional hydrologic and hydraulic data required for the permit applications will be provided by the project team.

11.0 QUANTITY AND COST ESTIMATES

On a conceptual basis, quantities and costs have been estimated for the design alternatives previously described in the report.

The earthwork estimate for channel improvements was performed using the average end-area method. It is assumed that excavated material will be disposed of along the channel overbank areas or that the County will utilize the material for construction of the nearby (1 - 1 ½ miles) projects.

Cost estimates for the bank protection material have been based upon costs from similar projects and for similar lining material within the Phoenix metropolitan area.

A summary of cost estimates is presented in Table 4. These costs include engineering fees, construction management, and contingencies.

TABLE 4

CHANNEL IMPROVEMENT QUANTITIES & COSTS

PINNACLE PEAK ROAD BRIDGE OVER SKUNK CREEK

100-YEAR BRIDGE WITH 10-YEAR CHANNEL DESIGN

GUIDE BANK IMPROVEMENTS
DROP STRUCTURE APPROX 300 FEET NORTH OF PINNACLE PEAK ROAD
308.5-FOOT BRIDGE SPAN

ITEM	*DESCRIPTION*	*QUANTITY*	*UNIT*	*UNIT COST*	*AMOUNT*
1	BRIDGE	26,900	SF	$35.00	$941,500
2	DROP STRUCTURE/CUTOFF WALLS	1	EA	$214,500.00	$214,500
3	EXCAVATION - PLACE ONSITE	41,703	CY	$1.00	$41,700
4	EXCAVATION - HAUL OFFSITE	136,627	CY	$2.00	$273,300
5	STRUCTURAL EXCAVATION	21,157	CY	$1.00	$21,200
6	SOIL CEMENT	3,143	CY	$20.00	$62,900
7	RIPRAP (TOE OF EMBANKMENT)	269	CY	$10.00	$2,700
8	100-YEAR GUIDE BANK IMPROVEMENTS	1	LS	$41,790.00	$41,800
9	10-YEAR "SUGAR" DIKES	1	LS	$3,300.00	$3,300
10	SOFT WIND DRIVE WALL	1	LS	$10,000.00	$10,000
11	SOIL CEMENT BRIDGE PROTECTION	3,700	CY	$20.00	$74,000
12	SOFT WIND DR HEADWALL/ PIPE OUTLET	1	EA	$4,000.00	$4,000
13	PINNACLE PEAK RD ST DRAIN (catch basins, headwalls, pipes, flapgates)	1	JOB	$40,000.00	$40,000
	BRIDGE/CHANNEL IMPROVEMENTS TOTAL				$1,730,900
14	UTILITY RELOCATION				
	- Realign 8" Water (b)	520	LF	$50.00	$26,000
	- Realign 12" ACP Water (b)	520	LF	$70.00	$36,400
	- Realign 12" Force Main (b)	620	LF	$102.00	$63,200
	UTILITY RELOCATION TOTAL				$125,600
15	PAVEMENT				
	- Subgrade Preparation	2,053	SY	$2.00	$4,100
	- 1 1/2" AC Surface CSE (D 1/2)	173	ton	$32.00	$5,500
	- 6" AC Surface SCE (A 1 1/2)	693	ton	$32.00	$22,200
	- Tack Coat (2 ea.)	1.7	ton	$250.00	$400
	- Concrete Curb & Gutter	2,000	LF	$8.00	$16,000
	- Signing & Striping (a)	1	LS	$6,070.00	$6,100
	- Fill	2,500	CY	$5.00	$12,500
	PAVEMENT TOTAL				$66,800
	SUBTOTAL				$1,923,300
	CONTINGENCIES	4.0	%		$76,700
	TOTAL				***$2,000,000***

(a) 10% of new roadway improvements
(b) Replace with a DIP Cl 52

q:\skunk\100%cost.wq2

12.0 CONCLUSIONS

The team of Alpha•Wood/Patel performed hydrologic, hydraulic, and structural analyses (existing and design condition) for the 2-, 10-, 50-, and 100-year storm events. The 100-year design included evaluation of five design alternatives. The structures considered ranged from a two - 8′ X 8′ barrel box culvert for the 2-year storm to a 425-foot bridge for one of the 100-year alternatives. The impacts of each design option were evaluated with respect to present and future cost, public safety, accessibility, liability, utility relocation, and roadway geometry.

The 100-year option (Option C-1) was the recommended design. This alternative consisted of a drop structure south of the Skunk Creek Landfill, 305-foot long bridge, and a 250-foot bottom width channel with 2:1 side slopes. A primary concern of the design was to provide a 100-year capacity for the project.

Funding limitations require the project to be designed and constructed in two phases. The first or interim phase includes:

1) 100-year bridge crossing of Skunk Creek at Pinnacle Peak Road;
2) 100-year capacity earth-lined channel downstream of Pinnacle Peak Road;
3) 100-year soil cement lined channel from the bridge upstream to the interim drop structure;
4) 10-year interim drop structure;
5) Guide banks from the bridge east to the landfill.

The second, or ultimate, phase includes:

1) Removal of the interim drop structure;
2) 100-year soil cement lined channelization to the Skunk Creek Landfill;
3) Construction of the ultimate drop structure immediately downstream of the landfill;
4) Relocation of utilities along 35th Avenue;

5) Construction of soil cement embankment protection downstream of the bridge.

This design will provide a safe crossing of Skunk Creek in the immediate future and will allow the City to expand the facilities in the future. The proposed improvements will complete the Skunk Creek flood control system and allow portions of adjacent lands to be removed from the 100-year floodplain.

The cost of the interim design is approximately $2 million including engineering, construction administration, and contingencies. This cost matches the $2 million currently allocated to the project.

13.0 REFERENCES

Bibliography

American Society of Civil Engineers, *"Manuals and Reports on Engineering Practice No. 54, Sedimentation Engineering"*, 1977.

Arizona Department of Water Resources, *"Design Manual for Engineering Analysis of Fluvial Systems"*, March, 1985.

Federal Highway Administration, *"Evaluating Scour of Bridges", (HEC-18)*, February, 1991.

Federal Highway Administration, *"Hydraulic Design of Energy Dissipators for Culverts and Channels, HEC-14"*, September, 1983.

Flood Control District of Maricopa County, *"New River, Skunk Creek, and Agua Fria River Flood Control Master Plan"*, Draft, May, 1983.

Simons and Senturk, *"Sediment Transport Technology"*, 1977.

Soil Conservation Service, *"Design of Open Channels, TR-25"*, October, 1977.

U.S. Army Corps of Engineers, Hydrology Engineering Center, *"HEC-2 Water Surface Profiles"*, Users Manual, September, 1982.

U.S. Army Corps of Engineers, Los Angeles District, *"Design Memorandum No. 3, Skunk Creek and the New and Agua Fria Rivers"*, Final, May, 1986.

U.S. Army Corps of Engineers, Los Angeles District, *"New River and Phoenix City Streams, Arizona, Design Memorandum No. 2, Hydrology Part 1"*, October, 1974.

U.S. Army Corps of Engineers, Los Angeles District, *"New River and Phoenix City Streams, Arizona, Design Memorandum No. 3, Skunk Creek and the New and Agua Fria Rivers"*, Draft, July, 1985.

U.S. Army Corps of Engineers, Office of the Chief of Engineers, *"Hydraulic Design of Flood Control Channels"*, July, 1970.

Bibliography (Con't)

United States Department of the Interior, Bureau of Reclamation, *"Design of Small Dams"*, Second Edition 1973.

United States Geographical Survey, *"Roughness Coefficients for Stream Channels in Arizona"*, 1973.

REPORT\93986-02.J13

APPENDICES

APPENDIX A

```
*******************************************
*  HEC-2 WATER SURFACE PROFILES           *
*                                         *
*  Version   4.6.2;  May 1991             *
*                                         *
*  RUN DATE    17JUN94    TIME   15:13:55 *
*******************************************
```

```
*************************************
*  U.S. ARMY CORPS OF ENGINEERS     *
*  HYDROLOGIC ENGINEERING CENTER    *
*  609 SECOND STREET, SUITE D       *
*  DAVIS, CALIFORNIA 95616-4687     *
*          (916) 756-1104           *
*************************************
```

```
X     X  XXXXXXX   XXXXX              XXXXX
X     X  X        X     X            X     X
X     X  X        X                        X
XXXXXXX  XXXX     X          XXXXX    XXXXX
X     X  X        X                  X
X     X  X        X     X            X
X     X  XXXXXXX   XXXXX             XXXXXXX
```

THIS RUN EXECUTED 17JUN94 15:13:55

```
************************************
HEC-2 WATER SURFACE PROFILES

Version   4.6.2;  May 1991
************************************
```

```
T1      PINNACLE PEAK RD BRIDGE OVER SKUNK CREEK
T2      EXISTING CONDITION ANALYSIS
T3      SKUNK CREEK              2-YEAR FLOW
T4      FILE SKEX210.DAT
T4      THIS MODEL IS BASED ON COE & VAN LOO MODEL FROM "SKUNK CREEK FLOODPLAIN
T4      DELINEATION STUDY, ADOBE DAM TO CAP," NOVEMBER, 1990.  MODIFICATIONS TO
T4      CROSS SECTIONS WERE MADE BASED ON NEW TOPOGRAPHIC DATA, AND FLOWS WERE
T4      REVISED BASED ON A HECWRC LOG-PEARSON III ANALYSIS OF USGS STREAM GAGE
T4      DATA.
```

J1	ICHECK	INQ	NINV	IDIR	STRT	METRIC	HVINS	Q	WSEL	FQ
	0	2	0	0	0.0129	0	0.0	1200.0	1372.70	

J2	NPROF	IPLOT	PRFVS	XSECV	XSECH	FN	ALLDC	IBW	CHNIM	ITRACE
	1	0	-1	0.0	0.0	0.0	0.0	-6.0	0.0	

J3 VARIABLE CODES FOR SUMMARY PRINTOUT

38	43	1	8	42	3	2	26	5	39
53	4	54		150					

J5	LPRNT	NUMSEC	********REQUESTED SECTION NUMBERS********
	-10	-10	

NC	0.050	0.050	0.040	0.1	0.3					
X1	8.566	97	9001.7	10040.6	0.0	0.0	0.0	1.0	0.0	
GR	1387.7	7864.4	1386.7	7914.2	1385.0	7933.2	1386.2	8010.9	1385.4	8173.0
GR	1384.3	8203.7	1384.5	8220.9	1383.3	8228.6	1382.5	8322.4	1381.5	8324.5
GR	1381.2	8338.7	1382.5	8341.2	1381.5	8344.0	1381.5	8449.8	1380.4	8503.0
GR	1380.2	8705.2	1378.7	8829.0	1380.4	8834.8	1378.8	8845.6	1380.4	8848.8
GR	1378.2	8853.6	1380.7	8862.6	1380.3	8867.2	1379.2	8872.3	1378.8	8875.2
GR	1379.8	8896.4	1380.3	8923.5	1379.2	8937.1	1380.1	8973.5	1382.1	8978.3
GR	1382.5	8983.7	1381.2	8988.6	1382.9	8995.1	1381.9	9001.7	1380.3	9008.1
GR	1380.1	9013.4	1377.7	9018.9	1376.5	9025.0	1375.6	9033.0	1373.2	9041.5
GR	1372.0	9052.5	1370.8	9063.8	1370.3	9126.1	1369.2	9138.9	1370.2	9208.1
GR	1370.1	9340.9	1369.1	9352.6	1370.3	9363.5	1370.1	9371.4	1369.1	9375.6
GR	1370.1	9423.2	1372.1	9460.0	1373.5	9481.4	1374.0	9502.6	1373.0	9514.7
GR	1372.2	9520.1	1373.4	9530.2	1373.7	9597.7	1372.2	9605.1	1372.3	9615.3
GR	1371.3	9628.7	1372.3	9655.6	1373.0	9772.6	1374.0	9794.1	1375.1	9845.6
GR	1375.1	9861.6	1373.8	9878.0	1372.5	9924.8	1371.2	9936.4	1371.2	9938.5
GR	1375.0	9943.2	1377.2	9949.5	1378.2	9966.1	1375.9	9975.9	1372.4	9983.7

GR	1372.0	9986.3	1368.8	9993.0	1368.8	9996.0	1366.3	10000.0	1366.9	10009.4
GR	1368.7	10015.0	1373.4	10024.9	1378.6	10033.1	1380.1	10040.6	1381.1	10115.4
GR	1380.0	10225.4	1381.2	10296.3	1381.6	10516.7	1382.6	10729.1	1383.8	10816.6
GR	1383.7	10825.5	1381.4	10828.6	1384.0	10837.6	1383.0	10895.8	1383.7	11111.2
GR	1385.9	12184.6	1389.2	12197.0						
X1	8.680	93	9088.6	10072.6	615.0	650.0	602.0	1.0	0.0	
GR	1390.3	8163.3	1388.6	8235.1	1389.1	8359.1	1387.5	8437.1	1385.1	8440.6
GR	1383.7	8591.0	1383.7	8703.7	1383.5	8830.4	1384.4	8879.3	1383.4	8897.3
GR	1383.0	8926.2	1385.0	8932.9	1382.2	8943.8	1384.5	8947.3	1382.4	8951.2
GR	1384.7	8961.0	1384.9	8963.4	1383.1	8967.4	1382.3	9060.2	1385.7	9069.1
GR	1386.3	9071.1	1384.6	9075.5	1385.6	9082.0	1385.0	9088.6	1382.8	9093.2
GR	1380.9	9101.2	1378.0	9112.5	1376.0	9120.2	1374.5	9126.6	1373.5	9134.2
GR	1372.0	9139.3	1371.7	9228.6	1370.6	9234.2	1371.8	9249.9	1371.8	9253.4
GR	1370.3	9264.4	1371.2	9372.0	1372.6	9429.6	1373.2	9531.8	1374.3	9630.9
GR	1374.4	9714.1	1375.5	9738.8	1376.4	9811.4	1375.2	9824.8	1376.5	9888.5
GR	1375.4	9899.8	1374.2	9910.2	1372.7	9919.0	1372.4	9940.5	1373.8	9945.1
GR	1375.0	9949.4	1376.2	9964.6	1373.9	9969.0	1372.2	9977.8	1369.2	9982.4
GR	1369.1	9991.8	1372.0	10000.0	1372.8	10001.3	1375.2	10006.9	1375.5	10015.3
GR	1376.6	10023.1	1377.1	10032.0	1378.1	10036.8	1376.6	10041.2	1378.2	10053.0
GR	1378.9	10056.2	1381.8	10066.7	1382.8	10072.6	1382.2	10076.0	1380.4	10083.6
GR	1380.7	10089.7	1383.4	10095.7	1383.1	10201.2	1384.3	10256.6	1384.2	10368.9
GR	1383.9	10523.6	1384.9	10654.1	1385.1	10781.0	1385.5	10934.2	1385.9	11104.7
GR	1386.5	11273.1	1386.8	11384.3	1387.6	11573.9	1388.0	11707.0	1388.7	11818.9
GR	1390.1	11891.0	1389.9	11952.6	1388.8	11979.1	1392.5	12008.1	1394.1	12020.2
GR	1391.0	12032.7	1391.6	12038.3	1393.1	12047.5				
X1	8.815	99	9609.8	10489.6	450.0	680.0	713.0	1.0	0.0	
GR	1390.4	8808.9	1389.2	8839.1	1387.5	8856.8	1386.3	8872.6	1385.6	8880.4
GR	1385.1	8957.0	1385.3	9014.6	1385.4	9072.2	1385.2	9117.2	1386.1	9135.9
GR	1386.7	9138.1	1386.4	9178.1	1386.6	9244.8	1386.6	9290.2	1386.6	9321.3
GR	1386.6	9346.5	1386.7	9366.3	1386.4	9376.6	1389.7	9384.9	1386.0	9391.7
GR	1389.3	9398.0	1386.3	9403.9	1389.7	9413.5	1386.9	9419.1	1385.9	9436.0
GR	1386.9	9461.3	1385.8	9487.1	1387.5	9498.5	1386.4	9523.1	1388.0	9544.5
GR	1389.2	9565.2	1390.3	9583.5	1388.5	9609.8	1386.6	9637.1	1385.0	9652.8
GR	1383.4	9670.6	1380.9	9687.2	1378.8	9707.2	1377.6	9725.1	1376.9	9740.7
GR	1374.5	9748.5	1374.4	9756.1	1375.8	9770.8	1375.5	9788.3	1375.0	9818.5
GR	1374.9	9850.1	1374.8	9881.0	1374.7	9912.6	1374.7	9942.9	1374.5	9965.4
GR	1374.1	9984.2	1372.0	10000.0	1372.8	10016.7	1372.2	10035.6	1374.3	10063.8
GR	1375.2	10078.6	1376.0	10095.5	1376.4	10111.8	1376.5	10129.2	1376.9	10153.1
GR	1376.8	10174.4	1376.7	10191.9	1377.4	10209.1	1378.5	10222.6	1379.5	10239.1
GR	1380.8	10261.2	1381.7	10272.3	1382.4	10288.5	1383.8	10306.6	1384.3	10320.4
GR	1385.0	10339.2	1385.4	10355.2	1385.6	10372.8	1385.5	10394.3	1386.4	10410.4
GR	1390.0	10442.0	1391.1	10458.5	1391.9	10471.5	1392.3	10489.6	1392.8	10513.3
GR	1393.2	10543.4	1392.5	10567.3	1391.7	10584.0	1391.4	10598.7	1390.4	10624.2
GR	1390.1	10641.8	1387.8	10681.9	1387.6	10700.9	1387.5	10736.6	1387.4	10756.1
GR	1389.2	10774.8	1387.7	10802.6	1387.8	10823.5	1388.2	10837.8	1388.2	10860.6
GR	1387.9	10880.4	1388.2	10899.4	1387.9	10925.9	1388.1	10952.9		

X1	8.907	95	9830.2	10263.3	520.0	400.0	485.8	1.0	0.0	
X3	0	0.0	0.0	0.0	0.0	11005.2	0.0	0.0	0.0	
GR	1397.5	8809.3	1396.5	8838.1	1395.9	8871.3	1393.5	8905.3	1392.4	8937.2
GR	1392.2	8970.4	1390.8	9003.5	1390.0	9027.4	1390.1	9048.0	1389.3	9080.4
GR	1387.1	9087.0	1388.3	9092.7	1389.2	9176.8	1389.2	9214.6	1389.2	9248.7
GR	1389.3	9291.0	1389.3	9327.2	1389.3	9369.9	1389.2	9414.6	1389.3	9454.7
GR	1389.4	9497.2	1389.9	9542.3	1389.7	9586.6	1390.0	9625.4	1389.9	9660.8
GR	1390.8	9664.8	1389.5	9668.6	1389.5	9677.5	1392.2	9681.2	1388.1	9690.2
GR	1390.9	9696.8	1387.9	9699.2	1389.9	9707.4	1393.4	9712.3	1390.3	9719.4
GR	1389.9	9737.3	1390.5	9763.0	1389.7	9786.2	1389.6	9797.0	1390.7	9807.1
GR	1390.4	9826.6	1393.0	9830.2	1389.6	9835.6	1385.4	9863.1	1381.7	9875.2
GR	1380.1	9894.0	1378.7	9916.2	1377.4	9940.3	1375.8	9960.3	1375.2	9987.9
GR	1375.1	10000.0	1375.1	10025.3	1375.7	10051.5	1376.5	10072.8	1377.1	10081.8
GR	1380.7	10094.5	1382.7	10106.6	1383.8	10122.1	1385.2	10140.3	1386.7	10159.5
GR	1390.3	10182.6	1391.6	10193.0	1391.7	10213.1	1391.9	10230.2	1392.8	10244.7
GR	1393.1	10263.3	1392.3	10283.1	1391.7	10302.9	1391.8	10337.3	1391.9	10369.3
GR	1392.2	10391.9	1392.2	10408.2	1390.5	10432.0	1390.2	10443.8	1392.1	10470.5
GR	1392.0	10488.7	1392.3	10507.6	1392.1	10524.8	1392.1	10551.6	1392.3	10570.1
GR	1391.2	10583.8	1391.3	10604.2	1392.0	10627.3	1392.2	10650.0	1391.6	10677.1
GR	1391.1	10695.0	1391.2	10738.1	1390.8	10770.7	1391.6	10797.7	1391.5	10826.7
GR	1390.9	10867.4	1391.0	10912.8	1391.1	10960.4	1391.4	10988.8	1392.0	11005.2
X1	8.957	95	9851.7	10283.2	260.0	240.0	264.0	1.0	0.0	
X3	0	0.0	0.0	0.0	0.0	10900.0	0.0	0.0	0.0	
GR	1400.0	8775.0	1398.0	8815.0	1396.0	8850.0	1394.0	8900.0	1392.0	8980.0
GR	1390.0	9045.0	1390.4	9077.5	1389.9	9104.9	1390.3	9136.9	1390.5	9176.1
GR	1390.3	9220.2	1390.4	9263.3	1390.2	9303.3	1390.4	9346.2	1390.4	9389.1
GR	1390.5	9433.5	1390.7	9474.2	1390.9	9512.7	1391.2	9557.9	1391.1	9605.4
GR	1391.2	9648.9	1391.4	9685.7	1391.3	9701.7	1391.1	9708.8	1393.0	9713.6
GR	1390.1	9721.2	1389.6	9724.7	1392.1	9730.0	1389.6	9734.6	1392.5	9743.5
GR	1391.3	9761.0	1391.4	9780.0	1391.6	9805.7	1390.9	9833.6	1392.1	9851.7
GR	1387.2	9877.8	1383.3	9903.0	1380.6	9926.3	1378.8	9954.7	1378.4	9975.6
GR	1378.1	10000.0	1378.1	10023.4	1378.5	10040.2	1378.5	10064.4	1382.4	10087.3
GR	1383.8	10096.7	1384.0	10112.1	1385.7	10153.8	1386.1	10171.4	1387.5	10187.2
GR	1388.5	10201.2	1388.5	10219.8	1388.2	10235.7	1388.7	10247.1	1390.8	10258.0
GR	1389.8	10261.8	1391.6	10283.2	1391.8	10301.6	1393.6	10330.0	1392.3	10348.7
GR	1392.0	10374.4	1392.3	10397.1	1391.9	10422.4	1392.3	10447.2	1392.2	10475.3
GR	1392.3	10500.4	1392.4	10519.6	1392.4	10548.5	1392.1	10583.0	1392.1	10624.0
GR	1392.0	10658.3	1391.9	10692.9	1391.2	10712.4	1391.3	10730.0	1391.3	10769.2
GR	1391.2	10792.8	1390.0	10804.9	1390.8	10825.3	1391.1	10844.1	1390.9	10873.7
GR	1390.9	10903.3	1390.7	10946.2	1390.6	10989.3	1390.5	11030.8	1390.7	11062.1
GR	1390.9	11089.1	1391.1	11108.3	1390.7	11125.6	1390.1	11145.1	1390.2	11173.0
GR	1390.1	11209.8	1390.3	11239.5	1390.1	11265.0	1390.2	11290.1	1389.9	11332.0
X1	9.014	86	9760.3	10320.7	260.0	250.0	301.0	1.0	0.0	
X3	0	0.0	0.0	8865.0	0.0	10550.9	0.0	0.0	0.0	
GR	1397.8	8641.6	1396.8	8667.2	1396.7	8699.9	1395.6	8722.9	1394.6	8737.2
GR	1394.3	8770.7	1394.1	8803.3	1394.0	8852.7	1394.1	8895.6	1394.2	8918.4
GR	1394.2	8957.6	1395.1	8989.7	1395.2	9015.0	1395.2	9062.9	1394.2	9094.8
GR	1393.3	9136.3	1393.5	9161.8	1393.7	9179.5	1393.8	9242.7	1394.1	9278.1
GR	1394.9	9312.4	1395.4	9334.8	1394.8	9361.5	1394.1	9382.8	1394.8	9404.8
GR	1394.8	9441.0	1394.3	9478.6	1395.0	9506.7	1395.0	9519.1	1394.9	9537.8
GR	1394.3	9563.6	1394.6	9593.9	1394.4	9617.7	1394.3	9640.3	1393.9	9655.9

GR	1393.5	9668.0	1392.9	9674.9	1392.6	9677.4	1393.2	9684.9	1393.7	9697.9
GR	1393.5	9710.8	1392.9	9729.1	1392.4	9741.8	1392.4	9753.2	1392.1	9760.3
GR	1391.5	9767.0	1391.5	9783.6	1390.9	9799.7	1390.8	9824.1	1389.9	9850.8
GR	1389.4	9873.9	1389.3	9903.7	1388.5	9923.9	1388.1	9953.0	1387.9	9982.3
GR	1387.8	10000.0	1387.6	10029.2	1388.1	10054.2	1388.0	10070.8	1387.4	10085.5
GR	1388.4	10102.1	1389.3	10125.7	1390.4	10153.5	1390.5	10186.6	1391.1	10222.8
GR	1391.1	10257.5	1392.0	10288.8	1392.2	10320.7	1392.3	10362.7	1392.5	10401.5
GR	1392.4	10450.2	1392.4	10488.2	1392.3	10524.9	1392.9	10550.9	1393.0	10579.9
GR	1392.5	10622.0	1392.7	10670.2	1392.5	10719.8	1392.7	10767.6	1392.5	10809.1
GR	1392.4	10854.2	1392.4	10894.1	1392.3	10945.2	1392.2	11001.0	1392.1	11062.5
GR	1391.6	11091.0								

PINNACLE PEAK ROAD DIP SECTION

PINNACLE PEAK ROAD DIP SECTION

X1	9.022	49	9768.2	10338.6	40.0	40.0	40.0	1.0	0.0	
X3	0	0.0	0.0	8850.0	0.0	10500.0	0.0	0.0	0.0	
GR	1395.6	8767.9	1395.5	8820.9	1395.4	8873.6	1395.4	8891.5	1395.4	8939.2
GR	1395.2	8990.7	1395.4	9052.6	1395.4	9113.7	1395.3	9176.6	1395.1	9229.3
GR	1395.1	9287.4	1394.9	9334.4	1394.8	9385.2	1394.7	9450.4	1394.8	9489.6
GR	1394.5	9524.7	1394.1	9576.1	1394.0	9617.7	1393.7	9656.6	1393.2	9693.1
GR	1393.1	9730.9	1392.7	9768.2	1391.9	9826.7	1391.3	9884.4	1390.9	9925.8
GR	1390.8	9956.6	1390.4	9987.7	1389.9	10000.0	1390.0	10078.9	1390.6	10135.1
GR	1391.0	10187.1	1391.6	10240.7	1392.0	10289.7	1392.4	10338.6	1392.7	10386.9
GR	1392.9	10441.8	1393.0	10492.3	1393.1	10541.9	1392.9	10588.6	1392.7	10636.9
GR	1392.7	10681.4	1392.5	10740.6	1392.6	10796.6	1392.6	10855.7	1392.4	10922.7
GR	1392.3	10988.0	1392.3	11032.1	1392.1	11079.5	1392.1	11085.0		
X1	9.030	84	9755.8	10316.5	40.0	40.0	40.0	1.0	0.0	
X3	0	0.0	0.0	9500.0	0.0	10520.0	0.0	0.0	0.0	
GR	1392.7	8771.1	1392.7	8807.9	1392.8	8845.4	1392.7	8874.8	1393.0	8906.8
GR	1393.2	8945.5	1392.7	8980.7	1392.8	9013.1	1392.9	9045.4	1393.4	9080.9
GR	1393.5	9124.8	1393.5	9158.2	1393.7	9191.8	1393.7	9231.1	1393.7	9251.9
GR	1393.9	9279.9	1393.9	9313.3	1394.2	9344.5	1394.2	9388.5	1394.6	9446.5
GR	1395.1	9476.6	1395.1	9505.8	1394.8	9533.7	1394.5	9565.5	1394.1	9602.9
GR	1393.7	9623.0	1393.3	9639.0	1393.3	9654.7	1393.3	9685.0	1393.0	9710.2
GR	1392.8	9733.0	1393.2	9735.2	1393.0	9743.9	1392.4	9755.8	1392.0	9778.0
GR	1391.3	9795.9	1391.3	9817.8	1390.9	9841.7	1390.7	9866.1	1390.7	9889.9
GR	1390.6	9915.1	1390.5	9934.1	1390.6	9959.5	1390.4	9978.8	1389.5	10000.0
GR	1389.5	10022.9	1389.7	10055.8	1389.9	10080.8	1390.1	10109.9	1390.4	10139.2
GR	1390.8	10163.8	1391.4	10188.8	1391.4	10207.6	1391.3	10228.1	1391.4	10249.8
GR	1391.8	10271.8	1391.9	10295.4	1392.0	10316.5	1392.0	10347.6	1392.1	10382.7
GR	1392.2	10410.8	1392.2	10436.7	1392.6	10457.7	1393.1	10475.6	1392.4	10488.1
GR	1393.1	10497.3	1394.6	10516.8	1394.8	10523.4	1394.9	10551.7	1395.0	10591.7
GR	1395.0	10651.4	1395.0	10685.9	1395.3	10743.8	1395.3	10796.2	1395.3	10848.2
GR	1395.4	10896.5	1395.2	10935.1	1395.0	10947.2	1394.3	10964.9	1392.9	10976.3
GR	1392.6	10984.4	1391.8	10985.2	1392.0	10999.1	1392.1	11015.0		
X1	9.064	92	9688.0	10434.5	150.0	240.0	180.0	1.0	0.0	
X3	0	0.0	0.0	9575.0	0.0	10468.9	0.0	0.0	0.0	
GR	1393.3	8753.5	1393.1	8773.6	1393.8	8803.7	1394.7	8838.7	1394.6	8865.9
GR	1394.9	8888.2	1394.4	8904.3	1394.2	8924.4	1393.0	8933.7	1392.8	8943.1
GR	1394.7	8965.1	1394.8	8974.1	1393.7	8986.9	1393.5	9002.9	1393.5	9025.2
GR	1393.1	9033.9	1394.0	9041.3	1393.1	9056.5	1394.5	9065.2	1394.2	9074.1
GR	1394.0	9096.3	1393.9	9128.6	1394.0	9149.8	1394.1	9175.5	1394.4	9207.1

GR	1394.4	9227.2	1394.3	9244.3	1394.3	9267.8	1394.2	9291.9	1394.4	9316.3
GR	1394.6	9350.1	1394.6	9382.0	1394.8	9425.2	1394.7	9460.2	1394.9	9491.4
GR	1394.8	9523.0	1395.1	9549.4	1395.1	9580.9	1394.6	9616.2	1394.5	9647.0
GR	1394.7	9670.0	1394.7	9688.0	1393.4	9698.1	1393.4	9728.3	1393.1	9744.3
GR	1392.3	9766.5	1392.2	9788.6	1392.3	9810.4	1392.1	9834.2	1392.2	9858.2
GR	1392.4	9889.8	1392.0	9917.3	1391.8	9931.4	1391.9	9954.0	1392.2	9976.0
GR	1392.2	9986.6	1390.8	10000.0	1391.3	10006.5	1392.1	10013.7	1392.4	10040.5
GR	1392.1	10059.2	1392.5	10084.7	1392.8	10105.5	1392.2	10133.2	1392.3	10156.8
GR	1392.4	10182.9	1392.7	10210.4	1393.0	10233.7	1393.1	10260.0	1393.1	10289.7
GR	1393.1	10323.1	1393.2	10354.5	1393.1	10385.8	1393.3	10411.9	1393.7	10434.5
GR	1398.1	10443.6	1399.7	10468.9	1397.9	10488.7	1398.0	10527.0	1397.6	10553.5
GR	1397.1	10589.6	1396.9	10633.3	1397.1	10663.3	1397.1	10693.0	1396.8	10723.1
GR	1396.4	10744.2	1396.3	10777.5	1397.0	10795.3	1397.3	10821.4	1397.1	10857.2
GR	1397.2	10880.9	1397.2	10895.2						
NC	0.055	0.050	0.040	0.1	0.3					
X1	9.100	92	9740.9	10418.9	140.0	240.0	190.0	1.0	0.0	
X3	0	0.0	0.0	9688.5	0.0	10436.2	0.0	0.0	0.0	
GR	1393.2	8755.8	1395.2	8770.1	1394.7	8780.5	1395.3	8808.2	1395.4	8842.4
GR	1395.2	8862.1	1395.1	8887.2	1395.0	8916.1	1395.1	8944.9	1395.0	8977.6
GR	1393.2	8998.5	1393.3	9007.7	1395.0	9016.2	1393.7	9025.9	1394.7	9030.8
GR	1394.5	9046.1	1393.6	9052.7	1395.2	9072.6	1393.8	9083.0	1395.0	9107.9
GR	1394.9	9138.3	1394.5	9157.2	1395.1	9166.5	1394.8	9176.8	1395.0	9203.4
GR	1395.5	9247.7	1395.9	9271.4	1395.3	9309.1	1395.7	9341.5	1395.2	9348.9
GR	1395.4	9368.4	1395.6	9398.7	1395.8	9433.3	1395.6	9467.5	1395.7	9504.8
GR	1395.7	9535.0	1395.9	9575.7	1396.2	9607.5	1396.2	9639.3	1395.6	9661.0
GR	1396.5	9669.2	1399.8	9681.4	1400.5	9688.5	1399.1	9693.1	1397.3	9694.7
GR	1395.7	9698.8	1396.1	9710.9	1394.4	9716.8	1394.1	9740.9	1393.3	9759.7
GR	1392.4	9791.4	1391.9	9820.9	1393.1	9839.8	1393.0	9868.1	1392.9	9899.7
GR	1393.0	9941.3	1392.8	9964.5	1391.9	9989.1	1390.6	9995.5	1391.3	10000.0
GR	1392.0	10007.3	1393.1	10012.7	1392.4	10034.9	1393.0	10080.0	1392.4	10105.8
GR	1392.6	10131.1	1392.8	10158.2	1393.1	10176.6	1392.6	10184.3	1393.0	10217.9
GR	1393.2	10246.6	1393.6	10273.0	1393.3	10309.3	1393.5	10340.5	1393.0	10380.5
GR	1393.5	10407.3	1398.6	10418.9	1400.4	10436.2	1400.4	10442.6	1398.7	10460.6
GR	1398.5	10489.3	1398.6	10536.4	1398.6	10573.1	1398.2	10633.3	1398.2	10679.4
GR	1398.4	10702.7	1397.8	10724.9	1397.9	10763.3	1398.3	10789.3	1398.2	10809.5
GR	1398.7	10833.8	1399.2	10854.6						
X1	9.200	90	9861.7	10309.0	425.0	530.0	528.0	1.0	0.0	
X3	0	0.0	0.0	9840.1	0.0	10326.0	0.0	0.0	0.0	
GR	1395.3	8786.4	1396.3	8817.5	1397.9	8843.2	1397.9	8873.9	1397.7	8898.4
GR	1398.0	8924.9	1398.5	8948.0	1398.5	8959.7	1398.2	8981.1	1397.8	9002.6
GR	1396.3	9009.4	1396.8	9029.8	1397.0	9043.1	1395.5	9050.3	1395.9	9055.1
GR	1397.6	9060.9	1395.8	9071.2	1397.5	9088.8	1396.7	9106.9	1397.5	9132.6
GR	1397.7	9147.6	1396.6	9158.2	1397.9	9179.6	1398.1	9197.7	1397.0	9215.5
GR	1397.8	9223.0	1397.3	9246.7	1400.2	9275.2	1401.0	9281.2	1398.9	9287.9
GR	1396.1	9308.6	1395.1	9315.7	1394.9	9341.6	1397.0	9366.7	1397.6	9383.5
GR	1396.4	9398.8	1398.5	9419.0	1398.8	9441.4	1399.0	9477.7	1399.4	9504.2
GR	1399.3	9525.7	1399.0	9557.5	1399.0	9579.7	1399.0	9601.3	1399.3	9628.7
GR	1399.1	9664.3	1398.7	9688.0	1398.7	9710.8	1398.5	9735.7	1398.7	9754.4
GR	1398.8	9774.8	1398.8	9803.9	1398.2	9831.8	1400.0	9840.1	1398.5	9856.6
GR	1398.9	9861.7	1396.1	9871.7	1393.8	9894.1	1392.9	9926.8	1392.3	9938.6
GR	1392.0	9959.2	1391.6	9987.6	1391.2	9996.4	1392.9	10000.0	1394.2	10004.7
GR	1394.2	10028.3	1395.0	10045.9	1394.0	10048.6	1394.0	10074.6	1394.3	10096.7

GR	1394.5	10103.4	1393.6	10108.3	1394.4	10113.4	1394.1	10139.2	1394.5	10152.3
GR	1393.8	10157.3	1393.9	10177.9	1394.0	10191.1	1393.2	10196.4	1394.3	10206.7
GR	1393.6	10217.4	1393.4	10254.1	1393.5	10284.9	1393.9	10296.6	1399.7	10309.0
GR	1401.9	10330.3	1400.9	10343.4	1401.5	10347.7	1400.3	10350.9	1400.3	10356.7
NC	0.050	0.050	0.045	0.1	0.3					

CITY OF PHOENIX LANDFILL

CITY OF PHOENIX LANDFILL

X1	9.282	94	9809.6	10043.5	420.0	440.0	443.0	1.0	0.0	
X3	0	0.0	0.0	9808.8	0.0	10226.6	0.0	0.0	0.0	
GR	1421.9	9146.1	1421.4	9167.3	1419.5	9190.3	1416.4	9213.6	1413.0	9237.7
GR	1409.5	9257.8	1405.1	9277.9	1403.0	9293.9	1403.0	9300.0	1400.5	9314.7
GR	1400.4	9330.9	1401.4	9332.8	1400.5	9336.3	1400.5	9364.3	1400.7	9376.2
GR	1401.4	9379.5	1400.0	9397.0	1402.0	9405.9	1399.4	9421.2	1399.2	9434.3
GR	1400.8	9438.6	1401.5	9448.4	1399.2	9457.5	1398.9	9465.6	1401.7	9473.4
GR	1401.7	9479.0	1400.3	9488.1	1401.3	9497.7	1400.6	9502.5	1401.5	9515.5
GR	1401.0	9536.9	1401.7	9548.5	1401.2	9568.3	1401.0	9596.0	1401.5	9618.7
GR	1400.6	9632.6	1401.2	9643.7	1400.8	9663.5	1401.0	9682.8	1401.3	9698.8
GR	1403.0	9709.9	1401.2	9720.9	1401.0	9740.7	1401.1	9765.2	1400.9	9783.5
GR	1401.5	9800.8	1400.9	9809.6	1395.8	9828.0	1393.5	9838.9	1394.9	9852.5
GR	1394.0	9871.8	1395.3	9892.2	1396.3	9907.5	1394.8	9930.8	1393.5	9951.8
GR	1393.9	9955.3	1392.6	9959.5	1393.5	9968.3	1392.8	9971.6	1393.1	9990.1
GR	1392.5	10000.0	1392.2	10008.2	1391.9	10011.9	1393.4	10016.7	1394.7	10031.4
GR	1394.2	10040.6	1397.4	10043.5	1398.1	10059.4	1394.1	10077.1	1393.1	10096.6
GR	1392.8	10125.1	1392.4	10135.1	1393.0	10136.7	1393.4	10151.9	1393.8	10170.7
GR	1394.3	10193.3	1402.3	10209.3	1403.6	10226.6	1402.7	10246.8	1402.1	10263.3
GR	1402.0	10295.5	1401.9	10327.7	1402.2	10346.5	1402.5	10379.7	1402.5	10381.1
GR	1402.5	10407.3	1402.5	10440.1	1402.3	10466.1	1402.2	10494.9	1402.5	10525.5
GR	1402.3	10560.6	1402.3	10588.4	1402.4	10613.2	1402.4	10636.2		
X1	9.400	92	9907.5	10306.5	450.0	580.0	623.0	1.0	0.0	
X3	0	0.0	0.0	9880.3	0.0	10306.5	0.0	0.0	0.0	
GR	1458.7	9588.2	1458.5	9617.4	1444.4	9638.7	1441.1	9665.9	1437.6	9687.1
GR	1432.5	9715.2	1426.8	9741.1	1423.0	9761.7	1418.5	9786.4	1412.0	9818.5
GR	1410.9	9824.4	1409.2	9828.1	1408.3	9840.0	1408.6	9845.8	1407.0	9849.9
GR	1406.6	9854.3	1409.0	9861.6	1409.3	9880.3	1402.9	9907.5	1399.7	9922.0
GR	1398.9	9955.3	1400.8	9961.7	1398.0	9968.2	1397.8	9996.3	1397.8	10000.0
GR	1397.8	10009.6	1396.9	10023.1	1398.6	10051.0	1398.3	10074.5	1398.3	10082.5
GR	1396.0	10089.6	1398.0	10104.3	1397.5	10113.0	1398.4	10119.7	1397.1	10126.7
GR	1396.8	10156.0	1396.8	10175.8	1397.8	10184.3	1395.8	10213.5	1397.0	10231.2
GR	1395.6	10254.5	1395.5	10265.8	1400.6	10281.8	1402.4	10306.5	1403.1	10331.5
GR	1402.8	10359.2	1403.0	10367.6	1403.0	10395.2	1403.1	10421.7	1403.0	10451.2
GR	1403.4	10472.4	1403.9	10498.1	1403.1	10538.9	1403.0	10568.0	1403.0	10598.8
GR	1402.8	10631.0	1402.8	10662.3	1402.8	10687.4	1402.6	10718.2	1402.8	10746.5
GR	1402.6	10771.6	1405.9	10782.2	1402.4	10792.1	1402.6	10811.3	1402.5	10835.0
GR	1402.8	10861.8	1406.0	10890.6	1408.7	10899.7	1406.2	10919.8	1406.0	10936.6
GR	1406.2	10975.5	1406.2	10995.2	1406.2	11018.5	1405.6	11044.7	1406.3	11059.0
GR	1406.3	11082.7	1406.4	11113.5	1405.8	11144.7	1406.2	11175.2	1406.1	11221.7
GR	1405.9	11252.9	1406.1	11279.7	1406.2	11306.1	1406.4	11344.0	1406.4	11380.4
GR	1406.5	11426.7	1406.4	11456.9	1406.4	11482.3	1406.7	11508.8	1407.2	11531.0
GR	1407.9	11564.8	1407.8	11582.5						

X1	9.488	92	9946.9	10124.9	420.0	400.0	464.6	1.0	0.0	
X3	0	0.0	0.0	9946.9	1410.5	10458.0	0.0	0.0	0.0	
GR	1422.8	9823.4	1416.8	9844.4	1412.1	9859.8	1411.5	9873.7	1412.5	9875.1
GR	1410.8	9880.2	1412.1	9886.7	1407.1	9895.1	1405.9	9899.2	1405.6	9906.6
GR	1402.3	9913.0	1410.2	9927.4	1410.5	9946.9	1403.5	9974.7	1399.9	9988.5
GR	1399.9	10000.0	1400.3	10017.5	1400.9	10041.5	1401.2	10061.3	1401.3	10071.2
GR	1402.9	10073.0	1402.7	10090.6	1404.3	10109.9	1405.2	10124.9	1404.4	10141.2
GR	1402.7	10145.0	1402.5	10158.4	1401.9	10176.5	1401.2	10202.7	1401.1	10222.9
GR	1400.9	10250.7	1400.6	10274.6	1400.6	10293.8	1400.7	10306.7	1400.3	10325.7
GR	1400.2	10336.2	1402.6	10362.6	1403.5	10392.2	1404.8	10400.3	1403.4	10418.4
GR	1402.5	10430.9	1405.4	10441.0	1405.2	10463.0	1405.2	10484.0	1405.4	10493.1
GR	1404.6	10501.2	1404.6	10516.8	1404.9	10544.6	1405.3	10575.9	1405.5	10603.5
GR	1405.5	10627.3	1405.5	10649.3	1406.3	10683.9	1406.6	10719.4	1406.7	10763.8
GR	1406.5	10800.2	1406.5	10843.1	1406.0	10881.5	1405.5	10902.5	1405.3	10921.8
GR	1405.2	10950.5	1404.8	10968.6	1405.5	10980.2	1405.5	11001.5	1405.6	11028.3
GR	1406.1	11062.4	1407.1	11086.1	1407.9	11108.3	1408.1	11128.7	1407.9	11153.0
GR	1408.7	11166.1	1408.6	11186.9	1408.1	11206.4	1407.8	11234.7	1408.1	11243.8
GR	1407.1	11250.6	1408.9	11258.4	1408.3	11264.7	1409.1	11297.3	1409.7	11313.8
GR	1409.6	11339.1	1409.4	11357.3	1409.1	11377.6	1411.8	11388.4	1409.1	11396.7
GR	1408.9	11410.5	1411.3	11421.5	1410.3	11425.0	1411.8	11431.4	1410.7	11436.3
GR	1411.9	11441.5	1410.6	11444.3						
X1	9.560	70	9985.7	10066.4	385.0	365.0	380.2	1.0	0.0	
GR	1425.8	9823.6	1425.6	9829.0	1423.7	9832.4	1422.8	9840.0	1422.8	9843.3
GR	1423.9	9847.3	1422.7	9852.2	1421.3	9856.6	1424.3	9863.6	1419.6	9871.8
GR	1417.0	9878.5	1416.2	9889.6	1415.0	9895.5	1413.6	9902.4	1413.7	9911.6
GR	1413.4	9922.5	1413.1	9929.4	1412.2	9931.0	1412.5	9938.1	1412.5	9947.2
GR	1410.1	9956.6	1402.7	9985.7	1401.2	9993.0	1401.4	10000.0	1402.1	10024.4
GR	1402.7	10047.2	1403.4	10066.4	1403.2	10069.7	1402.8	10071.3	1403.4	10090.7
GR	1403.9	10107.9	1403.6	10137.5	1403.4	10164.5	1402.7	10193.3	1402.4	10215.0
GR	1402.5	10231.7	1402.4	10245.5	1403.0	10252.3	1403.2	10261.3	1403.5	10268.9
GR	1403.4	10275.0	1403.0	10282.2	1403.3	10289.5	1401.7	10294.6	1402.2	10307.8
GR	1401.9	10322.0	1402.3	10336.7	1402.4	10344.3	1404.1	10347.2	1403.2	10350.7
GR	1405.4	10354.5	1405.5	10368.7	1405.4	10376.1	1402.8	10382.0	1403.2	10386.6
GR	1403.2	10398.0	1402.8	10406.7	1402.6	10414.6	1401.8	10419.6	1401.2	10422.4
GR	1403.5	10429.7	1406.5	10443.1	1408.9	10453.5	1411.8	10464.1	1412.4	10478.9
GR	1412.0	10483.4	1414.2	10490.0	1420.7	10494.9	1421.5	10509.4	1421.8	10526.9
X1	9.655	91	9815.7	10091.7	450.0	375.0	501.6	1.0	0.0	
X3	0	0.0	0.0	9700.9	0.0	10280.0	0.0	0.0	0.0	
GR	1415.5	8386.9	1415.3	8396.9	1413.2	8420.2	1412.4	8426.5	1409.9	8435.0
GR	1409.6	8451.3	1410.8	8458.2	1413.0	8467.4	1413.5	8496.7	1413.0	8506.9
GR	1413.8	8516.0	1413.3	8522.1	1413.2	8538.7	1410.9	8548.9	1410.5	8567.5
GR	1409.9	8582.3	1408.2	8592.7	1408.1	8615.5	1407.2	8630.7	1408.7	8646.2
GR	1409.7	8666.6	1409.7	8691.5	1410.5	8715.0	1409.7	8741.7	1409.8	8773.9
GR	1409.5	8811.7	1410.7	8825.3	1409.8	8854.6	1409.2	8865.0	1409.9	8878.9
GR	1409.9	8918.2	1410.3	8950.1	1409.7	8971.6	1410.2	8986.7	1409.4	9002.5
GR	1410.4	9020.3	1409.6	9038.7	1409.3	9072.5	1410.7	9093.3	1408.5	9111.7
GR	1409.8	9131.4	1408.8	9149.9	1409.3	9195.7	1410.2	9220.6	1408.5	9237.3
GR	1408.6	9279.7	1408.4	9335.4	1407.8	9394.6	1407.7	9444.9	1407.8	9495.9
GR	1408.4	9528.4	1408.7	9560.2	1409.5	9609.1	1409.2	9646.1	1410.6	9668.6
GR	1416.2	9688.3	1423.3	9700.9	1422.7	9720.4	1416.2	9732.8	1408.2	9760.2
GR	1406.5	9769.9	1405.6	9776.0	1404.0	9786.8	1403.1	9797.6	1407.5	9815.7

GR	1406.2	9824.8	1406.2	9830.6	1402.6	9842.7	1402.7	9888.2	1403.1	9925.4
GR	1403.1	9946.9	1402.5	9971.5	1403.4	9980.3	1400.7	9987.0	1401.0	10000.0
GR	1400.8	10006.1	1402.5	10014.5	1402.3	10033.6	1400.8	10047.0	1401.4	10057.6
GR	1404.4	10071.7	1407.4	10091.7	1407.7	10107.5	1408.8	10121.7	1410.2	10140.1
GR	1410.2	10147.8	1410.9	10158.2	1411.4	10183.0	1414.8	10211.8	1421.9	10246.5
GR	1430.7	10283.3								
X1	9.713	44	9726.1	10099.3	315.0	290.0	306.2	1.0	0.0	
GR	1429.7	9583.1	1430.9	9598.8	1429.2	9612.6	1426.7	9619.9	1419.0	9631.7
GR	1419.3	9649.0	1418.8	9666.9	1421.5	9674.3	1410.3	9698.4	1409.1	9713.1
GR	1408.8	9726.1	1407.1	9743.8	1405.6	9769.2	1403.7	9798.1	1403.4	9809.3
GR	1402.9	9820.6	1402.9	9849.4	1403.5	9863.6	1402.9	9887.6	1403.0	9912.8
GR	1402.5	9938.4	1403.1	9965.9	1402.1	9972.5	1401.6	9983.6	1402.4	9989.1
GR	1402.3	10000.0	1403.1	10017.7	1403.3	10029.1	1402.6	10042.8	1404.0	10054.2
GR	1406.6	10071.1	1410.6	10089.4	1412.6	10099.3	1412.4	10108.7	1412.2	10122.1
GR	1412.1	10135.2	1414.1	10158.1	1418.6	10186.0	1425.8	10216.2	1431.8	10249.0
GR	1437.9	10285.5	1442.2	10335.1	1444.2	10375.2	1444.9	10385.5		
NC	0.050	0.050	0.040	0.1	0.3					
X1	9.800	38	9789.7	10124.4	475.0	460.0	459.4	1.0	0.0	
GR	1442.0	9641.4	1430.7	9680.0	1425.9	9698.7	1424.7	9706.0	1423.8	9708.3
GR	1423.6	9721.5	1423.8	9737.0	1426.1	9744.0	1418.9	9759.4	1412.2	9789.7
GR	1408.5	9819.7	1404.4	9858.4	1403.9	9887.7	1404.0	9913.5	1403.8	9935.5
GR	1403.1	9964.8	1403.9	9990.1	1402.7	10000.0	1403.7	10019.8	1404.9	10037.6
GR	1406.0	10045.8	1405.5	10054.2	1407.1	10061.5	1407.1	10075.8	1408.9	10096.5
GR	1410.4	10124.4	1413.3	10153.4	1416.3	10183.4	1415.9	10200.9	1416.2	10209.9
GR	1417.1	10224.1	1420.7	10248.2	1426.8	10283.2	1439.7	10332.9	1445.6	10368.4
GR	1449.0	10397.4	1448.8	10436.6	1449.3	10465.4				

T1 PINNACLE PEAK RD BRIDGE OVER SKUNK CREEK
T2 EXISTING CONDITION ANALYSIS
T3 SKUNK CREEK 5-YEAR FLOW

J1	ICHECK	INQ	NINV	IDIR	STRT	METRIC	HVINS	Q	WSEL	FQ
	0	2	0	0	0.0129	0	0.0	4450.0	1372.70	
J2	NPROF	IPLOT	PRFVS	XSECV	XSECH	FN	ALLDC	IBW	CHNIM	ITRACE
	2	0	-1	0.0	0.0	0.0	0.0	-6.0	0.0	

T1 PINNACLE PEAK RD BRIDGE OVER SKUNK CREEK
T2 EXISTING CONDITION ANALYSIS
T3 SKUNK CREEK 10-YEAR FLOW

J1	ICHECK	INQ	NINV	IDIR	STRT	METRIC	HVINS	Q	WSEL	FQ
	0	2	0	0	0.0129	0	0.0	8650.0	1372.70	

J2	NPROF	IPLOT	PRFVS	XSECV	XSECH	FN	ALLDC	IBW	CHNIM	ITRACE
	3	0	-1	0.0	0.0	0.0	0.0	-6.0	0.0	

THIS RUN EXECUTED 17JUN94 15:14:03

****
HEC-2 WATER SURFACE PROFILES

Version 4.6.2; May 1991
****

NOTE- ASTERISK (*) AT LEFT OF CROSS-SECTION NUMBER INDICATES MESSAGE IN SUMMARY OF ERRORS LIST

SKUNK CREEK

SUMMARY PRINTOUT

	SECNO	Q	CWSEL	DEPTH	ELMIN	EG	CRIWS	VCH	10*KS	XLCH	SSTA	TOPWID	ENDST
	8.566	1200.00	1370.67	4.37	1366.30	1370.89	.00	3.73	128.92	.00	9080.18	383.54	10019.15
	8.566	4450.00	1371.70	5.40	1366.30	1372.24	.00	5.89	129.23	.00	9055.30	455.19	10021.32
	8.566	8650.00	1372.70	6.40	1366.30	1373.42	.00	6.82	129.08	.00	9046.08	613.63	10023.43
*	8.680	1200.00	1373.11	4.01	1369.10	1373.17	.00	1.95	17.66	602.00	9135.53	435.91	10002.02
*	8.680	4450.00	1374.75	5.65	1369.10	1374.88	.00	2.93	21.37	602.00	9125.53	678.05	10005.85
*	8.680	8650.00	1375.97	6.87	1369.10	1376.17	.00	3.59	22.49	602.00	9120.34	823.63	10018.62
*	8.815	1200.00	1375.37	3.37	1372.00	1375.57	.00	3.59	83.21	713.00	9745.66	306.93	10082.25
*	8.815	4450.00	1377.02	5.02	1372.00	1377.36	.00	4.70	61.48	713.00	9737.93	461.93	10199.87
*	8.815	8650.00	1378.16	6.16	1372.00	1378.67	.00	5.77	56.28	713.00	9716.73	501.71	10218.44
*	8.907	1200.00	1377.97	2.87	1375.10	1378.18	.00	3.71	37.47	485.80	9929.84	155.01	10084.85
	8.907	4450.00	1379.85	4.75	1375.10	1380.57	.00	6.80	66.24	485.80	9897.84	193.69	10091.53
	8.907	8650.00	1381.07	5.97	1375.10	1382.50	.00	9.60	98.66	485.80	9882.65	214.07	10096.72
*	8.957	1200.00	1379.87	1.77	1378.10	1380.55	1379.87	6.63	214.71	264.00	9937.88	134.54	10072.42
*	8.957	4450.00	1381.93	3.83	1378.10	1383.17	.00	8.93	138.02	264.00	9914.84	169.69	10084.53
	8.957	8650.00	1383.71	5.61	1378.10	1385.42	.00	10.49	117.80	264.00	9900.34	195.77	10096.11
*	9.014	1200.00	1389.05	1.65	1387.40	1389.57	1389.05	5.75	240.13	301.00	9909.93	209.29	10119.23
*	9.014	4450.00	1390.47	3.07	1387.40	1391.33	1390.47	7.47	192.59	301.00	9833.99	341.53	10175.53
*	9.014	8650.00	1391.54	4.14	1387.40	1392.59	1391.54	8.22	184.53	301.00	9766.53	506.35	10272.88
*	9.022	1200.00	1391.27	1.37	1389.90	1391.65	1391.27	4.96	263.67	40.00	9887.23	324.23	10211.46
*	9.022	4450.00	1392.31	2.41	1389.90	1392.97	1392.31	6.51	218.59	40.00	9796.79	530.67	10327.47
*	9.022	8650.00	1393.10	3.20	1389.90	1393.98	1393.10	7.56	166.66	40.00	9730.93	769.06	10500.00
*	9.030	1200.00	1391.84	2.34	1389.50	1391.90	.00	2.00	22.53	40.00	9782.06	499.42	10281.48
*	9.030	4450.00	1393.08	3.58	1389.50	1393.25	.00	3.29	25.98	40.00	9703.21	787.25	10497.08
*	9.030	8650.00	1394.00	4.50	1389.50	1394.26	.00	4.31	28.41	40.00	9607.92	901.08	10509.00

	SECNO	Q	CWSEL	DEPTH	ELMIN	EG	CRIWS	VCH	10*KS	XLCH	SSTA	TOPWID	ENDST
*	9.064	1200.00	1392.84	2.04	1390.80	1393.12	1392.84	4.24	255.27	180.00	9751.52	469.73	10221.25
*	9.064	4450.00	1393.83	3.03	1390.80	1394.20	.00	4.82	125.40	180.00	9694.75	740.02	10434.77
*	9.064	8650.00	1394.68	3.88	1390.80	1395.16	.00	5.57	84.75	180.00	9610.72	805.06	10436.52
*	9.100	1200.00	1393.96	3.36	1390.60	1394.01	.00	1.67	18.27	190.00	9744.16	664.19	10408.35
*	9.100	4450.00	1395.01	4.41	1390.60	1395.16	.00	3.14	26.38	190.00	9714.72	696.00	10410.71
*	9.100	8650.00	1395.83	5.23	1390.60	1396.12	.00	4.35	32.70	190.00	9698.46	705.08	10412.60
	9.200	1200.00	1394.96	3.76	1391.20	1395.03	.00	2.08	20.38	528.00	9882.85	414.89	10298.85
	9.200	4450.00	1396.37	5.17	1391.20	1396.59	.00	3.78	27.25	528.00	9870.73	431.16	10301.89
	9.200	8650.00	1397.48	6.28	1391.20	1397.91	.00	5.21	33.40	528.00	9866.75	437.51	10304.27
	9.282	1200.00	1395.73	3.83	1391.90	1395.79	.00	1.83	14.62	443.00	9828.32	322.48	10196.17
	9.282	4450.00	1397.52	5.62	1391.90	1397.72	.00	3.52	23.59	443.00	9821.78	362.38	10199.75
	9.282	8650.00	1398.93	7.03	1391.90	1399.30	.00	4.92	29.45	443.00	9816.72	385.83	10202.55
*	9.400	1200.00	1397.85	2.35	1395.50	1398.33	1397.85	5.55	306.71	623.00	9988.31	229.32	10273.19
*	9.400	4450.00	1399.84	4.34	1395.50	1400.29	.00	5.39	86.50	623.00	9921.36	352.60	10279.42
*	9.400	8650.00	1401.35	5.85	1395.50	1401.96	.00	6.30	65.57	623.00	9914.53	377.53	10292.07
*	9.488	1200.00	1402.38	2.48	1399.90	1402.51	.00	3.14	44.17	464.60	9979.00	291.54	10360.17
	9.488	4450.00	1403.66	3.76	1399.90	1404.06	.00	5.32	83.03	464.60	9974.12	397.80	10434.89
	9.488	8650.00	1404.74	4.84	1399.90	1405.39	.00	6.65	91.84	464.60	9969.78	450.63	10438.70
	9.560	1200.00	1403.96	2.76	1401.20	1404.06	.00	3.00	39.63	380.20	9980.74	422.90	10431.76
*	9.560	4450.00	1405.69	4.49	1401.20	1405.90	.00	4.31	32.53	380.20	9973.92	465.60	10439.51
*	9.560	8650.00	1407.04	5.84	1401.20	1407.38	.00	5.51	34.27	380.20	9968.64	476.79	10445.43
*	9.655	1200.00	1404.90	4.20	1400.70	1404.97	.00	2.02	11.67	501.60	9780.68	264.49	10075.08
	9.655	4450.00	1406.88	6.18	1400.70	1407.11	.00	3.91	22.06	501.60	9767.70	313.75	10088.27
	9.655	8650.00	1408.38	7.68	1400.70	1408.81	.00	5.38	28.26	501.60	9759.58	356.71	10116.29
	9.713	1200.00	1405.27	3.67	1401.60	1405.32	.00	1.90	11.61	306.20	9774.32	288.09	10062.41
	9.713	4450.00	1407.52	5.92	1401.60	1407.69	.00	3.32	16.04	306.20	9739.42	335.89	10075.31
	9.713	8650.00	1409.22	7.62	1401.60	1409.53	.00	4.48	19.41	306.20	9711.60	371.50	10083.10
*	9.800	1200.00	1405.97	3.27	1402.70	1406.10	.00	2.89	24.64	459.40	9843.62	211.88	10056.33
	9.800	4450.00	1408.35	5.65	1402.70	1408.66	.00	4.52	26.26	459.40	9821.14	269.01	10090.15
	9.800	8650.00	1410.17	7.47	1402.70	1410.67	.00	5.72	29.18	459.40	9806.18	313.88	10120.06

SKUNK CREEK

SUMMARY PRINTOUT TABLE 150

	SECNO	XLCH	ELTRD	ELLC	ELMIN	Q	CWSEL	CRIWS	EG	10*KS	VCH	AREA	.01K
	8.566	.00	.00	.00	1366.30	1200.00	1370.67	.00	1370.89	128.92	3.73	321.33	105.69
	8.566	.00	.00	.00	1366.30	4450.00	1371.70	.00	1372.24	129.23	5.89	755.16	391.46
	8.566	.00	.00	.00	1366.30	8650.00	1372.70	.00	1373.42	129.08	6.82	1268.39	761.34
*	8.680	602.00	.00	.00	1369.10	1200.00	1373.11	.00	1373.17	17.66	1.95	613.97	285.57
*	8.680	602.00	.00	.00	1369.10	4450.00	1374.75	.00	1374.88	21.37	2.93	1518.66	962.52
*	8.680	602.00	.00	.00	1369.10	8650.00	1375.97	.00	1376.17	22.49	3.59	2408.88	1823.97
*	8.815	713.00	.00	.00	1372.00	1200.00	1375.37	.00	1375.57	83.21	3.59	334.63	131.55
*	8.815	713.00	.00	.00	1372.00	4450.00	1377.02	.00	1377.36	61.48	4.70	947.39	567.54
*	8.815	713.00	.00	.00	1372.00	8650.00	1378.16	.00	1378.67	56.28	5.77	1498.22	1152.98
*	8.907	485.80	.00	.00	1375.10	1200.00	1377.97	.00	1378.18	37.47	3.71	323.47	196.03
	8.907	485.80	.00	.00	1375.10	4450.00	1379.85	.00	1380.57	66.24	6.80	654.71	546.78
	8.907	485.80	.00	.00	1375.10	8650.00	1381.07	.00	1382.50	98.66	9.60	901.19	870.84
*	8.957	264.00	.00	.00	1378.10	1200.00	1379.87	1379.87	1380.55	214.71	6.63	181.02	81.90
*	8.957	264.00	.00	.00	1378.10	4450.00	1381.93	.00	1383.17	138.02	8.93	498.14	378.79
	8.957	264.00	.00	.00	1378.10	8650.00	1383.71	.00	1385.42	117.80	10.49	824.47	796.96
*	9.014	301.00	.00	.00	1387.40	1200.00	1389.05	1389.05	1389.57	240.13	5.75	208.82	77.44
*	9.014	301.00	.00	.00	1387.40	4450.00	1390.47	1390.47	1391.33	192.59	7.47	595.77	320.66
*	9.014	301.00	.00	.00	1387.40	8650.00	1391.54	1391.54	1392.59	184.53	8.22	1052.54	636.77
*	9.022	40.00	.00	.00	1389.90	1200.00	1391.27	1391.27	1391.65	263.67	4.96	241.86	73.90
*	9.022	40.00	.00	.00	1389.90	4450.00	1392.31	1392.31	1392.97	218.59	6.51	684.05	300.98
*	9.022	40.00	.00	.00	1389.90	8650.00	1393.10	1393.10	1393.98	166.66	7.56	1187.65	670.04
*	9.030	40.00	.00	.00	1389.50	1200.00	1391.84	.00	1391.90	22.53	2.00	601.31	252.80
*	9.030	40.00	.00	.00	1389.50	4450.00	1393.08	.00	1393.25	25.98	3.29	1441.03	872.97
*	9.030	40.00	.00	.00	1389.50	8650.00	1394.00	.00	1394.26	28.41	4.31	2231.11	1622.96
*	9.064	180.00	.00	.00	1390.80	1200.00	1392.84	1392.84	1393.12	255.27	4.24	283.30	75.11
*	9.064	180.00	.00	.00	1390.80	4450.00	1393.83	.00	1394.20	125.40	4.82	923.08	397.38
*	9.064	180.00	.00	.00	1390.80	8650.00	1394.68	.00	1395.16	84.75	5.57	1558.85	939.63
*	9.100	190.00	.00	.00	1390.60	1200.00	1393.96	.00	1394.01	18.27	1.67	717.91	280.74
*	9.100	190.00	.00	.00	1390.60	4450.00	1395.01	.00	1395.16	26.38	3.14	1431.31	866.47
*	9.100	190.00	.00	.00	1390.60	8650.00	1395.83	.00	1396.12	32.70	4.35	2011.82	1512.70
	9.200	528.00	.00	.00	1391.20	1200.00	1394.96	.00	1395.03	20.38	2.08	576.19	265.84
	9.200	528.00	.00	.00	1391.20	4450.00	1396.37	.00	1396.59	27.25	3.78	1177.65	852.44
	9.200	528.00	.00	.00	1391.20	8650.00	1397.48	.00	1397.91	33.40	5.21	1661.08	1496.73
	9.282	443.00	.00	.00	1391.90	1200.00	1395.73	.00	1395.79	14.62	1.83	626.62	313.80
	9.282	443.00	.00	.00	1391.90	4450.00	1397.52	.00	1397.72	23.59	3.52	1248.88	916.24
	9.282	443.00	.00	.00	1391.90	8650.00	1398.93	.00	1399.30	29.45	4.92	1779.02	1594.04

	SECNO	XLCH	ELTRD	ELLC	ELMIN	Q	CWSEL	CRIWS	EG	10*KS	VCH	AREA	.01K
*	9.400	623.00	.00	.00	1395.50	1200.00	1397.85	1397.85	1398.33	306.71	5.55	216.40	68.52
*	9.400	623.00	.00	.00	1395.50	4450.00	1399.84	.00	1400.29	86.50	5.39	825.31	478.47
*	9.400	623.00	.00	.00	1395.50	8650.00	1401.35	.00	1401.96	65.57	6.30	1373.99	1068.19
*	9.488	464.60	.00	.00	1399.90	1200.00	1402.38	.00	1402.51	44.17	3.14	428.96	180.55
	9.488	464.60	.00	.00	1399.90	4450.00	1403.66	.00	1404.06	83.03	5.32	873.71	488.37
	9.488	464.60	.00	.00	1399.90	8650.00	1404.74	.00	1405.39	91.84	6.65	1334.00	902.63
	9.560	380.20	.00	.00	1401.20	1200.00	1403.96	.00	1404.06	39.63	3.00	491.96	190.61
*	9.560	380.20	.00	.00	1401.20	4450.00	1405.69	.00	1405.90	32.53	4.31	1250.84	780.19
*	9.560	380.20	.00	.00	1401.20	8650.00	1407.04	.00	1407.38	34.27	5.51	1883.00	1477.63
*	9.655	501.60	.00	.00	1400.70	1200.00	1404.90	.00	1404.97	11.67	2.02	604.44	351.25
	9.655	501.60	.00	.00	1400.70	4450.00	1406.88	.00	1407.11	22.06	3.91	1173.49	947.40
	9.655	501.60	.00	.00	1400.70	8650.00	1408.38	.00	1408.81	28.26	5.38	1677.35	1627.13
	9.713	306.20	.00	.00	1401.60	1200.00	1405.27	.00	1405.32	11.61	1.90	632.27	352.24
	9.713	306.20	.00	.00	1401.60	4450.00	1407.52	.00	1407.69	16.04	3.32	1339.69	1111.03
	9.713	306.20	.00	.00	1401.60	8650.00	1409.22	.00	1409.53	19.41	4.48	1935.67	1963.56
*	9.800	459.40	.00	.00	1402.70	1200.00	1405.97	.00	1406.10	24.64	2.89	415.71	241.75
	9.800	459.40	.00	.00	1402.70	4450.00	1408.35	.00	1408.66	26.26	4.52	985.32	868.33
	9.800	459.40	.00	.00	1402.70	8650.00	1410.17	.00	1410.67	29.18	5.72	1513.14	1601.34

SKUNK CREEK

SUMMARY PRINTOUT TABLE 150

	SECNO	Q	CWSEL	DIFWSP	DIFWSX	DIFKWS	TOPWID	XLCH
	8.566	1200.00	1370.67	.00	.00	-2.03	383.54	.00
	8.566	4450.00	1371.70	1.03	.00	-1.00	455.19	.00
	8.566	8650.00	1372.70	1.00	.00	.00	613.63	.00
*	8.680	1200.00	1373.11	.00	2.44	.00	435.91	602.00
*	8.680	4450.00	1374.75	1.64	3.05	.00	678.05	602.00
*	8.680	8650.00	1375.97	1.22	3.27	.00	823.63	602.00
*	8.815	1200.00	1375.37	.00	2.26	.00	306.93	713.00
*	8.815	4450.00	1377.02	1.65	2.27	.00	461.93	713.00
*	8.815	8650.00	1378.16	1.14	2.19	.00	501.71	713.00
*	8.907	1200.00	1377.97	.00	2.60	.00	155.01	485.80
	8.907	4450.00	1379.85	1.89	2.84	.00	193.69	485.80
	8.907	8650.00	1381.07	1.21	2.91	.00	214.07	485.80
*	8.957	1200.00	1379.87	.00	1.90	.00	134.54	264.00
*	8.957	4450.00	1381.93	2.06	2.08	.00	169.69	264.00
	8.957	8650.00	1383.71	1.78	2.65	.00	195.77	264.00
*	9.014	1200.00	1389.05	.00	9.19	.00	209.29	301.00
*	9.014	4450.00	1390.47	1.41	8.54	.00	341.53	301.00
*	9.014	8650.00	1391.54	1.08	7.83	.00	506.35	301.00
*	9.022	1200.00	1391.27	.00	2.22	.00	324.23	40.00
*	9.022	4450.00	1392.31	1.04	1.84	.00	530.67	40.00
*	9.022	8650.00	1393.10	.79	1.56	.00	769.06	40.00
*	9.030	1200.00	1391.84	.00	.57	.00	499.42	40.00
*	9.030	4450.00	1393.08	1.24	.77	.00	787.25	40.00
*	9.030	8650.00	1394.00	.92	.90	.00	901.08	40.00
*	9.064	1200.00	1392.84	.00	1.00	.00	469.73	180.00
*	9.064	4450.00	1393.83	.99	.75	.00	740.02	180.00
*	9.064	8650.00	1394.68	.84	.68	.00	805.06	180.00
*	9.100	1200.00	1393.96	.00	1.12	.00	664.19	190.00
*	9.100	4450.00	1395.01	1.04	1.17	.00	696.00	190.00
*	9.100	8650.00	1395.83	.83	1.15	.00	705.08	190.00
	9.200	1200.00	1394.96	.00	1.00	.00	414.89	528.00
	9.200	4450.00	1396.37	1.41	1.37	.00	431.16	528.00
	9.200	8650.00	1397.48	1.11	1.65	.00	437.51	528.00
	9.282	1200.00	1395.73	.00	.77	.00	322.48	443.00
	9.282	4450.00	1397.52	1.79	1.15	.00	362.38	443.00
	9.282	8650.00	1398.93	1.41	1.45	.00	385.83	443.00

SECNO	Q	CWSEL	DIFWSP	DIFWSX	DIFKWS	TOPWID	XLCH
9.400	1200.00	1397.85	.00	2.12	.00	229.32	623.00
9.400	4450.00	1399.84	1.99	2.32	.00	352.60	623.00
9.400	8650.00	1401.35	1.51	2.42	.00	377.53	623.00
9.488	1200.00	1402.38	.00	4.53	.00	291.54	464.60
9.488	4450.00	1403.66	1.27	3.81	.00	397.80	464.60
9.488	8650.00	1404.74	1.09	3.39	.00	450.63	464.60
9.560	1200.00	1403.96	.00	1.58	.00	422.90	380.20
9.560	4450.00	1405.69	1.73	2.04	.00	465.60	380.20
9.560	8650.00	1407.04	1.34	2.30	.00	476.79	380.20
9.655	1200.00	1404.90	.00	.94	.00	264.49	501.60
9.655	4450.00	1406.88	1.98	1.19	.00	313.75	501.60
9.655	8650.00	1408.38	1.50	1.34	.00	356.71	501.60
9.713	1200.00	1405.27	.00	.36	.00	288.09	306.20
9.713	4450.00	1407.52	2.25	.64	.00	335.89	306.20
9.713	8650.00	1409.22	1.70	.84	.00	371.50	306.20
9.800	1200.00	1405.97	.00	.70	.00	211.88	459.40
9.800	4450.00	1408.35	2.38	.83	.00	269.01	459.40
9.800	8650.00	1410.17	1.82	.94	.00	313.88	459.40

SUMMARY OF ERRORS AND SPECIAL NOTES

```
WARNING SECNO=      8.680  PROFILE=  1  CONVEYANCE CHANGE OUTSIDE ACCEPTABLE RANGE
WARNING SECNO=      8.680  PROFILE=  2  CONVEYANCE CHANGE OUTSIDE ACCEPTABLE RANGE
WARNING SECNO=      8.680  PROFILE=  3  CONVEYANCE CHANGE OUTSIDE ACCEPTABLE RANGE

WARNING SECNO=      8.815  PROFILE=  1  CONVEYANCE CHANGE OUTSIDE ACCEPTABLE RANGE
WARNING SECNO=      8.815  PROFILE=  2  CONVEYANCE CHANGE OUTSIDE ACCEPTABLE RANGE
WARNING SECNO=      8.815  PROFILE=  3  CONVEYANCE CHANGE OUTSIDE ACCEPTABLE RANGE

WARNING SECNO=      8.907  PROFILE=  1  CONVEYANCE CHANGE OUTSIDE ACCEPTABLE RANGE

CAUTION SECNO=      8.957  PROFILE=  1  CRITICAL DEPTH ASSUMED
CAUTION SECNO=      8.957  PROFILE=  1  MINIMUM SPECIFIC ENERGY
WARNING SECNO=      8.957  PROFILE=  2  CONVEYANCE CHANGE OUTSIDE ACCEPTABLE RANGE

CAUTION SECNO=      9.014  PROFILE=  1  CRITICAL DEPTH ASSUMED
CAUTION SECNO=      9.014  PROFILE=  1  MINIMUM SPECIFIC ENERGY
CAUTION SECNO=      9.014  PROFILE=  2  CRITICAL DEPTH ASSUMED
CAUTION SECNO=      9.014  PROFILE=  2  MINIMUM SPECIFIC ENERGY
CAUTION SECNO=      9.014  PROFILE=  3  CRITICAL DEPTH ASSUMED
CAUTION SECNO=      9.014  PROFILE=  3  PROBABLE MINIMUM SPECIFIC ENERGY
CAUTION SECNO=      9.014  PROFILE=  3  20 TRIALS ATTEMPTED TO BALANCE WSEL

CAUTION SECNO=      9.022  PROFILE=  1  CRITICAL DEPTH ASSUMED
CAUTION SECNO=      9.022  PROFILE=  1  PROBABLE MINIMUM SPECIFIC ENERGY
CAUTION SECNO=      9.022  PROFILE=  1  20 TRIALS ATTEMPTED TO BALANCE WSEL
CAUTION SECNO=      9.022  PROFILE=  2  CRITICAL DEPTH ASSUMED
CAUTION SECNO=      9.022  PROFILE=  2  PROBABLE MINIMUM SPECIFIC ENERGY
CAUTION SECNO=      9.022  PROFILE=  2  20 TRIALS ATTEMPTED TO BALANCE WSEL
CAUTION SECNO=      9.022  PROFILE=  3  CRITICAL DEPTH ASSUMED
CAUTION SECNO=      9.022  PROFILE=  3  PROBABLE MINIMUM SPECIFIC ENERGY
CAUTION SECNO=      9.022  PROFILE=  3  20 TRIALS ATTEMPTED TO BALANCE WSEL

WARNING SECNO=      9.030  PROFILE=  1  CONVEYANCE CHANGE OUTSIDE ACCEPTABLE RANGE
WARNING SECNO=      9.030  PROFILE=  2  CONVEYANCE CHANGE OUTSIDE ACCEPTABLE RANGE
WARNING SECNO=      9.030  PROFILE=  3  CONVEYANCE CHANGE OUTSIDE ACCEPTABLE RANGE

CAUTION SECNO=      9.064  PROFILE=  1  CRITICAL DEPTH ASSUMED
CAUTION SECNO=      9.064  PROFILE=  1  MINIMUM SPECIFIC ENERGY
WARNING SECNO=      9.064  PROFILE=  2  CONVEYANCE CHANGE OUTSIDE ACCEPTABLE RANGE
WARNING SECNO=      9.064  PROFILE=  3  CONVEYANCE CHANGE OUTSIDE ACCEPTABLE RANGE

WARNING SECNO=      9.100  PROFILE=  1  CONVEYANCE CHANGE OUTSIDE ACCEPTABLE RANGE
WARNING SECNO=      9.100  PROFILE=  2  CONVEYANCE CHANGE OUTSIDE ACCEPTABLE RANGE
WARNING SECNO=      9.100  PROFILE=  3  CONVEYANCE CHANGE OUTSIDE ACCEPTABLE RANGE

WARNING SECNO=      9.400  PROFILE=  1  CONVEYANCE CHANGE OUTSIDE ACCEPTABLE RANGE
WARNING SECNO=      9.400  PROFILE=  2  CONVEYANCE CHANGE OUTSIDE ACCEPTABLE RANGE
WARNING SECNO=      9.400  PROFILE=  3  CONVEYANCE CHANGE OUTSIDE ACCEPTABLE RANGE

WARNING SECNO=      9.488  PROFILE=  1  CONVEYANCE CHANGE OUTSIDE ACCEPTABLE RANGE
```

```
WARNING SECNO=      9.560  PROFILE=  2  CONVEYANCE CHANGE OUTSIDE ACCEPTABLE RANGE
WARNING SECNO=      9.560  PROFILE=  3  CONVEYANCE CHANGE OUTSIDE ACCEPTABLE RANGE

WARNING SECNO=      9.655  PROFILE=  1  CONVEYANCE CHANGE OUTSIDE ACCEPTABLE RANGE

WARNING SECNO=      9.800  PROFILE=  1  CONVEYANCE CHANGE OUTSIDE ACCEPTABLE RANGE
```

```
*****************************************
*  HEC-2 WATER SURFACE PROFILES          *
*                                        *
*  Version   4.6.2;  May 1991            *
*                                        *
*  RUN DATE    17JUN94    TIME   15:24:34 *
*****************************************
```

```
****************************************
*  U.S. ARMY CORPS OF ENGINEERS        *
*  HYDROLOGIC ENGINEERING CENTER       *
*  609 SECOND STREET, SUITE D          *
*  DAVIS, CALIFORNIA 95616-4687        *
*          (916) 756-1104              *
****************************************
```

```
X     X  XXXXXXX   XXXXX              XXXXX
X     X  X        X     X            X     X
X     X  X        X                        X
XXXXXXX  XXXX     X          XXXXX    XXXXX
X     X  X        X                  X
X     X  X        X     X            X
X     X  XXXXXXX   XXXXX             XXXXXXX
```

THIS RUN EXECUTED 17JUN94 15:24:34

```
************************************
HEC-2 WATER SURFACE PROFILES

Version   4.6.2;  May 1991
************************************
```

```
T1      PINNACLE PEAK RD BRIDGE OVER SKUNK CREEK
T2      EXISTING CONDITION ANALYSIS
T3      SKUNK CREEK              50-YEAR FLOW
T4      FILE SKX50100.DAT
T4      THIS MODEL IS BASED ON COE & VAN LOO MODEL FROM "SKUNK CREEK FLOODPLAIN
T4      DELINEATION STUDY, ADOBE DAM TO CAP," NOVEMBER 1990.  MODIFICATIONS TO
T4      CROSS SECTIONS WERE MADE BASED ON NEW TOPOGRAPHIC DATA, AND FLOWS WERE
T4      REVISED BASED ON A HECWRC LOG-PEARSON III ANALYSIS OF USGS STREAM GAGE
T4      DATA.
```

J1	ICHECK	INQ	NINV	IDIR	STRT	METRIC	HVINS	Q	WSEL	FQ
	0	2	0	0	0.0120	0	0.0	27500.0	1375.88	

J2	NPROF	IPLOT	PRFVS	XSECV	XSECH	FN	ALLDC	IBW	CHNIM	ITRACE
	1	0	-1	0.0	0.0	0.0	0.0	-6.0	0.0	15

J3 VARIABLE CODES FOR SUMMARY PRINTOUT

38	43	1	8	42	3	2	26	5	39
53	4	54		150					

J5 LPRNT NUMSEC ********REQUESTED SECTION NUMBERS********

LPRNT	NUMSEC
-10	-10

NC	0.050	0.050	0.040	0.1	0.3					
X1	8.566	97	9001.7	10040.6	0.0	0.0	0.0	1.0	0.0	
GR	1387.7	7864.4	1386.7	7914.2	1385.0	7933.2	1386.2	8010.9	1385.4	8173.0
GR	1384.3	8203.7	1384.5	8220.9	1383.3	8228.6	1382.5	8322.4	1381.5	8324.5
GR	1381.2	8338.7	1382.5	8341.2	1381.5	8344.0	1381.5	8449.8	1380.4	8503.0
GR	1380.2	8705.2	1378.7	8829.0	1380.4	8834.8	1378.8	8845.6	1380.4	8848.8
GR	1378.2	8853.6	1380.7	8862.6	1380.3	8867.2	1379.2	8872.3	1378.8	8875.2
GR	1379.8	8896.4	1380.3	8923.5	1379.2	8937.1	1380.1	8973.5	1382.1	8978.3
GR	1382.5	8983.7	1381.2	8988.6	1382.9	8995.1	1381.9	9001.7	1380.3	9008.1
GR	1380.1	9013.4	1377.7	9018.9	1376.5	9025.0	1375.6	9033.0	1373.2	9041.5
GR	1372.0	9052.5	1370.8	9063.8	1370.3	9126.1	1369.2	9138.9	1370.2	9208.1
GR	1370.1	9340.9	1369.1	9352.6	1370.3	9363.5	1370.1	9371.4	1369.1	9375.6
GR	1370.1	9423.2	1372.1	9460.0	1373.5	9481.4	1374.0	9502.6	1373.0	9514.7
GR	1372.2	9520.1	1373.4	9530.2	1373.7	9597.7	1372.2	9605.1	1372.3	9615.3
GR	1371.3	9628.7	1372.3	9655.6	1373.0	9772.6	1374.0	9794.1	1375.1	9845.6
GR	1375.1	9861.6	1373.8	9878.0	1372.5	9924.8	1371.2	9936.4	1371.2	9938.5
GR	1375.0	9943.2	1377.2	9949.5	1378.2	9966.1	1375.9	9975.9	1372.4	9983.7

GR	1372.0	9986.3	1368.8	9993.0	1368.8	9996.0	1366.3	10000.0	1366.9	10009.4
GR	1368.7	10015.0	1373.4	10024.9	1378.6	10033.1	1380.1	10040.6	1381.1	10115.4
GR	1380.0	10225.4	1381.2	10296.3	1381.6	10516.7	1382.6	10729.1	1383.8	10816.6
GR	1383.7	10825.5	1381.4	10828.6	1384.0	10837.6	1383.0	10895.8	1383.7	11111.2
GR	1385.9	12184.6	1389.2	12197.0						
X1	8.680	93	9088.6	10072.6	615.0	650.0	602.0	1.0	0.0	
GR	1390.3	8163.3	1388.6	8235.1	1389.1	8359.1	1387.5	8437.1	1385.1	8440.6
GR	1383.7	8591.0	1383.7	8703.7	1383.5	8830.4	1384.4	8879.3	1383.4	8897.3
GR	1383.0	8926.2	1385.0	8932.9	1382.2	8943.8	1384.5	8947.3	1382.4	8951.2
GR	1384.7	8961.0	1384.9	8963.4	1383.1	8967.4	1382.3	9060.2	1385.7	9069.1
GR	1386.3	9071.1	1384.6	9075.5	1385.6	9082.0	1385.0	9088.6	1382.8	9093.2
GR	1380.9	9101.2	1378.0	9112.5	1376.0	9120.2	1374.5	9126.6	1373.5	9134.2
GR	1372.0	9139.3	1371.7	9228.6	1370.6	9234.2	1371.8	9249.9	1371.8	9253.4
GR	1370.3	9264.4	1371.2	9372.0	1372.6	9429.6	1373.2	9531.8	1374.3	9630.9
GR	1374.4	9714.1	1375.5	9738.8	1376.4	9811.4	1375.2	9824.8	1376.5	9888.5
GR	1375.4	9899.8	1374.2	9910.2	1372.7	9919.0	1372.4	9940.5	1373.8	9945.1
GR	1375.0	9949.4	1376.2	9964.6	1373.9	9969.0	1372.2	9977.8	1369.2	9982.4
GR	1369.1	9991.8	1372.0	10000.0	1372.8	10001.3	1375.2	10006.9	1375.5	10015.3
GR	1376.6	10023.1	1377.1	10032.0	1378.1	10036.8	1376.6	10041.2	1378.2	10053.0
GR	1378.9	10056.2	1381.8	10066.7	1382.8	10072.6	1382.2	10076.0	1380.4	10083.6
GR	1380.7	10089.7	1383.4	10095.7	1383.1	10201.2	1384.3	10256.6	1384.2	10368.9
GR	1383.9	10523.6	1384.9	10654.1	1385.1	10781.0	1385.5	10934.2	1385.9	11104.7
GR	1386.5	11273.1	1386.8	11384.3	1387.6	11573.9	1388.0	11707.0	1388.7	11818.9
GR	1390.1	11891.0	1389.9	11952.6	1388.8	11979.1	1392.5	12008.1	1394.1	12020.2
GR	1391.0	12032.7	1391.6	12038.3	1393.1	12047.5				
X1	8.815	99	9609.8	10489.6	450.0	680.0	713.0	1.0	0.0	
GR	1390.4	8808.9	1389.2	8839.1	1387.5	8856.8	1386.3	8872.6	1385.6	8880.4
GR	1385.1	8957.0	1385.3	9014.6	1385.4	9072.2	1385.2	9117.2	1386.1	9135.9
GR	1386.7	9138.1	1386.4	9178.1	1386.6	9244.8	1386.6	9290.2	1386.6	9321.3
GR	1386.6	9346.5	1386.7	9366.3	1386.4	9376.6	1389.7	9384.9	1386.0	9391.7
GR	1389.3	9398.0	1386.3	9403.9	1389.7	9413.5	1386.9	9419.1	1385.9	9436.0
GR	1386.9	9461.3	1385.8	9487.1	1387.5	9498.5	1386.4	9523.1	1388.0	9544.5
GR	1389.2	9565.2	1390.3	9583.5	1388.5	9609.8	1386.6	9637.1	1385.0	9652.8
GR	1383.4	9670.6	1380.9	9687.2	1378.8	9707.2	1377.6	9725.1	1376.9	9740.7
GR	1374.5	9748.5	1374.4	9756.1	1375.8	9770.8	1375.5	9788.3	1375.0	9818.5
GR	1374.9	9850.1	1374.8	9881.0	1374.7	9912.6	1374.7	9942.9	1374.5	9965.4
GR	1374.1	9984.2	1372.0	10000.0	1372.8	10016.7	1372.2	10035.6	1374.3	10063.8
GR	1375.2	10078.6	1376.0	10095.5	1376.4	10111.8	1376.5	10129.2	1376.9	10153.1
GR	1376.8	10174.4	1376.7	10191.9	1377.4	10209.1	1378.5	10222.6	1379.5	10239.1
GR	1380.8	10261.2	1381.7	10272.3	1382.4	10288.5	1383.8	10306.6	1384.3	10320.4
GR	1385.0	10339.2	1385.4	10355.2	1385.6	10372.8	1385.5	10394.3	1386.4	10410.4
GR	1390.0	10442.0	1391.1	10458.5	1391.9	10471.5	1392.3	10489.6	1392.8	10513.3
GR	1393.2	10543.4	1392.5	10567.3	1391.7	10584.0	1391.4	10598.7	1390.4	10624.2
GR	1390.1	10641.8	1387.8	10681.9	1387.6	10700.9	1387.5	10736.6	1387.4	10756.1
GR	1389.2	10774.8	1387.7	10802.6	1387.8	10823.5	1388.2	10837.8	1388.2	10860.6
GR	1387.9	10880.4	1388.2	10899.4	1387.9	10925.9	1388.1	10952.9		

X1	8.907	95	9830.2	10263.3	520.0	400.0	485.8	1.0	0.0	
X3	0	0.0	0.0	0.0	0.0	11005.2	0.0	0.0	0.0	
[redacted]R	1397.5	8809.3	1396.5	8838.1	1395.9	8871.3	1393.5	8905.3	1392.4	8937.2
[redacted]R	1392.2	8970.4	1390.8	9003.5	1390.0	9027.4	1390.1	9048.0	1389.3	9080.4
GR	1387.1	9087.0	1388.3	9092.7	1389.2	9176.8	1389.2	9214.6	1389.2	9248.7
GR	1389.3	9291.0	1389.3	9327.2	1389.3	9369.9	1389.2	9414.6	1389.3	9454.7
[redacted]R	1389.4	9497.2	1389.9	9542.3	1389.7	9586.6	1390.0	9625.4	1389.9	9660.8
[redacted]R	1390.8	9664.8	1389.5	9668.6	1389.5	9677.5	1392.2	9681.2	1388.1	9690.2
GR	1390.9	9696.8	1387.9	9699.2	1389.9	9707.4	1393.4	9712.3	1390.3	9719.4
[redacted]R	1389.9	9737.3	1390.5	9763.0	1389.7	9786.2	1389.6	9797.0	1390.7	9807.1
[redacted]R	1390.4	9826.6	1393.0	9830.2	1389.6	9835.6	1385.4	9863.1	1381.7	9875.2
GR	1380.1	9894.0	1378.7	9916.2	1377.4	9940.3	1375.8	9960.3	1375.2	9987.9
GR	1375.1	10000.0	1375.1	10025.3	1375.7	10051.5	1376.5	10072.8	1377.1	10081.8
[redacted]R	1380.7	10094.5	1382.7	10106.6	1383.8	10122.1	1385.2	10140.3	1386.7	10159.5
[redacted]R	1390.3	10182.6	1391.6	10193.0	1391.7	10213.1	1391.9	10230.2	1392.8	10244.7
GR	1393.1	10263.3	1392.3	10283.1	1391.7	10302.9	1391.8	10337.3	1391.9	10369.3
GR	1392.2	10391.9	1392.2	10408.2	1390.5	10432.0	1390.2	10443.8	1392.1	10470.5
[redacted]R	1392.0	10488.7	1392.3	10507.6	1392.1	10524.8	1392.1	10551.6	1392.3	10570.1
[redacted]R	1391.2	10583.8	1391.3	10604.2	1392.0	10627.3	1392.2	10650.0	1391.6	10677.1
GR	1391.1	10695.0	1391.2	10738.1	1390.8	10770.7	1391.6	10797.7	1391.5	10826.7
GR	1390.9	10867.4	1391.0	10912.8	1391.1	10960.4	1391.4	10988.8	1392.0	11005.2
[redacted]										
X1	8.957	95	9851.7	10283.2	260.0	240.0	264.0	1.0	0.0	
X3	0	0.0	0.0	0.0	0.0	10900.0	0.0	0.0	0.0	
[redacted]R	1400.0	8775.0	1398.0	8815.0	1396.0	8850.0	1394.0	8900.0	1392.0	8980.0
[redacted]R	1390.0	9045.0	1390.4	9077.5	1389.9	9104.9	1390.3	9136.9	1390.5	9176.1
GR	1390.3	9220.2	1390.4	9263.3	1390.2	9303.3	1390.4	9346.2	1390.4	9389.1
GR	1390.5	9433.5	1390.7	9474.2	1390.9	9512.7	1391.2	9557.9	1391.1	9605.4
[redacted]R	1391.2	9648.9	1391.4	9685.7	1391.3	9701.7	1391.1	9708.8	1393.0	9713.6
[redacted]R	1390.1	9721.2	1389.6	9724.7	1392.1	9730.0	1389.6	9734.6	1392.5	9743.5
GR	1391.3	9761.0	1391.4	9780.0	1391.6	9805.7	1390.9	9833.6	1392.1	9851.7
GR	1387.2	9877.8	1383.3	9903.0	1380.6	9926.3	1378.8	9954.7	1378.4	9975.6
[redacted]R	1378.1	10000.0	1378.1	10023.4	1378.5	10040.2	1378.5	10064.4	1382.4	10087.3
[redacted]R	1383.8	10096.7	1384.0	10112.1	1385.7	10153.8	1386.1	10171.4	1387.5	10187.2
GR	1388.5	10201.2	1388.5	10219.8	1388.2	10235.7	1388.7	10247.1	1390.8	10258.0
[redacted]R	1389.8	10261.8	1391.6	10283.2	1391.8	10301.6	1393.6	10330.0	1392.3	10348.7
[redacted]R	1392.0	10374.4	1392.3	10397.1	1391.9	10422.4	1392.3	10447.2	1392.2	10475.3
[redacted]R	1392.3	10500.4	1392.4	10519.6	1392.4	10548.5	1392.1	10583.0	1392.1	10624.0
GR	1392.0	10658.3	1391.9	10692.9	1391.2	10712.4	1391.3	10730.0	1391.3	10769.2
[redacted]R	1391.2	10792.8	1390.0	10804.9	1390.8	10825.3	1391.1	10844.1	1390.9	10873.7
[redacted]R	1390.9	10903.3	1390.7	10946.2	1390.6	10989.3	1390.5	11030.8	1390.7	11062.1
GR	1390.9	11089.1	1391.1	11108.3	1390.7	11125.6	1390.1	11145.1	1390.2	11173.0
GR	1390.1	11209.8	1390.3	11239.5	1390.1	11265.0	1390.2	11290.1	1389.9	11332.0
[redacted]										
[redacted]X1	9.014	86	9760.3	10320.7	260.0	250.0	301.0	1.0	0.0	
X3	0	0.0	0.0	8865.0	0.0	10550.9	0.0	0.0	0.0	
[redacted]GR	1397.8	8641.6	1396.8	8667.2	1396.7	8699.9	1395.6	8722.9	1394.6	8737.2
[redacted]GR	1394.3	8770.7	1394.1	8803.3	1394.0	8852.7	1394.1	8895.6	1394.2	8918.4
[redacted]GR	1394.2	8957.6	1395.1	8989.7	1395.2	9015.0	1395.2	9062.9	1394.2	9094.8
GR	1393.3	9136.3	1393.5	9161.8	1393.7	9179.5	1393.8	9242.7	1394.1	9278.1
[redacted]GR	1394.9	9312.4	1395.4	9334.8	1394.8	9361.5	1394.1	9382.8	1394.8	9404.8
[redacted]GR	1394.8	9441.0	1394.3	9478.6	1395.0	9506.7	1395.0	9519.1	1394.9	9537.8
GR	1394.3	9563.6	1394.6	9593.9	1394.4	9617.7	1394.3	9640.3	1393.9	9655.9

GR	1393.5	9668.0	1392.9	9674.9	1392.6	9677.4	1393.2	9684.9	1393.7	9697.9
GR	1393.5	9710.8	1392.9	9729.1	1392.4	9741.8	1392.4	9753.2	1392.1	9760.3
GR	1391.5	9767.0	1391.5	9783.6	1390.9	9799.7	1390.8	9824.1	1389.9	9850.8
GR	1389.4	9873.9	1389.3	9903.7	1388.5	9923.9	1388.1	9953.0	1387.9	9982.3
GR	1387.8	10000.0	1387.6	10029.2	1388.1	10054.2	1388.0	10070.8	1387.4	10085.5
GR	1388.4	10102.1	1389.3	10125.7	1390.4	10153.5	1390.5	10186.6	1391.1	10222.8
GR	1391.1	10257.5	1392.0	10288.8	1392.2	10320.7	1392.3	10362.7	1392.5	10401.5
GR	1392.4	10450.2	1392.4	10488.2	1392.3	10524.9	1392.9	10550.9	1393.0	10579.9
GR	1392.5	10622.0	1392.7	10670.2	1392.5	10719.8	1392.7	10767.6	1392.5	10809.1
GR	1392.4	10854.2	1392.4	10894.1	1392.3	10945.2	1392.2	11001.0	1392.1	11062.5
GR	1391.6	11091.0								

PINNACLE PEAK ROAD DIP SECTION

PINNACLE PEAK ROAD DIP SECTION

X1	9.022	49	9768.2	10338.6	40.0	40.0	40.0	1.0	0.0	
X3	0	0.0	0.0	8850.0	0.0	10500.0	0.0	0.0	0.0	
GR	1395.6	8767.9	1395.5	8820.9	1395.4	8873.6	1395.4	8891.5	1395.4	8939.2
GR	1395.2	8990.7	1395.4	9052.6	1395.4	9113.7	1395.3	9176.6	1395.1	9229.3
GR	1395.1	9287.4	1394.9	9334.4	1394.8	9385.2	1394.7	9450.4	1394.8	9489.6
GR	1394.5	9524.7	1394.1	9576.1	1394.0	9617.7	1393.7	9656.6	1393.2	9693.1
GR	1393.1	9730.9	1392.7	9768.2	1391.9	9826.7	1391.3	9884.4	1390.9	9925.8
GR	1390.8	9956.6	1390.4	9987.7	1389.9	10000.0	1390.0	10078.9	1390.6	10135.1
GR	1391.0	10187.1	1391.6	10240.7	1392.0	10289.7	1392.4	10338.6	1392.7	10386.9
GR	1392.9	10441.8	1393.0	10492.3	1393.1	10541.9	1392.9	10588.6	1392.7	10636.9
GR	1392.7	10681.4	1392.5	10740.6	1392.6	10796.6	1392.6	10855.7	1392.4	10922.7
GR	1392.3	10988.0	1392.3	11032.1	1392.1	11079.5	1392.1	11085.0		
X1	9.030	84	9755.8	10316.5	40.0	40.0	40.0	1.0	0.0	
X3	0	0.0	0.0	8850.0	0.0	10520.0	0.0	0.0	0.0	
GR	1392.7	8771.1	1392.7	8807.9	1392.8	8845.4	1392.7	8874.8	1393.0	8906.8
GR	1393.2	8945.5	1392.7	8980.7	1392.8	9013.1	1392.9	9045.4	1393.4	9080.9
GR	1393.5	9124.8	1393.5	9158.2	1393.7	9191.8	1393.7	9231.1	1393.7	9251.9
GR	1393.9	9279.9	1393.9	9313.3	1394.2	9344.5	1394.2	9388.5	1394.6	9446.5
GR	1395.1	9476.6	1395.1	9505.8	1394.8	9533.7	1394.5	9565.5	1394.1	9602.9
GR	1393.7	9623.0	1393.3	9639.0	1393.3	9654.7	1393.3	9685.0	1393.0	9710.2
GR	1392.8	9733.0	1393.2	9735.2	1393.0	9743.9	1392.4	9755.8	1392.0	9778.0
GR	1391.3	9795.9	1391.3	9817.8	1390.9	9841.7	1390.7	9866.1	1390.7	9889.9
GR	1390.6	9915.1	1390.5	9934.1	1390.6	9959.5	1390.4	9978.8	1389.5	10000.0
GR	1389.5	10022.9	1389.7	10055.8	1389.9	10080.8	1390.1	10109.9	1390.4	10139.2
GR	1390.8	10163.8	1391.4	10188.8	1391.4	10207.6	1391.3	10228.1	1391.4	10249.8
GR	1391.8	10271.8	1391.9	10295.4	1392.0	10316.5	1392.0	10347.6	1392.1	10382.7
GR	1392.2	10410.8	1392.2	10436.7	1392.6	10457.7	1393.1	10475.6	1392.4	10488.1
GR	1393.1	10497.3	1394.6	10516.8	1394.8	10523.4	1394.9	10551.7	1395.0	10591.7
GR	1395.0	10651.4	1395.0	10685.9	1395.3	10743.8	1395.3	10796.2	1395.3	10848.2
GR	1395.4	10896.5	1395.2	10935.1	1395.0	10947.2	1394.3	10964.9	1392.9	10976.3
GR	1392.6	10984.4	1391.8	10985.2	1392.0	10999.1	1392.1	11015.0		
X1	9.064	92	9688.0	10434.5	150.0	240.0	180.0	1.0	0.0	
X3	0	0.0	0.0	8900.0	0.0	10468.9	0.0	0.0	0.0	
GR	1393.3	8753.5	1393.1	8773.6	1393.8	8803.7	1394.7	8838.7	1394.6	8865.9
GR	1394.9	8888.2	1394.4	8904.3	1394.2	8924.4	1393.0	8933.7	1392.8	8943.1
GR	1394.7	8965.1	1394.8	8974.1	1393.7	8986.9	1393.5	9002.9	1393.5	9025.2
GR	1393.1	9033.9	1394.0	9041.3	1393.1	9056.5	1394.5	9065.2	1394.2	9074.1
GR	1394.0	9096.3	1393.9	9128.6	1394.0	9149.8	1394.1	9175.5	1394.4	9207.1

GR	1394.4	9227.2	1394.3	9244.3	1394.3	9267.8	1394.2	9291.9	1394.4	9316.3
GR	1394.6	9350.1	1394.6	9382.0	1394.8	9425.2	1394.7	9460.2	1394.9	9491.4
GR	1394.8	9523.0	1395.1	9549.4	1395.1	9580.9	1394.6	9616.2	1394.5	9647.0
GR	1394.7	9670.0	1394.7	9688.0	1393.4	9698.1	1393.4	9728.3	1393.1	9744.3
GR	1392.3	9766.5	1392.2	9788.6	1392.3	9810.4	1392.1	9834.2	1392.2	9858.2
GR	1392.4	9889.8	1392.0	9917.3	1391.8	9931.4	1391.9	9954.0	1392.2	9976.0
GR	1392.2	9986.6	1390.8	10000.0	1391.3	10006.5	1392.1	10013.7	1392.4	10040.5
GR	1392.1	10059.2	1392.5	10084.7	1392.8	10105.5	1392.2	10133.2	1392.3	10156.8
GR	1392.4	10182.9	1392.7	10210.4	1393.0	10233.7	1393.1	10260.0	1393.1	10289.7
GR	1393.1	10323.1	1393.2	10354.5	1393.1	10385.8	1393.3	10411.9	1393.7	10434.5
GR	1398.1	10443.6	1399.7	10468.9	1397.9	10488.7	1398.0	10527.0	1397.6	10553.5
GR	1397.1	10589.6	1396.9	10633.3	1397.1	10663.3	1397.1	10693.0	1396.8	10723.1
GR	1396.4	10744.2	1396.3	10777.5	1397.0	10795.3	1397.3	10821.4	1397.1	10857.2
GR	1397.2	10880.9	1397.2	10895.2						
NC	0.055	0.050	0.040	0.1	0.3					
X1	9.100	92	9740.9	10418.9	140.0	240.0	190.0	1.0	0.0	
X3	0	0.0	0.0	8950.0	0.0	10436.2	0.0	0.0	0.0	
GR	1393.2	8755.8	1395.2	8770.1	1394.7	8780.5	1395.3	8808.2	1395.4	8842.4
GR	1395.2	8862.1	1395.1	8887.2	1395.0	8916.1	1395.1	8944.9	1395.0	8977.6
GR	1393.2	8998.5	1393.3	9007.7	1395.0	9016.2	1393.7	9025.9	1394.7	9030.8
GR	1394.5	9046.1	1393.6	9052.7	1395.2	9072.6	1393.8	9083.0	1395.0	9107.9
GR	1394.9	9138.3	1394.5	9157.2	1395.1	9166.5	1394.8	9176.8	1395.0	9203.4
GR	1395.5	9247.7	1395.9	9271.4	1395.3	9309.1	1395.7	9341.5	1395.2	9348.9
GR	1395.4	9368.4	1395.6	9398.7	1395.8	9433.3	1395.6	9467.5	1395.7	9504.8
GR	1395.7	9535.0	1395.9	9575.7	1396.2	9607.5	1396.2	9639.3	1395.6	9661.0
GR	1396.5	9669.2	1399.8	9681.4	1400.5	9688.5	1399.1	9693.1	1397.3	9694.7
GR	1395.7	9698.8	1396.1	9710.9	1394.4	9716.8	1394.1	9740.9	1393.3	9759.7
GR	1392.4	9791.4	1391.9	9820.9	1393.1	9839.8	1393.0	9868.1	1392.9	9899.7
GR	1393.0	9941.3	1392.8	9964.5	1391.9	9989.1	1390.6	9995.5	1391.3	10000.0
GR	1392.0	10007.3	1393.1	10012.7	1392.4	10034.9	1393.0	10080.0	1392.4	10105.8
GR	1392.6	10131.1	1392.8	10158.2	1393.1	10176.6	1392.6	10184.3	1393.0	10217.9
GR	1393.2	10246.6	1393.6	10273.0	1393.3	10309.3	1393.5	10340.5	1393.0	10380.5
GR	1393.5	10407.3	1398.6	10418.9	1400.4	10436.2	1400.4	10442.6	1398.7	10460.6
GR	1398.5	10489.3	1398.6	10536.4	1398.6	10573.1	1398.2	10633.3	1398.2	10679.4
GR	1398.4	10702.7	1397.8	10724.9	1397.9	10763.3	1398.3	10789.3	1398.2	10809.5
GR	1398.7	10833.8	1399.2	10854.6						
X1	9.200	90	9861.7	10309.0	425.0	530.0	528.0	1.0	0.0	
X3	0	0.0	0.0	9147.6	0.0	10326.0	0.0	0.0	0.0	
GR	1395.3	8786.4	1396.3	8817.5	1397.9	8843.2	1397.9	8873.9	1397.7	8898.4
GR	1398.0	8924.9	1398.5	8948.0	1398.5	8959.7	1398.2	8981.1	1397.8	9002.6
GR	1396.3	9009.4	1396.8	9029.8	1397.0	9043.1	1395.5	9050.3	1395.9	9055.1
GR	1397.6	9060.9	1395.8	9071.2	1397.5	9088.8	1396.7	9106.9	1397.5	9132.6
GR	1397.7	9147.6	1396.6	9158.2	1397.9	9179.6	1398.1	9197.7	1397.0	9215.5
GR	1397.8	9223.0	1397.3	9246.7	1400.2	9275.2	1401.0	9281.2	1398.9	9287.9
GR	1396.1	9308.6	1395.1	9315.7	1394.9	9341.6	1397.0	9366.7	1397.6	9383.5
GR	1396.4	9398.8	1398.5	9419.0	1398.8	9441.4	1399.0	9477.7	1399.4	9504.2
GR	1399.3	9525.7	1399.0	9557.5	1399.0	9579.7	1399.0	9601.3	1399.3	9628.7
GR	1399.1	9664.3	1398.7	9688.0	1398.7	9710.8	1398.5	9735.7	1398.7	9754.4
GR	1398.8	9774.8	1398.8	9803.9	1398.2	9831.8	1400.0	9840.1	1398.5	9856.6
GR	1398.9	9861.7	1396.1	9871.7	1393.8	9894.1	1392.9	9926.8	1392.3	9938.6
GR	1392.0	9959.2	1391.6	9987.6	1391.2	9996.4	1392.9	10000.0	1394.2	10004.7
GR	1394.2	10028.3	1395.0	10045.9	1394.0	10048.6	1394.0	10074.6	1394.3	10096.7

GR	1394.5	10103.4	1393.6	10108.3	1394.4	10113.4	1394.1	10139.2	1394.5	10152.3
GR	1393.8	10157.3	1393.9	10177.9	1394.0	10191.1	1393.2	10196.4	1394.3	10206.7
GR	1393.6	10217.4	1393.4	10254.1	1393.5	10284.9	1393.9	10296.6	1399.7	10309.0
GR	1401.9	10330.3	1400.9	10343.4	1401.5	10347.7	1400.3	10350.9	1400.3	10356.7
NC	0.050	0.050	0.045	0.1	0.3					

CITY OF PHOENIX LANDFILL

CITY OF PHOENIX LANDFILL

X1	9.282	94	9809.6	10043.5	420.0	440.0	443.0	1.0	0.0	
X3	0	0.0	0.0	9257.8	0.0	10226.6	0.0	0.0	0.0	
GR	1421.9	9146.1	1421.4	9167.3	1419.5	9190.3	1416.4	9213.6	1413.0	9237.7
GR	1409.5	9257.8	1405.1	9277.9	1403.0	9293.9	1403.0	9300.0	1400.5	9314.7
GR	1400.4	9330.9	1401.4	9332.8	1400.5	9336.3	1400.5	9364.3	1400.7	9376.2
GR	1401.4	9379.5	1400.0	9397.0	1402.0	9405.9	1399.4	9421.2	1399.2	9434.3
GR	1400.8	9438.6	1401.5	9448.4	1399.2	9457.5	1398.9	9465.6	1401.7	9473.4
GR	1401.7	9479.0	1400.3	9488.1	1401.3	9497.7	1400.6	9502.5	1401.5	9515.5
GR	1401.0	9536.9	1401.7	9548.5	1401.2	9568.3	1401.0	9596.0	1401.5	9618.7
GR	1400.6	9632.6	1401.2	9643.7	1400.8	9663.5	1401.0	9682.8	1401.3	9698.8
GR	1403.0	9709.9	1401.2	9720.9	1401.0	9740.7	1401.1	9765.2	1400.9	9783.5
GR	1401.5	9800.8	1400.9	9809.6	1395.8	9828.0	1393.5	9838.9	1394.9	9852.5
GR	1394.0	9871.8	1395.3	9892.2	1396.3	9907.5	1394.8	9930.8	1393.5	9951.8
GR	1393.9	9955.3	1392.6	9959.5	1393.5	9968.3	1392.8	9971.6	1393.1	9990.1
GR	1392.5	10000.0	1392.2	10008.2	1391.9	10011.9	1393.4	10016.7	1394.7	10031.4
GR	1394.2	10040.6	1397.4	10043.5	1398.1	10059.4	1394.1	10077.1	1393.1	10096.6
GR	1392.8	10125.1	1392.4	10135.1	1393.0	10136.7	1393.4	10151.9	1393.8	10170.7
GR	1394.3	10193.3	1402.3	10209.3	1403.6	10226.6	1402.7	10246.8	1402.1	10263.3
GR	1402.0	10295.5	1401.9	10327.7	1402.2	10346.5	1402.5	10379.7	1402.5	10381.1
GR	1402.5	10407.3	1402.5	10440.1	1402.3	10466.1	1402.2	10494.9	1402.5	10525.5
GR	1402.3	10560.6	1402.3	10588.4	1402.4	10613.2	1402.4	10636.2		
X1	9.400	92	9907.5	10306.5	450.0	580.0	623.0	1.0	0.0	
X3	0	0.0	0.0	9907.5	0.0	10500.0	0.0	0.0	0.0	
GR	1458.7	9588.2	1458.5	9617.4	1444.4	9638.7	1441.1	9665.9	1437.6	9687.1
GR	1432.5	9715.2	1426.8	9741.1	1423.0	9761.7	1418.5	9786.4	1412.0	9818.5
GR	1410.9	9824.4	1409.2	9828.1	1408.3	9840.0	1408.6	9845.8	1407.0	9849.9
GR	1406.6	9854.3	1409.0	9861.6	1409.3	9880.3	1402.9	9907.5	1399.7	9922.0
GR	1398.9	9955.3	1400.8	9961.7	1398.0	9968.2	1397.8	9996.3	1397.8	10000.0
GR	1397.8	10009.6	1396.9	10023.1	1398.6	10051.0	1398.3	10074.5	1398.3	10082.5
GR	1396.0	10089.6	1398.0	10104.3	1397.5	10113.0	1398.4	10119.7	1397.1	10126.7
GR	1396.8	10156.0	1396.8	10175.8	1397.8	10184.3	1395.8	10213.5	1397.0	10231.2
GR	1395.6	10254.5	1395.5	10265.8	1400.6	10281.8	1402.4	10306.5	1403.1	10331.5
GR	1402.8	10359.2	1403.0	10367.6	1403.0	10395.2	1403.1	10421.7	1403.0	10451.2
GR	1403.4	10472.4	1403.9	10498.1	1403.1	10538.9	1403.0	10568.0	1403.0	10598.8
GR	1402.8	10631.0	1402.8	10662.3	1402.8	10687.4	1402.6	10718.2	1402.8	10746.5
GR	1402.6	10771.6	1405.9	10782.2	1402.4	10792.1	1402.6	10811.3	1402.5	10835.0
GR	1402.8	10861.8	1406.0	10890.6	1408.7	10899.7	1406.2	10919.8	1406.0	10936.6
GR	1406.2	10975.5	1406.2	10995.2	1406.2	11018.5	1405.6	11044.7	1406.3	11059.0
GR	1406.3	11082.7	1406.4	11113.5	1405.8	11144.7	1406.2	11175.2	1406.1	11221.7
GR	1405.9	11252.9	1406.1	11279.7	1406.2	11306.1	1406.4	11344.0	1406.4	11380.4
GR	1406.5	11426.7	1406.4	11456.9	1406.4	11482.3	1406.7	11508.8	1407.2	11531.0
GR	1407.9	11564.8	1407.8	11582.5						

X1	9.488	92	9946.9	10124.9	420.0	400.0	464.6	1.0	0.0	
X3	0	0.0	0.0	0.0	0.0	10544.6	0.0	0.0	0.0	
GR	1422.8	9823.4	1416.8	9844.4	1412.1	9859.8	1411.5	9873.7	1412.5	9875.1
GR	1410.8	9880.2	1412.1	9886.7	1407.1	9895.1	1405.9	9899.2	1405.6	9906.6
GR	1402.3	9913.0	1410.2	9927.4	1410.5	9946.9	1403.5	9974.7	1399.9	9988.5
GR	1399.9	10000.0	1400.3	10017.5	1400.9	10041.5	1401.2	10061.3	1401.3	10071.2
GR	1402.9	10073.0	1402.7	10090.6	1404.3	10109.9	1405.2	10124.9	1404.4	10141.2
GR	1402.7	10145.0	1402.5	10158.4	1401.9	10176.5	1401.2	10202.7	1401.1	10222.9
GR	1400.9	10250.7	1400.6	10274.6	1400.6	10293.8	1400.7	10306.7	1400.3	10325.7
GR	1400.2	10336.2	1402.6	10362.6	1403.5	10392.2	1404.8	10400.3	1403.4	10418.4
GR	1402.5	10430.9	1405.4	10441.0	1405.2	10463.0	1405.2	10484.0	1405.4	10493.1
GR	1404.6	10501.2	1404.6	10516.8	1404.9	10544.6	1405.3	10575.9	1405.5	10603.5
GR	1405.5	10627.3	1405.5	10649.3	1406.3	10683.9	1406.6	10719.4	1406.7	10763.8
GR	1406.5	10800.2	1406.5	10843.1	1406.0	10881.5	1405.5	10902.5	1405.3	10921.8
GR	1405.2	10950.5	1404.8	10968.6	1405.5	10980.2	1405.5	11001.5	1405.6	11028.3
GR	1406.1	11062.4	1407.1	11086.1	1407.9	11108.3	1408.1	11128.7	1407.9	11153.0
GR	1408.7	11166.1	1408.6	11186.9	1408.1	11206.4	1407.8	11234.7	1408.1	11243.8
GR	1407.1	11250.6	1408.9	11258.4	1408.3	11264.7	1409.1	11297.3	1409.7	11313.8
GR	1409.6	11339.1	1409.4	11357.3	1409.1	11377.6	1411.8	11388.4	1409.1	11396.7
GR	1408.9	11410.5	1411.3	11421.5	1410.3	11425.0	1411.8	11431.4	1410.7	11436.3
GR	1411.9	11441.5	1410.6	11444.3						
X1	9.560	70	9985.7	10066.4	385.0	365.0	380.2	1.0	0.0	
GR	1425.8	9823.6	1425.6	9829.0	1423.7	9832.4	1422.8	9840.0	1422.8	9843.3
GR	1423.9	9847.3	1422.7	9852.2	1421.3	9856.6	1424.3	9863.6	1419.6	9871.8
GR	1417.0	9878.5	1416.2	9889.6	1415.0	9895.5	1413.6	9902.4	1413.7	9911.6
GR	1413.4	9922.5	1413.1	9929.4	1412.2	9931.0	1412.5	9938.1	1412.5	9947.2
GR	1410.1	9956.6	1402.7	9985.7	1401.2	9993.0	1401.4	10000.0	1402.1	10024.4
GR	1402.7	10047.2	1403.4	10066.4	1403.2	10069.7	1402.8	10071.3	1403.4	10090.7
GR	1403.9	10107.9	1403.6	10137.5	1403.4	10164.5	1402.7	10193.3	1402.4	10215.0
GR	1402.5	10231.7	1402.4	10245.5	1403.0	10252.3	1403.2	10261.3	1403.5	10268.9
GR	1403.4	10275.0	1403.0	10282.2	1403.3	10289.5	1401.7	10294.6	1402.2	10307.8
GR	1401.9	10322.0	1402.3	10336.7	1402.4	10344.3	1404.1	10347.2	1403.2	10350.7
GR	1405.4	10354.5	1405.5	10368.7	1405.4	10376.1	1402.8	10382.0	1403.2	10386.6
GR	1403.2	10398.0	1402.8	10406.7	1402.6	10414.6	1401.8	10419.6	1401.2	10422.4
GR	1403.5	10429.7	1406.5	10443.1	1408.9	10453.5	1411.8	10464.1	1412.4	10478.9
GR	1412.0	10483.4	1414.2	10490.0	1420.7	10494.9	1421.5	10509.4	1421.8	10526.9
X1	9.655	91	9815.7	10091.7	450.0	375.0	501.6	1.0	0.0	
X3	0	0.0	0.0	9700.0	0.0	10280.0	0.0	0.0	0.0	
GR	1415.5	8386.9	1415.3	8396.9	1413.2	8420.2	1412.4	8426.5	1409.9	8435.0
GR	1409.6	8451.3	1410.8	8458.2	1413.0	8467.4	1413.5	8496.7	1413.0	8506.9
GR	1413.8	8516.0	1413.3	8522.1	1413.2	8538.7	1410.9	8548.9	1410.5	8567.5
GR	1409.9	8582.3	1408.2	8592.7	1408.1	8615.5	1407.2	8630.7	1408.7	8646.2
GR	1409.7	8666.6	1409.7	8691.5	1410.5	8715.0	1409.7	8741.7	1409.8	8773.9
GR	1409.5	8811.7	1410.7	8825.3	1409.8	8854.6	1409.2	8865.0	1409.9	8878.9
GR	1409.9	8918.2	1410.3	8950.1	1409.7	8971.6	1410.2	8986.7	1409.4	9002.5
GR	1410.4	9020.3	1409.6	9038.7	1409.3	9072.5	1410.7	9093.3	1408.5	9111.7
GR	1409.8	9131.4	1408.8	9149.9	1409.3	9195.7	1410.2	9220.6	1408.5	9237.3
GR	1408.6	9279.7	1408.4	9335.4	1407.8	9394.6	1407.7	9444.9	1407.8	9495.9
GR	1408.4	9528.4	1408.7	9560.2	1409.5	9609.1	1409.2	9646.1	1410.6	9668.6
GR	1416.2	9688.3	1423.3	9700.9	1422.7	9720.4	1416.2	9732.8	1408.2	9760.2
GR	1406.5	9769.9	1405.6	9776.0	1404.0	9786.8	1403.1	9797.6	1407.5	9815.7

GR	1406.2	9824.8	1406.2	9830.6	1402.6	9842.7	1402.7	9888.2	1403.1	9925.4
GR	1403.1	9946.9	1402.5	9971.5	1403.4	9980.3	1400.7	9987.0	1401.0	10000.0
GR	1400.8	10006.1	1402.5	10014.5	1402.3	10033.6	1400.8	10047.0	1401.4	10057.6
GR	1404.4	10071.7	1407.4	10091.7	1407.7	10107.5	1408.8	10121.7	1410.2	10140.1
GR	1410.2	10147.8	1410.9	10158.2	1411.4	10183.0	1414.8	10211.8	1421.9	10246.5
GR	1430.7	10283.3								
X1	9.713	44	9726.1	10099.3	315.0	290.0	306.2	1.0	0.0	
GR	1429.7	9583.1	1430.9	9598.8	1429.2	9612.6	1426.7	9619.9	1419.0	9631.7
GR	1419.3	9649.0	1418.8	9666.9	1421.5	9674.3	1410.3	9698.4	1409.1	9713.1
GR	1408.8	9726.1	1407.1	9743.8	1405.6	9769.2	1403.7	9798.1	1403.4	9809.3
GR	1402.9	9820.6	1402.9	9849.4	1403.5	9863.6	1402.9	9887.6	1403.0	9912.8
GR	1402.5	9938.4	1403.1	9965.9	1402.1	9972.5	1401.6	9983.6	1402.4	9989.1
GR	1402.3	10000.0	1403.1	10017.7	1403.3	10029.1	1402.6	10042.8	1404.0	10054.2
GR	1406.6	10071.1	1410.6	10089.4	1412.6	10099.3	1412.4	10108.7	1412.2	10122.1
GR	1412.1	10135.2	1414.1	10158.1	1418.6	10186.0	1425.8	10216.2	1431.8	10249.0
GR	1437.9	10285.5	1442.2	10335.1	1444.2	10375.2	1444.9	10385.5		
NC	0.050	0.050	0.040	0.1	0.3					
X1	9.800	38	9789.7	10124.4	475.0	460.0	459.4	1.0	0.0	
GR	1442.0	9641.4	1430.7	9680.0	1425.9	9698.7	1424.7	9706.0	1423.8	9708.3
GR	1423.6	9721.5	1423.8	9737.0	1426.1	9744.0	1418.9	9759.4	1412.2	9789.7
GR	1408.5	9819.7	1404.4	9858.4	1403.9	9887.7	1404.0	9913.5	1403.8	9935.5
GR	1403.1	9964.8	1403.9	9990.1	1402.7	10000.0	1403.7	10019.8	1404.9	10037.6
GR	1406.0	10045.8	1405.5	10054.2	1407.1	10061.5	1407.1	10075.8	1408.9	10096.5
GR	1410.4	10124.4	1413.3	10153.4	1416.3	10183.4	1415.9	10200.9	1416.2	10209.9
GR	1417.1	10224.1	1420.7	10248.2	1426.8	10283.2	1439.7	10332.9	1445.6	10368.4
GR	1449.0	10397.4	1448.8	10436.6	1449.3	10465.4				

SECNO	DEPTH	CWSEL	CRIWS	WSELK	EG	HV	HL	OLOSS	L-BANK ELEV
Q	QLOB	QCH	QROB	ALOB	ACH	AROB	VOL	TWA	R-BANK ELEV
TIME	VLOB	VCH	VROB	XNL	XNCH	XNR	WTN	ELMIN	SSTA
SLOPE	XLOBL	XLCH	XLOBR	ITRIAL	IDC	ICONT	CORAR	TOPWID	ENDST

FLOW DISTRIBUTION FOR SECNO= 8.57 CWSEL= 1374.94

STA= 9035. 10041.
PER Q= 100.0
AREA= 3081.3
VEL= 8.9
DEPTH= 3.3

FLOW DISTRIBUTION FOR SECNO= 8.68 CWSEL= 1378.66

STA= 9110. 10073.
PER Q= 100.0
AREA= 4876.4
VEL= 5.6
DEPTH= 5.2

FLOW DISTRIBUTION FOR SECNO= 8.81 CWSEL= 1380.92

STA= 9687. 10490.
PER Q= 100.0
AREA= 2987.9
VEL= 9.2
DEPTH= 5.2

FLOW DISTRIBUTION FOR SECNO= 8.91 CWSEL= 1384.98

STA= 9864. 10263.
PER Q= 100.0
AREA= 1850.6
VEL= 14.9
DEPTH= 6.8

FLOW DISTRIBUTION FOR SECNO= 8.96 CWSEL= 1389.17

STA= 9867. 10283.
PER Q= 100.0
AREA= 2396.7
VEL= 11.5
DEPTH= 6.3

SECNO	DEPTH	CWSEL	CRIWS	WSELK	EG	HV	HL	OLOSS	L-BANK ELEV
Q	QLOB	QCH	QROB	ALOB	ACH	AROB	VOL	TWA	R-BANK ELEV
TIME	VLOB	VCH	VROB	XNL	XNCH	XNR	WTN	ELMIN	SSTA
SLOPE	XLOBL	XLCH	XLOBR	ITRIAL	IDC	ICONT	CORAR	TOPWID	ENDST

FLOW DISTRIBUTION FOR SECNO= 9.01 CWSEL= 1394.03

STA=	8865.	9760.	10321.	10450.	10551.
PER Q=	1.6	92.4	3.5	2.5	
AREA=	156.2	2425.0	215.3	161.0	
VEL=	2.8	10.5	4.4	4.3	
DEPTH=	.2	4.3	1.7	1.6	

FLOW DISTRIBUTION FOR SECNO= 9.02 CWSEL= 1395.19

STA=	9205.	9693.	9768.	10339.	10442.	10500.
PER Q=	3.5	3.1	85.3	5.5	2.5	
AREA=	306.9	162.6	2322.1	258.9	130.0	
VEL=	3.1	5.3	10.1	5.9	5.3	
DEPTH=	.6	2.2	4.1	2.5	2.2	

FLOW DISTRIBUTION FOR SECNO= 9.03 CWSEL= 1396.53

STA=	8850.	8946.	9045.	9158.	9280.	9447.	9639.	9733.	9756.	10317.	10383.	10437.	10517.
PER Q=	3.9	4.3	3.8	3.4	3.4	3.0	3.5	1.0	63.3	4.0	3.1	3.3	
AREA=	344.3	367.3	356.3	344.9	391.1	380.8	316.4	83.2	3218.9	298.1	235.2	286.8	
VEL=	3.1	3.2	2.9	2.7	2.4	2.2	3.0	3.2	5.4	3.7	3.6	3.2	
DEPTH=	3.6	3.7	3.2	2.8	2.3	2.0	3.4	3.6	5.7	4.5	4.4	3.6	

STA=	10517.	10520.
PER Q=	.0	
AREA=	6.0	
VEL=	1.5	
DEPTH=	1.9	

FLOW DISTRIBUTION FOR SECNO= 9.06 CWSEL= 1396.91

STA=	8900.	8974.	9041.	9129.	9207.	9316.	9425.	9581.	9688.	10435.	10441.
PER Q=	3.2	3.3	3.7	3.0	3.7	3.0	3.5	2.8	73.6	.1	
AREA=	220.3	219.3	258.8	220.2	283.2	250.5	315.1	238.2	3217.7	10.6	
VEL=	4.0	4.2	3.9	3.8	3.6	3.3	3.0	3.2	6.3	2.4	
DEPTH=	3.0	3.3	3.0	2.8	2.6	2.3	2.0	2.2	4.3	1.6	

SECNO	DEPTH	CWSEL	CRIWS	WSELK	EG	HV	HL	OLOSS	L-BANK ELEV
Q	QLOB	QCH	QROB	ALOB	ACH	AROB	VOL	TWA	R-BANK ELEV
TIME	VLOB	VCH	VROB	XNL	XNCH	XNR	WTN	ELMIN	SSTA
SLOPE	XLOBL	XLCH	XLOBR	ITRIAL	IDC	ICONT	CORAR	TOPWID	ENDST

FLOW DISTRIBUTION FOR SECNO= 9.10 CWSEL= 1397.59

STA=	8950.	9016.	9108.	9203.	9342.	9505.	9741.	10419.
PER Q=	3.0	4.1	3.3	3.1	3.4	4.1	79.0	
AREA=	212.4	292.1	259.5	291.1	326.1	393.7	3154.1	
VEL=	3.9	3.9	3.5	3.0	2.9	2.8	6.9	
DEPTH=	3.2	3.2	2.7	2.1	2.0	1.7	4.7	

FLOW DISTRIBUTION FOR SECNO= 9.20 CWSEL= 1399.74

STA=	9148.	9309.	9342.	9419.	9862.	10309.
PER Q=	3.6	3.1	3.4	2.4	87.5	
AREA=	298.1	152.3	224.7	360.9	2662.8	
VEL=	3.3	5.6	4.2	1.9	9.0	
DEPTH=	1.9	4.6	2.9	.8	6.0	

FLOW DISTRIBUTION FOR SECNO= 9.28 CWSEL= 1402.07

STA=	9305.	9488.	9810.	10044.	10077.	10097.	10125.	10135.	10152.	10171.	10193.	10209.
PER Q=	3.0	2.2	57.3	4.0	5.2	8.6	3.2	4.9	5.0	5.5	1.1	
AREA=	278.0	289.5	1771.7	174.2	165.1	259.8	94.7	149.7	159.2	181.1	60.3	
VEL=	3.0	2.0	8.9	6.3	8.7	9.1	9.4	9.0	8.7	8.4	4.8	
DEPTH=	1.5	.9	7.6	5.2	8.5	9.1	9.5	8.9	8.5	8.0	3.9	

FLOW DISTRIBUTION FOR SECNO= 9.40 CWSEL= 1405.17

STA=	9908.	10307.	10332.	10359.	10368.	10395.	10422.	10451.	10472.	10498.	10500.
PER Q=	94.7	.9	.8	.3	.8	.7	.8	.5	.4	.0	
AREA=	2885.4	60.5	61.5	19.1	59.9	56.2	62.5	41.7	39.0	2.4	
VEL=	9.0	3.9	3.7	3.8	3.7	3.6	3.6	3.4	2.9	1.8	
DEPTH=	7.2	2.4	2.2	2.3	2.2	2.1	2.1	2.0	1.5	1.3	

FLOW DISTRIBUTION FOR SECNO= 9.49 CWSEL= 1408.04

SECNO	DEPTH	CWSEL	CRIWS	WSELK	EG	HV	HL	OLOSS	L-BANK ELEV
Q	QLOB	QCH	QROB	ALOB	ACH	AROB	VOL	TWA	R-BANK ELEV
TIME	VLOB	VCH	VROB	XNL	XNCH	XNR	WTN	ELMIN	SSTA
SLOPE	XLOBL	XLCH	XLOBR	ITRIAL	IDC	ICONT	CORAR	TOPWID	ENDST

STA=	9894.	9923.	10125.	10158.	10177.	10203.	10223.	10251.	10275.	10294.	10307.	10326.	10363.
PER Q=	1.4	32.4	3.5	3.1	5.4	4.6	6.6	6.0	5.0	3.3	5.1	8.6	
AREA=	80.2	985.1	142.8	105.7	170.0	139.2	195.7	174.2	142.9	95.3	143.3	257.1	
VEL=	4.9	9.0	6.8	8.2	8.8	9.1	9.3	9.5	9.6	9.6	9.7	9.2	
DEPTH=	2.7	5.9	4.3	5.8	6.5	6.9	7.0	7.3	7.4	7.4	7.5	7.0	

STA=	10363.	10392.	10431.	10484.	10545.
PER Q=	4.0	4.1	3.1	3.8	
AREA=	147.7	166.4	161.2	194.7	
VEL=	7.4	6.7	5.3	5.3	
DEPTH=	5.0	4.3	3.0	3.2	

FLOW DISTRIBUTION FOR SECNO= 9.56 CWSEL= 1410.32

STA=	9956.	9986.	10066.	10091.	10108.	10138.	10165.	10193.	10215.	10232.	10246.	10261.	10282.
PER Q=	2.1	22.0	4.9	3.1	5.1	5.0	5.9	5.0	3.9	3.2	3.3	4.0	
AREA=	114.0	653.2	174.9	114.7	194.4	184.0	209.3	168.5	131.4	108.6	116.7	146.1	
VEL=	5.0	9.3	7.7	7.3	7.3	7.4	7.8	8.1	8.2	8.2	7.8	7.6	
DEPTH=	3.8	8.1	7.2	6.7	6.6	6.8	7.3	7.8	7.9	7.9	7.4	7.0	

STA=	10282.	10308.	10322.	10337.	10355.	10382.	10398.	10415.	10430.	10459.
PER Q=	6.0	3.6	3.7	3.5	3.2	3.2	3.6	3.7	2.0	
AREA=	202.6	117.4	120.8	127.2	141.8	114.8	123.8	123.4	102.1	
VEL=	8.2	8.5	8.4	7.5	6.1	7.7	7.9	8.2	5.4	
DEPTH=	7.9	8.3	8.2	7.1	5.2	7.2	7.5	8.2	3.5	

FLOW DISTRIBUTION FOR SECNO= 9.65 CWSEL= 1412.16

STA=	9747.	9787.	9816.	10092.	10140.	10189.
PER Q=	4.2	5.8	86.4	3.0	.5	
AREA=	190.2	217.1	2533.1	177.3	59.3	
VEL=	6.1	7.4	9.4	4.7	2.4	
DEPTH=	4.7	7.5	9.2	3.7	1.2	

FLOW DISTRIBUTION FOR SECNO= 9.71 CWSEL= 1413.59

STA=	9691.	9698.	9713.	9726.	10099.	10109.	10122.	10135.	10152.
PER Q=	.1	.8	.9	97.8	.1	.1	.1	.1	
AREA=	11.7	57.2	60.3	3534.8	10.3	17.3	18.9	12.7	
VEL=	2.0	3.8	4.3	7.6	1.6	1.8	2.0	1.3	
DEPTH=	1.6	3.9	4.6	9.5	1.1	1.3	1.4	.7	

SECNO	DEPTH	CWSEL	CRIWS	WSELK	EG	HV	HL	OLOSS	L-BANK ELEV
Q	QLOB	QCH	QROB	ALOB	ACH	AROB	VOL	TWA	R-BANK ELEV
TIME	VLOB	VCH	VROB	XNL	XNCH	XNR	WTN	ELMIN	SSTA
SLOPE	XLOBL	XLCH	XLOBR	ITRIAL	IDC	ICONT	CORAR	TOPWID	ENDST

FLOW DISTRIBUTION FOR SECNO= 9.80 CWSEL= 1414.67

STA=	9779.	9790.	10124.	10153.	10167.
PER Q=	.1	98.9	1.0	.0	
AREA=	13.8	3002.4	81.7	9.4	
VEL=	1.9	9.1	3.3	1.3	
DEPTH=	1.2	9.0	2.8	.7	

T1 PINNACLE PEAK RD BRIDGE OVER SKUNK CREEK
T2 EXISTING CONDITION ANALYSIS
T3 SKUNK CREEK 100-YEAR FLOW

J1	ICHECK	INQ	NINV	IDIR	STRT	METRIC	HVINS	Q	WSEL	FQ
	0	2	0	0	0.0120	0	0.0	41500.0	1375.88	

J2	NPROF	IPLOT	PRFVS	XSECV	XSECH	FN	ALLDC	IBW	CHNIM	ITRACE
	2	0	-1	0.0	0.0	0.0	0.0	-6.0	0.0	15

FLOW DISTRIBUTION FOR SECNO= 8.57 CWSEL= 1375.88

STA= 9031. 10041.
PER Q= 100.0
AREA= 3986.3
VEL= 10.4
DEPTH= 4.1

FLOW DISTRIBUTION FOR SECNO= 8.68 CWSEL= 1380.00

STA= 9105. 10073.
PER Q= 100.0
AREA= 6152.4
VEL= 6.7
DEPTH= 6.4

FLOW DISTRIBUTION FOR SECNO= 8.81 CWSEL= 1382.27

STA= 9678. 10490.
PER Q= 100.0
AREA= 3784.4
VEL= 11.0
DEPTH= 6.2

FLOW DISTRIBUTION FOR SECNO= 8.91 CWSEL= 1387.33

STA= 9086. 9088. 10263.
PER Q= .0 100.0
AREA= .1 2541.1
VEL= .8 16.3
DEPTH= .1 8.1

SECNO	DEPTH	CWSEL	CRIWS	WSELK	EG	HV	HL	OLOSS	L-BANK ELEV
Q	QLOB	QCH	QROB	ALOB	ACH	AROB	VOL	TWA	R-BANK ELEV
TIME	VLOB	VCH	VROB	XNL	XNCH	XNR	WTN	ELMIN	SSTA
SLOPE	XLOBL	XLCH	XLOBR	ITRIAL	IDC	ICONT	CORAR	TOPWID	ENDST

FLOW DISTRIBUTION FOR SECNO= 8.96 CWSEL= 1392.02

STA=	8980.	9263.	9605.	9850.	10283.	10900.
PER Q=	3.1	3.0	.8	92.1	1.0	
AREA=	442.6	468.8	173.8	3556.5	206.3	
VEL=	2.9	2.7	1.8	10.7	2.1	
DEPTH=	1.6	1.4	.7	8.3	.3	

FLOW DISTRIBUTION FOR SECNO= 9.01 CWSEL= 1395.32

STA=	8865.	9243.	9729.	9760.	10321.	10402.	10488.	10551.
PER Q=	3.3	3.4	1.2	83.0	3.4	3.4	2.4	
AREA=	403.8	450.9	89.0	3146.0	242.2	250.7	179.7	
VEL=	3.4	3.1	5.6	10.9	5.8	5.6	5.5	
DEPTH=	1.1	.9	2.9	5.6	3.0	2.9	2.9	

FLOW DISTRIBUTION FOR SECNO= 9.02 CWSEL= 1396.22

STA=	8850.	9334.	9576.	9693.	9768.	10339.	10387.	10442.	10500.
PER Q=	3.2	3.6	3.7	3.7	76.9	3.0	3.0	2.9	
AREA=	456.5	376.1	283.2	239.7	2907.1	177.1	187.6	189.7	
VEL=	2.9	4.0	5.4	6.4	11.0	7.0	6.7	6.3	
DEPTH=	.9	1.6	2.4	3.2	5.1	3.7	3.4	3.3	

FLOW DISTRIBUTION FOR SECNO= 9.03 CWSEL= 1397.57

STA=	8850.	8946.	9013.	9125.	9231.	9345.	9477.	9623.	9710.	9756.	10317.	10383.	10437.
PER Q=	4.1	3.1	4.5	3.6	3.4	3.1	3.1	3.4	2.1	58.8	4.0	3.1	
AREA=	443.1	318.4	489.5	420.7	417.7	413.2	433.2	372.4	213.1	3798.9	366.5	291.0	
VEL=	3.9	4.0	3.9	3.6	3.4	3.1	3.0	3.8	4.0	6.4	4.5	4.4	
DEPTH=	4.6	4.7	4.4	4.0	3.7	3.1	3.0	4.3	4.7	6.8	5.5	5.4	

STA=	10437.	10517.	10520.
PER Q=	3.6	.0	
AREA=	369.7	9.3	
VEL=	4.0	1.9	
DEPTH=	4.6	2.9	

SECNO	DEPTH	CWSEL	CRIWS	WSELK	EG	HV	HL	OLOSS	L-BANK ELEV
Q	QLOB	QCH	QROB	ALOB	ACH	AROB	VOL	TWA	R-BANK ELEV
TIME	VLOB	VCH	VROB	XNL	XNCH	XNR	WTN	ELMIN	SSTA
SLOPE	XLOBL	XLCH	XLOBR	ITRIAL	IDC	ICONT	CORAR	TOPWID	ENDST

FLOW DISTRIBUTION FOR SECNO= 9.06 CWSEL= 1397.96

STA=	8900.	8965.	9034.	9129.	9207.	9292.	9382.	9491.	9616.	9688.	10435.	10443.
PER Q=	3.1	3.4	4.4	3.4	3.3	3.3	3.5	3.6	2.5	69.5	.1	
AREA=	269.9	286.7	384.0	303.4	309.4	314.2	352.7	378.7	241.6	4008.6	18.8	
VEL=	4.8	4.9	4.8	4.6	4.4	4.3	4.1	3.9	4.2	7.2	2.9	
DEPTH=	4.1	4.2	4.1	3.9	3.6	3.5	3.2	3.0	3.4	5.4	2.1	

FLOW DISTRIBUTION FOR SECNO= 9.10 CWSEL= 1398.60

STA=	8950.	9016.	9083.	9157.	9248.	9368.	9505.	9639.	9741.	10419.
PER Q=	3.2	3.2	3.2	3.3	3.5	3.7	3.1	2.5	74.4	
AREA=	279.5	280.4	289.4	320.0	370.2	403.8	359.3	254.5	3839.9	
VEL=	4.7	4.8	4.6	4.3	3.9	3.8	3.6	4.1	8.0	
DEPTH=	4.2	4.2	3.9	3.5	3.1	3.0	2.7	2.5	5.7	

FLOW DISTRIBUTION FOR SECNO= 9.20 CWSEL= 1400.82

STA=	9148.	9247.	9342.	9399.	9601.	9804.	9862.	10309.	10320.
PER Q=	3.7	4.4	3.2	3.3	3.2	1.0	81.2	.0	
AREA=	328.1	323.2	240.0	394.5	395.9	116.0	3145.5	6.1	
VEL=	4.7	5.6	5.6	3.4	3.4	3.4	10.7	1.6	
DEPTH=	3.3	3.4	4.2	1.9	2.0	2.0	7.0	.6	

FLOW DISTRIBUTION FOR SECNO= 9.28 CWSEL= 1403.47

STA=	9290.	9421.	9516.	9664.	9810.	10044.	10077.	10097.	10125.	10137.	10152.	10171.	10193.
PER Q=	3.4	3.2	3.1	3.0	52.9	4.1	4.7	7.6	3.2	3.9	4.5	5.0	
AREA=	329.9	282.9	339.4	327.2	2100.5	221.4	192.5	299.8	125.9	156.1	185.6	212.9	
VEL=	4.2	4.7	3.8	3.8	10.5	7.7	10.1	10.6	10.7	10.4	10.1	9.8	
DEPTH=	2.5	3.0	2.3	2.2	9.0	6.6	9.9	10.5	10.9	10.3	9.9	9.4	

STA=	10193.	10225.
PER Q=	1.2	
AREA=	91.9	
VEL=	5.6	
DEPTH=	2.9	

SECNO	DEPTH	CWSEL	CRIWS	WSELK	EG	HV	HL	OLOSS	L-BANK ELEV
Q	QLOB	QCH	QROB	ALOB	ACH	AROB	VOL	TWA	R-BANK ELEV
TIME	VLOB	VCH	VROB	XNL	XNCH	XNR	WTN	ELMIN	SSTA
SLOPE	XLOBL	XLCH	XLOBR	ITRIAL	IDC	ICONT	CORAR	TOPWID	ENDST

FLOW DISTRIBUTION FOR SECNO= 9.40 CWSEL= 1406.74

STA=	9908.	10307.	10332.	10359.	10368.	10395.	10422.	10451.	10472.	10498.	10500.
PER Q=	90.8	1.4	1.4	.4	1.4	1.3	1.4	1.0	.9	.0	
AREA=	3510.5	99.6	104.9	32.2	103.1	97.7	108.7	75.0	79.3	5.4	
VEL=	10.7	5.8	5.6	5.6	5.5	5.5	5.5	5.3	4.9	2.5	
DEPTH=	8.8	4.0	3.8	3.8	3.7	3.7	3.7	3.5	3.1	2.9	

FLOW DISTRIBUTION FOR SECNO= 9.49 CWSEL= 1409.80

STA=	9891.	9927.	10125.	10158.	10177.	10203.	10223.	10251.	10275.	10294.	10307.	10326.	10363.
PER Q=	2.0	31.6	4.0	3.1	5.2	4.3	6.1	5.5	4.6	3.0	4.6	8.0	
AREA=	138.4	1287.5	201.8	137.6	216.2	174.8	244.7	216.3	176.7	118.1	176.7	322.1	
VEL=	6.0	10.2	8.2	9.4	10.0	10.3	10.4	10.6	10.7	10.7	10.8	10.3	
DEPTH=	3.8	7.3	6.0	7.6	8.3	8.7	8.8	9.1	9.2	9.2	9.3	8.7	

STA=	10363.	10392.	10431.	10484.	10545.
PER Q=	4.2	4.6	4.3	4.9	
AREA=	199.8	234.6	254.7	301.4	
VEL=	8.7	8.1	6.9	6.8	
DEPTH=	6.8	6.1	4.8	5.0	

FLOW DISTRIBUTION FOR SECNO= 9.56 CWSEL= 1412.01

STA=	9949.	9986.	10066.	10091.	10108.	10138.	10165.	10193.	10215.	10232.	10246.	10261.	10282.
PER Q=	2.7	21.2	4.9	3.1	5.3	5.1	5.9	4.9	3.8	3.1	3.3	4.1	
AREA=	170.1	789.2	215.8	143.6	244.2	229.5	257.8	205.1	159.5	131.8	143.4	181.3	
VEL=	6.6	11.2	9.4	9.0	9.0	9.2	9.5	9.8	9.9	9.9	9.6	9.3	
DEPTH=	4.7	9.8	8.9	8.4	8.3	8.5	9.0	9.5	9.6	9.6	9.1	8.7	

STA=	10282.	10308.	10322.	10337.	10355.	10382.	10398.	10415.	10430.	10483.
PER Q=	5.9	3.5	3.6	3.5	3.5	3.2	3.5	3.6	2.5	
AREA=	245.7	141.3	145.5	157.2	188.1	141.7	151.8	148.9	156.5	
VEL=	9.9	10.2	10.1	9.1	7.8	9.4	9.6	9.9	6.7	
DEPTH=	9.6	10.0	9.9	8.8	6.8	8.9	9.1	9.9	2.9	

FLOW DISTRIBUTION FOR SECNO= 9.65 CWSEL= 1414.05

STA=	9740.	9787.	9816.	10092.	10122.	10205.
PER Q=	4.8	6.0	83.3	3.1	2.8	
AREA=	272.3	271.8	3055.2	185.1	251.5	
VEL=	7.4	9.1	11.3	6.9	4.7	
DEPTH=	5.8	9.4	11.1	6.2	3.0	

SECNO	DEPTH	CWSEL	CRIWS	WSELK	EG	HV	HL	OLOSS	L-BANK ELEV
Q	QLOB	QCH	QROB	ALOB	ACH	AROB	VOL	TWA	R-BANK ELEV
TIME	VLOB	VCH	VROB	XNL	XNCH	XNR	WTN	ELMIN	SSTA
SLOPE	XLOBL	XLCH	XLOBR	ITRIAL	IDC	ICONT	CORAR	TOPWID	ENDST

FLOW DISTRIBUTION FOR SECNO= 9.71 CWSEL= 1415.77

STA=	9687.	9698.	9713.	9726.	10099.	10109.	10122.	10135.	10158.	10168.
PER Q=	.2	1.1	1.2	95.8	.3	.4	.4	.5	.0	
AREA=	32.2	89.3	88.7	4348.6	30.8	46.5	47.5	61.2	8.7	
VEL=	2.9	5.3	5.8	9.1	3.5	3.7	3.8	3.1	1.4	
DEPTH=	2.7	6.1	6.8	11.7	3.3	3.5	3.6	2.7	.8	

FLOW DISTRIBUTION FOR SECNO= 9.80 CWSEL= 1416.86

STA=	9769.	9790.	10124.	10153.	10183.	10201.	10210.	10220.
PER Q=	.4	97.4	1.8	.4	.0	.0	.0	
AREA=	49.1	3736.2	145.3	61.8	13.3	7.3	3.4	
VEL=	3.0	10.8	5.1	2.8	1.4	1.5	.8	
DEPTH=	2.3	11.2	5.0	2.1	.8	.8	.3	

THIS RUN EXECUTED 17JUN94 15:24:41

****
HEC-2 WATER SURFACE PROFILES

Version 4.6.2; May 1991
****

NOTE- ASTERISK (*) AT LEFT OF CROSS-SECTION NUMBER INDICATES MESSAGE IN SUMMARY OF ERRORS LIST

SKUNK CREEK

SUMMARY PRINTOUT

	SECNO	Q	CWSEL	DEPTH	ELMIN	EG	CRIWS	VCH	10*KS	XLCH	SSTA	TOPWID	ENDST
	8.566	27500.00	1374.94	8.64	1366.30	1376.17	.00	8.92	118.14	.00	9035.35	931.27	10027.32
	8.566	41500.00	1375.88	9.58	1366.30	1377.56	.00	10.41	120.16	.00	9030.51	968.07	10028.81
*	8.680	27500.00	1378.66	9.56	1369.10	1379.15	.00	5.64	26.04	602.00	9109.93	945.17	10055.10
*	8.680	41500.00	1380.00	10.90	1369.10	1380.71	.00	6.75	27.73	602.00	9104.70	955.49	10060.19
*	8.815	27500.00	1380.92	8.92	1372.00	1382.24	.00	9.20	68.46	713.00	9687.05	575.66	10262.71
*	8.815	41500.00	1382.27	10.27	1372.00	1384.13	.00	10.97	76.20	713.00	9678.08	607.48	10285.56
*	8.907	27500.00	1384.98	9.88	1375.10	1388.41	1384.98	14.86	125.62	485.80	9864.46	273.01	10137.47
*	8.907	41500.00	1387.33	12.23	1375.10	1391.47	1387.33	16.33	119.39	485.80	9086.31	314.89	10163.55
	8.957	27500.00	1389.17	11.07	1378.10	1391.21	.00	11.47	82.87	264.00	9867.31	382.22	10249.53
*	8.957	41500.00	1392.02	13.92	1378.10	1393.68	1391.19	10.74	50.44	264.00	8979.55	1570.88	10900.00
*	9.014	27500.00	1394.03	6.63	1387.40	1395.63	1394.03	10.48	112.89	301.00	8865.00	1069.40	10550.90
*	9.014	41500.00	1395.32	7.92	1387.40	1396.92	1395.32	10.95	87.04	301.00	8865.00	1678.68	10550.90
*	9.022	27500.00	1395.19	5.29	1389.90	1396.60	1395.19	10.11	113.86	40.00	9205.22	1294.78	10500.00
*	9.022	41500.00	1396.22	6.32	1389.90	1397.76	1396.22	10.97	99.46	40.00	8850.00	1650.00	10500.00
*	9.030	27500.00	1396.53	7.03	1389.50	1396.87	.00	5.41	20.63	40.00	8850.00	1670.00	10520.00
*	9.030	41500.00	1397.57	8.07	1389.50	1398.03	.00	6.43	23.33	40.00	8850.00	1670.00	10520.00
	9.064	27500.00	1396.91	6.11	1390.80	1397.41	.00	6.29	40.92	180.00	8900.00	1541.14	10441.14
	9.064	41500.00	1397.96	7.16	1390.80	1398.61	.00	7.19	39.86	180.00	8900.00	1543.33	10443.33
	9.100	27500.00	1397.59	6.99	1390.60	1398.21	.00	6.89	44.15	190.00	8950.00	1445.39	10416.60
	9.100	41500.00	1398.60	8.00	1390.60	1399.42	.00	8.04	46.48	190.00	8950.00	1452.35	10418.92
	9.200	27500.00	1399.74	8.54	1391.20	1400.88	.00	9.04	55.31	528.00	9147.60	1143.37	10309.43
	9.200	41500.00	1400.82	9.62	1391.20	1402.33	.00	10.72	62.30	528.00	9147.60	1170.40	10319.88

SECNO	Q	CWSEL	DEPTH	ELMIN	EG	CRIWS	VCH	10*KS	XLCH	SSTA	TOPWID	ENDST
9.282	27500.00	1402.07	10.17	1391.90	1403.18	.00	8.89	49.65	443.00	9305.49	891.53	10208.83
9.282	41500.00	1403.47	11.57	1391.90	1404.89	.00	10.45	54.66	443.00	9290.31	934.57	10224.88
9.400	27500.00	1405.17	9.67	1395.50	1406.38	.00	9.03	54.39	623.00	9907.50	592.50	10500.00
9.400	41500.00	1406.74	11.24	1395.50	1408.40	.00	10.73	59.46	623.00	9907.50	592.50	10500.00
9.488	27500.00	1408.04	8.14	1399.90	1409.14	.00	9.04	71.99	464.60	9893.52	617.87	10544.60
9.488	41500.00	1409.80	9.90	1399.90	1411.21	.00	10.17	67.42	464.60	9890.56	631.03	10544.60
9.560	27500.00	1410.32	9.12	1401.20	1411.31	.00	9.26	48.55	380.20	9955.75	502.92	10458.68
9.560	41500.00	1412.01	10.81	1401.20	1413.46	.00	11.15	54.70	380.20	9949.15	519.92	10483.40
9.655	27500.00	1412.16	11.46	1400.70	1413.42	.00	9.38	42.40	501.60	9746.64	442.79	10189.43
9.655	41500.00	1414.05	13.35	1400.70	1415.85	.00	11.31	48.02	501.60	9740.16	465.29	10205.45
9.713	27500.00	1413.59	11.99	1401.60	1414.48	.00	7.61	26.63	306.20	9691.32	460.96	10152.28
9.713	41500.00	1415.77	14.17	1401.60	1417.03	.00	9.14	29.15	306.20	9686.63	481.84	10168.47
9.800	27500.00	1414.67	11.97	1402.70	1415.93	.00	9.06	32.00	459.40	9778.54	388.54	10167.08
9.800	41500.00	1416.86	14.16	1402.70	1418.63	.00	10.82	34.10	459.40	9768.62	451.70	10220.32

SKUNK CREEK

SUMMARY PRINTOUT TABLE 150

	SECNO	XLCH	ELTRD	ELLC	ELMIN	Q	CWSEL	CRIWS	EG	10*KS	VCH	AREA	.01K
	8.566	.00	.00	.00	1366.30	27500.00	1374.94	.00	1376.17	118.14	8.92	3081.28	2530.12
	8.566	.00	.00	.00	1366.30	41500.00	1375.88	.00	1377.56	120.16	10.41	3986.28	3785.88
*	8.680	602.00	.00	.00	1369.10	27500.00	1378.66	.00	1379.15	26.04	5.64	4876.40	5389.23
*	8.680	602.00	.00	.00	1369.10	41500.00	1380.00	.00	1380.71	27.73	6.75	6152.38	7880.21
*	8.815	713.00	.00	.00	1372.00	27500.00	1380.92	.00	1382.24	68.46	9.20	2987.87	3323.69
*	8.815	713.00	.00	.00	1372.00	41500.00	1382.27	.00	1384.13	76.20	10.97	3784.43	4754.10
*	8.907	485.80	.00	.00	1375.10	27500.00	1384.98	1384.98	1388.41	125.62	14.86	1850.60	2453.59
*	8.907	485.80	.00	.00	1375.10	41500.00	1387.33	1387.33	1391.47	119.39	16.33	2541.35	3798.10
	8.957	264.00	.00	.00	1378.10	27500.00	1389.17	.00	1391.21	82.87	11.47	2396.74	3020.88
*	8.957	264.00	.00	.00	1378.10	41500.00	1392.02	1391.19	1393.68	50.44	10.74	4847.98	5843.28
*	9.014	301.00	.00	.00	1387.40	27500.00	1394.03	1394.03	1395.63	112.89	10.48	2957.46	2588.27
*	9.014	301.00	.00	.00	1387.40	41500.00	1395.32	1395.32	1396.92	87.04	10.95	4762.22	4448.28
*	9.022	40.00	.00	.00	1389.90	27500.00	1395.19	1395.19	1396.60	113.86	10.11	3180.50	2577.16
*	9.022	40.00	.00	.00	1389.90	41500.00	1396.22	1396.22	1397.76	99.46	10.97	4817.06	4161.17
*	9.030	40.00	.00	.00	1389.50	27500.00	1396.53	.00	1396.87	20.63	5.41	6629.17	6054.44
*	9.030	40.00	.00	.00	1389.50	41500.00	1397.57	.00	1398.03	23.33	6.43	8356.65	8591.03
	9.064	180.00	.00	.00	1390.80	27500.00	1396.91	.00	1397.41	40.92	6.29	5234.10	4298.85
	9.064	180.00	.00	.00	1390.80	41500.00	1397.96	.00	1398.61	39.86	7.19	6868.02	6572.90
	9.100	190.00	.00	.00	1390.60	27500.00	1397.59	.00	1398.21	44.15	6.89	4928.99	4138.69
	9.100	190.00	.00	.00	1390.60	41500.00	1398.60	.00	1399.42	46.48	8.04	6396.95	6087.09
	9.200	528.00	.00	.00	1391.20	27500.00	1399.74	.00	1400.88	55.31	9.04	3698.84	3697.54
	9.200	528.00	.00	.00	1391.20	41500.00	1400.82	.00	1402.33	62.30	10.72	4949.35	5257.65
	9.282	443.00	.00	.00	1391.90	27500.00	1402.07	.00	1403.18	49.65	8.89	3583.34	3902.70
	9.282	443.00	.00	.00	1391.90	41500.00	1403.47	.00	1404.89	54.66	10.45	4865.97	5613.03
	9.400	623.00	.00	.00	1395.50	27500.00	1405.17	.00	1406.38	54.39	9.03	3288.19	3728.74
	9.400	623.00	.00	.00	1395.50	41500.00	1406.74	.00	1408.40	59.46	10.73	4216.42	5381.96
	9.488	464.60	.00	.00	1399.90	27500.00	1408.04	.00	1409.14	71.99	9.04	3301.51	3241.13
	9.488	464.60	.00	.00	1399.90	41500.00	1409.80	.00	1411.21	67.42	10.17	4401.16	5054.40
	9.560	380.20	.00	.00	1401.20	27500.00	1410.32	.00	1411.31	48.55	9.26	3489.69	3946.55
	9.560	380.20	.00	.00	1401.20	41500.00	1412.01	.00	1413.46	54.70	11.15	4348.14	5611.09
	9.655	501.60	.00	.00	1400.70	27500.00	1412.16	.00	1413.42	42.40	9.38	3177.03	4223.08
	9.655	501.60	.00	.00	1400.70	41500.00	1414.05	.00	1415.85	48.02	11.31	4035.95	5989.04

SECNO	XLCH	ELTRD	ELLC	ELMIN	Q	CWSEL	CRIWS	EG	10*KS	VCH	AREA	.01K
9.713	306.20	.00	.00	1401.60	27500.00	1413.59	.00	1414.48	26.63	7.61	3723.22	5329.41
9.713	306.20	.00	.00	1401.60	41500.00	1415.77	.00	1417.03	29.15	9.14	4753.37	7686.47
9.800	459.40	.00	.00	1402.70	27500.00	1414.67	.00	1415.93	32.00	9.06	3107.29	4861.52
9.800	459.40	.00	.00	1402.70	41500.00	1416.86	.00	1418.63	34.10	10.82	4016.50	7106.37

SKUNK CREEK

SUMMARY PRINTOUT TABLE 150

	SECNO	Q	CWSEL	DIFWSP	DIFWSX	DIFKWS	TOPWID	XLCH
	8.566	27500.00	1374.94	.00	.00	-.94	931.27	.00
	8.566	41500.00	1375.88	.94	.00	.00	968.07	.00
*	8.680	27500.00	1378.66	.00	3.72	.00	945.17	602.00
*	8.680	41500.00	1380.00	1.34	4.12	.00	955.49	602.00
*	8.815	27500.00	1380.92	.00	2.27	.00	575.66	713.00
*	8.815	41500.00	1382.27	1.34	2.26	.00	607.48	713.00
*	8.907	27500.00	1384.98	.00	4.06	.00	273.01	485.80
*	8.907	41500.00	1387.33	2.35	5.07	.00	314.89	485.80
	8.957	27500.00	1389.17	.00	4.19	.00	382.22	264.00
*	8.957	41500.00	1392.02	2.85	4.69	.00	1570.88	264.00
*	9.014	27500.00	1394.03	.00	4.86	.00	1069.40	301.00
*	9.014	41500.00	1395.32	1.29	3.30	.00	1678.68	301.00
*	9.022	27500.00	1395.19	.00	1.16	.00	1294.78	40.00
*	9.022	41500.00	1396.22	1.03	.90	.00	1650.00	40.00
*	9.030	27500.00	1396.53	.00	1.34	.00	1670.00	40.00
*	9.030	41500.00	1397.57	1.04	1.35	.00	1670.00	40.00
	9.064	27500.00	1396.91	.00	.38	.00	1541.14	180.00
	9.064	41500.00	1397.96	1.05	.39	.00	1543.33	180.00
	9.100	27500.00	1397.59	.00	.68	.00	1445.39	190.00
	9.100	41500.00	1398.60	1.01	.64	.00	1452.35	190.00
	9.200	27500.00	1399.74	.00	2.16	.00	1143.37	528.00
	9.200	41500.00	1400.82	1.08	2.22	.00	1170.40	528.00
	9.282	27500.00	1402.07	.00	2.33	.00	891.53	443.00
	9.282	41500.00	1403.47	1.40	2.65	.00	934.57	443.00
	9.400	27500.00	1405.17	.00	3.10	.00	592.50	623.00
	9.400	41500.00	1406.74	1.57	3.26	.00	592.50	623.00
	9.488	27500.00	1408.04	.00	2.87	.00	617.87	464.60
	9.488	41500.00	1409.80	1.76	3.07	.00	631.03	464.60
	9.560	27500.00	1410.32	.00	2.28	.00	502.92	380.20
	9.560	41500.00	1412.01	1.69	2.20	.00	519.92	380.20
	9.655	27500.00	1412.16	.00	1.84	.00	442.79	501.60
	9.655	41500.00	1414.05	1.89	2.04	.00	465.29	501.60

SECNO	Q	CWSEL	DIFWSP	DIFWSX	DIFKWS	TOPWID	XLCH
9.713	27500.00	1413.59	.00	1.43	.00	460.96	306.20
9.713	41500.00	1415.77	2.18	1.72	.00	481.84	306.20
9.800	27500.00	1414.67	.00	1.08	.00	388.54	459.40
9.800	41500.00	1416.86	2.19	1.08	.00	451.70	459.40

SUMMARY OF ERRORS AND SPECIAL NOTES

WARNING SECNO=	8.680	PROFILE=	1	CONVEYANCE CHANGE OUTSIDE ACCEPTABLE RANGE
WARNING SECNO=	8.680	PROFILE=	2	CONVEYANCE CHANGE OUTSIDE ACCEPTABLE RANGE
WARNING SECNO=	8.815	PROFILE=	1	CONVEYANCE CHANGE OUTSIDE ACCEPTABLE RANGE
WARNING SECNO=	8.815	PROFILE=	2	CONVEYANCE CHANGE OUTSIDE ACCEPTABLE RANGE
CAUTION SECNO=	8.907	PROFILE=	1	CRITICAL DEPTH ASSUMED
CAUTION SECNO=	8.907	PROFILE=	1	MINIMUM SPECIFIC ENERGY
CAUTION SECNO=	8.907	PROFILE=	2	CRITICAL DEPTH ASSUMED
CAUTION SECNO=	8.907	PROFILE=	2	PROBABLE MINIMUM SPECIFIC ENERGY
CAUTION SECNO=	8.907	PROFILE=	2	20 TRIALS ATTEMPTED TO BALANCE WSEL
WARNING SECNO=	8.957	PROFILE=	2	CONVEYANCE CHANGE OUTSIDE ACCEPTABLE RANGE
CAUTION SECNO=	9.014	PROFILE=	1	CRITICAL DEPTH ASSUMED
CAUTION SECNO=	9.014	PROFILE=	1	MINIMUM SPECIFIC ENERGY
CAUTION SECNO=	9.014	PROFILE=	2	CRITICAL DEPTH ASSUMED
CAUTION SECNO=	9.014	PROFILE=	2	PROBABLE MINIMUM SPECIFIC ENERGY
CAUTION SECNO=	9.014	PROFILE=	2	20 TRIALS ATTEMPTED TO BALANCE WSEL
CAUTION SECNO=	9.022	PROFILE=	1	CRITICAL DEPTH ASSUMED
CAUTION SECNO=	9.022	PROFILE=	1	PROBABLE MINIMUM SPECIFIC ENERGY
CAUTION SECNO=	9.022	PROFILE=	1	20 TRIALS ATTEMPTED TO BALANCE WSEL
CAUTION SECNO=	9.022	PROFILE=	2	CRITICAL DEPTH ASSUMED
CAUTION SECNO=	9.022	PROFILE=	2	PROBABLE MINIMUM SPECIFIC ENERGY
CAUTION SECNO=	9.022	PROFILE=	2	20 TRIALS ATTEMPTED TO BALANCE WSEL
WARNING SECNO=	9.030	PROFILE=	1	CONVEYANCE CHANGE OUTSIDE ACCEPTABLE RANGE
WARNING SECNO=	9.030	PROFILE=	2	CONVEYANCE CHANGE OUTSIDE ACCEPTABLE RANGE

APPENDIX B

```
*****************************************
*  HEC-2 WATER SURFACE PROFILES         *
*                                       *
*  Version   4.6.2;  May 1991           *
*                                       *
*  RUN DATE    15JUN94    TIME   11:17:54  *
*****************************************
```

```
****************************************
*  U.S. ARMY CORPS OF ENGINEERS        *
*  HYDROLOGIC ENGINEERING CENTER       *
*  609 SECOND STREET, SUITE D          *
*  DAVIS, CALIFORNIA 95616-4687        *
*          (916) 756-1104              *
****************************************
```

```
X     X  XXXXXXX   XXXXX              XXXXX
X     X  X        X     X            X     X
X     X  X        X                        X
XXXXXXX  XXXX     X          XXXXX    XXXXX
X     X  X        X                  X
X     X  X        X     X            X
X     X  XXXXXXX   XXXXX             XXXXXXX
```

THIS RUN EXECUTED 15JUN94 11:17:54

```
************************************
HEC-2 WATER SURFACE PROFILES

Version   4.6.2;  May 1991
************************************


SPLIT FLOW BEING PERFORMED

SF

TWSECTION 9.100 TO 9.200
WS      2   9.100   9.200    -1.0     2.6
WC    0.0  1397.4   510.0  1399.0

TWSECTION 9.088 TO 9.100
WS      2   9.088   9.100    -1.0     2.6
WC    0.0  1397.0   235.0  1397.4
```

```
T1      PINNACLE PEAK RD BRIDGE OVER SKUNK CREEK
T2      PROPOSED OPTION ANALYSIS
T3      10-YEAR FLOW
T4      * THIS OPTION INCLUDES EXTENSION OF EAST DIKE ACROSS 35TH AVENUE
T4        TO REDIRECT UP TO THE 100-YEAR FLOW INTO THE INCISED CHANNEL
T4        UPSTREAM OF THE PINNACLE PEAK ROAD BRIDGE
T4      * WEST WALL ADJACENT TO RESIDENTIAL AREA CLOSED OFF AT SOFT WIND
T4        DRIVE
T4      * DROP STRUCTURE LOCATED AT CROSS SECTION 9.087

J1  ICHECK    INQ      NINV     IDIR     STRT     METRIC   HVINS    Q        WSEL     FQ

      0        2        0        0     0.0129       0      0.0    8650.0   1372.7

J2  NPROF     IPLOT    PRFVS    XSECV    XSECH    FN       ALLDC    IBW      CHNIM    ITRACE

     -1        0       -1       0.0      0.0      0.0      0.0      -6.0     0.0

J3  VARIABLE CODES FOR SUMMARY PRINTOUT

     38       43        1        8       42        3        2       26        5       39
     53        4       54              150

J5  LPRNT    NUMSEC                 ********REQUESTED SECTION NUMBERS********

    -10      -10

J6  IHLEQ    ICOPY    SUBDIV   STRTDS   RMILE

             0       -1.0

NC    0.050    0.050    0.040      0.1      0.3
X1    8.566       97   9001.7  10040.6      0.0      0.0      0.0      1.0      0.0
GR  1387.7   7864.4   1386.7   7914.2   1385.0   7933.2   1386.2   8010.9   1385.4   8173.0
GR  1384.3   8203.7   1384.5   8220.9   1383.3   8228.6   1382.5   8322.4   1381.5   8324.5
GR  1381.2   8338.7   1382.5   8341.2   1381.5   8344.0   1381.5   8449.8   1380.4   8503.0
GR  1380.2   8705.2   1378.7   8829.0   1380.4   8834.8   1378.8   8845.6   1380.4   8848.8
GR  1378.2   8853.6   1380.7   8862.6   1380.3   8867.2   1379.2   8872.3   1378.8   8875.2
GR  1379.8   8896.4   1380.3   8923.5   1379.2   8937.1   1380.1   8973.5   1382.1   8978.3
GR  1382.5   8983.7   1381.2   8988.6   1382.9   8995.1   1381.9   9001.7   1380.3   9008.1
GR  1380.1   9013.4   1377.7   9018.9   1376.5   9025.0   1375.6   9033.0   1373.2   9041.5
GR  1372.0   9052.5   1370.8   9063.8   1370.3   9126.1   1369.2   9138.9   1370.2   9208.1
GR  1370.1   9340.9   1369.1   9352.6   1370.3   9363.5   1370.1   9371.4   1369.1   9375.6
GR  1370.1   9423.2   1372.1   9460.0   1373.5   9481.4   1374.0   9502.6   1373.0   9514.7
GR  1372.2   9520.1   1373.4   9530.2   1373.7   9597.7   1372.2   9605.1   1372.3   9615.3
GR  1371.3   9628.7   1372.3   9655.6   1373.0   9772.6   1374.0   9794.1   1375.1   9845.6
GR  1375.1   9861.6   1373.8   9878.0   1372.5   9924.8   1371.2   9936.4   1371.2   9938.5
GR  1375.0   9943.2   1377.2   9949.5   1378.2   9966.1   1375.9   9975.9   1372.4   9983.7
GR  1372.0   9986.3   1368.8   9993.0   1368.8   9996.0   1366.3  10000.0   1366.9  10009.4
GR  1368.7  10015.0   1373.4  10024.9   1378.6  10033.1   1380.1  10040.6   1381.1  10115.4
GR  1380.0  10225.4   1381.2  10296.3   1381.6  10516.7   1382.6  10729.1   1383.8  10816.6
GR  1383.7  10825.5   1381.4  10828.6   1384.0  10837.6   1383.0  10895.8   1383.7  11111.2
```

```
GR   1385.9    12184.6     1389.2    12197.0

X1    8.680         93     9088.6    10072.6      615.0      650.0      602.0        1.0        0.0
GR   1390.3     8163.3     1388.6     8235.1     1389.1     8359.1     1387.5     8437.1     1385.1     8440.6
GR   1383.7     8591.0     1383.7     8703.7     1383.5     8830.4     1384.4     8879.3     1383.4     8897.3
GR   1383.0     8926.2     1385.0     8932.9     1382.2     8943.8     1384.5     8947.3     1382.4     8951.2
GR   1384.7     8961.0     1384.9     8963.4     1383.1     8967.4     1382.3     9060.2     1385.7     9069.1
GR   1386.3     9071.1     1384.6     9075.5     1385.6     9082.0     1385.0     9088.6     1382.8     9093.2
GR   1380.9     9101.2     1378.0     9112.5     1376.0     9120.2     1374.5     9126.6     1373.5     9134.2
GR   1372.0     9139.3     1371.7     9228.6     1370.6     9234.2     1371.8     9249.9     1371.8     9253.4
GR   1370.3     9264.4     1371.2     9372.0     1372.6     9429.6     1373.2     9531.8     1374.3     9630.9
GR   1374.4     9714.1     1375.5     9738.8     1376.4     9811.4     1375.2     9824.8     1376.5     9888.5
GR   1375.4     9899.8     1374.2     9910.2     1372.7     9919.0     1372.4     9940.5     1373.8     9945.1
GR   1375.0     9949.4     1376.2     9964.6     1373.9     9969.0     1372.2     9977.8     1369.2     9982.4
GR   1369.1     9991.8     1372.0    10000.0     1372.8    10001.3     1375.2    10006.9     1375.5    10015.3
GR   1376.6    10023.1     1377.1    10032.0     1378.1    10036.8     1376.6    10041.2     1378.2    10053.0
GR   1378.9    10056.2     1381.8    10066.7     1382.8    10072.6     1382.2    10076.0     1380.4    10083.6
GR   1380.7    10089.7     1383.4    10095.7     1383.1    10201.2     1384.3    10256.6     1384.2    10368.9
GR   1383.9    10523.6     1384.9    10654.1     1385.1    10781.0     1385.5    10934.2     1385.9    11104.7
GR   1386.5    11273.1     1386.8    11384.3     1387.6    11573.9     1388.0    11707.0     1388.7    11818.9
GR   1390.1    11891.0     1389.9    11952.6     1388.8    11979.1     1392.5    12008.1     1394.1    12020.2
GR   1391.0    12032.7     1391.6    12038.3     1393.1    12047.5
BEGIN CHANNELIZATION

        BEGIN CHANNELIZATION
X1    8.815         91     9609.8    10489.6      450.0      680.0      713.0        1.0        0.0
CI   9935.0     1372.5     713.035       4.0        4.0      250.0       0.01
GR   1390.4     8808.9     1389.2     8839.1     1387.5     8856.8     1386.3     8872.6     1385.6     8880.4
GR   1385.1     8957.0     1385.3     9014.6     1385.4     9072.2     1385.2     9117.2     1386.1     9135.9
GR   1386.7     9138.1     1386.4     9178.1     1386.6     9244.8     1386.6     9290.2     1386.6     9321.3
GR   1386.6     9346.5     1386.7     9366.3     1386.4     9376.6     1389.7     9384.9     1386.0     9391.7
GR   1389.3     9398.0     1386.3     9403.9     1389.7     9413.5     1386.9     9419.1     1385.9     9436.0
GR   1386.9     9461.3     1385.8     9487.1     1387.5     9498.5     1386.4     9523.1     1388.0     9544.5
GR   1389.2     9565.2     1390.3     9583.5     1388.5     9609.8     1386.6     9637.1     1385.0     9652.8
GR   1383.4     9670.6     1380.9     9687.2     1378.8     9707.2     1377.6     9725.1     1376.9     9740.7
GR   1374.5     9748.5     1374.4     9756.1     1375.8     9770.8     1375.5     9788.3     1375.0     9818.5
GR   1374.9     9850.1     1374.8     9881.0     1374.7     9912.6     1374.7     9942.9     1374.5     9965.4
GR   1374.1     9984.2     1372.0    10000.0     1372.8    10016.7     1372.2    10035.6     1374.3    10063.8
GR   1375.2    10078.6     1376.0    10095.5     1376.4    10111.8     1376.5    10129.2     1376.9    10153.1
GR   1376.8    10174.4     1376.7    10191.9     1377.4    10209.1     1378.5    10222.6     1379.5    10239.1
GR   1380.8    10261.2     1381.7    10272.3     1382.4    10288.5     1383.8    10306.6     1384.3    10320.4
GR   1385.0    10339.2     1385.4    10355.2     1385.6    10372.8     1385.5    10394.3     1386.4    10410.4
GR   1390.0    10442.0     1391.1    10458.5     1391.9    10471.5     1392.3    10489.6     1392.8    10513.3
GR   1393.2    10543.4     1392.5    10567.3     1391.7    10584.0     1391.4    10598.7     1390.4    10624.2
GR   1390.1    10641.8     1387.8    10681.9     1387.6    10700.9     1387.5    10736.6     1387.4    10756.1
GR   1389.2    10774.8

X1    8.907         91     9830.2    10263.3      520.0      400.0      485.8     0.961261        0.0
CI   10150.     1373.7     480.035       4.0        4.0     -250.0       0.01
X2      0.0        0.0           0       0.0        0.0        0.0          0        0.0        0.0
GR   1397.5     8809.3     1396.5     8838.1     1395.9     8871.3     1393.5     8905.3     1392.4     8937.2
GR   1392.2     8970.4     1390.8     9003.5     1390.0     9027.4     1390.1     9048.0     1389.3     9080.4
GR   1387.1     9087.0     1388.3     9092.7     1389.2     9176.8     1389.2     9248.7     1389.3     9291.0
GR   1389.3     9454.7     1389.4     9497.2     1389.9     9542.3     1389.7     9586.6     1390.0     9625.4
```

R	1389.9	9660.8	1390.8	9664.8	1389.5	9668.6	1389.5	9677.5	1392.2	9681.2
GR	1388.1	9690.2	1390.9	9696.8	1387.9	9699.2	1389.9	9707.4	1393.4	9712.3
GR	1390.3	9719.4	1389.9	9737.3	1390.5	9763.0	1389.7	9786.2	1389.6	9797.0
R	1390.7	9807.1	1390.4	9826.6	1393.0	9830.2	1389.6	9835.6	1385.4	9863.1
R	1381.7	9875.2	1380.1	9894.0	1378.7	9916.2	1377.4	9940.3	1375.8	9960.3
GR	1375.2	9987.9	1375.1	10000.0	1375.1	10025.3	1375.7	10051.5	1376.5	10072.8
R	1377.1	10081.8	1380.7	10094.5	1382.7	10106.6	1383.8	10122.1	1385.2	10140.3
R	1386.7	10159.5	1390.3	10182.6	1391.6	10193.0	1391.7	10213.1	1391.9	10230.2
GR	1392.8	10244.7	1393.1	10263.3	1392.3	10283.1	1391.7	10302.9	1391.8	10337.3
GR	1391.9	10369.3	1392.2	10391.9	1392.2	10408.2	1390.5	10432.0	1390.2	10443.8
R	1392.1	10470.5	1392.0	10488.7	1392.3	10507.6	1392.1	10524.8	1392.1	10551.6
R	1392.3	10570.1	1391.2	10583.8	1391.3	10604.2	1392.0	10627.3	1392.2	10650.0
GR	1391.6	10677.1	1391.1	10695.0	1391.2	10738.1	1390.8	10770.7	1391.6	10797.7
GR	1391.5	10826.7	1390.9	10867.4	1391.0	10912.8	1391.1	10960.4	1391.4	10988.8
R	1392.0	11005.2								
NC	0.0	0.0	0.0	0.3	0.5					
X1	8.957	92	9851.7	10283.2	260.0	240.0	264.0	0.933580	0.0	
CI	10235.	1374.33	250.035	4.0	4.0	-250.0	0.01			
X2	0.0	0.0	0	0.0	0.0	0.0	0	0.0	0.933580	
GR	1400.0	8775.0	1398.0	8815.0	1396.0	8850.0	1394.0	8900.0	1392.0	8980.0
GR	1390.0	9045.0	1390.4	9077.5	1389.9	9104.9	1390.3	9136.9	1390.5	9176.1
GR	1390.3	9220.2	1390.4	9263.3	1390.2	9303.3	1390.4	9346.2	1390.4	9389.1
GR	1390.5	9433.5	1390.7	9474.2	1390.9	9512.7	1391.2	9557.9	1391.1	9605.4
GR	1391.2	9648.9	1391.4	9685.7	1391.3	9701.7	1391.1	9708.8	1393.0	9713.6
GR	1390.1	9721.2	1389.6	9724.7	1392.1	9730.0	1389.6	9734.6	1392.5	9743.5
GR	1391.3	9761.0	1391.4	9780.0	1391.6	9805.7	1390.9	9833.6	1392.1	9851.7
GR	1387.2	9877.8	1383.3	9903.0	1380.6	9926.3	1378.8	9954.7	1378.4	9975.6
GR	1378.1	10000.0	1378.1	10023.4	1378.5	10040.2	1378.5	10064.4	1382.4	10087.3
GR	1383.8	10096.7	1384.0	10112.1	1385.7	10153.8	1386.1	10171.4	1387.5	10187.2
GR	1388.5	10201.2	1388.5	10219.8	1388.2	10235.7	1388.7	10247.1	1390.8	10258.0
GR	1389.8	10261.8	1391.6	10283.2	1391.8	10301.6	1393.6	10330.0	1392.3	10348.7
GR	1392.0	10374.4	1392.3	10397.1	1391.9	10422.4	1392.3	10447.2	1392.2	10475.3
GR	1392.3	10500.4	1392.4	10519.6	1392.4	10548.5	1392.1	10583.0	1392.1	10624.0
GR	1392.0	10658.3	1391.9	10692.9	1391.2	10712.4	1391.3	10730.0	1391.3	10769.2
GR	1391.2	10792.8	1390.0	10804.9	1390.8	10825.3	1391.1	10844.1	1390.9	10873.7
GR	1390.9	10903.3	1390.7	10946.2	1390.6	10989.3	1390.5	11030.8	1390.7	11062.1
GR	1390.9	11089.1	1391.1	11108.3	1390.7	11125.6	1390.1	11145.1	1390.2	11173.0
GR	1390.1	11209.8	1390.3	11239.5						

DOWNSTREAM OF PINNACLE PEAK ROAD BRIDGE

DOWNSTREAM OF PINNACLE PEAK ROAD BRIDGE

X1	9.014	86	9760.3	10320.7	260.0	250.0	301.0	1.0	0.0	
CI	10180.	1374.94	245.035	2.0	2.0	-250.0	0.01			
GR	1397.8	8641.6	1396.8	8667.2	1396.7	8699.9	1395.6	8722.9	1394.6	8737.2
GR	1394.3	8770.7	1394.1	8803.3	1394.0	8852.7	1394.1	8895.6	1394.2	8918.4
GR	1394.2	8957.6	1395.1	8989.7	1395.2	9015.0	1395.2	9062.9	1394.2	9094.8
GR	1393.3	9136.3	1393.5	9161.8	1393.7	9179.5	1393.8	9242.7	1394.1	9278.1
GR	1394.9	9312.4	1395.4	9334.8	1394.8	9361.5	1394.1	9382.8	1394.8	9404.8
GR	1394.8	9441.0	1394.3	9478.6	1395.0	9506.7	1395.0	9519.1	1394.9	9537.8
GR	1394.3	9563.6	1394.6	9593.9	1394.4	9617.7	1394.3	9640.3	1393.9	9655.9
GR	1393.5	9668.0	1392.9	9674.9	1392.6	9677.4	1393.2	9684.9	1393.7	9697.9
GR	1393.5	9710.8	1392.9	9729.1	1392.4	9741.8	1392.4	9753.2	1392.1	9760.3
GR	1391.5	9767.0	1391.5	9783.6	1390.9	9799.7	1390.8	9824.1	1389.9	9850.8

GR	1389.4	9873.9	1389.3	9903.7	1388.5	9923.9	1388.1	9953.0	1387.9	9982.3
GR	1387.8	10000.0	1387.6	10029.2	1388.1	10054.2	1388.0	10070.8	1387.4	10085.5
GR	1388.4	10102.1	1389.3	10125.7	1390.4	10153.5	1390.5	10186.6	1391.1	10222.8
GR	1391.1	10257.5	1392.0	10288.8	1392.2	10320.7	1392.3	10362.7	1392.5	10401.5
GR	1392.4	10450.2	1392.4	10488.2	1392.3	10524.9	1392.9	10550.9	1393.0	10579.9
GR	1392.5	10622.0	1392.7	10670.2	1392.5	10719.8	1392.7	10767.6	1392.5	10809.1
GR	1392.4	10854.2	1392.4	10894.1	1392.3	10945.2	1392.2	11001.0	1392.1	11062.5
GR	1391.6	11091.0								

DOWNSTREAM FACE OF PINNACLE PEAK ROAD BRIDGE

DOWNSTREAM FACE OF PINNACLE PEAK ROAD BRIDGE

X1	9.015	66	10015.0	10325.0	1.0	1.0	1.0	1.0	0.0	
CI	0.0	0.0	0.0	0.0	0.0	0.01	0.01			
X3	10	0.0	0.0	0.0	0.0	0.0	0.0	1392.2	1393.1	
BT	-12	10015.0	1394.5	1394.5	10015.01	1394.5	1390.0	10045.0	1394.8	1390.3
BT		10085.0	1395.2	1390.7	10125.0	1395.6	1391.1	10170.0	1395.7	1391.2
BT		10205.0	1395.7	1391.2	10245.0	1395.5	1391.0	10285.0	1395.2	1390.7
BT		10295.0	1395.1	1390.6	10324.99	1394.7	1390.2	10325.0	1394.7	1394.7
GR	1395.6	8767.9	1395.5	8820.9	1395.4	8873.6	1395.4	8891.5	1395.4	8939.2
GR	1395.2	8990.7	1395.4	9052.6	1395.4	9113.7	1395.3	9176.6	1395.1	9229.3
GR	1395.1	9287.4	1394.9	9334.4	1394.8	9385.2	1394.7	9450.4	1394.8	9489.6
GR	1394.5	9524.7	1394.1	9576.1	1394.0	9617.7	1393.7	9656.6	1393.2	9693.1
GR	1393.1	9730.9	1392.4	9761.0	1392.2	9821.0	1392.4	9881.0	1393.59	9956.0
GR	1394.4	10006.0	1394.5	10015.0	1390.0	10015.01	1374.94	10045.0	1374.94	10085.0
GR	1374.9	10088.74	1390.8	10088.75	1390.8	10093.75	1374.94	10093.76	1374.94	10125.0
GR	1374.9	10167.49	1391.2	10167.5	1391.2	10170.0	1391.2	10172.5	1374.94	10172.51
GR	1374.9	10205.0	1374.94	10245.0	1374.94	10246.24	1391.0	10246.25	1391.0	10251.25
GR	1374.9	10251.26	1374.94	10285.0	1374.94	10295.0	1390.2	10324.99	1394.7	10325.0
GR	1394.8	10326.0	1393.95	10376.0	1393.27	10453.0	1393.07	10520.0	1393.1	10541.9
GR	1392.9	10588.6	1392.7	10636.9	1392.7	10681.4	1392.5	10740.6	1392.6	10796.6
GR	1392.6	10855.7	1392.4	10922.7	1392.3	10988.0	1392.3	11032.1	1392.1	11079.5
GR	1392.1	11085.0								

UPSTREAM FACE OF PINNACLE PEAK ROAD BRIDGE

UPSTREAM FACE OF PINNACLE PEAK ROAD BRIDGE

X1	9.029	66	10015.0	10325.0	80.2	80.2	80.2	1.0	0.0	
CI	0.0	0.0	0.0	0.0	0.0	0.01	0.01			
X3	10	0.0	0.0	0.0	0.0	0.0	0.0	1392.2	1393.1	
BT	-16	10015.0	1394.5	1394.5	10015.01	1394.5	1390.0	10045.0	1394.8	1390.3
BT		10085.0	1395.2	1390.7	10088.75	1395.2	1390.8	10093.75	1395.3	1390.8
BT		10125.0	1395.6	1391.1	10170.0	1395.7	1391.2	10205.0	1395.7	1391.2
BT		10245.0	1395.5	1391.0	10246.25	1395.5	1391.0	10251.25	1395.5	1391.0
BT		10285.0	1395.2	1390.7	10295.0	1395.1	1390.6	10324.99	1394.7	1390.2
BT		10325.0	1394.7	1394.7						
GR	1395.6	8767.9	1395.5	8820.9	1395.4	8873.6	1395.4	8891.5	1395.4	8939.2
GR	1395.2	8990.7	1395.4	9052.6	1395.4	9113.7	1395.3	9176.6	1395.1	9229.3
GR	1395.1	9287.4	1394.9	9334.4	1394.8	9385.2	1394.7	9450.4	1394.8	9489.6
GR	1394.5	9524.7	1394.1	9576.1	1394.0	9617.7	1393.7	9656.6	1393.2	9693.1
GR	1393.1	9730.9	1392.4	9761.0	1392.2	9821.0	1392.4	9881.0	1393.59	9956.0
GR	1394.4	10006.0	1394.5	10015.0	1390.0	10015.01	1375.14	10045.0	1375.14	10085.0
GR	1375.1	10088.74	1390.8	10088.75	1390.8	10093.75	1375.14	10093.76	1375.14	10125.0
GR	1375.1	10167.49	1391.2	10167.5	1391.2	10170.0	1391.2	10172.5	1375.14	10172.51
GR	1375.1	10205.0	1375.14	10245.0	1375.14	10246.24	1391.0	10246.25	1391.0	10251.25
GR	1375.1	10251.26	1375.14	10285.0	1375.14	10295.0	1390.2	10324.99	1394.7	10325.0

GR	1394.8	10326.0	1393.95	10376.0	1393.27	10453.0	1393.07	10520.0	1393.1	10541.9
GR	1392.9	10588.6	1392.7	10636.9	1392.7	10681.4	1392.5	10740.6	1392.6	10796.6
GR	1392.6	10855.7	1392.4	10922.7	1392.3	10988.0	1392.3	11032.1	1392.1	11079.5
GR	1392.1	11085.0								

UPSTREAM OF PINNACLE PEAK ROAD BRIDGE

UPSTREAM OF PINNACLE PEAK ROAD BRIDGE

X1	9.030	84	9755.8	10316.5	1.0	1.0	1.0	1.0	0.0	
CI	10165.	1375.14	1.035	2.0	2.0	250.0	0.01			
X3	0	0.0	0.0	10000.0	0.0	0.0	0.0	0.0	0.0	
GR	1392.7	8771.1	1392.7	8807.9	1392.8	8845.4	1392.7	8874.8	1393.0	8906.8
GR	1393.2	8945.5	1392.7	8980.7	1392.8	9013.1	1392.9	9045.4	1393.4	9080.9
GR	1393.5	9124.8	1393.5	9158.2	1393.7	9191.8	1393.7	9231.1	1393.7	9251.9
GR	1393.9	9279.9	1393.9	9313.3	1394.2	9344.5	1394.2	9388.5	1394.6	9446.5
GR	1395.1	9476.6	1395.1	9505.8	1394.8	9533.7	1394.5	9565.5	1394.1	9602.9
GR	1393.7	9623.0	1393.3	9639.0	1393.3	9654.7	1393.3	9685.0	1393.0	9710.2
GR	1392.8	9733.0	1393.2	9735.2	1393.0	9743.9	1392.4	9755.8	1392.0	9778.0
GR	1391.3	9795.9	1391.3	9817.8	1390.9	9841.7	1390.7	9866.1	1390.7	9889.9
GR	1390.6	9915.1	1390.5	9934.1	1390.6	9959.5	1390.4	9978.8	1389.5	10000.0
GR	1389.5	10022.9	1389.7	10055.8	1389.9	10080.8	1390.1	10109.9	1390.4	10139.2
GR	1390.8	10163.8	1391.4	10188.8	1391.4	10207.6	1391.3	10228.1	1391.4	10249.8
GR	1391.8	10271.8	1391.9	10295.4	1392.0	10316.5	1392.0	10347.6	1392.1	10382.7
GR	1392.2	10410.8	1392.2	10436.7	1392.6	10457.7	1393.1	10475.6	1392.4	10488.1
GR	1393.1	10497.3	1394.6	10516.8	1394.8	10523.4	1394.9	10551.7	1395.0	10591.7
GR	1395.0	10651.4	1395.0	10685.9	1395.3	10743.8	1395.3	10796.2	1395.3	10848.2
GR	1395.4	10896.5	1395.2	10935.1	1395.0	10947.2	1394.3	10964.9	1392.9	10976.3
GR	1392.6	10984.4	1391.8	10985.2	1392.0	10999.1	1392.1	11015.0		

NC	0.0	0.0	0.0	0.1	0.3					
X1	9.064	92	9688.0	10434.5	150.0	240.0	180.0	0.994521	0.0	
CI	10185.	1375.66	208.035	2.0	2.0	250.0	0.01			
X2	0.0	0.0	0	0.0	0.0	0.0	0	0.0	0.0	
X3	0	0.0	0.0	9853.9	0.0	0.0	0.0	0.0	0.0	
GR	1393.3	8753.5	1393.1	8773.6	1393.8	8803.7	1394.7	8838.7	1394.6	8865.9
GR	1394.9	8888.2	1394.4	8904.3	1394.2	8924.4	1393.0	8933.7	1392.8	8943.1
GR	1394.7	8965.1	1394.8	8974.1	1393.7	8986.9	1393.5	9002.9	1393.5	9025.2
GR	1393.1	9033.9	1394.0	9041.3	1393.1	9056.5	1394.5	9065.2	1394.2	9074.1
GR	1394.0	9096.3	1393.9	9128.6	1394.0	9149.8	1394.1	9175.5	1394.4	9207.1
GR	1394.4	9227.2	1394.3	9244.3	1394.3	9267.8	1394.2	9291.9	1394.4	9316.3
GR	1394.6	9350.1	1394.6	9382.0	1394.8	9425.2	1394.7	9460.2	1394.9	9491.4
GR	1394.8	9523.0	1395.1	9549.4	1395.1	9580.9	1394.6	9616.2	1394.5	9647.0
GR	1394.7	9670.0	1394.7	9688.0	1393.4	9698.1	1393.4	9728.3	1393.1	9744.3
GR	1392.3	9766.5	1392.2	9788.6	1392.3	9810.4	1392.1	9834.2	1392.2	9858.2
GR	1392.4	9889.8	1392.0	9917.3	1391.8	9931.4	1391.9	9954.0	1392.2	9976.0
GR	1392.2	9986.6	1390.8	10000.0	1391.3	10006.5	1392.1	10013.7	1392.4	10040.5
GR	1392.1	10059.2	1392.5	10084.7	1392.8	10105.5	1392.2	10133.2	1392.3	10156.8
GR	1392.4	10182.9	1392.7	10210.4	1393.0	10233.7	1393.1	10260.0	1393.1	10289.7
GR	1393.1	10323.1	1393.2	10354.5	1393.1	10385.8	1393.3	10411.9	1393.7	10434.5
GR	1398.1	10443.6	1399.7	10468.9	1397.9	10488.7	1398.0	10527.0	1397.6	10553.5
GR	1397.1	10589.6	1396.9	10633.3	1397.1	10663.3	1397.1	10693.0	1396.8	10723.1
GR	1396.4	10744.2	1396.3	10777.5	1397.0	10795.3	1397.3	10821.4	1397.1	10857.2
GR	1397.2	10880.9	1397.2	10895.2						

```
NC      0.0       0.0       0.0       0.1       0.3
  BOTTOM OF DROP STRUCTURE
        BOTTOM OF DROP STRUCTURE
X1    9.087        92    9688.0   10434.5     150.0     240.0     180.0  0.994521       0.5
CI   10185.   1375.86    80.030       2.0       2.0     250.0      0.01
X2      0.0       0.0         0       0.0       0.0       0.0         0       0.0       0.0
X3        0       0.0       0.0    9779.3       0.0       0.0       0.0       0.0       0.0
GR   1393.3    8753.5    1393.1    8773.6    1393.8    8803.7    1394.7    8838.7    1394.6    8865.9
GR   1394.9    8888.2    1394.4    8904.3    1394.2    8924.4    1393.0    8933.7    1392.8    8943.1
GR   1394.7    8965.1    1394.8    8974.1    1393.7    8986.9    1393.5    9002.9    1393.5    9025.2
GR   1393.1    9033.9    1394.0    9041.3    1393.1    9056.5    1394.5    9065.2    1394.2    9074.1
GR   1394.0    9096.3    1393.9    9128.6    1394.0    9149.8    1394.1    9175.5    1394.4    9207.1
GR   1394.4    9227.2    1394.3    9244.3    1394.3    9267.8    1394.2    9291.9    1394.4    9316.3
GR   1394.6    9350.1    1394.6    9382.0    1394.8    9425.2    1394.7    9460.2    1394.9    9491.4
GR   1394.8    9523.0    1395.1    9549.4    1395.1    9580.9    1394.6    9616.2    1394.5    9647.0
GR   1394.7    9670.0    1394.7    9688.0    1393.4    9698.1    1393.4    9728.3    1393.1    9744.3
GR   1392.3    9766.5    1392.2    9788.6    1392.3    9810.4    1392.1    9834.2    1392.2    9858.2
GR   1392.4    9889.8    1392.0    9917.3    1391.8    9931.4    1391.9    9954.0    1392.2    9976.0
GR   1392.2    9986.6    1390.8   10000.0    1391.3   10006.5    1392.1   10013.7    1392.4   10040.5
GR   1392.1   10059.2    1392.5   10084.7    1392.8   10105.5    1392.2   10133.2    1392.3   10156.8
GR   1392.4   10182.9    1392.7   10210.4    1393.0   10233.7    1393.1   10260.0    1393.1   10289.7
GR   1393.1   10323.1    1393.2   10354.5    1393.1   10385.8    1393.3   10411.9    1393.7   10434.5
GR   1398.1   10443.6    1399.7   10468.9    1397.9   10488.7    1398.0   10527.0    1397.6   10553.5
GR   1397.1   10589.6    1396.9   10633.3    1397.1   10663.3    1397.1   10693.0    1396.8   10723.1
GR   1396.4   10744.2    1396.3   10777.5    1397.0   10795.3    1397.3   10821.4    1397.1   10857.2
GR   1397.2   10880.9    1397.2   10895.2

NC    0.040     0.040     0.035       0.1       0.3
  TOP OF DROP STRUCTURE
        TOP OF DROP STRUCTURE
X1    9.088        80   10025.0   10340.5     140.0     240.0     190.0  0.984807      -0.5
CI   10180.   1390.86    50.030       2.0       2.0     310.0      0.01
X2      0.0       0.0         0       0.0       0.0       0.0         0       0.0       0.0        15
X3        0       0.0       0.0    9800.2       0.0   10412.0       0.0       0.0       0.0
GR   1395.4    8842.4    1395.2    8862.1    1395.1    8887.2    1395.0    8916.1    1395.1    8944.9
GR   1395.0    8977.6    1393.2    8998.5    1393.3    9007.7    1395.0    9016.2    1393.7    9025.9
GR   1394.7    9030.8    1394.5    9046.1    1393.6    9052.7    1395.2    9072.6    1393.8    9083.0
GR   1395.0    9107.9    1394.9    9138.3    1394.5    9157.2    1395.1    9166.5    1394.8    9176.8
GR   1395.0    9203.4    1395.5    9247.7    1395.9    9271.4    1395.3    9309.1    1395.7    9341.5
GR   1395.2    9348.9    1395.4    9368.4    1395.6    9398.7    1395.8    9433.3    1395.6    9467.5
GR   1395.7    9504.8    1395.7    9535.0    1395.9    9575.7    1396.2    9607.5    1396.2    9639.3
GR   1395.6    9661.0    1396.0    9669.2    1396.0    9681.4    1396.0    9688.5    1396.0    9693.1
GR   1396.0    9694.7    1395.7    9698.8    1396.1    9710.9    1394.4    9716.8    1394.1    9740.9
GR   1393.3    9759.7    1392.4    9791.4    1397.5    9815.0    1395.7    9823.6    1391.4   10025.0
GR   1392.4   10034.9    1393.0   10080.0    1392.4   10105.8    1392.6   10131.1    1392.8   10158.2
GR   1393.1   10176.6    1392.6   10184.3    1393.0   10217.9    1393.2   10246.6    1393.6   10273.0
GR   1393.3   10309.3    1393.5   10340.5    1393.0   10380.5    1393.5   10407.3    1398.6   10418.9
GR   1400.4   10436.2    1400.4   10442.6    1398.7   10460.6    1398.5   10489.3    1398.6   10536.4
GR   1398.6   10573.1    1398.2   10633.3    1398.2   10679.4    1398.4   10702.7    1397.8   10724.9
GR   1397.9   10763.3    1398.3   10789.3    1398.2   10809.5    1398.7   10833.8    1399.2   10854.6
```

NC	0.055	0.050	0.040	0.1	0.3					
X1	9.100	88	9740.9	10418.9	140.0	240.0	190.0	0.984807	0.0	
CI	10170.	1392.5	100.035	47.619	2.0	310.0	0.01			
X2	0.0	0.0	0	0.0	0.0	0.0	0	0.0	0.0	15
X3	0	0.0	0.0	9697.7	0.0	10412.0	0.0	0.0	0.0	
GR	1395.4	8842.4	1395.2	8862.1	1395.1	8887.2	1395.0	8916.1	1395.1	8944.9
GR	1395.0	8977.6	1393.2	8998.5	1393.3	9007.7	1395.0	9016.2	1393.7	9025.9
GR	1394.7	9030.8	1394.5	9046.1	1393.6	9052.7	1395.2	9072.6	1393.8	9083.0
GR	1395.0	9107.9	1394.9	9138.3	1394.5	9157.2	1395.1	9166.5	1394.8	9176.8
GR	1395.0	9203.4	1395.5	9247.7	1395.9	9271.4	1395.3	9309.1	1395.7	9341.5
GR	1395.2	9348.9	1395.4	9368.4	1395.6	9398.7	1395.8	9433.3	1395.6	9467.5
GR	1395.7	9504.8	1395.7	9535.0	1395.9	9575.7	1396.2	9607.5	1396.2	9639.3
GR	1395.6	9661.0	1396.0	9669.2	1396.0	9681.4	1396.0	9688.5	1396.0	9693.1
GR	1396.0	9694.7	1395.7	9698.8	1396.1	9710.9	1394.4	9716.8	1394.1	9740.9
GR	1393.3	9759.7	1392.4	9791.4	1391.9	9820.9	1393.1	9839.8	1393.0	9868.1
GR	1392.9	9899.7	1393.0	9941.3	1393.0	9964.5	1393.0	9989.1	1393.0	9995.5
GR	1393.0	10000.0	1393.0	10007.3	1393.1	10012.7	1392.4	10034.9	1393.0	10080.0
GR	1392.4	10105.8	1392.6	10131.1	1392.8	10158.2	1393.1	10176.6	1392.6	10184.3
GR	1393.0	10217.9	1393.2	10246.6	1393.6	10273.0	1393.3	10309.3	1393.5	10340.5
GR	1393.0	10380.5	1393.5	10407.3	1398.6	10418.9	1400.4	10436.2	1400.4	10442.6
GR	1398.7	10460.6	1398.5	10489.3	1398.6	10536.4	1398.6	10573.1	1398.2	10633.3
GR	1398.2	10679.4	1398.4	10702.7	1397.8	10724.9	1397.9	10763.3	1398.3	10789.3
GR	1398.2	10809.5	1398.7	10833.8	1399.2	10854.6				
X1	9.200	89	9861.7	10330.3	375.0	480.0	478.0	1.0	0.0	
CI	0.0	0.0	0.0	0.0	0.0	0.01	0.01			
X2	0.0	0.0	0	0.0	0.0	0.0	0	0.0	0.0	15
X3	0	0.0	0.0	9840.1	0.0	10326.0	0.0	0.0	0.0	
GR	1395.3	8786.4	1396.3	8817.5	1397.9	8843.2	1397.9	8873.9	1397.7	8898.4
GR	1398.0	8924.9	1398.5	8948.0	1398.5	8959.7	1398.2	8981.1	1397.8	9002.6
GR	1396.3	9009.4	1396.8	9029.8	1397.0	9043.1	1395.5	9050.3	1395.9	9055.1
GR	1397.6	9060.9	1395.8	9071.2	1397.5	9088.8	1396.7	9106.9	1397.5	9132.6
GR	1397.7	9147.6	1396.6	9158.2	1397.9	9179.6	1398.1	9197.7	1397.0	9215.5
GR	1397.8	9223.0	1397.3	9246.7	1398.0	9275.2	1398.0	9281.2	1398.0	9287.9
GR	1396.1	9308.6	1395.1	9315.7	1394.9	9341.6	1397.0	9366.7	1397.6	9383.5
GR	1396.4	9398.8	1398.5	9419.0	1398.8	9441.4	1399.0	9477.7	1399.4	9504.2
GR	1399.3	9525.7	1399.0	9557.5	1399.0	9579.7	1399.0	9601.3	1399.3	9628.7
GR	1399.1	9664.3	1398.7	9688.0	1398.7	9710.8	1398.5	9735.7	1398.7	9754.4
GR	1398.8	9774.8	1398.8	9803.9	1398.2	9831.8	1400.0	9840.1	1398.5	9856.6
GR	1398.9	9861.7	1396.1	9871.7	1393.8	9894.1	1392.9	9926.8	1392.3	9938.6
GR	1392.0	9959.2	1391.6	9987.6	1391.2	9996.4	1392.9	10000.0	1394.2	10004.7
GR	1394.2	10028.3	1394.0	10048.6	1394.0	10074.6	1394.3	10096.7	1394.5	10103.4
GR	1393.6	10108.3	1394.4	10113.4	1394.1	10139.2	1394.5	10152.3	1393.8	10157.3
GR	1393.9	10177.9	1394.0	10191.1	1393.2	10196.4	1394.3	10206.7	1393.6	10217.4
GR	1393.4	10254.1	1393.5	10284.9	1393.9	10296.6	1399.7	10309.0	1401.9	10330.3
GR	1400.9	10343.4	1401.5	10347.7	1400.3	10350.9	1400.3	10356.7		
NC	0.050	0.050	0.045	0.1	0.3					

CITY OF PHOENIX LANDFILL

CITY OF PHOENIX LANDFILL

X1	9.282	94	9809.6	10043.5	420.0	440.0	443.0	1.0	0.0	
X3	0	0.0	0.0	9808.8	0.0	10226.6	0.0	0.0	0.0	
GR	1421.9	9146.1	1421.4	9167.3	1419.5	9190.3	1416.4	9213.6	1413.0	9237.7
GR	1409.5	9257.8	1405.1	9277.9	1403.0	9293.9	1403.0	9300.0	1400.5	9314.7
GR	1400.4	9330.9	1401.4	9332.8	1400.5	9336.3	1400.5	9364.3	1400.7	9376.2
GR	1401.4	9379.5	1400.0	9397.0	1402.0	9405.9	1399.4	9421.2	1399.2	9434.3
GR	1400.8	9438.6	1401.5	9448.4	1399.2	9457.5	1398.9	9465.6	1401.7	9473.4
GR	1401.7	9479.0	1400.3	9488.1	1401.3	9497.7	1400.6	9502.5	1401.5	9515.5
GR	1401.0	9536.9	1401.7	9548.5	1401.2	9568.3	1401.0	9596.0	1401.5	9618.7
GR	1400.6	9632.6	1401.2	9643.7	1400.8	9663.5	1401.0	9682.8	1401.3	9698.8
GR	1403.0	9709.9	1401.2	9720.9	1401.0	9740.7	1401.1	9765.2	1400.9	9783.5
GR	1401.5	9800.8	1400.9	9809.6	1395.8	9828.0	1393.5	9838.9	1394.9	9852.5
GR	1394.0	9871.8	1395.3	9892.2	1396.3	9907.5	1394.8	9930.8	1393.5	9951.8
GR	1393.9	9955.3	1392.6	9959.5	1393.5	9968.3	1392.8	9971.6	1393.1	9990.1
GR	1392.5	10000.0	1392.2	10008.2	1391.9	10011.9	1393.4	10016.7	1394.7	10031.4
GR	1394.2	10040.6	1397.4	10043.5	1398.1	10059.4	1394.1	10077.1	1393.1	10096.6
GR	1392.8	10125.1	1392.4	10135.1	1393.0	10136.7	1393.4	10151.9	1393.8	10170.7
GR	1394.3	10193.3	1402.3	10209.3	1403.6	10226.6	1402.7	10246.8	1402.1	10263.3
GR	1402.0	10295.5	1401.9	10327.7	1402.2	10346.5	1402.5	10379.7	1402.5	10381.1
GR	1402.5	10407.3	1402.5	10440.1	1402.3	10466.1	1402.2	10494.9	1402.5	10525.5
GR	1402.3	10560.6	1402.3	10588.4	1402.4	10613.2	1402.4	10636.2		
X1	9.400	92	9907.5	10306.5	450.0	580.0	623.0	1.0	0.0	
X3	0	0.0	0.0	9880.3	0.0	10306.5	0.0	0.0	0.0	
GR	1458.7	9588.2	1458.5	9617.4	1444.4	9638.7	1441.1	9665.9	1437.6	9687.1
GR	1432.5	9715.2	1426.8	9741.1	1423.0	9761.7	1418.5	9786.4	1412.0	9818.5
GR	1410.9	9824.4	1409.2	9828.1	1408.3	9840.0	1408.6	9845.8	1407.0	9849.9
GR	1406.6	9854.3	1409.0	9861.6	1409.3	9880.3	1402.9	9907.5	1399.7	9922.0
GR	1398.9	9955.3	1400.8	9961.7	1398.0	9968.2	1397.8	9996.3	1397.8	10000.0
GR	1397.8	10009.6	1396.9	10023.1	1398.6	10051.0	1398.3	10074.5	1398.3	10082.5
GR	1396.0	10089.6	1398.0	10104.3	1397.5	10113.0	1398.4	10119.7	1397.1	10126.7
GR	1396.8	10156.0	1396.8	10175.8	1397.8	10184.3	1395.8	10213.5	1397.0	10231.2
GR	1395.6	10254.5	1395.5	10265.8	1400.6	10281.8	1402.4	10306.5	1403.1	10331.5
GR	1402.8	10359.2	1403.0	10367.6	1403.0	10395.2	1403.1	10421.7	1403.0	10451.2
GR	1403.4	10472.4	1403.9	10498.1	1403.1	10538.9	1403.0	10568.0	1403.0	10598.8
GR	1402.8	10631.0	1402.8	10662.3	1402.8	10687.4	1402.6	10718.2	1402.8	10746.5
GR	1402.6	10771.6	1405.9	10782.2	1402.4	10792.1	1402.6	10811.3	1402.5	10835.0
GR	1402.8	10861.8	1406.0	10890.6	1408.7	10899.7	1406.2	10919.8	1406.0	10936.6
GR	1406.2	10975.5	1406.2	10995.2	1406.2	11018.5	1405.6	11044.7	1406.3	11059.0
GR	1406.3	11082.7	1406.4	11113.5	1405.8	11144.7	1406.2	11175.2	1406.1	11221.7
GR	1405.9	11252.9	1406.1	11279.7	1406.2	11306.1	1406.4	11344.0	1406.4	11380.4
GR	1406.5	11426.7	1406.4	11456.9	1406.4	11482.3	1406.7	11508.8	1407.2	11531.0
GR	1407.9	11564.8	1407.8	11582.5						
X1	9.488	92	9946.9	10124.9	420.0	400.0	464.6	1.0	0.0	
X3	0	0.0	0.0	9946.9	1410.5	10458.0	0.0	0.0	0.0	
GR	1422.8	9823.4	1416.8	9844.4	1412.1	9859.8	1411.5	9873.7	1412.5	9875.1
GR	1410.8	9880.2	1412.1	9886.7	1407.1	9895.1	1405.9	9899.2	1405.6	9906.6
GR	1402.3	9913.0	1410.2	9927.4	1410.5	9946.9	1403.5	9974.7	1399.9	9988.5
GR	1399.9	10000.0	1400.3	10017.5	1400.9	10041.5	1401.2	10061.3	1401.3	10071.2
GR	1402.9	10073.0	1402.7	10090.6	1404.3	10109.9	1405.2	10124.9	1404.4	10141.2
GR	1402.7	10145.0	1402.5	10158.4	1401.9	10176.5	1401.2	10202.7	1401.1	10222.9
GR	1400.9	10250.7	1400.6	10274.6	1400.6	10293.8	1400.7	10306.7	1400.3	10325.7

GR	1400.2	10336.2	1402.6	10362.6	1403.5	10392.2	1404.8	10400.3	1403.4	10418.4
GR	1402.5	10430.9	1405.4	10441.0	1405.2	10463.0	1405.2	10484.0	1405.4	10493.1
GR	1404.6	10501.2	1404.6	10516.8	1404.9	10544.6	1405.3	10575.9	1405.5	10603.5
GR	1405.5	10627.3	1405.5	10649.3	1406.3	10683.9	1406.6	10719.4	1406.7	10763.8
GR	1406.5	10800.2	1406.5	10843.1	1406.0	10881.5	1405.5	10902.5	1405.3	10921.8
GR	1405.2	10950.5	1404.8	10968.6	1405.5	10980.2	1405.5	11001.5	1405.6	11028.3
GR	1406.1	11062.4	1407.1	11086.1	1407.9	11108.3	1408.1	11128.7	1407.9	11153.0
GR	1408.7	11166.1	1408.6	11186.9	1408.1	11206.4	1407.8	11234.7	1408.1	11243.8
GR	1407.1	11250.6	1408.9	11258.4	1408.3	11264.7	1409.1	11297.3	1409.7	11313.8
GR	1409.6	11339.1	1409.4	11357.3	1409.1	11377.6	1411.8	11388.4	1409.1	11396.7
GR	1408.9	11410.5	1411.3	11421.5	1410.3	11425.0	1411.8	11431.4	1410.7	11436.3
GR	1411.9	11441.5	1410.6	11444.3						
X1	9.560	70	9985.7	10066.4	385.0	365.0	380.2	1.0	0.0	
GR	1425.8	9823.6	1425.6	9829.0	1423.7	9832.4	1422.8	9840.0	1422.8	9843.3
GR	1423.9	9847.3	1422.7	9852.2	1421.3	9856.6	1424.3	9863.6	1419.6	9871.8
GR	1417.0	9878.5	1416.2	9889.6	1415.0	9895.5	1413.6	9902.4	1413.7	9911.6
GR	1413.4	9922.5	1413.1	9929.4	1412.2	9931.0	1412.5	9938.1	1412.5	9947.2
GR	1410.1	9956.6	1402.7	9985.7	1401.2	9993.0	1401.4	10000.0	1402.1	10024.4
GR	1402.7	10047.2	1403.4	10066.4	1403.2	10069.7	1402.8	10071.3	1403.4	10090.7
GR	1403.9	10107.9	1403.6	10137.5	1403.4	10164.5	1402.7	10193.3	1402.4	10215.0
GR	1402.5	10231.7	1402.4	10245.5	1403.0	10252.3	1403.2	10261.3	1403.5	10268.9
GR	1403.4	10275.0	1403.0	10282.2	1403.3	10289.5	1401.7	10294.6	1402.2	10307.8
GR	1401.9	10322.0	1402.3	10336.7	1402.4	10344.3	1404.1	10347.2	1403.2	10350.7
GR	1405.4	10354.5	1405.5	10368.7	1405.4	10376.1	1402.8	10382.0	1403.2	10386.6
GR	1403.2	10398.0	1402.8	10406.7	1402.6	10414.6	1401.8	10419.6	1401.2	10422.4
GR	1403.5	10429.7	1406.5	10443.1	1408.9	10453.5	1411.8	10464.1	1412.4	10478.9
GR	1412.0	10483.4	1414.2	10490.0	1420.7	10494.9	1421.5	10509.4	1421.8	10526.9
X1	9.655	91	9815.7	10091.7	450.0	375.0	501.6	1.0	0.0	
X3	0	0.0	0.0	9700.0	0.0	10280.0	0.0	0.0	0.0	
GR	1415.5	8386.9	1415.3	8396.9	1413.2	8420.2	1412.4	8426.5	1409.9	8435.0
GR	1409.6	8451.3	1410.8	8458.2	1413.0	8467.4	1413.5	8496.7	1413.0	8506.9
GR	1413.8	8516.0	1413.3	8522.1	1413.2	8538.7	1410.9	8548.9	1410.5	8567.5
GR	1409.9	8582.3	1408.2	8592.7	1408.1	8615.5	1407.2	8630.7	1408.7	8646.2
GR	1409.7	8666.6	1409.7	8691.5	1410.5	8715.0	1409.7	8741.7	1409.8	8773.9
GR	1409.5	8811.7	1410.7	8825.3	1409.8	8854.6	1409.2	8865.0	1409.9	8878.9
GR	1409.9	8918.2	1410.3	8950.1	1409.7	8971.6	1410.2	8986.7	1409.4	9002.5
GR	1410.4	9020.3	1409.6	9038.7	1409.3	9072.5	1410.7	9093.3	1408.5	9111.7
GR	1409.8	9131.4	1408.8	9149.9	1409.3	9195.7	1410.2	9220.6	1408.5	9237.3
GR	1408.6	9279.7	1408.4	9335.4	1407.8	9394.6	1407.7	9444.9	1407.8	9495.9
GR	1408.4	9528.4	1408.7	9560.2	1409.5	9609.1	1409.2	9646.1	1410.6	9668.6
GR	1416.2	9688.3	1423.3	9700.9	1422.7	9720.4	1416.2	9732.8	1408.2	9760.2
GR	1406.5	9769.9	1405.6	9776.0	1404.0	9786.8	1403.1	9797.6	1407.5	9815.7
GR	1406.2	9824.8	1406.2	9830.6	1402.6	9842.7	1402.7	9888.2	1403.1	9925.4
GR	1403.1	9946.9	1402.5	9971.5	1403.4	9980.3	1400.7	9987.0	1401.0	10000.0
GR	1400.8	10006.1	1402.5	10014.5	1402.3	10033.6	1400.8	10047.0	1401.4	10057.6
GR	1404.4	10071.7	1407.4	10091.7	1407.7	10107.5	1408.8	10121.7	1410.2	10140.1
GR	1410.2	10147.8	1410.9	10158.2	1411.4	10183.0	1414.8	10211.8	1421.9	10246.5
GR	1430.7	10283.3								

X1	9.713	44	9726.1	10099.3	315.0	290.0	306.2	1.0	0.0	
GR	1429.7	9583.1	1430.9	9598.8	1429.2	9612.6	1426.7	9619.9	1419.0	9631.7
GR	1419.3	9649.0	1418.8	9666.9	1421.5	9674.3	1410.3	9698.4	1409.1	9713.1
GR	1408.8	9726.1	1407.1	9743.8	1405.6	9769.2	1403.7	9798.1	1403.4	9809.3
GR	1402.9	9820.6	1402.9	9849.4	1403.5	9863.6	1402.9	9887.6	1403.0	9912.8
GR	1402.5	9938.4	1403.1	9965.9	1402.1	9972.5	1401.6	9983.6	1402.4	9989.1
GR	1402.3	10000.0	1403.1	10017.7	1403.3	10029.1	1402.6	10042.8	1404.0	10054.2
GR	1406.6	10071.1	1410.6	10089.4	1412.6	10099.3	1412.4	10108.7	1412.2	10122.1
GR	1412.1	10135.2	1414.1	10158.1	1418.6	10186.0	1425.8	10216.2	1431.8	10249.0
GR	1437.9	10285.5	1442.2	10335.1	1444.2	10375.2	1444.9	10385.5		
NC	0.050	0.050	0.040	0.1	0.3					
X1	9.800	38	9789.7	10124.4	475.0	460.0	459.4	1.0	0.0	
GR	1442.0	9641.4	1430.7	9680.0	1425.9	9698.7	1424.7	9706.0	1423.8	9708.3
GR	1423.6	9721.5	1423.8	9737.0	1426.1	9744.0	1418.9	9759.4	1412.2	9789.7
GR	1408.5	9819.7	1404.4	9858.4	1403.9	9887.7	1404.0	9913.5	1403.8	9935.5
GR	1403.1	9964.8	1403.9	9990.1	1402.7	10000.0	1403.7	10019.8	1404.9	10037.6
GR	1406.0	10045.8	1405.5	10054.2	1407.1	10061.5	1407.1	10075.8	1408.9	10096.5
GR	1410.4	10124.4	1413.3	10153.4	1416.3	10183.4	1415.9	10200.9	1416.2	10209.9
GR	1417.1	10224.1	1420.7	10248.2	1426.8	10283.2	1439.7	10332.9	1445.6	10368.4
GR	1449.0	10397.4	1448.8	10436.6	1449.3	10465.4				

SECNO	DEPTH	CWSEL	CRIWS	WSELK	EG	HV	HL	OLOSS	L-BANK ELEV
Q	QLOB	QCH	QROB	ALOB	ACH	AROB	VOL	TWA	R-BANK ELEV
TIME	VLOB	VCH	VROB	XNL	XNCH	XNR	WTN	ELMIN	SSTA
SLOPE	XLOBL	XLCH	XLOBR	ITRIAL	IDC	ICONT	CORAR	TOPWID	ENDST

FLOW DISTRIBUTION FOR SECNO= 9.09 CWSEL= 1393.63

STA=	9881.	10004.	10319.	10357.	10384.	10385.
PER Q=	8.0	89.9	1.2	.8	.0	
AREA=	165.5	867.7	34.1	23.3	.5	
VEL=	4.2	9.0	3.2	3.2	1.5	
DEPTH=	1.3	2.8	.9	.9	.3	

FLOW DISTRIBUTION FOR SECNO= 9.10 CWSEL= 1395.07

STA=	9701.	9727.	10395.
PER Q=	.4	99.6	
AREA=	20.2	1529.5	
VEL=	1.8	5.6	
DEPTH=	.8	2.3	

FLOW DISTRIBUTION FOR SECNO= 9.20 CWSEL= 1397.14

STA=	9868.	10330.
PER Q=	100.0	
AREA=	1521.1	
VEL=	5.7	
DEPTH=	3.5	

THIS RUN EXECUTED 15JUN94 11:17:59

****
HEC-2 WATER SURFACE PROFILES

Version 4.6.2; May 1991
****

OTE- ASTERISK (*) AT LEFT OF CROSS-SECTION NUMBER INDICATES MESSAGE IN SUMMARY OF ERRORS LIST

10-YEAR FLOW

UMMARY PRINTOUT

	SECNO	Q	CWSEL	DEPTH	ELMIN	EG	CRIWS	VCH	10*KS	XLCH	SSTA	TOPWID	ENDST
	8.566	8650.00	1372.70	6.40	1366.30	1373.42	.00	6.82	129.08	.00	9046.08	613.63	10023.43
	8.680	8650.00	1375.97	6.87	1369.10	1376.17	.00	3.59	22.48	602.00	9120.34	823.72	10018.62
	8.815	8650.00	1377.62	5.62	1372.00	1378.04	.00	5.17	28.72	713.00	9724.74	487.10	10211.85
	8.907	8650.00	1378.83	5.13	1373.70	1379.43	.00	6.24	27.08	480.00	9952.56	291.01	10243.57
	8.957	8650.00	1379.51	5.18	1374.33	1380.10	.00	6.17	26.11	250.00	9992.30	291.45	10283.75
	9.014	8650.00	1380.14	5.20	1374.94	1380.78	.00	6.40	26.96	245.00	10044.62	270.76	10315.38
	9.015	8650.00	1380.10	5.20	1374.90	1380.82	.00	6.82	35.94	1.00	10034.73	255.37	10305.14
	9.029	8650.00	1380.42	5.32	1375.10	1381.11	.00	6.65	33.28	80.20	10034.34	256.14	10305.52
	9.030	8650.00	1380.56	5.42	1375.14	1381.14	.00	6.11	23.25	1.00	10029.15	271.70	10300.85
	9.064	8650.00	1381.05	5.39	1375.66	1381.64	.00	6.16	23.80	208.00	10041.38	271.55	10312.93
	9.087	8650.00	1381.21	5.35	1375.86	1381.80	.00	6.21	17.95	80.00	10041.47	271.38	10312.85
*	9.088	8650.00	1393.63	2.77	1390.86	1394.78	1393.63	8.97	84.81	50.00	9880.92	504.02	10384.94
	9.100	8650.00	1395.07	3.17	1391.90	1395.56	.00	5.63	57.45	100.00	9701.23	685.81	10387.04
	9.200	8650.00	1397.14	5.94	1391.20	1397.64	.00	5.69	34.07	478.00	9867.98	435.55	10303.53
	9.282	8650.00	1398.75	6.85	1391.90	1399.14	.00	5.11	33.37	443.00	9817.37	384.82	10202.19
	9.400	8650.00	1401.37	5.87	1395.50	1401.98	.00	6.26	64.38	623.00	9914.43	377.93	10292.36
	9.488	8650.00	1404.73	4.83	1399.90	1405.39	.00	6.67	92.52	464.60	9969.81	450.15	10438.67

SECNO	Q	CWSEL	DEPTH	ELMIN	EG	CRIWS	VCH	10*KS	XLCH	SSTA	TOPWID	ENDST
* 9.560	8650.00	1407.04	5.84	1401.20	1407.38	.00	5.50	34.24	380.20	9968.64	476.80	10445.44
9.655	8650.00	1408.38	7.68	1400.70	1408.81	.00	5.39	28.40	501.60	9759.61	356.58	10116.19
9.713	8650.00	1409.23	7.63	1401.60	1409.54	.00	4.47	19.37	306.20	9711.56	371.56	10083.11
9.800	8650.00	1410.17	7.47	1402.70	1410.68	.00	5.71	29.15	459.40	9806.17	313.92	10120.10

0-YEAR FLOW

SUMMARY PRINTOUT TABLE 150

	SECNO	XLCH	ELTRD	ELLC	ELMIN	Q	CWSEL	CRIWS	EG	10*KS	VCH	AREA	.01K
	8.566	.00	.00	.00	1366.30	8650.00	1372.70	.00	1373.42	129.08	6.82	1268.39	761.34
*	8.680	602.00	.00	.00	1369.10	8650.00	1375.97	.00	1376.17	22.48	3.59	2409.28	1824.35
	8.815	713.00	.00	.00	1372.00	8650.00	1377.62	.00	1378.04	28.72	5.17	1672.06	1614.13
	8.907	480.00	.00	.00	1373.70	8650.00	1378.83	.00	1379.43	27.08	6.24	1386.74	1662.36
	8.957	250.00	.00	.00	1374.33	8650.00	1379.51	.00	1380.10	26.11	6.17	1402.84	1692.91
	9.014	245.00	.00	.00	1374.94	8650.00	1380.14	.00	1380.78	26.96	6.40	1351.62	1666.03
	9.015	1.00	1394.50	1394.70	1374.90	8650.00	1380.10	.00	1380.82	35.94	6.82	1267.85	1442.84
	9.029	80.20	1394.50	1394.70	1375.10	8650.00	1380.42	.00	1381.11	33.28	6.65	1300.27	1499.52
	9.030	1.00	.00	.00	1375.14	8650.00	1380.56	.00	1381.14	23.25	6.11	1415.06	1794.00
	9.064	208.00	.00	.00	1375.66	8650.00	1381.05	.00	1381.64	23.80	6.16	1404.88	1773.08
	9.087	80.00	.00	.00	1375.86	8650.00	1381.21	.00	1381.80	17.95	6.21	1393.42	2041.77
*	9.088	50.00	.00	.00	1390.86	8650.00	1393.63	1393.63	1394.78	84.81	8.97	1091.10	939.26
	9.100	100.00	.00	.00	1391.90	8650.00	1395.07	.00	1395.56	57.45	5.63	1549.68	1141.27
	9.200	478.00	.00	.00	1391.20	8650.00	1397.14	.00	1397.64	34.07	5.69	1521.06	1482.02
	9.282	443.00	.00	.00	1391.90	8650.00	1398.75	.00	1399.14	33.37	5.11	1709.74	1497.49
	9.400	623.00	.00	.00	1395.50	8650.00	1401.37	.00	1401.98	64.38	6.26	1382.20	1078.09
	9.488	464.60	.00	.00	1399.90	8650.00	1404.73	.00	1405.39	92.52	6.67	1330.54	899.28
*	9.560	380.20	.00	.00	1401.20	8650.00	1407.04	.00	1407.38	34.24	5.50	1883.46	1478.20
	9.655	501.60	.00	.00	1400.70	8650.00	1408.38	.00	1408.81	28.40	5.39	1674.65	1623.12
	9.713	306.20	.00	.00	1401.60	8650.00	1409.23	.00	1409.54	19.37	4.47	1936.98	1965.65
	9.800	459.40	.00	.00	1402.70	8650.00	1410.17	.00	1410.68	29.15	5.71	1513.68	1602.13

10-YEAR FLOW

SUMMARY PRINTOUT TABLE 150

	SECNO	Q	CWSEL	DIFWSP	DIFWSX	DIFKWS	TOPWID	XLCH
	8.566	8650.00	1372.70	.00	.00	.00	613.63	.00
*	8.680	8650.00	1375.97	.00	3.27	.00	823.72	602.00
	8.815	8650.00	1377.62	.00	1.65	.00	487.10	713.00
	8.907	8650.00	1378.83	.00	1.21	.00	291.01	480.00
	8.957	8650.00	1379.51	.00	.68	.00	291.45	250.00
	9.014	8650.00	1380.14	.00	.63	.00	270.76	245.00
	9.015	8650.00	1380.10	.00	-.04	.00	255.37	1.00
	9.029	8650.00	1380.42	.00	.32	.00	256.14	80.20
	9.030	8650.00	1380.56	.00	.14	.00	271.70	1.00
	9.064	8650.00	1381.05	.00	.48	.00	271.55	208.00
	9.087	8650.00	1381.21	.00	.16	.00	271.38	80.00
*	9.088	8650.00	1393.63	.00	12.43	.00	504.02	50.00
	9.100	8650.00	1395.07	.00	1.44	.00	685.81	100.00
	9.200	8650.00	1397.14	.00	2.07	.00	435.55	478.00
	9.282	8650.00	1398.75	.00	1.61	.00	384.82	443.00
	9.400	8650.00	1401.37	.00	2.62	.00	377.93	623.00
	9.488	8650.00	1404.73	.00	3.36	.00	450.15	464.60
*	9.560	8650.00	1407.04	.00	2.31	.00	476.80	380.20
	9.655	8650.00	1408.38	.00	1.34	.00	356.58	501.60
	9.713	8650.00	1409.23	.00	.85	.00	371.56	306.20
	9.800	8650.00	1410.17	.00	.94	.00	313.92	459.40

SUMMARY OF ERRORS AND SPECIAL NOTES

```
WARNING SECNO=      8.680  PROFILE=  1  CONVEYANCE CHANGE OUTSIDE ACCEPTABLE RANGE

CAUTION SECNO=      9.088  PROFILE=  1  CRITICAL DEPTH ASSUMED
CAUTION SECNO=      9.088  PROFILE=  1  PROBABLE MINIMUM SPECIFIC ENERGY
CAUTION SECNO=      9.088  PROFILE=  1  20 TRIALS ATTEMPTED TO BALANCE WSEL

WARNING SECNO=      9.560  PROFILE=  1  CONVEYANCE CHANGE OUTSIDE ACCEPTABLE RANGE
```

```
*****************************************
*  HEC-2 WATER SURFACE PROFILES          *
*                                        *
*  Version   4.6.2;  May 1991            *
*                                        *
*  RUN DATE    15JUN94    TIME   11:18:45 *
*****************************************
```

```
****************************************
*  U.S. ARMY CORPS OF ENGINEERS        *
*  HYDROLOGIC ENGINEERING CENTER       *
*  609 SECOND STREET, SUITE D          *
*  DAVIS, CALIFORNIA 95616-4687        *
*          (916) 756-1104              *
****************************************
```

```
X     X  XXXXXXX   XXXXX              XXXXX
X     X  X        X     X            X     X
X     X  X        X                        X
XXXXXXX  XXXX     X          XXXXX    XXXXX
X     X  X        X                  X
X     X  X        X     X            X
X     X  XXXXXXX   XXXXX              XXXXXXX
```

THIS RUN EXECUTED 15JUN94 11:18:45

```
************************************
HEC-2 WATER SURFACE PROFILES

Version   4.6.2;  May 1991
************************************


SPLIT FLOW BEING PERFORMED


SF


TWSECTION 9.100 TO 9.200
WS      2   9.100   9.200    -1.0      2.6
WC    0.0  1397.4   510.0  1399.0

TWSECTION 9.088 TO 9.100
WS      2   9.088   9.100    -1.0      2.6
WC    0.0  1397.0   235.0  1397.4
```

```
T1      PINNACLE PEAK RD BRIDGE OVER SKUNK CREEK
T2      PROPOSED OPTION ANALYSIS
T3      100-YR FLOW
T4      * THIS OPTION INCLUDES EXTENSION OF EAST DIKE ACROSS 35TH AVENUE
T4        TO REDIRECT UP TO THE 100-YEAR FLOW INTO THE INCISED CHANNEL
T4        UPSTREAM OF THE PINNACLE PEAK ROAD BRIDGE
T4      * WEST WALL ADJACENT TO RESIDENTIAL AREA CLOSED OFF AT SOFT WIND
T4        DRIVE
T4      * DROP STRUCTURE LOCATED AT CROSS SECTION 9.087

J1  ICHECK   INQ     NINV    IDIR    STRT     METRIC   HVINS   Q        WSEL     FQ

     0        2       0       0     0.0120      0       0.0   41500.0  1375.88

J2  NPROF    IPLOT   PRFVS   XSECV   XSECH    FN       ALLDC   IBW      CHNIM    ITRACE

    -1        0      -1      0.0     0.0      0.0      0.0     -6.0     0.0

J3  VARIABLE CODES FOR SUMMARY PRINTOUT

     38       43      1       8       42       3        2       26       5        39
     53       4       54              150

J5  LPRNT    NUMSEC                 ********REQUESTED SECTION NUMBERS********

    -10      -10

J6  IHLEQ    ICOPY   SUBDIV  STRTDS  RMILE

             0      -1.0

NC    0.050    0.050    0.040     0.1      0.3
X1    8.566       97  9001.7  10040.6      0.0      0.0      0.0      1.0      0.0
GR  1387.7   7864.4   1386.7   7914.2   1385.0   7933.2   1386.2   8010.9   1385.4   8173.0
GR  1384.3   8203.7   1384.5   8220.9   1383.3   8228.6   1382.5   8322.4   1381.5   8324.5
GR  1381.2   8338.7   1382.5   8341.2   1381.5   8344.0   1381.5   8449.8   1380.4   8503.0
GR  1380.2   8705.2   1378.7   8829.0   1380.4   8834.8   1378.8   8845.6   1380.4   8848.8
GR  1378.2   8853.6   1380.7   8862.6   1380.3   8867.2   1379.2   8872.3   1378.8   8875.2
GR  1379.8   8896.4   1380.3   8923.5   1379.2   8937.1   1380.1   8973.5   1382.1   8978.3
GR  1382.5   8983.7   1381.2   8988.6   1382.9   8995.1   1381.9   9001.7   1380.3   9008.1
GR  1380.1   9013.4   1377.7   9018.9   1376.5   9025.0   1375.6   9033.0   1373.2   9041.5
GR  1372.0   9052.5   1370.8   9063.8   1370.3   9126.1   1369.2   9138.9   1370.2   9208.1
GR  1370.1   9340.9   1369.1   9352.6   1370.3   9363.5   1370.1   9371.4   1369.1   9375.6
GR  1370.1   9423.2   1372.1   9460.0   1373.5   9481.4   1374.0   9502.6   1373.0   9514.7
GR  1372.2   9520.1   1373.4   9530.2   1373.7   9597.7   1372.2   9605.1   1372.3   9615.3
GR  1371.3   9628.7   1372.3   9655.6   1373.0   9772.6   1374.0   9794.1   1375.1   9845.6
GR  1375.1   9861.6   1373.8   9878.0   1372.5   9924.8   1371.2   9936.4   1371.2   9938.5
GR  1375.0   9943.2   1377.2   9949.5   1378.2   9966.1   1375.9   9975.9   1372.4   9983.7
GR  1372.0   9986.3   1368.8   9993.0   1368.8   9996.0   1366.3  10000.0   1366.9  10009.4
GR  1368.7  10015.0   1373.4  10024.9   1378.6  10033.1   1380.1  10040.6   1381.1  10115.4
GR  1380.0  10225.4   1381.2  10296.3   1381.6  10516.7   1382.6  10729.1   1383.8  10816.6
GR  1383.7  10825.5   1381.4  10828.6   1384.0  10837.6   1383.0  10895.8   1383.7  11111.2
```

```
GR   1385.9    12184.6    1389.2    12197.0

X1    8.680         93    9088.6    10072.6     615.0     650.0     602.0       1.0       0.0
GR   1390.3     8163.3    1388.6     8235.1    1389.1    8359.1    1387.5    8437.1    1385.1    8440.6
GR   1383.7     8591.0    1383.7     8703.7    1383.5    8830.4    1384.4    8879.3    1383.4    8897.3
GR   1383.0     8926.2    1385.0     8932.9    1382.2    8943.8    1384.5    8947.3    1382.4    8951.2
GR   1384.7     8961.0    1384.9     8963.4    1383.1    8967.4    1382.3    9060.2    1385.7    9069.1
GR   1386.3     9071.1    1384.6     9075.5    1385.6    9082.0    1385.0    9088.6    1382.8    9093.2
GR   1380.9     9101.2    1378.0     9112.5    1376.0    9120.2    1374.5    9126.6    1373.5    9134.2
GR   1372.0     9139.3    1371.7     9228.6    1370.6    9234.2    1371.8    9249.9    1371.8    9253.4
GR   1370.3     9264.4    1371.2     9372.0    1372.6    9429.6    1373.2    9531.8    1374.3    9630.9
GR   1374.4     9714.1    1375.5     9738.8    1376.4    9811.4    1375.2    9824.8    1376.5    9888.5
GR   1375.4     9899.8    1374.2     9910.2    1372.7    9919.0    1372.4    9940.5    1373.8    9945.1
GR   1375.0     9949.4    1376.2     9964.6    1373.9    9969.0    1372.2    9977.8    1369.2    9982.4
GR   1369.1     9991.8    1372.0    10000.0    1372.8   10001.3    1375.2   10006.9    1375.5   10015.3
GR   1376.6    10023.1    1377.1    10032.0    1378.1   10036.8    1376.6   10041.2    1378.2   10053.0
GR   1378.9    10056.2    1381.8    10066.7    1382.8   10072.6    1382.2   10076.0    1380.4   10083.6
GR   1380.7    10089.7    1383.4    10095.7    1383.1   10201.2    1384.3   10256.6    1384.2   10368.9
GR   1383.9    10523.6    1384.9    10654.1    1385.1   10781.0    1385.5   10934.2    1385.9   11104.7
GR   1386.5    11273.1    1386.8    11384.3    1387.6   11573.9    1388.0   11707.0    1388.7   11818.9
GR   1390.1    11891.0    1389.9    11952.6    1388.8   11979.1    1392.5   12008.1    1394.1   12020.2
GR   1391.0    12032.7    1391.6    12038.3    1393.1   12047.5
  BEGIN CHANNELIZATION

        BEGIN CHANNELIZATION
X1    8.815         91    9609.8    10489.6     450.0     680.0     713.0       1.0       0.0
CI   9935.0     1372.5   713.035       4.0       4.0     250.0      0.01
GR   1390.4     8808.9    1389.2     8839.1    1387.5    8856.8    1386.3    8872.6    1385.6    8880.4
GR   1385.1     8957.0    1385.3     9014.6    1385.4    9072.2    1385.2    9117.2    1386.1    9135.9
GR   1386.7     9138.1    1386.4     9178.1    1386.6    9244.8    1386.6    9290.2    1386.6    9321.3
GR   1386.6     9346.5    1386.7     9366.3    1386.4    9376.6    1389.7    9384.9    1386.0    9391.7
GR   1389.3     9398.0    1386.3     9403.9    1389.7    9413.5    1386.9    9419.1    1385.9    9436.0
GR   1386.9     9461.3    1385.8     9487.1    1387.5    9498.5    1386.4    9523.1    1388.0    9544.5
GR   1389.2     9565.2    1390.3     9583.5    1388.5    9609.8    1386.6    9637.1    1385.0    9652.8
GR   1383.4     9670.6    1380.9     9687.2    1378.8    9707.2    1377.6    9725.1    1376.9    9740.7
GR   1374.5     9748.5    1374.4     9756.1    1375.8    9770.8    1375.5    9788.3    1375.0    9818.5
GR   1374.9     9850.1    1374.8     9881.0    1374.7    9912.6    1374.7    9942.9    1374.5    9965.4
GR   1374.1     9984.2    1372.0    10000.0    1372.8   10016.7    1372.2   10035.6    1374.3   10063.8
GR   1375.2    10078.6    1376.0    10095.5    1376.4   10111.8    1376.5   10129.2    1376.9   10153.1
GR   1376.8    10174.4    1376.7    10191.9    1377.4   10209.1    1378.5   10222.6    1379.5   10239.1
GR   1380.8    10261.2    1381.7    10272.3    1382.4   10288.5    1383.8   10306.6    1384.3   10320.4
GR   1385.0    10339.2    1385.4    10355.2    1385.6   10372.8    1385.5   10394.3    1386.4   10410.4
GR   1390.0    10442.0    1391.1    10458.5    1391.9   10471.5    1392.3   10489.6    1392.8   10513.3
GR   1393.2    10543.4    1392.5    10567.3    1391.7   10584.0    1391.4   10598.7    1390.4   10624.2
GR   1390.1    10641.8    1387.8    10681.9    1387.6   10700.9    1387.5   10736.6    1387.4   10756.1
GR   1389.2    10774.8

X1    8.907         91    9830.2    10263.3     520.0     400.0     485.8  0.961261       0.0
CI   10150.     1373.7   480.035       4.0       4.0    -250.0      0.01
X2      0.0        0.0         0       0.0       0.0       0.0         0       0.0       0.0
GR   1397.5     8809.3    1396.5     8838.1    1395.9    8871.3    1393.5    8905.3    1392.4    8937.2
GR   1392.2     8970.4    1390.8     9003.5    1390.0    9027.4    1390.1    9048.0    1389.3    9080.4
GR   1387.1     9087.0    1388.3     9092.7    1389.2    9176.8    1389.2    9248.7    1389.3    9291.0
GR   1389.3     9454.7    1389.4     9497.2    1389.9    9542.3    1389.7    9586.6    1390.0    9625.4
```

```
GR   1389.9    9660.8    1390.8    9664.8    1389.5    9668.6    1389.5    9677.5    1392.2    9681.2
GR   1388.1    9690.2    1390.9    9696.8    1387.9    9699.2    1389.9    9707.4    1393.4    9712.3
GR   1390.3    9719.4    1389.9    9737.3    1390.5    9763.0    1389.7    9786.2    1389.6    9797.0
GR   1390.7    9807.1    1390.4    9826.6    1393.0    9830.2    1389.6    9835.6    1385.4    9863.1
GR   1381.7    9875.2    1380.1    9894.0    1378.7    9916.2    1377.4    9940.3    1375.8    9960.3
GR   1375.2    9987.9    1375.1   10000.0    1375.1   10025.3    1375.7   10051.5    1376.5   10072.8
GR   1377.1   10081.8    1380.7   10094.5    1382.7   10106.6    1383.8   10122.1    1385.2   10140.3
GR   1386.7   10159.5    1390.3   10182.6    1391.6   10193.0    1391.7   10213.1    1391.9   10230.2
GR   1392.8   10244.7    1393.1   10263.3    1392.3   10283.1    1391.7   10302.9    1391.8   10337.3
GR   1391.9   10369.3    1392.2   10391.9    1392.2   10408.2    1390.5   10432.0    1390.2   10443.8
GR   1392.1   10470.5    1392.0   10488.7    1392.3   10507.6    1392.1   10524.8    1392.1   10551.6
GR   1392.3   10570.1    1391.2   10583.8    1391.3   10604.2    1392.0   10627.3    1392.2   10650.0
GR   1391.6   10677.1    1391.1   10695.0    1391.2   10738.1    1390.8   10770.7    1391.6   10797.7
GR   1391.5   10826.7    1390.9   10867.4    1391.0   10912.8    1391.1   10960.4    1391.4   10988.8
GR   1392.0   11005.2

NC      0.0       0.0       0.0       0.3       0.5
X1    8.957        92    9851.7   10283.2     260.0     240.0     264.0  0.933580       0.0
CI   10235.   1374.33   250.035       4.0       4.0    -250.0      0.01
X2      0.0       0.0         0       0.0       0.0       0.0         0       0.0  0.933580
GR   1400.0    8775.0    1398.0    8815.0    1396.0    8850.0    1394.0    8900.0    1392.0    8980.0
GR   1390.0    9045.0    1390.4    9077.5    1389.9    9104.9    1390.3    9136.9    1390.5    9176.1
GR   1390.3    9220.2    1390.4    9263.3    1390.2    9303.3    1390.4    9346.2    1390.4    9389.1
GR   1390.5    9433.5    1390.7    9474.2    1390.9    9512.7    1391.2    9557.9    1391.1    9605.4
GR   1391.2    9648.9    1391.4    9685.7    1391.3    9701.7    1391.1    9708.8    1393.0    9713.6
GR   1390.1    9721.2    1389.6    9724.7    1392.1    9730.0    1389.6    9734.6    1392.5    9743.5
GR   1391.3    9761.0    1391.4    9780.0    1391.6    9805.7    1390.9    9833.6    1392.1    9851.7
GR   1387.2    9877.8    1383.3    9903.0    1380.6    9926.3    1378.8    9954.7    1378.4    9975.6
GR   1378.1   10000.0    1378.1   10023.4    1378.5   10040.2    1378.5   10064.4    1382.4   10087.3
GR   1383.8   10096.7    1384.0   10112.1    1385.7   10153.8    1386.1   10171.4    1387.5   10187.2
GR   1388.5   10201.2    1388.5   10219.8    1388.2   10235.7    1388.7   10247.1    1390.8   10258.0
GR   1389.8   10261.8    1391.6   10283.2    1391.8   10301.6    1393.6   10330.0    1392.3   10348.7
GR   1392.0   10374.4    1392.3   10397.1    1391.9   10422.4    1392.3   10447.2    1392.2   10475.3
GR   1392.3   10500.4    1392.4   10519.6    1392.4   10548.5    1392.1   10583.0    1392.1   10624.0
GR   1392.0   10658.3    1391.9   10692.9    1391.2   10712.4    1391.3   10730.0    1391.3   10769.2
GR   1391.2   10792.8    1390.0   10804.9    1390.8   10825.3    1391.1   10844.1    1390.9   10873.7
GR   1390.9   10903.3    1390.7   10946.2    1390.6   10989.3    1390.5   11030.8    1390.7   11062.1
GR   1390.9   11089.1    1391.1   11108.3    1390.7   11125.6    1390.1   11145.1    1390.2   11173.0
GR   1390.1   11209.8    1390.3   11239.5
  DOWNSTREAM OF PINNACLE PEAK ROAD BRIDGE

        DOWNSTREAM OF PINNACLE PEAK ROAD BRIDGE
X1    9.014        86    9760.3   10320.7     260.0     250.0     301.0       1.0       0.0
CI   10180.   1374.94   245.035       2.0       2.0    -250.0      0.01
GR   1397.8    8641.6    1396.8    8667.2    1396.7    8699.9    1395.6    8722.9    1394.6    8737.2
GR   1394.3    8770.7    1394.1    8803.3    1394.0    8852.7    1394.1    8895.6    1394.2    8918.4
GR   1394.2    8957.6    1395.1    8989.7    1395.2    9015.0    1395.2    9062.9    1394.2    9094.8
GR   1393.3    9136.3    1393.5    9161.8    1393.7    9179.5    1393.8    9242.7    1394.1    9278.1
GR   1394.9    9312.4    1395.4    9334.8    1394.8    9361.5    1394.1    9382.8    1394.8    9404.8
GR   1394.8    9441.0    1394.3    9478.6    1395.0    9506.7    1395.0    9519.1    1394.9    9537.8
GR   1394.3    9563.6    1394.6    9593.9    1394.4    9617.7    1394.3    9640.3    1393.9    9655.9
GR   1393.5    9668.0    1392.9    9674.9    1392.6    9677.4    1393.2    9684.9    1393.7    9697.9
GR   1393.5    9710.8    1392.9    9729.1    1392.4    9741.8    1392.4    9753.2    1392.1    9760.3
GR   1391.5    9767.0    1391.5    9783.6    1390.9    9799.7    1390.8    9824.1    1389.9    9850.8
```

GR	1389.4	9873.9	1389.3	9903.7	1388.5	9923.9	1388.1	9953.0	1387.9	9982.3
GR	1387.8	10000.0	1387.6	10029.2	1388.1	10054.2	1388.0	10070.8	1387.4	10085.5
GR	1388.4	10102.1	1389.3	10125.7	1390.4	10153.5	1390.5	10186.6	1391.1	10222.8
GR	1391.1	10257.5	1392.0	10288.8	1392.2	10320.7	1392.3	10362.7	1392.5	10401.5
GR	1392.4	10450.2	1392.4	10488.2	1392.3	10524.9	1392.9	10550.9	1393.0	10579.9
GR	1392.5	10622.0	1392.7	10670.2	1392.5	10719.8	1392.7	10767.6	1392.5	10809.1
GR	1392.4	10854.2	1392.4	10894.1	1392.3	10945.2	1392.2	11001.0	1392.1	11062.5
GR	1391.6	11091.0								

DOWNSTREAM FACE OF PINNACLE PEAK ROAD BRIDGE

DOWNSTREAM FACE OF PINNACLE PEAK ROAD BRIDGE

X1	9.015	66	10015.0	10325.0	1.0	1.0	1.0	1.0	0.0	
CI	0.0	0.0	0.0	0.0	0.0	0.01	0.01			
X3	10	0.0	0.0	0.0	0.0	0.0	0.0	1392.2	1393.1	
BT	-12	10015.0	1394.5	1394.5	10015.01	1394.5	1390.0	10045.0	1394.8	1390.3
BT		10085.0	1395.2	1390.7	10125.0	1395.6	1391.1	10170.0	1395.7	1391.2
BT		10205.0	1395.7	1391.2	10245.0	1395.5	1391.0	10285.0	1395.2	1390.7
BT		10295.0	1395.1	1390.6	10324.99	1394.7	1390.2	10325.0	1394.7	1394.7
GR	1395.6	8767.9	1395.5	8820.9	1395.4	8873.6	1395.4	8891.5	1395.4	8939.2
GR	1395.2	8990.7	1395.4	9052.6	1395.4	9113.7	1395.3	9176.6	1395.1	9229.3
GR	1395.1	9287.4	1394.9	9334.4	1394.8	9385.2	1394.7	9450.4	1394.8	9489.6
GR	1394.5	9524.7	1394.1	9576.1	1394.0	9617.7	1393.7	9656.6	1393.2	9693.1
GR	1393.1	9730.9	1392.4	9761.0	1392.2	9821.0	1392.4	9881.0	1393.59	9956.0
GR	1394.4	10006.0	1394.5	10015.0	1390.0	10015.01	1374.94	10045.0	1374.94	10085.0
GR	1374.9	10088.74	1390.8	10088.75	1390.8	10093.75	1374.94	10093.76	1374.94	10125.0
GR	1374.9	10167.49	1391.2	10167.5	1391.2	10170.0	1391.2	10172.5	1374.94	10172.51
GR	1374.9	10205.0	1374.94	10245.0	1374.94	10246.24	1391.0	10246.25	1391.0	10251.25
GR	1374.9	10251.26	1374.94	10285.0	1374.94	10295.0	1390.2	10324.99	1394.7	10325.0
GR	1394.8	10326.0	1393.95	10376.0	1393.27	10453.0	1393.07	10520.0	1393.1	10541.9
GR	1392.9	10588.6	1392.7	10636.9	1392.7	10681.4	1392.5	10740.6	1392.6	10796.6
GR	1392.6	10855.7	1392.4	10922.7	1392.3	10988.0	1392.3	11032.1	1392.1	11079.5
GR	1392.1	11085.0								

UPSTREAM FACE OF PINNACLE PEAK ROAD BRIDGE

UPSTREAM FACE OF PINNACLE PEAK ROAD BRIDGE

X1	9.029	66	10015.0	10325.0	80.2	80.2	80.2	1.0	0.0	
CI	0.0	0.0	0.0	0.0	0.0	0.01	0.01			
X3	10	0.0	0.0	0.0	0.0	0.0	0.0	1392.2	1393.1	
BT	-16	10015.0	1394.5	1394.5	10015.01	1394.5	1390.0	10045.0	1394.8	1390.3
BT		10085.0	1395.2	1390.7	10088.75	1395.2	1390.8	10093.75	1395.3	1390.8
BT		10125.0	1395.6	1391.1	10170.0	1395.7	1391.2	10205.0	1395.7	1391.2
BT		10245.0	1395.5	1391.0	10246.25	1395.5	1391.0	10251.25	1395.5	1391.0
BT		10285.0	1395.2	1390.7	10295.0	1395.1	1390.6	10324.99	1394.7	1390.2
BT		10325.0	1394.7	1394.7						
GR	1395.6	8767.9	1395.5	8820.9	1395.4	8873.6	1395.4	8891.5	1395.4	8939.2
GR	1395.2	8990.7	1395.4	9052.6	1395.4	9113.7	1395.3	9176.6	1395.1	9229.3
GR	1395.1	9287.4	1394.9	9334.4	1394.8	9385.2	1394.7	9450.4	1394.8	9489.6
GR	1394.5	9524.7	1394.1	9576.1	1394.0	9617.7	1393.7	9656.6	1393.2	9693.1
GR	1393.1	9730.9	1392.4	9761.0	1392.2	9821.0	1392.4	9881.0	1393.59	9956.0
GR	1394.4	10006.0	1394.5	10015.0	1390.0	10015.01	1375.14	10045.0	1375.14	10085.0
GR	1375.1	10088.74	1390.8	10088.75	1390.8	10093.75	1375.14	10093.76	1375.14	10125.0
GR	1375.1	10167.49	1391.2	10167.5	1391.2	10170.0	1391.2	10172.5	1375.14	10172.51
GR	1375.1	10205.0	1375.14	10245.0	1375.14	10246.24	1391.0	10246.25	1391.0	10251.25
GR	1375.1	10251.26	1375.14	10285.0	1375.14	10295.0	1390.2	10324.99	1394.7	10325.0

```
GR   1394.8    10326.0    1393.95    10376.0    1393.27    10453.0    1393.07    10520.0    1393.1    10541.9
GR   1392.9    10588.6    1392.7     10636.9    1392.7     10681.4    1392.5     10740.6    1392.6    10796.6
GR   1392.6    10855.7    1392.4     10922.7    1392.3     10988.0    1392.3     11032.1    1392.1    11079.5
GR   1392.1    11085.0
 UPSTREAM OF PINNACLE PEAK ROAD BRIDGE

        UPSTREAM OF PINNACLE PEAK ROAD BRIDGE
X1    9.030        84     9755.8    10316.5       1.0        1.0        1.0        1.0       0.0
CI   10165.   1375.14      1.035        2.0       2.0      250.0       0.01
X3        0       0.0        0.0    10000.0       0.0        0.0        0.0        0.0       0.0
GR   1392.7     8771.1    1392.7     8807.9    1392.8     8845.4    1392.7     8874.8    1393.0    8906.8
GR   1393.2     8945.5    1392.7     8980.7    1392.8     9013.1    1392.9     9045.4    1393.4    9080.9
GR   1393.5     9124.8    1393.5     9158.2    1393.7     9191.8    1393.7     9231.1    1393.7    9251.9
GR   1393.9     9279.9    1393.9     9313.3    1394.2     9344.5    1394.2     9388.5    1394.6    9446.5
GR   1395.1     9476.6    1395.1     9505.8    1394.8     9533.7    1394.5     9565.5    1394.1    9602.9
GR   1393.7     9623.0    1393.3     9639.0    1393.3     9654.7    1393.3     9685.0    1393.0    9710.2
GR   1392.8     9733.0    1393.2     9735.2    1393.0     9743.9    1392.4     9755.8    1392.0    9778.0
GR   1391.3     9795.9    1391.3     9817.8    1390.9     9841.7    1390.7     9866.1    1390.7    9889.9
GR   1390.6     9915.1    1390.5     9934.1    1390.6     9959.5    1390.4     9978.8    1389.5   10000.0
GR   1389.5    10022.9    1389.7    10055.8    1389.9    10080.8    1390.1    10109.9    1390.4   10139.2
GR   1390.8    10163.8    1391.4    10188.8    1391.4    10207.6    1391.3    10228.1    1391.4   10249.8
GR   1391.8    10271.8    1391.9    10295.4    1392.0    10316.5    1392.0    10347.6    1392.1   10382.7
GR   1392.2    10410.8    1392.2    10436.7    1392.6    10457.7    1393.1    10475.6    1392.4   10488.1
GR   1393.1    10497.3    1394.6    10516.8    1394.8    10523.4    1394.9    10551.7    1395.0   10591.7
GR   1395.0    10651.4    1395.0    10685.9    1395.3    10743.8    1395.3    10796.2    1395.3   10848.2
GR   1395.4    10896.5    1395.2    10935.1    1395.0    10947.2    1394.3    10964.9    1392.9   10976.3
GR   1392.6    10984.4    1391.8    10985.2    1392.0    10999.1    1392.1    11015.0

NC       0.0       0.0        0.0        0.1       0.3
X1     9.064        92     9688.0    10434.5     150.0      240.0      180.0   0.994521       0.0
CI   10185.   1375.66    208.035        2.0       2.0      250.0       0.01
X2       0.0       0.0          0        0.0       0.0        0.0          0        0.0       0.0
X3         0       0.0        0.0     9853.9       0.0        0.0        0.0        0.0       0.0
GR   1393.3     8753.5    1393.1     8773.6    1393.8     8803.7    1394.7     8838.7    1394.6    8865.9
GR   1394.9     8888.2    1394.4     8904.3    1394.2     8924.4    1393.0     8933.7    1392.8    8943.1
GR   1394.7     8965.1    1394.8     8974.1    1393.7     8986.9    1393.5     9002.9    1393.5    9025.2
GR   1393.1     9033.9    1394.0     9041.3    1393.1     9056.5    1394.5     9065.2    1394.2    9074.1
GR   1394.0     9096.3    1393.9     9128.6    1394.0     9149.8    1394.1     9175.5    1394.4    9207.1
GR   1394.4     9227.2    1394.3     9244.3    1394.3     9267.8    1394.2     9291.9    1394.4    9316.3
GR   1394.6     9350.1    1394.6     9382.0    1394.8     9425.2    1394.7     9460.2    1394.9    9491.4
GR   1394.8     9523.0    1395.1     9549.4    1395.1     9580.9    1394.6     9616.2    1394.5    9647.0
GR   1394.7     9670.0    1394.7     9688.0    1393.4     9698.1    1393.4     9728.3    1393.1    9744.3
GR   1392.3     9766.5    1392.2     9788.6    1392.3     9810.4    1392.1     9834.2    1392.2    9858.2
GR   1392.4     9889.8    1392.0     9917.3    1391.8     9931.4    1391.9     9954.0    1392.2    9976.0
GR   1392.2     9986.6    1390.8    10000.0    1391.3    10006.5    1392.1    10013.7    1392.4   10040.5
GR   1392.1    10059.2    1392.5    10084.7    1392.8    10105.5    1392.2    10133.2    1392.3   10156.8
GR   1392.4    10182.9    1392.7    10210.4    1393.0    10233.7    1393.1    10260.0    1393.1   10289.7
GR   1393.1    10323.1    1393.2    10354.5    1393.1    10385.8    1393.3    10411.9    1393.7   10434.5
GR   1398.1    10443.6    1399.7    10468.9    1397.9    10488.7    1398.0    10527.0    1397.6   10553.5
GR   1397.1    10589.6    1396.9    10633.3    1397.1    10663.3    1397.1    10693.0    1396.8   10723.1
GR   1396.4    10744.2    1396.3    10777.5    1397.0    10795.3    1397.3    10821.4    1397.1   10857.2
GR   1397.2    10880.9    1397.2    10895.2
```

```
NC      0.0       0.0       0.0       0.1       0.3
 BOTTOM OF DROP STRUCTURE
       BOTTOM OF DROP STRUCTURE
X1    9.087        92    9688.0   10434.5     150.0     240.0     180.0  0.994521       0.5
CI   10185.   1375.86    80.030       2.0       2.0     250.0      0.01
X2      0.0       0.0         0       0.0       0.0       0.0         0       0.0       0.0
X3        0       0.0       0.0    9779.3       0.0       0.0       0.0       0.0       0.0
GR   1393.3    8753.5    1393.1    8773.6    1393.8    8803.7    1394.7    8838.7    1394.6    8865.9
GR   1394.9    8888.2    1394.4    8904.3    1394.2    8924.4    1393.0    8933.7    1392.8    8943.1
GR   1394.7    8965.1    1394.8    8974.1    1393.7    8986.9    1393.5    9002.9    1393.5    9025.2
GR   1393.1    9033.9    1394.0    9041.3    1393.1    9056.5    1394.5    9065.2    1394.2    9074.1
GR   1394.0    9096.3    1393.9    9128.6    1394.0    9149.8    1394.1    9175.5    1394.4    9207.1
GR   1394.4    9227.2    1394.3    9244.3    1394.3    9267.8    1394.2    9291.9    1394.4    9316.3
GR   1394.6    9350.1    1394.6    9382.0    1394.8    9425.2    1394.7    9460.2    1394.9    9491.4
GR   1394.8    9523.0    1395.1    9549.4    1395.1    9580.9    1394.6    9616.2    1394.5    9647.0
GR   1394.7    9670.0    1394.7    9688.0    1393.4    9698.1    1393.4    9728.3    1393.1    9744.3
GR   1392.3    9766.5    1392.2    9788.6    1392.3    9810.4    1392.1    9834.2    1392.2    9858.2
GR   1392.4    9889.8    1392.0    9917.3    1391.8    9931.4    1391.9    9954.0    1392.2    9976.0
GR   1392.2    9986.6    1390.8   10000.0    1391.3   10006.5    1392.1   10013.7    1392.4   10040.5
GR   1392.1   10059.2    1392.5   10084.7    1392.8   10105.5    1392.2   10133.2    1392.3   10156.8
GR   1392.4   10182.9    1392.7   10210.4    1393.0   10233.7    1393.1   10260.0    1393.1   10289.7
GR   1393.1   10323.1    1393.2   10354.5    1393.1   10385.8    1393.3   10411.9    1393.7   10434.5
GR   1398.1   10443.6    1399.7   10468.9    1397.9   10488.7    1398.0   10527.0    1397.6   10553.5
GR   1397.1   10589.6    1396.9   10633.3    1397.1   10663.3    1397.1   10693.0    1396.8   10723.1
GR   1396.4   10744.2    1396.3   10777.5    1397.0   10795.3    1397.3   10821.4    1397.1   10857.2
GR   1397.2   10880.9    1397.2   10895.2

NC    0.040     0.040     0.035       0.1       0.3
 TOP OF DROP STRUCTURE
       TOP OF DROP STRUCTURE
X1    9.088        80   10025.0   10340.5     140.0     240.0     190.0  0.984807      -0.5
CI   10180.   1390.86    50.030       2.0       2.0     310.0      0.01
X2      0.0       0.0         0       0.0       0.0       0.0         0       0.0       0.0        15
X3        0       0.0       0.0    9800.2       0.0   10412.0       0.0       0.0       0.0
GR   1395.4    8842.4    1395.2    8862.1    1395.1    8887.2    1395.0    8916.1    1395.1    8944.9
GR   1395.0    8977.6    1393.2    8998.5    1393.3    9007.7    1395.0    9016.2    1393.7    9025.9
GR   1394.7    9030.8    1394.5    9046.1    1393.6    9052.7    1395.2    9072.6    1393.8    9083.0
GR   1395.0    9107.9    1394.9    9138.3    1394.5    9157.2    1395.1    9166.5    1394.8    9176.8
GR   1395.0    9203.4    1395.5    9247.7    1395.9    9271.4    1395.3    9309.1    1395.7    9341.5
GR   1395.2    9348.9    1395.4    9368.4    1395.6    9398.7    1395.8    9433.3    1395.6    9467.5
GR   1395.7    9504.8    1395.7    9535.0    1395.9    9575.7    1396.2    9607.5    1396.2    9639.3
GR   1395.6    9661.0    1396.0    9669.2    1396.0    9681.4    1396.0    9688.5    1396.0    9693.1
GR   1396.0    9694.7    1395.7    9698.8    1396.1    9710.9    1394.4    9716.8    1394.1    9740.9
GR   1393.3    9759.7    1392.4    9791.4    1397.5    9815.0    1395.7    9823.6    1391.4   10025.0
GR   1392.4   10034.9    1393.0   10080.0    1392.4   10105.8    1392.6   10131.1    1392.8   10158.2
GR   1393.1   10176.6    1392.6   10184.3    1393.0   10217.9    1393.2   10246.6    1393.6   10273.0
GR   1393.3   10309.3    1393.5   10340.5    1393.0   10380.5    1393.5   10407.3    1398.6   10418.9
GR   1400.4   10436.2    1400.4   10442.6    1398.7   10460.6    1398.5   10489.3    1398.6   10536.4
GR   1398.6   10573.1    1398.2   10633.3    1398.2   10679.4    1398.4   10702.7    1397.8   10724.9
GR   1397.9   10763.3    1398.3   10789.3    1398.2   10809.5    1398.7   10833.8    1399.2   10854.6
```

NC	0.055	0.050	0.040	0.1	0.3					
X1	9.100	88	9740.9	10418.9	140.0	240.0	190.0	0.984807	0.0	
CI	10170.	1392.5	100.035	47.619	2.0	310.0	0.01			
X2	0.0	0.0	0	0.0	0.0	0.0	0	0.0	0.0	15
X3	0	0.0	0.0	9667.3	0.0	10412.0	0.0	0.0	0.0	
GR	1395.4	8842.4	1395.2	8862.1	1395.1	8887.2	1395.0	8916.1	1395.1	8944.9
GR	1395.0	8977.6	1393.2	8998.5	1393.3	9007.7	1395.0	9016.2	1393.7	9025.9
GR	1394.7	9030.8	1394.5	9046.1	1393.6	9052.7	1395.2	9072.6	1393.8	9083.0
GR	1395.0	9107.9	1394.9	9138.3	1394.5	9157.2	1395.1	9166.5	1394.8	9176.8
GR	1395.0	9203.4	1395.5	9247.7	1395.9	9271.4	1395.3	9309.1	1395.7	9341.5
GR	1395.2	9348.9	1395.4	9368.4	1395.6	9398.7	1395.8	9433.3	1395.6	9467.5
GR	1395.7	9504.8	1395.7	9535.0	1395.9	9575.7	1396.2	9607.5	1396.2	9639.3
GR	1395.6	9661.0	1396.0	9669.2	1396.0	9681.4	1396.0	9688.5	1396.0	9693.1
GR	1396.0	9694.7	1395.7	9698.8	1396.1	9710.9	1394.4	9716.8	1394.1	9740.9
GR	1393.3	9759.7	1392.4	9791.4	1391.9	9820.9	1393.1	9839.8	1393.0	9868.1
GR	1392.9	9899.7	1393.0	9941.3	1393.0	9964.5	1393.0	9989.1	1393.0	9995.5
GR	1393.0	10000.0	1393.0	10007.3	1393.1	10012.7	1392.4	10034.9	1393.0	10080.0
GR	1392.4	10105.8	1392.6	10131.1	1392.8	10158.2	1393.1	10176.6	1392.6	10184.3
GR	1393.0	10217.9	1393.2	10246.6	1393.6	10273.0	1393.3	10309.3	1393.5	10340.5
GR	1393.0	10380.5	1393.5	10407.3	1398.6	10418.9	1400.4	10436.2	1400.4	10442.6
GR	1398.7	10460.6	1398.5	10489.3	1398.6	10536.4	1398.6	10573.1	1398.2	10633.3
GR	1398.2	10679.4	1398.4	10702.7	1397.8	10724.9	1397.9	10763.3	1398.3	10789.3
GR	1398.2	10809.5	1398.7	10833.8	1399.2	10854.6				
X1	9.200	89	9861.7	10309.0	375.0	480.0	478.0	1.0	0.0	
CI	0.0	0.0	0.0	0.0	0.0	0.01	0.01			
X2	0.0	0.0	0	0.0	0.0	0.0	0	0.0	0.0	15
X3	0	0.0	0.0	9280.0	0.0	10330.3	0.0	0.0	0.0	
GR	1395.3	8786.4	1396.3	8817.5	1397.9	8843.2	1397.9	8873.9	1397.7	8898.4
GR	1398.0	8924.9	1398.5	8948.0	1398.5	8959.7	1398.2	8981.1	1397.8	9002.6
GR	1396.3	9009.4	1396.8	9029.8	1397.0	9043.1	1395.5	9050.3	1395.9	9055.1
GR	1397.6	9060.9	1395.8	9071.2	1397.5	9088.8	1396.7	9106.9	1397.5	9132.6
GR	1397.7	9147.6	1396.6	9158.2	1397.9	9179.6	1398.1	9197.7	1397.0	9215.5
GR	1397.8	9223.0	1397.3	9246.7	1398.0	9275.2	1398.0	9281.2	1398.0	9287.9
GR	1396.1	9308.6	1395.1	9315.7	1394.9	9341.6	1397.0	9366.7	1397.6	9383.5
GR	1396.4	9398.8	1398.5	9419.0	1398.8	9441.4	1399.0	9477.7	1399.4	9504.2
GR	1399.3	9525.7	1399.0	9557.5	1399.0	9579.7	1399.0	9601.3	1399.3	9628.7
GR	1399.1	9664.3	1398.7	9688.0	1398.7	9710.8	1398.5	9735.7	1398.7	9754.4
GR	1398.8	9774.8	1398.8	9803.9	1398.2	9831.8	1400.0	9840.1	1398.5	9856.6
GR	1398.9	9861.7	1396.1	9871.7	1393.8	9894.1	1392.9	9926.8	1392.3	9938.6
GR	1392.0	9959.2	1391.6	9987.6	1391.2	9996.4	1392.9	10000.0	1394.2	10004.7
GR	1394.2	10028.3	1394.0	10048.6	1394.0	10074.6	1394.3	10096.7	1394.5	10103.4
GR	1393.6	10108.3	1394.4	10113.4	1394.1	10139.2	1394.5	10152.3	1393.8	10157.3
GR	1393.9	10177.9	1394.0	10191.1	1393.2	10196.4	1394.3	10206.7	1393.6	10217.4
GR	1393.4	10254.1	1393.5	10284.9	1393.9	10296.6	1399.7	10309.0	1401.9	10330.3
GR	1400.9	10343.4	1401.5	10347.7	1400.3	10350.9	1400.3	10356.7		
NC	0.050	0.050	0.045	0.1	0.3					

CITY OF PHOENIX LANDFILL

CITY OF PHOENIX LANDFILL

X1	9.282	94	9809.6	10043.5	420.0	440.0	443.0	1.0	0.0	
X3	0	0.0	0.0	9257.8	0.0	10226.6	0.0	0.0	0.0	
GR	1421.9	9146.1	1421.4	9167.3	1419.5	9190.3	1416.4	9213.6	1413.0	9237.7
GR	1409.5	9257.8	1405.1	9277.9	1403.0	9293.9	1403.0	9300.0	1400.5	9314.7
GR	1400.4	9330.9	1401.4	9332.8	1400.5	9336.3	1400.5	9364.3	1400.7	9376.2
GR	1401.4	9379.5	1400.0	9397.0	1402.0	9405.9	1399.4	9421.2	1399.2	9434.3
GR	1400.8	9438.6	1401.5	9448.4	1399.2	9457.5	1398.9	9465.6	1401.7	9473.4
GR	1401.7	9479.0	1400.3	9488.1	1401.3	9497.7	1400.6	9502.5	1401.5	9515.5
GR	1401.0	9536.9	1401.7	9548.5	1401.2	9568.3	1401.0	9596.0	1401.5	9618.7
GR	1400.6	9632.6	1401.2	9643.7	1400.8	9663.5	1401.0	9682.8	1401.3	9698.8
GR	1403.0	9709.9	1401.2	9720.9	1401.0	9740.7	1401.1	9765.2	1400.9	9783.5
GR	1401.5	9800.8	1400.9	9809.6	1395.8	9828.0	1393.5	9838.9	1394.9	9852.5
GR	1394.0	9871.8	1395.3	9892.2	1396.3	9907.5	1394.8	9930.8	1393.5	9951.8
GR	1393.9	9955.3	1392.6	9959.5	1393.5	9968.3	1392.8	9971.6	1393.1	9990.1
GR	1392.5	10000.0	1392.2	10008.2	1391.9	10011.9	1393.4	10016.7	1394.7	10031.4
GR	1394.2	10040.6	1397.4	10043.5	1398.1	10059.4	1394.1	10077.1	1393.1	10096.6
GR	1392.8	10125.1	1392.4	10135.1	1393.0	10136.7	1393.4	10151.9	1393.8	10170.7
GR	1394.3	10193.3	1402.3	10209.3	1403.6	10226.6	1402.7	10246.8	1402.1	10263.3
GR	1402.0	10295.5	1401.9	10327.7	1402.2	10346.5	1402.5	10379.7	1402.5	10381.1
GR	1402.5	10407.3	1402.5	10440.1	1402.3	10466.1	1402.2	10494.9	1402.5	10525.5
GR	1402.3	10560.6	1402.3	10588.4	1402.4	10613.2	1402.4	10636.2		
X1	9.400	92	9907.5	10306.5	450.0	580.0	623.0	1.0	0.0	
X3	0	0.0	0.0	9907.5	0.0	10498.1	0.0	0.0	0.0	
GR	1458.7	9588.2	1458.5	9617.4	1444.4	9638.7	1441.1	9665.9	1437.6	9687.1
GR	1432.5	9715.2	1426.8	9741.1	1423.0	9761.7	1418.5	9786.4	1412.0	9818.5
GR	1410.9	9824.4	1409.2	9828.1	1408.3	9840.0	1408.6	9845.8	1407.0	9849.9
GR	1406.6	9854.3	1409.0	9861.6	1409.3	9880.3	1402.9	9907.5	1399.7	9922.0
GR	1398.9	9955.3	1400.8	9961.7	1398.0	9968.2	1397.8	9996.3	1397.8	10000.0
GR	1397.8	10009.6	1396.9	10023.1	1398.6	10051.0	1398.3	10074.5	1398.3	10082.5
GR	1396.0	10089.6	1398.0	10104.3	1397.5	10113.0	1398.4	10119.7	1397.1	10126.7
GR	1396.8	10156.0	1396.8	10175.8	1397.8	10184.3	1395.8	10213.5	1397.0	10231.2
GR	1395.6	10254.5	1395.5	10265.8	1400.6	10281.8	1402.4	10306.5	1403.1	10331.5
GR	1402.8	10359.2	1403.0	10367.6	1403.0	10395.2	1403.1	10421.7	1403.0	10451.2
GR	1403.4	10472.4	1403.9	10498.1	1403.1	10538.9	1403.0	10568.0	1403.0	10598.8
GR	1402.8	10631.0	1402.8	10662.3	1402.8	10687.4	1402.6	10718.2	1402.8	10746.5
GR	1402.6	10771.6	1405.9	10782.2	1402.4	10792.1	1402.6	10811.3	1402.5	10835.0
GR	1402.8	10861.8	1406.0	10890.6	1408.7	10899.7	1406.2	10919.8	1406.0	10936.6
GR	1406.2	10975.5	1406.2	10995.2	1406.2	11018.5	1405.6	11044.7	1406.3	11059.0
GR	1406.3	11082.7	1406.4	11113.5	1405.8	11144.7	1406.2	11175.2	1406.1	11221.7
GR	1405.9	11252.9	1406.1	11279.7	1406.2	11306.1	1406.4	11344.0	1406.4	11380.4
GR	1406.5	11426.7	1406.4	11456.9	1406.4	11482.3	1406.7	11508.8	1407.2	11531.0
GR	1407.9	11564.8	1407.8	11582.5						
X1	9.488	92	9946.9	10124.9	420.0	400.0	464.6	1.0	0.0	
X3	0	0.0	0.0	9946.9	1410.5	10544.6	0.0	0.0	0.0	
GR	1422.8	9823.4	1416.8	9844.4	1412.1	9859.8	1411.5	9873.7	1412.5	9875.1
GR	1410.8	9880.2	1412.1	9886.7	1407.1	9895.1	1405.9	9899.2	1405.6	9906.6
GR	1402.3	9913.0	1410.2	9927.4	1410.5	9946.9	1403.5	9974.7	1399.9	9988.5
GR	1399.9	10000.0	1400.3	10017.5	1400.9	10041.5	1401.2	10061.3	1401.3	10071.2
GR	1402.9	10073.0	1402.7	10090.6	1404.3	10109.9	1405.2	10124.9	1404.4	10141.2
GR	1402.7	10145.0	1402.5	10158.4	1401.9	10176.5	1401.2	10202.7	1401.1	10222.9
GR	1400.9	10250.7	1400.6	10274.6	1400.6	10293.8	1400.7	10306.7	1400.3	10325.7

R	1400.2	10336.2	1402.6	10362.6	1403.5	10392.2	1404.8	10400.3	1403.4	10418.4
GR	1402.5	10430.9	1405.4	10441.0	1405.2	10463.0	1405.2	10484.0	1405.4	10493.1
R	1404.6	10501.2	1404.6	10516.8	1404.9	10544.6	1405.3	10575.9	1405.5	10603.5
R	1405.5	10627.3	1405.5	10649.3	1406.3	10683.9	1406.6	10719.4	1406.7	10763.8
GR	1406.5	10800.2	1406.5	10843.1	1406.0	10881.5	1405.5	10902.5	1405.3	10921.8
GR	1405.2	10950.5	1404.8	10968.6	1405.5	10980.2	1405.5	11001.5	1405.6	11028.3
R	1406.1	11062.4	1407.1	11086.1	1407.9	11108.3	1408.1	11128.7	1407.9	11153.0
R	1408.7	11166.1	1408.6	11186.9	1408.1	11206.4	1407.8	11234.7	1408.1	11243.8
GR	1407.1	11250.6	1408.9	11258.4	1408.3	11264.7	1409.1	11297.3	1409.7	11313.8
GR	1409.6	11339.1	1409.4	11357.3	1409.1	11377.6	1411.8	11388.4	1409.1	11396.7
R	1408.9	11410.5	1411.3	11421.5	1410.3	11425.0	1411.8	11431.4	1410.7	11436.3
R	1411.9	11441.5	1410.6	11444.3						
X1	9.560	70	9985.7	10066.4	385.0	365.0	380.2	1.0	0.0	
R	1425.8	9823.6	1425.6	9829.0	1423.7	9832.4	1422.8	9840.0	1422.8	9843.3
GR	1423.9	9847.3	1422.7	9852.2	1421.3	9856.6	1424.3	9863.6	1419.6	9871.8
GR	1417.0	9878.5	1416.2	9889.6	1415.0	9895.5	1413.6	9902.4	1413.7	9911.6
R	1413.4	9922.5	1413.1	9929.4	1412.2	9931.0	1412.5	9938.1	1412.5	9947.2
R	1410.1	9956.6	1402.7	9985.7	1401.2	9993.0	1401.4	10000.0	1402.1	10024.4
GR	1402.7	10047.2	1403.4	10066.4	1403.2	10069.7	1402.8	10071.3	1403.4	10090.7
GR	1403.9	10107.9	1403.6	10137.5	1403.4	10164.5	1402.7	10193.3	1402.4	10215.0
R	1402.5	10231.7	1402.4	10245.5	1403.0	10252.3	1403.2	10261.3	1403.5	10268.9
R	1403.4	10275.0	1403.0	10282.2	1403.3	10289.5	1401.7	10294.6	1402.2	10307.8
GR	1401.9	10322.0	1402.3	10336.7	1402.4	10344.3	1404.1	10347.2	1403.2	10350.7
GR	1405.4	10354.5	1405.5	10368.7	1405.4	10376.1	1402.8	10382.0	1403.2	10386.6
R	1403.2	10398.0	1402.8	10406.7	1402.6	10414.6	1401.8	10419.6	1401.2	10422.4
R	1403.5	10429.7	1406.5	10443.1	1408.9	10453.5	1411.8	10464.1	1412.4	10478.9
GR	1412.0	10483.4	1414.2	10490.0	1420.7	10494.9	1421.5	10509.4	1421.8	10526.9
X1	9.655	91	9815.7	10091.7	450.0	375.0	501.6	1.0	0.0	
X3	0	0.0	0.0	9700.0	0.0	10280.0	0.0	0.0	0.0	
GR	1415.5	8386.9	1415.3	8396.9	1413.2	8420.2	1412.4	8426.5	1409.9	8435.0
R	1409.6	8451.3	1410.8	8458.2	1413.0	8467.4	1413.5	8496.7	1413.0	8506.9
R	1413.8	8516.0	1413.3	8522.1	1413.2	8538.7	1410.9	8548.9	1410.5	8567.5
GR	1409.9	8582.3	1408.2	8592.7	1408.1	8615.5	1407.2	8630.7	1408.7	8646.2
GR	1409.7	8666.6	1409.7	8691.5	1410.5	8715.0	1409.7	8741.7	1409.8	8773.9
R	1409.5	8811.7	1410.7	8825.3	1409.8	8854.6	1409.2	8865.0	1409.9	8878.9
R	1409.9	8918.2	1410.3	8950.1	1409.7	8971.6	1410.2	8986.7	1409.4	9002.5
GR	1410.4	9020.3	1409.6	9038.7	1409.3	9072.5	1410.7	9093.3	1408.5	9111.7
GR	1409.8	9131.4	1408.8	9149.9	1409.3	9195.7	1410.2	9220.6	1408.5	9237.3
R	1408.6	9279.7	1408.4	9335.4	1407.8	9394.6	1407.7	9444.9	1407.8	9495.9
R	1408.4	9528.4	1408.7	9560.2	1409.5	9609.1	1409.2	9646.1	1410.6	9668.6
GR	1416.2	9688.3	1423.3	9700.9	1422.7	9720.4	1416.2	9732.8	1408.2	9760.2
R	1406.5	9769.9	1405.6	9776.0	1404.0	9786.8	1403.1	9797.6	1407.5	9815.7
R	1406.2	9824.8	1406.2	9830.6	1402.6	9842.7	1402.7	9888.2	1403.1	9925.4
GR	1403.1	9946.9	1402.5	9971.5	1403.4	9980.3	1400.7	9987.0	1401.0	10000.0
GR	1400.8	10006.1	1402.5	10014.5	1402.3	10033.6	1400.8	10047.0	1401.4	10057.6
R	1404.4	10071.7	1407.4	10091.7	1407.7	10107.5	1408.8	10121.7	1410.2	10140.1
R	1410.2	10147.8	1410.9	10158.2	1411.4	10183.0	1414.8	10211.8	1421.9	10246.5
GR	1430.7	10283.3								

X1	9.713	44	9726.1	10099.3	315.0	290.0	306.2	1.0	0.0	
GR	1429.7	9583.1	1430.9	9598.8	1429.2	9612.6	1426.7	9619.9	1419.0	9631.7
GR	1419.3	9649.0	1418.8	9666.9	1421.5	9674.3	1410.3	9698.4	1409.1	9713.1
GR	1408.8	9726.1	1407.1	9743.8	1405.6	9769.2	1403.7	9798.1	1403.4	9809.3
GR	1402.9	9820.6	1402.9	9849.4	1403.5	9863.6	1402.9	9887.6	1403.0	9912.8
GR	1402.5	9938.4	1403.1	9965.9	1402.1	9972.5	1401.6	9983.6	1402.4	9989.1
GR	1402.3	10000.0	1403.1	10017.7	1403.3	10029.1	1402.6	10042.8	1404.0	10054.2
GR	1406.6	10071.1	1410.6	10089.4	1412.6	10099.3	1412.4	10108.7	1412.2	10122.1
GR	1412.1	10135.2	1414.1	10158.1	1418.6	10186.0	1425.8	10216.2	1431.8	10249.0
GR	1437.9	10285.5	1442.2	10335.1	1444.2	10375.2	1444.9	10385.5		
NC	0.050	0.050	0.040	0.1	0.3					
X1	9.800	38	9789.7	10124.4	475.0	460.0	459.4	1.0	0.0	
GR	1442.0	9641.4	1430.7	9680.0	1425.9	9698.7	1424.7	9706.0	1423.8	9708.3
GR	1423.6	9721.5	1423.8	9737.0	1426.1	9744.0	1418.9	9759.4	1412.2	9789.7
GR	1408.5	9819.7	1404.4	9858.4	1403.9	9887.7	1404.0	9913.5	1403.8	9935.5
GR	1403.1	9964.8	1403.9	9990.1	1402.7	10000.0	1403.7	10019.8	1404.9	10037.6
GR	1406.0	10045.8	1405.5	10054.2	1407.1	10061.5	1407.1	10075.8	1408.9	10096.5
GR	1410.4	10124.4	1413.3	10153.4	1416.3	10183.4	1415.9	10200.9	1416.2	10209.9
GR	1417.1	10224.1	1420.7	10248.2	1426.8	10283.2	1439.7	10332.9	1445.6	10368.4
GR	1449.0	10397.4	1448.8	10436.6	1449.3	10465.4				

SECNO	DEPTH	CWSEL	CRIWS	WSELK	EG	HV	HL	OLOSS	L-BANK ELEV
Q	QLOB	QCH	QROB	ALOB	ACH	AROB	VOL	TWA	R-BANK ELEV
TIME	VLOB	VCH	VROB	XNL	XNCH	XNR	WTN	ELMIN	SSTA
SLOPE	XLOBL	XLCH	XLOBR	ITRIAL	IDC	ICONT	CORAR	TOPWID	ENDST

FLOW DISTRIBUTION FOR SECNO= 9.09 CWSEL= 1397.23

STA=	9800.	9809.	10004.	10319.	10357.	10384.	10393.
PER Q=	.1	17.4	75.7	3.9	2.7	.3	
AREA=	9.6	812.6	1997.8	171.4	118.2	20.0	
VEL=	3.3	8.0	14.1	8.4	8.4	4.8	
DEPTH=	1.1	4.2	6.4	4.5	4.5	2.1	

FLOW DISTRIBUTION FOR SECNO= 9.10 CWSEL= 1399.37

STA=	9667.	9669.	9676.	9680.	9682.	9686.	9698.	9704.	9727.	10395.	10402.
PER Q=	.0	.2	.1	.0	.1	.4	.2	1.5	97.4	.0	
AREA=	4.6	23.5	15.2	5.3	14.2	41.3	23.9	121.4	4384.2	2.8	
VEL=	1.5	3.4	3.4	3.4	3.5	3.5	3.8	4.6	8.4	.9	
DEPTH=	3.4	3.4	3.4	3.4	3.5	3.5	4.1	5.1	6.6	.4	

FLOW DISTRIBUTION FOR SECNO= 9.20 CWSEL= 1400.84

STA=	9280.	9342.	9419.	9688.	9862.	10309.	10320.
PER Q=	3.9	3.7	3.3	2.8	86.2	.0	
AREA=	288.8	308.7	477.4	363.7	3158.2	6.2	
VEL=	5.7	5.0	2.9	3.2	11.3	1.5	
DEPTH=	4.7	4.0	1.8	2.1	7.1	.6	

THIS RUN EXECUTED 15JUN94 11:18:55

****
HEC-2 WATER SURFACE PROFILES

Version 4.6.2; May 1991
****

NOTE- ASTERISK (*) AT LEFT OF CROSS-SECTION NUMBER INDICATES MESSAGE IN SUMMARY OF ERRORS LIST

100-YR FLOW

SUMMARY PRINTOUT

	SECNO	Q	CWSEL	DEPTH	ELMIN	EG	CRIWS	VCH	10*KS	XLCH	SSTA	TOPWID	ENDST
	8.566	37253.12	1375.63	9.33	1366.30	1377.17	.00	9.94	118.11	.00	9032.69	964.26	10028.42
*	8.680	37253.12	1379.61	10.51	1369.10	1380.26	.00	6.44	27.36	602.00	9106.21	952.58	10058.79
	8.815	37253.12	1381.48	9.48	1372.00	1383.01	.00	9.92	46.03	713.00	9683.32	586.32	10269.64
	8.907	37253.12	1383.06	9.36	1373.70	1386.04	.00	13.85	64.10	480.00	9935.63	324.88	10260.50
	8.957	37253.12	1385.49	11.16	1374.33	1387.49	.00	11.33	34.81	250.00	9968.38	339.30	10307.67
	9.014	37253.12	1386.23	11.29	1374.94	1388.50	.00	12.11	36.60	245.00	10032.43	295.14	10327.57
	9.015	37253.12	1386.05	11.15	1374.90	1388.69	.00	13.04	57.57	1.00	10022.88	278.94	10316.83
	9.029	37253.12	1386.85	11.75	1375.10	1389.20	.00	12.30	48.65	80.20	10021.37	281.92	10318.31
	9.030	37253.12	1387.46	12.32	1375.14	1389.34	.00	11.01	27.19	1.00	10015.36	299.28	10314.64
	9.064	37253.12	1388.04	12.38	1375.66	1389.91	.00	10.95	26.72	208.00	10027.39	299.54	10326.92
	9.087	37253.12	1388.22	12.36	1375.86	1390.09	.00	10.97	19.74	80.00	10027.43	299.45	10326.88
*	9.088	37253.12	1397.23	6.37	1390.86	1399.81	1397.23	14.12	69.20	50.00	9800.20	592.79	10392.99
*	9.100	38014.15	1399.37	7.47	1391.90	1400.46	.00	8.44	32.25	100.00	9667.30	734.89	10402.19
	9.200	41500.00	1400.84	9.64	1391.20	1402.59	.00	11.32	52.93	478.00	9280.00	1039.94	10319.94
	9.282	41500.00	1403.56	11.66	1391.90	1404.94	.00	10.29	52.26	443.00	9289.61	936.51	10226.11
	9.400	41500.00	1406.72	11.22	1395.50	1408.40	.00	10.77	60.01	623.00	9907.50	590.60	10498.10
	9.488	41500.00	1409.79	9.89	1399.90	1411.27	.00	10.40	70.60	464.60	9949.73	594.87	10544.60

SECNO	Q	CWSEL	DEPTH	ELMIN	EG	CRIWS	VCH	10*KS	XLCH	SSTA	TOPWID	ENDST
9.560	41500.00	1412.10	10.90	1401.20	1413.52	.00	11.02	52.71	380.20	9948.77	524.13	10483.70
9.655	41500.00	1414.08	13.38	1400.70	1415.86	.00	11.28	47.61	501.60	9740.08	465.59	10205.66
9.713	41500.00	1415.79	14.19	1401.60	1417.04	.00	9.12	28.95	306.20	9686.58	482.04	10168.61
9.800	41500.00	1416.86	14.16	1402.70	1418.64	.00	10.81	34.09	459.40	9768.62	451.72	10220.34

100-YR FLOW

SUMMARY PRINTOUT TABLE 150

	SECNO	XLCH	ELTRD	ELLC	ELMIN	Q	CWSEL	CRIWS	EG	10*KS	VCH	AREA	.01K
	8.566	.00	.00	.00	1366.30	37253.12	1375.63	.00	1377.17	118.11	9.94	3749.46	3427.84
*	8.680	602.00	.00	.00	1369.10	37253.12	1379.61	.00	1380.26	27.36	6.44	5782.85	7122.15
	8.815	713.00	.00	.00	1372.00	37253.12	1381.48	.00	1383.01	46.03	9.92	3753.98	5490.72
	8.907	480.00	.00	.00	1373.70	37253.12	1383.06	.00	1386.04	64.10	13.85	2690.27	4653.07
	8.957	250.00	.00	.00	1374.33	37253.12	1385.49	.00	1387.49	34.81	11.33	3288.82	6313.70
	9.014	245.00	.00	.00	1374.94	37253.12	1386.23	.00	1388.50	36.60	12.11	3076.18	6157.76
	9.015	1.00	1394.50	1394.70	1374.90	37253.12	1386.05	.00	1388.69	57.57	13.04	2857.49	4909.78
	9.029	80.20	1394.50	1394.70	1375.10	37253.12	1386.85	.00	1389.20	48.65	12.30	3028.69	5341.08
	9.030	1.00	.00	.00	1375.14	37253.12	1387.46	.00	1389.34	27.19	11.01	3383.36	7144.06
	9.064	208.00	.00	.00	1375.66	37253.12	1388.04	.00	1389.91	26.72	10.95	3402.70	7206.92
	9.087	80.00	.00	.00	1375.86	37253.12	1388.22	.00	1390.09	19.74	10.97	3396.13	8384.02
*	9.088	50.00	.00	.00	1390.86	37253.12	1397.23	1397.23	1399.81	69.20	14.12	3129.47	4478.36
*	9.100	100.00	.00	.00	1391.90	38014.15	1399.37	.00	1400.46	32.25	8.44	4636.43	6693.96
	9.200	478.00	.00	.00	1391.20	41500.00	1400.84	.00	1402.59	52.93	11.32	4602.89	5704.47
	9.282	443.00	.00	.00	1391.90	41500.00	1403.56	.00	1404.94	52.26	10.29	4952.53	5740.43
	9.400	623.00	.00	.00	1395.50	41500.00	1406.72	.00	1408.40	60.01	10.77	4200.84	5357.24
	9.488	464.60	.00	.00	1399.90	41500.00	1409.79	.00	1411.27	70.60	10.40	4254.58	4938.93
	9.560	380.20	.00	.00	1401.20	41500.00	1412.10	.00	1413.52	52.71	11.02	4399.37	5715.91
	9.655	501.60	.00	.00	1400.70	41500.00	1414.08	.00	1415.86	47.61	11.28	4047.48	6014.19
	9.713	306.20	.00	.00	1401.60	41500.00	1415.79	.00	1417.04	28.95	9.12	4764.43	7713.46
	9.800	459.40	.00	.00	1402.70	41500.00	1416.86	.00	1418.64	34.09	10.81	4017.05	7107.75

00-YR FLOW

UMMARY PRINTOUT TABLE 150

	SECNO	Q	CWSEL	DIFWSP	DIFWSX	DIFKWS	TOPWID	XLCH
	8.566	37253.12	1375.63	.00	.00	-.25	964.26	.00
*	8.680	37253.12	1379.61	.00	3.98	.00	952.58	602.00
	8.815	37253.12	1381.48	.00	1.87	.00	586.32	713.00
	8.907	37253.12	1383.06	.00	1.58	.00	324.88	480.00
	8.957	37253.12	1385.49	.00	2.43	.00	339.30	250.00
	9.014	37253.12	1386.23	.00	.73	.00	295.14	245.00
	9.015	37253.12	1386.05	.00	-.18	.00	278.94	1.00
	9.029	37253.12	1386.85	.00	.80	.00	281.92	80.20
	9.030	37253.12	1387.46	.00	.61	.00	299.28	1.00
	9.064	37253.12	1388.04	.00	.58	.00	299.54	208.00
	9.087	37253.12	1388.22	.00	.18	.00	299.45	80.00
*	9.088	37253.12	1397.23	.00	9.01	.00	592.79	50.00
*	9.100	38014.15	1399.37	.00	2.14	.00	734.89	100.00
	9.200	41500.00	1400.84	.00	1.47	.00	1039.94	478.00
	9.282	41500.00	1403.56	.00	2.72	.00	936.51	443.00
	9.400	41500.00	1406.72	.00	3.16	.00	590.60	623.00
	9.488	41500.00	1409.79	.00	3.07	.00	594.87	464.60
	9.560	41500.00	1412.10	.00	2.31	.00	524.13	380.20
	9.655	41500.00	1414.08	.00	1.98	.00	465.59	501.60
	9.713	41500.00	1415.79	.00	1.71	.00	482.04	306.20
	9.800	41500.00	1416.86	.00	1.08	.00	451.72	459.40

SUMMARY OF ERRORS AND SPECIAL NOTES

WARNING SECNO=	8.680	PROFILE=	1	CONVEYANCE CHANGE OUTSIDE ACCEPTABLE RANGE
CAUTION SECNO=	9.088	PROFILE=	1	CRITICAL DEPTH ASSUMED
CAUTION SECNO=	9.088	PROFILE=	1	PROBABLE MINIMUM SPECIFIC ENERGY
CAUTION SECNO=	9.088	PROFILE=	1	20 TRIALS ATTEMPTED TO BALANCE WSEL
WARNING SECNO=	9.100	PROFILE=	1	CONVEYANCE CHANGE OUTSIDE ACCEPTABLE RANGE

```
*****************************************
*  HEC-2 WATER SURFACE PROFILES         *
*                                       *
*  Version   4.6.2;  May 1991           *
*                                       *
*  RUN DATE    15JUN94    TIME   11:20:47  *
*****************************************
```

```
****************************************
*  U.S. ARMY CORPS OF ENGINEERS        *
*  HYDROLOGIC ENGINEERING CENTER       *
*  609 SECOND STREET, SUITE D          *
*  DAVIS, CALIFORNIA 95616-4687        *
*          (916) 756-1104              *
****************************************
```

```
X     X  XXXXXXX   XXXXX              XXXXX
X     X  X        X     X            X     X
X     X  X        X                        X
XXXXXXX  XXXX     X          XXXXX    XXXXX
X     X  X        X                  X
X     X  X        X     X            X
X     X  XXXXXXX   XXXXX              XXXXXXX
```

THIS RUN EXECUTED 15JUN94 11:20:47

```
************************************
HEC-2 WATER SURFACE PROFILES

Version   4.6.2;  May 1991
************************************


SPLIT FLOW BEING PERFORMED


SF


TWSECTION 9.100 TO 9.200
WS      2   9.100   9.200    -1.0      2.6
WC    0.0  1397.4   510.0  1399.0

TWSECTION 9.088 TO 9.100
WS      2   9.088   9.100    -1.0      2.6
WC    0.0  1397.0   235.0  1397.4
```

```
T1      PINNACLE PEAK RD BRIDGE OVER SKUNK CREEK
T2      PROPOSED OPTION ANALYSIS
T3      500-YR FLOW
T4      * THIS OPTION INCLUDES EXTENSION OF EAST DIKE ACROSS 35TH AVENUE
T4        TO REDIRECT UP TO THE 100-YEAR FLOW INTO THE INCISED CHANNEL
T4        UPSTREAM OF THE PINNACLE PEAK ROAD BRIDGE
T4      * WEST WALL ADJACENT TO RESIDENTIAL AREA CLOSED OFF AT SOFT WIND
T4        DRIVE
T4      * DROP STRUCTURE LOCATED AT CROSS SECTION 9.087

J1  ICHECK   INQ     NINV    IDIR    STRT    METRIC  HVINS   Q       WSEL    FQ

     0       2       0       0     0.0120      0     0.0   70550.0 1377.00

J2  NPROF    IPLOT   PRFVS   XSECV   XSECH   FN      ALLDC   IBW     CHNIM   ITRACE

    -1       0      -1      0.0     0.0     0.0     0.0    -6.0     0.0

J3  VARIABLE CODES FOR SUMMARY PRINTOUT

     38      43      1       8       42      3       2       26      5       39
     53      4       54              150

J5  LPRNT    NUMSEC                 ********REQUESTED SECTION NUMBERS********

    -10     -10

J6  IHLEQ    ICOPY   SUBDIV  STRTDS  RMILE

             0      -1.0

NC   0.050   0.050   0.040   0.1     0.3
X1   8.566     97    9001.7  10040.6 0.0     0.0     0.0     1.0     0.0
GR   1387.7  7864.4  1386.7  7914.2  1385.0  7933.2  1386.2  8010.9  1385.4  8173.0
GR   1384.3  8203.7  1384.5  8220.9  1383.3  8228.6  1382.5  8322.4  1381.5  8324.5
GR   1381.2  8338.7  1382.5  8341.2  1381.5  8344.0  1381.5  8449.8  1380.4  8503.0
GR   1380.2  8705.2  1378.7  8829.0  1380.4  8834.8  1378.8  8845.6  1380.4  8848.8
GR   1378.2  8853.6  1380.7  8862.6  1380.3  8867.2  1379.2  8872.3  1378.8  8875.2
GR   1379.8  8896.4  1380.3  8923.5  1379.2  8937.1  1380.1  8973.5  1382.1  8978.3
GR   1382.5  8983.7  1381.2  8988.6  1382.9  8995.1  1381.9  9001.7  1380.3  9008.1
GR   1380.1  9013.4  1377.7  9018.9  1376.5  9025.0  1375.6  9033.0  1373.2  9041.5
GR   1372.0  9052.5  1370.8  9063.8  1370.3  9126.1  1369.2  9138.9  1370.2  9208.1
GR   1370.1  9340.9  1369.1  9352.6  1370.3  9363.5  1370.1  9371.4  1369.1  9375.6
GR   1370.1  9423.2  1372.1  9460.0  1373.5  9481.4  1374.0  9502.6  1373.0  9514.7
GR   1372.2  9520.1  1373.4  9530.2  1373.7  9597.7  1372.2  9605.1  1372.3  9615.3
GR   1371.3  9628.7  1372.3  9655.6  1373.0  9772.6  1374.0  9794.1  1375.1  9845.6
GR   1375.1  9861.6  1373.8  9878.0  1372.5  9924.8  1371.2  9936.4  1371.2  9938.5
GR   1375.0  9943.2  1377.2  9949.5  1378.2  9966.1  1375.9  9975.9  1372.4  9983.7
GR   1372.0  9986.3  1368.8  9993.0  1368.8  9996.0  1366.3  10000.0 1366.9  10009.4
GR   1368.7  10015.0 1373.4  10024.9 1378.6  10033.1 1380.1  10040.6 1381.1  10115.4
GR   1380.0  10225.4 1381.2  10296.3 1381.6  10516.7 1382.6  10729.1 1383.8  10816.6
GR   1383.7  10825.5 1381.4  10828.6 1384.0  10837.6 1383.0  10895.8 1383.7  11111.2
```

GR	1385.9	12184.6	1389.2	12197.0						
X1	8.680	93	9088.6	10072.6	615.0	650.0	602.0	1.0	0.0	
GR	1390.3	8163.3	1388.6	8235.1	1389.1	8359.1	1387.5	8437.1	1385.1	8440.6
GR	1383.7	8591.0	1383.7	8703.7	1383.5	8830.4	1384.4	8879.3	1383.4	8897.3
GR	1383.0	8926.2	1385.0	8932.9	1382.2	8943.8	1384.5	8947.3	1382.4	8951.2
GR	1384.7	8961.0	1384.9	8963.4	1383.1	8967.4	1382.3	9060.2	1385.7	9069.1
GR	1386.3	9071.1	1384.6	9075.5	1385.6	9082.0	1385.0	9088.6	1382.8	9093.2
GR	1380.9	9101.2	1378.0	9112.5	1376.0	9120.2	1374.5	9126.6	1373.5	9134.2
GR	1372.0	9139.3	1371.7	9228.6	1370.6	9234.2	1371.8	9249.9	1371.8	9253.4
GR	1370.3	9264.4	1371.2	9372.0	1372.6	9429.6	1373.2	9531.8	1374.3	9630.9
GR	1374.4	9714.1	1375.5	9738.8	1376.4	9811.4	1375.2	9824.8	1376.5	9888.5
GR	1375.4	9899.8	1374.2	9910.2	1372.7	9919.0	1372.4	9940.5	1373.8	9945.1
GR	1375.0	9949.4	1376.2	9964.6	1373.9	9969.0	1372.2	9977.8	1369.2	9982.4
GR	1369.1	9991.8	1372.0	10000.0	1372.8	10001.3	1375.2	10006.9	1375.5	10015.3
GR	1376.6	10023.1	1377.1	10032.0	1378.1	10036.8	1376.6	10041.2	1378.2	10053.0
GR	1378.9	10056.2	1381.8	10066,7	1382.8	10072.6	1382.2	10076.0	1380.4	10083.6
GR	1380.7	10089.7	1383.4	10095.7	1383.1	10201.2	1384.3	10256.6	1384.2	10368.9
GR	1383.9	10523.6	1384.9	10654.1	1385.1	10781.0	1385.5	10934.2	1385.9	11104.7
GR	1386.5	11273.1	1386.8	11384.3	1387.6	11573.9	1388.0	11707.0	1388.7	11818.9
GR	1390.1	11891.0	1389.9	11952.6	1388.8	11979.1	1392.5	12008.1	1394.1	12020.2
GR	1391.0	12032.7	1391.6	12038.3	1393.1	12047.5				

BEGIN CHANNELIZATION

BEGIN CHANNELIZATION

X1	8.815	91	9609.8	10489.6	450.0	680.0	713.0	1.0	0.0	
CI	9935.0	1372.5	713.035	4.0	4.0	250.0	0.01			
GR	1390.4	8808.9	1389.2	8839.1	1387.5	8856.8	1386.3	8872.6	1385.6	8880.4
GR	1385.1	8957.0	1385.3	9014.6	1385.4	9072.2	1385.2	9117.2	1386.1	9135.9
GR	1386.7	9138.1	1386.4	9178.1	1386.6	9244.8	1386.6	9290.2	1386.6	9321.3
GR	1386.6	9346.5	1386.7	9366.3	1386.4	9376.6	1389.7	9384.9	1386.0	9391.7
GR	1389.3	9398.0	1386.3	9403.9	1389.7	9413.5	1386.9	9419.1	1385.9	9436.0
GR	1386.9	9461.3	1385.8	9487.1	1387.5	9498.5	1386.4	9523.1	1388.0	9544.5
GR	1389.2	9565.2	1390.3	9583.5	1388.5	9609.8	1386.6	9637.1	1385.0	9652.8
GR	1383.4	9670.6	1380.9	9687.2	1378.8	9707.2	1377.6	9725.1	1376.9	9740.7
GR	1374.5	9748.5	1374.4	9756.1	1375.8	9770.8	1375.5	9788.3	1375.0	9818.5
GR	1374.9	9850.1	1374.8	9881.0	1374.7	9912.6	1374.7	9942.9	1374.5	9965.4
GR	1374.1	9984.2	1372.0	10000.0	1372.8	10016.7	1372.2	10035.6	1374.3	10063.8
GR	1375.2	10078.6	1376.0	10095.5	1376.4	10111.8	1376.5	10129.2	1376.9	10153.1
GR	1376.8	10174.4	1376.7	10191.9	1377.4	10209.1	1378.5	10222.6	1379.5	10239.1
GR	1380.8	10261.2	1381.7	10272.3	1382.4	10288.5	1383.8	10306.6	1384.3	10320.4
GR	1385.0	10339.2	1385.4	10355.2	1385.6	10372.8	1385.5	10394.3	1386.4	10410.4
GR	1390.0	10442.0	1391.1	10458.5	1391.9	10471.5	1392.3	10489.6	1392.8	10513.3
GR	1393.2	10543.4	1392.5	10567.3	1391.7	10584.0	1391.4	10598.7	1390.4	10624.2
GR	1390.1	10641.8	1387.8	10681.9	1387.6	10700.9	1387.5	10736.6	1387.4	10756.1
GR	1389.2	10774.8								
X1	8.907	91	9830.2	10263.3	520.0	400.0	485.8	0.961261	0.0	
CI	10150.	1373.7	480.035	4.0	4.0	-250.0	0.01			
X2	0.0	0.0	0	0.0	0.0	0.0	0	0.0	0.0	
GR	1397.5	8809.3	1396.5	8838.1	1395.9	8871.3	1393.5	8905.3	1392.4	8937.2
GR	1392.2	8970.4	1390.8	9003.5	1390.0	9027.4	1390.1	9048.0	1389.3	9080.4
GR	1387.1	9087.0	1388.3	9092.7	1389.2	9176.8	1389.2	9248.7	1389.3	9291.0
GR	1389.3	9454.7	1389.4	9497.2	1389.9	9542.3	1389.7	9586.6	1390.0	9625.4

R	1389.9	9660.8	1390.8	9664.8	1389.5	9668.6	1389.5	9677.5	1392.2	9681.2
GR	1388.1	9690.2	1390.9	9696.8	1387.9	9699.2	1389.9	9707.4	1393.4	9712.3
GR	1390.3	9719.4	1389.9	9737.3	1390.5	9763.0	1389.7	9786.2	1389.6	9797.0
R	1390.7	9807.1	1390.4	9826.6	1393.0	9830.2	1389.6	9835.6	1385.4	9863.1
GR	1381.7	9875.2	1380.1	9894.0	1378.7	9916.2	1377.4	9940.3	1375.8	9960.3
GR	1375.2	9987.9	1375.1	10000.0	1375.1	10025.3	1375.7	10051.5	1376.5	10072.8
R	1377.1	10081.8	1380.7	10094.5	1382.7	10106.6	1383.8	10122.1	1385.2	10140.3
R	1386.7	10159.5	1390.3	10182.6	1391.6	10193.0	1391.7	10213.1	1391.9	10230.2
GR	1392.8	10244.7	1393.1	10263.3	1392.3	10283.1	1391.7	10302.9	1391.8	10337.3
GR	1391.9	10369.3	1392.2	10391.9	1392.2	10408.2	1390.5	10432.0	1390.2	10443.8
R	1392.1	10470.5	1392.0	10488.7	1392.3	10507.6	1392.1	10524.8	1392.1	10551.6
R	1392.3	10570.1	1391.2	10583.8	1391.3	10604.2	1392.0	10627.3	1392.2	10650.0
GR	1391.6	10677.1	1391.1	10695.0	1391.2	10738.1	1390.8	10770.7	1391.6	10797.7
GR	1391.5	10826.7	1390.9	10867.4	1391.0	10912.8	1391.1	10960.4	1391.4	10988.8
R	1392.0	11005.2								

NC	0.0	0.0	0.0	0.3	0.5					
X1	8.957	92	9851.7	10283.2	260.0	240.0	264.0	0.933580	0.0	
CI	10235.	1374.33	250.035	4.0	4.0	-250.0	0.01			
X2	0.0	0.0	0	0.0	0.0	0.0	0	0.0	0.933580	
GR	1400.0	8775.0	1398.0	8815.0	1396.0	8850.0	1394.0	8900.0	1392.0	8980.0
GR	1390.0	9045.0	1390.4	9077.5	1389.9	9104.9	1390.3	9136.9	1390.5	9176.1
GR	1390.3	9220.2	1390.4	9263.3	1390.2	9303.3	1390.4	9346.2	1390.4	9389.1
GR	1390.5	9433.5	1390.7	9474.2	1390.9	9512.7	1391.2	9557.9	1391.1	9605.4
GR	1391.2	9648.9	1391.4	9685.7	1391.3	9701.7	1391.1	9708.8	1393.0	9713.6
GR	1390.1	9721.2	1389.6	9724.7	1392.1	9730.0	1389.6	9734.6	1392.5	9743.5
GR	1391.3	9761.0	1391.4	9780.0	1391.6	9805.7	1390.9	9833.6	1392.1	9851.7
GR	1387.2	9877.8	1383.3	9903.0	1380.6	9926.3	1378.8	9954.7	1378.4	9975.6
GR	1378.1	10000.0	1378.1	10023.4	1378.5	10040.2	1378.5	10064.4	1382.4	10087.3
GR	1383.8	10096.7	1384.0	10112.1	1385.7	10153.8	1386.1	10171.4	1387.5	10187.2
GR	1388.5	10201.2	1388.5	10219.8	1388.2	10235.7	1388.7	10247.1	1390.8	10258.0
GR	1389.8	10261.8	1391.6	10283.2	1391.8	10301.6	1393.6	10330.0	1392.3	10348.7
GR	1392.0	10374.4	1392.3	10397.1	1391.9	10422.4	1392.3	10447.2	1392.2	10475.3
GR	1392.3	10500.4	1392.4	10519.6	1392.4	10548.5	1392.1	10583.0	1392.1	10624.0
GR	1392.0	10658.3	1391.9	10692.9	1391.2	10712.4	1391.3	10730.0	1391.3	10769.2
GR	1391.2	10792.8	1390.0	10804.9	1390.8	10825.3	1391.1	10844.1	1390.9	10873.7
GR	1390.9	10903.3	1390.7	10946.2	1390.6	10989.3	1390.5	11030.8	1390.7	11062.1
GR	1390.9	11089.1	1391.1	11108.3	1390.7	11125.6	1390.1	11145.1	1390.2	11173.0
GR	1390.1	11209.8	1390.3	11239.5						

DOWNSTREAM OF PINNACLE PEAK ROAD BRIDGE

DOWNSTREAM OF PINNACLE PEAK ROAD BRIDGE

X1	9.014	86	9760.3	10320.7	260.0	250.0	301.0	1.0	0.0	
CI	10180.	1374.94	245.035	2.0	2.0	-250.0	0.01			
GR	1397.8	8641.6	1396.8	8667.2	1396.7	8699.9	1395.6	8722.9	1394.6	8737.2
GR	1394.3	8770.7	1394.1	8803.3	1394.0	8852.7	1394.1	8895.6	1394.2	8918.4
GR	1394.2	8957.6	1395.1	8989.7	1395.2	9015.0	1395.2	9062.9	1394.2	9094.8
GR	1393.3	9136.3	1393.5	9161.8	1393.7	9179.5	1393.8	9242.7	1394.1	9278.1
GR	1394.9	9312.4	1395.4	9334.8	1394.8	9361.5	1394.1	9382.8	1394.8	9404.8
GR	1394.8	9441.0	1394.3	9478.6	1395.0	9506.7	1395.0	9519.1	1394.9	9537.8
GR	1394.3	9563.6	1394.6	9593.9	1394.4	9617.7	1394.3	9640.3	1393.9	9655.9
GR	1393.5	9668.0	1392.9	9674.9	1392.6	9677.4	1393.2	9684.9	1393.7	9697.9
GR	1393.5	9710.8	1392.9	9729.1	1392.4	9741.8	1392.4	9753.2	1392.1	9760.3
GR	1391.5	9767.0	1391.5	9783.6	1390.9	9799.7	1390.8	9824.1	1389.9	9850.8

R	1389.4	9873.9	1389.3	9903.7	1388.5	9923.9	1388.1	9953.0	1387.9	9982.3
GR	1387.8	10000.0	1387.6	10029.2	1388.1	10054.2	1388.0	10070.8	1387.4	10085.5
GR	1388.4	10102.1	1389.3	10125.7	1390.4	10153.5	1390.5	10186.6	1391.1	10222.8
R	1391.1	10257.5	1392.0	10288.8	1392.2	10320.7	1392.3	10362.7	1392.5	10401.5
R	1392.4	10450.2	1392.4	10488.2	1392.3	10524.9	1392.9	10550.9	1393.0	10579.9
GR	1392.5	10622.0	1392.7	10670.2	1392.5	10719.8	1392.7	10767.6	1392.5	10809.1
GR	1392.4	10854.2	1392.4	10894.1	1392.3	10945.2	1392.2	11001.0	1392.1	11062.5
R	1391.6	11091.0								

DOWNSTREAM FACE OF PINNACLE PEAK ROAD BRIDGE

DOWNSTREAM FACE OF PINNACLE PEAK ROAD BRIDGE

X1	9.015	66	10015.0	10325.0	1.0	1.0	1.0	1.0	0.0	
CI	0.0	0.0	0.0	0.0	0.0	0.01	0.01			
X3	10	0.0	0.0	0.0	0.0	0.0	0.0	1392.2	1393.1	
BT	-12	10015.0	1394.5	1394.5	10015.01	1394.5	1390.0	10045.0	1394.8	1390.3
BT		10085.0	1395.2	1390.7	10125.0	1395.6	1391.1	10170.0	1395.7	1391.2
BT		10205.0	1395.7	1391.2	10245.0	1395.5	1391.0	10285.0	1395.2	1390.7
BT		10295.0	1395.1	1390.6	10324.99	1394.7	1390.2	10325.0	1394.7	1394.7
GR	1395.6	8767.9	1395.5	8820.9	1395.4	8873.6	1395.4	8891.5	1395.4	8939.2
GR	1395.2	8990.7	1395.4	9052.6	1395.4	9113.7	1395.3	9176.6	1395.1	9229.3
GR	1395.1	9287.4	1394.9	9334.4	1394.8	9385.2	1394.7	9450.4	1394.8	9489.6
GR	1394.5	9524.7	1394.1	9576.1	1394.0	9617.7	1393.7	9656.6	1393.2	9693.1
GR	1393.1	9730.9	1392.4	9761.0	1392.2	9821.0	1392.4	9881.0	1393.59	9956.0
GR	1394.4	10006.0	1394.5	10015.0	1390.0	10015.01	1374.94	10045.0	1374.94	10085.0
GR	1374.9	10088.74	1390.8	10088.75	1390.8	10093.75	1374.94	10093.76	1374.94	10125.0
GR	1374.9	10167.49	1391.2	10167.5	1391.2	10170.0	1391.2	10172.5	1374.94	10172.51
GR	1374.9	10205.0	1374.94	10245.0	1374.94	10246.24	1391.0	10246.25	1391.0	10251.25
GR	1374.9	10251.26	1374.94	10285.0	1374.94	10295.0	1390.2	10324.99	1394.7	10325.0
GR	1394.8	10326.0	1393.95	10376.0	1393.27	10453.0	1393.07	10520.0	1393.1	10541.9
GR	1392.9	10588.6	1392.7	10636.9	1392.7	10681.4	1392.5	10740.6	1392.6	10796.6
GR	1392.6	10855.7	1392.4	10922.7	1392.3	10988.0	1392.3	11032.1	1392.1	11079.5
GR	1392.1	11085.0								

UPSTREAM FACE OF PINNACLE PEAK ROAD BRIDGE

UPSTREAM FACE OF PINNACLE PEAK ROAD BRIDGE

X1	9.029	66	10015.0	10325.0	80.2	80.2	80.2	1.0	0.0	
CI	0.0	0.0	0.0	0.0	0.0	0.01	0.01			
X3	10	0.0	0.0	0.0	0.0	0.0	0.0	1392.2	1393.1	
BT	-16	10015.0	1394.5	1394.5	10015.01	1394.5	1390.0	10045.0	1394.8	1390.3
BT		10085.0	1395.2	1390.7	10088.75	1395.2	1390.8	10093.75	1395.3	1390.8
BT		10125.0	1395.6	1391.1	10170.0	1395.7	1391.2	10205.0	1395.7	1391.2
BT		10245.0	1395.5	1391.0	10246.25	1395.5	1391.0	10251.25	1395.5	1391.0
BT		10285.0	1395.2	1390.7	10295.0	1395.1	1390.6	10324.99	1394.7	1390.2
BT		10325.0	1394.7	1394.7						
GR	1395.6	8767.9	1395.5	8820.9	1395.4	8873.6	1395.4	8891.5	1395.4	8939.2
GR	1395.2	8990.7	1395.4	9052.6	1395.4	9113.7	1395.3	9176.6	1395.1	9229.3
GR	1395.1	9287.4	1394.9	9334.4	1394.8	9385.2	1394.7	9450.4	1394.8	9489.6
GR	1394.5	9524.7	1394.1	9576.1	1394.0	9617.7	1393.7	9656.6	1393.2	9693.1
GR	1393.1	9730.9	1392.4	9761.0	1392.2	9821.0	1392.4	9881.0	1393.59	9956.0
GR	1394.4	10006.0	1394.5	10015.0	1390.0	10015.01	1375.14	10045.0	1375.14	10085.0
GR	1375.1	10088.74	1390.8	10088.75	1390.8	10093.75	1375.14	10093.76	1375.14	10125.0
GR	1375.1	10167.49	1391.2	10167.5	1391.2	10170.0	1391.2	10172.5	1375.14	10172.51
GR	1375.1	10205.0	1375.14	10245.0	1375.14	10246.24	1391.0	10246.25	1391.0	10251.25
GR	1375.1	10251.26	1375.14	10285.0	1375.14	10295.0	1390.2	10324.99	1394.7	10325.0

```
GR   1394.8    10326.0    1393.95    10376.0    1393.27    10453.0    1393.07    10520.0    1393.1    10541.9
GR   1392.9    10588.6    1392.7     10636.9    1392.7     10681.4    1392.5     10740.6    1392.6    10796.6
GR   1392.6    10855.7    1392.4     10922.7    1392.3     10988.0    1392.3     11032.1    1392.1    11079.5
GR   1392.1    11085.0
UPSTREAM OF PINNACLE PEAK ROAD BRIDGE

        UPSTREAM OF PINNACLE PEAK ROAD BRIDGE
X1    9.030        84     9755.8    10316.5       1.0        1.0        1.0        1.0       0.0
CI   10165.   1375.14      1.035        2.0       2.0      250.0       0.01
X3        0       0.0        0.0    10000.0    1392.5        0.0        0.0        0.0       0.0
GR   1392.7     8771.1    1392.7     8807.9    1392.8     8845.4    1392.7     8874.8    1393.0    8906.8
GR   1393.2     8945.5    1392.7     8980.7    1392.8     9013.1    1392.9     9045.4    1393.4    9080.9
GR   1393.5     9124.8    1393.5     9158.2    1393.7     9191.8    1393.7     9231.1    1393.7    9251.9
GR   1393.9     9279.9    1393.9     9313.3    1394.2     9344.5    1394.2     9388.5    1394.6    9446.5
GR   1395.1     9476.6    1395.1     9505.8    1394.8     9533.7    1394.5     9565.5    1394.1    9602.9
GR   1393.7     9623.0    1393.3     9639.0    1393.3     9654.7    1393.3     9685.0    1393.0    9710.2
GR   1392.8     9733.0    1393.2     9735.2    1393.0     9743.9    1392.4     9755.8    1392.0    9778.0
GR   1391.3     9795.9    1391.3     9817.8    1390.9     9841.7    1390.7     9866.1    1390.7    9889.9
GR   1390.6     9915.1    1390.5     9934.1    1390.6     9959.5    1390.4     9978.8    1389.5   10000.0
GR   1389.5    10022.9    1389.7    10055.8    1389.9    10080.8    1390.1    10109.9    1390.4   10139.2
GR   1390.8    10163.8    1391.4    10188.8    1391.4    10207.6    1391.3    10228.1    1391.4   10249.8
GR   1391.8    10271.8    1391.9    10295.4    1392.0    10316.5    1392.0    10347.6    1392.1   10382.7
GR   1392.2    10410.8    1392.2    10436.7    1392.6    10457.7    1393.1    10475.6    1392.4   10488.1
GR   1393.1    10497.3    1394.6    10516.8    1394.8    10523.4    1394.9    10551.7    1395.0   10591.7
GR   1395.0    10651.4    1395.0    10685.9    1395.3    10743.8    1395.3    10796.2    1395.3   10848.2
GR   1395.4    10896.5    1395.2    10935.1    1395.0    10947.2    1394.3    10964.9    1392.9   10976.3
GR   1392.6    10984.4    1391.8    10985.2    1392.0    10999.1    1392.1    11015.0

NC       0.0       0.0        0.0        0.1       0.3
X1     9.064        92     9688.0    10434.5     150.0      240.0      180.0   0.994521       0.0
CI    10185.   1375.66    208.035        2.0       2.0      250.0       0.01
X2       0.0       0.0          0        0.0       0.0        0.0          0        0.0       0.0
X3         0       0.0        0.0     9853.9    1397.0        0.0        0.0        0.0       0.0
GR   1393.3     8753.5    1393.1     8773.6    1393.8     8803.7    1394.7     8838.7    1394.6    8865.9
GR   1394.9     8888.2    1394.4     8904.3    1394.2     8924.4    1393.0     8933.7    1392.8    8943.1
GR   1394.7     8965.1    1394.8     8974.1    1393.7     8986.9    1393.5     9002.9    1393.5    9025.2
GR   1393.1     9033.9    1394.0     9041.3    1393.1     9056.5    1394.5     9065.2    1394.2    9074.1
GR   1394.0     9096.3    1393.9     9128.6    1394.0     9149.8    1394.1     9175.5    1394.4    9207.1
GR   1394.4     9227.2    1394.3     9244.3    1394.3     9267.8    1394.2     9291.9    1394.4    9316.3
GR   1394.6     9350.1    1394.6     9382.0    1394.8     9425.2    1394.7     9460.2    1394.9    9491.4
GR   1394.8     9523.0    1395.1     9549.4    1395.1     9580.9    1394.6     9616.2    1394.5    9647.0
GR   1394.7     9670.0    1394.7     9688.0    1393.4     9698.1    1393.4     9728.3    1393.1    9744.3
GR   1392.3     9766.5    1392.2     9788.6    1392.3     9810.4    1392.1     9834.2    1392.2    9858.2
GR   1392.4     9889.8    1392.0     9917.3    1391.8     9931.4    1391.9     9954.0    1392.2    9976.0
GR   1392.2     9986.6    1390.8    10000.0    1391.3    10006.5    1392.1    10013.7    1392.4   10040.5
GR   1392.1    10059.2    1392.5    10084.7    1392.8    10105.5    1392.2    10133.2    1392.3   10156.8
GR   1392.4    10182.9    1392.7    10210.4    1393.0    10233.7    1393.1    10260.0    1393.1   10289.7
GR   1393.1    10323.1    1393.2    10354.5    1393.1    10385.8    1393.3    10411.9    1393.7   10434.5
GR   1398.1    10443.6    1399.7    10468.9    1397.9    10488.7    1398.0    10527.0    1397.6   10553.5
GR   1397.1    10589.6    1396.9    10633.3    1397.1    10663.3    1397.1    10693.0    1396.8   10723.1
GR   1396.4    10744.2    1396.3    10777.5    1397.0    10795.3    1397.3    10821.4    1397.1   10857.2
GR   1397.2    10880.9    1397.2    10895.2
```

```
NC      0.0       0.0       0.0       0.1       0.3
 BOTTOM OF DROP STRUCTURE
       BOTTOM OF DROP STRUCTURE
X1    9.087        92    9688.0   10434.5     150.0     240.0     180.0  0.994521       0.5
CI   10185.   1375.86    80.030       2.0       2.0     250.0      0.01
X2      0.0       0.0         0       0.0       0.0       0.0         0       0.0       0.0
X3        0       0.0       0.0    9779.3    1396.7       0.0       0.0       0.0       0.0
GR   1393.3    8753.5    1393.1    8773.6    1393.8    8803.7    1394.7    8838.7    1394.6    8865.9
GR   1394.9    8888.2    1394.4    8904.3    1394.2    8924.4    1393.0    8933.7    1392.8    8943.1
GR   1394.7    8965.1    1394.8    8974.1    1393.7    8986.9    1393.5    9002.9    1393.5    9025.2
GR   1393.1    9033.9    1394.0    9041.3    1393.1    9056.5    1394.5    9065.2    1394.2    9074.1
GR   1394.0    9096.3    1393.9    9128.6    1394.0    9149.8    1394.1    9175.5    1394.4    9207.1
GR   1394.4    9227.2    1394.3    9244.3    1394.3    9267.8    1394.2    9291.9    1394.4    9316.3
GR   1394.6    9350.1    1394.6    9382.0    1394.8    9425.2    1394.7    9460.2    1394.9    9491.4
GR   1394.8    9523.0    1395.1    9549.4    1395.1    9580.9    1394.6    9616.2    1394.5    9647.0
GR   1394.7    9670.0    1394.7    9688.0    1393.4    9698.1    1393.4    9728.3    1393.1    9744.3
GR   1392.3    9766.5    1392.2    9788.6    1392.3    9810.4    1392.1    9834.2    1392.2    9858.2
GR   1392.4    9889.8    1392.0    9917.3    1391.8    9931.4    1391.9    9954.0    1392.2    9976.0
GR   1392.2    9986.6    1390.8   10000.0    1391.3   10006.5    1392.1   10013.7    1392.4   10040.5
GR   1392.1   10059.2    1392.5   10084.7    1392.8   10105.5    1392.2   10133.2    1392.3   10156.8
GR   1392.4   10182.9    1392.7   10210.4    1393.0   10233.7    1393.1   10260.0    1393.1   10289.7
GR   1393.1   10323.1    1393.2   10354.5    1393.1   10385.8    1393.3   10411.9    1393.7   10434.5
GR   1398.1   10443.6    1399.7   10468.9    1397.9   10488.7    1398.0   10527.0    1397.6   10553.5
GR   1397.1   10589.6    1396.9   10633.3    1397.1   10663.3    1397.1   10693.0    1396.8   10723.1
GR   1396.4   10744.2    1396.3   10777.5    1397.0   10795.3    1397.3   10821.4    1397.1   10857.2
GR   1397.2   10880.9    1397.2   10895.2

NC    0.040     0.040     0.035       0.1       0.3
 TOP OF DROP STRUCTURE
       TOP OF DROP STRUCTURE
X1    9.088        80   10025.0   10340.5     140.0     240.0     190.0  0.984807      -0.5
CI   10180.   1390.86    50.030       2.0       2.0     310.0      0.01
X2      0.0       0.0         0       0.0       0.0       0.0         0       0.0       0.0        15
X3        0       0.0       0.0    9800.2    1397.0   10412.0       0.0       0.0       0.0
GR   1395.4    8842.4    1395.2    8862.1    1395.1    8887.2    1395.0    8916.1    1395.1    8944.9
GR   1395.0    8977.6    1393.2    8998.5    1393.3    9007.7    1395.0    9016.2    1393.7    9025.9
GR   1394.7    9030.8    1394.5    9046.1    1393.6    9052.7    1395.2    9072.6    1393.8    9083.0
GR   1395.0    9107.9    1394.9    9138.3    1394.5    9157.2    1395.1    9166.5    1394.8    9176.8
GR   1395.0    9203.4    1395.5    9247.7    1395.9    9271.4    1395.3    9309.1    1395.7    9341.5
GR   1395.2    9348.9    1395.4    9368.4    1395.6    9398.7    1395.8    9433.3    1395.6    9467.5
GR   1395.7    9504.8    1395.7    9535.0    1395.9    9575.7    1396.2    9607.5    1396.2    9639.3
GR   1395.6    9661.0    1396.0    9669.2    1396.0    9681.4    1396.0    9688.5    1396.0    9693.1
GR   1396.0    9694.7    1395.7    9698.8    1396.1    9710.9    1394.4    9716.8    1394.1    9740.9
GR   1393.3    9759.7    1392.4    9791.4    1397.5    9815.0    1395.7    9823.6    1391.4   10025.0
GR   1392.4   10034.9    1393.0   10080.0    1392.4   10105.8    1392.6   10131.1    1392.8   10158.2
GR   1393.1   10176.6    1392.6   10184.3    1393.0   10217.9    1393.2   10246.6    1393.6   10273.0
GR   1393.3   10309.3    1393.5   10340.5    1393.0   10380.5    1393.5   10407.3    1398.6   10418.9
GR   1400.4   10436.2    1400.4   10442.6    1398.7   10460.6    1398.5   10489.3    1398.6   10536.4
GR   1398.6   10573.1    1398.2   10633.3    1398.2   10679.4    1398.4   10702.7    1397.8   10724.9
GR   1397.9   10763.3    1398.3   10789.3    1398.2   10809.5    1398.7   10833.8    1399.2   10854.6
```

NC	0.055	0.050	0.040	0.1	0.3					
X1	9.100	88	9740.9	10418.9	140.0	240.0	190.0	0.984807	0.0	
CI	10170.	1392.5	100.035	47.619	2.0	310.0	0.01			
X2	0.0	0.0	0	0.0	0.0	0.0	0	0.0	0.0	15
X3	0	0.0	0.0	9667.3	1397.4	10412.0	0.0	0.0	0.0	
GR	1395.4	8842.4	1395.2	8862.1	1395.1	8887.2	1395.0	8916.1	1395.1	8944.9
GR	1395.0	8977.6	1393.2	8998.5	1393.3	9007.7	1395.0	9016.2	1393.7	9025.9
GR	1394.7	9030.8	1394.5	9046.1	1393.6	9052.7	1395.2	9072.6	1393.8	9083.0
GR	1395.0	9107.9	1394.9	9138.3	1394.5	9157.2	1395.1	9166.5	1394.8	9176.8
GR	1395.0	9203.4	1395.5	9247.7	1395.9	9271.4	1395.3	9309.1	1395.7	9341.5
GR	1395.2	9348.9	1395.4	9368.4	1395.6	9398.7	1395.8	9433.3	1395.6	9467.5
GR	1395.7	9504.8	1395.7	9535.0	1395.9	9575.7	1396.2	9607.5	1396.2	9639.3
GR	1395.6	9661.0	1396.0	9669.2	1396.0	9681.4	1396.0	9688.5	1396.0	9693.1
GR	1396.0	9694.7	1395.7	9698.8	1396.1	9710.9	1394.4	9716.8	1394.1	9740.9
GR	1393.3	9759.7	1392.4	9791.4	1391.9	9820.9	1393.1	9839.8	1393.0	9868.1
GR	1392.9	9899.7	1393.0	9941.3	1393.0	9964.5	1393.0	9989.1	1393.0	9995.5
GR	1393.0	10000.0	1393.0	10007.3	1393.1	10012.7	1392.4	10034.9	1393.0	10080.0
GR	1392.4	10105.8	1392.6	10131.1	1392.8	10158.2	1393.1	10176.6	1392.6	10184.3
GR	1393.0	10217.9	1393.2	10246.6	1393.6	10273.0	1393.3	10309.3	1393.5	10340.5
GR	1393.0	10380.5	1393.5	10407.3	1398.6	10418.9	1400.4	10436.2	1400.4	10442.6
GR	1398.7	10460.6	1398.5	10489.3	1398.6	10536.4	1398.6	10573.1	1398.2	10633.3
GR	1398.2	10679.4	1398.4	10702.7	1397.8	10724.9	1397.9	10763.3	1398.3	10789.3
GR	1398.2	10809.5	1398.7	10833.8	1399.2	10854.6				
X1	9.200	89	9861.7	10309.0	375.0	480.0	478.0	1.0	0.0	
CI	0.0	0.0	0.0	0.0	0.0	0.01	0.01			
X2	0.0	0.0	0	0.0	0.0	0.0	0	0.0	0.0	15
X3	0	0.0	0.0	9280.0	1399.0	10330.3	0.0	0.0	0.0	
GR	1395.3	8786.4	1396.3	8817.5	1397.9	8843.2	1397.9	8873.9	1397.7	8898.4
GR	1398.0	8924.9	1398.5	8948.0	1398.5	8959.7	1398.2	8981.1	1397.8	9002.6
GR	1396.3	9009.4	1396.8	9029.8	1397.0	9043.1	1395.5	9050.3	1395.9	9055.1
GR	1397.6	9060.9	1395.8	9071.2	1397.5	9088.8	1396.7	9106.9	1397.5	9132.6
GR	1397.7	9147.6	1396.6	9158.2	1397.9	9179.6	1398.1	9197.7	1397.0	9215.5
GR	1397.8	9223.0	1397.3	9246.7	1398.0	9275.2	1398.0	9281.2	1398.0	9287.9
GR	1396.1	9308.6	1395.1	9315.7	1394.9	9341.6	1397.0	9366.7	1397.6	9383.5
GR	1396.4	9398.8	1398.5	9419.0	1398.8	9441.4	1399.0	9477.7	1399.4	9504.2
GR	1399.3	9525.7	1399.0	9557.5	1399.0	9579.7	1399.0	9601.3	1399.3	9628.7
GR	1399.1	9664.3	1398.7	9688.0	1398.7	9710.8	1398.5	9735.7	1398.7	9754.4
GR	1398.8	9774.8	1398.8	9803.9	1398.2	9831.8	1400.0	9840.1	1398.5	9856.6
GR	1398.9	9861.7	1396.1	9871.7	1393.8	9894.1	1392.9	9926.8	1392.3	9938.6
GR	1392.0	9959.2	1391.6	9987.6	1391.2	9996.4	1392.9	10000.0	1394.2	10004.7
GR	1394.2	10028.3	1394.0	10048.6	1394.0	10074.6	1394.3	10096.7	1394.5	10103.4
GR	1393.6	10108.3	1394.4	10113.4	1394.1	10139.2	1394.5	10152.3	1393.8	10157.3
GR	1393.9	10177.9	1394.0	10191.1	1393.2	10196.4	1394.3	10206.7	1393.6	10217.4
GR	1393.4	10254.1	1393.5	10284.9	1393.9	10296.6	1399.7	10309.0	1401.9	10330.3
GR	1400.9	10343.4	1401.5	10347.7	1400.3	10350.9	1400.3	10356.7		
NC	0.050	0.050	0.045	0.1	0.3					

CITY OF PHOENIX LANDFILL

CITY OF PHOENIX LANDFILL

X1	9.282	94	9809.6	10043.5	420.0	440.0	443.0	1.0	0.0	
X3	0	0.0	0.0	9257.8	0.0	10226.6	0.0	0.0	0.0	
GR	1421.9	9146.1	1421.4	9167.3	1419.5	9190.3	1416.4	9213.6	1413.0	9237.7
GR	1409.5	9257.8	1405.1	9277.9	1403.0	9293.9	1403.0	9300.0	1400.5	9314.7
GR	1400.4	9330.9	1401.4	9332.8	1400.5	9336.3	1400.5	9364.3	1400.7	9376.2
GR	1401.4	9379.5	1400.0	9397.0	1402.0	9405.9	1399.4	9421.2	1399.2	9434.3
GR	1400.8	9438.6	1401.5	9448.4	1399.2	9457.5	1398.9	9465.6	1401.7	9473.4
GR	1401.7	9479.0	1400.3	9488.1	1401.3	9497.7	1400.6	9502.5	1401.5	9515.5
GR	1401.0	9536.9	1401.7	9548.5	1401.2	9568.3	1401.0	9596.0	1401.5	9618.7
GR	1400.6	9632.6	1401.2	9643.7	1400.8	9663.5	1401.0	9682.8	1401.3	9698.8
GR	1403.0	9709.9	1401.2	9720.9	1401.0	9740.7	1401.1	9765.2	1400.9	9783.5
GR	1401.5	9800.8	1400.9	9809.6	1395.8	9828.0	1393.5	9838.9	1394.9	9852.5
GR	1394.0	9871.8	1395.3	9892.2	1396.3	9907.5	1394.8	9930.8	1393.5	9951.8
GR	1393.9	9955.3	1392.6	9959.5	1393.5	9968.3	1392.8	9971.6	1393.1	9990.1
GR	1392.5	10000.0	1392.2	10008.2	1391.9	10011.9	1393.4	10016.7	1394.7	10031.4
GR	1394.2	10040.6	1397.4	10043.5	1398.1	10059.4	1394.1	10077.1	1393.1	10096.6
GR	1392.8	10125.1	1392.4	10135.1	1393.0	10136.7	1393.4	10151.9	1393.8	10170.7
GR	1394.3	10193.3	1402.3	10209.3	1403.6	10226.6	1402.7	10246.8	1402.1	10263.3
GR	1402.0	10295.5	1401.9	10327.7	1402.2	10346.5	1402.5	10379.7	1402.5	10381.1
GR	1402.5	10407.3	1402.5	10440.1	1402.3	10466.1	1402.2	10494.9	1402.5	10525.5
GR	1402.3	10560.6	1402.3	10588.4	1402.4	10613.2	1402.4	10636.2		
X1	9.400	92	9907.5	10306.5	450.0	580.0	623.0	1.0	0.0	
X3	0	0.0	0.0	9907.5	0.0	10498.1	0.0	0.0	0.0	
GR	1458.7	9588.2	1458.5	9617.4	1444.4	9638.7	1441.1	9665.9	1437.6	9687.1
GR	1432.5	9715.2	1426.8	9741.1	1423.0	9761.7	1418.5	9786.4	1412.0	9818.5
GR	1410.9	9824.4	1409.2	9828.1	1408.3	9840.0	1408.6	9845.8	1407.0	9849.9
GR	1406.6	9854.3	1409.0	9861.6	1409.3	9880.3	1402.9	9907.5	1399.7	9922.0
GR	1398.9	9955.3	1400.8	9961.7	1398.0	9968.2	1397.8	9996.3	1397.8	10000.0
GR	1397.8	10009.6	1396.9	10023.1	1398.6	10051.0	1398.3	10074.5	1398.3	10082.5
GR	1396.0	10089.6	1398.0	10104.3	1397.5	10113.0	1398.4	10119.7	1397.1	10126.7
GR	1396.8	10156.0	1396.8	10175.8	1397.8	10184.3	1395.8	10213.5	1397.0	10231.2
GR	1395.6	10254.5	1395.5	10265.8	1400.6	10281.8	1402.4	10306.5	1403.1	10331.5
GR	1402.8	10359.2	1403.0	10367.6	1403.0	10395.2	1403.1	10421.7	1403.0	10451.2
GR	1403.4	10472.4	1403.9	10498.1	1403.1	10538.9	1403.0	10568.0	1403.0	10598.8
GR	1402.8	10631.0	1402.8	10662.3	1402.8	10687.4	1402.6	10718.2	1402.8	10746.5
GR	1402.6	10771.6	1405.9	10782.2	1402.4	10792.1	1402.6	10811.3	1402.5	10835.0
GR	1402.8	10861.8	1406.0	10890.6	1408.7	10899.7	1406.2	10919.8	1406.0	10936.6
GR	1406.2	10975.5	1406.2	10995.2	1406.2	11018.5	1405.6	11044.7	1406.3	11059.0
GR	1406.3	11082.7	1406.4	11113.5	1405.8	11144.7	1406.2	11175.2	1406.1	11221.7
GR	1405.9	11252.9	1406.1	11279.7	1406.2	11306.1	1406.4	11344.0	1406.4	11380.4
GR	1406.5	11426.7	1406.4	11456.9	1406.4	11482.3	1406.7	11508.8	1407.2	11531.0
GR	1407.9	11564.8	1407.8	11582.5						
X1	9.488	92	9946.9	10124.9	420.0	400.0	464.6	1.0	0.0	
X3	0	0.0	0.0	9946.9	1410.5	10544.6	0.0	0.0	0.0	
GR	1422.8	9823.4	1416.8	9844.4	1412.1	9859.8	1411.5	9873.7	1412.5	9875.1
GR	1410.8	9880.2	1412.1	9886.7	1407.1	9895.1	1405.9	9899.2	1405.6	9906.6
GR	1402.3	9913.0	1410.2	9927.4	1410.5	9946.9	1403.5	9974.7	1399.9	9988.5
GR	1399.9	10000.0	1400.3	10017.5	1400.9	10041.5	1401.2	10061.3	1401.3	10071.2
GR	1402.9	10073.0	1402.7	10090.6	1404.3	10109.9	1405.2	10124.9	1404.4	10141.2
GR	1402.7	10145.0	1402.5	10158.4	1401.9	10176.5	1401.2	10202.7	1401.1	10222.9
GR	1400.9	10250.7	1400.6	10274.6	1400.6	10293.8	1400.7	10306.7	1400.3	10325.7

GR	1400.2	10336.2	1402.6	10362.6	1403.5	10392.2	1404.8	10400.3	1403.4	10418.4
GR	1402.5	10430.9	1405.4	10441.0	1405.2	10463.0	1405.2	10484.0	1405.4	10493.1
GR	1404.6	10501.2	1404.6	10516.8	1404.9	10544.6	1405.3	10575.9	1405.5	10603.5
GR	1405.5	10627.3	1405.5	10649.3	1406.3	10683.9	1406.6	10719.4	1406.7	10763.8
GR	1406.5	10800.2	1406.5	10843.1	1406.0	10881.5	1405.5	10902.5	1405.3	10921.8
GR	1405.2	10950.5	1404.8	10968.6	1405.5	10980.2	1405.5	11001.5	1405.6	11028.3
GR	1406.1	11062.4	1407.1	11086.1	1407.9	11108.3	1408.1	11128.7	1407.9	11153.0
GR	1408.7	11166.1	1408.6	11186.9	1408.1	11206.4	1407.8	11234.7	1408.1	11243.8
GR	1407.1	11250.6	1408.9	11258.4	1408.3	11264.7	1409.1	11297.3	1409.7	11313.8
GR	1409.6	11339.1	1409.4	11357.3	1409.1	11377.6	1411.8	11388.4	1409.1	11396.7
GR	1408.9	11410.5	1411.3	11421.5	1410.3	11425.0	1411.8	11431.4	1410.7	11436.3
GR	1411.9	11441.5	1410.6	11444.3						
X1	9.560	70	9985.7	10066.4	385.0	365.0	380.2	1.0	0.0	
GR	1425.8	9823.6	1425.6	9829.0	1423.7	9832.4	1422.8	9840.0	1422.8	9843.3
GR	1423.9	9847.3	1422.7	9852.2	1421.3	9856.6	1424.3	9863.6	1419.6	9871.8
GR	1417.0	9878.5	1416.2	9889.6	1415.0	9895.5	1413.6	9902.4	1413.7	9911.6
GR	1413.4	9922.5	1413.1	9929.4	1412.2	9931.0	1412.5	9938.1	1412.5	9947.2
GR	1410.1	9956.6	1402.7	9985.7	1401.2	9993.0	1401.4	10000.0	1402.1	10024.4
GR	1402.7	10047.2	1403.4	10066.4	1403.2	10069.7	1402.8	10071.3	1403.4	10090.7
GR	1403.9	10107.9	1403.6	10137.5	1403.4	10164.5	1402.7	10193.3	1402.4	10215.0
GR	1402.5	10231.7	1402.4	10245.5	1403.0	10252.3	1403.2	10261.3	1403.5	10268.9
GR	1403.4	10275.0	1403.0	10282.2	1403.3	10289.5	1401.7	10294.6	1402.2	10307.8
GR	1401.9	10322.0	1402.3	10336.7	1402.4	10344.3	1404.1	10347.2	1403.2	10350.7
GR	1405.4	10354.5	1405.5	10368.7	1405.4	10376.1	1402.8	10382.0	1403.2	10386.6
GR	1403.2	10398.0	1402.8	10406.7	1402.6	10414.6	1401.8	10419.6	1401.2	10422.4
GR	1403.5	10429.7	1406.5	10443.1	1408.9	10453.5	1411.8	10464.1	1412.4	10478.9
GR	1412.0	10483.4	1414.2	10490.0	1420.7	10494.9	1421.5	10509.4	1421.8	10526.9
X1	9.655	91	9815.7	10091.7	450.0	375.0	501.6	1.0	0.0	
X3	0	0.0	0.0	9700.0	0.0	10280.0	0.0	0.0	0.0	
GR	1415.5	8386.9	1415.3	8396.9	1413.2	8420.2	1412.4	8426.5	1409.9	8435.0
GR	1409.6	8451.3	1410.8	8458.2	1413.0	8467.4	1413.5	8496.7	1413.0	8506.9
GR	1413.8	8516.0	1413.3	8522.1	1413.2	8538.7	1410.9	8548.9	1410.5	8567.5
GR	1409.9	8582.3	1408.2	8592.7	1408.1	8615.5	1407.2	8630.7	1408.7	8646.2
GR	1409.7	8666.6	1409.7	8691.5	1410.5	8715.0	1409.7	8741.7	1409.8	8773.9
GR	1409.5	8811.7	1410.7	8825.3	1409.8	8854.6	1409.2	8865.0	1409.9	8878.9
GR	1409.9	8918.2	1410.3	8950.1	1409.7	8971.6	1410.2	8986.7	1409.4	9002.5
GR	1410.4	9020.3	1409.6	9038.7	1409.3	9072.5	1410.7	9093.3	1408.5	9111.7
GR	1409.8	9131.4	1408.8	9149.9	1409.3	9195.7	1410.2	9220.6	1408.5	9237.3
GR	1408.6	9279.7	1408.4	9335.4	1407.8	9394.6	1407.7	9444.9	1407.8	9495.9
GR	1408.4	9528.4	1408.7	9560.2	1409.5	9609.1	1409.2	9646.1	1410.6	9668.6
GR	1416.2	9688.3	1423.3	9700.9	1422.7	9720.4	1416.2	9732.8	1408.2	9760.2
GR	1406.5	9769.9	1405.6	9776.0	1404.0	9786.8	1403.1	9797.6	1407.5	9815.7
GR	1406.2	9824.8	1406.2	9830.6	1402.6	9842.7	1402.7	9888.2	1403.1	9925.4
GR	1403.1	9946.9	1402.5	9971.5	1403.4	9980.3	1400.7	9987.0	1401.0	10000.0
GR	1400.8	10006.1	1402.5	10014.5	1402.3	10033.6	1400.8	10047.0	1401.4	10057.6
GR	1404.4	10071.7	1407.4	10091.7	1407.7	10107.5	1408.8	10121.7	1410.2	10140.1
GR	1410.2	10147.8	1410.9	10158.2	1411.4	10183.0	1414.8	10211.8	1421.9	10246.5
GR	1430.7	10283.3								

X1	9.713	44	9726.1	10099.3	315.0	290.0	306.2	1.0	0.0	
GR	1429.7	9583.1	1430.9	9598.8	1429.2	9612.6	1426.7	9619.9	1419.0	9631.7
GR	1419.3	9649.0	1418.8	9666.9	1421.5	9674.3	1410.3	9698.4	1409.1	9713.1
GR	1408.8	9726.1	1407.1	9743.8	1405.6	9769.2	1403.7	9798.1	1403.4	9809.3
GR	1402.9	9820.6	1402.9	9849.4	1403.5	9863.6	1402.9	9887.6	1403.0	9912.8
GR	1402.5	9938.4	1403.1	9965.9	1402.1	9972.5	1401.6	9983.6	1402.4	9989.1
GR	1402.3	10000.0	1403.1	10017.7	1403.3	10029.1	1402.6	10042.8	1404.0	10054.2
GR	1406.6	10071.1	1410.6	10089.4	1412.6	10099.3	1412.4	10108.7	1412.2	10122.1
GR	1412.1	10135.2	1414.1	10158.1	1418.6	10186.0	1425.8	10216.2	1431.8	10249.0
GR	1437.9	10285.5	1442.2	10335.1	1444.2	10375.2	1444.9	10385.5		
NC	0.050	0.050	0.040	0.1	0.3					
X1	9.800	38	9789.7	10124.4	475.0	460.0	459.4	1.0	0.0	
GR	1442.0	9641.4	1430.7	9680.0	1425.9	9698.7	1424.7	9706.0	1423.8	9708.3
GR	1423.6	9721.5	1423.8	9737.0	1426.1	9744.0	1418.9	9759.4	1412.2	9789.7
GR	1408.5	9819.7	1404.4	9858.4	1403.9	9887.7	1404.0	9913.5	1403.8	9935.5
GR	1403.1	9964.8	1403.9	9990.1	1402.7	10000.0	1403.7	10019.8	1404.9	10037.6
GR	1406.0	10045.8	1405.5	10054.2	1407.1	10061.5	1407.1	10075.8	1408.9	10096.5
GR	1410.4	10124.4	1413.3	10153.4	1416.3	10183.4	1415.9	10200.9	1416.2	10209.9
GR	1417.1	10224.1	1420.7	10248.2	1426.8	10283.2	1439.7	10332.9	1445.6	10368.4
GR	1449.0	10397.4	1448.8	10436.6	1449.3	10465.4				

SECNO	DEPTH	CWSEL	CRIWS	WSELK	EG	HV	HL	OLOSS	L-BANK ELEV
Q	QLOB	QCH	QROB	ALOB	ACH	AROB	VOL	TWA	R-BANK ELEV
TIME	VLOB	VCH	VROB	XNL	XNCH	XNR	WTN	ELMIN	SSTA
SLOPE	XLOBL	XLCH	XLOBR	ITRIAL	IDC	ICONT	CORAR	TOPWID	ENDST

FLOW DISTRIBUTION FOR SECNO= 9.09 CWSEL= 1399.31

STA=	8842.	9028.	9242.	9424.	9627.	9809.	10004.	10319.	10357.	10406.
PER Q=	3.1	3.5	3.0	3.4	3.1	17.0	60.3	3.6	2.9	
AREA=	428.4	493.2	422.0	468.4	426.7	1220.1	2652.2	250.9	223.0	
VEL=	4.3	4.4	4.4	4.4	4.4	8.5	13.8	8.8	7.9	
DEPTH=	2.3	2.3	2.3	2.3	2.4	6.2	8.4	6.6	4.5	

FLOW DISTRIBUTION FOR SECNO= 9.10 CWSEL= 1400.47

STA=	8842.	9023.	9198.	9390.	9565.	9727.	10395.	10412.
PER Q=	3.1	3.0	3.3	3.0	4.3	83.2	.0	
AREA=	555.9	537.7	591.6	536.2	632.0	5125.6	16.6	
VEL=	3.5	3.6	3.6	3.6	4.3	10.3	1.8	
DEPTH=	3.1	3.1	3.1	3.1	3.9	7.7	1.0	

FLOW DISTRIBUTION FOR SECNO= 9.20 CWSEL= 1402.11

STA=	8786.	8948.	9107.	9275.	9342.	9419.	9580.	9736.	9862.	10309.	10330.
PER Q=	3.2	3.2	3.4	3.8	3.8	3.2	3.2	2.9	73.1	.1	
AREA=	503.1	494.7	523.9	382.7	408.0	494.2	493.6	421.2	3732.1	28.0	
VEL=	4.5	4.6	4.6	7.1	6.5	4.6	4.6	4.8	13.8	2.8	
DEPTH=	3.1	3.1	3.1	5.8	5.3	3.1	3.2	3.3	8.3	1.3	

THIS RUN EXECUTED 15JUN94 11:20:56

****
HEC-2 WATER SURFACE PROFILES

Version 4.6.2; May 1991
****

NOTE- ASTERISK (*) AT LEFT OF CROSS-SECTION NUMBER INDICATES MESSAGE IN SUMMARY OF ERRORS LIST

500-YR FLOW

SUMMARY PRINTOUT

	SECNO	Q	CWSEL	DEPTH	ELMIN	EG	CRIWS	VCH	10*KS	XLCH	SSTA	TOPWID	ENDST
	8.566	60631.30	1376.95	10.65	1366.30	1379.21	.00	12.04	120.50	.00	9022.69	985.21	10030.51
*	8.680	60631.30	1381.53	12.43	1369.10	1382.51	.00	7.96	29.50	602.00	9098.56	979.86	10091.54
	8.815	60631.30	1383.36	11.36	1372.00	1385.74	.00	12.38	55.29	713.00	9670.85	630.09	10300.94
*	8.907	60631.30	1385.14	11.44	1373.70	1390.13	1385.14	17.91	84.53	480.00	9927.28	341.56	10268.84
*	8.957	60631.30	1389.49	15.16	1374.33	1392.06	.00	12.88	31.52	250.00	9952.39	371.27	10323.66
	9.014	60631.30	1390.00	15.06	1374.94	1393.21	.00	14.37	36.38	245.00	10024.88	310.25	10335.12
	9.015	60631.30	1389.75	14.85	1374.90	1393.47	.00	15.48	61.26	1.00	10015.51	293.59	10324.11
	9.029	60631.30	1390.76	15.66	1375.10	1394.12	.00	14.72	75.14	80.20	10015.01	294.98	10324.99
*	9.030	60631.30	1391.85	16.71	1375.14	1394.38	.00	12.75	26.01	1.00	10000.00	326.91	10988.64
	9.064	60631.30	1392.73	17.07	1375.66	1395.04	.00	12.19	37.66	208.00	9853.90	482.40	10336.30
	9.087	60631.30	1393.04	17.18	1375.86	1395.33	.00	12.14	32.92	80.00	9779.30	557.20	10336.50
*	9.088	60631.30	1399.31	8.45	1390.86	1401.33	1399.31	13.79	45.21	50.00	8842.40	1563.99	10406.39
	9.100	63339.70	1400.47	8.57	1391.90	1401.87	.00	10.28	38.81	100.00	8842.40	1569.60	10412.00
	9.200	70550.00	1402.11	10.91	1391.20	1404.39	1402.01	13.82	63.16	478.00	8786.40	1543.90	10330.30
	9.282	70550.00	1405.10	13.20	1391.90	1407.42	.00	13.77	76.02	443.00	9277.93	948.67	10226.60
	9.400	70550.00	1409.21	13.71	1395.50	1411.82	.00	13.56	68.76	623.00	9907.50	590.60	10498.10
	9.488	70550.00	1412.71	12.81	1399.90	1414.82	.00	12.47	65.88	464.60	9857.77	686.83	10544.60

SECNO	Q	CWSEL	DEPTH	ELMIN	EG	CRIWS	VCH	10*KS	XLCH	SSTA	TOPWID	ENDST
9.560	70550.00	1414.94	13.74	1401.20	1417.15	.00	13.80	58.99	380.20	9895.76	594.80	10490.56
9.655	70550.00	1417.06	16.36	1400.70	1419.88	.00	14.34	56.06	501.60	9731.17	491.64	10222.82
9.713	70550.00	1419.29	17.69	1401.60	1421.25	.00	11.54	32.67	306.20	9631.25	546.13	10188.90
9.800	70550.00	1420.39	17.69	1402.70	1423.05	.00	13.45	36.54	459.40	9756.21	489.94	10246.14

500-YR FLOW

SUMMARY PRINTOUT TABLE 150

	SECNO	XLCH	ELTRD	ELLC	ELMIN	Q	CWSEL	CRIWS	EG	10*KS	VCH	AREA	.01K
	8.566	.00	.00	.00	1366.30	60631.30	1376.95	.00	1379.21	120.50	12.04	5036.64	5523.46
*	8.680	602.00	.00	.00	1369.10	60631.30	1381.53	.00	1382.51	29.50	7.96	7628.68	11163.68
	8.815	713.00	.00	.00	1372.00	60631.30	1383.36	.00	1385.74	55.29	12.38	4898.49	8153.91
*	8.907	480.00	.00	.00	1373.70	60631.30	1385.14	1385.14	1390.13	84.53	17.91	3385.06	6594.70
*	8.957	250.00	.00	.00	1374.33	60631.30	1389.49	.00	1392.06	31.52	12.88	4708.78	10800.25
	9.014	245.00	.00	.00	1374.94	60631.30	1390.00	.00	1393.21	36.38	14.37	4219.00	10052.20
	9.015	1.00	1394.50	1394.70	1374.90	60631.30	1389.75	.00	1393.47	61.26	15.48	3916.78	7746.24
	9.029	80.20	1394.50	1394.70	1375.10	60631.30	1390.76	.00	1394.12	75.14	14.72	4119.73	6994.35
*	9.030	1.00	.00	.00	1375.14	60631.30	1391.85	.00	1394.38	26.01	12.75	4756.84	11888.38
	9.064	208.00	.00	.00	1375.66	60631.30	1392.73	.00	1395.04	37.66	12.19	4971.86	9879.66
	9.087	80.00	.00	.00	1375.86	60631.30	1393.04	.00	1395.33	32.92	12.14	4993.80	10566.83
*	9.088	50.00	.00	.00	1390.86	60631.30	1399.31	1399.31	1401.33	45.21	13.79	6584.83	9017.84
	9.100	100.00	.00	.00	1391.90	63339.70	1400.47	.00	1401.87	38.81	10.28	7995.56	10167.49
	9.200	478.00	.00	.00	1391.20	70550.00	1402.11	1402.01	1404.39	63.16	13.82	7481.37	8877.17
	9.282	443.00	.00	.00	1391.90	70550.00	1405.10	.00	1407.42	76.02	13.77	6397.03	8091.48
	9.400	623.00	.00	.00	1395.50	70550.00	1409.21	.00	1411.82	68.76	13.56	5672.43	8507.98
	9.488	464.60	.00	.00	1399.90	70550.00	1412.71	.00	1414.82	65.88	12.47	6160.52	8692.20
	9.560	380.20	.00	.00	1401.20	70550.00	1414.94	.00	1417.15	58.99	13.80	6024.67	9185.44
	9.655	501.60	.00	.00	1400.70	70550.00	1417.06	.00	1419.88	56.06	14.34	5477.29	9422.66
	9.713	306.20	.00	.00	1401.60	70550.00	1419.29	.00	1421.25	32.67	11.54	6507.93	12342.98
	9.800	459.40	.00	.00	1402.70	70550.00	1420.39	.00	1423.05	36.54	13.45	5686.86	11671.68

500-YR FLOW

SUMMARY PRINTOUT TABLE 150

	SECNO	Q	CWSEL	DIFWSP	DIFWSX	DIFKWS	TOPWID	XLCH
	8.566	60631.30	1376.95	.00	.00	-.05	985.21	.00
*	8.680	60631.30	1381.53	.00	4.57	.00	979.86	602.00
	8.815	60631.30	1383.36	.00	1.83	.00	630.09	713.00
*	8.907	60631.30	1385.14	.00	1.78	.00	341.56	480.00
*	8.957	60631.30	1389.49	.00	4.34	.00	371.27	250.00
	9.014	60631.30	1390.00	.00	.51	.00	310.25	245.00
	9.015	60631.30	1389.75	.00	-.25	.00	293.59	1.00
	9.029	60631.30	1390.76	.00	1.01	.00	294.98	80.20
*	9.030	60631.30	1391.85	.00	1.10	.00	326.91	1.00
	9.064	60631.30	1392.73	.00	.88	.00	482.40	208.00
	9.087	60631.30	1393.04	.00	.30	.00	557.20	80.00
*	9.088	60631.30	1399.31	.00	6.27	.00	1563.99	50.00
	9.100	63339.70	1400.47	.00	1.17	.00	1569.60	100.00
	9.200	70550.00	1402.11	.00	1.64	.00	1543.90	478.00
	9.282	70550.00	1405.10	.00	2.99	.00	948.67	443.00
	9.400	70550.00	1409.21	.00	4.11	.00	590.60	623.00
	9.488	70550.00	1412.71	.00	3.50	.00	686.83	464.60
	9.560	70550.00	1414.94	.00	2.23	.00	594.80	380.20
	9.655	70550.00	1417.06	.00	2.12	.00	491.64	501.60
	9.713	70550.00	1419.29	.00	2.23	.00	546.13	306.20
	9.800	70550.00	1420.39	.00	1.09	.00	489.94	459.40

SUMMARY OF ERRORS AND SPECIAL NOTES

WARNING SECNO=	8.680	PROFILE=	1	CONVEYANCE CHANGE OUTSIDE ACCEPTABLE RANGE
CAUTION SECNO=	8.907	PROFILE=	1	CRITICAL DEPTH ASSUMED
CAUTION SECNO=	8.907	PROFILE=	1	MINIMUM SPECIFIC ENERGY
WARNING SECNO=	8.957	PROFILE=	1	CONVEYANCE CHANGE OUTSIDE ACCEPTABLE RANGE
WARNING SECNO=	9.030	PROFILE=	1	CONVEYANCE CHANGE OUTSIDE ACCEPTABLE RANGE
CAUTION SECNO=	9.088	PROFILE=	1	CRITICAL DEPTH ASSUMED
CAUTION SECNO=	9.088	PROFILE=	1	PROBABLE MINIMUM SPECIFIC ENERGY
CAUTION SECNO=	9.088	PROFILE=	1	20 TRIALS ATTEMPTED TO BALANCE WSEL

APPENDIX C

```
*******************************************
*  HEC-2 WATER SURFACE PROFILES           *
*                                         *
*  Version   4.6.2;  May 1991             *
*                                         *
*  RUN DATE    15JUN94    TIME    11:22:00 *
*******************************************
```

```
****************************************
*  U.S. ARMY CORPS OF ENGINEERS        *
*  HYDROLOGIC ENGINEERING CENTER       *
*  609 SECOND STREET, SUITE D          *
*  DAVIS, CALIFORNIA 95616-4687        *
*          (916) 756-1104              *
****************************************
```

```
X     X  XXXXXXX   XXXXX              XXXXX
X     X  X        X     X            X     X
X     X  X        X                        X
XXXXXXX  XXXX     X          XXXXX    XXXXX
X     X  X        X                  X
X     X  X        X     X            X
X     X  XXXXXXX   XXXXX              XXXXXXX
```

THIS RUN EXECUTED 15JUN94 11:22:00

```
************************************
HEC-2 WATER SURFACE PROFILES

Version   4.6.2;  May 1991
************************************
```

SPLIT FLOW BEING PERFORMED

SF

```
TNSECTION 5 TO SECTION 6
NS     2       5       6    -1.0    0.035  0.0118
NG   0.0  1390.6    40.0  1390.7

TNSECTION 4 TO SECTION 5
NS     2       4       5    -1.0    0.035  0.0134
NG   0.0  1390.5    45.0  1390.6

TNSECTION 3 TO SECTION 4
NS     2       3       4    -1.0    0.035  0.0149
NG   0.0  1390.3    50.0  1390.5

TNSECTION 2 TO SECTION 3
NS     2       2       3    -1.0    0.035  0.0160
NG   0.0  1390.2    60.0  1390.3

TNSECTION 1 TO SECTION 2
NS     2       1       2    -1.0    0.035  0.0138
NG   0.0  1390.0    72.0  1390.2
```

```
T1      PINNACLE PEAK ROAD BRIDGE OVER SKUNK CREEK
T2      EAST EMBANKMENT WEIR FLOW AT DROP STRUCTURE
T3      100-YEAR FLOW

J1  ICHECK    INQ      NINV     IDIR     STRT     METRIC   HVINS    Q        WSEL     FQ

     0        2        0        0      0.0138      0      0.0    10900.0   1394.0

J2  NPROF     IPLOT    PRFVS    XSECV    XSECH    FN       ALLDC    IBW      CHNIM    ITRACE

    -1        0       -1       0.0      0.0      0.0      0.0      -6.0     0.0

J5  LPRNT     NUMSEC                   ********REQUESTED SECTION NUMBERS********

    -10       -10

NC    0.040     0.040     0.035     0.1       0.3
X1        1         3       0.0      30.0      0.0       0.0       0.0       1.0       0.0
GR   1396.4       0.0    1390.4      12.0   1390.0      30.0

X1        2         3       0.0      68.0      72.0      72.0      72.0       1.0       0.0
GR   1396.5       0.0    1391.4      10.2   1390.2      68.0

X1        3         3       0.0     100.0      60.0      60.0      60.0       1.0       0.0
GR   1396.6       0.0    1392.2       8.8   1390.3     100.0

X1        4         3       0.0     140.0      50.0      50.0      50.0       1.0       0.0
GR   1396.8       0.0    1393.3       7.0   1390.5     140.0

X1        5         3       0.0     175.0      45.0      45.0      45.0       1.0       0.0
GR   1396.9       0.0    1394.1       5.6   1390.6     175.0

X1        6         3       0.0     210.0      40.0      40.0      40.0       1.0       0.0
GR   1397.0       0.0    1395.2       3.5   1390.9     210.0
```

THIS RUN EXECUTED 15JUN94 11:22:01

****
HEC-2 WATER SURFACE PROFILES

Version 4.6.2; May 1991
****

NOTE- ASTERISK (*) AT LEFT OF CROSS-SECTION NUMBER INDICATES MESSAGE IN SUMMARY OF ERRORS LIST

100-YEAR FLOW

SUMMARY PRINTOUT TABLE 150

	SECNO	XLCH	ELTRD	ELLC	ELMIN	Q	CWSEL	CRIWS	EG	10*KS	VCH	AREA	.01K
	1.000	.00	.00	.00	1390.00	109.00	1391.36	.00	1391.75	137.31	5.01	21.75	9.30
*	2.000	72.00	.00	.00	1390.20	176.02	1392.01	.00	1392.10	28.54	2.50	70.48	32.95
*	3.000	60.00	.00	.00	1390.30	1602.85	1393.38	1393.38	1394.42	146.44	8.20	195.45	132.45
*	4.000	50.00	.00	.00	1390.50	3927.44	1394.88	1394.88	1396.39	133.81	9.83	399.37	339.52
*	5.000	45.00	.00	.00	1390.60	7111.24	1396.12	1396.12	1398.02	118.46	11.05	643.42	653.37
*	6.000	40.00	.00	.00	1390.90	10900.00	1397.44	1397.44	1399.66	113.11	11.97	910.47	1024.89

100-YEAR FLOW

SUMMARY PRINTOUT TABLE 150

	SECNO	Q	CWSEL	DIFWSP	DIFWSX	DIFKWS	TOPWID	XLCH
	1.000	109.00	1391.36	.00	.00	-2.64	19.91	.00
*	2.000	176.02	1392.01	.00	.65	.00	59.03	72.00
*	3.000	1602.85	1393.38	.00	1.37	.00	93.56	60.00
*	4.000	3927.44	1394.88	.00	1.51	.00	136.17	50.00
*	5.000	7111.24	1396.12	.00	1.24	.00	173.45	45.00
*	6.000	10900.00	1397.44	.00	1.31	.00	210.00	40.00

SUMMARY OF ERRORS AND SPECIAL NOTES

```
WARNING SECNO=      2.000  PROFILE=  1  CONVEYANCE CHANGE OUTSIDE ACCEPTABLE RANGE

CAUTION SECNO=      3.000  PROFILE=  1  CRITICAL DEPTH ASSUMED
CAUTION SECNO=      3.000  PROFILE=  1  MINIMUM SPECIFIC ENERGY

CAUTION SECNO=      4.000  PROFILE=  1  CRITICAL DEPTH ASSUMED
CAUTION SECNO=      4.000  PROFILE=  1  PROBABLE MINIMUM SPECIFIC ENERGY
CAUTION SECNO=      4.000  PROFILE=  1  20 TRIALS ATTEMPTED TO BALANCE WSEL

CAUTION SECNO=      5.000  PROFILE=  1  CRITICAL DEPTH ASSUMED
CAUTION SECNO=      5.000  PROFILE=  1  PROBABLE MINIMUM SPECIFIC ENERGY
CAUTION SECNO=      5.000  PROFILE=  1  20 TRIALS ATTEMPTED TO BALANCE WSEL

CAUTION SECNO=      6.000  PROFILE=  1  CRITICAL DEPTH ASSUMED
CAUTION SECNO=      6.000  PROFILE=  1  PROBABLE MINIMUM SPECIFIC ENERGY
CAUTION SECNO=      6.000  PROFILE=  1  20 TRIALS ATTEMPTED TO BALANCE WSEL
```

STEPPED SPILLWAY DROP STRUCTURE

20-Jun-94

HYDRAULIC ANALYSIS
Stilling Basin without Baffle Blocks
File: SKDRP10.WQ2

10-YEAR ANALYSIS

REFERENCES:

Chamani, M. R. and N. Rajaratnam, "Jet Flow on Stepped Spillways," Department of Civil Engineering, University of Alberta, Edmonton, Alberta, Canada, 1993.

Federal Highway Administration, Hydraulic Engineering Circular No. 14, Hydraulic Design of Energy Dissipators for Culverts and Channels, September 1983.

Rajaratnam, N., "Skimming flow in Stepped Spillways," Journal of Hydraulic Engineering, Vol. 166 No. 4, April 1990.

GIVEN DATA:

FLOW	8650	CFS	
SPILLWAY WIDTH	250	FT	
TAILWATER DEPTH	5.35	FT	
SPILLWAY CREST ELEVATION	1390.86	MSL	
STILLING BASIN BOTTOM ELEV	1375.86	MSL	need
DOWNSTREAM FLOWLINE ELEV	1375.72	MSL	
alpha (if jet flow)	0.15		
NUMBER OF STEPS	6		
STEP HEIGHT/LENGTH RATIO	0.33		

SOLUTION:

HYDRAULIC PARAMETERS:

DISCHARGE INTENSITY q = Q/W	34.6	cfs/ft
DROP HEIGHT (H)	15	ft
STEP HEIGHT (h)	2.5	ft
STEP LENGTH (L)	7.5	ft
Yc=.315*q^.667	3.35	ft
Yc/h	1.34	**SKIMMING FLOW**
Vc=q/Yc	10.33	fps

RELATIVE ENERGY LOSS ACROSS DROP	0.48	ft/ft
E0 = H + 1.5 * Yc	20.02	ft
E1 = y1 + (V1 ^ 2)/(2g)	10.35	ft
q = V1 * y1	35	cfs/ft
ENERGY LOSS ACROSS DROP	9.67	ft
USING assumed trial values of y1=	1.446	
then V1=	23.93	
and E1=	10.34	
THEREFORE, V1=	23.93	fps
AND y1=	1.446	ft
Froude Fr1=V1/(g*y1)^.5	3.51	

STILLING BASIN:

For known value of Fr1, read from Figure VI-11, HEC-14:

Lb/y1 =	25	
therefore, Lb=	36.2	ft

CHECK TAILWATER REQUIREMENTS:

		1375.72	downstream flowline elevation
	+	5.35	ft (tailwater depth)
tailwater per channel hydraulics		**1381.07**	
		1375.86	basin bottom elevation
y2 = y1*0.5*((1+8*Fr1 ^ 2) ^ 0.5-1)		6.48	ft
tailwater required for hyd jump		**1382.34**	

ADJUSTMENT REQUIRED TO BASIN BOTTOM ELEVATION: **-1.27 ft**

STEPPED SPILLWAY DROP STRUCTURE

20-Jun-94

HYDRAULIC ANALYSIS
Stilling Basin without Baffle Blocks
File: SKDRP100.WQ2

100-YEAR ANALYSIS

REFERENCES:

Chamani, M. R. and N. Rajaratnam, "Jet Flow on Stepped Spillways," Department of Civil Engineering, University of Alberta, Edmonton, Alberta, Canada, 1993.

Federal Highway Administration, Hydraulic Engineering Circular No. 14, Hydraulic Design of Energy Dissipators for Culverts and Channels, September 1983.

Rajaratnam, N., "Skimming flow in Stepped Spillways," Journal of Hydraulic Engineering, Vol. 166 No. 4, April 1990.

GIVEN DATA:

FLOW	22000	CFS	
SPILLWAY WIDTH	250	FT	
TAILWATER DEPTH	12.36	FT	
SPILLWAY CREST ELEVATION	1390.86	MSL	
STILLING BASIN BOTTOM ELEV	1375.86	MSL	need
DOWNSTREAM FLOWLINE ELEV	1375.72	MSL	
alpha (if jet flow)	0.15		
NUMBER OF STEPS	6		
STEP HEIGHT/LENGTH RATIO	0.33		

SOLUTION:

HYDRAULIC PARAMETERS:

DISCHARGE INTENSITY q = Q/W	88	cfs/ft
DROP HEIGHT (H)	15	ft
STEP HEIGHT (h)	2.5	ft
STEP LENGTH (L)	7.5	ft
Yc=.315*q^.667	6.24	ft
Yc/h	2.50	**SKIMMING FLOW**
Vc=q/Yc	14.10	fps

RELATIVE ENERGY LOSS ACROSS DROP	0.34	ft/ft
E0 = H + 1.5 * Yc	24.36	ft
E1 = y1 + (V1 ^ 2)/(2g)	16.07	ft
q = V1 * y1	88	cfs/ft
ENERGY LOSS ACROSS DROP	8.29	ft
USING assumed trial values of y1=	3.037	
then V1=	28.98	
and E1=	16.07	
THEREFORE, V1=	28.98	fps
AND y1=	3.037	ft
Froude Fr1=V1/(g*y1)^.5	2.93	

STILLING BASIN:

For known value of Fr1, read from Figure VI-11, HEC-14:

Lb/y1 =	18.5	
therefore, Lb=	56.2	ft

CHECK TAILWATER REQUIREMENTS:

		1375.72	downstream flowline elevation
	+	12.36	ft (tailwater depth)
tailwater per channel hydraulics		**1388.08**	
		1375.86	basin bottom elevation
y2 = y1*0.5*((1+8*Fr1 ^ 2) ^ 0.5-1)		11.16	ft
tailwater required for hyd jump		**1387.02**	

ADJUSTMENT REQUIRED TO BASIN BOTTOM ELEVATION: **0.00 ft**

APPENDIX D

```
*****************************************
*  HEC-2 WATER SURFACE PROFILES         *
*                                       *
*  Version   4.6.2;  May 1991           *
*                                       *
*  RUN DATE    15JUN94    TIME    11:26:32  *
*****************************************
```

```
****************************************
*  U.S. ARMY CORPS OF ENGINEERS        *
*  HYDROLOGIC ENGINEERING CENTER       *
*  609 SECOND STREET, SUITE D          *
*  DAVIS, CALIFORNIA 95616-4687        *
*          (916) 756-1104              *
****************************************
```

```
X     X  XXXXXXX   XXXXX              XXXXX
X     X  X        X     X            X     X
X     X  X        X                        X
XXXXXXX  XXXX     X          XXXXX    XXXXX
X     X  X        X                  X
X     X  X        X     X            X
X     X  XXXXXXX   XXXXX             XXXXXXX
```

THIS RUN EXECUTED 15JUN94 11:26:32

```
************************************
HEC-2 WATER SURFACE PROFILES

Version   4.6.2;  May 1991
************************************
```

```
T1      PINNACLE PEAK RD BRIDGE OVER SKUNK CREEK
T2      ULTIMATE CONDITION ANALYSIS
T3      10-, 50- 100- AND 500-YR FLOWS
T4      * DROP STRUCTURE LOCATED AT CROSS SECTION 9.488

J1  ICHECK   INQ     NINV    IDIR    STRT     METRIC   HVINS    Q        WSEL     FQ

      0       2       0       0    0.0129       0       0.0    8650.0   1372.70

J2  NPROF    IPLOT   PRFVS   XSECV   XSECH    FN       ALLDC    IBW      CHNIM    ITRACE

      1       0      -1      0.0     0.0      0.0      0.0     -6.0      0.0

J3  VARIABLE CODES FOR SUMMARY PRINTOUT

     38      43       1       8      42       3        2       26       5       39
     53       4      54             150

J5  LPRNT    NUMSEC                 ********REQUESTED SECTION NUMBERS********

    -10     -10

J6  IHLEQ    ICOPY   SUBDIV  STRTDS  RMILE

              0     -1.0

NC    0.050    0.050    0.040      0.1      0.3
X1    8.566       97   9001.7  10040.6      0.0      0.0      0.0      1.0      0.0
GR  1387.7   7864.4   1386.7   7914.2   1385.0   7933.2   1386.2   8010.9   1385.4   8173.0
GR  1384.3   8203.7   1384.5   8220.9   1383.3   8228.6   1382.5   8322.4   1381.5   8324.5
GR  1381.2   8338.7   1382.5   8341.2   1381.5   8344.0   1381.5   8449.8   1380.4   8503.0
GR  1380.2   8705.2   1378.7   8829.0   1380.4   8834.8   1378.8   8845.6   1380.4   8848.8
GR  1378.2   8853.6   1380.7   8862.6   1380.3   8867.2   1379.2   8872.3   1378.8   8875.2
GR  1379.8   8896.4   1380.3   8923.5   1379.2   8937.1   1380.1   8973.5   1382.1   8978.3
GR  1382.5   8983.7   1381.2   8988.6   1382.9   8995.1   1381.9   9001.7   1380.3   9008.1
GR  1380.1   9013.4   1377.7   9018.9   1376.5   9025.0   1375.6   9033.0   1373.2   9041.5
GR  1372.0   9052.5   1370.8   9063.8   1370.3   9126.1   1369.2   9138.9   1370.2   9208.1
GR  1370.1   9340.9   1369.1   9352.6   1370.3   9363.5   1370.1   9371.4   1369.1   9375.6
GR  1370.1   9423.2   1372.1   9460.0   1373.5   9481.4   1374.0   9502.6   1373.0   9514.7
GR  1372.2   9520.1   1373.4   9530.2   1373.7   9597.7   1372.2   9605.1   1372.3   9615.3
GR  1371.3   9628.7   1372.3   9655.6   1373.0   9772.6   1374.0   9794.1   1375.1   9845.6
GR  1375.1   9861.6   1373.8   9878.0   1372.5   9924.8   1371.2   9936.4   1371.2   9938.5
GR  1375.0   9943.2   1377.2   9949.5   1378.2   9966.1   1375.9   9975.9   1372.4   9983.7
GR  1372.0   9986.3   1368.8   9993.0   1368.8   9996.0   1366.3  10000.0   1366.9  10009.4
```

GR	1368.7	10015.0	1373.4	10024.9	1378.6	10033.1	1380.1	10040.6	1381.1	10115.4
GR	1380.0	10225.4	1381.2	10296.3	1381.6	10516.7	1382.6	10729.1	1383.8	10816.6
GR	1383.7	10825.5	1381.4	10828.6	1384.0	10837.6	1383.0	10895.8	1383.7	11111.2
GR	1385.9	12184.6	1389.2	12197.0						
X1	8.680	93	9088.6	10072.6	615.0	650.0	602.0	1.0	0.0	
GR	1390.3	8163.3	1388.6	8235.1	1389.1	8359.1	1387.5	8437.1	1385.1	8440.6
GR	1383.7	8591.0	1383.7	8703.7	1383.5	8830.4	1384.4	8879.3	1383.4	8897.3
GR	1383.0	8926.2	1385.0	8932.9	1382.2	8943.8	1384.5	8947.3	1382.4	8951.2
GR	1384.7	8961.0	1384.9	8963.4	1383.1	8967.4	1382.3	9060.2	1385.7	9069.1
GR	1386.3	9071.1	1384.6	9075.5	1385.6	9082.0	1385.0	9088.6	1382.8	9093.2
GR	1380.9	9101.2	1378.0	9112.5	1376.0	9120.2	1374.5	9126.6	1373.5	9134.2
GR	1372.0	9139.3	1371.7	9228.6	1370.6	9234.2	1371.8	9249.9	1371.8	9253.4
GR	1370.3	9264.4	1371.2	9372.0	1372.6	9429.6	1373.2	9531.8	1374.3	9630.9
GR	1374.4	9714.1	1375.5	9738.8	1376.4	9811.4	1375.2	9824.8	1376.5	9888.5
GR	1375.4	9899.8	1374.2	9910.2	1372.7	9919.0	1372.4	9940.5	1373.8	9945.1
GR	1375.0	9949.4	1376.2	9964.6	1373.9	9969.0	1372.2	9977.8	1369.2	9982.4
GR	1369.1	9991.8	1372.0	10000.0	1372.8	10001.3	1375.2	10006.9	1375.5	10015.3
GR	1376.6	10023.1	1377.1	10032.0	1378.1	10036.8	1376.6	10041.2	1378.2	10053.0
GR	1378.9	10056.2	1381.8	10066.7	1382.8	10072.6	1382.2	10076.0	1380.4	10083.6
GR	1380.7	10089.7	1383.4	10095.7	1383.1	10201.2	1384.3	10256.6	1384.2	10368.9
GR	1383.9	10523.6	1384.9	10654.1	1385.1	10781.0	1385.5	10934.2	1385.9	11104.7
GR	1386.5	11273.1	1386.8	11384.3	1387.6	11573.9	1388.0	11707.0	1388.7	11818.9
GR	1390.1	11891.0	1389.9	11952.6	1388.8	11979.1	1392.5	12008.1	1394.1	12020.2
GR	1391.0	12032.7	1391.6	12038.3	1393.1	12047.5				

BEGIN CHANNELIZATION

BEGIN CHANNELIZATION

X1	8.815	91	9609.8	10489.6	450.0	680.0	713.0	1.0	0.0	
CI	9935.0	1372.5	713.035	4.0	4.0	250.0	0.01			
GR	1390.4	8808.9	1389.2	8839.1	1387.5	8856.8	1386.3	8872.6	1385.6	8880.4
GR	1385.1	8957.0	1385.3	9014.6	1385.4	9072.2	1385.2	9117.2	1386.1	9135.9
GR	1386.7	9138.1	1386.4	9178.1	1386.6	9244.8	1386.6	9290.2	1386.6	9321.3
GR	1386.6	9346.5	1386.7	9366.3	1386.4	9376.6	1389.7	9384.9	1386.0	9391.7
GR	1389.3	9398.0	1386.3	9403.9	1389.7	9413.5	1386.9	9419.1	1385.9	9436.0
GR	1386.9	9461.3	1385.8	9487.1	1387.5	9498.5	1386.4	9523.1	1388.0	9544.5
GR	1389.2	9565.2	1390.3	9583.5	1388.5	9609.8	1386.6	9637.1	1385.0	9652.8
GR	1383.4	9670.6	1380.9	9687.2	1378.8	9707.2	1377.6	9725.1	1376.9	9740.7
GR	1374.5	9748.5	1374.4	9756.1	1375.8	9770.8	1375.5	9788.3	1375.0	9818.5
GR	1374.9	9850.1	1374.8	9881.0	1374.7	9912.6	1374.7	9942.9	1374.5	9965.4
GR	1374.1	9984.2	1372.0	10000.0	1372.8	10016.7	1372.2	10035.6	1374.3	10063.8
GR	1375.2	10078.6	1376.0	10095.5	1376.4	10111.8	1376.5	10129.2	1376.9	10153.1
GR	1376.8	10174.4	1376.7	10191.9	1377.4	10209.1	1378.5	10222.6	1379.5	10239.1
GR	1380.8	10261.2	1381.7	10272.3	1382.4	10288.5	1383.8	10306.6	1384.3	10320.4
GR	1385.0	10339.2	1385.4	10355.2	1385.6	10372.8	1385.5	10394.3	1386.4	10410.4
GR	1390.0	10442.0	1391.1	10458.5	1391.9	10471.5	1392.3	10489.6	1392.8	10513.3
GR	1393.2	10543.4	1392.5	10567.3	1391.7	10584.0	1391.4	10598.7	1390.4	10624.2
GR	1390.1	10641.8	1387.8	10681.9	1387.6	10700.9	1387.5	10736.6	1387.4	10756.1
GR	1389.2	10774.8								

```
X1    8.907       91     9830.2   10263.3     520.0     400.0     485.8  0.961261       0.0
CI   10150.   1373.7    480.035       4.0       4.0    -250.0      0.01
X2      0.0      0.0          0       0.0       0.0       0.0         0       0.0       0.0
GR   1397.5   8809.3     1396.5    8838.1    1395.9    8871.3    1393.5    8905.3    1392.4    8937.2
GR   1392.2   8970.4     1390.8    9003.5    1390.0    9027.4    1390.1    9048.0    1389.3    9080.4
GR   1387.1   9087.0     1388.3    9092.7    1389.2    9176.8    1389.2    9248.7    1389.3    9291.0
GR   1389.3   9454.7     1389.4    9497.2    1389.9    9542.3    1389.7    9586.6    1390.0    9625.4
GR   1389.9   9660.8     1390.8    9664.8    1389.5    9668.6    1389.5    9677.5    1392.2    9681.2
GR   1388.1   9690.2     1390.9    9696.8    1387.9    9699.2    1389.9    9707.4    1393.4    9712.3
GR   1390.3   9719.4     1389.9    9737.3    1390.5    9763.0    1389.7    9786.2    1389.6    9797.0
GR   1390.7   9807.1     1390.4    9826.6    1393.0    9830.2    1389.6    9835.6    1385.4    9863.1
GR   1381.7   9875.2     1380.1    9894.0    1378.7    9916.2    1377.4    9940.3    1375.8    9960.3
GR   1375.2   9987.9     1375.1   10000.0    1375.1   10025.3    1375.7   10051.5    1376.5   10072.8
GR   1377.1  10081.8     1380.7   10094.5    1382.7   10106.6    1383.8   10122.1    1385.2   10140.3
GR   1386.7  10159.5     1390.3   10182.6    1391.6   10193.0    1391.7   10213.1    1391.9   10230.2
GR   1392.8  10244.7     1393.1   10263.3    1392.3   10283.1    1391.7   10302.9    1391.8   10337.3
GR   1391.9  10369.3     1392.2   10391.9    1392.2   10408.2    1390.5   10432.0    1390.2   10443.8
GR   1392.1  10470.5     1392.0   10488.7    1392.3   10507.6    1392.1   10524.8    1392.1   10551.6
GR   1392.3  10570.1     1391.2   10583.8    1391.3   10604.2    1392.0   10627.3    1392.2   10650.0
GR   1391.6  10677.1     1391.1   10695.0    1391.2   10738.1    1390.8   10770.7    1391.6   10797.7
GR   1391.5  10826.7     1390.9   10867.4    1391.0   10912.8    1391.1   10960.4    1391.4   10988.8
GR   1392.0  11005.2

NC      0.0      0.0        0.0       0.3       0.5
X1    8.957       92     9851.7   10283.2     260.0     240.0     264.0  0.933580       0.0
CI   10235.  1374.33    250.035       4.0       4.0    -250.0      0.01
X2      0.0      0.0          0       0.0       0.0       0.0         0       0.0  0.933580
GR   1400.0   8775.0     1398.0    8815.0    1396.0    8850.0    1394.0    8900.0    1392.0    8980.0
GR   1390.0   9045.0     1390.4    9077.5    1389.9    9104.9    1390.3    9136.9    1390.5    9176.1
GR   1390.3   9220.2     1390.4    9263.3    1390.2    9303.3    1390.4    9346.2    1390.4    9389.1
GR   1390.5   9433.5     1390.7    9474.2    1390.9    9512.7    1391.2    9557.9    1391.1    9605.4
GR   1391.2   9648.9     1391.4    9685.7    1391.3    9701.7    1391.1    9708.8    1393.0    9713.6
GR   1390.1   9721.2     1389.6    9724.7    1392.1    9730.0    1389.6    9734.6    1392.5    9743.5
GR   1391.3   9761.0     1391.4    9780.0    1391.6    9805.7    1390.9    9833.6    1392.1    9851.7
GR   1387.2   9877.8     1383.3    9903.0    1380.6    9926.3    1378.8    9954.7    1378.4    9975.6
GR   1378.1  10000.0     1378.1   10023.4    1378.5   10040.2    1378.5   10064.4    1382.4   10087.3
GR   1383.8  10096.7     1384.0   10112.1    1385.7   10153.8    1386.1   10171.4    1387.5   10187.2
GR   1388.5  10201.2     1388.5   10219.8    1388.2   10235.7    1388.7   10247.1    1390.8   10258.0
GR   1389.8  10261.8     1391.6   10283.2    1391.8   10301.6    1393.6   10330.0    1392.3   10348.7
GR   1392.0  10374.4     1392.3   10397.1    1391.9   10422.4    1392.3   10447.2    1392.2   10475.3
GR   1392.3  10500.4     1392.4   10519.6    1392.4   10548.5    1392.1   10583.0    1392.1   10624.0
GR   1392.0  10658.3     1391.9   10692.9    1391.2   10712.4    1391.3   10730.0    1391.3   10769.2
GR   1391.2  10792.8     1390.0   10804.9    1390.8   10825.3    1391.1   10844.1    1390.9   10873.7
GR   1390.9  10903.3     1390.7   10946.2    1390.6   10989.3    1390.5   11030.8    1390.7   11062.1
GR   1390.9  11089.1     1391.1   11108.3    1390.7   11125.6    1390.1   11145.1    1390.2   11173.0
GR   1390.1  11209.8     1390.3   11239.5
DOWNSTREAM OF PINNACLE PEAK ROAD BRIDGE
```

DOWNSTREAM OF PINNACLE PEAK ROAD BRIDGE

X1	9.014	86	9760.3	10320.7	260.0	250.0	301.0	1.0	0.0	
CI	10180.	1374.94	245.035	2.0	2.0	-250.0	0.01			
GR	1397.8	8641.6	1396.8	8667.2	1396.7	8699.9	1395.6	8722.9	1394.6	8737.2
GR	1394.3	8770.7	1394.1	8803.3	1394.0	8852.7	1394.1	8895.6	1394.2	8918.4
GR	1394.2	8957.6	1395.1	8989.7	1395.2	9015.0	1395.2	9062.9	1394.2	9094.8
GR	1393.3	9136.3	1393.5	9161.8	1393.7	9179.5	1393.8	9242.7	1394.1	9278.1
GR	1394.9	9312.4	1395.4	9334.8	1394.8	9361.5	1394.1	9382.8	1394.8	9404.8
GR	1394.8	9441.0	1394.3	9478.6	1395.0	9506.7	1395.0	9519.1	1394.9	9537.8
GR	1394.3	9563.6	1394.6	9593.9	1394.4	9617.7	1394.3	9640.3	1393.9	9655.9
GR	1393.5	9668.0	1392.9	9674.9	1392.6	9677.4	1393.2	9684.9	1393.7	9697.9
GR	1393.5	9710.8	1392.9	9729.1	1392.4	9741.8	1392.4	9753.2	1392.1	9760.3
GR	1391.5	9767.0	1391.5	9783.6	1390.9	9799.7	1390.8	9824.1	1389.9	9850.8
GR	1389.4	9873.9	1389.3	9903.7	1388.5	9923.9	1388.1	9953.0	1387.9	9982.3
GR	1387.8	10000.0	1387.6	10029.2	1388.1	10054.2	1388.0	10070.8	1387.4	10085.5
GR	1388.4	10102.1	1389.3	10125.7	1390.4	10153.5	1390.5	10186.6	1391.1	10222.8
GR	1391.1	10257.5	1392.0	10288.8	1392.2	10320.7	1392.3	10362.7	1392.5	10401.5
GR	1392.4	10450.2	1392.4	10488.2	1392.3	10524.9	1392.9	10550.9	1393.0	10579.9
GR	1392.5	10622.0	1392.7	10670.2	1392.5	10719.8	1392.7	10767.6	1392.5	10809.1
GR	1392.4	10854.2	1392.4	10894.1	1392.3	10945.2	1392.2	11001.0	1392.1	11062.5
GR	1391.6	11091.0								

DOWNSTREAM FACE OF PINNACLE PEAK ROAD BRIDGE

DOWNSTREAM FACE OF PINNACLE PEAK ROAD BRIDGE

X1	9.015	66	10015.0	10325.0	1.0	1.0	1.0	1.0	0.0	
CI	0.0	0.0	0.0	0.0	0.0	0.01	0.01			
X3	10	0.0	0.0	0.0	0.0	0.0	0.0	1392.2	1393.1	
BT	-12	10015.0	1394.5	1394.5	10015.01	1394.5	1390.0	10045.0	1394.8	1390.3
BT		10085.0	1395.2	1390.7	10125.0	1395.6	1391.1	10170.0	1395.7	1391.2
BT		10205.0	1395.7	1391.2	10245.0	1395.5	1391.0	10285.0	1395.2	1390.7
BT		10295.0	1395.1	1390.6	10324.99	1394.7	1390.2	10325.0	1394.7	1394.7
GR	1395.6	8767.9	1395.5	8820.9	1395.4	8873.6	1395.4	8891.5	1395.4	8939.2
GR	1395.2	8990.7	1395.4	9052.6	1395.4	9113.7	1395.3	9176.6	1395.1	9229.3
GR	1395.1	9287.4	1394.9	9334.4	1394.8	9385.2	1394.7	9450.4	1394.8	9489.6
GR	1394.5	9524.7	1394.1	9576.1	1394.0	9617.7	1393.7	9656.6	1393.2	9693.1
GR	1393.1	9730.9	1392.4	9761.0	1392.2	9821.0	1392.4	9881.0	1393.59	9956.0
GR	1394.4	10006.0	1394.5	10015.0	1390.0	10015.01	1374.94	10045.0	1374.94	10085.0
GR	1374.9	10088.74	1390.8	10088.75	1390.8	10093.75	1374.94	10093.76	1374.94	10125.0
GR	1374.9	10167.49	1391.2	10167.5	1391.2	10170.0	1391.2	10172.5	1374.94	10172.51
GR	1374.9	10205.0	1374.94	10245.0	1374.94	10246.24	1391.0	10246.25	1391.0	10251.25
GR	1374.9	10251.26	1374.94	10285.0	1374.94	10295.0	1390.2	10324.99	1394.7	10325.0
GR	1394.8	10326.0	1393.95	10376.0	1393.27	10453.0	1393.07	10520.0	1393.1	10541.9
GR	1392.9	10588.6	1392.7	10636.9	1392.7	10681.4	1392.5	10740.6	1392.6	10796.6
GR	1392.6	10855.7	1392.4	10922.7	1392.3	10988.0	1392.3	11032.1	1392.1	11079.5
GR	1392.1	11085.0								

UPSTREAM FACE OF PINNACLE PEAK ROAD BRIDGE

UPSTREAM FACE OF PINNACLE PEAK ROAD BRIDGE

X1	9.029	66	10015.0	10325.0	80.2	80.2	80.2	1.0	0.0	
CI	0.0	0.0	0.0	0.0	0.0	0.01	0.01			
X3	10	0.0	0.0	0.0	0.0	0.0	0.0	1392.2	1393.1	
BT	-16	10015.0	1394.5	1394.5	10015.01	1394.5	1390.0	10045.0	1394.8	1390.3
BT		10085.0	1395.2	1390.7	10088.75	1395.2	1390.8	10093.75	1395.3	1390.8

```
BT          10125.0    1395.6    1391.1    10170.0    1395.7    1391.2    10205.0    1395.7    1391.2
BT          10245.0    1395.5    1391.0    10246.25   1395.5    1391.0    10251.25   1395.5    1391.0
BT          10285.0    1395.2    1390.7    10295.0    1395.1    1390.6    10324.99   1394.7    1390.2
BT          10325.0    1394.7    1394.7
GR  1395.6   8767.9    1395.5    8820.9    1395.4     8873.6    1395.4     8891.5    1395.4    8939.2
GR  1395.2   8990.7    1395.4    9052.6    1395.4     9113.7    1395.3     9176.6    1395.1    9229.3
GR  1395.1   9287.4    1394.9    9334.4    1394.8     9385.2    1394.7     9450.4    1394.8    9489.6
GR  1394.5   9524.7    1394.1    9576.1    1394.0     9617.7    1393.7     9656.6    1393.2    9693.1
GR  1393.1   9730.9    1392.4    9761.0    1392.2     9821.0    1392.4     9881.0    1393.59   9956.0
GR  1394.4  10006.0    1394.5   10015.0    1390.0    10015.01   1375.14   10045.0    1375.14   10085.0
GR  1375.1  10088.74   1390.8   10088.75   1390.8    10093.75   1375.14   10093.76   1375.14   10125.0
GR  1375.1  10167.49   1391.2   10167.5    1391.2    10170.0    1391.2    10172.5    1375.14   10172.51
GR  1375.1  10205.0    1375.14  10245.0    1375.14   10246.24   1391.0    10246.25   1391.0    10251.25
GR  1375.1  10251.26   1375.14  10285.0    1375.14   10295.0    1390.2    10324.99   1394.7    10325.0
GR  1394.8  10326.0    1393.95  10376.0    1393.27   10453.0    1393.07   10520.0    1393.1    10541.9
GR  1392.9  10588.6    1392.7   10636.9    1392.7    10681.4    1392.5    10740.6    1392.6    10796.6
GR  1392.6  10855.7    1392.4   10922.7    1392.3    10988.0    1392.3    11032.1    1392.1    11079.5
GR  1392.1  11085.0
UPSTREAM OF PINNACLE PEAK ROAD BRIDGE

      UPSTREAM OF PINNACLE PEAK ROAD BRIDGE
X1   9.030        84    9755.8   10316.5     1.0       1.0       1.0       1.0       0.0
CI  10165.   1375.14     1.035       2.0     2.0     250.0      0.01
GR  1392.7   8771.1    1392.7    8807.9    1392.8     8845.4    1392.7     8874.8    1393.0    8906.8
GR  1393.2   8945.5    1392.7    8980.7    1392.8     9013.1    1392.9     9045.4    1393.4    9080.9
GR  1393.5   9124.8    1393.5    9158.2    1393.7     9191.8    1393.7     9231.1    1393.7    9251.9
GR  1393.9   9279.9    1393.9    9313.3    1394.2     9344.5    1394.2     9388.5    1394.6    9446.5
GR  1395.1   9476.6    1395.1    9505.8    1394.8     9533.7    1394.5     9565.5    1394.1    9602.9
GR  1393.7   9623.0    1393.3    9639.0    1393.3     9654.7    1393.3     9685.0    1393.0    9710.2
GR  1392.8   9733.0    1393.2    9735.2    1393.0     9743.9    1392.4     9755.8    1392.0    9778.0
GR  1391.3   9795.9    1391.3    9817.8    1390.9     9841.7    1390.7     9866.1    1390.7    9889.9
GR  1390.6   9915.1    1390.5    9934.1    1390.6     9959.5    1390.4     9978.8    1389.5   10000.0
GR  1389.5  10022.9    1389.7   10055.8    1389.9    10080.8    1390.1    10109.9    1390.4   10139.2
GR  1390.8  10163.8    1391.4   10188.8    1391.4    10207.6    1391.3    10228.1    1391.4   10249.8
GR  1391.8  10271.8    1391.9   10295.4    1392.0    10316.5    1392.0    10347.6    1392.1   10382.7
GR  1392.2  10410.8    1392.2   10436.7    1392.6    10457.7    1393.1    10475.6    1392.4   10488.1
GR  1393.1  10497.3    1394.6   10516.8    1394.8    10523.4    1394.9    10551.7    1395.0   10591.7
GR  1395.0  10651.4    1395.0   10685.9    1395.3    10743.8    1395.3    10796.2    1395.3   10848.2
GR  1395.4  10896.5    1395.2   10935.1    1395.0    10947.2    1394.3    10964.9    1392.9   10976.3
GR  1392.6  10984.4    1391.8   10985.2    1392.0    10999.1    1392.1    11015.0

NC      0.0       0.0       0.0       0.1     0.3
X1   9.064        92    9688.0   10434.5   150.0     240.0     180.0  0.994521       0.0
CI  10185.   1375.66   208.035       2.0     2.0     250.0      0.01
X2      0.0       0.0         0       0.0     0.0       0.0         0       0.0       0.0
GR  1393.3   8753.5    1393.1    8773.6    1393.8     8803.7    1394.7     8838.7    1394.6    8865.9
GR  1394.9   8888.2    1394.4    8904.3    1394.2     8924.4    1393.0     8933.7    1392.8    8943.1
GR  1394.7   8965.1    1394.8    8974.1    1393.7     8986.9    1393.5     9002.9    1393.5    9025.2
GR  1393.1   9033.9    1394.0    9041.3    1393.1     9056.5    1394.5     9065.2    1394.2    9074.1
GR  1394.0   9096.3    1393.9    9128.6    1394.0     9149.8    1394.1     9175.5    1394.4    9207.1
GR  1394.4   9227.2    1394.3    9244.3    1394.3     9267.8    1394.2     9291.9    1394.4    9316.3
GR  1394.6   9350.1    1394.6    9382.0    1394.8     9425.2    1394.7     9460.2    1394.9    9491.4
GR  1394.8   9523.0    1395.1    9549.4    1395.1     9580.9    1394.6     9616.2    1394.5    9647.0
GR  1394.7   9670.0    1394.7    9688.0    1393.4     9698.1    1393.4     9728.3    1393.1    9744.3
```

R	1392.3	9766.5	1392.2	9788.6	1392.3	9810.4	1392.1	9834.2	1392.2	9858.2
GR	1392.4	9889.8	1392.0	9917.3	1391.8	9931.4	1391.9	9954.0	1392.2	9976.0
GR	1392.2	9986.6	1390.8	10000.0	1391.3	10006.5	1392.1	10013.7	1392.4	10040.5
R	1392.1	10059.2	1392.5	10084.7	1392.8	10105.5	1392.2	10133.2	1392.3	10156.8
GR	1392.4	10182.9	1392.7	10210.4	1393.0	10233.7	1393.1	10260.0	1393.1	10289.7
GR	1393.1	10323.1	1393.2	10354.5	1393.1	10385.8	1393.3	10411.9	1393.7	10434.5
R	1398.1	10443.6	1399.7	10468.9	1397.9	10488.7	1398.0	10527.0	1397.6	10553.5
R	1397.1	10589.6	1396.9	10633.3	1397.1	10663.3	1397.1	10693.0	1396.8	10723.1
GR	1396.4	10744.2	1396.3	10777.5	1397.0	10795.3	1397.3	10821.4	1397.1	10857.2
GR	1397.2	10880.9	1397.2	10895.2						
C	0.0	0.0	0.0	0.1	0.3					
X1	9.087	92	9688.0	10434.5	150.0	240.0	180.0	0.994521	0.5	
CI	10185.	1375.86	80.030	2.0	2.0	250.0	0.01			
2	0.0	0.0	0	0.0	0.0	0.0	0	0.0	0.0	
R	1393.3	8753.5	1393.1	8773.6	1393.8	8803.7	1394.7	8838.7	1394.6	8865.9
GR	1394.9	8888.2	1394.4	8904.3	1394.2	8924.4	1393.0	8933.7	1392.8	8943.1
R	1394.7	8965.1	1394.8	8974.1	1393.7	8986.9	1393.5	9002.9	1393.5	9025.2
R	1393.1	9033.9	1394.0	9041.3	1393.1	9056.5	1394.5	9065.2	1394.2	9074.1
GR	1394.0	9096.3	1393.9	9128.6	1394.0	9149.8	1394.1	9175.5	1394.4	9207.1
GR	1394.4	9227.2	1394.3	9244.3	1394.3	9267.8	1394.2	9291.9	1394.4	9316.3
R	1394.6	9350.1	1394.6	9382.0	1394.8	9425.2	1394.7	9460.2	1394.9	9491.4
R	1394.8	9523.0	1395.1	9549.4	1395.1	9580.9	1394.6	9616.2	1394.5	9647.0
GR	1394.7	9670.0	1394.7	9688.0	1393.4	9698.1	1393.4	9728.3	1393.1	9744.3
GR	1392.3	9766.5	1392.2	9788.6	1392.3	9810.4	1392.1	9834.2	1392.2	9858.2
R	1392.4	9889.8	1392.0	9917.3	1391.8	9931.4	1391.9	9954.0	1392.2	9976.0
R	1392.2	9986.6	1390.8	10000.0	1391.3	10006.5	1392.1	10013.7	1392.4	10040.5
GR	1392.1	10059.2	1392.5	10084.7	1392.8	10105.5	1392.2	10133.2	1392.3	10156.8
GR	1392.4	10182.9	1392.7	10210.4	1393.0	10233.7	1393.1	10260.0	1393.1	10289.7
R	1393.1	10323.1	1393.2	10354.5	1393.1	10385.8	1393.3	10411.9	1393.7	10434.5
R	1398.1	10443.6	1399.7	10468.9	1397.9	10488.7	1398.0	10527.0	1397.6	10553.5
GR	1397.1	10589.6	1396.9	10633.3	1397.1	10663.3	1397.1	10693.0	1396.8	10723.1
R	1396.4	10744.2	1396.3	10777.5	1397.0	10795.3	1397.3	10821.4	1397.1	10857.2
GR	1397.2	10880.9	1397.2	10895.2						
NC	0.0	0.0	0.0	0.1	0.3					
X1	9.088	88	9740.9	10418.9	140.0	240.0	190.0	0.984807	-0.5	
CI	10180.	1375.99	50.030	2.0	2.0	250.0	0.01			
X2	0.0	0.0	0	0.0	0.0	0.0	0	0.0	0.0	15
GR	1395.4	8842.4	1395.2	8862.1	1395.1	8887.2	1395.0	8916.1	1395.1	8944.9
GR	1395.0	8977.6	1393.2	8998.5	1393.3	9007.7	1395.0	9016.2	1393.7	9025.9
GR	1394.7	9030.8	1394.5	9046.1	1393.6	9052.7	1395.2	9072.6	1393.8	9083.0
GR	1395.0	9107.9	1394.9	9138.3	1394.5	9157.2	1395.1	9166.5	1394.8	9176.8
GR	1395.0	9203.4	1395.5	9247.7	1395.9	9271.4	1395.3	9309.1	1395.7	9341.5
GR	1395.2	9348.9	1395.4	9368.4	1395.6	9398.7	1395.8	9433.3	1395.6	9467.5
GR	1395.7	9504.8	1395.7	9535.0	1395.9	9575.7	1396.2	9607.5	1396.2	9639.3
GR	1395.6	9661.0	1396.0	9669.2	1396.0	9681.4	1396.0	9688.5	1396.0	9693.1
GR	1396.0	9694.7	1395.7	9698.8	1396.1	9710.9	1394.4	9716.8	1394.1	9740.9
GR	1393.3	9759.7	1392.4	9791.4	1391.9	9820.9	1393.1	9839.8	1393.0	9868.1
GR	1392.9	9899.7	1393.0	9941.3	1393.0	9964.5	1393.0	9989.1	1393.0	9995.5
GR	1393.0	10000.0	1393.0	10007.3	1393.1	10012.7	1392.4	10034.9	1393.0	10080.0
GR	1392.4	10105.8	1392.6	10131.1	1392.8	10158.2	1393.1	10176.6	1392.6	10184.3
GR	1393.0	10217.9	1393.2	10246.6	1393.6	10273.0	1393.3	10309.3	1393.5	10340.5
GR	1393.0	10380.5	1393.5	10407.3	1398.6	10418.9	1400.4	10436.2	1400.4	10442.6

R	1398.7	10460.6	1398.5	10489.3	1398.6	10536.4	1398.6	10573.1	1398.2	10633.3
GR	1398.2	10679.4	1398.4	10702.7	1397.8	10724.9	1397.9	10763.3	1398.3	10789.3
R	1398.2	10809.5	1398.7	10833.8	1399.2	10854.6				
C	0.055	0.050	0.040	0.1	0.3					
X1	9.100	88	9740.9	10418.9	140.0	240.0	190.0	0.984807	0.0	
I	10170.	1376.24	100.035	2.0	2.0	250.0	0.01			
2	0.0	0.0	0	0.0	0.0	0.0	0	0.0	0.0	
GR	1395.4	8842.4	1395.2	8862.1	1395.1	8887.2	1395.0	8916.1	1395.1	8944.9
GR	1395.0	8977.6	1393.2	8998.5	1393.3	9007.7	1395.0	9016.2	1393.7	9025.9
R	1394.7	9030.8	1394.5	9046.1	1393.6	9052.7	1395.2	9072.6	1393.8	9083.0
R	1395.0	9107.9	1394.9	9138.3	1394.5	9157.2	1395.1	9166.5	1394.8	9176.8
GR	1395.0	9203.4	1395.5	9247.7	1395.9	9271.4	1395.3	9309.1	1395.7	9341.5
GR	1395.2	9348.9	1395.4	9368.4	1395.6	9398.7	1395.8	9433.3	1395.6	9467.5
R	1395.7	9504.8	1395.7	9535.0	1395.9	9575.7	1396.2	9607.5	1396.2	9639.3
R	1395.6	9661.0	1396.0	9669.2	1396.0	9681.4	1396.0	9688.5	1396.0	9693.1
GR	1396.0	9694.7	1395.7	9698.8	1396.1	9710.9	1394.4	9716.8	1394.1	9740.9
R	1393.3	9759.7	1392.4	9791.4	1391.9	9820.9	1393.1	9839.8	1393.0	9868.1
R	1392.9	9899.7	1393.0	9941.3	1393.0	9964.5	1393.0	9989.1	1393.0	9995.5
GR	1393.0	10000.0	1393.0	10007.3	1393.1	10012.7	1392.4	10034.9	1393.0	10080.0
GR	1392.4	10105.8	1392.6	10131.1	1392.8	10158.2	1393.1	10176.6	1392.6	10184.3
R	1393.0	10217.9	1393.2	10246.6	1393.6	10273.0	1393.3	10309.3	1393.5	10340.5
R	1393.0	10380.5	1393.5	10407.3	1398.6	10418.9	1400.4	10436.2	1400.4	10442.6
GR	1398.7	10460.6	1398.5	10489.3	1398.6	10536.4	1398.6	10573.1	1398.2	10633.3
GR	1398.2	10679.4	1398.4	10702.7	1397.8	10724.9	1397.9	10763.3	1398.3	10789.3
R	1398.2	10809.5	1398.7	10833.8	1399.2	10854.6				
X1	9.200	89	9861.7	10309.0	375.0	480.0	478.0	1.0	0.0	
CI	10045.	1377.61	550.035	2.0	2.0	250.0	0.01			
R	1395.3	8786.4	1396.3	8817.5	1397.9	8843.2	1397.9	8873.9	1397.7	8898.4
R	1398.0	8924.9	1398.5	8948.0	1398.5	8959.7	1398.2	8981.1	1397.8	9002.6
GR	1396.3	9009.4	1396.8	9029.8	1397.0	9043.1	1395.5	9050.3	1395.9	9055.1
R	1397.6	9060.9	1395.8	9071.2	1397.5	9088.8	1396.7	9106.9	1397.5	9132.6
R	1397.7	9147.6	1396.6	9158.2	1397.9	9179.6	1398.1	9197.7	1397.0	9215.5
R	1397.8	9223.0	1397.3	9246.7	1398.0	9275.2	1398.0	9281.2	1398.0	9287.9
GR	1396.1	9308.6	1395.1	9315.7	1394.9	9341.6	1397.0	9366.7	1397.6	9383.5
R	1396.4	9398.8	1398.5	9419.0	1398.8	9441.4	1399.0	9477.7	1399.4	9504.2
R	1399.3	9525.7	1399.0	9557.5	1399.0	9579.7	1399.0	9601.3	1399.3	9628.7
GR	1399.1	9664.3	1398.7	9688.0	1398.7	9710.8	1398.5	9735.7	1398.7	9754.4
GR	1398.8	9774.8	1398.8	9803.9	1398.2	9831.8	1400.0	9840.1	1398.5	9856.6
R	1398.9	9861.7	1396.1	9871.7	1393.8	9894.1	1392.9	9926.8	1392.3	9938.6
R	1392.0	9959.2	1391.6	9987.6	1391.2	9996.4	1392.9	10000.0	1394.2	10004.7
GR	1394.2	10028.3	1394.0	10048.6	1394.0	10074.6	1394.3	10096.7	1394.5	10103.4
R	1393.6	10108.3	1394.4	10113.4	1394.1	10139.2	1394.5	10152.3	1393.8	10157.3
R	1393.9	10177.9	1394.0	10191.1	1393.2	10196.4	1394.3	10206.7	1393.6	10217.4
R	1393.4	10254.1	1393.5	10284.9	1393.9	10296.6	1399.7	10309.0	1401.9	10330.3
GR	1400.9	10343.4	1401.5	10347.7	1400.3	10350.9	1400.3	10356.7		
C	0.050	0.050	0.045	0.1	0.3					

CITY OF PHOENIX LANDFILL

CITY OF PHOENIX LANDFILL

X1	9.282	94	9809.6	10043.5	420.0	440.0	443.0	1.0	0.0	
CI	9900.0	1378.74	450.035	2.0	2.0	250.0	0.01			
GR	1421.9	9146.1	1421.4	9167.3	1419.5	9190.3	1416.4	9213.6	1413.0	9237.7
GR	1409.5	9257.8	1405.1	9277.9	1403.0	9293.9	1403.0	9300.0	1400.5	9314.7
GR	1400.4	9330.9	1401.4	9332.8	1400.5	9336.3	1400.5	9364.3	1400.7	9376.2
GR	1401.4	9379.5	1400.0	9397.0	1402.0	9405.9	1399.4	9421.2	1399.2	9434.3
GR	1400.8	9438.6	1401.5	9448.4	1399.2	9457.5	1398.9	9465.6	1401.7	9473.4
GR	1401.7	9479.0	1400.3	9488.1	1401.3	9497.7	1400.6	9502.5	1401.5	9515.5
GR	1401.0	9536.9	1401.7	9548.5	1401.2	9568.3	1401.0	9596.0	1401.5	9618.7
GR	1400.6	9632.6	1401.2	9643.7	1400.8	9663.5	1401.0	9682.8	1401.3	9698.8
GR	1403.0	9709.9	1401.2	9720.9	1401.0	9740.7	1401.1	9765.2	1400.9	9783.5
GR	1401.5	9800.8	1400.9	9809.6	1395.8	9828.0	1393.5	9838.9	1394.9	9852.5
GR	1394.0	9871.8	1395.3	9892.2	1396.3	9907.5	1394.8	9930.8	1393.5	9951.8
GR	1393.9	9955.3	1392.6	9959.5	1393.5	9968.3	1392.8	9971.6	1393.1	9990.1
GR	1392.5	10000.0	1392.2	10008.2	1391.9	10011.9	1393.4	10016.7	1394.7	10031.4
GR	1394.2	10040.6	1397.4	10043.5	1398.1	10059.4	1394.1	10077.1	1393.1	10096.6
GR	1392.8	10125.1	1392.4	10135.1	1393.0	10136.7	1393.4	10151.9	1393.8	10170.7
GR	1394.3	10193.3	1402.3	10209.3	1403.6	10226.6	1402.7	10246.8	1402.1	10263.3
GR	1402.0	10295.5	1401.9	10327.7	1402.2	10346.5	1402.5	10379.7	1402.5	10381.1
GR	1402.5	10407.3	1402.5	10440.1	1402.3	10466.1	1402.2	10494.9	1402.5	10525.5
GR	1402.3	10560.6	1402.3	10588.4	1402.4	10613.2	1402.4	10636.2		

BOTTOM OF FUTURE DROP STRUCTURE

BOTTOM OF FUTURE DROP STRUCTURE

X1	9.369	92	9907.5	10306.5	450.0	580.0	623.0	1.0	0.0	
CI	10130.	1379.88	457.035	2.0	2.0	400.0	0.01			
GR	1458.7	9588.2	1458.5	9617.4	1444.4	9638.7	1441.1	9665.9	1437.6	9687.1
GR	1432.5	9715.2	1426.8	9741.1	1423.0	9761.7	1418.5	9786.4	1412.0	9818.5
GR	1410.9	9824.4	1409.2	9828.1	1408.3	9840.0	1408.6	9845.8	1407.0	9849.9
GR	1406.6	9854.3	1409.0	9861.6	1409.3	9880.3	1402.9	9907.5	1399.7	9922.0
GR	1398.9	9955.3	1400.8	9961.7	1398.0	9968.2	1397.8	9996.3	1397.8	10000.0
GR	1397.8	10009.6	1396.9	10023.1	1398.6	10051.0	1398.3	10074.5	1398.3	10082.5
GR	1396.0	10089.6	1398.0	10104.3	1397.5	10113.0	1398.4	10119.7	1397.1	10126.7
GR	1396.8	10156.0	1396.8	10175.8	1397.8	10184.3	1395.8	10213.5	1397.0	10231.2
GR	1395.6	10254.5	1395.5	10265.8	1400.6	10281.8	1402.4	10306.5	1403.1	10331.5
GR	1402.8	10359.2	1403.0	10367.6	1403.0	10395.2	1403.1	10421.7	1403.0	10451.2
GR	1403.4	10472.4	1403.9	10498.1	1403.1	10538.9	1403.0	10568.0	1403.0	10598.8
GR	1402.8	10631.0	1402.8	10662.3	1402.8	10687.4	1402.6	10718.2	1402.8	10746.5
GR	1402.6	10771.6	1405.9	10782.2	1402.4	10792.1	1402.6	10811.3	1402.5	10835.0
GR	1402.8	10861.8	1406.0	10890.6	1408.7	10899.7	1406.2	10919.8	1406.0	10936.6
GR	1406.2	10975.5	1406.2	10995.2	1406.2	11018.5	1405.6	11044.7	1406.3	11059.0
GR	1406.3	11082.7	1406.4	11113.5	1405.8	11144.7	1406.2	11175.2	1406.1	11221.7
GR	1405.9	11252.9	1406.1	11279.7	1406.2	11306.1	1406.4	11344.0	1406.4	11380.4
GR	1406.5	11426.7	1406.4	11456.9	1406.4	11482.3	1406.7	11508.8	1407.2	11531.0
GR	1407.9	11564.8	1407.8	11582.5						

TOP OF FUTURE DROP STRUCTURE

TOP OF FUTURE DROP STRUCTURE

X1	9.400	88	9907.5	10306.5	450.0	580.0	623.0	1.0	0.0	
CI	10130.	1397.8	53.035	2.0	2.0	400.0	0.01			
GR	1437.6	9687.1	1432.5	9715.2	1426.8	9741.1	1423.0	9761.7	1418.5	9786.4
GR	1412.0	9818.5	1410.9	9824.4	1409.2	9828.1	1408.3	9840.0	1408.6	9845.8
GR	1407.0	9849.9	1406.6	9854.3	1409.0	9861.6	1409.3	9880.3	1402.9	9907.5

GR	1399.7	9922.0	1398.9	9955.3	1400.8	9961.7	1398.0	9968.2	1397.8	9996.3
GR	1397.8	10000.0	1397.8	10009.6	1396.9	10023.1	1398.6	10051.0	1398.3	10074.5
GR	1398.3	10082.5	1396.0	10089.6	1398.0	10104.3	1397.5	10113.0	1398.4	10119.7
GR	1397.1	10126.7	1396.8	10156.0	1396.8	10175.8	1397.8	10184.3	1395.8	10213.5
GR	1397.0	10231.2	1395.6	10254.5	1395.5	10265.8	1400.6	10281.8	1402.4	10306.5
GR	1403.1	10331.5	1402.8	10359.2	1403.0	10367.6	1403.0	10395.2	1403.1	10421.7
GR	1403.0	10451.2	1403.4	10472.4	1403.9	10498.1	1403.1	10538.9	1403.0	10568.0
GR	1403.0	10598.8	1402.8	10631.0	1402.8	10662.3	1402.8	10687.4	1402.6	10718.2
GR	1402.8	10746.5	1402.6	10771.6	1405.9	10782.2	1402.4	10792.1	1402.6	10811.3
GR	1402.5	10835.0	1402.8	10861.8	1406.0	10890.6	1408.7	10899.7	1406.2	10919.8
GR	1406.0	10936.6	1406.2	10975.5	1406.2	10995.2	1406.2	11018.5	1405.6	11044.7
GR	1406.3	11059.0	1406.3	11082.7	1406.4	11113.5	1405.8	11144.7	1406.2	11175.2
GR	1406.1	11221.7	1405.9	11252.9	1406.1	11279.7	1406.2	11306.1	1406.4	11344.0
GR	1406.4	11380.4	1406.5	11426.7	1406.4	11456.9	1406.4	11482.3	1406.7	11508.8
GR	1407.2	11531.0	1407.9	11564.8	1407.8	11582.5				
X1	9.488	92	9946.9	10124.9	420.0	400.0	464.6	1.0	0.0	
CI	10180.	1399.9	410.035	2.0	2.0	400.0	0.01			
X3	0	0.0	0.0	9946.9	1410.5	0.0	0.0	0.0	0.0	
GR	1422.8	9823.4	1416.8	9844.4	1412.1	9859.8	1411.5	9873.7	1412.5	9875.1
GR	1410.8	9880.2	1412.1	9886.7	1407.1	9895.1	1405.9	9899.2	1405.6	9906.6
GR	1402.3	9913.0	1410.2	9927.4	1410.5	9946.9	1403.5	9974.7	1399.9	9988.5
GR	1399.9	10000.0	1400.3	10017.5	1400.9	10041.5	1401.2	10061.3	1401.3	10071.2
GR	1402.9	10073.0	1402.7	10090.6	1404.3	10109.9	1405.2	10124.9	1404.4	10141.2
GR	1402.7	10145.0	1402.5	10158.4	1401.9	10176.5	1401.2	10202.7	1401.1	10222.9
GR	1400.9	10250.7	1400.6	10274.6	1400.6	10293.8	1400.7	10306.7	1400.3	10325.7
GR	1400.2	10336.2	1402.6	10362.6	1403.5	10392.2	1404.8	10400.3	1403.4	10418.4
GR	1402.5	10430.9	1405.4	10441.0	1405.2	10463.0	1405.2	10484.0	1405.4	10493.1
GR	1404.6	10501.2	1404.6	10516.8	1404.9	10544.6	1405.3	10575.9	1405.5	10603.5
GR	1405.5	10627.3	1405.5	10649.3	1406.3	10683.9	1406.6	10719.4	1406.7	10763.8
GR	1406.5	10800.2	1406.5	10843.1	1406.0	10881.5	1405.5	10902.5	1405.3	10921.8
GR	1405.2	10950.5	1404.8	10968.6	1405.5	10980.2	1405.5	11001.5	1405.6	11028.3
GR	1406.1	11062.4	1407.1	11086.1	1407.9	11108.3	1408.1	11128.7	1407.9	11153.0
GR	1408.7	11166.1	1408.6	11186.9	1408.1	11206.4	1407.8	11234.7	1408.1	11243.8
GR	1407.1	11250.6	1408.9	11258.4	1408.3	11264.7	1409.1	11297.3	1409.7	11313.8
GR	1409.6	11339.1	1409.4	11357.3	1409.1	11377.6	1411.8	11388.4	1409.1	11396.7
GR	1408.9	11410.5	1411.3	11421.5	1410.3	11425.0	1411.8	11431.4	1410.7	11436.3
GR	1411.9	11441.5	1410.6	11444.3						
X1	9.560	70	9985.7	10066.4	385.0	365.0	380.2	1.0	0.0	
CI	0.0	0.0	0.0	0.0	0.0	0.01	0.01			
GR	1425.8	9823.6	1425.6	9829.0	1423.7	9832.4	1422.8	9840.0	1422.8	9843.3
GR	1423.9	9847.3	1422.7	9852.2	1421.3	9856.6	1424.3	9863.6	1419.6	9871.8
GR	1417.0	9878.5	1416.2	9889.6	1415.0	9895.5	1413.6	9902.4	1413.7	9911.6
GR	1413.4	9922.5	1413.1	9929.4	1412.2	9931.0	1412.5	9938.1	1412.5	9947.2
GR	1410.1	9956.6	1402.7	9985.7	1401.2	9993.0	1401.4	10000.0	1402.1	10024.4
GR	1402.7	10047.2	1403.4	10066.4	1403.2	10069.7	1402.8	10071.3	1403.4	10090.7
GR	1403.9	10107.9	1403.6	10137.5	1403.4	10164.5	1402.7	10193.3	1402.4	10215.0
GR	1402.5	10231.7	1402.4	10245.5	1403.0	10252.3	1403.2	10261.3	1403.5	10268.9
GR	1403.4	10275.0	1403.0	10282.2	1403.3	10289.5	1401.7	10294.6	1402.2	10307.8
GR	1401.9	10322.0	1402.3	10336.7	1402.4	10344.3	1404.1	10347.2	1403.2	10350.7
GR	1405.4	10354.5	1405.5	10368.7	1405.4	10376.1	1402.8	10382.0	1403.2	10386.6
GR	1403.2	10398.0	1402.8	10406.7	1402.6	10414.6	1401.8	10419.6	1401.2	10422.4
GR	1403.5	10429.7	1406.5	10443.1	1408.9	10453.5	1411.8	10464.1	1412.4	10478.9

GR	1412.0	10483.4	1414.2	10490.0	1420.7	10494.9	1421.5	10509.4	1421.8	10526.9
X1	9.655	91	9815.7	10091.7	450.0	375.0	501.6	1.0	0.0	
X3	0	0.0	0.0	9700.0	0.0	10280.0	0.0	0.0	0.0	
GR	1415.5	8386.9	1415.3	8396.9	1413.2	8420.2	1412.4	8426.5	1409.9	8435.0
GR	1409.6	8451.3	1410.8	8458.2	1413.0	8467.4	1413.5	8496.7	1413.0	8506.9
GR	1413.8	8516.0	1413.3	8522.1	1413.2	8538.7	1410.9	8548.9	1410.5	8567.5
GR	1409.9	8582.3	1408.2	8592.7	1408.1	8615.5	1407.2	8630.7	1408.7	8646.2
GR	1409.7	8666.6	1409.7	8691.5	1410.5	8715.0	1409.7	8741.7	1409.8	8773.9
GR	1409.5	8811.7	1410.7	8825.3	1409.8	8854.6	1409.2	8865.0	1409.9	8878.9
GR	1409.9	8918.2	1410.3	8950.1	1409.7	8971.6	1410.2	8986.7	1409.4	9002.5
GR	1410.4	9020.3	1409.6	9038.7	1409.3	9072.5	1410.7	9093.3	1408.5	9111.7
GR	1409.8	9131.4	1408.8	9149.9	1409.3	9195.7	1410.2	9220.6	1408.5	9237.3
GR	1408.6	9279.7	1408.4	9335.4	1407.8	9394.6	1407.7	9444.9	1407.8	9495.9
GR	1408.4	9528.4	1408.7	9560.2	1409.5	9609.1	1409.2	9646.1	1410.6	9668.6
GR	1416.2	9688.3	1423.3	9700.9	1422.7	9720.4	1416.2	9732.8	1408.2	9760.2
GR	1406.5	9769.9	1405.6	9776.0	1404.0	9786.8	1403.1	9797.6	1407.5	9815.7
GR	1406.2	9824.8	1406.2	9830.6	1402.6	9842.7	1402.7	9888.2	1403.1	9925.4
GR	1403.1	9946.9	1402.5	9971.5	1403.4	9980.3	1400.7	9987.0	1401.0	10000.0
GR	1400.8	10006.1	1402.5	10014.5	1402.3	10033.6	1400.8	10047.0	1401.4	10057.6
GR	1404.4	10071.7	1407.4	10091.7	1407.7	10107.5	1408.8	10121.7	1410.2	10140.1
GR	1410.2	10147.8	1410.9	10158.2	1411.4	10183.0	1414.8	10211.8	1421.9	10246.5
GR	1430.7	10283.3								
X1	9.713	44	9726.1	10099.3	315.0	290.0	306.2	1.0	0.0	
GR	1429.7	9583.1	1430.9	9598.8	1429.2	9612.6	1426.7	9619.9	1419.0	9631.7
GR	1419.3	9649.0	1418.8	9666.9	1421.5	9674.3	1410.3	9698.4	1409.1	9713.1
GR	1408.8	9726.1	1407.1	9743.8	1405.6	9769.2	1403.7	9798.1	1403.4	9809.3
GR	1402.9	9820.6	1402.9	9849.4	1403.5	9863.6	1402.9	9887.6	1403.0	9912.8
GR	1402.5	9938.4	1403.1	9965.9	1402.1	9972.5	1401.6	9983.6	1402.4	9989.1
GR	1402.3	10000.0	1403.1	10017.7	1403.3	10029.1	1402.6	10042.8	1404.0	10054.2
GR	1406.6	10071.1	1410.6	10089.4	1412.6	10099.3	1412.4	10108.7	1412.2	10122.1
GR	1412.1	10135.2	1414.1	10158.1	1418.6	10186.0	1425.8	10216.2	1431.8	10249.0
GR	1437.9	10285.5	1442.2	10335.1	1444.2	10375.2	1444.9	10385.5		
NC	0.050	0.050	0.040	0.1	0.3					
X1	9.800	38	9789.7	10124.4	475.0	460.0	459.4	1.0	0.0	
GR	1442.0	9641.4	1430.7	9680.0	1425.9	9698.7	1424.7	9706.0	1423.8	9708.3
GR	1423.6	9721.5	1423.8	9737.0	1426.1	9744.0	1418.9	9759.4	1412.2	9789.7
GR	1408.5	9819.7	1404.4	9858.4	1403.9	9887.7	1404.0	9913.5	1403.8	9935.5
GR	1403.1	9964.8	1403.9	9990.1	1402.7	10000.0	1403.7	10019.8	1404.9	10037.6
GR	1406.0	10045.8	1405.5	10054.2	1407.1	10061.5	1407.1	10075.8	1408.9	10096.5
GR	1410.4	10124.4	1413.3	10153.4	1416.3	10183.4	1415.9	10200.9	1416.2	10209.9
GR	1417.1	10224.1	1420.7	10248.2	1426.8	10283.2	1439.7	10332.9	1445.6	10368.4
GR	1449.0	10397.4	1448.8	10436.6	1449.3	10465.4				

SECNO	DEPTH	CWSEL	CRIWS	WSELK	EG	HV	HL	OLOSS	L-BANK ELEV
Q	QLOB	QCH	QROB	ALOB	ACH	AROB	VOL	TWA	R-BANK ELEV
TIME	VLOB	VCH	VROB	XNL	XNCH	XNR	WTN	ELMIN	SSTA
SLOPE	XLOBL	XLCH	XLOBR	ITRIAL	IDC	ICONT	CORAR	TOPWID	ENDST

FLOW DISTRIBUTION FOR SECNO= 9.09 CWSEL= 1381.29

STA= 10024. 10395.
PER Q= 100.0
AREA= 1380.0
VEL= 6.3
DEPTH= 5.1

T1 PINNACLE PEAK RD BRIDGE OVER SKUNK CREEK
T2 ULTIMATE CONDITION ANALYSIS
T3 10-, 50- 100- AND 500-YR FLOWS

J1	ICHECK	INQ	NINV	IDIR	STRT	METRIC	HVINS	Q	WSEL	FQ
	0	3	0	0	0.0120	0	0.0	27500.0	1374.92	

J2	NPROF	IPLOT	PRFVS	XSECV	XSECH	FN	ALLDC	IBW	CHNIM	ITRACE
	2	0	-1	0.0	0.0	0.0	0.0	-6.0	0.0	

FLOW DISTRIBUTION FOR SECNO= 9.09 CWSEL= 1386.31

STA= 10014. 10395.
PER Q= 100.0
AREA= 2791.4
VEL= 9.9
DEPTH= 9.6

T1 PINNACLE PEAK RD BRIDGE OVER SKUNK CREEK
T2 ULTIMATE CONDITION ANALYSIS
T3 10-, 50- 100- AND 500-YR FLOWS

J1	ICHECK	INQ	NINV	IDIR	STRT	METRIC	HVINS	Q	WSEL	FQ
	0	4	0	0	0.0120	0	0.0	41500.0	1375.88	

J2	NPROF	IPLOT	PRFVS	XSECV	XSECH	FN	ALLDC	IBW	CHNIM	ITRACE
	3	0	-1	0.0	0.0	0.0	0.0	-6.0	0.0	

FLOW DISTRIBUTION FOR SECNO= 9.09 CWSEL= 1389.12

STA= 10008. 10395.
PER Q= 100.0
AREA= 3627.1
VEL= 11.4
DEPTH= 12.0

T1 PINNACLE PEAK RD BRIDGE OVER SKUNK CREEK
T2 ULTIMATE CONDITION ANALYSIS
T3 10-, 50- 100- AND 500-YR FLOWS

J1	ICHECK	INQ	NINV	IDIR	STRT	METRIC	HVINS	Q	WSEL	FQ
	0	5	0	0	0.0120	0	0.0	70550.0	1377.47	

J2	NPROF	IPLOT	PRFVS	XSECV	XSECH	FN	ALLDC	IBW	CHNIM	ITRACE
	15	0	-1	0.0	0.0	0.0	0.0	-6.0	0.0	

FLOW DISTRIBUTION FOR SECNO= 9.09 CWSEL= 1398.01

STA=	8842.	9104.	9458.	9727.	10395.	10795.
PER Q=	3.0	3.0	1.9	92.0	.1	
AREA=	999.8	1119.1	749.9	8330.1	78.5	
VEL=	2.1	1.9	1.8	7.8	.5	
DEPTH=	3.8	3.2	2.8	12.5	.2	

THIS RUN EXECUTED 15JUN94 11:26:46

****
HEC-2 WATER SURFACE PROFILES

Version 4.6.2; May 1991
****

NOTE- ASTERISK (*) AT LEFT OF CROSS-SECTION NUMBER INDICATES MESSAGE IN SUMMARY OF ERRORS LIST

10-, 50- 100- AND 500-YR

SUMMARY PRINTOUT

	SECNO	Q	CWSEL	DEPTH	ELMIN	EG	CRIWS	VCH	10*KS	XLCH	SSTA	TOPWID	ENDST
	8.566	8650.00	1372.70	6.40	1366.30	1373.42	.00	6.82	129.08	.00	9046.08	613.63	10023.43
	8.566	27500.00	1374.92	8.62	1366.30	1376.17	.00	8.97	119.83	.00	9035.41	930.21	10027.30
	8.566	41500.00	1375.88	9.58	1366.30	1377.56	.00	10.41	120.16	.00	9030.51	968.07	10028.81
	8.566	70550.00	1377.47	11.17	1366.30	1379.98	.00	12.72	120.08	.00	9020.07	996.02	10031.32
*	8.680	8650.00	1375.97	6.87	1369.10	1376.17	.00	3.59	22.49	602.00	9120.34	823.63	10018.62
*	8.680	27500.00	1378.66	9.56	1369.10	1379.15	.00	5.63	25.95	602.00	9109.91	945.22	10055.13
*	8.680	41500.00	1380.00	10.90	1369.10	1380.71	.00	6.75	27.73	602.00	9104.70	955.49	10060.19
*	8.680	70550.00	1382.23	13.13	1369.10	1383.35	.00	8.49	30.22	602.00	8943.67	991.18	10093.11
	8.815	8650.00	1377.62	5.62	1372.00	1378.04	.00	5.17	28.71	713.00	9724.74	487.11	10211.85
	8.815	27500.00	1380.50	8.50	1372.00	1381.66	.00	8.63	41.28	713.00	9691.03	565.04	10256.07
	8.815	41500.00	1381.87	9.87	1372.00	1383.56	.00	10.43	48.03	713.00	9680.79	595.33	10276.12
	8.815	70550.00	1384.03	12.03	1372.00	1386.75	.00	13.24	58.86	713.00	9663.51	649.64	10313.15
	8.907	8650.00	1378.83	5.13	1373.70	1379.43	.00	6.24	27.09	480.00	9952.56	291.00	10243.56
	8.907	27500.00	1382.05	8.35	1373.70	1384.14	.00	11.61	51.56	480.00	9939.63	316.88	10256.50
	8.907	41500.00	1383.43	9.73	1373.70	1386.81	.00	14.76	69.47	480.00	9934.13	327.87	10262.00
*	8.907	70550.00	1386.25	12.55	1373.70	1391.69	1386.25	18.73	82.95	480.00	9922.86	350.40	10273.26
	8.957	8650.00	1379.51	5.18	1374.33	1380.10	.00	6.15	25.94	250.00	9992.26	291.53	10283.79
	8.957	27500.00	1383.72	9.39	1374.33	1385.33	.00	10.18	34.51	250.00	9975.46	325.14	10300.60
*	8.957	41500.00	1386.25	11.92	1374.33	1388.38	.00	11.69	34.35	250.00	9965.34	345.37	10310.71
*	8.957	70550.00	1391.81	17.48	1374.33	1393.98	1386.90	12.06	35.76	250.00	8972.44	1830.97	11075.81
	9.014	8650.00	1380.14	5.20	1374.94	1380.77	.00	6.39	26.84	245.00	10044.60	270.79	10315.40
	9.014	27500.00	1384.49	9.55	1374.94	1386.27	.00	10.70	35.05	245.00	10035.90	288.21	10324.10
	9.014	41500.00	1386.95	12.01	1374.94	1389.42	.00	12.61	36.76	245.00	10030.97	298.05	10329.03
	9.014	70550.00	1392.54	17.60	1374.94	1395.45	1387.94	13.72	58.03	245.00	9738.26	1119.13	11091.00
	9.015	8650.00	1380.10	5.20	1374.90	1380.82	.00	6.83	36.01	1.00	10034.73	255.36	10305.13
	9.015	27500.00	1384.36	9.46	1374.90	1386.41	.00	11.50	53.03	1.00	10026.25	272.24	10313.51
	9.015	41500.00	1386.76	11.86	1374.90	1389.62	.00	13.58	58.72	1.00	10021.47	281.74	10318.22
*	9.015	70550.00	1391.84	16.94	1374.90	1396.17	.00	16.69	139.82	1.00	10015.01	309.99	10324.99

SECNO	Q	CWSEL	DEPTH	ELMIN	EG	CRIWS	VCH	10*KS	XLCH	SSTA	TOPWID	ENDST
9.029	8650.00	1380.42	5.32	1375.10	1381.11	.00	6.66	33.32	80.20	10034.34	256.13	10305.52
9.029	27500.00	1385.02	9.92	1375.10	1386.87	.00	10.91	45.39	80.20	10025.05	274.61	10314.68
9.029	41500.00	1387.61	12.51	1375.10	1390.15	.00	12.80	49.48	80.20	10019.84	284.96	10319.82
9.029	70550.00	1392.95	17.85	1375.10	1397.34	1389.36	16.85	145.01	80.20	9737.48	487.98	10325.00
9.030	8650.00	1380.56	5.42	1375.14	1381.14	.00	6.11	23.27	1.00	10029.15	271.69	10300.85
9.030	27500.00	1385.47	10.33	1375.14	1386.97	.00	9.84	26.90	1.00	10019.34	291.32	10310.66
9.030	41500.00	1388.27	13.13	1375.14	1390.30	.00	11.44	27.17	1.00	10013.74	302.53	10316.26
* 9.030	70550.00	1397.92	22.78	1375.14	1398.49	.00	6.69	6.92	1.00	8771.10	2243.90	11015.00
9.064	8650.00	1381.05	5.39	1375.66	1381.64	.00	6.16	23.87	208.00	10041.39	271.53	10312.92
9.064	27500.00	1386.04	10.38	1375.66	1387.53	.00	9.78	26.43	208.00	10031.39	291.54	10322.92
9.064	41500.00	1388.86	13.20	1375.66	1390.87	.00	11.38	26.71	208.00	10025.76	302.79	10328.55
9.064	70550.00	1398.00	22.34	1375.66	1398.70	.00	7.05	10.28	208.00	8753.50	2086.05	10883.47
9.087	8650.00	1381.20	5.34	1375.86	1381.80	.00	6.21	17.98	80.00	10041.47	271.37	10312.84
9.087	27500.00	1386.22	10.36	1375.86	1387.71	.00	9.81	19.59	80.00	10031.44	291.43	10322.87
9.087	41500.00	1389.03	13.17	1375.86	1391.05	.00	11.40	19.75	80.00	10025.81	302.69	10328.50
9.087	70550.00	1398.00	22.14	1375.86	1398.82	.00	7.55	9.03	80.00	8753.50	2012.38	10883.47
9.088	8650.00	1381.29	5.30	1375.99	1381.90	.00	6.27	18.52	50.00	10024.09	271.18	10295.27
9.088	27500.00	1386.31	10.32	1375.99	1387.82	.00	9.85	19.86	50.00	10014.05	291.26	10305.31
9.088	41500.00	1389.12	13.13	1375.99	1391.16	.00	11.44	19.97	50.00	10008.42	302.52	10310.94
9.088	70550.00	1398.01	22.02	1375.99	1398.88	.00	7.79	8.70	50.00	8842.40	1794.78	10794.58
9.100	8650.00	1381.50	5.26	1376.24	1382.12	.00	6.32	25.87	100.00	10014.32	271.02	10285.34
9.100	27500.00	1386.53	10.29	1376.24	1388.05	.00	9.88	27.25	100.00	10004.25	291.17	10295.41
9.100	41500.00	1389.35	13.11	1376.24	1391.39	.00	11.46	27.34	100.00	9998.61	302.43	10301.05
9.100	70550.00	1398.07	21.83	1376.24	1399.02	.00	8.09	13.22	100.00	8842.40	1609.64	10744.84
9.200	8650.00	1382.91	5.30	1377.61	1383.52	.00	6.27	25.14	550.00	9909.41	271.19	10180.59
9.200	27500.00	1388.05	10.44	1377.61	1389.52	.00	9.73	25.95	550.00	9899.13	291.74	10190.87
9.200	41500.00	1390.88	13.27	1377.61	1392.87	.00	11.31	26.17	550.00	9893.46	303.08	10196.54
9.200	70550.00	1398.35	20.74	1377.61	1400.08	.00	10.62	17.72	550.00	8786.40	1052.44	10306.12
9.282	8650.00	1384.05	5.31	1378.74	1384.65	.00	6.27	25.19	450.00	9764.41	271.19	10035.59
9.282	27500.00	1389.22	10.48	1378.74	1390.68	.00	9.69	25.68	450.00	9754.05	291.89	10045.95
9.282	41500.00	1392.07	13.33	1378.74	1394.04	.00	11.25	25.80	450.00	9748.33	303.33	10051.67
9.282	70550.00	1398.91	20.17	1378.74	1400.94	.00	11.60	16.59	450.00	9465.22	468.29	10202.53
* 9.369	8650.00	1385.14	5.26	1379.88	1385.39	.00	4.01	10.17	457.00	9919.49	421.03	10340.51
* 9.369	27500.00	1390.86	10.98	1379.88	1391.41	.00	5.94	8.71	457.00	9908.04	443.91	10351.96
* 9.369	41500.00	1394.06	14.18	1379.88	1394.78	.00	6.83	8.38	457.00	9901.64	456.72	10358.36
* 9.369	70550.00	1400.58	20.70	1379.88	1401.51	.00	7.72	6.73	457.00	9888.59	482.81	10371.41
* 9.400	8650.00	1399.71	4.21	1395.50	1400.93	1399.71	8.88	139.94	53.00	9921.97	411.84	10333.81
* 9.400	27500.00	1402.39	6.89	1395.50	1405.05	1402.39	13.07	114.90	53.00	9909.79	429.39	10339.19
* 9.400	41500.00	1404.57	9.07	1395.50	1406.91	1404.57	12.69	66.89	53.00	9900.40	969.30	10877.73
* 9.400	70550.00	1407.00	11.50	1395.50	1409.57	1407.00	14.05	55.22	53.00	9849.92	1618.15	11522.05

	SECNO	Q	CWSEL	DEPTH	ELMIN	EG	CRIWS	VCH	10*KS	XLCH	SSTA	TOPWID	ENDST
*	9.488	8650.00	1403.31	3.41	1399.90	1403.91	.00	6.23	43.02	410.00	9973.17	427.77	10433.73
*	9.488	27500.00	1406.53	6.63	1399.90	1407.84	.00	9.45	41.58	410.00	9962.68	1025.59	11072.54
	9.488	41500.00	1407.50	7.60	1399.90	1409.38	1407.21	11.64	52.94	410.00	9958.80	1142.97	11252.35
	9.488	70550.00	1409.47	9.57	1399.90	1411.83	1409.27	13.68	54.46	410.00	9950.96	1403.34	11413.15
*	9.560	8650.00	1405.58	4.38	1401.20	1406.55	.00	10.44	120.38	380.20	9974.36	464.65	10439.01
*	9.560	27500.00	1408.42	7.22	1401.20	1410.51	.00	15.41	115.99	380.20	9963.19	488.24	10451.43
*	9.560	41500.00	1409.65	8.45	1401.20	1412.73	1409.59	18.72	134.45	380.20	9958.36	497.90	10456.25
*	9.560	70550.00	1412.38	11.18	1401.20	1416.62	1412.38	21.99	122.38	380.20	9930.69	540.41	10484.53
*	9.655	8650.00	1408.06	7.36	1400.70	1408.57	.00	5.84	21.86	501.60	9761.00	351.16	10112.15
*	9.655	27500.00	1411.61	10.91	1400.70	1413.16	.00	10.38	34.11	501.60	9748.52	436.26	10184.78
*	9.655	41500.00	1413.54	12.84	1400.70	1415.71	.00	12.41	37.24	501.60	9741.90	459.24	10201.14
*	9.655	70550.00	1416.33	15.63	1400.70	1419.84	.00	16.02	45.43	501.60	9732.55	486.72	10219.27
	9.713	8650.00	1408.77	7.17	1401.60	1409.14	.00	4.88	15.55	306.20	9726.40	354.63	10081.03
	9.713	27500.00	1412.97	11.37	1401.60	1414.01	.00	8.20	20.46	306.20	9692.63	452.68	10145.31
	9.713	41500.00	1415.19	13.59	1401.60	1416.63	.00	9.76	21.54	306.20	9687.88	476.95	10164.84
	9.713	70550.00	1418.71	17.11	1401.60	1420.94	.00	12.26	23.49	306.20	9680.31	506.15	10186.46
*	9.800	8650.00	1409.67	6.97	1402.70	1410.30	.00	6.36	39.33	459.40	9810.24	300.53	10110.77
*	9.800	27500.00	1413.96	11.26	1402.70	1415.46	.00	9.87	42.46	459.40	9781.75	378.21	10159.97
	9.800	41500.00	1416.11	13.41	1402.70	1418.18	.00	11.67	43.54	459.40	9772.02	425.00	10207.21
	9.800	70550.00	1419.58	16.88	1402.70	1422.64	.00	14.35	44.83	459.40	9757.92	482.88	10240.79

10-, 50- 100- AND 500-YR

SUMMARY PRINTOUT TABLE 150

	SECNO	XLCH	ELTRD	ELLC	ELMIN	Q	CWSEL	CRIWS	EG	10*KS	VCH	AREA	.01K
	8.566	.00	.00	.00	1366.30	8650.00	1372.70	.00	1373.42	129.08	6.82	1268.39	761.34
	8.566	.00	.00	.00	1366.30	27500.00	1374.92	.00	1376.17	119.83	8.97	3066.74	2512.17
	8.566	.00	.00	.00	1366.30	41500.00	1375.88	.00	1377.56	120.16	10.41	3986.28	3785.88
	8.566	.00	.00	.00	1366.30	70550.00	1377.47	.00	1379.98	120.08	12.72	5546.37	6438.26
*	8.680	602.00	.00	.00	1369.10	8650.00	1375.97	.00	1376.17	22.49	3.59	2408.88	1823.97
*	8.680	602.00	.00	.00	1369.10	27500.00	1378.66	.00	1379.15	25.95	5.63	4881.60	5398.62
*	8.680	602.00	.00	.00	1369.10	41500.00	1380.00	.00	1380.71	27.73	6.75	6152.38	7880.21
*	8.680	602.00	.00	.00	1369.10	70550.00	1382.23	.00	1383.35	30.22	8.49	8324.90	12833.25
	8.815	713.00	.00	.00	1372.00	8650.00	1377.62	.00	1378.04	28.71	5.17	1672.18	1614.31
	8.815	713.00	.00	.00	1372.00	27500.00	1380.50	.00	1381.66	41.28	8.63	3185.35	4280.21
	8.815	713.00	.00	.00	1372.00	41500.00	1381.87	.00	1383.56	48.03	10.43	3978.60	5987.87
	8.815	713.00	.00	.00	1372.00	70550.00	1384.03	.00	1386.75	58.86	13.24	5329.69	9195.73
	8.907	480.00	.00	.00	1373.70	8650.00	1378.83	.00	1379.43	27.09	6.24	1386.45	1661.82
	8.907	480.00	.00	.00	1373.70	27500.00	1382.05	.00	1384.14	51.56	11.61	2369.36	3829.89
	8.907	480.00	.00	.00	1373.70	41500.00	1383.43	.00	1386.81	69.47	14.76	2812.39	4979.11
*	8.907	480.00	.00	.00	1373.70	70550.00	1386.25	1386.25	1391.69	82.95	18.73	3767.40	7746.28
	8.957	250.00	.00	.00	1374.33	8650.00	1379.51	.00	1380.10	25.94	6.15	1405.69	1698.32
	8.957	250.00	.00	.00	1374.33	27500.00	1383.72	.00	1385.33	34.51	10.18	2700.95	4681.29
*	8.957	250.00	.00	.00	1374.33	41500.00	1386.25	.00	1388.38	34.35	11.69	3548.87	7081.32
*	8.957	250.00	.00	.00	1374.33	70550.00	1391.81	1386.90	1393.98	35.76	12.06	7003.35	11797.57
	9.014	245.00	.00	.00	1374.94	8650.00	1380.14	.00	1380.77	26.84	6.39	1353.44	1669.65
	9.014	245.00	.00	.00	1374.94	27500.00	1384.49	.00	1386.27	35.05	10.70	2570.45	4645.00
	9.014	245.00	.00	.00	1374.94	41500.00	1386.95	.00	1389.42	36.76	12.61	3291.96	6845.07
	9.014	245.00	.00	.00	1374.94	70550.00	1392.54	1387.94	1395.45	58.03	13.72	5246.62	9261.62
	9.015	1.00	1394.50	1394.70	1374.90	8650.00	1380.10	.00	1380.82	36.01	6.83	1267.07	1441.47
	9.015	1.00	1394.50	1394.70	1374.90	27500.00	1384.36	.00	1386.41	53.03	11.50	2391.22	3776.25
	9.015	1.00	1394.50	1394.70	1374.90	41500.00	1386.76	.00	1389.62	58.72	13.58	3055.99	5415.56
*	9.015	1.00	1394.50	1394.70	1374.90	70550.00	1391.84	.00	1396.17	139.82	16.69	4225.95	5966.33
	9.029	80.20	1394.50	1394.70	1375.10	8650.00	1380.42	.00	1381.11	33.32	6.66	1299.67	1498.46
	9.029	80.20	1394.50	1394.70	1375.10	27500.00	1385.02	.00	1386.87	45.39	10.91	2521.42	4081.63
	9.029	80.20	1394.50	1394.70	1375.10	41500.00	1387.61	.00	1390.15	49.48	12.80	3243.23	5899.55
	9.029	80.20	1394.50	1394.70	1375.10	70550.00	1392.95	1389.36	1397.34	145.01	16.85	4267.54	5858.59
	9.030	1.00	.00	.00	1375.14	8650.00	1380.56	.00	1381.14	23.27	6.11	1414.72	1793.32
	9.030	1.00	.00	.00	1375.14	27500.00	1385.47	.00	1386.97	26.90	9.84	2795.86	5302.22
	9.030	1.00	.00	.00	1375.14	41500.00	1388.27	.00	1390.30	27.17	11.44	3627.70	7961.42
*	9.030	1.00	.00	.00	1375.14	70550.00	1397.92	.00	1398.49	6.92	6.69	15277.51	26817.60

	SECNO	XLCH	ELTRD	ELLC	ELMIN	Q	CWSEL	CRIWS	EG	10*KS	VCH	AREA	.01K
	9.064	208.00	.00	.00	1375.66	8650.00	1381.05	.00	1381.64	23.87	6.16	1403.68	1770.65
	9.064	208.00	.00	.00	1375.66	27500.00	1386.04	.00	1387.53	26.43	9.78	2811.62	5348.65
	9.064	208.00	.00	.00	1375.66	41500.00	1388.86	.00	1390.87	26.71	11.38	3647.94	8029.58
	9.064	208.00	.00	.00	1375.66	70550.00	1398.00	.00	1398.70	10.28	7.05	12636.13	21998.96
	9.087	80.00	.00	.00	1375.86	8650.00	1381.20	.00	1381.80	17.98	6.21	1392.65	2039.97
	9.087	80.00	.00	.00	1375.86	27500.00	1386.22	.00	1387.71	19.59	9.81	2803.73	6213.52
	9.087	80.00	.00	.00	1375.86	41500.00	1389.03	.00	1391.05	19.75	11.40	3640.12	9338.05
	9.087	80.00	.00	.00	1375.86	70550.00	1398.00	.00	1398.82	9.03	7.55	11710.24	23474.77
	9.088	50.00	.00	.00	1375.99	8650.00	1381.29	.00	1381.90	18.52	6.27	1380.00	2010.20
	9.088	50.00	.00	.00	1375.99	27500.00	1386.31	.00	1387.82	19.86	9.85	2791.35	6170.50
	9.088	50.00	.00	.00	1375.99	41500.00	1389.12	.00	1391.16	19.97	11.44	3627.07	9286.21
	9.088	50.00	.00	.00	1375.99	70550.00	1398.01	.00	1398.88	8.70	7.79	11277.46	23913.46
	9.100	100.00	.00	.00	1376.24	8650.00	1381.50	.00	1382.12	25.87	6.32	1368.91	1700.53
	9.100	100.00	.00	.00	1376.24	27500.00	1386.53	.00	1388.05	27.25	9.88	2784.70	5268.46
	9.100	100.00	.00	.00	1376.24	41500.00	1389.35	.00	1391.39	27.34	11.46	3620.68	7936.72
	9.100	100.00	.00	.00	1376.24	70550.00	1398.07	.00	1399.02	13.22	8.09	10593.51	19402.40
	9.200	550.00	.00	.00	1377.61	8650.00	1382.91	.00	1383.52	25.14	6.27	1380.37	1725.02
	9.200	550.00	.00	.00	1377.61	27500.00	1388.05	.00	1389.52	25.95	9.73	2826.51	5397.87
	9.200	550.00	.00	.00	1377.61	41500.00	1390.88	.00	1392.87	26.17	11.31	3669.88	8111.64
	9.200	550.00	.00	.00	1377.61	70550.00	1398.35	.00	1400.08	17.72	10.62	7271.10	16758.50
	9.282	450.00	.00	.00	1378.74	8650.00	1384.05	.00	1384.65	25.19	6.27	1380.27	1723.31
	9.282	450.00	.00	.00	1378.74	27500.00	1389.22	.00	1390.68	25.68	9.69	2837.58	5426.35
	9.282	450.00	.00	.00	1378.74	41500.00	1392.07	.00	1394.04	25.80	11.25	3688.90	8169.74
	9.282	450.00	.00	.00	1378.74	70550.00	1398.91	.00	1400.94	16.59	11.60	6566.33	17319.51
*	9.369	457.00	.00	.00	1379.88	8650.00	1385.14	.00	1385.39	10.17	4.01	2157.70	2712.31
*	9.369	457.00	.00	.00	1379.88	27500.00	1390.86	.00	1391.41	8.71	5.94	4632.31	9319.12
*	9.369	457.00	.00	.00	1379.88	41500.00	1394.06	.00	1394.78	8.38	6.83	6074.51	14337.68
*	9.369	457.00	.00	.00	1379.88	70550.00	1400.58	.00	1401.51	6.73	7.72	9138.44	27190.19
*	9.400	53.00	.00	.00	1395.50	8650.00	1399.71	1399.71	1400.93	139.94	8.88	973.60	731.21
*	9.400	53.00	.00	.00	1395.50	27500.00	1402.39	1402.39	1405.05	114.90	13.07	2104.00	2565.56
*	9.400	53.00	.00	.00	1395.50	41500.00	1404.57	1404.57	1406.91	66.89	12.69	3891.59	5074.24
*	9.400	53.00	.00	.00	1395.50	70550.00	1407.00	1407.00	1409.57	55.22	14.05	6761.18	9493.71
*	9.488	410.00	.00	.00	1399.90	8650.00	1403.31	.00	1403.91	43.02	6.23	1394.12	1318.85
*	9.488	410.00	.00	.00	1399.90	27500.00	1406.53	.00	1407.84	41.58	9.45	3392.88	4264.61
	9.488	410.00	.00	.00	1399.90	41500.00	1407.50	1407.21	1409.38	52.94	11.64	4481.34	5703.69
	9.488	410.00	.00	.00	1399.90	70550.00	1409.47	1409.27	1411.83	54.46	13.68	7004.74	9560.10
*	9.560	380.20	.00	.00	1401.20	8650.00	1405.58	.00	1406.55	120.38	10.44	1198.60	788.39
*	9.560	380.20	.00	.00	1401.20	27500.00	1408.42	.00	1410.51	115.99	15.41	2551.23	2553.41
*	9.560	380.20	.00	.00	1401.20	41500.00	1409.65	1409.59	1412.73	134.45	18.72	3157.82	3579.08
*	9.560	380.20	.00	.00	1401.20	70550.00	1412.38	1412.38	1416.62	122.38	21.99	4546.12	6377.45

	SECNO	XLCH	ELTRD	ELLC	ELMIN	Q	CWSEL	CRIWS	EG	10*KS	VCH	AREA	.01K
*	9.655	501.60	.00	.00	1400.70	8650.00	1408.06	.00	1408.57	21.86	5.84	1563.91	1850.23
*	9.655	501.60	.00	.00	1400.70	27500.00	1411.61	.00	1413.16	34.11	10.38	2935.70	4708.93
*	9.655	501.60	.00	.00	1400.70	41500.00	1413.54	.00	1415.71	37.24	12.41	3800.64	6800.70
*	9.655	501.60	.00	.00	1400.70	70550.00	1416.33	.00	1419.84	45.43	16.02	5122.71	10467.61
	9.713	306.20	.00	.00	1401.60	8650.00	1408.77	.00	1409.14	15.55	4.88	1771.26	2193.43
	9.713	306.20	.00	.00	1401.60	27500.00	1412.97	.00	1414.01	20.46	8.20	3445.01	6079.78
	9.713	306.20	.00	.00	1401.60	41500.00	1415.19	.00	1416.63	21.54	9.76	4472.59	8942.35
	9.713	306.20	.00	.00	1401.60	70550.00	1418.71	.00	1420.94	23.49	12.26	6204.31	14556.38
*	9.800	459.40	.00	.00	1402.70	8650.00	1409.67	.00	1410.30	39.33	6.36	1359.65	1379.27
*	9.800	459.40	.00	.00	1402.70	27500.00	1413.96	.00	1415.46	42.46	9.87	2834.64	4220.19
	9.800	459.40	.00	.00	1402.70	41500.00	1416.11	.00	1418.18	43.54	11.67	3684.41	6289.04
	9.800	459.40	.00	.00	1402.70	70550.00	1419.58	.00	1422.64	44.83	14.35	5298.01	10537.06

10-, 50- 100- AND 500-YR

SUMMARY PRINTOUT TABLE 150

	SECNO	Q	CWSEL	DIFWSP	DIFWSX	DIFKWS	TOPWID	XLCH
	8.566	8650.00	1372.70	.00	.00	.00	613.63	.00
	8.566	27500.00	1374.92	2.22	.00	.00	930.21	.00
	8.566	41500.00	1375.88	.96	.00	.00	968.07	.00
	8.566	70550.00	1377.47	1.59	.00	.00	996.02	.00
*	8.680	8650.00	1375.97	.00	3.27	.00	823.63	602.00
*	8.680	27500.00	1378.66	2.69	3.74	.00	945.22	602.00
*	8.680	41500.00	1380.00	1.34	4.12	.00	955.49	602.00
*	8.680	70550.00	1382.23	2.23	4.76	.00	991.18	602.00
	8.815	8650.00	1377.62	.00	1.65	.00	487.11	713.00
	8.815	27500.00	1380.50	2.87	1.84	.00	565.04	713.00
	8.815	41500.00	1381.87	1.37	1.87	.00	595.33	713.00
	8.815	70550.00	1384.03	2.17	1.80	.00	649.64	713.00
	8.907	8650.00	1378.83	.00	1.21	.00	291.00	480.00
	8.907	27500.00	1382.05	3.22	1.55	.00	316.88	480.00
	8.907	41500.00	1383.43	1.38	1.57	.00	327.87	480.00
*	8.907	70550.00	1386.25	2.82	2.22	.00	350.40	480.00
	8.957	8650.00	1379.51	.00	.68	.00	291.53	250.00
	8.957	27500.00	1383.72	4.21	1.67	.00	325.14	250.00
*	8.957	41500.00	1386.25	2.53	2.82	.00	345.37	250.00
*	8.957	70550.00	1391.81	5.56	5.56	.00	1830.97	250.00
	9.014	8650.00	1380.14	.00	.62	.00	270.79	245.00
	9.014	27500.00	1384.49	4.35	.77	.00	288.21	245.00
	9.014	41500.00	1386.95	2.46	.70	.00	298.05	245.00
	9.014	70550.00	1392.54	5.59	.73	.00	1119.13	245.00
	9.015	8650.00	1380.10	.00	-.04	.00	255.36	1.00
	9.015	27500.00	1384.36	4.26	-.13	.00	272.24	1.00
	9.015	41500.00	1386.76	2.40	-.19	.00	281.74	1.00
*	9.015	70550.00	1391.84	5.08	-.70	.00	309.99	1.00
	9.029	8650.00	1380.42	.00	.32	.00	256.13	80.20
	9.029	27500.00	1385.02	4.60	.66	.00	274.61	80.20
	9.029	41500.00	1387.61	2.59	.85	.00	284.96	80.20
	9.029	70550.00	1392.95	5.34	1.11	.00	487.98	80.20
	9.030	8650.00	1380.56	.00	.14	.00	271.69	1.00
	9.030	27500.00	1385.47	4.91	.45	.00	291.32	1.00
	9.030	41500.00	1388.27	2.80	.67	.00	302.53	1.00
*	9.030	70550.00	1397.92	9.65	4.97	.00	2243.90	1.00

	SECNO	Q	CWSEL	DIFWSP	DIFWSX	DIFKWS	TOPWID	XLCH
	9.064	8650.00	1381.05	.00	.48	.00	271.53	208.00
	9.064	27500.00	1386.04	5.00	.57	.00	291.54	208.00
	9.064	41500.00	1388.86	2.81	.59	.00	302.79	208.00
	9.064	70550.00	1398.00	9.15	.08	.00	2086.05	208.00
	9.087	8650.00	1381.20	.00	.16	.00	271.37	80.00
	9.087	27500.00	1386.22	5.01	.18	.00	291.43	80.00
	9.087	41500.00	1389.03	2.82	.18	.00	302.69	80.00
	9.087	70550.00	1398.00	8.97	.00	.00	2012.38	80.00
	9.088	8650.00	1381.29	.00	.08	.00	271.18	50.00
	9.088	27500.00	1386.31	5.02	.09	.00	291.26	50.00
	9.088	41500.00	1389.12	2.82	.09	.00	302.52	50.00
	9.088	70550.00	1398.01	8.89	.01	.00	1794.78	50.00
	9.100	8650.00	1381.50	.00	.21	.00	271.02	100.00
	9.100	27500.00	1386.53	5.04	.23	.00	291.17	100.00
	9.100	41500.00	1389.35	2.82	.23	.00	302.43	100.00
	9.100	70550.00	1398.07	8.72	.05	.00	1609.64	100.00
	9.200	8650.00	1382.91	.00	1.41	.00	271.19	550.00
	9.200	27500.00	1388.05	5.13	1.51	.00	291.74	550.00
	9.200	41500.00	1390.88	2.84	1.53	.00	303.08	550.00
	9.200	70550.00	1398.35	7.47	.29	.00	1052.44	550.00
	9.282	8650.00	1384.05	.00	1.13	.00	271.19	450.00
	9.282	27500.00	1389.22	5.17	1.17	.00	291.89	450.00
	9.282	41500.00	1392.07	2.85	1.19	.00	303.33	450.00
	9.282	70550.00	1398.91	6.84	.56	.00	468.29	450.00
*	9.369	8650.00	1385.14	.00	1.09	.00	421.03	457.00
*	9.369	27500.00	1390.86	5.72	1.64	.00	443.91	457.00
*	9.369	41500.00	1394.06	3.20	1.99	.00	456.72	457.00
*	9.369	70550.00	1400.58	6.52	1.67	.00	482.81	457.00
*	9.400	8650.00	1399.71	.00	14.57	.00	411.84	53.00
*	9.400	27500.00	1402.39	2.69	11.54	.00	429.39	53.00
*	9.400	41500.00	1404.57	2.18	10.51	.00	969.30	53.00
*	9.400	70550.00	1407.00	2.43	6.42	.00	1618.15	53.00
*	9.488	8650.00	1403.31	.00	3.61	.00	427.77	410.00
*	9.488	27500.00	1406.53	3.22	4.14	.00	1025.59	410.00
	9.488	41500.00	1407.50	.97	2.93	.00	1142.97	410.00
	9.488	70550.00	1409.47	1.97	2.47	.00	1403.34	410.00
*	9.560	8650.00	1405.58	.00	2.27	.00	464.65	380.20
*	9.560	27500.00	1408.42	2.84	1.89	.00	488.24	380.20
*	9.560	41500.00	1409.65	1.23	2.15	.00	497.90	380.20
*	9.560	70550.00	1412.38	2.72	2.90	.00	540.41	380.20

	SECNO	Q	CWSEL	DIFWSP	DIFWSX	DIFKWS	TOPWID	XLCH
*	9.655	8650.00	1408.06	.00	2.47	.00	351.16	501.60
*	9.655	27500.00	1411.61	3.55	3.19	.00	436.26	501.60
*	9.655	41500.00	1413.54	1.93	3.89	.00	459.24	501.60
*	9.655	70550.00	1416.33	2.79	3.95	.00	486.72	501.60
	9.713	8650.00	1408.77	.00	.71	.00	354.63	306.20
	9.713	27500.00	1412.97	4.20	1.36	.00	452.68	306.20
	9.713	41500.00	1415.19	2.21	1.64	.00	476.95	306.20
	9.713	70550.00	1418.71	3.52	2.38	.00	506.15	306.20
*	9.800	8650.00	1409.67	.00	.90	.00	300.53	459.40
*	9.800	27500.00	1413.96	4.29	.98	.00	378.21	459.40
	9.800	41500.00	1416.11	2.15	.92	.00	425.00	459.40
	9.800	70550.00	1419.58	3.48	.88	.00	482.88	459.40

SUMMARY OF ERRORS AND SPECIAL NOTES

```
WARNING SECNO=     8.680  PROFILE=  1  CONVEYANCE CHANGE OUTSIDE ACCEPTABLE RANGE
WARNING SECNO=     8.680  PROFILE=  2  CONVEYANCE CHANGE OUTSIDE ACCEPTABLE RANGE
WARNING SECNO=     8.680  PROFILE=  3  CONVEYANCE CHANGE OUTSIDE ACCEPTABLE RANGE
WARNING SECNO=     8.680  PROFILE=  4  CONVEYANCE CHANGE OUTSIDE ACCEPTABLE RANGE

CAUTION SECNO=     8.907  PROFILE=  4  CRITICAL DEPTH ASSUMED
CAUTION SECNO=     8.907  PROFILE=  4  MINIMUM SPECIFIC ENERGY

WARNING SECNO=     8.957  PROFILE=  3  CONVEYANCE CHANGE OUTSIDE ACCEPTABLE RANGE
WARNING SECNO=     8.957  PROFILE=  4  CONVEYANCE CHANGE OUTSIDE ACCEPTABLE RANGE

WARNING SECNO=     9.015  PROFILE=  4  CONVEYANCE CHANGE OUTSIDE ACCEPTABLE RANGE

WARNING SECNO=     9.030  PROFILE=  4  CONVEYANCE CHANGE OUTSIDE ACCEPTABLE RANGE

WARNING SECNO=     9.369  PROFILE=  1  CONVEYANCE CHANGE OUTSIDE ACCEPTABLE RANGE
WARNING SECNO=     9.369  PROFILE=  2  CONVEYANCE CHANGE OUTSIDE ACCEPTABLE RANGE
WARNING SECNO=     9.369  PROFILE=  3  CONVEYANCE CHANGE OUTSIDE ACCEPTABLE RANGE
WARNING SECNO=     9.369  PROFILE=  4  CONVEYANCE CHANGE OUTSIDE ACCEPTABLE RANGE

CAUTION SECNO=     9.400  PROFILE=  1  CRITICAL DEPTH ASSUMED
CAUTION SECNO=     9.400  PROFILE=  1  PROBABLE MINIMUM SPECIFIC ENERGY
CAUTION SECNO=     9.400  PROFILE=  1  20 TRIALS ATTEMPTED TO BALANCE WSEL
CAUTION SECNO=     9.400  PROFILE=  2  CRITICAL DEPTH ASSUMED
CAUTION SECNO=     9.400  PROFILE=  2  PROBABLE MINIMUM SPECIFIC ENERGY
CAUTION SECNO=     9.400  PROFILE=  2  20 TRIALS ATTEMPTED TO BALANCE WSEL
CAUTION SECNO=     9.400  PROFILE=  3  CRITICAL DEPTH ASSUMED
CAUTION SECNO=     9.400  PROFILE=  3  PROBABLE MINIMUM SPECIFIC ENERGY
CAUTION SECNO=     9.400  PROFILE=  3  20 TRIALS ATTEMPTED TO BALANCE WSEL
CAUTION SECNO=     9.400  PROFILE=  4  CRITICAL DEPTH ASSUMED
CAUTION SECNO=     9.400  PROFILE=  4  PROBABLE MINIMUM SPECIFIC ENERGY
CAUTION SECNO=     9.400  PROFILE=  4  20 TRIALS ATTEMPTED TO BALANCE WSEL

WARNING SECNO=     9.488  PROFILE=  1  CONVEYANCE CHANGE OUTSIDE ACCEPTABLE RANGE
WARNING SECNO=     9.488  PROFILE=  2  CONVEYANCE CHANGE OUTSIDE ACCEPTABLE RANGE

WARNING SECNO=     9.560  PROFILE=  1  CONVEYANCE CHANGE OUTSIDE ACCEPTABLE RANGE
WARNING SECNO=     9.560  PROFILE=  2  CONVEYANCE CHANGE OUTSIDE ACCEPTABLE RANGE
WARNING SECNO=     9.560  PROFILE=  3  CONVEYANCE CHANGE OUTSIDE ACCEPTABLE RANGE
CAUTION SECNO=     9.560  PROFILE=  4  CRITICAL DEPTH ASSUMED
CAUTION SECNO=     9.560  PROFILE=  4  PROBABLE MINIMUM SPECIFIC ENERGY
CAUTION SECNO=     9.560  PROFILE=  4  20 TRIALS ATTEMPTED TO BALANCE WSEL

WARNING SECNO=     9.655  PROFILE=  1  CONVEYANCE CHANGE OUTSIDE ACCEPTABLE RANGE
WARNING SECNO=     9.655  PROFILE=  2  CONVEYANCE CHANGE OUTSIDE ACCEPTABLE RANGE
WARNING SECNO=     9.655  PROFILE=  3  CONVEYANCE CHANGE OUTSIDE ACCEPTABLE RANGE
WARNING SECNO=     9.655  PROFILE=  4  CONVEYANCE CHANGE OUTSIDE ACCEPTABLE RANGE

WARNING SECNO=     9.800  PROFILE=  1  CONVEYANCE CHANGE OUTSIDE ACCEPTABLE RANGE
WARNING SECNO=     9.800  PROFILE=  2  CONVEYANCE CHANGE OUTSIDE ACCEPTABLE RANGE
```

APPENDIX E

PIER SCOUR CALCULATION SHEET

Consultant: Wood, Patel & Associates, Inc. — Sheet # 1 of 2

References: USDOT Federal Highway Administration - Hydraulic Engineering Circular No. 18 (HEC-18)

Project Name: Skunk Creek (Pier/Contraction Scour) — Date: 06/20/94

Designer: R. Hiner — Checked By J. Holzmeister — Project #: 93986.02

HYDROLOGIC/HYDRAULIC PARAMETERS

Return Interval	100	yrs.	Flow Top Width	282	ft.
Discharge	37253	cfs	Flow Area	3029	ft^2
Water Surface Elev.	1386.85	ft.	Channel Slope	0.00250	ft/ft
Thalweg Elevation	1375.10	ft.	Max. Velocity	14.30	ft/sec
Depth of Flow (Y1)	11.75	ft.	Froude Number	0.76920	

PIER SCOUR CALCULATIONS

Pier Type: Stemwall _____ Columns _____

Foundation Type: Spread Ftng _____ Piles/Drilled Shaft X

K1 = 1.1 Correction factor for pier nose shape K1=1.1 (assume square nose pier)

Angle of Attack (deg) = N/A (15 Minimum for stemwall pier)

Pier Width = 5 ft. Number of Columns/Piles per bent: 4

Dist. Between Columns = 16.33 ft. (Must be greater than 16 ft. for independent analysis)

Effective Pier Width (a) = 9 ft. (Pier width normal to flow plus 4 ft. for debris)

Length of Pier (L) = N/A ft.

K2 = 1 (from Table 4.3, pg. 52 HEC-18)

* Note: For stemwall piers, K2 value determined from Table 4.3
for column piers, K2 = 1.0

Colorado State University Equation (HEC-18 pg. 52)

$$Y_s = Y_1\left(2K_1K_2\left(\frac{a}{Y_1}\right)^{0.65}F_r^{0.43}\right)$$

Scour hole depth = 19.42 ft.

Critical Pier Elevation = N/A ft. (Bottom of shallowest spread footing or tip of shallowest pile)

Minimum scour elevation = 1355.68 ft.

Password: rhubarb

CONTRACTION SCOUR CALCULATION SHEET

CHANNEL/FLOW DATA

Bottom width of main channel (Wc1) = 250 ft.

Bottom width of contracted sect. (Wc2) 230 ft.

Flow in the approach channel (Qmc1) = 37253 cfs

Flow in the contracted section (Qmc2) 37253 cfs

Manning's n for main channel (n1) = 0.035

Manning's n for contracted sect. (n2) = 0.035

Avg. depth in main channel (Y1) = 11.75 ft.

Mode of bed material transport

K1 = 0.59

K2 = 1

CONTRACTION SCOUR CALCULATIONS

Laursen's Equation (HEC-18 pg. 37)
Case 2

$$\frac{Y_2}{Y_1} = \left(\frac{Q_{mc2}}{Q_{mc1}}\right)^{\frac{6}{7}} \left(\frac{W_{c1}}{W_{c2}}\right)^{K_1} \left(\frac{n_2}{n_1}\right)^{K_2}$$

$$Y_s = Y_2 - Y_1$$

Avg. depth in contracted sect. (Y2) = 12.34 ft.

Average scour depth (Ys) = **0.59** ft.

DEGRADATION / GRAVEL MINING

N/A ft.

TOTAL SCOUR

for **100** yr. event = **20.01** ft.

PIER SCOUR CALCULATION SHEET

Consultant: Wood, Patel & Associates, Inc. Sheet # 1 of 2

References: USDOT Federal Highway Administration - Hydraulic Engineering Circular No. 18 (HEC-18)

Project Name: Skunk Creek (Pier/Contraction Scour) Date: 06/20/94

Designer: R. Hiner Checked By J. Holzmeister Project #: 93986.02

HYDROLOGIC/HYDRAULIC PARAMETERS

Return Interval	500	yrs.	Flow Top Width	295	ft.
Discharge	60631	cfs	Flow Area	4120	ft^2
Water Surface Elev.	1390.76	ft.	Channel Slope	0.00250	ft/ft
Thalweg Elevation	1375.10	ft.	Max. Velocity	17.50	ft/sec
Depth of Flow (Y1)	15.66	ft.	Froude Number	0.82523	

PIER SCOUR CALCULATIONS

Pier Type: Stemwall _____ Columns _____

Foundation Type: Spread Ftng _____ Piles/Drilled Shaft X

K1 = 1.1 Correction factor for pier nose shape K1=1.1 (assume square nose pier)

Angle of Attack (deg) = N/A (15 Minimum for stemwall pier)

Pier Width = 5 ft. Number of Columns/Piles per bent: 4

Dist. Between Columns = 16.33 ft. (Must be greater than 16 ft. for independent analysis)

Effective Pier Width (a) = 9 ft. (Pier width normal to flow plus 4 ft. for debris)

Length of Pier (L) = N/A ft.

K2 = 1 (from Table 4.3, pg. 52 HEC-18)

* Note: For stemwall piers, K2 value determined from Table 4.3
for column piers, K2 = 1.0

Colorado State University Equation (HEC-18 pg. 52)

$$Y_s = Y_1 \left(2K_1K_2 \left(\frac{a}{Y_1} \right)^{0.65} F_r^{0.43} \right)$$

Scour hole depth = 22.13 ft.

Critical Pier Elevation = N/A ft. (Bottom of shallowest spread footing or tip of shallowest pile)

Minimum scour elevation = 1352.97 ft.

CONTRACTION SCOUR CALCULATION SHEET

CHANNEL/FLOW DATA

Bottom width of main channel (Wc1) = 250 ft.

Bottom width of contracted sect. (Wc2) 230 ft.

Flow in the approach channel (Qmc1) = 60631 cfs

Flow in the contracted section (Qmc2) 60631 cfs

Manning's n for main channel (n1) = 0.035

Manning's n for contracted sect. (n2) = 0.035

Avg. depth in main channel (Y1) = 15.66 ft.

Mode of bed material transport

K1 = 0.59

K2 = 1

CONTRACTION SCOUR CALCULATIONS

Laursen's Equation (HEC-18 pg. 37)
Case 2

$$\frac{Y_2}{Y_1} = \left(\frac{Q_{mc2}}{Q_{mc1}}\right)^{\frac{6}{7}} \left(\frac{W_{c1}}{W_{c2}}\right)^{K_1} \left(\frac{n_2}{n_1}\right)^{K_2}$$

$$Y_s = Y_2 - Y_1$$

Avg. depth in contracted sect. (Y2) = 16.45 ft.

Average scour depth (Ys) = **0.79** ft.

DEGRADATION / GRAVEL MINING

N/A ft.

TOTAL SCOUR

for **500** yr. event = **22.92** ft.

SKUNK CREEK CHANNELIZATION JOB NO.: 93986.02

DROP STRUCTURE

SEEPAGE AND UPLIFT COMPUTATION:

LANE'S WEIGHTED CREEP METHOD

DGN BY: JJH DATE: 3/22/94

PROCEDURE FROM DESIGN OF SMALL DAMS CHK BY: RLH DATE:

filename: SKWCM6.WQ1

Effective Length Calculation

Path	Direction	Length (ft)	Cum. Length (ft)	Weight Factor	Effective Length (ft)	Fractional Length
1-2	V	8	8	1	8.00	0.12
2-3	H	0.95	8.95	0.333	8.32	0.12
3-4	V	4.5	13.45	1	12.82	0.19
4-5	H	7.63	21.08	0.333	15.36	0.22
5-6	H	35.49	56.57	0.333	27.18	0.39
6-7	V	2.17	58.74	1	29.35	0.42
7-8	H	65.75	124.49	0.333	51.24	0.74
8-9	V	7.5	131.99	1	58.74	0.85
9-10	H	0.95	132.94	0.333	59.06	0.86
10-11	V	10	142.94	1	69.06	1.00

Total Creep Calculation

STAGE	at Crest	at Endsill	Creep
Low Flow	1390.86	1375.72	4.56
10-yr.	1393.63	1381.05	5.49
100-yr.	1397.23	1388.22	7.66

Uplift Head Calculation

		Pizometric Profile				Uplift Head		
Point	Elevation	Low Flow	10-yr.	100-yr.	SPF	Low FLow	10-yr.	100-yr.
1	1390.86	1390.86	1393.63	1397.23	0.00	0.00	2.77	6.37
2	1382.86	1389.11	1392.17	1396.19	0.00	6.25	9.31	13.33
3	1382.86	1389.04	1392.12	1396.14	0.00	6.18	9.26	13.28
4	1387.36	1388.05	1391.30	1395.56	0.00	0.69	3.94	8.20
5	1387.36	1387.49	1390.83	1395.23	0.00	0.13	3.47	7.87
6	1375.53	1384.90	1388.68	1393.68	0.00	9.37	13.15	18.15
7	1373.36	1384.43	1388.28	1393.40	0.00	11.07	14.92	20.04
8	1373.22	1379.63	1384.30	1390.54	0.00	6.41	11.08	17.32
9	1365.72	1377.98	1382.93	1389.57	0.00	12.26	17.21	23.85
10	1365.72	1377.91	1382.87	1389.52	0.00	12.19	17.15	23.80
11	1375.72	1375.72	1381.05	1388.22	0.00	0.00	5.33	12.50

Fx and Fy Calculations
Low Flow Conditions (post hydrograph)

Surface	Surface Area per ft.	Pressure Centroid	Centroid Coordinate xc	Centroid Coordinate yc	Pressure	Fx	Fy
1-2	11.31	7.54	19.81	19.81	2204	1558	1558
2-3	0.95	0.47	17.62	17.14	368	0	368
3-4	6.36	2.33	19.73	18.78	1363	963	963
4-5	7.63	2.95	24.53	21.64	196	0	196
5-6	37.41	24.77	50.31	13.87	11094	3508	10525
6-7	2.17	1.11	62.49	8.56	1384	1384	0
7-8	63.53	28.94	91.41	7.50	34633	0	34633
8-9	10.61	5.86	130.16	3.37	6180	4369	4369
9-10	0.95	0.47	134	0.00	725	0	725
10-11	14.14	4.71	131.14	3.33	5379	3803	3803

Fx and Fy Calculations
10-year Flow Condition

Surface	Surface Area per ft.	Pressure Centroid	Centroid Coordinate xc	Centroid Coordinate yc	Pressure	Fx	Fy
1-2	11.31	6.68	20.42	20.42	4264	3014	3014
2-3	0.95	0.47	17.62	17.14	550	0	550
3-4	6.36	2.75	20.03	19.08	2617	1850	1850
4-5	7.63	3.74	24.77	21.64	1763	0	1763
5-6	37.41	22.33	48.14	14.59	19401	6135	18406
6-7	2.17	1.11	62.49	8.56	1901	1901	0
7-8	63.53	30.20	92.66	7.50	51535	0	51535
8-9	10.61	5.69	130.04	3.48	9363	6620	6620
9-10	0.95	0.47	134.00	0.00	1018	0	1018
10-11	14.14	5.83	130.35	4.12	9918	7012	7012

WOOD / PATEL ASSOCIATES
Civil Engineers
Hydrologists
Land Surveyors

PROJECT SKUNK CREEK
PROJECT NO. 92996.02 SHEET NO. 1 OF 6
CALCULATED BY WH DATE 3/23/94
CHECKED BY DATE

SKUNK CREEK DROP STRUCTURE

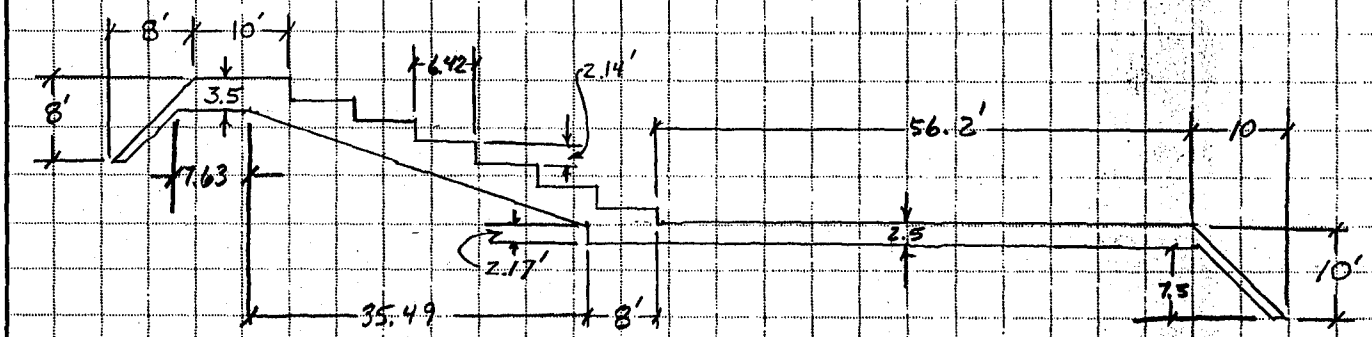

TOTAL LENGTH = 122.7'

SECTION 1

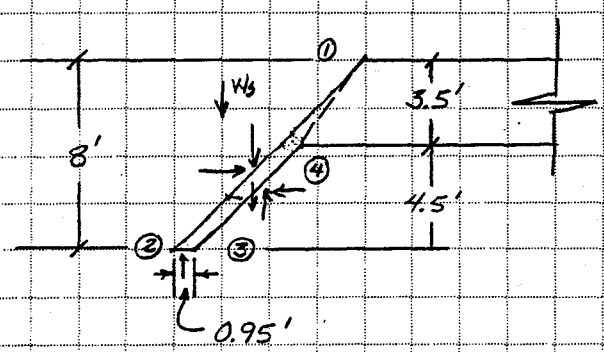

AREA = (0.5)(4.28)(0.67) + (0.5)(0.62)(0.67) + (6.36)(0.67)

AREA = 5.92 FT^2

W_t = (5.92)(140) = 829 lbs $\qquad$ W_s = (0.5)(8)(8)(72.5) = 2320 lbs

DETERMINE CENTER OF GRAVITY FROM 1

X_c = [(4.26)(5.28) + (1.43)(2.17) + (0.22)(3.02)] / 5.92

X_c = 4.44 FT

OVERTURNING ABOUT ①

$$SF = \frac{(0.83)(4.44) + (2.320)(5.33) + (1.56)(5.33) + (1.56)(5.33)}{(0.37)(7.53) + (0.96)(6.35) + (0.96)(6.35)} = \frac{32.7}{15.0} = \underline{\underline{2.18}}$$

$$SF_{10} = \frac{(0.83)(4.44) + (2.32)(5.33) + (3.01)(4.72) + (3.01)(4.72) + (0.17)(5.33)}{(0.55)(7.53) + (1.85)(6.06) + (1.85)(5.11)} = \underline{\underline{1.83}}$$

SECTION 2

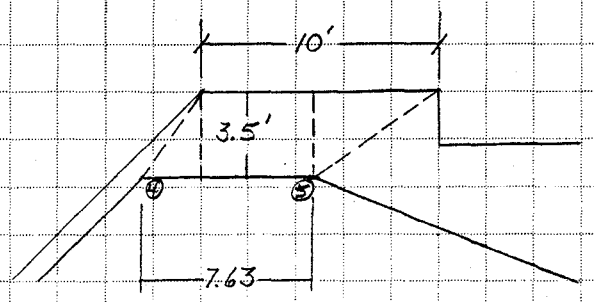

AREA = (0.5)(2.55)(3.5) + (3.5)(5.08) + (0.5)(4.92)(3.5) = 30.85 FT²

WEIGHT = (30.85)(140) = 4319 lbs

DETERMINE CENTER OF GRAVITY FROM 4

$$X_c = \frac{(1.70)(4.46) + (5.09)(17.78) + (9.27)(8.61)}{30.85} = 5.77 \text{ FT FROM } 4$$

DETERMINE OVERTURNING ABOUT 5

$$SF = \frac{(4.32)(1.86)}{(0.20)(4.68)} = \frac{8.04}{0.93} = \underline{\underline{8.59}}$$

$$SF_{10} = \frac{(4.32)(1.86) + (0.17)(0.08)}{(1.76)(3.89)} = \frac{8.05}{6.85} = \underline{\underline{1.18}}$$

SECTION 3

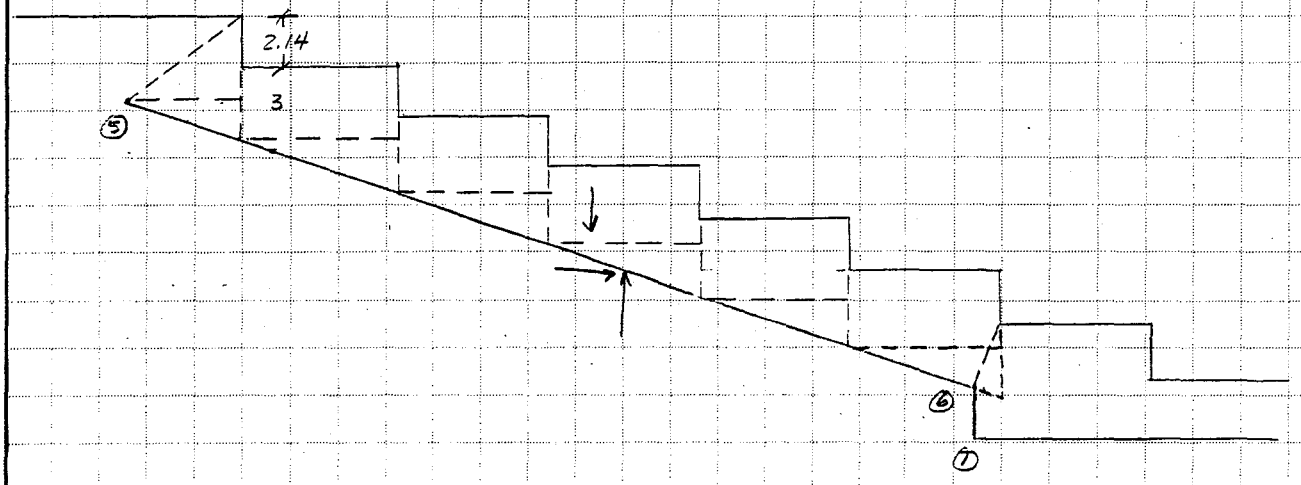

AREA = (0.5)(4.92)(3.5) + (0.5)(4.92)(1.64) + (5)(3)(6.42) + (0.5)(5)(2.14)(6.42) − (0.5)(1)(2.82) − (0.5)(2.82)(0.61)

AREA = 141.02 FT^2

WEIGHT = (141)(140) = 19,743 lb

DETERMINE CENTER OF GRAVITY FROM 5

X_c = (3.28)(8.61) + (3.28)(4.03) + (8.13)(19.26) + (14.55)(19.26) + (20.97)(19.26) + (27.39)(19.26) + (33.81)(19.26) + (9.2)(6.87) + (15.62)(6.87) + (22.04)(6.87) + (28.46)(6.87) + (34.88)(6.87) − (36.67)(1.41) − (36.16)(0.86)

X_c = 2735.14 / 141.02 = 19.39 FT FROM 5

DETERMINE OVERTURNING MOMENT ABOUT 6

$$SF = \frac{(19.74)(16.10)}{(3.51)(4.0) + (10.53)(11.99)} = \frac{317.8}{140.3} = \underline{\underline{2.26}}$$

$$SF_{10} = \frac{(19.74)(16.10) + \text{neglect } W_w}{(6.14)(4.77) + (18.41)(14.31)} = \frac{317.8}{292.7} = \underline{\underline{1.09}}$$

Neglect W_w conservative

WOOD / PATEL ASSOCIATES
Civil Engineers
Hydrologists
Land Surveyors

PROJECT: SKUNK CREEK
PROJECT NO. 93986.02 SHEET NO. 5 OF 6
CALCULATED BY: JJH DATE: 3/23/94
CHECKED BY: _____ DATE: _____

SECTION 4

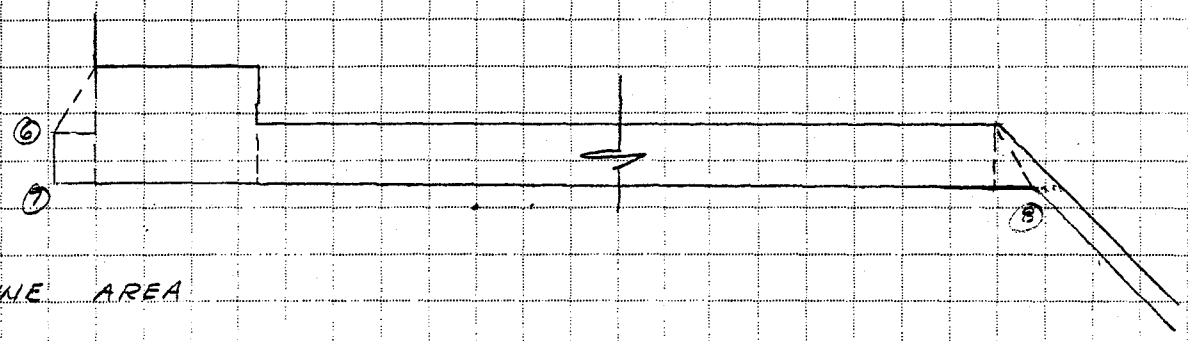

DETERMINE AREA

AREA = (0.5)(1.52)(2.47) + (1.52)(2.17) + (4.64)(6.42) + (2.5)(56.2) + (0.5)(1.55)(2.5)

AREA = 177.4 FT^2

WEIGHT = (177.4)(140) = 24,840 lbs

DETERMINE CENTER OF GRAVITY FROM 7

X_c = (1.01)(1.89) + (0.76)(3.29) + (4.73)(29.78) + (36.04)(140.5) + (64.66)(1.93) / 1774 = 30.06 FT

DETERMINE OVERTURNING MOMENT

$$SF = \frac{(24.84)(30.06)}{(1.38)(1.06) + (34.63)(28.94)} = \frac{746.7}{1003.7} = \underline{\underline{0.75}}$$

ASSUMES NO WEEP HOLES

$$SF_{10} = \frac{(24.84)(30.06) + (0.332)(56.2) + (0.197)(6.42)}{(1.90)(1.06) + (51.54)(30.2)} = \frac{766.6}{1558.5} = \underline{\underline{0.49}}$$

WOOD / PATEL ASSOCIATES
Civil Engineers
Hydrologists
Land Surveyors

PROJECT: SKUNK CREEK
PROJECT NO. 93986.02 SHEET NO. 6 OF 6
CALCULATED BY: JJH DATE
CHECKED BY: DATE

SECTION 5

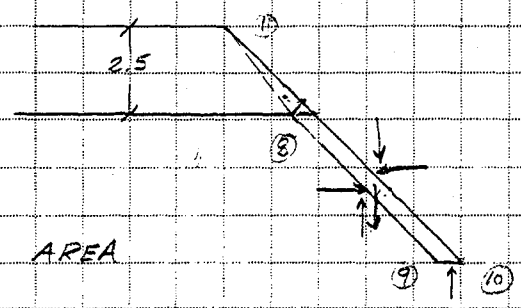

DETERMINE AREA

AREA = (7.5)(0.67) + (0.5)(0.67)(2.87) + (0.5)(0.95)(0.48)

AREA = 6.21 FT^2

WEIGHT = (6.02)(140) = 842.4 lbs W_s = (0.5)(10)(10)(72.5) = 3625 lbs

DETERMINE CENTER OF GRAVITY FROM (10)

X_c = (5.03)(4.22) + (7.97)(0.23) + (8.80)(1.43) / 6.21 = 5.73 FT

DETERMINE OVERTURNING MOMENT ABOUT (10)

$$SF = \frac{(0.84)(5.73) + (3.80)(3.33) + (3.90)(3.33) + (3.63)(3.33)}{(4.37)(3.36) + (4.37)(3.36) + (0.73)(0.48)} = \frac{42.2}{29.7} = \underline{\underline{1.42}}$$

$$SF_{10} = \frac{(0.84)(5.73) + (7.01)(4.12) + (7.01)(4.12) + (3.63)(3.33) + (0.33)(5)}{(6.62)(3.47) + (6.62)(3.47) + (1.02)(0.47)} = \frac{76.4}{46.4} = \underline{\underline{1.65}}$$

WOOD/PATEL ASSOCIATES
Civil Engineers
Hydrologists
Land Surveyors

PROJECT: Pinnacle Peak Road Bridge
PROJECT NO. 93986 SHEET NO. 1 OF 2
CALCULATED BY JW DATE 11/3/93
CHECKED BY RPA DATE 7-13-94

DETERMINE: SCOUR DEPTH AT SOIL CEMENT EMBANKMENT PROTECTION DUE TO SIDE FLOW

REF: HIGHWAYS IN THE RIVER ENVIRONMENT

$$Y_s/Y_c = 4\left(\frac{Y_c}{d_s}\right)^{0.2} - 3\left(\frac{d_{rr}}{Y_c}\right)^{0.1}$$

Y_s = SCOUR DEPTH MEASURED FROM DS TAILWATER
Y_c = CRITICAL DEPTH OF FLOW
d_s = SIZE OF MATERIAL BEING SCOURED
d_{rr} = SIZE OF RIP-RAP PROTECTING SILL

THE EMBANKMENT IS CONSTRUCTED OF SOIL CEMENT
ASSUME RIP-RAP = 1.0 AT INVERT

$$Y_s = \left[4\left(\frac{5.87}{1.5}\right)^{0.2} - 3\left(\frac{1.0}{5.87}\right)^{0.1}\right] 5.87$$

Y_s = 16 FT

* $3\left(\frac{d_{rr}}{Y_c}\right)^{0.1}$ IS RELATIVELY INSENSITIVE

d_{rr} = 0.25 → 2.18 → Y_s = 18 FT
d_{rr} = 0.50 → 2.35 → Y_s = 17.1 FT
d_{rr} = 1.00 → 2.51 → Y_s = 16.1 FT
d_{rr} = 1.50 → 2.62 → Y_s = 15.5 FT

WOOD / PATEL
ASSOCIATES
Civil Engineers
Hydrologists
Land Surveyors

PROJECT Pinnacle Peak Road Bridge
PROJECT NO. 93986 SHEET NO. 2 OF 2
CALCULATED BY JLH DATE 11/3/93
CHECKED BY RPA DATE 7/13/94

RECOMMENDATION: EXTEND THE EMBANKMENT PROTECTION TO 16 FT BELOW THE THALWEG RATHER THAN THE PREVIOUSLY DESIGNED 10 FT FOR THE EAST EMBANKMENT SOIL CEMENT

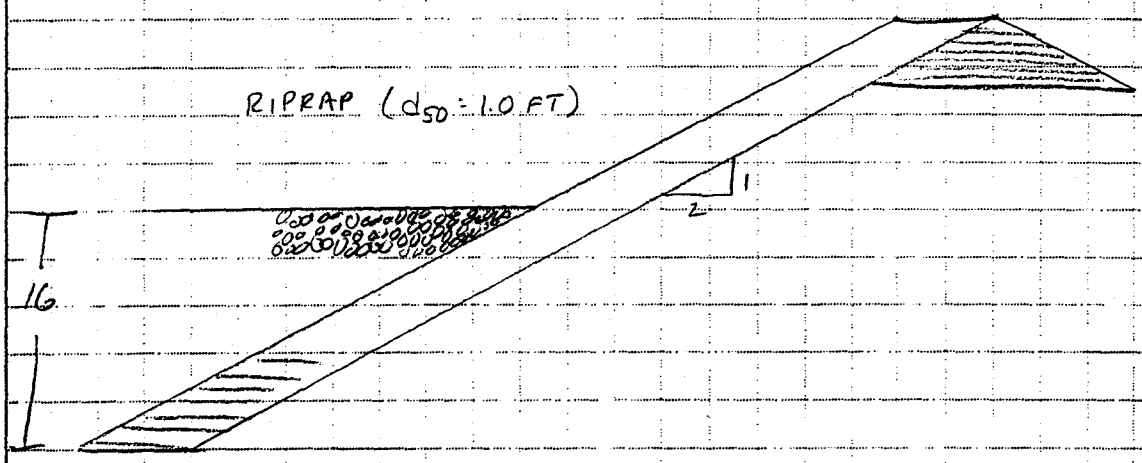

APPENDIX F

DEPARTMENT OF THE ARMY
LOS ANGELES DISTRICT, CORPS OF ENGINEERS
ARIZONA-NEVADA AREA OFFICE
3636 NORTH CENTRAL AVENUE
PHOENIX, ARIZONA 85012-1936

JUN 21 1994

REPLY TO
ATTENTION OF

Office of the Chief
Regulatory Branch

Post-it™ Fax Note 7671	Date	# of pages ▸ 3
To Jeff Holzmeister	From Gary	
Co./Dept. Wood/Patel	Co.	
Phone #	Phone #	
Fax # We just	Fax # Recd this	

City of Phoenix
Street and Transportation Department
ATTN: Mr. Ralph Goodall
1034 East Madison Street
Phoenix, Arizona 85034

File Number: 94-495-CL

Dear Mr. Goodall:

This is in reply to your application and/or letter dated May 24, 1994 concerning our permit authority under Section 404 of the Clean Water Act (U.S.C. 1344) over your proposal to discharge dredged and/or fill material associated with a bridge crossing, channel grading, soil cement bank stabilization, and a drop structure in Skunk Creek at Pinnacle Peak Road and 35th Avenue, (Sections 10, 11, and 15, T4N, R2E), Phoenix, Maricopa County, Arizona.

Regulations for our permit program, published in the Federal Register, include 33 CFR Part 330 - Nationwide Permits (see the enclosure). The Corps of Engineers has determined that your proposed activity complies with the terms of the nationwide permit at Part 330, Appendix A(B)(26) for discharges of dredged or fill material into headwaters and isolated waters of the United States, including wetlands, that are part of a single and complete project which would cause the loss or substantial adverse modification of one to ten acres of such waters. For the purposes of this nationwide permit, the acreage of loss of waters of the U.S. includes the filled area plus waters of the U.S. that are adversely affected by flooding, excavation or drainage as a result of the project. You must comply with the applicable regional, general, and 404 only conditions described in the enclosure. Furthermore, you must also comply with the attached special conditions.

This letter of verification is valid for a period not to exceed two years unless the nationwide permit is modified, reissued, or revoked before that time. It is incumbent upon you to remain informed of changes to the nationwide permits.

A nationwide permit does not grant any property rights or exclusive privileges. Also, it does not authorize any injury to the property or rights of others or authorize interference with any existing or proposed Federal project. Furthermore, it does not obviate the need to obtain other Federal, state, or local authorizations required by law.

If you have any questions please contact me at (602) 640-5385.

Sincerely,

Cindy Lester

Cindy Lester
Chief, Arizona Field Office
Regulatory Branch

Enclosure(s)

SPECIAL CONDITIONS APPLICABLE TO NATIONWIDE PERMIT FOR
THE GENERAL PERMITTEE'S FILE NUMBER 94-495-CL

a. The permittee shall comply with all requirements and conditions in the letter of state water quality certification that the Arizona Department of Environmental Quality signed on June 8, 1994. This certification demonstrates that the permittee has complied with Section 401(a) of the Clean Water Act. A copy of this letter is enclosed.

WCMS-301.224.237

495-3570

ARIZONA DEPARTMENT OF ENVIRONMENTAL QUALITY

Fife Symington, Governor Edward Z. Fox, Director

June 8, 1994

RECEIVED
JUN 17 1994
WOOD, PATEL & ASSOCIATES

Mr. ~~Dan Burdett~~ Jeff
Wood, Patel & Associates, Inc.
1550 E. Missouri, Ste. 203
Phoenix, AZ 85014

RE: NWP 26 - For the City of Phoenix to construct a bridge on Deer Valley Road to cross Skunk Creek.

Dear Mr. Burdett:

The Arizona Department of Environmental Quality (ADEQ) staff has reviewed the referenced Public Notice and other information for State Water Quality Certification pursuant to Sections 401 and 404 of the Federal Clean Water Act. Information listed in Section B were used as the basis for this action. Our technical review has determined that no negative impacts will occur to the chemical, physical or biological integrity of Skunk Creek when the conditions shown below in Section C are adhered to during construction and post construction activities.

A. PROJECT DESCRIPTION

1. Approximately 175,000 cubic yards of material will be removed from Skunk Creek to create a channel. The channel will be excavated to a depth of 15 to 17 feet at the bridge and grade control structure and slope to a grade match at the Adobe Dam 100-year flood water elevation.

2. Soil cement bank protection will be placed on both sides of Skunk Creek between the bridge and the grade control structure for a distance of 350 feet.

3. A concrete grade control structure will be placed 350 feet upstream of the dam with a difference in elevation of 17 feet between the upstream and downstream channel invert surfaces.

4. Training dikes on both sides of Skunk Creek will guide flowing water to the grade control structure.

5. Downstream of the bridge the channel walls will be composed of native soil and will be sloped at 1V to 4H. The channel height feathers to zero approximately 800 feet downstream of the bridge.

B. BASIS FOR CONDITIONAL STATE 401 WATER QUALITY CERTIFICATION

1. State of Arizona, Water Quality Standards for Navigable Waters, Arizona Administrative Code (A.A.C.) Title 18, Chapter 11, Article 1.

2. Arizona Water Quality Control Council Policy for Construction and Related Activities in Watercourses, Adopted April 13, 1977.

3. Final Report and Recommendations of the Governor's Riparian Habitat Task Force, Executive Order 89-16, dated October 1990, and Executive Order No. 91-6 dated February 14, 1991.

4. U.S. Army Corps of Engineers (COE) Predischarge Notification No. 49-495-CL dated May 24, 1994 and received by ADEQ on May 24, 1994.

5. An information package received by ADEQ March 4, 1994 from Jeffrey Holzmeister of Wood, Patel & Associates, Inc. (WPA) consisting of the following:

   a. A cover letter requesting 401 Certification for the project.

   b. A copy of the 404 application to the US Army Corps of Engineers (COE).

   c. Two 3x5 inch color photographs of the site.

   d. An 8 1/2 x 11 inch vicinity map of the area.

   e. A copy of our State Certification for the adjacent Skunk Creek Landfill.

   f. An aerial photo of the project area measuring 3 feet by 5 feet.

   g. A drawing of channel details measuring 2 feet by 3 feet.

   h. A drawing of the Skunk Creek Channel Plan/Profile.

6. A visit by James Matt on May 24, 1994 to the City of Phoenix Transportation Department to discuss the project with Gary Benton.

7. A set of 4 blueline prints of the project measuring 24 inches x 36 inches furnished by WPA and received by James Matt on May 26, 1994.

C. CONDITIONS FOR STATE 401 WATER QUALITY CERTIFICATION

1. Other permits or approvals may be required by Maricopa County, the Arizona Department of Environmental Quality (ADEQ), or the U.S. Environmental Protection Agency if the overall project includes a potable water supply, wastewater reuse facilities, or wastewater collection/holding/treatment/disposal facilities.

2. No disposal of construction or demolition wastes, wastewater, contaminated water or any other potential pollutant is authorized by this State 401 Water Quality Certification by ADEQ, except as expressly provided in the Section 404 Permit.

3. This Certification is only for the project described in Section A and is valid for a period of 30 months from the date signed by the Assistant Director. If project construction has not started by this deadline, the applicant must notify ADEQ, Attention Surface Water Quality Certification, Office of Water Quality, 3033 North Central Avenue, 5th Floor, Phoenix, Arizona 85012. ADEQ will then have the option of extending, modifying or denying this Certification.

4. The applicant must provide a copy of these State 401 Water Quality Certification Conditions to all appropriate contractors and subcontractors. The applicant must also post a copy of these conditions in a weather resistant location at the construction site where it may be seen by the workers.

5. There can be no substantive changes/modifications in the project plans and analyses identified in Sections A and B or the implementation of those plans which might affect surface water quality. If a substantive change/ modification is desired, notice and supporting information must be submitted to ADEQ for review. ADEQ will then modify this Certification to include the changes/modifications, provided that Water Quality Standards for Navigable Waters (A.A.C. Title 18, Chapter 11, Article 1) will be achieved. Failure of the operator to promptly notify ADEQ of any proposed substantive changes/modifications could result in a revocation of this Certification. Correspondence to ADEQ must be addressed per Condition C.3, above.

6. When this project is physically commenced at the construction site, ADEQ must be notified by the applicant or his designee within seven days of the start date. When this notification is made, please provide the start date and the names and phone numbers of the prime contractor and a contact person. ADEQ may conduct inspections to determine compliance with A.A.C. Title 18, Chapter 11, Article 1. When the project is complete ADEQ must be similarly notified. Notification must be addressed to ADEQ per Condition C.3, above.

7. Runoff and seepage from roadways, embankments, and other alterations of the natural environment must not cause a violation of A.A.C. Title 18, Chapter 11, Article 1.

8. All off-site material sources for the project must have valid and current permits under the Federal Clean Water Act [Sections 402 (NPDES) and 404 (Dredge and Fill)] and the State Aquifer Protection Program, where necessary. Facilities and activities not covered by individual permits under these programs are not exempt from the duty to comply with water quality standards, and will be subject to compliance action if violation is documented. Other permits pertaining to air quality may be required for material sources and are the responsibility of the applicant or his agent(s).

9. Water for dust suppression, if used, must not contain contaminants that could violate ADEQ water quality standards for surface waters or aquifers.

10. Practices to avoid or minimize damage to floodplain ecosystems, including riparian zones and wetlands, should be considered during project planning, construction and operation, consistent with the Final Report and Recommendations of the Governor's Riparian Habitat Task Force of October, 1990 and Executive Order 89-16.

11. Pollution from the operation of equipment in the construction area must be removed from and properly disposed outside of the 100-year floodplain. Spills must be cleaned up and properly disposed.

12. Construction material placed within the 100-year floodplain must be free of substances which can cause or contribute to the pollution of waters of the State. Use of native soil or rock is encouraged whenever possible. The applicant must take necessary steps to insure contaminated materials are not used for fill within the 100-year floodplain. Prior to use as fill, materials obtained from agricultural, mining, or other potentially contaminated areas must be tested to evaluate the presence of pollutants and the results must be reported to ADEQ at the address specified in Condition C.3, above.

13. Erosion control and/or other bank protection features should be used to minimize channel erosion and soil loss, where appropriate. Denuded areas should be revegetated as soon as possible with native plants and seed.

14. Materials used and disposed on-site shall contain less than ten (10) percent of particles that are finer than 0.25 mm diameter (passing a No. 60 Sieve, on a dry weight basis) unless these materials are protected by solid construction surfaces or disposed outside the 100-year floodplain and stabilized to prevent subsequent runoff into waters of the State.

15. Debris (such as soil, silt, sand, rubbish, cement, asphalt, oil or petroleum products, organic materials, tires or batteries) derived from construction or demolition activities must not be deposited at any site where it may be washed into a watercourse.

16. A boulder/cobble field will be laid out to surround the top of the grade control structure. The field should extend 100 feet in all directions on the surface from the grade control structure. Rock size may vary from a minimum diameter of 8 inches to 24 inches. The boulders should be in a single layer and spread out within the field with minimal contact.

17. After construction of this project has been completed and approved by the City of Phoenix, a set of photographs shall be taken and submitted to ADEQ as per Condition C.3, above. A minimum of 12 photographs will be taken to show the new invert of Skunk Creek and the boulder/cobble field.

Construction procedures must be consistent with the Arizona Water Quality Control Council (WQCC) Policy for Construction and Related Activities in Watercourses, Adopted April 13, 1977. The specific procedures for preventing water pollution indicated in WQCC Policies #1 through #13, together with Conditions C.1 through C.17, listed above, should ensure compliance with water quality standards. Subject to the above Project Description, Basis and Conditions of Certification, this letter certifies that the proposed project of The City of Phoenix Transportation Department complies with existing navigable water quality standards. If you have any questions about this Letter of Certification, please call James Matt (602) 207-4502. Thank you for your cooperation and efforts to protect our natural environment.

Sincerely,

Authorized ADEQ Signature _____ Date 6/10/94

Brian E. Munson, Director
Water Division

BEM:EKS:JRM:hn

cc: James Romero, EPA Region 9
Corps of Engineers Regulatory Branch - Phoenix
Larry Rielly, AGFD
Sam Spiller, USFWS

JRM\A:#9\BURDETT.LTR