FINAL DESIGN REPORT
SKUNK CREEK CHANNEL IMPROVEMENTS
APPENDICES

Submitted to:

Flood Control District of Maricopa County
2801 West Durango Street
Phoenix, AZ

Submitted by:

Simons, Li & Associates, Inc.
4600 South Mill Avenue, Suite 200
Tempe, AZ 85282

June, 1998

Simons, Li & Associates, Inc.

Property of
Flood Control District of MC Library
Please Return to
2801 W. Durango
Phoenix, AZ 85009

FINAL DESIGN REPORT

SKUNK CREEK CHANNEL IMPROVEMENTS

Submitted to:

Flood Control District of Maricopa County
2801 West Durango
Phoenix, Arizona 85009

Submitted by:

Simons, Li & Associates, Inc.
4600 South Mill Avenue, Suite 200
Tempe, Arizona 85282

Registered Professional Engineer (Civil)
CERTIFICATE NO.
21560
DENNIS L.
RICHARDS
Date Signed 6-30-98
ARIZONA, U.S.A.

Registered Professional Engineer (Civil)
CERTIFICATE NO.
28660
BART S.
BERGENDAHL
Date Signed 6-30-98
ARIZONA, U.S.A.

June, 1998

TABLE OF CONTENTS

Section		Page
LIST OF FIGURES		iii
LIST OF TABLES		iv
I.	INTRODUCTION	1
1.1	Authorization and Purpose	1
1.2	Project Description	1
1.3	Scope of Work	1
II.	DATA BASE	4
2.1	Data Collection Summary	4
2.2	Hydrology	4
2.3	Sediment Characteristics	9
2.4	Land Use	9
2.5	Topographic Mapping	12
III.	ANALYSES	14
3.1	Hydraulic Analysis	14
3.2	Qualitative Channel Stability Analysis (Level I)	18
3.3	Sediment Transport Capacity Analysis (Level II)	18
3.4	Sediment Supply Analysis	29
3.5	Movable Bed Modeling (Level III)	43
3.6	Scour Components	43
3.6.1	General scour	48
3.6.2	Long-term degradation	48
3.6.3	Low-flow incisement	48
3.6.4	Bedform scour	48
3.6.5	Factor of safety	49
3.6.6	Standard Toe-Down Depth	49
3.6.7	Local scour	49
3.6.8	Bend scour	49
3.6.9	Toe-Down Adjustment	49

Registered Professional Engineer (Civil) CERTIFICATE NO. 21560 DENNIS L. RICHARDS Date Signed 6-30-98 ARIZONA, U.S.A.

Registered Professional Engineer (Civil) CERTIFICATE NO. 28660 BART S. BERGENDAHL Date Signed 6-30-98 ARIZONA, U.S.A.

TABLE OF CONTENTS - Continued

Section		Page
IV.	FINAL DESIGN	56
4.1	Criteria and Constraints	56
4.2	Channel Geometry	56
4.3	Ramp Configuration and Criteria	57
4.4	Grade Control Structures	57
4.5	Toe-Down Elevations	65
4.6	Top-of-Bank Elevations	69
4.7	Local Drainage Structures	69
IV.	REFERENCES	74

APPENDICES (Bound Separately)

APPENDIX A	Existing Conditions HEC-2 Output File
APPENDIX B	Proposed Conditions HEC-2 Output File
APPENDIX C	Example Scour Calculations
APPENDIX D	QUASED Output Summaries
APPENDIX E	Geotechnical Reports
APPENDIX F	Gabion Design Calculations
APPENDIX G	Local Drainage Data
APPENDIX H	Construction Quantities Calculations

APPENDIX A

EXISTING CONDITIONS HEC-2 MODEL

14AUG97 18:56:02

```
************************************
 HEC-2 WATER SURFACE PROFILES

 Version   4.6.2;  May 1991
************************************


T1      SIMONS, LI & ASSOCIATES, INC. (PAZ-MC-17)
T2      SKUNK CREEK HEC-2 ANALYSIS
T3      EXISTING.DAT       100-YEAR DISCHARGE   (EXISTING CONDITIONS)

J1  ICHECK    INQ       NINV      IDIR      STRT      METRIC    HVINS     Q

      0         2         0         0   0.00270         0         0

J2  NPROF     IPLOT     PRFVS     XSECV     XSECH     FN        ALLDC     IBW

      1         0        -1         0         0         0         0         0


J3  VARIABLE CODES FOR SUMMARY PRINTOUT

    38        43         1         2        26         8         4
    68        39

QT       1     11000
NC    .035      .035      .035       0.1       0.3
X1    5724        63    920.62    1072.5
X3      10
GR    1183    820.36      1184    829.21      1185    832.89      1186
GR    1188    844.42      1189    847.39      1190    850.48      1191
GR    1193    859.18      1194    862.29      1195    865.53      1196
GR    1198    875.52      1199    878.86      1200    881.96      1201
GR    1203    891.05      1203    892.24      1202    916.69      1201
GR    1199    922.76      1198    924.85      1197    926.87      1196
GR    1194    932.96      1193    934.83      1192    936.79      1191
GR    1189    942.71      1188    944.87      1187    946.95      1186
GR    1184    966.05      1183    974.67      1183   1022.46      1184
GR    1186   1039.76      1187   1042.04      1188   1044.32      1189
GR    1191   1051.18      1192   1053.45      1193   1055.73      1194
GR    1196   1062.05      1197   1064.14      1198   1066.27      1199
GR    1201    1072.5      1202   1220.62      1202   1288.06

X1    5838         4   1934.67   2065.33     114.0     114.0     114.0
X3      10
GR  1199.6   1934.67   1181.64   1970.00   1181.64   2030.00   1199.64
```

14AUG97 11:40:35

X1	5994	4	1934.67	2065.33	156.0	156.0	156.0
X3	10						
GR	1199.9	1934.67	1181.85	1970.00	1181.85	2030.00	1199.85
NC				0.3	0.5		
X1	6094	4	1934.67	2065.33	100.0	100.0	100.0
X3	10						
GR	1200.1	1934.67	1182.05	1970.00	1182.05	2030.00	1200.05

D/S face of Paradise Lane Bridge

NC				0.3	0.5		
X1	6194	4	1934.67	2065.33	100.0	100.0	100.0
X3	10						
GR	1200.3	1934.67	1182.25	1970.00	1182.25	2030.00	1200.25
SB	1.05	1.6	2.6		60.0	4.0	1728.0

U/S face of Paradise Lane Bridge

X1	6260	4	1934.67	2065.33	66.0	66.0	66.0
X2			1	1200.25	1203.25		
X3	10						
BT	4	1934.67	1203.25		1970.00	1203.25	
BT	2065.3	1203.25					
GR	1199.6	1934.67	1182.41	1970.00	1182.41	2030.00	1199.64
X1	6394	4	1934.67	2065.33	134.0	134.0	134.0
X3	10						
GR	1200.2	1934.67	1182.73	1970.00	1182.73	2030.00	1200.23
NC				0.1	0.3		
X1	6594	4	1935.67	2064.33	200.0	200.0	200.0
X3	10						
GR	1200.7	1935.67	1183.21	1970.00	1183.21	2030.00	1200.71
X1	6694	4	1935.67	2064.33	100.0	100.0	100.0
X3	10						
GR	1200.9	1935.67	1183.45	1970.00	1183.45	2030.00	1200.95

D/S Face of 75th Avenue Bridge

NC				0.3	0.5		
X1	6876	4	1935.67	2064.33	182.0	182.0	182.0
X3	10						
GR	1200.4	1935.67	1183.83	1970.00	1183.83	2030.00	1200.39

14AUG97 11:40:35

SB	1.05	1.6	2.6		60.0	4.0	1542.0

U/S Face of 75th Avenue Bridge

X1	6964	4	1935.67	2064.33	88.0	88.0	88.0
X2			1	1200.40	1203.40		
X3	10						
BT	4	1935.67	1203.40		1970.00	1203.40	
BT	2064.3	1203.40					
GR	1200.6	1935.67	1184.04	1970.00	1184.04	2030.00	1200.60
X1	7094	4	1935.67	2064.33	130.0	130.0	130.0
X3	10						
GR	1200.8	1935.67	1184.31	1970.00	1184.31	2030.00	1200.81
NC				0.1	0.3		
X1	7194	4	1937.67	2062.33	100.0	100.0	100.0
X3	10						
GR	1200.9	1937.67	1184.36	1970.00	1184.36	2030.00	1200.86
X1	7247	4	1937.67	2062.33	53.0	53.0	53.0
X3	10						
GR	1200.9	1937.67	1184.39	1970.00	1184.39	2030.00	1200.88
X1	7284	4	1928.25	2071.75	37.0	37.0	37.0
X3	10						
GR	1200.9	1928.25	1184.40	1953.00	1184.40	2047.00	1200.90
X1	7329	4	1928.25	2071.75	45.0	45.0	45.0
X3	10						
GR	1200.9	1928.25	1184.43	1953.00	1184.43	2047.00	1200.92
X1	7334	4	1930.50	2069.50	5.0	5.0	5.0
X3	10						
GR	1200.9	1930.50	1186.09	1953.00	1186.09	2047.00	1200.92
X1	7354	4	1930.50	2069.50	20.0	20.0	20.0
X3	10						
GR	1200.8	1930.50	1192.50	1953.00	1192.50	2047.00	1207.50
X1	7363	8	1934.25	2065.75	9.4	9.4	9.4
X3	10						
GR	1207.5	1934.25	1195.02	1953.00	1195.02	1998.00	1192.50
GR	1195.0	2002.00	1195.02	2047.00	1207.52	2065.75	
X1	7500	59	942.28	1058.1	135.51	135.16	137.29
X3	10						
GR	1215	767.67	1215	785.87	1215	793.52	1214
GR	1214	807.31	1213	815.28	1212	818.55	1211
GR	1209	833.38	1208	836.88	1207	858.03	1207
GR	1209	942.28	1209	942.54	1208	947.11	1207
GR	1205	954.59	1204	956.7	1203	958.8	1202
GR	1200	965.21	1199	967.31	1198	969.43	1197

14AUG97 11:40:35

GR	1195	976.02	1194	988.44	1194	1016.96	1195
GR	1197	1024.09	1198	1026.58	1199	1029.49	1200
GR	1202	1038.59	1203	1040.5	1204	1042.19	1205
GR	1207	1047.22	1208	1048.88	1209	1053.37	1209
GR	1210	1062.53	1210	1125.51	1210	1128	1211
GR	1210	1185.51	1210	1192.1	1210	1196.51	1210
X1	7632	49	892.47	1064.17	132.35	132.08	132.26
X3	10						
GR	1215	807.81	1214	892.47	1213	897.86	1212
GR	1210	904.57	1209	925.85	1208	927.74	1207
GR	1205	931.24	1204	932.35	1203	933.44	1203
GR	1202	946.19	1201	949.77	1200	953.35	1199
GR	1197	964.61	1196	968.55	1195	975.03	1195
GR	1197	1026.99	1198	1028.83	1199	1030.66	1200
GR	1202	1036.23	1203	1038.1	1204	1039.96	1205
GR	1207	1045.65	1208	1047.45	1209	1055.04	1210
GR	1211	1124.76	1211	1180.28	1212	1182.89	1212
GR	1210	1190.43	1210	1190.74	1211	1219.31	1211
X1	7735	51	900.62	1065.49	103.2	103.62	103.05
X3	10						
GR	1215	704.97	1215	712.9	1216	720.19	1216
GR	1215	768.8	1215	878.82	1214	900.62	1213
GR	1211	908.75	1210	911.48	1209	914.26	1208
GR	1206	945.15	1205	946.9	1204	948.74	1203
GR	1201	954.82	1200	956.85	1199	959.33	1198
GR	1196	969.35	1195	973.3	1195	996.38	1196
GR	1198	1031.17	1199	1034.37	1200	1036.33	1201
GR	1203	1042.57	1204	1043.83	1205	1045.78	1206
GR	1208	1050.73	1209	1052.46	1210	1058.96	1211
GR	1211	1164.33	1212	1189.52	1213	1191.53	1213
GR	1211	1198.32					
X1	7834	68	902.16	1079.79	97.2	100.53	99.1
X3	10						
GR	1216	721.64	1216	725.45	1216	797.85	1215
GR	1216	814.46	1216	824.99	1215	885.66	1214
GR	1212	906.29	1211	911.96	1210	928.95	1209
GR	1207	946.74	1206	948.13	1205	949.49	1204
GR	1202	953.26	1201	954.7	1200	956.18	1199
GR	1197	960.56	1196	969.73	1195	978.36	1194
GR	1195	991.69	1196	995.12	1197	998.62	1198
GR	1200	1051.51	1201	1053.8	1202	1056.21	1203
GR	1205	1067.97	1206	1069.54	1207	1070.42	1208
GR	1210	1073.59	1211	1074.77	1212	1079.79	1213
GR	1215	1085.95	1215	1087.83	1214	1092.42	1213
GR	1213	1171.66	1213	1178.31	1213	1182.19	1212
GR	1210	1187	1209	1188.41	1208	1189.82	1207
GR	1208	1193.18	1209	1194.48	1210	1255.54	

14AUG97 11:40:35

X1	7948	63	920.76	1087.57	136.09	91.63	113.4
X3	10						
GR	1216	846.91	1216	851.19	1216	853.91	1216
GR	1217	867.01	1216	912.79	1215	918.49	1214
GR	1212	925.29	1211	927.36	1211	930.85	1211
GR	1209	942.49	1208	944.31	1207	946.2	1206
GR	1204	952.06	1203	954.03	1202	955.99	1201
GR	1199	961.84	1198	963.79	1197	965.73	1196
GR	1197	992.2	1198	1017.58	1199	1051.69	1200
GR	1202	1057.11	1203	1058.92	1204	1060.73	1205
GR	1207	1066.15	1208	1067.95	1209	1069.74	1209
GR	1210	1078.3	1211	1080.77	1212	1083.21	1213
GR	1213	1130.85	1213	1144.09	1212	1176.77	1212
GR	1213	1201.2	1212	1205.96	1211	1210.31	1210
GR	1208	1213.13	1208	1215.26	1209	1216.51	
X1	8000	62	910.02	1080.72	52	52	52
X3	10						
GR	1217	838.92	1217	849.85	1216	853.73	1216
GR	1216	863.85	1217	867.33	1217	871.84	1216
GR	1214	917.75	1213	921.8	1212	925.47	1211
GR	1209	939.27	1208	940.62	1207	941.97	1206
GR	1204	945.84	1203	947.11	1202	948.41	1201
GR	1199	953.81	1198	957.15	1197	960.55	1197
GR	1199	1020.22	1200	1042.13	1201	1044.06	1202
GR	1204	1049.75	1205	1051.67	1206	1053.58	1207
GR	1209	1059.34	1210	1061.22	1211	1068.15	1212
GR	1214	1074.98	1215	1077.35	1215	1078.18	1214
GR	1213	1202.43	1214	1205.39	1214	1211.1	1213
GR	1211	1221.31	1210	1222.34	1209	1223.31	1209
GR	1211	1226.65	1211	1227.49			
X1	8255	64	939.51	1063.93	255	255.	255
X3	10						
GR	1217	712.97	1217	769.64	1216	830.02	1215
GR	1216	846.67	1216	852.64	1215	890.24	1214
GR	1212	919.08	1212	928.43	1213	931.21	1214
GR	1216	939.51	1216	946.81	1215	948.05	1214
GR	1212	952.19	1211	953.55	1210	954.87	1209
GR	1207	958.97	1206	960.31	1205	961.68	1204
GR	1202	965.73	1201	967.05	1200	968.42	1199
GR	1199	1021.15	1199	1022.56	1200	1029.64	1201
GR	1203	1035.15	1204	1036.92	1205	1038.85	1206
GR	1208	1044.05	1209	1045.71	1210	1047.34	1211
GR	1213	1054.37	1214	1057.06	1215	1059.68	1215
GR	1214	1189.77	1214	1197	1213	1207.61	1212
GR	1211	1211.02	1212	1212.09	1212	1223.37	1212

14AUG97 11:40:35

X1	8428	62	911.69	1118.85	187.56	163.79	172.99
X3	10						
GR	1217	825.5	1216	830.1	1216	831.07	1216
GR	1217	844.13	1217	847.55	1216	893.07	1215
GR	1213	915.28	1212	929.86	1211	936.04	1210
GR	1208	946.24	1207	948.62	1206	951.02	1205
GR	1203	958.22	1202	960.66	1201	963.51	1200
GR	1200	1005.61	1200	1023.57	1201	1031.59	1201
GR	1202	1056.33	1203	1063.07	1204	1066.84	1205
GR	1207	1078.17	1208	1080.4	1209	1082.59	1210
GR	1212	1099.84	1213	1118.85	1214	1120.5	1215
GR	1217	1125.23	1218	1126.83	1219	1128.51	1219
GR	1217	1132.39	1216	1152.26	1215	1154.2	1214
GR	1213	1168.91	1214	1174.49	1214	1182.29	1213
GR	1212	1251.38	1212	1260.59			
X1	8500	48	901.27	1145.24	72	72	72
X3	10						
GR	1217	747	1217	838.1	1217	841.7	1217
GR	1218	853.88	1218	855.66	1217	878.84	1216
GR	1214	898.21	1213	901.27	1212	903.87	1211
GR	1209	912.86	1208	915.89	1207	919.1	1206
GR	1204	930.24	1203	935.14	1202	945.92	1201
GR	1202	968.94	1202	972.91	1202	983.15	1202
GR	1201	1033.93	1201	1038.31	1201	1044.44	1202
GR	1204	1072.57	1205	1074.52	1206	1076.52	1207
GR	1209	1084.09	1210	1086.77	1211	1089.66	1212
GR	1213	1179.68	1213	1227.8	1213	1302	
X1	8811	49	878.9	1099.09	311.00	311.00	311.00
X3	10						
GR	1216	716.69	1216	781.98	1216	790.14	1216
GR	1215	840.53	1215	844.12	1214	877.2	1213
GR	1211	888.66	1210	890.53	1209	892.95	1208
GR	1206	905.85	1205	925.39	1204	957.34	1204
GR	1203	967.51	1203	975.02	1203	985.94	1202
GR	1203	1028.34	1204	1031.03	1204	1060.15	1204
GR	1206	1082.71	1207	1084.93	1208	1087.22	1209
GR	1211	1094.25	1212	1096.71	1213	1099.09	1214
GR	1216	1146.26	1217	1148.24	1217	1153.74	1216
GR	1215	1225.47	1215	1236.2	1214	1277.03	1215
X1	9000	36	2070.63	2318.07	189	189	189
GR	1216	2000	1217	2030.56	1217	2034.64	1217
GR	1217	2061.22	1217	2066.79	1217	2070.63	1218
GR	1217	2082.58	1216	2087.14	1214	2095.77	1213
GR	1211	2107.7	1209	2119.24	1208	2125.98	1207
GR	1204	2185.13	1203	2191.39	1203	2214.71	1204
GR	1207	2283.58	1208	2286.21	1209	2288.83	1211
GR	1213	2299.08	1214	2301.63	1216	2306.2	1217
GR	1219	2398.3					

D/S Face of Bell Rd Bridge

14AUG97 11:40:35

NC				0.3	0.5		
X1	9295	36	743.70	983.1	295.00	295.00	295.00
X3	10						
GR	1218.6	586.5	1219.0	710.5	1219.0	743.7	1219.0
GR	1217.0	776.5	1216.0	777.6	1214.0	778.9	1213.0
GR	1211.0	800.9	1209.0	817.6	1208.0	821.6	1207.0
GR	1204.0	838.8	1204.0	844.7	1204.0	849.3	1204.0
GR	1207.0	927.4	1208.0	940.6	1209.0	962.1	1211.0
GR	1213.0	981.2	1214.0	981.5	1216.0	982.3	1217.0
GR	1219.0	996.0	1219.0	1014.9	1219.0	1031.1	1219.2
GR	1218.7	1162.5					

U/S Face of Bell Rd Bridge

SB	1.05	1.6	2.6	435	171	12	2773
X1	9405	18	787.60	1027.50	110.00	110.00	110.0
X2			1	1219.12	1220.37		
X3	10						
GR	1218.0	611.0	1218.6	635.7	1218.8	669.7	1218.8
GR	1217.0	788.0	1216.0	788.4	1214.0	789.2	1213.0
GR	1211.0	801.3	1210.0	814.4	1206.0	884.5	1209.0
GR	1218.0	1027.5	1219.0	1027.5	1219.0	1144.2	
X1	9539	26	2000	2238.68	134	134	134
GR	1218	2000	1217	2010.08	1216	2013.77	1214
GR	1212	2041.36	1211	2049.08	1209	2093.02	1208
GR	1208	2146.06	1207	2158.59	1206	2165.58	1206
GR	1208	2210.66	1209	2212.7	1211	2216.84	1212
GR	1214	2222.52	1216	2225.66	1217	2227.02	1218
GR	1219	2270.36					
NC				0.1	0.3		
X1	9725	35	1890.02	2186.77	186	186	186
GR	1218	1770	1217	1805.05	1217	1855.5	1218
GR	1220	1890.02	1219	1893.4	1218	1897.01	1217
GR	1215	1907.79	1214	1911.18	1213	1921.85	1212
GR	1210	2002.3	1210	2080.97	1209	2095.97	1208
GR	1207	2147.96	1208	2163.04	1209	2165.4	1210
GR	1212	2177.44	1213	2178.99	1214	2180.45	1215
GR	1217	2185.31	1218	2186.77	1219	2214.76	1219
X1	9960	30	780.34	1183.63	2350	235	235
X3	10						
GR	1218	741	1219	753.99	1219	777.26	1218
GR	1216	786.3	1214	796.74	1213	806.77	1212
GR	1211	856.52	1212	869.63	1213	875.15	1213
GR	1213	933.22	1212	955.78	1211	960.48	1211
GR	1212	1087.07	1211	1092.21	1211	1104.53	1212
GR	1226.2	1183.63	1226.2	1192.76	1214	1195.34	1216

14AUG97 11:40:35

X1	10025	37	2067.42	2337.22	65	65	65
GR	1219	2000	1218	2011.21	1217	2029.01	1217
GR	1219	2042.24	1219	2067.42	1218	2069.86	1217
GR	1215	2079.08	1214	2086.6	1213	2107.89	1212
GR	1213	2136.48	1213	2164.96	1212	2166.83	1211
GR	1211	2209.25	1212	2217.96	1212	2244.69	1211
GR	1212	2305.3	1213	2317.66	1214	2318.89	1216
GR	1218	2337.22	1218	2338.97	1218	2360.99	1219
GR	1221	2425.36	1222	2498.24			
X1	10125	37	901.81	1184.82	100	100	100
X3	10						
GR	1220	739.37	1220	833.35	1219	860	1219
GR	1221	911.93	1219	922.58	1218	924.45	1217
GR	1214	958.08	1213	961.87	1212	965.69	1211
GR	1212	1014.42	1212	1019.48	1211	1030.13	1211
GR	1212	1051.48	1212	1061.88	1212	1073.71	1212
GR	1213	1096.67	1213	1121.82	1214	1133.59	1216
GR	1218	1158	1219	1164.22	1221	1184.82	1222
GR	1230.4	1279.91	1230.4	1362.85			
X1	10500	30	931.94	1238.15	375	375	375
X3	10						
GR	1222	813.42	1223	900.16	1223	931.94	1222
GR	1219	944.33	1218	947.51	1217	950.65	1216
GR	1213	1000.48	1212	1012.25	1212	1032.95	1213
GR	1214	1071.25	1214	1114.74	1216	1154.11	1216
GR	1217	1217.42	1218	1222	1219	1226.54	1221
GR	1223	1244.04	1224	1251.89	1226.26	1267.43	1226.26
X1	11000	37	963.32	1234.46	500.94	500.78	500.07
X3	10						
GR	1224	901.23	1223	917.34	1222	925.17	1221
GR	1219	963.32	1218	968.07	1217	973.61	1216
GR	1214	985.47	1213	987.4	1212	989.21	1212
GR	1214	1010.65	1215	1024.57	1216	1031.77	1217
GR	1218	1121.69	1218	1125.06	1219	1170.06	1219
GR	1220	1242.24	1221	1245.12	1222	1247.95	1223
GR	1225	1256.35	1226	1259.15	1227	1268.83	1226.26
GR	1228	1306.48	1230.42	1309.34			
X1	11238	36	850.56	1090.57	238.98	238.56	238.83
X3	10						
GR	1226	698	1226	796.79	1226	808.35	1225
GR	1223	850.56	1222	854.08	1221	856.63	1220
GR	1218	878.29	1218	883.38	1218	913.92	1217
GR	1216	945.75	1217	954	1217	976.94	1217
GR	1218	1014.66	1219	1017.49	1219	1020.41	1219
GR	1219	1038.67	1220	1060.66	1221	1074.27	1221
GR	1223	1090.57	1224	1092.83	1225	1125.81	1226
GR	1230.4	1272.02					

14AUG97 11:40:35

X1	11305	28	784.67	1087.1	6728	67.78	67.12
X3	10						
GR	1225	684	1224	732.28	1224	733.73	1224
GR	1223	783.32	1227.49	784.67	1222	810.24	1221.5
GR	1222	849.89	1221	860.99	1220	870.43	1219
GR	1217	938.13	1217	1009.96	1218	1036.63	1219
GR	1221	1079.42	1222	1081.31	1223	1087.1	1224
GR	1226	1175.41	1226.66	1183.2	1226.66	1259.75	
X1	11500	27	819.02	1061.54	195.51	195.09	195.75
X3	10						
GR	1228	792.76	1227	809.36	1226	816.42	1225
GR	1223	831.21	1222	843.29	1221	856.86	1220
GR	1219	962.4	1219	962.66	1218	983.28	1218
GR	1220	1041.05	1221	1044.61	1222	1049.12	1223
GR	1225	1061.54	1226	1065.44	1227	1068.66	1228
GR	1225.6	1103	1229	1118.4			
X1	11628	31	828.33	1049.1	159.52	121.77	128.8
X3	10						
GR	1229	795.95	1228	805.41	1227	808.77	1226
GR	1224	830.49	1223	832.63	1222	834.65	1221
GR	1221	907.85	1220	917.7	1220	933.64	1220
GR	1218	985.85	1218	1004.16	1219	1021.57	1220
GR	1222	1039.45	1223	1044.26	1224	1049.1	1225
GR	1227	1064.41	1228	1069.46	1229	1081.09	1225.61
GR	1229	1103.68					
X1	11740	30	787.11	1051.73	96.86	119.77	112.31
X3	10						
GR	1229	773	1228	782.51	1227	784.82	1226
GR	1224	799.73	1223	802.23	1222	804.71	1221
GR	1219	945.37	1219	951.22	1219	984.06	1219
GR	1221	1020.25	1222	1025	1223	1029.59	1224
GR	1226	1042.78	1227	1046.02	1228	1048.97	1229
GR	1225.6	1065.28	1232.79	1065.91	1232.79	1104.29	1232.79
X1	11840	41	781.09	1048.50	64.33	112.64	100.26
X3	10						
GR	1229	776.6	1228	778.88	1227	781.09	1226
GR	1224	787.88	1223	790.51	1222	795.88	1222
GR	1222	871.71	1222	878.42	1221	918.91	1220
GR	1219	967.78	1219	978.87	1219	1013.48	1220
GR	1222	1027.99	1223	1031.2	1224	1034.46	1225
GR	1227	1043.77	1228	1045.99	1229	1048.5	1225.61
GR	1230	1067.72	1231	1073.15	1231	1076.38	1230
GR	1231	1084.95	1231	1088.04	1230	1090.23	1229
GR	1231.8	1196.71					

14AUG97 11:40:35

X1	12000	32	796.73	1058.41	160.08	160.49	160.65
X3	10						
GR	1230	681.85	1230	763.62	1229	796.73	1228
GR	1226	804.27	1225	807.01	1224	809.71	1223
GR	1221	947.66	1221	958.83	1221	961.42	1220
GR	1219	1013.85	1220	1018.61	1221	1024.19	1222
GR	1224	1035.55	1225	1039.22	1226	1042.12	1227
GR	1229	1051.26	1230	1058.41	1232.79	1065.86	1230
GR	1229.8	1195.06	1231.87	1196.66			
X1	12141	39	829.56	1083.01	121.06	151.38	141.29
X3	10						
GR	1230	668.59	1230	749.44	1230	828.96	1230
GR	1228	834.63	1227	839.46	1226	846.55	1225
GR	1223	859.54	1223	870.43	1223	897.61	1222
GR	1220	966.57	1220	987.54	1220	1006.06	1219
GR	1220	1029.73	1221	1033.4	1222	1041.55	1223
GR	1225	1052.63	1226	1055.71	1227	1058.82	1228
GR	1230	1070.17	1232.79	1083.01	1230	1194.75	1232.07
GR	1230	1213.8	1230.01	1214.08	1231.87	1215.69	1230
X1	12355	37	894.36	1104.87	203.6	277.56	244.09
X3	10						
GR	1230	669.05	1230	677.92	1230	779.7	1230
GR	1229	894.36	1228	898.29	1227	902.05	1226
GR	1224	912.66	1223	919.88	1222	925.75	1221
GR	1222	1017.37	1222	1040.38	1222	1054.11	1223
GR	1225	1079.92	1226	1083.36	1227	1088.05	1228
GR	1230	1094.78	1231	1104.87	1232.79	1109.45	1231
GR	1231	1175.35	1231	1180	1231	1212.62	1232.07
GR	1231.8	1246.26	1230.74	1281.1			
X1	12500	36	913.95	1137.78	145.13	145.78	145.14
X3	10						
GR	1230	839.45	1230	839.76	1230	913.95	1229
GR	1227	925.98	1226	927.81	1225	929.5	1224
GR	1222	934.81	1222	949.92	1222	985.92	1222
GR	1223	1047.33	1223	1070.37	1223	1084.85	1223
GR	1225	1114.36	1226	1121	1227	1125.06	1228
GR	1230	1136.86	1231	1137.78	1232.79	1151.94	1231
GR	1232	1278.47	1231.41	1283.1	1231	1283.24	1231.87
GR	1231	1316.55					
X1	12776	42	929.53	1164.45	276.45	276.91	276.73
X3	10						
GR	1231	779.3	1231	926.72	1230	929.53	1229
GR	1227	935.73	1226	937.25	1225	938.78	1224
GR	1223	964.98	1224	968.61	1224	974.41	1223
GR	1221	990.45	1221	992.42	1222	1012.41	1223
GR	1224	1054.59	1224	1096.11	1224	1109.4	1224
GR	1226	1128.75	1227	1133.91	1228	1141.14	1229
GR	1231	1153.01	1232	1164.45	1234.64	1172.76	1232
GR	1232	1224.68	1232	1230.2	1232	1265.73	1232.14

14AUG97 11:40:35

GR	1231.8	1302.29	1231	1315.47			
X1	12822	42	929.53	1164.45	46.45	46.91	46.73
X3	10						
GR	1231	779.3	1231	926.72	1230	929.53	1229
GR	1227	935.73	1226	937.25	1225	938.78	1224
GR	1223	964.98	1224	968.61	1224	974.41	1223
GR	1221	990.45	1221	992.42	1222	1012.41	1223
GR	1224	1054.59	1224	1096.11	1224	1109.4	1224
GR	1226	1128.75	1227	1133.91	1228	1141.14	1229
GR	1231	1153.01	1232	1164.45	1234.64	1172.76	1232
GR	1232	1224.68	1232	1230.2	1232	1265.73	1232.14
GR	1231.8	1302.29	1231	1315.47			
X1	12952	34	854.60	1036.7	130.8	130.77	130.98
X3	10						
GR	1231.0	702.0	1232.0	851.7	1232.0	854.6	1231.0
GR	1229.0	861.6	1228.0	864.9	1227.0	871.4	1227.0
GR	1227.0	882.5	1226.0	889.2	1225.0	894.3	1224.0
GR	1224.0	904.9	1224.0	908.5	1224.0	912.8	1223.0
GR	1224.0	999.4	1225.0	1005.4	1226.0	1008.8	1227.0
GR	1229.0	1016.8	1230.0	1019.9	1231.0	1022.9	1232.0
GR	1233.0	1056.6	1233.0	1098.4	1234.6	1175.3	1234.6
X1	13050	30	812.90	1002.2	98.7	98.86	98.62
X3	10						
GR	1230.0	677.1	1231.0	713.9	1231.0	812.9	1230.0
GR	1228.0	846.6	1227.0	854.5	1226.0	864.9	1225.0
GR	1223.0	910.3	1223.0	919.3	1224.0	925.8	1224.0
GR	1225.0	988.6	1226.0	991.1	1227.0	993.1	1228.0
GR	1230.0	998.4	1231.0	1000.2	1232.0	1002.2	1232.0
GR	1232.0	1126.2	1232.0	1155.5	1232.0	1172.2	1232.0
X1	13131	27	836.50	1025.3	81.37	81.35	81.87
X3	10						
GR	1234.4	675.5	1238.3	742.3	1232.0	807.1	1234.4
GR	1230.0	842.9	1229.0	854.5	1228.0	877.9	1227.0
GR	1225.0	920.9	1225.0	939.8	1225.0	952.4	1225.0
GR	1227.0	995.0	1228.0	997.0	1229.0	998.9	1230.0
GR	1232.0	1003.4	1233.0	1004.6	1234.0	1006.3	1235.0
GR	1236.0	1117.8	1236.0	1203.8			
X1	13206	24	2022.61	2165.69	75	75	75
GR	1232	2000	1233	2016.44	1233	2022.61	1232
GR	1230	2028.25	1229	2030.07	1228	2031.99	1227
GR	1225	2045.4	1225	2056.47	1225	2067.27	1225
GR	1227	2148.97	1228	2151.53	1229	2154.11	1230
GR	1232	2159.28	1233	2160.8	1234	2162.35	1235

14AUG97 11:40:35

X1	13400	44	942.03	1077.13	194.58	194.65	194.04
X3	10						
GR	1232	734.82	1233.92	736.44	1232.17	740.99	1234
GR	1235	774.41	1234	845.38	1234	872.53	1234
GR	1234	942.03	1233	943.75	1232	945.46	1231
GR	1229	950.31	1228	951.92	1227	953.46	1226
GR	1225	996.29	1225	1000.19	1225	1004.88	1226
GR	1228	1061.52	1229	1066.99	1230	1069.08	1231
GR	1233	1074.96	1234	1077.13	1237.59	1102.38	1235.07
GR	1235.1	1127.27	1235	1127.7	1238.15	1131.21	1235
GR	1235.5	1170.38	1235.83	1174.31	1236	1205.14	1237
X1	13500	25	2000	2161.77	100	100	100
GR	1235	2000	1235	2013.9	1234	2016	1233
GR	1231	2022.03	1230	2024.03	1229	2026.03	1228
GR	1226	2040.64	1225	2044.22	1225	2055.97	1226
GR	1226	2108.85	1227	2131.43	1228	2138.76	1229
GR	1231	2147.05	1232	2148.9	1233	2150.75	1234
X1	14000	29	2043.32	2196.07	500	500	500
GR	1236	2000	1237	2030	1238	2043.32	1238
GR	1236	2068.77	1235	2071.52	1234	2074.1	1233
GR	1231	2079.98	1230	2081.88	1229	2087.64	1228
GR	1226	2120.59	1226	2128.09	1227	2140.85	1227
GR	1228	2170.88	1229	2179.61	1230	2181.73	1231
GR	1233	2188.13	1234	2190.18	1235	2192.19	1236
X1	14500	38	943.82	1095.96	500.28	500.56	500.29
X3	10						
GR	1246.5	749.33	1245.25	754.06	1246.5	770.72	1246.5
GR	1239	889.48	1239	943.82	1238	946.02	1237
GR	1235	952.81	1234	954.8	1233	957.36	1232
GR	1230	965.34	1229	986.75	1228	990.55	1228
GR	1228	1021.08	1229	1028.92	1230	1039.86	1231
GR	1233	1065.52	1234	1067.69	1235	1069.65	1236
GR	1244.1	1095.96	1238	1209.58	1237.5	1240.29	1238.15
GR	1237.4	1283.33	1237	1283.46	1237.49	1285.39	
X1	14734	42	870.64	1110.41	227.23	239.76	234.01
X3	10						
GR	1238.8	728.64	1238.05	733.24	1238	733.31	1238.8
GR	1237.8	769.21	1238	772.84	1238.99	773.8	1246.53
GR	1238	884.15	1237	893.78	1236	900.87	1235
GR	1233	924.28	1232	929.4	1231	935.1	1230
GR	1228	1001.63	1228	1006.29	1229	1009.89	1230
GR	1232	1062.53	1233	1064.61	1234	1066.92	1235
GR	1237	1074.08	1238	1076.55	1239	1081.77	1245.17
GR	1245.3	1214.56	1245.3	1219.62	1240	1265.33	1240.65
GR	1239	1286.18	1241.52	1288.3			

14AUG97 11:40:35

X1	15000	43	889.96	1116.21	266.94	266.19	266.16
X3	10						
GR	1240	728.94	1239.76	733.56	1239.81	738.2	1239.94
GR	1239.9	773.81	1240	775.31	1241.54	889.96	1240
GR	1238	916.91	1237	919.57	1236	923.19	1235
GR	1233	936.85	1232	939.95	1232	955.67	1232
GR	1231	1008.55	1232	1014.32	1233	1030.85	1234
GR	1236	1063.03	1237	1073.91	1238	1077.7	1239
GR	1240	1114.53	1240.11	1114.61	1241.52	1116.21	1240
GR	1239.8	1148.1	1240	1149.52	1240.28	1149.7	1241
GR	1246.6	1208.61	1246.6	1227.56	1246.6	1271.59	
X1	15185	46	906.55	1118.7	178.68	194.41	184.52
X3	10						
GR	1248.1	699.62	1239.76	809.46	1241.71	814.63	1239.94
GR	1241.9	853.47	1238.99	858.55	1241	869.42	1241
GR	1240	919.33	1239	921.69	1238	923.96	1237
GR	1235	930.88	1234	933.08	1233	943.65	1233
GR	1232	968.47	1232	987.48	1232	992.67	1231
GR	1232	1009.08	1233	1011.56	1234	1020.66	1234
GR	1235	1054.44	1236	1057.32	1237	1070.15	1237
GR	1238	1090.27	1239	1093.92	1240	1097.47	1243.45
GR	1241.5	1134.14	1241.67	1166.12	1241.67	1169.15	1241.67
GR	1241.6	1299.21					
X1	15500	42	913.85	1120.95	315.25	315.83	315.93
X3	10						
GR	1248.5	726.76	1248.6	822.74	1242	856.63	1242.2
GR	1242.2	876.15	1241.4	907.73	1241.68	909.34	1242.2
GR	1241	930.45	1241	943.36	1240	947.13	1239
GR	1237	953.85	1236	955.9	1235	958.12	1234
GR	1233	978.09	1233	992.31	1232	994.87	1232
GR	1234	1012.17	1235	1055.12	1236	1098.31	1237
GR	1239	1108.1	1240	1110.42	1241	1112.74	1242
GR	1241.9	1148.7	1245.69	1150.3	1245.75	1181.96	1242
GR	1242	1183.99	1242	1212.81			
X1	15689	53	931.23	1122.57	190.79	192.45	189.34
X3	10						
GR	1243	724.63	1249.58	731.91	1243	741.99	1243
GR	1243	873.66	1244.64	875.81	1242.93	880.32	1245.22
GR	1242.9	915.26	1242.2	919.77	1243	920.19	1243
GR	1241	955.38	1240	959.33	1239	963.57	1238
GR	1236	979.54	1235	987.13	1234	989.74	1233
GR	1234	1012.66	1235	1043.77	1235	1049.56	1235
GR	1237	1083.74	1238	1092.49	1239	1095.15	1240
GR	1242	1103.39	1243	1122.57	1243	1130.38	1245.61
GR	1243	1142.47	1243	1142.53	1245.69	1144.09	1243
GR	1245.7	1176.11	1243.16	1177.72	1243	1177.73	1243
GR	1243	1207.88	1243	1211.97	1244	1228.24	

14AUG97 11:40:35

X1	15837	46	918.16	1089.98	151.29	127.53	147.57
X3	10						
GR	1245.2	695.94	1243	807.18	1245.2	847.68	1245.2
GR	1242.9	884.39	1242.2	888.89	1243	889.41	1243
GR	1241	921.91	1240	923.7	1239	925.47	1238
GR	1236	978.94	1235	990.64	1234	999.73	1234
GR	1235	1019.2	1235	1028.42	1236	1032.75	1237
GR	1239	1043.33	1240	1045.86	1241	1048.81	1242
GR	1244	1066.54	1245	1074.93	1245	1078.16	1245
GR	1245.9	1116.89	1245	1129.83	1244	1147.23	1243.86
GR	1245.7	1193.13	1244	1194.96	1244.08	1194.98	1244
GR	1245	1284.42					
X1	16000	46	930.86	1082.65	163.4	163.87	163.34
X3	10						
GR	1246	745	1245	836.3	1244	847.33	1244
GR	1244.5	861.89	1247.51	863.49	1241.4	895.26	1244.48
GR	1245	915.5	1246	921.43	1247	927.33	1247
GR	1245	934.74	1244	936.71	1243	938.65	1242
GR	1240	944.48	1239	946.34	1238	955.26	1237
GR	1236	995.97	1236	1030.37	1236	1042.73	1237
GR	1239	1055.52	1240	1057.52	1241	1059.23	1242
GR	1244	1065.01	1245	1066.99	1246	1072.98	1252.21
GR	1246	1183.57	1246.1	1193.98	1245.57	1232.26	1245.71
GR	1245.7	1284.67					
X1	16200	54	939.27	1073.48	207.59	200.24	200.73
X3	10						
GR	1247	740.63	1246	760.39	1246	772.52	1247.51
GR	1246	783.21	1247.51	785.37	1241.4	829.23	1245.85
GR	1246	921.77	1247	923.89	1248	925.98	1249
GR	1251	932.26	1252	934.59	1252	934.69	1251
GR	1249	939.27	1248	940.79	1247	942.26	1246
GR	1244	946.96	1243	948.67	1242	950.39	1241
GR	1239	956.02	1238	960.3	1237	965.45	1236
GR	1237	1019.25	1238	1028.1	1239	1034.62	1240
GR	1242	1042.32	1243	1044.97	1244	1047.66	1245
GR	1247	1058.16	1248	1073.48	1250.5	1093.08	1248
GR	1248.3	1203.46	1250.5	1218.39	1247	1223.02	1252.61
X1	16345	55	796.92	1094.72	152.35	141.03	145.2
X3	10						
GR	1249	724.64	1250	755.52	1250	796.92	1249
GR	1247	842.46	1246	875.03	1246	881.2	1246
GR	1244	904.9	1243	925.34	1242	933.04	1242
GR	1243	935.44	1244	937.72	1245	939.76	1246
GR	1245	946.93	1244	949.28	1243	955.64	1242
GR	1240	963.06	1239	966.13	1238	969.89	1237
GR	1237	1012.33	1237	1026.36	1238	1029.3	1239
GR	1241	1038.18	1242	1041.18	1243	1044.18	1244
GR	1246	1053.48	1247	1064.89	1247	1078.22	1247
GR	1249	1094.72	1249	1099.7	1249	1101.79	1250
GR	1251	1109.62	1250	1112.1	1249	1175.07	1247.68

14AUG97 11:40:35

X1	16368	51	812.14	1093.44	27.15	30.41	22.96
X3	10						
GR	1249	723.74	1249	728.66	1249	729.27	1249
GR	1249	771.62	1249	807.67	1249	812.14	1248
GR	1246	864.8	1245	870.99	1244	877.32	1243
GR	1241	910.43	1243.43	913.86	1240	914.55	1243.43
GR	1241	939.24	1242	945.57	1243	949.32	1244
GR	1243	959.34	1242	961.24	1241	963.05	1240
GR	1238	972.22	1237	988.27	1237	993.55	1237
GR	1238	1029.78	1239	1032.01	1240	1034.25	1241
GR	1243	1041	1244	1043.63	1245	1046.87	1246
GR	1247	1082.67	1247	1084.86	1248	1088.57	1249
GR	1249	1278.02					
X1	16500	52	949.45	1058.89	132.78	132.26	132.35
X3	10						
GR	1243	709.85	1244	713.98	1245	718.21	1246
GR	1248	731.78	1248	758.77	1247	766.13	1247
GR	1248	921.35	1247	927.37	1247	941.66	1248
GR	1247	950.99	1246	952.54	1245	954.12	1244
GR	1242	958.57	1241	960.13	1240	961.7	1239
GR	1238	1025.08	1239	1028.58	1240	1031.93	1241
GR	1243	1040	1244	1042.69	1245	1045.37	1246
GR	1248	1054.27	1249	1058.89	1249	1108.4	1251.03
GR	1247	1120.63	1246.99	1120.66	1249	1122.27	1248.6
GR	1247.3	1156.41	1248	1162	1249	1196.04	1249
GR	1249	1274.61	1249	1277.96			
X1	16900	54	1887.56	2068.13	400	400	400
GR	1250	1745	1250	1745.87	1249	1748.63	1248
GR	1247	1760.28	1248	1761.96	1249	1763.65	1250
GR	1251	1767.36	1250	1772.13	1250	1778.87	1251
GR	1252	1788.52	1251	1794.43	1250	1815.68	1249
GR	1247	1896.5	1246	1900.49	1245	1904.84	1244
GR	1245	1916.81	1246	1921.11	1246	1942.62	1245
GR	1243	1948.72	1242	1950.96	1241	1953.97	1240
GR	1238	1986.11	1238	1993.61	1239	2005.52	1240
GR	1242	2036.71	1243	2038.55	1244	2040.53	1245
GR	1247	2046.9	1248	2048.99	1249	2051.17	1250
GR	1251	2068.13	1250	2076.73	1250	2092.2	1250
X1	17000	47	1903.72	2057.17	100	100	100
GR	1252	1750	1252	1766.58	1251	1766.97	1250
GR	1249	1769.01	1250	1769.99	1251	1770.91	1251
GR	1249	1843.28	1248	1850.42	1248	1857.69	1248
GR	1247	1883.64	1248	1887.75	1249	1891.71	1249
GR	1249	1916.63	1248	1918.68	1247	1920.75	1246
GR	1244	1926.83	1243	1928.91	1242	1930.95	1241
GR	1240	1961.3	1240	1975.65	1239	1978.84	1239
GR	1241	1997.3	1242	2039.12	1243	2040.89	1244
GR	1246	2046.25	1247	2048.06	1248	2049.85	1249
GR	1251	2055.34	1252	2057.17			

14AUG97 11:40:35

X1	17500	52	931.07	1096.64	506.62	501.23	500.1
GR	1253	818.05	1254	822.26	1254	826.15	1253
GR	1251	830.44	1250	830.98	1250	831.58	1251
GR	1252	841.03	1251	851.51	1251	879.32	1252
GR	1254	908.74	1254	931.07	1253	932.79	1252
GR	1250	937.92	1249	939.75	1248	941.48	1247
GR	1245	946.58	1244	948.23	1244	950.88	1244
GR	1244	992.14	1244	1007.44	1244	1020.55	1244
GR	1246	1062.68	1247	1064.56	1248	1066.37	1249
GR	1251	1072.08	1252	1074.01	1253	1075.91	1254
GR	1254	1113.55	1255	1121.83	1256	1125.93	1257
GR	1257	1164.6	1258	1264.61			
X1	17850	49	1910.32	2075.37	350	350	350
GR	1253	1728	1253	1734.3	1253	1797.07	1253
GR	1253	1879.41	1254	1882.54	1255	1885.51	1256
GR	1255	1910.32	1254	1912.03	1253	1913.74	1252
GR	1250	1918.88	1249	1920.6	1248	1922.32	1247
GR	1245	1949.22	1245	1960.08	1246	1962.24	1247
GR	1246	1981.12	1246	1986.02	1246	2010.38	1246
GR	1248	2039.42	1249	2041.38	1250	2043.38	1251
GR	1253	2049.16	1254	2051.06	1255	2053.02	1255
GR	1253	2083.74	1253	2089.88	1254	2093.56	1254
GR	1255	2166.36	1256	2170.44	1257	2174.7	1258
NC				0.3	0.5		

D/S Face of Union Hills Bridge

X1	18170	56	791.80	1066.90	320	320	320
X3	10						
GR	1261.0	455.0	1261.0	457.9	1261.0	479.4	1261.0
GR	1261.0	536.5	1262.0	560.6	1262.0	576.5	1262.0
GR	1264.0	685.3	1265.0	702.3	1265.0	747.0	1262.6
GR	1263.0	766.1	1262.0	769.8	1261.0	773.2	1260.0
GR	1258.0	789.3	1257.0	791.8	1256.0	794.5	1255.0
GR	1253.0	801.8	1252.0	804.4	1251.0	807.0	1250.0
GR	1248.0	814.9	1248.0	816.9	1248.0	891.7	1247.0
GR	1247.0	985.8	1247.0	997.1	1248.0	999.3	1249.0
GR	1251.0	1007.8	1252.0	1010.9	1253.0	1013.9	1254.0
GR	1256.0	1022.9	1257.0	1026.2	1258.0	1033.7	1259.0
GR	1261.0	1066.9	1261.0	1088.8	1261.0	1106.5	1260.0
GR	1258.0	1300.8					
SB	1.05	1.6	2.6	406	205	6	3624

U/S Face of Union Hills Bridge

X1	18390	49	765.50	1095.40	227.28	221.07	220.23
X2			1	1263.28	1267.78		
X3	10						
GR	1265.0	645.0	1265.0	700.8	1265.0	740.4	1264.0
GR	1262.0	765.5	1262.0	777.2	1262.0	778.8	1261.0

14AUG97 11:40:35

GR	1259.0	793.4	1258.0	796.1	1257.0	798.8	1256.0
GR	1254.0	806.8	1253.0	809.4	1252.0	812.1	1251.0
GR	1249.0	820.1	1248.0	962.5	1248.0	997.2	1248.0
GR	1249.0	1028.8	1250.0	1031.7	1251.0	1034.9	1252.0
GR	1254.0	1043.9	1255.0	1047.0	1256.0	1050.2	1257.0
GR	1259.0	1062.3	1260.0	1066.7	1261.0	1071.3	1262.0
GR	1264.5	1095.2	1264.0	1095.4	1264.5	1155.6	1264.0
GR	1264.5	1230.4	1262.0	1243.5	1261.0	1275.0	1260.0
X1	18710	44	1910	2066.39	320	320	320
GR	1263	1854.52	1262	1910	1261	1911.75	1260
GR	1258	1916.98	1257	1918.65	1256	1920.34	1255
GR	1253	1925.67	1252	1927.41	1251	1929.22	1250
GR	1250	1983.67	1250	2037.67	1251	2039.4	1252
GR	1254	2044.42	1255	2046.09	1256	2047.75	1257
GR	1259	2052.82	1260	2054.64	1261	2056.24	1262
GR	1264.5	2074.39	1262	2075.66	1261	2079.05	1260
GR	1258	2089.02	1257	2092.99	1257	2108.98	1257
GR	1257	2131	1256	2157.02	1255	2182.91	1255
NC				0.1	0.3		
X1	19000	41	917.34	1075.56	290.46	290.79	290.79
X3	10						
GR	1262	872.35	1262	917.34	1261	919.08	1260
GR	1258	924.39	1257	926.14	1256	927.88	1255
GR	1253	933.11	1252	934.78	1251	977.14	1251
GR	1251	1023.93	1252	1047.9	1253	1049.65	1254
GR	1256	1054.83	1257	1056.47	1258	1058.21	1259
GR	1261	1063.43	1262	1065.13	1264.49	1075.56	1263
GR	1263	1084.38	1262	1087.99	1261	1091.6	1260
GR	1258	1102.96	1258	1130.06	1259	1148.1	1259
GR	1267.2	1210.1					
X1	19212	44	923.5	1077.86	210.61	222.81	211.95
X3	10						
GR	1262	832.34	1262	841.02	1262	881.12	1262
GR	1260	926.94	1259	928.57	1258	930.28	1257
GR	1255	935.47	1254	937.15	1253	938.84	1252
GR	1252	1004.66	1252	1048.02	1253	1049.73	1254
GR	1256	1054.92	1257	1056.71	1258	1058.42	1259
GR	1261	1063.4	1262	1069.33	1263	1076.37	1264.49
GR	1263	1089.72	1262	1092.71	1261	1095.7	1260
GR	1258	1107.13	1258	1121.36	1259	1138.72	1260
GR	1260.2	1264.48	1260	1269.92	1260.22	1269.96	1260.73
X1	19426	46	731.68	1079.19	214.02	222.12	213.53
X3	10						
GR	1262	731.68	1263	872	1263	926.32	1262
GR	1260	930.79	1259	932.19	1258	933.67	1257
GR	1255	938.11	1254	939.59	1253	958.93	1253
GR	1253	1050.5	1254	1052.06	1255	1053.63	1256
GR	1258	1058.38	1259	1059.95	1260	1061.53	1261
GR	1263	1066.26	1264	1078.72	1264.49	1079.19	1264.49
GR	1263	1093.31	1262	1096.66	1261	1100.11	1260

14AUG97 11:40:35

GR	1259	1123.91	1260	1136.34	1260	1159.88	1259
GR	1260	1188.11	1261	1199.59	1260.34	1217.63	1260.26
GR	1262	1255.16					
X1	19500	50	926.38	1078.59	74.76	74.25	74.72
X3	10						
GR	1263	731.73	1263	779.49	1263	795.36	1264
GR	1263	927.42	1262	928.47	1261	929.52	1260
GR	1258	932.61	1257	933.64	1256	934.64	1255
GR	1254	977.92	1254	998.28	1254	1027.06	1254
GR	1255	1051.2	1256	1052.9	1257	1054.57	1258
GR	1260	1059.43	1261	1061.13	1262	1062.79	1263
GR	1265	1077.99	1264.49	1078.59	1264.49	1086.53	1265
GR	1263	1094.35	1262	1102.09	1261	1113.78	1260
GR	1261	1140.2	1261.8	1220.69	1262	1230.19	1262
GR	1263.2	1257.01	1261.7	1257.5	1262	1259.17	1261.98
X1	19782	40	1907.68	2076.5	282	282	282
GR	1267	1715	1266	1724.36	1265	1733.82	1264
GR	1265	1818.01	1265	1849.15	1265	1895.02	1266
GR	1265	1918.3	1264	1919.26	1263	1920.2	1262
GR	1260	1923.18	1259	1924.2	1258	1925.15	1257
GR	1255	1971.22	1255	2015.36	1256	2053.75	1257
GR	1259	2058.56	1260	2060.15	1261	2061.71	1262
GR	1264	2066.56	1265	2068.19	1266	2074.14	1264.49
GR	1266	2087.8	1266	2087.8	1265	2091.12	1264

D/S Face of 59TH AV. bridge

NC				0.3	0.5		
X1	19950	39	916.04	1083.05	168.88	168.68	168.02
X3	10						
GR	1268	714.93	1268	916.04	1267	917.86	1266
GR	1264	922.99	1263	925.13	1262	926.8	1261
GR	1259	931.53	1258	933.19	1257	934.73	1256
GR	1255	987.32	1256	1047.08	1257	1063.25	1258
GR	1260	1069.49	1261	1071	1262	1072.51	1263
GR	1265	1078.21	1266	1080.35	1267	1081.64	1268
GR	1269	1133.64	1269	1174.41	1269	1195.92	1269
GR	1267.9	1253.18	1268	1257.86	1267	1266.81	1266
SB	1.05	1.6	2.6	167.5	125	3	1951.6

U/S Face of 59TH AV. Bridge

X1	20050	39	908.52	1089.42	102.13	103.91	100.72
X2			1	1268.60	1270.00		
X3	10						
GR	1268	711.6	1269	885.37	1269	908.52	1268.92
GR	1267	915.14	1266	916.66	1265	918.04	1264
GR	1262	922.29	1261	923.87	1260	925.44	1259
GR	1257	929.56	1256	930.83	1256	1060.22	1257
GR	1259	1065.48	1260	1067.02	1261	1068.59	1262

14AUG97 11:40:35

GR	1264	1073.78	1265	1075.28	1266	1076.8	1267
GR	1269	1083.99	1269	1089.42	1269	1091.47	1268.9
GR	1268.9	1208.99	1268.9	1241.89	1268.81	1244.8	1269
X1	20220	43	1871.65	2123.44	170	170	170
GR	1270	1777	1269	1801.81	1268	1825.6	1267
GR	1265	1879.15	1264	1881.22	1263	1883.22	1262
GR	1260	1891.09	1259	1894.65	1258	1897.67	1257
GR	1256	1939.28	1256	1958.89	1256	1964.05	1256
GR	1256	2059.61	1256	2072.8	1257	2096.69	1258
GR	1260	2106.64	1261	2108.51	1262	2110.37	1263
GR	1265	2116.04	1266	2117.94	1267	2120.05	1268
GR	1267	2166.22	1266	2176.18	1266	2214.09	1267
GR	1269	2231.04	1270	2236.55	1270	2247.49	
NC				0.1	0.3		
X1	20235	43	1811.61	2125.17	15	15	15
GR	1270	1723	1270	1778.02	1269	1811.61	1268
GR	1266	1857.49	1265	1863.72	1264	1869.44	1263
GR	1261	1885.67	1260	1889.55	1259	1895.76	1258
GR	1256	2001.75	1256	2023.22	1256	2061.58	1256
GR	1258	2104.02	1259	2105.86	1260	2107.76	1261
GR	1263	2113.29	1264	2115.16	1265	2117.06	1266
GR	1268	2125.17	1268	2159.04	1267	2167.11	1266
GR	1267	2232.35	1268	2237.33	1269	2242.16	1269
GR	1271	2253.89	1271	2269.97	1270	2277.21	
X1	20300	35	1803.14	2126.44	65	65	65
GR	1269	1744	1269	1803.14	1268	1819.82	1267
GR	1265	1853.44	1264	1860.75	1263	1867.16	1262
GR	1260	1886.27	1259	1892.29	1258	1899.38	1257
GR	1256	2034.62	1256	2070.64	1256	2078.33	1257
GR	1259	2106.52	1260	2108.37	1261	2110.29	1262
GR	1264	2115.88	1265	2117.92	1266	2119.68	1267
GR	1268	2164.35	1267	2171.11	1266	2177.92	1265
X1	20500	33	800.74	1124.93	200.73	200.71	200.31
X3	10						
GR	1269	714.35	1269	800.74	1268	811.67	1267
GR	1265	835.31	1264	841.96	1263	849.45	1262
GR	1260	876.28	1259	884.07	1258	893.36	1257
GR	1257	1002.36	1257	1081.14	1258	1099.15	1259
GR	1261	1105.05	1262	1107.08	1263	1109.07	1264
GR	1266	1115	1267	1116.97	1268	1124.93	1268
GR	1266	1186.05	1265	1192.47	1265	1205.19	
X1	20682	33	785.83	1151.16	184.74	181.99	182.04
X3	10						
GR	1269	709.82	1269	785.83	1268	794.31	1267
GR	1265	817.54	1264	826.8	1263	835.76	1262
GR	1260	866.42	1259	877.59	1258	888.55	1258
GR	1257	964.73	1257	971.94	1258	1065.71	1259
GR	1261	1101.95	1262	1103.91	1263	1105.89	1264
GR	1266	1117.75	1267	1133.56	1268	1151.16	1268

14AUG97 11:40:35

GR	1266	1195.43	1265	1201.45	1265	1258.45	
X1	20883	36	846.55	1156.15	212.22	203.72	201.39
X3	10						
GR	1270	817.25	1270	846.55	1269	851.83	1268
GR	1266	866.6	1265	870.78	1264	874.95	1263
GR	1261	885.98	1260	889.33	1259	892.76	1258
GR	1258	928.45	1258	956.96	1259	1046.59	1259
GR	1260	1096.08	1261	1099.04	1262	1101.41	1263
GR	1265	1121.52	1266	1134.6	1267	1146.21	1268
GR	1267	1197.13	1266	1202.55	1265	1208.65	1265
GR	1265	1264.13					
X1	21000	35	861.07	1166.8	117.44	117.66	117.3
X3	10						
GR	1272	747.95	1272	804.41	1272	817.78	1271
GR	1269	868.48	1268	871.12	1267	873.73	1266
GR	1264	882.36	1263	885.28	1262	888.18	1261
GR	1259	960.66	1258	970.04	1258	976.29	1259
GR	1259	1021.03	1260	1030.84	1261	1085.85	1262
GR	1264	1098.84	1265	1104.36	1266	1116.31	1267
GR	1269	1166.8	1269	1199.37	1268	1205.47	1267
X1	21330	44	859.45	1169.52	330.26	330.85	330.86
X3	10						
GR	1275	703	1275	707.38	1275	727.75	1274
GR	1272	781.93	1271	810.86	1270	815.99	1269
GR	1267	859.45	1266	864.58	1266	867.72	1266
GR	1266	878.06	1266	878.4	1266	881.01	1266
GR	1264	894.3	1263	910.1	1262	940.03	1261
GR	1261	967.89	1260	972.84	1260	993.12	1261
GR	1261	1035.45	1262	1039.26	1263	1087.38	1264
GR	1266	1098.78	1267	1103.04	1268	1124.88	1269
GR	1270	1205.44	1269	1212.07	1268	1218.73	1267
X1	21395	43	856.44	1174.76	65.77	65.17	65.4
X3	10						
GR	1274	703	1274	708.35	1274	856.44	1273
GR	1271	871.98	1270	875.9	1269	879.51	1268
GR	1266	889.73	1265	894.66	1264	902.6	1263
GR	1262	975.05	1262	975.49	1261	980.11	1260
GR	1260	1010.48	1260	1012.97	1261	1019.08	1262
GR	1261	1032.74	1261	1041.83	1262	1044.34	1263
GR	1263	1091.46	1264	1097.41	1265	1101.01	1266
GR	1268	1131.77	1269	1154.06	1270	1174.76	1270
GR	1268	1228.89	1267	1233.94	1266	1239.92	
X1	21565	30	1820.1	2351.59	170	170	170
GR	1273	1800.19	1273	1820.1	1272	1836	1271
GR	1269	1854.02	1268	1858.67	1267	1863.43	1266
GR	1264	1878.13	1263	1969.83	1262	1977.77	1261
GR	1261	2006.56	1261	2012.4	1262	2016.1	1263
GR	1265	2129.33	1266	2143.66	1267	2159.45	1268
GR	1270	2264.77	1271	2294.27	1272	2315.65	1273

14AUG97 11:40:35

X1	21700	33	1815.58	2091.9	135	135	135
GR	1274	1730	1274	1758.5	1275	1780.18	1276
GR	1277	1815.58	1276	1833.25	1275	1836.49	1274
GR	1272	1848.29	1271	1850.96	1270	1853.67	1269
GR	1267	1863.79	1266	1867.92	1265	1872.08	1264
GR	1262	1966.92	1262	1973.65	1263	1983.92	1264
GR	1266	2064.98	1267	2070.18	1268	2075	1269
GR	1271	2091.9	1271	2111.84	1270	2130.42	
X1	22000	31	803.8	1145.96	300.66	300.93	300.42
X3	10						
GR	1277	803.8	1276	807.79	1275	811.71	1274
GR	1272	835.44	1271	841.32	1270	851.5	1269
GR	1267	876.77	1266	888.1	1265	913.34	1265
GR	1265	1002.44	1265	1005.64	1265	1020.42	1266
GR	1268	1096.41	1269	1100.7	1270	1105.2	1271
GR	1273	1120.99	1274	1126.27	1275	1145.96	1275
GR	1274	1245.44					
X1	22062	43	781.77	1136.71	101.72	37.13	61.82
X3	10						
GR	1277	781.77	1276	797.57	1275	804.12	1274
GR	1272	823.05	1271	825.64	1270	828	1269
GR	1267	835.43	1266	837.84	1266	841.87	1267.18
GR	1266	849.32	1266	860.93	1267.04	860.98	1267.04
GR	1266.8	870.58	1266	870.61	1266.8	872.74	1266
GR	1267.1	883.93	1267.1	889.61	1266	889.75	1265
GR	1266	1077.69	1267	1082.85	1268	1087.96	1269
GR	1271	1103.23	1272	1108.22	1273	1113.2	1274
GR	1275	1180.62	1274	1239.8	1274	1242.49	
X1	22152	28	783.42	1146.91	90.76	92.2	89.77
X3	10						
GR	1278	723	1278	783.42	1277	788.1	1276
GR	1275	798.54	1274	803.61	1273	808.04	1272
GR	1270	825.53	1269	829.52	1267	843.49	1266
GR	1266	983.72	1266	1073.09	1267	1077.63	1268
GR	1270	1091.44	1271	1096.42	1272	1101.91	1273
GR	1275	1118.58	1276	1146.91	1276	1177.22	
X1	22200	33	782.71	1144.95	48.97	48.4	48.24
X3	10						
GR	1278	724.95	1277	782.71	1276	791.26	1275
GR	1273	816.13	1272	824.88	1271	835.89	1270
GR	1268	870.21	1267	881.48	1266	917.09	1266
GR	1266	1004.74	1266	1016.08	1266	1025.34	1266
GR	1266	1056.75	1266	1069.84	1267	1079.76	1268
GR	1270	1094.03	1271	1098.82	1272	1104.16	1273
GR	1275	1121.11	1276	1144.95	1276	1189.87	

14AUG97 11:40:35

X1	22347	29	797.28	1158.25	184.95	123.76	146.86
X3	10						
GR	1278	739.62	1278	797.28	1278	806.62	1277
GR	1275	824.31	1274	830.2	1273	841	1272
GR	1270	867.56	1269	875.1	1268	888.39	1267
GR	1267	994.86	1267	1043.33	1268	1090.49	1269
GR	1271	1105.75	1272	1109.91	1273	1114.12	1274
GR	1276	1126.22	1277.71	1147.81	1277.71	1158.25	1276
X1	22445	39	868.34	1125.16	140.09	88.02	98.49
X3	10						
GR	1279	727.58	1279	770.6	1279	801.78	1278
GR	1278	838.62	1277	844.9	1276	868.34	1275
GR	1273	943.23	1272	947.44	1271	951.57	1270
GR	1268	967.12	1268.26	967.47	1267	968.36	1266
GR	1264	971.93	1264	972.8	1265	976.68	1266
GR	1266	1039.66	1267	1041.4	1268	1043.05	1269
GR	1271	1048.5	1272	1052.59	1273	1062.4	1274
GR	1276	1125.16	1277	1133.35	1277	1168.05	1276
X1	22500	30	869.26	1124.51	55	55	55
X3	10						
GR	1279	717.14	1279	770.35	1279	802.17	1278
GR	1278	840.66	1277	846.29	1276	869.26	1275
GR	1273	946	1272	949.86	1271	953.46	1270
GR	1268	1004.47	1268	1039.14	1269	1042.95	1270
GR	1272	1055.77	1273	1062.13	1274	1067.98	1275
GR	1275	1095.5	1276	1124.51	1277	1132.83	1277
X1	22625	29	914.34	1201.27	125.77	125.6	125.01
X3	10						
GR	1278	874	1278	903.03	1279	908.82	1279
GR	1277	924.88	1276	927.28	1276	940.22	1276
GR	1275	984.92	1275	998.73	1274	1003.22	1273
GR	1271	1015.59	1270	1019.7	1270	1067.7	1271
GR	1273	1158.16	1274	1163.52	1275	1169.06	1276
GR	1278	1201.27	1278	1203.99	1277	1218.13	1277
QT	1	8400					
X1	22877	44	959	1090.45	252.52	252.04	252.3
X3	10						
GR	1279	959	1278	960.87	1277	962.49	1276
GR	1274	967.26	1273	968.85	1272	970.91	1271
GR	1269	976.52	1268	978.33	1268	1002.75	1269
GR	1271	1053.23	1272	1055.4	1273	1057.49	1274
GR	1276	1063.05	1277	1064.97	1278	1066.98	1279
GR	1281	1075.73	1282	1080.03	1283	1086.01	1283
GR	1281	1100.85	1280	1104.06	1279	1107.39	1278
GR	1276	1173.42	1275	1180.38	1274	1187.33	1274
GR	1276	1301.99	1277	1306.63	1278	1311.35	1279

14AUG97 11:40:35

X1	23000	55	954.48	1069.74	123.8	123.58	123.57
X3	10						
GR	1279	711.74	1279	747.74	1279	752.65	1279
GR	1280	954.48	1279	962.75	1278	964.65	1277
GR	1275	969.82	1274	971.65	1273	973.48	1272
GR	1270	978.81	1269	980.56	1269	1000.49	1269
GR	1270	1048.95	1271	1050.93	1272	1052.85	1273
GR	1275	1058.62	1276	1060.52	1277	1062.1	1278
GR	1280	1066.67	1281	1068.21	1282	1069.74	1283
GR	1284	1076.27	1283	1078.55	1282	1080.84	1281
GR	1280	1114.86	1280	1120.51	1280	1143.49	1281
GR	1280	1186.88	1280	1215.98	1281	1226.41	1282
GR	1283	1233.55	1282	1236.54	1281	1239.65	1280
X1	23114	82	847	1079.49	120.26	111.29	114.1
X3	10						
GR	1280	711.46	1281	717.19	1282	736.02	1283
GR	1284	744.06	1283	747.48	1282	751.28	1281
GR	1282	837.93	1283	840.45	1284	843.07	1284
GR	1282	849.51	1281	870.41	1280	904.85	1279
GR	1277	930.6	1276	932.75	1275	934.98	1274
GR	1272	941.6	1271	943.84	1270	946	1269
GR	1269	1032.88	1269	1036.29	1270	1052.48	1271
GR	1273	1061.74	1274	1063.74	1275	1065.9	1276
GR	1278	1071.88	1279	1073.87	1280	1075.83	1281
GR	1283	1081.39	1284	1083.25	1285	1085.12	1286
GR	1285	1089.47	1284	1091.58	1283	1093.7	1282
GR	1283	1100.73	1284	1102.73	1285	1104.81	1286
GR	1288	1111.16	1289	1113.05	1290	1114.9	1291
GR	1292	1121.17	1291	1123.28	1290	1125.35	1289
GR	1287	1131.69	1286	1133.74	1285	1135.81	1284
GR	1282	1201.75	1281	1233.1	1280	1267.63	1280
GR	1282	1287.55	1282	1294.05			
X1	23319	53	931.9	1069.97	204.24	210.62	205.44
X3	10						
GR	1280	716.11	1281	809.03	1280.78	843.63	1281
GR	1280	931.9	1279	935.66	1279	938.78	1279
GR	1277	945.08	1276	946.37	1275	947.61	1274
GR	1272	951.22	1271	966.9	1271	1022.6	1271
GR	1272	1050.43	1273	1052.1	1274	1053.76	1275
GR	1277	1058.86	1278	1060.65	1279	1062.4	1280
GR	1282	1067.83	1283	1069.97	1284	1072.17	1285
GR	1284	1077.67	1283	1080.19	1282	1082.97	1282
GR	1282	1134.96	1282	1137.57	1282	1143.41	1283
GR	1284	1155.18	1283	1164.32	1282	1169.87	1281
GR	1282	1264.76	1282	1273.28	1281	1298.54	

14AUG97 11:40:35

X1	23500	58	925.04	1068.18	181.84	181.98	181.7
X3	10						
GR	1282	830	1283	834.3	1284	840.12	1284
GR	1282	845.49	1281	847.26	1280	848.18	1279
GR	1278	852.99	1279	854.29	1280	855.39	1281
GR	1283	859.54	1284	861.92	1284	867.95	1283
GR	1282	921	1282	925.04	1281	937.94	1280
GR	1278	943.5	1277	945.33	1276	947.12	1275
GR	1273	952.65	1272	954.5	1272	966.41	1272
GR	1273	1048.08	1274	1050.52	1275	1052.54	1276
GR	1278	1058.28	1279	1060.14	1280	1062.06	1281
GR	1283	1068.18	1284	1107.7	1285	1120.08	1286
GR	1286	1214.04	1287	1220.5	1288	1259.91	1289
GR	1288	1278.06	1287	1282.86	1287	1306.81	

X1	23575	61	785.30	1032.20	75.27	76.03	75.26
X3	10						
GR	1281.0	712.5	1281.0	737.4	1282.0	755.6	1283.0
GR	1284.0	771.5	1284.0	775.0	1284.0	776.3	1283.0
GR	1281.0	821.0	1280.0	828.6	1279.0	835.0	1278.0
GR	1276.0	855.3	1275.0	866.3	1274.0	877.8	1273.0
GR	1272.0	942.5	1273.0	960.9	1274.0	970.4	1275.0
GR	1277.0	981.8	1278.0	983.3	1279.0	985.4	1280.0
GR	1281.0	992.8	1280.0	995.5	1279.0	997.6	1278.0
GR	1279.0	1004.1	1280.0	1008.8	1281.0	1020.6	1282.0
GR	1284.0	1034.7	1284.0	1038.8	1283.0	1040.6	1282.0
GR	1283.0	1045.5	1283.0	1051.2	1282.0	1052.7	1281.0
GR	1281.0	1091.9	1281.0	1131.1	1281.0	1138.3	1281.0
GR	1281.0	1160.7	1282.0	1162.9	1282.0	1168.7	1281.0
GR	1280.0	1233.7					

X1	23645	37	878.70	1037.20	70.23	70.37	70.2
X3	10						
GR	1281.0	697.0	1281.0	707.2	1282.0	872.7	1282.0
GR	1280.0	891.1	1279.0	894.0	1278.0	897.7	1277.0
GR	1275.0	906.1	1274.0	908.5	1273.0	910.8	1272.0
GR	1273.0	936.6	1274.0	938.6	1275.0	940.7	1276.0
GR	1278.0	945.7	1279.0	947.8	1280.0	949.4	1281.0
GR	1283.0	959.9	1284.0	962.8	1284.0	964.2	1284.0
GR	1285.0	1026.3	1285.0	1037.2	1285.0	1112.3	1285.0
GR	1285.0	1196.4	1286.0	1219.7			

X1	24000	37	886.39	1086.17	355.91	355.19	355.65
X3	10						
GR	1286	837.65	1286	857.08	1286	861.15	1286
GR	1284	896.99	1283	904.5	1282	910.17	1281
GR	1279	930.11	1278	933.41	1277	937.06	1276
GR	1274	964.81	1274	1014.25	1275	1042.5	1276
GR	1278	1070.68	1279	1072.71	1280	1074.67	1281
GR	1283	1080.49	1284	1082.41	1285	1084.29	1286
GR	1288	1110.68	1289	1149.05	1289	1158.76	1289
GR	1288	1249.46	1287	1303.08			

14AUG97 11:40:35

X1	24112	36	750.67	1211.90	108.97	131.77	112.73
X3	10						
GR	1294.3	684.67	1285	750.67	1285	764.34	1285
GR	1284	864.57	1283	880.5	1282	908.57	1281
GR	1279	915.74	1278	918.51	1277	922.4	1276
GR	1275	938.81	1275	948.52	1274	968.54	1274
GR	1276	1026.4	1276	1059.01	1276	1068.71	1277
GR	1279	1099.9	1280	1102.79	1281	1105.78	1282
GR	1284	1194.03	1285	1208.87	1286	1211.9	1286
GR	1287	1269.66					
X1	24263	49	866.80	1283.85	139.82	162.22	150.94
X3	10						
GR	1288.5	738	1294.26	775.86	1288	821.32	1288
GR	1288	865.37	1287	866.05	1294.5	866.66	1286
GR	1284	870.92	1283	925.99	1283	933.29	1283
GR	1281	940.28	1280	943.55	1279	951.23	1278
GR	1277	1078.94	1278	1085.3	1279	1088.59	1280
GR	1282	1097.71	1283	1102.91	1284	1120.57	1285
GR	1287	1127.92	1288	1130.42	1288	1134.1	1287
GR	1285	1176.38	1284	1197.34	1284	1198.21	1284
GR	1284	1238.53	1283	1242.84	1283	1256.28	1284
GR	1286	1278.06	1287	1283.85	1287	1287.52	1287
X1	24365	39	920.99	1118.33	102.35	102.93	102.11
X3	10						
GR	1288	760	1288.68	772.85	1288.7	777.54	1294.5
GR	1294.5	920.99	1287	922.1	1286	927.24	1285
GR	1283	939.76	1282	942.11	1281	944.58	1280
GR	1278	954.27	1277	962.69	1277	1026.07	1277
GR	1278	1084.52	1279	1089.53	1280	1093.1	1281
GR	1283	1101.56	1284	1109.86	1285	1114.42	1286
GR	1287	1122.06	1286	1153.67	1285	1166.15	1284
GR	1283	1245.36	1284	1257.69	1285	1265.06	1286
X1	24442	44	928.43	1103.15	92.51	58.98	77.18
X3	10						
GR	1288	737	1287.9	750.58	1287.2	796.69	1287
GR	1287	821.91	1287	904.73	1287.2	922.42	1286.9
GR	1286	936.07	1285	938.8	1284	941.56	1283
GR	1281	949.88	1280	952.61	1279	955.41	1278
GR	1277	992.19	1277	1032.19	1277	1061.89	1278
GR	1280	1076.1	1281	1083.14	1282	1086.7	1283
GR	1285	1100.3	1286	1103.15	1286	1114.64	1285
GR	1285	1165.33	1284	1202.95	1283	1218.58	1283
GR	1285	1243.31	1286	1246.17	1287	1249.15	1287
X1	24455	48	940.65	1105.77	14.26	15.7	12.67
X3	10						
GR	1287.6	792	1289.94	798.3	1289.94	822.4	1287.28
GR	1287.2	830.55	1287	841.35	1287	908.83	1287.2
GR	1288.9	933.95	1286	940.65	1285	943.56	1284
GR	1282	951.94	1281	954.37	1280	956.73	1279

14AUG97 11:40:35

GR	1277	963.86	1276	966.85	1275	971.22	1275
GR	1277	987.01	1278	1026.46	1278	1030.98	1277
GR	1278	1066.56	1279	1070.03	1280	1076.91	1281
GR	1283	1090.01	1284	1093.14	1285	1102.36	1286
GR	1285	1168.61	1284	1202.59	1283	1214.12	1283
GR	1285	1239.05	1286	1242.3	1287	1245.11	
X1	24500	54	929.75	1110.35	45.26	45.23	45.68
X3	10						
GR	1287.2	775	1289.94	785.06	1288	789.29	1288
GR	1288	827.51	1288	827.51	1289.94	832.12	1287.16
GR	1287.2	840.2	1287	854.15	1287	905.62	1287.2
GR	1288.9	929.75	1286	939.02	1285	941.93	1284
GR	1282	950.52	1281	953.4	1280	956.22	1279
GR	1277	967.05	1277	981.9	1278	1029.73	1279
GR	1280	1038.44	1280	1039.33	1280	1039.79	1279
GR	1278	1056.61	1279	1067.82	1280	1074.25	1281
GR	1283	1085.35	1284	1087.48	1285	1097.45	1286
GR	1286	1145.31	1285	1163.45	1284	1191.86	1283
GR	1284	1227.5	1285	1232.23	1286	1234.58	1287
X1	24592	39	911.55	1201.26	99.01	83.79	92.36
X3	10						
GR	1295.7	762	1289	837.1	1295.7	838.62	1295.7
GR	1289	918.72	1288	921.81	1287	924.92	1286
GR	1284	933.5	1283	936	1282	938.45	1281
GR	1279	945,87	1278	949.61	1277	955.46	1277
GR	1279	1082.09	1280	1084.8	1281	1087.46	1282
GR	1284	1095.64	1285	1098.3	1285	1119.28	1284
GR	1285	1191.4	1286	1194.76	1287	1197.92	1288
GR	1288	1226.78	1288	1277.85	1288	1285.51	1288
X1	24698	40	892.77	1186.73	105.13	153.7	105.82
X3	10						
GR	1290	707	1295.78	709.27	1290.64	815.37	1290
GR	1288	901.39	1287	905.46	1286	907.6	1285
GR	1283	914.43	1282	916.77	1281	919.03	1280
GR	1278	925.95	1277	932.09	1277	1012.7	1278
GR	1277	1046.18	1277	1058.08	1277	1064.52	1277
GR	1279	1150.43	1280	1153.1	1281	1160.52	1282
GR	1284	1168.07	1285	1170.03	1286	1171.87	1287
GR	1288	1180.64	1288	1186.73	1289	1194.14	1289
X1	24787	48	890.06	1269.54	86.38	114.98	89.24
X3	10						
GR	1290.9	780.09	1290.83	783.68	1288.97	800	1289.75
GR	1289	886.11	1289.43	888.59	1289	890.06	1289.41
GR	1289	901.46	1288	904.1	1287	906.54	1286
GR	1284	913.58	1283	915.8	1282	917.9	1281
GR	1279	924.32	1278	926.62	1277	935.19	1277
GR	1277	991.41	1277	1000.22	1277	1014.17	1277
GR	1277	1196.74	1277	1206.15	1278	1236.59	1279
GR	1281	1246.01	1282	1249.07	1283	1251.31	1284
GR	1286	1258.03	1287	1260.29	1288	1262.47	1289

14AUG97 11:40:35

GR	1289	1309.94	1289	1350.38	1289	1368.24	
X1	24894	65	900.2	1342.25	102.84	142.62	106.72
X3	10						
GR	1290	731.63	1290	804	1288.97	843.26	1289
GR	1289.4	849.46	1288.61	881.59	1288	882.86	1287.99
GR	1288	895.71	1289	896.92	1289	897.68	1288
GR	1286	904.92	1285	907.16	1284	909.43	1283
GR	1281	915.69	1280	917.79	1279	919.79	1278
GR	1276	983.59	1276	1004.46	1277	1007.07	1278
GR	1280	1015.03	1280	1015.48	1279	1020.36	1278
GR	1277	1037	1278	1044.01	1278	1072.38	1278
GR	1277	1101.1	1277	1108.09	1277	1214	1277
GR	1279	1281.85	1280	1285.34	1281	1288.58	1282
GR	1284	1298.26	1285	1305.05	1286	1311.31	1287
GR	1289	1324.98	1290	1330.97	1291	1335.76	1292
GR	1291	1369.89	1290	1391.09	1289	1426.17	1289
X1	25000	59	850.8	1267.14	106.44	106.76	106.87
X3	10						
GR	1295.9	687.98	1288.97	796	1289.23	800.5	1289
GR	1289	814.83	1289	822.45	1289.37	834.21	1289
GR	1288.9	840.32	1289	850.8	1288	852.89	1287
GR	1285	859.49	1284	861.54	1283	863.72	1282
GR	1280	870.51	1279	872.76	1278	879.26	1278
GR	1278	1010.92	1278	1034.91	1278	1046.93	1278
GR	1278	1157.85	1278	1178.41	1279	1191.02	1280
GR	1282	1212.94	1283	1217.57	1284	1220.68	1285
GR	1287	1232.4	1288	1237.14	1289	1241.61	1290
GR	1292	1253.73	1293	1256.99	1294	1260.04	1294
GR	1294	1292.92	1293	1297.1	1292	1312.46	1291
GR	1289	1430.39	1288	1492.45	1288	1503.97	1298.41
X1	25082	57	879.59	1286.68	70.97	116.93	81.88
X3	10						
GR	1295.9	727	1296.47	727.02	1295.9	800.75	1290
GR	1289	839.68	1289.42	839.76	1289.43	841.36	1289
GR	1289.3	873.48	1289	874.73	1289.3	875.09	1288.97
GR	1288	892.48	1287	894.69	1286	896.95	1285
GR	1283	903.43	1282	905.68	1281	907.81	1280
GR	1278	918.62	1278	936.07	1278	960.08	1278
GR	1278	1044.31	1278	1050.36	1278	1062.2	1278
GR	1279	1111.76	1280	1162.2	1281	1197.23	1282
GR	1284	1265.7	1285	1269.51	1286	1272.73	1287
GR	1289	1282.71	1289	1283.66	1288	1286.68	1288
GR	1289	1336.19	1289	1380.86	1290	1432.81	1298.41
GR	1289	1456.99	1289	1523.32			
X1	25171	57	890.89	1300.72	93.92	93.25	89.02
X3	10						
GR	1290	698.34	1290.25	705.41	1290.25	720.56	1290
GR	1289.5	731.01	1289.43	831.83	1289.43	842.25	1289.51
GR	1289.3	874.05	1289	875.47	1288.97	880.17	1290
GR	1289	890.89	1288	893.15	1287	895.5	1286

14AUG97 11:40:35

GR	1284	901.77	1283	903.98	1282	905.83	1281
GR	1279	915.56	1279	994.66	1279	1020.41	1279
GR	1280	1062.47	1279	1073.42	1279	1088.77	1279
GR	1279	1106.62	1279	1119.99	1279	1145.32	1278
GR	1279	1203.83	1280	1209.32	1281	1216.34	1282
GR	1284	1235.33	1285	1243.1	1286	1264.43	1287
GR	1289	1300.72	1290	1359.11	1298.41	1370.2	1291
GR	1298.4	1415.97	1296.98	1421.47			
X1	25268	53	880.69	1268.91	100.82	106.32	97.06
X3	10						
GR	1291	719.98	1297.09	747.28	1300.9	759.64	1300.9
GR	1297.1	823.7	1290.25	826.89	1289.49	831.38	1289.09
GR	1289.5	866.34	1293.1	871	1290	871.6	1290
GR	1288	883.02	1287	885.32	1286	887.6	1285
GR	1283	894.48	1282	896.78	1281	899.1	1280
GR	1279	925.09	1280	961.46	1280	963.13	1279
GR	1278	1019.8	1279	1026.74	1279	1050.89	1279
GR	1280	1138.04	1280	1155.47	1280	1166.82	1279
GR	1280	1229.75	1281	1231.85	1282	1234	1283
GR	1285	1240.92	1286	1243.17	1287	1245.58	1288
GR	1290	1254.19	1291	1268.91	1298.41	1285.54	
X1	25380	43	878.23	1177.21	91.1	182.55	111.65
X3	10						
GR	1297.1	729.84	1291	757.86	1300.61	763.61	1300.61
GR	1290	825.51	1290.25	834.11	1289.81	838.21	1289.41
GR	1289.8	873.6	1290	875.01	1293.1	878.23	1290
GR	1288	889.7	1287	892.4	1286	895.24	1285
GR	1283	902.32	1282	904.75	1281	911.78	1280
GR	1280	1005.35	1280	1042.16	1281	1058.33	1281
GR	1280	1149.61	1281	1151.59	1282	1153.68	1283
GR	1285	1159.66	1286	1161.84	1287	1163.84	1288
GR	1290	1173.87	1291	1177.21	1298.41	1183.43	
X1	25500	54	897.13	1111.76	120.04	120.24	120.68
X3	10						
GR	1301.4	718.27	1297.62	722.1	1293	724.41	1292
GR	1291.4	764.77	1291.07	766.57	1291	801.7	1290.9
GR	1291.3	804.38	1293.1	809.3	1292	824	1293
GR	1292	897.13	1291	899.47	1290	901.74	1289
GR	1287	909.16	1286	911.39	1285	913.57	1284
GR	1283	941.43	1283	943.53	1282	1003.12	1281
GR	1282	1060.37	1283	1062.34	1284	1064.29	1285
GR	1287	1070.21	1288	1072.29	1289	1074.2	1290
GR	1292	1090.86	1293	1111.76	1298.41	1112.78	1300.96
GR	1295.5	1191.55	1292.12	1203.82	1292	1203.86	1291.71
GR	1291.9	1242.46	1292	1244.4	1292.75	1247.13	1293

14AUG97 11:40:35

X1	25600	27	1910.87	2104.03	100	100	100
GR	1292	1908	1291	1910.87	1290	1913.58	1289
GR	1287	1921.97	1286	1924.16	1285	1926.39	1284
GR	1283	1950.14	1283	1964.96	1282	2006.22	1281
GR	1282	2066.81	1283	2068.54	1284	2070.35	1285
GR	1287	2075.69	1288	2077.47	1289	2079.28	1290
GR	1292	2093.12	1293	2104.03			
X1	25870	36	1871.41	2111.71	270	270	270
GR	1296	1821	1297	1823.28	1298	1824.68	1298
GR	1296	1862.08	1295	1871.41	1294	1895.95	1293
GR	1291	1903.42	1290	1905.91	1289	1908.44	1288
GR	1286	1916.05	1285	1918.53	1284	1921.09	1284
GR	1284	1961.42	1284	1995.53	1284	2026.26	1285
GR	1287	2051.83	1288	2054.53	1289	2057.35	1290
GR	1292	2076.9	1293	2081.79	1294	2089.23	1295
GR	1297	2111.71					
X1	26000	54	880.80	1085.20	130	130	130
X3	10						
GR	1300.0	707.0	1301.0	809.6	1301.2	817.5	1301.0
GR	1301.0	873.4	1301.0	880.8	1300.0	889.5	1299.0
GR	1299.0	894.5	1299.0	895.1	1300.0	896.1	1300.0
GR	1298.0	901.2	1297.0	903.1	1296.0	905.0	1295.0
GR	1293.0	911.4	1292.0	913.7	1291.0	915.9	1290.0
GR	1288.0	922.4	1287.0	924.5	1286.0	926.8	1285.0
GR	1285.0	983.5	1285.0	1023.3	1286.0	1037.1	1287.0
GR	1289.0	1048.8	1290.0	1051.2	1291.0	1053.6	1292.0
GR	1294.0	1060.8	1295.0	1063.2	1296.0	1065.6	1297.0
GR	1299.0	1078.0	1300.0	1079.7	1301.0	1085.2	1302.6
GR	1300.8	1215.7	1300.8	1218.2	1302.6	1241.9	1301.0

D/S Face of 51st AV Bridge

NC				0.3	0.5		
X1	26020	54	880.80	1085.20	20	20	20
X3	10						
GR	1300.0	707.0	1301.0	809.6	1301.2	817.5	1301.0
GR	1301.0	873.4	1301.0	880.8	1300.0	889.5	1299.0
GR	1299.0	894.5	1299.0	895.1	1300.0	896.1	1300.0
GR	1298.0	901.2	1297.0	903.1	1296.0	905.0	1295.0
GR	1293.0	911.4	1292.0	913.7	1291.0	915.9	1290.0
GR	1288.0	922.4	1287.0	924.5	1286.0	926.8	1285.0
GR	1285.0	983.5	1285.0	1023.3	1286.0	1037.1	1287.0
GR	1289.0	1048.8	1290.0	1051.2	1291.0	1053.6	1292.0
GR	1294.0	1060.8	1295.0	1063.2	1296.0	1065.6	1297.0
GR	1299.0	1078.0	1300.0	1079.7	1301.0	1085.2	1302.6
GR	1300.8	1215.7	1300.8	1218.2	1302.6	1241.9	1301.0

14AUG97 11:40:35

SB	1.05	1.6	2.6	355	101	12	1364

U/S Face of 51st AV Bridge

X1	26120	37	894.60	1096.5	100.63	100.7	100.03
X2			1	1297.14	1302.37		
X3	10						
GR	1300.0	707.0	1301.0	792.1	1300.8	862.0	1301.0
GR	1299.0	905.9	1298.0	908.1	1297.0	910.3	1296.0
GR	1294.0	917.5	1293.0	919.7	1292.0	922.3	1291.0
GR	1289.0	929.6	1288.0	932.0	1287.0	934.4	1286.0
GR	1287.0	1051.5	1288.0	1054.3	1289.0	1056.8	1290.0
GR	1292.0	1064.8	1293.0	1067.2	1294.0	1069.9	1295.0
GR	1297.0	1079.0	1298.0	1082.5	1299.0	1085.4	1300.0
GR	1301.0	1205.1	1300.0	1283.2			
X1	26260	39	1907.3	2131.25	140	140	140
GR	1297	1825	1296	1855.38	1296	1876.31	1296
GR	1294	1925.74	1293	1928.66	1292	1931.51	1291
GR	1289	1940.23	1288	1943.16	1287	1945.93	1286
GR	1286	2050.7	1286	2054.14	1287	2064.88	1288
GR	1290	2074.55	1291	2077.88	1292	2080.97	1293
GR	1295	2090.59	1296	2101.12	1297	2109.14	1298
GR	1299	2131.25	1298	2139.55	1297	2143.33	1296
GR	1294	2156.06	1293	2210.74	1293	2254.85	1293
NC				0.1	0.3		
X1	26500	20	2068.53	2334.92	240	240	240
GR	1297	2000	1297	2068.53	1297	2070.14	1297
GR	1295	2080.44	1294	2084.09	1293	2087.5	1292
GR	1290	2101.65	1289	2114.37	1289	2277.06	1290
GR	1292	2320.44	1293	2324.16	1294	2327.84	1295
X1	26700	24	2000	2267.85	200	200	200
GR	1298	2000	1297	2025.46	1296	2031.34	1295
GR	1293	2038.2	1292	2040.46	1291	2042.7	1290
GR	1290	2132.54	1290	2160.3	1290	2171.06	1290
GR	1292	2248.8	1293	2251.63	1294	2253.87	1295
GR	1297	2261.06	1298	2263.39	1299	2265.74	1300
X1	27000	25	2002.71	2243.22	300	300	300
GR	1298	2000	1299	2002.71	1299	2017.43	1298
GR	1296	2022.99	1295	2024.76	1294	2026.72	1293
GR	1291	2032.35	1291	2034.13	1292	2085.32	1292
GR	1292	2227.11	1292	2228.32	1293	2230.25	1294
GR	1296	2235.71	1297	2237.67	1298	2239.53	1299

14AUG97 11:40:35

SECNO	DEPTH	CWSEL	CRIWS	WSELK	EG	HV	HL
Q	QLOB	QCH	QROB	ALOB	ACH	AROB	VOL
TIME	VLOB	VCH	VROB	XNL	XNCH	XNR	WTN
SLOPE	XLOBL	XLCH	XLOBR	ITRIAL	IDC	ICONT	CORAR

*PROF 1

CCHV= .100 CEHV= .300
*SECNO 5724.000
3280 CROSS SECTION 5724.00 EXTENDED 11.73 FEET

3495 OVERBANK AREA ASSUMED NON-EFFECTIVE, ELLEA= 1200.00 ELREA= 1201.0

5724.000	11.73	1194.73	.00	1197.10	1196.10	1.37	.00
11000.0	.0	11000.0	.0	.0	1171.3	.0	.0
.00	.00	9.39	.00	.000	.035	.000	.000
.002671	0.	0.	0.	0	0	3	.00

*SECNO 5838.000

3495 OVERBANK AREA ASSUMED NON-EFFECTIVE, ELLEA= 1199.60 ELREA= 1199.6

5838.000	13.35	1194.99	.00	.00	1196.40	1.42	.29
11000.0	.0	11000.0	.0	.0	1150.7	.0	3.0
.00	.00	9.56	.00	.000	.035	.000	.000
.002456	114.	114.	114.	2	0	0	.00

*SECNO 5994.000

3495 OVERBANK AREA ASSUMED NON-EFFECTIVE, ELLEA= 1199.90 ELREA= 1199.8

5994.000	13.57	1195.42	.00	.00	1196.78	1.36	.37
11000.0	.0	11000.0	.0	.0	1175.3	.0	7.2
.01	.00	9.36	.00	.000	.035	.000	.000
.002311	156.	156.	156.	2	0	0	.00

CCHV= .300 CEHV= .500
*SECNO 6094.000

3495 OVERBANK AREA ASSUMED NON-EFFECTIVE, ELLEA= 1200.10 ELREA= 1200.0

6094.000	13.61	1195.66	.00	.00	1197.01	1.35	.23
11000.0	.0	11000.0	.0	.0	1179.7	.0	9.9
.01	.00	9.32	.00	.000	.035	.000	.000
.002287	100.	100.	100.	0	0	0	.00

14AUG97 11:40:35

SECNO	DEPTH	CWSEL	CRIWS	WSELK	EG	HV	HL
Q	QLOB	QCH	QROB	ALOB	ACH	AROB	VOL
TIME	VLOB	VCH	VROB	XNL	XNCH	XNR	WTN
SLOPE	XLOBL	XLCH	XLOBR	ITRIAL	IDC	ICONT	CORAR

CCHV= .300 CEHV= .500
*SECNO 6194.000

3495 OVERBANK AREA ASSUMED NON-EFFECTIVE, ELLEA= 1204.00 ELREA= 1204.0

6194.000	13.65	1195.90	.00	.00	1197.25	1.34	.23
11000.0	.0	11000.0	.0	.0	1183.6	.0	12.6
.01	.00	9.29	.00	.000	.035	.000	.000
.002266	100.	100.	100.	0	0	0	.00

SPECIAL BRIDGE

SB XK	XKOR	COFQ	RDLEN	BWC	BWP	BAREA	SS
1.05	1.60	2.60	.00	60.00	4.00	1728.00	2.00

*SECNO 6260.000
CLASS A LOW FLOW

3420 BRIDGE W.S.= 1195.81 BRIDGE VELOCITY= 9.84 CALCULATED CHANNEL

EGPRS	EGLWC	H3	QWEIR	QLOW	BAREA	TRAPEZOID AREA	ELL
.00	1197.38	.19	0.	11000.	1728.	1636.	1200.

3495 OVERBANK AREA ASSUMED NON-EFFECTIVE, ELLEA= 1204.00 ELREA= 1204.0

6260.000	13.68	1196.09	.00	.00	1197.38	1.29	.14
11000.0	.0	11000.0	.0	.0	1204.9	.0	14.4
.02	.00	9.13	.00	.000	.035	.000	.000
.002193	66.	66.	66.	0	0	0	.00

*SECNO 6394.000

3495 OVERBANK AREA ASSUMED NON-EFFECTIVE, ELLEA= 1200.20 ELREA= 1200.2

6394.000	13.65	1196.38	.00	.00	1197.69	1.31	.30
11000.0	.0	11000.0	.0	.0	1195.7	.0	18.1
.02	.00	9.20	.00	.000	.035	.000	.000
.002227	134.	134.	134.	1	0	0	.00

14AUG97 11:40:35

SECNO	DEPTH	CWSEL	CRIWS	WSELK	EG	HV	HL
Q	QLOB	QCH	QROB	ALOB	ACH	AROB	VOL
TIME	VLOB	VCH	VROB	XNL	XNCH	XNR	WTN
SLOPE	XLOBL	XLCH	XLOBR	ITRIAL	IDC	ICONT	CORAR

CCHV= .100 CEHV= .300
*SECNO 6594.000

3495 OVERBANK AREA ASSUMED NON-EFFECTIVE, ELLEA= 1200.70 ELREA= 1200.7

6594.000	13.59	1196.80	.00	.00	1198.15	1.35	.45
11000.0	.0	11000.0	.0	.0	1178.9	.0	23.6
.03	.00	9.33	.00	.000	.035	.000	.000
.002293	200.	200.	200.	1	0	0	.00

*SECNO 6694.000

3495 OVERBANK AREA ASSUMED NON-EFFECTIVE, ELLEA= 1200.90 ELREA= 1200.9

6694.000	13.58	1197.03	.00	.00	1198.38	1.36	.23
11000.0	.0	11000.0	.0	.0	1176.7	.0	26.3
.03	.00	9.35	.00	.000	.035	.000	.000
.002306	100.	100.	100.	0	0	0	.00

CCHV= .300 CEHV= .500
*SECNO 6876.000

3495 OVERBANK AREA ASSUMED NON-EFFECTIVE, ELLEA= 1205.00 ELREA= 1205.0

6876.000	13.70	1197.53	.00	.00	1198.81	1.28	.41
11000.0	.0	11000.0	.0	.0	1211.4	.0	31.3
.03	.00	9.08	.00	.000	.035	.000	.000
.002168	182.	182.	182.	2	0	0	.00

SPECIAL BRIDGE

SB	XK	XKOR	COFQ	RDLEN	BWC	BWP	BAREA	SS
	1.05	1.60	2.60	.00	60.00	4.00	1542.00	2.00

*SECNO 6964.000
CLASS A LOW FLOW

3420 BRIDGE W.S.= 1197.45 BRIDGE VELOCITY= 9.80 CALCULATED CHANNEL

14AUG97 11:40:35

SECNO	DEPTH	CWSEL	CRIWS	WSELK	EG	HV	HL
Q	QLOB	QCH	QROB	ALOB	ACH	AROB	VOL
TIME	VLOB	VCH	VROB	XNL	XNCH	XNR	WTN
SLOPE	XLOBL	XLCH	XLOBR	ITRIAL	IDC	ICONT	CORAR

EGPRS	EGLWC	H3	QWEIR	QLOW	BAREA	TRAPEZOID AREA	ELL
.00	1198.99	.17	0.	11000.	1542.	1451.	1200.

3495 OVERBANK AREA ASSUMED NON-EFFECTIVE, ELLEA= 1205.00 ELREA= 1205.0

6964.000	13.66	1197.70	.00	.00	1198.99	1.29	.18
11000.0	.0	11000.0	.0	.0	1206.9	.0	33.7
.04	.00	9.11	.00	.000	.035	.000	.000
.002191	88.	88.	88.	0	0	0	.00

*SECNO 7094.000

3495 OVERBANK AREA ASSUMED NON-EFFECTIVE, ELLEA= 1200.80 ELREA= 1200.8

7094.000	13.69	1198.00	.00	.00	1199.28	1.28	.28
11000.0	.0	11000.0	.0	.0	1210.0	.0	37.3
.04	.00	9.09	.00	.000	.035	.000	.000
.002179	130.	130.	130.	0	0	0	.00

CCHV= .100 CEHV= .300
*SECNO 7194.000

3495 OVERBANK AREA ASSUMED NON-EFFECTIVE, ELLEA= 1200.90 ELREA= 1200.8

7194.000	13.85	1198.21	.00	.00	1199.50	1.29	.22
11000.0	.0	11000.0	.0	.0	1207.0	.0	40.1
.04	.00	9.11	.00	.000	.035	.000	.000
.002143	100.	100.	100.	0	0	0	.00

*SECNO 7247.000

3495 OVERBANK AREA ASSUMED NON-EFFECTIVE, ELLEA= 1200.90 ELREA= 1200.8

7247.000	13.96	1198.35	.00	.00	1199.61	1.26	.11
11000.0	.0	11000.0	.0	.0	1219.3	.0	41.6
.05	.00	9.02	.00	.000	.035	.000	.000
.002084	53.	53.	53.	2	0	0	.00

14AUG97 11:40:35

SECNO	DEPTH	CWSEL	CRIWS	WSELK	EG	HV	HL
Q	QLOB	QCH	QROB	ALOB	ACH	AROB	VOL
TIME	VLOB	VCH	VROB	XNL	XNCH	XNR	WTN
SLOPE	XLOBL	XLCH	XLOBR	ITRIAL	IDC	ICONT	CORAR

*SECNO 7284.000

3301 HV CHANGED MORE THAN HVINS

3302 WARNING: CONVEYANCE CHANGE OUTSIDE OF ACCEPTABLE RANGE, KRATIO = 1.54

3495 OVERBANK AREA ASSUMED NON-EFFECTIVE, ELLEA= 1200.90 ELREA= 1200.9

7284.000	14.67	1199.07	.00	.00	1199.72	.65	.05
11000.0	.0	11000.0	.0	.0	1702.9	.0	42.8
.05	.00	6.46	.00	.000	.035	.000	.000
.000882	37.	37.	37.	2	0	0	.00

*SECNO 7329.000

3495 OVERBANK AREA ASSUMED NON-EFFECTIVE, ELLEA= 1200.90 ELREA= 1200.9

7329.000	14.69	1199.12	.00	.00	1199.76	.65	.04
11000.0	.0	11000.0	.0	.0	1704.3	.0	44.6
.05	.00	6.45	.00	.000	.035	.000	.000
.000881	45.	45.	45.	2	0	0	.00

*SECNO 7334.000

3495 OVERBANK AREA ASSUMED NON-EFFECTIVE, ELLEA= 1200.90 ELREA= 1200.9

7334.000	12.87	1198.96	.00	.00	1199.84	.88	.01
11000.0	.0	11000.0	.0	.0	1460.9	.0	44.7
.05	.00	7.53	.00	.000	.035	.000	.000
.001389	5.	5.	5.	2	0	0	.00

*SECNO 7354.000

3301 HV CHANGED MORE THAN HVINS

3685 20 TRIALS ATTEMPTED WSEL,CWSEL
3693 PROBABLE MINIMUM SPECIFIC ENERGY
3720 CRITICAL DEPTH ASSUMED

14AUG97 11:40:35

SECNO	DEPTH	CWSEL	CRIWS	WSELK	EG	HV	HL
Q	QLOB	QCH	QROB	ALOB	ACH	AROB	VOL
TIME	VLOB	VCH	VROB	XNL	XNCH	XNR	WTN
SLOPE	XLOBL	XLCH	XLOBR	ITRIAL	IDC	ICONT	CORAR

3495 OVERBANK AREA ASSUMED NON-EFFECTIVE, ELLEA= 1200.80 ELREA= 1207.5

7354.000	7.09	1199.59	1199.59	.00	1202.74	3.15	.06
11000.0	.0	11000.0	.0	.0	772.8	.0	45.3
.05	.00	14.23	.00	.000	.035	.000	.000
.010148	20.	20.	20.	20	11	0	.00

*SECNO 7363.000
3685 20 TRIALS ATTEMPTED WSEL,CWSEL
3693 PROBABLE MINIMUM SPECIFIC ENERGY
3720 CRITICAL DEPTH ASSUMED

3495 OVERBANK AREA ASSUMED NON-EFFECTIVE, ELLEA= 1207.50 ELREA= 1207.5

7363.000	9.63	1202.13	1202.13	.00	1205.43	3.30	.10
11000.0	.0	11000.0	.0	.0	754.9	.0	45.4
.05	.00	14.57	.00	.000	.035	.000	.000
.010674	9.	9.	9.	20	11	0	.00

*SECNO 7500.000

3301 HV CHANGED MORE THAN HVINS

3685 20 TRIALS ATTEMPTED WSEL,CWSEL
3693 PROBABLE MINIMUM SPECIFIC ENERGY
3720 CRITICAL DEPTH ASSUMED

3495 OVERBANK AREA ASSUMED NON-EFFECTIVE, ELLEA= 1209.00 ELREA= 1209.0

7500.000	10.81	1204.81	1204.81	.00	1208.74	3.93	1.39
11000.0	.0	11000.0	.0	.0	691.3	.0	47.7
.05	.00	15.91	.00	.000	.035	.000	.000
.009680	136.	137.	135.	20	8	0	.00

*SECNO 7632.000

3301 HV CHANGED MORE THAN HVINS

14AUG97 11:40:35

SECNO	DEPTH	CWSEL	CRIWS	WSELK	EG	HV	HL
Q	QLOB	QCH	QROB	ALOB	ACH	AROB	VOL
TIME	VLOB	VCH	VROB	XNL	XNCH	XNR	WTN
SLOPE	XLOBL	XLCH	XLOBR	ITRIAL	IDC	ICONT	CORAR

3302 WARNING: CONVEYANCE CHANGE OUTSIDE OF ACCEPTABLE RANGE, KRATIO = 1.92

3495 OVERBANK AREA ASSUMED NON-EFFECTIVE, ELLEA= 1214.00 ELREA= 1211.0

7632.000	13.20	1208.20	.00	.00	1209.60	1.40	.60
11000.0	.0	11000.0	.0	.0	1159.9	.0	50.5
.06	.00	9.48	.00	.000	.035	.000	.000
.002624	132.	132.	132.	3	0	0	.00

*SECNO 7735.000

3495 OVERBANK AREA ASSUMED NON-EFFECTIVE, ELLEA= 1214.00 ELREA= 1211.0

7735.000	13.35	1208.35	.00	.00	1209.96	1.61	.30
11000.0	.0	11000.0	.0	.0	1080.5	.0	53.2
.06	.00	10.18	.00	.000	.035	.000	.000
.003242	103.	103.	104.	2	0	0	.00

*SECNO 7834.000

3495 OVERBANK AREA ASSUMED NON-EFFECTIVE, ELLEA= 1214.00 ELREA= 1212.0

7834.000	15.12	1209.12	.00	.00	1210.26	1.15	.25
11000.0	.0	11000.0	.0	.0	1280.5	.0	55.9
.06	.00	8.59	.00	.000	.035	.000	.000
.002084	97.	99.	101.	2	0	0	.00

*SECNO 7948.000
3280 CROSS SECTION 7948.00 EXTENDED .34 FEET

3495 OVERBANK AREA ASSUMED NON-EFFECTIVE, ELLEA= 1214.00 ELREA= 1213.0

7948.000	13.34	1209.34	.00	.00	1210.51	1.17	.24
11000.0	.0	11000.0	.0	.0	1268.5	.0	59.2
.07	.00	8.67	.00	.000	.035	.000	.000
.002225	136.	113.	92.	2	0	0	.00

14AUG97 11:40:35

SECNO	DEPTH	CWSEL	CRIWS	WSELK	EG	HV	HL
Q	QLOB	QCH	QROB	ALOB	ACH	AROB	VOL
TIME	VLOB	VCH	VROB	XNL	XNCH	XNR	WTN
SLOPE	XLOBL	XLCH	XLOBR	ITRIAL	IDC	ICONT	CORAR

*SECNO 8000.000

3495 OVERBANK AREA ASSUMED NON-EFFECTIVE, ELLEA= 1216.00 ELREA= 1214.0

8000.000	12.27	1209.27	.00	.00	1210.73	1.45	.13
11000.0	.0	11000.0	.0	.0	1137.5	.0	60.6
.07	.00	9.67	.00	.000	.035	.000	.000
.002786	52.	52.	52.	2	0	0	.00

*SECNO 8255.000

3301 HV CHANGED MORE THAN HVINS

3302 WARNING: CONVEYANCE CHANGE OUTSIDE OF ACCEPTABLE RANGE, KRATIO = .59

3495 OVERBANK AREA ASSUMED NON-EFFECTIVE, ELLEA= 1216.00 ELREA= 1215.0

8255.000	9.99	1208.99	.00	.00	1212.46	3.47	1.13
11000.0	.0	11000.0	.0	.0	735.6	.0	66.1
.07	.00	14.95	.00	.000	.035	.000	.000
.008120	255.	255.	255.	3	0	0	.00

*SECNO 8428.000
3280 CROSS SECTION 8428.00 EXTENDED .50 FEET

3301 HV CHANGED MORE THAN HVINS

3302 WARNING: CONVEYANCE CHANGE OUTSIDE OF ACCEPTABLE RANGE, KRATIO = 2.13

3495 OVERBANK AREA ASSUMED NON-EFFECTIVE, ELLEA= 1214.00 ELREA= 1213.0

8428.000	12.50	1212.50	.00	.00	1213.30	.81	.57
11000.0	.0	11000.0	.0	.0	1527.7	.0	70.6
.08	.00	7.20	.00	.000	.035	.000	.000
.001791	188.	173.	164.	3	0	0	.00

14AUG97 11:40:35

SECNO	DEPTH	CWSEL	CRIWS	WSELK	EG	HV	HL
Q	QLOB	QCH	QROB	ALOB	ACH	AROB	VOL
TIME	VLOB	VCH	VROB	XNL	XNCH	XNR	WTN
SLOPE	XLOBL	XLCH	XLOBR	ITRIAL	IDC	ICONT	CORAR

*SECNO 8500.000

3495 OVERBANK AREA ASSUMED NON-EFFECTIVE, ELLEA= 1213.00 ELREA= 1213.0

8500.000	11.89	1212.89	.00	.00	1213.44	.55	.11
11000.0	.0	11000.0	.0	.0	1844.4	.0	73.4
.08	.00	5.96	.00	.000	.035	.000	.000
.001327	72.	72.	72.	2	0	0	.00

*SECNO 8811.000

8811.000	11.28	1213.28	.00	.00	1213.83	.55	.39
11000.0	.0	10999.6	.4	.1	1840.3	1.0	86.5
.10	.01	5.98	.39	.035	.035	.035	.000
.001191	311.	311.	311.	2	0	0	.00

*SECNO 9000.000

3302 WARNING: CONVEYANCE CHANGE OUTSIDE OF ACCEPTABLE RANGE, KRATIO = .64

9000.000	10.28	1213.28	.00	.00	1214.31	1.02	.34
11000.0	.0	11000.0	.0	.0	1354.3	.0	93.5
.10	.00	8.12	.00	.000	.035	.000	.000
.002923	189.	189.	189.	2	0	0	.00

CCHV= .300 CEHV= .500
*SECNO 9295.000

3495 OVERBANK AREA ASSUMED NON-EFFECTIVE, ELLEA= 1219.00 ELREA= 1218.0

9295.000	10.17	1214.17	.00	.00	1215.16	.99	.85
11000.0	.0	11000.0	.0	.0	1377.3	.0	102.7
.11	.00	7.99	.00	.000	.035	.000	.000
.002812	295.	295.	295.	3	0	0	.00

14AUG97 11:40:35

SECNO	DEPTH	CWSEL	CRIWS	WSELK	EG	HV	HL
Q	QLOB	QCH	QROB	ALOB	ACH	AROB	VOL
TIME	VLOB	VCH	VROB	XNL	XNCH	XNR	WTN
SLOPE	XLOBL	XLCH	XLOBR	ITRIAL	IDC	ICONT	CORAR

SPECIAL BRIDGE

SB	XK	XKOR	COFQ	RDLEN	BWC	BWP	BAREA	SS
	1.05	1.60	2.60	435.00	171.00	12.00	2773.00	3.00

*SECNO 9405.000

3301 HV CHANGED MORE THAN HVINS

3302 WARNING: CONVEYANCE CHANGE OUTSIDE OF ACCEPTABLE RANGE, KRATIO = .66

CLASS A LOW FLOW

3420 BRIDGE W.S.= 1215.10 BRIDGE VELOCITY= 5.75 CALCULATED CHANNEL

EGPRS	EGLWC	H3	QWEIR	QLOW	BAREA	TRAPEZOID AREA	ELL
.00	1215.92	.18	0.	11000.	2773.	2602.	1219.

3495 OVERBANK AREA ASSUMED NON-EFFECTIVE, ELLEA= 1218.00 ELREA= 1219.0

9405.000	8.35	1214.35	.00	.00	1215.92	1.57	.76
11000.0	.0	11000.0	.0	.0	1093.1	.0	105.8
.12	.00	10.06	.00	.000	.035	.000	.000
.006360	110.	110.	110.	0	0	0	.00

*SECNO 9539.000

3301 HV CHANGED MORE THAN HVINS

3302 WARNING: CONVEYANCE CHANGE OUTSIDE OF ACCEPTABLE RANGE, KRATIO = 1.46

9539.000	9.65	1215.65	.00	.00	1216.66	1.00	.56
11000.0	.0	11000.0	.0	.0	1368.8	.0	109.6
.12	.00	8.04	.00	.000	.035	.000	.000
.002995	134.	134.	134.	3	0	0	.00

14AUG97 11:40:35

SECNO	DEPTH	CWSEL	CRIWS	WSELK	EG	HV	HL
Q	QLOB	QCH	QROB	ALOB	ACH	AROB	VOL
TIME	VLOB	VCH	VROB	XNL	XNCH	XNR	WTN
SLOPE	XLOBL	XLCH	XLOBR	ITRIAL	IDC	ICONT	CORAR

CCHV= .100 CEHV= .300

*SECNO 9725.000

9725.000	9.53	1216.53	.00	.00	1217.14	.61	.44
11000.0	.0	11000.0	.0	.0	1748.7	.0	116.3
.13	.00	6.29	.00	.000	.035	.000	.000
.001953	186.	186.	186.	0	0	0	.00

*SECNO 9960.000

3280 CROSS SECTION 9960.00 EXTENDED .14 FEET

3495 OVERBANK AREA ASSUMED NON-EFFECTIVE, ELLEA= 1218.00 ELREA= 1226.2

9960.000	6.14	1217.14	.00	.00	1217.61	.47	.46
11000.0	.0	11000.0	.0	.0	1994.8	.0	126.4
.14	.00	5.51	.00	.000	.035	.000	.000
.001936	2350.	235.	235.	3	0	0	.00

*SECNO 10025.000

3301 HV CHANGED MORE THAN HVINS

3302 WARNING: CONVEYANCE CHANGE OUTSIDE OF ACCEPTABLE RANGE, KRATIO = .52

10025.000	6.65	1216.65	.00	.00	1218.13	1.48	.22
11000.0	.0	11000.0	.0	.0	1126.1	.0	128.7
.14	.00	9.77	.00	.000	.035	.000	.000
.007149	65.	65.	65.	3	0	0	.00

*SECNO 10125.000

3495 OVERBANK AREA ASSUMED NON-EFFECTIVE, ELLEA= 1221.00 ELREA= 1221.0

10125.000	6.17	1217.17	.00	.00	1219.09	1.92	.83
11000.0	.0	11000.0	.0	.0	988.6	.0	131.1
.15	.00	11.13	.00	.000	.035	.000	.000
.009701	100.	100.	100.	2	0	0	.00

14AUG97 11:40:35

SECNO	DEPTH	CWSEL	CRIWS	WSELK	EG	HV	HL
Q	QLOB	QCH	QROB	ALOB	ACH	AROB	VOL
TIME	VLOB	VCH	VROB	XNL	XNCH	XNR	WTN
SLOPE	XLOBL	XLCH	XLOBR	ITRIAL	IDC	ICONT	CORAR

*SECNO 10500.000

3301 HV CHANGED MORE THAN HVINS

3302 WARNING: CONVEYANCE CHANGE OUTSIDE OF ACCEPTABLE RANGE, KRATIO = 1.87

3495 OVERBANK AREA ASSUMED NON-EFFECTIVE, ELLEA= 1223.00 ELREA= 1222.0

10500.000	8.23	1220.23	.00	.00	1220.97	.74	1.76
11000.0	.0	11000.0	.0	.0	1594.4	.0	142.2
.16	.00	6.90	.00	.000	.035	.000	.000
.002764	375.	375.	375.	2	0	0	.00

*SECNO 11000.000

11000.000	9.84	1221.84	.00	.00	1222.93	1.09	1.85
11000.0	220.3	10667.0	112.7	49.9	1257.7	23.0	159.0
.18	4.42	8.48	4.90	.035	.035	.035	.000
.005197	501.	500.	501.	3	0	0	.00

*SECNO 11238.000

3495 OVERBANK AREA ASSUMED NON-EFFECTIVE, ELLEA= 1223.00 ELREA= 1223.0

11238.000	6.98	1222.98	.00	.00	1224.54	1.56	1.47
11000.0	.0	11000.0	.0	.0	1097.4	.0	165.7
.18	.00	10.02	.00	.000	.035	.000	.000
.007398	239.	239.	239.	2	0	0	.00

*SECNO 11305.000

3301 HV CHANGED MORE THAN HVINS

3302 WARNING: CONVEYANCE CHANGE OUTSIDE OF ACCEPTABLE RANGE, KRATIO = 1.48

3495 OVERBANK AREA ASSUMED NON-EFFECTIVE, ELLEA= 1227.49 ELREA= 1223.0

14AUG97 11:40:35

SECNO	DEPTH	CWSEL	CRIWS	WSELK	EG	HV	HL
Q	QLOB	QCH	QROB	ALOB	ACH	AROB	VOL
TIME	VLOB	VCH	VROB	XNL	XNCH	XNR	WTN
SLOPE	XLOBL	XLCH	XLOBR	ITRIAL	IDC	ICONT	CORAR
11305.000	7.09	1224.09	.00	.00	1224.93	.85	.32
11000.0	.0	10987.7	12.3	.0	1486.0	7.2	167.7
.19	.00	7.39	1.72	.000	.035	.035	.000
.003394	6728.	67.	68.	4	0	0	.00

*SECNO 11500.000

3301 HV CHANGED MORE THAN HVINS

3302 WARNING: CONVEYANCE CHANGE OUTSIDE OF ACCEPTABLE RANGE, KRATIO = .65

3495 OVERBANK AREA ASSUMED NON-EFFECTIVE, ELLEA= 1225.00 ELREA= 1225.0

11500.000	6.50	1224.50	.00	.00	1226.15	1.64	.97
11000.0	.0	11000.0	.0	.0	1070.1	.0	173.4
.19	.00	10.28	.00	.000	.035	.000	.000
.007997	196.	196.	195.	3	0	0	.00

*SECNO 11628.000

3265 DIVIDED FLOW

11628.000	7.71	1225.71	.00	.00	1226.94	1.23	.76
11000.0	5.9	10972.7	21.4	4.1	1231.5	8.1	176.9
.20	1.43	8.91	2.63	.035	.035	.035	.000
.004488	160.	129.	122.	3	0	0	.00

*SECNO 11740.000

3495 OVERBANK AREA ASSUMED NON-EFFECTIVE, ELLEA= 1226.00 ELREA= 1229.0

11740.000	7.45	1226.45	.00	.00	1227.43	.98	.46
11000.0	.2	10999.8	.0	.2	1385.0	.0	180.3
.20	.90	7.94	.00	.035	.035	.000	.000
.003734	97.	112.	120.	2	0	0	.00

14AUG97 11:40:35

SECNO	DEPTH	CWSEL	CRIWS	WSELK	EG	HV	HL
Q	QLOB	QCH	QROB	ALOB	ACH	AROB	VOL
TIME	VLOB	VCH	VROB	XNL	XNCH	XNR	WTN
SLOPE	XLOBL	XLCH	XLOBR	ITRIAL	IDC	ICONT	CORAR

*SECNO 11840.000

3495 OVERBANK AREA ASSUMED NON-EFFECTIVE, ELLEA= 1227.00 ELREA= 1229.0

11840.000	7.94	1226.94	.00	.00	1227.77	.83	.33
11000.0	.0	11000.0	.0	.0	1508.8	.0	183.6
.20	.00	7.29	.00	.000	.035	.000	.000
.002892	64.	100.	113.	2	0	0	.00

*SECNO 12000.000

3495 OVERBANK AREA ASSUMED NON-EFFECTIVE, ELLEA= 1229.00 ELREA= 1230.0

12000.000	8.34	1227.34	.00	.00	1228.34	1.00	.52
11000.0	.0	11000.0	.0	.0	1369.8	.0	188.9
.21	.00	8.03	.00	.000	.035	.000	.000
.003641	160.	161.	160.	2	0	0	.00

*SECNO 12141.000

3495 OVERBANK AREA ASSUMED NON-EFFECTIVE, ELLEA= 1230.00 ELREA= 1232.7

12141.000	8.79	1227.79	.00	.00	1228.92	1.13	.54
11000.0	.0	11000.0	.0	.0	1289.1	.0	193.2
.21	.00	8.53	.00	.000	.035	.000	.000
.003996	121.	141.	151.	0	0	0	.00

*SECNO 12355.000

3495 OVERBANK AREA ASSUMED NON-EFFECTIVE, ELLEA= 1229.00 ELREA= 1231.0

12355.000	7.68	1228.68	.00	.00	1229.97	1.29	1.00
11000.0	.0	11000.0	.0	.0	1205.5	.0	200.2
.22	.00	9.12	.00	.000	.035	.000	.000
.004216	204.	244.	278.	2	0	0	.00

*SECNO 12500.000

14AUG97 11:40:35

SECNO	DEPTH	CWSEL	CRIWS	WSELK	EG	HV	HL
Q	QLOB	QCH	QROB	ALOB	ACH	AROB	VOL
TIME	VLOB	VCH	VROB	XNL	XNCH	XNR	WTN
SLOPE	XLOBL	XLCH	XLOBR	ITRIAL	IDC	ICONT	CORAR

3495 OVERBANK AREA ASSUMED NON-EFFECTIVE, ELLEA= 1230.00 ELREA= 1231.0

12500.000	7.49	1229.49	.00	.00	1230.54	1.05	.55
11000.0	.0	11000.0	.0	.0	1336.3	.0	204.4
.23	.00	8.23	.00	.000	.035	.000	.000
.003380	145.	145.	146.	2	0	0	.00

*SECNO 12776.000

3495 OVERBANK AREA ASSUMED NON-EFFECTIVE, ELLEA= 1230.00 ELREA= 1232.0

12776.000	9.47	1230.47	.00	.00	1231.42	.95	.87
11000.0	.3	10999.7	.0	.3	1406.5	.0	213.1
.24	.84	7.82	.00	.035	.035	.000	.000
.002932	276.	277.	277.	2	0	0	.00

*SECNO 12822.000

3495 OVERBANK AREA ASSUMED NON-EFFECTIVE, ELLEA= 1230.00 ELREA= 1232.0

12822.000	9.66	1230.66	.00	.00	1231.56	.89	.13
11000.0	.6	10999.4	.0	.6	1448.8	.0	214.7
.24	1.01	7.59	.00	.035	.035	.000	.000
.002669	46.	47.	47.	2	0	0	.00

*SECNO 12952.000

3301 HV CHANGED MORE THAN HVINS

3302 WARNING: CONVEYANCE CHANGE OUTSIDE OF ACCEPTABLE RANGE, KRATIO = .54

3495 OVERBANK AREA ASSUMED NON-EFFECTIVE, ELLEA= 1232.00 ELREA= 1233.0

12952.000	7.18	1230.18	.00	.00	1232.61	2.42	.59
11000.0	.0	11000.0	.0	.0	880.8	.0	218.2
.24	.00	12.49	.00	.000	.035	.000	.000
.009176	131.	131.	131.	3	0	0	.00

14AUG97 11:40:35

SECNO	DEPTH	CWSEL	CRIWS	WSELK	EG	HV	HL
Q	QLOB	QCH	QROB	ALOB	ACH	AROB	VOL
TIME	VLOB	VCH	VROB	XNL	XNCH	XNR	WTN
SLOPE	XLOBL	XLCH	XLOBR	ITRIAL	IDC	ICONT	CORAR

*SECNO 13050.000

3280 CROSS SECTION 13050.00 EXTENDED 2.20 FEET

3301 HV CHANGED MORE THAN HVINS

3302 WARNING: CONVEYANCE CHANGE OUTSIDE OF ACCEPTABLE RANGE, KRATIO = 1.68

13050.000	9.20	1232.20	.00	.00	1233.25	1.05	.50
11000.0	528.8	10441.6	29.6	180.8	1242.3	36.4	220.8
.24	2.92	8.40	.81	.035	.035	.035	.000
.003241	99.	99.	99.	4	0	0	.00

*SECNO 13131.000

3301 HV CHANGED MORE THAN HVINS

3685 20 TRIALS ATTEMPTED WSEL,CWSEL
3693 PROBABLE MINIMUM SPECIFIC ENERGY
3720 CRITICAL DEPTH ASSUMED

3495 OVERBANK AREA ASSUMED NON-EFFECTIVE, ELLEA= 1234.40 ELREA= 1242.1

13131.000	6.75	1231.75	1231.75	.00	1234.35	2.60	.44
11000.0	.0	11000.0	.0	.0	849.7	.0	223.0
.25	.00	12.95	.00	.000	.035	.000	.000
.010754	81.	82.	81.	20	14	0	.00

*SECNO 13206.000

3265 DIVIDED FLOW

3280 CROSS SECTION 13206.00 EXTENDED .84 FEET

13206.000	7.84	1232.84	.00	.00	1235.00	2.15	.60
11000.0	10.6	10989.4	.0	5.9	933.1	.0	224.5
.25	1.81	11.78	.00	.035	.035	.000	.000
.006196	75.	75.	75.	3	0	0	.00

14AUG97 11:40:35

SECNO	DEPTH	CWSEL	CRIWS	WSELK	EG	HV	HL
Q	QLOB	QCH	QROB	ALOB	ACH	AROB	VOL
TIME	VLOB	VCH	VROB	XNL	XNCH	XNR	WTN
SLOPE	XLOBL	XLCH	XLOBR	ITRIAL	IDC	ICONT	CORAR

*SECNO 13400.000

3265 DIVIDED FLOW

3280 CROSS SECTION 13400.00 EXTENDED 2.25 FEET

13400.000	9.25	1234.25	.00	.00	1236.06	1.80	1.03
11000.0	55.7	10944.1	.2	37.5	1012.7	.2	229.0
.25	1.49	10.81	.72	.035	.035	.035	.000
.004574	195.	194.	195.	2	0	0	.00

*SECNO 13500.000

13500.000	9.97	1234.97	.00	.00	1236.50	1.54	.42
11000.0	.0	11000.0	.0	.0	1105.0	.0	231.4
.26	.00	9.95	.00	.000	.035	.000	.000
.003866	100.	100.	100.	2	0	0	.00

*SECNO 14000.000

3265 DIVIDED FLOW

3280 CROSS SECTION 14000.00 EXTENDED .80 FEET

14000.000	10.80	1236.80	.00	.00	1238.55	1.75	1.99
11000.0	14.0	10986.0	.0	9.7	1033.6	.0	243.8
.27	1.44	10.63	.00	.035	.035	.000	.000
.004084	500.	500.	500.	3	0	0	.00

*SECNO 14500.000

3280 CROSS SECTION 14500.00 EXTENDED 1.43 FEET

3495 OVERBANK AREA ASSUMED NON-EFFECTIVE, ELLEA= 1239.00 ELREA= 1244.1

14500.000	10.92	1238.92	.00	.00	1240.46	1.54	1.88
11000.0	.0	11000.0	.0	.0	1105.2	.0	256.1
.28	.00	9.95	.00	.000	.035	.000	.000
.003480	500.	500.	501.	2	0	0	.00

14AUG97 11:40:35

SECNO	DEPTH	CWSEL	CRIWS	WSELK	EG	HV	HL
Q	QLOB	QCH	QROB	ALOB	ACH	AROB	VOL
TIME	VLOB	VCH	VROB	XNL	XNCH	XNR	WTN
SLOPE	XLOBL	XLCH	XLOBR	ITRIAL	IDC	ICONT	CORAR

*SECNO 14734.000

3280 CROSS SECTION 14734.00 EXTENDED 1.63 FEET

3301 HV CHANGED MORE THAN HVINS

3302 WARNING: CONVEYANCE CHANGE OUTSIDE OF ACCEPTABLE RANGE, KRATIO = 1.56

3495 OVERBANK AREA ASSUMED NON-EFFECTIVE, ELLEA= 1246.53 ELREA= 1245.1

14734.000	12.42	1240.42	.00	.00	1241.05	.63	.50
11000.0	.0	11000.0	.0	.0	1732.5	.0	263.7
.29	.00	6.35	.00	.000	.035	.000	.000
.001429	227.	234.	240.	2	0	0	.00

*SECNO 15000.000

3280 CROSS SECTION 15000.00 EXTENDED .62 FEET

3301 HV CHANGED MORE THAN HVINS

3302 WARNING: CONVEYANCE CHANGE OUTSIDE OF ACCEPTABLE RANGE, KRATIO = .58

3495 OVERBANK AREA ASSUMED NON-EFFECTIVE, ELLEA= 1241.54 ELREA= 1241.5

15000.000	9.61	1240.61	.00	.00	1241.83	1.22	.61
11000.0	.0	11000.0	.0	.0	1239.6	.0	272.8
.30	.00	8.87	.00	.000	.035	.000	.000
.004210	267.	266.	266.	2	0	0	.00

*SECNO 15185.000

3265 DIVIDED FLOW

3495 OVERBANK AREA ASSUMED NON-EFFECTIVE, ELLEA= 1241.00 ELREA= 1243.4

14AUG97 11:40:35

SECNO	DEPTH	CWSEL	CRIWS	WSELK	EG	HV	HL
Q	QLOB	QCH	QROB	ALOB	ACH	AROB	VOL
TIME	VLOB	VCH	VROB	XNL	XNCH	XNR	WTN
SLOPE	XLOBL	XLCH	XLOBR	ITRIAL	IDC	ICONT	CORAR
15185.000	10.55	1241.55	.00	.00	1242.50	.96	.64
11000.0	457.0	10543.0	.0	149.6	1320.3	.0	278.5
.31	3.06	7.99	.00	.035	.035	.000	.000
.002926	179.	185.	194.	2	0	0	.00

*SECNO 15500.000

3265 DIVIDED FLOW

3280 CROSS SECTION 15500.00 EXTENDED .45 FEET

15500.000	10.46	1242.46	.00	.00	1243.49	1.03	.96
11000.0	54.0	10906.5	39.5	32.5	1331.9	27.3	288.9
.32	1.66	8.19	1.45	.035	.035	.035	.000
.003176	315.	316.	316.	2	0	0	.00

*SECNO 15689.000

3301 HV CHANGED MORE THAN HVINS

3495 OVERBANK AREA ASSUMED NON-EFFECTIVE, ELLEA= 1243.00 ELREA= 1243.0

15689.000	9.81	1242.81	.00	.00	1244.47	1.66	.80
11000.0	.0	11000.0	.0	.0	1064.2	.0	294.3
.32	.00	10.34	.00	.000	.035	.000	.000
.005845	191.	189.	192.	2	0	0	.00

*SECNO 15837.000

3265 DIVIDED FLOW

3301 HV CHANGED MORE THAN HVINS

3495 OVERBANK AREA ASSUMED NON-EFFECTIVE, ELLEA= 1243.00 ELREA= 1245.0

15837.000	9.38	1243.38	1242.48	.00	1245.59	2.21	.95
11000.0	103.9	10896.1	.0	38.4	908.7	.0	297.7
.33	2.70	11.99	.00	.035	.035	.000	.000
.007138	151.	148.	128.	4	9	0	.00

14AUG97 11:40:35

SECNO	DEPTH	CWSEL	CRIWS	WSELK	EG	HV	HL
Q	QLOB	QCH	QROB	ALOB	ACH	AROB	VOL
TIME	VLOB	VCH	VROB	XNL	XNCH	XNR	WTN
SLOPE	XLOBL	XLCH	XLOBR	ITRIAL	IDC	ICONT	CORAR

*SECNO 16000.000

3495 OVERBANK AREA ASSUMED NON-EFFECTIVE, ELLEA= 1247.00 ELREA= 1252.2

16000.000	8.43	1244.43	.00	.00	1246.69	2.26	1.09
11000.0	.0	11000.0	.0	.0	911.5	.0	301.1
.33	.00	12.07	.00	.000	.035	.000	.000
.006216	163.	163.	164.	0	0	0	.00

*SECNO 16200.000

3301 HV CHANGED MORE THAN HVINS

7185 MINIMUM SPECIFIC ENERGY
3720 CRITICAL DEPTH ASSUMED

3495 OVERBANK AREA ASSUMED NON-EFFECTIVE, ELLEA= 1249.00 ELREA= 1248.0

16200.000	9.17	1245.17	1245.17	.00	1248.68	3.51	1.55
11000.0	.0	11000.0	.0	.0	732.1	.0	304.9
.33	.00	15.02	.00	.000	.035	.000	.000
.009866	208.	201.	200.	3	8	0	.00

*SECNO 16345.000
3280 CROSS SECTION 16345.00 EXTENDED .86 FEET

3301 HV CHANGED MORE THAN HVINS

3302 WARNING: CONVEYANCE CHANGE OUTSIDE OF ACCEPTABLE RANGE, KRATIO = 1.78

3495 OVERBANK AREA ASSUMED NON-EFFECTIVE, ELLEA= 1250.00 ELREA= 1249.0

16345.000	11.87	1248.87	.00	.00	1249.69	.82	.74
11000.0	.0	11000.0	.0	.0	1515.0	.0	308.7
.34	.00	7.26	.00	.000	.035	.000	.000
.003113	152.	145.	141.	4	0	0	.00

14AUG97 11:40:35

SECNO	DEPTH	CWSEL	CRIWS	WSELK	EG	HV	HL
Q	QLOB	QCH	QROB	ALOB	ACH	AROB	VOL
TIME	VLOB	VCH	VROB	XNL	XNCH	XNR	WTN
SLOPE	XLOBL	XLCH	XLOBR	ITRIAL	IDC	ICONT	CORAR

*SECNO 16368.000

3280 CROSS SECTION 16368.00 EXTENDED .18 FEET

16368.000	12.18	1249.18	.00	.00	1249.76	.58	.05
11000.0	9.2	10971.6	19.2	15.9	1788.3	33.1	309.6
.34	.58	6.14	.58	.035	.035	.035	.000
.001851	27.	23.	30.	2	0	0	.00

*SECNO 16500.000

3280 CROSS SECTION 16500.00 EXTENDED 5.68 FEET

3301 HV CHANGED MORE THAN HVINS

3302 WARNING: CONVEYANCE CHANGE OUTSIDE OF ACCEPTABLE RANGE, KRATIO = .65

3495 OVERBANK AREA ASSUMED NON-EFFECTIVE, ELLEA= 1248.00 ELREA= 1249.0

16500.000	10.68	1248.68	1246.99	.00	1250.49	1.81	.36
11000.0	935.8	10064.2	.0	265.5	895.3	.0	314.1
.34	3.53	11.24	.00	.035	.035	.000	.000
.004403	133.	132.	132.	6	13	0	.00

*SECNO 16900.000

3265 DIVIDED FLOW

3280 CROSS SECTION 16900.00 EXTENDED .89 FEET

3301 HV CHANGED MORE THAN HVINS

3302 WARNING: CONVEYANCE CHANGE OUTSIDE OF ACCEPTABLE RANGE, KRATIO = 1.48

16900.000	12.88	1250.88	.00	.00	1251.74	.86	1.15
11000.0	479.9	10434.0	86.1	174.5	1372.1	50.6	326.8
.36	2.75	7.60	1.70	.035	.035	.035	.000
.002018	400.	400.	400.	2	0	0	.00

14AUG97 11:40:35

SECNO	DEPTH	CWSEL	CRIWS	WSELK	EG	HV	HL
Q	QLOB	QCH	QROB	ALOB	ACH	AROB	VOL
TIME	VLOB	VCH	VROB	XNL	XNCH	XNR	WTN
SLOPE	XLOBL	XLCH	XLOBR	ITRIAL	IDC	ICONT	CORAR

*SECNO 17000.000

17000.000	12.08	1251.08	.00	.00	1251.93	.86	.20
11000.0	958.8	10041.2	.0	283.1	1303.1	.0	330.4
.36	3.39	7.71	.00	.035	.035	.000	.000
.001947	100.	100.	100.	2	0	0	.00

*SECNO 17500.000

3265 DIVIDED FLOW

3301 HV CHANGED MORE THAN HVINS

3302 WARNING: CONVEYANCE CHANGE OUTSIDE OF ACCEPTABLE RANGE, KRATIO = .61

17500.000	7.85	1251.85	.00	.00	1253.76	1.92	1.51
11000.0	95.6	10904.4	.0	38.7	977.2	.0	345.4
.38	2.47	11.16	.00	.035	.035	.000	.000
.005317	507.	500.	501.	2	0	0	.00

*SECNO 17850.000

3265 DIVIDED FLOW

3280 CROSS SECTION 17850.00 EXTENDED .79 FEET

17850.000	8.80	1253.80	1252.44	.00	1255.59	1.79	1.81
11000.0	309.2	10674.4	16.4	120.6	979.1	7.3	353.9
.38	2.56	10.90	2.25	.035	.035	.035	.000
.005054	350.	350.	350.	6	12	0	.00

CCHV= .300 CEHV= .500
*SECNO 18170.000

3301 HV CHANGED MORE THAN HVINS

3302 WARNING: CONVEYANCE CHANGE OUTSIDE OF ACCEPTABLE RANGE, KRATIO = 1.90

14AUG97 11:40:35

SECNO	DEPTH	CWSEL	CRIWS	WSELK	EG	HV	HL
Q	QLOB	QCH	QROB	ALOB	ACH	AROB	VOL
TIME	VLOB	VCH	VROB	XNL	XNCH	XNR	WTN
SLOPE	XLOBL	XLCH	XLOBR	ITRIAL	IDC	ICONT	CORAR

3495 OVERBANK AREA ASSUMED NON-EFFECTIVE, ELLEA= 1257.00 ELREA= 1261.0

18170.000	9.13	1256.13	.00	.00	1256.72	.59	.77
11000.0	.0	11000.0	.0	.0	1783.4	.0	364.5
.40	.00	6.17	.00	.000	.035	.000	.000
.001394	320.	320.	320.	2	0	0	.00

SPECIAL BRIDGE

SB	XK	XKOR	COFQ	RDLEN	BWC	BWP	BAREA	SS
	1.05	1.60	2.60	406.00	205.00	6.00	3624.00	2.50

*SECNO 18390.000
CLASS A LOW FLOW

3420 BRIDGE W.S.= 1256.60 BRIDGE VELOCITY= 5.45 CALCULATED CHANNEL

EGPRS	EGLWC	H3	QWEIR	QLOW	BAREA	TRAPEZOID AREA	ELL
.00	1256.76	.04	0.	11000.	3624.	3624.	1263.

3495 OVERBANK AREA ASSUMED NON-EFFECTIVE, ELLEA= 1262.00 ELREA= 1264.0

18390.000	8.16	1256.16	.00	.00	1256.76	.59	.04
11000.0	.0	11000.0	.0	.0	1777.4	.0	373.5
.41	.00	6.19	.00	.000	.035	.000	.000
.001573	227.	220.	221.	0	0	0	.00

*SECNO 18710.000

3265 DIVIDED FLOW

3280 CROSS SECTION 18710.00 EXTENDED 2.07 FEET

3301 HV CHANGED MORE THAN HVINS

3685 20 TRIALS ATTEMPTED WSEL,CWSEL
3693 PROBABLE MINIMUM SPECIFIC ENERGY

14AUG97 11:40:35

SECNO	DEPTH	CWSEL	CRIWS	WSELK	EG	HV	HL
Q	QLOB	QCH	QROB	ALOB	ACH	AROB	VOL
TIME	VLOB	VCH	VROB	XNL	XNCH	XNR	WTN
SLOPE	XLOBL	XLCH	XLOBR	ITRIAL	IDC	ICONT	CORAR

3720 CRITICAL DEPTH ASSUMED

18710.000	7.07	1257.07	1257.07	.00	1259.23	2.16	.93
11000.0	.0	10226.7	773.3	.0	841.0	153.2	383.7
.42	.00	12.16	5.05	.000	.035	.035	.000
.007143	320.	320.	320.	20	11	0	.00

CCHV= .100 CEHV= .300

*SECNO 19000.000

3495 OVERBANK AREA ASSUMED NON-EFFECTIVE, ELLEA= 1262.00 ELREA= 1264.4

19000.000	8.06	1259.06	.00	.00	1261.08	2.02	1.83
11000.0	.0	11000.0	.0	.0	964.2	.0	390.3
.42	.00	11.41	.00	.000	.035	.000	.000
.005580	290.	291.	291.	2	0	0	.00

*SECNO 19212.000

3495 OVERBANK AREA ASSUMED NON-EFFECTIVE, ELLEA= 1262.00 ELREA= 1264.4

19212.000	8.33	1260.33	.00	.00	1262.19	1.86	1.10
11000.0	.0	11000.0	.0	.0	1004.2	.0	395.1
.43	.00	10.95	.00	.000	.035	.000	.000
.004820	211.	212.	223.	2	0	0	.00

*SECNO 19426.000

3495 OVERBANK AREA ASSUMED NON-EFFECTIVE, ELLEA= 1262.00 ELREA= 1264.4

19426.000	8.38	1261.38	.00	.00	1263.20	1.82	1.01
11000.0	.0	11000.0	.0	.0	1015.3	.0	400.0
.43	.00	10.83	.00	.000	.035	.000	.000
.004625	214.	214.	222.	2	0	0	.00

*SECNO 19500.000

3495 OVERBANK AREA ASSUMED NON-EFFECTIVE, ELLEA= 1264.00 ELREA= 1264.4

19500.000	7.47	1261.47	.00	.00	1263.75	2.29	.41
11000.0	.0	11000.0	.0	.0	906.4	.0	401.6
.44	.00	12.14	.00	.000	.035	.000	.000
.006618	75.	75.	74.	2	0	0	.00

14AUG97 11:40:35

SECNO	DEPTH	CWSEL	CRIWS	WSELK	EG	HV	HL
Q	QLOB	QCH	QROB	ALOB	ACH	AROB	VOL
TIME	VLOB	VCH	VROB	XNL	XNCH	XNR	WTN
SLOPE	XLOBL	XLCH	XLOBR	ITRIAL	IDC	ICONT	CORAR

*SECNO 19782.000

3265 DIVIDED FLOW

3280 CROSS SECTION 19782.00 EXTENDED .72 FEET

3301 HV CHANGED MORE THAN HVINS

19782.000	8.72	1263.72	.00	.00	1265.17	1.45	1.33
11000.0	.0	10998.6	1.4	.0	1138.8	1.2	408.3
.44	.00	9.66	1.11	.000	.035	.035	.000
.003526	282.	282.	282.	3	0	0	.00

CCHV= .300 CEHV= .500
*SECNO 19950.000

3495 OVERBANK AREA ASSUMED NON-EFFECTIVE, ELLEA= 1268.00 ELREA= 1268.0

19950.000	9.51	1264.51	.00	.00	1265.77	1.25	.54
11000.0	.0	11000.0	.0	.0	1225.5	.0	412.8
.45	.00	8.98	.00	.000	.035	.000	.000
.002944	169.	168.	169.	2	0	0	.00

SPECIAL BRIDGE

SB	XK	XKOR	COFQ	RDLEN	BWC	BWP	BAREA	SS
	1.05	1.60	2.60	167.50	125.00	3.00	1951.60	1.80

*SECNO 20050.000
CLASS A LOW FLOW

3420 BRIDGE W.S.= 1264.95 BRIDGE VELOCITY= 8.37 CALCULATED CHANNEL

EGPRS	EGLWC	H3	QWEIR	QLOW	BAREA	TRAPEZOID AREA	ELL
.00	1265.86	.10	0.	11000.	1952.	1823.	1268.

3495 OVERBANK AREA ASSUMED NON-EFFECTIVE, ELLEA= 1269.00 ELREA= 1269.0

14AUG97 11:40:35

SECNO	DEPTH	CWSEL	CRIWS	WSELK	EG	HV	HL
Q	QLOB	QCH	QROB	ALOB	ACH	AROB	VOL
TIME	VLOB	VCH	VROB	XNL	XNCH	XNR	WTN
SLOPE	XLOBL	XLCH	XLOBR	ITRIAL	IDC	ICONT	CORAR
20050.000	8.61	1264.61	.00	.00	1265.86	1.24	.09
11000.0	.0	11000.0	.0	.0	1229.2	.0	415.7
.45	.00	8.95	.00	.000	.035	.000	.000
.002961	102.	101.	104.	0	0	0	.00

*SECNO 20220.000

3301 HV CHANGED MORE THAN HVINS

3302 WARNING: CONVEYANCE CHANGE OUTSIDE OF ACCEPTABLE RANGE, KRATIO = 1.89

20220.000	9.93	1265.93	.00	.00	1266.34	.41	.24
11000.0	.0	11000.0	.0	.0	2133.2	.0	422.2
.46	.00	5.16	.00	.000	.035	.000	.000
.000825	170.	170.	170.	2	0	0	.00

CCHV= .100 CEHV= .300
*SECNO 20235.000

20235.000	9.95	1265.95	.00	.00	1266.36	.40	.01
11000.0	.0	11000.0	.0	.0	2156.2	.0	423.0
.46	.00	5.10	.00	.000	.035	.000	.000
.000877	15.	15.	15.	0	0	0	.00

*SECNO 20300.000

3265 DIVIDED FLOW

3280 CROSS SECTION 20300.00 EXTENDED 1.05 FEET

20300.000	10.05	1266.05	.00	.00	1266.42	.36	.05
11000.0	.0	10922.6	77.4	.0	2247.0	75.6	426.3
.47	.00	4.86	1.02	.000	.035	.035	.000
.000805	65.	65.	65.	2	0	0	.00

*SECNO 20500.000
3280 CROSS SECTION 20500.00 EXTENDED 1.22 FEET

14AUG97 11:40:35

SECNO	DEPTH	CWSEL	CRIWS	WSELK	EG	HV	HL
Q	QLOB	QCH	QROB	ALOB	ACH	AROB	VOL
TIME	VLOB	VCH	VROB	XNL	XNCH	XNR	WTN
SLOPE	XLOBL	XLCH	XLOBR	ITRIAL	IDC	ICONT	CORAR

3495 OVERBANK AREA ASSUMED NON-EFFECTIVE, ELLEA= 1269.00 ELREA= 1268.0

20500.000	9.21	1266.21	.00	.00	1266.60	.39	.17
11000.0	.0	11000.0	.0	.0	2194.9	.0	436.7
.48	.00	5.01	.00	.000	.035	.000	.000
.000943	201.	200.	201.	1	0	0	.00

*SECNO 20682.000
3280 CROSS SECTION 20682.00 EXTENDED 1.40 FEET

3495 OVERBANK AREA ASSUMED NON-EFFECTIVE, ELLEA= 1269.00 ELREA= 1268.0

20682.000	9.40	1266.40	.00	.00	1266.78	.38	.18
11000.0	.0	11000.0	.0	.0	2224.5	.0	445.9
.49	.00	4.94	.00	.000	.035	.000	.000
.001024	185.	182.	182.	2	0	0	.00

*SECNO 20883.000
3280 CROSS SECTION 20883.00 EXTENDED 1.53 FEET

3495 OVERBANK AREA ASSUMED NON-EFFECTIVE, ELLEA= 1270.00 ELREA= 1268.0

20883.000	8.53	1266.53	.00	.00	1267.09	.56	.26
11000.0	.0	11000.0	.0	.0	1824.7	.0	455.3
.50	.00	6.03	.00	.000	.035	.000	.000
.001643	212.	201.	204.	2	0	0	.00

*SECNO 21000.000
3280 CROSS SECTION 21000.00 EXTENDED .54 FEET

3495 OVERBANK AREA ASSUMED NON-EFFECTIVE, ELLEA= 1271.00 ELREA= 1269.0

21000.000	8.54	1266.54	.00	.00	1267.47	.93	.27
11000.0	.0	11000.0	.0	.0	1421.2	.0	459.7
.50	.00	7.74	.00	.000	.035	.000	.000
.003328	117.	117.	118.	2	0	0	.00

14AUG97 11:40:35

SECNO	DEPTH	CWSEL	CRIWS	WSELK	EG	HV	HL
Q	QLOB	QCH	QROB	ALOB	ACH	AROB	VOL
TIME	VLOB	VCH	VROB	XNL	XNCH	XNR	WTN
SLOPE	XLOBL	XLCH	XLOBR	ITRIAL	IDC	ICONT	CORAR

*SECNO 21330.000

3280 CROSS SECTION 21330.00 EXTENDED .71 FEET

3495 OVERBANK AREA ASSUMED NON-EFFECTIVE, ELLEA= 1267.00 ELREA= 1270.0

21330.000	7.71	1267.71	.00	.00	1268.84	1.14	1.31
11000.0	3.8	10996.2	.0	2.6	1285.6	.0	470.0
.51	1.47	8.55	.00	.035	.035	.000	.000
.004824	330.	331.	331.	2	0	0	.00

*SECNO 21395.000

3280 CROSS SECTION 21395.00 EXTENDED 1.97 FEET

3495 OVERBANK AREA ASSUMED NON-EFFECTIVE, ELLEA= 1274.00 ELREA= 1270.0

21395.000	7.96	1267.96	.00	.00	1269.21	1.25	.33
11000.0	.0	11000.0	.0	.0	1225.3	.0	471.8
.51	.00	8.98	.00	.000	.035	.000	.000
.005370	66.	65.	65.	1	0	0	.00

*SECNO 21565.000

3301 HV CHANGED MORE THAN HVINS

21565.000	8.29	1269.29	.00	.00	1269.94	.65	.67
11000.0	.0	11000.0	.0	.0	1697.3	.0	477.5
.52	.00	6.48	.00	.000	.035	.000	.000
.003028	170.	170.	170.	2	0	0	.00

*SECNO 21700.000

3301 HV CHANGED MORE THAN HVINS

3302 WARNING: CONVEYANCE CHANGE OUTSIDE OF ACCEPTABLE RANGE, KRATIO = .61

21700.000	7.16	1269.16	.00	.00	1270.90	1.75	.63
11000.0	.0	11000.0	.0	.0	1037.5	.0	481.8
.52	.00	10.60	.00	.000	.035	.000	.000
.008165	135.	135.	135.	3	0	0	.00

14AUG97 11:40:35

SECNO	DEPTH	CWSEL	CRIWS	WSELK	EG	HV	HL
Q	QLOB	QCH	QROB	ALOB	ACH	AROB	VOL
TIME	VLOB	VCH	VROB	XNL	XNCH	XNR	WTN
SLOPE	XLOBL	XLCH	XLOBR	ITRIAL	IDC	ICONT	CORAR

*SECNO 22000.000

3301 HV CHANGED MORE THAN HVINS

3302 WARNING: CONVEYANCE CHANGE OUTSIDE OF ACCEPTABLE RANGE, KRATIO = 1.59

3495 OVERBANK AREA ASSUMED NON-EFFECTIVE, ELLEA= 1277.00 ELREA= 1275.0

22000.000	6.60	1271.60	.00	.00	1272.45	.85	1.46
11000.0	.0	11000.0	.0	.0	1488.4	.0	490.5
.54	.00	7.39	.00	.000	.035	.000	.000
.003217	301.	300.	301.	2	0	0	.00

*SECNO 22062.000

3495 OVERBANK AREA ASSUMED NON-EFFECTIVE, ELLEA= 1277.00 ELREA= 1275.0

22062.000	6.94	1271.94	.00	.00	1272.64	.70	.18
11000.0	.0	11000.0	.0	.0	1633.9	.0	492.7
.54	.00	6.73	.00	.000	.035	.000	.000
.002555	102.	62.	37.	2	0	0	.00

*SECNO 22152.000

3495 OVERBANK AREA ASSUMED NON-EFFECTIVE, ELLEA= 1278.00 ELREA= 1276.0

22152.000	6.13	1272.13	.00	.00	1272.92	.79	.25
11000.0	.0	11000.0	.0	.0	1542.1	.0	496.0
.54	.00	7.13	.00	.000	.035	.000	.000
.003068	91.	90.	92.	2	0	0	.00

*SECNO 22200.000

3495 OVERBANK AREA ASSUMED NON-EFFECTIVE, ELLEA= 1277.00 ELREA= 1276.0

22200.000	6.20	1272.20	.00	.00	1273.13	.93	.17
11000.0	.0	11000.0	.0	.0	1422.0	.0	497.6
.54	.00	7.74	.00	.000	.035	.000	.000
.003855	49.	48.	48.	2	0	0	.00

14AUG97 11:40:35

SECNO	DEPTH	CWSEL	CRIWS	WSELK	EG	HV	HL
Q	QLOB	QCH	QROB	ALOB	ACH	AROB	VOL
TIME	VLOB	VCH	VROB	XNL	XNCH	XNR	WTN
SLOPE	XLOBL	XLCH	XLOBR	ITRIAL	IDC	ICONT	CORAR

*SECNO 22347.000

3495 OVERBANK AREA ASSUMED NON-EFFECTIVE, ELLEA= 1278.00 ELREA= 1277.7

22347.000	5.68	1272.68	.00	.00	1273.87	1.19	.67
11000.0	.0	11000.0	.0	.0	1256.9	.0	502.1
.55	.00	8.75	.00	.000	.035	.000	.000
.005455	185.	147.	124.	2	0	0	.00

*SECNO 22445.000

3301 HV CHANGED MORE THAN HVINS

3685 20 TRIALS ATTEMPTED WSEL,CWSEL
3693 PROBABLE MINIMUM SPECIFIC ENERGY
3720 CRITICAL DEPTH ASSUMED

3495 OVERBANK AREA ASSUMED NON-EFFECTIVE, ELLEA= 1276.00 ELREA= 1276.0

22445.000	10.26	1274.26	1274.26	.00	1277.24	2.98	.73
11000.0	.0	11000.0	.0	.0	794.5	.0	504.5
.55	.00	13.84	.00	.000	.035	.000	.000
.010749	140.	98.	88.	20	17	0	.00

*SECNO 22500.000

3265 DIVIDED FLOW

3280 CROSS SECTION 22500.00 EXTENDED .11 FEET

3301 HV CHANGED MORE THAN HVINS

3685 20 TRIALS ATTEMPTED WSEL,CWSEL
3693 PROBABLE MINIMUM SPECIFIC ENERGY
3720 CRITICAL DEPTH ASSUMED

22500.000	8.11	1276.11	1276.11	.00	1278.10	1.99	.63
11000.0	.1	10999.5	.4	.1	971.9	.7	505.6
.55	.66	11.32	.61	.035	.035	.035	.000
.012037	55.	55.	55.	20	15	0	.00

14AUG97 11:40:35

SECNO	DEPTH	CWSEL	CRIWS	WSELK	EG	HV	HL
Q	QLOB	QCH	QROB	ALOB	ACH	AROB	VOL
TIME	VLOB	VCH	VROB	XNL	XNCH	XNR	WTN
SLOPE	XLOBL	XLCH	XLOBR	ITRIAL	IDC	ICONT	CORAR

*SECNO 22625.000

3280 CROSS SECTION 22625.00 EXTENDED 1.08 FEET

3301 HV CHANGED MORE THAN HVINS

3302 WARNING: CONVEYANCE CHANGE OUTSIDE OF ACCEPTABLE RANGE, KRATIO = 1.85

3495 OVERBANK AREA ASSUMED NON-EFFECTIVE, ELLEA= 1279.00 ELREA= 1278.0

22625.000	8.08	1278.08	.00	.00	1278.95	.87	.74
11000.0	.0	10932.2	67.8	.0	1458.4	29.4	509.1
.56	.00	7.50	2.31	.000	.035	.035	.000
.003503	126.	125.	126.	2	0	0	.00

*SECNO 22877.000

3301 HV CHANGED MORE THAN HVINS

3495 OVERBANK AREA ASSUMED NON-EFFECTIVE, ELLEA= 1279.00 ELREA= 1283.0

22877.000	10.55	1278.55	.00	.00	1279.97	1.42	.86
8400.0	.0	8400.0	.0	.0	879.7	.0	516.0
.56	.00	9.55	.00	.000	.035	.000	.000
.003283	253.	252.	252.	3	0	0	.00

*SECNO 23000.000

3495 OVERBANK AREA ASSUMED NON-EFFECTIVE, ELLEA= 1280.00 ELREA= 1282.0

23000.000	9.85	1278.85	.00	.00	1280.46	1.61	.43
8400.0	.0	8400.0	.0	.0	824.8	.0	518.4
.57	.00	10.18	.00	.000	.035	.000	.000
.003770	124.	124.	124.	2	0	0	.00

*SECNO 23114.000

14AUG97 11:40:35

SECNO	DEPTH	CWSEL	CRIWS	WSELK	EG	HV	HL
Q	QLOB	QCH	QROB	ALOB	ACH	AROB	VOL
TIME	VLOB	VCH	VROB	XNL	XNCH	XNR	WTN
SLOPE	XLOBL	XLCH	XLOBR	ITRIAL	IDC	ICONT	CORAR

3280 CROSS SECTION 23114.00 EXTENDED .27 FEET

3301 HV CHANGED MORE THAN HVINS

3302 WARNING: CONVEYANCE CHANGE OUTSIDE OF ACCEPTABLE RANGE, KRATIO = 1.71

3495 OVERBANK AREA ASSUMED NON-EFFECTIVE, ELLEA= 1283.00 ELREA= 1282.0

23114.000	11.26	1280.26	.00	.00	1280.80	.54	.23
8400.0	.0	8400.0	.0	.0	1417.9	.0	521.3
.57	.00	5.92	.00	.000	.035	.000	.000
.001287	120.	114.	111.	2	0	0	.00

*SECNO 23319.000

3265 DIVIDED FLOW

3280 CROSS SECTION 23319.00 EXTENDED .27 FEET

3301 HV CHANGED MORE THAN HVINS

3495 OVERBANK AREA ASSUMED NON-EFFECTIVE, ELLEA= 1280.00 ELREA= 1283.0

23319.000	9.27	1280.27	.00	.00	1281.32	1.05	.36
8400.0	3.9	8396.1	.0	6.9	1022.0	.0	527.1
.58	.57	8.22	.00	.035	.035	.000	.000
.002590	204.	205.	211.	2	0	0	.00

*SECNO 23500.000

3495 OVERBANK AREA ASSUMED NON-EFFECTIVE, ELLEA= 1282.00 ELREA= 1283.0

23500.000	8.65	1280.65	.00	.00	1281.90	1.25	.52
8400.0	.0	8400.0	.0	.0	937.1	.0	531.2
.59	.00	8.96	.00	.000	.035	.000	.000
.003166	182.	182.	182.	2	0	0	.00

14AUG97 11:40:35

SECNO	DEPTH	CWSEL	CRIWS	WSELK	EG	HV	HL
Q	QLOB	QCH	QROB	ALOB	ACH	AROB	VOL
TIME	VLOB	VCH	VROB	XNL	XNCH	XNR	WTN
SLOPE	XLOBL	XLCH	XLOBR	ITRIAL	IDC	ICONT	CORAR

*SECNO 23575.000
3280 CROSS SECTION 23575.00 EXTENDED 1.43 FEET

3301 HV CHANGED MORE THAN HVINS

3495 OVERBANK AREA ASSUMED NON-EFFECTIVE, ELLEA= 1282.00 ELREA= 1282.0

23575.000	9.43	1281.43	.00	.00	1282.17	.74	.22
8400.0	.0	8400.0	.0	.0	1217.3	.0	533.0
.59	.00	6.90	.00	.000	.035	.000	.000
.002752	75.	75.	76.	3	0	0	.00

*SECNO 23645.000
3280 CROSS SECTION 23645.00 EXTENDED 2.50 FEET

3301 HV CHANGED MORE THAN HVINS

3685 20 TRIALS ATTEMPTED WSEL,CWSEL
3693 PROBABLE MINIMUM SPECIFIC ENERGY
3720 CRITICAL DEPTH ASSUMED

3495 OVERBANK AREA ASSUMED NON-EFFECTIVE, ELLEA= 1282.00 ELREA= 1285.0

23645.000	11.50	1283.50	1283.50	.00	1285.18	1.68	.27
8400.0	1898.9	6501.1	.0	365.5	566.4	.0	534.8
.59	5.20	11.48	.00	.035	.035	.000	.000
.005994	70.	70.	70.	20	16	0	.00

*SECNO 24000.000

3301 HV CHANGED MORE THAN HVINS

3302 WARNING: CONVEYANCE CHANGE OUTSIDE OF ACCEPTABLE RANGE, KRATIO = 2.71

3495 OVERBANK AREA ASSUMED NON-EFFECTIVE, ELLEA= 1286.00 ELREA= 1286.0

14AUG97 11:40:35

SECNO	DEPTH	CWSEL	CRIWS	WSELK	EG	HV	HL
Q	QLOB	QCH	QROB	ALOB	ACH	AROB	VOL
TIME	VLOB	VCH	VROB	XNL	XNCH	XNR	WTN
SLOPE	XLOBL	XLCH	XLOBR	ITRIAL	IDC	ICONT	CORAR
24000.000	11.54	1285.54	.00	.00	1285.93	.39	.62
8400.0	.0	8400.0	.0	.0	1678.4	.0	545.4
.61	.00	5.00	.00	.000	.035	.000	.000
.000816	356.	356.	355.	2	0	0	.00

*SECNO 24112.000

3495 OVERBANK AREA ASSUMED NON-EFFECTIVE, ELLEA= 1285.00 ELREA= 1286.0

24112.000	11.86	1285.86	.00	.00	1286.03	.17	.08
8400.0	1.6	8398.4	.0	2.6	2506.5	.0	550.9
.62	.61	3.35	.00	.035	.035	.000	.000
.000655	109.	113.	132.	2	0	0	.00

*SECNO 24263.000

3265 DIVIDED FLOW

3302 WARNING: CONVEYANCE CHANGE OUTSIDE OF ACCEPTABLE RANGE, KRATIO = .63

3495 OVERBANK AREA ASSUMED NON-EFFECTIVE, ELLEA= 1286.00 ELREA= 1287.0

24263.000	8.88	1285.88	.00	.00	1286.23	.36	.15
8400.0	.0	8400.0	.0	.0	1755.7	.0	558.2
.63	.00	4.78	.00	.000	.035	.000	.000
.001651	140.	151.	162.	2	0	0	.00

*SECNO 24365.000

3495 OVERBANK AREA ASSUMED NON-EFFECTIVE, ELLEA= 1294.50 ELREA= 1287.0

24365.000	8.88	1285.88	.00	.00	1286.46	.59	.16
8400.0	.0	8400.0	.0	.0	1366.7	.0	561.9
.63	.00	6.15	.00	.000	.035	.000	.000
.001518	102.	102.	103.	2	0	0	.00

14AUG97 11:40:35

SECNO	DEPTH	CWSEL	CRIWS	WSELK	EG	HV	HL
Q	QLOB	QCH	QROB	ALOB	ACH	AROB	VOL
TIME	VLOB	VCH	VROB	XNL	XNCH	XNR	WTN
SLOPE	XLOBL	XLCH	XLOBR	ITRIAL	IDC	ICONT	CORAR

*SECNO 24442.000

3495 OVERBANK AREA ASSUMED NON-EFFECTIVE, ELLEA= 1288.89 ELREA= 1286.0

24442.000	8.88	1285.88	.00	.00	1286.65	.77	.13
8400.0	.0	8400.0	.0	.0	1191.8	.0	564.2
.64	.00	7.05	.00	.000	.035	.000	.000
.002037	93.	77.	59.	2	0	0	.00

*SECNO 24455.000

3495 OVERBANK AREA ASSUMED NON-EFFECTIVE, ELLEA= 1286.00 ELREA= 1286.0

24455.000	10.88	1285.88	.00	.00	1286.69	.82	.03
8400.0	.0	8400.0	.0	.0	1158.6	.0	564.5
.64	.00	7.25	.00	.000	.035	.000	.000
.002216	14.	13.	16.	2	0	0	.00

*SECNO 24500.000

3495 OVERBANK AREA ASSUMED NON-EFFECTIVE, ELLEA= 1288.90 ELREA= 1286.0

24500.000	8.87	1285.87	.00	.00	1286.87	.99	.12
8400.0	.0	8400.0	.0	.0	1051.0	.0	565.7
.64	.00	7.99	.00	.000	.035	.000	.000
.003110	45.	46.	45.	2	0	0	.00

*SECNO 24592.000

3301 HV CHANGED MORE THAN HVINS

3302 WARNING: CONVEYANCE CHANGE OUTSIDE OF ACCEPTABLE RANGE, KRATIO = 1.51

3495 OVERBANK AREA ASSUMED NON-EFFECTIVE, ELLEA= 1295.70 ELREA= 1288.0

24592.000	9.70	1286.70	.00	.00	1287.11	.41	.18
8400.0	.0	8400.0	.0	.0	1634.9	.0	568.5
.64	.00	5.14	.00	.000	.035	.000	.000
.001355	99.	92.	84.	2	0	0	.00

14AUG97 11:40:35

SECNO	DEPTH	CWSEL	CRIWS	WSELK	EG	HV	HL
Q	QLOB	QCH	QROB	ALOB	ACH	AROB	VOL
TIME	VLOB	VCH	VROB	XNL	XNCH	XNR	WTN
SLOPE	XLOBL	XLCH	XLOBR	ITRIAL	IDC	ICONT	CORAR

*SECNO 24698.000

3302 WARNING: CONVEYANCE CHANGE OUTSIDE OF ACCEPTABLE RANGE, KRATIO = 1.94

3495 OVERBANK AREA ASSUMED NON-EFFECTIVE, ELLEA= 1290.00 ELREA= 1288.0

24698.000	10.01	1287.01	.00	.00	1287.20	.19	.07
8400.0	.0	8400.0	.0	.0	2425.8	.0	573.4
.65	.00	3.46	.00	.000	.035	.000	.000
.000361	105.	106.	154.	2	0	0	.00

*SECNO 24787.000

3302 WARNING: CONVEYANCE CHANGE OUTSIDE OF ACCEPTABLE RANGE, KRATIO = 1.41

3495 OVERBANK AREA ASSUMED NON-EFFECTIVE, ELLEA= 1289.00 ELREA= 1289.0

24787.000	10.13	1287.13	.00	.00	1287.23	.10	.02
8400.0	.0	8400.0	.0	.0	3329.4	.0	579.3
.66	.00	2.52	.00	.000	.035	.000	.000
.000181	86.	89.	115.	2	0	0	.00

*SECNO 24894.000

3495 OVERBANK AREA ASSUMED NON-EFFECTIVE, ELLEA= 1288.00 ELREA= 1292.0

24894.000	11.17	1287.17	.00	.00	1287.25	.08	.02
8400.0	.0	8400.0	.0	.0	3813.8	.0	588.1
.67	.00	2.20	.00	.000	.035	.000	.000
.000141	103.	107.	143.	1	0	0	.00

*SECNO 25000.000

3495 OVERBANK AREA ASSUMED NON-EFFECTIVE, ELLEA= 1289.00 ELREA= 1294.0

25000.000	9.17	1287.17	.00	.00	1287.27	.11	.02
8400.0	.0	8400.0	.0	.0	3183.7	.0	596.7
.69	.00	2.64	.00	.000	.035	.000	.000
.000228	106.	107.	107.	2	0	0	.00

14AUG97 11:40:35

SECNO	DEPTH	CWSEL	CRIWS	WSELK	EG	HV	HL
Q	QLOB	QCH	QROB	ALOB	ACH	AROB	VOL
TIME	VLOB	VCH	VROB	XNL	XNCH	XNR	WTN
SLOPE	XLOBL	XLCH	XLOBR	ITRIAL	IDC	ICONT	CORAR

*SECNO 25082.000

3495 OVERBANK AREA ASSUMED NON-EFFECTIVE, ELLEA= 1288.97 ELREA= 1288.0

25082.000	9.17	1287.17	.00	.00	1287.30	.13	.02
8400.0	.0	8400.0	.0	.0	2850.8	.0	602.4
.69	.00	2.95	.00	.000	.035	.000	.000
.000333	71.	82.	117.	1	0	0	.00

*SECNO 25171.000

3495 OVERBANK AREA ASSUMED NON-EFFECTIVE, ELLEA= 1289.00 ELREA= 1289.0

25171.000	9.19	1287.19	.00	.00	1287.34	.15	.03
8400.0	.0	8400.0	.0	.0	2709.9	.0	608.0
.70	.00	3.10	.00	.000	.035	.000	.000
.000401	94.	89.	93.	0	0	0	.00

*SECNO 25268.000

3495 OVERBANK AREA ASSUMED NON-EFFECTIVE, ELLEA= 1289.00 ELREA= 1291.0

25268.000	9.23	1287.23	.00	.00	1287.38	.15	.04
8400.0	.0	8400.0	.0	.0	2684.2	.0	614.0
.71	.00	3.13	.00	.000	.035	.000	.000
.000379	101.	97.	106.	0	0	0	.00

*SECNO 25380.000

3302 WARNING: CONVEYANCE CHANGE OUTSIDE OF ACCEPTABLE RANGE, KRATIO = .57

3495 OVERBANK AREA ASSUMED NON-EFFECTIVE, ELLEA= 1293.10 ELREA= 1291.0

25380.000	7.14	1287.14	.00	.00	1287.52	.38	.07
8400.0	.0	8400.0	.0	.0	1706.9	.0	619.7
.72	.00	4.92	.00	.000	.035	.000	.000
.001178	91.	112.	183.	2	0	0	.00

14AUG97 11:40:35

SECNO	DEPTH	CWSEL	CRIWS	WSELK	EG	HV	HL
Q	QLOB	QCH	QROB	ALOB	ACH	AROB	VOL
TIME	VLOB	VCH	VROB	XNL	XNCH	XNR	WTN
SLOPE	XLOBL	XLCH	XLOBR	ITRIAL	IDC	ICONT	CORAR

*SECNO 25500.000

3301 HV CHANGED MORE THAN HVINS

3685 20 TRIALS ATTEMPTED WSEL,CWSEL
3693 PROBABLE MINIMUM SPECIFIC ENERGY
3720 CRITICAL DEPTH ASSUMED

3495 OVERBANK AREA ASSUMED NON-EFFECTIVE, ELLEA= 1292.00 ELREA= 1293.0

25500.000	5.81	1286.81	1286.81	.00	1289.04	2.23	.33
8400.0	.0	8400.0	.0	.0	701.0	.0	623.0
.72	.00	11.98	.00	.000	.035	.000	.000
.011337	120.	121.	120.	20	15	0	.00

*SECNO 25600.000

3301 HV CHANGED MORE THAN HVINS

3302 WARNING: CONVEYANCE CHANGE OUTSIDE OF ACCEPTABLE RANGE, KRATIO = 1.63

25600.000	7.56	1288.56	.00	.00	1289.79	1.23	.65
8400.0	.0	8400.0	.0	.0	944.2	.0	624.9
.72	.00	8.90	.00	.000	.035	.000	.000
.004248	100.	100.	100.	3	0	0	.00

*SECNO 25870.000

3301 HV CHANGED MORE THAN HVINS

25870.000	5.64	1289.64	.00	.00	1291.52	1.88	1.53
8400.0	.0	8400.0	.0	.0	763.2	.0	630.2
.73	.00	11.01	.00	.000	.035	.000	.000
.007979	270.	270.	270.	3	0	0	.00

*SECNO 26000.000

3301 HV CHANGED MORE THAN HVINS

14AUG97 11:40:35

SECNO	DEPTH	CWSEL	CRIWS	WSELK	EG	HV	HL
Q	QLOB	QCH	QROB	ALOB	ACH	AROB	VOL
TIME	VLOB	VCH	VROB	XNL	XNCH	XNR	WTN
SLOPE	XLOBL	XLCH	XLOBR	ITRIAL	IDC	ICONT	CORAR

7185 MINIMUM SPECIFIC ENERGY
3720 CRITICAL DEPTH ASSUMED

3495 OVERBANK AREA ASSUMED NON-EFFECTIVE, ELLEA= 1301.00 ELREA= 1301.0

26000.000	5.52	1290.52	1290.52	.00	1292.99	2.47	1.20
8400.0	.0	8400.0	.0	.0	666.0	.0	632.3
.73	.00	12.61	.00	.000	.035	.000	.000
.010769	130.	130.	130.	2	8	0	.00

CCHV= .300 CEHV= .500
*SECNO 26020.000

3301 HV CHANGED MORE THAN HVINS

3302 WARNING: CONVEYANCE CHANGE OUTSIDE OF ACCEPTABLE RANGE, KRATIO = 1.50

3685 20 TRIALS ATTEMPTED WSEL,CWSEL

3495 OVERBANK AREA ASSUMED NON-EFFECTIVE, ELLEA= 1301.00 ELREA= 1301.0

26020.000	6.98	1291.98	1290.51	.00	1293.43	1.45	.14
8400.0	.0	8400.0	.0	.0	868.7	.0	632.7
.73	.00	9.67	.00	.000	.035	.000	.000
.004758	20.	20.	20.	25	5	0	.00

SPECIAL BRIDGE

5227 DOWNSTREAM ELEV IS 1289.52 , NOT 1291.98 HYDRAULIC JUMP OCCURS DOWNST

SB	XK	XKOR	COFQ	RDLEN	BWC	BWP	BAREA	SS
	1.05	1.60	2.60	355.00	101.00	12.00	1364.00	3.00

*SECNO 26120.000
CLASS B LOW FLOW

3420 BRIDGE W.S.= 1291.56 BRIDGE VELOCITY= 12.92 CALCULATED CHANNEL

14AUG97 11:40:35

SECNO	DEPTH	CWSEL	CRIWS	WSELK	EG	HV	HL
Q	QLOB	QCH	QROB	ALOB	ACH	AROB	VOL
TIME	VLOB	VCH	VROB	XNL	XNCH	XNR	WTN
SLOPE	XLOBL	XLCH	XLOBR	ITRIAL	IDC	ICONT	CORAR

EGPRS	EGLWC	H3	QWEIR	QLOW	BAREA	TRAPEZOID AREA	ELL
.00	1294.91	.00	0.	8400.	1364.	1364.	1297.

3495 OVERBANK AREA ASSUMED NON-EFFECTIVE, ELLEA= 1301.00 ELREA= 1301.0

26120.000	7.81	1293.81	.00	.00	1294.91	1.10	1.47
8400.0	.0	8400.0	.0	.0	998.8	.0	634.8
.74	.00	8.41	.00	.000	.035	.000	.000
.003251	101.	100.	101.	0	0	0	.00

*SECNO 26260.000

3265 DIVIDED FLOW

3280 CROSS SECTION 26260.00 EXTENDED 1.71 FEET

26260.000	8.70	1294.70	.00	.00	1295.36	.66	.33
8400.0	.0	8049.5	350.5	.0	1210.4	153.1	638.6
.74	.00	6.65	2.29	.000	.035	.035	.000
.001774	140.	140.	140.	2	0	0	.00

CCHV= .100 CEHV= .300

*SECNO 26500.000

26500.000	6.28	1295.28	.00	.00	1295.83	.55	.45
8400.0	.0	8400.0	.0	.0	1415.9	.0	646.3
.75	.00	5.93	.00	.000	.035	.000	.000
.001977	240.	240.	240.	2	0	0	.00

*SECNO 26700.000

26700.000	5.59	1295.59	.00	.00	1296.43	.84	.51
8400.0	.0	8400.0	.0	.0	1144.2	.0	652.1
.76	.00	7.34	.00	.000	.035	.000	.000
.003464	200.	200.	200.	2	0	0	.00

14AUG97 11:40:35

SECNO	DEPTH	CWSEL	CRIWS	WSELK	EG	HV	HL
Q	QLOB	QCH	QROB	ALOB	ACH	AROB	VOL
TIME	VLOB	VCH	VROB	XNL	XNCH	XNR	WTN
SLOPE	XLOBL	XLCH	XLOBR	ITRIAL	IDC	ICONT	CORAR

*SECNO 27000.000

27000.000	5.66	1296.66	.00	.00	1297.78	1.11	1.27
8400.0	.0	8400.0	.0	.0	992.5	.0	659.5
.77	.00	8.46	.00	.000	.035	.000	.000
.005262	300.	300.	300.	2	0	0	.00

14AUG97 11:40:35

****
HEC-2 WATER SURFACE PROFILES

Version 4.6.2; May 1991
****

NOTE- ASTERISK (*) AT LEFT OF CROSS-SECTION NUMBER INDICATES MESSAGE IN SUMMARY

SLA.DAT 100-YEAR D

SUMMARY PRINTOUT

	SECNO	Q	CWSEL	CRIWS	VCH	DEPTH	TOPWID	AREA
	5724.000	11000.00	1194.73	.00	9.39	11.73	127.88	1171.
	5838.000	11000.00	1194.99	.00	9.56	13.35	112.45	1150.
	5994.000	11000.00	1195.42	.00	9.36	13.57	113.20	1175.
	6094.000	11000.00	1195.66	.00	9.32	13.61	113.35	1179.
	6194.000	11000.00	1195.90	.00	9.29	13.65	113.49	1183.
	6260.000	11000.00	1196.09	.00	9.13	13.68	116.16	1204.
	6394.000	11000.00	1196.38	.00	9.20	13.65	115.17	1195.
	6594.000	11000.00	1196.80	.00	9.33	13.59	113.37	1178.
	6694.000	11000.00	1197.03	.00	9.35	13.58	113.34	1176.
	6876.000	11000.00	1197.53	.00	9.08	13.70	116.80	1211.
	6964.000	11000.00	1197.70	.00	9.11	13.66	116.65	1206.
	7094.000	11000.00	1198.00	.00	9.09	13.69	116.93	1209.
	7194.000	11000.00	1198.21	.00	9.11	13.85	114.23	1207.
	7247.000	11000.00	1198.35	.00	9.02	13.96	114.70	1219.
*	7284.000	11000.00	1199.07	.00	6.46	14.67	138.03	1702.
	7329.000	11000.00	1199.12	.00	6.45	14.69	138.11	1704.
	7334.000	11000.00	1198.96	.00	7.53	12.87	133.07	1460.

14AUG97 11:40:35

	SECNO	Q	CWSEL	CRIWS	VCH	DEPTH	TOPWID	AREA
*	7354.000	11000.00	1199.59	1199.59	14.23	7.09	123.87	772.
*	7363.000	11000.00	1202.13	1202.13	14.57	9.63	115.35	754.
*	7500.000	11000.00	1204.81	1204.81	15.91	10.81	88.56	691.
*	7632.000	11000.00	1208.20	.00	9.48	13.20	121.54	1159.
	7735.000	11000.00	1208.35	.00	10.18	13.35	119.46	1080.
	7834.000	11000.00	1209.12	.00	8.59	15.12	129.84	1280.
	7948.000	11000.00	1209.34	.00	8.67	13.34	134.71	1268.
	8000.000	11000.00	1209.27	.00	9.67	12.27	120.97	1137.
*	8255.000	11000.00	1208.99	.00	14.95	9.99	89.49	735.
*	8428.000	11000.00	1212.50	.00	7.20	12.50	186.71	1527.
	8500.000	11000.00	1212.89	.00	5.96	11.89	240.20	1844.
	8811.000	11000.00	1213.28	.00	5.98	11.28	227.88	1841.
*	9000.000	11000.00	1213.28	.00	8.12	10.28	201.23	1354.
	9295.000	11000.00	1214.17	.00	7.99	10.17	202.78	1377.
*	9405.000	11000.00	1214.35	.00	10.06	8.35	211.55	1093.
*	9539.000	11000.00	1215.65	.00	8.04	9.65	210.14	1368.
	9725.000	11000.00	1216.53	.00	6.29	9.53	282.17	1748.
	9960.000	11000.00	1217.14	.00	5.51	6.14	390.88	1994.
*	10025.000	11000.00	1216.65	.00	9.77	6.65	248.15	1126.
	10125.000	11000.00	1217.17	.00	11.13	6.17	226.65	988.
*	10500.000	11000.00	1220.23	.00	6.90	8.23	290.91	1594.
	11000.000	11000.00	1221.84	.00	8.48	9.84	320.23	1330.
	11238.000	11000.00	1222.98	.00	10.02	6.98	239.89	1097.
*	11305.000	11000.00	1224.09	.00	7.39	7.09	300.24	1493.
*	11500.000	11000.00	1224.50	.00	10.28	6.50	239.28	1070.
	11628.000	11000.00	1225.71	.00	8.91	7.71	249.69	1243.

14AUG97 11:40:35

	SECNO	Q	CWSEL	CRIWS	VCH	DEPTH	TOPWID	AREA
	11740.000	11000.00	1226.45	.00	7.94	7.45	258.14	1385.
	11840.000	11000.00	1226.94	.00	7.29	7.94	262.41	1508.
	12000.000	11000.00	1227.34	.00	8.03	8.34	244.78	1369.
	12141.000	11000.00	1227.79	.00	8.53	8.79	225.52	1289.
	12355.000	11000.00	1228.68	.00	9.12	7.68	198.28	1205.
	12500.000	11000.00	1229.49	.00	8.23	7.49	216.93	1336.
	12776.000	11000.00	1230.47	.00	7.82	9.47	222.60	1406.
	12822.000	11000.00	1230.66	.00	7.59	9.66	223.93	1449.
*	12952.000	11000.00	1230.18	.00	12.49	7.18	161.98	880.
*	13050.000	11000.00	1232.20	.00	8.40	9.20	512.61	1459.
*	13131.000	11000.00	1231.75	1231.75	12.95	6.75	166.03	849.
	13206.000	11000.00	1232.84	.00	11.78	7.84	151.54	938.
	13400.000	11000.00	1234.25	.00	10.81	9.25	269.60	1050.
	13500.000	11000.00	1234.97	.00	9.95	9.97	147.50	1105.
	14000.000	11000.00	1236.80	.00	10.63	10.80	153.28	1043.
	14500.000	11000.00	1238.92	.00	9.95	10.92	135.89	1105.
*	14734.000	11000.00	1240.42	.00	6.35	12.42	216.60	1732.
*	15000.000	11000.00	1240.61	.00	8.87	9.61	212.33	1239.
	15185.000	11000.00	1241.55	.00	7.99	10.55	319.86	1469.
	15500.000	11000.00	1242.46	.00	8.19	10.46	324.10	1391.
	15689.000	11000.00	1242.81	.00	10.34	9.81	185.15	1064.
	15837.000	11000.00	1243.38	1242.48	11.99	9.38	224.19	947.
	16000.000	11000.00	1244.43	.00	12.07	8.43	130.04	911.
*	16200.000	11000.00	1245.17	1245.17	15.02	9.17	105.74	732.
*	16345.000	11000.00	1248.87	.00	7.26	11.87	278.10	1515.
	16368.000	11000.00	1249.18	.00	6.14	12.18	554.28	1837.

14AUG97 11:40:35

	SECNO	Q	CWSEL	CRIWS	VCH	DEPTH	TOPWID	AREA
*	16500.000	11000.00	1248.68	1246.99	11.24	10.68	347.56	1160.
*	16900.000	11000.00	1250.88	.00	7.60	12.88	356.60	1597.
	17000.000	11000.00	1251.08	.00	7.71	12.08	288.54	1586.
*	17500.000	11000.00	1251.85	.00	11.16	7.85	198.09	1015.
	17850.000	11000.00	1253.80	1252.44	10.90	8.80	304.44	1106.
*	18170.000	11000.00	1256.13	.00	6.17	9.13	229.18	1783.
	18390.000	11000.00	1256.16	.00	6.19	8.16	249.75	1777.
*	18710.000	11000.00	1257.07	1257.07	12.16	7.07	267.01	994.
	19000.000	11000.00	1259.06	.00	11.41	8.06	137.53	964.
	19212.000	11000.00	1260.33	.00	10.95	8.33	135.91	1004.
	19426.000	11000.00	1261.38	.00	10.83	8.38	134.97	1015.
	19500.000	11000.00	1261.47	.00	12.14	7.47	132.88	906.
	19782.000	11000.00	1263.72	.00	9.66	8.72	149.99	1140.
	19950.000	11000.00	1264.51	.00	8.98	9.51	155.26	1225.
	20050.000	11000.00	1264.61	.00	8.95	8.61	156.14	1229.
*	20220.000	11000.00	1265.93	.00	5.16	9.93	241.73	2133.
	20235.000	11000.00	1265.95	.00	5.10	9.95	261.09	2156.
	20300.000	11000.00	1266.05	.00	4.86	10.05	377.99	2322.
	20500.000	11000.00	1266.21	.00	5.01	9.21	288.82	2194.
	20682.000	11000.00	1266.40	.00	4.94	9.40	318.57	2224.
	20883.000	11000.00	1266.53	.00	6.03	8.53	276.40	1824.
	21000.000	11000.00	1266.54	.00	7.74	8.54	251.46	1421.
	21330.000	11000.00	1267.71	.00	8.55	7.71	266.30	1288.
	21395.000	11000.00	1267.96	.00	8.98	7.96	248.11	1225.
	21565.000	11000.00	1269.29	.00	6.48	8.29	366.32	1697.
*	21700.000	11000.00	1269.16	.00	10.60	7.16	224.70	1037.

14AUG97 11:40:35

	SECNO	Q	CWSEL	CRIWS	VCH	DEPTH	TOPWID	AREA
*	22000.000	11000.00	1271.60	.00	7.39	6.60	275.86	1488.
	22062.000	11000.00	1271.94	.00	6.73	6.94	284.70	1633.
	22152.000	11000.00	1272.13	.00	7.13	6.13	290.83	1542.
	22200.000	11000.00	1272.20	.00	7.74	6.20	282.07	1422.
	22347.000	11000.00	1272.68	.00	8.75	5.68	268.83	1256.
*	22445.000	11000.00	1274.26	1274.26	13.84	10.26	138.20	794.
*	22500.000	11000.00	1276.11	1276.11	11.32	8.11	270.05	972.
*	22625.000	11000.00	1278.08	.00	7.50	8.08	317.81	1487.
	22877.000	8400.00	1278.55	.00	9.55	10.55	108.38	879.
	23000.000	8400.00	1278.85	.00	10.18	9.85	101.90	824.
*	23114.000	8400.00	1280.26	.00	5.92	11.26	180.65	1417.
	23319.000	8400.00	1280.27	.00	8.22	9.27	183.45	1028.
	23500.000	8400.00	1280.65	.00	8.96	8.65	124.74	937.
	23575.000	8400.00	1281.43	.00	6.90	9.43	219.95	1217.
*	23645.000	8400.00	1283.50	1283.50	11.48	11.50	264.35	931.
*	24000.000	8400.00	1285.54	.00	5.00	11.54	196.75	1678.
	24112.000	8400.00	1285.86	.00	3.35	11.86	466.86	2509.
*	24263.000	8400.00	1285.88	.00	4.78	8.88	377.44	1755.
	24365.000	8400.00	1285.88	.00	6.15	8.88	188.36	1366.
	24442.000	8400.00	1285.88	.00	7.05	8.88	166.43	1191.
	24455.000	8400.00	1285.88	.00	7.25	10.88	164.35	1158.
	24500.000	8400.00	1285.87	.00	7.99	8.87	166.59	1051.
*	24592.000	8400.00	1286.70	.00	5.14	9.70	271.14	1634.
*	24698.000	8400.00	1287.01	.00	3.46	10.01	268.44	2425.
*	24787.000	8400.00	1287.13	.00	2.52	10.13	354.34	3329.
	24894.000	8400.00	1287.17	.00	2.20	11.17	413.99	3813.

14AUG97 11:40:35

	SECNO	Q	CWSEL	CRIWS	VCH	DEPTH	TOPWID	AREA
	25000.000	8400.00	1287.17	.00	2.64	9.17	378.49	3183.
	25082.000	8400.00	1287.17	.00	2.95	9.17	382.01	2850.
	25171.000	8400.00	1287.19	.00	3.10	9.19	387.11	2709.
	25268.000	8400.00	1287.23	.00	3.13	9.23	361.30	2684.
*	25380.000	8400.00	1287.14	.00	4.92	7.14	272.20	1706.
*	25500.000	8400.00	1286.81	1286.81	11.98	5.81	160.28	701.
*	25600.000	8400.00	1288.56	.00	8.90	7.56	160.72	944.
	25870.000	8400.00	1289.64	.00	11.01	5.64	152.57	763.
*	26000.000	8400.00	1290.52	1290.52	12.61	5.52	135.54	666.
*	26020.000	8400.00	1291.98	1290.51	9.67	6.98	142.21	868.
*	26120.000	8400.00	1293.81	.00	8.41	7.81	151.45	998.
	26260.000	8400.00	1294.70	.00	6.65	8.70	274.30	1363.
	26500.000	8400.00	1295.28	.00	5.93	6.28	252.86	1415.
	26700.000	8400.00	1295.59	.00	7.34	5.59	225.29	1144.
	27000.000	8400.00	1296.66	.00	8.46	5.66	215.25	992.

14AUG97 11:40:35

SUMMARY OF ERRORS AND SPECIAL NOTES

```
WARNING SECNO=   7284.000  PROFILE=  1  CONVEYANCE CHANGE OUTSIDE ACCEPTABLE RAN

CAUTION SECNO=   7354.000  PROFILE=  1  CRITICAL DEPTH ASSUMED
CAUTION SECNO=   7354.000  PROFILE=  1  PROBABLE MINIMUM SPECIFIC ENERGY
CAUTION SECNO=   7354.000  PROFILE=  1  20 TRIALS ATTEMPTED TO BALANCE WSEL

CAUTION SECNO=   7363.000  PROFILE=  1  CRITICAL DEPTH ASSUMED
CAUTION SECNO=   7363.000  PROFILE=  1  PROBABLE MINIMUM SPECIFIC ENERGY
CAUTION SECNO=   7363.000  PROFILE=  1  20 TRIALS ATTEMPTED TO BALANCE WSEL

CAUTION SECNO=   7500.000  PROFILE=  1  CRITICAL DEPTH ASSUMED
CAUTION SECNO=   7500.000  PROFILE=  1  PROBABLE MINIMUM SPECIFIC ENERGY
CAUTION SECNO=   7500.000  PROFILE=  1  20 TRIALS ATTEMPTED TO BALANCE WSEL

WARNING SECNO=   7632.000  PROFILE=  1  CONVEYANCE CHANGE OUTSIDE ACCEPTABLE RAN

WARNING SECNO=   8255.000  PROFILE=  1  CONVEYANCE CHANGE OUTSIDE ACCEPTABLE RAN

WARNING SECNO=   8428.000  PROFILE=  1  CONVEYANCE CHANGE OUTSIDE ACCEPTABLE RAN

WARNING SECNO=   9000.000  PROFILE=  1  CONVEYANCE CHANGE OUTSIDE ACCEPTABLE RAN

WARNING SECNO=   9405.000  PROFILE=  1  CONVEYANCE CHANGE OUTSIDE ACCEPTABLE RAN

WARNING SECNO=   9539.000  PROFILE=  1  CONVEYANCE CHANGE OUTSIDE ACCEPTABLE RAN

WARNING SECNO=  10025.000  PROFILE=  1  CONVEYANCE CHANGE OUTSIDE ACCEPTABLE RAN

WARNING SECNO=  10500.000  PROFILE=  1  CONVEYANCE CHANGE OUTSIDE ACCEPTABLE RAN

WARNING SECNO=  11305.000  PROFILE=  1  CONVEYANCE CHANGE OUTSIDE ACCEPTABLE RAN

WARNING SECNO=  11500.000  PROFILE=  1  CONVEYANCE CHANGE OUTSIDE ACCEPTABLE RAN

WARNING SECNO=  12952.000  PROFILE=  1  CONVEYANCE CHANGE OUTSIDE ACCEPTABLE RAN

WARNING SECNO=  13050.000  PROFILE=  1  CONVEYANCE CHANGE OUTSIDE ACCEPTABLE RAN

CAUTION SECNO=  13131.000  PROFILE=  1  CRITICAL DEPTH ASSUMED
CAUTION SECNO=  13131.000  PROFILE=  1  PROBABLE MINIMUM SPECIFIC ENERGY
CAUTION SECNO=  13131.000  PROFILE=  1  20 TRIALS ATTEMPTED TO BALANCE WSEL

WARNING SECNO=  14734.000  PROFILE=  1  CONVEYANCE CHANGE OUTSIDE ACCEPTABLE RAN

WARNING SECNO=  15000.000  PROFILE=  1  CONVEYANCE CHANGE OUTSIDE ACCEPTABLE RAN

CAUTION SECNO=  16200.000  PROFILE=  1  CRITICAL DEPTH ASSUMED
CAUTION SECNO=  16200.000  PROFILE=  1  MINIMUM SPECIFIC ENERGY

WARNING SECNO=  16345.000  PROFILE=  1  CONVEYANCE CHANGE OUTSIDE ACCEPTABLE RAN
```

14AUG97 11:40:35

```
WARNING SECNO=  16500.000  PROFILE=  1  CONVEYANCE CHANGE OUTSIDE ACCEPTABLE RAN

WARNING SECNO=  16900.000  PROFILE=  1  CONVEYANCE CHANGE OUTSIDE ACCEPTABLE RAN

WARNING SECNO=  17500.000  PROFILE=  1  CONVEYANCE CHANGE OUTSIDE ACCEPTABLE RAN

WARNING SECNO=  18170.000  PROFILE=  1  CONVEYANCE CHANGE OUTSIDE ACCEPTABLE RAN

CAUTION SECNO=  18710.000  PROFILE=  1  CRITICAL DEPTH ASSUMED
CAUTION SECNO=  18710.000  PROFILE=  1  PROBABLE MINIMUM SPECIFIC ENERGY
CAUTION SECNO=  18710.000  PROFILE=  1  20 TRIALS ATTEMPTED TO BALANCE WSEL

WARNING SECNO=  20220.000  PROFILE=  1  CONVEYANCE CHANGE OUTSIDE ACCEPTABLE RAN

WARNING SECNO=  21700.000  PROFILE=  1  CONVEYANCE CHANGE OUTSIDE ACCEPTABLE RAN

WARNING SECNO=  22000.000  PROFILE=  1  CONVEYANCE CHANGE OUTSIDE ACCEPTABLE RAN

CAUTION SECNO=  22445.000  PROFILE=  1  CRITICAL DEPTH ASSUMED
CAUTION SECNO=  22445.000  PROFILE=  1  PROBABLE MINIMUM SPECIFIC ENERGY
CAUTION SECNO=  22445.000  PROFILE=  1  20 TRIALS ATTEMPTED TO BALANCE WSEL

CAUTION SECNO=  22500.000  PROFILE=  1  CRITICAL DEPTH ASSUMED
CAUTION SECNO=  22500.000  PROFILE=  1  PROBABLE MINIMUM SPECIFIC ENERGY
CAUTION SECNO=  22500.000  PROFILE=  1  20 TRIALS ATTEMPTED TO BALANCE WSEL

WARNING SECNO=  22625.000  PROFILE=  1  CONVEYANCE CHANGE OUTSIDE ACCEPTABLE RAN

WARNING SECNO=  23114.000  PROFILE=  1  CONVEYANCE CHANGE OUTSIDE ACCEPTABLE RAN

CAUTION SECNO=  23645.000  PROFILE=  1  CRITICAL DEPTH ASSUMED
CAUTION SECNO=  23645.000  PROFILE=  1  PROBABLE MINIMUM SPECIFIC ENERGY
CAUTION SECNO=  23645.000  PROFILE=  1  20 TRIALS ATTEMPTED TO BALANCE WSEL

WARNING SECNO=  24000.000  PROFILE=  1  CONVEYANCE CHANGE OUTSIDE ACCEPTABLE RAN

WARNING SECNO=  24263.000  PROFILE=  1  CONVEYANCE CHANGE OUTSIDE ACCEPTABLE RAN

WARNING SECNO=  24592.000  PROFILE=  1  CONVEYANCE CHANGE OUTSIDE ACCEPTABLE RAN

WARNING SECNO=  24698.000  PROFILE=  1  CONVEYANCE CHANGE OUTSIDE ACCEPTABLE RAN

WARNING SECNO=  24787.000  PROFILE=  1  CONVEYANCE CHANGE OUTSIDE ACCEPTABLE RAN

WARNING SECNO=  25380.000  PROFILE=  1  CONVEYANCE CHANGE OUTSIDE ACCEPTABLE RAN

CAUTION SECNO=  25500.000  PROFILE=  1  CRITICAL DEPTH ASSUMED
CAUTION SECNO=  25500.000  PROFILE=  1  PROBABLE MINIMUM SPECIFIC ENERGY
CAUTION SECNO=  25500.000  PROFILE=  1  20 TRIALS ATTEMPTED TO BALANCE WSEL

WARNING SECNO=  25600.000  PROFILE=  1  CONVEYANCE CHANGE OUTSIDE ACCEPTABLE RAN

CAUTION SECNO=  26000.000  PROFILE=  1  CRITICAL DEPTH ASSUMED
CAUTION SECNO=  26000.000  PROFILE=  1  MINIMUM SPECIFIC ENERGY
```

14AUG97 11:40:35

```
CAUTION SECNO=  26020.000  PROFILE=  1  20 TRIALS ATTEMPTED TO BALANCE WSEL
WARNING SECNO=  26020.000  PROFILE=  1  CONVEYANCE CHANGE OUTSIDE ACCEPTABLE RAN

CAUTION SECNO=  26120.000  PROFILE=  1  HYDRAULIC JUMP D.S.
```

APPENDIX B

PROPOSED CONDITIONS HEC-2 MODEL

```
T1      SIMONS, LI & ASSOCIATES, INC. (PAZ-MC-17)  01/02/98
T2      SKUNK CREEK HEC-2 ANALYSIS
T3      PROP_H2.DAT    100-YEAR DISCHARGE  (Design Model for WSEL Computations)
J1     0       2       0       0 0.00270       0       0         1197.10       0
J2    -1       0      -1       0       0       0       0       0       0       0
J3    38      43       1       2      26       8       4      25       5      42
J3    68      39
QT     1   11000
NC  .040    .040    .040     0.1     0.3
*
*   Start of the Skunk Creek Study
*   Dibble Design Plans (3/31/95) are used to create the HEC-2 model
*      North Bank Design : Dibble
*      South Bank Design : Dibble
*
X1  5724      63  920.62  1072.5
X3    10
GR  1183  820.36    1184  829.21    1185  832.89    1186  837.11    1187  841.08
GR  1188  844.42    1189  847.39    1190  850.48    1191   853.3    1192  856.18
GR  1193  859.18    1194  862.29    1195  865.53    1196  868.87    1197  872.18
GR  1198  875.52    1199  878.86    1200  881.96    1201  885.05    1202  888.03
GR  1203  891.05    1203  892.24    1202  916.69    1201  918.71    1200  920.62
GR  1199  922.76    1198  924.85    1197  926.87    1196  928.89    1195  930.94
GR  1194  932.96    1193  934.83    1192  936.79    1191  938.76    1190  940.71
GR  1189  942.71    1188  944.87    1187  946.95    1186   949.1    1185  957.29
GR  1184  966.05    1181  974.67    1181 1022.46    1184 1031.54    1185 1037.45
GR  1186 1039.76    1187 1042.04    1188 1044.32    1189 1046.61    1190 1048.91
GR  1191 1051.18    1192 1053.45    1193 1055.73    1194 1057.84    1195 1059.94
GR  1196 1062.05    1197 1064.14    1198 1066.27    1199 1068.32    1200 1070.46
GR  1201  1072.5    1202 1220.62    1202 1288.06
X1  5814       4 1934.67 2065.33    90.0    90.0    90.0
X3    10
GR1199.4 1934.67 1181.39 1970.00 1181.39 2030.00 1199.39 2065.33
X1  5970       4 1934.67 2065.33   156.0   156.0   156.0
X3    10
GR1199.7 1934.67 1181.60 1970.00 1181.60 2030.00 1199.70 2065.33
X1  6070       4 1934.67 2065.33   100.0   100.0   100.0
X3    10
GR1199.9 1934.67 1181.80 1970.00 1181.80 2030.00 1199.80 2065.33
*
*    D/S face of Paradise Lane Bridge
*
NC                          0.3     0.5
X1  6170       4 1934.67 2065.33   100.0   100.0   100.0
X3    10                                                  1204    1204
GR1200.0 1934.67 1182.00 1970.00 1182.00 2030.00 1200.00 2065.33
SB  1.05     1.6     2.6            60.0     4.0  1728.0     2.0 1182.16 1182.00
*
*    U/S face of Paradise Lane Bridge
*
X1  6236       4 1934.67 2065.33    66.0    66.0    66.0
X2                     1 1200.25 1203.25
X3    10                                                  1204    1204
BT     4 1934.67 1203.25         1970.00 1203.25         2030.00 1203.25
BT2065.3 1203.25
GR1199.4 1934.67 1182.16 1970.00 1182.16 2030.00 1199.39 2065.33
NC                          0.1     0.3
X1  6370       4 1934.67 2065.33   134.0   134.0   134.0
X3    10
GR1200.0 1934.67 1182.50 1970.00 1182.50 2030.00 1200.00 2065.33
```

```
X1  6570       4 1935.67 2064.33   200.0   200.0   200.0
X3    10
GR1200.5 1935.67 1183.00 1970.00 1183.00 2030.00 1200.50 2064.33
X1  6670       4 1935.67 2064.33   100.0   100.0   100.0
X3    10
GR1200.7 1935.67 1183.20 1970.00 1183.20 2030.00 1200.70 2064.33
*
*    D/S Face of  75th Avenue Bridge
*
NC                           0.3     0.5
X1  6852       4 1935.67 2064.33   182.0   182.0   182.0
X3    10                                                  1205    1205
GR1200.1 1935.67 1183.58 1970.00 1183.58 2030.00 1200.14 2064.33
SB  1.05     1.6     2.6            60.0     4.0  1542.0     2.0 1183.79 1183.58
*
*    U/S Face of  75th Avenue Bridge
*
X1  6940       4 1935.67 2064.33    88.0    88.0    88.0
X2                     1 1200.40 1203.40
X3    10                                                  1205    1205
BT     4 1935.67 1203.40         1970.00 1203.40         2030.00 1203.40
BT2064.3 1203.40
GR1200.4 1935.67 1183.79 1970.00 1183.79 2030.00 1200.35 2064.33
NC                           0.1     0.3
X1  7070       4 1935.67 2064.33   130.0   130.0   130.0
X3    10
GR1200.6 1935.67 1184.06 1970.00 1184.06 2030.00 1200.55 2064.33
X1  7170       4 1937.67 2062.33   100.0   100.0   100.0
X3    10
GR1200.7 1937.67 1184.11 1970.00 1184.11 2030.00 1200.65 2062.33
X1  7223       4 1937.67 2062.33    53.0    53.0    53.0
X3    10
GR1200.7 1937.67 1184.14 1970.00 1184.14 2030.00 1200.65 2062.33
X1  7260       4 1928.25 2071.75    37.0    37.0    37.0
X3    10
GR1200.7 1928.25 1184.15 1953.00 1184.15 2047.00 1200.65 2071.75
X1  7305       4 1928.25 2071.75    45.0    45.0    45.0
X3    10
GR1200.7 1928.25 1184.18 1953.00 1184.18 2047.00 1200.65 2071.75
X1  7310       4 1930.50 2069.50     5.0     5.0     5.0
X3    10
GR1200.7 1930.50 1185.84 1953.00 1185.84 2047.00 1200.65 2069.50
X1  7330       4 1930.50 2069.50    20.0    20.0    20.0
X3    10
GR1200.6 1930.50 1192.25 1953.00 1192.25 2047.00 1207.25 2069.50
X1  7339       8 1934.25 2065.75     9.4     9.4     9.4
X3    10
GR1207.3 1934.25 1194.75 1953.00 1194.75 1998.00 1192.25 1998.00 1192.25  2002.00
GR1194.8 2002.00 1194.75 2047.00 1207.25 2065.75
*
*   Start of Project
*   SLA Design is used to create the HEC-2 model
*      North Bank Design : SLA
*      South Bank Design : SLA
*
*
X1  7340       4 1934.00 2066.00       1       1       1
X3    10
GR1207.5 1934.00 1194.77 1953.00 1194.77 2047.00 1207.50 2066.00
X1  7350       4 1923.90 2076.10      10      10      10
```

```
X3     10
GR1207.5 1923.90 1194.77 1949.35 1194.77 2050.65 1207.50 2076.10
X1  7377       4 1901.41 2098.56      27      27      27
X3     10
GR1207.5 1901.41 1194.77 1939.60 1194.77 2060.40 1207.50 2098.56
X1  7500       4 1836.17 2163.83     123     123     123
X3     10
GR1215.0 1836.17 1195.39 1895.00 1195.39 2105.00 1215.00 2163.83
X1  7700       4 1853.30 2146.70     200     200     200
X3     10
GR1210.3 1853.30 1196.39 1895.00 1196.39 2105.00 1210.29 2146.70
X1  7900       4 1853.90 2146.10     200     200     200
X3     10
GR1211.1 1853.90 1197.39 1895.00 1197.39 2105.00 1211.09 2146.10
X1  8000       4 1853.90 2146.10     100     100     100
X3     10
GR1211.1 1853.90 1197.89 1895.00 1197.89 2105.00 1211.09 2146.10
X1  8200       4 1854.80 2145.20   200.0   200.0   200.0
X3     10
GR1212.3 1854.80 1198.89 1895.00 1198.89 2105.00 1212.29 2145.20
X1  8400       4 1855.40 2144.60   200.0   200.0   200.0
X3     10
GR1213.1 1855.40 1199.89 1895.00 1199.89 2105.00 1213.09 2144.60
X1  8500       4 1854.17 2145.83   100.0   100.0   100.0
X3     10
GR1214.0 1854.17 1200.39 1895.00 1200.39 2105.00 1214.00 2145.83
X1  8700       4 1855.10 2144.90   200.0   200.0   200.0
X3     10
GR1214.7 1855.10 1201.39 1895.00 1201.39 2105.00 1214.69 2144.90
X1  8900       4 1854.50 2145.50   200.0   200.0   200.0
X3     10
GR1215.9 1854.50 1202.39 1895.00 1202.39 2105.00 1215.89 2145.50
X1  9000       4 1854.50 2145.50   100.0   100.0   100.0
X3     10
GR1215.9 1854.50 1202.89 1895.00 1202.89 2105.00 1215.89 2145.50
X1  9100       4 1853.90 2146.10   100.0   100.0   100.0
X3     10
GR1217.1 1853.90 1203.39 1895.00 1203.39 2105.00 1217.09 2146.10
*
*   Start of Bell GCS
*
X1  9271       4 1853.75 2146.25     171     171     171
X3     10
GR1218.0 1853.75 1204.25 1895.00 1204.25 2105.00 1218.00 2146.25
*
*   D/S face of Bell Rd Bridge
*
NC                             0.3     0.5
X1  9295       4 1848.00 2151.92      24      24      24
X3     10                    1895            2105
GR1220.0 1848.00 1204.36 1895.00 1204.36 2105.00 1220.00 2151.92
SB  1.05     1.6     2.6     435     200      12  3173.0       3 1204.91 1204.36
*
* U/S face of Bell Rd Bridge
*
X1  9405       4 1867.73 2160.00   110.0   110.0   110.0
X2                     1 1219.12 1220.37
X3     10                    1910            2120
GR1219.0 1867.73 1204.91 1910.00 1204.91 2120.00 1217.00 2160.00
*
```

```
*
*   SLA Design ties into VAL-TECH Design for the North Bank
*      North Bank Design : VAL-TECH
*      South Bank Design : SLA
*
*
*   VAL-TECH Design Plans are used to create the HEC-2 model between
*   Stations 9471 and 10025 for the North Bank
*
*
X1  9471       4 1868.72 2155.00    66.0    66.0    66.0
X3    10
GR1219.0 1868.72 1205.24 1910.00 1205.24 2120.00 1217.00 2155.00
*
*   End   of Bell GCS
*
X1  9500       4 1869.17 2155.00    29.0    29.0    29.0
X3    10
GR1219.0 1869.17 1205.39 1910.00 1205.39 2120.00 1217.00 2155.00
NC                            0.1     0.3
X1  9700       4 1867.07 2144.00   200.0   200.0   200.0
X3    10
GR1220.7 1867.07 1206.39 1910.00 1206.39 2110.00 1217.00 2144.00
X1  9800       4 1876.17 2152.00   100.0   100.0   100.0
X3    10
GR1221.5 1876.17 1206.89 1920.00 1206.89 2122.00 1217.00 2152.00
X1 10000       4 1881.17 2150.00   200.0   200.0   200.0
X3    10
GR1222.5 1881.17 1207.89 1925.00 1207.89 2120.00 1218.00 2150.00
X1 10025       4 1877.00 2157.00    25.0    25.0    25.0
X3    10
GR1222.5 1877.00 1207.90 1922.00 1207.90 2117.00 1218.00 2157.00
*
*
*   VAL-TECH Design for the North Bank terminates. SLA Design is used
*   for both the North and South Banks
*
*      North Bank Design : SLA
*      South Bank Design : SLA
*
*
X1 10100       4 1861.17 2138.83    75.0    75.0    75.0
X3    10
GR1223.0 1861.17 1208.39 1905.00 1208.39 2095.00 1223.00 2138.83
X1 10200       4 1865.57 2140.43   100.0   100.0   100.0
X3    10
GR1223.7 1865.57 1208.89 1910.00 1208.89 2096.00 1223.70 2140.43
X1 10400       4 1868.87 2135.30   200.0   200.0   200.0
X3    10
GR1225.0 1868.87 1209.89 1914.20 1209.89 2090.00 1224.90 2135.30
X1 10600       4 1869.70 2130.60   200.0   200.0   200.0
X3    10
GR1226.0 1869.70 1210.89 1915.00 1210.89 2085.00 1226.09 2130.60
X1 10800       4 1869.80 2130.20   200.0   200.0   200.0
X3    10
GR1227.3 1869.80 1211.89 1916.00 1211.89 2084.00 1227.29 2130.20
X1 10900       4 1876.67 2136.40   100.0   100.0   100.0
X3    10
GR1228.0 1876.67 1212.39 1923.50 1212.39 2089.60 1227.61 2136.40
X111000   4.0     1876.3  2123.7  100.0   100.0   100.0
```

```
GR1228.0  1876.3  1212.9  1921.7  1212.9  2078.4  1228.0  2123.7
X111095   4.0     1879.2  2120.8  95.0    95.0    95.0
GR1228.0  1879.2  1213.4  1923.2  1213.4  2076.9  1228.0  2120.8
*
*   Start of 69th Av. GCS
*
X111100   4.0     1886.4  2113.7  5.0     5.0     5.0
GR1228.0  1886.4  1216.9  1924.2  1216.9  2075.9  1228.0  2113.7
X111150   4.0     1893.9  2106.2  50.0    50.0    50.0
GR1228.0  1893.9  1216.9  1927.2  1216.9  2072.9  1228.0  2106.2
*
*   End of 69th Av. GCS
*
X111230   4.0     1896.6  2103.4  80.0    80.0    80.0
GR1228.0  1896.6  1217.1  1929.4  1217.1  2070.6  1228.0  2103.4
*
*   D/S face of 69th Av. Dip Crossing
*
X111238   4.0     1896.7  2103.3  8.0     8.0     8.0
GR1228.0  1896.7  1217.1  1929.4  1217.1  2070.6  1228.0  2103.3
*
*   U/S face of 69th Av. Dip Crossing
*
X111305   4.0     1895.2  2104.8  67.0    67.0    67.0
GR1228.5  1895.2  1217.1  1929.4  1217.1  2070.6  1228.5  2104.8
X111310   4.0     1895.6  2104.4  5.0     5.0     5.0
GR1228.5  1895.6  1217.2  1929.4  1217.2  2070.6  1228.5  2104.4
X111400   4.0     1895.1  2104.9  90.0    90.0    90.0
GR1228.5  1895.1  1217.1  1929.4  1217.1  2070.6  1228.5  2104.9
X111500   4.0     1896.4  2103.6  100.0   100.0   100.0
GR1228.0  1896.4  1217.7  1927.4  1217.7  2072.6  1228.0  2103.6
X111700   4.0     1896.3  2103.7  200.0   200.0   200.0
GR1228.5  1896.3  1218.1  1927.5  1218.1  2072.5  1228.5  2103.7
X111900   4.0     1896.1  2103.9  200.0   200.0   200.0
GR1229.0  1896.1  1218.5  1927.5  1218.5  2072.5  1229.0  2103.9
X112000   4.0     1895.2  2104.8  100.0   100.0   100.0
GR1229.5  1895.2  1218.7  1927.5  1218.7  2072.5  1229.5  2104.8
X112200   4.0     1898.0  2102.0  200.0   200.0   200.0
GR1229.0  1898.0  1219.2  1927.5  1219.2  2072.5  1229.0  2102.0
X112400   4.0     1896.3  2103.7  200.0   200.0   200.0
GR1230.0  1896.3  1219.6  1927.5  1219.6  2072.5  1230.0  2103.7
X112500   4.0     1896.9  2103.1  100.0   100.0   100.0
GR1230.0  1896.9  1219.8  1927.5  1219.8  2072.5  1230.0  2103.1
X112645   4.0     1897.9  2102.1  145.0   145.0   145.0
GR1230.0  1897.9  1220.1  1927.5  1220.1  2072.5  1230.0  2102.1
*
*   Start of 67th AV. GCS
*
X112650   4       1900.5  2099.5  5.0     5.0     5.0
GR1230.0  1900.5  1221.0  1927.5  1221.0  2072.5  1230.0  2099.5
X112660   4       1900.5  2099.5  10.0    10.0    10.0
GR1230.0  1900.5  1221.0  1927.5  1221.0  2072.5  1230.0  2099.5
*
*   End of 67th AV. GCS
*
*
*
*
*   SLA Design ties into INCA Design for the North and South Bank Protection
*      North Bank Design : INCA
```

```
*      South Bank Design : INCA
*
*
*
*   INCA Design Plans (10/22/96) and As-Built Survey by Moldonado (per SLA's request)
*   are used to create the HEC-2 model between Stations 12784 and 13400
*
*
*
X112784   4       1895.0  2115.0  124.0   124.0   124.0
GR1231.5  1895.0  1221.2  1925.8  1221.2  2075.6  1231.1  2115.0
X112822   4       1888.0  2113.0  38.0    38.0    38.0
GR1231.5  1888.0  1221.3  1928.7  1221.3  2082.4  1231.5  2113.0
X112853   8       1881.0  2110.0  31.0    31.0    31.0
GR1231.4  1881.0  1230.0  1901.0  1230.0  1906.0  1221.4  1940.5  1221.4  2078.7
GR1230    2096    1230.0  2104.0  1231.7  2110.0
X112884.0 8.0     1892.0  2104.0  31.0    31.0    31.0
GR1231    1892    1228.8  1912.0  1228.8  1920.0  1221.4  1942.1  1221.4  2064.5
GR1228.6  2086.0  1228.6  2094.0  1231.9  2104.0
X112981   8       1901.0  2079.0  97.0    97.0    97.0
GR1232.0  1901.0  1226.0  1936.0  1226.0  1946.0  1221.6  1959.1  1221.6  2045.6
GR1225.8  2054.0  1225.8  2062.0  1231.7  2079.0
NC                          0.3     0.5
*
*   D/S Face of 67th AV. Bridge
*
X113050   4       1911.0  2080.0  69.0    69.0    69.0
X3    10                1928.00         2072.00
GR1231.0  1911.0  1221.8  1948.0  1221.8  2059.5  1232.0  2080.0
SB  1.05     1.6     2.6     164     116      12 1431.00     2.5 1221.90 1221.80
*
*   U/S Face of 67th AV. Bridge
*
X113131   4       1911.0  2080.0  81.0    81.0    81.0
X2                     1 1233.50 1235.82
X3    10                1928.00         2072.00
GR1231.0  1911.0  1221.9  1947.4  1221.9  2059.8  1232.0  2080.0
X113206   8       1923.0  2085.0  75.0    75.0    75.0
GR1231.7  1923.0  1225.4  1945.0  1225.4  1952.0  1222.1  1962.0  1222.1  2038.2
GR1225.0  2047.0  1225.0  2057.0  1234.7  2085.0
X113300   8       1931.0  2090.0  94.0    94.0    94.0
GR1232.7  1931.0  1229.5  1946.0  1229.5  1955.0  1222.2  1969.5  1222.2  2048.8
GR1229.3  2070.0  1229.3  2080.0  1234.7  2090.0
NC                          0.1     0.3
X113400   4       1953.0  2086.0  100.0   100.0   100.0
GR1233.8  1953.0  1222.4  1975.8  1222.4  2050.7  1234.2  2086.0
*
*
*   INCA Design for the North and South Bank Protection terminates.
*   SLA Design is used for both the North and South Banks
*
*      North Bank Design : SLA
*      South Bank Design : SLA
*
*
X113500   4       1935.0  2086.0  100.0   100.0   100.0
GR1235.0  1935.0  1222.6  1959.8  1222.6  2061.2  1235.0  2086.0
X113600   4       1930.0  2080.0  100.0   100.0   100.0
GR1235.0  1930.0  1222.8  1954.4  1222.8  2055.6  1235.0  2080.0
X113700   4       1917.4  2071.0  100.0   100.0   100.0
```

```
GR1236.0  1917.4  1223.0  1943.4  1223.0  2045.0  1236.0  2071.0
X113800   4       1908.7  2061.0  100.0   100.0   100.0
GR1236.0  1908.7  1223.2  1934.3  1223.2  2035.4  1236.0  2061.0
X113900   4       1904.0  2056.0  100.0   100.0   100.0
GR1236.0  1904.0  1223.4  1929.2  1223.4  2030.8  1236.0  2056.0
X114000   4       1903.4  2058.0  100.0   100.0   100.0
GR1237.0  1903.4  1223.6  1930.2  1223.6  2031.2  1237.0  2058.0
X114100   4       1898.2  2053.0  100.0   100.0   100.0
GR1237.0  1898.2  1223.8  1924.6  1223.8  2026.6  1237.0  2053.0
X114200   4       1897.9  2051.0  100.0   100.0   100.0
GR1237.0  1897.9  1224.0  1924.0  1224.0  2024.9  1237.0  2051.0
X114300   4       1910.0  2067.0  100.0   100.0   100.0
GR1238.0  1910.0  1224.2  1937.7  1224.2  2039.3  1238.0  2067.0
X114400   4       1905.0  2061.0  100.0   100.0   100.0
GR1238.0  1905.0  1224.4  1932.3  1224.4  2033.7  1238.0  2061.0
X114500   4       1897.2  2051.0  100.0   100.0   100.0
GR1238.0  1897.2  1224.6  1924.1  1224.6  2024.1  1238.0  2051.0
X114700   4       1920.8  2079.2  200.0   200.0   200.0
GR1238.0  1920.8  1224.9  1960.0  1224.9  2040.0  1238.0  2079.2
X114900   4       1924.0  2076.0  200.0   200.0   200.0
GR1239.0  1924.0  1225.3  1965.0  1225.3  2035.0  1239.0  2076.0
X115000   4       1927.0  2073.0  100.0   100.0   100.0
GR1239.0  1927.0  1225.5  1967.5  1225.5  2032.5  1239.0  2073.0
X115200   4       1929.7  2070.3  200.0   200.0   200.0
GR1239.0  1929.7  1225.9  1969.0  1225.9  2031.0  1239.0  2070.3
X115400   4       1931.4  2068.6  200.0   200.0   200.0
GR1240.0  1931.4  1226.3  1972.5  1226.3  2027.5  1240.0  2068.6
X115495   4       1931.9  2068.1  95.0    95.0    95.0
GR1240.0  1931.9  1226.5  1972.5  1226.5  2027.5  1240.0  2068.1
*
*   Start of GCS
*
X115500   4.0     1940.5  2059.5  5.0     5.0     5.0
GR1240.0  1940.5  1228.5  1975.0  1228.5  2025.0  1240.0  2059.5
X115510   4.0     1940.5  2059.5  10.0    10.0    10.0
GR1240.0  1940.5  1228.5  1975.0  1228.5  2025.0  1240.0  2059.5
*
*   End of GCS
*
X115700   4.0     1945.3  2054.7  190.0   190.0   190.0
GR1241.0  1945.3  1229.4  1979.7  1229.4  2020.0  1241.0  2054.7
X115900   4.0     1945.7  2054.3  200.0   200.0   200.0
GR1243.0  1945.7  1230.4  1983.5  1230.4  2016.5  1243.0  2054.3
X116000   4.0     1939.1  2060.9  100.0   100.0   100.0
GR1245.0  1939.1  1230.9  1981.5  1230.9  2018.5  1245.0  2060.9
X116100   4.0     1933.5  2066.5  100.0   100.0   100.0
GR1245.5  1933.5  1231.4  1975.9  1231.4  2024.1  1245.5  2066.5
X116200   4.0     1927.8  2072.2  100.0   100.0   100.0
GR1246.0  1927.8  1231.8  1970.3  1231.8  2029.7  1246.0  2072.2
X116400   4.0     1916.5  2083.5  200.0   200.0   200.0
GR1247.0  1916.5  1232.8  1959.1  1232.8  2040.9  1247.0  2083.5
X116500   4.0     1912.4  2087.6  100.0   100.0   100.0
GR1247.0  1912.4  1233.3  1953.5  1233.3  2046.5  1247.0  2087.6
X116600   4.0     1913.8  2086.2  100.0   100.0   100.0
GR1247.0  1913.8  1233.8  1953.5  1233.8  2046.5  1247.0  2086.2
X116700   4.0     1915.3  2084.7  100.0   100.0   100.0
GR1247.0  1915.3  1234.3  1953.5  1234.3  2046.5  1247.0  2084.7
X116800   4.0     1916.7  2083.3  100.0   100.0   100.0
GR1247.0  1916.7  1234.7  1953.5  1234.7  2046.5  1247.0  2083.3
X116900   4.0     1915.2  2084.8  100.0   100.0   100.0
```

```
GR1248.0  1915.2  1235.2  1953.5  1235.2  2046.5  1248.0  2084.8
*
*
*   SLA Design for the North Bank ties into Existing Bank Protection
*      North Bank Design : Existing
*      South Bank Design : SLA
*
*
*
*
X1 17000       4 1879.10 2060.00   100.0   100.0   100.0
X3    10
GR1255.0 1879.10 1235.70 1937.00 1235.70 2030.00 1253.00 2060.00
X1 17100       4 1879.04 2060.00   100.0   100.0   100.0
X3    10
GR1255.5 1879.04 1236.18 1937.00 1236.18 2030.00 1253.00 2060.00
*
*   SLA Design for the South Bank ties into Existing Bank Protection
*      North Bank Design : Existing
*      South Bank Design : Existing
*
*
*   SLA Design Model uses Existing Bank Protection
*   for the North and South Banks between Stations 17200 and 20160
*
*
X1 17200       4 1910.00 2058.00   100.0   100.0   100.0
X3    10
GR1252.0 1910.00 1236.66 1935.00 1236.66 2028.00 1253.00 2058.00
X1 17300       4 1912.00 2058.00   100.0   100.0   100.0
X3    10
GR1253.0 1912.00 1237.14 1935.00 1237.14 2030.00 1253.50 2058.00
X1 17400       4 1910.00 2060.00   100.0   100.0   100.0
X3    10
GR1253.6 1910.00 1237.62 1940.00 1237.62 2030.00 1253.80 2060.00
X1 17500       4 1910.00 2055.00   100.0   100.0   100.0
X3    10
GR1254.0 1910.00 1238.10 1935.00 1238.10 2025.00 1254.00 2055.00
X1 17700       4 1905.00 2055.00   200.0   200.0   200.0
X3    10
GR1255.5 1905.00 1239.06 1935.00 1239.06 2022.00 1253.00 2055.00
X1 17850       4 1910.00 2055.00   150.0   150.0   150.0
X3    10
GR1256.0 1910.00 1239.78 1935.00 1239.78 2022.00 1255.80 2055.00
*
*   Start of Union Hills GCS
*
X1 17950       4 1910.00 2055.00   100.0   100.0   100.0
X3    10
GR1256.0 1910.00 1240.26 1935.00 1240.26 2025.00 1256.00 2055.00
X1 17955       4 1905.00 2055.00     5.0     5.0     5.0
X3    10
GR1257.0 1905.00 1245.80 1925.00 1245.80 2035.00 1258.00 2055.00
X1 17960       4 1905.00 2055.00     5.0     5.0     5.0
X3    10
GR1257.0 1905.00 1245.90 1925.00 1245.90 2035.00 1258.00 2055.00
*
*   End of Union Hills GCS
*
X1 18000       4 1905.00 2055.00    40.0    40.0    40.0
```

```
X3    10
GR1257.0 1905.00 1246.00 1925.00 1246.00 2035.00 1258.00 2055.00
*
*   D/S face of Union Hills Bridge
*
NC                          0.3     0.5
X1 18170       4 1910.00 2060.00     170     170     170
X3    10                   1910
GR1265.0 1910.00 1247.00 1938.00 1247.00 2040.00 1261.00 2060.00
SB  1.05     1.6     2.6     200      95       6  1478.0     2.0 1248.00 1247.00
*
*   U/S face of Union Hills Bridge
*
X1 18390       4 1900.00 2060.00   220.0   220.0   220.0
X2                    1 1260.88 1261.10
X3    10                                  2070
GR1266.0 1900.00 1248.00 1945.00 1248.00 2040.00 1261.00 2060.00
NC                          0.1     0.3
X1 18500       4 1900.00 2060.00   110.0   110.0   110.0
X3    10
GR1267.0 1900.00 1248.50 1957.00 1248.50 2045.00 1261.50 2060.00
X1 18710       4 1910.00 2060.00   210.0   210.0   210.0
X3    10
GR1262.0 1910.00 1249.50 1932.00 1249.50 2035.00 1262.00 2060.00
X1 18900       4 1910.00 2060.00   190.0   190.0   190.0
X3    10
GR1263.0 1910.00 1251.00 1930.00 1251.00 2040.00 1263.00 2060.00
X1 19000       4 1910.00 2060.00     100     100     100
X3    10
GR1263.0 1910.00 1251.50 1932.00 1251.50 2040.00 1263.00 2060.00
X1 19200       4 1915.00 2070.00     200     200     200
X3    10
GR1263.5 1915.00 1252.00 1935.00 1252.00 2040.00 1264.00 2070.00
X1 19400       4 1920.00 2070.00     200     200     200
X3    10
GR1264.0 1920.00 1253.00 1935.00 1253.00 2045.00 1264.00 2070.00
X1 19500       4 1920.00 2065.00     100     100     100
X3    10
GR1264.7 1920.00 1253.80 1935.00 1253.80 2045.00 1264.35 2065.00
X1 19600       4 1920.00 2065.00     100     100     100
X3    10
GR1265.4 1920.00 1254.20 1935.00 1254.20 2045.00 1265.38 2065.00
X1 19782       4 1910.00 2070.00   182.0   182.0   182.0
X3    10
GR1266.0 1910.00 1254.50 1930.00 1254.50 2050.00 1266.00 2070.00
*
*
*   Start of 59th Av GCS
*
*
*   D/S face of 59th Av. Bridge
*
*
NC                          0.3     0.5
X1 19940       4 1910.00 2080.00     158     158     158
X3    10                   1916            2083
GR1268.0 1910.00 1255.30 1930.00 1255.30 2055.00 1268.00 2080.00
SB  1.05     1.6     2.6   167.5   125.0       3  1951.6     1.8 1255.40 1255.30
*
*   U/S face of 59th Av. Bridge
```

```
*
X1 20050       4 1915.00 2085.00   110.0   110.0   110.0
X2                     1 1268.00 1270.00
X3    10                   1910            2084
GR1270.0 1915.00 1255.40 1935.00 1255.40 2060.00 1270.00 2085.00
*
*   End of 59th Av GCS
*
X1 20160       4 1895.00 2105.00   110.0   110.0   110.0
X3    10
GR1267.8 1895.00 1255.42 1925.00 1255.42 2082.00 1268.50 2105.00
*
*
*   SLA Design for the South Bank Starts
*      North Bank Design : Existing
*      South Bank Design : SLA
*
*
X1 20200       4 1884.79 2126.37    40.0    40.0    40.0
X3    10
GR1267.8 1884.79 1255.45 1921.84 1255.45 2100.21 1268.50 2126.37
NC                           0.1     0.3
X1 20300       4 1884.50 2130.04   100.0   100.0   100.0
X3    10
GR1268.2 1884.50 1255.93 1921.31 1255.93 2100.04 1268.30 2130.04
X1 20500       4 1888.67 2125.05   200.0   200.0   200.0
X3    10
GR1269.0 1888.67 1256.89 1925.04 1256.89 2104.56 1267.50 2125.05
X1 20700       5 1872.21 2190.00   200.0   200.0   200.0
X3    10
GR1269.8 1872.21 1257.85 1920.00 1257.85 2100.00 1265.00 2120.00 1269.00 2190.00
X1 20900       5 1884.03 2180.00   200.0   200.0   200.0
X3    10
GR1270.8 1884.03 1258.81 1920.00 1258.81 2100.00 1264.00 2120.00 1269.00 2180.00
X1 21000       5 1884.87 2190.00   100.0   100.0   100.0
X3    10
GR1271.0 1884.87 1259.29 1920.00 1259.29 2105.00 1264.19 2122.00 1269.30 2190.00
*
*   Start of 57th Av GCS
*
X1 21230       5 1883.67 2190.00   230.0   230.0   230.0
X3    10
GR1272.5 1883.67 1260.39 1920.00 1260.39 2108.00 1266.00 2125.00 1270.00 2190.00
X1 21240       5 1883.70 2190.00    10.0    10.0    10.0
X3    10
GR1272.5 1883.70 1260.50 1920.00 1260.50 2108.00 1266.00 2125.00 1270.00 2190.00
*
*    End of 57th Av GCS
*
X1 21330       5 1883.61 2210.00     90.0    90.0   90.00
X3    10
GR1273.0 1883.61 1260.87 1920.00 1260.87 2106.00 1266.60 2130.00 1270.31 2210.00
*
*    D/S Face of 57th Av. Dip Crossing
*
X1 21395       5 1881.20 2230.00    65.0    65.0   65.0
X3    10    1264
GR1273.6 1881.20 1264.00 1910.00 1264.00 2120.00 1266.60 2130.00 1270.94 2230.00
*
*    U/S Face of 57th Av. Dip Crossing
```

```
*
X1 21565       5 1880.00 2230.00   170.0   170.0   170.0
X3    10    1264
GR1274.0 1880.00 1264.00 1910.00 1264.00 2115.00 1267.00 2130.00 1271.00 2230.00
*
*
*   SLA Design for the North Bank Starts
*      North Bank Design : SLA
*      South Bank Design : SLA
*
*
X1 21700       4 1882.00 2143.05   135.0   135.0   135.0
X3    10
GR1275.0 1882.00 1262.65 1920.00 1262.65 2106.00 1275.00 2143.05
X1 21900       4 1877.83 2157.17   200.0   200.0   200.0
X3    10
GR1276.0 1877.83 1263.61 1915.00 1263.61 2120.00 1276.00 2157.17
X1 22000       4 1836.27 2176.73   100.0   100.0   100.0
X3    10
GR1277.0 1836.27 1264.09 1875.00 1264.09 2138.00 1277.00 2176.73
X1 22200       4 1819.37 2180.63   200.0   200.0   200.0
X3    10
GR1277.0 1819.37 1265.05 1855.22 1265.05 2144.78 1277.00 2180.63
X1 22400       4 1857.03 2152.97   200.0   200.0   200.0
X3    10
GR1277.0 1857.03 1266.01 1890.00 1266.01 2120.00 1277.00 2152.97
X1 22500       4 1868.47 2141.53   100.0   100.0   100.0
X3    10
GR1277.0 1868.47 1266.49 1900.00 1266.49 2110.00 1277.00 2141.53
X1 22510       4 1888.50 2138.50    10.0    10.0    10.0
X3    10
GR1277.0 1888.50 1266.50 1920.00 1266.50 2110.00 1277.00 2138.50
X1 22520       4 1893.80 2141.20    10.0    10.0    10.0
X3    10
GR1277.0 1893.80 1266.60 1925.00 1266.60 2110.00 1277.00 2141.20
X1 22540       4 1899.10 2140.90    20.0    20.0    20.0
X3    10
GR1277.0 1899.10 1266.70 1930.00 1266.70 2110.00 1277.00 2140.90
X1 22560       4 1904.40 2140.60    20.0    20.0    20.0
X3    10
GR1277.0 1904.40 1266.80 1935.00 1266.80 2110.00 1277.00 2140.60
X1 22580       4 1909.70 2140.30    20.0    20.0    20.0
X3    10
GR1277.0 1909.70 1266.90 1940.00 1266.90 2110.00 1277.00 2140.30
X1 22600       4 1915.00 2137.00    20.0    20.0    20.0
X3    10
GR1277.0 1915.00 1267.00 1945.00 1267.00 2110.00 1277.00 2137.00
X1 22620       4 1920.30 2139.70    20.0    20.0    20.0
X3    10
GR1277.0 1920.30 1267.10 1950.00 1267.10 2110.00 1277.00 2139.70
X1 22640       4 1925.60 2139.40    20.0    20.0    20.0
X3    10
GR1277.0 1925.60 1267.20 1955.00 1267.20 2110.00 1277.00 2139.40
X1 22660       4 1930.90 2139.10    20.0    20.0    20.0
X3    10
GR1277.0 1930.90 1267.30 1960.00 1267.30 2110.00 1277.00 2139.10
X1 22680       4 1936.20 2138.80    20.0    20.0    20.0
X3    10
GR1277.0 1936.20 1267.40 1955.40 1267.40 2119.60 1277.00 2138.80
X1 22700       4 1941.50 2135.50    20.0    20.0    20.0
```

```
X3     10
GR1277.0 1941.50 1267.50 1960.50 1267.50 2118.50 1277.00 2135.50
X1 22720       4 1946.50 2138.50    20.0    20.0    20.0
X3     10
GR1277.0 1946.50 1267.50 1965.50 1267.50 2119.50 1277.00 2138.50
X1 22740       4 1951.80 2138.20    20.0    20.0    20.0
X3     10
GR1277.0 1951.80 1267.60 1970.60 1267.60 2119.40 1277.00 2138.20
X1 22760       4 1957.10 2137.90    20.0    20.0    20.0
X3     10
GR1277.0 1957.10 1267.70 1975.70 1267.70 2119.30 1277.00 2137.90
X1 22780       4 1962.40 2137.60    20.0    20.0    20.0
X3     10
GR1277.0 1962.40 1267.80 1980.80 1267.80 2119.20 1277.00 2137.60
X1 22800       4 1963.40 2134.30    20.0    20.0    20.0
X3     10
GR1277.0 1963.40 1267.90 1981.90 1267.90 2118.10 1277.00 2134.30
X1 22820       4 1965.00 2137.00    20.0    20.0    20.0
X3     10
GR1277.0 1965.00 1268.00 1983.00 1268.00 2119.00 1277.00 2137.00
X1 22840       4 1966.30 2136.70    20.0    20.0    20.0
X3     10
GR1277.0 1966.30 1268.10 1984.10 1268.10 2118.90 1277.00 2136.70
X1 22860       4 1968.60 2136.40    20.0    20.0    20.0
X3     10
GR1277.0 1968.60 1268.20 1986.20 1268.20 2118.80 1277.00 2136.40
*
*   U/S of the 55th Av. Channel
*
QT      1    8400
X1 22877       4 1970.90 2146.60    17.0    17.0    17.0
X3     10
GR1277.0 1970.90 1268.30 1988.30 1268.30 2122.20 1277.00 2146.60
X1 22900       4 1972.20 2132.80    23.0    23.0    23.0
X3     10
GR1277.0 1972.20 1268.40 1989.40 1268.40 2117.60 1277.00 2132.80
X1 22920       4 1973.50 2135.50    20.0    20.0    20.0
X3     10
GR1277.0 1973.50 1268.50 1990.50 1268.50 2118.50 1277.00 2135.50
X1 22940       4 1974.80 2135.20    20.0    20.0    20.0
X3     10
GR1277.0 1974.80 1268.60 1991.60 1268.60 2118.40 1277.00 2135.20
X1 22960       4 1976.10 2134.90    20.0    20.0    20.0
X3     10
GR1277.0 1976.10 1268.70 1992.70 1268.70 2118.30 1277.00 2134.90
X1 22980       4 1977.40 2145.10    20.0    20.0    20.0
X3     10
GR1277.0 1977.40 1268.80 1993.80 1268.80 2121.70 1277.00 2145.10
X1 23000       4 1923.20 2103.80      20      20      20
X3     10
GR1281.0 1923.20 1268.90 1947.40 1268.90 2079.60 1281.00 2103.80
X1 23100       4 1935.80 2114.20     100     100     100
X3     10
GR1281.5 1935.80 1269.40 1960.00 1269.40 2090.00 1281.50 2114.20
X1 23200       4 1900.55 2099.45     100     100     100
X3     10
GR1282.0 1900.55 1269.85 1937.00 1269.85 2063.00 1281.78 2099.45
*
*   Start of 54th Av GCS
*
```

```
X1 23300       4 1902.00 2098.01     100     100     100
X3    10
GR1282.0 1902.00 1270.33 1937.00 1270.33 2063.00 1282.00 2098.01
X1 23310       4 1902.05 2097.95      10      10      10
X3    10
GR1282.0 1902.05 1270.35 1937.00 1270.35 2063.00 1282.00 2097.95
*
*   End of 54th Av GCS
*
X1 23400       4 1902.93 2097.07      90      90      90
X3    10
GR1282.5 1902.93 1270.81 1938.00 1270.81 2062.00 1282.50 2097.07
X1 23500       4 1904.87 2095.13     100     100     100
X3    10
GR1283.0 1904.87 1271.29 1940.00 1271.29 2060.00 1283.00 2095.13
*
*   D/S face of 54th Av. Crossing  (flush w/invert)
*
X1 23575       4 1894.85 2090.15      75      75      75
X3    10
GR1286.0 1894.85 1271.65 1937.90 1271.65 2047.10 1286.00 2090.15
*
*   U/S face of 54th Av. Crossing  (flush w/invert)
*
X1 23645       4 1894.85 2090.15      70      70      70
X3    10
GR1286.0 1894.85 1271.65 1937.90 1271.65 2047.10 1286.00 2090.15
X1 23800       4 1902.19 2097.81   155.0   155.0   155.0
X3    10
GR1284.0 1902.19 1272.73 1936.00 1272.73 2064.00 1284.00 2097.81
X1 24000       4 1894.57 2092.43   200.0   200.0   200.0
X3    10
GR1285.0 1894.57 1273.69 1928.50 1273.69 2058.50 1285.00 2092.43
X1 24200       4 1892.45 2107.55   200.0   200.0   200.0
X3    10
GR1288.0 1892.45 1274.65 1932.50 1274.65 2067.50 1288.00 2107.55
*
*
*   SLA Design for the South Bank ties into Existing Bank Protection
*      North Bank Design : SLA
*      South Bank Design : Existing
*
*
X1 24365       4 1890.00 2089.68   165.0   165.0   165.0
X3    10
GR1287.8 1890.00 1275.44 1920.00 1275.44 2055.00 1289.37 2089.68
*
*   Start of GCS
*
X1 24500       4 1890.00 2094.23     135     135     135
X3    10
GR1287.8 1890.00 1276.09 1920.00 1276.09 2060.00 1287.50 2094.23
X1 24510       4 1890.00 2093.23      10      10      10
X3    10
GR1287.8 1890.00 1279.09 1915.00 1279.09 2068.00 1287.50 2093.23
*
*   End of GCS
*
X1 24700       4 1890.00 2086.79     190     190     190
X3    10
```

```
GR1290.0 1890.00 1279.09 1918.00 1279.09 2060.00 1288.50 2086.79
X1 24900       4 1900.00 2090.26     200     200     200
X3    10
GR1289.5 1900.00 1279.09 1925.00 1279.09 2062.00 1289.50 2090.26
X1 25000       4 1900.00 2099.98     100     100     100
X3    10
GR1290.0 1900.00 1279.09 1926.00 1279.09 2071.00 1290.00 2099.98
X1 25200       4 1900.00 2105.45     200     200     200
X3    10
GR1290.0 1900.00 1279.40 1925.00 1279.40 2075.00 1291.00 2105.45
X1 25400       4 1896.00 2096.92     200     200     200
X3    10
GR1291.0 1896.00 1280.59 1920.00 1280.59 2065.00 1292.00 2096.92
X1 25500       4 1900.00 2096.17     100     100     100
X3    10
GR1292.0 1900.00 1281.19 1925.00 1281.19 2065.00 1292.00 2096.17
*
*
*   SLA Design for the North Bank ties into Existing Bank Protection
*      North Bank Design : Existing
*      South Bank Design : Existing
*
*
X1 25600       4 1900.00 2085.00     100     100     100
X3    10
GR1293.0 1900.00 1281.79 1933.00 1281.79 2067.00 1291.00 2085.00
*
*   Start of GCS
*
X1 25650       4 1900.00 2090.00      50      50      50
X3    10
GR1293.0 1900.00 1282.09 1935.00 1282.09 2065.00 1293.00 2090.00
X1 25660       4 1900.00 2090.00      10      10      10
X3    10
GR1293.0 1900.00 1283.09 1935.00 1283.09 2065.00 1293.00 2090.00
*
*   End of GCS
*
X1 25700       4 1900.00 2090.00      40      40      40
X3    10
GR1292.0 1900.00 1283.09 1937.00 1283.09 2060.00 1293.00 2090.00
X1 25827       4 1900.00 2090.00     127     127     127
X3    10
GR1292.0 1900.00 1283.09 1940.00 1283.09 2060.00 1293.00 2090.00
X1 25830       4 1900.00 2090.00       3       3       3
X3    10
GR1292.0 1900.00 1283.17 1940.00 1283.17 2060.00 1293.00 2090.00
X1 25870       5 1895.00 2090.00    40.0    40.0    40.0
X3    10
GR1294.0 1895.00 1283.41 1922.00 1283.41 2042.00 1292.00 2065.00    1294    2090
*
*   D/S face of 51th Av. Bridge
*
NC                            0.3     0.5
X1 26000       4 1900.00 2100.00     130     130     130
X3    10                 1920.65         2070.35
GR1301.0 1900.00 1284.19 1935.00 1284.19 2044.00 1297.50 2100.00
SB  1.05     1.6     2.6   144.7     120       5 1691.00     2.0 1285.00 1284.19
*
*   U/S face of 51th Av. Bridge
```

```
*
X1 26120       4 1900.00 2090.00     120     120     120
X2                     1 1297.14 1302.37
X3    10                 1920.65         2070.35
GR1301.0 1900.00 1285.00 1940.00 1285.00 2050.00 1302.00 2090.00
X1 26260       4 1910.00 2125.00   140.0   140.0   140.0
X3    10
GR1296.0 1910.00 1287.50 1938.00 1287.50 2095.00 1296.00 2125.00
NC                            0.1     0.3
X1 26500       4 1910.00 2170.00     240     240     240
X3    10
GR1297.2 1910.00 1288.98 1940.00 1288.98 2140.00 1297.00 2170.00
*
*
*   SLA Design for the Skunk Creek River System ties into
*   SVERDRUP Existing Conditions Model as presented in
*    "Skunk Creek Master Plan - Final Report" (8/23/95)
*
*
*
X1 26795       8 1880.00 2129.00     295     295     295
X3    10
GR1299.0 1740.00 1299.00 1880.00 1290.50 1895.00 1290.50 1908.00 1290.50    2048
GR1290.0 2095.00 1299.00 2129.00 1300.00 2150.00
X1 27083       5 1865.00 2135.00     288     288     288
X3    10
GR1300.0 1800.00 1300.00 1865.00 1293.00 1890.00 1293.00 2110.00    1301    2135
X1 27282       6 1850.00 2150.00     200     200     200
X3    10
GR1302.0 1800.00 1302.00 1850.00 1296.00 1880.00 1296.00 2125.00    1302    2150
GR1302.0 2200.00
*
*       Manning n-VALUE for natural channel cinder block fences on both sides
*
NC  0.02    0.02   0.032
*
*       Gabions End
*
X1 27424       8 1840.10 2155.00     155     130     142
X3    10
GR1310.0 1840.00 1304.00 1840.10 1298.00 1870.00 1297.50 1898.00  1297.5    2075
GR1298.0 2130.00 1304.00 2155.00 1310.00 2155.10
X1 27741       8 1865.10 2158.00     325     305     317
X3    10
GR1312.0 1865.00 1306.00 1865.10 1300.00 1884.00 1298.00 1890.00  1298.0    2132
GR1300.0 2139.00 1306.00 2158.00 1312.00 2158.10
*
*
*       Existing Grade Control Structure
*       Downstream Lip of Energy Dissipator
*
*
NC  0.02    0.02   0.045      .6      .8
X1 27952       6 1890.00 2130.10     230     200     211
X3    10
GR1307.0 1870.00 1307.00 1890.00 1298.20 1891.00 1298.20 2130.00  1307.0  2130.1
GR1307.0 2150.00
*
*       Start of Existing GCS
*
```

```
*       CONCRETE APRON
*
X1 27953       6 1890.00 2130.10       1       1       1
X3    10
GR1307.0 1870.00 1307.00 1890.00 1296.90 1891.00 1296.90 2130.00  1307.0  2130.1
GR1307.0 2150.00
*
*
*       CONCRETE APRON
*
X1 27968       6 1890.00 2130.10      15      15      15
X3    10
GR1307.0 1870.00 1307.00 1890.00 1296.90 1891.00 1296.90 2130.00  1307.0  2130.1
GR1307.0 2150.00
*
*       End of Existing GCS
*
NC  0.02    0.02   0.014      .3      .5
*
*
*       EXISTING WEIR STRUCTURE ON WEST SIDE OF 48th AVENUE
*       WITH 20-FOOT NOTCH FOR LOW FLOWS
*
*
X1 27969      10 1890.00 2100.10       1       1       1
X3    10
GR1308.0 1870.00 1307.10 1890.00 1301.93 1890.10 1301.93 1985.00 1299.84  1985.1
GR1299.8 2005.00 1301.90 2005.10 1301.93 2100.00 1307.06 2100.10 1308.00  2150.0
*
*       BACK OF WALK EAST SIDE OF 48th AVENUE
*       48TH AVENUE DIP CROSSING
*
X1 28023      11 1845.00 2190.00      54      54      54
X3    10
GR1306.0 1795.00 1304.00 1845.00 1302.42 1870.00 1301.50 1900.00 1300.90  1950.0
GR1300.8 1980.00 1300.90 2010.00 1301.20 2055.00 1301.50 2080.00 1302.30  2120.0
GR  1304    2190
*
*       MANNING n-VALUE FOR NATURAL CHANNEL
*       CONTINUE CINDER BLOCK FENCES ON BOTH BANKS
*
*
NC  0.02    0.02   0.032      .1      .3
X1 28038       9 1850.10 2160.00      15      15      15
X3    10
GR1314.0 1850.00 1308.00 1850.10 1302.00 1880.00 1300.00 1890.00 1299.00  2000.0
GR1300.0 2120.00 1302.00 2140.00 1308.00 2160.00 1314.00 2160.10
X1 28252      16 1853.10 2151.00     200     230     214
X3    10
GR1314.0 1853.00 1308.00 1853.10 1306.00 1861.00 1304.00 1870.00 1302.00  1876.0
GR1300.0 1929.00 1300.00 1958.00 1300.00 1967.00 1300.00 2000.00 1300.00  2091.0
GR1300.0 2122.00 1302.00 2130.00 1304.00 2139.00 1306.00 2144.00 1308.00  2151.0
GR1314.0 2151.10
X1 28545      12 1852.10 2146.00     295     290     293
X3    10
GR1314.0 1852.00 1308.00 1852.10 1306.00 1859.00 1304.00 1866.00 1302.00  1871.0
GR1300.0 1961.00 1300.00 1988.00 1302.00 2116.00 1304.00 2128.00 1306.00  2135.0
GR1308.0 2146.00 1314.00 2146.10
X1 29023      11 1420.00 2118.00     480     475     478
X3    10
```

```
GR1318.0 1414.00 1312.00 1414.10 1312.00 1420.00 1302.00 1454.00 1300.00  1960.0
GR1299.8 1970.00 1300.00 1986.00 1302.00 2085.00 1308.00 2118.00 1308.00  2120.0
GR1314.0 2120.10

EJ

ER
```

```
1*******************************************
 *  HEC-2 WATER SURFACE PROFILES            *
 *                                          *
 *  Version   4.6.2;  May 1991              *
 *                                          *
 *  RUN DATE    13JUL98    TIME   15:33:18  *
 *******************************************
```

```
*************************************
*  U.S. ARMY CORPS OF ENGINEERS
*  HYDROLOGIC ENGINEERING CENTER
*  609 SECOND STREET, SUITE D
*  DAVIS, CALIFORNIA 95616-4687
*          (916) 756-1104
*************************************
```

```
X     X  XXXXXXX   XXXXX              XXXXX
X     X  X        X     X            X     X
X     X  X        X                        X
XXXXXXX  XXXX     X         XXXXX    XXXXX
X     X  X        X                  X
X     X  X        X     X            X
X     X  XXXXXXX   XXXXX             XXXXXXX
```

1

13JUL98 15:33:18 PAGE 1

THIS RUN EXECUTED 13JUL98 15:33:18

```
*************************************
 HEC-2 WATER SURFACE PROFILES

 Version   4.6.2;  May 1991
*************************************
```

T1 SIMONS, LI & ASSOCIATES, INC. (PAZ-MC-17) 01/02/98
T2 SKUNK CREEK HEC-2 ANALYSIS
T3 PROP_H2.DAT 100-YEAR DISCHARGE (Design Model for WSEL Computations)

J1	ICHECK	INQ	NINV	IDIR	STRT	METRIC	HVINS	Q	WSEL	FQ
	0	2	0	0	0.00270	0	0		1197.10	0

J2	NPROF	IPLOT	PRFVS	XSECV	XSECH	FN	ALLDC	IBW	CHNIM	ITRACE
	-1	0	-1	0	0	0	0	0	0	0

J3 VARIABLE CODES FOR SUMMARY PRINTOUT

38	43	1	2	26	8	4	25	5	42
68	39								

QT	1	11000			
NC	.040	.040	.040	0.1	0.3

Start of the Skunk Creek Study
Dibble Design Plans (3/31/95) are used to create the HEC-2 model
North Bank Design : Dibble
South Bank Design : Dibble

```
X1     5724        63     920.62     1072.5
X3       10
GR     1183    820.36      1184     829.21      1185     832.89      1186     837.11      1187     841.08
GR     1188    844.42      1189     847.39      1190     850.48      1191      853.3      1192     856.18
GR     1193    859.18      1194     862.29      1195     865.53      1196     868.87      1197     872.18
GR     1198    875.52      1199     878.86      1200     881.96      1201     885.05      1202     888.03
GR     1203    891.05      1203     892.24      1202     916.69      1201     918.71      1200     920.62
GR     1199    922.76      1198     924.85      1197     926.87      1196     928.89      1195     930.94
GR     1194    932.96      1193     934.83      1192     936.79      1191     938.76      1190     940.71
GR     1189    942.71      1188     944.87      1187     946.95      1186      949.1      1185     957.29
GR     1184    966.05      1181     974.67      1181     1022.46     1184     1031.54     1185     1037.45
GR     1186   1039.76      1187    1042.04      1188     1044.32     1189     1046.61     1190     1048.91
GR     1191   1051.18      1192    1053.45      1193     1055.73     1194     1057.84     1195     1059.94
GR     1196   1062.05      1197    1064.14      1198     1066.27     1199     1068.32     1200     1070.46
GR     1201    1072.5      1202    1220.62      1202     1288.06
1
   13JUL98      15:33:18                                                                          PAGE    2


X1     5814         4    1934.67    2065.33       90.0       90.0       90.0
X3       10
GR   1199.4   1934.67    1181.39    1970.00    1181.39    2030.00    1199.39    2065.33

X1     5970         4    1934.67    2065.33      156.0      156.0      156.0
X3       10
GR   1199.7   1934.67    1181.60    1970.00    1181.60    2030.00    1199.70    2065.33

X1     6070         4    1934.67    2065.33      100.0      100.0      100.0
X3       10
GR   1199.9   1934.67    1181.80    1970.00    1181.80    2030.00    1199.80    2065.33

     D/S face of Paradise Lane Bridge


NC                                     0.3        0.5
X1     6170         4    1934.67    2065.33      100.0      100.0      100.0
X3       10                                                                 1204       1204
GR   1200.0   1934.67    1182.00    1970.00    1182.00    2030.00    1200.00    2065.33

SB     1.05       1.6        2.6                  60.0        4.0     1728.0        2.0    1182.16    1182.00

     U/S face of Paradise Lane Bridge

X1     6236         4    1934.67    2065.33       66.0       66.0       66.0
X2                               1    1200.25    1203.25
X3       10                                                                 1204       1204
BT        4   1934.67    1203.25               1970.00    1203.25               2030.00    1203.25
BT   2065.3   1203.25
GR   1199.4   1934.67    1182.16    1970.00    1182.16    2030.00    1199.39    2065.33

NC                                     0.1        0.3
X1     6370         4    1934.67    2065.33      134.0      134.0      134.0
X3       10
GR   1200.0   1934.67    1182.50    1970.00    1182.50    2030.00    1200.00    2065.33

X1     6570         4    1935.67    2064.33      200.0      200.0      200.0
X3       10
GR   1200.5   1935.67    1183.00    1970.00    1183.00    2030.00    1200.50    2064.33
```

X1	6670	4	1935.67	2064.33	100.0	100.0	100.0			
X3	10									
GR	1200.7	1935.67	1183.20	1970.00	1183.20	2030.00	1200.70	2064.33		

D/S Face of 75th Avenue Bridge

NC				0.3	0.5					
X1	6852	4	1935.67	2064.33	182.0	182.0	182.0			
X3	10							1205	1205	
GR	1200.1	1935.67	1183.58	1970.00	1183.58	2030.00	1200.14	2064.33		

1

SB	1.05	1.6	2.6		60.0	4.0	1542.0	2.0	1183.79	1183.58

U/S Face of 75th Avenue Bridge

X1	6940	4	1935.67	2064.33	88.0	88.0	88.0			
X2			1	1200.40	1203.40					
X3	10							1205	1205	
BT	4	1935.67	1203.40		1970.00	1203.40		2030.00	1203.40	
BT	2064.3	1203.40								
GR	1200.4	1935.67	1183.79	1970.00	1183.79	2030.00	1200.35	2064.33		
NC				0.1	0.3					
X1	7070	4	1935.67	2064.33	130.0	130.0	130.0			
X3	10									
GR	1200.6	1935.67	1184.06	1970.00	1184.06	2030.00	1200.55	2064.33		
X1	7170	4	1937.67	2062.33	100.0	100.0	100.0			
X3	10									
GR	1200.7	1937.67	1184.11	1970.00	1184.11	2030.00	1200.65	2062.33		
X1	7223	4	1937.67	2062.33	53.0	53.0	53.0			
X3	10									
GR	1200.7	1937.67	1184.14	1970.00	1184.14	2030.00	1200.65	2062.33		
X1	7260	4	1928.25	2071.75	37.0	37.0	37.0			
X3	10									
GR	1200.7	1928.25	1184.15	1953.00	1184.15	2047.00	1200.65	2071.75		
X1	7305	4	1928.25	2071.75	45.0	45.0	45.0			
X3	10									
GR	1200.7	1928.25	1184.18	1953.00	1184.18	2047.00	1200.65	2071.75		
X1	7310	4	1930.50	2069.50	5.0	5.0	5.0			
X3	10									
GR	1200.7	1930.50	1185.84	1953.00	1185.84	2047.00	1200.65	2069.50		
X1	7330	4	1930.50	2069.50	20.0	20.0	20.0			
X3	10									
GR	1200.6	1930.50	1192.25	1953.00	1192.25	2047.00	1207.25	2069.50		
X1	7339	8	1934.25	2065.75	9.4	9.4	9.4			
X3	10									
GR	1207.3	1934.25	1194.75	1953.00	1194.75	1998.00	1192.25	1998.00	1192.25	2002.0

```
GR   1194.8    2002.00    1194.75    2047.00    1207.25    2065.75

     Start of Project
     SLA Design is used to create the HEC-2 model
        North Bank Design : SLA
        South Bank Design : SLA


1
   13JUL98      15:33:18                                                                                    PAGE    4


X1     7340         4    1934.00    2066.00          1          1          1
X3       10
GR   1207.5    1934.00    1194.77    1953.00    1194.77    2047.00    1207.50    2066.00

X1     7350         4    1923.90    2076.10         10         10         10
X3       10
GR   1207.5    1923.90    1194.77    1949.35    1194.77    2050.65    1207.50    2076.10

X1     7377         4    1901.41    2098.56         27         27         27
X3       10
GR   1207.5    1901.41    1194.77    1939.60    1194.77    2060.40    1207.50    2098.56

X1     7500         4    1836.17    2163.83        123        123        123
X3       10
GR   1215.0    1836.17    1195.39    1895.00    1195.39    2105.00    1215.00    2163.83

X1     7700         4    1853.30    2146.70        200        200        200
X3       10
GR   1210.3    1853.30    1196.39    1895.00    1196.39    2105.00    1210.29    2146.70

X1     7900         4    1853.90    2146.10        200        200        200
X3       10
GR   1211.1    1853.90    1197.39    1895.00    1197.39    2105.00    1211.09    2146.10

X1     8000         4    1853.90    2146.10        100        100        100
X3       10
GR   1211.1    1853.90    1197.89    1895.00    1197.89    2105.00    1211.09    2146.10

X1     8200         4    1854.80    2145.20      200.0      200.0      200.0
X3       10
GR   1212.3    1854.80    1198.89    1895.00    1198.89    2105.00    1212.29    2145.20

X1     8400         4    1855.40    2144.60      200.0      200.0      200.0
X3       10
GR   1213.1    1855.40    1199.89    1895.00    1199.89    2105.00    1213.09    2144.60

X1     8500         4    1854.17    2145.83      100.0      100.0      100.0
X3       10
GR   1214.0    1854.17    1200.39    1895.00    1200.39    2105.00    1214.00    2145.83

X1     8700         4    1855.10    2144.90      200.0      200.0      200.0
X3       10
GR   1214.7    1855.10    1201.39    1895.00    1201.39    2105.00    1214.69    2144.90

X1     8900         4    1854.50    2145.50      200.0      200.0      200.0
X3       10
GR   1215.9    1854.50    1202.39    1895.00    1202.39    2105.00    1215.89    2145.50
```

```
X1    9000        4   1854.50   2145.50     100.0     100.0     100.0
X3      10
GR   1215.9  1854.50   1202.89   1895.00   1202.89   2105.00   1215.89   2145.50

X1    9100        4   1853.90   2146.10     100.0     100.0     100.0
X3      10
GR   1217.1  1853.90   1203.39   1895.00   1203.39   2105.00   1217.09   2146.10

   Start of Bell GCS

X1    9271        4   1853.75   2146.25       171       171       171
X3      10
GR   1218.0  1853.75   1204.25   1895.00   1204.25   2105.00   1218.00   2146.25

   D/S face of Bell Rd Bridge

NC                                  0.3       0.5
X1    9295        4   1848.00   2151.92        24        24        24
X3      10                        1895                2105
GR   1220.0  1848.00   1204.36   1895.00   1204.36   2105.00   1220.00   2151.92

SB    1.05      1.6       2.6       435       200        12    3173.0         3   1204.91   1204.36

  U/S face of Bell Rd Bridge

X1    9405        4   1867.73   2160.00     110.0     110.0     110.0
X2                        1     1219.12   1220.37
X3      10                        1910                2120
GR   1219.0  1867.73   1204.91   1910.00   1204.91   2120.00   1217.00   2160.00

   SLA Design ties into VAL-TECH Design for the North Bank
      North Bank Design : VAL-TECH
      South Bank Design : SLA

   VAL-TECH Design Plans are used to create the HEC-2 model between
   Stations 9471 and 10025 for the North Bank

X1    9471        4   1868.72   2155.00      66.0      66.0      66.0
X3      10
GR   1219.0  1868.72   1205.24   1910.00   1205.24   2120.00   1217.00   2155.00

   End   of Bell GCS
```



```
X1    9500        4   1869.17   2155.00      29.0      29.0      29.0
```

```
X3      10
GR   1219.0   1869.17   1205.39   1910.00   1205.39   2120.00   1217.00   2155.00

NC                                   0.1       0.3
X1    9700        4    1867.07   2144.00     200.0     200.0     200.0
X3      10
GR   1220.7   1867.07   1206.39   1910.00   1206.39   2110.00   1217.00   2144.00

X1    9800        4    1876.17   2152.00     100.0     100.0     100.0
X3      10
GR   1221.5   1876.17   1206.89   1920.00   1206.89   2122.00   1217.00   2152.00

X1   10000        4    1881.17   2150.00     200.0     200.0     200.0
X3      10
GR   1222.5   1881.17   1207.89   1925.00   1207.89   2120.00   1218.00   2150.00

X1   10025        4    1877.00   2157.00      25.0      25.0      25.0
X3      10
GR   1222.5   1877.00   1207.90   1922.00   1207.90   2117.00   1218.00   2157.00
```

VAL-TECH Design for the North Bank terminates. SLA Design is used for both the North and South Banks

North Bank Design : SLA
South Bank Design : SLA

```
X1   10100        4    1861.17   2138.83      75.0      75.0      75.0
X3      10
GR   1223.0   1861.17   1208.39   1905.00   1208.39   2095.00   1223.00   2138.83

X1   10200        4    1865.57   2140.43     100.0     100.0     100.0
X3      10
GR   1223.7   1865.57   1208.89   1910.00   1208.89   2096.00   1223.70   2140.43

X1   10400        4    1868.87   2135.30     200.0     200.0     200.0
X3      10
GR   1225.0   1868.87   1209.89   1914.20   1209.89   2090.00   1224.90   2135.30

X1   10600        4    1869.70   2130.60     200.0     200.0     200.0
X3      10
GR   1226.0   1869.70   1210.89   1915.00   1210.89   2085.00   1226.09   2130.60

X1   10800        4    1869.80   2130.20     200.0     200.0     200.0
X3      10
GR   1227.3   1869.80   1211.89   1916.00   1211.89   2084.00   1227.29   2130.20
1
```



```
X1   10900        4    1876.67   2136.40     100.0     100.0     100.0
X3      10
GR   1228.0   1876.67   1212.39   1923.50   1212.39   2089.60   1227.61   2136.40

X1   11000      4.0      1876.3    2123.7     100.0     100.0     100.0
GR   1228.0    1876.3    1212.9    1921.7    1212.9    2078.4    1228.0    2123.7
```

X1	11095	4.0	1879.2	2120.8	95.0	95.0	95.0	
GR	1228.0	1879.2	1213.4	1923.2	1213.4	2076.9	1228.0	2120.8

Start of 69th Av. GCS

X1	11100	4.0	1886.4	2113.7	5.0	5.0	5.0	
GR	1228.0	1886.4	1216.9	1924.2	1216.9	2075.9	1228.0	2113.7
X1	11150	4.0	1893.9	2106.2	50.0	50.0	50.0	
GR	1228.0	1893.9	1216.9	1927.2	1216.9	2072.9	1228.0	2106.2

End of 69th Av. GCS

X1	11230	4.0	1896.6	2103.4	80.0	80.0	80.0	
GR	1228.0	1896.6	1217.1	1929.4	1217.1	2070.6	1228.0	2103.4

D/S face of 69th Av. Dip Crossing

X1	11238	4.0	1896.7	2103.3	8.0	8.0	8.0	
GR	1228.0	1896.7	1217.1	1929.4	1217.1	2070.6	1228.0	2103.3

U/S face of 69th Av. Dip Crossing

X1	11305	4.0	1895.2	2104.8	67.0	67.0	67.0	
GR	1228.5	1895.2	1217.1	1929.4	1217.1	2070.6	1228.5	2104.8
X1	11310	4.0	1895.6	2104.4	5.0	5.0	5.0	
GR	1228.5	1895.6	1217.2	1929.4	1217.2	2070.6	1228.5	2104.4
X1	11400	4.0	1895.1	2104.9	90.0	90.0	90.0	
GR	1228.5	1895.1	1217.1	1929.4	1217.1	2070.6	1228.5	2104.9
X1	11500	4.0	1896.4	2103.6	100.0	100.0	100.0	
GR	1228.0	1896.4	1217.7	1927.4	1217.7	2072.6	1228.0	2103.6
X1	11700	4.0	1896.3	2103.7	200.0	200.0	200.0	
GR	1228.5	1896.3	1218.1	1927.5	1218.1	2072.5	1228.5	2103.7

1

X1	11900	4.0	1896.1	2103.9	200.0	200.0	200.0	
GR	1229.0	1896.1	1218.5	1927.5	1218.5	2072.5	1229.0	2103.9
X1	12000	4.0	1895.2	2104.8	100.0	100.0	100.0	
GR	1229.5	1895.2	1218.7	1927.5	1218.7	2072.5	1229.5	2104.8
X1	12200	4.0	1898.0	2102.0	200.0	200.0	200.0	
GR	1229.0	1898.0	1219.2	1927.5	1219.2	2072.5	1229.0	2102.0
X1	12400	4.0	1896.3	2103.7	200.0	200.0	200.0	
GR	1230.0	1896.3	1219.6	1927.5	1219.6	2072.5	1230.0	2103.7
X1	12500	4.0	1896.9	2103.1	100.0	100.0	100.0	
GR	1230.0	1896.9	1219.8	1927.5	1219.8	2072.5	1230.0	2103.1

```
X1   12645     4.0       1897.9    2102.1    145.0     145.0     145.0
GR   1230.0    1897.9    1220.1    1927.5    1220.1    2072.5    1230.0    2102.1

     Start of 67th AV. GCS

X1   12650     4         1900.5    2099.5    5.0       5.0       5.0
GR   1230.0    1900.5    1221.0    1927.5    1221.0    2072.5    1230.0    2099.5

X1   12660     4         1900.5    2099.5    10.0      10.0      10.0
GR   1230.0    1900.5    1221.0    1927.5    1221.0    2072.5    1230.0    2099.5

     End of 67th AV. GCS


     SLA Design ties into INCA Design for the North and South Bank Protection
        North Bank Design : INCA
        South Bank Design : INCA


     INCA Design Plans (10/22/96) and As-Built Survey by Moldonado (per SLA's req
     are used to create the HEC-2 model between Stations 12784 and 13400


X1   12784     4         1895.0    2115.0    124.0     124.0     124.0
GR   1231.5    1895.0    1221.2    1925.8    1221.2    2075.6    1231.1    2115.0

X1   12822     4         1888.0    2113.0    38.0      38.0      38.0
GR   1231.5    1888.0    1221.3    1928.7    1221.3    2082.4    1231.5    2113.0
1
   13JUL98     15:33:18                                                                PAGE    9


X1   12853     8         1881.0    2110.0    31.0      31.0      31.0
GR   1231.4    1881.0    1230.0    1901.0    1230.0    1906.0    1221.4    1940.5    1221.4    2078.7
GR   1230      2096      1230.0    2104.0    1231.7    2110.0

X1   12884.    0 8.0     1892.0    2104.0    31.0      31.0      31.0
GR   1231      1892      1228.8    1912.0    1228.8    1920.0    1221.4    1942.1    1221.4    2064.5
GR   1228.6    2086.0    1228.6    2094.0    1231.9    2104.0

X1   12981     8         1901.0    2079.0    97.0      97.0      97.0
GR   1232.0    1901.0    1226.0    1936.0    1226.0    1946.0    1221.6    1959.1    1221.6    2045.6
GR   1225.8    2054.0    1225.8    2062.0    1231.7    2079.0

NC                                  0.3       0.5

     D/S Face of 67th AV. Bridge

X1   13050     4         1911.0    2080.0    69.0      69.0      69.0
X3      10                          1928.00               2072.00
GR   1231.0    1911.0    1221.8    1948.0    1221.8    2059.5    1232.0    2080.0
```

SB	1.05	1.6	2.6	164	116	12	1431.00	2.5	1221.90	1221.80

U/S Face of 67th AV. Bridge

X1	13131	4	1911.0	2080.0	81.0	81.0	81.0			
X2			1	1233.50	1235.82					
X3	10			1928.00		2072.00				
GR	1231.0	1911.0	1221.9	1947.4	1221.9	2059.8	1232.0	2080.0		
X1	13206	8	1923.0	2085.0	75.0	75.0	75.0			
GR	1231.7	1923.0	1225.4	1945.0	1225.4	1952.0	1222.1	1962.0	1222.1	2038.2
GR	1225.0	2047.0	1225.0	2057.0	1234.7	2085.0				
X1	13300	8	1931.0	2090.0	94.0	94.0	94.0			
GR	1232.7	1931.0	1229.5	1946.0	1229.5	1955.0	1222.2	1969.5	1222.2	2048.8
GR	1229.3	2070.0	1229.3	2080.0	1234.7	2090.0				
NC				0.1	0.3					
X1	13400	4	1953.0	2086.0	100.0	100.0	100.0			
GR	1233.8	1953.0	1222.4	1975.8	1222.4	2050.7	1234.2	2086.0		

INCA Design for the North and South Bank Protection terminates.
SLA Design is used for both the North and South Banks

North Bank Design : SLA
South Bank Design : SLA

X1	13500	4	1935.0	2086.0	100.0	100.0	100.0			
GR	1235.0	1935.0	1222.6	1959.8	1222.6	2061.2	1235.0	2086.0		
X1	13600	4	1930.0	2080.0	100.0	100.0	100.0			
GR	1235.0	1930.0	1222.8	1954.4	1222.8	2055.6	1235.0	2080.0		
X1	13700	4	1917.4	2071.0	100.0	100.0	100.0			
GR	1236.0	1917.4	1223.0	1943.4	1223.0	2045.0	1236.0	2071.0		
X1	13800	4	1908.7	2061.0	100.0	100.0	100.0			
GR	1236.0	1908.7	1223.2	1934.3	1223.2	2035.4	1236.0	2061.0		
X1	13900	4	1904.0	2056.0	100.0	100.0	100.0			
GR	1236.0	1904.0	1223.4	1929.2	1223.4	2030.8	1236.0	2056.0		
X1	14000	4	1903.4	2058.0	100.0	100.0	100.0			
GR	1237.0	1903.4	1223.6	1930.2	1223.6	2031.2	1237.0	2058.0		
X1	14100	4	1898.2	2053.0	100.0	100.0	100.0			
GR	1237.0	1898.2	1223.8	1924.6	1223.8	2026.6	1237.0	2053.0		
X1	14200	4	1897.9	2051.0	100.0	100.0	100.0			
GR	1237.0	1897.9	1224.0	1924.0	1224.0	2024.9	1237.0	2051.0		
X1	14300	4	1910.0	2067.0	100.0	100.0	100.0			
GR	1238.0	1910.0	1224.2	1937.7	1224.2	2039.3	1238.0	2067.0		

X1	14400	4	1905.0	2061.0	100.0	100.0	100.0	
GR	1238.0	1905.0	1224.4	1932.3	1224.4	2033.7	1238.0	2061.0
X1	14500	4	1897.2	2051.0	100.0	100.0	100.0	
GR	1238.0	1897.2	1224.6	1924.1	1224.6	2024.1	1238.0	2051.0
X1	14700	4	1920.8	2079.2	200.0	200.0	200.0	
GR	1238.0	1920.8	1224.9	1960.0	1224.9	2040.0	1238.0	2079.2
X1	14900	4	1924.0	2076.0	200.0	200.0	200.0	
GR	1239.0	1924.0	1225.3	1965.0	1225.3	2035.0	1239.0	2076.0
X1	15000	4	1927.0	2073.0	100.0	100.0	100.0	
GR	1239.0	1927.0	1225.5	1967.5	1225.5	2032.5	1239.0	2073.0
X1	15200	4	1929.7	2070.3	200.0	200.0	200.0	
GR	1239.0	1929.7	1225.9	1969.0	1225.9	2031.0	1239.0	2070.3
X1	15400	4	1931.4	2068.6	200.0	200.0	200.0	
GR	1240.0	1931.4	1226.3	1972.5	1226.3	2027.5	1240.0	2068.6

X1	15495	4	1931.9	2068.1	95.0	95.0	95.0	
GR	1240.0	1931.9	1226.5	1972.5	1226.5	2027.5	1240.0	2068.1

Start of GCS

X1	15500	4.0	1940.5	2059.5	5.0	5.0	5.0	
GR	1240.0	1940.5	1228.5	1975.0	1228.5	2025.0	1240.0	2059.5
X1	15510	4.0	1940.5	2059.5	10.0	10.0	10.0	
GR	1240.0	1940.5	1228.5	1975.0	1228.5	2025.0	1240.0	2059.5

End of GCS

X1	15700	4.0	1945.3	2054.7	190.0	190.0	190.0	
GR	1241.0	1945.3	1229.4	1979.7	1229.4	2020.0	1241.0	2054.7
X1	15900	4.0	1945.7	2054.3	200.0	200.0	200.0	
GR	1243.0	1945.7	1230.4	1983.5	1230.4	2016.5	1243.0	2054.3
X1	16000	4.0	1939.1	2060.9	100.0	100.0	100.0	
GR	1245.0	1939.1	1230.9	1981.5	1230.9	2018.5	1245.0	2060.9
X1	16100	4.0	1933.5	2066.5	100.0	100.0	100.0	
GR	1245.5	1933.5	1231.4	1975.9	1231.4	2024.1	1245.5	2066.5
X1	16200	4.0	1927.8	2072.2	100.0	100.0	100.0	
GR	1246.0	1927.8	1231.8	1970.3	1231.8	2029.7	1246.0	2072.2
X1	16400	4.0	1916.5	2083.5	200.0	200.0	200.0	
GR	1247.0	1916.5	1232.8	1959.1	1232.8	2040.9	1247.0	2083.5
X1	16500	4.0	1912.4	2087.6	100.0	100.0	100.0	

```
GR   1247.0     1912.4     1233.3     1953.5     1233.3     2046.5     1247.0     2087.6

X1   16600      4.0        1913.8     2086.2     100.0      100.0      100.0
GR   1247.0     1913.8     1233.8     1953.5     1233.8     2046.5     1247.0     2086.2

X1   16700      4.0        1915.3     2084.7     100.0      100.0      100.0
GR   1247.0     1915.3     1234.3     1953.5     1234.3     2046.5     1247.0     2084.7

X1   16800      4.0        1916.7     2083.3     100.0      100.0      100.0
GR   1247.0     1916.7     1234.7     1953.5     1234.7     2046.5     1247.0     2083.3

X1   16900      4.0        1915.2     2084.8     100.0      100.0      100.0
GR   1248.0     1915.2     1235.2     1953.5     1235.2     2046.5     1248.0     2084.8
```

SLA Design for the North Bank ties into Existing Bank Protection
North Bank Design : Existing
South Bank Design : SLA


```
X1   17000      4          1879.10    2060.00    100.0      100.0      100.0
X3   10
GR   1255.0     1879.10    1235.70    1937.00    1235.70    2030.00    1253.00    2060.00

X1   17100      4          1879.04    2060.00    100.0      100.0      100.0
X3   10
GR   1255.5     1879.04    1236.18    1937.00    1236.18    2030.00    1253.00    2060.00
```

SLA Design for the South Bank ties into Existing Bank Protection
North Bank Design : Existing
South Bank Design : Existing

SLA Design Model uses Existing Bank Protection
for the North and South Banks between Stations 17200 and 20160

```
X1   17200      4          1910.00    2058.00    100.0      100.0      100.0
X3   10
GR   1252.0     1910.00    1236.66    1935.00    1236.66    2028.00    1253.00    2058.00

X1   17300      4          1912.00    2058.00    100.0      100.0      100.0
X3   10
GR   1253.0     1912.00    1237.14    1935.00    1237.14    2030.00    1253.50    2058.00

X1   17400      4          1910.00    2060.00    100.0      100.0      100.0
X3   10
GR   1253.6     1910.00    1237.62    1940.00    1237.62    2030.00    1253.80    2060.00

X1   17500      4          1910.00    2055.00    100.0      100.0      100.0
X3   10
GR   1254.0     1910.00    1238.10    1935.00    1238.10    2025.00    1254.00    2055.00
```

```
X1    17700        4    1905.00    2055.00      200.0      200.0      200.0
X3       10
GR   1255.5  1905.00    1239.06    1935.00    1239.06    2022.00    1253.00    2055.00

X1    17850        4    1910.00    2055.00      150.0      150.0      150.0
X3       10
GR   1256.0  1910.00    1239.78    1935.00    1239.78    2022.00    1255.80    2055.00

   Start of Union Hills GCS

1
   13JUL98      15:33:18                                                                                    PAGE   13

X1    17950        4    1910.00    2055.00      100.0      100.0      100.0
X3       10
GR   1256.0  1910.00    1240.26    1935.00    1240.26    2025.00    1256.00    2055.00

X1    17955        4    1905.00    2055.00        5.0        5.0        5.0
X3       10
GR   1257.0  1905.00    1245.80    1925.00    1245.80    2035.00    1258.00    2055.00

X1    17960        4    1905.00    2055.00        5.0        5.0        5.0
X3       10
GR   1257.0  1905.00    1245.90    1925.00    1245.90    2035.00    1258.00    2055.00

   End of Union Hills GCS

X1    18000        4    1905.00    2055.00       40.0       40.0       40.0
X3       10
GR   1257.0  1905.00    1246.00    1925.00    1246.00    2035.00    1258.00    2055.00

   D/S face of Union Hills Bridge

NC                                     0.3        0.5
X1    18170        4    1910.00    2060.00        170        170        170
X3       10                          1910
GR   1265.0  1910.00    1247.00    1938.00    1247.00    2040.00    1261.00    2060.00

SB    1.05      1.6        2.6        200         95          6     1478.0        2.0    1248.00    1247.00

   U/S face of Union Hills Bridge

X1    18390        4    1900.00    2060.00      220.0      220.0      220.0
X2                           1    1260.88    1261.10
X3       10                                             2070
GR   1266.0  1900.00    1248.00    1945.00    1248.00    2040.00    1261.00    2060.00

NC                                     0.1        0.3
X1    18500        4    1900.00    2060.00      110.0      110.0      110.0
X3       10
GR   1267.0  1900.00    1248.50    1957.00    1248.50    2045.00    1261.50    2060.00

X1    18710        4    1910.00    2060.00      210.0      210.0      210.0
X3       10
GR   1262.0  1910.00    1249.50    1932.00    1249.50    2035.00    1262.00    2060.00
```

```
X1    18900        4    1910.00    2060.00       190.0       190.0       190.0
X3       10
GR   1263.0  1910.00    1251.00    1930.00    1251.00     2040.00     1263.00     2060.00
```

1


```
X1    19000        4    1910.00    2060.00         100         100         100
X3       10
GR   1263.0  1910.00    1251.50    1932.00    1251.50     2040.00     1263.00     2060.00

X1    19200        4    1915.00    2070.00         200         200         200
X3       10
GR   1263.5  1915.00    1252.00    1935.00    1252.00     2040.00     1264.00     2070.00

X1    19400        4    1920.00    2070.00         200         200         200
X3       10
GR   1264.0  1920.00    1253.00    1935.00    1253.00     2045.00     1264.00     2070.00

X1    19500        4    1920.00    2065.00         100         100         100
X3       10
GR   1264.7  1920.00    1253.80    1935.00    1253.80     2045.00     1264.35     2065.00

X1    19600        4    1920.00    2065.00         100         100         100
X3       10
GR   1265.4  1920.00    1254.20    1935.00    1254.20     2045.00     1265.38     2065.00

X1    19782        4    1910.00    2070.00       182.0       182.0       182.0
X3       10
GR   1266.0  1910.00    1254.50    1930.00    1254.50     2050.00     1266.00     2070.00
```

Start of 59th Av GCS

D/S face of 59th Av. Bridge

```
NC                                    0.3         0.5
X1    19940        4    1910.00    2080.00         158         158         158
X3       10                          1916                    2083
GR   1268.0  1910.00    1255.30    1930.00    1255.30     2055.00     1268.00     2080.00

SB    1.05       1.6        2.6      167.5       125.0           3      1951.6         1.8    1255.40     1255.30
```

U/S face of 59th Av. Bridge

```
X1    20050        4    1915.00    2085.00       110.0       110.0       110.0
X2                            1    1268.00    1270.00
X3       10                          1910                    2084
GR   1270.0  1915.00    1255.40    1935.00    1255.40     2060.00     1270.00     2085.00
```

End of 59th Av GCS

1

```
X1    20160        4    1895.00    2105.00      110.0      110.0      110.0
X3       10
GR    1267.8    1895.00    1255.42    1925.00    1255.42    2082.00    1268.50    2105.00

    SLA Design for the South Bank Starts
      North Bank Design : Existing
      South Bank Design : SLA

X1    20200        4    1884.79    2126.37       40.0       40.0       40.0
X3       10
GR    1267.8    1884.79    1255.45    1921.84    1255.45    2100.21    1268.50    2126.37

NC                                     0.1        0.3
X1    20300        4    1884.50    2130.04      100.0      100.0      100.0
X3       10
GR    1268.2    1884.50    1255.93    1921.31    1255.93    2100.04    1268.30    2130.04

X1    20500        4    1888.67    2125.05      200.0      200.0      200.0
X3       10
GR    1269.0    1888.67    1256.89    1925.04    1256.89    2104.56    1267.50    2125.05

X1    20700        5    1872.21    2190.00      200.0      200.0      200.0
X3       10
GR    1269.8    1872.21    1257.85    1920.00    1257.85    2100.00    1265.00    2120.00    1269.00    2190.00

X1    20900        5    1884.03    2180.00      200.0      200.0      200.0
X3       10
GR    1270.8    1884.03    1258.81    1920.00    1258.81    2100.00    1264.00    2120.00    1269.00    2180.00

X1    21000        5    1884.87    2190.00      100.0      100.0      100.0
X3       10
GR    1271.0    1884.87    1259.29    1920.00    1259.29    2105.00    1264.19    2122.00    1269.30    2190.00

    Start of 57th Av GCS

X1    21230        5    1883.67    2190.00      230.0      230.0      230.0
X3       10
GR    1272.5    1883.67    1260.39    1920.00    1260.39    2108.00    1266.00    2125.00    1270.00    2190.00

X1    21240        5    1883.70    2190.00       10.0       10.0       10.0
X3       10
GR    1272.5    1883.70    1260.50    1920.00    1260.50    2108.00    1266.00    2125.00    1270.00    2190.00

    End of 57th Av GCS
```



```
X1    21330        5    1883.61    2210.00       90.  0   90.  0   90.0  0
X3       10
GR    1273.0    1883.61    1260.87    1920.00    1260.87    2106.00    1266.60    2130.00    1270.31    2210.00
```

D/S Face of 57th Av. Dip Crossing

X1	21395	5	1881.20	2230.00	65.0	65.0	65.0			
X3	10	1264								
GR	1273.6	1881.20	1264.00	1910.00	1264.00	2120.00	1266.60	2130.00	1270.94	2230.00

U/S Face of 57th Av. Dip Crossing

X1	21565	5	1880.00	2230.00	170.0	170.0	170.0			
X3	10	1264								
GR	1274.0	1880.00	1264.00	1910.00	1264.00	2115.00	1267.00	2130.00	1271.00	2230.00

SLA Design for the North Bank Starts
North Bank Design : SLA
South Bank Design : SLA

X1	21700	4	1882.00	2143.05	135.0	135.0	135.0	
X3	10							
GR	1275.0	1882.00	1262.65	1920.00	1262.65	2106.00	1275.00	2143.05
X1	21900	4	1877.83	2157.17	200.0	200.0	200.0	
X3	10							
GR	1276.0	1877.83	1263.61	1915.00	1263.61	2120.00	1276.00	2157.17
X1	22000	4	1836.27	2176.73	100.0	100.0	100.0	
X3	10							
GR	1277.0	1836.27	1264.09	1875.00	1264.09	2138.00	1277.00	2176.73
X1	22200	4	1819.37	2180.63	200.0	200.0	200.0	
X3	10							
GR	1277.0	1819.37	1265.05	1855.22	1265.05	2144.78	1277.00	2180.63
X1	22400	4	1857.03	2152.97	200.0	200.0	200.0	
X3	10							
GR	1277.0	1857.03	1266.01	1890.00	1266.01	2120.00	1277.00	2152.97
X1	22500	4	1868.47	2141.53	100.0	100.0	100.0	
X3	10							
GR	1277.0	1868.47	1266.49	1900.00	1266.49	2110.00	1277.00	2141.53

1

X1	22510	4	1888.50	2138.50	10.0	10.0	10.0	
X3	10							
GR	1277.0	1888.50	1266.50	1920.00	1266.50	2110.00	1277.00	2138.50
X1	22520	4	1893.80	2141.20	10.0	10.0	10.0	
X3	10							
GR	1277.0	1893.80	1266.60	1925.00	1266.60	2110.00	1277.00	2141.20
X1	22540	4	1899.10	2140.90	20.0	20.0	20.0	
X3	10							
GR	1277.0	1899.10	1266.70	1930.00	1266.70	2110.00	1277.00	2140.90

```
X1    22560        4    1904.40    2140.60      20.0      20.0      20.0
X3       10
GR    1277.0    1904.40    1266.80    1935.00    1266.80    2110.00    1277.00    2140.60

X1    22580        4    1909.70    2140.30      20.0      20.0      20.0
X3       10
GR    1277.0    1909.70    1266.90    1940.00    1266.90    2110.00    1277.00    2140.30

X1    22600        4    1915.00    2137.00      20.0      20.0      20.0
X3       10
GR    1277.0    1915.00    1267.00    1945.00    1267.00    2110.00    1277.00    2137.00

X1    22620        4    1920.30    2139.70      20.0      20.0      20.0
X3       10
GR    1277.0    1920.30    1267.10    1950.00    1267.10    2110.00    1277.00    2139.70

X1    22640        4    1925.60    2139.40      20.0      20.0      20.0
X3       10
GR    1277.0    1925.60    1267.20    1955.00    1267.20    2110.00    1277.00    2139.40

X1    22660        4    1930.90    2139.10      20.0      20.0      20.0
X3       10
GR    1277.0    1930.90    1267.30    1960.00    1267.30    2110.00    1277.00    2139.10

X1    22680        4    1936.20    2138.80      20.0      20.0      20.0
X3       10
GR    1277.0    1936.20    1267.40    1955.40    1267.40    2119.60    1277.00    2138.80

X1    22700        4    1941.50    2135.50      20.0      20.0      20.0
X3       10
GR    1277.0    1941.50    1267.50    1960.50    1267.50    2118.50    1277.00    2135.50

X1    22720        4    1946.50    2138.50      20.0      20.0      20.0
X3       10
GR    1277.0    1946.50    1267.50    1965.50    1267.50    2119.50    1277.00    2138.50
1
```



```
X1    22740        4    1951.80    2138.20      20.0      20.0      20.0
X3       10
GR    1277.0    1951.80    1267.60    1970.60    1267.60    2119.40    1277.00    2138.20

X1    22760        4    1957.10    2137.90      20.0      20.0      20.0
X3       10
GR    1277.0    1957.10    1267.70    1975.70    1267.70    2119.30    1277.00    2137.90

X1    22780        4    1962.40    2137.60      20.0      20.0      20.0
X3       10
GR    1277.0    1962.40    1267.80    1980.80    1267.80    2119.20    1277.00    2137.60

X1    22800        4    1963.40    2134.30      20.0      20.0      20.0
X3       10
GR    1277.0    1963.40    1267.90    1981.90    1267.90    2118.10    1277.00    2134.30

X1    22820        4    1965.00    2137.00      20.0      20.0      20.0
X3       10
GR    1277.0    1965.00    1268.00    1983.00    1268.00    2119.00    1277.00    2137.00
```

```
X1    22840        4    1966.30    2136.70       20.0       20.0       20.0
X3       10
GR    1277.0    1966.30    1268.10    1984.10    1268.10    2118.90    1277.00    2136.70

X1    22860        4    1968.60    2136.40       20.0       20.0       20.0
X3       10
GR    1277.0    1968.60    1268.20    1986.20    1268.20    2118.80    1277.00    2136.40

    U/S of the 55th Av. Channel


QT        1     8400
X1    22877        4    1970.90    2146.60       17.0       17.0       17.0
X3       10
GR    1277.0    1970.90    1268.30    1988.30    1268.30    2122.20    1277.00    2146.60

X1    22900        4    1972.20    2132.80       23.0       23.0       23.0
X3       10
GR    1277.0    1972.20    1268.40    1989.40    1268.40    2117.60    1277.00    2132.80

X1    22920        4    1973.50    2135.50       20.0       20.0       20.0
X3       10
GR    1277.0    1973.50    1268.50    1990.50    1268.50    2118.50    1277.00    2135.50

X1    22940        4    1974.80    2135.20       20.0       20.0       20.0
X3       10
GR    1277.0    1974.80    1268.60    1991.60    1268.60    2118.40    1277.00    2135.20
1
    13JUL98      15:33:18                                                          PAGE    19


X1    22960        4    1976.10    2134.90       20.0       20.0       20.0
X3       10
GR    1277.0    1976.10    1268.70    1992.70    1268.70    2118.30    1277.00    2134.90

X1    22980        4    1977.40    2145.10       20.0       20.0       20.0
X3       10
GR    1277.0    1977.40    1268.80    1993.80    1268.80    2121.70    1277.00    2145.10

X1    23000        4    1923.20    2103.80         20         20         20
X3       10
GR    1281.0    1923.20    1268.90    1947.40    1268.90    2079.60    1281.00    2103.80

X1    23100        4    1935.80    2114.20        100        100        100
X3       10
GR    1281.5    1935.80    1269.40    1960.00    1269.40    2090.00    1281.50    2114.20

X1    23200        4    1900.55    2099.45        100        100        100
X3       10
GR    1282.0    1900.55    1269.85    1937.00    1269.85    2063.00    1281.78    2099.45

    Start of 54th Av GCS


X1    23300        4    1902.00    2098.01        100        100        100
X3       10
GR    1282.0    1902.00    1270.33    1937.00    1270.33    2063.00    1282.00    2098.01
```

```
X1    23310        4    1902.05    2097.95        10        10        10
X3       10
GR   1282.0   1902.05   1270.35    1937.00   1270.35   2063.00   1282.00   2097.95

   End of 54th Av GCS

X1    23400        4    1902.93    2097.07        90        90        90
X3       10
GR   1282.5   1902.93   1270.81    1938.00   1270.81   2062.00   1282.50   2097.07

X1    23500        4    1904.87    2095.13       100       100       100
X3       10
GR   1283.0   1904.87   1271.29    1940.00   1271.29   2060.00   1283.00   2095.13

   D/S face of 54th Av. Crossing  (flush w/invert)

X1    23575        4    1894.85    2090.15        75        75        75
X3       10
GR   1286.0   1894.85   1271.65    1937.90   1271.65   2047.10   1286.00   2090.15

   U/S face of 54th Av. Crossing  (flush w/invert)
```



```
X1    23645        4    1894.85    2090.15        70        70        70
X3       10
GR   1286.0   1894.85   1271.65    1937.90   1271.65   2047.10   1286.00   2090.15

X1    23800        4    1902.19    2097.81     155.0     155.0     155.0
X3       10
GR   1284.0   1902.19   1272.73    1936.00   1272.73   2064.00   1284.00   2097.81

X1    24000        4    1894.57    2092.43     200.0     200.0     200.0
X3       10
GR   1285.0   1894.57   1273.69    1928.50   1273.69   2058.50   1285.00   2092.43

X1    24200        4    1892.45    2107.55     200.0     200.0     200.0
X3       10
GR   1288.0   1892.45   1274.65    1932.50   1274.65   2067.50   1288.00   2107.55

   SLA Design for the South Bank ties into Existing Bank Protection
      North Bank Design : SLA
      South Bank Design : Existing

X1    24365        4    1890.00    2089.68     165.0     165.0     165.0
X3       10
GR   1287.8   1890.00   1275.44    1920.00   1275.44   2055.00   1289.37   2089.68

   Start of GCS

X1    24500        4    1890.00    2094.23       135       135       135
```

```
X3      10
GR   1287.8   1890.00   1276.09   1920.00   1276.09   2060.00   1287.50   2094.23

X1    24510         4   1890.00   2093.23        10        10        10
X3      10
GR   1287.8   1890.00   1279.09   1915.00   1279.09   2068.00   1287.50   2093.23

   End of GCS

X1    24700         4   1890.00   2086.79       190       190       190
X3      10
GR   1290.0   1890.00   1279.09   1918.00   1279.09   2060.00   1288.50   2086.79

X1    24900         4   1900.00   2090.26       200       200       200
X3      10
GR   1289.5   1900.00   1279.09   1925.00   1279.09   2062.00   1289.50   2090.26
```



```
X1    25000         4   1900.00   2099.98       100       100       100
X3      10
GR   1290.0   1900.00   1279.09   1926.00   1279.09   2071.00   1290.00   2099.98

X1    25200         4   1900.00   2105.45       200       200       200
X3      10
GR   1290.0   1900.00   1279.40   1925.00   1279.40   2075.00   1291.00   2105.45

X1    25400         4   1896.00   2096.92       200       200       200
X3      10
GR   1291.0   1896.00   1280.59   1920.00   1280.59   2065.00   1292.00   2096.92

X1    25500         4   1900.00   2096.17       100       100       100
X3      10
GR   1292.0   1900.00   1281.19   1925.00   1281.19   2065.00   1292.00   2096.17

   SLA Design for the North Bank ties into Existing Bank Protection
      North Bank Design : Existing
      South Bank Design : Existing

X1    25600         4   1900.00   2085.00       100       100       100
X3      10
GR   1293.0   1900.00   1281.79   1933.00   1281.79   2067.00   1291.00   2085.00

   Start of GCS

X1    25650         4   1900.00   2090.00        50        50        50
X3      10
GR   1293.0   1900.00   1282.09   1935.00   1282.09   2065.00   1293.00   2090.00

X1    25660         4   1900.00   2090.00        10        10        10
X3      10
GR   1293.0   1900.00   1283.09   1935.00   1283.09   2065.00   1293.00   2090.00
```

End of GCS

```
X1    25700        4    1900.00    2090.00       40        40        40
X3       10
GR   1292.0  1900.00    1283.09    1937.00  1283.09   2060.00   1293.00   2090.00

X1    25827        4    1900.00    2090.00      127       127       127
X3       10
GR   1292.0  1900.00    1283.09    1940.00  1283.09   2060.00   1293.00   2090.00
1
```



```
X1    25830        4    1900.00    2090.00        3         3         3
X3       10
GR   1292.0  1900.00    1283.17    1940.00  1283.17   2060.00   1293.00   2090.00

X1    25870        5    1895.00    2090.00     40.0      40.0      40.0
X3       10
GR   1294.0  1895.00    1283.41    1922.00  1283.41   2042.00   1292.00   2065.00      1294      2090
```

D/S face of 51th Av. Bridge

```
NC                                  0.3       0.5
X1    26000        4    1900.00    2100.00      130       130       130
X3       10                        1920.65            2070.35
GR   1301.0  1900.00    1284.19    1935.00  1284.19   2044.00   1297.50   2100.00

SB    1.05      1.6        2.6      144.7      120         5   1691.00       2.0   1285.00   1284.19
```

U/S face of 51th Av. Bridge

```
X1    26120        4    1900.00    2090.00      120       120       120
X2                         1       1297.14  1302.37
X3       10                        1920.65            2070.35
GR   1301.0  1900.00    1285.00    1940.00  1285.00   2050.00   1302.00   2090.00

X1    26260        4    1910.00    2125.00     140.0     140.0     140.0
X3       10
GR   1296.0  1910.00    1287.50    1938.00  1287.50   2095.00   1296.00   2125.00

NC                                  0.1       0.3
X1    26500        4    1910.00    2170.00      240       240       240
X3       10
GR   1297.2  1910.00    1288.98    1940.00  1288.98   2140.00   1297.00   2170.00
```

SLA Design for the Skunk Creek River System ties into
SVERDRUP Existing Conditions Model as presented in
"Skunk Creek Master Plan - Final Report" (8/23/95)

```
X1    26795        8    1880.00    2129.00      295       295       295
X3       10
GR   1299.0  1740.00    1299.00    1880.00  1290.50   1895.00   1290.50   1908.00   1290.50      2048
```

```
GR   1290.0    2095.00    1299.00    2129.00    1300.00    2150.00

X1    27083          5    1865.00    2135.00        288        288        288
X3       10
GR   1300.0    1800.00    1300.00    1865.00    1293.00    1890.00    1293.00    2110.00       1301       2135
1
```



```
X1    27282          6    1850.00    2150.00        200        200        200
X3       10
GR   1302.0    1800.00    1302.00    1850.00    1296.00    1880.00    1296.00    2125.00       1302       2150
GR   1302.0    2200.00
```

Manning n-VALUE for natural channel cinder block fences on both sides

```
NC     0.02       0.02      0.032
```

Gabions End

```
X1    27424          8    1840.10    2155.00        155        130        142
X3       10
GR   1310.0    1840.00    1304.00    1840.10    1298.00    1870.00    1297.50    1898.00       1297.5       2075
GR   1298.0    2130.00    1304.00    2155.00    1310.00    2155.10

X1    27741          8    1865.10    2158.00        325        305        317
X3       10
GR   1312.0    1865.00    1306.00    1865.10    1300.00    1884.00    1298.00    1890.00       1298.0       2132
GR   1300.0    2139.00    1306.00    2158.00    1312.00    2158.10
```

Existing Grade Control Structure
Downstream Lip of Energy Dissipator

```
NC     0.02       0.02      0.045         .6         .8
X1    27952          6    1890.00    2130.10        230        200        211
X3       10
GR   1307.0    1870.00    1307.00    1890.00    1298.20    1891.00    1298.20    2130.00       1307.0       2130.1
GR   1307.0    2150.00
```

Start of Existing GCS

CONCRETE APRON

```
X1    27953          6    1890.00    2130.10          1          1          1
X3       10
GR   1307.0    1870.00    1307.00    1890.00    1296.90    1891.00    1296.90    2130.00       1307.0       2130.1
GR   1307.0    2150.00
```

CONCRETE APRON

```
X1    27968        6    1890.00    2130.10        15        15        15
X3       10
GR   1307.0  1870.00    1307.00    1890.00   1296.90   1891.00   1296.90   2130.00    1307.0    2130.1
GR   1307.0  2150.00

        End of Existing GCS


NC     0.02     0.02      0.014        .3        .5


        EXISTING WEIR STRUCTURE ON WEST SIDE OF 48th AVENUE
        WITH 20-FOOT NOTCH FOR LOW FLOWS


X1    27969       10    1890.00    2100.10         1         1         1
X3       10
GR   1308.0  1870.00    1307.10    1890.00   1301.93   1890.10   1301.93   1985.00   1299.84    1985.1
GR   1299.8  2005.00    1301.90    2005.10   1301.93   2100.00   1307.06   2100.10   1308.00    2150.0

        BACK OF WALK EAST SIDE OF 48th AVENUE
        48TH AVENUE DIP CROSSING


X1    28023       11    1845.00    2190.00        54        54        54
X3       10
GR   1306.0  1795.00    1304.00    1845.00   1302.42   1870.00   1301.50   1900.00   1300.90    1950.0
GR   1300.8  1980.00    1300.90    2010.00   1301.20   2055.00   1301.50   2080.00   1302.30    2120.0
GR     1304     2190

        MANNING n-VALUE FOR NATURAL CHANNEL
        CONTINUE CINDER BLOCK FENCES ON BOTH BANKS


NC     0.02     0.02     0.032        .1        .3
X1    28038        9    1850.10    2160.00        15        15        15
X3       10
GR   1314.0  1850.00    1308.00    1850.10   1302.00   1880.00   1300.00   1890.00   1299.00    2000.0
GR   1300.0  2120.00    1302.00    2140.00   1308.00   2160.00   1314.00   2160.10

X1    28252       16    1853.10    2151.00       200       230       214
X3       10
GR   1314.0  1853.00    1308.00    1853.10   1306.00   1861.00   1304.00   1870.00   1302.00    1876.0
GR   1300.0  1929.00    1300.00    1958.00   1300.00   1967.00   1300.00   2000.00   1300.00    2091.0
GR   1300.0  2122.00    1302.00    2130.00   1304.00   2139.00   1306.00   2144.00   1308.00    2151.0
GR   1314.0  2151.10
1
```



```
X1    28545       12    1852.10    2146.00       295       290       293
X3       10
GR   1314.0  1852.00    1308.00    1852.10   1306.00   1859.00   1304.00   1866.00   1302.00    1871.0
GR   1300.0  1961.00    1300.00    1988.00   1302.00   2116.00   1304.00   2128.00   1306.00    2135.0
GR   1308.0  2146.00    1314.00    2146.10
```

```
X1    29023        11    1420.00    2118.00        480        475        478
X3       10
GR   1318.0    1414.00    1312.00    1414.10    1312.00    1420.00    1302.00    1454.00    1300.00    1960.0
GR   1299.8    1970.00    1300.00    1986.00    1302.00    2085.00    1308.00    2118.00    1308.00    2120.0
GR   1314.0    2120.10
```

1


```
   SECNO     DEPTH     CWSEL     CRIWS     WSELK     EG        HV        HL        OLOSS     L-BANK ELEV
   Q         QLOB      QCH       QROB      ALOB      ACH       AROB      VOL       TWA       R-BANK ELEV
   TIME      VLOB      VCH       VROB      XNL       XNCH      XNR       WTN       ELMIN     SSTA
   SLOPE     XLOBL     XLCH      XLOBR     ITRIAL    IDC       ICONT     CORAR     TOPWID    ENDST

*PROF 1

CCHV=     .100 CEHV=     .300
*SECNO 5724.000
3280 CROSS SECTION   5724.00 EXTENDED     11.62 FEET

3495 OVERBANK AREA ASSUMED NON-EFFECTIVE, ELLEA=     1200.00 ELREA=     1201.00

  5724.000     13.62   1194.62       .00   1197.10   1195.79      1.16       .00       .00   1200.00
   11000.0        .0   11000.0        .0        .0    1271.1        .0        .0        .0   1201.00
       .00       .00      8.65       .00      .000      .040      .000      .000   1181.00    931.70
   .002667        0.        0.        0.         0         0         3       .00    127.44   1059.15

*SECNO 5814.000

3495 OVERBANK AREA ASSUMED NON-EFFECTIVE, ELLEA=     1199.40 ELREA=     1199.39

  5814.000     13.31   1194.70       .00       .00   1196.13      1.43       .26       .08   1199.40
   11000.0        .0   11000.0        .0        .0    1146.2        .0       2.5        .2   1199.39
       .00       .00      9.60       .00      .000      .040      .000      .000   1181.39   1943.89
   .003242       90.       90.       90.         2         0         0       .00    112.23   2056.12

*SECNO 5970.000

3495 OVERBANK AREA ASSUMED NON-EFFECTIVE, ELLEA=     1199.70 ELREA=     1199.70

  5970.000     13.69   1195.29       .00       .00   1196.62      1.33       .48       .01   1199.70
   11000.0        .0   11000.0        .0        .0    1186.8        .0       6.7        .7   1199.70
       .01       .00      9.27       .00      .000      .040      .000      .000   1181.60   1943.29
   .002933      156.      156.      156.         2         0         0       .00    113.43   2056.71

*SECNO 6070.000

3495 OVERBANK AREA ASSUMED NON-EFFECTIVE, ELLEA=     1199.90 ELREA=     1199.80

  6070.000     13.81   1195.61       .00       .00   1196.91      1.30       .29       .00   1199.90
   11000.0        .0   11000.0        .0        .0    1200.9        .0       9.4        .9   1199.80
       .01       .00      9.16       .00      .000      .040      .000      .000   1181.80   1943.06
   .002840      100.      100.      100.         1         0         0       .00    114.03   2057.09
```

SECNO	DEPTH	CWSEL	CRIWS	WSELK	EG	HV	HL	OLOSS	L-BANK ELEV
Q	QLOB	QCH	QROB	ALOB	ACH	AROB	VOL	TWA	R-BANK ELEV
TIME	VLOB	VCH	VROB	XNL	XNCH	XNR	WTN	ELMIN	SSTA
SLOPE	XLOBL	XLCH	XLOBR	ITRIAL	IDC	ICONT	CORAR	TOPWID	ENDST

CCHV= .300 CEHV= .500
*SECNO 6170.000

3495 OVERBANK AREA ASSUMED NON-EFFECTIVE, ELLEA= 1204.00 ELREA= 1204.00

6170.000	13.93	1195.93	.00	.00	1197.20	1.27	.28	.01	1200.00
11000.0	.0	11000.0	.0	.0	1216.9	.0	12.2	1.2	1200.00
.01	.00	9.04	.00	.000	.040	.000	.000	1182.00	1942.65
.002738	100.	100.	100.	2	0	0	.00	114.69	2057.35

SPECIAL BRIDGE

SB	XK	XKOR	COFQ	RDLEN	BWC	BWP	BAREA	SS	ELCHU	ELCHD
	1.05	1.60	2.60	.00	60.00	4.00	1728.00	2.00	1182.16	1182.00

*SECNO 6236.000
CLASS A LOW FLOW

3420 BRIDGE W.S.= 1195.85 BRIDGE VELOCITY= 9.56 CALCULATED CHANNEL AREA= 1141.

EGPRS	EGLWC	H3	QWEIR	QLOW	BAREA	TRAPEZOID AREA	ELLC	ELTRD	WEIRLN
.00	1197.33	.17	0.	11000.	1728.	1668.	1200.25	1203.25	0.

3495 OVERBANK AREA ASSUMED NON-EFFECTIVE, ELLEA= 1204.00 ELREA= 1204.00

6236.000	13.94	1196.10	.00	.00	1197.33	1.23	.13	.00	1199.40
11000.0	.0	11000.0	.0	.0	1234.4	.0	14.0	1.4	1199.39
.02	.00	8.91	.00	.000	.040	.000	.000	1182.16	1941.44
.002674	66.	66.	66.	0	0	0	.00	117.14	2058.58

CCHV= .100 CEHV= .300
*SECNO 6370.000

3495 OVERBANK AREA ASSUMED NON-EFFECTIVE, ELLEA= 1200.00 ELREA= 1200.00

6370.000	13.95	1196.45	.00	.00	1197.69	1.24	.36	.00	1200.00
11000.0	.0	11000.0	.0	.0	1231.0	.0	17.8	1.7	1200.00
.02	.00	8.94	.00	.000	.040	.000	.000	1182.50	1941.82
.002679	134.	134.	134.	0	0	0	.00	116.37	2058.18

SECNO	DEPTH	CWSEL	CRIWS	WSELK	EG	HV	HL	OLOSS	L-BANK ELEV
Q	QLOB	QCH	QROB	ALOB	ACH	AROB	VOL	TWA	R-BANK ELEV
TIME	VLOB	VCH	VROB	XNL	XNCH	XNR	WTN	ELMIN	SSTA
SLOPE	XLOBL	XLCH	XLOBR	ITRIAL	IDC	ICONT	CORAR	TOPWID	ENDST

*SECNO 6570.000

3495 OVERBANK AREA ASSUMED NON-EFFECTIVE, ELLEA= 1200.50 ELREA= 1200.50

6570.000	13.98	1196.98	.00	.00	1198.23	1.26	.54	.00	1200.50
11000.0	.0	11000.0	.0	.0	1222.9	.0	23.5	2.2	1200.50
.03	.00	8.99	.00	.000	.040	.000	.000	1183.00	1942.56
.002700	200.	200.	200.	0	0	0	.00	114.87	2057.44

*SECNO 6670.000

3495 OVERBANK AREA ASSUMED NON-EFFECTIVE, ELLEA= 1200.70 ELREA= 1200.70

6670.000	14.06	1197.26	.00	.00	1198.50	1.24	.27	.00	1200.70
11000.0	.0	11000.0	.0	.0	1230.7	.0	26.3	2.5	1200.70
.03	.00	8.94	.00	.000	.040	.000	.000	1183.20	1942.43
.002652	100.	100.	100.	1	0	0	.00	115.14	2057.57

CCHV= .300 CEHV= .500
*SECNO 6852.000

3495 OVERBANK AREA ASSUMED NON-EFFECTIVE, ELLEA= 1205.00 ELREA= 1205.00

6852.000	14.26	1197.84	.00	.00	1198.99	1.15	.46	.03	1200.10
11000.0	.0	11000.0	.0	.0	1277.9	.0	31.5	3.0	1200.14
.03	.00	8.61	.00	.000	.040	.000	.000	1183.58	1940.36
.002438	182.	182.	182.	2	0	0	.00	119.20	2059.57

SPECIAL BRIDGE

SB	XK	XKOR	COFQ	RDLEN	BWC	BWP	BAREA	SS	ELCHU	ELCHD
	1.05	1.60	2.60	.00	60.00	4.00	1542.00	2.00	1183.79	1183.58

*SECNO 6940.000
CLASS A LOW FLOW

3420 BRIDGE W.S.= 1197.80 BRIDGE VELOCITY= 9.25 CALCULATED CHANNEL AREA= 1177.
1

SECNO	DEPTH	CWSEL	CRIWS	WSELK	EG	HV	HL	OLOSS	L-BANK ELEV
Q	QLOB	QCH	QROB	ALOB	ACH	AROB	VOL	TWA	R-BANK ELEV
TIME	VLOB	VCH	VROB	XNL	XNCH	XNR	WTN	ELMIN	SSTA
SLOPE	XLOBL	XLCH	XLOBR	ITRIAL	IDC	ICONT	CORAR	TOPWID	ENDST

EGPRS	EGLWC	H3	QWEIR	QLOW	BAREA	TRAPEZOID AREA	ELLC	ELTRD	WEIRLN
.00	1199.15	.14	0.	11000.	1542.	1482.	1200.40	1203.40	0.

3495 OVERBANK AREA ASSUMED NON-EFFECTIVE, ELLEA= 1205.00 ELREA= 1205.00

6940.000	14.19	1197.98	.00	.00	1199.15	1.17	.16	.00	1200.40
11000.0	.0	11000.0	.0	.0	1268.1	.0	34.1	3.2	1200.35
.04	.00	8.67	.00	.000	.040	.000	.000	1183.79	1940.67
.002488	88.	88.	88.	0	0	0	.00	118.74	2059.42

CCHV= .100 CEHV= .300

*SECNO 7070.000

3495 OVERBANK AREA ASSUMED NON-EFFECTIVE, ELLEA= 1200.60 ELREA= 1200.55

7070.000	14.26	1198.32	.00	.00	1199.47	1.15	.32	.00	1200.60
11000.0	.0	11000.0	.0	.0	1276.8	.0	37.9	3.6	1200.55
.04	.00	8.62	.00	.000	.040	.000	.000	1184.06	1940.43
.002445	130.	130.	130.	1	0	0	.00	119.23	2059.66

*SECNO 7170.000

3495 OVERBANK AREA ASSUMED NON-EFFECTIVE, ELLEA= 1200.70 ELREA= 1200.65

7170.000	14.45	1198.56	.00	.00	1199.71	1.16	.24	.00	1200.70
11000.0	.0	11000.0	.0	.0	1275.0	.0	40.8	3.9	1200.65
.04	.00	8.63	.00	.000	.040	.000	.000	1184.11	1941.83
.002396	100.	100.	100.	0	0	0	.00	116.42	2058.25

*SECNO 7223.000

3495 OVERBANK AREA ASSUMED NON-EFFECTIVE, ELLEA= 1200.70 ELREA= 1200.65

7223.000	14.57	1198.71	.00	.00	1199.84	1.13	.13	.00	1200.70
11000.0	.0	11000.0	.0	.0	1289.3	.0	42.4	4.0	1200.65
.05	.00	8.53	.00	.000	.040	.000	.000	1184.14	1941.55
.002324	53.	53.	53.	2	0	0	.00	116.98	2058.53

1

SECNO	DEPTH	CWSEL	CRIWS	WSELK	EG	HV	HL	OLOSS	L-BANK ELEV
Q	QLOB	QCH	QROB	ALOB	ACH	AROB	VOL	TWA	R-BANK ELEV
TIME	VLOB	VCH	VROB	XNL	XNCH	XNR	WTN	ELMIN	SSTA
SLOPE	XLOBL	XLCH	XLOBR	ITRIAL	IDC	ICONT	CORAR	TOPWID	ENDST

*SECNO 7260.000

3301 HV CHANGED MORE THAN HVINS

3302 WARNING: CONVEYANCE CHANGE OUTSIDE OF ACCEPTABLE RANGE, KRATIO = 1.51

3495 OVERBANK AREA ASSUMED NON-EFFECTIVE, ELLEA= 1200.70 ELREA= 1200.65

7260.000	15.20	1199.35	.00	.00	1199.95	.60	.05	.05	1200.70
11000.0	.0	11000.0	.0	.0	1775.5	.0	43.7	4.1	1200.65
.05	.00	6.20	.00	.000	.040	.000	.000	1184.15	1930.26
.001020	37.	37.	37.	2	0	0	.00	139.54	2069.81

*SECNO 7305.000

3495 OVERBANK AREA ASSUMED NON-EFFECTIVE, ELLEA= 1200.70 ELREA= 1200.65

7305.000	15.22	1199.40	.00	.00	1199.99	.59	.05	.00	1200.70
11000.0	.0	11000.0	.0	.0	1778.3	.0	45.5	4.3	1200.65
.05	.00	6.19	.00	.000	.040	.000	.000	1184.18	1930.20
.001015	45.	45.	45.	2	0	0	.00	139.67	2069.87

*SECNO 7310.000

3495 OVERBANK AREA ASSUMED NON-EFFECTIVE, ELLEA= 1200.70 ELREA= 1200.65

7310.000	13.42	1199.26	.00	.00	1200.06	.80	.01	.06	1200.70
11000.0	.0	11000.0	.0	.0	1535.3	.0	45.7	4.3	1200.65
.05	.00	7.16	.00	.000	.040	.000	.000	1185.84	1932.67
.001567	5.	5.	5.	2	0	0	.00	134.72	2067.40

*SECNO 7330.000

3301 HV CHANGED MORE THAN HVINS

3685 20 TRIALS ATTEMPTED WSEL,CWSEL
3693 PROBABLE MINIMUM SPECIFIC ENERGY
3720 CRITICAL DEPTH ASSUMED

1

SECNO	DEPTH	CWSEL	CRIWS	WSELK	EG	HV	HL	OLOSS	L-BANK ELEV
Q	QLOB	QCH	QROB	ALOB	ACH	AROB	VOL	TWA	R-BANK ELEV
TIME	VLOB	VCH	VROB	XNL	XNCH	XNR	WTN	ELMIN	SSTA
SLOPE	XLOBL	XLCH	XLOBR	ITRIAL	IDC	ICONT	CORAR	TOPWID	ENDST

3495 OVERBANK AREA ASSUMED NON-EFFECTIVE, ELLEA= 1200.60 ELREA= 1207.25

7330.000	7.09	1199.34	1199.34	.00	1202.49	3.15	.07	.71	1200.60
11000.0	.0	11000.0	.0	.0	771.7	.0	46.2	4.3	1207.25
.05	.00	14.25	.00	.000	.040	.000	.000	1192.25	1933.90
.013295	20.	20.	20.	20	11	0	.00	123.74	2057.63

*SECNO 7339.000
3685 20 TRIALS ATTEMPTED WSEL,CWSEL

3693 PROBABLE MINIMUM SPECIFIC ENERGY
3720 CRITICAL DEPTH ASSUMED

3495 OVERBANK AREA ASSUMED NON-EFFECTIVE, ELLEA= 1207.30 ELREA= 1207.25

7339.000	9.63	1201.88	1201.88	.00	1205.17	3.30	.13	.04	1207.30
11000.0	.0	11000.0	.0	.0	754.8	.0	46.4	4.4	1207.25
.05	.00	14.57	.00	.000	.040	.000	.000	1192.25	1942.35
.013950	9.	9.	9.	20	11	0	.00	115.34	2057.69

*SECNO 7340.000
7185 MINIMUM SPECIFIC ENERGY
3720 CRITICAL DEPTH ASSUMED

3495 OVERBANK AREA ASSUMED NON-EFFECTIVE, ELLEA= 1207.50 ELREA= 1207.50

7340.000	7.20	1201.97	1201.97	.00	1205.27	3.30	.01	.00	1207.50
11000.0	.0	11000.0	.0	.0	754.5	.0	46.4	4.4	1207.50
.05	.00	14.58	.00	.000	.040	.000	.000	1194.77	1942.25
.013252	1.	1.	1.	2	15	0	.00	115.50	2057.75

*SECNO 7350.000

3301 HV CHANGED MORE THAN HVINS

3302 WARNING: CONVEYANCE CHANGE OUTSIDE OF ACCEPTABLE RANGE, KRATIO = 1.68

SECNO	DEPTH	CWSEL	CRIWS	WSELK	EG	HV	HL	OLOSS	L-BANK ELEV
Q	QLOB	QCH	QROB	ALOB	ACH	AROB	VOL	TWA	R-BANK ELEV
TIME	VLOB	VCH	VROB	XNL	XNCH	XNR	WTN	ELMIN	SSTA
SLOPE	XLOBL	XLCH	XLOBR	ITRIAL	IDC	ICONT	CORAR	TOPWID	ENDST

3495 OVERBANK AREA ASSUMED NON-EFFECTIVE, ELLEA= 1207.50 ELREA= 1207.50

7350.000	9.21	1203.98	.00	.00	1205.52	1.55	.07	.18	1207.50
11000.0	.0	11000.0	.0	.0	1102.2	.0	46.6	4.4	1207.50
.05	.00	9.98	.00	.000	.040	.000	.000	1194.77	1930.94
.004716	10.	10.	10.	5	0	0	.00	138.11	2069.06

*SECNO 7377.000

3301 HV CHANGED MORE THAN HVINS

3302 WARNING: CONVEYANCE CHANGE OUTSIDE OF ACCEPTABLE RANGE, KRATIO = 1.45

3495 OVERBANK AREA ASSUMED NON-EFFECTIVE, ELLEA= 1207.50 ELREA= 1207.50

7377.000	10.11	1204.88	.00	.00	1205.68	.81	.08	.07	1207.50

11000.0	.0	11000.0	.0	.0	1527.0	.0	47.5	4.5	1207.50
.05	.00	7.20	.00	.000	.040	.000	.000	1194.77	1909.28
.002249	27.	27.	27.	3	0	0	.00	181.41	2090.69

*SECNO 7500.000

3302 WARNING: CONVEYANCE CHANGE OUTSIDE OF ACCEPTABLE RANGE, KRATIO = 1.69

3495 OVERBANK AREA ASSUMED NON-EFFECTIVE, ELLEA= 1215.00 ELREA= 1215.00

7500.000	10.18	1205.57	.00	.00	1205.88	.31	.15	.05	1215.00
11000.0	.0	11000.0	.0	.0	2449.0	.0	53.1	5.1	1215.00
.06	.00	4.49	.00	.000	.040	.000	.000	1195.39	1864.46
.000789	123.	123.	123.	2	0	0	.00	271.09	2135.54

*SECNO 7700.000

3495 OVERBANK AREA ASSUMED NON-EFFECTIVE, ELLEA= 1210.30 ELREA= 1210.29

7700.000	9.32	1205.71	.00	.00	1206.09	.38	.18	.02	1210.30
11000.0	.0	11000.0	.0	.0	2216.5	.0	63.8	6.4	1210.29
.07	.00	4.96	.00	.000	.040	.000	.000	1196.39	1867.07
.001072	200.	200.	200.	2	0	0	.00	265.87	2132.95

SECNO	DEPTH	CWSEL	CRIWS	WSELK	EG	HV	HL	OLOSS	L-BANK ELEV
Q	QLOB	QCH	QROB	ALOB	ACH	AROB	VOL	TWA	R-BANK ELEV
TIME	VLOB	VCH	VROB	XNL	XNCH	XNR	WTN	ELMIN	SSTA
SLOPE	XLOBL	XLCH	XLOBR	ITRIAL	IDC	ICONT	CORAR	TOPWID	ENDST

*SECNO 7900.000

3495 OVERBANK AREA ASSUMED NON-EFFECTIVE, ELLEA= 1211.10 ELREA= 1211.09

7900.000	8.50	1205.89	.00	.00	1206.36	.47	.25	.03	1211.10
11000.0	.0	11000.0	.0	.0	2002.0	.0	73.5	7.6	1211.09
.08	.00	5.49	.00	.000	.040	.000	.000	1197.39	1869.51
.001466	200.	200.	200.	0	0	0	.00	260.99	2130.50

*SECNO 8000.000

3495 OVERBANK AREA ASSUMED NON-EFFECTIVE, ELLEA= 1211.10 ELREA= 1211.09

8000.000	8.13	1206.02	.00	.00	1206.53	.51	.16	.01	1211.10
11000.0	.0	11000.0	.0	.0	1913.2	.0	78.0	8.2	1211.09
.09	.00	5.75	.00	.000	.040	.000	.000	1197.89	1869.70
.001700	100.	100.	100.	0	0	0	.00	260.61	2130.32

*SECNO 8200.000

3495 OVERBANK AREA ASSUMED NON-EFFECTIVE, ELLEA= 1212.30 ELREA= 1212.29

8200.000	7.44	1206.33	.00	.00	1206.96	.63	.39	.03	1212.30
11000.0	.0	11000.0	.0	.0	1730.2	.0	86.3	9.3	1212.29
.09	.00	6.36	.00	.000	.040	.000	.000	1198.89	1872.68
.002305	200.	200.	200.	0	0	0	.00	254.67	2127.34

*SECNO 8400.000

3495 OVERBANK AREA ASSUMED NON-EFFECTIVE, ELLEA= 1213.10 ELREA= 1213.09

8400.000	6.89	1206.78	.00	.00	1207.52	.74	.52	.04	1213.10
11000.0	.0	11000.0	.0	.0	1588.4	.0	93.9	10.5	1213.09
.10	.00	6.93	.00	.000	.040	.000	.000	1199.89	1874.36
.003009	200.	200.	200.	2	0	0	.00	251.30	2125.66

*SECNO 8500.000

1

SECNO	DEPTH	CWSEL	CRIWS	WSELK	EG	HV	HL	OLOSS	L-BANK ELEV
Q	QLOB	QCH	QROB	ALOB	ACH	AROB	VOL	TWA	R-BANK ELEV
TIME	VLOB	VCH	VROB	XNL	XNCH	XNR	WTN	ELMIN	SSTA
SLOPE	XLOBL	XLCH	XLOBR	ITRIAL	IDC	ICONT	CORAR	TOPWID	ENDST

3495 OVERBANK AREA ASSUMED NON-EFFECTIVE, ELLEA= 1214.00 ELREA= 1214.00

8500.000	6.67	1207.06	.00	.00	1207.86	.80	.32	.02	1214.00
11000.0	.0	11000.0	.0	.0	1531.2	.0	97.5	11.1	1214.00
.11	.00	7.18	.00	.000	.040	.000	.000	1200.39	1875.03
.003374	100.	100.	100.	1	0	0	.00	249.95	2124.98

*SECNO 8700.000

3495 OVERBANK AREA ASSUMED NON-EFFECTIVE, ELLEA= 1214.70 ELREA= 1214.69

8700.000	6.33	1207.72	.00	.00	1208.62	.89	.73	.03	1214.70
11000.0	.0	11000.0	.0	.0	1450.5	.0	104.4	12.2	1214.69
.11	.00	7.58	.00	.000	.040	.000	.000	1201.39	1876.01
.003997	200.	200.	200.	2	0	0	.00	247.99	2124.00

*SECNO 8900.000

3495 OVERBANK AREA ASSUMED NON-EFFECTIVE, ELLEA= 1215.90 ELREA= 1215.89

8900.000	6.13	1208.52	.00	.00	1209.48	.96	.84	.02	1215.90
11000.0	.0	11000.0	.0	.0	1400.7	.0	110.9	13.4	1215.89
.12	.00	7.85	.00	.000	.040	.000	.000	1202.39	1876.62
.004461	200.	200.	200.	2	0	0	.00	246.78	2123.40

*SECNO 9000.000

3495 OVERBANK AREA ASSUMED NON-EFFECTIVE, ELLEA= 1215.90 ELREA= 1215.89

9000.000	6.08	1208.97	.00	.00	1209.94	.97	.45	.00	1215.90
11000.0	.0	11000.0	.0	.0	1390.9	.0	114.1	13.9	1215.89
.12	.00	7.91	.00	.000	.040	.000	.000	1202.89	1876.09
.004590	100.	100.	100.	2	0	0	.00	247.84	2123.93

*SECNO 9100.000

3495 OVERBANK AREA ASSUMED NON-EFFECTIVE, ELLEA= 1217.10 ELREA= 1217.09

1

13JUL98 15:33:18

SECNO	DEPTH	CWSEL	CRIWS	WSELK	EG	HV	HL	OLOSS	L-BANK ELEV
Q	QLOB	QCH	QROB	ALOB	ACH	AROB	VOL	TWA	R-BANK ELEV
TIME	VLOB	VCH	VROB	XNL	XNCH	XNR	WTN	ELMIN	SSTA
SLOPE	XLOBL	XLCH	XLOBR	ITRIAL	IDC	ICONT	CORAR	TOPWID	ENDST
9100.000	6.03	1209.42	.00	.00	1210.41	.99	.47	.01	1217.10
11000.0	.0	11000.0	.0	.0	1375.0	.0	117.3	14.5	1217.09
.13	.00	8.00	.00	.000	.040	.000	.000	1203.39	1876.93
.004728	100.	100.	100.	0	0	0	.00	246.16	2123.09

*SECNO 9271.000

3495 OVERBANK AREA ASSUMED NON-EFFECTIVE, ELLEA= 1218.00 ELREA= 1218.00

9271.000	5.97	1210.22	.00	.00	1211.24	1.02	.82	.01	1218.00
11000.0	.0	11000.0	.0	.0	1360.1	.0	122.7	15.5	1218.00
.13	.00	8.09	.00	.000	.040	.000	.000	1204.25	1877.10
.004893	171.	171.	171.	1	0	0	.00	245.81	2122.90

CCHV= .300 CEHV= .500
*SECNO 9295.000

3470 ENCROACHMENT STATIONS= 1895.0 2105.0 TYPE= 1 TARGET= 210.000

3495 OVERBANK AREA ASSUMED NON-EFFECTIVE, ELLEA= 100000.00 ELREA= 100000.00

9295.000	5.88	1210.24	.00	.00	1211.47	1.23	.13	.11	100000.00
11000.0	.0	11000.0	.0	.0	1235.6	.0	123.4	15.6	100000.00
.13	.00	8.90	.00	.000	.040	.000	.000	1204.36	1895.00
.005813	24.	24.	24.	2	0	0	.00	210.00	2105.00

SPECIAL BRIDGE

SB	XK	XKOR	COFQ	RDLEN	BWC	BWP	BAREA	SS	ELCHU	ELCHD
	1.05	1.60	2.60	435.00	200.00	12.00	3173.00	3.00	1204.91	1204.36

*SECNO 9405.000
CLASS A LOW FLOW

3420 BRIDGE W.S.= 1210.22 BRIDGE VELOCITY= 9.62 CALCULATED CHANNEL AREA= 1083.

EGPRS	EGLWC	H3	QWEIR	QLOW	BAREA	TRAPEZOID AREA	ELLC	ELTRD	WEIRLN
.00	1211.92	.36	0.	11000.	3173.	3277.	1219.12	1220.37	0.

1

13JUL98 15:33:18

SECNO	DEPTH	CWSEL	CRIWS	WSELK	EG	HV	HL	OLOSS	L-BANK ELEV
Q	QLOB	QCH	QROB	ALOB	ACH	AROB	VOL	TWA	R-BANK ELEV
TIME	VLOB	VCH	VROB	XNL	XNCH	XNR	WTN	ELMIN	SSTA
SLOPE	XLOBL	XLCH	XLOBR	ITRIAL	IDC	ICONT	CORAR	TOPWID	ENDST

3470 ENCROACHMENT STATIONS= 1910.0 2120.0 TYPE= 1 TARGET= 210.000

3495 OVERBANK AREA ASSUMED NON-EFFECTIVE, ELLEA= 100000.00 ELREA= 100000.00

9405.000	5.70	1210.61	.00	.00	1211.92	1.31	.45	.00	100000.00
11000.0	.0	11000.0	.0	.0	1196.3	.0	126.4	16.1	100000.00
.14	.00	9.20	.00	.000	.040	.000	.000	1204.91	1910.00
.006461	110.	110.	110.	0	0	0	.00	210.00	2120.00

*SECNO 9471.000

3495 OVERBANK AREA ASSUMED NON-EFFECTIVE, ELLEA= 1219.00 ELREA= 1217.00

9471.000	6.20	1211.44	.00	.00	1212.38	.94	.34	.11	1219.00
11000.0	.0	11000.0	.0	.0	1417.0	.0	128.4	16.5	1217.00
.14	.00	7.76	.00	.000	.040	.000	.000	1205.24	1891.40
.004299	66.	66.	66.	3	0	0	.00	247.06	2138.45

*SECNO 9500.000

3495 OVERBANK AREA ASSUMED NON-EFFECTIVE, ELLEA= 1219.00 ELREA= 1217.00

9500.000	6.17	1211.56	.00	.00	1212.51	.95	.13	.01	1219.00
11000.0	.0	11000.0	.0	.0	1409.4	.0	129.4	16.6	1217.00
.14	.00	7.81	.00	.000	.040	.000	.000	1205.39	1891.50
.004377	29.	29.	29.	2	0	0	.00	247.09	2138.59

CCHV= .100 CEHV= .300
*SECNO 9700.000

3495 OVERBANK AREA ASSUMED NON-EFFECTIVE, ELLEA= 1220.70 ELREA= 1217.00

9700.000	6.03	1212.42	.00	.00	1213.50	1.08	.95	.04	1220.70
11000.0	.0	11000.0	.0	.0	1319.7	.0	135.6	17.7	1217.00
.15	.00	8.34	.00	.000	.040	.000	.000	1206.39	1891.90
.005167	200.	200.	200.	1	0	0	.00	237.44	2129.34

1

SECNO	DEPTH	CWSEL	CRIWS	WSELK	EG	HV	HL	OLOSS	L-BANK ELEV
Q	QLOB	QCH	QROB	ALOB	ACH	AROB	VOL	TWA	R-BANK ELEV
TIME	VLOB	VCH	VROB	XNL	XNCH	XNR	WTN	ELMIN	SSTA
SLOPE	XLOBL	XLCH	XLOBR	ITRIAL	IDC	ICONT	CORAR	TOPWID	ENDST

*SECNO 9800.000

3495 OVERBANK AREA ASSUMED NON-EFFECTIVE, ELLEA= 1221.50 ELREA= 1217.00

9800.000	6.06	1212.95	.00	.00	1214.01	1.06	.51	.00	1221.50
11000.0	.0	11000.0	.0	.0	1334.5	.0	138.7	18.3	1217.00
.15	.00	8.24	.00	.000	.040	.000	.000	1206.89	1901.81
.005002	100.	100.	100.	2	0	0	.00	238.18	2139.99

*SECNO 10000.000

3495 OVERBANK AREA ASSUMED NON-EFFECTIVE, ELLEA= 1222.50 ELREA= 1218.00

10000.000	6.05	1213.94	.00	.00	1215.07	1.13	1.04	.02	1222.50
11000.0	.0	11000.0	.0	.0	1288.6	.0	144.7	19.4	1218.00
.16	.00	8.54	.00	.000	.040	.000	.000	1207.89	1906.85
.005400	200.	200.	200.	2	0	0	.00	231.09	2137.95

*SECNO 10025.000

3495 OVERBANK AREA ASSUMED NON-EFFECTIVE, ELLEA= 1222.50 ELREA= 1218.00

10025.000	6.31	1214.21	.00	.00	1215.21	1.00	.12	.01	1222.50
11000.0	.0	11000.0	.0	.0	1370.3	.0	145.5	19.5	1218.00
.16	.00	8.03	.00	.000	.040	.000	.000	1207.90	1902.56
.004606	25.	25.	25.	2	0	0	.00	239.43	2141.98

*SECNO 10100.000

3495 OVERBANK AREA ASSUMED NON-EFFECTIVE, ELLEA= 1223.00 ELREA= 1223.00

10100.000	6.08	1214.47	.00	.00	1215.64	1.17	.38	.05	1223.00
11000.0	.0	11000.0	.0	.0	1265.2	.0	147.7	19.9	1223.00
.16	.00	8.69	.00	.000	.040	.000	.000	1208.39	1886.77
.005589	75.	75.	75.	2	0	0	.00	226.46	2113.23

*SECNO 10200.000

1

SECNO	DEPTH	CWSEL	CRIWS	WSELK	EG	HV	HL	OLOSS	L-BANK ELEV
Q	QLOB	QCH	QROB	ALOB	ACH	AROB	VOL	TWA	R-BANK ELEV
TIME	VLOB	VCH	VROB	XNL	XNCH	XNR	WTN	ELMIN	SSTA
SLOPE	XLOBL	XLCH	XLOBR	ITRIAL	IDC	ICONT	CORAR	TOPWID	ENDST

3495 OVERBANK AREA ASSUMED NON-EFFECTIVE, ELLEA= 1223.70 ELREA= 1223.70

10200.000	6.12	1215.01	.00	.00	1216.21	1.20	.56	.01	1223.70
11000.0	.0	11000.0	.0	.0	1250.6	.0	150.6	20.4	1223.70
.16	.00	8.80	.00	.000	.040	.000	.000	1208.89	1891.64
.005683	100.	100.	100.	2	0	0	.00	222.72	2114.36

*SECNO 10400.000

3495 OVERBANK AREA ASSUMED NON-EFFECTIVE, ELLEA= 1225.00 ELREA= 1224.90

10400.000	6.23	1216.12	.00	.00	1217.39	1.28	1.16	.02	1225.00
11000.0	.0	11000.0	.0	.0	1213.7	.0	156.3	21.4	1224.90
.17	.00	9.06	.00	.000	.040	.000	.000	1209.89	1895.49
.005934	200.	200.	200.	1	0	0	.00	213.34	2108.83

*SECNO 10600.000

3495 OVERBANK AREA ASSUMED NON-EFFECTIVE, ELLEA= 1226.00 ELREA= 1226.09

10600.000	6.40	1217.29	.00	.00	1218.57	1.29	1.18	.00	1226.00
11000.0	.0	11000.0	.0	.0	1208.8	.0	161.8	22.4	1226.09
.18	.00	9.10	.00	.000	.040	.000	.000	1210.89	1895.84
.005830	200.	200.	200.	0	0	0	.00	208.33	2104.17

*SECNO 10800.000

3495 OVERBANK AREA ASSUMED NON-EFFECTIVE, ELLEA= 1227.30 ELREA= 1227.29

10800.000	6.58	1218.47	.00	.00	1219.70	1.23	1.12	.01	1227.30
11000.0	.0	11000.0	.0	.0	1234.1	.0	167.4	23.3	1227.29
.18	.00	8.91	.00	.000	.040	.000	.000	1211.89	1896.29
.005413	200.	200.	200.	0	0	0	.00	207.43	2103.72

*SECNO 10900.000

3495 OVERBANK AREA ASSUMED NON-EFFECTIVE, ELLEA= 1228.00 ELREA= 1227.61

1

SECNO	DEPTH	CWSEL	CRIWS	WSELK	EG	HV	HL	OLOSS	L-BANK ELEV
Q	QLOB	QCH	QROB	ALOB	ACH	AROB	VOL	TWA	R-BANK ELEV
TIME	VLOB	VCH	VROB	XNL	XNCH	XNR	WTN	ELMIN	SSTA
SLOPE	XLOBL	XLCH	XLOBR	ITRIAL	IDC	ICONT	CORAR	TOPWID	ENDST
10900.000	6.62	1219.01	.00	.00	1220.24	1.24	.54	.00	1228.00
11000.0	.0	11000.0	.0	.0	1231.4	.0	170.3	23.8	1227.61
.19	.00	8.93	.00	.000	.040	.000	.000	1212.39	1903.66
.005412	100.	100.	100.	2	0	0	.00	206.28	2109.94

*SECNO 11000.000

11000.000	6.57	1219.47	.00	.00	1220.87	1.40	.58	.05	1228.00
11000.0	.0	11000.0	.0	.0	1159.8	.0	173.0	24.3	1228.00
.19	.00	9.48	.00	.000	.040	.000	.000	1212.90	1901.94
.006185	100.	100.	100.	2	0	0	.00	196.18	2098.12

*SECNO 11095.000

11095.000	6.65	1220.05	.00	.00	1221.46	1.41	.59	.00	1228.00
11000.0	.0	11000.0	.0	.0	1155.8	.0	175.5	24.7	1228.00
.19	.00	9.52	.00	.000	.040	.000	.000	1213.40	1903.15
.006156	95.	95.	95.	2	0	0	.00	193.75	2096.90

*SECNO 11100.000

3301 HV CHANGED MORE THAN HVINS

3685 20 TRIALS ATTEMPTED WSEL,CWSEL
3693 PROBABLE MINIMUM SPECIFIC ENERGY
3720 CRITICAL DEPTH ASSUMED

11100.000	5.23	1222.13	1222.13	.00	1224.52	2.39	.04	.30	1228.00
11000.0	.0	11000.0	.0	.0	885.9	.0	175.7	24.7	1228.00
.19	.00	12.42	.00	.000	.040	.000	.000	1216.90	1906.40
.014220	5.	5.	5.	20	15	0	.00	187.30	2093.70

*SECNO 11150.000

3301 HV CHANGED MORE THAN HVINS

3302 WARNING: CONVEYANCE CHANGE OUTSIDE OF ACCEPTABLE RANGE, KRATIO = 1.43

11150.000	6.61	1223.51	.00	.00	1225.09	1.57	.48	.08	1228.00
11000.0	.0	11000.0	.0	.0	1093.0	.0	176.8	24.9	1228.00
.19	.00	10.06	.00	.000	.040	.000	.000	1216.90	1907.39
.006994	50.	50.	50.	3	0	0	.00	185.32	2092.71

SECNO	DEPTH	CWSEL	CRIWS	WSELK	EG	HV	HL	OLOSS	L-BANK ELEV
Q	QLOB	QCH	QROB	ALOB	ACH	AROB	VOL	TWA	R-BANK ELEV
TIME	VLOB	VCH	VROB	XNL	XNCH	XNR	WTN	ELMIN	SSTA
SLOPE	XLOBL	XLCH	XLOBR	ITRIAL	IDC	ICONT	CORAR	TOPWID	ENDST

*SECNO 11230.000

11230.000	7.10	1224.20	.00	.00	1225.61	1.41	.51	.02	1228.00
11000.0	.0	11000.0	.0	.0	1154.4	.0	178.9	25.3	1228.00
.20	.00	9.53	.00	.000	.040	.000	.000	1217.10	1908.03
.005777	80.	80.	80.	2	0	0	.00	183.94	2091.97

*SECNO 11238.000

11238.000	7.18	1224.28	.00	.00	1225.66	1.37	.05	.00	1228.00
11000.0	.0	11000.0	.0	.0	1169.4	.0	179.1	25.3	1228.00
.20	.00	9.41	.00	.000	.040	.000	.000	1217.10	1907.84

.005549	8.	8.	8.	2	0	0	.00	184.31	2092.16

*SECNO 11305.000

11305.000	7.75	1224.85	.00	.00	1226.01	1.16	.32	.02	1228.50
11000.0	.0	11000.0	.0	.0	1274.5	.0	181.0	25.6	1228.50
.20	.00	8.63	.00	.000	.040	.000	.000	1217.10	1906.15
.004273	67.	67.	67.	2	0	0	.00	187.70	2093.85

*SECNO 11310.000

11310.000	7.64	1224.84	.00	.00	1226.04	1.19	.02	.01	1228.50
11000.0	.0	11000.0	.0	.0	1254.1	.0	181.1	25.6	1228.50
.20	.00	8.77	.00	.000	.040	.000	.000	1217.20	1906.54
.004484	5.	5.	5.	2	0	0	.00	186.93	2093.46

*SECNO 11400.000

11400.000	8.33	1225.43	.00	.00	1226.41	.98	.35	.02	1228.50
11000.0	.0	11000.0	.0	.0	1384.2	.0	183.8	26.0	1228.50
.20	.00	7.95	.00	.000	.040	.000	.000	1217.10	1904.35
.003330	90.	90.	90.	2	0	0	.00	191.30	2095.65

*SECNO 11500.000

11500.000	8.05	1225.75	.00	.00	1226.76	1.01	.34	.01	1228.00
11000.0	.0	11000.0	.0	.0	1363.6	.0	187.0	26.5	1228.00
.20	.00	8.07	.00	.000	.040	.000	.000	1217.70	1903.18
.003556	100.	100.	100.	2	0	0	.00	193.65	2096.82

SECNO	DEPTH	CWSEL	CRIWS	WSELK	EG	HV	HL	OLOSS	L-BANK ELEV
Q	QLOB	QCH	QROB	ALOB	ACH	AROB	VOL	TWA	R-BANK ELEV
TIME	VLOB	VCH	VROB	XNL	XNCH	XNR	WTN	ELMIN	SSTA
SLOPE	XLOBL	XLCH	XLOBR	ITRIAL	IDC	ICONT	CORAR	TOPWID	ENDST

*SECNO 11700.000

11700.000	8.41	1226.51	.00	.00	1227.43	.92	.66	.01	1228.50
11000.0	.0	11000.0	.0	.0	1431.8	.0	193.4	27.3	1228.50
.21	.00	7.68	.00	.000	.040	.000	.000	1218.10	1902.27
.003062	200.	200.	200.	2	0	0	.00	195.46	2097.73

*SECNO 11900.000

11900.000	8.66	1227.16	.00	.00	1228.01	.86	.58	.01	1229.00
11000.0	.0	11000.0	.0	.0	1481.1	.0	200.1	28.2	1229.00
.22	.00	7.43	.00	.000	.040	.000	.000	1218.50	1901.59
.002762	200.	200.	200.	1	0	0	.00	196.83	2098.41

*SECNO 12000.000

12000.000	8.75	1227.45	.00	.00	1228.29	.84	.27	.00	1229.50
11000.0	.0	11000.0	.0	.0	1497.5	.0	203.5	28.7	1229.50
.22	.00	7.35	.00	.000	.040	.000	.000	1218.70	1901.33
.002672	100.	100.	100.	0	0	0	.00	197.33	2098.67

*SECNO 12200.000

12200.000	8.79	1227.99	.00	.00	1228.82	.83	.53	.00	1229.00
11000.0	.0	11000.0	.0	.0	1507.8	.0	210.4	29.6	1229.00
.23	.00	7.30	.00	.000	.040	.000	.000	1219.20	1901.03
.002622	200.	200.	200.	0	0	0	.00	197.94	2098.97

*SECNO 12400.000

12400.000	8.93	1228.53	.00	.00	1229.33	.80	.51	.00	1230.00
11000.0	.0	11000.0	.0	.0	1533.4	.0	217.4	30.5	1230.00
.24	.00	7.17	.00	.000	.040	.000	.000	1219.60	1900.72
.002490	200.	200.	200.	1	0	0	.00	198.56	2099.28

*SECNO 12500.000

12500.000	8.99	1228.79	.00	.00	1229.58	.79	.25	.00	1230.00
11000.0	.0	11000.0	.0	.0	1545.7	.0	220.9	31.0	1230.00
.24	.00	7.12	.00	.000	.040	.000	.000	1219.80	1900.53
.002431	100.	100.	100.	0	0	0	.00	198.93	2099.47

SECNO	DEPTH	CWSEL	CRIWS	WSELK	EG	HV	HL	OLOSS	L-BANK ELEV
Q	QLOB	QCH	QROB	ALOB	ACH	AROB	VOL	TWA	R-BANK ELEV
TIME	VLOB	VCH	VROB	XNL	XNCH	XNR	WTN	ELMIN	SSTA
SLOPE	XLOBL	XLCH	XLOBR	ITRIAL	IDC	ICONT	CORAR	TOPWID	ENDST

*SECNO 12645.000

12645.000	9.05	1229.15	.00	.00	1229.93	.77	.35	.00	1230.00
11000.0	.0	11000.0	.0	.0	1557.1	.0	226.1	31.6	1230.00
.25	.00	7.06	.00	.000	.040	.000	.000	1220.10	1900.44
.002376	145.	145.	145.	0	0	0	.00	199.12	2099.56

*SECNO 12650.000

12650.000	7.99	1228.99	.00	.00	1230.02	1.03	.01	.08	1230.00
11000.0	.0	11000.0	.0	.0	1350.1	.0	226.2	31.7	1230.00
.25	.00	8.15	.00	.000	.040	.000	.000	1221.00	1903.53
.003658	5.	5.	5.	2	0	0	.00	192.94	2096.47

*SECNO 12660.000

12660.000	8.04	1229.04	.00	.00	1230.06	1.02	.04	.00	1230.00
11000.0	.0	11000.0	.0	.0	1360.1	.0	226.6	31.7	1230.00
.25	.00	8.09	.00	.000	.040	.000	.000	1221.00	1903.37
.003577	10.	10.	10.	2	0	0	.00	193.25	2096.63

*SECNO 12784.000

12784.000	8.45	1229.65	.00	.00	1230.47	.82	.39	.02	1231.50
11000.0	.0	11000.0	.0	.0	1514.1	.0	230.7	32.3	1231.10
.25	.00	7.27	.00	.000	.040	.000	.000	1221.20	1900.54
.002765	124.	124.	124.	2	0	0	.00	208.68	2109.22

```
*SECNO 12822.000
 12822.000      8.50   1229.80      .00      .00   1230.57      .77      .10      .00   1231.50
   11000.0        .0   11000.0       .0       .0    1558.7       .0    232.0     32.5   1231.50
       .26       .00      7.06      .00     .000      .040     .000     .000  1221.30   1894.79
   .002580       38.       38.      38.        2         0        0      .00   213.11   2107.90


*SECNO 12853.000
 12853.000      8.32   1229.72      .00      .00   1230.74     1.02      .09      .07   1231.40
   11000.0        .0   11000.0       .0       .0    1358.3       .0    233.0     32.6   1231.70
       .26       .00      8.10      .00     .000      .040     .000     .000  1221.40   1907.12
   .003481       31.       31.      31.        2         0        0      .00   188.31   2095.44


1
   13JUL98      15:33:18                                                                    PAGE   43


    SECNO     DEPTH     CWSEL     CRIWS     WSELK     EG        HV        HL        OLOSS     L-BANK ELEV
    Q         QLOB      QCH       QROB      ALOB      ACH       AROB      VOL       TWA       R-BANK ELEV
    TIME      VLOB      VCH       VROB      XNL       XNCH      XNR       WTN       ELMIN     SSTA
    SLOPE     XLOBL     XLCH      XLOBR     ITRIAL    IDC       ICONT     CORAR     TOPWID    ENDST


*SECNO 12884.000
 12884.000      8.31   1229.71      .00      .00   1230.92     1.22      .13      .06   1231.00
   11000.0        .0   11000.0       .0       .0    1241.3       .0    234.0     32.7   1231.90
       .26       .00      8.86      .00     .000      .040     .000     .000  1221.40   1903.76
   .004862       31.       31.      31.        2         0        0      .00   193.59   2097.35


*SECNO 12981.000

3301 HV CHANGED MORE THAN HVINS

 12981.000      8.18   1229.78      .00      .00   1231.77     1.99      .61      .23   1232.00
   11000.0        .0   11000.0       .0       .0     971.9       .0    236.4     33.1   1231.70
       .26       .00     11.32      .00     .000      .040     .000     .000  1221.60   1913.92
   .008533       97.       97.      97.        2         0        0      .00   159.56   2073.48


CCHV=     .300 CEHV=     .500
*SECNO 13050.000

3301 HV CHANGED MORE THAN HVINS


3302 WARNING:  CONVEYANCE CHANGE OUTSIDE OF ACCEPTABLE RANGE,  KRATIO =  1.60


3470 ENCROACHMENT STATIONS=     1928.0    2072.0  TYPE=      1  TARGET=      144.000

3495 OVERBANK AREA ASSUMED NON-EFFECTIVE, ELLEA=    100000.00 ELREA=    100000.00

 13050.000      9.38   1231.18      .00      .00   1232.36     1.18      .35      .24 100000.00
   11000.0        .0   11000.0       .0       .0    1261.6       .0    238.2     33.4 100000.00
       .26       .00      8.72      .00     .000      .040     .000     .000  1221.80   1928.00
   .003325       69.       69.      69.        3         0        0      .00   144.00   2072.00
```

SPECIAL BRIDGE

SB	XK	XKOR	COFQ	RDLEN	BWC	BWP	BAREA	SS	ELCHU	ELCHD
	1.05	1.60	2.60	164.00	116.00	12.00	1431.00	2.50	1221.90	1221.80

*SECNO 13131.000

1

13JUL98 15:33:18 PAGE 44

SECNO	DEPTH	CWSEL	CRIWS	WSELK	EG	HV	HL	OLOSS	L-BANK ELEV
Q	QLOB	QCH	QROB	ALOB	ACH	AROB	VOL	TWA	R-BANK ELEV
TIME	VLOB	VCH	VROB	XNL	XNCH	XNR	WTN	ELMIN	SSTA
SLOPE	XLOBL	XLCH	XLOBR	ITRIAL	IDC	ICONT	CORAR	TOPWID	ENDST

CLASS A LOW FLOW

3420 BRIDGE W.S.= 1230.87 BRIDGE VELOCITY= 9.64 CALCULATED CHANNEL AREA= 1134.

EGPRS	EGLWC	H3	QWEIR	QLOW	BAREA	TRAPEZOID AREA	ELLC	ELTRD	WEIRLN
.00	1232.65	.37	0.	11000.	1431.	1543.	1233.50	1235.82	0.

3470 ENCROACHMENT STATIONS= 1928.0 2072.0 TYPE= 1 TARGET= 144.000

3495 OVERBANK AREA ASSUMED NON-EFFECTIVE, ELLEA= 100000.00 ELREA= 100000.00

13131.000	9.65	1231.55	.00	.00	1232.65	1.10	.29	.00	100000.00
11000.0	.0	11000.0	.0	.0	1304.8	.0	240.6	33.6	100000.00
.26	.00	8.43	.00	.000	.040	.000	.000	1221.90	1928.00
.002991	81.	81.	81.	0	0	0	.00	144.00	2072.00

*SECNO 13206.000

13206.000	9.53	1231.63	.00	.00	1233.14	1.50	.29	.20	1231.70
11000.0	.0	11000.0	.0	.0	1117.9	.0	242.7	33.9	1234.70
.27	.00	9.84	.00	.000	.040	.000	.000	1222.10	1923.23
.005074	75.	75.	75.	2	0	0	.00	152.92	2076.15

*SECNO 13300.000

13300.000	9.88	1232.08	.00	.00	1233.69	1.60	.50	.05	1232.70
11000.0	.0	11000.0	.0	.0	1082.5	.0	245.0	34.2	1234.70
.27	.00	10.16	.00	.000	.040	.000	.000	1222.20	1933.88
.005610	94.	94.	94.	2	0	0	.00	151.27	2085.16

CCHV= .100 CEHV= .300

*SECNO 13400.000

13400.000	10.07	1232.47	.00	.00	1234.32	1.85	.56	.07	1233.80
11000.0	.0	11000.0	.0	.0	1007.6	.0	247.4	34.5	1234.20
.27	.00	10.92	.00	.000	.040	.000	.000	1222.40	1955.66
.005583	100.	100.	100.	2	0	0	.00	125.17	2080.83

SECNO	DEPTH	CWSEL	CRIWS	WSELK	EG	HV	HL	OLOSS	L-BANK ELEV
Q	QLOB	QCH	QROB	ALOB	ACH	AROB	VOL	TWA	R-BANK ELEV
TIME	VLOB	VCH	VROB	XNL	XNCH	XNR	WTN	ELMIN	SSTA
SLOPE	XLOBL	XLCH	XLOBR	ITRIAL	IDC	ICONT	CORAR	TOPWID	ENDST

*SECNO 13500.000

3301 HV CHANGED MORE THAN HVINS

3302 WARNING: CONVEYANCE CHANGE OUTSIDE OF ACCEPTABLE RANGE, KRATIO = 1.53

13500.000	11.18	1233.78	.00	.00	1234.76	.98	.35	.09	1235.00
11000.0	.0	11000.0	.0	.0	1383.2	.0	250.2	34.9	1235.00
.28	.00	7.95	.00	.000	.040	.000	.000	1222.60	1937.45
.002399	100.	100.	100.	3	0	0	.00	146.11	2083.55

*SECNO 13600.000

13600.000	11.22	1234.02	.00	.00	1235.00	.98	.24	.00	1235.00
11000.0	.0	11000.0	.0	.0	1387.6	.0	253.4	35.2	1235.00
.28	.00	7.93	.00	.000	.040	.000	.000	1222.80	1931.95
.002373	100.	100.	100.	2	0	0	.00	146.09	2078.05

*SECNO 13700.000

13700.000	11.27	1234.27	.00	.00	1235.23	.96	.23	.00	1236.00
11000.0	.0	11000.0	.0	.0	1398.6	.0	256.6	35.5	1236.00
.28	.00	7.86	.00	.000	.040	.000	.000	1223.00	1920.87
.002324	100.	100.	100.	1	0	0	.00	146.67	2067.53

*SECNO 13800.000

13800.000	11.31	1234.51	.00	.00	1235.47	.96	.23	.00	1236.00
11000.0	.0	11000.0	.0	.0	1399.1	.0	259.8	35.9	1236.00
.29	.00	7.86	.00	.000	.040	.000	.000	1223.20	1911.68
.002315	100.	100.	100.	0	0	0	.00	146.34	2058.02

*SECNO 13900.000

13900.000	11.35	1234.75	.00	.00	1235.70	.94	.23	.00	1236.00
11000.0	.0	11000.0	.0	.0	1410.0	.0	263.0	36.2	1236.00
.29	.00	7.80	.00	.000	.040	.000	.000	1223.40	1906.51
.002269	100.	100.	100.	1	0	0	.00	146.98	2053.49

*SECNO 14000.000

14000.000	11.38	1234.98	.00	.00	1235.92	.95	.23	.00	1237.00
11000.0	.0	11000.0	.0	.0	1408.6	.0	266.2	36.5	1237.00
.29	.00	7.81	.00	.000	.040	.000	.000	1223.60	1907.44
.002268	100.	100.	100.	0	0	0	.00	146.53	2053.96

SECNO	DEPTH	CWSEL	CRIWS	WSELK	EG	HV	HL	OLOSS	L-BANK ELEV
Q	QLOB	QCH	QROB	ALOB	ACH	AROB	VOL	TWA	R-BANK ELEV
TIME	VLOB	VCH	VROB	XNL	XNCH	XNR	WTN	ELMIN	SSTA
SLOPE	XLOBL	XLCH	XLOBR	ITRIAL	IDC	ICONT	CORAR	TOPWID	ENDST

*SECNO 14100.000

14100.000	11.43	1235.23	.00	.00	1236.15	.92	.22	.00	1237.00
11000.0	.0	11000.0	.0	.0	1426.6	.0	269.5	36.9	1237.00
.30	.00	7.71	.00	.000	.040	.000	.000	1223.80	1901.75
.002196	100.	100.	100.	2	0	0	.00	147.71	2049.45

*SECNO 14200.000

14200.000	11.44	1235.44	.00	.00	1236.37	.93	.22	.00	1237.00
11000.0	.0	11000.0	.0	.0	1418.5	.0	272.7	37.2	1237.00
.30	.00	7.75	.00	.000	.040	.000	.000	1224.00	1901.01
.002222	100.	100.	100.	0	0	0	.00	146.88	2047.89

*SECNO 14300.000

14300.000	11.48	1235.68	.00	.00	1236.60	.92	.22	.00	1238.00
11000.0	.0	11000.0	.0	.0	1429.2	.0	276.0	37.5	1238.00
.30	.00	7.70	.00	.000	.040	.000	.000	1224.20	1914.68
.002182	100.	100.	100.	1	0	0	.00	147.64	2062.32

*SECNO 14400.000

14400.000	11.50	1235.90	.00	.00	1236.81	.92	.22	.00	1238.00
11000.0	.0	11000.0	.0	.0	1431.0	.0	279.3	37.9	1238.00
.31	.00	7.69	.00	.000	.040	.000	.000	1224.40	1909.22
.002172	100.	100.	100.	0	0	0	.00	147.55	2056.78

*SECNO 14500.000

14500.000	11.50	1236.10	.00	.00	1237.04	.94	.22	.01	1238.00
11000.0	.0	11000.0	.0	.0	1416.8	.0	282.6	38.2	1238.00
.31	.00	7.76	.00	.000	.040	.000	.000	1224.60	1901.00
.002219	100.	100.	100.	1	0	0	.00	146.21	2047.20

*SECNO 14700.000

14700.000	11.61	1236.51	.00	.00	1237.57	1.06	.49	.04	1238.00
11000.0	.0	11000.0	.0	.0	1332.3	.0	288.9	38.9	1238.00
.32	.00	8.26	.00	.000	.040	.000	.000	1224.90	1925.26
.002763	200.	200.	200.	2	0	0	.00	149.49	2074.74

SECNO	DEPTH	CWSEL	CRIWS	WSELK	EG	HV	HL	OLOSS	L-BANK ELEV
Q	QLOB	QCH	QROB	ALOB	ACH	AROB	VOL	TWA	R-BANK ELEV
TIME	VLOB	VCH	VROB	XNL	XNCH	XNR	WTN	ELMIN	SSTA
SLOPE	XLOBL	XLCH	XLOBR	ITRIAL	IDC	ICONT	CORAR	TOPWID	ENDST

```
*SECNO 14900.000
 14900.000     11.68   1236.98      .00      .00   1238.23     1.25      .61      .06   1239.00
   11000.0        .0   11000.0       .0       .0    1226.4       .0    294.8     39.6   1239.00
       .32       .00      8.97      .00     .000      .040     .000     .000  1225.30   1930.03
   .003343      200.      200.     200.        2         0        0      .00   139.93   2069.97


*SECNO 15000.000
 15000.000     11.76   1237.26      .00      .00   1238.61     1.35      .35      .03   1239.00
   11000.0        .0   11000.0       .0       .0    1179.6       .0    297.5     39.9   1239.00
       .33       .00      9.32      .00     .000      .040     .000     .000  1225.50   1932.21
   .003653      100.      100.     100.        2         0        0      .00   135.57   2067.79


*SECNO 15200.000
 15200.000     12.11   1238.01      .00      .00   1239.33     1.33      .72      .00   1239.00
   11000.0        .0   11000.0       .0       .0    1190.1       .0    303.0     40.5   1239.00
       .33       .00      9.24      .00     .000      .040     .000     .000  1225.90   1932.68
   .003518      200.      200.     200.        2         0        0      .00   134.63   2067.32


*SECNO 15400.000
 15400.000     12.36   1238.66      .00      .00   1240.11     1.45      .74      .04   1240.00
   11000.0        .0   11000.0       .0       .0    1137.6       .0    308.3     41.1   1240.00
       .34       .00      9.67      .00     .000      .040     .000     .000  1226.30   1935.43
   .003878      200.      200.     200.        2         0        0      .00   129.14   2064.57


*SECNO 15495.000
 15495.000     12.60   1239.10      .00      .00   1240.47     1.37      .35      .01   1240.00
   11000.0        .0   11000.0       .0       .0    1170.2       .0    310.8     41.4   1240.00
       .34       .00      9.40      .00     .000      .040     .000     .000  1226.50   1934.61
   .003590       95.       95.      95.        2         0        0      .00   130.78   2065.39


*SECNO 15500.000

3301 HV CHANGED MORE THAN HVINS

3685 20 TRIALS ATTEMPTED WSEL,CWSEL
3693 PROBABLE MINIMUM SPECIFIC ENERGY
3720 CRITICAL DEPTH ASSUMED
 15500.000      9.39   1237.89   1237.89      .00   1241.38     3.49      .03      .63   1240.00
   11000.0        .0   11000.0       .0       .0     734.0       .0    310.9     41.4   1240.00
       .34       .00     14.99      .00     .000      .040     .000     .000  1228.50   1946.83
   .012857        5.        5.       5.       20        15        0      .00   106.34   2053.17


1
   13JUL98      15:33:18                                                                  PAGE   48

    SECNO     DEPTH     CWSEL     CRIWS     WSELK        EG        HV        HL     OLOSS   L-BANK ELEV
    Q         QLOB      QCH       QROB      ALOB       ACH      AROB       VOL       TWA   R-BANK ELEV
    TIME      VLOB      VCH       VROB      XNL       XNCH       XNR       WTN     ELMIN   SSTA
    SLOPE     XLOBL     XLCH      XLOBR     ITRIAL     IDC     ICONT     CORAR    TOPWID   ENDST


*SECNO 15510.000
```

3301 HV CHANGED MORE THAN HVINS

15510.000	10.52	1239.02	1237.89	.00	1241.57	2.55	.10	.09	1240.00
11000.0	.0	11000.0	.0	.0	858.0	.0	311.1	41.4	1240.00
.34	.00	12.82	.00	.000	.040	.000	.000	1228.50	1943.44
.008314	10.	10.	10.	16	5	0	.00	113.12	2056.56

*SECNO 15700.000

15700.000	11.08	1240.48	.00	.00	1243.33	2.85	1.67	.09	1241.00
11000.0	.0	11000.0	.0	.0	811.6	.0	314.7	41.9	1241.00
.35	.00	13.55	.00	.000	.040	.000	.000	1229.40	1946.86
.009253	190.	190.	190.	3	0	0	.00	106.27	2053.13

*SECNO 15900.000

15900.000	11.95	1242.35	.00	.00	1245.13	2.78	1.80	.01	1243.00
11000.0	.0	11000.0	.0	.0	822.4	.0	318.5	42.4	1243.00
.35	.00	13.38	.00	.000	.040	.000	.000	1230.40	1947.66
.008712	200.	200.	200.	2	0	0	.00	104.68	2052.34

*SECNO 16000.000

3301 HV CHANGED MORE THAN HVINS

16000.000	13.11	1244.01	.00	.00	1245.88	1.87	.66	.09	1245.00
11000.0	.0	11000.0	.0	.0	1001.4	.0	320.6	42.6	1245.00
.35	.00	10.98	.00	.000	.040	.000	.000	1230.90	1942.09
.005168	100.	100.	100.	3	0	0	.00	115.82	2057.91

*SECNO 16100.000

3301 HV CHANGED MORE THAN HVINS

16100.000	13.68	1245.08	.00	.00	1246.34	1.26	.39	.06	1245.50
11000.0	.0	11000.0	.0	.0	1222.5	.0	323.1	42.9	1245.50
.36	.00	9.00	.00	.000	.040	.000	.000	1231.40	1934.75
.003105	100.	100.	100.	2	0	0	.00	130.49	2065.25

1

SECNO	DEPTH	CWSEL	CRIWS	WSELK	EG	HV	HL	OLOSS	L-BANK ELEV
Q	QLOB	QCH	QROB	ALOB	ACH	AROB	VOL	TWA	R-BANK ELEV
TIME	VLOB	VCH	VROB	XNL	XNCH	XNR	WTN	ELMIN	SSTA
SLOPE	XLOBL	XLCH	XLOBR	ITRIAL	IDC	ICONT	CORAR	TOPWID	ENDST

*SECNO 16200.000

16200.000	13.87	1245.67	.00	.00	1246.63	.96	.26	.03	1246.00
11000.0	.0	11000.0	.0	.0	1399.4	.0	326.2	43.2	1246.00
.36	.00	7.86	.00	.000	.040	.000	.000	1231.80	1928.79
.002217	100.	100.	100.	2	0	0	.00	142.41	2071.21

*SECNO 16400.000

16400.000	13.53	1246.33	.00	.00	1247.02	.68	.36	.03	1247.00
11000.0	.0	11000.0	.0	.0	1656.2	.0	333.2	43.9	1247.00
.37	.00	6.64	.00	.000	.040	.000	.000	1232.80	1918.51
.001504	200.	200.	200.	2	0	0	.00	162.99	2081.49

*SECNO 16500.000

16500.000	13.26	1246.56	.00	.00	1247.17	.61	.14	.01	1247.00
11000.0	.0	11000.0	.0	.0	1760.5	.0	337.1	44.3	1247.00
.37	.00	6.25	.00	.000	.040	.000	.000	1233.30	1913.72
.001321	100.	100.	100.	2	0	0	.00	172.55	2086.28

*SECNO 16600.000

16600.000	12.86	1246.66	.00	.00	1247.32	.65	.14	.01	1247.00
11000.0	.0	11000.0	.0	.0	1694.2	.0	341.1	44.7	1247.00
.38	.00	6.49	.00	.000	.040	.000	.000	1233.80	1914.81
.001475	100.	100.	100.	2	0	0	.00	170.38	2085.19

*SECNO 16700.000

16700.000	12.48	1246.78	.00	.00	1247.49	.71	.16	.02	1247.00
11000.0	.0	11000.0	.0	.0	1629.7	.0	344.9	45.1	1247.00
.38	.00	6.75	.00	.000	.040	.000	.000	1234.30	1915.95
.001648	100.	100.	100.	2	0	0	.00	168.10	2084.05

*SECNO 16800.000

16800.000	12.23	1246.93	.00	.00	1247.67	.75	.17	.01	1247.00
11000.0	.0	11000.0	.0	.0	1585.5	.0	348.6	45.5	1247.00
.38	.00	6.94	.00	.000	.040	.000	.000	1234.70	1916.90
.001779	100.	100.	100.	1	0	0	.00	166.20	2083.10

SECNO	DEPTH	CWSEL	CRIWS	WSELK	EG	HV	HL	OLOSS	L-BANK ELEV
Q	QLOB	QCH	QROB	ALOB	ACH	AROB	VOL	TWA	R-BANK ELEV
TIME	VLOB	VCH	VROB	XNL	XNCH	XNR	WTN	ELMIN	SSTA
SLOPE	XLOBL	XLCH	XLOBR	ITRIAL	IDC	ICONT	CORAR	TOPWID	ENDST

*SECNO 16900.000

16900.000	11.87	1247.07	.00	.00	1247.88	.81	.19	.02	1248.00
11000.0	.0	11000.0	.0	.0	1526.0	.0	352.1	45.9	1248.00
.39	.00	7.21	.00	.000	.040	.000	.000	1235.20	1917.97
.001985	100.	100.	100.	2	0	0	.00	164.05	2082.03

*SECNO 17000.000

3495 OVERBANK AREA ASSUMED NON-EFFECTIVE, ELLEA= 1255.00 ELREA= 1253.00

17000.000	11.46	1247.16	.00	.00	1248.15	.99	.22	.06	1255.00
11000.0	.0	11000.0	.0	.0	1377.3	.0	355.5	46.2	1253.00
.39	.00	7.99	.00	.000	.040	.000	.000	1235.70	1902.61
.002451	100.	100.	100.	2	0	0	.00	147.27	2049.88

*SECNO 17100.000

3495 OVERBANK AREA ASSUMED NON-EFFECTIVE, ELLEA= 1255.50 ELREA= 1253.00

17100.000	11.20	1247.38	.00	.00	1248.42	1.04	.25	.02	1255.50
11000.0	.0	11000.0	.0	.0	1342.5	.0	358.6	46.6	1253.00
.39	.00	8.19	.00	.000	.040	.000	.000	1236.18	1903.38
.002649	100.	100.	100.	0	0	0	.00	146.60	2049.99

*SECNO 17200.000

3495 OVERBANK AREA ASSUMED NON-EFFECTIVE, ELLEA= 1252.00 ELREA= 1253.00

17200.000	10.85	1247.51	.00	.00	1248.79	1.28	.29	.07	1252.00
11000.0	.0	11000.0	.0	.0	1213.2	.0	361.5	46.9	1253.00
.40	.00	9.07	.00	.000	.040	.000	.000	1236.66	1917.32
.003233	100.	100.	100.	2	0	0	.00	130.61	2047.92

*SECNO 17300.000

3495 OVERBANK AREA ASSUMED NON-EFFECTIVE, ELLEA= 1253.00 ELREA= 1253.50

17300.000	10.67	1247.81	.00	.00	1249.13	1.32	.33	.01	1253.00
11000.0	.0	11000.0	.0	.0	1192.9	.0	364.3	47.2	1253.50
.40	.00	9.22	.00	.000	.040	.000	.000	1237.14	1919.53
.003369	100.	100.	100.	0	0	0	.00	128.72	2048.25

1

SECNO	DEPTH	CWSEL	CRIWS	WSELK	EG	HV	HL	OLOSS	L-BANK ELEV
Q	QLOB	QCH	QROB	ALOB	ACH	AROB	VOL	TWA	R-BANK ELEV
TIME	VLOB	VCH	VROB	XNL	XNCH	XNR	WTN	ELMIN	SSTA
SLOPE	XLOBL	XLCH	XLOBR	ITRIAL	IDC	ICONT	CORAR	TOPWID	ENDST

*SECNO 17400.000

3495 OVERBANK AREA ASSUMED NON-EFFECTIVE, ELLEA= 1253.60 ELREA= 1253.80

17400.000	10.47	1248.09	.00	.00	1249.52	1.43	.36	.03	1253.60
11000.0	.0	11000.0	.0	.0	1147.2	.0	367.0	47.5	1253.80
.40	.00	9.59	.00	.000	.040	.000	.000	1237.62	1920.34
.003816	100.	100.	100.	2	0	0	.00	129.08	2049.42

*SECNO 17500.000

3495 OVERBANK AREA ASSUMED NON-EFFECTIVE, ELLEA= 1254.00 ELREA= 1254.00

17500.000	10.33	1248.43	.00	.00	1249.94	1.51	.39	.03	1254.00
11000.0	.0	11000.0	.0	.0	1113.9	.0	369.6	47.8	1254.00
.41	.00	9.88	.00	.000	.040	.000	.000	1238.10	1918.76
.004084	100.	100.	100.	2	0	0	.00	125.72	2044.48

*SECNO 17700.000

3495 OVERBANK AREA ASSUMED NON-EFFECTIVE, ELLEA= 1255.50 ELREA= 1253.00

17700.000	10.19	1249.25	.00	.00	1250.79	1.54	.84	.01	1255.50
11000.0	.0	11000.0	.0	.0	1104.2	.0	374.7	48.4	1253.00
.41	.00	9.96	.00	.000	.040	.000	.000	1239.06	1916.41
.004337	200.	200.	200.	2	0	0	.00	129.72	2046.12

*SECNO 17850.000

3495 OVERBANK AREA ASSUMED NON-EFFECTIVE, ELLEA= 1256.00 ELREA= 1255.80

17850.000	10.05	1249.83	.00	.00	1251.51	1.68	.68	.04	1256.00
11000.0	.0	11000.0	.0	.0	1056.1	.0	378.4	48.8	1255.80
.42	.00	10.42	.00	.000	.040	.000	.000	1239.78	1919.51
.004738	150.	150.	150.	2	0	0	.00	123.19	2042.70

*SECNO 17950.000

1

SECNO	DEPTH	CWSEL	CRIWS	WSELK	EG	HV	HL	OLOSS	L-BANK ELEV
Q	QLOB	QCH	QROB	ALOB	ACH	AROB	VOL	TWA	R-BANK ELEV
TIME	VLOB	VCH	VROB	XNL	XNCH	XNR	WTN	ELMIN	SSTA
SLOPE	XLOBL	XLCH	XLOBR	ITRIAL	IDC	ICONT	CORAR	TOPWID	ENDST

3495 OVERBANK AREA ASSUMED NON-EFFECTIVE, ELLEA= 1256.00 ELREA= 1256.00

17950.000	10.14	1250.40	.00	.00	1251.98	1.57	.45	.01	1256.00
11000.0	.0	11000.0	.0	.0	1092.9	.0	380.8	49.1	1256.00
.42	.00	10.06	.00	.000	.040	.000	.000	1240.26	1918.89
.004332	100.	100.	100.	2	0	0	.00	125.45	2044.34

*SECNO 17955.000

3301 HV CHANGED MORE THAN HVINS

3685 20 TRIALS ATTEMPTED WSEL,CWSEL
3693 PROBABLE MINIMUM SPECIFIC ENERGY
3720 CRITICAL DEPTH ASSUMED

3495 OVERBANK AREA ASSUMED NON-EFFECTIVE, ELLEA= 1257.00 ELREA= 1258.00

17955.000	6.51	1252.31	1252.31	.00	1255.33	3.02	.04	.43	1257.00
11000.0	.0	11000.0	.0	.0	789.1	.0	381.0	49.1	1258.00
.42	.00	13.94	.00	.000	.040	.000	.000	1245.80	1913.37
.013479	5.	5.	5.	20	14	0	.00	132.31	2045.68

*SECNO 17960.000
7185 MINIMUM SPECIFIC ENERGY
3720 CRITICAL DEPTH ASSUMED

3495 OVERBANK AREA ASSUMED NON-EFFECTIVE, ELLEA= 1257.00 ELREA= 1258.00

17960.000	6.52	1252.42	1252.42	.00	1255.43	3.01	.07	.00	1257.00
11000.0	.0	11000.0	.0	.0	790.3	.0	381.0	49.1	1258.00
.42	.00	13.92	.00	.000	.040	.000	.000	1245.90	1913.26
.013439	5.	5.	5.	2	5	0	.00	132.52	2045.77

*SECNO 18000.000

3301 HV CHANGED MORE THAN HVINS

1

13JUL98 15:33:18 PAGE 53

SECNO	DEPTH	CWSEL	CRIWS	WSELK	EG	HV	HL	OLOSS	L-BANK ELEV
Q	QLOB	QCH	QROB	ALOB	ACH	AROB	VOL	TWA	R-BANK ELEV
TIME	VLOB	VCH	VROB	XNL	XNCH	XNR	WTN	ELMIN	SSTA
SLOPE	XLOBL	XLCH	XLOBR	ITRIAL	IDC	ICONT	CORAR	TOPWID	ENDST

3302 WARNING: CONVEYANCE CHANGE OUTSIDE OF ACCEPTABLE RANGE, KRATIO = 1.41

3495 OVERBANK AREA ASSUMED NON-EFFECTIVE, ELLEA= 1257.00 ELREA= 1258.00

18000.000	7.98	1253.98	.00	.00	1255.90	1.92	.37	.11	1257.00
11000.0	.0	11000.0	.0	.0	988.2	.0	381.9	49.2	1258.00
.42	.00	11.13	.00	.000	.040	.000	.000	1246.00	1910.50
.006760	40.	40.	40.	4	0	0	.00	137.79	2048.29

CCHV= .300 CEHV= .500
*SECNO 18170.000

3470 ENCROACHMENT STATIONS= 1910.0 2060.0 TYPE= 1 TARGET= -1910.000

3495 OVERBANK AREA ASSUMED NON-EFFECTIVE, ELLEA= 1315.00 ELREA= 100000.00

18170.000	8.06	1255.06	.00	.00	1257.28	2.23	1.23	.15	1315.00
11000.0	.0	11000.0	.0	.0	918.6	.0	385.6	49.7	100000.00
.42	.00	11.97	.00	.000	.040	.000	.000	1247.00	1925.47
.007735	170.	170.	170.	3	0	0	.00	126.04	2051.51

SPECIAL BRIDGE

5227 DOWNSTREAM ELEV IS 1253.00 , NOT 1255.06 HYDRAULIC JUMP OCCURS DOWNSTREAM (IF LOW FLOW CONTROLS)

SB	XK	XKOR	COFQ	RDLEN	BWC	BWP	BAREA	SS	ELCHU	ELCHD
	1.05	1.60	2.60	200.00	95.00	6.00	1478.00	2.00	1248.00	1247.00

*SECNO 18390.000
CLASS B LOW FLOW

3420 BRIDGE W.S.= 1254.86 BRIDGE VELOCITY= 14.41 CALCULATED CHANNEL AREA= 705.

EGPRS	EGLWC	H3	QWEIR	QLOW	BAREA	TRAPEZOID AREA	ELLC	ELTRD	WEIRLN
.00	1258.82	.00	0.	11000.	1478.	1478.	1260.88	1261.10	0.

3470 ENCROACHMENT STATIONS= .0 2070.0 TYPE= 1 TARGET= 2069.999

1

13JUL98 15:33:18 PAGE 54

SECNO	DEPTH	CWSEL	CRIWS	WSELK	EG	HV	HL	OLOSS	L-BANK ELEV
Q	QLOB	QCH	QROB	ALOB	ACH	AROB	VOL	TWA	R-BANK ELEV
TIME	VLOB	VCH	VROB	XNL	XNCH	XNR	WTN	ELMIN	SSTA
SLOPE	XLOBL	XLCH	XLOBR	ITRIAL	IDC	ICONT	CORAR	TOPWID	ENDST

3495 OVERBANK AREA ASSUMED NON-EFFECTIVE, ELLEA= 1316.00 ELREA= 1261.00

18390.000	9.02	1257.02	.00	.00	1258.82	1.80	1.54	.00	1316.00
11000.0	.0	11000.0	.0	.0	1020.7	.0	390.5	50.4	1261.00
.43	.00	10.78	.00	.000	.040	.000	.000	1248.00	1922.46
.005716	220.	220.	220.	0	0	0	.00	131.41	2053.87

CCHV= .100 CEHV= .300

*SECNO 18500.000

3495 OVERBANK AREA ASSUMED NON-EFFECTIVE, ELLEA= 1267.00 ELREA= 1261.50

18500.000	9.05	1257.55	.00	.00	1259.55	2.00	.67	.06	1267.00
11000.0	.0	11000.0	.0	.0	969.8	.0	393.0	50.7	1261.50
.43	.00	11.34	.00	.000	.040	.000	.000	1248.50	1929.12
.006468	110.	110.	110.	2	0	0	.00	126.33	2055.44

*SECNO 18710.000

3301 HV CHANGED MORE THAN HVINS

3495 OVERBANK AREA ASSUMED NON-EFFECTIVE, ELLEA= 1262.00 ELREA= 1262.00

18710.000	9.80	1259.30	.00	.00	1260.62	1.33	1.01	.07	1262.00
11000.0	.0	11000.0	.0	.0	1190.6	.0	398.2	51.4	1262.00
.44	.00	9.24	.00	.000	.040	.000	.000	1249.50	1914.74
.003726	210.	210.	210.	2	0	0	.00	139.86	2054.61

*SECNO 18900.000

3495 OVERBANK AREA ASSUMED NON-EFFECTIVE, ELLEA= 1263.00 ELREA= 1263.00

18900.000	8.96	1259.96	.00	.00	1261.46	1.50	.78	.05	1263.00
11000.0	.0	11000.0	.0	.0	1119.6	.0	403.2	52.0	1263.00
.44	.00	9.82	.00	.000	.040	.000	.000	1251.00	1915.06
.004575	190.	190.	190.	2	0	0	.00	139.87	2054.94

SECNO	DEPTH	CWSEL	CRIWS	WSELK	EG	HV	HL	OLOSS	L-BANK ELEV
Q	QLOB	QCH	QROB	ALOB	ACH	AROB	VOL	TWA	R-BANK ELEV
TIME	VLOB	VCH	VROB	XNL	XNCH	XNR	WTN	ELMIN	SSTA
SLOPE	XLOBL	XLCH	XLOBR	ITRIAL	IDC	ICONT	CORAR	TOPWID	ENDST

*SECNO 19000.000

3495 OVERBANK AREA ASSUMED NON-EFFECTIVE, ELLEA= 1263.00 ELREA= 1263.00

19000.000	8.90	1260.40	.00	.00	1261.94	1.54	.47	.01	1263.00
11000.0	.0	11000.0	.0	.0	1106.1	.0	405.8	52.3	1263.00
.45	.00	9.95	.00	.000	.040	.000	.000	1251.50	1914.97
.004775	100.	100.	100.	2	0	0	.00	140.51	2055.48

*SECNO 19200.000

3495 OVERBANK AREA ASSUMED NON-EFFECTIVE, ELLEA= 1263.50 ELREA= 1264.00

19200.000	9.49	1261.49	.00	.00	1262.82	1.33	.86	.02	1263.50
11000.0	.0	11000.0	.0	.0	1187.4	.0	411.1	53.0	1264.00
.45	.00	9.26	.00	.000	.040	.000	.000	1252.00	1918.50
.003927	200.	200.	200.	2	0	0	.00	145.23	2063.73

*SECNO 19400.000

3495 OVERBANK AREA ASSUMED NON-EFFECTIVE, ELLEA= 1264.00 ELREA= 1264.00

19400.000	9.27	1262.27	.00	.00	1263.63	1.36	.80	.01	1264.00
11000.0	.0	11000.0	.0	.0	1175.1	.0	416.5	53.6	1264.00
.46	.00	9.36	.00	.000	.040	.000	.000	1253.00	1922.37
.004032	200.	200.	200.	2	0	0	.00	143.69	2066.06

*SECNO 19500.000

3495 OVERBANK AREA ASSUMED NON-EFFECTIVE, ELLEA= 1264.70 ELREA= 1264.35

19500.000	8.75	1262.55	.00	.00	1264.14	1.59	.45	.07	1264.70
11000.0	.0	11000.0	.0	.0	1088.4	.0	419.1	53.9	1264.35
.46	.00	10.11	.00	.000	.040	.000	.000	1253.80	1922.95
.004973	100.	100.	100.	2	0	0	.00	138.65	2061.60

*SECNO 19600.000

SECNO	DEPTH	CWSEL	CRIWS	WSELK	EG	HV	HL	OLOSS	L-BANK ELEV
Q	QLOB	QCH	QROB	ALOB	ACH	AROB	VOL	TWA	R-BANK ELEV
TIME	VLOB	VCH	VROB	XNL	XNCH	XNR	WTN	ELMIN	SSTA
SLOPE	XLOBL	XLCH	XLOBR	ITRIAL	IDC	ICONT	CORAR	TOPWID	ENDST

3495 OVERBANK AREA ASSUMED NON-EFFECTIVE, ELLEA= 1265.40 ELREA= 1265.38

19600.000	8.88	1263.08	.00	.00	1264.63	1.55	.49	.00	1265.40
11000.0	.0	11000.0	.0	.0	1099.9	.0	421.6	54.3	1265.38
.46	.00	10.00	.00	.000	.040	.000	.000	1254.20	1923.11
.004775	100.	100.	100.	2	0	0	.00	137.77	2060.88

*SECNO 19782.000

3301 HV CHANGED MORE THAN HVINS

3495 OVERBANK AREA ASSUMED NON-EFFECTIVE, ELLEA= 1266.00 ELREA= 1266.00

19782.000	9.80	1264.30	.00	.00	1265.34	1.04	.66	.05	1266.00
11000.0	.0	11000.0	.0	.0	1343.1	.0	426.7	54.9	1266.00
.47	.00	8.19	.00	.000	.040	.000	.000	1254.50	1912.96
.002832	182.	182.	182.	2	0	0	.00	154.09	2067.04

CCHV= .300 CEHV= .500
*SECNO 19940.000

3470 ENCROACHMENT STATIONS= 1916.0 2083.0 TYPE= 1 TARGET= 167.000

3495 OVERBANK AREA ASSUMED NON-EFFECTIVE, ELLEA= 100000.00 ELREA= 1268.00

19940.000	9.45	1264.75	.00	.00	1265.80	1.05	.46	.00	100000.00
11000.0	.0	11000.0	.0	.0	1338.8	.0	431.6	55.4	1268.00
.48	.00	8.22	.00	.000	.040	.000	.000	1255.30	1916.00
.002951	158.	158.	158.	2	0	0	.00	157.60	2073.60

SPECIAL BRIDGE

SB	XK	XKOR	COFQ	RDLEN	BWC	BWP	BAREA	SS	ELCHU	ELCHD
	1.05	1.60	2.60	167.50	125.00	3.00	1951.60	1.80	1255.40	1255.30

*SECNO 20050.000
1

SECNO	DEPTH	CWSEL	CRIWS	WSELK	EG	HV	HL	OLOSS	L-BANK ELEV
Q	QLOB	QCH	QROB	ALOB	ACH	AROB	VOL	TWA	R-BANK ELEV
TIME	VLOB	VCH	VROB	XNL	XNCH	XNR	WTN	ELMIN	SSTA
SLOPE	XLOBL	XLCH	XLOBR	ITRIAL	IDC	ICONT	CORAR	TOPWID	ENDST

CLASS A LOW FLOW

3420 BRIDGE W.S.= 1264.74 BRIDGE VELOCITY= 8.43 CALCULATED CHANNEL AREA= 1297.

EGPRS	EGLWC	H3	QWEIR	QLOW	BAREA	TRAPEZOID AREA	ELLC	ELTRD	WEIRLN

.00	1265.91	.07	0.	11000.	1952.	1823.	1268.00	1270.00	0.

3470 ENCROACHMENT STATIONS= 1910.0 2084.0 TYPE= 1 TARGET= 174.000

3495 OVERBANK AREA ASSUMED NON-EFFECTIVE, ELLEA= 1320.00 ELREA= 100000.00

20050.000	9.42	1264.82	.00	.00	1265.91	1.09	.11	.00	1320.00
11000.0	.0	11000.0	.0	.0	1314.9	.0	434.9	55.8	100000.00
.48	.00	8.37	.00	.000	.040	.000	.000	1255.40	1922.09
.003049	110.	110.	110.	0	0	0	.00	154.05	2076.14

*SECNO 20160.000

3301 HV CHANGED MORE THAN HVINS

3302 WARNING: CONVEYANCE CHANGE OUTSIDE OF ACCEPTABLE RANGE, KRATIO = 1.49

3495 OVERBANK AREA ASSUMED NON-EFFECTIVE, ELLEA= 1267.80 ELREA= 1268.50

20160.000	10.31	1265.73	.00	.00	1266.29	.55	.22	.16	1267.80
11000.0	.0	11000.0	.0	.0	1842.7	.0	438.9	56.3	1268.50
.48	.00	5.97	.00	.000	.040	.000	.000	1255.42	1899.99
.001381	110.	110.	110.	2	0	0	.00	200.15	2100.15

*SECNO 20200.000

3495 OVERBANK AREA ASSUMED NON-EFFECTIVE, ELLEA= 1267.80 ELREA= 1268.50

20200.000	10.52	1265.97	.00	.00	1266.38	.40	.05	.04	1267.80
11000.0	.0	11000.0	.0	.0	2154.5	.0	440.7	56.5	1268.50
.49	.00	5.11	.00	.000	.040	.000	.000	1255.45	1890.27
.000986	40.	40.	40.	2	0	0	.00	231.04	2121.31

SECNO	DEPTH	CWSEL	CRIWS	WSELK	EG	HV	HL	OLOSS	L-BANK ELEV
Q	QLOB	QCH	QROB	ALOB	ACH	AROB	VOL	TWA	R-BANK ELEV
TIME	VLOB	VCH	VROB	XNL	XNCH	XNR	WTN	ELMIN	SSTA
SLOPE	XLOBL	XLCH	XLOBR	ITRIAL	IDC	ICONT	CORAR	TOPWID	ENDST

CCHV= .100 CEHV= .300
*SECNO 20300.000

3495 OVERBANK AREA ASSUMED NON-EFFECTIVE, ELLEA= 1268.20 ELREA= 1268.30

20300.000	10.13	1266.06	.00	.00	1266.49	.43	.10	.01	1268.20
11000.0	.0	11000.0	.0	.0	2089.0	.0	445.6	57.0	1268.30
.49	.00	5.27	.00	.000	.040	.000	.000	1255.93	1890.92
.001105	100.	100.	100.	2	0	0	.00	233.69	2124.61

*SECNO 20500.000

3495 OVERBANK AREA ASSUMED NON-EFFECTIVE, ELLEA= 1269.00 ELREA= 1267.50

20500.000	9.36	1266.25	.00	.00	1266.77	.52	.25	.03	1269.00
11000.0	.0	11000.0	.0	.0	1896.3	.0	454.7	58.1	1267.50
.50	.00	5.80	.00	.000	.040	.000	.000	1256.89	1896.93
.001459	200.	200.	200.	2	0	0	.00	225.70	2122.63

*SECNO 20700.000

3495 OVERBANK AREA ASSUMED NON-EFFECTIVE, ELLEA= 1269.80 ELREA= 1269.00

20700.000	8.71	1266.56	.00	.00	1267.12	.55	.33	.01	1269.80
11000.0	.0	11000.0	.0	.0	1844.2	.0	463.3	59.2	1269.00
.51	.00	5.96	.00	.000	.040	.000	.000	1257.85	1885.16
.001936	200.	200.	200.	2	0	0	.00	262.19	2147.34

*SECNO 20900.000

3495 OVERBANK AREA ASSUMED NON-EFFECTIVE, ELLEA= 1270.80 ELREA= 1269.00

20900.000	8.13	1266.94	.00	.00	1267.57	.63	.43	.02	1270.80
11000.0	.0	11000.0	.0	.0	1724.0	.0	471.5	60.4	1269.00
.52	.00	6.38	.00	.000	.040	.000	.000	1258.81	1895.62
.002388	200.	200.	200.	2	0	0	.00	259.61	2155.23

*SECNO 21000.000

1

SECNO	DEPTH	CWSEL	CRIWS	WSELK	EG	HV	HL	OLOSS	L-BANK ELEV
Q	QLOB	QCH	QROB	ALOB	ACH	AROB	VOL	TWA	R-BANK ELEV
TIME	VLOB	VCH	VROB	XNL	XNCH	XNR	WTN	ELMIN	SSTA
SLOPE	XLOBL	XLCH	XLOBR	ITRIAL	IDC	ICONT	CORAR	TOPWID	ENDST

3495 OVERBANK AREA ASSUMED NON-EFFECTIVE, ELLEA= 1271.00 ELREA= 1269.30

21000.000	7.88	1267.17	.00	.00	1267.82	.65	.25	.01	1271.00
11000.0	.0	11000.0	.0	.0	1700.0	.0	475.5	61.0	1269.30
.52	.00	6.47	.00	.000	.040	.000	.000	1259.29	1896.39
.002573	100.	100.	100.	1	0	0	.00	265.15	2161.54

*SECNO 21230.000

3495 OVERBANK AREA ASSUMED NON-EFFECTIVE, ELLEA= 1272.50 ELREA= 1270.00

21230.000	7.36	1267.75	.00	.00	1268.52	.77	.66	.04	1272.50
11000.0	.0	11000.0	.0	.0	1565.1	.0	484.1	62.4	1270.00
.53	.00	7.03	.00	.000	.040	.000	.000	1260.39	1897.95
.003227	230.	230.	230.	0	0	0	.00	255.35	2153.30

*SECNO 21240.000

3495 OVERBANK AREA ASSUMED NON-EFFECTIVE, ELLEA= 1272.50 ELREA= 1270.00

21240.000	7.27	1267.77	.00	.00	1268.55	.78	.03	.00	1272.50
11000.0	.0	11000.0	.0	.0	1551.2	.0	484.4	62.4	1270.00
.53	.00	7.09	.00	.000	.040	.000	.000	1260.50	1897.98
.003332	10.	10.	10.	0	0	0	.00	255.92	2153.90

*SECNO 21330.000

3495 OVERBANK AREA ASSUMED NON-EFFECTIVE, ELLEA= 1273.00 ELREA= 1270.31

21330.000	7.21	1268.08	.00	.00	1268.86	.79	.31	.00	1273.00
11000.0	.0	11000.0	.0	.0	1543.7	.0	487.6	63.0	1270.31
.54	.00	7.13	.00	.000	.040	.000	.000	1260.87	1898.41
.003512	90.	90.	90.	0	0	0	.00	263.25	2161.65

*SECNO 21395.000

3301 HV CHANGED MORE THAN HVINS

1

13JUL98 15:33:18 PAGE 60

SECNO	DEPTH	CWSEL	CRIWS	WSELK	EG	HV	HL	OLOSS	L-BANK ELEV
Q	QLOB	QCH	QROB	ALOB	ACH	AROB	VOL	TWA	R-BANK ELEV
TIME	VLOB	VCH	VROB	XNL	XNCH	XNR	WTN	ELMIN	SSTA
SLOPE	XLOBL	XLCH	XLOBR	ITRIAL	IDC	ICONT	CORAR	TOPWID	ENDST

3685 20 TRIALS ATTEMPTED WSEL,CWSEL
3693 PROBABLE MINIMUM SPECIFIC ENERGY
3720 CRITICAL DEPTH ASSUMED

3495 OVERBANK AREA ASSUMED NON-EFFECTIVE, ELLEA= 1273.60 ELREA= 1270.94

21395.000	4.34	1268.34	1268.34	.00	1270.20	1.86	.42	.32	1273.60
11000.0	.0	11000.0	.0	.0	1005.2	.0	489.5	63.4	1270.94
.54	.00	10.94	.00	.000	.040	.000	.000	1264.00	1896.98
.015352	65.	65.	65.	20	14	0	.00	273.13	2170.11

*SECNO 21565.000

3301 HV CHANGED MORE THAN HVINS

3302 WARNING: CONVEYANCE CHANGE OUTSIDE OF ACCEPTABLE RANGE, KRATIO = 2.11

3495 OVERBANK AREA ASSUMED NON-EFFECTIVE, ELLEA= 1274.00 ELREA= 1271.00

21565.000	6.75	1270.75	.00	.00	1271.40	.64	1.08	.12	1274.00
11000.0	.0	11000.0	.0	.0	1707.9	.0	494.8	64.5	1271.00
.55	.00	6.44	.00	.000	.040	.000	.000	1264.00	1889.74

.003433	170.	170.	170.	2	0	0	.00	334.11	2223.84

*SECNO 21700.000

3495 OVERBANK AREA ASSUMED NON-EFFECTIVE, ELLEA= 1275.00 ELREA= 1275.00

21700.000	8.51	1271.16	.00	.00	1271.74	.58	.33	.01	1275.00
11000.0	.0	11000.0	.0	.0	1804.0	.0	500.3	65.4	1275.00
.55	.00	6.10	.00	.000	.040	.000	.000	1262.65	1893.80
.001834	135.	135.	135.	2	0	0	.00	237.74	2131.54

*SECNO 21900.000

3495 OVERBANK AREA ASSUMED NON-EFFECTIVE, ELLEA= 1276.00 ELREA= 1276.00

21900.000	7.93	1271.54	.00	.00	1272.11	.57	.38	.00	1276.00
11000.0	.0	11000.0	.0	.0	1815.2	.0	508.6	66.5	1276.00
.56	.00	6.06	.00	.000	.040	.000	.000	1263.61	1891.20
.001945	200.	200.	200.	2	0	0	.00	252.60	2143.80

SECNO	DEPTH	CWSEL	CRIWS	WSELK	EG	HV	HL	OLOSS	L-BANK ELEV
Q	QLOB	QCH	QROB	ALOB	ACH	AROB	VOL	TWA	R-BANK ELEV
TIME	VLOB	VCH	VROB	XNL	XNCH	XNR	WTN	ELMIN	SSTA
SLOPE	XLOBL	XLCH	XLOBR	ITRIAL	IDC	ICONT	CORAR	TOPWID	ENDST

*SECNO 22000.000

3495 OVERBANK AREA ASSUMED NON-EFFECTIVE, ELLEA= 1277.00 ELREA= 1277.00

22000.000	7.82	1271.91	.00	.00	1272.29	.37	.15	.02	1277.00
11000.0	.0	11000.0	.0	.0	2241.6	.0	513.2	67.2	1277.00
.57	.00	4.91	.00	.000	.040	.000	.000	1264.09	1851.53
.001261	100.	100.	100.	2	0	0	.00	309.95	2161.47

*SECNO 22200.000

3495 OVERBANK AREA ASSUMED NON-EFFECTIVE, ELLEA= 1277.00 ELREA= 1277.00

22200.000	7.13	1272.18	.00	.00	1272.56	.38	.27	.00	1277.00
11000.0	.0	11000.0	.0	.0	2216.0	.0	523.5	68.7	1277.00
.58	.00	4.96	.00	.000	.040	.000	.000	1265.05	1833.84
.001435	200.	200.	200.	2	0	0	.00	332.32	2166.16

*SECNO 22400.000

3302 WARNING: CONVEYANCE CHANGE OUTSIDE OF ACCEPTABLE RANGE, KRATIO = .65

3495 OVERBANK AREA ASSUMED NON-EFFECTIVE, ELLEA= 1277.00 ELREA= 1277.00

22400.000	6.32	1272.33	.00	.00	1273.09	.76	.42	.11	1277.00
11000.0	.0	11000.0	.0	.0	1574.8	.0	532.2	70.0	1277.00
.59	.00	6.99	.00	.000	.040	.000	.000	1266.01	1871.03
.003367	200.	200.	200.	2	0	0	.00	267.95	2138.97

*SECNO 22500.000

3495 OVERBANK AREA ASSUMED NON-EFFECTIVE, ELLEA= 1277.00 ELREA= 1277.00

22500.000	6.08	1272.57	.00	.00	1273.55	.97	.39	.06	1277.00
11000.0	.0	11000.0	.0	.0	1388.9	.0	535.6	70.6	1277.00
.59	.00	7.92	.00	.000	.040	.000	.000	1266.49	1881.75
.004581	100.	100.	100.	0	0	0	.00	246.51	2128.25

1

SECNO	DEPTH	CWSEL	CRIWS	WSELK	EG	HV	HL	OLOSS	L-BANK ELEV
Q	QLOB	QCH	QROB	ALOB	ACH	AROB	VOL	TWA	R-BANK ELEV
TIME	VLOB	VCH	VROB	XNL	XNCH	XNR	WTN	ELMIN	SSTA
SLOPE	XLOBL	XLCH	XLOBR	ITRIAL	IDC	ICONT	CORAR	TOPWID	ENDST

*SECNO 22510.000

3495 OVERBANK AREA ASSUMED NON-EFFECTIVE, ELLEA= 1277.00 ELREA= 1277.00

22510.000	5.94	1272.44	.00	.00	1273.68	1.24	.05	.08	1277.00
11000.0	.0	11000.0	.0	.0	1229.2	.0	535.9	70.7	1277.00
.59	.00	8.95	.00	.000	.040	.000	.000	1266.50	1902.18
.006064	10.	10.	10.	2	0	0	.00	223.94	2126.12

*SECNO 22520.000

3495 OVERBANK AREA ASSUMED NON-EFFECTIVE, ELLEA= 1277.00 ELREA= 1277.00

22520.000	5.83	1272.43	.00	.00	1273.78	1.35	.06	.03	1277.00
11000.0	.0	11000.0	.0	.0	1180.0	.0	536.1	70.7	1277.00
.59	.00	9.32	.00	.000	.040	.000	.000	1266.60	1907.52
.006781	10.	10.	10.	2	0	0	.00	219.97	2127.48

*SECNO 22540.000

3495 OVERBANK AREA ASSUMED NON-EFFECTIVE, ELLEA= 1277.00 ELREA= 1277.00

22540.000	5.81	1272.51	.00	.00	1273.94	1.43	.14	.02	1277.00
11000.0	.0	11000.0	.0	.0	1147.9	.0	536.7	70.8	1277.00
.59	.00	9.58	.00	.000	.040	.000	.000	1266.70	1912.56
.007208	20.	20.	20.	2	0	0	.00	214.88	2127.44

*SECNO 22560.000

3495 OVERBANK AREA ASSUMED NON-EFFECTIVE, ELLEA= 1277.00 ELREA= 1277.00

22560.000	5.81	1272.61	.00	.00	1274.11	1.50	.15	.02	1277.00
11000.0	.0	11000.0	.0	.0	1117.4	.0	537.2	70.9	1277.00
.59	.00	9.84	.00	.000	.040	.000	.000	1266.80	1917.58
.007641	20.	20.	20.	2	0	0	.00	209.84	2127.42

*SECNO 22580.000

1

13JUL98 15:33:18 PAGE 63

SECNO	DEPTH	CWSEL	CRIWS	WSELK	EG	HV	HL	OLOSS	L-BANK ELEV
Q	QLOB	QCH	QROB	ALOB	ACH	AROB	VOL	TWA	R-BANK ELEV
TIME	VLOB	VCH	VROB	XNL	XNCH	XNR	WTN	ELMIN	SSTA
SLOPE	XLOBL	XLCH	XLOBR	ITRIAL	IDC	ICONT	CORAR	TOPWID	ENDST

3495 OVERBANK AREA ASSUMED NON-EFFECTIVE, ELLEA= 1277.00 ELREA= 1277.00

22580.000	5.81	1272.71	.00	.00	1274.29	1.59	.16	.02	1277.00
11000.0	.0	11000.0	.0	.0	1088.5	.0	537.7	71.0	1277.00
.59	.00	10.11	.00	.000	.040	.000	.000	1266.90	1922.58
.008078	20.	20.	20.	2	0	0	.00	204.85	2127.42

*SECNO 22600.000

3495 OVERBANK AREA ASSUMED NON-EFFECTIVE, ELLEA= 1277.00 ELREA= 1277.00

22600.000	5.80	1272.80	.00	.00	1274.49	1.70	.17	.03	1277.00
11000.0	.0	11000.0	.0	.0	1052.2	.0	538.2	71.1	1277.00
.59	.00	10.45	.00	.000	.040	.000	.000	1267.00	1927.61
.008655	20.	20.	20.	2	0	0	.00	198.04	2125.65

*SECNO 22620.000

3495 OVERBANK AREA ASSUMED NON-EFFECTIVE, ELLEA= 1277.00 ELREA= 1277.00

22620.000	5.83	1272.93	.00	.00	1274.69	1.75	.18	.02	1277.00
11000.0	.0	11000.0	.0	.0	1035.5	.0	538.7	71.2	1277.00
.59	.00	10.62	.00	.000	.040	.000	.000	1267.10	1932.50
.008939	20.	20.	20.	2	0	0	.00	195.00	2127.50

*SECNO 22640.000

3495 OVERBANK AREA ASSUMED NON-EFFECTIVE, ELLEA= 1277.00 ELREA= 1277.00

22640.000	5.86	1273.06	.00	.00	1274.90	1.84	.18	.03	1277.00
11000.0	.0	11000.0	.0	.0	1010.5	.0	539.2	71.3	1277.00
.59	.00	10.89	.00	.000	.040	.000	.000	1267.20	1937.43
.009381	20.	20.	20.	2	0	0	.00	190.13	2127.57

*SECNO 22660.000

3495 OVERBANK AREA ASSUMED NON-EFFECTIVE, ELLEA= 1277.00 ELREA= 1277.00

SECNO	DEPTH	CWSEL	CRIWS	WSELK	EG	HV	HL	OLOSS	L-BANK ELEV
Q	QLOB	QCH	QROB	ALOB	ACH	AROB	VOL	TWA	R-BANK ELEV
TIME	VLOB	VCH	VROB	XNL	XNCH	XNR	WTN	ELMIN	SSTA
SLOPE	XLOBL	XLCH	XLOBR	ITRIAL	IDC	ICONT	CORAR	TOPWID	ENDST
22660.000	5.88	1273.18	.00	.00	1275.11	1.93	.19	.03	1277.00
11000.0	.0	11000.0	.0	.0	986.6	.0	539.6	71.4	1277.00
.59	.00	11.15	.00	.000	.040	.000	.000	1267.30	1942.35
.009820	20.	20.	20.	2	0	0	.00	185.31	2127.65

*SECNO 22680.000

3301 HV CHANGED MORE THAN HVINS

3495 OVERBANK AREA ASSUMED NON-EFFECTIVE, ELLEA= 1277.00 ELREA= 1277.00

22680.000	6.50	1273.90	.00	.00	1275.32	1.42	.15	.05	1277.00
11000.0	.0	11000.0	.0	.0	1151.3	.0	540.1	71.5	1277.00
.59	.00	9.55	.00	.000	.040	.000	.000	1267.40	1942.41
.006125	20.	20.	20.	3	0	0	.00	190.19	2132.59

*SECNO 22700.000

3495 OVERBANK AREA ASSUMED NON-EFFECTIVE, ELLEA= 1277.00 ELREA= 1277.00

22700.000	6.42	1273.92	.00	.00	1275.50	1.57	.13	.05	1277.00
11000.0	.0	11000.0	.0	.0	1093.2	.0	540.6	71.6	1277.00
.59	.00	10.06	.00	.000	.040	.000	.000	1267.50	1947.65
.006894	20.	20.	20.	2	0	0	.00	182.34	2130.00

*SECNO 22720.000

3495 OVERBANK AREA ASSUMED NON-EFFECTIVE, ELLEA= 1277.00 ELREA= 1277.00

22720.000	6.57	1274.07	.00	.00	1275.63	1.56	.14	.00	1277.00
11000.0	.0	11000.0	.0	.0	1096.1	.0	541.1	71.6	1277.00
.60	.00	10.04	.00	.000	.040	.000	.000	1267.50	1952.38
.006723	20.	20.	20.	1	0	0	.00	180.24	2132.62

*SECNO 22740.000

3495 OVERBANK AREA ASSUMED NON-EFFECTIVE, ELLEA= 1277.00 ELREA= 1277.00

SECNO	DEPTH	CWSEL	CRIWS	WSELK	EG	HV	HL	OLOSS	L-BANK ELEV
Q	QLOB	QCH	QROB	ALOB	ACH	AROB	VOL	TWA	R-BANK ELEV
TIME	VLOB	VCH	VROB	XNL	XNCH	XNR	WTN	ELMIN	SSTA

SLOPE	XLOBL	XLCH	XLOBR	ITRIAL	IDC	ICONT	CORAR	TOPWID	ENDST
22740.000	6.52	1274.12	.00	.00	1275.81	1.69	.14	.04	1277.00
11000.0	.0	11000.0	.0	.0	1055.8	.0	541.6	71.7	1277.00
.60	.00	10.42	.00	.000	.040	.000	.000	1267.60	1957.55
.007322	20.	20.	20.	2	0	0	.00	174.89	2132.45

*SECNO 22760.000

3495 OVERBANK AREA ASSUMED NON-EFFECTIVE, ELLEA= 1277.00 ELREA= 1277.00

22760.000	6.48	1274.18	.00	.00	1276.00	1.83	.15	.04	1277.00
11000.0	.0	11000.0	.0	.0	1014.3	.0	542.1	71.8	1277.00
.60	.00	10.85	.00	.000	.040	.000	.000	1267.70	1962.74
.008034	20.	20.	20.	2	0	0	.00	169.51	2132.26

*SECNO 22780.000

3495 OVERBANK AREA ASSUMED NON-EFFECTIVE, ELLEA= 1277.00 ELREA= 1277.00

22780.000	6.44	1274.24	.00	.00	1276.22	1.98	.17	.05	1277.00
11000.0	.0	11000.0	.0	.0	974.3	.0	542.5	71.9	1277.00
.60	.00	11.29	.00	.000	.040	.000	.000	1267.80	1967.92
.008808	20.	20.	20.	2	0	0	.00	164.16	2132.08

*SECNO 22800.000

3495 OVERBANK AREA ASSUMED NON-EFFECTIVE, ELLEA= 1277.00 ELREA= 1277.00

22800.000	6.49	1274.39	.00	.00	1276.41	2.01	.18	.01	1277.00
11000.0	.0	11000.0	.0	.0	966.0	.0	543.0	72.0	1277.00
.60	.00	11.39	.00	.000	.040	.000	.000	1267.90	1968.68
.008845	20.	20.	20.	1	0	0	.00	160.99	2129.67

*SECNO 22820.000

3495 OVERBANK AREA ASSUMED NON-EFFECTIVE, ELLEA= 1277.00 ELREA= 1277.00

22820.000	6.74	1274.74	.00	.00	1276.59	1.85	.17	.02	1277.00
11000.0	.0	11000.0	.0	.0	1007.3	.0	543.4	72.0	1277.00
.60	.00	10.92	.00	.000	.040	.000	.000	1268.00	1969.52
.007815	20.	20.	20.	2	0	0	.00	162.96	2132.48

SECNO	DEPTH	CWSEL	CRIWS	WSELK	EG	HV	HL	OLOSS	L-BANK ELEV
Q	QLOB	QCH	QROB	ALOB	ACH	AROB	VOL	TWA	R-BANK ELEV
TIME	VLOB	VCH	VROB	XNL	XNCH	XNR	WTN	ELMIN	SSTA
SLOPE	XLOBL	XLCH	XLOBR	ITRIAL	IDC	ICONT	CORAR	TOPWID	ENDST

*SECNO 22840.000

3495 OVERBANK AREA ASSUMED NON-EFFECTIVE, ELLEA= 1277.00 ELREA= 1277.00

22840.000	6.80	1274.90	.00	.00	1276.74	1.84	.16	.00	1277.00
11000.0	.0	11000.0	.0	.0	1009.5	.0	543.9	72.1	1277.00
.60	.00	10.90	.00	.000	.040	.000	.000	1268.10	1970.50
.007701	20.	20.	20.	0	0	0	.00	162.01	2132.50

*SECNO 22860.000

3495 OVERBANK AREA ASSUMED NON-EFFECTIVE, ELLEA= 1277.00 ELREA= 1277.00

22860.000	6.83	1275.03	.00	.00	1276.91	1.89	.16	.01	1277.00
11000.0	.0	11000.0	.0	.0	998.3	.0	544.4	72.2	1277.00
.60	.00	11.02	.00	.000	.040	.000	.000	1268.20	1972.55
.007857	20.	20.	20.	2	0	0	.00	159.90	2132.45

*SECNO 22877.000

3301 HV CHANGED MORE THAN HVINS

3495 OVERBANK AREA ASSUMED NON-EFFECTIVE, ELLEA= 1277.00 ELREA= 1277.00

22877.000	8.09	1276.39	.00	.00	1277.10	.71	.07	.12	1277.00
8400.0	.0	8400.0	.0	.0	1240.1	.0	544.8	72.2	1277.00
.60	.00	6.77	.00	.000	.040	.000	.000	1268.30	1972.12
.002462	17.	17.	17.	3	0	0	.00	172.76	2144.88

*SECNO 22900.000

3495 OVERBANK AREA ASSUMED NON-EFFECTIVE, ELLEA= 1277.00 ELREA= 1277.00

22900.000	7.96	1276.36	.00	.00	1277.20	.84	.06	.04	1277.00
8400.0	.0	8400.0	.0	.0	1140.0	.0	545.4	72.3	1277.00
.60	.00	7.37	.00	.000	.040	.000	.000	1268.40	1973.48
.002921	23.	23.	23.	2	0	0	.00	158.19	2131.67

1

SECNO	DEPTH	CWSEL	CRIWS	WSELK	EG	HV	HL	OLOSS	L-BANK ELEV
Q	QLOB	QCH	QROB	ALOB	ACH	AROB	VOL	TWA	R-BANK ELEV
TIME	VLOB	VCH	VROB	XNL	XNCH	XNR	WTN	ELMIN	SSTA
SLOPE	XLOBL	XLCH	XLOBR	ITRIAL	IDC	ICONT	CORAR	TOPWID	ENDST

*SECNO 22920.000

3495 OVERBANK AREA ASSUMED NON-EFFECTIVE, ELLEA= 1277.00 ELREA= 1277.00

22920.000	7.92	1276.42	.00	.00	1277.26	.85	.06	.00	1277.00
8400.0	.0	8400.0	.0	.0	1138.3	.0	546.0	72.4	1277.00
.60	.00	7.38	.00	.000	.040	.000	.000	1268.50	1974.67
.002965	20.	20.	20.	0	0	0	.00	159.66	2134.33

*SECNO 22940.000

3495 OVERBANK AREA ASSUMED NON-EFFECTIVE, ELLEA= 1277.00 ELREA= 1277.00

22940.000	7.86	1276.46	.00	.00	1277.33	.87	.06	.01	1277.00
8400.0	.0	8400.0	.0	.0	1121.7	.0	546.5	72.5	1277.00
.60	.00	7.49	.00	.000	.040	.000	.000	1268.60	1975.86
.003079	20.	20.	20.	1	0	0	.00	158.28	2134.14

*SECNO 22960.000

3495 OVERBANK AREA ASSUMED NON-EFFECTIVE, ELLEA= 1277.00 ELREA= 1277.00

22960.000	7.80	1276.50	.00	.00	1277.40	.90	.06	.01	1277.00
8400.0	.0	8400.0	.0	.0	1103.3	.0	547.0	72.6	1277.00
.60	.00	7.61	.00	.000	.040	.000	.000	1268.70	1977.07
.003214	20.	20.	20.	1	0	0	.00	156.85	2133.93

*SECNO 22980.000

3495 OVERBANK AREA ASSUMED NON-EFFECTIVE, ELLEA= 1277.00 ELREA= 1277.00

22980.000	7.85	1276.65	.00	.00	1277.47	.82	.06	.01	1277.00
8400.0	.0	8400.0	.0	.0	1153.4	.0	547.5	72.6	1277.00
.60	.00	7.28	.00	.000	.040	.000	.000	1268.80	1978.10
.002972	20.	20.	20.	2	0	0	.00	166.00	2144.10

*SECNO 23000.000

1

SECNO	DEPTH	CWSEL	CRIWS	WSELK	EG	HV	HL	OLOSS	L-BANK ELEV
Q	QLOB	QCH	QROB	ALOB	ACH	AROB	VOL	TWA	R-BANK ELEV
TIME	VLOB	VCH	VROB	XNL	XNCH	XNR	WTN	ELMIN	SSTA
SLOPE	XLOBL	XLCH	XLOBR	ITRIAL	IDC	ICONT	CORAR	TOPWID	ENDST

3495 OVERBANK AREA ASSUMED NON-EFFECTIVE, ELLEA= 1281.00 ELREA= 1281.00

23000.000	7.81	1276.71	.00	.00	1277.53	.82	.06	.00	1281.00
8400.0	.0	8400.0	.0	.0	1154.6	.0	548.0	72.7	1281.00
.60	.00	7.28	.00	.000	.040	.000	.000	1268.90	1931.78
.002915	20.	20.	20.	0	0	0	.00	163.44	2095.22

*SECNO 23100.000

3495 OVERBANK AREA ASSUMED NON-EFFECTIVE, ELLEA= 1281.50 ELREA= 1281.50

23100.000	7.56	1276.96	.00	.00	1277.87	.91	.31	.03	1281.50
8400.0	.0	8400.0	.0	.0	1097.2	.0	550.6	73.1	1281.50
.61	.00	7.66	.00	.000	.040	.000	.000	1269.40	1944.88
.003363	100.	100.	100.	2	0	0	.00	160.24	2105.12

*SECNO 23200.000

3495 OVERBANK AREA ASSUMED NON-EFFECTIVE, ELLEA= 1282.00 ELREA= 1281.78

23200.000	7.48	1277.33	.00	.00	1278.22	.89	.34	.00	1282.00
8400.0	.0	8400.0	.0	.0	1111.6	.0	553.2	73.5	1281.78
.61	.00	7.56	.00	.000	.040	.000	.000	1269.85	1914.56
.003481	100.	100.	100.	2	0	0	.00	171.29	2085.85

*SECNO 23300.000

3495 OVERBANK AREA ASSUMED NON-EFFECTIVE, ELLEA= 1282.00 ELREA= 1282.00

23300.000	7.33	1277.66	.00	.00	1278.59	.93	.36	.01	1282.00
8400.0	.0	8400.0	.0	.0	1085.6	.0	555.7	73.8	1282.00
.62	.00	7.74	.00	.000	.040	.000	.000	1270.33	1915.00
.003730	100.	100.	100.	1	0	0	.00	170.00	2085.01

*SECNO 23310.000

3495 OVERBANK AREA ASSUMED NON-EFFECTIVE, ELLEA= 1282.00 ELREA= 1282.00

SECNO	DEPTH	CWSEL	CRIWS	WSELK	EG	HV	HL	OLOSS	L-BANK ELEV
Q	QLOB	QCH	QROB	ALOB	ACH	AROB	VOL	TWA	R-BANK ELEV
TIME	VLOB	VCH	VROB	XNL	XNCH	XNR	WTN	ELMIN	SSTA
SLOPE	XLOBL	XLCH	XLOBR	ITRIAL	IDC	ICONT	CORAR	TOPWID	ENDST
23310.000	7.35	1277.70	.00	.00	1278.63	.93	.04	.00	1282.00
8400.0	.0	8400.0	.0	.0	1087.2	.0	555.9	73.9	1282.00
.62	.00	7.73	.00	.000	.040	.000	.000	1270.35	1914.97
.003713	10.	10.	10.	0	0	0	.00	170.07	2085.03

*SECNO 23400.000

3495 OVERBANK AREA ASSUMED NON-EFFECTIVE, ELLEA= 1282.50 ELREA= 1282.50

23400.000	7.19	1278.00	.00	.00	1279.00	1.00	.35	.02	1282.50
8400.0	.0	8400.0	.0	.0	1046.5	.0	558.1	74.2	1282.50
.62	.00	8.03	.00	.000	.040	.000	.000	1270.81	1916.43
.004120	90.	90.	90.	2	0	0	.00	167.14	2083.57

*SECNO 23500.000

3495 OVERBANK AREA ASSUMED NON-EFFECTIVE, ELLEA= 1283.00 ELREA= 1283.00

23500.000	7.08	1278.37	.00	.00	1279.46	1.10	.44	.03	1283.00
8400.0	.0	8400.0	.0	.0	999.7	.0	560.5	74.6	1283.00
.62	.00	8.40	.00	.000	.040	.000	.000	1271.29	1918.77
.004623	100.	100.	100.	2	0	0	.00	162.47	2081.23

*SECNO 23575.000

3495 OVERBANK AREA ASSUMED NON-EFFECTIVE, ELLEA= 1286.00 ELREA= 1286.00

23575.000	6.93	1278.58	.00	.00	1279.93	1.35	.39	.08	1286.00
8400.0	.0	8400.0	.0	.0	901.2	.0	562.1	74.9	1286.00
.62	.00	9.32	.00	.000	.040	.000	.000	1271.65	1917.10
.005920	75.	75.	75.	2	0	0	.00	150.79	2067.90

*SECNO 23645.000

3495 OVERBANK AREA ASSUMED NON-EFFECTIVE, ELLEA= 1286.00 ELREA= 1286.00

23645.000	7.56	1279.21	.00	.00	1280.31	1.10	.35	.02	1286.00
8400.0	.0	8400.0	.0	.0	997.2	.0	563.6	75.1	1286.00
.63	.00	8.42	.00	.000	.040	.000	.000	1271.65	1915.22
.004372	70.	70.	70.	2	0	0	.00	154.57	2069.78

SECNO	DEPTH	CWSEL	CRIWS	WSELK	EG	HV	HL	OLOSS	L-BANK ELEV
Q	QLOB	QCH	QROB	ALOB	ACH	AROB	VOL	TWA	R-BANK ELEV
TIME	VLOB	VCH	VROB	XNL	XNCH	XNR	WTN	ELMIN	SSTA
SLOPE	XLOBL	XLCH	XLOBR	ITRIAL	IDC	ICONT	CORAR	TOPWID	ENDST

*SECNO 23800.000

3495 OVERBANK AREA ASSUMED NON-EFFECTIVE, ELLEA= 1284.00 ELREA= 1284.00

23800.000	7.31	1280.04	.00	.00	1280.95	.91	.62	.02	1284.00
8400.0	.0	8400.0	.0	.0	1095.2	.0	567.4	75.7	1284.00
.63	.00	7.67	.00	.000	.040	.000	.000	1272.73	1914.08
.003673	155.	155.	155.	2	0	0	.00	171.83	2085.92

*SECNO 24000.000

3495 OVERBANK AREA ASSUMED NON-EFFECTIVE, ELLEA= 1285.00 ELREA= 1285.00

24000.000	7.08	1280.77	.00	.00	1281.73	.96	.76	.01	1285.00
8400.0	.0	8400.0	.0	.0	1070.7	.0	572.3	76.5	1285.00
.64	.00	7.85	.00	.000	.040	.000	.000	1273.69	1907.26
.003978	200.	200.	200.	2	0	0	.00	172.48	2079.74

*SECNO 24200.000

3495 OVERBANK AREA ASSUMED NON-EFFECTIVE, ELLEA= 1288.00 ELREA= 1288.00

24200.000	6.93	1281.58	.00	.00	1282.52	.94	.80	.00	1288.00
8400.0	.0	8400.0	.0	.0	1080.5	.0	577.3	77.3	1288.00
.65	.00	7.77	.00	.000	.040	.000	.000	1274.65	1911.70
.003980	200.	200.	200.	2	0	0	.00	176.61	2088.30

*SECNO 24365.000

3495 OVERBANK AREA ASSUMED NON-EFFECTIVE, ELLEA= 1287.80 ELREA= 1289.37

24365.000	6.77	1282.21	.00	.00	1283.25	1.04	.69	.03	1287.80
8400.0	.0	8400.0	.0	.0	1026.1	.0	581.3	78.0	1289.37
.65	.00	8.19	.00	.000	.040	.000	.000	1275.44	1903.58
.004449	165.	165.	165.	2	0	0	.00	168.27	2071.85

*SECNO 24500.000

1

13JUL98 15:33:18 PAGE 71

SECNO	DEPTH	CWSEL	CRIWS	WSELK	EG	HV	HL	OLOSS	L-BANK ELEV
Q	QLOB	QCH	QROB	ALOB	ACH	AROB	VOL	TWA	R-BANK ELEV
TIME	VLOB	VCH	VROB	XNL	XNCH	XNR	WTN	ELMIN	SSTA
SLOPE	XLOBL	XLCH	XLOBR	ITRIAL	IDC	ICONT	CORAR	TOPWID	ENDST

3495 OVERBANK AREA ASSUMED NON-EFFECTIVE, ELLEA= 1287.80 ELREA= 1287.50

24500.000	6.80	1282.89	.00	.00	1283.83	.94	.57	.01	1287.80
8400.0	.0	8400.0	.0	.0	1080.6	.0	584.5	78.5	1287.50
.66	.00	7.77	.00	.000	.040	.000	.000	1276.09	1902.58
.004018	135.	135.	135.	2	0	0	.00	177.82	2080.40

*SECNO 24510.000

3301 HV CHANGED MORE THAN HVINS

3685 20 TRIALS ATTEMPTED WSEL,CWSEL
3693 PROBABLE MINIMUM SPECIFIC ENERGY
3720 CRITICAL DEPTH ASSUMED

3495 OVERBANK AREA ASSUMED NON-EFFECTIVE, ELLEA= 1287.80 ELREA= 1287.50

24510.000	4.39	1283.48	1283.48	.00	1285.55	2.06	.07	.34	1287.80
8400.0	.0	8400.0	.0	.0	728.9	.0	584.7	78.5	1287.50
.66	.00	11.52	.00	.000	.040	.000	.000	1279.09	1902.39
.014933	10.	10.	10.	20	14	0	.00	178.79	2081.18

*SECNO 24700.000

3301 HV CHANGED MORE THAN HVINS

3302 WARNING: CONVEYANCE CHANGE OUTSIDE OF ACCEPTABLE RANGE, KRATIO = 2.02

3495 OVERBANK AREA ASSUMED NON-EFFECTIVE, ELLEA= 1290.00 ELREA= 1288.50

24700.000	6.94	1286.03	.00	.00	1286.91	.88	1.25	.12	1290.00
8400.0	.0	8400.0	.0	.0	1115.5	.0	588.8	79.3	1288.50

.66	.00	7.53	.00	.000	.040	.000	.000	1279.09	1900.19
.003663	190.	190.	190.	2	0	0	.00	179.56	2079.75

*SECNO 24900.000

1

SECNO	DEPTH	CWSEL	CRIWS	WSELK	EG	HV	HL	OLOSS	L-BANK ELEV
Q	QLOB	QCH	QROB	ALOB	ACH	AROB	VOL	TWA	R-BANK ELEV
TIME	VLOB	VCH	VROB	XNL	XNCH	XNR	WTN	ELMIN	SSTA
SLOPE	XLOBL	XLCH	XLOBR	ITRIAL	IDC	ICONT	CORAR	TOPWID	ENDST

3495 OVERBANK AREA ASSUMED NON-EFFECTIVE, ELLEA= 1289.50 ELREA= 1289.50

24900.000	7.71	1286.80	.00	.00	1287.55	.75	.63	.01	1289.50
8400.0	.0	8400.0	.0	.0	1209.1	.0	594.1	80.1	1289.50
.67	.00	6.95	.00	.000	.040	.000	.000	1279.09	1906.47
.002747	200.	200.	200.	3	0	0	.00	176.47	2082.94

*SECNO 25000.000

3495 OVERBANK AREA ASSUMED NON-EFFECTIVE, ELLEA= 1290.00 ELREA= 1290.00

25000.000	8.11	1287.20	.00	.00	1287.81	.61	.24	.01	1290.00
8400.0	.0	8400.0	.0	.0	1341.0	.0	597.0	80.5	1290.00
.68	.00	6.26	.00	.000	.040	.000	.000	1279.09	1906.68
.002085	100.	100.	100.	2	0	0	.00	185.85	2092.53

*SECNO 25200.000

3495 OVERBANK AREA ASSUMED NON-EFFECTIVE, ELLEA= 1290.00 ELREA= 1291.00

25200.000	8.25	1287.65	.00	.00	1288.20	.55	.39	.01	1290.00
8400.0	.0	8400.0	.0	.0	1406.9	.0	603.3	81.4	1291.00
.69	.00	5.97	.00	.000	.040	.000	.000	1279.40	1905.54
.001844	200.	200.	200.	2	0	0	.00	191.11	2096.65

*SECNO 25400.000

3495 OVERBANK AREA ASSUMED NON-EFFECTIVE, ELLEA= 1291.00 ELREA= 1292.00

25400.000	7.38	1287.97	.00	.00	1288.72	.75	.45	.06	1291.00
8400.0	.0	8400.0	.0	.0	1208.4	.0	609.3	82.3	1292.00
.69	.00	6.95	.00	.000	.040	.000	.000	1280.59	1902.99
.002876	200.	200.	200.	2	0	0	.00	182.64	2085.64

*SECNO 25500.000

3495 OVERBANK AREA ASSUMED NON-EFFECTIVE, ELLEA= 1292.00 ELREA= 1292.00

1

SECNO	DEPTH	CWSEL	CRIWS	WSELK	EG	HV	HL	OLOSS	L-BANK ELEV
Q	QLOB	QCH	QROB	ALOB	ACH	AROB	VOL	TWA	R-BANK ELEV
TIME	VLOB	VCH	VROB	XNL	XNCH	XNR	WTN	ELMIN	SSTA
SLOPE	XLOBL	XLCH	XLOBR	ITRIAL	IDC	ICONT	CORAR	TOPWID	ENDST
25500.000	7.00	1288.19	.00	.00	1289.08	.89	.32	.04	1292.00
8400.0	.0	8400.0	.0	.0	1108.5	.0	612.0	82.7	1292.00
.70	.00	7.58	.00	.000	.040	.000	.000	1281.19	1908.80
.003659	100.	100.	100.	1	0	0	.00	176.41	2085.20

*SECNO 25600.000

3495 OVERBANK AREA ASSUMED NON-EFFECTIVE, ELLEA= 1293.00 ELREA= 1291.00

25600.000	6.68	1288.47	.00	.00	1289.55	1.09	.41	.06	1293.00
8400.0	.0	8400.0	.0	.0	1004.1	.0	614.4	83.1	1291.00
.70	.00	8.37	.00	.000	.040	.000	.000	1281.79	1913.34
.004727	100.	100.	100.	2	0	0	.00	166.71	2080.05

*SECNO 25650.000

3495 OVERBANK AREA ASSUMED NON-EFFECTIVE, ELLEA= 1293.00 ELREA= 1293.00

25650.000	6.58	1288.67	.00	.00	1289.82	1.15	.25	.02	1293.00
8400.0	.0	8400.0	.0	.0	975.8	.0	615.6	83.3	1293.00
.70	.00	8.61	.00	.000	.040	.000	.000	1282.09	1913.87
.005167	50.	50.	50.	0	0	0	.00	166.23	2080.10

*SECNO 25660.000

3301 HV CHANGED MORE THAN HVINS

3302 WARNING: CONVEYANCE CHANGE OUTSIDE OF ACCEPTABLE RANGE, KRATIO = .63

3495 OVERBANK AREA ASSUMED NON-EFFECTIVE, ELLEA= 1293.00 ELREA= 1293.00

25660.000	5.03	1288.12	.00	.00	1290.17	2.05	.08	.27	1293.00
8400.0	.0	8400.0	.0	.0	730.9	.0	615.7	83.3	1293.00
.70	.00	11.49	.00	.000	.040	.000	.000	1283.09	1917.23
.012851	10.	10.	10.	3	0	0	.00	160.47	2077.70

SECNO	DEPTH	CWSEL	CRIWS	WSELK	EG	HV	HL	OLOSS	L-BANK ELEV
Q	QLOB	QCH	QROB	ALOB	ACH	AROB	VOL	TWA	R-BANK ELEV
TIME	VLOB	VCH	VROB	XNL	XNCH	XNR	WTN	ELMIN	SSTA
SLOPE	XLOBL	XLCH	XLOBR	ITRIAL	IDC	ICONT	CORAR	TOPWID	ENDST

*SECNO 25700.000

3301 HV CHANGED MORE THAN HVINS

3495 OVERBANK AREA ASSUMED NON-EFFECTIVE, ELLEA= 1292.00 ELREA= 1293.00

25700.000	6.13	1289.22	.00	.00	1290.61	1.39	.37	.07	1292.00
8400.0	.0	8400.0	.0	.0	888.9	.0	616.5	83.5	1293.00
.70	.00	9.45	.00	.000	.040	.000	.000	1283.09	1911.54
.007058	40.	40.	40.	4	0	0	.00	167.01	2078.56

*SECNO 25827.000

3495 OVERBANK AREA ASSUMED NON-EFFECTIVE, ELLEA= 1292.00 ELREA= 1293.00

25827.000	7.27	1290.36	.00	.00	1291.31	.95	.66	.04	1292.00
8400.0	.0	8400.0	.0	.0	1071.2	.0	619.3	83.9	1293.00
.71	.00	7.84	.00	.000	.040	.000	.000	1283.09	1907.36
.004028	127.	127.	127.	2	0	0	.00	174.65	2082.01

*SECNO 25830.000

3495 OVERBANK AREA ASSUMED NON-EFFECTIVE, ELLEA= 1292.00 ELREA= 1293.00

25830.000	7.19	1290.36	.00	.00	1291.33	.98	.01	.01	1292.00
8400.0	.0	8400.0	.0	.0	1057.9	.0	619.4	84.0	1293.00
.71	.00	7.94	.00	.000	.040	.000	.000	1283.17	1907.45
.004192	3.	3.	3.	2	0	0	.00	174.48	2081.93

*SECNO 25870.000

3495 OVERBANK AREA ASSUMED NON-EFFECTIVE, ELLEA= 1294.00 ELREA= 1294.00

25870.000	6.99	1290.40	.00	.00	1291.57	1.17	.18	.06	1294.00
8400.0	.0	8400.0	.0	.0	966.9	.0	620.4	84.1	1294.00
.71	.00	8.69	.00	.000	.040	.000	.000	1283.41	1904.17
.004932	40.	40.	40.	2	0	0	.00	156.55	2060.72

SECNO	DEPTH	CWSEL	CRIWS	WSELK	EG	HV	HL	OLOSS	L-BANK ELEV
Q	QLOB	QCH	QROB	ALOB	ACH	AROB	VOL	TWA	R-BANK ELEV
TIME	VLOB	VCH	VROB	XNL	XNCH	XNR	WTN	ELMIN	SSTA
SLOPE	XLOBL	XLCH	XLOBR	ITRIAL	IDC	ICONT	CORAR	TOPWID	ENDST

CCHV= .300 CEHV= .500
*SECNO 26000.000

3470 ENCROACHMENT STATIONS= 1920.7 2070.4 TYPE= 1 TARGET= 149.700

3495 OVERBANK AREA ASSUMED NON-EFFECTIVE, ELLEA= 100000.00 ELREA= 100000.00

26000.000	6.82	1291.01	.00	.00	1292.40	1.39	.72	.11	100000.00
8400.0	.0	8400.0	.0	.0	887.8	.0	623.1	84.6	100000.00
.71	.00	9.46	.00	.000	.040	.000	.000	1284.19	1920.82
.006187	130.	130.	130.	1	0	0	.00	149.53	2070.35

SPECIAL BRIDGE

SB	XK	XKOR	COFQ	RDLEN	BWC	BWP	BAREA	SS	ELCHU	ELCHD
	1.05	1.60	2.60	144.70	120.00	5.00	1691.00	2.00	1285.00	1284.19

*SECNO 26120.000
CLASS A LOW FLOW

3420 BRIDGE W.S.= 1291.21 BRIDGE VELOCITY= 9.91 CALCULATED CHANNEL AREA= 791.

EGPRS	EGLWC	H3	QWEIR	QLOW	BAREA	TRAPEZOID AREA	ELLC	ELTRD	WEIRLN
.00	1293.05	.27	0.	8400.	1691.	1691.	1297.14	1302.37	0.

3470 ENCROACHMENT STATIONS= 1920.7 2070.4 TYPE= 1 TARGET= 149.700

3495 OVERBANK AREA ASSUMED NON-EFFECTIVE, ELLEA= 100000.00 ELREA= 100000.00

26120.000	6.28	1291.28	.00	.00	1293.05	1.77	.65	.00	100000.00
8400.0	.0	8400.0	.0	.0	786.6	.0	625.4	85.0	100000.00
.72	.00	10.68	.00	.000	.040	.000	.000	1285.00	1924.30
.008506	120.	120.	120.	0	0	0	.00	140.48	2064.78

*SECNO 26260.000

3301 HV CHANGED MORE THAN HVINS

1
13JUL98 15:33:18 PAGE 76

SECNO	DEPTH	CWSEL	CRIWS	WSELK	EG	HV	HL	OLOSS	L-BANK ELEV
Q	QLOB	QCH	QROB	ALOB	ACH	AROB	VOL	TWA	R-BANK ELEV
TIME	VLOB	VCH	VROB	XNL	XNCH	XNR	WTN	ELMIN	SSTA
SLOPE	XLOBL	XLCH	XLOBR	ITRIAL	IDC	ICONT	CORAR	TOPWID	ENDST

3495 OVERBANK AREA ASSUMED NON-EFFECTIVE, ELLEA= 1296.00 ELREA= 1296.00

26260.000	5.63	1293.13	.00	.00	1294.25	1.12	1.00	.20	1296.00
8400.0	.0	8400.0	.0	.0	989.8	.0	628.3	85.5	1296.00
.72	.00	8.49	.00	.000	.040	.000	.000	1287.50	1919.49
.006062	140.	140.	140.	3	0	0	.00	195.34	2114.83

CCHV= .100 CEHV= .300
*SECNO 26500.000

3495 OVERBANK AREA ASSUMED NON-EFFECTIVE, ELLEA= 1297.20 ELREA= 1297.00

26500.000	5.72	1294.70	.00	.00	1295.38	.69	1.10	.04	1297.20
8400.0	.0	8400.0	.0	.0	1264.7	.0	634.5	86.7	1297.00
.73	.00	6.64	.00	.000	.040	.000	.000	1288.98	1919.13
.003559	240.	240.	240.	2	0	0	.00	242.27	2161.39

*SECNO 26795.000

3495 OVERBANK AREA ASSUMED NON-EFFECTIVE, ELLEA= 1299.00 ELREA= 1299.00

26795.000	5.78	1295.78	.00	.00	1296.60	.82	1.18	.04	1299.00
8400.0	.0	8400.0	.0	.0	1156.5	.0	642.7	88.3	1299.00
.74	.00	7.26	.00	.000	.040	.000	.000	1290.00	1885.67
.004523	295.	295.	295.	2	0	0	.00	231.18	2116.85

*SECNO 27083.000

3495 OVERBANK AREA ASSUMED NON-EFFECTIVE, ELLEA= 1300.00 ELREA= 1301.00

27083.000	4.29	1297.29	.00	.00	1298.37	1.08	1.69	.08	1300.00
8400.0	.0	8400.0	.0	.0	1005.6	.0	649.8	89.9	1301.00
.75	.00	8.35	.00	.000	.040	.000	.000	1293.00	1874.68
.007903	288.	288.	288.	2	0	0	.00	248.73	2123.41

*SECNO 27282.000
7185 MINIMUM SPECIFIC ENERGY
3720 CRITICAL DEPTH ASSUMED
1

SECNO	DEPTH	CWSEL	CRIWS	WSELK	EG	HV	HL	OLOSS	L-BANK ELEV
Q	QLOB	QCH	QROB	ALOB	ACH	AROB	VOL	TWA	R-BANK ELEV
TIME	VLOB	VCH	VROB	XNL	XNCH	XNR	WTN	ELMIN	SSTA
SLOPE	XLOBL	XLCH	XLOBR	ITRIAL	IDC	ICONT	CORAR	TOPWID	ENDST

3495 OVERBANK AREA ASSUMED NON-EFFECTIVE, ELLEA= 1302.00 ELREA= 1302.00

27282.000	3.24	1299.24	1299.24	.00	1300.79	1.55	2.20	.14	1302.00
8400.0	.0	8400.0	.0	.0	841.2	.0	654.1	91.1	1302.00
.76	.00	9.99	.00	.000	.040	.000	.000	1296.00	1863.81
.016302	200.	200.	200.	3	15	0	.00	274.68	2138.49

*SECNO 27424.000

3302 WARNING: CONVEYANCE CHANGE OUTSIDE OF ACCEPTABLE RANGE, KRATIO = 1.51

3495 OVERBANK AREA ASSUMED NON-EFFECTIVE, ELLEA= 1304.00 ELREA= 1304.00

27424.000	3.60	1301.10	.00	.00	1302.29	1.19	1.47	.04	1304.00
8400.0	.0	8400.0	.0	.0	961.2	.0	657.0	92.0	1304.00
.76	.00	8.74	.00	.000	.032	.000	.000	1297.50	1854.52
.007137	155.	142.	130.	2	0	0	.00	288.43	2142.95

*SECNO 27741.000

3301 HV CHANGED MORE THAN HVINS

3302 WARNING: CONVEYANCE CHANGE OUTSIDE OF ACCEPTABLE RANGE, KRATIO = 1.66

3495 OVERBANK AREA ASSUMED NON-EFFECTIVE, ELLEA= 1306.00 ELREA= 1306.00

27741.000	4.95	1302.95	.00	.00	1303.62	.67	1.28	.05	1306.00
8400.0	.0	8400.0	.0	.0	1276.9	.0	665.2	94.1	1306.00
.78	.00	6.58	.00	.000	.032	.000	.000	1298.00	1874.71
.002592	325.	317.	305.	3	0	0	.00	273.64	2148.34

CCHV= .600 CEHV= .800

*SECNO 27952.000

3495 OVERBANK AREA ASSUMED NON-EFFECTIVE, ELLEA= 1307.00 ELREA= 1307.00

SECNO	DEPTH	CWSEL	CRIWS	WSELK	EG	HV	HL	OLOSS	L-BANK ELEV
Q	QLOB	QCH	QROB	ALOB	ACH	AROB	VOL	TWA	R-BANK ELEV
TIME	VLOB	VCH	VROB	XNL	XNCH	XNR	WTN	ELMIN	SSTA
SLOPE	XLOBL	XLCH	XLOBR	ITRIAL	IDC	ICONT	CORAR	TOPWID	ENDST
27952.000	5.49	1303.69	.00	.00	1304.32	.63	.68	.02	1307.00
8400.0	.0	8400.0	.0	.0	1314.5	.0	671.4	95.3	1307.00
.78	.00	6.39	.00	.000	.045	.000	.000	1298.20	1890.38
.004096	230.	211.	200.	2	0	0	.00	239.69	2130.06

*SECNO 27953.000

3302 WARNING: CONVEYANCE CHANGE OUTSIDE OF ACCEPTABLE RANGE, KRATIO = 1.57

3495 OVERBANK AREA ASSUMED NON-EFFECTIVE, ELLEA= 1307.00 ELREA= 1307.00

27953.000	7.22	1304.12	.00	.00	1304.49	.37	.00	.16	1307.00
8400.0	.0	8400.0	.0	.0	1729.3	.0	671.5	95.3	1307.00
.78	.00	4.86	.00	.000	.045	.000	.000	1296.90	1890.28
.001672	1.	1.	1.	2	0	0	.00	239.79	2130.07

*SECNO 27968.000

3495 OVERBANK AREA ASSUMED NON-EFFECTIVE, ELLEA= 1307.00 ELREA= 1307.00

27968.000	7.25	1304.15	.00	.00	1304.51	.36	.02	.00	1307.00
8400.0	.0	8400.0	.0	.0	1737.2	.0	672.1	95.4	1307.00
.79	.00	4.84	.00	.000	.045	.000	.000	1296.90	1890.28
.001647	15.	15.	15.	1	0	0	.00	239.79	2130.07

CCHV= .300 CEHV= .500
*SECNO 27969.000

3301 HV CHANGED MORE THAN HVINS

3685 20 TRIALS ATTEMPTED WSEL,CWSEL
3693 PROBABLE MINIMUM SPECIFIC ENERGY
3720 CRITICAL DEPTH ASSUMED

3495 OVERBANK AREA ASSUMED NON-EFFECTIVE, ELLEA= 1307.10 ELREA= 1307.06

27969.000	5.57	1305.37	1305.37	.00	1307.24	1.87	.00	.75	1307.10
8400.0	.0	8400.0	.0	.0	766.4	.0	672.1	95.4	1307.06
.79	.00	10.96	.00	.000	.014	.000	.000	1299.80	1890.03
.002029	1.	1.	1.	20	15	0	.00	210.03	2100.07

SECNO	DEPTH	CWSEL	CRIWS	WSELK	EG	HV	HL	OLOSS	L-BANK ELEV
Q	QLOB	QCH	QROB	ALOB	ACH	AROB	VOL	TWA	R-BANK ELEV
TIME	VLOB	VCH	VROB	XNL	XNCH	XNR	WTN	ELMIN	SSTA
SLOPE	XLOBL	XLCH	XLOBR	ITRIAL	IDC	ICONT	CORAR	TOPWID	ENDST

*SECNO 28023.000
3280 CROSS SECTION 28023.00 EXTENDED 3.47 FEET

3301 HV CHANGED MORE THAN HVINS

3302 WARNING: CONVEYANCE CHANGE OUTSIDE OF ACCEPTABLE RANGE, KRATIO = 3.58

28023.000	6.67	1307.47	.00	.00	1307.74	.27	.02	.48	1304.00
8400.0	206.4	8193.6	.0	123.4	1949.1	.0	673.9	95.8	1304.00
.79	1.67	4.20	.00	.020	.014	.000	.000	1300.80	1795.00
.000158	54.	54.	54.	4	0	0	.00	395.00	2190.00

CCHV= .100 CEHV= .300
*SECNO 28038.000

3302 WARNING: CONVEYANCE CHANGE OUTSIDE OF ACCEPTABLE RANGE, KRATIO = .55

3495 OVERBANK AREA ASSUMED NON-EFFECTIVE, ELLEA= 1308.00 ELREA= 1308.00

28038.000	8.51	1307.51	.00	.00	1307.74	.23	.00	.00	1308.00
8400.0	.0	8400.0	.0	.0	2164.1	.0	674.6	95.9	1308.00
.79	.00	3.88	.00	.000	.032	.000	.000	1299.00	1852.54
.000518	15.	15.	15.	2	0	0	.00	305.83	2158.37

*SECNO 28252.000

3495 OVERBANK AREA ASSUMED NON-EFFECTIVE, ELLEA= 1308.00 ELREA= 1308.00

28252.000	7.60	1307.60	.00	.00	1307.88	.28	.12	.01	1308.00
8400.0	.0	8400.0	.0	.0	1985.7	.0	684.8	97.4	1308.00
.80	.00	4.23	.00	.000	.032	.000	.000	1300.00	1854.66
.000658	200.	214.	230.	2	0	0	.00	294.95	2149.62

*SECNO 28545.000

3495 OVERBANK AREA ASSUMED NON-EFFECTIVE, ELLEA= 1308.00 ELREA= 1308.00

SECNO	DEPTH	CWSEL	CRIWS	WSELK	EG	HV	HL	OLOSS	L-BANK ELEV
Q	QLOB	QCH	QROB	ALOB	ACH	AROB	VOL	TWA	R-BANK ELEV
TIME	VLOB	VCH	VROB	XNL	XNCH	XNR	WTN	ELMIN	SSTA
SLOPE	XLOBL	XLCH	XLOBR	ITRIAL	IDC	ICONT	CORAR	TOPWID	ENDST
28545.000	7.79	1307.79	.00	.00	1308.12	.33	.22	.02	1308.00
8400.0	.0	8400.0	.0	.0	1823.2	.0	697.6	99.4	1308.00
.82	.00	4.61	.00	.000	.032	.000	.000	1300.00	1852.85
.000862	295.	293.	290.	1	0	0	.00	291.95	2144.80

*SECNO 29023.000

3302 WARNING: CONVEYANCE CHANGE OUTSIDE OF ACCEPTABLE RANGE, KRATIO = 2.80

3495 OVERBANK AREA ASSUMED NON-EFFECTIVE, ELLEA= 1312.00 ELREA= 1308.00

29023.000	8.41	1308.21	.00	.00	1308.26	.05	.11	.03	1312.00
8400.0	.0	8399.9	.1	.0	4750.8	.4	733.7	104.7	1308.00
.90	.00	1.77	.26	.000	.032	.020	.000	1299.80	1432.88
.000110	480.	478.	475.	2	0	0	.00	687.12	2120.00

THIS RUN EXECUTED 13JUL98 15:33:23

****
HEC-2 WATER SURFACE PROFILES

Version 4.6.2; May 1991
****

NOTE- ASTERISK (*) AT LEFT OF CROSS-SECTION NUMBER INDICATES MESSAGE IN SUMMARY OF ERRORS LIST

PROP_H2.DAT 100-YEAR

SUMMARY PRINTOUT

	SECNO	Q	CWSEL	CRIWS	VCH	DEPTH	TOPWID	AREA	10*KS	ELMIN	FRCH	XLCH
	5724.000	11000.00	1194.62	.00	8.65	13.62	127.44	1271.07	26.67	1181.00	.48	.00
	5814.000	11000.00	1194.70	.00	9.60	13.31	112.23	1146.19	32.42	1181.39	.53	90.00
	5970.000	11000.00	1195.29	.00	9.27	13.69	113.43	1186.80	29.33	1181.60	.50	156.00
	6070.000	11000.00	1195.61	.00	9.16	13.81	114.03	1200.88	28.40	1181.80	.50	100.00
	6170.000	11000.00	1195.93	.00	9.04	13.93	114.69	1216.91	27.38	1182.00	.49	100.00
	6236.000	11000.00	1196.10	.00	8.91	13.94	117.14	1234.41	26.74	1182.16	.48	66.00
	6370.000	11000.00	1196.45	.00	8.94	13.95	116.37	1231.00	26.79	1182.50	.48	134.00
	6570.000	11000.00	1196.98	.00	8.99	13.98	114.87	1222.93	27.00	1183.00	.49	200.00
	6670.000	11000.00	1197.26	.00	8.94	14.06	115.14	1230.67	26.52	1183.20	.48	100.00
	6852.000	11000.00	1197.84	.00	8.61	14.26	119.20	1277.94	24.38	1183.58	.46	182.00
	6940.000	11000.00	1197.98	.00	8.67	14.19	118.74	1268.12	24.88	1183.79	.47	88.00
	7070.000	11000.00	1198.32	.00	8.62	14.26	119.23	1276.84	24.45	1184.06	.46	130.00
	7170.000	11000.00	1198.56	.00	8.63	14.45	116.42	1275.01	23.96	1184.11	.46	100.00
	7223.000	11000.00	1198.71	.00	8.53	14.57	116.98	1289.31	23.24	1184.14	.45	53.00
*	7260.000	11000.00	1199.35	.00	6.20	15.20	139.54	1775.48	10.20	1184.15	.31	37.00
	7305.000	11000.00	1199.40	.00	6.19	15.22	139.67	1778.27	10.15	1184.18	.31	45.00
	7310.000	11000.00	1199.26	.00	7.16	13.42	134.72	1535.26	15.67	1185.84	.37	5.00

1

	SECNO	Q	CWSEL	CRIWS	VCH	DEPTH	TOPWID	AREA	10*KS	ELMIN	FRCH	XLCH
*	7330.000	11000.00	1199.34	1199.34	14.25	7.09	123.74	771.75	132.95	1192.25	1.01	20.00
*	7339.000	11000.00	1201.88	1201.88	14.57	9.63	115.34	754.80	139.50	1192.25	1.00	9.40
*	7340.000	11000.00	1201.97	1201.97	14.58	7.20	115.50	754.49	132.52	1194.77	1.01	1.00
*	7350.000	11000.00	1203.98	.00	9.98	9.21	138.11	1102.16	47.16	1194.77	.62	10.00
*	7377.000	11000.00	1204.88	.00	7.20	10.11	181.41	1527.03	22.49	1194.77	.44	27.00
*	7500.000	11000.00	1205.57	.00	4.49	10.18	271.09	2449.04	7.89	1195.39	.26	123.00
	7700.000	11000.00	1205.71	.00	4.96	9.32	265.87	2216.51	10.72	1196.39	.30	200.00
	7900.000	11000.00	1205.89	.00	5.49	8.50	260.99	2002.02	14.66	1197.39	.35	200.00

APPENDIX B

PROPOSED CONDITIONS

HEC-2 MODEL OUTPUT SUMMARY

n = 0.040

8000.000	11000.00	1206.02	.00	5.75	8.13	260.61	1913.25	17.00	1197.89	.37	100.00
8200.000	11000.00	1206.33	.00	6.36	7.44	254.67	1730.22	23.05	1198.89	.43	200.00
8400.000	11000.00	1206.78	.00	6.93	6.89	251.30	1588.38	30.09	1199.89	.49	200.00
8500.000	11000.00	1207.06	.00	7.18	6.67	249.95	1531.25	33.74	1200.39	.51	100.00
8700.000	11000.00	1207.72	.00	7.58	6.33	247.99	1450.54	39.97	1201.39	.55	200.00
8900.000	11000.00	1208.52	.00	7.85	6.13	246.78	1400.65	44.61	1202.39	.58	200.00
9000.000	11000.00	1208.97	.00	7.91	6.08	247.84	1390.94	45.90	1202.89	.59	100.00
9100.000	11000.00	1209.42	.00	8.00	6.03	246.16	1374.96	47.28	1203.39	.60	100.00
9271.000	11000.00	1210.22	.00	8.09	5.97	245.81	1360.08	48.93	1204.25	.61	171.00
9295.000	11000.00	1210.24	.00	8.90	5.88	210.00	1235.62	58.13	1204.36	.65	24.00
9405.000	11000.00	1210.61	.00	9.20	5.70	210.00	1196.27	64.61	1204.91	.68	110.00
9471.000	11000.00	1211.44	.00	7.76	6.20	247.06	1417.00	42.99	1205.24	.57	66.00
9500.000	11000.00	1211.56	.00	7.81	6.17	247.09	1409.35	43.77	1205.39	.58	29.00
9700.000	11000.00	1212.42	.00	8.34	6.03	237.44	1319.74	51.67	1206.39	.62	200.00
9800.000	11000.00	1212.95	.00	8.24	6.06	238.18	1334.46	50.02	1206.89	.61	100.00
10000.000	11000.00	1213.94	.00	8.54	6.05	231.09	1288.60	54.00	1207.89	.64	200.00
10025.000	11000.00	1214.21	.00	8.03	6.31	239.43	1370.26	46.06	1207.90	.59	25.00
10100.000	11000.00	1214.47	.00	8.69	6.08	226.46	1265.18	55.89	1208.39	.65	75.00

1

	SECNO	Q	CWSEL	CRIWS	VCH	DEPTH	TOPWID	AREA	10*KS	ELMIN	FRCH	XLCH
	10200.000	11000.00	1215.01	.00	8.80	6.12	222.72	1250.60	56.83	1208.89	.65	100.00
	10400.000	11000.00	1216.12	.00	9.06	6.23	213.34	1213.66	59.34	1209.89	.67	200.00
	10600.000	11000.00	1217.29	.00	9.10	6.40	208.33	1208.84	58.30	1210.89	.67	200.00
	10800.000	11000.00	1218.47	.00	8.91	6.58	207.43	1234.11	54.13	1211.89	.64	200.00
	10900.000	11000.00	1219.01	.00	8.93	6.62	206.28	1231.36	54.12	1212.39	.64	100.00
	11000.000	11000.00	1219.47	.00	9.48	6.57	196.18	1159.82	61.85	1212.90	.69	100.00
	11095.000	11000.00	1220.05	.00	9.52	6.65	193.75	1155.75	61.56	1213.40	.69	95.00
*	11100.000	11000.00	1222.13	1222.13	12.42	5.23	187.30	885.89	142.20	1216.90	1.01	5.00
*	11150.000	11000.00	1223.51	.00	10.06	6.61	185.32	1092.95	69.94	1216.90	.73	50.00

11230.000	11000.00	1224.20	.00	9.53	7.10	183.94	1154.41	57.77	1217.10	.67	80.00
11238.000	11000.00	1224.28	.00	9.41	7.18	184.31	1169.43	55.49	1217.10	.66	8.00
11305.000	11000.00	1224.85	.00	8.63	7.75	187.70	1274.46	42.73	1217.10	.58	67.00
11310.000	11000.00	1224.84	.00	8.77	7.64	186.93	1254.07	44.84	1217.20	.60	5.00
11400.000	11000.00	1225.43	.00	7.95	8.33	191.30	1384.24	33.30	1217.10	.52	90.00
11500.000	11000.00	1225.75	.00	8.07	8.05	193.65	1363.58	35.56	1217.70	.54	100.00
11700.000	11000.00	1226.51	.00	7.68	8.41	195.46	1431.78	30.62	1218.10	.50	200.00
11900.000	11000.00	1227.16	.00	7.43	8.66	196.83	1481.06	27.62	1218.50	.48	200.00
12000.000	11000.00	1227.45	.00	7.35	8.75	197.33	1497.54	26.72	1218.70	.47	100.00
12200.000	11000.00	1227.99	.00	7.30	8.79	197.94	1507.84	26.22	1219.20	.47	200.00
12400.000	11000.00	1228.53	.00	7.17	8.93	198.56	1533.44	24.90	1219.60	.45	200.00
12500.000	11000.00	1228.79	.00	7.12	8.99	198.93	1545.72	24.31	1219.80	.45	100.00
12645.000	11000.00	1229.15	.00	7.06	9.05	199.12	1557.07	23.76	1220.10	.45	145.00
12650.000	11000.00	1228.99	.00	8.15	7.99	192.94	1350.12	36.58	1221.00	.54	5.00
12660.000	11000.00	1229.04	.00	8.09	8.04	193.25	1360.09	35.77	1221.00	.54	10.00
12784.000	11000.00	1229.65	.00	7.27	8.45	208.68	1514.05	27.65	1221.20	.48	124.00
12822.000	11000.00	1229.80	.00	7.06	8.50	213.11	1558.69	25.80	1221.30	.46	38.00

1

	SECNO	Q	CWSEL	CRIWS	VCH	DEPTH	TOPWID	AREA	10*KS	ELMIN	FRCH	XLCH
	12853.000	11000.00	1229.72	.00	8.10	8.32	188.31	1358.29	34.81	1221.40	.53	31.00
	12884.000	11000.00	1229.71	.00	8.86	8.31	193.59	1241.29	48.62	1221.40	.62	31.00
	12981.000	11000.00	1229.78	.00	11.32	8.18	159.56	971.86	85.33	1221.60	.81	97.00
*	13050.000	11000.00	1231.18	.00	8.72	9.38	144.00	1261.57	33.25	1221.80	.52	69.00
	13131.000	11000.00	1231.55	.00	8.43	9.65	144.00	1304.82	29.91	1221.90	.49	81.00
	13206.000	11000.00	1231.63	.00	9.84	9.53	152.92	1117.87	50.74	1222.10	.64	75.00
	13300.000	11000.00	1232.08	.00	10.16	9.88	151.27	1082.53	56.10	1222.20	.67	94.00
	13400.000	11000.00	1232.47	.00	10.92	10.07	125.17	1007.56	55.83	1222.40	.68	100.00
*	13500.000	11000.00	1233.78	.00	7.95	11.18	146.11	1383.16	23.99	1222.60	.46	100.00
	13600.000	11000.00	1234.02	.00	7.93	11.22	146.09	1387.63	23.73	1222.80	.45	100.00

13700.000	11000.00	1234.27	.00	7.86	11.27	146.67	1398.63	23.24	1223.00	.45	100.00
13800.000	11000.00	1234.51	.00	7.86	11.31	146.34	1399.14	23.15	1223.20	.45	100.00
13900.000	11000.00	1234.75	.00	7.80	11.35	146.98	1410.05	22.69	1223.40	.44	100.00
14000.000	11000.00	1234.98	.00	7.81	11.38	146.53	1408.59	22.68	1223.60	.44	100.00
14100.000	11000.00	1235.23	.00	7.71	11.43	147.71	1426.64	21.96	1223.80	.44	100.00
14200.000	11000.00	1235.44	.00	7.75	11.44	146.88	1418.55	22.22	1224.00	.44	100.00
14300.000	11000.00	1235.68	.00	7.70	11.48	147.64	1429.17	21.82	1224.20	.44	100.00
14400.000	11000.00	1235.90	.00	7.69	11.50	147.55	1431.00	21.72	1224.40	.43	100.00
14500.000	11000.00	1236.10	.00	7.76	11.50	146.21	1416.75	22.19	1224.60	.44	100.00
14700.000	11000.00	1236.51	.00	8.26	11.61	149.49	1332.27	27.63	1224.90	.49	200.00
14900.000	11000.00	1236.98	.00	8.97	11.68	139.93	1226.43	33.43	1225.30	.53	200.00
15000.000	11000.00	1237.26	.00	9.32	11.76	135.57	1179.63	36.53	1225.50	.56	100.00
15200.000	11000.00	1238.01	.00	9.24	12.11	134.63	1190.13	35.18	1225.90	.55	200.00
15400.000	11000.00	1238.66	.00	9.67	12.36	129.14	1137.57	38.78	1226.30	.57	200.00
15495.000	11000.00	1239.10	.00	9.40	12.60	130.78	1170.23	35.90	1226.50	.55	95.00
* 15500.000	11000.00	1237.89	1237.89	14.99	9.39	106.34	733.99	128.57	1228.50	1.01	5.00

1

SECNO	Q	CWSEL	CRIWS	VCH	DEPTH	TOPWID	AREA	10*KS	ELMIN	FRCH	XLCH
15510.000	11000.00	1239.02	1237.89	12.82	10.52	113.12	857.99	83.14	1228.50	.82	10.00
15700.000	11000.00	1240.48	.00	13.55	11.08	106.27	811.60	92.53	1229.40	.86	190.00
15900.000	11000.00	1242.35	.00	13.38	11.95	104.68	822.37	87.12	1230.40	.84	200.00
16000.000	11000.00	1244.01	.00	10.98	13.11	115.82	1001.39	51.68	1230.90	.66	100.00
16100.000	11000.00	1245.08	.00	9.00	13.68	130.49	1222.54	31.05	1231.40	.52	100.00
16200.000	11000.00	1245.67	.00	7.86	13.87	142.41	1399.41	22.17	1231.80	.44	100.00
16400.000	11000.00	1246.33	.00	6.64	13.53	162.99	1656.20	15.04	1232.80	.37	200.00
16500.000	11000.00	1246.56	.00	6.25	13.26	172.55	1760.48	13.21	1233.30	.34	100.00
16600.000	11000.00	1246.66	.00	6.49	12.86	170.38	1694.16	14.75	1233.80	.36	100.00
16700.000	11000.00	1246.78	.00	6.75	12.48	168.10	1629.67	16.48	1234.30	.38	100.00
16800.000	11000.00	1246.93	.00	6.94	12.23	166.20	1585.46	17.79	1234.70	.40	100.00

	16900.000	11000.00	1247.07	.00	7.21	11.87	164.05	1525.96	19.85	1235.20	.42	100.00
	17000.000	11000.00	1247.16	.00	7.99	11.46	147.27	1377.27	24.51	1235.70	.46	100.00
	17100.000	11000.00	1247.38	.00	8.19	11.20	146.60	1342.50	26.49	1236.18	.48	100.00
	17200.000	11000.00	1247.51	.00	9.07	10.85	130.61	1213.16	32.33	1236.66	.52	100.00
	17300.000	11000.00	1247.81	.00	9.22	10.67	128.72	1192.92	33.69	1237.14	.53	100.00
	17400.000	11000.00	1248.09	.00	9.59	10.47	129.08	1147.25	38.16	1237.62	.57	100.00
	17500.000	11000.00	1248.43	.00	9.88	10.33	125.72	1113.85	40.84	1238.10	.58	100.00
	17700.000	11000.00	1249.25	.00	9.96	10.19	129.72	1104.15	43.37	1239.06	.60	200.00
	17850.000	11000.00	1249.83	.00	10.42	10.05	123.19	1056.07	47.38	1239.78	.63	150.00
	17950.000	11000.00	1250.40	.00	10.06	10.14	125.45	1092.90	43.32	1240.26	.60	100.00
*	17955.000	11000.00	1252.31	1252.31	13.94	6.51	132.31	789.15	134.79	1245.80	1.01	5.00
*	17960.000	11000.00	1252.42	1252.42	13.92	6.52	132.52	790.28	134.39	1245.90	1.00	5.00
*	18000.000	11000.00	1253.98	.00	11.13	7.98	137.79	988.20	67.60	1246.00	.73	40.00
	18170.000	11000.00	1255.06	.00	11.97	8.06	126.04	918.62	77.35	1247.00	.78	170.00
*	18390.000	11000.00	1257.02	.00	10.78	9.02	131.41	1020.69	57.16	1248.00	.68	220.00

1

	SECNO	Q	CWSEL	CRIWS	VCH	DEPTH	TOPWID	AREA	10*KS	ELMIN	FRCH	XLCH
	18500.000	11000.00	1257.55	.00	11.34	9.05	126.33	969.82	64.68	1248.50	.72	110.00
	18710.000	11000.00	1259.30	.00	9.24	9.80	139.86	1190.58	37.26	1249.50	.56	210.00
	18900.000	11000.00	1259.96	.00	9.82	8.96	139.87	1119.64	45.75	1251.00	.61	190.00
	19000.000	11000.00	1260.40	.00	9.95	8.90	140.51	1106.05	47.75	1251.50	.62	100.00
	19200.000	11000.00	1261.49	.00	9.26	9.49	145.23	1187.35	39.27	1252.00	.57	200.00
	19400.000	11000.00	1262.27	.00	9.36	9.27	143.69	1175.12	40.32	1253.00	.58	200.00
	19500.000	11000.00	1262.55	.00	10.11	8.75	138.65	1088.43	49.73	1253.80	.64	100.00
	19600.000	11000.00	1263.08	.00	10.00	8.88	137.77	1099.85	47.75	1254.20	.62	100.00
	19782.000	11000.00	1264.30	.00	8.19	9.80	154.09	1343.13	28.32	1254.50	.49	182.00
	19940.000	11000.00	1264.75	.00	8.22	9.45	157.60	1338.77	29.51	1255.30	.50	158.00
	20050.000	11000.00	1264.82	.00	8.37	9.42	154.05	1314.93	30.49	1255.40	.50	110.00
*	20160.000	11000.00	1265.73	.00	5.97	10.31	200.15	1842.71	13.81	1255.42	.35	110.00

	20200.000	11000.00	1265.97	.00	5.11	10.52	231.04	2154.46	9.86	1255.45	.29	40.00
	20300.000	11000.00	1266.06	.00	5.27	10.13	233.69	2088.98	11.05	1255.93	.31	100.00
	20500.000	11000.00	1266.25	.00	5.80	9.36	225.70	1896.27	14.59	1256.89	.35	200.00
	20700.000	11000.00	1266.56	.00	5.96	8.71	262.19	1844.15	19.36	1257.85	.40	200.00
	20900.000	11000.00	1266.94	.00	6.38	8.13	259.61	1724.03	23.88	1258.81	.44	200.00
	21000.000	11000.00	1267.17	.00	6.47	7.88	265.15	1699.98	25.73	1259.29	.45	100.00
	21230.000	11000.00	1267.75	.00	7.03	7.36	255.35	1565.07	32.27	1260.39	.50	230.00
	21240.000	11000.00	1267.77	.00	7.09	7.27	255.92	1551.22	33.32	1260.50	.51	10.00
	21330.000	11000.00	1268.08	.00	7.13	7.21	263.25	1543.74	35.12	1260.87	.52	90.00
*	21395.000	11000.00	1268.34	1268.34	10.94	4.34	273.13	1005.16	153.52	1264.00	1.01	65.00
*	21565.000	11000.00	1270.75	.00	6.44	6.75	334.11	1707.89	34.33	1264.00	.50	170.00
	21700.000	11000.00	1271.16	.00	6.10	8.51	237.74	1803.95	18.34	1262.65	.39	135.00
	21900.000	11000.00	1271.54	.00	6.06	7.93	252.60	1815.24	19.45	1263.61	.40	200.00
	22000.000	11000.00	1271.91	.00	4.91	7.82	309.95	2241.58	12.61	1264.09	.32	100.00

1

	SECNO	Q	CWSEL	CRIWS	VCH	DEPTH	TOPWID	AREA	10*KS	ELMIN	FRCH	XLCH
	22200.000	11000.00	1272.18	.00	4.96	7.13	332.32	2216.02	14.35	1265.05	.34	200.00
*	22400.000	11000.00	1272.33	.00	6.99	6.32	267.95	1574.75	33.67	1266.01	.51	200.00
	22500.000	11000.00	1272.57	.00	7.92	6.08	246.51	1388.89	45.81	1266.49	.59	100.00
	22510.000	11000.00	1272.44	.00	8.95	5.94	223.94	1229.23	60.64	1266.50	.67	10.00
	22520.000	11000.00	1272.43	.00	9.32	5.83	219.97	1180.00	67.81	1266.60	.71	10.00
	22540.000	11000.00	1272.51	.00	9.58	5.81	214.88	1147.89	72.08	1266.70	.73	20.00
	22560.000	11000.00	1272.61	.00	9.84	5.81	209.84	1117.39	76.41	1266.80	.75	20.00
	22580.000	11000.00	1272.71	.00	10.11	5.81	204.85	1088.46	80.78	1266.90	.77	20.00
	22600.000	11000.00	1272.80	.00	10.45	5.80	198.04	1052.21	86.55	1267.00	.80	20.00
	22620.000	11000.00	1272.93	.00	10.62	5.83	195.00	1035.50	89.39	1267.10	.81	20.00
	22640.000	11000.00	1273.06	.00	10.89	5.86	190.13	1010.48	93.81	1267.20	.83	20.00
	22660.000	11000.00	1273.18	.00	11.15	5.88	185.31	986.63	98.20	1267.30	.85	20.00
	22680.000	11000.00	1273.90	.00	9.55	6.50	190.19	1151.27	61.25	1267.40	.68	20.00

22700.000	11000.00	1273.92	.00	10.06	6.42	182.34	1093.15	68.94	1267.50	.72	20.00
22720.000	11000.00	1274.07	.00	10.04	6.57	180.24	1096.14	67.23	1267.50	.72	20.00
22740.000	11000.00	1274.12	.00	10.42	6.52	174.89	1055.84	73.22	1267.60	.75	20.00
22760.000	11000.00	1274.18	.00	10.85	6.48	169.51	1014.26	80.34	1267.70	.78	20.00
22780.000	11000.00	1274.24	.00	11.29	6.44	164.16	974.27	88.08	1267.80	.82	20.00
22800.000	11000.00	1274.39	.00	11.39	6.49	160.99	966.03	88.45	1267.90	.82	20.00
22820.000	11000.00	1274.74	.00	10.92	6.74	162.96	1007.29	78.15	1268.00	.77	20.00
22840.000	11000.00	1274.90	.00	10.90	6.80	162.01	1009.48	77.01	1268.10	.77	20.00
22860.000	11000.00	1275.03	.00	11.02	6.83	159.90	998.32	78.57	1268.20	.78	20.00
22877.000	8400.00	1276.39	.00	6.77	8.09	172.76	1240.05	24.62	1268.30	.45	17.00
22900.000	8400.00	1276.36	.00	7.37	7.96	158.19	1140.02	29.21	1268.40	.48	23.00
22920.000	8400.00	1276.42	.00	7.38	7.92	159.66	1138.34	29.65	1268.50	.49	20.00
22940.000	8400.00	1276.46	.00	7.49	7.86	158.28	1121.65	30.79	1268.60	.50	20.00

1

SECNO	Q	CWSEL	CRIWS	VCH	DEPTH	TOPWID	AREA	10*KS	ELMIN	FRCH	XLCH
22960.000	8400.00	1276.50	.00	7.61	7.80	156.85	1103.34	32.14	1268.70	.51	20.00
22980.000	8400.00	1276.65	.00	7.28	7.85	166.00	1153.42	29.72	1268.80	.49	20.00
23000.000	8400.00	1276.71	.00	7.28	7.81	163.44	1154.58	29.15	1268.90	.48	20.00
23100.000	8400.00	1276.96	.00	7.66	7.56	160.24	1097.19	33.63	1269.40	.52	100.00
23200.000	8400.00	1277.33	.00	7.56	7.48	171.29	1111.64	34.81	1269.85	.52	100.00
23300.000	8400.00	1277.66	.00	7.74	7.33	170.00	1085.61	37.30	1270.33	.54	100.00
23310.000	8400.00	1277.70	.00	7.73	7.35	170.07	1087.25	37.13	1270.35	.54	10.00
23400.000	8400.00	1278.00	.00	8.03	7.19	167.14	1046.54	41.20	1270.81	.57	90.00
23500.000	8400.00	1278.37	.00	8.40	7.08	162.47	999.65	46.23	1271.29	.60	100.00
23575.000	8400.00	1278.58	.00	9.32	6.93	150.79	901.15	59.20	1271.65	.67	75.00
23645.000	8400.00	1279.21	.00	8.42	7.56	154.57	997.15	43.72	1271.65	.58	70.00
23800.000	8400.00	1280.04	.00	7.67	7.31	171.83	1095.18	36.73	1272.73	.54	155.00
24000.000	8400.00	1280.77	.00	7.85	7.08	172.48	1070.73	39.78	1273.69	.55	200.00
24200.000	8400.00	1281.58	.00	7.77	6.93	176.61	1080.45	39.80	1274.65	.55	200.00

	24365.000	8400.00	1282.21	.00	8.19	6.77	168.27	1026.13	44.49	1275.44	.58	165.00
	24500.000	8400.00	1282.89	.00	7.77	6.80	177.82	1080.62	40.18	1276.09	.56	135.00
*	24510.000	8400.00	1283.48	1283.48	11.52	4.39	178.79	728.94	149.33	1279.09	1.01	10.00
*	24700.000	8400.00	1286.03	.00	7.53	6.94	179.56	1115.55	36.63	1279.09	.53	190.00
	24900.000	8400.00	1286.80	.00	6.95	7.71	176.47	1209.06	27.47	1279.09	.47	200.00
	25000.000	8400.00	1287.20	.00	6.26	8.11	185.85	1340.97	20.85	1279.09	.41	100.00
	25200.000	8400.00	1287.65	.00	5.97	8.25	191.11	1406.93	18.44	1279.40	.39	200.00
	25400.000	8400.00	1287.97	.00	6.95	7.38	182.64	1208.44	28.76	1280.59	.48	200.00
	25500.000	8400.00	1288.19	.00	7.58	7.00	176.41	1108.53	36.59	1281.19	.53	100.00
	25600.000	8400.00	1288.47	.00	8.37	6.68	166.71	1004.15	47.27	1281.79	.60	100.00
	25650.000	8400.00	1288.67	.00	8.61	6.58	166.23	975.77	51.67	1282.09	.63	50.00
*	25660.000	8400.00	1288.12	.00	11.49	5.03	160.47	730.87	128.51	1283.09	.95	10.00

1

	SECNO	Q	CWSEL	CRIWS	VCH	DEPTH	TOPWID	AREA	10*KS	ELMIN	FRCH	XLCH
	25700.000	8400.00	1289.22	.00	9.45	6.13	167.01	888.87	70.58	1283.09	.72	40.00
	25827.000	8400.00	1290.36	.00	7.84	7.27	174.65	1071.17	40.28	1283.09	.56	127.00
	25830.000	8400.00	1290.36	.00	7.94	7.19	174.48	1057.94	41.92	1283.17	.57	3.00
	25870.000	8400.00	1290.40	.00	8.69	6.99	156.55	966.92	49.32	1283.41	.62	40.00
	26000.000	8400.00	1291.01	.00	9.46	6.82	149.53	887.76	61.87	1284.19	.68	130.00
	26120.000	8400.00	1291.28	.00	10.68	6.28	140.48	786.60	85.06	1285.00	.80	120.00
	26260.000	8400.00	1293.13	.00	8.49	5.63	195.34	989.79	60.62	1287.50	.66	140.00
	26500.000	8400.00	1294.70	.00	6.64	5.72	242.27	1264.68	35.59	1288.98	.51	240.00
	26795.000	8400.00	1295.78	.00	7.26	5.78	231.18	1156.50	45.23	1290.00	.57	295.00
	27083.000	8400.00	1297.29	.00	8.35	4.29	248.73	1005.55	79.03	1293.00	.73	288.00
*	27282.000	8400.00	1299.24	1299.24	9.99	3.24	274.68	841.17	163.02	1296.00	1.01	200.00
*	27424.000	8400.00	1301.10	.00	8.74	3.60	288.43	961.18	71.37	1297.50	.84	142.00
*	27741.000	8400.00	1302.95	.00	6.58	4.95	273.64	1276.89	25.92	1298.00	.54	317.00
	27952.000	8400.00	1303.69	.00	6.39	5.49	239.69	1314.49	40.96	1298.20	.48	211.00
*	27953.000	8400.00	1304.12	.00	4.86	7.22	239.79	1729.35	16.72	1296.90	.32	1.00

	27968.000	8400.00	1304.15	.00	4.84	7.25	239.79	1737.22	16.47	1296.90	.32	15.00
*	27969.000	8400.00	1305.37	1305.37	10.96	5.57	210.03	766.39	20.29	1299.80	1.01	1.00
*	28023.000	8400.00	1307.47	.00	4.20	6.67	395.00	2072.55	1.58	1300.80	.31	54.00
*	28038.000	8400.00	1307.51	.00	3.88	8.51	305.83	2164.15	5.18	1299.00	.26	15.00
	28252.000	8400.00	1307.60	.00	4.23	7.60	294.95	1985.70	6.58	1300.00	.29	214.00
	28545.000	8400.00	1307.79	.00	4.61	7.79	291.95	1823.22	8.62	1300.00	.32	293.00
*	29023.000	8400.00	1308.21	.00	1.77	8.41	687.12	4751.25	1.10	1299.80	.12	478.00

1

SUMMARY OF ERRORS AND SPECIAL NOTES

```
WARNING SECNO=   7260.000  PROFILE=  1  CONVEYANCE CHANGE OUTSIDE ACCEPTABLE RANGE

CAUTION SECNO=   7330.000  PROFILE=  1  CRITICAL DEPTH ASSUMED
CAUTION SECNO=   7330.000  PROFILE=  1  PROBABLE MINIMUM SPECIFIC ENERGY
CAUTION SECNO=   7330.000  PROFILE=  1  20 TRIALS ATTEMPTED TO BALANCE WSEL

CAUTION SECNO=   7339.000  PROFILE=  1  CRITICAL DEPTH ASSUMED
CAUTION SECNO=   7339.000  PROFILE=  1  PROBABLE MINIMUM SPECIFIC ENERGY
CAUTION SECNO=   7339.000  PROFILE=  1  20 TRIALS ATTEMPTED TO BALANCE WSEL

CAUTION SECNO=   7340.000  PROFILE=  1  CRITICAL DEPTH ASSUMED
CAUTION SECNO=   7340.000  PROFILE=  1  MINIMUM SPECIFIC ENERGY

WARNING SECNO=   7350.000  PROFILE=  1  CONVEYANCE CHANGE OUTSIDE ACCEPTABLE RANGE

WARNING SECNO=   7377.000  PROFILE=  1  CONVEYANCE CHANGE OUTSIDE ACCEPTABLE RANGE

WARNING SECNO=   7500.000  PROFILE=  1  CONVEYANCE CHANGE OUTSIDE ACCEPTABLE RANGE

CAUTION SECNO=  11100.000  PROFILE=  1  CRITICAL DEPTH ASSUMED
CAUTION SECNO=  11100.000  PROFILE=  1  PROBABLE MINIMUM SPECIFIC ENERGY
CAUTION SECNO=  11100.000  PROFILE=  1  20 TRIALS ATTEMPTED TO BALANCE WSEL

WARNING SECNO=  11150.000  PROFILE=  1  CONVEYANCE CHANGE OUTSIDE ACCEPTABLE RANGE

WARNING SECNO=  13050.000  PROFILE=  1  CONVEYANCE CHANGE OUTSIDE ACCEPTABLE RANGE

WARNING SECNO=  13500.000  PROFILE=  1  CONVEYANCE CHANGE OUTSIDE ACCEPTABLE RANGE

CAUTION SECNO=  15500.000  PROFILE=  1  CRITICAL DEPTH ASSUMED
CAUTION SECNO=  15500.000  PROFILE=  1  PROBABLE MINIMUM SPECIFIC ENERGY
CAUTION SECNO=  15500.000  PROFILE=  1  20 TRIALS ATTEMPTED TO BALANCE WSEL

CAUTION SECNO=  17955.000  PROFILE=  1  CRITICAL DEPTH ASSUMED
CAUTION SECNO=  17955.000  PROFILE=  1  PROBABLE MINIMUM SPECIFIC ENERGY
CAUTION SECNO=  17955.000  PROFILE=  1  20 TRIALS ATTEMPTED TO BALANCE WSEL
```

```
 CAUTION SECNO=  17960.000  PROFILE=  1  CRITICAL DEPTH ASSUMED
 CAUTION SECNO=  17960.000  PROFILE=  1  MINIMUM SPECIFIC ENERGY

 WARNING SECNO=  18000.000  PROFILE=  1  CONVEYANCE CHANGE OUTSIDE ACCEPTABLE RANGE

 CAUTION SECNO=  18390.000  PROFILE=  1  HYDRAULIC JUMP D.S.

 WARNING SECNO=  20160.000  PROFILE=  1  CONVEYANCE CHANGE OUTSIDE ACCEPTABLE RANGE

 CAUTION SECNO=  21395.000  PROFILE=  1  CRITICAL DEPTH ASSUMED
 CAUTION SECNO=  21395.000  PROFILE=  1  PROBABLE MINIMUM SPECIFIC ENERGY
 CAUTION SECNO=  21395.000  PROFILE=  1  20 TRIALS ATTEMPTED TO BALANCE WSEL

 WARNING SECNO=  21565.000  PROFILE=  1  CONVEYANCE CHANGE OUTSIDE ACCEPTABLE RANGE
1
   13JUL98      15:33:18                                                                                    PAGE   91


 WARNING SECNO=  22400.000  PROFILE=  1  CONVEYANCE CHANGE OUTSIDE ACCEPTABLE RANGE

 CAUTION SECNO=  24510.000  PROFILE=  1  CRITICAL DEPTH ASSUMED
 CAUTION SECNO=  24510.000  PROFILE=  1  PROBABLE MINIMUM SPECIFIC ENERGY
 CAUTION SECNO=  24510.000  PROFILE=  1  20 TRIALS ATTEMPTED TO BALANCE WSEL

 WARNING SECNO=  24700.000  PROFILE=  1  CONVEYANCE CHANGE OUTSIDE ACCEPTABLE RANGE

 WARNING SECNO=  25660.000  PROFILE=  1  CONVEYANCE CHANGE OUTSIDE ACCEPTABLE RANGE

 CAUTION SECNO=  27282.000  PROFILE=  1  CRITICAL DEPTH ASSUMED
 CAUTION SECNO=  27282.000  PROFILE=  1  MINIMUM SPECIFIC ENERGY

 WARNING SECNO=  27424.000  PROFILE=  1  CONVEYANCE CHANGE OUTSIDE ACCEPTABLE RANGE

 WARNING SECNO=  27741.000  PROFILE=  1  CONVEYANCE CHANGE OUTSIDE ACCEPTABLE RANGE

 WARNING SECNO=  27953.000  PROFILE=  1  CONVEYANCE CHANGE OUTSIDE ACCEPTABLE RANGE

 CAUTION SECNO=  27969.000  PROFILE=  1  CRITICAL DEPTH ASSUMED
 CAUTION SECNO=  27969.000  PROFILE=  1  PROBABLE MINIMUM SPECIFIC ENERGY
 CAUTION SECNO=  27969.000  PROFILE=  1  20 TRIALS ATTEMPTED TO BALANCE WSEL

 WARNING SECNO=  28023.000  PROFILE=  1  CONVEYANCE CHANGE OUTSIDE ACCEPTABLE RANGE

 WARNING SECNO=  28038.000  PROFILE=  1  CONVEYANCE CHANGE OUTSIDE ACCEPTABLE RANGE

 WARNING SECNO=  29023.000  PROFILE=  1  CONVEYANCE CHANGE OUTSIDE ACCEPTABLE RANGE
```

APPENDIX B

PROPOSED CONDITIONS

HEC-2 MODEL OUTPUT SUMMARY

n = 0.025

****
HEC-2 WATER SURFACE PROFILES

Version 4.6.2; May 1991
****

NOTE- ASTERISK (*) AT LEFT OF CROSS-SECTION NUMBER INDICATES MESSAGE IN SUMMARY OF ERRORS LIST

PROP_H2.DAT 100-YEAR

SUMMARY PRINTOUT

	SECNO	Q	CWSEL	CRIWS	VCH	DEPTH	TOPWID	AREA	10*KS	ELMIN	FRCH	XLCH
	5724.000	11000.00	1191.70	.00	12.01	10.70	115.37	915.53	26.98	1181.00	.75	.00
	5814.000	11000.00	1191.54	.00	13.55	10.15	99.86	811.94	33.86	1181.39	.84	90.00
	5970.000	11000.00	1192.51	.00	12.40	10.91	102.59	886.81	26.24	1181.60	.74	156.00
	6070.000	11000.00	1192.86	.00	12.18	11.06	103.30	903.08	24.93	1181.80	.73	100.00
	6170.000	11000.00	1193.21	.00	11.97	11.21	103.99	918.87	23.75	1182.00	.71	100.00
	6236.000	11000.00	1193.76	.00	11.32	11.60	107.55	971.73	20.56	1182.16	.66	66.00
	6370.000	11000.00	1194.00	.00	11.50	11.50	106.42	956.50	21.39	1182.50	.68	134.00
	6570.000	11000.00	1194.37	.00	11.75	11.37	104.61	935.79	22.54	1183.00	.69	200.00
	6670.000	11000.00	1194.62	.00	11.69	11.42	104.81	941.03	22.18	1183.20	.69	100.00
	6852.000	11000.00	1195.22	.00	11.23	11.64	108.32	979.66	20.18	1183.58	.66	182.00
	6940.000	11000.00	1195.64	.00	10.98	11.85	109.06	1001.61	18.93	1183.79	.64	88.00
	7070.000	11000.00	1195.88	.00	10.99	11.82	109.20	1001.12	18.99	1184.06	.64	130.00
	7170.000	11000.00	1196.06	.00	11.04	11.95	106.68	996.65	18.79	1184.11	.64	100.00
	7223.000	11000.00	1196.21	.00	10.90	12.07	107.20	1009.15	18.15	1184.14	.63	53.00
*	7260.000	11000.00	1197.36	.00	7.32	13.21	133.58	1503.57	6.49	1184.15	.38	37.00
	7305.000	11000.00	1197.39	.00	7.31	13.21	133.65	1504.06	6.49	1184.18	.38	45.00
	7310.000	11000.00	1197.15	.00	8.75	11.31	128.30	1256.84	11.08	1185.84	.49	5.00

1

	SECNO	Q	CWSEL	CRIWS	VCH	DEPTH	TOPWID	AREA	10*KS	ELMIN	FRCH	XLCH
*	7330.000	11000.00	1199.34	1199.34	14.25	7.09	123.73	771.69	51.94	1192.25	1.01	20.00
*	7339.000	11000.00	1201.88	1201.88	14.57	9.63	115.34	754.86	54.48	1192.25	1.00	9.40
*	7340.000	11000.00	1201.97	1201.97	14.58	7.20	115.50	754.45	51.78	1194.77	1.01	1.00
*	7350.000	11000.00	1203.90	.00	10.07	9.13	137.82	1091.87	18.95	1194.77	.63	10.00
*	7377.000	11000.00	1204.76	.00	7.31	9.98	180.68	1505.10	9.17	1194.77	.45	27.00
*	7500.000	11000.00	1205.37	.00	4.59	9.98	269.89	2395.09	3.30	1195.39	.27	123.00
	7700.000	11000.00	1205.39	.00	5.16	9.00	263.97	2132.56	4.71	1196.39	.32	200.00
	7900.000	11000.00	1205.42	.00	5.85	8.03	258.16	1879.46	6.96	1197.39	.38	200.00
	8000.000	11000.00	1205.45	.00	6.23	7.56	257.04	1764.47	8.53	1197.89	.42	100.00
	8200.000	11000.00	1205.51	.00	7.23	6.62	249.72	1522.23	13.42	1198.89	.52	200.00
	8400.000	11000.00	1205.65	.00	8.41	5.76	244.53	1308.50	21.59	1199.89	.64	200.00
	8500.000	11000.00	1205.77	.00	9.04	5.38	242.27	1216.16	27.20	1200.39	.71	100.00
	8700.000	11000.00	1206.17	.00	10.25	4.78	238.68	1072.68	40.48	1201.39	.85	200.00
	8900.000	11000.00	1206.92	.00	10.87	4.53	237.15	1011.95	48.71	1202.39	.93	200.00
	9000.000	11000.00	1207.40	.00	10.88	4.51	238.11	1011.11	49.10	1202.89	.93	100.00
	9100.000	11000.00	1207.88	.00	10.93	4.49	237.00	1006.19	49.61	1203.39	.94	100.00
	9271.000	11000.00	1208.72	.00	10.99	4.47	236.87	1000.46	50.52	1204.25	.94	171.00
*	9295.000	11000.00	1208.73	1208.73	11.99	4.37	210.00	917.31	60.18	1204.36	1.01	24.00
*	9405.000	11000.00	1210.65	.00	9.12	5.74	210.00	1205.57	24.61	1204.91	.67	110.00
	9471.000	11000.00	1211.11	.00	8.23	5.87	245.10	1336.47	20.18	1205.24	.62	66.00
	9500.000	11000.00	1211.15	.00	8.40	5.76	244.64	1309.17	21.56	1205.39	.64	29.00
	9700.000	11000.00	1211.33	.00	10.34	4.94	230.65	1063.86	39.76	1206.39	.85	200.00
	9800.000	11000.00	1211.68	.00	10.62	4.79	230.57	1035.60	43.48	1206.89	.88	100.00
	10000.000	11000.00	1212.41	1212.39	11.67	4.52	221.99	942.99	56.47	1207.89	1.00	200.00
	10025.000	11000.00	1213.29	.00	9.52	5.39	233.01	1154.92	30.64	1207.90	.75	25.00
	10100.000	11000.00	1213.20	.00	11.19	4.81	218.86	983.24	48.24	1208.39	.93	75.00

1

SECNO Q CWSEL CRIWS VCH DEPTH TOPWID AREA 10*KS ELMIN FRCH XLCH

	10200.000	11000.00	1213.58	1213.54	11.69	4.69	214.22	941.06	54.26	1208.89	.98	100.00
*	10400.000	11000.00	1214.69	1214.69	12.05	4.80	204.68	912.78	56.56	1209.89	1.01	200.00
*	10600.000	11000.00	1215.81	1215.81	12.10	4.92	199.50	908.78	55.50	1210.89	1.00	200.00
	10800.000	11000.00	1217.03	.00	11.67	5.14	198.81	942.20	49.00	1211.89	.95	200.00
	10900.000	11000.00	1217.46	1217.37	11.95	5.07	196.90	920.36	52.30	1212.39	.97	100.00
*	11000.000	11000.00	1218.07	1218.07	12.36	5.17	187.74	890.06	54.92	1212.90	1.00	100.00
*	11095.000	11000.00	1218.62	1218.62	12.43	5.22	185.15	885.03	54.96	1213.40	1.00	95.00
*	11100.000	11000.00	1222.13	1222.13	12.40	5.23	187.35	887.22	55.29	1216.90	1.00	5.00
	11150.000	11000.00	1222.63	.00	11.78	5.73	180.08	933.42	44.42	1216.90	.91	50.00
	11230.000	11000.00	1223.03	.00	11.66	5.93	176.91	943.68	41.85	1217.10	.89	80.00
	11238.000	11000.00	1223.22	.00	11.25	6.12	177.97	978.03	37.47	1217.10	.85	8.00
	11305.000	11000.00	1223.86	.00	10.09	6.76	181.73	1090.63	26.82	1217.10	.73	67.00
	11310.000	11000.00	1223.82	.00	10.33	6.62	180.79	1065.36	28.80	1217.20	.75	5.00
	11400.000	11000.00	1224.40	.00	9.22	7.30	185.20	1193.32	20.40	1217.10	.64	90.00
	11500.000	11000.00	1224.52	.00	9.73	6.82	186.27	1130.65	24.57	1217.70	.70	100.00
	11700.000	11000.00	1225.07	.00	9.52	6.97	186.80	1155.77	22.93	1218.10	.67	200.00
	11900.000	11000.00	1225.55	.00	9.40	7.05	187.14	1170.12	22.07	1218.50	.66	200.00
	12000.000	11000.00	1225.79	.00	9.35	7.09	187.34	1176.19	21.72	1218.70	.66	100.00
	12200.000	11000.00	1226.21	.00	9.43	7.01	187.26	1166.11	22.34	1219.20	.67	200.00
	12400.000	11000.00	1226.68	.00	9.35	7.08	187.48	1176.92	21.70	1219.60	.66	200.00
	12500.000	11000.00	1226.91	.00	9.32	7.11	187.60	1180.70	21.49	1219.80	.65	100.00
	12645.000	11000.00	1227.22	.00	9.29	7.12	187.57	1183.65	21.30	1220.10	.65	145.00
*	12650.000	11000.00	1226.54	.00	12.26	5.54	178.30	897.06	50.03	1221.00	.96	5.00
	12660.000	11000.00	1226.95	.00	11.37	5.95	180.65	967.52	39.60	1221.00	.87	10.00
	12784.000	11000.00	1228.06	.00	9.23	6.86	197.60	1191.17	22.29	1221.20	.66	124.00
	12822.000	11000.00	1228.24	.00	8.90	6.94	202.25	1235.99	20.32	1221.30	.63	38.00

SECNO	Q	CWSEL	CRIWS	VCH	DEPTH	TOPWID	AREA	10*KS	ELMIN	FRCH	XLCH
12853.000	11000.00	1227.96	.00	10.60	6.56	177.76	1037.48	30.81	1221.40	.77	31.00

	12884.000	11000.00	1227.54	.00	12.72	6.14	159.10	864.88	48.70	1221.40	.96	31.00
*	12981.000	11000.00	1228.84	1228.84	13.34	7.24	151.30	824.50	53.67	1221.60	1.01	97.00
*	13050.000	11000.00	1231.00	.00	8.90	9.20	144.00	1235.41	13.88	1221.80	.54	69.00
	13131.000	11000.00	1231.40	.00	8.57	9.50	144.00	1283.83	12.30	1221.90	.51	81.00
	13206.000	11000.00	1231.26	.00	10.37	9.16	150.54	1061.21	23.07	1222.10	.69	75.00
	13300.000	11000.00	1231.35	.00	11.31	9.15	146.45	972.72	29.94	1222.20	.77	94.00
	13400.000	11000.00	1231.30	.00	12.73	8.90	119.33	864.38	34.00	1222.40	.83	100.00
*	13500.000	11000.00	1232.96	.00	8.70	10.36	142.82	1264.55	12.23	1222.60	.52	100.00
	13600.000	11000.00	1233.06	.00	8.81	10.26	142.24	1248.97	12.67	1222.80	.52	100.00
	13700.000	11000.00	1233.18	.00	8.85	10.18	142.35	1242.76	12.89	1223.00	.53	100.00
	13800.000	11000.00	1233.29	.00	8.99	10.09	141.45	1223.45	13.47	1223.20	.54	100.00
	13900.000	11000.00	1233.42	.00	9.03	10.02	141.68	1218.80	13.66	1223.40	.54	100.00
	14000.000	11000.00	1233.53	.00	9.17	9.93	140.71	1199.92	14.26	1223.60	.55	100.00
	14100.000	11000.00	1233.67	.00	9.16	9.87	141.47	1201.30	14.30	1223.80	.55	100.00
	14200.000	11000.00	1233.79	.00	9.32	9.79	140.20	1179.90	15.00	1224.00	.57	100.00
	14300.000	11000.00	1233.94	.00	9.33	9.74	140.68	1179.18	15.09	1224.20	.57	100.00
	14400.000	11000.00	1234.07	.00	9.40	9.67	140.27	1169.86	15.44	1224.40	.57	100.00
	14500.000	11000.00	1234.19	.00	9.62	9.59	138.50	1143.45	16.38	1224.60	.59	100.00
	14700.000	11000.00	1234.31	.00	10.80	9.41	136.35	1018.49	23.29	1224.90	.70	200.00
	14900.000	11000.00	1234.48	.00	12.28	9.18	124.99	895.63	31.89	1225.30	.81	200.00
	15000.000	11000.00	1234.61	.00	13.08	9.11	119.65	840.98	37.15	1225.50	.87	100.00
	15200.000	11000.00	1235.53	.00	12.55	9.63	119.85	876.62	32.48	1225.90	.82	200.00
	15400.000	11000.00	1235.96	.00	13.55	9.66	112.98	811.61	38.90	1226.30	.89	200.00
	15495.000	11000.00	1236.75	.00	12.51	10.25	116.65	879.63	31.07	1226.50	.80	95.00
*	15500.000	11000.00	1237.88	1237.88	15.01	9.38	106.26	732.67	50.48	1228.50	1.01	5.00

1

	SECNO	Q	CWSEL	CRIWS	VCH	DEPTH	TOPWID	AREA	10*KS	ELMIN	FRCH	XLCH
	15510.000	11000.00	1238.74	.00	13.32	10.24	111.41	826.00	36.10	1228.50	.86	10.00
*	15700.000	11000.00	1239.60	1239.60	15.27	10.20	101.04	720.51	50.18	1229.40	1.01	190.00

*	15900.000	11000.00	1241.27	1241.27	15.42	10.87	98.24	713.54	50.12	1230.40	1.01	200.00
	16000.000	11000.00	1243.18	.00	12.11	12.28	110.88	908.29	26.35	1230.90	.75	100.00
	16100.000	11000.00	1244.21	.00	9.90	12.81	125.26	1111.35	15.77	1231.40	.59	100.00
	16200.000	11000.00	1244.74	.00	8.66	12.94	136.87	1269.98	11.34	1231.80	.50	100.00
	16400.000	11000.00	1245.28	.00	7.39	12.47	156.66	1487.50	7.96	1232.80	.42	200.00
	16500.000	11000.00	1245.45	.00	6.99	12.15	165.89	1572.60	7.12	1233.30	.40	100.00
	16600.000	11000.00	1245.47	.00	7.36	11.67	163.19	1494.60	8.25	1233.80	.43	100.00
	16700.000	11000.00	1245.49	.00	7.76	11.19	160.32	1417.51	9.60	1234.30	.46	100.00
	16800.000	11000.00	1245.54	.00	8.09	10.84	157.84	1358.98	10.82	1234.70	.49	100.00
	16900.000	11000.00	1245.57	.00	8.55	10.37	155.06	1286.20	12.69	1235.20	.52	100.00
	17000.000	11000.00	1245.49	.00	9.67	9.79	139.37	1138.06	16.73	1235.70	.60	100.00
	17100.000	11000.00	1245.57	.00	10.15	9.39	137.92	1084.26	19.35	1236.18	.64	100.00
	17200.000	11000.00	1245.47	.00	11.53	8.81	123.53	953.76	25.94	1236.66	.73	100.00
	17300.000	11000.00	1245.63	.00	11.94	8.49	121.86	921.12	28.69	1237.14	.77	100.00
	17400.000	11000.00	1245.67	.00	13.00	8.05	120.06	846.14	37.00	1237.62	.86	100.00
	17500.000	11000.00	1245.87	.00	13.68	7.77	116.88	803.92	42.46	1238.10	.92	100.00
	17700.000	11000.00	1246.65	.00	14.07	7.59	118.85	782.08	47.19	1239.06	.97	200.00
*	17850.000	11000.00	1247.23	1247.23	14.70	7.45	113.83	748.24	51.97	1239.78	1.01	150.00
	17950.000	11000.00	1248.65	.00	12.51	8.39	119.34	879.00	32.49	1240.26	.81	100.00
*	17955.000	11000.00	1252.31	1252.31	13.94	6.51	132.31	789.10	52.66	1245.80	1.01	5.00
*	17960.000	11000.00	1252.42	1252.42	13.92	6.52	132.51	790.23	52.51	1245.90	1.00	5.00
	18000.000	11000.00	1253.37	.00	12.16	7.37	135.66	904.53	34.65	1246.00	.83	40.00
*	18170.000	11000.00	1253.85	1253.85	14.30	6.85	122.45	768.98	52.26	1247.00	1.01	170.00
*	18390.000	11000.00	1257.02	.00	10.78	9.02	131.41	1020.69	22.33	1248.00	.68	220.00

1

SECNO	Q	CWSEL	CRIWS	VCH	DEPTH	TOPWID	AREA	10*KS	ELMIN	FRCH	XLCH
18500.000	11000.00	1256.91	.00	12.35	8.41	123.63	890.36	32.57	1248.50	.81	110.00
18710.000	11000.00	1258.13	.00	10.69	8.63	135.45	1029.09	22.57	1249.50	.68	210.00
18900.000	11000.00	1258.23	.00	12.47	7.23	134.09	882.06	37.14	1251.00	.86	190.00

	19000.000	11000.00	1258.45	.00	13.12	6.95	133.38	838.70	43.44	1251.50	.92	100.00
	19200.000	11000.00	1259.81	.00	11.60	7.81	138.07	948.08	30.20	1252.00	.78	200.00
	19400.000	11000.00	1260.30	.00	12.22	7.30	136.56	900.41	35.48	1253.00	.84	200.00
*	19500.000	11000.00	1260.32	1260.32	13.97	6.52	131.34	787.21	52.69	1253.80	1.01	100.00
	19600.000	11000.00	1261.37	.00	12.65	7.17	132.44	869.73	38.40	1254.20	.87	100.00
*	19782.000	11000.00	1262.99	.00	9.62	8.49	149.52	1143.59	18.08	1254.50	.61	182.00
	19940.000	11000.00	1263.24	.00	9.96	7.94	153.15	1104.82	20.87	1255.30	.65	158.00
	20050.000	11000.00	1263.41	.00	10.00	8.01	149.69	1100.07	20.65	1255.40	.65	110.00
*	20160.000	11000.00	1264.64	.00	6.77	9.22	195.53	1624.18	7.94	1255.42	.41	110.00
	20200.000	11000.00	1264.92	.00	5.75	9.47	225.77	1913.90	5.53	1255.45	.35	40.00
	20300.000	11000.00	1264.95	.00	6.00	9.02	227.65	1832.29	6.44	1255.93	.37	100.00
	20500.000	11000.00	1264.99	.00	6.81	8.10	219.49	1615.88	9.34	1256.89	.44	200.00
	20700.000	11000.00	1265.12	.00	7.39	7.27	231.14	1488.00	13.07	1257.85	.51	200.00
	20900.000	11000.00	1265.27	.00	8.38	6.46	234.63	1312.51	20.22	1258.81	.62	200.00
	21000.000	11000.00	1265.43	.00	8.68	6.14	237.03	1267.04	23.05	1259.29	.66	100.00
	21230.000	11000.00	1265.80	.00	9.94	5.41	220.65	1106.28	32.95	1260.39	.78	230.00
	21240.000	11000.00	1265.78	.00	10.20	5.28	220.30	1078.27	35.80	1260.50	.81	10.00
	21330.000	11000.00	1266.09	.00	10.29	5.22	223.53	1069.04	37.51	1260.87	.83	90.00
*	21395.000	11000.00	1268.36	1268.36	10.90	4.36	273.53	1009.36	59.26	1264.00	1.00	65.00
*	21565.000	11000.00	1269.97	.00	7.57	5.97	312.04	1453.28	20.96	1264.00	.62	170.00
*	21700.000	11000.00	1270.34	.00	6.83	7.69	232.73	1609.84	10.17	1262.65	.46	135.00
	21900.000	11000.00	1270.53	.00	7.04	6.92	246.51	1562.03	12.11	1263.61	.49	200.00
	22000.000	11000.00	1270.92	.00	5.68	6.83	304.00	1937.19	7.80	1264.09	.40	100.00

1

	SECNO	Q	CWSEL	CRIWS	VCH	DEPTH	TOPWID	AREA	10*KS	ELMIN	FRCH	XLCH
	22200.000	11000.00	1271.06	.00	5.95	6.01	325.64	1849.53	9.96	1265.05	.44	200.00
*	22400.000	11000.00	1270.84	.00	9.30	4.83	259.02	1182.74	32.58	1266.01	.77	200.00
*	22500.000	11000.00	1270.78	1270.78	11.50	4.29	235.76	956.87	58.23	1266.49	1.01	100.00
*	22510.000	11000.00	1271.08	1271.08	11.83	4.58	216.15	929.49	57.23	1266.50	1.01	10.00

*	22520.000	11000.00	1271.26	1271.26	11.85	4.66	212.98	928.11	56.38	1266.60	1.00	10.00
*	22540.000	11000.00	1271.44	1271.44	11.94	4.74	208.46	921.24	56.19	1266.70	1.00	20.00
*	22560.000	11000.00	1271.63	1271.63	12.02	4.83	203.97	914.83	55.89	1266.80	1.00	20.00
*	22580.000	11000.00	1271.82	1271.82	12.11	4.92	199.50	908.25	55.60	1266.90	1.00	20.00
*	22600.000	11000.00	1272.02	1272.02	12.23	5.02	193.59	899.25	55.28	1267.00	1.00	20.00
*	22620.000	11000.00	1272.20	1272.20	12.30	5.10	190.61	894.40	55.13	1267.10	1.00	20.00
*	22640.000	11000.00	1272.40	1272.40	12.39	5.20	186.21	887.56	54.85	1267.20	1.00	20.00
*	22660.000	11000.00	1272.61	1272.61	12.49	5.31	181.85	880.77	54.55	1267.30	1.00	20.00
*	22680.000	11000.00	1273.66	.00	9.93	6.26	189.26	1107.36	27.04	1267.40	.72	20.00
	22700.000	11000.00	1273.54	.00	10.75	6.04	180.89	1023.71	33.12	1267.50	.80	20.00
	22720.000	11000.00	1273.57	.00	10.92	6.07	178.26	1007.79	34.20	1267.50	.81	20.00
	22740.000	11000.00	1273.44	.00	11.73	5.84	172.18	938.00	41.47	1267.60	.89	20.00
	22760.000	11000.00	1273.25	1273.20	12.78	5.55	165.85	860.48	52.58	1267.70	.99	20.00
*	22780.000	11000.00	1273.45	1273.45	13.01	5.65	160.99	845.53	53.63	1267.80	1.00	20.00
*	22800.000	11000.00	1273.61	1273.61	13.10	5.71	157.96	839.42	53.66	1267.90	1.00	20.00
	22820.000	11000.00	1274.11	.00	12.16	6.11	160.42	904.72	42.68	1268.00	.90	20.00
	22840.000	11000.00	1274.13	.00	12.43	6.03	158.91	885.24	45.31	1268.10	.93	20.00
	22860.000	11000.00	1274.07	1274.00	12.97	5.87	156.11	848.34	50.98	1268.20	.98	20.00
*	22877.000	8400.00	1276.14	.00	7.01	7.84	171.58	1197.89	10.69	1268.30	.47	17.00
	22900.000	8400.00	1276.06	.00	7.68	7.66	157.07	1093.12	12.99	1268.40	.51	23.00
	22920.000	8400.00	1276.08	.00	7.73	7.58	158.35	1086.29	13.38	1268.50	.52	20.00
	22940.000	8400.00	1276.08	.00	7.93	7.48	156.71	1059.83	14.32	1268.60	.54	20.00

SECNO	Q	CWSEL	CRIWS	VCH	DEPTH	TOPWID	AREA	10*KS	ELMIN	FRCH	XLCH
22960.000	8400.00	1276.07	.00	8.12	7.37	155.09	1034.70	15.30	1268.70	.55	20.00
22980.000	8400.00	1276.19	.00	7.79	7.39	163.77	1077.74	14.28	1268.80	.54	20.00
23000.000	8400.00	1276.22	.00	7.82	7.32	161.48	1074.82	14.20	1268.90	.53	20.00
23100.000	8400.00	1276.25	.00	8.54	6.85	157.39	984.03	18.40	1269.40	.60	100.00
23200.000	8400.00	1276.40	.00	8.79	6.55	165.70	956.13	21.46	1269.85	.64	100.00

	23300.000	8400.00	1276.52	.00	9.39	6.19	163.11	894.30	26.25	1270.33	.71	100.00
	23310.000	8400.00	1276.54	.00	9.39	6.19	163.14	894.86	26.20	1270.35	.71	10.00
	23400.000	8400.00	1276.64	.00	10.18	5.83	158.98	824.96	33.18	1270.81	.79	90.00
	23500.000	8400.00	1276.78	.00	11.21	5.49	152.94	749.31	43.41	1271.29	.89	100.00
*	23575.000	8400.00	1277.00	1277.00	12.52	5.35	141.33	670.77	56.56	1271.65	1.01	75.00
*	23645.000	8400.00	1278.32	.00	9.76	6.67	149.19	860.96	26.53	1271.65	.72	70.00
	23800.000	8400.00	1278.86	.00	9.36	6.13	164.77	897.05	26.33	1272.73	.71	155.00
	24000.000	8400.00	1279.27	.00	10.25	5.58	163.51	819.58	35.17	1273.69	.81	200.00
	24200.000	8400.00	1279.96	.00	10.48	5.31	166.87	801.65	38.86	1274.65	.84	200.00
	24365.000	8400.00	1280.47	.00	11.34	5.03	159.72	740.84	47.81	1275.44	.93	165.00
	24500.000	8400.00	1281.48	.00	10.07	5.39	169.93	833.88	34.95	1276.09	.80	135.00
*	24510.000	8400.00	1283.48	1283.48	11.53	4.39	178.79	728.81	58.36	1279.09	1.01	10.00
*	24700.000	8400.00	1285.08	.00	8.86	5.99	174.43	947.89	23.65	1279.09	.67	190.00
	24900.000	8400.00	1285.66	.00	8.31	6.57	170.64	1011.29	18.56	1279.09	.60	200.00
	25000.000	8400.00	1286.06	.00	7.41	6.97	180.13	1133.43	13.65	1279.09	.52	100.00
	25200.000	8400.00	1286.38	.00	7.19	6.98	184.80	1168.89	12.74	1279.40	.50	200.00
	25400.000	8400.00	1286.40	.00	9.04	5.81	174.68	929.51	25.30	1280.59	.69	200.00
	25500.000	8400.00	1286.41	.00	10.48	5.22	167.12	801.55	39.03	1281.19	.84	100.00
*	25600.000	8400.00	1286.58	1286.58	12.02	4.79	157.48	698.62	57.06	1281.79	1.01	100.00
*	25650.000	8400.00	1286.97	1286.97	11.99	4.88	156.85	700.32	56.21	1282.09	1.00	50.00
*	25660.000	8400.00	1287.94	1287.94	11.98	4.85	159.34	701.12	57.10	1283.09	1.01	10.00

1

	SECNO	Q	CWSEL	CRIWS	VCH	DEPTH	TOPWID	AREA	10*KS	ELMIN	FRCH	XLCH
	25700.000	8400.00	1288.70	.00	10.46	5.61	163.30	803.39	37.45	1283.09	.83	40.00
	25827.000	8400.00	1289.57	.00	8.97	6.48	168.74	936.07	23.53	1283.09	.67	127.00
	25830.000	8400.00	1289.54	.00	9.15	6.37	168.30	918.27	24.99	1283.17	.69	3.00
	25870.000	8400.00	1289.41	.00	10.32	6.00	151.36	814.09	32.60	1283.41	.78	40.00
	26000.000	8400.00	1289.59	1289.56	12.34	5.40	142.99	680.84	54.71	1284.19	1.00	130.00
*	26120.000	8400.00	1291.38	.00	10.48	6.38	140.98	801.19	31.41	1285.00	.78	120.00

	26260.000	8400.00	1291.83	1291.81	11.29	4.33	186.56	744.25	57.49	1287.50	1.00	140.00
*	26500.000	8400.00	1293.78	.00	8.05	4.80	235.43	1043.88	25.34	1288.98	.67	240.00
	26795.000	8400.00	1294.41	.00	9.95	4.41	223.57	844.36	48.08	1290.00	.90	295.00
*	27083.000	8400.00	1296.49	1296.49	10.40	3.49	243.36	808.04	62.09	1293.00	1.01	288.00
*	27282.000	8400.00	1299.24	1299.24	9.99	3.24	274.67	841.07	63.70	1296.00	1.01	200.00
*	27424.000	8400.00	1300.73	1300.73	9.86	3.23	284.93	851.75	105.03	1297.50	1.01	142.00
*	27741.000	8400.00	1303.07	.00	6.41	5.07	274.41	1310.44	23.87	1298.00	.52	317.00
	27952.000	8400.00	1303.74	.00	6.34	5.54	239.69	1325.02	39.90	1298.20	.48	211.00
*	27953.000	8400.00	1304.16	.00	4.83	7.26	239.79	1738.04	16.45	1296.90	.32	1.00
	27968.000	8400.00	1304.19	.00	4.81	7.29	239.79	1745.77	16.21	1296.90	.31	15.00
*	27969.000	8400.00	1305.37	1305.37	10.97	5.57	210.03	765.47	20.37	1299.80	1.01	1.00
*	28023.000	8400.00	1307.47	.00	4.20	6.67	395.00	2073.23	1.58	1300.80	.31	54.00
*	28038.000	8400.00	1307.51	.00	3.88	8.51	305.85	2164.63	5.18	1299.00	.26	15.00
	28252.000	8400.00	1307.61	.00	4.23	7.61	294.97	1986.20	6.58	1300.00	.29	214.00
	28545.000	8400.00	1307.79	.00	4.61	7.79	291.97	1823.61	8.61	1300.00	.32	293.00
*	29023.000	8400.00	1308.21	.00	1.77	8.41	687.13	4751.92	1.10	1299.80	.12	478.00

1

SUMMARY OF ERRORS AND SPECIAL NOTES

```
WARNING SECNO=   7260.000  PROFILE=  1  CONVEYANCE CHANGE OUTSIDE ACCEPTABLE RANGE

CAUTION SECNO=   7330.000  PROFILE=  1  CRITICAL DEPTH ASSUMED
CAUTION SECNO=   7330.000  PROFILE=  1  PROBABLE MINIMUM SPECIFIC ENERGY
CAUTION SECNO=   7330.000  PROFILE=  1  20 TRIALS ATTEMPTED TO BALANCE WSEL

CAUTION SECNO=   7339.000  PROFILE=  1  CRITICAL DEPTH ASSUMED
CAUTION SECNO=   7339.000  PROFILE=  1  PROBABLE MINIMUM SPECIFIC ENERGY
CAUTION SECNO=   7339.000  PROFILE=  1  20 TRIALS ATTEMPTED TO BALANCE WSEL

CAUTION SECNO=   7340.000  PROFILE=  1  CRITICAL DEPTH ASSUMED
CAUTION SECNO=   7340.000  PROFILE=  1  MINIMUM SPECIFIC ENERGY

WARNING SECNO=   7350.000  PROFILE=  1  CONVEYANCE CHANGE OUTSIDE ACCEPTABLE RANGE

WARNING SECNO=   7377.000  PROFILE=  1  CONVEYANCE CHANGE OUTSIDE ACCEPTABLE RANGE

WARNING SECNO=   7500.000  PROFILE=  1  CONVEYANCE CHANGE OUTSIDE ACCEPTABLE RANGE
```

```
CAUTION SECNO=   9295.000  PROFILE=  1  CRITICAL DEPTH ASSUMED
CAUTION SECNO=   9295.000  PROFILE=  1  MINIMUM SPECIFIC ENERGY

CAUTION SECNO=   9405.000  PROFILE=  1  HYDRAULIC JUMP D.S.
WARNING SECNO=   9405.000  PROFILE=  1  CONVEYANCE CHANGE OUTSIDE ACCEPTABLE RANGE

CAUTION SECNO=  10400.000  PROFILE=  1  CRITICAL DEPTH ASSUMED
CAUTION SECNO=  10400.000  PROFILE=  1  MINIMUM SPECIFIC ENERGY

CAUTION SECNO=  10600.000  PROFILE=  1  CRITICAL DEPTH ASSUMED
CAUTION SECNO=  10600.000  PROFILE=  1  MINIMUM SPECIFIC ENERGY

CAUTION SECNO=  11000.000  PROFILE=  1  CRITICAL DEPTH ASSUMED
CAUTION SECNO=  11000.000  PROFILE=  1  MINIMUM SPECIFIC ENERGY

CAUTION SECNO=  11095.000  PROFILE=  1  CRITICAL DEPTH ASSUMED
CAUTION SECNO=  11095.000  PROFILE=  1  MINIMUM SPECIFIC ENERGY

CAUTION SECNO=  11100.000  PROFILE=  1  CRITICAL DEPTH ASSUMED
CAUTION SECNO=  11100.000  PROFILE=  1  PROBABLE MINIMUM SPECIFIC ENERGY
CAUTION SECNO=  11100.000  PROFILE=  1  20 TRIALS ATTEMPTED TO BALANCE WSEL

WARNING SECNO=  12650.000  PROFILE=  1  CONVEYANCE CHANGE OUTSIDE ACCEPTABLE RANGE

CAUTION SECNO=  12981.000  PROFILE=  1  CRITICAL DEPTH ASSUMED
CAUTION SECNO=  12981.000  PROFILE=  1  PROBABLE MINIMUM SPECIFIC ENERGY
CAUTION SECNO=  12981.000  PROFILE=  1  20 TRIALS ATTEMPTED TO BALANCE WSEL

WARNING SECNO=  13050.000  PROFILE=  1  CONVEYANCE CHANGE OUTSIDE ACCEPTABLE RANGE

WARNING SECNO=  13500.000  PROFILE=  1  CONVEYANCE CHANGE OUTSIDE ACCEPTABLE RANGE
1
```



```
CAUTION SECNO=  15500.000  PROFILE=  1  CRITICAL DEPTH ASSUMED
CAUTION SECNO=  15500.000  PROFILE=  1  PROBABLE MINIMUM SPECIFIC ENERGY
CAUTION SECNO=  15500.000  PROFILE=  1  20 TRIALS ATTEMPTED TO BALANCE WSEL

CAUTION SECNO=  15700.000  PROFILE=  1  CRITICAL DEPTH ASSUMED
CAUTION SECNO=  15700.000  PROFILE=  1  PROBABLE MINIMUM SPECIFIC ENERGY
CAUTION SECNO=  15700.000  PROFILE=  1  20 TRIALS ATTEMPTED TO BALANCE WSEL

CAUTION SECNO=  15900.000  PROFILE=  1  CRITICAL DEPTH ASSUMED
CAUTION SECNO=  15900.000  PROFILE=  1  PROBABLE MINIMUM SPECIFIC ENERGY
CAUTION SECNO=  15900.000  PROFILE=  1  20 TRIALS ATTEMPTED TO BALANCE WSEL

CAUTION SECNO=  17850.000  PROFILE=  1  CRITICAL DEPTH ASSUMED
CAUTION SECNO=  17850.000  PROFILE=  1  MINIMUM SPECIFIC ENERGY

CAUTION SECNO=  17955.000  PROFILE=  1  CRITICAL DEPTH ASSUMED
CAUTION SECNO=  17955.000  PROFILE=  1  PROBABLE MINIMUM SPECIFIC ENERGY
CAUTION SECNO=  17955.000  PROFILE=  1  20 TRIALS ATTEMPTED TO BALANCE WSEL

CAUTION SECNO=  17960.000  PROFILE=  1  CRITICAL DEPTH ASSUMED
CAUTION SECNO=  17960.000  PROFILE=  1  MINIMUM SPECIFIC ENERGY

CAUTION SECNO=  18170.000  PROFILE=  1  CRITICAL DEPTH ASSUMED
CAUTION SECNO=  18170.000  PROFILE=  1  MINIMUM SPECIFIC ENERGY
```

```
CAUTION SECNO=  18390.000  PROFILE=  1  HYDRAULIC JUMP D.S.
WARNING SECNO=  18390.000  PROFILE=  1  CONVEYANCE CHANGE OUTSIDE ACCEPTABLE RANGE

CAUTION SECNO=  19500.000  PROFILE=  1  CRITICAL DEPTH ASSUMED
CAUTION SECNO=  19500.000  PROFILE=  1  MINIMUM SPECIFIC ENERGY

WARNING SECNO=  19782.000  PROFILE=  1  CONVEYANCE CHANGE OUTSIDE ACCEPTABLE RANGE

WARNING SECNO=  20160.000  PROFILE=  1  CONVEYANCE CHANGE OUTSIDE ACCEPTABLE RANGE

CAUTION SECNO=  21395.000  PROFILE=  1  CRITICAL DEPTH ASSUMED
CAUTION SECNO=  21395.000  PROFILE=  1  PROBABLE MINIMUM SPECIFIC ENERGY
CAUTION SECNO=  21395.000  PROFILE=  1  20 TRIALS ATTEMPTED TO BALANCE WSEL

WARNING SECNO=  21565.000  PROFILE=  1  CONVEYANCE CHANGE OUTSIDE ACCEPTABLE RANGE

WARNING SECNO=  21700.000  PROFILE=  1  CONVEYANCE CHANGE OUTSIDE ACCEPTABLE RANGE

WARNING SECNO=  22400.000  PROFILE=  1  CONVEYANCE CHANGE OUTSIDE ACCEPTABLE RANGE

CAUTION SECNO=  22500.000  PROFILE=  1  CRITICAL DEPTH ASSUMED
CAUTION SECNO=  22500.000  PROFILE=  1  MINIMUM SPECIFIC ENERGY

CAUTION SECNO=  22510.000  PROFILE=  1  CRITICAL DEPTH ASSUMED
CAUTION SECNO=  22510.000  PROFILE=  1  PROBABLE MINIMUM SPECIFIC ENERGY
CAUTION SECNO=  22510.000  PROFILE=  1  20 TRIALS ATTEMPTED TO BALANCE WSEL

CAUTION SECNO=  22520.000  PROFILE=  1  CRITICAL DEPTH ASSUMED
CAUTION SECNO=  22520.000  PROFILE=  1  PROBABLE MINIMUM SPECIFIC ENERGY
1
   28JUL98      08:35:55                                                                                    PAGE   94


CAUTION SECNO=  22520.000  PROFILE=  1  20 TRIALS ATTEMPTED TO BALANCE WSEL

CAUTION SECNO=  22540.000  PROFILE=  1  CRITICAL DEPTH ASSUMED
CAUTION SECNO=  22540.000  PROFILE=  1  MINIMUM SPECIFIC ENERGY

CAUTION SECNO=  22560.000  PROFILE=  1  CRITICAL DEPTH ASSUMED
CAUTION SECNO=  22560.000  PROFILE=  1  MINIMUM SPECIFIC ENERGY

CAUTION SECNO=  22580.000  PROFILE=  1  CRITICAL DEPTH ASSUMED
CAUTION SECNO=  22580.000  PROFILE=  1  MINIMUM SPECIFIC ENERGY

CAUTION SECNO=  22600.000  PROFILE=  1  CRITICAL DEPTH ASSUMED
CAUTION SECNO=  22600.000  PROFILE=  1  MINIMUM SPECIFIC ENERGY

CAUTION SECNO=  22620.000  PROFILE=  1  CRITICAL DEPTH ASSUMED
CAUTION SECNO=  22620.000  PROFILE=  1  MINIMUM SPECIFIC ENERGY

CAUTION SECNO=  22640.000  PROFILE=  1  CRITICAL DEPTH ASSUMED
CAUTION SECNO=  22640.000  PROFILE=  1  MINIMUM SPECIFIC ENERGY

CAUTION SECNO=  22660.000  PROFILE=  1  CRITICAL DEPTH ASSUMED
CAUTION SECNO=  22660.000  PROFILE=  1  MINIMUM SPECIFIC ENERGY

WARNING SECNO=  22680.000  PROFILE=  1  CONVEYANCE CHANGE OUTSIDE ACCEPTABLE RANGE

CAUTION SECNO=  22780.000  PROFILE=  1  CRITICAL DEPTH ASSUMED
```

```
CAUTION SECNO=  22780.000  PROFILE=  1  PROBABLE MINIMUM SPECIFIC ENERGY
CAUTION SECNO=  22780.000  PROFILE=  1  20 TRIALS ATTEMPTED TO BALANCE WSEL

CAUTION SECNO=  22800.000  PROFILE=  1  CRITICAL DEPTH ASSUMED
CAUTION SECNO=  22800.000  PROFILE=  1  MINIMUM SPECIFIC ENERGY

WARNING SECNO=  22877.000  PROFILE=  1  CONVEYANCE CHANGE OUTSIDE ACCEPTABLE RANGE

CAUTION SECNO=  23575.000  PROFILE=  1  CRITICAL DEPTH ASSUMED
CAUTION SECNO=  23575.000  PROFILE=  1  PROBABLE MINIMUM SPECIFIC ENERGY
CAUTION SECNO=  23575.000  PROFILE=  1  20 TRIALS ATTEMPTED TO BALANCE WSEL

WARNING SECNO=  23645.000  PROFILE=  1  CONVEYANCE CHANGE OUTSIDE ACCEPTABLE RANGE

CAUTION SECNO=  24510.000  PROFILE=  1  CRITICAL DEPTH ASSUMED
CAUTION SECNO=  24510.000  PROFILE=  1  PROBABLE MINIMUM SPECIFIC ENERGY
CAUTION SECNO=  24510.000  PROFILE=  1  20 TRIALS ATTEMPTED TO BALANCE WSEL

WARNING SECNO=  24700.000  PROFILE=  1  CONVEYANCE CHANGE OUTSIDE ACCEPTABLE RANGE

CAUTION SECNO=  25600.000  PROFILE=  1  CRITICAL DEPTH ASSUMED
CAUTION SECNO=  25600.000  PROFILE=  1  MINIMUM SPECIFIC ENERGY

CAUTION SECNO=  25650.000  PROFILE=  1  CRITICAL DEPTH ASSUMED
CAUTION SECNO=  25650.000  PROFILE=  1  MINIMUM SPECIFIC ENERGY

CAUTION SECNO=  25660.000  PROFILE=  1  CRITICAL DEPTH ASSUMED
CAUTION SECNO=  25660.000  PROFILE=  1  PROBABLE MINIMUM SPECIFIC ENERGY
1
   28JUL98      08:35:55                                                                    PAGE   95

CAUTION SECNO=  25660.000  PROFILE=  1  20 TRIALS ATTEMPTED TO BALANCE WSEL

CAUTION SECNO=  26120.000  PROFILE=  1  HYDRAULIC JUMP D.S.

WARNING SECNO=  26500.000  PROFILE=  1  CONVEYANCE CHANGE OUTSIDE ACCEPTABLE RANGE

CAUTION SECNO=  27083.000  PROFILE=  1  CRITICAL DEPTH ASSUMED
CAUTION SECNO=  27083.000  PROFILE=  1  MINIMUM SPECIFIC ENERGY

CAUTION SECNO=  27282.000  PROFILE=  1  CRITICAL DEPTH ASSUMED
CAUTION SECNO=  27282.000  PROFILE=  1  PROBABLE MINIMUM SPECIFIC ENERGY
CAUTION SECNO=  27282.000  PROFILE=  1  20 TRIALS ATTEMPTED TO BALANCE WSEL

CAUTION SECNO=  27424.000  PROFILE=  1  CRITICAL DEPTH ASSUMED
CAUTION SECNO=  27424.000  PROFILE=  1  MINIMUM SPECIFIC ENERGY

WARNING SECNO=  27741.000  PROFILE=  1  CONVEYANCE CHANGE OUTSIDE ACCEPTABLE RANGE

WARNING SECNO=  27953.000  PROFILE=  1  CONVEYANCE CHANGE OUTSIDE ACCEPTABLE RANGE

CAUTION SECNO=  27969.000  PROFILE=  1  CRITICAL DEPTH ASSUMED
CAUTION SECNO=  27969.000  PROFILE=  1  PROBABLE MINIMUM SPECIFIC ENERGY
CAUTION SECNO=  27969.000  PROFILE=  1  20 TRIALS ATTEMPTED TO BALANCE WSEL

WARNING SECNO=  28023.000  PROFILE=  1  CONVEYANCE CHANGE OUTSIDE ACCEPTABLE RANGE

WARNING SECNO=  28038.000  PROFILE=  1  CONVEYANCE CHANGE OUTSIDE ACCEPTABLE RANGE
```

WARNING SECNO= 29023.000 PROFILE= 1 CONVEYANCE CHANGE OUTSIDE ACCEPTABLE RANGE

APPENDIX C

EXAMPLE SCOUR CALCULATIONS

LONG-TERM SCOUR (Reference 11)

SECTION NUMBER: 5724

1. SCHOKLITSCH METHOD

$$S_L = K\left(\frac{D_{50}\,B}{Q}\right)^{3/4}$$

$$= 0.00174\left(\frac{2.2 * 100}{2970}\right)^{3/4}$$

$$= 0.000247 \text{ ft/ft}$$

S_L = Stable Slope (ft/ft)

K = 0.00174 (ft. lb)

D_{50} = Mean Particle Size (mm.)

B = Channel Width (ft.)

Q = Dominant Discharge Q_{10} (cfs)

2. MEYER-PETER, MULLER METHOD (MPM)

$$S_L = \frac{K\left(\frac{Q}{Q_B}\right)\left(\frac{n_s}{D_{90}^{1/6}}\right)^{3/2} D_{50}}{d}$$

$$= \frac{0.19\,(1)\left(\frac{0.035}{50^{1/6}}\right)^{3/2} 2.2}{4.25}$$

$$= 0.000242 \text{ ft/ft}$$

K = 0.19

$\frac{Q}{Q_B}$ = Ratio of total flow to channel flow

n_s = Manning n for streambed

D_{90} = Particle Size with 90% finer (mm.)

D_{50} = Particle Size with 50% finer (mm.)

d = Hydraulic depth (ft.)

3. SHIELD'S DIAGRAM METHOD

$$S_L = \frac{0.06\,(\gamma_s - \gamma_w)\,D_{50}}{\gamma_w\, d}$$

$$= \frac{0.06\,(165-62.4)\left(2.2/304.8\right)}{62.4\,(4.25)}$$

$$= 0.000168 \text{ ft/ft}$$

γ_s = specific weight of sediment (lb / ft^3)

γ_w = specific weight of water

D_{50} = particle size with 50% finer (ft)

1. MEYER-PETER, MULLER METHOD

SECTION NUMBER: 5724

$$D_c = \frac{d\,S}{K\left(\frac{n_s}{D_{90}^{1/6}}\right)^{3/2}}$$

D_c : Incipient particle size (mm.)

K : 0.19 (ft·lb)

$$D_c = \frac{4.25\ (39.88 * 10^{-4})}{0.19\left(\frac{0.035}{50^{1/6}}\right)^{3/2}}$$

$= 36.23$ mm.

2. COMPETENT BOTTOM VELOCITY (CBV)

$$D_c = 1.88\ V_m^2$$

V_m = mean channel velocity (ft/s)

$$D_c = 1.88\ (6.96)^2$$

D_c, mm.

$= 91.07$ mm.

3. YANG'S INCIPIENT MOTION

$$D_c = 0.00659\ V_{cr}^2$$

V_{cr} = Critical velocity (average) at incipient motion (ft/s)

$$= 0.00659\ (6.96)^2$$

$= 0.319$ ft

$\equiv 97.3$ mm.

4. SHIELD'S DIAGRAM

$$D_c = \frac{\gamma_w R S}{(\gamma_s - \gamma_w) T_*}$$

R: hydraulic radius (ft)

S: Slope of Energy Grade Line (ft/ft)

T_* = Shield's parameter

→ Check $\frac{W}{d} \Rightarrow \frac{\text{Top Width}}{\text{Hydraulic depth}} = \frac{85}{4.25} = 20 > 10$

$\therefore R \approx d$

→ T_* : Use Shield's Curve

$$R_* = \frac{U_* D}{\nu}$$

$$U_* = \sqrt{\frac{\tau}{\rho}} = \sqrt{\frac{\gamma R S}{\rho}} = \sqrt{g d S}$$

Assume $\nu_{water} = 1.059 * 10^{-5}$ ft²/s

$D = D_{50} = 2.2$ mm $= 7.22 * 10^{-3}$ ft.

$$R_* = \frac{\sqrt{(32.2)(4.25)(39.88 * 10^{-4})}\ (7.22 * 10^{-3})}{1.059 * 10^{-5}}$$

$= 503.66$

$\therefore T_* = 0.06$

$$D_c = \frac{62.4 * 4.25 * 39.88 * 10^{-4}}{(165 - 62.4)\ (0.06)} = 0.17 \text{ ft} \equiv 52.36 \text{ mm.}$$

Armoring Depth

$$y_d = y_a \left(\frac{1}{\Delta p} - 1 \right)$$

y_d : depth to armor (ft)

y_a : thickness of armor layer ($2 D_c$)

D_c : particle size (mm)

Δp : Decimal percent of original bed-material larger than armor size

For the section average armor size for Reach 1;

$D_c = 36$ mm.

Percent Coarser, $\Delta p = 14.5\% = 0.0145$

(From Figure 2.2)

$$y_d = 2 * \left(\frac{36}{304.8} \right) \left(\frac{1}{0.0145} - 1 \right)$$

$$= 1.4 \text{ ft.}$$

CONTRACTION SCOUR

Contraction Scour at Section 9405;

In the upstream main channel the hydraulic conditions at Section 9725 resulted in the most severe contraction scour. Therefore the hydraulic parameters correspond to Section 9725.

Upstream Main Channel;

Velocity (V) = 5.84 ft/s

Depth (y) = 5.98 ft

Top Width (W) = 25.37 ft.

EGL Slope (S) = $26.15 * 10^{-4}$ ft/ft

→ Determine whether the contraction scour is live-bed or clear-water:

$$V_c = \frac{K_s^{1/2} (S_s - 1)^{1/2} D_{50}^{1/2} y^{1/6}}{n}$$

K_s : Shield's parameter (from Reference 12)

S_s : specific gravity (2.65)

n : Manning's roughness coefficient

$$V_c = \frac{(0.06)^{1/2} (1.65)^{1/2} (0.00722)^{1/2} (5.98)^{1/6}}{0.035}$$

$$= 1.03 \text{ ft/s}$$

$V_c = 1.03$ ft/s $<$ $V = 5.84$ ft/s

$\therefore$ Type of contraction scour is Live Bed

Live-Bed Contraction Scour (Reference 10)

$$\frac{y_2}{y_1} = \left(\frac{Q_2}{Q_1}\right)^{6/7} \left(\frac{W_1}{W_2}\right)^{k_1}$$

y_1 : Average depth in the upstream main channel, ft

y_2 : Average depth in the contracted section, ft

Q_1 : Flow in the upstream channel transporting sediment, cfs

Q_2 : Flow in the contracted channel, cfs

W_1 : Top Width of the upstream main channel, ft

W_2 : Top Width of the main channel in the contracted section less pier widths, ft.

k_1 : exponent

→ To compute the exponent, k_1:

$$V_* = \sqrt{\frac{\tau}{\rho}}$$

V_* : shear velocity in the upstream main channel (ft/s)

$$\tau = \gamma R S$$

τ : shear stress on the bed (lb/ft^2)

ρ : Density of water

γ : Specific weight of water (62.4 lb/ft^3)

Check $\frac{W}{y} = \frac{425.37}{5.98} = 71 > 10$

$\therefore \quad R \approx y$

$$V_* = \sqrt{\frac{\gamma y S}{\rho}} = \sqrt{g y S}$$

$$V_* = \sqrt{32.2 * 5.98 * 26.15 * 10^{-4}} = 0.71 \text{ ft/s}$$

$$\frac{V_*}{w} = \frac{0.71}{0.75} = 0.95 \Rightarrow k_1 = 0.64$$

w: Fall velocity of bed material based on D_{50}, ft/s
(Figure 3, Reference 10)

$$\frac{y_2}{5.98} = (1)^{6/7} \left(\frac{425.37}{196.78}\right)^{0.64} = 9.79 \text{ ft.}$$

$y_s = y_2 - y_0$

$= 9.79 - 6.59$

$= 3.2$ ft.

y_s = Average Scour depth (ft)

y_0 = Existing depth in the contracted section before scour, ft.

LOCAL SCOUR

Pier Scour (Reference 10)

$$\frac{y_s}{a} = 2.0\ K_1\ K_2\ K_3\ K_4 \left(\frac{y_1}{a}\right)^{0.35} F_{r_1}^{\ 0.43}$$

y_s : Scour depth, ft.

y_1 : Flow depth directly upstream of the pier, ft.

K_2 : Correction factor for angle of attack of flow (Table 3, Reference 10)

K_1 : Correction factor for pier nose shape (Table 2, Ref. 10)

K_3 : Correction factor for bed condition (Table 4, Ref. 10)

K_4 : Correction factor for armoring by bed material size (Table 5, Ref. 10)

a : Effective Pier Width (Pier Width + Debris Accumulation), ft.

F_{r_1} : Froude number directly upstream of the pier

Assume: 1 ft. debris accumulation on each side of the pier.

$y_1 = 6.59$ ft.

$a = (1.5 + 2(1)) = 3.5$ ft.

$y_1 = 6.59$ ft.

Round nose $\Rightarrow K_1 = 1.0$

Flow parallel to piers $\Rightarrow K_2 = 1.0$

Small dunes $\Rightarrow K_3 = 1.1$

$D_{50} = 2.2$ mm $\Rightarrow K_4 = 1.0$

$$y_s = (3.5)(2.0)(1.0)(1.0)(1.1)(1.0)\left(\frac{6.59}{3.5}\right)^{0.35}(0.58)^{0.43}$$

$= 7.6$ ft.

For Section 9405

DROP SCOUR (Reference 13)

(Scour downstream of a Grade-Control Structure)

$$y_s = 1.70 \frac{q^{0.67}}{g^{0.33}} \left(\frac{\Delta H}{y_t}\right)^{0.158} (S_r)^{-0.134}$$

q: Discharge per unit width ($ft^3/s/ft$)

g: gravitational acceleration ($32.2\ ft/sec^2$)

ΔH: difference in water-surface elevation upstream and downstream of the grade-control structure (ft)

y_t: depth of tailwater downstream of grade-control structure measured vertically from the original bed elevation (ft)

S_r = relative submergence calculated as $\left(\frac{y_t - D_p}{y_1}\right)$

y_1 = depth of water upstream of grade-control structure measured vertically from the crest (ft)

D_p = drop height of grade-control structure, measured vertically from the crest to the original bed elevation downstream (ft.)

The magnitude of the drop scour at Section 9295

$$y_s = 1.7 \frac{(56.41)^{0.67}}{(32.2)^{0.33}} \left(\frac{1212.37 - 1210.39}{7.29}\right)^{0.158} \left(\frac{7.29}{6.01}\right)^{-0.134}$$

$= 6.4$ ft.

BEND SCOUR (Reference 8)

By using Zeller's (1981) Equation:

$$y_{bs} = \frac{0.0685\, Y_{max}\, V_m^{0.8}}{Y_h^{0.4}\, S^{0.3}} \left(2.1 \left(\frac{\sin^2(\alpha/2)}{\cos\alpha} \right)^{0.2} - 1 \right)$$

V_m = Average velocity of flow upstream of bend, ft/s.

Y_{max} = Maximum depth of flow upstream of bend, ft.

Y_h : Hydraulic depth of flow upstream of bend, ft.

α : Angle formed by the projection of the channel centerline from the point of curvature to a point which meets a line tangent to the outer bank of the channel, in degrees (Fig. (5.25), Ref. 8)

Bend Scour between sections (9405 - 10500)

Y_{max} is at Section 11500 $\Rightarrow$ $Y_{max} = 8$ ft.

$Y_h = 7$ ft.

Average velocity between (10500 - 11500) $\Rightarrow$ $V_m = 9.3$ ft/s.

Average EGL Slope between (10500 - 11500) $\Rightarrow$ $S = 0.0046$ ft/ft.

$\alpha = 25^\circ$

$$y_{bs} = \frac{0.0685\,(8)\,(9.3)^{0.8}}{7^{0.4}\,(0.0046)^{0.3}} \left(2.1 \left(\frac{\sin^2(12.5)}{\cos 25} \right)^{0.2} - 1 \right)$$

$$= 1.21 \text{ ft.}$$

The longitudinal extent of the bend scour.

$$X = 2.3 \left(\frac{C}{\sqrt{g}} \right) Y$$

Y : depth of flow within the bend area.

Y between (9400 - 10500) $\Rightarrow$ Y = 6.5 ft.

C : Chezy coefficient $= \frac{1.49}{n} Y^{1/6}$

$$= \frac{1.49}{0.035} (6.5)^{1/6} = 58$$

$$X = 2.3 \left(\frac{58}{\sqrt{32.2}} \right) (6.5) = 153 \text{ ft.}$$

SUPERELEVATION (Reference 8)

$$\Delta y_{se} = c \frac{V^2}{g} \frac{W}{r_c}$$

c: Superelevation coefficient (Table 4.3, Ref. 8)

Superelevation between Sections (9405 - 10500)

Maximum Velocity is at Section 10125

$\therefore$ $V = 12.2$ ft/s

$W = 196$ ft.

$$\Delta y_{se} = 1.3 * \frac{(12.2)^2}{32.2} * \frac{196}{1950} = 0.6 \text{ ft.}$$

APPENDIX C

EXAMPLE SCOUR CALCULATIONS

Equilibrium Slope Computations

Reach No.	Sec. No.	Hydr. Depth (ft)	Top Width (ft)	Schoklit (ft/ft)	MPM (ft/ft)	Shields (ft/ft)	Sec. Avg. Eq. Slop (ft/ft)	Sec. Avg. Eq. Slope for Reach (ft/ft)	Remarks	ELMIN (ft)	Avg. S u/s of GCS (ft/ft)	Depth to Eq. Slop (ft)
	5724	4.10	93.25	0.000266	0.000179	0.000205	0.000217			1181		0.00
	5814	4.72	81.33	0.000240	0.000156	0.000178	0.000191			1181.39		0.37
	5970	4.86	81.88	0.000241	0.000151	0.000173	0.000189			1181.6		0.55
	6070	4.87	82.02	0.000241	0.000151	0.000173	0.000188			1181.8		0.73
1								**0.000196**				
	6170	4.87	82.06	0.000241	0.000151	0.000173	0.000188			1182		0.91
	6236	4.87	83.21	0.000244	0.000151	0.000173	0.000189			1182.16		1.06
	6370	4.80	82.44	0.000242	0.000153	0.000175	0.000190			1182.5		1.38
2								**0.000189**				
	6570	4.74	81.4	0.000240	0.000155	0.000178	0.000191			1183		1.84
	6670	4.75	81.45	0.000240	0.000155	0.000177	0.000191			1183.2		2.02
3								**0.000191**				
	6852	4.77	82.97	0.000243	0.000154	0.000176	0.000191			1183.58		2.36
	6940	4.77	82.91	0.000243	0.000154	0.000176	0.000191			1183.79		2.56
4								**0.000191**				
	7070	4.77	83.01	0.000244	0.000154	0.000177	0.000191			1184.06		2.80
	7170	4.96	82.41	0.000242	0.000148	0.000170	0.000187			1184.11		2.83
	7223	5.04	82.84	0.000243	0.000146	0.000167	0.000185			1184.14		2.85
5								**0.000188**				
	7260	5.85	113.15	0.000307	0.000126	0.000144	0.000192			1184.15		2.85
	7305	5.84	113.15	0.000307	0.000126	0.000144	0.000192			1184.18		2.87
	7310	4.20	107.58	0.000296	0.000175	0.000201	0.000224			1185.84		4.53
6								**0.000203**				
	7330	2.88	106.84	0.000294	0.000255	0.000293	0.000281		Dibble GCS	1192.25	0.000193	10.94
	7339	2.92	102.87	0.000286	0.000251	0.000288	0.000275			1192.25		
	7340	2.95	103.21	0.000287	0.000249	0.000286	0.000274			1194.77		0.00
7								**0.000277**	Dibble GCS			
	7350	3.67	117.03	0.000315	0.000200	0.000229	0.000248			1194.77		0.00
	7377	3.97	146.94	0.000374	0.000185	0.000212	0.000257			1194.77		0.00
8								**0.000253**				
	7500	3.87	234.5	0.000531	0.000190	0.000217	0.000313			1195.39		0.56
	7700	3.02	228.88	0.000521	0.000243	0.000279	0.000348			1196.39		1.48
9								**0.000330**				
	7900	2.28	224.1	0.000513	0.000323	0.000370	0.000402			1197.39		2.41

ESD

	8000	2.09	223.38	0.000512	0.000352	0.000404	0.000423			1197.89		2.87
10								**0.000412**				
	8200	1.99	222.25	0.000510	0.000370	0.000424	0.000434			1198.89		3.79
	8400	2.01	222.38	0.000510	0.000366	0.000419	0.000432			1199.89		4.72
	8500	2.02	222.46	0.000510	0.000364	0.000417	0.000430			1200.39		5.18
11								**0.000432**				
	8700	2.00	222.33	0.000510	0.000367	0.000421	0.000433			1201.39		6.10
	8900	2.00	222.32	0.000510	0.000368	0.000421	0.000433			1202.39		7.02
12								**0.000433**				
	9000	2.01	222.87	0.000511	0.000366	0.000420	0.000432			1202.89		7.49
	9100	2.01	222.43	0.000510	0.000365	0.000418	0.000431			1203.39		7.95
13								**0.000432**				
	9271	1.99	222.31	0.000510	0.000368	0.000422	0.000433		Bell GCS	1204.25	0.000382	8.74
	9295	2.05	210	0.000489	0.000357	0.000410	0.000419			1204.36		
	9405	2.46	210	0.000489	0.000299	0.000343	0.000377			1204.91		
	9471	2.25	223.86	0.000513	0.000327	0.000374	0.000405			1205.24		0.00
14								**0.000408**	Bell GCS			
	9500	2.19	223.6	0.000512	0.000335	0.000384	0.000410			1205.39		0.14
	9700	1.96	212.53	0.000493	0.000375	0.000429	0.000432			1206.39		1.06
	9800	2.10	214.95	0.000497	0.000349	0.000400	0.000415			1206.89		1.52
15								**0.000419**				
	10000	2.03	207.49	0.000484	0.000362	0.000415	0.000420			1207.89		2.44
	10025	2.31	211.98	0.000492	0.000317	0.000364	0.000391			1207.9		2.44
	10100	2.02	202.49	0.000475	0.000364	0.000417	0.000419			1208.39		2.90
16								**0.000410**				
	10200	2.11	199.08	0.000469	0.000349	0.000399	0.000406			1208.89		3.36
	10400	2.14	189.17	0.000452	0.000343	0.000393	0.000396			1209.89		4.28
17								**0.000401**				
	10600	2.22	183.8	0.000442	0.000332	0.000380	0.000385			1210.89		5.20
	10800	2.26	182.09	0.000439	0.000325	0.000373	0.000379			1211.89		6.12
18								**0.000382**				
	10900	2.26	180.4	0.000436	0.000325	0.000372	0.000378			1212.39		6.58
	11000	2.20	170.46	0.000418	0.000334	0.000383	0.000378			1212.9		7.05
	11095	2.32	168.3	0.000414	0.000317	0.000363	0.000364	**0.000373**		1213.4		7.52
19												
	11100	2.13	166.93	0.000411	0.000344	0.000394	0.000383		69th GCS	1216.9	0.000397	
	11150	2.75	163.12	0.000404	0.000267	0.000306	0.000326			1216.9		0.00
20								**0.000355**	69th GCS			
	11230	2.79	158.98	0.000396	0.000263	0.000302	0.000321			1217.1		0.18

ESD

	11238	2.84	159.28	0.000397	0.000258	0.000296	0.000317			1217.1		0.17
	11305	3.12	161.14	0.000401	0.000236	0.000270	0.000302			1217.1		0.15
	11310	3.01	160.37	0.000399	0.000244	0.000279	0.000307			1217.2		0.25
21								**0.000312**				
	11400	3.39	163.08	0.000404	0.000217	0.000248	0.000290			1217.1		0.12
	11500	2.96	164.11	0.000406	0.000248	0.000284	0.000313			1217.7		0.69
	11700	3.07	164.56	0.000407	0.000240	0.000274	0.000307			1218.1		1.03
22								**0.000303**				
	11900	3.11	164.8	0.000407	0.000236	0.000270	0.000305			1218.5		1.37
	12000	3.13	164.9	0.000407	0.000235	0.000269	0.000304			1218.7		1.54
23								**0.000304**				
	12200	3.05	164.53	0.000407	0.000241	0.000276	0.000308			1219.2		1.98
	12400	3.10	164.79	0.000407	0.000237	0.000271	0.000305			1219.6		2.32
24								**0.000307**				
	12500	3.12	164.9	0.000407	0.000236	0.000270	0.000304			1219.8		2.49
	12645	3.12	164.87	0.000407	0.000235	0.000269	0.000304			1220.1		2.74
25								**0.000304**				
	12650	2.21	158.83	0.000396	0.000333	0.000382	0.000370		67th GCS	1221	0.000306	3.64
	12660	2.60	161.4	0.000401	0.000283	0.000324	0.000336			1221		0.00
26								**0.000353**	67th GCS			
	12784	2.97	171.93	0.000420	0.000247	0.000283	0.000317			1221.2		0.17
	12822	2.99	176.02	0.000428	0.000246	0.000281	0.000318			1221.3		0.26
	12853	2.86	156.5	0.000392	0.000257	0.000294	0.000314			1221.4		0.35
27								**0.000317**				
	12884	2.82	140.41	0.000361	0.000260	0.000298	0.000307			1221.4		0.35
	12981	2.95	102.45	0.000285	0.000249	0.000285	0.000273			1221.6		0.52
	13050	4.10	138.95	0.000358	0.000179	0.000205	0.000248			1221.8		0.71
28								**0.000276**	67th Bridge			
	13131	4.13	139.86	0.000360	0.000178	0.000204	0.000247			1221.9		0.79
	13206	3.38	119.52	0.000320	0.000217	0.000249	0.000262			1222.1		0.97
	13300	3.97	101.43	0.000283	0.000185	0.000212	0.000227			1222.2		1.04
	13400	3.95	97.14	0.000274	0.000186	0.000213	0.000224			1222.4		1.22
29								**0.000240**				
	13500	4.56	121.25	0.000324	0.000161	0.000185	0.000223			1222.6		1.40
	13600	4.46	120.61	0.000322	0.000165	0.000189	0.000225			1222.8		1.57
30								**0.000224**				
	13700	4.39	120.68	0.000322	0.000167	0.000192	0.000227			1223		1.75

ESD

	13800	4.32	119.86	0.000321	0.000170	0.000195	0.000228			1223.2		1.92
	13900	4.26	120.05	0.000321	0.000173	0.000198	0.000230			1223.4		2.10
								0.000229				
	14000	4.20	119.19	0.000319	0.000175	0.000200	0.000232			1223.6		2.27
	14100	4.15	119.95	0.000321	0.000177	0.000203	0.000234			1223.8		2.45
	14200	4.10	118.71	0.000318	0.000179	0.000205	0.000234			1224		2.63
32								**0.000233**				
	14300	4.07	119.22	0.000320	0.000181	0.000207	0.000236			1224.2		2.80
	14400	4.04	118.9	0.000319	0.000182	0.000208	0.000236			1224.4		2.98
33								**0.000236**				
	14500	4.00	117.34	0.000316	0.000184	0.000210	0.000237			1224.6		3.15
	14700	3.77	105.64	0.000292	0.000195	0.000224	0.000237			1224.9		3.40
34								**0.000237**				
	14900	3.76	96.03	0.000272	0.000195	0.000224	0.000230			1225.3		3.76
	15000	3.81	91.75	0.000263	0.000193	0.000221	0.000225			1225.5		3.93
35								**0.000228**				
	15200	4.05	90.87	0.000261	0.000181	0.000208	0.000217			1225.9		4.28
	15400	4.07	84.62	0.000247	0.000180	0.000207	0.000211			1226.3		4.63
	15495	4.23	86.02	0.000250	0.000174	0.000199	0.000208			1226.5		4.81
								0.000212				
	15500	3.61	76.18	0.000228	0.000203	0.000233	0.000222		Trial GCS	1228.5	0.000243	6.81
	15510	3.99	79.36	0.000235	0.000184	0.000211	0.000210			1228.5		0.00
37								**0.000216**	Trial GCS			
	15700	3.84	69.09	0.000212	0.000191	0.000219	0.000208			1229.4		0.86
	15900	4.01	64.88	0.000202	0.000183	0.000210	0.000199			1230.4		1.81
	16000	4.61	74.03	0.000223	0.000159	0.000182	0.000188			1230.9		2.28
38								**0.000198**				
	16100	4.94	86.34	0.000251	0.000149	0.000171	0.000190			1231.4		2.76
	16200	5.06	96.94	0.000274	0.000145	0.000166	0.000195			1231.8		3.14
39								**0.000193**				
	16400	4.82	115.64	0.000312	0.000153	0.000175	0.000213			1232.8		4.09
	16500	4.59	124.55	0.000330	0.000160	0.000183	0.000224			1233.3		4.57
	16600	4.25	122.04	0.000325	0.000173	0.000198	0.000232			1233.8		5.04
40								**0.000223**				
	16700	3.91	119.51	0.000320	0.000188	0.000215	0.000241			1234.3		5.52
	16800	3.72	117.82	0.000317	0.000198	0.000226	0.000247			1234.7		5.90
	16900	3.43	115.71	0.000312	0.000214	0.000245	0.000257			1235.2		6.37
	17000	3.25	109.63	0.000300	0.000226	0.000259	0.000262			1235.7		6.85

ESD

41								**0.000252**				
	17100	3.17	109.39	0.000300	0.000232	0.000265	0.000266			1236.18		7.31
	17200	3.16	104.59	0.000290	0.000233	0.000266	0.000263			1236.66		7.76
	17300	3.30	106.01	0.000293	0.000223	0.000255	0.000257			1237.14		8.22
42								**0.000262**				
	17400	3.12	102.41	0.000285	0.000235	0.000269	0.000263			1237.62		8.68
	17500	3.24	101.9	0.000284	0.000227	0.000260	0.000257			1238.1		9.13
43								**0.000260**				
	17700	3.21	101.51	0.000283	0.000229	0.000262	0.000258			1239.06		10.05
	17850	3.27	99.56	0.000279	0.000225	0.000258	0.000254			1239.78		10.73
44								**0.000256**				
	17950	3.45	102.87	0.000286	0.000213	0.000244	0.000248		Union GCS	1240.26	0.000235	11.19
	17955	2.67	119.52	0.000320	0.000275	0.000315	0.000304			1245.8		
	17960	2.67	119.6	0.000320	0.000275	0.000315	0.000304			1245.9		0.00
45								**0.000285**	Union GCS			
	18000	3.19	121.67	0.000324	0.000230	0.000264	0.000273			1246		0.09
	18170	2.81	110.72	0.000302	0.000262	0.000300	0.000288			1247		1.04
46								**0.000280**				
	18390	3.69	111.04	0.000303	0.000199	0.000228	0.000244			1248		1.98
	18500	3.34	103.28	0.000287	0.000220	0.000252	0.000253			1248.5		2.45
47								**0.000248**				
	18710	3.48	116.91	0.000315	0.000211	0.000242	0.000256			1249.5		3.40
	18900	2.67	119.27	0.000320	0.000275	0.000315	0.000303			1251		4.84
48								**0.000280**				
	19000	3.00	119.51	0.000320	0.000245	0.000281	0.000282			1251.5		5.32
	19200	3.41	120.46	0.000322	0.000215	0.000247	0.000261			1252		5.76
49								**0.000272**				
	19400	3.06	121.69	0.000324	0.000240	0.000275	0.000280			1253		6.71
	19500	2.68	119.1	0.000319	0.000275	0.000315	0.000303			1253.8		7.48
50								**0.000291**				
	19600	3.18	120.41	0.000322	0.000231	0.000264	0.000272			1254.2		7.85
	19782	3.70	133.55	0.000348	0.000199	0.000228	0.000258			1254.5		8.10
51								**0.000265**				
	19940	3.23	136.96	0.000355	0.000228	0.000261	0.000281		59th GCS	1255.3	0.000273	8.86
	20050	3.23	135.36	0.000351	0.000227	0.000260	0.000280			1255.4		
	20160	3.85	173.91	0.000424	0.000191	0.000219	0.000278			1255.42		0.00
52								**0.000280**	59th GCS			
	20200	3.93	199.12	0.000469	0.000187	0.000214	0.000290			1255.45		0.02
	20300	3.52	198.84	0.000469	0.000209	0.000239	0.000306			1255.93		0.46
53								**0.000298**				

ESD

	20500	2.79	193.84	0.000460	0.000263	0.000301	0.000341			1256.89		1.35
	20700	2.27	196.1	0.000464	0.000323	0.000370	0.000386			1257.85		2.24
54								**0.000364**				
	20900	2.18	195.58	0.000463	0.000337	0.000386	0.000395			1258.81		3.13
	21000	2.23	200.01	0.000471	0.000329	0.000377	0.000392			1259.29		3.57
55								**0.000394**				
	21230	2.16	201.47	0.000474	0.000340	0.000390	0.000401		57th GCS	1260.39	0.000352	4.59
	21240	2.05	200.94	0.000473	0.000359	0.000411	0.000414			1260.5		0.00
56								**0.000408**	57th GCS			
	21330	2.25	202.87	0.000476	0.000327	0.000374	0.000392			1260.87		0.34
	21395	1.76	222.42	0.000510	0.000417	0.000477	0.000468		57th DIP	1264		3.44
	21565	2.78	228.42	0.000520	0.000265	0.000303	0.000363			1264		3.37
57								**0.000408**	57th DIP			
	21700	4.28	213.81	0.000495	0.000172	0.000197	0.000288			1262.65		1.97
	21900	3.51	227.15	0.000518	0.000209	0.000240	0.000322			1263.61		2.86
58								**0.000305**				
	22000	3.22	283.01	0.000611	0.000228	0.000262	0.000367			1264.09		3.30
	22200	2.44	304.59	0.000646	0.000301	0.000344	0.000430			1265.05		4.18
59								**0.000399**				
	22400	1.68	240.28	0.000540	0.000438	0.000502	0.000494			1266.01		5.06
	22500	1.95	222.05	0.000623	0.000376	0.000431	0.000477			1266.49		5.50
	22510	1.89	201.1	0.000579	0.000389	0.000445	0.000471			1266.5		5.51
	22520	1.92	196.87	0.000569	0.000383	0.000438	0.000464			1266.6		5.61
	22540	1.96	192.16	0.000559	0.000374	0.000429	0.000454			1266.7		5.70
60								**0.000472**				
	22560	1.98	187.3	0.000548	0.000371	0.000424	0.000448			1266.8		5.79
	22580	2.02	182.54	0.000538	0.000364	0.000417	0.000440			1266.9		5.88
	22600	2.06	177.15	0.000526	0.000357	0.000409	0.000430			1267		5.98
	22620	2.09	173.03	0.000517	0.000351	0.000403	0.000424			1267.1		6.07
	22640	2.13	168.31	0.000506	0.000345	0.000395	0.000415			1267.2		6.16
	22660	2.17	163.6	0.000496	0.000338	0.000388	0.000407			1267.3		6.25
	22680	2.67	175.24	0.000522	0.000275	0.000315	0.000370			1267.4		6.35
	22700	2.58	168.08	0.000506	0.000285	0.000326	0.000372			1267.5		6.44
	22720	2.64	164.93	0.000499	0.000278	0.000319	0.000365			1267.5		6.43
	22740	2.56	159.4	0.000486	0.000287	0.000328	0.000367			1267.6		6.52

ESD

	22760	2.47	153.83	0.000473	0.000297	0.000340	0.000370			1267.7		6.61
	22780	2.39	148.28	0.000460	0.000308	0.000352	0.000373			1267.8		6.71
	22800	2.40	145.67	0.000454	0.000306	0.000350	0.000370			1267.9		6.80
	22820	2.51	146.43	0.000456	0.000292	0.000335	0.000361			1268		6.89
	22840	2.54	145.33	0.000453	0.000290	0.000332	0.000358			1268.1		6.98
	22860	2.50	142.96	0.000448	0.000294	0.000337	0.000360			1268.2		7.08
61								**0.000389**				
	22877	3.14	149.82	0.000464	0.000234	0.000268	0.000322			1268.3		7.17
	22900	3.07	140.3	0.000442	0.000239	0.000274	0.000318			1268.4		7.26
	22920	3.00	140.57	0.000442	0.000245	0.000280	0.000322			1268.5		7.35
	22940	2.91	139	0.000439	0.000252	0.000289	0.000326			1268.6		7.45
	22960	2.84	137.47	0.000435	0.000259	0.000296	0.000330			1268.7		7.54
	22980	2.77	142.07	0.000446	0.000265	0.000303	0.000338			1268.8		7.63
	23000	2.76	143.7	0.000450	0.000266	0.000305	0.000340			1268.9		7.72
	23100	2.48	140.28	0.000442	0.000297	0.000340	0.000359			1269.4		8.18
	23200	2.34	140.93	0.000443	0.000315	0.000360	0.000373			1269.85		8.60
62								**0.000337**				
	23300	2.29	140.49	0.000442	0.000321	0.000367	0.000377		54th GCS	1270.33	0.000385	9.04
	23310	2.37	141.02	0.000443	0.000310	0.000355	0.000369			1270.35		0.00
63								**0.000373**	54th GCS			
	23400	2.26	138.29	0.000437	0.000325	0.000372	0.000378			1270.81		0.43
	23500	2.26	134.35	0.000428	0.000325	0.000372	0.000375			1271.29		0.87
	23575	2.20	123.2	0.000401	0.000334	0.000382	0.000372			1271.65		1.20
64								**0.000375**				
	23645	2.94	128.29	0.000413	0.000249	0.000286	0.000316			1271.65		1.18
	23800	2.35	142.88	0.000448	0.000313	0.000358	0.000373			1272.73		2.20
	24000	2.26	144.26	0.000451	0.000325	0.000372	0.000383			1273.69		3.08
65								**0.000357**				
	24200	2.26	149.22	0.000463	0.000325	0.000373	0.000387			1274.65		3.97
	24365	2.21	146.31	0.000456	0.000332	0.000381	0.000390			1275.44		4.70
66								**0.000388**				
	24500	2.26	153.14	0.000472	0.000325	0.000372	0.000389		Trial GCS	1276.09	0.000373	5.30
	24510	1.81	163.97	0.000496	0.000407	0.000466	0.000456			1279.09		0.00
67								**0.000423**	Trial GCS			

ESD

	24700	2.89	158.5	0.000484	0.000254	0.000291	0.000343			1279.09		0.00
	24900	3.22	154.44	0.000475	0.000228	0.000262	0.000322			1279.09		0.00
68								**0.000332**				
	25000	3.38	163.04	0.000494	0.000217	0.000249	0.000320			1279.09		0.00
	25200	3.28	167.26	0.000504	0.000224	0.000256	0.000328			1279.4		0.07
69								**0.000324**				
	25400	2.28	157.12	0.000481	0.000322	0.000369	0.000390			1280.59		1.18
	25500	2.00663086	150.81	0.000466	0.000366	0.000419	0.000417			1281.19		1.75
	25600	2.012619609	144.22	0.000451	0.000365	0.000418	0.000411			1281.79		2.31
70								**0.000406**				
	25650	2.029087828	141.64	0.000445	0.000362	0.000415	0.000407		Trial GCS	1282.09	0.000354	2.60
	25660	1.984639125	142.57	0.000447	0.000370	0.000424	0.000414			1283.09		0.00
71								**0.000410**	Trial GCS			
	25700	2.480999296	142.1	0.000446	0.000296	0.000339	0.000360			1283.09		0.00
	25827	2.939421275	144.11	0.000451	0.000250	0.000286	0.000329			1283.09		0.00
	25830	2.856267409	143.6	0.000449	0.000257	0.000295	0.000334			1283.17		0.00
	25870	2.730017762	135.12	0.000429	0.000269	0.000308	0.000336			1283.41		0.22
	26000	2.286277349	124.32	0.000403	0.000321	0.000368	0.000364			1284.19		0.94
72								**0.000345**				
	26120	3.482252906	128.19	0.000413	0.000211	0.000242	0.000288			1285		1.69
	26260	1.76978884	169.54	0.000509	0.000415	0.000476	0.000467			1287.5		4.13
	26500	1.943456813	214.88	0.000608	0.000378	0.000433	0.000473			1288.98		5.49
73								**0.000409**				
	26795	1.689101501	211.13	0.000600	0.000435	0.000498	0.000511			1290		6.37
	27083	1.44362276	229.88	0.000640	0.000509	0.000583	0.000577			1293		9.23
74								**0.000544**				
	27282	1.335313531	257.55	0.000696	0.000550	0.000630	0.000626			1296		12.14
	27424	1.29977637	268.3	0.000718	0.000565	0.000647	0.000644			1297.5		13.57
75								**0.000635**				
	27741	2.506860434	258.73	0.000699	0.000293	0.000336	0.000443			1298		13.92
76								**0.000443**				
	27952	2.854654078	239.36	0.000659	0.000257	0.000295	0.000404		Sverdrup GC	1298.2	0.000475	14.02
	27953	4.304464025	239.47	0.000659	0.000171	0.000196	0.000342			1296.9		
	27968	4.322044515	239.47	0.000659	0.000170	0.000195	0.000341			1296.9		
	27969	1.57056442	209.95	0.000598	0.000468	0.000536	0.000534			1299.8		
77								**0.000405**	verdrup GCS			
	28023	2.27450473	347.79	0.000872	0.000323	0.000370	0.000522			1300.8		
	28038	4.298307399	278.27	0.000738	0.000171	0.000196	0.000368			1299		

APPENDIX C

EXAMPLE SCOUR CALCULATIONS

Armorizing Depth Computations

Reach No.	Sec. No.	Velocit (ft/s)	Hydr. Depth (ft)	Energy Slope (ft/ft)	MPM (mm)	CBV (mm)	SHIELD (mm)	YANG (mm)	Sec. Avg Armor Size (mm)	Sec. Avg. Armor Size for Reach (mm)	Percent finer	Armor Depth (ft)	Remarks
	5724	7.78	4.10	26.73	38.8	113.8	33.8	121.6	77.0				
	5814	7.73	4.72	22.27	37.2	112.3	32.5	120.0	75.5				
	5970	7.47	4.86	20.05	34.5	104.9	30.1	112.1	70.4				
	6070	7.44	4.87	19.79	34.1	104.1	29.8	111.2	69.8				
1										**73.17**	96.4	12.9	
	6170	7.44	4.87	19.83	34.2	104.1	29.8	111.2	69.8				
	6236	7.33	4.87	19.18	33.1	101.0	28.9	107.9	67.7				
	6370	7.5	4.80	20.5	34.8	105.8	30.4	113.0	71.0				
2										**69.50**	95.2	9.1	
	6570	7.7	4.74	22.01	36.9	111.5	32.2	119.1	74.9				
	6670	7.68	4.75	21.83	36.7	110.9	32.0	118.5	74.5				
3										**74.72**	96.9	15.4	
	6852	7.51	4.77	20.68	34.9	106.0	30.5	113.3	71.2				
	6940	7.51	4.77	20.69	34.9	106.0	30.5	113.3	71.2				
4										**71.18**	95.8	10.6	
	7070	7.51	4.77	20.69	34.9	106.0	30.5	113.3	71.2				
	7170	7.27	4.96	18.46	32.4	99.4	28.3	106.2	66.6				
	7223	7.12	5.04	17.37	31.0	95.3	27.0	101.8	63.8				
5										**67.17**	94.5	7.6	
	7260	4.49	5.85	5.65	11.7	37.9	10.2	40.5	25.1				
	7305	4.49	5.84	5.68	11.7	37.9	10.3	40.5	25.1				
	7310	6.58	4.20	18.72	27.8	81.4	24.3	87.0	55.1				
6										**35.09**	84.2	1.2	
	7330	9.67	2.88	65.84	67.0	175.8	58.5	187.8	122.3				Dibble GCS
	7339	9.88	2.92	72.09	74.6	183.5	65.1	196.1	129.8				
	7340	9.77	2.95	65.47	68.3	179.5	59.6	191.7	124.8				
7										**125.62**	97.8	37.3	Dibble GCS
	7350	6.91	3.67	24.4	31.7	89.8	27.7	95.9	61.3				
	7377	5.09	3.97	11.82	16.6	48.7	14.5	52.0	33.0				
8										**47.11**	88.1	2.3	
	7500	3.27	3.87	5.03	6.9	20.1	6.0	21.5	13.6				
	7700	4.3	3.02	12.07	12.9	34.8	11.3	37.1	24.0				
9										**18.82**	76.8	0.4	
	7900	5.82	2.28	32.14	25.9	63.7	22.6	68.0	45.1				

AD

	8000	6.38	2.09	43.38	32.0	76.5	27.9	81.8	54.6				
10										**49.81**	88.9	2.6	
	8200	6.73	1.99	51.49	36.2	85.2	31.6	91.0	61.0				
	8400	6.65	2.01	49.71	35.3	83.1	30.8	88.8	59.5				
	8500	6.62	2.02	48.76	34.8	82.4	30.4	88.0	58.9				
11										**59.81**	92.1	4.6	
	8700	6.68	2.00	50.37	35.6	83.9	31.1	89.6	60.1				
	8900	6.69	2.00	50.51	35.7	84.1	31.2	89.9	60.2				
12										**60.15**	92.2	4.7	
	9000	6.64	2.01	49.57	35.2	82.9	30.7	88.6	59.3				
	9100	6.63	2.01	49.11	35.0	82.6	30.6	88.3	59.1				
13										**59.23**	92.0	4.4	
	9271	6.7	1.99	50.75	35.8	84.4	31.3	90.2	60.4				Bell GCS
	9295	6.88	2.05	52.66	38.3	89.0	33.4	95.1	64.0				
	9405	5.76	2.46	29.21	25.4	62.4	22.2	66.6	44.1				
	9471	5.9	2.25	33.64	26.8	65.4	23.4	69.9	46.4				
14										**53.72**	90.2	3.2	Bell GCS
	9500	6.06	2.19	36.66	28.4	69.0	24.8	73.8	49.0				
	9700	7.13	1.96	58.87	40.8	95.6	35.7	102.1	68.5				
	9800	6.57	2.10	45.47	33.9	81.2	29.6	86.7	57.8				
15										**58.46**	91.7	4.2	
	10000	7.05	2.03	55.03	39.5	93.4	34.5	99.8	66.8				
	10025	6.05	2.31	34.02	27.9	68.8	24.3	73.5	48.6				
	10100	7.27	2.02	59	42.1	99.4	36.8	106.2	71.1				
16										**62.19**	92.9	5.3	
	10200	7.08	2.11	52.73	39.3	94.2	34.3	100.7	67.1				
	10400	7.33	2.14	55.28	41.9	101.0	36.6	107.9	71.9				
17										**69.51**	95.2	9.1	
	10600	7.3	2.22	52.45	41.1	100.2	35.9	107.0	71.1				
	10800	7.22	2.26	50.09	40.0	98.0	35.0	104.7	69.4				
18										**70.24**	95.5	9.7	
	10900	7.28	2.26	50.9	40.7	99.6	35.5	106.5	70.6				
	11000	7.92	2.20	62.49	48.6	117.9	42.5	126.0	83.8				
	11095	7.61	2.32	53.71	44.1	108.9	38.5	116.3	76.9	**77.10**	97.0	16.6	
19													
	11100	8.34	2.13	72.03	54.4	130.8	47.5	139.7	93.1				69th GCS
	11150	6.62	2.75	32.5	31.6	82.4	27.6	88.0	57.4				
20										**75.25**	97.0	16.0	69th GCS
	11230	6.7	2.79	32.62	32.2	84.4	28.1	90.2	58.7				

AD

	11238	6.56	2.84	30.5	30.7	80.9	26.8	86.4	56.2				
	11305	5.91	3.12	21.89	24.2	65.7	21.1	70.2	45.3				
	11310	6.15	3.01	24.79	26.4	71.1	23.1	76.0	49.1				
21										**52.33**	89.7	3.0	
	11400	5.37	3.39	16.16	19.4	54.2	16.9	57.9	37.1				
	11500	6.11	2.96	25.08	26.3	70.2	22.9	75.0	48.6				
	11700	5.89	3.07	22.21	24.1	65.2	21.0	69.7	45.0				
22										**43.58**	86.9	1.9	
	11900	5.79	3.11	21.07	23.2	63.0	20.3	67.3	43.5				
	12000	5.76	3.13	20.73	22.9	62.4	20.0	66.6	43.0				
23										**43.23**	86.8	1.9	
	12200	5.92	3.05	22.58	24.4	65.9	21.3	70.4	45.5				
	12400	5.81	3.10	21.35	23.4	63.5	20.4	67.8	43.8				
24										**44.64**	87.3	2.0	
	12500	5.78	3.12	20.93	23.1	62.8	20.2	67.1	43.3				
	12645	5.77	3.12	20.81	23.0	62.6	20.1	66.9	43.1				
25										**43.21**	86.8	1.9	
	12650	8.48	2.21	71.36	55.7	135.2	48.6	144.4	96.0				67th GCS
	12660	7.09	2.60	40.19	36.9	94.5	32.2	101.0	66.2				
26										**81.07**	97.1	17.8	67th GCS
	12784	5.82	2.97	22.58	23.7	63.7	20.7	68.0	44.0				
	12822	5.64	2.99	21.04	22.3	59.8	19.4	63.9	41.4				
	12853	6.63	2.86	30.93	31.3	82.6	27.3	88.3	57.4				
27										**47.60**	88.2	2.3	
	12884	7.5	2.82	40.26	40.2	105.8	35.1	113.0	73.5				
	12981	9.81	2.95	65.37	68.4	180.9	59.7	193.3	125.6				
	13050	5.21	4.10	11.89	17.3	51.0	15.1	54.5	34.5				
28										**77.85**	97.0	16.8	67th Bridge
	13131	5.15	4.13	11.49	16.8	49.9	14.7	53.3	33.6				
	13206	7.34	3.38	30.48	36.5	101.3	31.9	108.2	69.5				
	13300	7.38	3.97	25.16	35.3	102.4	30.8	109.4	69.5				
	13400	7.75	3.95	27.91	39.0	112.9	34.0	120.6	76.6				
29										**62.31**	92.9	5.4	
	13500	5.38	4.56	11.11	17.9	54.4	15.6	58.1	36.5				
	13600	5.52	4.46	12.02	19.0	57.3	16.6	61.2	38.5				
30										**37.52**	85.0	1.4	
	13700	5.6	4.39	12.66	19.7	59.0	17.2	63.0	39.7				

AD

	13800	5.73	4.32	13.53	20.7	61.7	18.1	65.9	41.6				
	13900	5.81	4.26	14.18	21.4	63.5	18.7	67.8	42.8				
31										**41.38**	86.2	1.7	
	14000	5.93	4.20	15.04	22.4	66.1	19.5	70.6	44.7				
	14100	5.96	4.15	15.45	22.7	66.8	19.8	71.3	45.2				
	14200	6.1	4.10	16.39	23.8	70.0	20.8	74.7	47.3				
32										**45.71**	87.6	2.1	
	14300	6.13	4.07	16.76	24.1	70.6	21.1	75.5	47.8				
	14400	6.19	4.04	17.24	24.6	72.0	21.5	77.0	48.8				
33										**48.30**	88.5	2.4	
	14500	6.33	4.00	18.27	25.9	75.3	22.6	80.5	51.1				
	14700	7.47	3.77	27.42	36.5	104.9	31.9	112.1	71.4				
34										**61.21**	92.6	5.0	
	14900	8.23	3.76	33.4	44.5	127.3	38.8	136.1	86.7				
	15000	8.5	3.81	35.11	47.3	135.8	41.3	145.1	92.4				
35										**89.53**	97.2	20.7	
	15200	8.07	4.05	29.26	41.9	122.4	36.6	130.8	82.9				
	15400	8.62	4.07	33.15	47.8	139.7	41.7	149.3	94.6				
	15495	8.17	4.23	28.33	42.4	125.5	37.0	134.1	84.7				
36										**87.43**	97.2	20.0	
	15500	10.79	3.61	60.89	77.9	218.9	68.0	233.9	149.6				Trial GCS
	15510	9.38	3.99	40.45	57.1	165.4	49.8	176.7	112.3				
37										**130.96**	97.9	40.6	Trial GCS
	15700	11.2	3.84	60.83	82.7	235.8	72.2	252.0	160.7				
	15900	11.42	4.01	60.08	85.2	245.2	74.4	262.0	166.7				
	16000	8.7	4.61	28.87	47.1	142.3	41.1	152.0	95.7				
38										**141.00**	98.1	47.7	
	16100	6.97	4.94	16.88	29.5	91.3	25.7	97.6	61.0				
	16200	6.05	5.06	12.25	22.0	68.8	19.2	73.5	45.9				
39										**53.45**	90.1	3.2	
	16400	5.33	4.82	10.11	17.2	53.4	15.0	57.1	35.7				
	16500	5.19	4.59	10.17	16.5	50.6	14.4	54.1	33.9				
	16600	5.73	4.25	13.74	20.7	61.7	18.0	65.9	41.6				
40										**37.07**	84.9	1.4	
	16700	6.35	3.91	18.84	26.1	75.8	22.8	81.0	51.4				
	16800	6.78	3.72	22.96	30.2	86.4	26.4	92.3	58.8				
	16900	7.49	3.43	31.12	37.8	105.5	33.0	112.7	72.2				
	17000	8.34	3.25	41.73	48.0	130.8	41.9	139.7	90.1				

AD

41										**68.13**	94.8	8.2	
	17100	8.56	3.17	45.35	50.9	137.8	44.4	147.2	95.1				
	17200	8.99	3.16	50.49	56.4	151.9	49.3	162.3	105.0				
	17300	8.49	3.30	42.57	49.7	135.5	43.4	144.8	93.4				
42										**97.81**	97.4	23.8	
	17400	9.28	3.12	54.6	60.4	161.9	52.7	173.0	112.0				
	17500	8.99	3.24	48.92	56.1	151.9	49.0	162.3	104.8				
43										**108.41**	97.6	28.4	
	17700	9.1	3.21	50.44	57.4	155.7	50.1	166.3	107.4				
	17850	9.13	3.27	49.86	57.7	156.7	50.3	167.4	108.0				
44										**107.71**	97.5	28.1	
	17950	8.36	3.45	38.89	47.5	131.4	41.5	140.4	90.2				Union GCS
	17955	9.31	2.67	67.45	63.7	163.0	55.6	174.1	114.1				
	17960	9.31	2.67	67.31	63.6	163.0	55.5	174.1	114.0				
45										**106.11**	97.5	27.3	Union GCS
	18000	7.66	3.19	36.05	40.7	110.3	35.5	117.9	76.1				
	18170	9.55	2.81	66.62	66.2	171.5	57.8	183.2	119.7				
46										**97.88**	97.4	23.9	
	18390	7.26	3.69	26.8	35.0	99.1	30.5	105.9	67.6				
	18500	8.61	3.34	43	50.9	139.4	44.4	148.9	95.9				
47										**81.75**	97.1	18.0	
	18710	7.3	3.48	29.22	36.0	100.2	31.4	107.0	68.7				
	18900	9.32	2.67	67.44	63.8	163.3	55.7	174.5	114.3				
48										**91.48**	97.3	21.4	
	19000	8.29	3.00	45.77	48.6	129.2	42.4	138.0	89.6				
	19200	7.22	3.41	29.29	35.4	98.0	30.9	104.7	67.2				
49										**78.40**	97.1	17.0	
	19400	7.98	3.06	41.31	44.7	119.7	39.0	127.9	82.9				
	19500	9.32	2.68	67.37	63.8	163.3	55.7	174.5	114.3				
50										**98.59**	97.4	24.2	
	19600	7.75	3.18	37.03	41.7	112.9	36.4	120.6	77.9				
	19782	6.01	3.70	18.27	23.9	67.9	20.9	72.6	46.3				
51										**62.12**	92.9	5.3	
	19940	6.72	3.23	27.24	31.1	84.9	27.2	90.7	58.5				59th GCS
	20050	6.79	3.23	27.86	31.9	86.7	27.8	92.6	59.7				
	20160	4.44	3.85	9.38	12.8	37.1	11.2	39.6	25.1				
52										**47.79**	88.3	2.4	59th GCS
	20200	3.79	3.93	6.64	9.2	27.0	8.1	28.9	18.3				
	20300	4.24	3.52	9.61	12.0	33.8	10.4	36.1	23.1				
53										**20.69**	78.1	0.5	

AD

	20500	5.48	2.79	21.8	21.6	56.5	18.8	60.3	39.3				
	20700	6.67	2.27	42.3	34.0	83.6	29.7	89.4	59.2				
54										**49.23**	88.8	2.5	
	20900	6.96	2.18	48.6	37.5	91.1	32.8	97.3	64.7				
	21000	6.65	2.23	43.07	34.0	83.1	29.7	88.8	58.9				
55										**61.80**	92.8	5.2	
	21230	6.83	2.16	47.56	36.3	87.7	31.7	93.7	62.4				57th GCS
	21240	7.22	2.05	56.89	41.2	98.0	36.0	104.7	70.0				
56										**66.18**	94.2	7.0	57th GCS
	21330	6.51	2.25	40.87	32.5	79.7	28.4	85.1	56.4				
	21395	7.57	1.76	76.45	47.7	107.7	41.6	115.1	78.0				57th DIP
	21565	4.68	2.78	15.96	15.7	41.2	13.7	44.0	28.6				
57										**54.37**	90.4	3.4	57th DIP
	21700	3.25	4.28	4.33	6.6	19.9	5.7	21.2	13.3				
	21900	3.72	3.51	7.4	9.2	26.0	8.0	27.8	17.8				
58										**15.55**	72.6	0.3	
	22000	3.26	3.22	6.38	7.3	20.0	6.3	21.3	13.7				
	22200	3.99	2.44	13.74	11.9	29.9	10.4	32.0	21.0				
59										**17.39**	75.0	0.3	
	22400	7.37	1.68	77.53	46.0	102.1	40.2	109.1	74.3				
	22500	6.85	1.95	54.54	37.7	88.2	32.9	94.3	63.3				
	22510	7.82	1.89	74.35	49.7	115.0	43.4	122.8	82.7				
	22520	7.86	1.92	73.64	50.0	116.1	43.7	124.1	83.5				
	22540	7.88	1.96	71.83	49.9	116.7	43.5	124.7	83.7				
60										**77.51**	97.0	16.7	
	22560	8	1.98	73.05	51.3	120.3	44.7	128.6	86.2				
	22580	8.06	2.02	72.47	51.8	122.1	45.2	130.5	87.4				
	22600	8.14	2.06	72.02	52.5	124.6	45.8	133.1	89.0				
	22620	8.21	2.09	71.75	53.1	126.7	46.3	135.4	90.4				
	22640	8.28	2.13	71.18	53.7	128.9	46.9	137.7	91.8				
	22660	8.36	2.17	70.75	54.4	131.4	47.5	140.4	93.4				
	22680	6.34	2.67	30.98	29.3	75.6	25.6	80.7	52.8				
	22700	6.85	2.58	37.94	34.6	88.2	30.2	94.3	61.8				
	22720	6.82	2.64	36.4	34.0	87.4	29.7	93.4	61.2				
	22740	7.27	2.56	43.15	39.1	99.4	34.2	106.2	69.7				

AD

	22760	7.81	2.47	52.19	45.7	114.7	39.9	122.5	80.7				
	22780	8.39	2.39	63	53.3	132.3	46.5	141.4	93.4				
	22800	8.48	2.40	63.98	54.4	135.2	47.5	144.4	95.4				
	22820	8.07	2.51	54.53	48.5	122.4	42.3	130.8	86.0				
	22840	8.06	2.54	53.73	48.2	122.1	42.1	130.5	85.7				
	22860	8.32	2.50	58.5	51.7	130.1	45.1	139.0	91.5				
61										**82.27**	97.1	18.2	
	22877	4.83	3.14	14.53	16.1	43.9	14.1	46.9	30.2				
	22900	5.26	3.07	17.82	19.4	52.0	16.9	55.6	36.0				
	22920	5.38	3.00	19.15	20.4	54.4	17.8	58.1	37.7				
	22940	5.6	2.91	21.63	22.3	59.0	19.5	63.0	40.9				
	22960	5.81	2.84	24.1	24.2	63.5	21.2	67.8	44.2				
	22980	5.76	2.77	24.36	23.9	62.4	20.9	66.6	43.5				
	23000	5.72	2.76	24.22	23.7	61.5	20.7	65.7	42.9				
	23100	6.54	2.48	36.52	32.0	80.4	27.9	85.9	56.6				
	23200	6.9	2.34	43.77	36.2	89.5	31.6	95.6	63.2				
62										**43.90**	87.0	1.9	
	23300	7.05	2.29	46.98	38.1	93.4	33.2	99.8	66.2				54th GCS
	23310	6.79	2.37	41.59	34.9	86.7	30.5	92.6	61.2				
63										**63.66**	93.4	5.9	54th GCS
	23400	7.27	2.26	50.78	40.6	99.4	35.4	106.2	70.4				
	23500	7.47	2.26	53.5	42.9	104.9	37.4	112.1	74.3				
	23575	8.37	2.20	69.93	54.5	131.7	47.5	140.7	93.6				
64										**79.44**	97.1	17.3	
	23645	6.01	2.94	24.48	25.5	67.9	22.3	72.6	47.1				
	23800	6.76	2.35	41.7	34.7	85.9	30.3	91.8	60.7				
	24000	6.96	2.26	46.6	37.3	91.1	32.5	97.3	64.5				
65										**57.42**	91.4	4.0	
	24200	6.74	2.26	43.68	34.9	85.4	30.5	91.2	60.5				
	24365	7.02	2.21	48.8	38.2	92.6	33.3	99.0	65.8				
66										**63.15**	93.2	5.7	
	24500	6.55	2.26	41.24	33.0	80.7	28.8	86.2	57.2				Trial GCS
	24510	7.67	1.81	76.06	48.6	110.6	42.4	118.2	80.0				
67										**68.56**	94.9	8.4	Trial GCS

AD

	24700	4.96	2.89	17.05	17.4	46.3	15.2	49.4	32.1				
	24900	4.57	3.22	12.58	14.3	39.3	12.5	42.0	27.0				
68										**29.55**	82.5	0.9	
	25000	4.12	3.38	9.56	11.4	31.9	10.0	34.1	21.9				
	25200	4.13	3.28	10	11.6	32.1	10.1	34.3	22.0				
69										**21.94**	79.0	0.5	
	25400	6.33	2.28	37.97	30.7	75.3	26.8	80.5	53.3				
	25500	7.5	2.01	63.36	45.0	105.8	39.3	113.0	75.8				
	25600	7.82	2.01	68.66	48.9	115.0	42.7	122.8	82.4				
70										**70.48**	95.6	9.9	
	25650	7.9	2.03	69.22	49.7	117.3	43.4	125.4	83.9				Trial GCS
	25660	8.02	1.98	73.5	51.6	120.9	45.1	129.2	86.7				
71										**85.33**	97.2	19.2	Trial GCS
	25700	6.44	2.48	35.18	30.9	78.0	27.0	83.3	54.8				
	25827	5.36	2.94	19.46	20.2	54.0	17.7	57.7	37.4				
	25830	5.53	2.86	21.56	21.8	57.5	19.0	61.4	39.9				
	25870	6.15	2.73	28.39	27.4	71.1	23.9	76.0	49.6				
	26000	7.99	2.29	60.48	48.9	120.0	42.7	128.2	85.0				
72										**53.34**	90.1	3.2	
	26120	5.09	3.48	14.08	17.4	48.7	15.1	52.0	33.3				
	26260	7.57	1.77	75.98	47.6	107.7	41.5	115.1	78.0				
	26500	5.44	1.94	34.59	23.8	55.6	20.8	59.4	39.9				
73										**50.41**	89.1	2.7	
	26795	6.37	1.69	57.27	34.2	76.3	29.9	81.5	55.5				
	27083	6.84	1.44	81.37	41.6	88.0	36.3	94.0	65.0				
74										**60.21**	92.3	4.7	
	27282	6.6	1.34	83.99	39.7	81.9	34.7	87.5	60.9				
	27424	6.51	1.30	138.65	63.8	79.7	55.7	85.1	71.1				
75										**66.00**	94.1	6.9	
	27741	3.5	2.51	16.75	14.9	23.0	13.0	24.6	18.9				
76										**18.87**	76.8	0.4	
	27952	3.32	2.85	25.74	26.0	20.7	22.7	22.1	22.9				Sverdrup GC
	27953	2.2	4.30	6.64	10.1	9.1	8.8	9.7	9.4				
	27968	2.19	4.32	6.55	10.0	9.0	8.7	9.6	9.4				
	27969	6.88	1.57	24.02	13.4	89.0	11.7	95.1	52.3				
77										**23.49**	80.0	0.6	verdrup GC
	28023	2.87	2.27	2.42	1.9	15.5	1.7	16.5	8.9				
	28038	1.9	4.30	2.4	3.7	6.8	3.2	7.3	5.2				

APPENDIX C

EXAMPLE SCOUR CALCULATIONS

Drop Scour

SECNO	Q	CWSEL	DEPTH	VELOCIT	10*KS	Bottom Width	Unit Q	Long Term Scour	Drop Scour	Total Drop Scour	
	(cfs)	(ft)	(ft)	(ft/sec)	(ft/ft)	(ft)	(cfs/ft)	(ft)	(ft)	(ft)	
7310	11000	1197.28	11.44	8.63	10.64	94	117.02		12.14		
7330	11000	1199.34	7.09	14.26	51.97	94	117.02	1.10		13.24	
	Dibble GCS										
7350	11000	1203.9	9.13	10.07	18.95	94	117.02				
9100	11000	1207.88	4.49	10.93	49.61	210	52.38		9.93		
9271	11000	1208.72	4.47	10.99	50.52	210	52.38	3.20		13.13	
	Bell										
9500	11000	1211.15	5.76	8.4	21.56	210	52.38				
									In the computation of Drop Scour 7% Submerge		
10900	11000	1217.46	5.07	11.95	52.3				13.62		
11095	11000	1218.62	5.22	12.43	54.96	155	70.97	7.50		21.12	(The Recommended Elevation a
	69th										i.e., 19.8 ft (drop scour) + 2 ft (
11230	11000	1223.03	5.93	11.66	41.85						
12500	11000	1226.91	7.11	9.31	21.46	145.00	75.86		10.12		
12645	11000	1227.22	7.12	9.29	21.29	145.00	75.86	3.64		13.76	
	67th										
12784	11000	1228.06	6.86	9.23	22.29	150.00	73.33				
15400	11000	1235.96	9.66	13.55	38.9	55.00	200.00		24.06		
15495	11000	1236.75	10.25	12.51	31.07	50.00	220.00	6.78		30.84	
	Trial GCS										
15700	11000	1239.62	10.22	15.25	50.09	50.00	220.00				

4/15/98

										Total Drop Scour		
15400	11000	1235.96	9.66	13.55	38.9	55.00	200.00		24.06			
15495	11000	1236.75	10.25	12.51	31.07	50.00	220.00	6.78		30.84		
Trial GCS												
15700	11000	1239.62	10.22	15.25	50.09	50.00	220.00					
This is a designated GCS . Do not subtract LONG TERM in Drop Scour Comp.												
17850	11000	1247.23	7.45	14.7	51.93	87	126.44		13.10			
17950	11000	1248.65	8.39	12.52	32.5	90	122.22	11.20		24.30		
	Union											
18000	11000	1253.37	7.37	12.16	34.65	110	100.00					
GCS is not submerged . Therefore												
19782	11000	1262.99	8.49	9.62	18.08	120.00	91.67		#####			
19940	11000	1263.24	7.94	9.96	20.87	125	88.00	8.90		#NUM!		
	59th											
20200	11000	1264.92	9.47	5.75	5.53	157	70.06					
Run a Hypothetical scenario w/ an 8.9 drop @ 19940. Though the BW remained the same. That scenario resulted in a 7.												
19782	11000	1262.99	8.49	9.62	18.08	120.00	91.67		14.94			
19940	11000	1263.24	7.94	9.96	20.87	125	88.00	7.50		22.44		
	59th											
20200	11000	1264.92	9.47	5.75	5.53	157	70.06					
21000	11000	1265.43	6.14	8.68	23.05	185	59.46		9.49			
21230	11000	1265.8	5.41	9.94	32.95	188	58.51	4.60		9.49		
57th GCS												
21330	11000	1266.09	5.22	10.29	37.51	188	58.51					

Total Drop Scour

Bormann Eq. is not used for Submerged GCS. @ 54th The (depth) 5.06 ft. < (Long Term) 5.5 ft Therefore												
23200	8400	1274.91	5.06	11.74	52.22	126	66.67		#####			
23300	8400	1275.59	5.26	11.25	45.63	126	66.67	6.00		#NUM!		
	54th											
23400	8400	1276.02	5.21	11.54	48.73	126	66.67					
Run a Hypothetical scenario w/ a 6ft drop @ 23300. Though the BW remained the same. That scenario resulted in a 4.35												
23200	8400	1274.91	5.06	11.74	52.22	126	66.67		11.91			
23300	8400	1275.59	5.26	11.25	45.63	126	66.67	4.35		16.26		
	54th											
23400	8400	1276.02	5.21	11.54	48.73	126	66.67					
This is a designated GCS . Do not subtract LONG TERM in Drop Scour Comp.												
24365	8400	1280.47	5.03	11.34	47.85	135	62.22		8.48			
24500	8400	1281.48	5.39	10.07	34.93	140	60.00	5.3		13.78		
	Trial GCS											
24700	8400	1285.08	5.99	8.86	23.65	153	54.90					
This is a designated GCS . Do not subtract LONG TERM in Drop Scour Comp.												
25600	8400	1286.58	4.79	12.02	57.06	134	62.69		9.00			
25650	8400	1286.97	4.88	11.99	56.21	130	64.62	2.6		11.60	Use 12ft	
	Trial GCS											

25700	8400	1288.7	5.61	10.46	37.45	130	64.62					

SECNO	Q	CWSEL	DEPTH	VELOCIT	10*KS	Bottom Width	Unit Q	Long Term Scour	Drop Scour	Total Drop Scour		
	(cfs)	(ft)	(ft)	(ft/sec)	(ft/ft)	(ft)	(cfs/ft)	(ft)	(ft)	(ft)		
7310	11000	1197.28	11.44	8.63	10.64	94	117.02		12.14			
7330	11000	1199.34	7.09	14.26	51.97	94	117.02	1.10		13.24		
	Dibble											
7350	11000	1203.9	9.13	10.07	18.95	94	117.02					

Drop Scour :

$$1.7 \frac{q^{0.67}}{g^{0.33}} \left(\frac{\Delta H}{y_t} \right)^{0.158} (S_r)^{-0.13}$$

$$\Rightarrow 1.7 \frac{(117.02)^{0.67}}{(32.2)^{0.33}} \left[\frac{(1203.9 - 1197.28 + 1.1)}{11.44} \right]^{0.158} \left[\frac{(11.44 - 1.1)}{9.13} \right]^{-0.1}$$

$$= 12.15 \text{ ft.}$$

GC STRUCURE	1		2		3		5		6	
	STA	ELE	STA	ELE	STA	ELE	STA	ELE	STA	ELE
UNION HILLS	17950	1245.9	17960	1245.9	17933.2	1240.3	17905.3	1231	17978	1239.9
59TH AVE. GCS	19940	1255.4	20160	1255.4	19940	1255.4	19894.4	1239.8	20178	1249.4
57TH AVE GCS	21230	1260.5	21240	1260.5	21230	1260.5	21187.7	1246.4	21258	1254.5
54TH AVE GCS	23280	1270.4	23290	1270.4	23280	1270.4	23231.1	1254.1	23308	1264.4
STA 245 GCS	24500	1279.1	24510	1279.1	24497	1276.1	24455.6	1262.3	24528	1273.1
STA 256 GCS	25650	1283.1	25660	1283.1	25647	1282.1	25611	1270.1	25678	1277.1

55.4

x = 15
91.4

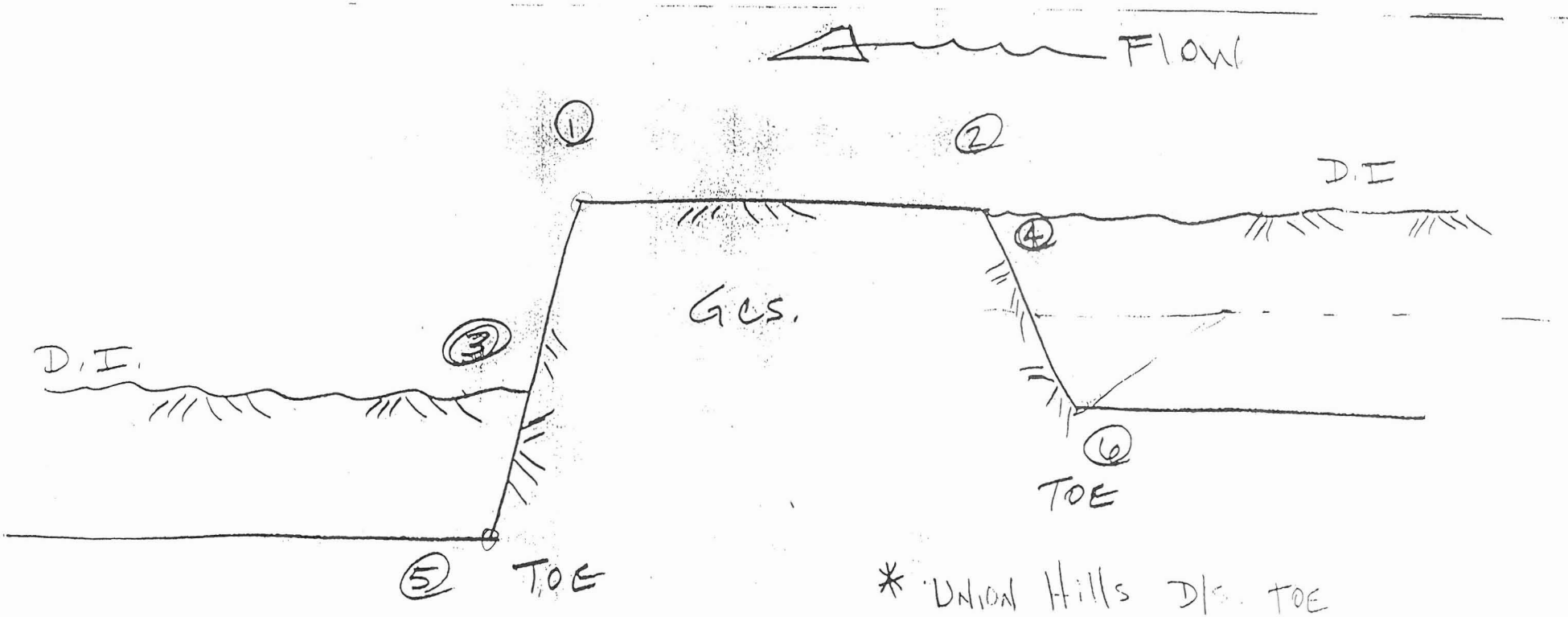

* UNION HILLS D/S TOE
TERMINATES @ 1228.3
FOR FULL CONCRETE LINED CHANNEL
AT LONG TERM [illegible] DEPTH + 1'

12/31/97

PHASE I GCS :

① Union Hills (Station: 179+55)

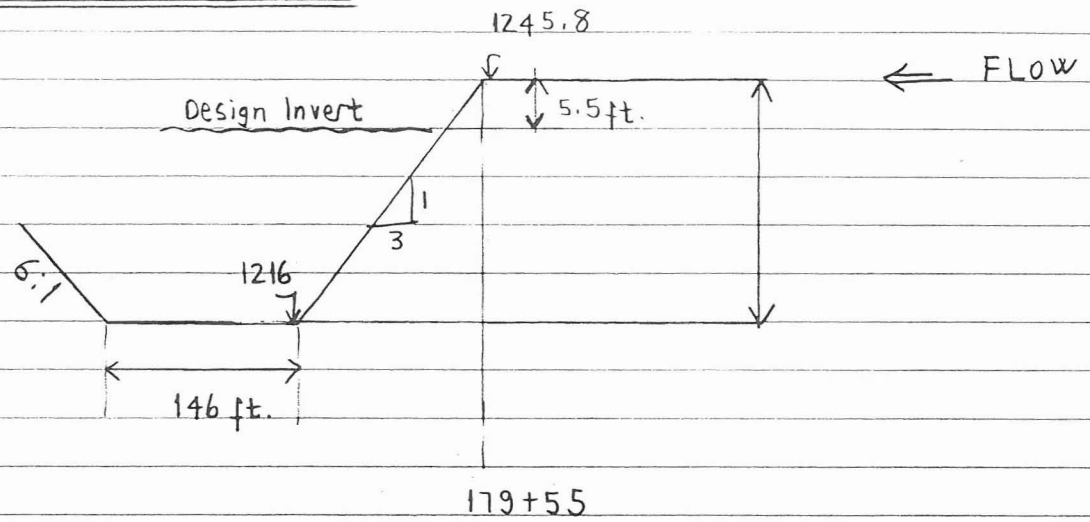

24.3

② 59th AV (Station: 199+40)

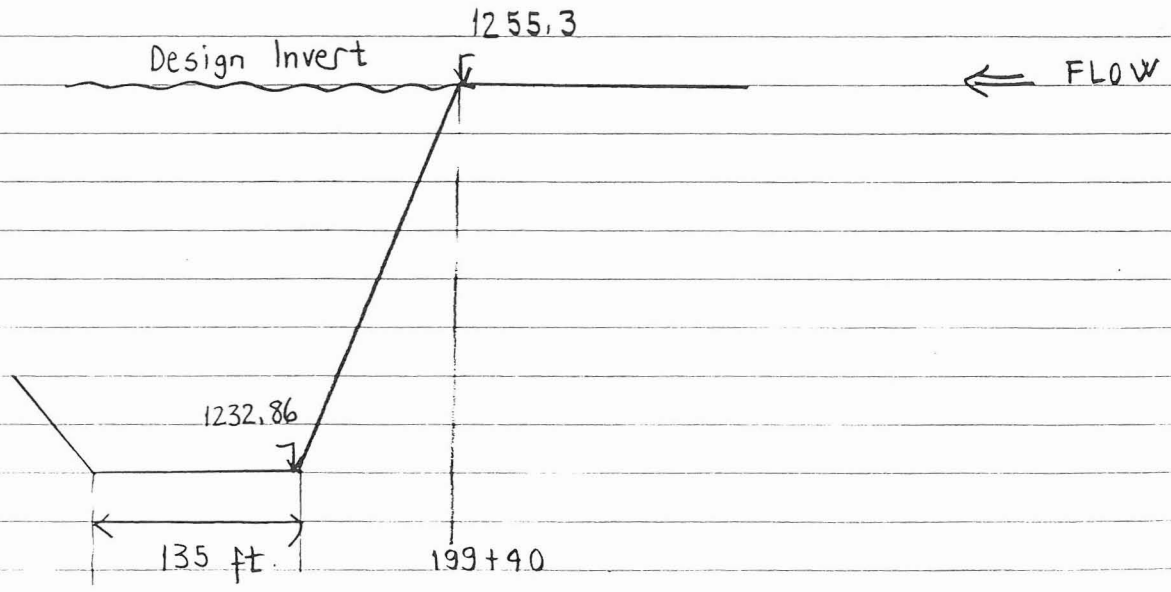

22.44

③ 57 th AV (station: 212+30)

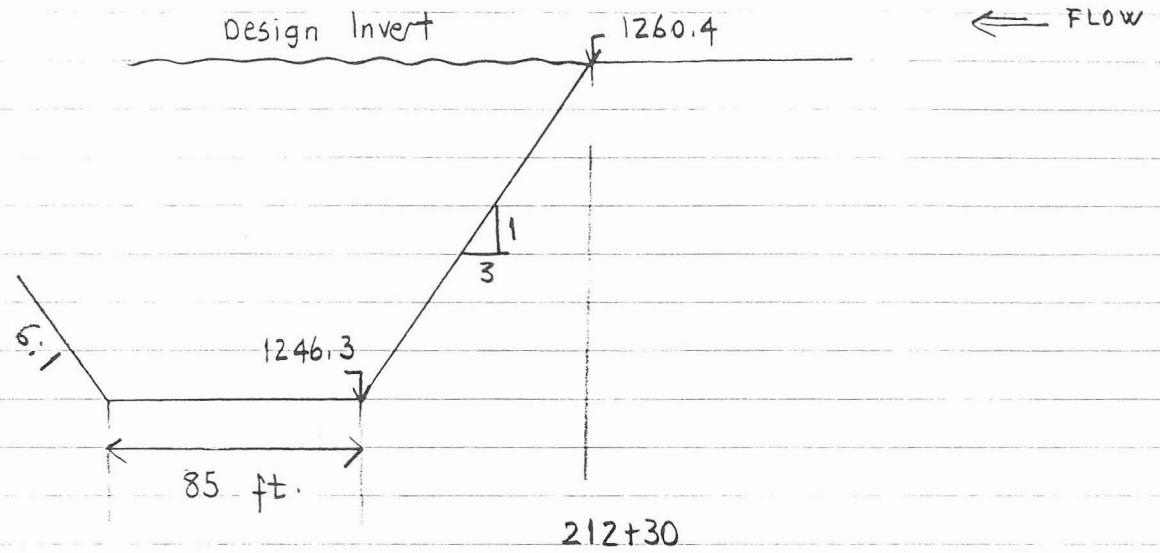

④ 54 th AV (Station: 233+00)

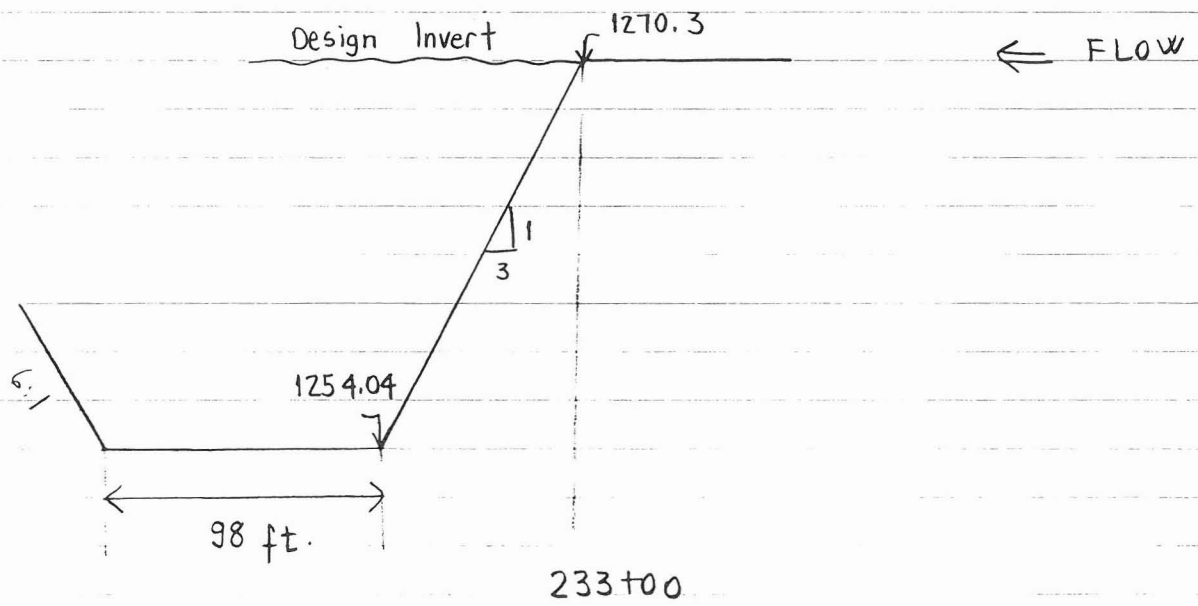

⑤ Trial GCS (Station : 245+00)

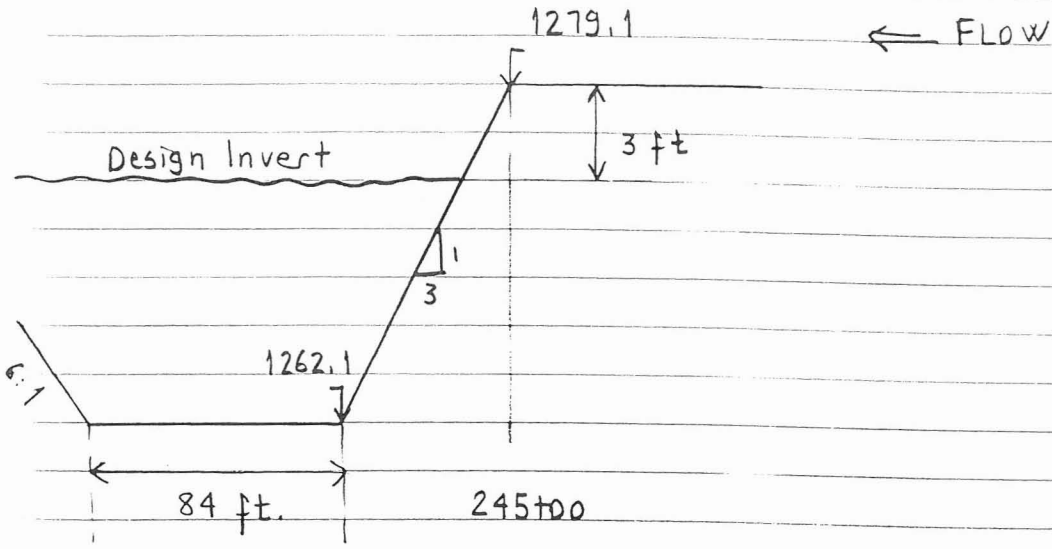

⑥ Trial GCS (Station : 256+50)

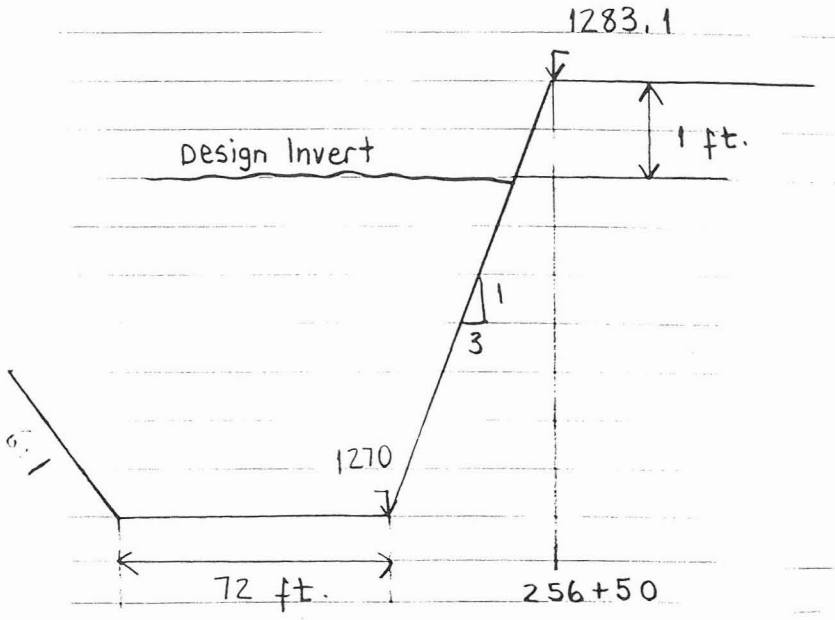

SIMONS, LI & ASSOCIATES, INC.

CLIENT SKUNK CREEK | JOB NO. | PAGE
PROJECT | DATE CHECKED | DATE 4/15/98
DETAIL | CHECKED BY | COMPUTED BY

Phase II

BELL ROAD GCS.

			TOP ELEV.
u/s	sta.	94+71	(1205.2)
D/s	sta.	92+71 ℄	(1204.2)

200 Ft. TOP Length

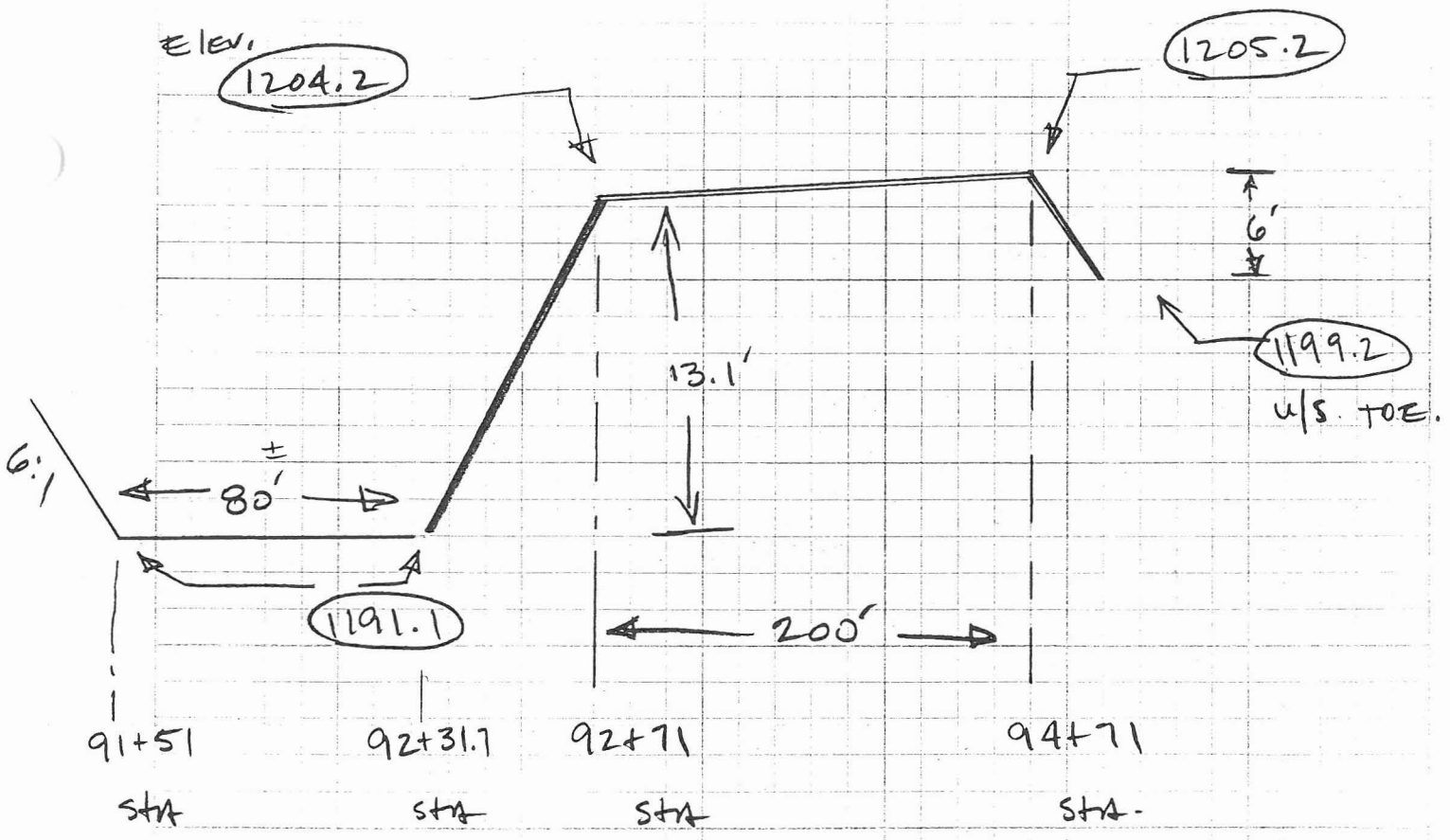

NO DROP!

12/29/97

PHASE II GCS :

① Station : 111+00

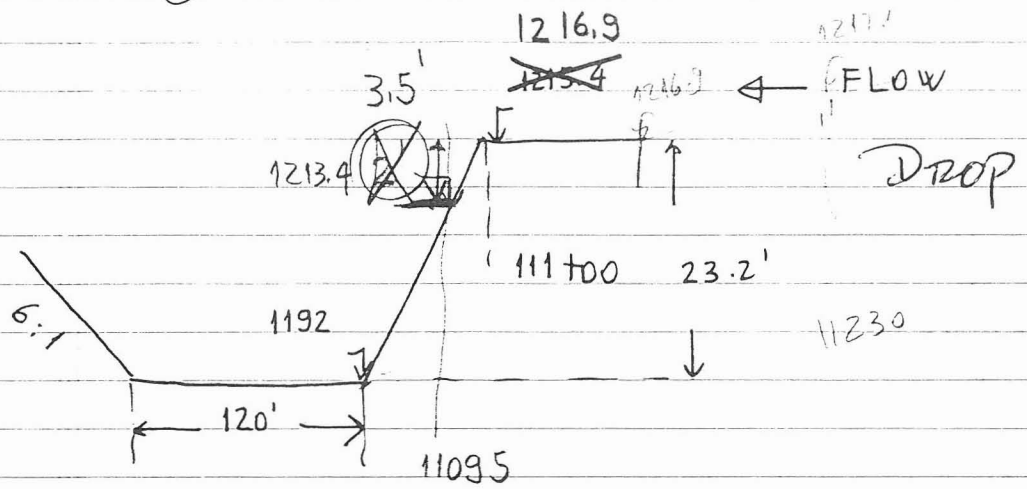

② Station : 126+50

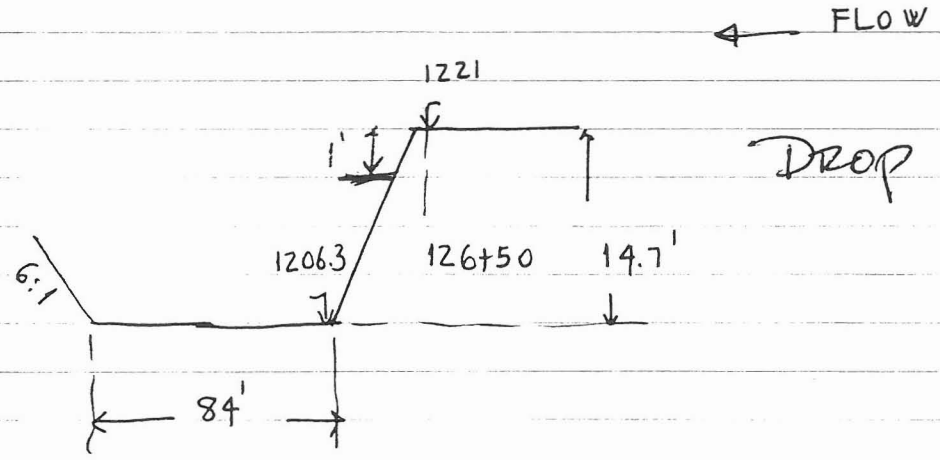

③ Station : 155+00

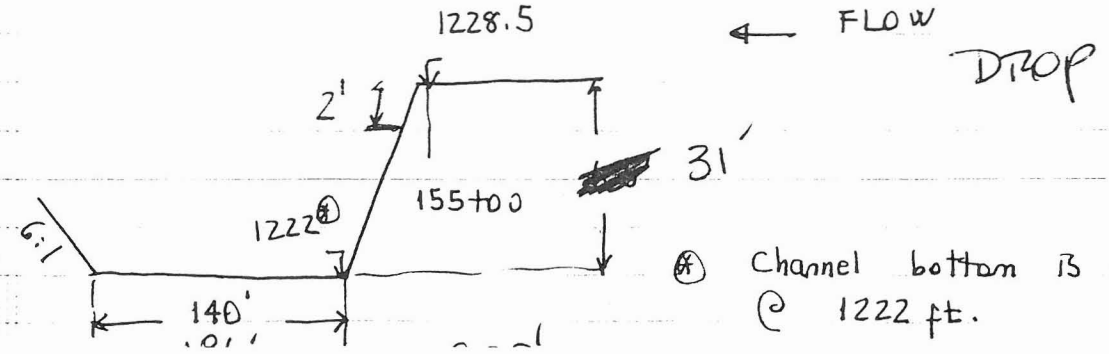

* Channel bottom is closed @ 1222 ft.

BACKUP CALCS - 55TH DROP

KJP

practical situations, the embankment may span a wide floodplain overbank and extend partially into the main channel itself. Due to the normally large differences which exist between channel and overbank hydraulics, caution must be exercised in defining the embankment length. Figure 6.5 shows a recommended embankment length definition for different cases that might be encountered. In the situation where the embankment crosses the entire overbank and extends into the main channel, it is recommended that the scour be computed by utilizing the overbank hydraulics in combination with the embankment length a_{e2}, and that this depth of scour then be compared to the scour depth computed by utilizing the main-channel hydraulics in combination with the embankment length a_{e1}. The larger of the two values should then be used for design purposes.

6.6.6 *Scour Below Channel Drops*

Scour below channel drops, such as grade-control structures, is a special case of local scour. Where the drop consists of a free, unsubmerged overfall, the depth of scour below the drop (U.S. Bureau of Reclamation, 1977) shall be computed from:

$$Z_{lsf} = 1.32\, q^{0.54} H_t^{0.225} - TW \qquad = 8' \tag{6.13}$$

Where:

Z_{lsf} = Depth of local scour due to a free-overfall drop, in feet, measured below the streambed surface downstream of the drop;

q = Discharge per unit width of the channel bottom, in cubic feet per second per foot;

H_t = Total drop in head, measured from the upstream energy grade line to the downstream energy grade line, in feet; and

TW = Tailwater ~~elevation~~ depth (downstream water-surface elevation), in feet.

Figure 6.6 shows the relationship of the parameters in Equation 6.13.

Where the drop is submerged, as will be the case for most instances involving grade-control structures placed along watercourses located within the City of Tucson, the depth of scour below the drop (Simons, Li & Associates, 1986) shall be computed from:

$$Z_{lss} = 0.581 q^{0.667} (h/Y)^{0.411} [1-(h/Y)]^{-0.118} \tag{6.14}$$

Where:

$h/Y \leq$ 0.99; and,

Z_{lss} = Depth of local scour due to a submerged drop, in feet, measured below the streambed surface downstream of the drop;

q = Discharge per unit width of the channel bottom, in cubic feet per second per foot;

h = Drop height, in feet; and,

Y = Downstream depth of flow, in feet.

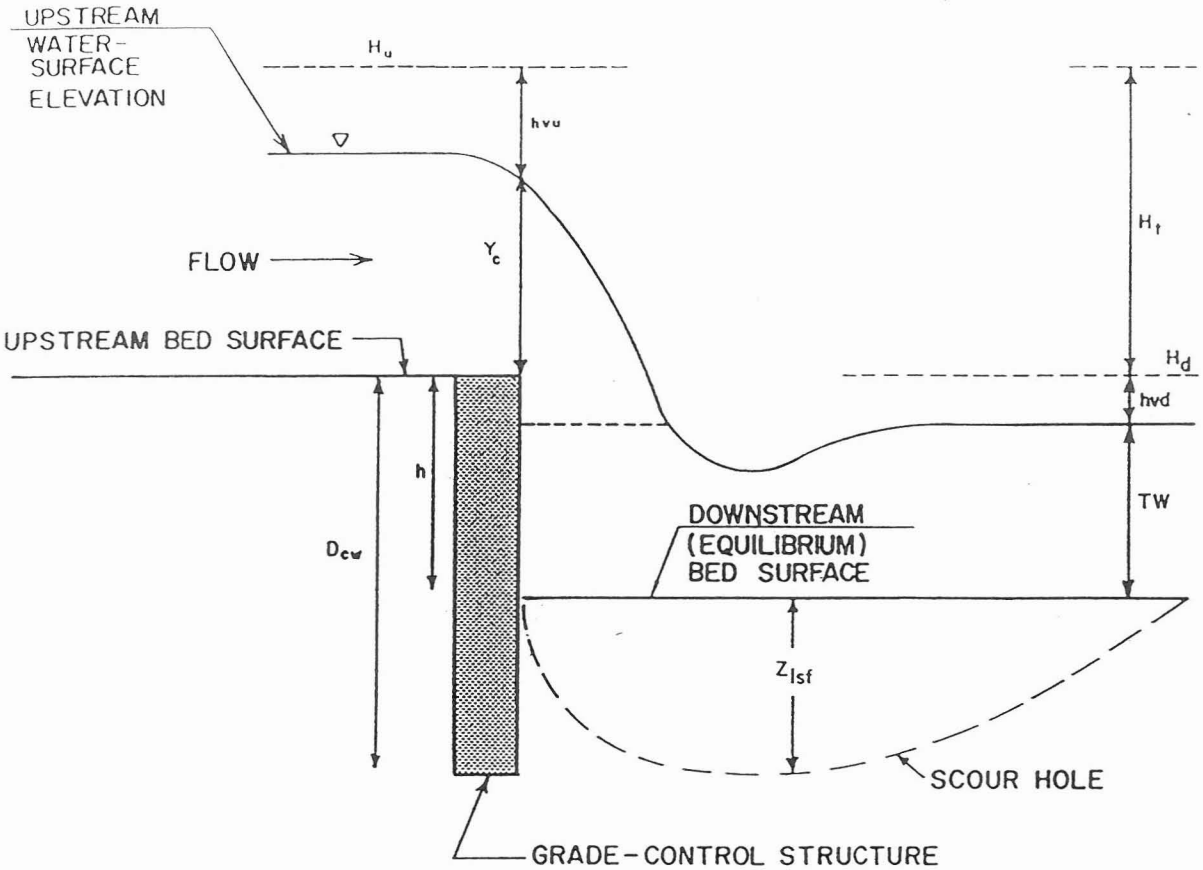

FIGURE 6.6
DEPTH OF SCOUR BELOW A FREE OVERFALL

NOTE: If $h/Y > 0.85$, the predicted scour below a channel drop should also be computed using Equation 6.13. The smaller of the two values thus computed should then be used for design purposes.

Figure 6.7 gives the relationship of the parameters in Equation 6.14.

The longitudinal extent of a scour hole created by either a free or submerged overfall is represented by the distances x_{sce} and L_s, as depicted in Figure 6.7. These dimensions are given by the equations:

$$x_{sce} = 6.0\ Z_{lsf},\ \text{or}\ 6.0\ Z_{lss} \tag{6.15}$$

$$L_s = 12.0\ Z_{lsf},\ \text{or}\ 12.0\ Z_{lss} \tag{6.16}$$

(12.0)(8) = 96'

Bank protection toe-downs downstream of a grade-control structure shall extend to the computed depth of scour for a distance equal to x_{sce} beyond of the grade-control structure, as computed by Equation 6.15. They shall then taper back to the normal toe-down depth within a total distance downstream of the grade-control structure equal to L_s, as computed by Equation 6.16. Note that L_s includes x_{sce}.

In the absence of bridge piers and/or abutments, the depth of scour below grade-control structures is not added to the other scour components. Rather, the depth of scour caused by the grade-control structure is compared to the depth of scour computed by Equation 6.3, and the larger of the two values is then used for toe-down design.

6.7 Scour-Hole Geometry at Culvert Outlets

Culverts normally have less cross-sectional area available for the conveyance of flow than do the natural channels they replace. Consequently, flow velocities are increased and a potential for erosion is created at the culvert outlet. Often there is a drop at the culvert outlet, either under design conditions or as a result of outlet scour, and this further increases the possibility of outlet scour. The scour hole created at the outlet of a culvert can become large enough to threaten the culvert, the roadway, adjacent property, or other nearby improvements.

For non-cohesive soils, the dimensions of a scour hole downstream of a culvert outlet *where no drop exists* can be computed by:

$$DSG = \alpha \left[\frac{Q_r}{g^{1/2}\, D^{5/2}} \right]^{\beta} (0.09)^{\theta} \tag{6.17}$$

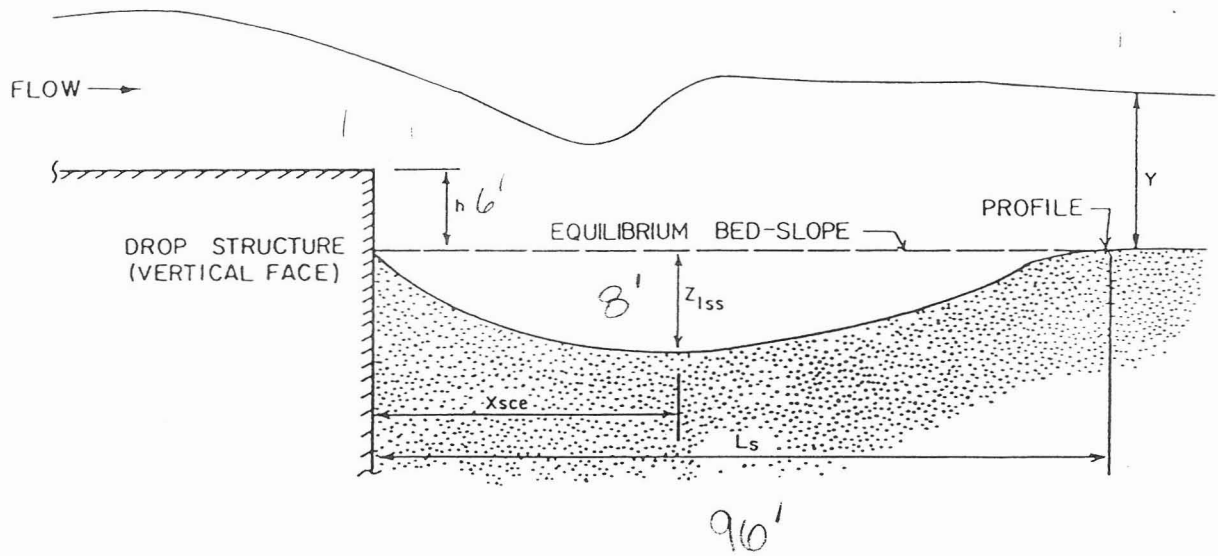

FIGURE 6.7

RELATIONSHIP OF VARIABLES IN EQUATION FOR SCOUR BELOW A SUBMERGED GRADE-CONTROL STRUCTURE

Form 435 - Printed in U.S.A. 11/95

WORK SHEET

Project
Type of Work

Estimator
Date

Item No.
Sheet No.

$Z = 1.32\, q^{.54}\, H_t^{.225} - T_w$

$q = 2020/90 = 22$ cfs/ft

$H_t = 6'$

$T_w = 2.5'$

$Z = 8.0'$

Zone of influence $= 12 \cdot Z$ ← Z

$= 96'$

$L_s = (12.0)\, Z_{LSF}$

SECNO	Q	CWSEL	DEPTH	VELOCIT	10*KS	Bottom Width	Unit Q	Long Term Scour	Drop Scour	Total Drop Scour		
	(cfs)	(ft)	(ft)	(ft/sec)	(ft/ft)	(ft)	(cfs/ft)	(ft)	(ft)	(ft)		
7310	11000	1197.28	11.44	8.63	10.64	94	117.02		12.14			
7330	11000	1199.34	7.09	14.26	51.97	94	117.02	1.10		13.24		
	Dibble											
7350	11000	1203.9	9.13	10.07	18.95	94	117.02					

Drop Scour: $1.7 \dfrac{q^{0.67}}{g^{0.33}} \left(\dfrac{\Delta H}{y_t}\right)^{0.158} (S_r)^{-0.13}$

$$\Rightarrow 1.7 \frac{(117.02)^{0.67}}{(32.2)^{0.33}} \left[\frac{(1203.9-1197.28+1.1)}{11.44}\right]^{0.158} \left[\frac{(11.44-1.1)}{9.13}\right]^{-0.1}$$

$$= 12.15 \text{ ft.}$$

Key:
If drop is unsubmerged see me. S.

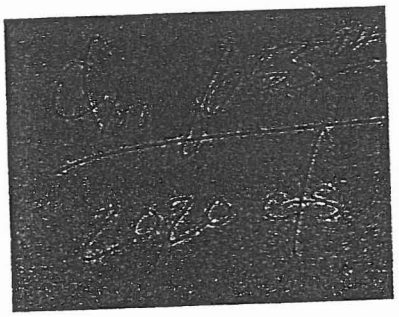

55th Ave. Channel
2020 cfs
(K. D. Sherwood)
Glendale

Form 435 - Printed in U.S.A. 11/95

WORK SHEET

Project
Type of Work

Estimator
Date

Item No.
Sheet No.

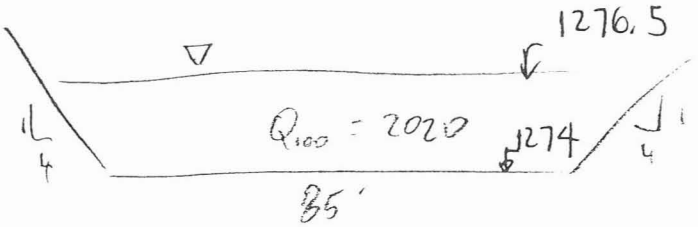

For S = 1% & n = .03

Y_n = 2.5' q = 2020/90 = 22 cfs/ft

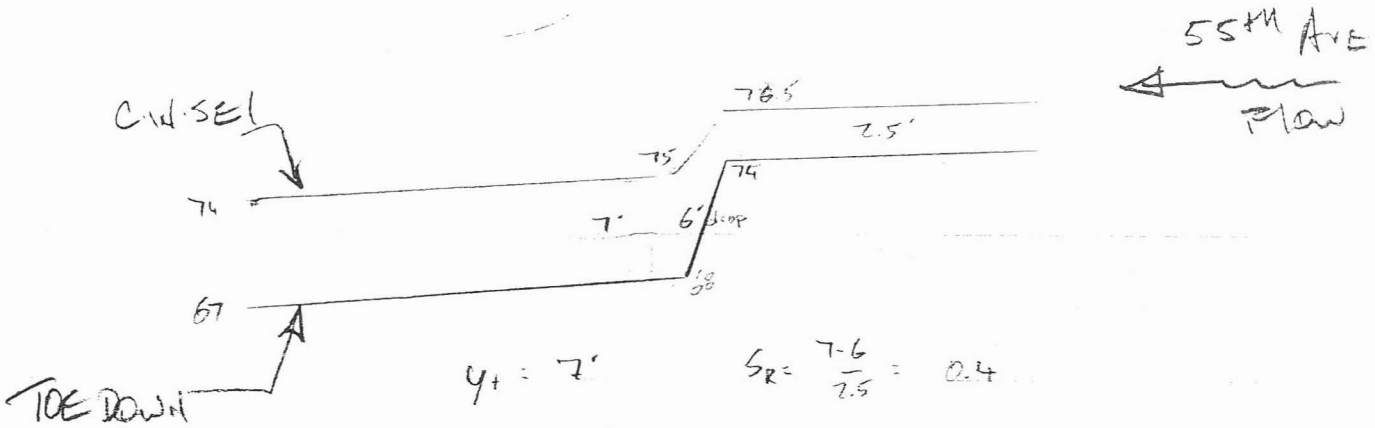

y_t = 7' $S_R = \frac{7-6}{2.5} = 0.4$

y_1 = 2.5'

D_p = 6'

ΔH = 1.5'

$$S_{OUT} = 1.7 \left(\frac{22^{.67}}{32^{.33}}\right)\left(\frac{1.5}{7}\right)^{.158} .4^{-.17}$$

= 3.8'

TOE DOWN Req'd

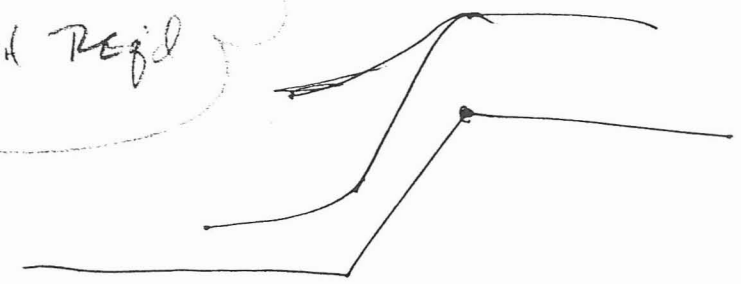

APPENDIX C

EXAMPLE SCOUR CALCULATIONS

Bridge Pier Scour Computations

SECNO	Q	DEPTH	FRCH	Dune Scour (ft)	K1 (pier shape)	K2 (angle of attack)	K3 (dune height)	K4 (bed material)	Debris on each side	Pier Width	Effective Pier Width	# of piers	Scour depth
9295	11000	6.87	0.66	0.34									
BELL					1	1	1.1	1	2	1.5	5.5		10.20
9405	11000	6.59	0.58	0.32									
67TH AV					1	1	1.1	1	2	4	8		14.08
13131	11000	10.16	0.49	0.54									
18390	11000	7.98	0.74	0.40									
UNION					1	1	1.1	1	2	3	7		14.49
18710	11000	8.11	0.77	0.41									
59TH AV					1.1	1	1.1	1	2	3	7		14.51
20050	11000	7.93	0.63	0.40									
51ST AV					1	1	1.1	1	2	5	9		14.28
26120	8400	7.72	0.53	0.39									

APPENDIX C

EXAMPLE SCOUR CALCULATIONS

Super-Elevation

SECNO	Q	VCH	TOPWID		Radius	Max VCH		Super Elevation		
6236	11000	8.36	119.95							
6370	11000	8.44	118.86							
6570	11000	8.56	116.96							
6670	11000	8.54	117.06							
6852	11000	8.29	120.89							
6940	11000	8.37	120.35							
7070	11000	8.34	120.7							
7170	11000	8.38	117.7							
7223	11000	8.31	118.14							
7260	11000	6.07	140.34							
7305	11000	6.06	140.46							
7310	11000	7	135.54							
7330	11000	14.25	123.73							
7339	11000	14.57	115.34							
7340	11000	14.58	115.5							
7350	11000	9.98	138.11		1245	14.58	115.5	0.6		
8000	11000	5.75	260.61							
8200	11000	6.36	254.67							
8400	11000	6.93	251.3							
8500	11000	7.18	249.95		850	7.18	249.95	0.5		

SECNO	Q	VCH	TOPWID		Radius	Max VCH		Super Elevation		
9700	11000	8.34	237.44							
9800	11000	8.24	238.18							
10000	11000	8.54	231.09							
10025	11000	8.03	239.43							
10100	11000	8.69	226.46							
10200	11000	8.8	222.72							
10400	11000	9.06	213.34							
10600	11000	9.1	208.33		2292	9.1	208.33	0.2		
10600	11000	9.1	208.33							
10800	11000	8.91	207.43							
10900	11000	8.93	206.28							
11000	11000	9.48	196.18							
11095	11000	9.52	193.75							
11100	11000	12.5	183.22		2292	12.5	183.22	0.4		
11150	11000	12.63	178							
11200	11000	9.66	183.41							
11230	11000	9.54	183.78							
11238	11000	8.69	187.44							
11305	11000	8.83	186.66							
11310	11000	7.98	191.12							
11500	11000	8.1	193.49							
11700	11000	7.7	195.37							
11900	11000	7.44	196.76		1910	12.63	178	0.5		

SECNO	Q	VCH	TOPWID		Radius	Max VCH		Super Elevation		
11900	11000	7.44	196.76							
12000	11000	7.35	197.28							
12200	11000	7.3	197.9							
12400	11000	7.18	198.53							
12500	11000	7.12	198.9		1910	7.44	196.76	0.2		
12650	11000	8.15	192.91							
12660	11000	8.09	193.23							
12776	11000	7.27	208.66							
12822	11000	7.06	213.09							
12853	11000	8.1	188.3							
12884	11000	8.87	193.55							
12952	11000	11.32	159.53							
13050	11000	8.72	144		1700	11.32	159.53	0.4		
13206	11000	9.84	152.92							
13300	11000	10.16	151.27							
13400	11000	10.92	125.17							
13500	11000	7.8	159.16							
13600	11000	6.82	174.87							
13700	11000	6.13	189.54							
13800	11000	5.76	199.58		1500	10.92	125.17	0.3		

SECNO	Q	VCH	TOPWID		Radius	Max VCH		Super Elevation		
16900	11000	7.51	139.6							
17000	11000	8.02	147.09							
17100	11000	8.23	146.43							
17200	11000	9.1	130.49							
17300	11000	9.25	128.63							
17400	11000	9.62	128.99							
17500	11000	9.9	125.65							
17700	11000	9.98	129.65		3290	9.98	129.65	0.1		
17700	11000	9.98	129.65							
17850	11000	10.43	123.15							
17950	11000	10.07	125.42							
17955	11000	13.94	132.31							
17960	11000	13.92	132.51							
18000	11000	11.13	137.79							
18170	11000	11.97	126.04							
18390	11000	10.78	131.41							
18500	11000	11.34	126.33							
18710	11000	9.24	139.86							
18900	11000	9.82	139.87							
19000	11000	9.95	140.51							
19200	11000	9.26	145.23							
19400	11000	9.36	143.69							
19500	11000	10.11	138.65							
19600	11000	10	137.77							
19782	11000	8.19	154.09							
19940	11000	8.22	157.6							
20050	11000	8.37	154.05		3290	13.94	132.31	0.2		

SECNO	Q	VCH	TOPWID		Radius	Max VCH		Super Elevation		
21800										
21900	11000	6.06	252.6							
22000	11000	4.91	309.95							
22200	11000	4.96	332.32							
22400	11000	6.99	267.95		550	6.99	267.95	0.7		
23645	8400	8.64	153.58							
23800	8400	7.78	171.29							
24000	8400	7.92	172.11							
24200	8400	7.82	176.41		4500	8.64	153.58	0.1		
25000	8400	6.26	185.85							
25200	8400	5.97	191.11							
25400	8400	6.95	182.64							
25500	8400	7.58	176.41							
25600	8400	8.37	166.71							
25650	8400	8.61	166.23							
25660	8400	11.49	160.47							
25700	8400	9.45	167.01							
25827	8400	7.84	174.65							
25830	8400	7.94	174.48							
25870	8400	8.69	156.55							
26000	8400	9.43	151.93							
26120	8400	10.67	140.5							
26260	8400	8.49	195.34		2040	11.45	140.28	0.3		

APPENDIX D

QUASED OUTPUT SUMMARIES

APPENDIX D

QUASED OUTPUT SUMMARIES

QUASED Output for Minimum Bed Elevations

Table B.1 QUASED Output for Minimum Bed Elevation

Reach	Section	Initial Bed Elev.	Discretized time step t=1	2	3	4	5	6	7	8	9	10	11	12	13	14	15	16	17	18
79	5724	1183	1183.1	1183.3	1183.3	1183.3	1183.3	1183.3	1183.3	1183.3	1183.3	1183.3	1183.3	1183.3	1183.3	1183.3	1183.5	1183.6	1183.7	1183.8
79	5814	1181.4	1181.5	1181.7	1181.6	1181.6	1181.6	1181.6	1181.6	1181.6	1181.6	1181.6	1181.6	1181.5	1181.5	1181.6	1181.6	1181.7	1181.8	1181.8
79	5970	1181.6	1181.7	1181.8	1181.8	1181.8	1181.8	1181.8	1181.8	1181.8	1181.8	1181.8	1181.8	1181.7	1181.7	1181.8	1181.8	1181.9	1181.9	1182.1
79	6070	1181.8	1181.9	1182.1	1182	1182	1182	1182	1182	1182	1182	1181.9	1181.9	1181.9	1181.9	1181.9	1182	1182.1	1182.2	1182.3
78	6170	1182	1182.1	1182.3	1182.2	1182.2	1182.2	1182.2	1182.2	1182.2	1182.2	1182.2	1182.2	1182.2	1182.2	1182.2	1182.3	1182.4	1182.4	1182.4
78	6236	1182.2	1182.3	1182.4	1182.4	1182.4	1182.4	1182.4	1182.4	1182.4	1182.4	1182.3	1182.3	1182.4	1182.4	1182.4	1182.5	1182.6	1182.7	1182.7
78	6370	1182.5	1182.6	1182.8	1182.8	1182.8	1182.8	1182.8	1182.8	1182.8	1182.8	1182.8	1182.8	1182.8	1182.8	1182.8	1182.9	1183	1183.1	1183.1
77	6570	1183	1183.1	1183.2	1183.2	1183.2	1183.2	1183.2	1183.2	1183.2	1183.2	1183.2	1183.1	1183.1	1183.1	1183.1	1183.2	1183.3	1183.3	1183.3
77	6670	1183.2	1183.3	1183.4	1183.4	1183.4	1183.4	1183.4	1183.4	1183.4	1183.4	1183.3	1183.3	1183.3	1183.3	1183.3	1183.4	1183.4	1183.6	1183.6
76	6852	1183.6	1183.5	1183.5	1183.5	1183.5	1183.5	1183.5	1183.5	1183.5	1183.4	1183.4	1183.4	1183.4	1183.4	1183.5	1183.6	1183.7	1183.7	1183.7
76	6940	1183.8	1183.7	1183.7	1183.7	1183.7	1183.7	1183.7	1183.7	1183.7	1183.7	1183.7	1183.6	1183.6	1183.6	1183.7	1183.8	1183.8	1183.8	1183.9
75	7070	1184.1	1184.1	1184.1	1184.1	1184.1	1184.1	1184.1	1184.1	1184.1	1184.1	1183.9	1183.8	1183.8	1183.8	1183.9	1184	1184.1	1184.2	1184.3
75	7170	1184.1	1184.1	1184.1	1184.1	1184.1	1184.1	1184.1	1184.1	1184.1	1183.9	1183.8	1183.8	1183.7	1183.7	1183.8	1183.9	1184	1184.1	1184.2
75	7223	1184.1	1184.1	1184.1	1184.1	1184.1	1184.1	1184.1	1184.1	1184.1	1183.9	1183.8	1183.8	1183.7	1183.7	1183.8	1183.9	1184	1184.1	1184.2
74	7260	1184.2	1184.2	1184.4	1184.5	1184.5	1184.5	1184.5	1184.5	1184.4	1184.3	1184.2	1184.2	1184.1	1184.3	1184.7	1185	1185.1	1185.1	1185.1
74	7305	1184.2	1184.2	1184.4	1184.5	1184.5	1184.5	1184.5	1184.5	1184.4	1184.3	1184.2	1184.2	1184.1	1184.3	1184.7	1185	1185.1	1185.1	1185.1
74	7310	1185.8	1185.8	1186.1	1186.1	1186.1	1186.1	1186.1	1186.1	1186	1185.9	1185.8	1185.7	1185.7	1185.9	1186.3	1186.6	1186.7	1186.7	1186.7
73	7330	1192.3	1192.3	1192.3	1192.3	1192.3	1192.3	1192.3	1192.3	1192.3	1192.3	1192.3	1192.3	1192.3	1192.3	1192.3	1192.3	1192.3	1192.3	1192.3
73	7339	1192.3	1192.3	1192.3	1192.3	1192.3	1192.3	1192.3	1192.3	1192.3	1192.3	1192.3	1192.3	1192.3	1192.3	1192.3	1192.3	1192.3	1192.3	1192.3
73	7340	1194.8	1194.8	1194.8	1194.8	1194.8	1194.8	1194.8	1194.8	1194.8	1194.8	1194.8	1194.8	1194.8	1194.8	1194.8	1194.8	1194.8	1194.8	1194.8
72	7350	1194.8	1195.1	1195.4	1195.4	1195.4	1195.4	1195.3	1195.2	1195.2	1195.2	1195.2	1195.2	1195.3	1195.5	1195.7	1196	1196.2	1196.4	1196.5
72	7377	1194.8	1195	1195.3	1195.3	1195.3	1195.3	1195.3	1195.2	1195.2	1195.2	1195.2	1195.2	1195.3	1195.5	1195.7	1195.9	1196.1	1196.3	1196.4
71	7500	1195.4	1195.6	1195.8	1195.8	1195.8	1195.8	1195.9	1196	1196.1	1196.2	1196.3	1196.6	1196.8	1197.1	1197.2	1197.3	1197.3	1197.3	1197.3
71	7700	1196.4	1196.6	1196.8	1196.9	1196.9	1196.9	1197	1197.1	1197.2	1197.3	1197.5	1197.7	1197.9	1198.2	1198.4	1198.5	1198.5	1198.5	1198.5
70	7900	1197.4	1197.4	1197.5	1197.5	1197.5	1197.6	1197.7	1197.8	1198.1	1198.3	1198.6	1198.9	1199.2	1199.3	1199.3	1199.3	1199.2	1199.2	1199.2
70	8000	1197.9	1197.9	1198	1198	1198	1198.1	1198.2	1198.3	1198.6	1198.8	1199.1	1199.4	1199.7	1199.8	1199.8	1199.8	1199.7	1199.7	1199.7
69	8200	1198.9	1198.9	1198.9	1198.9	1198.9	1198.9	1198.9	1198.9	1199.1	1199.2	1199.4	1199.6	1199.8	1199.9	1199.9	1199.9	1199.9	1199.9	1199.9
69	8400	1199.9	1199.9	1199.9	1199.9	1199.9	1199.9	1199.9	1199.9	1200.1	1200.2	1200.4	1200.6	1200.8	1200.9	1200.9	1200.9	1200.9	1200.9	1200.9
69	8500	1200.4	1200.4	1200.4	1200.4	1200.4	1200.4	1200.4	1200.4	1200.6	1200.7	1200.9	1201.1	1201.3	1201.4	1201.4	1201.4	1201.4	1201.4	1201.4
68	8700	1201.4	1201.4	1201.4	1201.4	1201.4	1201.4	1201.4	1201.4	1201.4	1201.4	1201.4	1201.5	1201.6	1201.7	1201.7	1201.7	1201.7	1201.7	1201.7
68	8900	1202.4	1202.4	1202.4	1202.4	1202.4	1202.4	1202.4	1202.4	1202.4	1202.4	1202.4	1202.5	1202.6	1202.7	1202.7	1202.7	1202.7	1202.7	1202.7
67	9000	1202.9	1203	1203.1	1203.1	1203.1	1203.1	1203.1	1203.2	1203.3	1203.4	1203.5	1203.6	1203.7	1203.8	1203.8	1203.7	1203.7	1203.7	1203.7
67	9100	1203.4	1203.5	1203.6	1203.6	1203.6	1203.6	1203.6	1203.7	1203.8	1203.9	1204	1204.1	1204.2	1204.3	1204.3	1204.2	1204.2	1204.2	1204.2
66	9271	1204.3	1204.3	1204.3	1204.3	1204.3	1204.3	1204.3	1204.3	1204.3	1204.3	1204.3	1204.3	1204.3	1204.3	1204.3	1204.3	1204.3	1204.3	1204.3
66	9295	1204.4	1204.4	1204.4	1204.4	1204.4	1204.4	1204.4	1204.4	1204.4	1204.4	1204.4	1204.4	1204.4	1204.4	1204.4	1204.4	1204.4	1204.4	1204.4
66	9405	1204.9	1204.9	1204.9	1204.9	1204.9	1204.9	1204.9	1204.9	1204.9	1204.9	1204.9	1204.9	1204.9	1204.9	1204.9	1204.9	1204.9	1204.9	1204.9

Table B.1 QUASED Output for Minimum Bed Elevation (continued)

Reach	Section	Initial Bed Elev.	Discretized time step t=1	2	3	4	5	6	7	8	9	10	11	12	13	14	15	16	17	18
66	9471	1205.2	1205.2	1205.2	1205.2	1205.2	1205.2	1205.2	1205.2	1205.2	1205.2	1205.2	1205.2	1205.2	1205.2	1205.2	1205.2	1205.2	1205.2	1205.2
65	9500	1205.4	1205.4	1205.4	1205.4	1205.4	1205.4	1205.4	1205.4	1205.4	1205.4	1205.4	1205.4	1205.4	1205.4	1205.3	1205.3	1205.2	1205.2	1205.2
65	9700	1206.4	1206.4	1206.4	1206.4	1206.4	1206.4	1206.4	1206.4	1206.4	1206.4	1206.4	1206.4	1206.4	1206.4	1206.3	1206.3	1206.2	1206.2	1206.2
65	9800	1206.9	1206.9	1206.9	1206.9	1206.9	1206.9	1206.9	1206.9	1206.9	1206.9	1206.9	1206.9	1206.9	1206.9	1206.8	1206.8	1206.7	1206.7	1206.7
64	10000	1207.9	1207.9	1207.9	1207.9	1207.9	1207.9	1207.9	1207.9	1207.9	1207.9	1207.9	1207.9	1207.9	1207.8	1207.9	1207.9	1207.9	1207.9	1207.9
64	10025	1207.9	1207.9	1207.9	1207.9	1207.9	1207.9	1207.9	1207.9	1207.9	1207.9	1207.9	1207.9	1207.9	1207.8	1207.9	1207.9	1207.9	1207.9	1207.9
64	10100	1208.4	1208.4	1208.4	1208.4	1208.4	1208.4	1208.4	1208.4	1208.4	1208.4	1208.4	1208.4	1208.4	1208.3	1208.3	1208.3	1208.3	1208.3	1208.3
63	10200	1208.9	1208.9	1208.8	1208.8	1208.8	1208.8	1208.8	1208.8	1208.8	1208.8	1208.7	1208.6	1208.6	1208.6	1208.6	1208.5	1208.5	1208.5	1208.5
63	10400	1209.9	1209.9	1209.8	1209.8	1209.8	1209.8	1209.8	1209.8	1209.8	1209.7	1209.6	1209.5	1209.4	1209.4	1209.4	1209.4	1209.4	1209.4	1209.4
62	10600	1210.9	1210.9	1210.7	1210.7	1210.7	1210.7	1210.7	1210.6	1210.6	1210.5	1210.4	1210.3	1210.2	1210.1	1210.1	1210.1	1210.1	1210.1	1210.1
62	10800	1211.9	1211.9	1211.7	1211.7	1211.7	1211.7	1211.7	1211.6	1211.6	1211.5	1211.4	1211.3	1211.2	1211.1	1211.1	1211.1	1211.1	1211.1	1211.1
61	10900	1212.4	1212.1	1211.9	1211.9	1211.9	1211.9	1211.8	1211.9	1211.8	1211.8	1211.6	1211.5	1211.4	1211.3	1211.3	1211.3	1211.3	1211.3	1211.3
61	11000	1212.9	1212.5	1212.2	1212.2	1212.2	1212.2	1212.2	1212.1	1212	1211.9	1211.8	1211.7	1211.6	1211.5	1211.5	1211.5	1211.5	1211.5	1211.5
61	11095	1213.4	1213	1212.7	1212.7	1212.7	1212.7	1212.7	1212.6	1212.5	1212.4	1212.3	1212.2	1212.1	1212	1212	1212	1212	1212	1212
60	11100	1216.9	1216.9	1216.9	1216.9	1216.9	1216.9	1216.9	1216.9	1216.9	1216.9	1216.9	1216.9	1216.9	1216.9	1216.9	1216.9	1216.9	1216.9	1216.9
60	11150	1216.9	1216.9	1216.9	1216.9	1216.9	1216.9	1216.9	1216.9	1216.9	1216.9	1216.9	1216.9	1216.9	1216.9	1216.9	1216.9	1216.9	1216.9	1216.9
59	11230	1217.1	1217.1	1217.1	1217.1	1217.1	1217.1	1217.1	1217.1	1217.1	1217	1217	1216.9	1216.9	1216.9	1216.9	1216.9	1216.9	1216.9	1216.9
59	11238	1217.1	1217.1	1217.1	1217.1	1217.1	1217.1	1217.1	1217.1	1217.1	1217	1217	1216.9	1216.9	1216.9	1216.9	1216.9	1216.9	1216.9	1216.9
59	11305	1217.1	1217.1	1217.1	1217.1	1217.1	1217.1	1217.1	1217.1	1217.1	1217	1217	1216.9	1216.9	1216.9	1216.9	1216.9	1216.9	1216.9	1216.9
59	11310	1217.2	1217.2	1217.2	1217.2	1217.2	1217.2	1217.2	1217.2	1217.2	1217.1	1217.1	1217	1217	1217	1217	1217	1217	1217	1217
58	11400	1217.1	1217.1	1217.1	1217.1	1217.1	1217.1	1217.1	1217.1	1217.1	1217.1	1217.1	1217.1	1217	1217	1217	1217	1217	1217	1217
58	11500	1217.7	1217.7	1217.7	1217.7	1217.7	1217.7	1217.7	1217.7	1217.7	1217.7	1217.7	1217.7	1217.6	1217.6	1217.6	1217.6	1217.6	1217.6	1217.6
58	11700	1218.1	1218.1	1218.1	1218.1	1218.1	1218.1	1218.1	1218.1	1218.1	1218.1	1218.1	1218.1	1218	1218	1218	1218	1218	1218	1218
57	11900	1218.5	1218.5	1218.5	1218.5	1218.5	1218.5	1218.5	1218.5	1218.5	1218.5	1218.5	1218.5	1218.4	1218.4	1218.4	1218.4	1218.4	1218.4	1218.4
57	12000	1218.7	1218.7	1218.7	1218.7	1218.7	1218.7	1218.7	1218.7	1218.7	1218.7	1218.7	1218.7	1218.7	1218.6	1218.6	1218.6	1218.6	1218.6	1218.6
56	12200	1219.2	1219.2	1219.2	1219.2	1219.2	1219.2	1219.2	1219.2	1219.3	1219.3	1219.3	1219.3	1219.3	1219.3	1219.3	1219.3	1219.3	1219.3	1219.3
56	12400	1219.6	1219.6	1219.6	1219.6	1219.6	1219.6	1219.6	1219.6	1219.7	1219.7	1219.7	1219.7	1219.7	1219.7	1219.7	1219.7	1219.7	1219.7	1219.7
55	12500	1219.8	1219.8	1219.8	1219.8	1219.8	1219.8	1219.8	1219.9	1219.9	1219.9	1220	1219.9	1219.9	1219.9	1219.9	1219.9	1219.9	1219.9	1219.9
55	12645	1220.1	1220.1	1220.1	1220.1	1220.1	1220.1	1220.2	1220.2	1220.2	1220.3	1220.3	1220.2	1220.2	1220.2	1220.2	1220.2	1220.2	1220.2	1220.2
54	12650	1221	1221	1221	1221	1221	1221	1221	1221	1221	1221	1221	1221	1221	1221	1221	1221	1221	1221	1221
54	12660	1221	1221	1221	1221	1221	1221	1221	1221	1221	1221	1221	1221	1221	1221	1221	1221	1221	1221	1221
53	12784	1221.2	1221.2	1221.3	1221.2	1221.2	1221.2	1221.2	1221.2	1221.2	1221.2	1221.1	1221.1	1221.1	1221.1	1221.1	1221.1	1221.1	1221.1	1221.1
53	12822	1221.3	1221.3	1221.3	1221.3	1221.3	1221.3	1221.3	1221.3	1221.3	1221.3	1221.2	1221.2	1221.2	1221.2	1221.2	1221.2	1221.2	1221.2	1221.2
53	12853	1221.4	1221.4	1221.4	1221.5	1221.5	1221.5	1221.5	1221.5	1221.5	1221.5	1221.4	1221.4	1221.4	1221.4	1221.4	1221.4	1221.4	1221.4	1221.4
52	12884	1221.4	1221.2	1221.1	1221.1	1221.1	1221.1	1221.1	1221.1	1221.1	1221.1	1220.9	1220.8	1220.8	1220.8	1220.8	1220.8	1220.8	1220.8	1220.8
52	12981	1221.6	1221.3	1221.2	1221.2	1221.2	1221.2	1221.2	1221.2	1221.2	1221.1	1221	1220.9	1220.9	1220.9	1220.9	1220.9	1220.9	1220.9	1221.1

Table B.1 QUASED Output for Minimum Bed Elevation (continued)

Reach	Section	Initial Bed Elev.	Discretized time step t=1	2	3	4	5	6	7	8	9	10	11	12	13	14	15	16	17	18
52	13050	1221.8	1221.5	1221.4	1221.4	1221.4	1221.4	1221.4	1221.4	1221.4	1221.3	1221.2	1221.1	1221.1	1221.1	1221.1	1221.1	1221.1	1221.1	1221.1
51	13131	1221.9	1221.8	1221.7	1221.7	1221.7	1221.7	1221.7	1221.7	1221.7	1221.6	1221.5	1221.4	1221.3	1221.3	1221.3	1221.3	1221.3	1221.3	1221.3
51	13206	1222.1	1222	1221.9	1221.9	1221.9	1221.9	1221.9	1221.9	1221.9	1221.8	1221.7	1221.6	1221.5	1221.5	1221.5	1221.5	1221.5	1221.5	1221.5
51	13300	1222.2	1222.1	1222	1222	1222	1222	1222	1222	1222	1221.9	1221.8	1221.7	1221.6	1221.6	1221.6	1221.6	1221.6	1221.6	1221.6
51	13400	1222.4	1222.3	1222.1	1222.1	1222.1	1222.1	1222.1	1222.1	1222.1	1222	1221.9	1221.8	1221.7	1221.7	1221.7	1221.7	1221.7	1221.7	1221.7
50	13500	1222.6	1222.7	1223	1223	1223	1223	1223.1	1223.1	1223.1	1223.1	1223	1222.9	1222.9	1222.9	1222.9	1222.9	1222.9	1222.9	1222.9
50	13600	1222.8	1222.9	1223.2	1223.2	1223.2	1223.2	1223.3	1223.3	1223.3	1223.3	1223.2	1223.2	1223.1	1223.1	1223.1	1223.1	1223.1	1223.1	1223.1
49	13700	1223	1223.1	1223.4	1223.4	1223.4	1223.4	1223.5	1223.5	1223.5	1223.5	1223.4	1223.4	1223.4	1223.4	1223.4	1223.4	1223.4	1223.4	1223.4
49	13800	1223.2	1223.3	1223.6	1223.6	1223.6	1223.6	1223.7	1223.7	1223.7	1223.7	1223.6	1223.6	1223.6	1223.6	1223.6	1223.6	1223.6	1223.6	1223.6
49	13900	1223.4	1223.5	1223.8	1223.8	1223.8	1223.8	1223.9	1223.9	1223.9	1223.9	1223.8	1223.8	1223.8	1223.8	1223.8	1223.8	1223.8	1223.8	1223.8
48	14000	1223.6	1223.7	1224	1224	1224	1224	1224	1224	1224	1224	1223.9	1223.9	1223.9	1223.9	1223.9	1223.9	1223.9	1223.9	1223.9
48	14100	1223.8	1223.9	1224.2	1224.2	1224.2	1224.2	1224.2	1224.2	1224.2	1224.2	1224.2	1224.1	1224.1	1224.1	1224.1	1224.1	1224.1	1224.1	1224.1
48	14200	1224	1224.1	1224.4	1224.4	1224.4	1224.4	1224.4	1224.4	1224.4	1224.4	1224.3	1224.3	1224.3	1224.3	1224.3	1224.3	1224.3	1224.3	1224.3
47	14300	1224.2	1224.5	1224.8	1224.8	1224.9	1225	1225	1225	1225	1225	1225	1225	1225.1	1225.1	1225.1	1225.1	1225.1	1225.1	1225.1
47	14400	1224.4	1224.7	1225	1225.1	1225.1	1225.2	1225.2	1225.2	1225.2	1225.2	1225.2	1225.2	1225.3	1225.3	1225.3	1225.3	1225.3	1225.3	1225.3
46	14500	1224.6	1224.8	1225	1225	1225.1	1225	1225	1225	1225	1225	1225	1225	1225	1225	1225	1225	1225	1225	1225
46	14700	1224.9	1225.1	1225.4	1225.4	1225.5	1225.5	1225.6	1225.6	1225.6	1225.6	1225.6	1225.6	1225.6	1225.6	1225.7	1225.7	1225.7	1225.6	1225.6
45	14900	1225.3	1225.4	1225.6	1225.6	1225.6	1225.6	1225.6	1225.6	1225.6	1225.5	1225.5	1225.5	1225.5	1225.5	1225.5	1225.6	1225.6	1225.7	1225.7
45	15000	1225.5	1225.6	1225.8	1225.8	1225.8	1225.8	1225.8	1225.8	1225.8	1225.7	1225.7	1225.7	1225.7	1225.7	1225.7	1225.8	1225.8	1225.8	1225.8
44	15200	1225.9	1226.1	1226.2	1226.3	1226.3	1226.3	1226.3	1226.1	1226	1225.9	1225.8	1225.9	1225.9	1225.9	1226	1226.1	1226.2	1226.2	1226.2
44	15400	1226.3	1226.5	1226.7	1226.8	1226.8	1226.8	1226.8	1226.6	1226.5	1226.4	1226.3	1226.3	1226.3	1226.3	1226.4	1226.5	1226.6	1226.6	1226.6
44	15495	1226.5	1226.7	1226.9	1227	1227	1227	1226.9	1226.8	1226.7	1226.6	1226.6	1226.6	1226.6	1226.6	1226.7	1226.8	1226.9	1226.9	1226.9
43	15500	1228.5	1228.5	1228.5	1228.5	1228.5	1228.5	1228.5	1228.5	1228.5	1228.5	1228.5	1228.5	1228.5	1228.5	1228.5	1228.5	1228.5	1228.5	1228.5
43	15510	1228.5	1228.5	1228.5	1228.5	1228.5	1228.5	1228.5	1228.5	1228.5	1228.5	1228.5	1228.5	1228.5	1228.5	1228.5	1228.5	1228.5	1228.5	1228.5
42	15700	1229.4	1228.9	1228.5	1228.5	1228.5	1228.4	1228.3	1228.2	1228.1	1228	1227.9	1227.8	1227.7	1227.7	1227.7	1227.7	1227.7	1227.7	1227.7
42	15900	1230.4	1229.9	1229.5	1229.5	1229.4	1229.4	1229.3	1229.2	1229.1	1229	1228.9	1228.8	1228.7	1228.7	1228.6	1228.6	1228.6	1228.6	1228.6
42	16000	1230.9	1230.4	1230.1	1230.1	1230.1	1230.1	1229.9	1229.8	1229.7	1229.6	1229.5	1229.4	1229.3	1229.3	1229.3	1229.3	1229.3	1229.3	1229.3
41	16100	1231.4	1232	1231.8	1231.8	1231.8	1231.7	1231.6	1231.5	1231.4	1231.3	1231.3	1231.4	1231.4	1231.4	1231.4	1231.4	1231.4	1231.4	1231.4
41	16200	1231.8	1232.3	1232.1	1232.1	1232.1	1232.1	1231.9	1231.9	1231.8	1231.8	1231.8	1231.8	1231.8	1231.8	1231.8	1231.8	1231.8	1231.8	1231.8
40	16400	1232.8	1233.6	1233.8	1233.8	1233.8	1233.8	1233.8	1233.8	1233.8	1233.9	1234	1234.1	1234.2	1234.3	1234.3	1234.3	1234.3	1234.1	1234.1
40	16500	1233.3	1234	1234.2	1234.2	1234.2	1234.2	1234.2	1234.2	1234.2	1234.3	1234.4	1234.5	1234.6	1234.7	1234.7	1234.7	1234.7	1234.6	1234.6
40	16600	1233.8	1234.5	1234.7	1234.7	1234.7	1234.7	1234.7	1234.7	1234.7	1234.8	1234.9	1235	1235.1	1235.2	1235.2	1235.2	1235.2	1235.1	1235.1
39	16700	1234.3	1234.4	1234.6	1234.6	1234.6	1234.6	1234.6	1234.7	1234.7	1234.8	1234.8	1234.9	1234.9	1234.9	1234.9	1234.9	1234.9	1234.9	1234.9
39	16800	1234.7	1234.8	1235	1235	1235	1235	1235	1235	1235.1	1235.2	1235.2	1235.3	1235.3	1235.4	1235.4	1235.4	1235.4	1235.4	1235.4
39	16900	1235.2	1235.3	1235.5	1235.5	1235.5	1235.5	1235.5	1235.5	1235.6	1235.7	1235.7	1235.8	1235.8	1235.9	1235.9	1235.9	1235.9	1235.9	1235.9
39	17000	1235.7	1235.8	1236	1236	1236	1236	1236	1236	1236.1	1236.2	1236.3	1236.4	1236.4	1236.5	1236.5	1236.5	1236.5	1236.5	1236.5

Table B.1 QUASED Output for Minimum Bed Elevation (continued)

Reach	Section	Initial Bed Elev.	Discretized time step t=1	2	3	4	5	6	7	8	9	10	11	12	13	14	15	16	17	18
38	17100	1236.2	1236.3	1236.2	1236.2	1236.2	1236.2	1236.2	1236.2	1236.2	1236.2	1236.2	1236.3	1236.3	1236.3	1236.3	1236.3	1236.3	1236.3	1236.3
38	17200	1236.7	1236.8	1236.7	1236.7	1236.7	1236.7	1236.7	1236.7	1236.7	1236.7	1236.7	1236.7	1236.8	1236.8	1236.8	1236.8	1236.8	1236.8	1236.8
38	17300	1237.1	1237.2	1237.1	1237.1	1237.1	1237.1	1237.1	1237.1	1237.1	1237.1	1237.1	1237.1	1237.2	1237.2	1237.2	1237.2	1237.2	1237.2	1237.2
37	17400	1237.6	1237.5	1237.3	1237.3	1237.3	1237.3	1237.3	1237.3	1237.3	1237.3	1237.3	1237.3	1237.3	1237.3	1237.3	1237.3	1237.3	1237.3	1237.3
37	17500	1238.1	1238	1237.8	1237.8	1237.8	1237.8	1237.8	1237.8	1237.8	1237.8	1237.8	1237.8	1237.8	1237.8	1237.8	1237.8	1237.8	1237.8	1237.8
36	17700	1239.1	1239.1	1238.9	1238.9	1238.8	1238.7	1238.6	1238.5	1238.4	1238.3	1238.3	1238.3	1238.2	1238.2	1238.2	1238.2	1238.2	1238.2	1238.2
36	17850	1239.8	1239.8	1239.6	1239.6	1239.5	1239.4	1239.3	1239.2	1239.1	1239	1239	1238.9	1238.9	1238.9	1238.9	1238.9	1238.9	1238.9	1238.9
35	17950	1240.3	1240.3	1240.3	1240.3	1240.3	1240.3	1240.3	1240.3	1240.3	1240.3	1240.3	1240.3	1240.3	1240.3	1240.3	1240.3	1240.3	1240.3	1240.3
35	17955	1245.8	1245.8	1245.8	1245.8	1245.8	1245.8	1245.8	1245.8	1245.8	1245.8	1245.8	1245.8	1245.8	1245.8	1245.8	1245.8	1245.8	1245.8	1245.8
35	17960	1245.9	1245.9	1245.9	1245.9	1245.9	1245.9	1245.9	1245.9	1245.9	1245.9	1245.9	1245.9	1245.9	1245.9	1245.9	1245.9	1245.9	1245.9	1245.9
34	18000	1246	1245.6	1245.2	1245.1	1245.1	1245.1	1245.1	1245.2	1245.3	1245.4	1245.4	1245.5	1245.5	1245.5	1245.6	1245.6	1245.6	1245.6	1245.6
34	18170	1247	1246.6	1246.2	1246.1	1246.1	1246.1	1246.1	1246.2	1246.3	1246.4	1246.5	1246.5	1246.5	1246.6	1246.6	1246.6	1246.6	1246.6	1246.6
33	18390	1248	1247.9	1247.9	1247.9	1247.9	1247.9	1247.9	1247.8	1247.7	1247.6	1247.6	1247.6	1247.6	1247.6	1247.6	1247.6	1247.6	1247.6	1247.6
33	18500	1248.5	1248.4	1248.4	1248.4	1248.4	1248.4	1248.4	1248.3	1248.2	1248.1	1248.1	1248.1	1248.1	1248.1	1248.1	1248.1	1248.1	1248.1	1248.1
32	18710	1249.5	1249.3	1249.1	1249.1	1249.1	1249.1	1249.1	1249.1	1249.1	1249.1	1249.1	1249.1	1249.1	1249.1	1249.1	1249.1	1249.1	1249.1	1249.1
32	18900	1251	1250.8	1250.6	1250.6	1250.6	1250.6	1250.6	1250.6	1250.6	1250.6	1250.6	1250.6	1250.6	1250.6	1250.6	1250.6	1250.6	1250.6	1250.6
31	19000	1251.5	1251.5	1251.5	1251.5	1251.5	1251.5	1251.5	1251.5	1251.5	1251.5	1251.4	1251.4	1251.3	1251.3	1251.3	1251.3	1251.3	1251.3	1251.3
31	19200	1252	1252	1252	1252	1252	1252	1252	1252	1252	1252	1251.9	1251.9	1251.8	1251.8	1251.9	1251.9	1251.9	1251.9	1251.9
30	19400	1253	1252.7	1252.4	1252.4	1252.4	1252.4	1252.4	1252.4	1252.4	1252.4	1252.4	1252.4	1252.3	1252.3	1252.3	1252.3	1252.3	1252.3	1252.3
30	19500	1253.8	1253.5	1253.2	1253.2	1253.2	1253.2	1253.2	1253.2	1253.2	1253.2	1253.2	1253.2	1253.1	1253.1	1253.1	1253.1	1253.1	1253.1	1253.1
29	19600	1254.2	1254.1	1254	1254	1254	1254	1253.9	1253.8	1253.7	1253.6	1253.5	1253.4	1253.3	1253.3	1253.3	1253.3	1253.3	1253.3	1253.3
29	19782	1254.5	1254.4	1254.3	1254.3	1254.3	1254.3	1254.3	1254.2	1254.1	1254	1253.9	1253.8	1253.8	1253.8	1253.8	1253.8	1253.8	1253.8	1253.8
28	19940	1255.3	1255.3	1255.3	1255.3	1255.3	1255.3	1255.3	1255.3	1255.3	1255.3	1255.3	1255.3	1255.3	1255.3	1255.3	1255.3	1255.3	1255.3	1255.3
28	20050	1255.4	1255.4	1255.4	1255.4	1255.4	1255.4	1255.4	1255.4	1255.4	1255.4	1255.4	1255.4	1255.4	1255.4	1255.4	1255.4	1255.4	1255.4	1255.4
28	20160	1255.4	1255.4	1255.4	1255.4	1255.4	1255.4	1255.4	1255.4	1255.4	1255.4	1255.4	1255.4	1255.4	1255.4	1255.4	1255.4	1255.4	1255.4	1255.4
27	20200	1255.4	1255.6	1255.8	1255.8	1255.8	1255.8	1255.8	1255.9	1256	1256.1	1256.2	1256.3	1256.4	1256.5	1256.5	1256.5	1256.5	1256.4	1256.3
27	20300	1255.9	1256.1	1256.3	1256.3	1256.3	1256.3	1256.3	1256.4	1256.5	1256.6	1256.7	1256.8	1256.9	1257	1257	1257	1257	1256.9	1256.8
26	20500	1256.9	1257	1257.1	1257.1	1257.1	1257.1	1257.2	1257.3	1257.4	1257.5	1257.6	1257.7	1257.8	1257.8	1257.8	1257.8	1257.8	1257.8	1257.8
26	20700	1257.8	1257.9	1258	1258	1258	1258	1258.1	1258.2	1258.3	1258.4	1258.5	1258.6	1258.7	1258.7	1258.7	1258.7	1258.7	1258.7	1258.7
25	20900	1258.8	1258.6	1258.3	1258.3	1258.3	1258.3	1258.3	1258.3	1258.3	1258.3	1258.3	1258.4	1258.5	1258.5	1258.5	1258.5	1258.5	1258.5	1258.5
25	21000	1259.3	1259.1	1258.8	1258.8	1258.8	1258.8	1258.8	1258.8	1258.8	1258.8	1258.8	1258.9	1259	1259	1259	1259	1259	1259	1259
24	21230	1260.4	1260.4	1260.4	1260.4	1260.4	1260.4	1260.4	1260.4	1260.4	1260.4	1260.4	1260.4	1260.4	1260.4	1260.4	1260.4	1260.4	1260.4	1260.4
24	21240	1260.5	1260.5	1260.5	1260.5	1260.5	1260.5	1260.5	1260.5	1260.5	1260.5	1260.5	1260.5	1260.5	1260.5	1260.5	1260.5	1260.5	1260.5	1260.5
23	21330	1260.9	1260.8	1260.7	1260.7	1260.7	1260.7	1260.7	1260.7	1260.7	1260.7	1260.7	1260.7	1260.7	1260.6	1260.6	1260.6	1260.6	1260.6	1260.6
23	21395	1264	1263.9	1263.8	1263.8	1263.8	1263.8	1263.8	1263.8	1263.8	1263.8	1263.8	1263.8	1263.8	1263.8	1263.8	1263.8	1263.8	1263.8	1263.8
23	21565	1264	1263.9	1263.8	1263.8	1263.8	1263.8	1263.8	1263.8	1263.8	1263.8	1263.8	1263.8	1263.8	1263.8	1263.8	1263.8	1263.8	1263.8	1263.8

Table B.1 QUASED Output for Minimum Bed Elevation (continued)

Reach	Section	Initial Bed Elev.	Discretized time step t=1	2	3	4	5	6	7	8	9	10	11	12	13	14	15	16	17	18
22	21700	1262.7	1263	1263.5	1263.5	1263.5	1263.5	1263.5	1263.5	1263.5	1263.5	1263.5	1263.4	1263.4	1263.5	1263.6	1263.6	1263.7	1263.8	1263.7
22	21900	1263.6	1263.8	1264.3	1264.3	1264.3	1264.3	1264.3	1264.3	1264.3	1264.3	1264.3	1264.3	1264.3	1264.3	1264.3	1264.4	1264.4	1264.4	1264.4
21	22000	1264.1	1264.4	1264.7	1264.7	1264.8	1264.8	1264.9	1265	1265.1	1265.2	1265.3	1265.4	1265.5	1265.5	1265.5	1265.5	1265.5	1265.5	1265.5
21	22200	1265.1	1265.4	1265.7	1265.7	1265.7	1265.8	1265.9	1266	1266.1	1266.2	1266.3	1266.4	1266.5	1266.5	1266.5	1266.5	1266.5	1266.5	1266.5
20	22400	1266	1265.9	1265.8	1265.8	1265.8	1265.8	1265.8	1265.8	1265.8	1265.8	1265.8	1265.8	1265.8	1265.8	1265.8	1265.8	1265.8	1265.8	1265.8
20	22500	1266.5	1266.4	1266.3	1266.3	1266.3	1266.3	1266.3	1266.3	1266.3	1266.3	1266.3	1266.3	1266.3	1266.3	1266.3	1266.3	1266.3	1266.3	1266.3
20	22510	1266.5	1266.4	1266.3	1266.3	1266.3	1266.3	1266.3	1266.3	1266.3	1266.3	1266.3	1266.3	1266.3	1266.3	1266.3	1266.3	1266.4	1266.4	1266.4
20	22520	1266.6	1266.5	1266.4	1266.4	1266.4	1266.4	1266.4	1266.4	1266.4	1266.4	1266.4	1266.4	1266.4	1266.4	1266.4	1266.4	1266.5	1266.5	1266.5
20	22540	1266.7	1266.6	1266.5	1266.5	1266.5	1266.5	1266.5	1266.5	1266.5	1266.5	1266.5	1266.5	1266.5	1266.5	1266.6	1266.6	1266.6	1266.6	1266.6
19	22560	1266.8	1266.6	1266.4	1266.4	1266.4	1266.4	1266.4	1266.3	1266.3	1266.2	1266.2	1266.1	1266.1	1266.1	1266.1	1266.1	1266.2	1266.2	1266.2
19	22580	1266.9	1266.7	1266.5	1266.5	1266.5	1266.5	1266.5	1266.4	1266.3	1266.3	1266.2	1266	1265.9	1266	1266	1266	1266.1	1266.1	1266.1
19	22600	1267	1266.8	1266.6	1266.6	1266.6	1266.6	1266.6	1266.5	1266.4	1266.3	1266.3	1266.1	1266.1	1266.1	1266.1	1266.1	1266.2	1266.2	1266.2
19	22620	1267.1	1266.9	1266.7	1266.7	1266.7	1266.7	1266.7	1266.6	1266.5	1266.4	1266.3	1266.2	1266.2	1266.2	1266.2	1266.2	1266.3	1266.3	1266.3
19	22640	1267.2	1267	1266.8	1266.8	1266.8	1266.8	1266.8	1266.7	1266.6	1266.5	1266.4	1266.3	1266.3	1266.2	1266.2	1266.2	1266.3	1266.3	1266.3
19	22660	1267.3	1267.1	1266.8	1266.9	1266.9	1266.9	1266.9	1266.8	1266.7	1266.6	1266.5	1266.4	1266.3	1266.3	1266.3	1266.3	1266.4	1266.4	1266.4
19	22680	1267.4	1267.2	1267	1267	1267	1267	1267	1266.9	1266.8	1266.7	1266.7	1266.5	1266.4	1266.4	1266.4	1266.4	1266.5	1266.5	1266.5
19	22700	1267.5	1267.3	1267.1	1267.1	1267.1	1267.1	1267.1	1267	1266.9	1266.8	1266.7	1266.6	1266.6	1266.5	1266.5	1266.5	1266.6	1266.6	1266.6
19	22720	1267.5	1267.3	1267.1	1267.1	1267.1	1267.1	1267.1	1267	1266.9	1266.8	1266.7	1266.6	1266.6	1266.5	1266.5	1266.5	1266.6	1266.6	1266.6
19	22740	1267.6	1267.4	1267.2	1267.1	1267.1	1267.1	1267.1	1267	1266.9	1266.8	1266.7	1266.6	1266.5	1266.5	1266.5	1266.5	1266.6	1266.6	1266.6
19	22760	1267.7	1267.5	1267.2	1267.2	1267.2	1267.2	1267.2	1267.1	1267	1266.9	1266.8	1266.7	1266.6	1266.6	1266.6	1266.6	1266.7	1266.7	1266.7
19	22780	1267.8	1267.6	1267.3	1267.3	1267.3	1267.3	1267.3	1267.2	1267.1	1267	1266.9	1266.8	1266.7	1266.7	1266.7	1266.7	1266.8	1266.8	1266.8
19	22800	1267.9	1267.7	1267.4	1267.4	1267.4	1267.3	1267.3	1267.2	1267.1	1267	1266.9	1266.8	1266.7	1266.7	1266.7	1266.7	1266.8	1266.8	1266.8
19	22820	1268	1267.8	1267.5	1267.5	1267.5	1267.4	1267.3	1267.3	1267.2	1267.1	1267	1266.9	1266.8	1266.8	1266.8	1266.8	1266.9	1266.9	1266.9
19	22840	1268.1	1267.9	1267.6	1267.6	1267.6	1267.6	1267.4	1267.4	1267.3	1267.2	1267.1	1267	1266.9	1266.9	1266.9	1266.9	1267	1267	1267
19	22860	1268.2	1268	1267.7	1267.7	1267.7	1267.7	1267.6	1267.5	1267.4	1267.3	1267.2	1267.1	1267	1267	1267	1267	1267.1	1267.1	1267.1
18	22877	1268.3	1268.3	1268.2	1268.2	1268.2	1268.2	1268.2	1268.2	1268.2	1268.3	1268.3	1268.3	1268.3	1268.3	1268.3	1268.2	1268.2	1268.2	1268.2
18	22900	1268.4	1268.4	1268.3	1268.3	1268.3	1268.3	1268.3	1268.3	1268.3	1268.4	1268.4	1268.4	1268.4	1268.3	1268.3	1268.3	1268.2	1268.2	1268.2
18	22920	1268.5	1268.5	1268.4	1268.4	1268.4	1268.4	1268.4	1268.4	1268.4	1268.5	1268.5	1268.5	1268.5	1268.4	1268.4	1268.3	1268.3	1268.3	1268.3
18	22940	1268.6	1268.6	1268.5	1268.5	1268.5	1268.5	1268.5	1268.5	1268.6	1268.6	1268.6	1268.6	1268.6	1268.6	1268.5	1268.4	1268.3	1268.4	1268.4
18	22960	1268.7	1268.7	1268.6	1268.6	1268.6	1268.6	1268.6	1268.6	1268.7	1268.7	1268.7	1268.7	1268.7	1268.7	1268.6	1268.6	1268.4	1268.5	1268.5
18	22980	1268.8	1268.8	1268.7	1268.7	1268.7	1268.7	1268.7	1268.7	1268.8	1268.8	1268.8	1268.8	1268.8	1268.8	1268.7	1268.7	1268.7	1268.7	1268.7
18	23000	1268.9	1268.9	1268.8	1268.8	1268.8	1268.8	1268.8	1268.8	1268.8	1268.9	1268.9	1268.9	1268.9	1268.9	1268.8	1268.8	1268.8	1268.8	1268.8
18	23100	1269.4	1269.4	1269.3	1269.3	1269.3	1269.3	1269.3	1269.3	1269.3	1269.4	1269.4	1269.4	1269.4	1269.3	1269.3	1269.3	1269.3	1269.3	1269.3
18	23200	1269.8	1269.8	1269.7	1269.7	1269.7	1269.7	1269.7	1269.7	1269.8	1269.8	1269.8	1269.8	1269.8	1269.8	1269.7	1269.7	1269.7	1269.7	1269.7
17	23300	1270.3	1270.3	1270.3	1270.3	1270.3	1270.3	1270.3	1270.3	1270.3	1270.3	1270.3	1270.3	1270.3	1270.3	1270.3	1270.3	1270.3	1270.3	1270.3
17	23310	1270.3	1270.3	1270.3	1270.3	1270.3	1270.3	1270.3	1270.3	1270.3	1270.3	1270.3	1270.3	1270.3	1270.3	1270.3	1270.3	1270.3	1270.3	1270.3

Table B.1 QUASED Output for Minimum Bed Elevation (continued)

Reach	Section	Initial Bed Elev.	Discretized time step t=1	2	3	4	5	6	7	8	9	10	11	12	13	14	15	16	17	18
16	23400	1270.8	1270.6	1270.5	1270.5	1270.5	1270.5	1270.5	1270.5	1270.5	1270.5	1270.4	1270.4	1270.3	1270.4	1270.4	1270.4	1270.4	1270.4	1270.4
16	23500	1271.3	1271.1	1271	1271	1271	1271	1271	1271	1271	1271	1270.9	1270.9	1270.8	1270.9	1270.9	1270.9	1270.9	1270.9	1270.9
16	23575	1271.7	1271.4	1271.3	1271.3	1271.3	1271.3	1271.3	1271.3	1271.3	1271.3	1271.2	1271.2	1271.2	1271.1	1271.1	1271.1	1271.1	1271.1	1271.1
15	23645	1271.7	1271.6	1271.4	1271.4	1271.4	1271.4	1271.4	1271.4	1271.4	1271.4	1271.4	1271.4	1271.4	1271.4	1271.4	1271.4	1271.4	1271.4	1271.4
15	23800	1272.7	1272.6	1272.4	1272.4	1272.4	1272.4	1272.4	1272.4	1272.4	1272.4	1272.4	1272.4	1272.4	1272.4	1272.4	1272.4	1272.4	1272.4	1272.4
15	24000	1273.7	1273.6	1273.4	1273.4	1273.4	1273.4	1273.4	1273.4	1273.4	1273.4	1273.4	1273.4	1273.4	1273.4	1273.4	1273.4	1273.4	1273.4	1273.4
14	24200	1274.7	1274.6	1274.5	1274.5	1274.5	1274.5	1274.5	1274.5	1274.5	1274.5	1274.5	1274.5	1274.4	1274.3	1274.4	1274.4	1274.4	1274.4	1274.4
14	24365	1275.4	1275.3	1275.2	1275.2	1275.2	1275.2	1275.2	1275.2	1275.2	1275.2	1275.2	1275.2	1275.2	1275.1	1275.1	1275.1	1275.1	1275.1	1275.1
13	24500	1276.1	1276.1	1276.1	1276.1	1276.1	1276.1	1276.1	1276.1	1276.1	1276.1	1276.1	1276.1	1276.1	1276.1	1276.1	1276.1	1276.1	1276.1	1276.1
13	24510	1279.1	1279.1	1279.1	1279.1	1279.1	1279.1	1279.1	1279.1	1279.1	1279.1	1279.1	1279.1	1279.1	1279.1	1279.1	1279.1	1279.1	1279.1	1279.1
12	24700	1279.1	1279.2	1279.4	1279.4	1279.4	1279.4	1279.4	1279.4	1279.4	1279.4	1279.4	1279.3	1279.3	1279.3	1279.3	1279.3	1279.3	1279.3	1279.3
12	24900	1279.1	1279.2	1279.4	1279.4	1279.4	1279.4	1279.4	1279.4	1279.4	1279.4	1279.4	1279.3	1279.3	1279.3	1279.3	1279.3	1279.3	1279.3	1279.3
11	25000	1279.1	1279.7	1280.4	1280.4	1280.4	1280.4	1280.4	1280.6	1280.6	1280.6	1280.6	1280.6	1280.6	1280.6	1280.6	1280.6	1280.6	1280.6	1280.6
11	25200	1279.4	1280	1280.7	1280.7	1280.7	1280.7	1280.8	1280.8	1280.9	1280.9	1280.9	1280.9	1280.9	1280.9	1280.9	1280.9	1280.9	1280.9	1280.9
10	25400	1280.6	1280.5	1280.6	1280.7	1280.8	1280.9	1281	1281.1	1281.1	1281.2	1281.2	1281.2	1281.2	1281.2	1281.2	1281.2	1281.2	1281.2	1281.2
10	25500	1281.2	1281.1	1281.2	1281.3	1281.4	1281.5	1281.6	1281.7	1281.7	1281.8	1281.8	1281.8	1281.8	1281.8	1281.8	1281.8	1281.8	1281.8	1281.8
10	25600	1281.8	1281.7	1281.8	1281.9	1282	1282.1	1282.2	1282.3	1282.3	1282.4	1282.4	1282.4	1282.3	1282.3	1282.3	1282.3	1282.3	1282.3	1282.3
9	25650	1282.1	1282.1	1282.1	1282.1	1282.1	1282.1	1282.1	1282.1	1282.1	1282.1	1282.1	1282.1	1282.1	1282.1	1282.1	1282.1	1282.1	1282.1	1282.1
9	25660	1283.1	1283.1	1283.1	1283.1	1283.1	1283.1	1283.1	1283.1	1283.1	1283.1	1283.1	1283.1	1283.1	1283.1	1283.1	1283.1	1283.1	1283.1	1283.1
8	25700	1283.1	1283.2	1283.3	1283.3	1283.3	1283.3	1283.3	1283.3	1283.2	1283.1	1283	1282.9	1282.8	1282.8	1282.8	1282.8	1282.8	1282.8	1282.8
8	25827	1283.1	1283.2	1283.3	1283.3	1283.3	1283.3	1283.3	1283.3	1283.2	1283.1	1283	1282.9	1282.8	1282.8	1282.8	1282.8	1282.8	1282.8	1282.8
8	25830	1283.2	1283.3	1283.3	1283.4	1283.4	1283.4	1283.4	1283.4	1283.3	1283.2	1283.1	1283	1282.9	1282.9	1282.9	1282.9	1282.9	1282.9	1282.9
8	25870	1283.4	1283.5	1283.6	1283.6	1283.6	1283.6	1283.6	1283.6	1283.5	1283.4	1283.3	1283.2	1283.1	1283.1	1283.1	1283.1	1283.1	1283.1	1283.1
8	26000	1284.2	1284.3	1284.4	1284.4	1284.4	1284.4	1284.4	1284.4	1284.3	1284.2	1284.1	1284	1283.9	1283.8	1283.9	1283.9	1283.9	1283.9	1283.9
7	26120	1285	1285	1284.8	1284.8	1284.8	1284.8	1284.8	1284.8	1284.8	1284.8	1284.8	1284.8	1284.8	1284.8	1284.8	1284.8	1284.8	1284.8	1284.8
7	26260	1287.5	1287.5	1287.4	1287.4	1287.4	1287.4	1287.4	1287.4	1287.4	1287.4	1287.4	1287.4	1287.4	1287.4	1287.4	1287.4	1287.4	1287.4	1287.4
7	26500	1289	1289	1288.9	1288.9	1288.9	1288.9	1288.9	1288.9	1288.9	1288.9	1288.9	1288.9	1288.9	1288.9	1288.9	1288.9	1288.9	1288.9	1288.9
6	26795	1290	1289.8	1289.5	1289.5	1289.5	1289.5	1289.4	1289.4	1289.3	1289.2	1289.1	1289	1288.9	1288.9	1288.9	1288.9	1288.9	1288.9	1288.9
6	27083	1293	1292.8	1292.5	1292.5	1292.5	1292.5	1292.4	1292.4	1292.3	1292.2	1292.1	1292.1	1291.9	1292	1292	1292	1292	1292	1292
5	27282	1296	1295.8	1295.5	1295.5	1295.5	1295.4	1295.3	1295.2	1295.1	1295	1294.9	1294.8	1294.7	1294.6	1294.6	1294.6	1294.6	1294.6	1294.6
5	27424	1297.5	1297.3	1297	1297	1297	1296.9	1296.8	1296.7	1296.6	1296.5	1296.4	1296.3	1296.2	1296.1	1296.1	1296.1	1296.1	1296.1	1296.1
4	27741	1298	1298	1297.9	1297.9	1297.9	1297.9	1297.9	1297.9	1297.8	1297.7	1297.6	1297.5	1297.4	1297.3	1297.3	1297.3	1297.3	1297.3	1297.3
3	27952	1298.2	1298.2	1298.2	1298.2	1298.2	1298.2	1298.2	1298.2	1298.2	1298.2	1298.2	1298.2	1298.2	1298.2	1298.2	1298.2	1298.2	1298.2	1298.2
3	27953	1296.9	1296.9	1296.9	1296.9	1296.9	1296.9	1296.9	1296.9	1296.9	1296.9	1296.9	1296.9	1296.9	1296.9	1296.9	1296.9	1296.9	1296.9	1296.9
3	27968	1296.9	1296.9	1296.9	1296.9	1296.9	1296.9	1296.9	1296.9	1296.9	1296.9	1296.9	1296.9	1296.9	1296.9	1296.9	1296.9	1296.9	1296.9	1296.9
3	27969	1299.8	1299.8	1299.8	1299.8	1299.8	1299.8	1299.8	1299.8	1299.8	1299.8	1299.8	1299.8	1299.8	1299.8	1299.8	1299.8	1299.8	1299.8	1299.8

Table B.1 QUASED Output for Minimum Bed Elevation (continued)

Reach	Section	Initial Bed Elev.	Discretized time step t=1	2	3	4	5	6	7	8	9	10	11	12	13	14	15	16	17	18
2	28023	1300.8	1300.8	1300.8	1300.8	1300.8	1300.8	1300.8	1300.8	1300.8	1300.8	1300.8	1300.8	1300.8	1300.8	1300.8	1300.8	1300.8	1300.8	1300.8
2	28038	1299	1299	1299	1299	1299	1299	1299	1299	1299	1299	1299	1299	1299	1299	1299	1299	1299	1299	1299
2	28252	1300	1300	1300	1300	1300	1300	1300	1300	1300	1300	1300	1300	1300	1300	1300	1300	1300	1300	1300
1	28545	1300	1300	1300	1300	1300	1300	1300	1300	1300	1300	1300	1300	1300	1300	1300	1300	1300	1300	1300
1	29023	1299.8	1299.8	1299.8	1299.8	1299.8	1299.8	1299.8	1299.8	1299.8	1299.8	1299.8	1299.8	1299.8	1299.8	1299.8	1299.8	1299.8	1299.8	1299.8

Table B.1 QUASED Output for Minimum Bed Elevation (continued)

Reach	Section	Discretized time step						Quased	Min	Max.	Max
		19	20	21	22	23	t=24	Diff.	Elev.	Diff	Scour
79	5724	1183.8	1183.9	1183.9	1183.9	1184.2	1184.3	1.3	1183.1	0.1	0.0
79	5814	1181.8	1181.8	1181.8	1181.8	1182.1	1182.2	0.8	1181.5	0.1	0.0
79	5970	1182.1	1182	1182	1182	1182.3	1182.4	0.8	1181.7	0.1	0.0
79	6070	1182.3	1182.2	1182.2	1182.2	1182.5	1182.6	0.8	1181.9	0.1	0.0
78	6170	1182.5	1182.5	1182.5	1182.5	1182.8	1182.9	0.9	1182.1	0.1	0.0
78	6236	1182.7	1182.7	1182.7	1182.7	1183	1183.1	0.9	1182.3	0.1	0.0
78	6370	1183.1	1183.1	1183.1	1183.1	1183.4	1183.5	1	1182.6	0.1	0.0
77	6570	1183.4	1183.4	1183.4	1183.4	1183.7	1183.7	0.7	1183.1	0.1	0.0
77	6670	1183.6	1183.6	1183.6	1183.6	1183.8	1183.9	0.7	1183.3	0.1	0.0
76	6852	1183.7	1183.7	1183.7	1183.7	1183.8	1183.8	0.2	1183.4	-0.2	0.2
76	6940	1183.9	1183.9	1183.9	1183.9	1184	1184	0.2	1183.6	-0.2	0.2
75	7070	1184.4	1184.4	1184.5	1184.5	1184.6	1184.6	0.5	1183.8	-0.3	0.3
75	7170	1184.3	1184.3	1184.4	1184.4	1184.5	1184.5	0.4	1183.7	-0.4	0.4
75	7223	1184.3	1184.3	1184.4	1184.4	1184.5	1184.5	0.4	1183.7	-0.4	0.4
74	7260	1185.1	1185.1	1185	1184.9	1184.9	1184.8	0.6	1184.1	-0.1	0.1
74	7305	1185.1	1185.1	1185	1184.9	1184.9	1184.8	0.6	1184.1	-0.1	0.1
74	7310	1186.7	1186.7	1186.6	1186.5	1186.5	1186.4	0.6	1185.7	-0.1	0.1
73	7330	1192.3	1192.3	1192.3	1192.3	1192.3	1192.3	0	1192.3	0	0.0
73	7339	1192.3	1192.3	1192.3	1192.3	1192.3	1192.3	0	1192.3	0	0.0
73	7340	1194.8	1194.8	1194.8	1194.8	1194.8	1194.8	0	1194.8	0	0.0
72	7350	1196.6	1196.7	1196.8	1196.9	1197.4	1197.4	2.6	1195.1	0.3	0.0
72	7377	1196.5	1196.6	1196.7	1196.8	1197.3	1197.2	2.4	1195	0.2	0.0
71	7500	1197.3	1197.3	1197.3	1197.3	1197.3	1197.4	2	1195.6	0.2	0.0
71	7700	1198.5	1198.5	1198.5	1198.5	1198.5	1198.6	2.2	1196.6	0.2	0.0
70	7900	1199.2	1199.2	1199.2	1199.2	1199.2	1199.2	1.8	1197.4	0	0.0
70	8000	1199.7	1199.7	1199.7	1199.7	1199.7	1199.7	1.8	1197.9	0	0.0
69	8200	1199.9	1199.9	1199.9	1199.9	1199.9	1199.9	1	1198.9	0	0.0
69	8400	1200.9	1200.9	1200.9	1200.9	1200.9	1200.9	1	1199.9	0	0.0
69	8500	1201.4	1201.4	1201.4	1201.4	1201.4	1201.4	1	1200.4	0	0.0
68	8700	1201.7	1201.7	1201.7	1201.7	1201.7	1201.7	0.3	1201.4	0	0.0
68	8900	1202.7	1202.7	1202.7	1202.7	1202.7	1202.7	0.3	1202.4	0	0.0
67	9000	1203.7	1203.7	1203.7	1203.7	1203.8	1203.8	0.9	1203	0.1	0.0
67	9100	1204.2	1204.2	1204.2	1204.2	1204.3	1204.3	0.9	1203.5	0.1	0.0
66	9271	1204.3	1204.3	1204.3	1204.3	1204.3	1204.3	0	1204.3	0	0.0
66	9295	1204.4	1204.4	1204.4	1204.4	1204.4	1204.4	0	1204.4	0	0.0
66	9405	1204.9	1204.9	1204.9	1204.9	1204.9	1204.9	0	1204.9	0	0.0

Table B.1 QUASED Output for Minimum Bed Elevation (continued)

Reach	Section	Discretized time step						Quased	Min	Max.	Max
		19	20	21	22	23	t=24	Diff.	Elev.	Diff	Scour
66	9471	1205.2	1205.2	1205.2	1205.2	1205.2	1205.2	0	1205.2	0	0.0
65	9500	1205.2	1205.2	1205.2	1205.2	1205.1	1205.1	-0.3	1205.1	-0.3	0.3
65	9700	1206.2	1206.2	1206.2	1206.2	1206.1	1206.1	-0.3	1206.1	-0.3	0.3
65	9800	1206.7	1206.7	1206.7	1206.7	1206.6	1206.6	-0.3	1206.6	-0.3	0.3
64	10000	1207.9	1207.9	1207.9	1207.9	1207.8	1207.8	-0.1	1207.8	-0.1	0.1
64	10025	1207.9	1207.9	1207.9	1207.9	1207.8	1207.8	-0.1	1207.8	-0.1	0.1
64	10100	1208.3	1208.3	1208.3	1208.3	1208.2	1208.2	-0.2	1208.2	-0.2	0.2
63	10200	1208.5	1208.5	1208.5	1208.5	1208.4	1208.4	-0.5	1208.4	-0.5	0.5
63	10400	1209.4	1209.4	1209.4	1209.4	1209.3	1209.3	-0.6	1209.3	-0.6	0.6
62	10600	1210.1	1210.1	1210.1	1210.1	1210.1	1210	-0.9	1210	-0.9	0.9
62	10800	1211.1	1211.1	1211.1	1211.1	1211.1	1211	-0.9	1211	-0.9	0.9
61	10900	1211.3	1211.3	1211.3	1211.3	1211.3	1211.3	-1.1	1211.3	-1.1	1.1
61	11000	1211.5	1211.5	1211.5	1211.5	1211.5	1211.5	-1.4	1211.5	-1.4	1.4
61	11095	1212	1212	1212	1212	1212	1212	-1.4	1212	-1.4	1.4
60	11100	1216.9	1216.9	1216.9	1216.9	1216.9	1216.9	0	1216.9	0	0.0
60	11150	1216.9	1216.9	1216.9	1216.9	1216.9	1216.9	0	1216.9	0	0.0
59	11230	1216.9	1216.9	1216.9	1216.9	1217.1	1217.1	0	1216.9	-0.2	0.2
59	11238	1216.9	1216.9	1216.9	1216.9	1217.1	1217.1	0	1216.9	-0.2	0.2
59	11305	1216.9	1216.9	1216.9	1216.9	1217.1	1217.1	0	1216.9	-0.2	0.2
59	11310	1217	1217	1217	1217	1217.2	1217.2	0	1217	-0.2	0.2
58	11400	1217	1217	1217	1217	1217.1	1217.1	0	1217	-0.1	0.1
58	11500	1217.6	1217.6	1217.6	1217.6	1217.7	1217.7	0	1217.6	-0.1	0.1
58	11700	1218	1218	1218	1218	1218.1	1218.1	0	1218	-0.1	0.1
57	11900	1218.4	1218.4	1218.4	1218.4	1218.4	1218.4	-0.1	1218.4	-0.1	0.1
57	12000	1218.6	1218.6	1218.6	1218.6	1218.6	1218.6	-0.1	1218.6	-0.1	0.1
56	12200	1219.3	1219.3	1219.3	1219.3	1219.3	1219.3	0.1	1219.2	0	0.0
56	12400	1219.7	1219.7	1219.7	1219.7	1219.7	1219.7	0.1	1219.6	0	0.0
55	12500	1219.9	1219.9	1219.9	1219.9	1219.9	1219.9	0.1	1219.8	0	0.0
55	12645	1220.2	1220.2	1220.2	1220.2	1220.2	1220.2	0.1	1220.1	0	0.0
54	12650	1221	1221	1221	1221	1221	1221	0	1221	0	0.0
54	12660	1221	1221	1221	1221	1221	1221	0	1221	0	0.0
53	12784	1221.1	1221.1	1221.1	1221.1	1221.2	1221.2	0	1221.1	-0.1	0.1
53	12822	1221.2	1221.2	1221.2	1221.2	1221.3	1221.3	0	1221.2	-0.1	0.1
53	12853	1221.4	1221.4	1221.4	1221.4	1221.5	1221.5	0.1	1221.4	0	0.0
52	12884	1220.8	1220.8	1220.8	1220.8	1221	1221	-0.4	1220.8	-0.6	0.6
52	12981	1221.1	1221.1	1221.2	1221.1	1221.4	1221.4	-0.2	1220.9	-0.7	0.7

Table B.1 QUASED Output for Minimum Bed Elevation (continued)

Reach	Section	Discretized time step						Quased	Min	Max.	Max
		19	20	21	22	23	t=24	Diff.	Elev.	Diff	Scour
52	13050	1221.1	1221.1	1221.1	1221.1	1221.3	1221.3	-0.5	1221.1	-0.7	0.7
51	13131	1221.3	1221.3	1221.3	1221.3	1221.4	1221.5	-0.4	1221.3	-0.6	0.6
51	13206	1221.5	1221.5	1221.5	1221.5	1221.6	1221.7	-0.4	1221.5	-0.6	0.6
51	13300	1221.6	1221.6	1221.6	1221.6	1221.7	1221.8	-0.4	1221.6	-0.6	0.6
51	13400	1221.7	1221.7	1221.7	1221.7	1221.8	1221.9	-0.5	1221.7	-0.7	0.7
50	13500	1222.9	1222.9	1222.9	1222.9	1222.8	1222.8	0.2	1222.7	0.1	0.0
50	13600	1223.1	1223.1	1223.1	1223.1	1222.9	1223	0.2	1222.9	0.1	0.0
49	13700	1223.4	1223.4	1223.4	1223.4	1223.4	1223.4	0.4	1223.1	0.1	0.0
49	13800	1223.6	1223.6	1223.6	1223.6	1223.6	1223.6	0.4	1223.3	0.1	0.0
49	13900	1223.8	1223.8	1223.8	1223.8	1223.8	1223.8	0.4	1223.5	0.1	0.0
48	14000	1223.9	1223.9	1223.9	1223.9	1224	1224	0.4	1223.7	0.1	0.0
48	14100	1224.1	1224.1	1224.1	1224.1	1224.2	1224.2	0.4	1223.9	0.1	0.0
48	14200	1224.3	1224.3	1224.3	1224.3	1224.4	1224.4	0.4	1224.1	0.1	0.0
47	14300	1225.1	1225.1	1225.1	1225.1	1225	1225.1	0.9	1224.5	0.3	0.0
47	14400	1225.3	1225.3	1225.3	1225.3	1225.2	1225.3	0.9	1224.7	0.3	0.0
46	14500	1225	1225	1225	1225	1225.1	1225.1	0.5	1224.8	0.2	0.0
46	14700	1225.6	1225.6	1225.6	1225.6	1225.8	1225.7	0.8	1225.1	0.2	0.0
45	14900	1225.6	1225.6	1225.6	1225.6	1225.8	1225.9	0.6	1225.4	0.1	0.0
45	15000	1225.8	1225.8	1225.8	1225.8	1226	1226.1	0.6	1225.6	0.1	0.0
44	15200	1226.2	1226.2	1226.2	1226.2	1226.4	1226.5	0.6	1225.8	-0.1	0.1
44	15400	1226.7	1226.7	1226.6	1226.6	1226.8	1226.9	0.6	1226.3	0	0.0
44	15495	1226.9	1226.9	1226.9	1226.9	1227.1	1227.2	0.7	1226.6	0.1	0.0
43	15500	1228.5	1228.5	1228.5	1228.5	1228.5	1228.5	0	1228.5	0	0.0
43	15510	1228.5	1228.5	1228.5	1228.5	1228.5	1228.5	0	1228.5	0	0.0
42	15700	1227.7	1227.7	1227.7	1227.7	1227.8	1227.8	-1.6	1227.7	-1.7	1.7
42	15900	1228.7	1228.8	1228.8	1228.8	1228.9	1228.9	-1.5	1228.6	-1.8	1.8
42	16000	1229.3	1229.3	1229.3	1229.3	1229.4	1229.4	-1.5	1229.3	-1.6	1.6
41	16100	1231.4	1231.4	1231.4	1231.4	1231.3	1231.2	-0.2	1231.2	-0.2	0.2
41	16200	1231.8	1231.8	1231.8	1231.8	1231.7	1231.7	-0.1	1231.7	-0.1	0.1
40	16400	1234.1	1234.1	1234.1	1234.1	1233.9	1233.8	1	1233.6	0.8	0.0
40	16500	1234.6	1234.6	1234.6	1234.6	1234.4	1234.3	1	1234	0.7	0.0
40	16600	1235.1	1235.1	1235.1	1235.1	1234.9	1234.8	1	1234.5	0.7	0.0
39	16700	1234.9	1234.9	1234.9	1234.9	1234.8	1234.8	0.5	1234.4	0.1	0.0
39	16800	1235.4	1235.4	1235.4	1235.4	1235.3	1235.3	0.6	1234.8	0.1	0.0
39	16900	1235.9	1235.9	1235.9	1235.9	1235.8	1235.8	0.6	1235.3	0.1	0.0
39	17000	1236.5	1236.5	1236.5	1236.5	1236.4	1236.4	0.7	1235.8	0.1	0.0

Table B.1 QUASED Output for Minimum Bed Elevation (continued)

Reach	Section	Discretized time step						Quased	Min	Max.	Max
		19	20	21	22	23	t=24	Diff.	Elev.	Diff	Scour
38	17100	1236.3	1236.3	1236.3	1236.3	1236.4	1236.4	0.2	1236.2	0	0.0
38	17200	1236.8	1236.8	1236.8	1236.8	1236.9	1236.9	0.2	1236.7	0	0.0
38	17300	1237.2	1237.2	1237.2	1237.2	1237.3	1237.3	0.2	1237.1	0	0.0
37	17400	1237.3	1237.3	1237.3	1237.3	1237.5	1237.5	-0.1	1237.3	-0.3	0.3
37	17500	1237.8	1237.8	1237.8	1237.8	1238	1238	-0.1	1237.8	-0.3	0.3
36	17700	1238.2	1238.2	1238.2	1238.2	1238.3	1238.4	-0.7	1238.2	-0.9	0.9
36	17850	1238.9	1238.9	1238.9	1238.9	1239	1239.1	-0.7	1238.9	-0.9	0.9
35	17950	1240.3	1240.3	1240.3	1240.3	1240.3	1240.3	0	1240.3	0	0.0
35	17955	1245.8	1245.8	1245.8	1245.8	1245.8	1245.8	0	1245.8	0	0.0
35	17960	1245.9	1245.9	1245.9	1245.9	1245.9	1245.9	0	1245.9	0	0.0
34	18000	1245.6	1245.6	1245.6	1245.6	1245.5	1245.4	-0.6	1245.1	-0.9	0.9
34	18170	1246.6	1246.6	1246.6	1246.6	1246.5	1246.4	-0.6	1246.1	-0.9	0.9
33	18390	1247.6	1247.6	1247.6	1247.6	1247.6	1247.6	-0.4	1247.6	-0.4	0.4
33	18500	1248.1	1248.1	1248.1	1248.1	1248.1	1248.1	-0.4	1248.1	-0.4	0.4
32	18710	1249.1	1249.1	1249.1	1249.1	1249	1248.9	-0.6	1248.9	-0.6	0.6
32	18900	1250.6	1250.6	1250.6	1250.6	1250.5	1250.4	-0.6	1250.4	-0.6	0.6
31	19000	1251.3	1251.3	1251.3	1251.3	1251.4	1251.4	-0.1	1251.3	-0.2	0.2
31	19200	1251.9	1251.9	1251.9	1251.9	1252	1252	0	1251.8	-0.2	0.2
30	19400	1252.3	1252.3	1252.3	1252.3	1252.3	1252.3	-0.7	1252.3	-0.7	0.7
30	19500	1253.1	1253.1	1253.1	1253.1	1253.1	1253.1	-0.7	1253.1	-0.7	0.7
29	19600	1253.3	1253.3	1253.3	1253.3	1253.4	1253.4	-0.8	1253.3	-0.9	0.9
29	19782	1253.8	1253.8	1253.8	1253.8	1253.9	1253.9	-0.6	1253.8	-0.7	0.7
28	19940	1255.3	1255.3	1255.3	1255.3	1255.3	1255.3	0	1255.3	0	0.0
28	20050	1255.4	1255.4	1255.4	1255.4	1255.4	1255.4	0	1255.4	0	0.0
28	20160	1255.4	1255.4	1255.4	1255.4	1255.4	1255.4	0	1255.4	0	0.0
27	20200	1256.3	1256.2	1256.2	1256.2	1255.9	1255.8	0.4	1255.6	0.2	0.0
27	20300	1256.8	1256.7	1256.7	1256.7	1256.4	1256.3	0.4	1256.1	0.2	0.0
26	20500	1257.8	1257.8	1257.8	1257.8	1257.7	1257.7	0.8	1257	0.1	0.0
26	20700	1258.7	1258.7	1258.7	1258.7	1258.6	1258.6	0.8	1257.9	0.1	0.0
25	20900	1258.5	1258.5	1258.5	1258.5	1258.4	1258.4	-0.4	1258.3	-0.5	0.5
25	21000	1259	1259	1259	1259	1258.9	1258.9	-0.4	1258.8	-0.5	0.5
24	21230	1260.4	1260.4	1260.4	1260.4	1260.4	1260.4	0	1260.4	0	0.0
24	21240	1260.5	1260.5	1260.5	1260.5	1260.5	1260.5	0	1260.5	0	0.0
23	21330	1260.6	1260.6	1260.6	1260.6	1260.6	1260.6	-0.3	1260.6	-0.3	0.3
23	21395	1263.8	1263.8	1263.8	1263.8	1263.8	1263.8	-0.2	1263.8	-0.2	0.2
23	21565	1263.8	1263.8	1263.8	1263.8	1263.8	1263.8	-0.2	1263.8	-0.2	0.2

Table B.1 QUASED Output for Minimum Bed Elevation (continued)

Reach	Section	Discretized time step						Quased	Min	Max.	Max
		19	20	21	22	23	t=24	Diff.	Elev.	Diff	Scour
22	21700	1263.7	1263.7	1263.7	1263.7	1263.8	1263.9	1.2	1263	0.3	0.0
22	21900	1264.4	1264.4	1264.4	1264.4	1264.5	1264.6	1	1263.8	0.2	0.0
21	22000	1265.5	1265.5	1265.5	1265.5	1265.3	1265.3	1.2	1264.4	0.3	0.0
21	22200	1266.5	1266.5	1266.5	1266.5	1266.3	1266.3	1.2	1265.4	0.3	0.0
20	22400	1265.8	1265.8	1265.8	1265.8	1265.9	1265.9	-0.1	1265.8	-0.2	0.2
20	22500	1266.3	1266.3	1266.3	1266.3	1266.4	1266.4	-0.1	1266.3	-0.2	0.2
20	22510	1266.4	1266.4	1266.4	1266.4	1266.5	1266.5	0	1266.3	-0.2	0.2
20	22520	1266.5	1266.5	1266.5	1266.5	1266.7	1266.6	0	1266.4	-0.2	0.2
20	22540	1266.6	1266.6	1266.6	1266.6	1266.8	1266.7	0	1266.5	-0.2	0.2
19	22560	1266.2	1266.2	1266.2	1266.2	1266.3	1266.4	-0.4	1266.1	-0.7	0.7
19	22580	1266.1	1266.1	1266.1	1266.1	1266.2	1266.3	-0.6	1265.9	-1	1.0
19	22600	1266.2	1266.2	1266.2	1266.2	1266.3	1266.4	-0.6	1266.1	-0.9	0.9
19	22620	1266.3	1266.3	1266.3	1266.3	1266.4	1266.5	-0.6	1266.2	-0.9	0.9
19	22640	1266.3	1266.3	1266.3	1266.3	1266.4	1266.5	-0.7	1266.2	-1	1.0
19	22660	1266.4	1266.4	1266.4	1266.4	1266.5	1266.6	-0.7	1266.3	-1	1.0
19	22680	1266.5	1266.5	1266.5	1266.5	1266.6	1266.7	-0.7	1266.4	-1	1.0
19	22700	1266.6	1266.6	1266.6	1266.6	1266.7	1266.8	-0.7	1266.5	-1	1.0
19	22720	1266.6	1266.6	1266.6	1266.6	1266.7	1266.8	-0.7	1266.5	-1	1.0
19	22740	1266.6	1266.6	1266.6	1266.6	1266.7	1266.8	-0.8	1266.5	-1.1	1.1
19	22760	1266.7	1266.7	1266.7	1266.7	1266.8	1266.9	-0.8	1266.6	-1.1	1.1
19	22780	1266.8	1266.8	1266.8	1266.8	1266.9	1267	-0.8	1266.7	-1.1	1.1
19	22800	1266.8	1266.8	1266.8	1266.8	1266.9	1267	-0.9	1266.7	-1.2	1.2
19	22820	1266.9	1266.9	1266.9	1266.9	1267	1267.1	-0.9	1266.8	-1.2	1.2
19	22840	1267	1267	1267	1267	1267.1	1267.2	-0.9	1266.9	-1.2	1.2
19	22860	1267.1	1267.1	1267.1	1267.1	1267.2	1267.3	-0.9	1267	-1.2	1.2
18	22877	1268.2	1268.2	1268.2	1268.2	1268.1	1268.1	-0.2	1268.1	-0.2	0.2
18	22900	1268.2	1268.2	1268.2	1268.2	1268.1	1268.1	-0.3	1268.1	-0.3	0.3
18	22920	1268.3	1268.3	1268.3	1268.3	1268.2	1268.2	-0.3	1268.2	-0.3	0.3
18	22940	1268.4	1268.4	1268.4	1268.4	1268.3	1268.3	-0.3	1268.3	-0.3	0.3
18	22960	1268.5	1268.5	1268.5	1268.5	1268.4	1268.3	-0.3	1268.3	-0.4	0.4
18	22980	1268.7	1268.7	1268.7	1268.7	1268.6	1268.6	-0.2	1268.6	-0.2	0.2
18	23000	1268.8	1268.8	1268.8	1268.8	1268.7	1268.7	-0.2	1268.7	-0.2	0.2
18	23100	1269.3	1269.3	1269.3	1269.3	1269.2	1269.2	-0.2	1269.2	-0.2	0.2
18	23200	1269.7	1269.7	1269.7	1269.7	1269.6	1269.6	-0.2	1269.6	-0.2	0.2
17	23300	1270.3	1270.3	1270.3	1270.3	1270.3	1270.3	0	1270.3	0	0.0
17	23310	1270.3	1270.3	1270.3	1270.3	1270.3	1270.3	0	1270.3	0	0.0

Table B.1 QUASED Output for Minimum Bed Elevation (continued)

Reach	Section	Discretized time step						Quased	Min	Max.	Max
		19	20	21	22	23	t=24	Diff.	Elev.	Diff	Scour
16	23400	1270.4	1270.4	1270.4	1270.4	1270.4	1270.5	-0.3	1270.3	-0.5	0.5
16	23500	1270.9	1270.9	1270.9	1270.9	1270.9	1271	-0.3	1270.8	-0.5	0.5
16	23575	1271.1	1271.1	1271.1	1271.1	1271.2	1271.2	-0.5	1271.1	-0.6	0.6
15	23645	1271.4	1271.4	1271.4	1271.4	1271.3	1271.3	-0.4	1271.3	-0.4	0.4
15	23800	1272.4	1272.4	1272.4	1272.4	1272.3	1272.3	-0.4	1272.3	-0.4	0.4
15	24000	1273.4	1273.4	1273.4	1273.4	1273.3	1273.3	-0.4	1273.3	-0.4	0.4
14	24200	1274.4	1274.4	1274.4	1274.4	1274.3	1274.4	-0.3	1274.3	-0.4	0.4
14	24365	1275.1	1275.1	1275.1	1275.1	1275.1	1275.1	-0.3	1275.1	-0.3	0.3
13	24500	1276.1	1276.1	1276.1	1276.1	1276.1	1276.1	0	1276.1	0	0.0
13	24510	1279.1	1279.1	1279.1	1279.1	1279.1	1279.1	0	1279.1	0	0.0
12	24700	1279.3	1279.3	1279.3	1279.3	1279.4	1279.4	0.3	1279.2	0.1	0.0
12	24900	1279.3	1279.3	1279.3	1279.3	1279.4	1279.4	0.3	1279.2	0.1	0.0
11	25000	1280.6	1280.6	1280.6	1280.6	1280.6	1280.6	1.5	1279.7	0.6	0.0
11	25200	1280.9	1280.9	1280.9	1280.9	1280.9	1280.9	1.5	1280	0.6	0.0
10	25400	1281.2	1281.2	1281.2	1281.2	1281.3	1281.3	0.7	1280.5	-0.1	0.1
10	25500	1281.8	1281.8	1281.8	1281.8	1281.9	1281.9	0.7	1281.1	-0.1	0.1
10	25600	1282.3	1282.3	1282.3	1282.3	1282.4	1282.4	0.6	1281.7	-0.1	0.1
9	25650	1282.1	1282.1	1282.1	1282.1	1282.1	1282.1	0	1282.1	0	0.0
9	25660	1283.1	1283.1	1283.1	1283.1	1283.1	1283.1	0	1283.1	0	0.0
8	25700	1282.8	1282.8	1282.8	1282.8	1282.8	1282.8	-0.3	1282.8	-0.3	0.3
8	25827	1282.8	1282.8	1282.8	1282.8	1282.8	1282.8	-0.3	1282.8	-0.3	0.3
8	25830	1282.9	1282.9	1282.9	1282.9	1282.9	1282.9	-0.3	1282.9	-0.3	0.3
8	25870	1283.1	1283.1	1283.1	1283.1	1283.1	1283.2	-0.2	1283.1	-0.3	0.3
8	26000	1283.9	1283.9	1283.9	1283.9	1283.9	1284	-0.2	1283.8	-0.4	0.4
7	26120	1284.8	1284.8	1284.8	1284.8	1284.6	1284.5	-0.5	1284.5	-0.5	0.5
7	26260	1287.4	1287.4	1287.4	1287.4	1287.3	1287.2	-0.3	1287.2	-0.3	0.3
7	26500	1288.9	1288.9	1288.9	1288.9	1288.8	1288.8	-0.2	1288.8	-0.2	0.2
6	26795	1288.9	1288.9	1288.9	1288.9	1288.8	1288.8	-1.2	1288.8	-1.2	1.2
6	27083	1292	1292	1292	1292	1291.9	1291.9	-1.1	1291.9	-1.1	1.1
5	27282	1294.6	1294.6	1294.6	1294.6	1294.6	1294.5	-1.5	1294.5	-1.5	1.5
5	27424	1296.1	1296.1	1296.1	1296.1	1296.1	1296	-1.5	1296	-1.5	1.5
4	27741	1297.3	1297.3	1297.3	1297.3	1297.3	1297.3	-0.7	1297.3	-0.7	0.7
3	27952	1298.2	1298.2	1298.2	1298.2	1298.2	1298.2	0	1298.2	0	0.0
3	27953	1296.9	1296.9	1296.9	1296.9	1296.9	1296.9	0	1296.9	0	0.0
3	27968	1296.9	1296.9	1296.9	1296.9	1296.9	1296.9	0	1296.9	0	0.0
3	27969	1299.8	1299.8	1299.8	1299.8	1299.8	1299.8	0	1299.8	0	0.0

Table B.1 QUASED Output for Minimum Bed Elevation (continued)

Reach	Section	Discretized time step						Quased	Min	Max.	Max
		19	20	21	22	23	t=24	Diff.	Elev.	Diff	Scour
2	28023	1300.8	1300.8	1300.8	1300.8	1300.8	1300.8	0	1300.8	0	0.0
2	28038	1299	1299	1299	1299	1299	1299	0	1299	0	0.0
2	28252	1300	1300	1300	1300	1300	1300	0	1300	0	0.0
1	28545	1300	1300	1300	1300	1300	1300	0	1300	0	0.0
1	29023	1299.8	1299.8	1299.8	1299.8	1299.8	1299.8	0	1299.8	0	0.0

APPENDIX D

QUASED OUTPUT SUMMARIES

Steady State Output for Hydraulics

Table B.2 Steady State Output for Hydraulics

Reach	Last Section	Discharge (cfs)	Slope (ft/ft)	Depth (ft)	Average Depth	Velocity (ft/s)	TopWidt (ft)	Effective Width (ft)
1	6070	11000	0.002885	10.6	8.4	12.73	103	103
2	6370	11000	0.002136	11.5	9	11.49	107	107
3	6670	11000	0.002236	11.4	9	11.72	105	105
4	6940	11000	0.001956	11.7	9.1	11.1	109	109
5	7223	11000	0.001875	11.9	9.3	11	108	108
6	7310	11000	0.000672	13.1	11.2	7.39	134	134
7	7340	11000	0.00532	8.4	6.4	14.43	119	119
8	7377	11000	0.001406	9.6	8.1	8.69	160	160
9	7700	11000	0.000401	9.5	8.5	4.88	267	267
10	8000	11000	0.000775	7.8	7.1	6.04	258	258
11	8500	11000	0.00198	6	5.5	8.12	246	246
12	8900	11000	0.00446	4.7	4.4	10.56	238	238
13	9100	11000	0.004935	4.5	4.3	10.91	238	238
14	9471	11000	0.003735	5.2	5.1	10.05	217	217
15	9800	11000	0.003432	5.2	4.8	9.74	236	236
16	10100	11000	0.004047	5.1	4.7	10.41	226	226
17	10400	11000	0.005541	4.7	4.4	11.87	210	210
18	10800	11000	0.005225	5	4.6	11.89	200	200
19	11095	11000	0.005426	5.2	4.7	12.27	190	190
20	11150	11000	0.004985	5.5	5	12.09	184	184
21	11310	11000	0.003262	6.4	5.7	10.72	180	180
22	11700	11000	0.002333	7	6.2	9.57	186	186
23	12000	11000	0.002189	7.1	6.3	9.38	187	187
24	12400	11000	0.002202	7	6.3	9.39	187	187
25	12645	11000	0.00214	7.1	6.3	9.31	188	188
26	12660	11000	0.004481	5.7	5.2	11.82	180	180
27	12853	11000	0.002322	6.8	6	9.37	196	196
28	13050	11000	0.004395	7.3	6.1	12.24	152	152
29	13400	11000	0.002608	9.2	7.2	10.9	142	142
30	13600	11000	0.001109	10.5	8.4	8.07	162	162
31	13900	11000	0.000651	10.6	8.9	6.41	194	194
32	14200	11000	0.000647	10.3	8.7	6.3	202	202
33	14400	11000	0.001177	9.7	8	8.05	171	171
34	14700	11000	0.002443	9.1	7.3	10.91	138	138
35	15000	11000	0.003733	9	7	13.03	122	122
36	15495	11000	0.003556	9.7	7.3	13.06	116	116
37	15510	11000	0.004327	9.8	7.2	14.16	109	109
38	16000	11000	0.004618	10.9	7.4	14.82	101	101
39	16200	11000	0.001355	12.9	9.1	9.28	131	131
40	16600	11000	0.000761	12.1	9.4	7.18	163	163
41	17000	11000	0.001222	10.6	8.5	8.45	154	154
42	17300	11000	0.002498	8.9	7.7	11.29	127	127
43	17500	11000	0.003973	7.9	7	13.34	119	119
44	17850	11000	0.004958	7.5	6.6	14.39	117	117
45	17960	11000	0.004758	7	6.3	13.58	129	129
46	18170	11000	0.004345	7.1	6.5	13.23	129	129
47	18500	11000	0.002745	8.7	7.5	11.57	128	128
48	18900	11000	0.002986	7.9	7.1	11.58	135	135
49	19200	11000	0.003682	7.4	6.6	12.36	136	136
50	19500	11000	0.004408	6.9	6.3	13.1	134	134

Table B.2 Steady State Output for Hydraulics (continued)

Reach	Last Section	Discharge (cfs)	Slope (ft/ft)	Depth (ft)	Average Depth	Velocity (ft/s)	TopWidt (ft)	Effective Width (ft)
51	19782	11000	0.002824	7.8	7.1	11.14	141	141
52	20160	11000	0.001753	8.3	7.6	9.18	162	162
53	20300	11000	0.000599	9.2	8.3	5.88	227	227
54	20700	11000	0.001121	7.7	6.9	7.1	225	225
55	21000	11000	0.002163	6.3	5.5	8.53	236	236
56	21240	11000	0.003438	5.3	4.9	10.07	221	221
57	21565	11000	0.00424	5.1	4.2	9.61	281	281
58	21900	11000	0.001114	7.3	6.6	6.93	240	240
59	22200	11000	0.000888	6.4	6	5.81	315	315
60	22540	11000	0.004865	4.6	4.3	10.81	238	238
61	22860	11000	0.00475	5.6	5.2	12.05	177	177
62	23200	8400	0.001645	7.1	6.4	8.17	160	160
63	23310	8399	0.002623	6.2	5.5	9.39	163	163
64	23575	8399	0.00433	5.6	5	11.2	152	152
65	24000	8399	0.002886	6.1	5.4	9.7	161	161
66	24365	8399	0.004333	5.2	4.7	10.91	164	164
67	24510	8399	0.004666	4.9	4.5	10.8	175	175
68	24900	8400	0.00211	6.3	5.7	8.59	173	173
69	25200	8400	0.001319	7	6.3	7.3	183	183
70	25600	8399	0.00401	5.3	4.8	10.51	167	167
71	25660	8399	0.005665	4.9	4.4	11.98	158	158
72	26000	8399	0.003591	5.9	5.2	10.41	157	157
73	26500	8399	0.004253	4.9	4.4	10.12	194	194
74	27083	8400	0.005508	3.9	3.5	10.17	234	234
75	27424	8400	0.008436	3.2	3	9.92	280	280
76	27741	8399	0.002387	5.1	4.8	6.41	274	274
77	27969	8399	0.001714	7.2	7.1	5.05	239	239
78	28252	8400	0.000571	8	6.9	4.05	304	302
79	29023	8400	0.000486	8.1	6.6	3.19	490	490
1	6070	6700	0.003199	7.9	6.5	11.26	92	92
2	6370	6700	0.002158	8.7	7.1	9.91	95	95
3	6670	6700	0.00226	8.6	7.1	10.11	94	94
4	6940	6700	0.002018	8.9	7.2	9.66	97	97
5	7223	6700	0.001905	9	7.3	9.52	96	96
6	7310	6700	0.000645	10	8.8	6.18	124	124
7	7340	6699	0.005872	6.4	4.8	12.52	112	112
8	7377	6700	0.001558	7	6.1	7.62	147	147
9	7700	6700	0.000499	6.7	6.2	4.38	250	250
10	8000	6700	0.00127	5	4.7	5.9	241	241
11	8500	6699	0.003903	3.6	3.5	8.38	232	232
12	8900	6700	0.005007	3.3	3.2	9.1	230	230
13	9100	6699	0.004977	3.3	3.2	9.08	231	231
14	9471	6700	0.003807	3.8	3.8	8.39	215	215
15	9800	6700	0.004263	3.6	3.4	8.68	226	226
16	10100	6700	0.004368	3.7	3.5	8.89	218	218
17	10400	6699	0.005687	3.5	3.3	9.96	202	202
18	10800	6700	0.0052	3.8	3.5	9.91	192	192
19	11095	6699	0.005771	3.8	3.5	10.44	181	181
20	11150	6700	0.004918	4.2	3.8	10.03	176	176

Table B.2 Steady State Output for Hydraulics (continued)

Reach	Last Section	Discharge (cfs)	Slope (ft/ft)	Depth (ft)	Average Depth	Velocity (ft/s)	TopWidt (ft)	Effective Width (ft)
21	11310	6699	0.00301	4.9	4.5	8.76	170	170
22	11700	6700	0.002297	5.2	4.8	8	176	176
23	12000	6700	0.002146	5.3	4.8	7.83	177	177
24	12400	6700	0.002193	5.3	4.8	7.89	177	177
25	12645	6700	0.002119	5.3	4.9	7.8	177	177
26	12660	6700	0.004976	4.2	3.9	10.19	171	171
27	12853	6700	0.002359	5.1	4.6	7.93	184	184
28	13050	6699	0.004444	5.6	4.7	10.35	142	142
29	13400	6700	0.002448	7	5.9	9.3	125	125
30	13600	6700	0.001112	7.9	6.7	6.9	147	147
31	13900	6700	0.000665	7.9	6.9	5.49	178	178
32	14200	6700	0.000692	7.6	6.6	5.45	186	186
33	14400	6700	0.001323	7.1	6.1	7.11	155	155
34	14700	6700	0.002745	6.7	5.6	9.71	124	124
35	15000	6699	0.003781	6.8	5.5	11.25	108	108
36	15495	6700	0.003398	7.5	5.9	11.1	103	103
37	15510	6700	0.004594	7.4	5.7	12.52	95	95
38	16000	6699	0.00493	8.4	5.9	13.24	86	86
39	16200	6700	0.001375	9.9	7.3	8.11	114	114
40	16600	6700	0.000825	9	7.3	6.34	144	144
41	17000	6700	0.001535	7.5	6.3	7.79	137	137
42	17300	6700	0.003342	6.1	5.5	10.49	117	117
43	17500	6699	0.004993	5.5	5	12.12	110	110
44	17850	6699	0.005146	5.6	5	12.28	109	109
45	17960	6699	0.005207	5.1	4.7	11.72	122	122
46	18170	6700	0.004608	5.2	4.9	11.27	123	123
47	18500	6700	0.002994	6.4	5.7	10.07	118	118
48	18900	6700	0.003746	5.6	5.2	10.39	127	127
49	19200	6700	0.0041	5.4	4.9	10.68	128	128
50	19500	6700	0.004692	5.1	4.7	11.17	128	128
51	19782	6700	0.002818	5.8	5.4	9.33	135	135
52	20160	6700	0.001923	6	5.6	7.92	154	154
53	20300	6700	0.000667	6.7	6.2	5.11	214	214
54	20700	6699	0.001588	5.2	4.8	6.64	210	210
55	21000	6700	0.003449	4.1	3.8	8.44	210	210
56	21240	6699	0.00484	3.6	3.4	9.34	210	210
57	21565	6700	0.004508	3.7	3.3	8.36	249	249
58	21900	6700	0.000861	5.9	5.4	5.34	231	231
59	22200	6700	0.000873	4.8	4.6	4.79	306	306
60	22540	6699	0.005567	3.3	3.1	9.38	231	231
61	22860	6699	0.005098	4.1	3.9	10.26	170	170
62	23200	5500	0.002484	4.9	4.6	8	151	151
63	23310	5499	0.003892	4.3	3.9	9.19	152	152
64	23575	5499	0.005341	4.1	3.7	10.35	143	143
65	24000	5500	0.003226	4.6	4.2	8.66	152	152
66	24365	5499	0.004564	4	3.7	9.52	157	157
67	24510	5500	0.00503	3.7	3.5	9.47	168	168
68	24900	5500	0.001894	5.1	4.7	7.13	166	166
69	25200	5500	0.001203	5.6	5.1	6.1	176	176
70	25600	5499	0.004477	4	3.7	9.32	160	160

Table B.2 Steady State Output for Hydraulics (continued)

Reach	Last Section	Discharge (cfs)	Slope (ft/ft)	Depth (ft)	Average Depth	Velocity (ft/s)	TopWidt (ft)	Effective Width (ft)
71	25660	5499	0.006147	3.7	3.4	10.56	151	151
72	26000	5500	0.003547	4.7	4.2	8.94	149	149
73	26500	5500	0.004706	3.7	3.4	8.96	186	186
74	27083	5499	0.006072	3	2.7	8.94	228	228
75	27424	5499	0.009184	2.5	2.3	8.69	273	273
76	27741	5499	0.002131	4.1	3.9	5.28	268	268
77	27969	5500	0.001343	6	5.9	3.98	239	239
78	28252	5500	0.000491	6.6	5.7	3.33	293	291
79	29023	5500	0.000454	6.6	5.3	2.68	476	476
1	6070	4900	0.002972	6.8	5.6	9.93	88	88
2	6370	4900	0.002144	7.3	6.1	8.97	89	89
3	6670	4900	0.002267	7.2	6.1	9.16	88	88
4	6940	4900	0.002049	7.4	6.1	8.81	91	91
5	7223	4900	0.001907	7.6	6.3	8.62	90	90
6	7310	4900	0.000634	8.4	7.5	5.51	119	119
7	7340	4899	0.006179	5.5	4	11.36	109	109
8	7377	4900	0.001652	5.7	5.1	6.97	140	140
9	7700	4900	0.000594	5.3	5	4.11	242	242
10	8000	4900	0.001884	3.7	3.5	5.94	233	233
11	8500	4899	0.004774	2.8	2.7	7.96	227	227
12	8900	4899	0.004987	2.8	2.7	8.07	227	227
13	9100	4900	0.004985	2.8	2.7	8.07	227	227
14	9471	4900	0.003837	3.1	3.1	7.48	214	214
15	9800	4900	0.004636	2.9	2.8	7.92	221	221
16	10100	4900	0.004491	3	2.9	7.98	213	213
17	10400	4900	0.00561	2.9	2.8	8.82	199	199
18	10800	4899	0.005173	3.1	3	8.8	188	188
19	11095	4899	0.005837	3.1	3	9.32	177	177
20	11150	4900	0.005018	3.5	3.2	8.96	171	171
21	11310	4899	0.002871	4.1	3.8	7.72	166	166
22	11700	4900	0.002279	4.4	4	7.13	171	171
23	12000	4900	0.002116	4.4	4.1	6.97	172	172
24	12400	4900	0.002193	4.4	4.1	7.05	172	172
25	12645	4900	0.002111	4.4	4.1	6.96	172	172
26	12660	4899	0.005204	3.4	3.2	9.22	166	166
27	12853	4899	0.002386	4.2	3.9	7.11	178	178
28	13050	4899	0.004571	4.7	4	9.35	137	137
29	13400	4900	0.00239	5.9	5	8.31	120	120
30	13600	4900	0.001116	6.6	5.7	6.24	139	139
31	13900	4900	0.000681	6.6	5.8	4.97	170	170
32	14200	4900	0.000735	6.2	5.6	4.99	177	177
33	14400	4900	0.001449	5.8	5.1	6.59	147	147
34	14700	4900	0.00294	5.5	4.7	8.97	116	116
35	15000	4899	0.003717	5.7	4.8	10.13	102	102
36	15495	4899	0.003289	6.4	5.1	9.98	96	96
37	15510	4899	0.004763	6.2	4.9	11.54	87	87
38	16000	4900	0.005143	7	5.1	12.3	78	78
39	16200	4900	0.001393	8.4	6.3	7.44	105	105
40	16600	4900	0.000897	7.4	6.2	5.91	135	135

Table B.2 Steady State Output for Hydraulics (continued)

Reach	Last Section	Discharge (cfs)	Slope (ft/ft)	Depth (ft)	Average Depth	Velocity (ft/s)	TopWidt (ft)	Effective Width (ft)
41	17000	4900	0.00188	6	5.1	7.51	127	127
42	17300	4899	0.004054	4.8	4.4	10	111	111
43	17500	4900	0.005121	4.6	4.2	10.93	107	107
44	17850	4900	0.00511	4.6	4.2	10.98	105	105
45	17960	4899	0.005522	4.2	3.9	10.65	119	119
46	18170	4900	0.004809	4.3	4	10.18	120	120
47	18500	4900	0.003174	5.2	4.7	9.2	113	113
48	18900	4900	0.004389	4.5	4.2	9.7	123	123
49	19200	4899	0.003913	4.5	4.2	9.43	125	125
50	19500	4899	0.004965	4.1	3.9	10.14	125	125
51	19782	4900	0.002823	4.8	4.6	8.33	131	131
52	20160	4900	0.002046	4.9	4.6	7.2	151	151
53	20300	4900	0.000717	5.5	5.1	4.65	207	207
54	20700	4900	0.002092	4	3.8	6.43	203	203
55	21000	4900	0.004235	3.2	3	8.02	204	204
56	21240	4899	0.005003	3	2.8	8.39	206	206
57	21565	4899	0.004685	3.1	2.8	7.61	234	234
58	21900	4900	0.000742	5.1	4.8	4.53	227	227
59	22200	4900	0.000898	4	3.8	4.28	301	301
60	22540	4899	0.006235	2.6	2.5	8.65	227	227
61	22860	4899	0.005343	3.4	3.2	9.26	167	167
62	23200	4200	0.003141	3.9	3.7	7.81	146	146
63	23310	4199	0.004281	3.6	3.3	8.6	148	148
64	23575	4200	0.005453	3.4	3.2	9.45	140	140
65	24000	4200	0.003433	3.9	3.6	8.01	148	148
66	24365	4199	0.004569	3.4	3.2	8.63	154	154
67	24510	4199	0.005262	3.1	3	8.69	164	164
68	24900	4200	0.001764	4.4	4.1	6.32	163	163
69	25200	4200	0.001135	4.9	4.5	5.43	172	172
70	25600	4199	0.00484	3.3	3.1	8.65	157	157
71	25660	4199	0.006487	3.1	2.9	9.73	148	148
72	26000	4200	0.003511	4	3.6	8.09	144	144
73	26500	4200	0.004988	3.1	2.9	8.26	182	182
74	27083	4199	0.00634	2.6	2.3	8.16	226	226
75	27424	4199	0.009693	2.1	2	7.97	269	269
76	27741	4200	0.001988	3.5	3.4	4.67	265	265
77	27969	4200	0.00114	5.4	5.3	3.41	239	239
78	28252	4200	0.000433	5.9	5.1	2.9	287	286
79	29023	4200	0.000426	5.9	4.6	2.38	470	470
1	6070	2970	0.002531	5.3	4.5	7.97	82	82
2	6370	2970	0.002063	5.5	4.8	7.52	83	83
3	6670	2970	0.002246	5.4	4.7	7.76	81	81
4	6940	2970	0.002089	5.5	4.8	7.53	83	83
5	7223	2970	0.00191	5.7	4.9	7.33	83	83
6	7310	2970	0.000634	6.3	5.8	4.6	113	113
7	7340	2969	0.006892	4.3	2.9	9.78	105	105
8	7377	2970	0.001811	4.1	3.8	6	132	132
9	7700	2970	0.000855	3.6	3.4	3.79	232	232
10	8000	2969	0.003776	2.3	2.2	6.1	224	224

Table B.2 Steady State Output for Hydraulics (continued)

Reach	Last Section	Discharge (cfs)	Slope (ft/ft)	Depth (ft)	Average Depth	Velocity (ft/s)	TopWidt (ft)	Effective Width (ft)
11	8500	2969	0.005014	2.1	2	6.67	222	222
12	8900	2969	0.005044	2.1	2	6.68	222	222
13	9100	2970	0.004934	2.1	2	6.64	223	223
14	9471	2970	0.003909	2.3	2.3	6.21	213	213
15	9800	2969	0.004923	2.1	2.1	6.68	217	217
16	10100	2969	0.004602	2.2	2.2	6.63	208	208
17	10400	2969	0.0054	2.2	2.1	7.2	194	194
18	10800	2969	0.005127	2.3	2.2	7.26	183	183
19	11095	2969	0.005738	2.3	2.2	7.68	172	172
20	11150	2969	0.005227	2.6	2.4	7.48	165	165
21	11310	2970	0.002656	3.2	3	6.26	160	160
22	11700	2969	0.002264	3.3	3.1	5.91	164	164
23	12000	2970	0.00209	3.3	3.1	5.78	165	165
24	12400	2970	0.002196	3.3	3.1	5.86	165	165
25	12645	2970	0.002087	3.3	3.1	5.78	165	165
26	12660	2969	0.005578	2.5	2.4	7.78	160	160
27	12853	2969	0.002369	3.2	3	5.91	171	171
28	13050	2970	0.004692	3.4	3.2	8.18	121	121
29	13400	2970	0.002544	4.4	3.8	7.13	112	112
30	13600	2970	0.001138	4.9	4.4	5.31	129	129
31	13900	2970	0.000728	4.8	4.4	4.27	159	159
32	14200	2970	0.000847	4.4	4.1	4.37	167	167
33	14400	2970	0.001739	4.1	3.7	5.87	137	137
34	14700	2970	0.003168	4	3.6	7.74	108	108
35	15000	2970	0.003434	4.4	3.8	8.37	94	94
36	15495	2969	0.003114	4.9	4.1	8.37	87	87
37	15510	2969	0.005068	4.6	3.8	10.09	78	78
38	16000	2969	0.005515	5.3	4.1	10.89	68	68
39	16200	2970	0.001457	6.3	5	6.51	92	92
40	16600	2970	0.001105	5.3	4.6	5.36	122	122
41	17000	2970	0.002811	4	3.6	7.2	116	116
42	17300	2970	0.004722	3.4	3.2	8.76	106	106
43	17500	2970	0.005175	3.4	3.2	9.14	102	102
44	17850	2970	0.005016	3.5	3.2	9.11	101	101
45	17960	2969	0.006026	3	2.9	9.07	116	116
46	18170	2970	0.005132	3.1	3	8.6	117	117
47	18500	2970	0.003489	3.8	3.5	7.93	107	107
48	18900	2969	0.004833	3.2	3.1	8.31	118	118
49	19200	2970	0.003753	3.4	3.2	7.76	120	120
50	19500	2969	0.005434	3	2.9	8.65	121	121
51	19782	2970	0.002765	3.6	3.4	6.88	127	127
52	20160	2970	0.002309	3.5	3.4	6.18	145	145
53	20300	2970	0.000813	3.9	3.7	4.01	199	199
54	20700	2970	0.003205	2.6	2.5	6.07	195	195
55	21000	2970	0.004584	2.3	2.2	6.81	198	198
56	21240	2970	0.005223	2.2	2.1	7.02	201	201
57	21565	2969	0.004965	2.3	2.2	6.38	222	222
58	21900	2970	0.000587	4.1	3.9	3.49	221	221
59	22200	2970	0.001006	2.9	2.8	3.63	294	294
60	22540	2969	0.006745	1.9	1.8	7.29	222	222

Table B.2 Steady State Output for Hydraulics (continued)

Reach	Last Section	Discharge (cfs)	Slope (ft/ft)	Depth (ft)	Average Depth	Velocity (ft/s)	TopWidt (ft)	Effective Width (ft)
61	22860	2969	0.005732	2.5	2.4	7.82	162	162
62	23200	2270	0.002981	2.8	2.7	6.07	141	141
63	23310	2270	0.004428	2.5	2.3	6.92	141	141
64	23575	2269	0.005624	2.4	2.2	7.61	133	133
65	24000	2269	0.003932	2.6	2.5	6.65	140	140
66	24365	2270	0.004624	2.3	2.2	6.88	148	148
67	24510	2270	0.005865	2.1	2	7.11	159	159
68	24900	2270	0.001481	3.2	3.1	4.77	157	156
69	25200	2270	0.000978	3.5	3.3	4.13	165	165
70	25600	2269	0.005833	2.2	2.1	7.29	151	151
71	25660	2269	0.007136	2.1	2	7.96	143	143
72	26000	2270	0.003435	2.8	2.6	6.39	137	137
73	26500	2270	0.005662	2.1	2	6.81	176	176
74	27083	2269	0.006935	1.8	1.6	6.61	221	221
75	27424	2269	0.01111	1.4	1.3	6.56	263	263
76	27741	2270	0.001675	2.6	2.5	3.5	259	259
77	27969	2270	0.000767	4.2	4.2	2.37	238	238
78	28252	2270	0.000302	4.7	4	2.07	277	277
79	29023	2270	0.00036	4.6	3.4	1.79	460	460
1	6070	1850	0.002298	4.2	3.7	6.58	77	77
2	6370	1850	0.002015	4.2	3.8	6.36	77	78
3	6670	1850	0.002252	4.1	3.7	6.61	76	76
4	6940	1850	0.002164	4.2	3.7	6.5	77	77
5	7223	1850	0.001924	4.3	3.8	6.26	77	77
6	7310	1850	0.000674	4.8	4.5	3.88	109	109
7	7340	1849	0.007442	3.5	2.2	8.39	102	102
8	7377	1850	0.001966	3.1	2.9	5.18	127	127
9	7700	1850	0.001383	2.5	2.4	3.6	225	225
10	8000	1849	0.005237	1.5	1.5	5.62	220	220
11	8500	1849	0.004994	1.6	1.5	5.55	219	219
12	8900	1849	0.005044	1.6	1.5	5.57	219	219
13	9100	1849	0.004921	1.6	1.5	5.52	220	220
14	9471	1849	0.00404	1.7	1.7	5.22	212	212
15	9800	1849	0.005028	1.6	1.5	5.62	214	214
16	10100	1850	0.004682	1.7	1.7	5.54	204	204
17	10400	1850	0.005246	1.7	1.6	5.95	191	191
18	10800	1849	0.005078	1.8	1.7	6.03	180	180
19	11095	1849	0.005596	1.8	1.7	6.37	169	169
20	11150	1850	0.005423	1.9	1.9	6.27	161	161
21	11310	1850	0.002486	2.4	2.3	5.13	156	156
22	11700	1850	0.002276	2.5	2.4	4.95	159	159
23	12000	1850	0.002062	2.5	2.4	4.82	160	160
24	12400	1850	0.00221	2.5	2.3	4.92	160	160
25	12645	1850	0.002058	2.5	2.4	4.82	160	160
26	12660	1850	0.006062	1.9	1.8	6.67	156	156
27	12853	1850	0.002306	2.4	2.3	4.91	166	166
28	13050	1849	0.004893	2.6	2.4	6.96	116	116
29	13400	1850	0.002639	3.4	3	6.11	104	104
30	13600	1850	0.001122	3.8	3.4	4.47	122	122

31	13900	1850	0.000767	3.6	3.3	3.66	152	152
32	14200	1850	0.000969	3.2	3	3.84	159	159
33	14400	1850	0.00203	2.9	2.8	5.2	130	130
34	14700	1850	0.003242	3.1	2.8	6.58	102	102
35	15000	1850	0.003164	3.4	3	6.94	88	88
36	15495	1850	0.002916	3.8	3.3	7.02	80	80
37	15510	1849	0.005409	3.5	3	8.83	71	71
38	16000	1849	0.005938	4	3.2	9.68	60	60
39	16200	1850	0.001548	4.8	3.9	5.73	83	83
40	16600	1850	0.001481	3.7	3.3	5	112	112
41	17000	1850	0.003927	2.7	2.5	6.79	109	109
42	17300	1849	0.004741	2.6	2.4	7.35	103	103
43	17500	1849	0.005089	2.6	2.4	7.63	99	99
44	17850	1849	0.004985	2.6	2.5	7.64	98	98
45	17960	1849	0.006586	2.2	2.1	7.78	113	113
46	18170	1850	0.005282	2.3	2.3	7.24	114	114
47	18500	1850	0.003786	2.8	2.6	6.85	103	103
48	18900	1849	0.005302	2.4	2.3	7.15	115	115
49	19200	1850	0.003632	2.6	2.5	6.43	117	117
50	19500	1850	0.005935	2.2	2.1	7.43	118	118
51	19782	1850	0.002688	2.7	2.6	5.71	124	124
52	20160	1850	0.002653	2.6	2.5	5.38	142	142
53	20300	1850	0.000924	2.9	2.8	3.49	194	194
54	20700	1850	0.004188	1.8	1.8	5.55	191	191
55	21000	1849	0.00462	1.7	1.7	5.69	194	194
56	21240	1850	0.005336	1.6	1.6	5.89	198	198
57	21565	1849	0.005289	1.7	1.7	5.36	218	218
58	21900	1850	0.000454	3.4	3.2	2.68	216	216
59	22200	1850	0.001244	2.1	2.1	3.16	289	289
60	22540	1849	0.006712	1.4	1.4	6.02	220	220
61	22860	1849	0.005604	1.8	1.8	6.49	160	160
62	23200	1699	0.004396	2.1	2	6.19	138	138
63	23310	1699	0.004479	2.1	2	6.24	139	139
64	23575	1699	0.005538	2	1.9	6.79	131	131
65	24000	1699	0.004218	2.2	2.1	6.09	137	137
66	24365	1699	0.004604	2	1.9	6.15	146	146
67	24510	1699	0.006213	1.8	1.7	6.48	157	157
68	24900	1700	0.00136	2.8	2.7	4.16	154	154
69	25200	1700	0.000908	3	2.9	3.62	163	163
70	25600	1699	0.006127	1.8	1.7	6.64	149	149
71	25660	1699	0.007225	1.8	1.7	7.15	140	140
72	26000	1700	0.003436	2.4	2.3	5.72	134	134
73	26500	1699	0.005975	1.7	1.6	6.2	173	173
74	27083	1699	0.007214	1.6	1.3	5.96	219	219
75	27424	1699	0.011032	1.2	1.1	5.87	261	261
76	27741	1700	0.001574	2.2	2.2	3.07	256	256
77	27969	1700	0.00064	3.8	3.8	1.99	238	238
78	28252	1700	0.000243	4.3	3.6	1.74	273	273
79	29023	1700	0.000323	4.1	3	1.56	455	455
1	6070	779	0.002295	2.5	2.3	4.89	69	69
2	6370	779	0.002173	2.5	2.3	4.8	70	70
3	6670	779	0.002352	2.4	2.3	4.93	70	70
4	6940	779	0.002312	2.5	2.3	4.89	70	70
5	7223	779	0.001894	2.6	2.4	4.58	70	70

Table B.2 Steady State Output for Hydraulics (continued)

Reach	Last Section	Discharge (cfs)	Slope (ft/ft)	Depth (ft)	Average Depth	Velocity (ft/s)	TopWidt (ft)	Effective Width (ft)
6	7310	779	0.000919	2.9	2.8	2.86	103	103
7	7340	779	0.009094	2.5	1.2	6.4	98	98
8	7377	779	0.002159	1.8	1.7	3.86	120	120
9	7700	779	0.005153	1.1	1.1	3.61	217	217
10	8000	779	0.00434	1	1	3.78	216	216
11	8500	779	0.005006	0.9	0.9	3.96	216	216
12	8900	779	0.004985	0.9	0.9	3.95	216	216
13	9100	779	0.005007	0.9	0.9	3.95	216	216
14	9471	779	0.004359	1	1	3.81	211	211
15	9800	779	0.005089	0.9	0.9	4.03	210	210
16	10100	779	0.004909	1	1	3.98	200	200
17	10400	779	0.005053	1	1	4.19	187	187
18	10800	779	0.004991	1.1	1	4.3	175	175
19	11095	779	0.005444	1.1	1	4.52	165	165
20	11150	779	0.006008	1.2	1.1	4.56	156	156
21	11310	779	0.002129	1.5	1.5	3.52	150	150
22	11700	779	0.002466	1.5	1.4	3.62	153	153
23	12000	779	0.002008	1.5	1.5	3.44	154	154
24	12400	779	0.002244	1.5	1.4	3.56	154	154
25	12645	779	0.002035	1.5	1.5	3.45	154	154
26	12660	779	0.006865	1.1	1.1	4.93	152	152
27	12853	779	0.002182	1.5	1.4	3.48	159	159
28	13050	779	0.004137	1.6	1.5	4.82	111	111
29	13400	779	0.002857	2	1.9	4.62	93	93
30	13600	779	0.001166	2.2	2.1	3.32	113	113
31	13900	779	0.000936	2	1.9	2.83	142	142
32	14200	779	0.0014	1.7	1.7	3.11	150	150
33	14400	779	0.002583	1.6	1.6	4.07	123	123
34	14700	779	0.002993	1.9	1.8	4.68	94	94
35	15000	779	0.002778	2.2	2	4.91	81	81
36	15495	779	0.00259	2.4	2.2	5.02	72	72
37	15510	779	0.006108	2.1	1.9	6.82	62	62
38	16000	779	0.006087	2.4	2.1	7.41	51	51
39	16200	779	0.001883	2.7	2.4	4.61	70	70
40	16600	779	0.002996	1.8	1.7	4.55	101	101
41	17000	779	0.004616	1.5	1.5	5.2	102	102
42	17300	779	0.00474	1.5	1.5	5.3	99	99
43	17500	779	0.00504	1.5	1.5	5.47	96	96
44	17850	779	0.004932	1.6	1.5	5.5	94	94
45	17960	779	0.007716	1.3	1.2	5.85	110	110
46	18170	779	0.005633	1.4	1.4	5.26	111	111
47	18500	779	0.004296	1.6	1.5	5.15	99	99
48	18900	779	0.006187	1.4	1.3	5.36	112	112
49	19200	779	0.003363	1.6	1.5	4.52	113	113
50	19500	779	0.007173	1.2	1.2	5.64	115	115
51	19782	779	0.002504	1.7	1.6	4.01	121	121
52	20160	779	0.003752	1.4	1.4	4.24	138	138
53	20300	779	0.001203	1.6	1.6	2.68	187	187
54	20700	779	0.00544	1	1	4.27	186	186
55	21000	779	0.004815	1	1	4.12	190	190

Table B.2 Steady State Output for Hydraulics (continued)

Reach	Last Section	Discharge (cfs)	Slope (ft/ft)	Depth (ft)	Average Depth	Velocity (ft/s)	TopWidt (ft)	Effective Width (ft)
56	21240	779	0.005897	0.9	0.9	4.32	194	194
57	21565	779	0.006015	1.1	1	3.88	213	213
58	21900	779	0.000264	2.5	2.4	1.6	211	211
59	22200	779	0.002727	1.2	1.1	2.66	283	283
60	22540	779	0.005955	0.9	0.9	4.17	216	216
61	22860	779	0.005285	1.1	1.1	4.56	156	156
62	23200	739	0.004789	1.2	1.2	4.61	134	134
63	23310	739	0.00458	1.3	1.2	4.57	134	134
64	23575	739	0.005301	1.2	1.2	4.88	126	126
65	24000	739	0.005488	1.3	1.2	4.71	132	132
66	24365	739	0.004895	1.2	1.1	4.56	142	142
67	24510	739	0.007009	1	1	4.84	153	153
68	24900	739	0.001038	1.8	1.8	2.79	149	149
69	25200	739	0.000728	2	1.9	2.46	157	157
70	25600	739	0.00658	1.1	1.1	4.88	145	145
71	25660	739	0.007911	1	1	5.32	136	136
72	26000	739	0.003503	1.5	1.4	4.14	128	128
73	26500	739	0.00697	1	1	4.7	168	168
74	27083	739	0.008223	1	0.8	4.46	216	216
75	27424	739	0.011021	0.7	0.7	4.27	257	257
76	27741	739	0.001323	1.4	1.4	2.11	251	251
77	27969	739	0.000391	2.9	2.8	1.19	238	238
78	28252	739	0.000111	3.4	2.9	0.99	265	265
79	29023	739	0.000204	3.1	2.1	0.99	448	448

APPENDIX D

QUASED OUTPUT SUMMARIES

Steady State Output for Sediment Transport Rate

Table B.3 Steady State Output for Sediment Transport Rate

Reach	QSED (cfs)	BEDPCT	SUSP (cfs)	FS (cfs)	M (cfs)	CS (cfs)	VCS (cfs)	VFG (cfs)	FG (cfs)	MG (cfs)	CG (cfs)	VCG (cfs)	SC (cfs)
[illegible]	18.67	23.36	14.31	5.73	3.83	1.85	2.32	1.21	0.98	1.25	1.26	0.25	0.00
2	12.75	22.95	9.82	4.22	2.70	1.23	1.56	0.80	0.65	0.80	0.72	0.06	0.00
3	16.32	19.00	13.22	5.96	3.63	1.39	1.89	0.93	0.73	0.89	0.81	0.08	0.00
4	13.77	27.74	9.95	3.90	3.05	1.43	1.70	1.38	1.01	0.78	0.41	0.11	0.00
5	19.78	18.27	16.17	7.14	4.91	1.57	2.16	1.60	1.09	0.80	0.41	0.10	0.00
6	3.37	28.46	2.41	1.22	0.82	0.31	0.40	0.32	0.21	0.08	0.01	0.00	0.00
7	55.95	22.93	43.12	14.68	12.15	5.77	7.04	5.63	4.08	3.24	2.02	1.27	0.07
8	13.08	19.19	10.57	5.19	3.28	0.99	1.36	1.01	0.68	0.46	0.11	0.00	0.00
9	1.72	27.12	1.25	0.81	0.45	0.07	0.20	0.14	0.05	0.00	0.00	0.00	0.00
10	4.95	19.18	4.00	3.40	0.55	0.22	0.28	0.23	0.21	0.06	0.00	0.00	0.00
11	13.25	27.35	9.63	3.20	3.82	1.40	1.61	1.26	1.07	0.67	0.23	0.00	0.00
12	43.68	24.15	33.13	9.29	12.00	4.58	5.28	4.11	3.53	2.44	1.87	0.58	0.00
13	53.36	22.56	41.32	11.59	14.90	5.44	6.41	4.92	4.19	2.88	2.26	0.78	0.00
14	20.37	31.14	14.03	3.92	5.18	3.08	3.32	2.49	1.27	0.68	0.40	0.02	0.00
15	29.15	22.00	22.74	7.36	8.51	3.52	4.33	2.99	1.44	0.73	0.27	0.01	0.00
16	39.46	19.78	31.65	10.03	11.61	4.60	5.79	3.93	1.87	0.96	0.59	0.07	0.00
17	69.52	16.88	57.78	17.71	20.74	7.82	10.17	6.77	3.19	1.67	1.15	0.31	0.00
18	36.21	30.28	25.24	6.55	8.89	5.58	5.86	4.45	2.33	1.32	0.95	0.28	0.00
19	58.25	19.63	46.81	13.45	16.53	7.24	8.87	6.13	2.97	1.59	1.13	0.33	0.00
20	62.75	22.58	48.58	15.79	21.15	9.54	7.34	3.79	1.61	1.76	0.99	0.77	0.02
21	61.01	14.15	52.38	20.16	22.74	6.47	5.90	2.74	1.07	1.09	0.55	0.28	0.00
22	19.78	29.27	13.99	5.04	6.61	3.18	2.35	1.24	0.53	0.57	0.19	0.07	0.00
23	41.30	9.44	37.40	22.05	11.97	2.15	2.56	1.10	0.91	0.43	0.14	0.00	0.00
[illegible]	13.76	28.44	9.85	4.99	3.76	1.63	1.43	0.75	0.71	0.36	0.14	0.00	0.00
25	35.52	10.76	31.69	18.37	10.30	2.05	2.35	1.04	0.86	0.41	0.14	0.00	0.00
26	63.37	16.16	53.13	24.92	14.77	6.64	8.31	3.49	2.42	1.66	1.02	0.16	0.00
27	37.02	12.80	32.28	18.15	8.88	2.79	3.86	1.52	1.00	0.63	0.19	0.00	0.00
28	53.90	16.49	45.01	20.40	12.48	5.92	7.33	3.10	2.15	1.47	0.91	0.15	0.00
29	17.22	29.05	12.22	4.11	2.83	2.44	3.29	1.88	1.24	0.86	0.49	0.07	0.00
30	6.02	30.08	4.21	1.80	1.08	0.77	1.11	0.62	0.39	0.22	0.04	0.00	0.00
31	2.19	41.11	1.29	0.60	0.38	0.31	0.45	0.26	0.15	0.04	0.00	0.00	0.00
32	2.74	32.53	1.85	0.92	0.51	0.33	0.51	0.28	0.16	0.04	0.00	0.00	0.00
33	8.99	25.28	6.71	3.48	1.74	0.71	1.09	0.84	0.65	0.36	0.12	0.00	0.00
34	25.27	22.69	19.54	8.67	4.76	2.08	3.14	2.43	1.90	1.20	0.94	0.18	0.00
35	49.71	19.31	40.11	16.68	9.47	4.00	6.27	4.75	3.64	2.32	1.99	0.57	0.03
36	59.18	15.17	50.20	22.48	12.03	4.12	7.03	5.05	3.71	2.29	1.93	0.52	0.02
37	77.36	14.53	66.12	45.24	8.14	2.32	5.93	5.06	4.92	2.46	2.29	0.96	0.05
38	73.79	16.25	61.80	41.12	7.66	2.42	5.95	5.21	5.15	2.61	2.48	1.09	0.09
39	14.07	18.86	11.42	8.87	1.44	0.41	1.01	0.89	0.88	0.40	0.17	0.00	0.00
40	6.36	19.35	5.13	3.80	1.23	0.34	0.39	0.32	0.21	0.07	0.01	0.00	0.00
41	11.71	18.49	9.55	6.66	2.29	0.67	0.74	0.61	0.43	0.23	0.08	0.00	0.00
42	29.11	18.15	23.82	15.07	5.73	1.86	2.00	1.66	1.19	0.72	0.52	0.37	0.00
43	49.39	17.70	40.65	23.03	10.36	4.39	3.94	2.40	2.01	1.43	1.09	0.73	0.01
44	67.73	17.13	56.13	30.99	14.19	6.09	5.49	3.34	2.79	2.00	1.56	1.13	0.15
45	61.88	17.33	51.15	28.63	12.99	5.52	4.97	3.03	2.53	1.81	1.38	0.96	0.06
46	71.76	15.31	60.77	47.40	4.52	4.03	5.10	3.09	2.95	2.38	1.43	0.76	0.10
47	43.95	14.46	37.60	30.62	2.74	2.20	2.85	1.70	1.61	1.26	0.70	0.28	0.00
[illegible]	39.24	18.02	32.17	19.69	7.50	2.37	2.16	2.43	2.16	1.52	1.15	0.27	0.00
49	54.68	16.94	45.41	27.28	10.51	3.28	3.02	3.38	2.99	2.12	1.66	0.45	0.00
50	34.24	30.94	23.65	8.90	5.02	2.68	4.76	4.36	3.60	2.89	1.56	0.46	0.01
51	40.21	14.92	34.21	17.32	7.62	1.94	4.58	3.51	2.52	1.79	0.81	0.13	0.00

Table B.3 Steady State Output for Sediment Transport Rate (continued)

Reach	QSED (cfs)	BEDPCT	SUSP (cfs)	FS (cfs)	M (cfs)	CS (cfs)	VCS (cfs)	VFG (cfs)	FG (cfs)	MG (cfs)	CG (cfs)	VCG (cfs)	SC (cfs)
2	10.47	29.13	7.42	2.66	2.32	1.38	1.78	1.18	0.63	0.40	0.12	0.00	0.00
53	2.51	32.32	1.70	0.81	0.60	0.28	0.42	0.26	0.12	0.02	0.00	0.00	0.00
54	7.30	24.36	5.52	3.33	1.33	0.46	0.76	0.68	0.51	0.17	0.05	0.00	0.00
55	13.61	24.51	10.27	4.61	3.14	1.15	1.77	1.43	0.96	0.48	0.07	0.00	0.00
56	25.67	23.15	19.73	8.09	5.83	2.29	3.43	2.78	1.93	1.08	0.26	0.00	0.00
57	42.57	24.60	32.10	12.59	9.65	4.24	5.75	4.13	2.99	2.08	0.86	0.28	0.00
58	11.99	18.47	9.77	6.27	3.54	0.63	0.64	0.38	0.38	0.12	0.01	0.00	0.00
59	8.54	19.47	6.88	4.62	2.49	0.41	0.45	0.26	0.25	0.06	0.00	0.00	0.00
60	52.89	18.12	43.31	25.04	9.47	4.03	5.36	2.98	2.88	1.95	1.01	0.18	0.00
61	55.60	16.70	46.31	26.26	10.02	4.17	5.64	3.11	2.97	2.03	1.12	0.29	0.00
62	17.91	16.68	14.92	11.36	3.13	0.97	0.95	0.58	0.47	0.34	0.11	0.00	0.00
63	32.79	16.12	27.50	20.13	5.84	1.89	1.84	1.12	0.93	0.73	0.30	0.03	0.00
64	62.22	14.96	52.91	36.56	11.25	3.80	3.70	2.24	1.88	1.52	1.10	0.18	0.00
65	18.64	24.84	14.01	7.46	2.92	2.10	3.05	1.48	0.86	0.58	0.18	0.02	0.00
66	31.03	27.19	22.60	8.36	5.78	3.06	4.31	3.14	2.82	1.84	1.30	0.41	0.00
67	24.55	16.42	20.51	8.68	5.41	1.90	3.23	2.11	1.70	0.97	0.52	0.02	0.00
68	25.40	8.57	23.22	11.93	8.76	1.12	1.72	1.15	0.49	0.20	0.03	0.00	0.00
69	14.72	11.62	13.01	6.92	4.87	0.75	1.04	0.74	0.33	0.08	0.00	0.00	0.00
70	42.88	14.23	36.78	27.15	7.75	2.29	2.39	1.48	0.89	0.50	0.39	0.05	0.00
71	40.48	11.87	35.68	25.78	7.47	2.06	2.28	1.37	0.80	0.42	0.29	0.01	0.00
72	10.07	30.67	6.98	2.14	2.70	1.46	1.67	1.39	0.44	0.24	0.04	0.00	0.00
73	24.11	18.91	19.55	6.80	7.40	2.59	3.47	2.61	0.77	0.41	0.07	0.00	0.00
74	44.85	13.59	38.76	23.23	10.05	2.57	2.97	3.04	2.01	0.80	0.19	0.00	0.00
75	49.51	14.77	42.20	23.82	11.16	3.25	3.67	3.83	2.54	1.00	0.24	0.00	0.00
76	10.09	11.79	8.90	6.17	2.25	0.36	0.53	0.49	0.26	0.04	0.00	0.00	0.00
77	2.26	14.26	1.94	1.36	0.55	0.06	0.14	0.12	0.03	0.00	0.00	0.00	0.00
78	1.31	12.59	1.15	0.94	0.27	0.01	0.06	0.04	0.00	0.00	0.00	0.00	0.00
79	0.97	11.15	0.86	0.75	0.19	0.00	0.03	0.01	0.00	0.00	0.00	0.00	0.00
1	12.39	23.17	9.52	3.98	2.59	1.21	1.53	0.79	0.64	0.80	0.75	0.09	0.00
2	7.33	23.34	5.62	2.62	1.61	0.71	0.90	0.46	0.37	0.44	0.22	0.00	0.00
3	9.53	19.14	7.70	3.74	2.19	0.80	1.09	0.54	0.42	0.49	0.25	0.00	0.00
4	8.41	28.12	6.05	2.52	1.91	0.87	1.04	0.84	0.61	0.46	0.15	0.01	0.00
5	11.92	18.48	9.72	4.56	3.00	0.92	1.27	0.94	0.64	0.45	0.13	0.01	0.00
6	1.82	29.23	1.29	0.70	0.45	0.16	0.22	0.17	0.11	0.03	0.00	0.00	0.00
7	37.55	23.25	28.82	10.28	8.30	3.80	4.66	3.71	2.68	2.11	1.28	0.72	0.00
8	8.83	19.35	7.12	3.63	2.21	0.64	0.90	0.67	0.44	0.28	0.05	0.00	0.00
9	1.31	26.75	0.96	0.63	0.35	0.05	0.15	0.10	0.03	0.00	0.00	0.00	0.00
10	5.60	18.69	4.56	3.82	0.63	0.25	0.31	0.26	0.25	0.08	0.00	0.00	0.00
11	19.44	25.81	14.42	4.50	5.56	2.07	2.38	1.86	1.59	1.04	0.43	0.01	0.00
12	29.41	24.34	22.25	6.75	8.41	3.07	3.56	2.76	2.36	1.59	0.72	0.19	0.00
13	30.83	23.12	23.70	7.34	8.98	3.11	3.69	2.82	2.39	1.60	0.72	0.19	0.00
14	12.38	32.48	8.36	2.54	3.25	1.83	2.02	1.50	0.75	0.38	0.12	0.00	0.00
15	22.88	22.08	17.83	5.97	6.74	2.70	3.35	2.30	1.10	0.54	0.18	0.00	0.00
16	25.50	20.38	20.30	6.87	7.64	2.89	3.67	2.48	1.17	0.58	0.20	0.00	0.00
17	42.44	17.29	35.10	11.59	12.91	4.55	5.98	3.96	1.85	0.94	0.58	0.08	0.00
18	21.13	31.36	14.51	4.06	5.34	3.19	3.41	2.57	1.33	0.72	0.46	0.06	0.00
19	36.93	20.21	29.46	9.02	10.68	4.45	5.50	3.78	1.82	0.95	0.62	0.11	0.00
20	36.46	23.23	27.99	9.67	12.48	5.36	4.17	2.14	0.90	0.97	0.50	0.28	0.00
21	31.41	14.95	26.71	10.99	11.72	3.21	2.92	1.36	0.53	0.52	0.14	0.03	0.00
22	11.48	30.14	8.02	3.06	3.89	1.79	1.35	0.71	0.30	0.30	0.08	0.00	0.00

Table B.3 Steady State Output for Sediment Transport Rate (continued)

Reach	QSED (cfs)	BEDPCT	SUSP (cfs)	FS (cfs)	M (cfs)	CS (cfs)	VCS (cfs)	VFG (cfs)	FG (cfs)	MG (cfs)	CG (cfs)	VCG (cfs)	SC (cfs)
23	23.74	9.77	21.42	13.23	6.67	1.15	1.37	0.59	0.48	0.21	0.04	0.00	0.00
24	8.15	29.24	5.77	3.08	2.25	0.93	0.83	0.43	0.40	0.19	0.05	0.00	0.00
25	19.83	11.41	17.57	10.59	5.64	1.10	1.26	0.56	0.46	0.20	0.04	0.00	0.00
26	42.63	16.37	35.65	17.39	9.98	4.30	5.43	2.27	1.56	1.05	0.60	0.06	0.00
27	22.39	13.10	19.46	11.45	5.29	1.59	2.21	0.87	0.57	0.33	0.07	0.00	0.00
28	32.05	17.17	26.55	12.68	7.46	3.38	4.22	1.78	1.23	0.82	0.46	0.04	0.00
29	9.44	30.05	6.60	2.43	1.61	1.32	1.80	1.03	0.67	0.44	0.14	0.00	0.00
30	3.42	31.04	2.36	1.09	0.64	0.43	0.64	0.35	0.21	0.07	0.00	0.00	0.00
31	1.28	41.71	0.75	0.37	0.23	0.17	0.27	0.15	0.08	0.01	0.00	0.00	0.00
32	1.70	32.98	1.14	0.60	0.32	0.19	0.32	0.17	0.09	0.01	0.00	0.00	0.00
33	6.00	25.68	4.46	2.43	1.18	0.47	0.73	0.57	0.42	0.14	0.05	0.00	0.00
34	17.35	22.97	13.37	6.24	3.34	1.42	2.15	1.66	1.29	0.80	0.38	0.07	0.00
35	30.15	19.52	24.26	10.69	5.83	2.34	3.69	2.78	2.13	1.34	1.09	0.26	0.00
36	32.97	15.60	27.83	13.24	6.75	2.20	3.75	2.69	1.98	1.21	0.96	0.20	0.00
37	50.50	14.50	43.17	30.30	5.31	1.46	3.74	3.18	3.09	1.53	1.38	0.52	0.00
38	48.51	16.25	40.63	27.69	5.04	1.54	3.80	3.32	3.28	1.65	1.53	0.63	0.01
39	8.58	19.05	6.95	5.54	0.87	0.24	0.60	0.53	0.51	0.22	0.07	0.00	0.00
40	4.17	19.51	3.36	2.54	0.80	0.22	0.25	0.20	0.13	0.04	0.00	0.00	0.00
41	9.37	18.47	7.64	5.37	1.83	0.53	0.59	0.48	0.34	0.18	0.05	0.00	0.00
42	25.34	18.05	20.76	13.19	4.99	1.61	1.73	1.44	1.03	0.62	0.44	0.29	0.00
43	39.87	17.67	32.83	18.88	8.38	3.48	3.13	1.91	1.60	1.13	0.84	0.53	0.00
44	42.91	17.01	35.61	20.46	9.05	3.69	3.35	2.03	1.69	1.19	0.89	0.57	0.00
45	41.73	17.29	34.51	19.96	8.80	3.59	3.25	1.97	1.64	1.16	0.85	0.51	0.00
[illegible]	46.87	15.16	39.77	31.84	2.94	2.50	3.19	1.93	1.83	1.45	0.83	0.37	0.00
47	29.43	14.45	25.17	21.03	1.83	1.42	1.85	1.10	1.03	0.80	0.26	0.11	0.00
48	30.84	17.75	25.36	15.74	5.91	1.82	1.67	1.87	1.66	1.15	0.84	0.16	0.00
49	37.15	16.90	30.87	19.13	7.14	2.14	1.99	2.21	1.95	1.36	1.01	0.22	0.00
50	22.01	31.63	15.05	6.01	3.31	1.70	3.04	2.77	2.27	1.79	0.91	0.21	0.00
51	23.54	15.37	19.92	10.79	4.48	1.09	2.57	1.97	1.41	0.97	0.24	0.02	0.00
52	6.88	30.03	4.82	1.83	1.54	0.89	1.16	0.77	0.40	0.24	0.05	0.00	0.00
53	1.60	33.47	1.06	0.55	0.40	0.17	0.27	0.17	0.05	0.01	0.00	0.00	0.00
54	6.78	23.88	5.16	3.11	1.24	0.42	0.71	0.63	0.47	0.15	0.05	0.00	0.00
55	14.93	23.81	11.38	4.98	3.44	1.28	1.95	1.57	1.07	0.55	0.10	0.00	0.00
56	23.54	22.85	18.16	7.49	5.37	2.08	3.13	2.53	1.75	0.97	0.22	0.00	0.00
57	26.25	24.98	19.69	8.13	6.07	2.58	3.54	2.53	1.81	1.23	0.30	0.05	0.00
58	4.78	20.12	3.82	2.62	1.39	0.22	0.25	0.15	0.13	0.02	0.00	0.00	0.00
59	4.71	20.12	3.76	2.67	1.38	0.20	0.24	0.14	0.07	0.01	0.00	0.00	0.00
60	37.86	18.12	31.00	18.55	6.80	2.78	3.73	2.07	1.98	1.31	0.61	0.04	0.00
61	36.01	16.78	29.97	17.70	6.52	2.58	3.53	1.93	1.84	1.22	0.61	0.08	0.00
62	19.53	16.18	16.37	12.32	3.44	1.06	1.05	0.63	0.52	0.38	0.13	0.00	0.00
63	35.31	15.74	29.75	21.57	6.31	2.05	1.99	1.21	1.01	0.79	0.34	0.04	0.00
64	53.88	14.80	45.90	32.00	9.71	3.22	3.14	1.90	1.59	1.28	0.91	0.14	0.00
65	13.59	25.25	10.16	5.55	2.14	1.51	2.20	1.06	0.61	0.40	0.11	0.00	0.00
66	20.59	27.96	14.83	5.86	3.95	2.04	2.89	2.10	1.87	1.20	0.52	0.18	0.00
67	17.08	16.49	14.26	6.31	3.81	1.28	2.20	1.43	1.14	0.62	0.28	0.00	0.00
68	12.73	9.52	11.52	6.25	4.25	0.54	0.83	0.56	0.23	0.08	0.00	0.00	0.00
[illegible]	7.86	12.52	6.88	3.88	2.50	0.37	0.54	0.38	0.16	0.03	0.00	0.00	0.00
[illegible]	31.70	14.29	27.17	20.45	5.70	1.63	1.72	1.06	0.64	0.35	0.16	0.01	0.00
71	29.27	11.93	25.78	19.00	5.36	1.41	1.58	0.94	0.54	0.28	0.17	0.00	0.00
72	6.21	31.82	4.24	1.39	1.71	0.87	1.02	0.84	0.26	0.13	0.01	0.00	0.00
73	17.17	19.59	13.81	5.01	5.31	1.79	2.43	1.82	0.53	0.27	0.02	0.00	0.00

Table B.3 Steady State Output for Sediment Transport Rate (continued)

Reach	QSED (cfs)	BEDPCT	SUSP (cfs)	FS (cfs)	M (cfs)	CS (cfs)	VCS (cfs)	VFG (cfs)	FG (cfs)	MG (cfs)	CG (cfs)	VCG (cfs)	SC (cfs)
4	32.45	13.75	27.99	17.30	7.25	1.77	2.08	2.11	1.37	0.52	0.07	0.00	0.00
75	35.16	15.11	29.85	17.42	7.93	2.20	2.53	2.62	1.71	0.64	0.12	0.00	0.00
76	5.20	12.25	4.56	3.32	1.14	0.15	0.26	0.23	0.10	0.00	0.00	0.00	0.00
77	1.02	13.21	0.89	0.68	0.25	0.01	0.05	0.03	0.00	0.00	0.00	0.00	0.00
78	0.66	12.73	0.58	0.50	0.13	0.00	0.02	0.01	0.00	0.00	0.00	0.00	0.00
79	0.53	11.76	0.47	0.42	0.10	0.00	0.01	0.00	0.00	0.00	0.00	0.00	0.00
1	7.88	23.52	6.03	2.73	1.72	0.77	0.98	0.51	0.41	0.49	0.26	0.01	0.00
2	5.15	23.51	3.94	1.90	1.14	0.49	0.63	0.32	0.26	0.29	0.13	0.00	0.00
3	6.71	19.32	5.41	2.71	1.54	0.56	0.76	0.37	0.29	0.33	0.14	0.00	0.00
4	6.16	28.69	4.39	1.89	1.41	0.63	0.76	0.61	0.44	0.32	0.09	0.00	0.00
5	8.40	18.93	6.81	3.29	2.11	0.64	0.88	0.65	0.44	0.30	0.08	0.00	0.00
6	1.24	29.55	0.87	0.49	0.31	0.10	0.15	0.11	0.07	0.01	0.00	0.00	0.00
7	28.79	23.41	22.05	8.13	6.45	2.87	3.54	2.81	2.03	1.58	0.92	0.47	0.00
8	6.67	19.65	5.36	2.84	1.69	0.48	0.68	0.50	0.33	0.12	0.02	0.00	0.00
9	1.15	26.34	0.85	0.56	0.30	0.04	0.13	0.09	0.02	0.00	0.00	0.00	0.00
10	6.81	18.24	5.57	4.60	0.77	0.31	0.38	0.32	0.31	0.11	0.00	0.00	0.00
11	18.44	25.84	13.68	4.31	5.28	1.96	2.25	1.76	1.50	0.98	0.40	0.00	0.00
12	20.66	24.26	15.65	4.98	6.02	2.12	2.49	1.92	1.63	1.06	0.44	0.01	0.00
13	21.77	23.03	16.75	5.43	6.45	2.16	2.58	1.97	1.65	1.08	0.44	0.01	0.00
14	9.08	33.36	6.05	1.93	2.42	1.32	1.47	1.09	0.54	0.25	0.06	0.00	0.00
15	18.06	22.37	14.02	4.83	5.35	2.09	2.62	1.80	0.85	0.40	0.12	0.00	0.00
16	18.71	20.93	14.79	5.21	5.64	2.07	2.65	1.79	0.84	0.40	0.12	0.00	0.00
[illegible]	29.24	17.91	24.00	8.34	9.00	3.08	4.06	2.68	1.25	0.62	0.21	0.00	0.00
18	14.73	32.05	10.01	2.95	3.81	2.21	2.39	1.79	0.91	0.48	0.19	0.00	0.00
19	26.26	20.59	20.86	6.64	7.69	3.10	3.87	2.65	1.27	0.65	0.38	0.03	0.00
20	26.36	23.49	20.17	7.24	9.15	3.81	2.99	1.53	0.64	0.67	0.22	0.12	0.00
21	21.40	15.41	18.11	7.78	7.95	2.11	1.92	0.90	0.35	0.33	0.08	0.00	0.00
22	8.11	31.21	5.58	2.22	2.76	1.25	0.95	0.50	0.21	0.20	0.04	0.00	0.00
23	16.10	10.21	14.46	9.14	4.45	0.76	0.91	0.40	0.32	0.12	0.01	0.00	0.00
24	5.80	29.53	4.08	2.26	1.61	0.64	0.59	0.30	0.27	0.11	0.01	0.00	0.00
25	14.20	11.52	12.56	7.80	3.97	0.74	0.87	0.38	0.31	0.12	0.01	0.00	0.00
26	32.53	16.64	27.12	13.72	7.66	3.20	4.06	1.69	1.16	0.76	0.26	0.02	0.00
27	16.10	13.27	13.96	8.44	3.76	1.10	1.55	0.61	0.39	0.21	0.03	0.00	0.00
28	23.77	17.38	19.64	9.65	5.56	2.44	3.07	1.29	0.88	0.58	0.30	0.01	0.00
29	6.55	30.95	4.52	1.75	1.13	0.90	1.25	0.71	0.46	0.29	0.08	0.00	0.00
30	2.43	31.63	1.66	0.80	0.45	0.30	0.45	0.25	0.14	0.04	0.00	0.00	0.00
31	0.91	42.64	0.52	0.28	0.17	0.12	0.20	0.11	0.04	0.00	0.00	0.00	0.00
32	1.26	33.24	0.84	0.47	0.25	0.13	0.24	0.13	0.04	0.01	0.00	0.00	0.00
33	4.82	25.53	3.59	1.99	0.95	0.37	0.58	0.45	0.33	0.11	0.03	0.00	0.00
34	13.60	22.91	10.48	5.01	2.63	1.09	1.67	1.29	1.00	0.61	0.28	0.03	0.00
35	21.11	19.77	16.94	7.74	4.12	1.61	2.54	1.91	1.46	0.91	0.70	0.13	0.00
36	22.66	15.87	19.07	9.58	4.70	1.48	2.52	1.81	1.33	0.80	0.37	0.09	0.00
37	38.06	14.50	32.54	23.21	3.99	1.07	2.75	2.34	2.27	1.12	0.98	0.33	0.00
38	37.15	16.23	31.12	21.54	3.87	1.16	2.86	2.49	2.46	1.23	1.12	0.43	0.00
39	6.32	19.07	5.12	4.14	0.64	0.17	0.43	0.38	0.36	0.15	0.04	0.00	0.00
[illegible]	3.36	19.58	2.70	2.06	0.64	0.17	0.20	0.16	0.10	0.03	0.00	0.00	0.00
[illegible]	8.71	18.32	7.12	5.00	1.70	0.49	0.54	0.45	0.31	0.17	0.05	0.00	0.00
42	23.25	17.95	19.08	12.15	4.58	1.47	1.59	1.31	0.94	0.57	0.40	0.25	0.00
43	29.99	17.68	24.69	14.55	6.32	2.55	2.31	1.40	1.17	0.82	0.59	0.31	0.00
44	30.88	17.13	25.59	15.13	6.52	2.57	2.35	1.42	1.18	0.82	0.59	0.31	0.00

Table B.3 Steady State Output for Sediment Transport Rate (continued)

Reach	QSED (cfs)	BEDPCT	SUSP (cfs)	FS (cfs)	M (cfs)	CS (cfs)	VCS (cfs)	VFG (cfs)	FG (cfs)	MG (cfs)	CG (cfs)	VCG (cfs)	SC (cfs)
[illegible]	32.65	17.23	27.03	15.95	6.90	2.74	2.50	1.51	1.25	0.87	0.62	0.31	0.00
46	36.32	15.15	30.82	25.09	2.27	1.87	2.40	1.44	1.37	1.08	0.59	0.22	0.00
47	23.19	14.33	19.86	16.80	1.43	1.08	1.42	0.84	0.79	0.60	0.19	0.05	0.00
48	26.97	17.52	22.24	13.93	5.18	1.57	1.45	1.62	1.43	0.98	0.69	0.11	0.00
49	25.21	17.26	20.85	13.47	4.88	1.42	1.32	1.47	1.29	0.88	0.39	0.08	0.00
50	17.00	31.92	11.57	4.78	2.59	1.30	2.35	2.13	1.74	1.35	0.65	0.12	0.00
51	16.46	15.73	13.87	7.74	3.12	0.75	1.76	1.35	0.96	0.64	0.14	0.00	0.00
52	5.33	30.44	3.71	1.46	1.21	0.68	0.90	0.59	0.30	0.17	0.02	0.00	0.00
53	1.20	33.66	0.80	0.42	0.30	0.12	0.21	0.13	0.03	0.00	0.00	0.00	0.00
54	6.90	23.27	5.29	3.17	1.27	0.43	0.72	0.64	0.48	0.15	0.05	0.00	0.00
55	13.94	23.78	10.62	4.68	3.21	1.18	1.82	1.46	0.99	0.51	0.09	0.00	0.00
56	17.33	23.53	13.26	5.68	3.97	1.50	2.28	1.84	1.26	0.67	0.13	0.00	0.00
57	19.38	25.20	14.50	6.16	4.52	1.88	2.60	1.85	1.32	0.87	0.20	0.00	0.00
58	2.69	20.72	2.13	1.54	0.79	0.11	0.14	0.08	0.04	0.00	0.00	0.00	0.00
59	3.38	20.48	2.69	1.98	1.00	0.08	0.18	0.10	0.05	0.00	0.00	0.00	0.00
60	31.81	18.10	26.05	15.96	5.75	2.29	3.10	1.71	1.63	1.06	0.30	0.01	0.00
61	27.63	16.85	22.98	14.04	5.04	1.93	2.65	1.45	1.37	0.89	0.26	0.02	0.00
62	19.97	15.94	16.78	12.58	3.52	1.09	1.07	0.65	0.53	0.40	0.14	0.00	0.00
63	30.36	15.66	25.61	18.70	5.41	1.73	1.69	1.02	0.85	0.66	0.27	0.02	0.00
64	42.11	14.88	35.85	25.37	7.56	2.45	2.40	1.45	1.21	0.96	0.65	0.08	0.00
65	11.01	25.44	8.21	4.58	1.74	1.20	1.77	0.85	0.49	0.31	0.08	0.00	0.00
66	15.53	27.92	11.19	4.58	3.02	1.51	2.16	1.57	1.39	0.87	0.36	0.07	0.00
67	13.35	16.62	11.13	5.09	3.01	0.99	1.71	1.11	0.87	0.46	0.11	0.00	0.00
[illegible]	8.65	9.67	7.82	4.47	2.80	0.34	0.53	0.36	0.14	0.02	0.00	0.00	0.00
69	5.06	13.37	4.38	2.54	1.59	0.23	0.35	0.25	0.10	0.01	0.00	0.00	0.00
70	26.70	14.36	22.86	17.37	4.78	1.34	1.42	0.87	0.52	0.28	0.12	0.00	0.00
71	23.86	11.96	21.00	15.66	4.34	1.11	1.26	0.74	0.43	0.21	0.11	0.00	0.00
72	4.53	32.67	3.05	1.05	1.26	0.61	0.74	0.61	0.18	0.08	0.00	0.00	0.00
73	13.66	20.03	10.93	4.07	4.24	1.40	1.91	1.43	0.41	0.20	0.01	0.00	0.00
74	25.43	13.98	21.87	13.78	5.65	1.34	1.59	1.61	1.04	0.38	0.04	0.00	0.00
75	27.76	15.23	23.53	13.98	6.27	1.68	1.97	2.02	1.30	0.47	0.07	0.00	0.00
76	3.44	12.40	3.02	2.27	0.74	0.08	0.17	0.14	0.05	0.00	0.00	0.00	0.00
77	0.59	13.32	0.52	0.41	0.14	0.00	0.03	0.01	0.00	0.00	0.00	0.00	0.00
78	0.39	13.24	0.34	0.30	0.08	0.00	0.01	0.00	0.00	0.00	0.00	0.00	0.00
79	0.34	12.70	0.30	0.27	0.06	0.00	0.01	0.00	0.00	0.00	0.00	0.00	0.00
1	3.62	23.72	2.76	1.37	0.81	0.34	0.44	0.23	0.18	0.19	0.07	0.00	0.00
2	2.85	23.15	2.19	1.13	0.65	0.26	0.34	0.17	0.14	0.14	0.03	0.00	0.00
3	3.85	19.22	3.11	1.65	0.89	0.31	0.42	0.21	0.16	0.17	0.05	0.00	0.00
4	3.67	29.08	2.60	1.18	0.85	0.36	0.45	0.36	0.25	0.17	0.04	0.00	0.00
5	4.91	19.46	3.96	2.02	1.23	0.36	0.50	0.37	0.25	0.16	0.03	0.00	0.00
6	0.67	29.97	0.47	0.29	0.17	0.05	0.08	0.06	0.02	0.00	0.00	0.00	0.00
7	19.63	23.57	15.01	5.82	4.48	1.92	2.38	1.88	1.35	1.03	0.57	0.21	0.00
8	4.34	19.62	3.49	1.92	1.10	0.30	0.43	0.32	0.20	0.07	0.00	0.00	0.00
9	1.06	25.57	0.79	0.53	0.28	0.04	0.12	0.08	0.02	0.00	0.00	0.00	0.00
10	10.01	17.81	8.23	6.60	1.15	0.48	0.58	0.48	0.48	0.19	0.07	0.00	0.00
[illegible]	11.21	26.32	8.26	2.78	3.27	1.16	1.36	1.06	0.89	0.54	0.17	0.00	0.00
[illegible]	11.94	24.84	8.98	3.07	3.54	1.20	1.42	1.09	0.91	0.55	0.17	0.00	0.00
13	12.31	23.68	9.39	3.29	3.70	1.19	1.43	1.09	0.90	0.54	0.16	0.00	0.00
14	5.42	34.36	3.56	1.23	1.48	0.75	0.88	0.64	0.30	0.12	0.01	0.00	0.00
15	11.27	23.01	8.68	3.17	3.38	1.26	1.61	1.10	0.50	0.22	0.04	0.00	0.00

Table B.3 Steady State Output for Sediment Transport Rate (continued)

Reach	QSED (cfs)	BEDPCT	SUSP (cfs)	FS (cfs)	M (cfs)	CS (cfs)	VCS (cfs)	VFG (cfs)	FG (cfs)	MG (cfs)	CG (cfs)	VCG (cfs)	SC (cfs)
[illegible]	10.88	21.65	8.53	3.20	3.32	1.15	1.51	1.01	0.46	0.20	0.03	0.00	0.00
17	15.86	18.99	12.85	4.83	4.91	1.59	2.13	1.40	0.64	0.29	0.07	0.00	0.00
18	8.50	33.50	5.65	1.81	2.25	1.23	1.37	1.02	0.51	0.24	0.07	0.00	0.00
19	14.87	21.83	11.62	4.04	4.43	1.70	2.14	1.46	0.69	0.33	0.10	0.00	0.00
20	16.04	23.72	12.24	4.63	5.64	2.23	1.79	0.90	0.37	0.37	0.10	0.00	0.00
21	10.79	16.59	9.00	4.13	3.99	1.02	0.95	0.44	0.17	0.09	0.02	0.00	0.00
22	4.65	31.78	3.17	1.35	1.62	0.68	0.54	0.28	0.11	0.06	0.01	0.00	0.00
23	9.18	10.50	8.21	5.44	2.45	0.40	0.49	0.21	0.16	0.03	0.00	0.00	0.00
24	3.33	30.38	2.32	1.36	0.94	0.34	0.34	0.17	0.14	0.03	0.00	0.00	0.00
25	8.06	11.95	7.10	4.62	2.19	0.39	0.47	0.21	0.16	0.03	0.00	0.00	0.00
26	20.42	16.94	16.96	8.95	4.81	1.92	2.47	1.02	0.69	0.43	0.12	0.00	0.00
27	9.03	13.79	7.78	4.93	2.08	0.58	0.84	0.33	0.20	0.06	0.00	0.00	0.00
28	14.83	17.76	12.20	6.27	3.49	1.47	1.87	0.78	0.53	0.33	0.09	0.00	0.00
29	4.06	31.77	2.77	1.14	0.71	0.55	0.77	0.44	0.27	0.16	0.03	0.00	0.00
30	1.42	32.23	0.96	0.49	0.27	0.16	0.27	0.14	0.08	0.02	0.00	0.00	0.00
31	0.54	44.04	0.30	0.18	0.11	0.04	0.12	0.06	0.02	0.00	0.00	0.00	0.00
32	0.83	34.33	0.55	0.33	0.17	0.05	0.17	0.08	0.02	0.00	0.00	0.00	0.00
33	3.59	25.26	2.68	1.53	0.71	0.27	0.43	0.33	0.24	0.07	0.01	0.00	0.00
34	8.77	22.89	6.76	3.37	1.71	0.69	1.06	0.81	0.62	0.36	0.14	0.00	0.00
35	10.97	20.37	8.74	4.34	2.18	0.81	1.29	0.97	0.74	0.44	0.19	0.01	0.00
36	12.34	16.02	10.37	5.51	2.55	0.77	1.31	0.94	0.69	0.40	0.16	0.01	0.00
37	25.01	14.32	21.43	15.69	2.62	0.67	1.74	1.47	1.42	0.69	0.57	0.14	0.00
38	24.27	16.11	20.36	14.41	2.53	0.73	1.82	1.58	1.55	0.77	0.67	0.21	0.00
[illegible]	3.93	18.99	3.19	2.66	0.40	0.10	0.27	0.23	0.21	0.05	0.01	0.00	0.00
40	2.58	19.46	2.08	1.60	0.49	0.12	0.15	0.12	0.08	0.02	0.00	0.00	0.00
41	8.67	17.76	7.13	4.97	1.70	0.49	0.54	0.45	0.31	0.17	0.05	0.00	0.00
42	17.00	17.59	14.01	9.19	3.37	1.04	1.14	0.94	0.67	0.39	0.17	0.10	0.00
43	18.02	17.54	14.86	9.20	3.83	1.46	1.34	0.81	0.67	0.45	0.19	0.08	0.00
44	18.13	17.06	15.03	9.37	3.85	1.43	1.32	0.79	0.65	0.44	0.18	0.07	0.00
45	21.95	16.89	18.24	11.14	4.66	1.76	1.63	0.98	0.80	0.54	0.35	0.10	0.00
46	23.75	14.87	20.22	16.95	1.48	1.16	1.50	0.90	0.85	0.65	0.21	0.06	0.00
47	15.79	14.10	13.57	11.68	0.96	0.70	0.92	0.55	0.51	0.37	0.11	0.00	0.00
48	17.98	17.48	14.84	9.68	3.49	1.01	0.94	1.05	0.92	0.61	0.25	0.02	0.00
49	14.27	17.27	11.80	7.97	2.74	0.76	0.71	0.79	0.69	0.45	0.17	0.00	0.00
50	11.10	32.24	7.53	3.33	1.76	0.84	1.55	1.39	1.12	0.84	0.25	0.03	0.00
51	9.54	15.87	8.03	4.77	1.79	0.41	0.96	0.74	0.52	0.32	0.04	0.00	0.00
52	3.49	30.75	2.42	1.02	0.82	0.43	0.59	0.39	0.19	0.06	0.00	0.00	0.00
53	0.76	35.01	0.49	0.29	0.20	0.04	0.14	0.08	0.02	0.00	0.00	0.00	0.00
54	7.17	22.53	5.55	3.30	1.33	0.44	0.74	0.66	0.49	0.16	0.06	0.00	0.00
55	8.83	24.44	6.67	3.10	2.06	0.73	1.14	0.91	0.60	0.28	0.02	0.00	0.00
56	10.40	24.16	7.89	3.59	2.41	0.87	1.35	1.08	0.72	0.35	0.04	0.00	0.00
57	11.53	25.13	8.63	3.85	2.74	1.07	1.53	1.08	0.74	0.45	0.07	0.00	0.00
58	1.09	21.55	0.85	0.66	0.32	0.02	0.05	0.03	0.01	0.00	0.00	0.00	0.00
59	2.20	20.25	1.75	1.32	0.65	0.04	0.11	0.06	0.02	0.00	0.00	0.00	0.00
60	20.58	18.33	16.81	10.72	3.71	1.41	1.93	1.06	1.00	0.61	0.14	0.00	0.00
61	17.61	16.89	14.63	9.28	3.21	1.16	1.63	0.88	0.82	0.50	0.12	0.00	0.00
[illegible]	9.66	16.11	8.10	6.37	1.68	0.48	0.49	0.29	0.23	0.09	0.02	0.00	0.00
[illegible]	16.90	15.81	14.23	10.76	2.96	0.90	0.89	0.54	0.44	0.32	0.10	0.00	0.00
64	23.63	15.05	20.07	14.83	4.19	1.28	1.27	0.77	0.63	0.48	0.18	0.01	0.00
65	6.72	25.62	5.00	2.92	1.07	0.70	1.06	0.51	0.28	0.16	0.02	0.00	0.00
66	8.17	28.41	5.85	2.60	1.63	0.77	1.12	0.81	0.70	0.41	0.13	0.00	0.00

Table B.3 Steady State Output for Sediment Transport Rate (continued)

Reach	QSED (cfs)	BEDPCT	SUSP (cfs)	FS (cfs)	M (cfs)	CS (cfs)	VCS (cfs)	VFG (cfs)	FG (cfs)	MG (cfs)	CG (cfs)	VCG (cfs)	SC (cfs)
67	6.94	19.04	5.62	2.65	1.55	0.53	0.91	0.60	0.46	0.22	0.03	0.00	0.00
68	2.95	11.14	2.62	1.61	0.91	0.10	0.18	0.12	0.04	0.00	0.00	0.00	0.00
69	1.87	14.71	1.59	1.03	0.57	0.04	0.13	0.09	0.02	0.00	0.00	0.00	0.00
70	18.08	14.38	15.48	12.00	3.19	0.85	0.92	0.56	0.33	0.17	0.05	0.00	0.00
71	14.48	12.00	12.74	9.80	2.59	0.61	0.71	0.42	0.23	0.10	0.02	0.00	0.00
72	2.16	34.18	1.42	0.54	0.63	0.26	0.36	0.28	0.08	0.02	0.00	0.00	0.00
73	8.05	20.95	6.36	2.53	2.52	0.77	1.10	0.81	0.23	0.09	0.00	0.00	0.00
74	14.42	14.33	12.35	8.14	3.17	0.70	0.86	0.86	0.53	0.16	0.00	0.00	0.00
75	17.58	15.37	14.88	9.32	3.96	0.97	1.17	1.19	0.74	0.23	0.01	0.00	0.00
76	1.32	11.84	1.16	0.94	0.27	0.01	0.05	0.04	0.00	0.00	0.00	0.00	0.00
77	0.15	14.98	0.13	0.12	0.03	0.00	0.00	0.00	0.00	0.00	0.00	0.00	0.00
78	0.10	16.95	0.08	0.08	0.02	0.00	0.00	0.00	0.00	0.00	0.00	0.00	0.00
79	0.11	15.57	0.09	0.09	0.02	0.00	0.00	0.00	0.00	0.00	0.00	0.00	0.00
1	1.84	23.06	1.42	0.77	0.43	0.17	0.23	0.11	0.09	0.05	0.00	0.00	0.00
2	1.62	22.99	1.24	0.69	0.38	0.14	0.19	0.10	0.07	0.04	0.00	0.00	0.00
3	2.26	18.91	1.83	1.04	0.53	0.17	0.25	0.12	0.09	0.05	0.00	0.00	0.00
4	2.27	29.87	1.59	0.78	0.54	0.22	0.28	0.22	0.15	0.06	0.01	0.00	0.00
5	2.94	19.78	2.36	1.28	0.74	0.21	0.30	0.22	0.14	0.05	0.00	0.00	0.00
6	0.39	29.97	0.27	0.18	0.11	0.02	0.05	0.03	0.01	0.00	0.00	0.00	0.00
7	13.07	23.37	10.02	4.14	3.08	1.25	1.58	1.24	0.88	0.65	0.21	0.06	0.00
8	2.86	19.72	2.29	1.31	0.72	0.19	0.28	0.20	0.12	0.03	0.00	0.00	0.00
9	1.14	23.72	0.87	0.57	0.31	0.04	0.13	0.08	0.02	0.00	0.00	0.00	0.00
10	9.54	17.12	7.90	6.35	1.10	0.44	0.54	0.45	0.44	0.17	0.05	0.00	0.00
11	6.53	26.75	4.79	1.77	1.98	0.67	0.80	0.62	0.50	0.17	0.03	0.00	0.00
12	7.03	25.19	5.26	1.98	2.16	0.69	0.84	0.64	0.52	0.17	0.04	0.00	0.00
13	7.20	23.90	5.48	2.11	2.24	0.68	0.84	0.63	0.51	0.17	0.03	0.00	0.00
14	3.36	35.56	2.16	0.81	0.95	0.45	0.55	0.39	0.17	0.04	0.00	0.00	0.00
15	7.03	24.03	5.34	2.11	2.14	0.75	0.99	0.67	0.30	0.07	0.00	0.00	0.00
16	6.40	22.21	4.98	2.01	1.99	0.64	0.88	0.58	0.25	0.06	0.00	0.00	0.00
17	9.05	19.65	7.27	2.97	2.83	0.86	1.18	0.77	0.34	0.08	0.01	0.00	0.00
18	4.94	34.36	3.24	1.12	1.35	0.69	0.80	0.58	0.28	0.12	0.01	0.00	0.00
19	8.55	22.63	6.61	2.47	2.58	0.93	1.20	0.81	0.37	0.16	0.02	0.00	0.00
20	9.89	23.74	7.54	2.99	3.52	1.31	1.08	0.54	0.22	0.20	0.04	0.00	0.00
21	6.01	16.97	4.99	2.44	2.19	0.53	0.50	0.23	0.08	0.04	0.00	0.00	0.00
22	2.79	32.09	1.90	0.85	0.99	0.38	0.32	0.16	0.06	0.03	0.00	0.00	0.00
23	5.23	10.81	4.66	3.20	1.35	0.20	0.27	0.11	0.08	0.01	0.00	0.00	0.00
24	2.01	31.17	1.38	0.86	0.57	0.19	0.20	0.10	0.08	0.01	0.00	0.00	0.00
25	4.58	12.35	4.01	2.71	1.21	0.20	0.26	0.11	0.08	0.01	0.00	0.00	0.00
26	13.90	16.89	11.55	6.34	3.27	1.24	1.62	0.67	0.44	0.26	0.05	0.00	0.00
27	5.12	14.23	4.39	2.91	1.15	0.30	0.46	0.18	0.10	0.02	0.00	0.00	0.00
28	9.55	17.94	7.84	4.23	2.25	0.89	1.16	0.48	0.32	0.19	0.04	0.00	0.00
29	2.45	32.11	1.66	0.74	0.45	0.32	0.47	0.26	0.16	0.05	0.00	0.00	0.00
30	0.78	33.17	0.52	0.29	0.16	0.08	0.15	0.08	0.02	0.00	0.00	0.00	0.00
31	0.33	43.58	0.19	0.12	0.07	0.02	0.08	0.04	0.01	0.00	0.00	0.00	0.00
32	0.58	34.14	0.38	0.24	0.12	0.03	0.12	0.06	0.01	0.00	0.00	0.00	0.00
33	2.62	24.89	1.97	1.15	0.53	0.19	0.31	0.24	0.17	0.04	0.00	0.00	0.00
34	5.35	22.98	4.12	2.16	1.05	0.41	0.63	0.49	0.36	0.20	0.06	0.00	0.00
35	5.92	20.85	4.69	2.49	1.18	0.42	0.67	0.51	0.38	0.21	0.07	0.00	0.00
36	6.76	16.34	5.66	3.17	1.39	0.40	0.69	0.50	0.36	0.20	0.06	0.00	0.00
37	16.54	14.07	14.22	10.75	1.74	0.43	1.12	0.94	0.90	0.43	0.20	0.04	0.00

38	16.58	15.87	13.95	10.12	1.73	0.48	1.20	1.04	1.02	0.50	0.41	0.10	0.00
39	2.60	19.04	2.10	1.79	0.26	0.07	0.17	0.15	0.13	0.03	0.00	0.00	0.00
40	2.29	19.16	1.85	1.43	0.43	0.11	0.13	0.11	0.07	0.01	0.00	0.00	0.00
[illegible]	8.35	17.46	6.89	4.80	1.63	0.47	0.52	0.43	0.30	0.16	0.05	0.00	0.00
[illegible]	10.67	17.26	8.83	6.01	2.10	0.62	0.68	0.56	0.39	0.22	0.08	0.00	0.00
43	10.99	17.51	9.07	5.86	2.32	0.84	0.78	0.47	0.38	0.25	0.09	0.00	0.00
44	11.09	16.86	9.22	5.97	2.35	0.83	0.78	0.46	0.38	0.24	0.08	0.00	0.00
45	15.21	16.67	12.67	8.05	3.24	1.17	1.09	0.65	0.53	0.35	0.13	0.01	0.00
46	15.19	14.54	12.98	11.14	0.93	0.70	0.92	0.55	0.50	0.37	0.10	0.00	0.00
47	10.93	14.10	9.39	8.23	0.65	0.46	0.61	0.36	0.33	0.23	0.05	0.00	0.00
48	12.45	17.28	10.30	6.91	2.41	0.67	0.63	0.70	0.61	0.39	0.14	0.00	0.00
49	8.30	17.25	6.87	4.82	1.58	0.42	0.40	0.44	0.37	0.22	0.06	0.00	0.00
50	7.52	32.84	5.05	2.36	1.21	0.56	1.04	0.93	0.74	0.54	0.14	0.00	0.00
51	5.44	16.02	4.57	2.90	1.02	0.22	0.53	0.41	0.28	0.09	0.00	0.00	0.00
52	2.48	31.01	1.71	0.75	0.59	0.29	0.42	0.27	0.13	0.04	0.00	0.00	0.00
53	0.52	33.78	0.34	0.21	0.14	0.02	0.09	0.05	0.01	0.00	0.00	0.00	0.00
54	6.31	21.97	4.92	2.94	1.17	0.38	0.65	0.57	0.42	0.13	0.03	0.00	0.00
55	5.12	25.09	3.84	1.92	1.22	0.40	0.66	0.52	0.32	0.08	0.00	0.00	0.00
56	6.25	24.69	4.70	2.31	1.49	0.50	0.80	0.64	0.41	0.11	0.00	0.00	0.00
57	7.22	24.65	5.44	2.56	1.76	0.64	0.95	0.65	0.43	0.23	0.01	0.00	0.00
58	0.43	21.83	0.34	0.28	0.13	0.00	0.02	0.00	0.00	0.00	0.00	0.00	0.00
59	1.63	19.07	1.32	1.00	0.48	0.02	0.08	0.04	0.01	0.00	0.00	0.00	0.00
60	12.07	18.21	9.87	6.58	2.18	0.77	1.10	0.60	0.54	0.29	0.03	0.00	0.00
61	10.51	17.15	8.71	5.80	1.90	0.65	0.93	0.50	0.45	0.25	0.03	0.00	0.00
62	12.37	15.65	10.43	8.02	2.15	0.63	0.63	0.38	0.30	0.21	0.05	0.00	0.00
63	12.80	15.66	10.80	8.28	2.23	0.65	0.66	0.39	0.32	0.22	0.05	0.00	0.00
64	17.23	15.04	14.64	11.01	3.03	0.90	0.90	0.54	0.44	0.32	0.10	0.00	0.00
[illegible]	5.37	25.51	4.00	2.39	0.86	0.54	0.84	0.40	0.22	0.12	0.01	0.00	0.00
66	5.95	28.07	4.28	1.98	1.21	0.55	0.81	0.58	0.49	0.27	0.07	0.00	0.00
67	4.76	21.43	3.74	1.76	1.05	0.38	0.65	0.43	0.33	0.15	0.01	0.00	0.00
68	1.78	11.57	1.57	1.01	0.54	0.05	0.11	0.07	0.01	0.00	0.00	0.00	0.00
69	1.12	15.42	0.94	0.62	0.34	0.02	0.08	0.05	0.01	0.00	0.00	0.00	0.00
70	14.54	14.54	12.42	9.77	2.54	0.66	0.72	0.44	0.25	0.12	0.03	0.00	0.00
71	10.79	12.02	9.49	7.42	1.91	0.43	0.51	0.30	0.16	0.06	0.00	0.00	0.00
72	1.51	34.36	0.99	0.40	0.45	0.17	0.25	0.19	0.05	0.01	0.00	0.00	0.00
73	6.33	21.49	4.97	2.06	1.98	0.59	0.85	0.62	0.17	0.06	0.00	0.00	0.00
74	11.18	14.37	9.58	6.49	2.43	0.51	0.64	0.64	0.38	0.10	0.00	0.00	0.00
75	12.81	15.64	10.80	6.97	2.88	0.67	0.83	0.83	0.50	0.14	0.00	0.00	0.00
76	0.83	11.98	0.73	0.61	0.17	0.00	0.03	0.02	0.00	0.00	0.00	0.00	0.00
77	0.08	16.04	0.07	0.06	0.02	0.00	0.00	0.00	0.00	0.00	0.00	0.00	0.00
78	0.04	20.03	0.04	0.04	0.01	0.00	0.00	0.00	0.00	0.00	0.00	0.00	0.00
79	0.06	18.04	0.05	0.05	0.01	0.00	0.00	0.00	0.00	0.00	0.00	0.00	0.00
1	0.71	23.16	0.55	0.33	0.17	0.06	0.08	0.04	0.03	0.01	0.00	0.00	0.00
2	0.68	22.91	0.52	0.32	0.16	0.05	0.08	0.04	0.03	0.01	0.00	0.00	0.00
3	0.92	18.69	0.75	0.46	0.22	0.06	0.10	0.05	0.03	0.01	0.00	0.00	0.00
4	0.97	29.68	0.69	0.37	0.24	0.09	0.12	0.09	0.06	0.02	0.00	0.00	0.00
5	1.10	19.92	0.88	0.52	0.28	0.07	0.11	0.08	0.04	0.01	0.00	0.00	0.00
6	0.16	25.45	0.12	0.08	0.05	0.00	0.02	0.01	0.00	0.00	0.00	0.00	0.00
7	6.91	23.25	5.30	2.38	1.66	0.62	0.81	0.63	0.43	0.30	0.07	0.00	0.00
[illegible]	1.12	21.40	0.88	0.55	0.29	0.07	0.12	0.08	0.03	0.00	0.00	0.00	0.00
[illegible]	1.89	23.50	1.44	0.80	0.50	0.13	0.22	0.16	0.08	0.01	0.00	0.00	0.00
10	2.17	21.35	1.71	1.48	0.25	0.10	0.14	0.11	0.09	0.01	0.00	0.00	0.00
11	2.06	32.11	1.40	0.56	0.63	0.21	0.27	0.21	0.15	0.03	0.00	0.00	0.00
12	2.04	32.12	1.38	0.55	0.62	0.21	0.27	0.21	0.15	0.03	0.00	0.00	0.00

Table B.3 Steady State Output for Sediment Transport Rate (continued)

Reach	QSED (cfs)	BEDPCT	SUSP (cfs)	FS (cfs)	M (cfs)	CS (cfs)	VCS (cfs)	VFG (cfs)	FG (cfs)	MG (cfs)	CG (cfs)	VCG (cfs)	SC (cfs)
[illegible]	2.04	32.07	1.38	0.55	0.62	0.21	0.27	0.21	0.15	0.03	0.00	0.00	0.00
14	1.40	36.24	0.89	0.38	0.42	0.15	0.23	0.16	0.06	0.00	0.00	0.00	0.00
15	2.65	25.30	1.98	0.88	0.82	0.24	0.37	0.24	0.09	0.01	0.00	0.00	0.00
16	2.48	22.96	1.91	0.86	0.79	0.21	0.33	0.21	0.08	0.01	0.00	0.00	0.00
17	2.79	23.20	2.15	0.95	0.87	0.25	0.38	0.24	0.09	0.01	0.00	0.00	0.00
18	1.84	36.41	1.17	0.47	0.53	0.23	0.30	0.21	0.09	0.01	0.00	0.00	0.00
19	3.25	23.39	2.49	1.08	1.00	0.31	0.44	0.29	0.12	0.02	0.00	0.00	0.00
20	4.24	24.52	3.20	1.40	1.54	0.51	0.45	0.22	0.08	0.04	0.00	0.00	0.00
21	1.32	24.36	1.00	0.55	0.51	0.07	0.13	0.06	0.01	0.00	0.00	0.00	0.00
22	1.12	34.09	0.74	0.39	0.43	0.09	0.13	0.06	0.01	0.00	0.00	0.00	0.00
23	1.41	14.39	1.21	0.88	0.38	0.03	0.08	0.03	0.01	0.00	0.00	0.00	0.00
24	0.75	32.30	0.51	0.36	0.23	0.04	0.08	0.03	0.01	0.00	0.00	0.00	0.00
25	1.43	14.33	1.23	0.90	0.39	0.03	0.09	0.03	0.01	0.00	0.00	0.00	0.00
26	5.48	19.23	4.42	2.57	1.29	0.48	0.65	0.27	0.17	0.05	0.00	0.00	0.00
27	1.28	20.16	1.02	0.73	0.30	0.04	0.14	0.05	0.01	0.00	0.00	0.00	0.00
28	3.11	19.02	2.51	1.53	0.73	0.25	0.35	0.14	0.09	0.02	0.00	0.00	0.00
29	1.03	32.01	0.70	0.35	0.20	0.12	0.20	0.11	0.06	0.01	0.00	0.00	0.00
30	0.29	33.52	0.19	0.12	0.06	0.01	0.06	0.03	0.01	0.00	0.00	0.00	0.00
31	0.15	42.35	0.09	0.06	0.04	0.00	0.04	0.01	0.00	0.00	0.00	0.00	0.00
32	0.35	31.90	0.24	0.16	0.08	0.01	0.07	0.03	0.00	0.00	0.00	0.00	0.00
33	1.34	25.96	0.99	0.63	0.28	0.09	0.17	0.12	0.05	0.01	0.00	0.00	0.00
34	1.84	22.82	1.42	0.84	0.37	0.12	0.21	0.16	0.11	0.03	0.00	0.00	0.00
35	1.90	21.32	1.49	0.89	0.38	0.12	0.21	0.16	0.11	0.03	0.00	0.00	0.00
[illegible]	1.84	19.97	1.48	0.89	0.37	0.12	0.20	0.15	0.10	0.03	0.00	0.00	0.00
37	7.89	13.50	6.83	5.37	0.82	0.19	0.50	0.41	0.39	0.17	0.06	0.00	0.00
38	7.13	15.51	6.02	4.64	0.74	0.19	0.49	0.42	0.40	0.18	0.08	0.00	0.00
39	1.35	18.89	1.09	0.96	0.13	0.03	0.09	0.07	0.06	0.01	0.00	0.00	0.00
40	2.35	17.84	1.93	1.47	0.45	0.11	0.13	0.11	0.07	0.02	0.00	0.00	0.00
41	4.24	17.11	3.52	2.57	0.82	0.22	0.25	0.20	0.13	0.04	0.01	0.00	0.00
42	4.33	17.41	3.57	2.60	0.84	0.23	0.26	0.21	0.14	0.04	0.01	0.00	0.00
43	4.41	17.54	3.63	2.53	0.93	0.30	0.29	0.17	0.13	0.04	0.01	0.00	0.00
44	4.51	17.10	3.74	2.62	0.94	0.30	0.30	0.17	0.13	0.05	0.01	0.00	0.00
45	6.91	18.51	5.63	3.74	1.46	0.52	0.49	0.29	0.24	0.14	0.03	0.00	0.00
46	5.87	16.13	4.93	4.43	0.36	0.26	0.35	0.21	0.19	0.07	0.01	0.00	0.00
47	4.71	15.97	3.96	3.61	0.28	0.20	0.27	0.16	0.14	0.05	0.00	0.00	0.00
48	5.46	19.25	4.41	3.14	1.06	0.30	0.28	0.31	0.26	0.09	0.02	0.00	0.00
49	2.84	18.45	2.31	1.76	0.53	0.13	0.13	0.14	0.11	0.03	0.00	0.00	0.00
50	3.85	32.50	2.60	1.32	0.65	0.27	0.53	0.47	0.36	0.22	0.03	0.00	0.00
51	1.35	22.06	1.06	0.72	0.26	0.06	0.16	0.12	0.04	0.01	0.00	0.00	0.00
52	1.45	30.28	1.01	0.47	0.36	0.15	0.24	0.15	0.06	0.01	0.00	0.00	0.00
53	0.25	30.51	0.18	0.12	0.08	0.00	0.05	0.01	0.00	0.00	0.00	0.00	0.00
54	2.16	33.76	1.43	0.87	0.39	0.16	0.27	0.25	0.18	0.05	0.00	0.00	0.00
55	2.07	24.78	1.56	0.88	0.51	0.13	0.26	0.19	0.10	0.01	0.00	0.00	0.00
56	2.76	24.58	2.08	1.14	0.67	0.19	0.34	0.26	0.14	0.02	0.00	0.00	0.00
57	2.52	29.14	1.79	0.91	0.63	0.22	0.35	0.24	0.14	0.03	0.00	0.00	0.00
58	0.06	27.40	0.04	0.04	0.02	0.00	0.00	0.00	0.00	0.00	0.00	0.00	0.00
59	1.17	20.29	0.93	0.70	0.36	0.01	0.06	0.03	0.00	0.00	0.00	0.00	0.00
[illegible]	4.10	18.00	3.37	2.47	0.74	0.21	0.35	0.18	0.14	0.02	0.00	0.00	0.00
61	3.86	17.06	3.20	2.33	0.69	0.20	0.32	0.17	0.13	0.03	0.00	0.00	0.00
62	4.40	20.62	3.50	2.83	0.77	0.24	0.25	0.15	0.12	0.04	0.00	0.00	0.00
63	4.23	20.85	3.35	2.72	0.74	0.23	0.24	0.14	0.11	0.04	0.00	0.00	0.00

Table B.3 Steady State Output for Sediment Transport Rate (continued)

Reach	QSED (cfs)	BEDPCT	SUSP (cfs)	FS (cfs)	M (cfs)	CS (cfs)	VCS (cfs)	VFG (cfs)	FG (cfs)	MG (cfs)	CG (cfs)	VCG (cfs)	SC (cfs)
64	5.10	20.39	4.06	3.25	0.90	0.29	0.29	0.18	0.14	0.06	0.00	0.00	0.00
65	2.94	25.20	2.20	1.40	0.48	0.27	0.45	0.21	0.10	0.03	0.00	0.00	0.00
66	2.15	34.93	1.40	0.71	0.44	0.21	0.32	0.23	0.19	0.06	0.00	0.00	0.00
67	1.41	32.86	0.95	0.47	0.30	0.13	0.22	0.15	0.11	0.02	0.00	0.00	0.00
68	0.36	13.28	0.31	0.22	0.11	0.00	0.02	0.01	0.00	0.00	0.00	0.00	0.00
69	0.27	15.70	0.23	0.17	0.08	0.00	0.02	0.00	0.00	0.00	0.00	0.00	0.00
[illegible]	6.51	14.33	5.57	4.57	1.11	0.25	0.30	0.17	0.09	0.02	0.00	0.00	0.00
71	5.23	11.95	4.61	3.76	0.89	0.17	0.22	0.12	0.06	0.01	0.00	0.00	0.00
72	0.55	34.88	0.36	0.17	0.18	0.04	0.09	0.06	0.01	0.00	0.00	0.00	0.00
73	2.92	21.95	2.28	1.04	0.94	0.23	0.38	0.27	0.06	0.01	0.00	0.00	0.00
74	5.28	13.97	4.54	3.28	1.13	0.19	0.28	0.26	0.13	0.01	0.00	0.00	0.00
75	5.26	15.39	4.45	3.12	1.17	0.21	0.31	0.29	0.14	0.01	0.00	0.00	0.00
76	0.23	13.65	0.20	0.18	0.04	0.00	0.01	0.00	0.00	0.00	0.00	0.00	0.00
77	0.01	20.64	0.01	0.01	0.00	0.00	0.00	0.00	0.00	0.00	0.00	0.00	0.00
78	0.00	29.97	0.00	0.00	0.00	0.00	0.00	0.00	0.00	0.00	0.00	0.00	0.00
79	0.01	25.89	0.01	0.01	0.00	0.00	0.00	0.00	0.00	0.00	0.00	0.00	0.00

APPENDIX E

GEOTECHNICAL REPORTS

R·A·M

RICKER • ATKINSON • McBEE & ASSOCIATES, INC.

Geotechnical Engineering • Construction Materials Testing

Simons, Li & Associates, Inc.
4600 S. Mill Avenue, Suite 200
Tempe, Arizona 85282

May 8, 1997

Attention: Bert Bergendahl, P.E.

Subject: Geotechnical Engineering Report
Skunk Creek Master Plan Final Design
FCD 95-38
ACDC to 51st Avenue
Peoria/Glendale, Arizona

R.A.M. Project No. G01319

Attached to this letter is the Geotechnical Engineering Report for the proposed Skunk Creek Master Plan Final Design to be located in Peoria/Glendale, Arizona.

The proposed project will include constructing a protected drainage channel along the alignment of Skunk Creek with drop structures to limit flow velocities. The results of our field exploration; laboratory testing; and engineering analysis, evaluation and recommendations are presented in the report for the channel. A separate report will be prepared for the drop structures once the location and configuration of each structure has been determined.

The following is a brief summary of selected recommendations.

A. Protected Channel Slopes:

- Single layer gabion protection may be used on channel slopes of 2H:1V and 3H:1V.
- Erosion protection on the channel sides and bottom may be used at all bridge crossings to limit scour. The protection should extend up and down stream with cut-off walls.

The attached report was prepared based on project and site data available at this time and was prepared in a manner and to the standards of the local geotechnical engineering practice. Our

2105 South Hardy Drive, Suite 13, Tempe, AZ 85282 • Telephone (602) 921-8100 • Facsimile (602) 921-4081

services did not include evaluations for the presence of hazardous materials, for area subsidence resulting from groundwater withdrawal or other geologic hazards.

Respectfully submitted,

RICKER, ATKINSON, MCBEE & ASSOCIATES, INC.

By: Kenneth L. Ricker, P.E.

Reviewed by: Charles H. Atkinson, P.E.

/nk
Copies to: Addressee (5)

RICKER • ATKINSON • McBEE & ASSOCIATES, INC.

Geotechnical Engineering • Construction Materials Testing

Geotechnical Engineering Services
Skunk Creek Channel Improvements
FCD Contract No. 95-38
Grade Control Structure Analysis
R.A.M. Project No. G01319

For:
Simons, Li & Associates, Inc.
4600 South Mill Avenue, Suite 200
Tempe, Arizona 85282

♦♦♦

By:
Ricker, Atkinson, McBee & Associates, Inc.
2105 South Hardy Drive, Suite 13
Tempe, Arizona 85282

R·A·M

RICKER • ATKINSON • McBEE & ASSOCIATES, INC.

Geotechnical Engineering • Construction Materials Testing

Simons, Li & Associates, Inc.
4600 S. Mill Avenue, Suite 200
Tempe, Arizona 85282

November 7, 1997

Attention: Bart Bergendahl, P.E.

Subject: Geotechnical Engineering Report
Skunk Creek Master Plan Final Design
FCD 95-38
ACDC to 51st Avenue
Peoria/Glendale, Arizona

R.A.M. Project No. G01319
Supplement No. 2

At your request, this firm has reviewed the subject project with respect to material specifications for use in reconstruction of the channel bank through a landfill area. We understand that the existing channel bank and the underlying and adjacent landfill will be completely removed from the channel and channel bank areas and from those areas required to do the construction. The excavation may extend to depths of 20 to 40 feet.

We recommend that the fill material consist of the following:

Maximum Particle Size	18 inches*
Maximum Plasticity Index	15
Maximum Percent Passing No. 200 Sieve	15
Minimum Percent Passing No. 4 Sieve	40
Maximum Percent Passing No. 4 Sieve	65

* The maximum particle size should be reduced to 4 inches for fill placed above the anticipated adjacent channel scour depth.

All fill shall be free of organics and debris and should be fairly well graded such that voids cannot be observed. Nesting of large gravel or rubble shall not occur.

If you have any questions, please do not hesitate to call. This supplement should be attached to and made a part of the original report.

2105 South Hardy Drive, Suite 13, Tempe, AZ 85282 • Telephone (602) 921-8100 • Facsimile (602) 921-4081

Respectfully submitted,
RICKER, ATKINSON, MCBEE & ASSOCIATES, INC.

By: Kenneth L. Ricker, P.E.

Reviewed by: Charles H. Atkinson, P.E.

/nk
Copies To: Addressee (5)

R·A·M

RICKER • ATKINSON • McBEE & ASSOCIATES, INC.

Geotechnical Engineering • Construction Materials Testing

Simons, Li & Associates, Inc.
4600 S. Mill Avenue, Suite 200
Tempe, Arizona 85282

November 25, 1997

Attention: Bart S. Bergendahl, P.E.

Subject: Geotechnical Engineering Services
Skunk Creek Channel Improvements
FCD 95-38
Grade Control Structures

R.A.M. Project No. G01319
Supplement No. 3

At your request, this firm has excavated four test pits in the center of the channel at the following grade control structure locations:

Location

1. Approximately 150' downstream of 69th Avenue
2. Approximately 150' downstream of 57th Avenue
3. Approximately 150' downstream of 54th Avenue
4. Approximately 700' upstream of 54th Avenue

The test pits were excavated with a CAT 330 B trackhoe using a 53-inch wide bucket. The trackhoe was provided by Wright's Excavating, Inc. The test pits extended to depths of 17 to 24 feet below existing stream grade which is approximately 5 feet below the anticipated maximum depth of excavation at each grade control structure. The test pits were logged by a field technician from our firm who also obtained representative samples of the various materials encountered. The logs of the test pits are attached along with the laboratory test results. This report completes our services for the project.

If you have any questions or need clarification of any item please contact the undersigned.

Respectfully submitted,
RICKER, ATKINSON, MCBEE & ASSOCIATES, INC.

Registered Professional Engineer (Civil) CERTIFICATE NO. 10971 KENNETH L. RICKER Date Signed 11-24-97 ARIZONA, U.S.A.

Registered Professional Engineer (Civil) CERTIFICATE NO. 21852 CHARLES H. ATKINSON Date Signed 11-24-97 ARIZONA, U.S.A.

By: Kenneth L. Ricker, P.E.

Reviewed by: Charles H. Atkinson, P.E.

/nk
Copies To: Addressee (5)

LEGEND

CLASSIFICATION OF SOILS

ASTM Designation: D2487-83
(Based on Unified Soil Classification System)

Criteria for Assigning Group Symbols and Group Names Using Laboratory Tests				Soil Classification: Group Symbol	Soil Classification: Name
COARSE-GRAINED SOILS More than 50% retained on No. 200 Sieve	Gravels More than 50% coarse fraction retained on No. 4 Sieve	Clean Gravels Less than 5% fines	$Cu \geq 4$ and $1 \leq Cc \leq 3$	GW	Well graded gravel
			$Cu < 4$ and/or $1 > Cc > 3$	GP	Poorly graded gravel
		Gravels with Fines More than 12% fines	Fines classify as ML or MH	GM	Silty gravel
			Fines classify as CL or CH	GC	Clayey gravel
	Sands 50% or more of coarse fraction passes No. 4 sieve	Clean Sands Less than 5% fines	$Cu \geq 6$ and $1 \leq Cc \leq 3$	SW	Well-graded sand
			$Cu < 6$ and/or $1 > Cc > 3$	SP	Poorly graded sand
		Sands with Fines More than 12% fines	Fines classify as ML or MH	SM	Silty sand
			Fines classify as CL or CH	SC	Clayey sand
FINE-GRAINED SOILS 50% or more passes the No. 200 Sieve	Silts and Clays Liquid limit less than 50	Inorganic	PI>7 and plots on or above "A" line	CL	Lean clay
			PI<4 or plots below "A" line	ML	Silt
		Organic	Liquid Limit - oven dried / Liquid limit - not dried <0.75	OL	Organic clay / Organic silt
	Silts and Clays Liquid limit 50 or more	Inorganic	PI plots on or above "A" line	CH	Fat clay
			PI plots below "A" line	MH	Elastic silt
		Organic	Liquid limit - oven dried / Liquid limit - not dried <0.75	OH	Organic clay / Organic silt
HIGHLY ORGANIC SOILS	Primarily organic matter, dark in color, and organic odor			PT	Peat

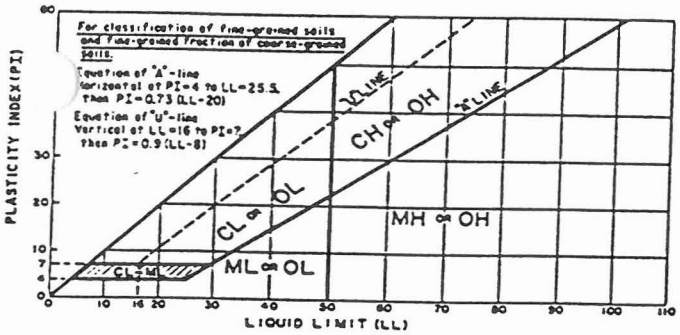

TEST PIT LOG DEFINITIONS

Blows per foot using 140 pound hammer with 30 inch free-fall.

Depth, feet	Blows/Foot		Sample Type	Dry Density pcf	Water Content, %	Unified Classification	Description
	C	N/R					

C = Continuous Penetration Resistance (2 inch diameter rod)
N = Standard Penetration Resistance (ASTM D1586)
R = Penetration Resistance (3 inch diameter ring line sampler)

U.S. STANDARD SERIES SIEVE				GRAIN SIZES		CLEAR SQUARE SIEVE OPENINGS		
200	40		10	4		3/4"	3"	12"
SILTS & CLAYS DISTINGUISHED ON BASIS OF PLASTICITY	SAND			GRAVEL			COBBLES	BOULDERS
	FINE	MEDIUM	COARSE	FINE	COARSE			

MOISTURE CONDITION (INCREASING MOISTURE →)

DRY	SLIGHTLY DAMP	DAMP (Plastic Limit)	MOIST	VERY MOIST	WELL (SATURATED) (Liquid Limit)

CONSISTENCY CORRELATION		RELATIVE DENSITY CORRELATION	
CLAYS & SILTS	BLOWS/FOOT*	SANDS & GRAVELS	BLOWS/FOOT*
VERY SOFT	0-2	VERY LOOSE	0-4
SOFT	2-4	LOOSE	4-10
FIRM	4-8	MEDIUM DENSE	10-30
STIFF	8-16	DENSE	30-50
VERY STIFF	16-32	VERY DENSE	OVER 50
HARD	OVER 32		

***Number of blows of 140 lb. hammer falling 30" to drive a 2" O.D. (1-3/8" I.D.) split-spoon sampler (ASTM D1586).**

TEST PIT LOG

Project: 150' Downstream of 69th Avenue TEST PIT: 1

Elevation: Not Determined Datum: --- Date: 11-14-97

Depth, feet	Blows/Foot C	Blows/Foot N/R	Sample Type	Dry Density, pcf	Water Content, %	Unified Classification	Description
5						GC	Clayey Sandy Gravel with Cobbles; brown, nearly dry, medium dense to dense, medium plasticity fines, (+3"~15%), some boulders.
10						SM	Silty Gravelly Sand; brown, nearly dry, dense to very dense, non-plastic fines, moderate cementation, (+3"~2%), occasional cobbles.
15							
20							Stopped excavating at 18 feet. No Groundwater Observed.
25							

This test pit log represents the conditions encountered on the date of excavation at this particular location. No other warranty is expressed or implied to the actual conditions which may exist within the vicinity of this test pit location.

TEST PIT LOG

Project: 150' Downstream of 57th Avenue TEST PIT: 2

Elevation: Not Determined Datum: --- Date: 11-14-97

Depth, feet	Blows/Foot C	Blows/Foot N/R	Sample Type	Dry Density, pcf	Water Content, %	Unified Classification	Description
5						SP/ SW/ SC	Clayey Gravelly Sand; brown, nearly dry, medium dense to dense, some medium plasticity fines, with cobbles (+3"~5%), trace boulders.
10							
15						SC	Clayey Gravelly Sand; brown, nearly dry, dense to very dense, medium plasticity fines, (+3"~0%).
20						CL/ SC	Sandy Clay/Clayey Sand; brown, nearly dry, very hard, medium plasticity, very heavy cementation.
25							Stopped excavating at 24 feet. No Groundwater Observed.

This test pit log represents the conditions encountered on the date of excavation at this particular location. No other warranty is expressed or implied to the actual conditions which may exist within the vicinity of this test pit location.

TEST PIT LOG

Project: 150' Downstream of 54th Avenue TEST PIT: 3

Elevation: Not Determined Datum: --- Date: 11-14-97

Depth, feet	Blows/Foot C	Blows/Foot N/R	Sample Type	Dry Density, pcf	Water Content, %	Unified Classification	Description
5						SM/ GP	Fill - Silty Sand and Gravel with Cobbles, Trash, Asphalt and Other Debris; brown, nearly dry, loose to medium dense, low plasticity fines, (+3"~25%), boulders.
						SP/ SW/ SC	Clayey Gravelly Sand; brown, nearly dry, medium dense to dense, some medium plasticity fines, with cobbles (+3"~5%), trace boulders.
10						CL/ SC	Sandy Clay/Clayey Sand; brown, nearly dry, very hard, medium plasticity, very heavy cementation.
15							
20							Stopped excavating at 17 feet. No Groundwater Observed.
25							

This test pit log represents the conditions encountered on the date of excavation at this particular location. No other warranty is expressed or implied to the actual conditions which may exist within the vicinity of this test pit location.

TEST PIT LOG

Project: 700' Upstream of 54th Avenue TEST PIT: 4

Elevation: Not Determined Datum: --- Date: 11-14-97

Depth, feet	Blows/Foot C	Blows/Foot N/R	Sample Type	Dry Density, pcf	Water Content, %	Unified Classification	Description
5						GP	Sandy Gravel with Cobbles; brown, nearly dry, medium dense to dense, trace to non-plastic fines, (+3" ~ 15%), some boulders.
10							
15						CL/ SC	Sandy Clay/Clayey Sand; brown, nearly dry, very hard, medium plasticity, very heavy cementation.
20							Stopped excavating at 20 feet. No Groundwater Observed.
25							

This test pit log represents the conditions encountered on the date of excavation at this particular location. No other warranty is expressed or implied to the actual conditions which may exist within the vicinity of this test pit location.

LABORATORY TEST RESULTS

Date: 25-Nov-97

SAMPLE SOURCE: As noted below

TESTING PERFORMED: Sieve Analysis, Percent Passing No. 200 Sieve, Atterberg Limits (ASTM C136, D1140, D4318)

SAMPLED BY: RAM/Miller

RESULTS:

Sample	Atterberg Limits		Sieve Size - Accumulative Percent Passing											Soil
Source	LL	PI	200	100	50	30	16	8	4	3/4"	1"	2"	3"	Class.*
1 @ 8'-18'		NP	29	47	56	63	67	71	74	81	82	100		SM
2 @ 14'-19'	48	22	10	15	20	33	47	61	76	100				SC
2 @19'-24'	46	21	10	12	13	15	18	21	28	58	59	100		**
3 @ 8'-17'	38	13	10	14	17	21	25	30	35	49	72	100		**
4 @ 18'-20'	47	19	11	16	21	27	32	40	50	89	97	100		SC

NP = Non-Plastic

* Unified Soil Classification System

** Sieve analysis not representative of material due to very heavy cementation which prevented breaking the sample down.

R·A·M

RICKER • ATKINSON • McBEE & ASSOCIATES, INC.

Geotechnical Engineering • Construction Materials Testing

Simons, Li & Associates, Inc.
4600 South Mill Ave., Suite 200
Tempe, AZ 85282

October 21, 1997

Attention: Bart S. Bergendahl, P.E.

Project: Geotechnical Engineering Services
Skunk Creek Channel Improvements
FCD Contract No. 95-38
Grade Control Structure Analysis

R.A.M. Project No. G01319
Supplement No. 1

Pursuant to your letter of October 3, 1997, enclosed is the analysis package requested regarding the proposed grade control structures for the Skunk Creek project. The factors of safety against piping, overturning, uplift, and sliding were calculated and are as follows:

- Piping: Fs = 9.3
- Overturning: Fs = 2.4
- Uplift: Fs = 2.1
- Sliding:
  - Low Water Case Fs = 1.8 Without gabions: Fs = 1.4
  - High Water Case Fs = 1.7 Without gabions: Fs = 1.3

Based on the foregoing, it is our opinion that the planned configuration for the control structures meets or exceeds the typical minimum factor of safety of 1.5.

If you have any questions, please call at the number listed above.

Respectfully submitted,

RICKER, ATKINSON, MCBEE & ASSOCIATES, INC.

Registered Professional Engineer (Civil)
CERTIFICATE NO.
10971
KENNETH L.
RICKER
Date Signed 10-21-97
ARIZONA, U.S.A.

By: Michele St. Germaine, E.I.T. and Kenneth L. Ricker, P.E.

Distribution: Addressee (5)

2105 South Hardy Drive, Suite 13, Tempe, AZ 85282 • Telephone (602) 921-8100 • Facsimile (602) 921-4081

SKUNK CREEK, PROJECT NO. G01319

DROP STRUCTURE DIMENSIONS

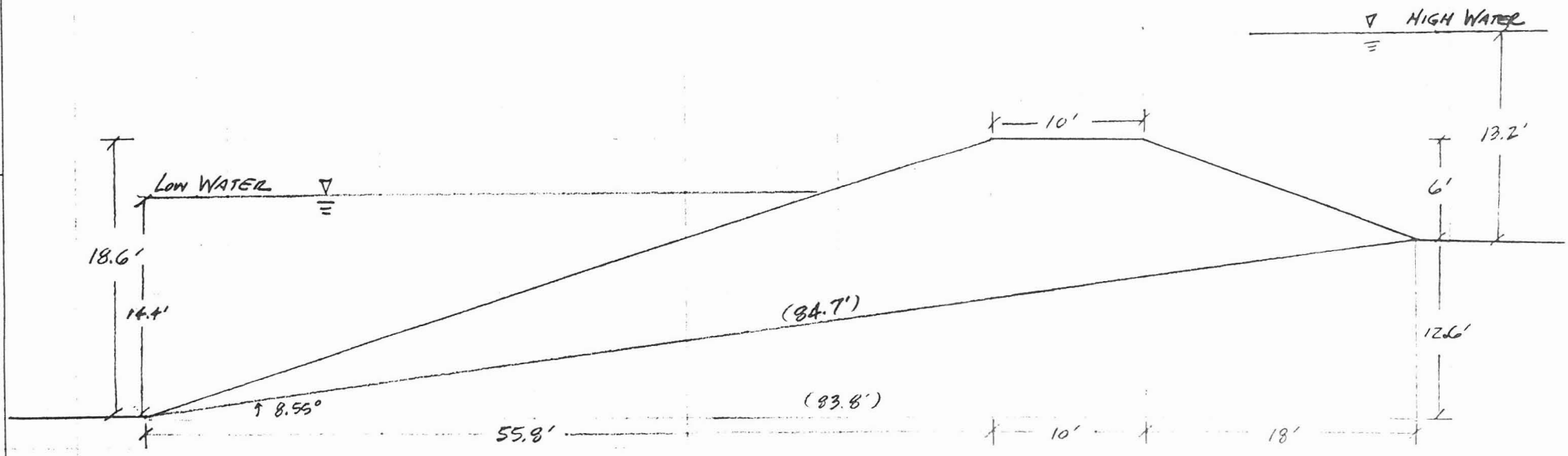

ASSUME: $\gamma_{soil} = 138$ pcf
$c = 0$
$\phi = 42$

By: M St Germain
DATE: Oct 13, 1997

REVIEWED BY: KLR
DATE: 10-21-97

RICKER, ATKINSON, MCBEE & ASSOCIATES

FLOW NET.

- $q = \Delta H \frac{n_f}{n_d} k$

$\Delta H_{max} = 11.4$ ft
Use $k = 0.02$ ft/min
$n_f = 3$ $n_d = 12$

$\rightarrow q = (11.4 \text{ ft})(0.02 \text{ ft/min})\left(\frac{3}{12}\right) = \boxed{0.057 \text{ ft}^2/\text{min}}$

- Loss of head/drop $= \frac{\Delta H}{n_d} = \frac{11.4 \text{ ft}}{12} = \boxed{0.95 \text{ ft/drop}}$

- Gradient

$i = \frac{\Delta H}{L} = \frac{11.4 \text{ ft}}{84.7 \text{ ft}} = \boxed{0.13}$

$i_{cr} = \frac{\gamma_b}{\gamma_w} = \frac{\gamma_{sat} - \gamma_w}{\gamma_w} = \frac{138 \text{ pcf} - 62.4 \text{ pcf}}{62.4 \text{ pcf}} = 1.211$

$F_s = \frac{i_{cr}}{i} = \frac{1.211}{0.13} = 9.3 > 2 \Longrightarrow \boxed{\text{NO PIPING}}$

By: A. St. Germain
DATE: 13 OCT 97

REVIEWED BY: KPM
DATE: 10-21-97

FLOW NET

$N_f = 3$
$N_d = 12$
$\Delta H_{max} = 11.4$ FT

$\rightarrow \Delta H/drop = 11.4'/12 = 0.95'$

SCALE: 1" = 10'

By: N. S. Germani
DATE: 13 OCT 97

REVIEWED BY: KW
DATE: 10-21-97

Force Diagram for Overturning

SKUNK CREEK G01319

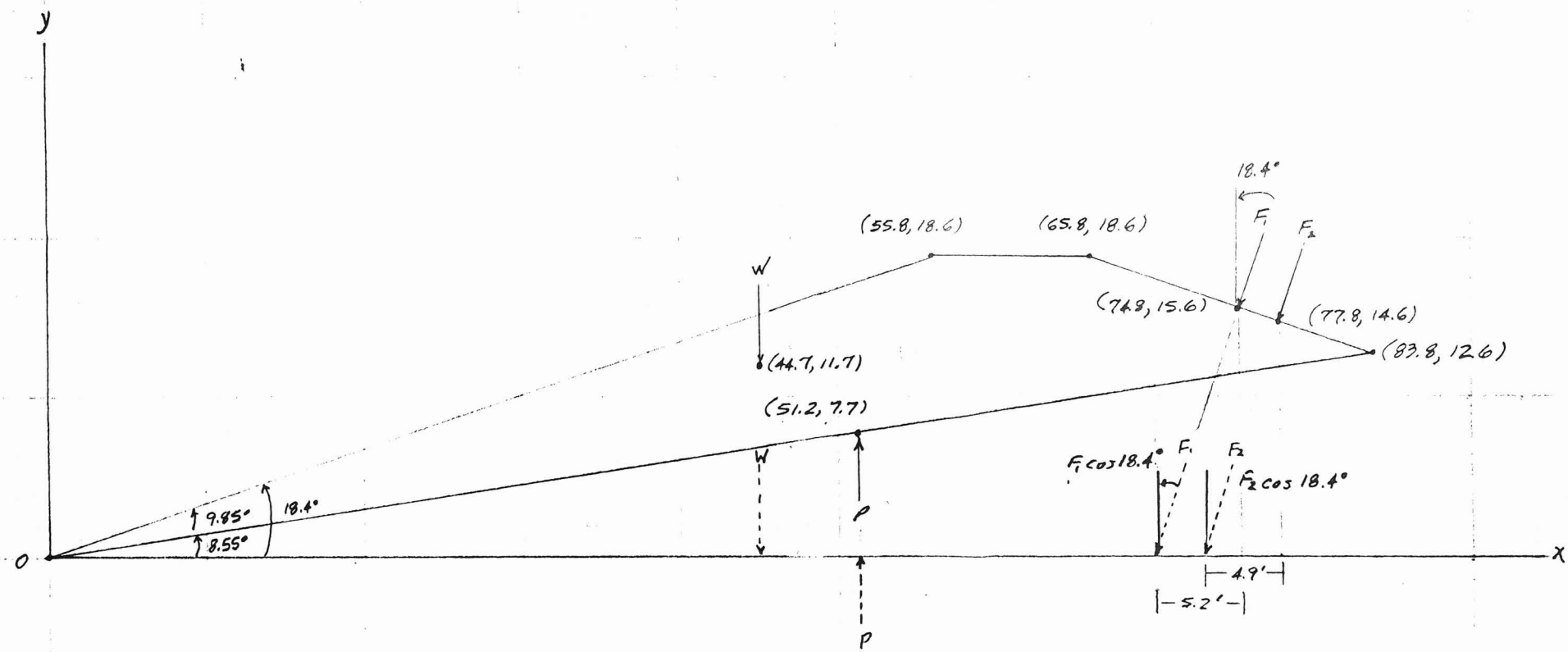

$$\circlearrowleft + \Sigma M_o = 44.7'(W) + F_1(\cos 18.4°)(74.8' - 5.2') + F_2(\cos 18.4°)(77.8' - 4.9') - 51.2'(P)$$

$$= (44.7')(63.1 \text{ kips/ft}) + (66.0')(8.54 \text{ kips/ft}) + (69.2')(3.56 \text{ kips/ft}) - (51.2')(29.8 \text{ kips/ft})$$

$$= 2820.6 \text{ kips-ft/ft} + 563.6 \text{ kips-ft/ft} + 246.4 \text{ kips-ft/ft} - 1525.8 \text{ kips-ft/ft}$$

$$\Sigma M_o = 2104.8 \text{ kips-ft/ft}$$

$$\rightarrow F_s \text{ against overturning} = \frac{\Sigma + M_o}{\Sigma - M_o} = \frac{3630.6}{1525.8} = \boxed{2.4}$$

By: M St. Germain
DATE: 15 Oct 97

REVIEWED BY: Kim
DATE: 10-29-97

RICKER, ATKINSON, MCBEE & ASSOCIATES

FORCES

- Centroid of Drop Structure

Part	$A\ (ft^2)$	$\bar{x}\ (ft)$	$\bar{y}\ (ft)$	$\bar{x}A\ (ft^3)$	$\bar{y}A\ (ft^3)$
1	78.3	71.8	13.7	5621.9	1072.7
2	87.0	60.8	14.3	3648.0	858.0
3	7.5	59.1	9.4	443.3	70.5
4	284.6	37.7	11.8	10729.4	3358.3
TOTALS	$457.4\ ft^2$			$20450\ ft^3$	$5360\ ft^3$

$$\bar{X} = \frac{\Sigma A\bar{x}}{\Sigma A} = \frac{20450\ ft^3}{457.4\ ft^2} = 44.7\ ft$$

$$\bar{y} = \frac{\Sigma A\bar{y}}{\Sigma A} = \frac{5360\ ft^3}{457.4\ ft^2} = 11.7\ ft$$

- Weight $= A\gamma_{soil} = (457.4\ ft^2)(138\ pcf) = \underline{63.1\ kips/ft} = W$

- Hydrostatic Pressure

$P_1 = 7.2\ ft(\gamma_w) = 7.2\ ft(62.4\ pcf) = 449.3\ psf$
$P_2 = 13.2\ ft(\gamma_w) = 13.2\ ft(62.4\ pcf) = 823.7\ psf$

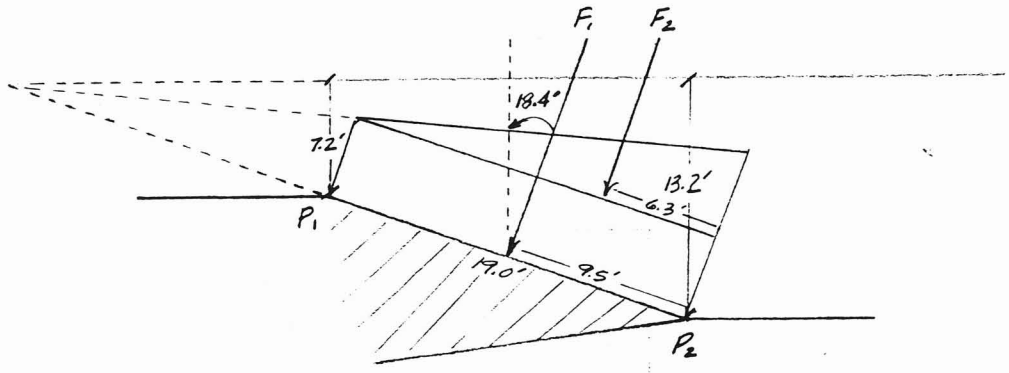

$F_1 = (449.3\ psf)(19.0') = \boxed{8.54\ kips/ft}$

$F_2 = \frac{1}{2}(823.7\ psf - 449.3\ psf)(19.0\ ft) = \boxed{3.56\ kips/ft}$

By: K. St. Germaine
DATE: 15 Oct 97

REVIEWED BY: KMR
DATE: 10-21-97

CENTROID

SKUNK CREEK G01319

AREA = 457.4 ft^2

$W_t = (457.4\ ft^2)\ \gamma_{sat} = (457.4)(138) = 63.1$ kips/ft

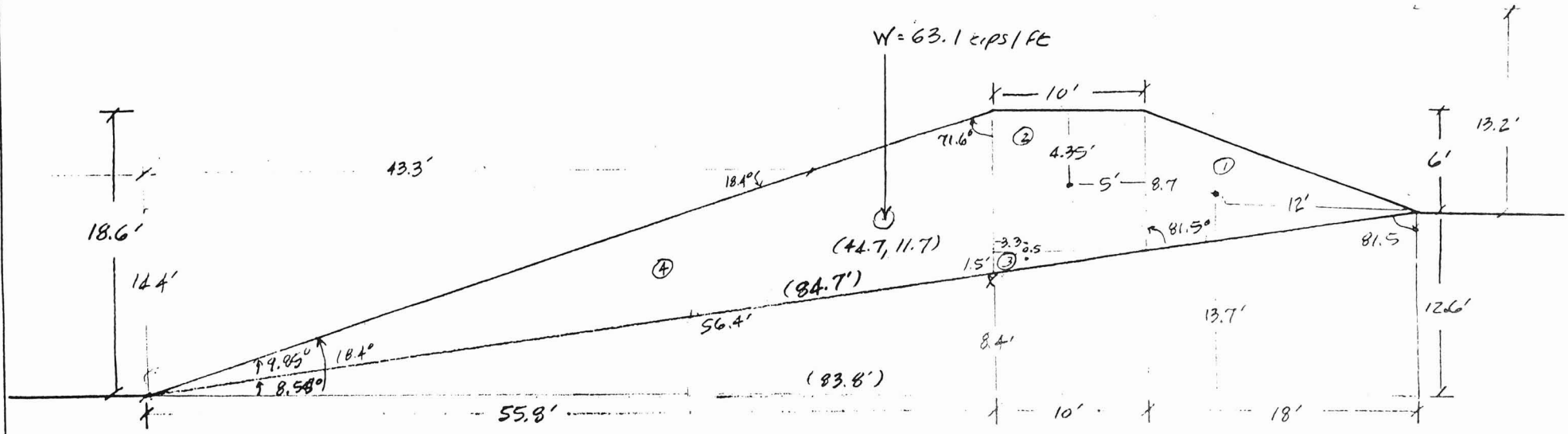

Area ① = ½(8.7)(18') = 78.3 ft^2

Area ② = (10')(8.7') = 87.0 ft^2

Area ③ = ½(1.5')(10') = 7.5 ft^2

Area ④ = ½(10.2')(55.8') = 284.6 ft^2

A_{TOTAL} = 457.4 ft^2

By: M. St. Germain

DATE: 14 OCT 97

REVIEWED BY: KW

DATE: 10-21-97

RICKER, ATKINSON, MCBEE & ASSOCIATES

- UPLIFT FORCE

Loss of head / potential drop = 0.95 ft. / drop

Pressure Diagram

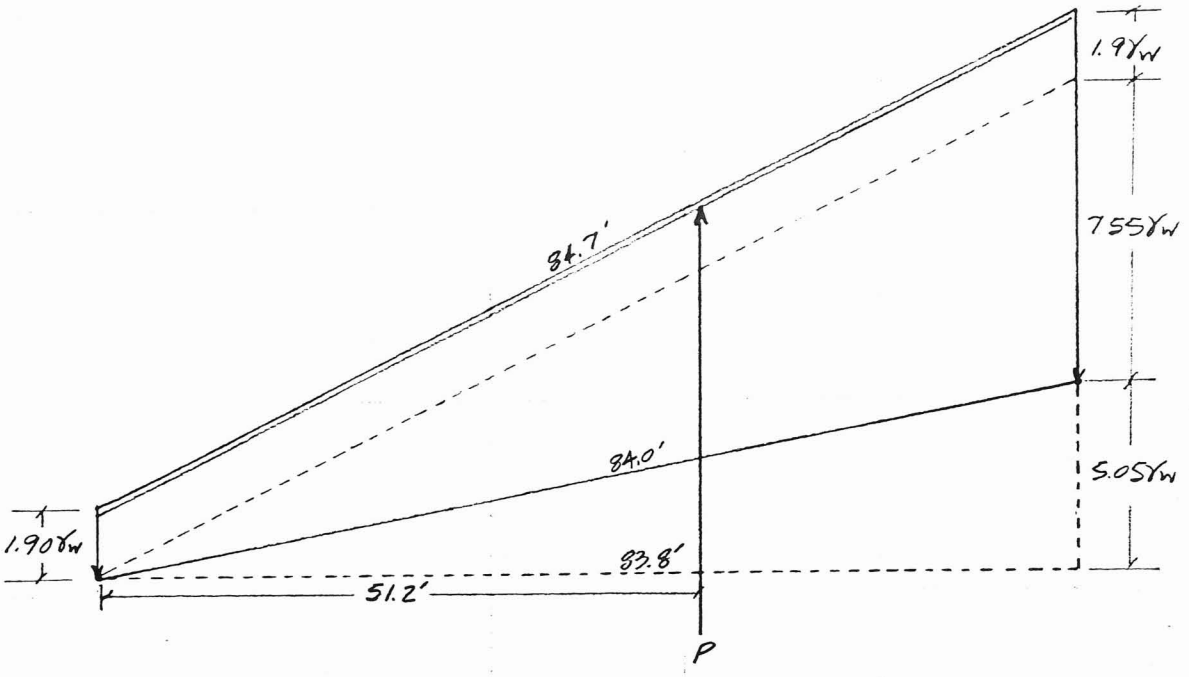

$P = (1.90\,ft)(62.4\,pcf)(84.7\,ft) + (1/2)(12.6\,ft - 5.05\,ft)(62.4\,pcf)(83.8\,ft)$

$= 10.04\ kips/ft + 19.74\ kips/ft$

$= \boxed{29.8\ kips/ft}$

$F_s = \dfrac{Weight}{Uplift} = \dfrac{63.1\ kips/ft}{29.8\ kips/ft} = \boxed{2.1}$

By: M. St Germain

DATE: 14 Oct 97

REVIEWED BY: RBR

DATE: 10-21-97

RICKER, ATKINSON, MCBEE & ASSOCIATES

GEOSYSTEM SLOPE STABILITY PROGRAM
SB-SLOPE

PROJECT DATA: G1319
Project: Skunk Creek Drop Structures
Location: Phoenix AZ
Filename: SKUNKD-G Description: Skunk Creek - Downstream With Gabions

ANALYSIS DATA:

Point No.	Coordinates X	Coordinates Y	Line No.	Left Point	Right Point	Soil No.	Phreatic Line
1	0.0	0.0	1	1	2	2	N
2	20.0	0.0	2	2	3	1	N
3	63.3	14.4	3	3	4	1	N
4	75.8	18.6	4	4	5	1	N
5	85.8	18.6	5	5	6	1	N
6	103.8	12.6	6	6	7	2	Y
7	115.0	12.6	7	2	8	2	N
8	28.7	1.3	8	8	9	2	N
9	63.3	12.8	9	9	10	2	Y
10	75.8	17.1	10	10	11	2	Y
11	85.8	17.1	11	11	12	2	Y
12	100.5	12.1	12	12	6	2	Y
13	0.0	14.4	13	8	12	2	N

Soil No.	Density pcf	Cohesion psf	Phi Deg
1	150.0	0	30.0
2	138.0	0	42.0

Free water surface, left point = 13
right point = 3

LOW WATER ANALYSIS SETUP

By: M. St. Germaine
DATE: 16 OCT 97

REVIEWED BY: [illegible]
DATE: 10-21-97

RICKER ATKINSON McBEE & ASSOCIATES

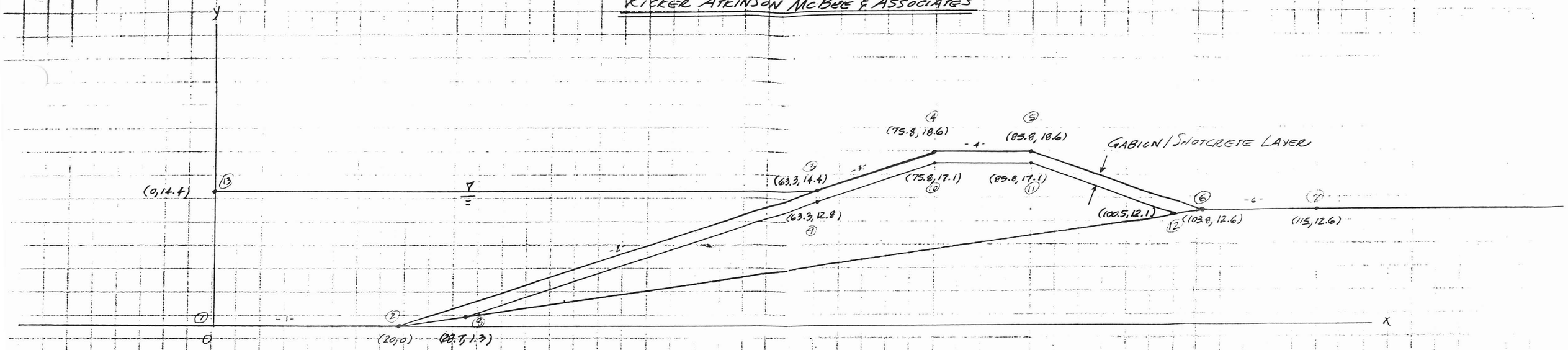

LOW WATER MODEL FOR SB-SLOPE PROGRAM

By: M. St. Germaine
DATE: 16 Oct 97

REVIEWED BY: [illegible]
DATE: 10-21-97

RICKER, ATKINSON, MCBEE & ASSOCIATES

SKUNK CREEK G1319

BISHOP'S METHOD SLICE DIAGNOSTICS - FILE SKUNKD-G at 2:01 pm on 10/16/1997
Center coordinates: X=55.00, Y=53.00, Radius: 40.20
Number of slices selected = 15, number of slices used = 17
Adjustment of negative effective normal forces is in effect
Factor of safety = 1.763

No.	Left Side of Slice: X	Y Top	Y Bottom	Slice Angle	Vertical Force	Water Force	Normal Force	Resisting Term	Driving Term
1	59.13	13.01	13.01	6.64	97	86	10	6	-15
2	60.17	13.36	13.13	8.14	107	78	30	17	-3
3	61.21	13.71	13.28	9.65	113	67	46	26	8
4	62.26	14.05	13.46	11.16	115	54	61	33	19
5	63.30	14.40	13.67	12.68	124	0	124	68	27
6	64.34	14.75	13.90	14.20	139	0	139	77	34
7	65.38	15.10	14.16	15.74	151	0	151	83	41
8	66.43	15.45	14.46	17.29	157	0	157	86	47
9	67.47	15.80	14.78	18.85	159	0	159	87	51
10	68.51	16.15	15.14	20.43	155	0	155	85	54
11	69.55	16.50	15.53	22.02	147	0	147	81	55
12	70.59	16.85	15.95	23.63	133	0	133	73	53
13	71.63	17.20	16.40	25.26	114	0	114	63	48
14	72.68	17.55	16.89	26.92	89	0	89	49	40
15	73.72	17.90	17.42	28.59	58	0	58	32	28
16	74.76	18.25	17.99	30.30	20	0	20	11	10
17	75.80	18.60	18.60	31.16	0	0	0	0	0

failure surface enters at x = 59.1278 y = 13.0125
failure surface exits at x = 75.8010 y = 18.6000
OVERALL MINIMUM: x = 55.0, y = 53.0, r = 40.2, FS = 1.763

LOW WATER SLICE DIAGNOSTICS

By: M. St. Germaine
DATE: 16 Oct 97

REVIEWED By: RLR
DATE: 10-21-97

LOW WATER FLOW SURFACE

SB-SLOPE

Simplified Bishop Slope Stability Analysis

PROJECT: Skunk Creek Drop Structures G01319

LOCATION: Phoenix AZ

FILE: SKUNKD-G

COMPLETE SLOPE CROSS SECTION SHOWN

CIRCLE	X	Y	RADIUS	FS
1	55.0	53.0	40.2	1.76

SOIL*	DENSITY	COHESION	PHI
1	150.0	0.0	30.0
2	138.0	0.0	42.0

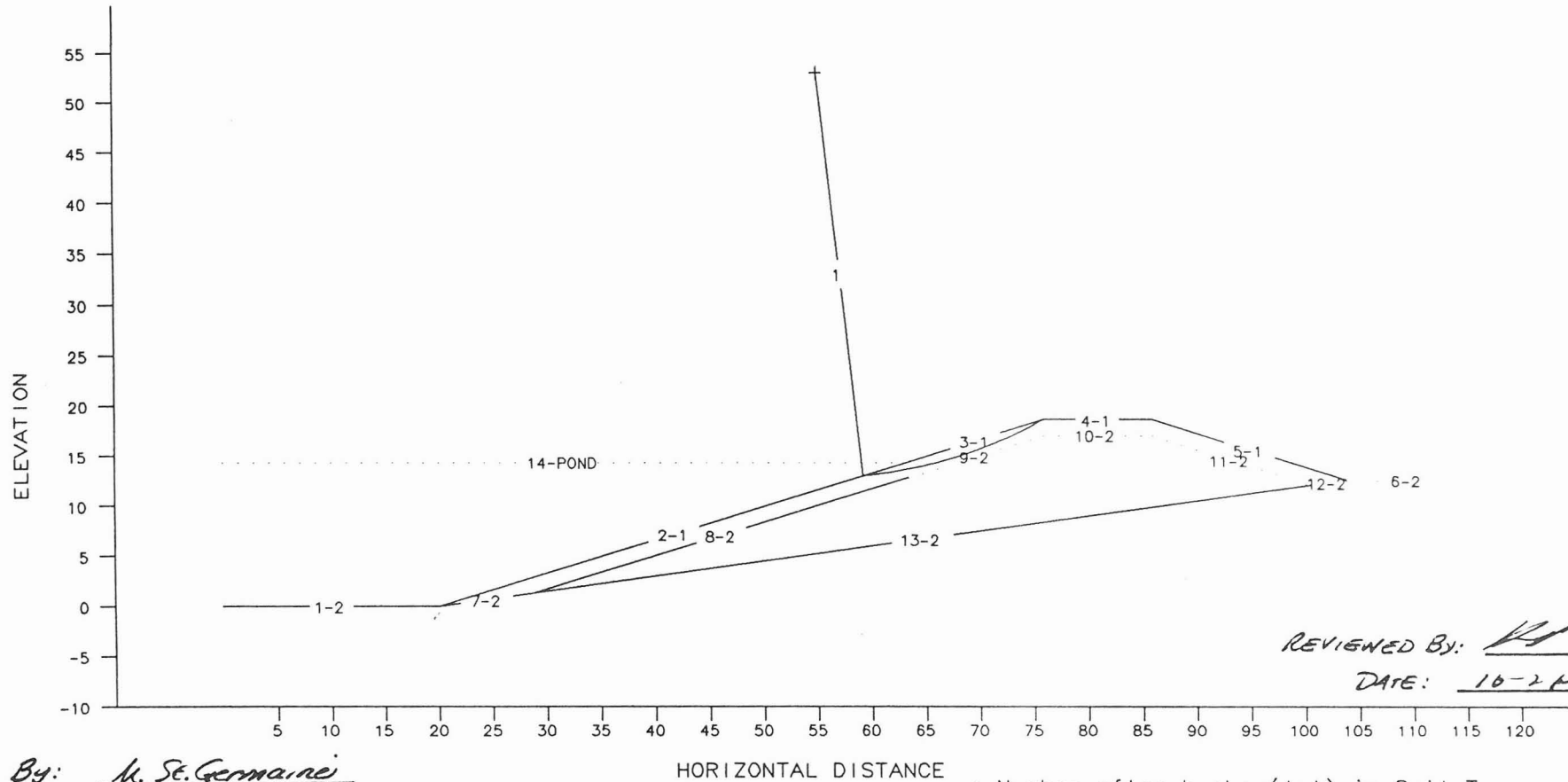

REVIEWED BY: [illegible]

DATE: 10-2-97

By: M. St. Germaine

DATE: 16 OCT 97

* Number after hyphen('-') is Soil Type

RICKER, ATKINSON, MCBEE & ASSOC., INC.

GEOSYSTEM SLOPE STABILITY PROGRAM
SB-SLOPE

PROJECT DATA: G01319
Project: Skunk Creek Drop Structures
Location: Phoenix, AZ
Filename: SKUNKU-G Description: Skunk Creek - Upstream With Gabions

ANALYSIS DATA:

Point No.	Coordinates X	Coordinates Y	Line No.	Left Point	Right Point	Soil No.	Phreatic Line
1	0.0	0.0	1	1	2	2	Y
2	20.0	0.0	2	2	3	1	N
3	75.8	18.6	3	3	4	1	N
4	85.8	18.6	4	4	5	1	N
5	90.8	16.9	5	5	6	1	N
6	103.8	12.6	6	6	7	2	N
7	115.0	12.6	7	2	8	2	Y
8	28.7	1.3	8	8	9	2	Y
9	75.8	17.1	9	9	10	2	Y
10	85.8	17.1	10	10	11	2	Y
11	90.8	15.3	11	11	12	2	N
12	100.5	12.1	12	12	6	2	N
13	90.8	25.8	13	8	12	2	N
14	115.0	25.8					

Soil No.	Density pcf	Cohesion psf	Phi Deg
1	150.0	0	30.0
2	138.0	0	42.0

water surface, left point = 13
right point = 14

HIGH WATER ANALYSIS SETUP

By: M. St. Germaine
DATE: 16 Oct 97

REVIEWED BY: [illegible]
DATE: 10-21-97

RICKER ATKINSON MCBEE & ASSOCIATES

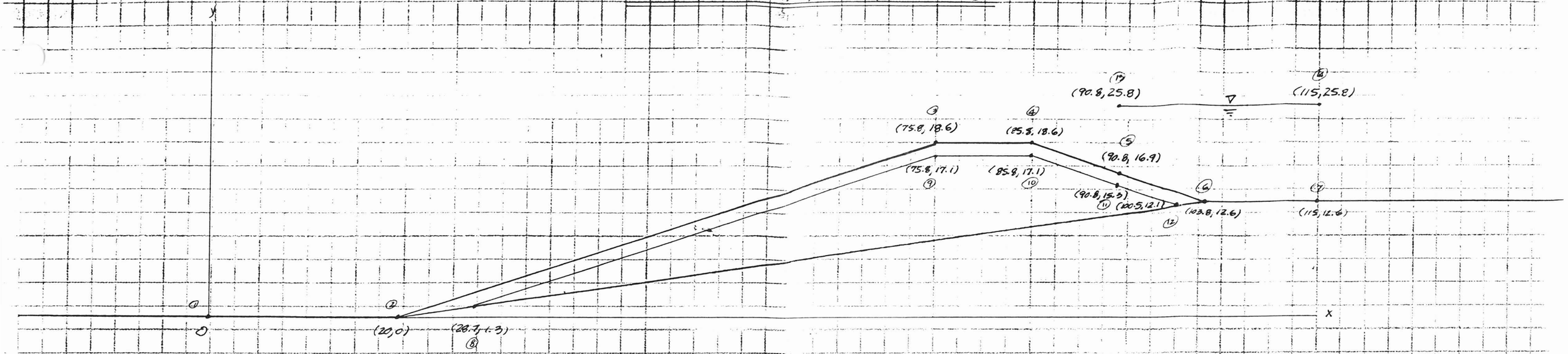

HIGH WATER MODEL FOR SB-SLOPE PROGRAM

By: M. St. Germain
DATE: 16 OCT 97

REVIEWED BY: [illegible]
DATE: 10-21-97

SKUNK CREEK G1319

BISHOP'S METHOD SLICE DIAGNOSTICS - FILE SKUNKU-G at 2:16 pm on 10/16/1997
Center coordinates: X=0.00, Y=160.00, Radius: 159.10
Number of slices selected = 20, number of slices used = 20
Adjustment of negative effective normal forces is in effect
Factor of safety = 1.741

No.	Left Side of Slice: X	Y Top	Y Bottom	Slice Angle	Vertical Force	Water Force	Normal Force	Resisting Term	Driving Term
1	33.22	4.41	4.41	12.36	24	0	24	13	5
2	34.90	4.97	4.77	12.98	70	0	70	38	16
3	36.58	5.53	5.16	13.60	111	0	111	61	26
4	38.25	6.08	5.57	14.22	147	0	147	81	36
5	39.93	6.64	5.99	14.85	178	0	178	98	46
6	41.61	7.20	6.44	15.47	205	0	205	112	55
7	43.29	7.76	6.90	16.10	226	0	226	124	63
8	44.97	8.32	7.39	16.73	242	0	242	133	70
9	46.64	8.88	7.89	17.36	254	0	254	139	76
10	48.32	9.44	8.42	18.00	260	0	260	142	80
11	50.00	10.00	8.96	18.64	261	0	261	143	83
12	51.68	10.56	9.53	19.27	256	0	256	141	85
13	53.36	11.12	10.11	19.92	247	0	247	135	84
14	55.03	11.68	10.72	20.56	232	0	232	127	81
15	56.71	12.24	11.35	21.21	212	0	212	116	77
16	58.39	12.80	12.00	21.86	186	0	186	102	69
17	60.07	13.36	12.67	22.51	154	0	154	85	59
18	61.75	13.92	13.37	23.16	117	0	117	64	46
19	63.42	14.47	14.09	23.82	74	0	74	41	30
20	65.10	15.03	14.83	24.49	26	0	26	14	11

failure surface enters at x = 33.2212 y = 4.4071
failure surface exits at x = 66.7788 y = 15.5929
OVERALL MINIMUM: x = 0.0, y = 160.0, r = 159.1, FS = 1.741

HIGH WATER SLICE DIAGNOSTICS

By: M. St. Germaine
DATE: 16 OCT 97

REVIEWED BY: HH
DATE: 10-14-97

HIGH WATER FAILURE SURFACE

SB-SLOPE

Simplified Bishop Slope Stability Analysis

PROJECT: Skunk Creek Drop Structures G01319

LOCATION: Phoenix, AZ

FILE: SKUNKU-G COMPLETE SLOPE CROSS SECTION

CIRCLE	X	Y	RADIUS	FS
1	0.0	160.0	159.1	1.74

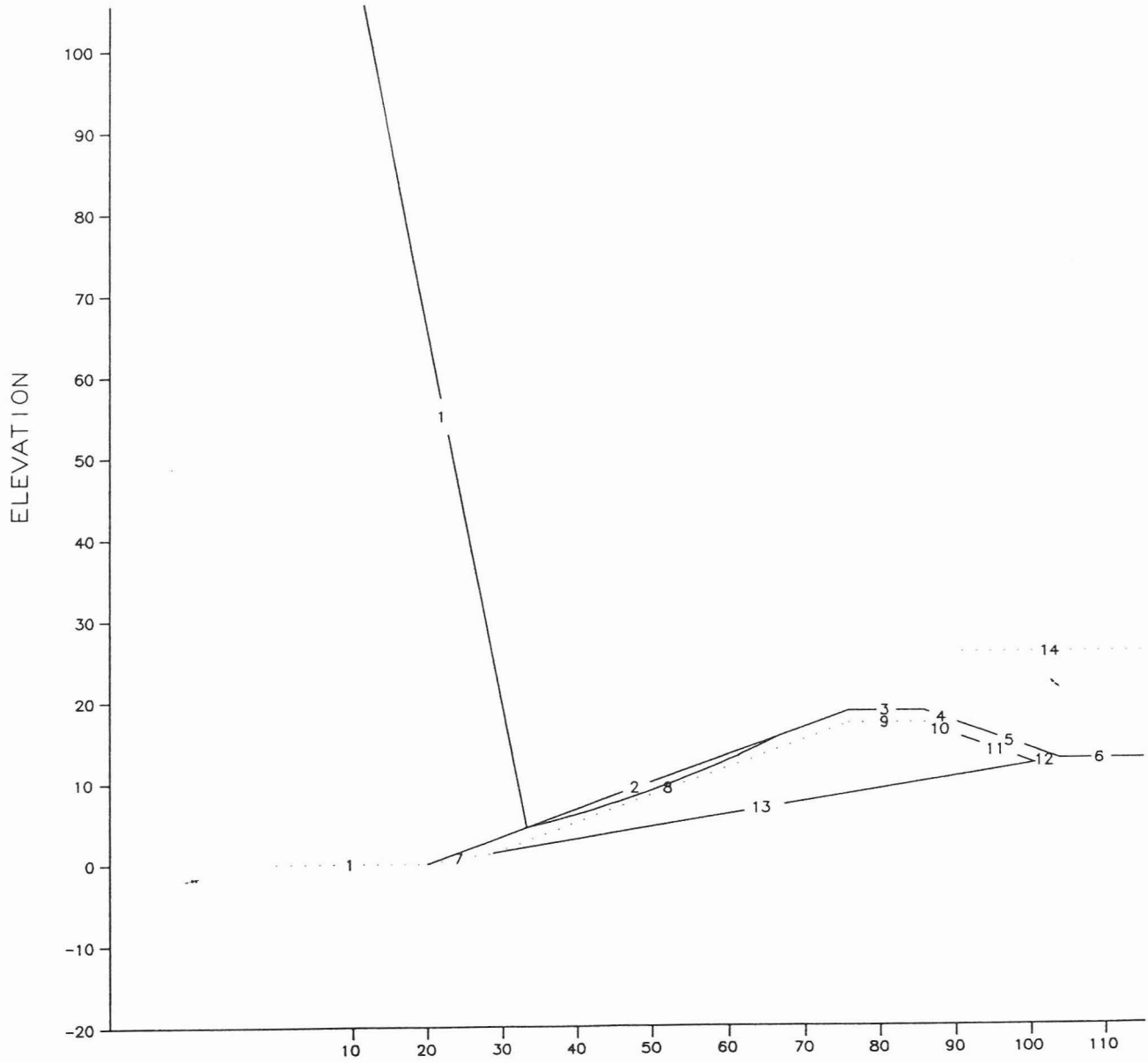

By: M. St. Germaine

DATE: 16 OCT 97

RICKER, ATKINSON, MCBEE & ASSOC., INC.

REVIEWED BY: [illegible]

DATE: 10-21-97

BISHOP'S METHOD SLICE DIAGNOSTICS - FILE SKUNKUP at 11:30 am on 10/16/1997
Center coordinates: X=-11.00, Y=206.60, Radius: 206.80
Number of slices selected = 15, number of slices used = 15
Adjustment of negative effective normal forces is in effect
Factor of safety = 1.352

No.	Left Side of Slice: X	Y Top	Y Bottom	Slice Angle	Vertical Force	Water Force	Normal Force	Resisting Term	Driving Term
1	34.82	4.94	4.94	13.17	45	20	25	20	10
2	37.39	5.80	5.54	13.90	130	59	71	57	31
3	39.96	6.65	6.18	14.63	202	91	110	88	51
4	42.52	7.51	6.85	15.37	261	118	143	113	69
5	45.09	8.36	7.55	16.11	308	139	169	133	85
6	47.66	9.22	8.29	16.85	342	155	187	147	99
7	50.23	10.08	9.07	17.60	363	164	199	155	110
8	52.80	10.93	9.89	18.34	371	168	203	158	117
9	55.36	11.79	10.74	19.09	366	166	201	155	120
10	57.93	12.64	11.63	19.85	348	157	191	147	118
11	60.50	13.50	12.55	20.61	316	143	173	133	111
12	63.07	14.36	13.52	21.37	270	122	148	114	98
13	65.64	15.21	14.52	22.14	210	95	115	88	79
14	68.20	16.07	15.57	22.91	136	62	75	57	53
15	70.77	16.92	16.65	23.68	48	22	26	20	19

failure surface enters at x = 34.8197 y = 4.9399
failure surface exits at x = 73.3403 y = 17.7801
OVERALL MINIMUM: x = -11.0, y = 206.6, r = 206.8, FS = 1.352

HIGH WATER SLICE DIAGNOSTICS
(WITHOUT GABIONS/SHOTCRETE)

By: M. St. Germaine
DATE: 16 OCT 97

REVIEWED BY: KLA
DATE: 10-21-97

BISHOP'S METHOD SLICE DIAGNOSTICS - FILE SKUNKDN at 9:20 am on 10/16/1997
Center coordinates: X=62.70, Y=37.00, Radius: 22.60
Number of slices selected = 15, number of slices used = 16
Adjustment of negative effective normal forces is in effect
Factor of safety = 1.396

No.	Left Side of Slice: X	Y Top	Y Bottom	Slice Angle	Vertical Force	Water Force	Normal Force	Resisting Term	Driving Term
1	63.33	14.41	14.41	2.64	14	6	8	7	1
2	64.16	14.69	14.45	4.76	40	18	22	19	3
3	64.99	14.97	14.52	6.87	62	28	34	29	7
4	65.82	15.25	14.62	9.00	81	37	44	37	13
5	66.65	15.53	14.75	11.15	96	43	53	43	19
6	67.48	15.81	14.91	13.30	107	49	59	47	25
7	68.32	16.09	15.11	15.48	115	52	63	50	31
8	69.15	16.36	15.34	17.68	119	54	65	51	36
9	69.98	16.64	15.60	19.91	118	53	65	50	40
10	70.81	16.92	15.91	22.17	113	51	62	48	43
11	71.64	17.20	16.24	24.47	104	47	57	44	43
12	72.47	17.48	16.62	26.80	91	41	50	38	41
13	73.31	17.76	17.04	29.19	72	33	39	30	35
14	74.14	18.04	17.51	31.64	48	22	26	20	25
15	74.97	18.32	18.02	34.15	18	8	10	8	10
16	75.80	18.60	18.58	35.46	0	0	0	0	0

failure surface enters at x = 63.3258 y = 14.4087
failure surface exits at x = 75.8225 y = 18.6000
OVERALL MINIMUM: x = 62.7, y = 37.0, r = 22.6, FS = 1.396

LOW WATER SLICE DIAGNOSTICS
(WITHOUT GABION/SHOTCRETE)

By: N. St. Germaine
DATE: 16 OCT 97

REVIEWED By: [illegible]
DATE: 10-21-97

RICKER ATKINSON, McBEE & ASSOCIATES, INC.
Skunk Creek, R.A.M. Project No. G01319

Factor of Safety Calculations for Failure Surfaces (Using Bishop's Simplified Method of Slices)

Gamma = 138 pcf
C = 0
phi = 42 tan(phi)= 0.900
u = 0

Ma = cos(a) * [1 + (tan(a)*tan(phi)/Fs)]
Fs = SUM[W * tan(phi)/Ma)]/ SUM[(W*sin(a))]

Low Water

Slice	b (ft)	H (ft)	W (kips)	a (deg)	sin(a)	W*sin(a)	cos(a)	tan(a)	Ma	(W*tan(phi)/Ma
1	3.34	0.40	1.84	10.5	0.18	0.336	0.983	0.185	1.041	1.594
2	3.34	0.80	3.69	12.0	0.21	0.767	0.978	0.213	1.044	3.179
3	3.34	1.00	4.61	17.5	0.30	1.386	0.954	0.315	1.049	3.955
4	3.34	0.80	3.69	22.5	0.38	1.411	0.924	0.414	1.046	3.175
5	3.34	0.40	1.84	28.5	0.48	0.880	0.879	0.543	1.031	1.611
					SUMS	4.78				13.51

Fs = 2.83

High Water

Slice	b (ft)	H (ft)	W (kips)	a (deg)	sin(a)	W*sin(a)	cos(a)	tan(a)	Ma	(W*tan(phi)/Ma
1	6.72	0.75	6.96	8.5	0.15	1.028	0.989	0.149	1.036	6.045
2	6.72	1.40	12.98	14.5	0.25	3.251	0.968	0.259	1.048	11.157
3	6.72	1.50	13.91	17.5	0.30	4.183	0.954	0.315	1.049	11.935
4	6.72	1.40	12.98	20.5	0.35	4.547	0.937	0.374	1.048	11.154
5	6.72	0.75	6.96	28.0	0.47	3.265	0.883	0.532	1.032	6.066
					SUMS	16.27				46.36

Fs = 2.85

By: M. St. Germaine
Date: October 20, 1997

Reviewed by: [illegible]
Date: 10-21-97

RICKER, ATKINSON, BEE & ASSOCIATES

SKUNK CREEK G01319

LOW WATER - FAILURE SURFACE DIMENSIONS

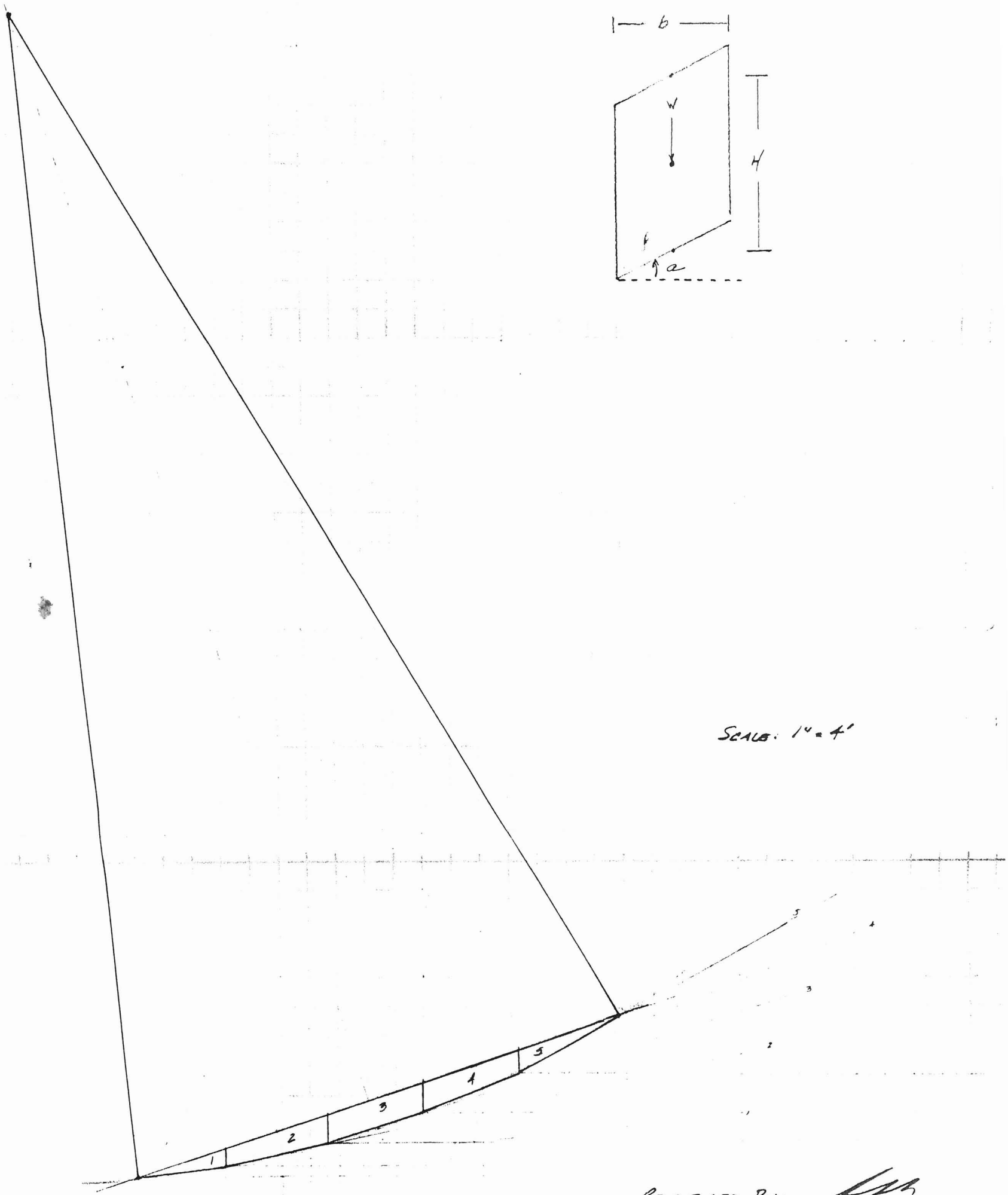

SCALE: 1" = 4'

By: M. St. Germaine

DATE: 18 Oct 97

REVIEWED BY:

DATE: 10-21-97

RICKER, ATKINSON, MCBEE & ASSOCIATES

SKUNK CREEK G01319

HIGH WATER - FAILURE SURFACE DIMENSIONS

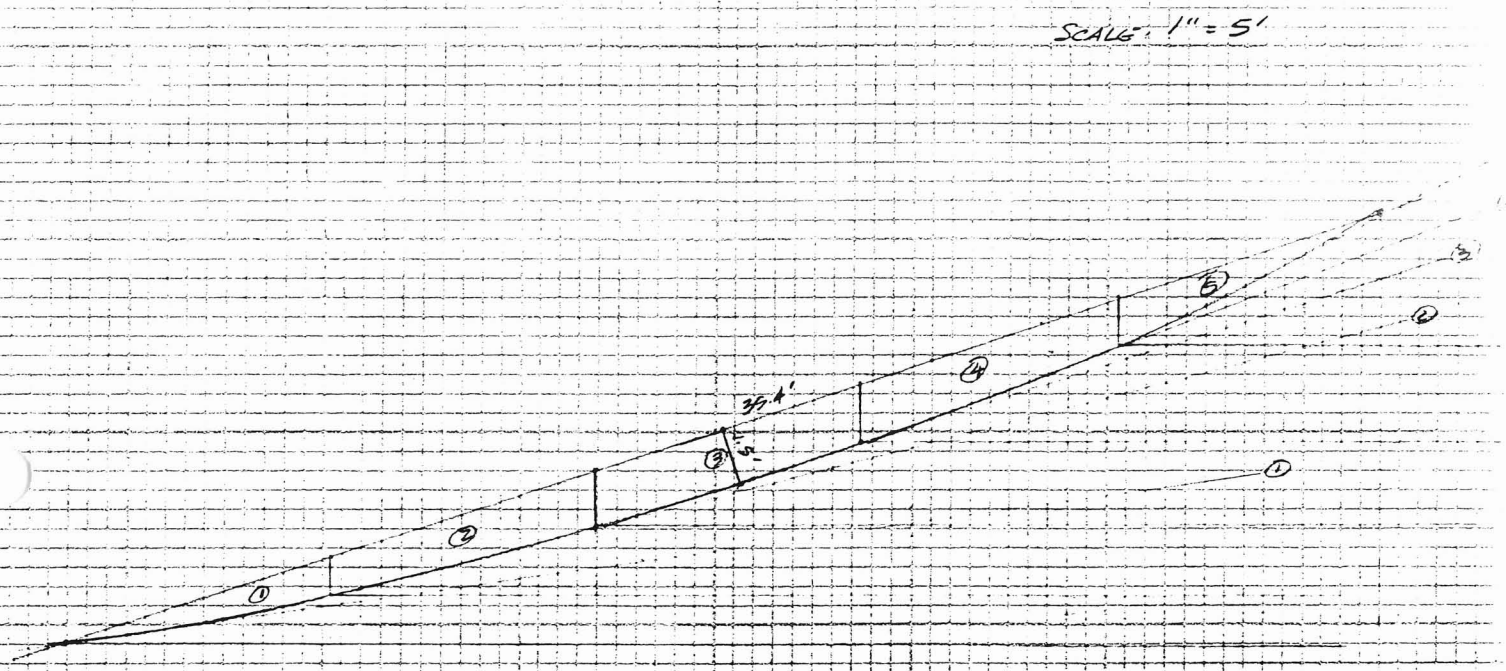

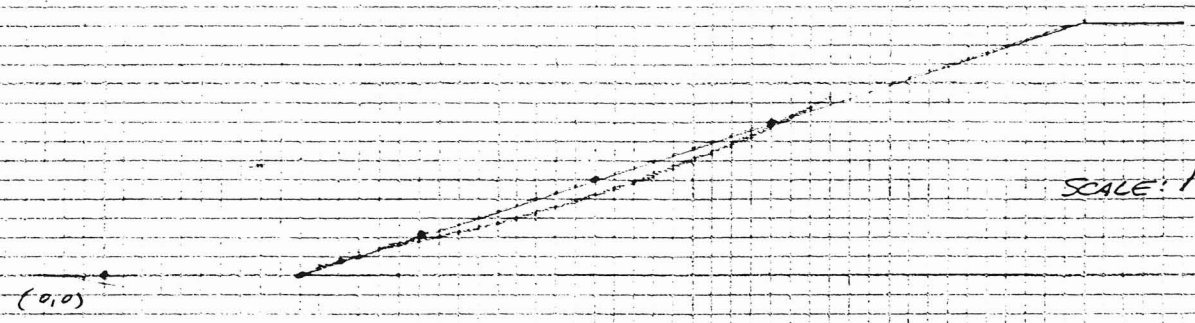

BY: M. St. Germain

DATE: 20 OCT 97

REVIEWED BY: KRI

DATE: 10-21-97

R·A·M

Registered Professional Engineer (Civil)
CERTIFICATE NO.
10971
KENNETH L.
RICKER
Date Signed 5/8/97
ARIZONA, U.S.A.

RICKER • ATKINSON • McBEE & ASSOCIATES, INC.

Geotechnical Engineering • Construction Materials Testing

Geotechnical Engineering Report
Skunk Creek Master Plan Final Design
FCD 95-38
ACDC to 51st Avenue
Peoria/Glendale, Arizona
R.A.M. Project No. G01319

For:
Simons, Li & Associates, Inc.
4600 S. Mill Avenue, Suite 200
Tempe, Arizona 85282

♦♦♦

By:
Ricker, Atkinson, McBee & Associates, Inc.
2105 South Hardy Drive, Suite 13
Tempe, Arizona 85282

R·A·M

RICKER • ATKINSON • McBEE & ASSOCIATES, INC.

Geotechnical Engineering • Construction Materials Testing

Simons, Li & Associates, Inc.
4600 S. Mill Avenue, Suite 200
Tempe, Arizona 85282

May 8, 1997

Attention: Bert Bergendahl, P.E.

Subject: Geotechnical Engineering Report
Skunk Creek Master Plan Final Design
FCD 95-38
ACDC to 51st Avenue
Peoria/Glendale, Arizona

R.A.M. Project No. G01319

Attached to this letter is the Geotechnical Engineering Report for the proposed Skunk Creek Master Plan Final Design to be located in Peoria/Glendale, Arizona.

The proposed project will include constructing a protected drainage channel along the alignment of Skunk Creek with drop structures to limit flow velocities. The results of our field exploration; laboratory testing; and engineering analysis, evaluation and recommendations are presented in the report for the channel. A separate report will be prepared for the drop structures once the location and configuration of each structure has been determined.

The following is a brief summary of selected recommendations.

A. Protected Channel Slopes:

- Single layer gabion protection may be used on channel slopes of 2H:1V and 3H:1V.
- Erosion protection on the channel sides and bottom may be used at all bridge crossings to limit scour. The protection should extend up and down stream with cut-off walls.

The attached report was prepared based on project and site data available at this time and was prepared in a manner and to the standards of the local geotechnical engineering practice. Our

2105 South Hardy Drive, Suite 13, Tempe, AZ 85282 • Telephone (602) 921-8100 • Facsimile (602) 921-4081

services did not include evaluations for the presence of hazardous materials, for area subsidence resulting from groundwater withdrawal or other geologic hazards.

Respectfully submitted,

RICKER, ATKINSON, MCBEE & ASSOCIATES, INC.

By: Kenneth L. Ricker, P.E.

Reviewed by: Charles H. Atkinson, P.E.

/nk
Copies to: Addressee (5)

TABLE OF CONTENTS

REPORT PAGE

Introduction 1

Proposed Construction 1

Site Conditions 2

Field Explorations 2

Laboratory Analysis 2

Subsurface Conditions 3

Channel Design Recommendations

Channel Slopes 4

Site Development Recommendations

Excavatability 4

Earthwork Factors 5

Materials Suitability and Requirements

Site Soils 6

Corrosion Potential 6

Site Preparation and Grading Procedures

Channel Areas 6

APPENDIX A - FIELD EXPLORATION

Site Plan A1

Soil Legend A2

Test Pit Logs A3

APPENDIX B - LABORATORY ANALYSIS

Sieve Analysis, Percent Passing No. 200 Sieve, Atterberg Limits B1

pH, Minimum Resistivity B4

Registered Professional Engineer (Civil)
CERTIFICATE NO.
10971
KENNETH L.
RICKER
Date Signed 5/8/97
ARIZONA, U.S.A.

REPORT

R·A·M

INTRODUCTION

This report presents the results of our geotechnical engineering services for the proposed Skunk Creek Master Plan Final Design (FCD 95-38) in Peoria/Glendale, Arizona. The scope of our services included performing a field exploration program, laboratory analysis and geotechnical engineering evaluation, analysis and recommendations. The geotechnical recommendations presented herein consist of channel design, site development, material suitability and requirements, site preparation and grading procedures. We would be pleased to discuss with you any additional recommendations you may require. In addition, we are available to review project specifications and plans for conformance with our recommendations at no charge to you. A separate report will be prepared for drop structures when the location and configuration of the structures has been determined.

This firm should be notified for additional evaluation and recommendations should the facility design parameters (location, type, size), site use or conditions encountered during construction differ from those presented herein.

PROPOSED CONSTRUCTION

The Skunk Creek Master Plan Final Design will include a trapezoidal protected drainage channel and drop structures along the existing alignment of Skunk Creek from the Arizona Canal Diversion Channel (ACDC)(Sta. 50+00) to 51st Avenue (Sta. 253+73) in Peoria/Glendale, Arizona. The channel will have side slopes protected with a single layer gabion mat toed-down into an open unprotected channel bottom. The channel side slopes will be at 2H:1V and 3H:1V. The channel depth varies from 8 to 21 feet. The bottom width will vary depending on hydraulics and available right-of-way. The drainage channel is crossed by Paradise Lane (future bridge), 75th Avenue (existing low water crossing with future bridge), Bell Road (existing bridges), 69th Avenue (future low water crossing), 67th Avenue (existing low water crossing with future bridge), Union Hills Drive (existing bridge), 59th Avenue (existing bridge), 57th Avenue (existing low water crossing), 54th Drive (existing low water crossing) and 51st Avenue (existing bridge). Channel design has been accomplished by Dibble & Associates from Sta. 50+00 to 69+25 and will be incorporated into

this design. In addition, existing channel side slopes and protection between Sta. 124+15 and 130+94, Sta. 164+88 (north side) and 214+00 (north side), Sta. 171+20 (south side) and 197+53 (south side), Sta. 240+00 (south side) and 253+73 (south side) will be incorporated into the design. The new channel configuration will require numerous cuts and fills up to 20 feet high.

SITE CONDITIONS

Skunk Creek Master Plan Final Design project will be along the existing channel of Skunk Creek. The existing channel varies considerably in width, configuration and grade with some improved areas. The surface along the channel bottom and sides contains various amounts of debris and vegetation with areas of fill and large rubble. Side slopes along the channel vary from 1.5H:1V to 3H:1V.

FIELD EXPLORATIONS

Subsurface conditions in the channel bottom and along the side slopes were explored by excavating 50 test pits to depths of 4.0 to 10.0 feet as shown on the Site Plan in Appendix A. The test pits were excavated with a CAT 416B Extend-a-hoe using a 24-inch wide bucket. The excavation equipment and crew were provided by D & S Drilling, Inc. The test pit locations were determined in the field by a technician from our firm who also directed the drill crew. During the field explorations, representative disturbed samples were obtained, the test pits logged and soils field classified by our technician. The results of the field explorations are presented in Appendix A.

LABORATORY ANALYSIS

Representative samples obtained during the field exploration were subjected to the following laboratory tests.

Type of Test	Type of Sample	Number of Samples Tested
Sieve Analysis and Atterberg Limits (ASTM C136, D1140, D4318)	Representative	51
pH/Minimum Resistivity (ADOT 236A)	Representative	11

The results of the laboratory testing are presented in Appendix B. The above sieve analyses are representative of that portion of the in-situ sample test that passes a 3- to 4-inch sieve. The estimated percent of plus 3-inch material is shown on the test pit logs for each location where oversize material was present.

SUBSURFACE CONDITIONS

The subsurface conditions encountered at the test pit locations along the alignment were variable. The results of each test pit are presented in Appendix A in the test pit logs. In general, the soils encountered in the test pits were granular soils consisting of sandy gravel with cobbles, silty/clayey sandy gravel, gravelly silty sand, silty/clayey sand with some gravel, gravelly sand, gravelly sand with some silt, clayey sandy gravel with cobbles, sandy gravel with cobbles and some silt, clayey gravelly sand with cobbles and silty sand. The granular soils contained various amounts of cobbles and occasional trace to some boulders. In Test Pit 7 a sandy clay deposit was encountered for the full depth of exploration (7 feet). In Test Pits 36 and 36A, a four-foot thick layer of debris-laiden fill was encountered. In Test Pit 36A refusal to backhoe penetration occurred on large concrete slabs.

The soil moisture was described as nearly dry at most locations and damp in isolated areas. At the time of field explorations for the project no groundwater was encountered in our test pits. Groundwater at the sites is relatively deep and will not influence construction.

CHANNEL DESIGN RECOMMENDATIONS

Channel Slopes:

Channel construction will include cuts in native soils and existing fills up to 20 feet in height. In addition, slope areas in existing debris fills will be removed and replaced and in other areas new fill will be required to establish final configuration. For the most part, these slopes will be constructed in or with granular soils composed of sands and silty sand (fine granular soils) or sandy gravels with various amounts of silt, clay, cobbles and/or boulders (coarse granular soils). Planned slopes of 2H:1V and 3H:1V are designed for various areas. In addition, slopes of 1.5H:1V exist in some areas where additional construction will not be required. These slopes were evaluated using the following parameters.

1. Embankment Material (native/fill)

Fine Granular Soils	$\phi = 32°$	Coarse Granular Soils	$\phi = 38°$
	$C = 100$ psf		$C = 100$ psf
	$\Upsilon_{sat} = 110$ pcf		$\Upsilon_{sat} = 130$ pcf
	$\Upsilon_{sub} = 48$ pcf		$\Upsilon_{sub} = 68$ pcf

2. Rapid draw-down.

3. Slope height 10 and 20 feet.

Our analysis indicates that 2H:1V and 3H:1V slopes are stable for both soil types and 1.5H:1V slopes are stable for coarse granular soils. All have factors of safety greater than 1.5. The fine granular soils at slopes of 1.5H:1V are marginally stable with a factor of safety slightly greater than 1. Since the existing embankments are in areas where coarse granular soils exist, then planned and existing slopes are stable.

SITE DEVELOPMENT RECOMMENDATIONS

Excavatability:

The excavatability of site materials is difficult to evaluate based only on the exploration equipment

used during this design report. Therefore, we recommend that the contractor evaluate the excavatability of site materials by performing test excavations with the size and type of equipment the contractor plans on using at the site. For design purposes the following paragraph presents our best analysis as to the excavatability of site soils.

The near surface soils can probably be removed with conventional excavating equipment. Excavations penetrating the granular deposits containing large amounts of gravel and various amounts of cobbles and boulders will be slower and more difficult to accomplish. OSHA requires all excavations over five feet in depth, in which personnel are to enter, be either braced or sloped in accordance with OSHA regulations.

Earthwork Factors:

Earthwork losses due to ground height losses and shrinkage were estimated based on past experiences in the area and limited test data. The materials encountered at the site were of low to medium density. The estimated ground height losses due to subgrade compaction are as follows for previously ungraded areas:

*Ground Height Loss at Given Percent Compaction	
95%	100%
1.0" to 2.0"	1.5" to 2.5"

*Based on maximum dry density obtained by ASTM D698, dry densities obtained from samples, and achieving an 8-inch deep compacted zone without stripping natural surface zones. These values do not include recompaction of zone disturbed by demolition or previous site usage.

The estimated shrinkage losses from cut to fill zones are as follows for naturally occurring soils. Where existing fills are reconditioned, considerable shrinkage to some gain in material is expected:

*Estimated Percent Shrinkage at Given Percent Compaction

Depth of Excavation	95%	100%	105%
0 to 10 feet	10%± 2%	15% ± 2%	20% ± 2%
10 to 20 feet	7%± 2%	12% ± 2%	17% ± 2%

*Based on maximum dry density obtained by ASTM D698 and dry densities obtained from samples for natural undisturbed soils from the near surface zone, and local experience.

Our experience with earthwork losses has generally indicated that subgrades and fill zones compacted to a minimum value of 95% of maximum dry density (ASTM D698) result in losses comparable to 100% compaction (similarly for 90% minimum use 95% and for 100% minimum use 105%). These estimates do not include compaction to greater depths than assumed, losses due to wind or wastage, over-excavation, etc. These values do not include recompaction of zones disturbed by demolition or previous site usage.

MATERIALS SUITABILITY AND REQUIREMENTS

Site Soils:

Site soils may be used as fill in channel slope and bottom areas. These soils must be mechanically compacted to required densities.

Corrosion Potential:

Based on laboratory pH and resistivity tests, site soils which are at high moisture content or which become wetted will exhibit high potential for corrosion at Test Pits 14A and 32A and low potential for corrosion at all other locations.

SITE PREPARATION AND GRADING PROCEDURES

Channel Areas:

The proposed channel will include construction of various heights and widths of fills. All earthwork should be accomplished with observation and testing by a qualified technician under the direction

of a registered geotechnical/ materials engineer. The following apply to the areas within and extending 5 feet beyond the channel areas.

1. Clear and grub the site by removing and disposing of all vegetation, debris, rubble and remnants of former developments.

2. Strip the site of any existing fill zones, backfill zones and unstable soils. During stripping observe the surface for evidence of buried debris, vegetation or disturbed materials which will require additional removal. If encountered, these materials should be removed. Areas steeper than 5H to 1V should be benched and any depressions widened to accommodate compaction equipment.

3. Prepare the ground surface in fill areas and in areas cut to grade by scarifying, moisture conditioning and compacting the exposed surface soils to a depth of 8 inches.

4. Moisture condition and place all fill and backfill materials required to achieve specified grades. Fill materials should be moisture conditioned, placed and compacted in horizontal lifts of thicknesses compatible with the compaction equipment being used.

5. Compact subgrade, fill, backfill, subbase fill or base material to the following minimum percent compaction of the ASTM D698 maximum dry density for each lift.

Material	Minimum Percent Compaction
Soil:	
Channel Areas	95
Backfill:*	90

* Outside of channel areas.

6. The moisture content of soil and base materials at the time of compaction should be:

Type	Area of Use	Moisture Content
On-site	Channel	Optimum plus or minus 3%
Imported	Channel	Optimum plus or minus 3%

7. Any soils which are disturbed or overexcavated by the contractor outside the limits of the plans or specifications should be replaced with materials compacted as specified above.

APPENDIX A
FIELD EXPLORATIONS

R·A·M

● Test Pit Location

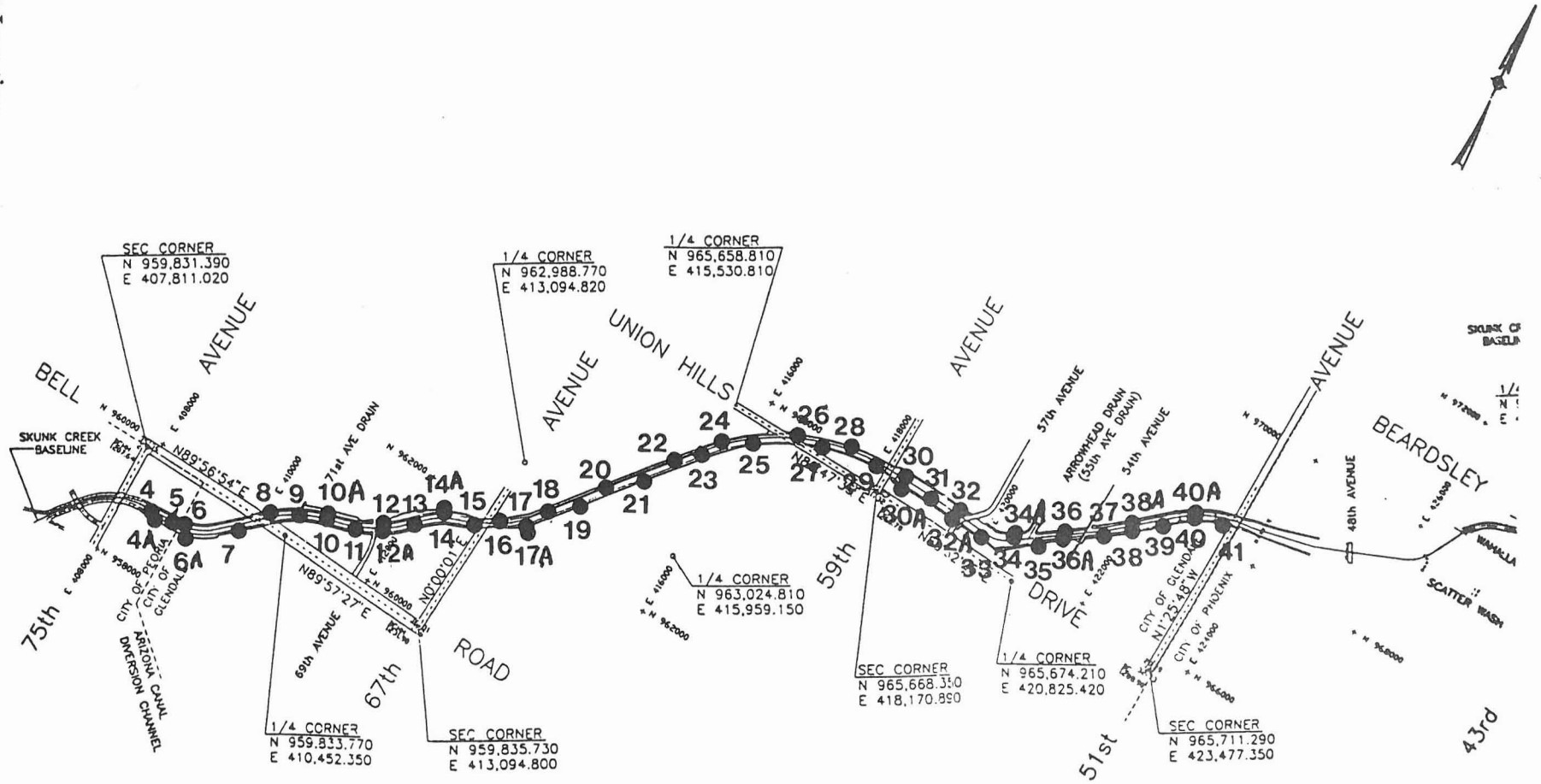

SITE PLAN

LEGEND

CLASSIFICATION OF SOILS

ASTM Designation: D2487-83
(Based on Unified Soil Classification System)

			Criteria for Assigning Group Symbols and Group Names Using Laboratory Tests	Soil Classification: Group Symbol	Soil Classification: Name
COARSE-GRAINED SOILS More than 50% retained on No. 200 Sieve	Gravels More than 50% coarse fraction retained on No. 4 Sieve	Clean Gravels Less than 5% fines	$Cu \geq 4$ and $1 \leq Cc \leq 3$	GW	Well graded gravel
			$Cu < 4$ and/or $1 > Cc > 3$	GP	Poorly graded gravel
		Gravels with Fines More than 12% fines	Fines classify as ML or MH	GM	Silty gravel
			Fines classify as CL or CH	GC	Clayey gravel
	Sands 50% or more of coarse fraction passes No. 4 sieve	Clean Sands Less than 5% fines	$Cu \geq 6$ and $1 \leq Cc \leq 3$	SW	Well-graded sand
			$Cu < 6$ and/or $1 > Cc > 3$	SP	Poorly graded sand
		Sands with Fines More than 12% fines	Fines classify as ML or MH	SM	Silty sand
			Fines classify as CL or CH	SC	Clayey sand
FINE-GRAINED SOILS 50% or more passes the No. 200 Sieve	Silts and Clays Liquid limit less than 50	Inorganic	PI>7 and plots on or above "A" line	CL	Lean clay
			PI<4 or plots below "A" line	ML	Silt
		Organic	Liquid Limit - oven dried / Liquid limit - not dried <0.75	OL	Organic clay / Organic silt
	Silts and Clays Liquid limit 50 or more	Inorganic	PI plots on or above "A" line	CH	Fat clay
			PI plots below "A" line	MH	Elastic silt
		Organic	Liquid limit - oven dried / Liquid limit - not dried <0.75	OH	Organic clay / Organic silt
HIGHLY ORGANIC SOILS	Primarily organic matter, dark in color, and organic odor			PT	Peat

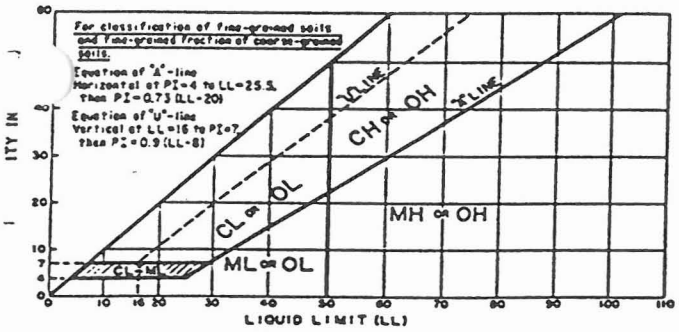

TEST PIT LOG DEFINITIONS

Blows per foot using 140 pound hammer with 30 inch free-fall.

Depth, feet	Blows/Foot		Sample Type	Dry Density pcf	Water Content, %	Unified Classification	Description
	C	N/R					

C = Continuous Penetration Resistance (2 inch diameter rod)
N = Standard Penetration Resistance (ASTM D1586)
R = Penetration Resistance (3 inch diameter ring line sampler)

GRAIN SIZES

U.S. STANDARD SERIES SIEVE				CLEAR SQUARE SIEVE OPENINGS			
200	40	10	4	3/4"		3"	12"
SILTS & CLAYS DISTINGUISHED ON BASIS OF PLASTICITY	SAND			GRAVEL		COBBLES	BOULDERS
	FINE	MEDIUM	COARSE	FINE	COARSE		

MOISTURE CONDITION (INCREASING MOISTURE →)

DRY — SLIGHTLY DAMP — DAMP (Plastic Limit) — MOIST — VERY MOIST — WELL (SATURATED) (Liquid Limit)

CONSISTENCY CORRELATION		RELATIVE DENSITY CORRELATION	
CLAYS & SILTS	BLOWS/FOOT*	SANDS & GRAVELS	BLOWS/FOOT*
VERY SOFT	0-2	VERY LOOSE	0-4
SOFT	2-4	LOOSE	4-10
FIRM	4-8	MEDIUM DENSE	10-30
STIFF	8-16	DENSE	30-50
VERY STIFF	16-32	VERY DENSE	OVER 50
HARD	OVER 32		

*Number of blows of 140 lb. hammer falling 30" to drive a 2" O.D. (1-3/8" I.D.) split-spoon sampler (ASTM D1586).

TEST PIT LOG

Project: Skunk Creek Improvements 71+00 35'R

TEST PIT: 4

Elevation: 1200 Datum: ---

Date: 3-20-97

Depth, feet	Blows/Foot C	Blows/Foot N/R	Sample Type	Dry Density, pcf	Water Content, %	Unified Classification	Description
						GP	Sandy Gravel with Cobbles; brown, nearly dry, medium dense to dense, trace non-plastic fines, (+3" ~ 15%) some boulders.
5						SP/ SW/ SC	Clayey Gravelly Sand; brown, nearly dry, medium dense to dense, some medium plasticity fines, with cobbles, (+3" ~ 15%) some boulders.
10							Stopped excavating at 10 feet. No Groundwater Observed.
15							
20							
25							

This test pit represents the conditions encountered on the date of excavation at this particular location. No other warranty is expressed or implied to the actual conditions which may exist within the vicinity of this test pit location.

TEST PIT LOG

Project: Skunk Creek Improvements 72+00 50'R

TEST PIT: 4A

Elevation: 1215 Datum: ---

Date: 3-20-97

Depth, feet	Blows/Foot C	Blows/Foot N/R	Sample Type	Dry Density, pcf	Water Content, %	Unified Classification	Description
						GP	Sandy Gravel with Cobbles; brown, nearly dry, medium dense to dense, trace non-plastic fines. Some Boulders (10% + 3").
5							
							Stopped excavating at 8 feet. No Groundwater Observed.
10							
15							
20							
25							

This test pit represents the conditions encountered on the date of excavation at this particular location. No other warranty is expressed or implied to the actual conditions which may exist within the vicinity of this test pit location.

TEST PIT LOG

Project: Skunk Creek Improvements 75+00 55'R

TEST PIT: 5

Elevation: 1199 Datum: ---

Date: 3-20-97

Depth, feet	Blows/Foot C	Blows/Foot N/R	Sample Type	Dry Density, pcf	Water Content, %	Unified Classification	Description
						GP/ GW/ GC	Silty/Clayey Sandy Gravel; brown, nearly dry, some to trace low plasticity fines, with cobbles, (+3" ~ 15%) some boulders.
5							
							Stopped excavating at 7 feet. No Groundwater Observed.
10							
15							
20							
25							

This test pit represents the conditions encountered on the date of excavation at this particular location. No other warranty is expressed or implied to the actual conditions which may exist within the vicinity of this test pit location.

TEST PIT LOG

Project: Skunk Creek Improvements 80+00 55'L

TEST PIT: 6

Elevation: 1200 Datum: ---

Date: 3-20-97

Depth, feet	Blows/Foot C	Blows/Foot N/R	Sample Type	Dry Density, pcf	Water Content, %	Unified Classification	Description
						GP	Sandy Gravel with Cobbles; brown, nearly dry, medium dense to dense, trace non-plastic fines, (+3" ~ 10%) some boulders.
5						SM	Gravelly Silty Sand; brown, nearly dry, medium dense to dense, high plasticity silt (MH) fines, light to moderate cementation.
10							Stopped excavating at 10 feet. No Groundwater Observed.
15							
20							
25							

This test pit represents the conditions encountered on the date of excavation at this particular location. No other warranty is expressed or implied to the actual conditions which may exist within the vicinity of this test pit location.

TEST PIT LOG

Project: Skunk Creek Improvements 80+00 95'R

TEST PIT: 6A

Elevation: 1215 Datum: ---

Date: 3-20-97

Depth, feet	Blows/Foot C	Blows/Foot N/R	Sample Type	Dry Density, pcf	Water Content, %	Unified Classification	Description
						SM	Gravelly Silty Sand; brown, nearly dry, medium dense to dense, high plasticity silt (MH) fines, light to moderate cementation.
5							
10							
							Stopped excavating at 10 feet. No Groundwater Observed.
15							
20							
25							

This test pit represents the conditions encountered on the date of excavation at this particular location. No other warranty is expressed or implied to the actual conditions which may exist within the vicinity of this test pit location.

TEST PIT LOG

Project: Skunk Creek Improvements 85+00 70'R TEST PIT: 7

Elevation: 1215 Datum: --- Date: 3-20-97

Depth, feet	Blows/Foot C	Blows/Foot N/R	Sample Type	Dry Density, pcf	Water Content, %	Unified Classification	Description
						CL	Sandy Clay; brown, damp, stiff, medium plasticity, trace gravel.
5							
10							
							Stopped excavating at 10 feet. No Groundwater Observed.
15							
20							
25							

This test pit represents the conditions encountered on the date of excavation at this particular location. No other warranty is expressed or implied to the actual conditions which may exist within the vicinity of this test pit location.

TEST PIT LOG

Project: Skunk Creek Improvements 91+00 80'L

TEST PIT: 8

Elevation: 1210 Datum: ---

Date: 3-20-97

Depth, feet	Blows/Foot C	Blows/Foot N/R	Sample Type	Dry Density, pcf	Water Content, %	Unified Classification	Description
						GP	Sandy Gravel with Cobbles; brown, nearly dry, medium dense to dense, trace non-plastic fines.
						SM/ SC	Silty/Clayey Sand, some Gravel; brown, damp, medium dense to dense, low plasticity fines
5							
						GP/ GW/ GC	Silty/Clayey Sandy Gravel; brown, nearly dry, some to trace low plasticity fines, with cobbles, (+3" ~ 5%) trace boulders.
10							
							Stopped excavating at 10 feet. No Groundwater Observed.
15							
20							
25							

This test pit represents the conditions encountered on the date of excavation at this particular location. No other warranty is expressed or implied to the actual conditions which may exist within the vicinity of this test pit location.

TEST PIT LOG

Project: Skunk Creek Improvements 95+00 20'R TEST PIT: 9

Elevation: 1210 Datum: --- Date: 3-20-97

Depth, feet	Blows/Foot C	Blows/Foot N/R	Sample Type	Dry Density, pcf	Water Content, %	Unified Classification	Description
						SP	Gravelly Sand; brown, nearly dry, medium dense, trace non-plastic fines, some cobbles, (+3" ~ 10%) some boulders.
5							
10							
							Stopped excavating at 10 feet. No Groundwater Observed.
15							
20							
25							

This test pit represents the conditions encountered on the date of excavation at this particular location. No other warranty is expressed or implied to the actual conditions which may exist within the vicinity of this test pit location.

TEST PIT LOG

Project: Skunk Creek Improvements 100+00 70'L

TEST PIT: 10

Elevation: 1218 Datum: ---

Date: 3-20-97

Depth, feet	Blows/Foot C	Blows/Foot N/R	Sample Type	Dry Density, pcf	Water Content, %	Unified Classification	Description
						SP/ SM	Gravelly Sand, some Silt; brown, nearly dry, medium dense, non-plastic fines, some cobbles, (+3" ~ 10%) some boulders.
5							
10							
							Stopped excavating at 10 feet. No Groundwater Observed.
15							
20							
25							

This test pit represents the conditions encountered on the date of excavation at this particular location. No other warranty is expressed or implied to the actual conditions which may exist within the vicinity of this test pit location.

TEST PIT LOG

Project: Skunk Creek Improvements 100+00 90'L

TEST PIT: 10A

Elevation: 1222 Datum: ---

Date: 3-20-97

Depth, feet	Blows/Foot C	Blows/Foot N/R	Sample Type	Dry Density, pcf	Water Content, %	Unified Classification	Description
						SP/ SM	Gravelly Sand, some Silt; brown, nearly dry, medium dense, non-plastic fines, some cobbles, (+3" ~ 10%) some boulders.
5							
							Stopped excavating at 7.5 feet. No Groundwater Observed.
10							
15							
20							
25							

This test pit represents the conditions encountered on the date of excavation at this particular location. No other warranty is expressed or implied to the actual conditions which may exist within the vicinity of this test pit location.

TEST PIT LOG

Project: Skunk Creek Improvements 105+00 80'R TEST PIT: 11

Elevation: 1214 Datum: --- Date: 3-20-97

Depth, feet	Blows/Foot C	Blows/Foot N/R	Sample Type	Dry Density, pcf	Water Content, %	Unified Classification	Description
						GC	Clayey Sandy Gravel with Cobbles; brown, nearly dry, medium dense to dense, medium plasticity fines, (+3" ~ 15%) some boulders.
5							
10							
							Stopped excavating at 10 feet. No Groundwater Observed.
15							
20							
25							

This test pit represents the conditions encountered on the date of excavation at this particular location. No other warranty is expressed or implied to the actual conditions which may exist within the vicinity of this test pit location.

TEST PIT LOG

Project: Skunk Creek Improvements 110+00 50'L

TEST PIT: 12

Elevation: 1218 Datum: ---

Date: 3-20-97

Depth, feet	Blows/Foot C	Blows/Foot N/R	Sample Type	Dry Density, pcf	Water Content, %	Unified Classification	Description
5						SP	Gravelly Sand; brown, nearly dry, medium dense, trace non-plastic fines, some cobbles, (+3" ~ 5%) trace boulders.
						SP/ SM	Gravelly Sand, some Silt; brown, nearly dry, medium dense, non-plastic fines, some cobbles, (+3" ~ 5%) trace boulders.
10							Stopped excavating at 9 feet. No Groundwater Observed.
15							
20							
25							

This test pit represents the conditions encountered on the date of excavation at this particular location. No other warranty is expressed or implied to the actual conditions which may exist within the vicinity of this test pit location.

TEST PIT LOG

Project: Skunk Creek Improvements 110+00 85'L TEST PIT: 12A

Elevation: 1226 Datum: --- Date: 3-20-97

Depth, feet	Blows/Foot C	Blows/Foot N/R	Sample Type	Dry Density, pcf	Water Content, %	Unified Classification	Description
						SP/ SM	Gravelly Sand, some Silt; brown, nearly dry, medium dense, non-plastic fines, some cobbles. (trace +3").
5							
							Stopped excavating at 6 feet. No Groundwater Observed.
10							
15							
20							
25							

This test pit represents the conditions encountered on the date of excavation at this particular location. No other warranty is expressed or implied to the actual conditions which may exist within the vicinity of this test pit location.

TEST PIT LOG

Project: Skunk Creek Improvements 115+00 50'L

TEST PIT: 13

Elevation: 1220 Datum: ---

Date: 3-20-97

Depth, feet	Blows/Foot C	Blows/Foot N/R	Sample Type	Dry Density, pcf	Water Content, %	Unified Classification	Description
						SP	Gravelly Sand; brown, nearly dry, medium dense, trace non-plastic fines, some cobbles, (+3" ~ 10%) trace boulders.
5							
10							
							Stopped excavating at 10 feet. No Groundwater Observed.
15							
20							
25							

This test pit represents the conditions encountered on the date of excavation at this particular location. No other warranty is expressed or implied to the actual conditions which may exist within the vicinity of this test pit location.

TEST PIT LOG

Project: Skunk Creek Improvements 120+00 70'L

TEST PIT: 14

Elevation: 1222 Datum: ---

Date: 3-20-97

Depth, feet	Blows/Foot C	Blows/Foot N/R	Sample Type	Dry Density, pcf	Water Content, %	Unified Classification	Description
						SP	Gravelly Sand; brown, nearly dry, medium dense, trace non-plastic fines, some cobbles, (+3" ~ 10%) some boulders.
5						GP/ GW/ GC	Silty/Clayey Sandy Gravel; brown, nearly dry, some to trace low plasticity fines, with cobbles, (+3" ~ 15%) some boulders.
10							Stopped excavating at 10 feet. No Groundwater Observed.
15							
20							
25							

This test pit represents the conditions encountered on the date of excavation at this particular location. No other warranty is expressed or implied to the actual conditions which may exist within the vicinity of this test pit location.

TEST PIT LOG

Project: Skunk Creek Improvements 120+00 90'L

TEST PIT: 14A

Elevation: 1228

Datum: ---

Date: 3-20-97

Depth, feet	Blows/Foot C	Blows/Foot N/R	Sample Type	Dry Density, pcf	Water Content, %	Unified Classification	Description
						SM	Gravelly Silty Sand; brown, nearly dry, medium dense to dense, high plasticity silt (MH) fines, light to moderate cementation, (trace + 3").
5						GP/ GW/ GC	Silty/Clayey Sandy Gravel; brown, nearly dry, some to trace low plasticity fines, with cobbles, (+3" ~ 5%) trace boulders.
10							Stopped excavating at 8 feet. No Groundwater Observed.
15							
20							
25							

This test pit represents the conditions encountered on the date of excavation at this particular location. No other warranty is expressed or implied to the actual conditions which may exist within the vicinity of this test pit location.

TEST PIT LOG

Project: Skunk Creek Improvements 125+00 20'L

TEST PIT: 15

Elevation: 1224 Datum: ---

Date: 3-20-97

Depth, feet	Blows/Foot C	Blows/Foot N/R	Sample Type	Dry Density, pcf	Water Content, %	Unified Classification	Description
						SP	Gravelly Sand; brown, nearly dry, medium dense, trace non-plastic fines, some cobbles, (+3" ~ 15%) trace boulders.
5							Loose to Medium Dense Below 6 Feet.
10							Stopped excavating at 9 feet. No Groundwater Observed.
15							
20							
25							

This test pit represents the conditions encountered on the date of excavation at this particular location. No other warranty is expressed or implied to the actual conditions which may exist within the vicinity of this test pit location.

TEST PIT LOG

Project: Skunk Creek Improvements 130+00 60'L

TEST PIT: 16

Elevation: 1226

Datum: ---

Date: 3-20-97

Depth, feet	Blows/Foot C	Blows/Foot N/R	Sample Type	Dry Density, pcf	Water Content, %	Unified Classification	Description
						SP/ SW/ SC	Clayey Gravelly Sand; brown, nearly dry, medium dense to dense, some medium plasticity fines, with cobbles, (+3" ~ 10%) trace to some boulders.
5							
10							
							Stopped excavating at 10 feet. No Groundwater Observed.
15							
20							
25							

This test pit represents the conditions encountered on the date of excavation at this particular location. No other warranty is expressed or implied to the actual conditions which may exist within the vicinity of this test pit location.

TEST PIT LOG

Project: Skunk Creek Improvements 135+00 30'R

TEST PIT: 17

Elevation: 1230

Datum: ---

Date: 3-20-97

Depth, feet	Blows/Foot C	Blows/Foot N/R	Sample Type	Dry Density, pcf	Water Content, %	Unified Classification	Description
						GP	Sandy Gravel with Cobbles; brown, nearly dry, medium dense to dense, trace non-plastic fines, (+3" ~ 10%) trace boulders.
5						GP/ GW/ GC	Silty/Clayey Sandy Gravel; brown, nearly dry, some to trace low plasticity fines, with cobbles, (+3" ~ 10%) some boulders.
10							Stopped excavating at 10 feet. No Groundwater Observed.
15							
20							
25							

This test pit represents the conditions encountered on the date of excavation at this particular location. No other warranty is expressed or implied to the actual conditions which may exist within the vicinity of this test pit location.

TEST PIT LOG

Project: Skunk Creek Improvements 135+00 80'R

TEST PIT: 17A

Elevation: 1235 Datum: ---

Date: 3-20-97

Depth, feet	Blows/Foot C	Blows/Foot N/R	Sample Type	Dry Density, pcf	Water Content, %	Unified Classification	Description
						SP	Gravelly Sand; brown, nearly dry, medium dense, trace non-plastic fines, some cobbles. (+3" ~ 5%) trace boulders.
5							
							Stopped excavating at 8 feet. No Groundwater Observed.
10							
15							
20							
25							

This test pit represents the conditions encountered on the date of excavation at this particular location. No other warranty is expressed or implied to the actual conditions which may exist within the vicinity of this test pit location.

TEST PIT LOG

Project: Skunk Creek Improvements 140+00 25'L

TEST PIT: 18

Elevation: 1231

Datum: ---

Date: 3-20-97

Depth, feet	Blows/Foot C	Blows/Foot N/R	Sample Type	Dry Density, pcf	Water Content, %	Unified Classification	Description
						GP	Sandy Gravel with Cobbles; brown, nearly dry, medium dense to dense, trace non-plastic fines, (+3" ~ 15%) some boulders.
5							
							Stopped excavating at 5 feet. No Groundwater Observed.
10							
15							
20							
25							

This test pit represents the conditions encountered on the date of excavation at this particular location. No other warranty is expressed or implied to the actual conditions which may exist within the vicinity of this test pit location.

TEST PIT LOG

Project: Skunk Creek Improvements 145+00 50'R

TEST PIT: 19

Elevation: 1230 Datum: ---

Date: 3-20-97

Depth, feet	Blows/Foot C	Blows/Foot N/R	Sample Type	Dry Density, pcf	Water Content, %	Unified Classification	Description
						GP/ GW/ GC	Silty/Clayey Sandy Gravel; brown, nearly dry, some to trace low plasticity fines, with cobbles, (+3" ~ 15%) some boulders.
5							
10							
							Stopped excavating at 10 feet. No Groundwater Observed.
15							
20							
25							

This test pit represents the conditions encountered on the date of excavation at this particular location. No other warranty is expressed or implied to the actual conditions which may exist within the vicinity of this test pit location.

TEST PIT LOG

Project: Skunk Creek Improvements 150+00 30'L

TEST PIT: 20

Elevation: 1238 Datum: ---

Date: 3-20-97

Depth, feet	Blows/Foot C	Blows/Foot N/R	Sample Type	Dry Density, pcf	Water Content, %	Unified Classification	Description
						GC	Clayey Sandy Gravel with Cobbles; brown, nearly dry, medium dense to dense, medium plasticity fines, (+3" ~ 15%) some boulders.
5							
10							
							Stopped excavating at 10 feet. No Groundwater Observed.
15							
20							
25							

This test pit represents the conditions encountered on the date of excavation at this particular location. No other warranty is expressed or implied to the actual conditions which may exist within the vicinity of this test pit location.

TEST PIT LOG

Project: Skunk Creek Improvements 155+00 70'R

TEST PIT: 21

Elevation: 1238

Datum: ---

Date: 3-20-97

Depth, feet	Blows/Foot C	Blows/Foot N/R	Sample Type	Dry Density, pcf	Water Content, %	Unified Classification	Description
						GP/ GW/ GC	Silty/Clayey Sandy Gravel; brown, nearly dry, some to trace low plasticity fines, with cobbles, (+3" ~ 20%) some boulders.
5							
							Stopped excavating at 7 feet. No Groundwater Observed.
10							
15							
20							
25							

This test pit represents the conditions encountered on the date of excavation at this particular location. No other warranty is expressed or implied to the actual conditions which may exist within the vicinity of this test pit location.

TEST PIT LOG

Project: Skunk Creek Improvements 160+00 30'L

TEST PIT: 22

Elevation: 1238

Datum: ---

Date: 3-20-97

Depth, feet	Blows/Foot C	Blows/Foot N/R	Sample Type	Dry Density, pcf	Water Content, %	Unified Classification	Description
						GP/ GW/ GC	Silty/Clayey Sandy Gravel; brown, nearly dry, some to trace low plasticity fines, with cobbles, (+3" ~ 20%) some boulders.
5							
10							
							Stopped excavating at 10 feet. No Groundwater Observed.
15							
20							
25							

This test pit represents the conditions encountered on the date of excavation at this particular location. No other warranty is expressed or implied to the actual conditions which may exist within the vicinity of this test pit location.

TEST PIT LOG

Project: Skunk Creek Improvements 165+00 60'R

TEST PIT: 23

Elevation: 1245 Datum: ---

Date: 3-20-97

Depth, feet	Blows/Foot C	Blows/Foot N/R	Sample Type	Dry Density, pcf	Water Content, %	Unified Classification	Description
						GP/ GM	Sandy Gravel with Cobbles, some Silt; brown, nearly dry, medium dense to dense, no to low plasticity fines, (+3" ~ 25%) some boulders.
5							
10							
							Stopped excavating at 10 feet. No Groundwater Observed.
15							
20							
25							

This test pit represents the conditions encountered on the date of excavation at this particular location. No other warranty is expressed or implied to the actual conditions which may exist within the vicinity of this test pit location.

TEST PIT LOG

Project: Skunk Creek Improvements 170+00 15'L

TEST PIT: 24

Elevation: 1241 Datum: ---

Date: 3-20-97

Depth, feet	Blows/Foot C	Blows/Foot N/R	Sample Type	Dry Density, pcf	Water Content, %	Unified Classification	Description
						GC	Clayey Sandy Gravel with Cobbles; brown, nearly dry, medium dense to dense, medium plasticity fines, (+3" ~ 15%) some boulders.
5							
10							
							Stopped excavating at 10 feet. No Groundwater Observed.
15							
20							
25							

This test pit represents the conditions encountered on the date of excavation at this particular location. No other warranty is expressed or implied to the actual conditions which may exist within the vicinity of this test pit location.

TEST PIT LOG

Project: Skunk Creek Improvements 175+00 30'R

TEST PIT: 25

Elevation: 1246 Datum: ---

Date: 3-20-97

Depth, feet	Blows/Foot C	Blows/Foot N/R	Sample Type	Dry Density, pcf	Water Content, %	Unified Classification	Description
						GP/ GW/ GC	Silty/Clayey Sandy Gravel; brown, nearly dry, some to trace low plasticity fines, with cobbles, (+3" ~ 20%) some boulders.
5							
10							
							Stopped excavating at 10 feet. No Groundwater Observed.
15							
20							
25							

This test pit represents the conditions encountered on the date of excavation at this particular location. No other warranty is expressed or implied to the actual conditions which may exist within the vicinity of this test pit location.

TEST PIT LOG

Project: Skunk Creek Improvements 180+00 20'L

TEST PIT: 26

Elevation: 1248

Datum: ---

Date: 3-20-97

Depth, feet	Blows/Foot C	Blows/Foot N/R	Sample Type	Dry Density, pcf	Water Content, %	Unified Classification	Description
						GC	Clayey Sandy Gravel with Cobbles; brown, nearly dry, medium dense to dense, medium plasticity fines, (+3" ~ 15%) some boulders.
5							
							Large Boulders at 6 Feet.
							Stopped excavating at 7.5 feet. No Groundwater Observed.
10							
15							
20							
25							

This test pit represents the conditions encountered on the date of excavation at this particular location. No other warranty is expressed or implied to the actual conditions which may exist within the vicinity of this test pit location.

TEST PIT LOG

Project: Skunk Creek Improvements 185+00 50'R

TEST PIT: 27

Elevation: 1251 Datum: ---

Date: 3-20-97

Depth, feet	Blows/Foot C	Blows/Foot N/R	Sample Type	Dry Density, pcf	Water Content, %	Unified Classification	Description
						GP/ GW/ GC	Silty/Clayey Sandy Gravel; brown, nearly dry, some to trace low plasticity fines, with cobbles, (+3" ~ 20%) some boulders.
5							
10							
							Stopped excavating at 10 feet. No Groundwater Observed.
15							
20							
25							

This test pit represents the conditions encountered on the date of excavation at this particular location. No other warranty is expressed or implied to the actual conditions which may exist within the vicinity of this test pit location.

TEST PIT LOG

Project: Skunk Creek Improvements 190+00 40'L

TEST PIT: 28

Elevation: 1253 Datum: ---

Date: 3-20-97

Depth, feet	Blows/Foot C	Blows/Foot N/R	Sample Type	Dry Density, pcf	Water Content, %	Unified Classification	Description
						GP/ GW/ GC	Silty/Clayey Sandy Gravel; brown, nearly dry, some to trace low plasticity fines, with cobbles, (+3" ~ 10%) some boulders.
5							
10							
							Stopped excavating at 10 feet. No Groundwater Observed.
15							
20							
25							

This test pit represents the conditions encountered on the date of excavation at this particular location. No other warranty is expressed or implied to the actual conditions which may exist within the vicinity of this test pit location.

TEST PIT LOG

Project: Skunk Creek Improvements 195+00 50'R

TEST PIT: 29

Elevation: 1254 Datum: ---

Date: 3-20-97

Depth, feet	Blows/Foot C	Blows/Foot N/R	Sample Type	Dry Density, pcf	Water Content, %	Unified Classification	Description
5						SP	Gravelly Sand; brown, nearly dry, medium dense, trace non-plastic fines, some cobbles. (+3" ~ 15%) trace boulders.
10						GP/ GW/ GC	Silty/Clayey Sandy Gravel; brown, nearly dry, some to trace low plasticity fines, with cobbles, (+3" ~ 15%) some boulders.
15							Stopped excavating at 10 feet. No Groundwater Observed.
20							
25							

This test pit represents the conditions encountered on the date of excavation at this particular location. No other warranty is expressed or implied to the actual conditions which may exist within the vicinity of this test pit location.

TEST PIT LOG

Project: Skunk Creek Improvements 200+00 90'L

TEST PIT: 30

Elevation: 1258 Datum: ---

Date: 3-20-97

Depth, feet	Blows/Foot C	Blows/Foot N/R	Sample Type	Dry Density, pcf	Water Content, %	Unified Classification	Description
						GP/ GW/ GC	Silty/Clayey Sandy Gravel; brown, nearly dry, some to trace low plasticity fines, with cobbles, (+3" ~ 15%) some boulders.
5							
							Very Hard
10							Stopped excavating at 8.5 feet. No Groundwater Observed.
15							
20							
25							

This test pit represents the conditions encountered on the date of excavation at this particular location. No other warranty is expressed or implied to the actual conditions which may exist within the vicinity of this test pit location.

TEST PIT LOG

Project: Skunk Creek Improvements 200+00 100'R

TEST PIT: 30A

Elevation: 1262 Datum: ---

Date: 3-20-97

Depth, feet	Blows/Foot C	Blows/Foot N/R	Sample Type	Dry Density, pcf	Water Content, %	Unified Classification	Description
						SP	Gravelly Sand; brown, nearly dry, medium dense, trace non-plastic fines, some cobbles, (+3" ~ 3%).
5							
							Stopped excavating at 8 feet. No Groundwater Observed.
10							
15							
20							
25							

This test pit represents the conditions encountered on the date of excavation at this particular location. No other warranty is expressed or implied to the actual conditions which may exist within the vicinity of this test pit location.

TEST PIT LOG

Project: Skunk Creek Improvements 205+00 70'R TEST PIT: 31

Elevation: 1259 Datum: --- Date: 3-20-97

Depth, feet	Blows/Foot C	Blows/Foot N/R	Sample Type	Dry Density, pcf	Water Content, %	Unified Classification	Description
						SP/ SW/ SC	Clayey Gravelly Sand; brown, nearly dry, medium dense to dense, some medium plasticity fines, with cobbles, (+3" ~ 5%) trace boulders.
5							
10							
							Stopped excavating at 10 feet. No Groundwater Observed.
15							
20							
25							

This test pit represents the conditions encountered on the date of excavation at this particular location. No other warranty is expressed or implied to the actual conditions which may exist within the vicinity of this test pit location.

TEST PIT LOG

Project: Skunk Creek Improvements 210 +00 90'L

TEST PIT: 32

Elevation: 1262 Datum: ---

Date: 3-20-97

Depth, feet	Blows/Foot C	Blows/Foot N/R	Sample Type	Dry Density, pcf	Water Content, %	Unified Classification	Description
						GP	Sandy Gravel with Cobbles; brown, nearly dry, medium dense to dense, trace non-plastic fines, (+3" ~ 10%) some boulders.
5							
10							
							Stopped excavating at 10 feet. No Groundwater Observed.
15							
20							
25							

This test pit represents the conditions encountered on the date of excavation at this particular location. No other warranty is expressed or implied to the actual conditions which may exist within the vicinity of this test pit location.

TEST PIT LOG

Project: Skunk Creek Improvements 209+25 100'R

TEST PIT: 32A

Elevation: 1268 Datum: ---

Date: 3-20-97

Depth, feet	Blows/Foot C	Blows/Foot N/R	Sample Type	Dry Density, pcf	Water Content, %	Unified Classification	Description
						GC	Clayey Sandy Gravel with Cobbles; brown, nearly dry, medium dense to dense, medium plasticity fines.
5						SP/ SM	Gravelly Sand, some Silt; brown, nearly dry, medium dense, non-plastic fines, some cobbles, (+3" ~ 25%) trace boulders.
10							Stopped excavating at 9 feet. No Groundwater Observed.
15							
20							
25							

This test pit represents the conditions encountered on the date of excavation at this particular location. No other warranty is expressed or implied to the actual conditions which may exist within the vicinity of this test pit location.

TEST PIT LOG

Project: Skunk Creek Improvements 215+00 70'R

TEST PIT: 33

Elevation: 1268

Datum: ---

Date: 3-20-97

Depth, feet	Blows/Foot C	Blows/Foot N/R	Sample Type	Dry Density, pcf	Water Content, %	Unified Classification	Description
						GP/ GM	Sandy Gravel with Cobbles, some Silt; brown, nearly dry, medium dense to dense, no to low plasticity fines, (+3" ~ 15%) some boulders.
5						GP/ GW/ GC	Silty/Clayey Sandy Gravel; brown, nearly dry, some to trace low plasticity fines, with cobbles, (+3" ~ 10%) some boulders.
10							Stopped excavating at 10 feet. No Groundwater Observed.
15							
20							
25							

This test pit represents the conditions encountered on the date of excavation at this particular location. No other warranty is expressed or implied to the actual conditions which may exist within the vicinity of this test pit location.

TEST PIT LOG

Project: Skunk Creek Improvements 220+00 80'L

TEST PIT: 34

Elevation: 1270 Datum: ---

Date: 3-20-97

Depth, feet	Blows/Foot C	Blows/Foot N/R	Sample Type	Dry Density, pcf	Water Content, %	Unified Classification	Description
						GP/ GM	Sandy Gravel with Cobbles, some Silt; brown, nearly dry, medium dense to dense, no to low plasticity fines, (+3" ~ 10%) some boulders.
5						SC	Clayey Gravelly Sand with Cobbles; brown, nearly dry, dense, medium plasticity fines, (+3" ~ 15%) some boulders.
10							Stopped excavating at 10 feet. No Groundwater Observed.
15							
20							
25							

This test pit represents the conditions encountered on the date of excavation at this particular location. No other warranty is expressed or implied to the actual conditions which may exist within the vicinity of this test pit location.

TEST PIT LOG

Project: Skunk Creek Improvements 220+00 100'L

TEST PIT: 34A

Elevation: 1275

Datum: ---

Date: 3-20-97

Depth, feet	Blows/Foot C	Blows/Foot N/R	Sample Type	Dry Density, pcf	Water Content, %	Unified Classification	Description
						GP/ GW/ GC	Silty/Clayey Sandy Gravel; brown, nearly dry, some to trace low plasticity fines, with cobbles, (+3" ~ 10%) some boulders.
5							
							Stopped excavating at 7.5 feet. No Groundwater Observed.
10							
15							
20							
25							

This test pit represents the conditions encountered on the date of excavation at this particular location. No other warranty is expressed or implied to the actual conditions which may exist within the vicinity of this test pit location.

TEST PIT LOG

Project: Skunk Creek Improvements 225+00 30'R

TEST PIT: 35

Elevation: 1275 Datum: ---

Date: 3-20-97

Depth, feet	Blows/Foot C	Blows/Foot N/R	Sample Type	Dry Density, pcf	Water Content, %	Unified Classification	Description
						SC	Clayey Gravelly Sand with Cobbles; brown, nearly dry, dense, medium plasticity fines, (+3" ~ 20%) some boulders.
5							
10							
							Stopped excavating at 10 feet. No Groundwater Observed.
15							
20							
25							

This test pit represents the conditions encountered on the date of excavation at this particular location. No other warranty is expressed or implied to the actual conditions which may exist within the vicinity of this test pit location.

TEST PIT LOG

Project: Skunk Creek Improvements 230+00 10'L

TEST PIT: 36

Elevation: 1280 Datum: ---

Date: 3-20-97

Depth, feet	Blows/Foot C	Blows/Foot N/R	Sample Type	Dry Density, pcf	Water Content, %	Unified Classification	Description
						SM/ SC	Fill - Silty/Clayey Sand, some Gravel; brown, damp, medium dense to dense, low plasticity fines, (+3" ~ 25%) slabs of concrete and AC and boulders.
5						SP/ SW/ SC	Clayey Gravelly Sand; brown, nearly dry, medium dense to dense, some medium plasticity fines, with cobbles, (+3" ~ 5%).
10							Stopped excavating at 10 feet. No Groundwater Observed.
15							
20							
25							

This test pit represents the conditions encountered on the date of excavation at this particular location. No other warranty is expressed or implied to the actual conditions which may exist within the vicinity of this test pit location.

TEST PIT LOG

Project: Skunk Creek Improvements 230+00 85'R

TEST PIT: 36A

Elevation: 1282 Datum: ---

Date: 3-20-97

Depth, feet	Blows/Foot C	Blows/Foot N/R	Sample Type	Dry Density, pcf	Water Content, %	Unified Classification	Description
						SM/ SC	Fill - Silty/Clayey Sand, some Gravel; brown, damp, medium dense to dense, low plasticity fines, mostly buried slabs of concrete.
5							Refusal at 4 feet. No Groundwater Observed.
10							
15							
20							
25							

This test pit represents the conditions encountered on the date of excavation at this particular location. No other warranty is expressed or implied to the actual conditions which may exist within the vicinity of this test pit location.

TEST PIT LOG

Project: Skunk Creek Improvements 235+00 40'R TEST PIT: 37

Elevation: 1271 Datum: --- Date: 3-18-97

Depth, feet	Blows/Foot C	Blows/Foot N/R	Sample Type	Dry Density, pcf	Water Content, %	Unified Classification	Description
						SP/ SM	Gravelly Sand, some Silt; brown, nearly dry, medium dense, non-plastic fines, some cobbles, (+3" ~ 15%) some boulders.
5						GP/ GW/ GC	Silty/Clayey Sandy Gravel; brown, nearly dry, some to trace low plasticity fines, with cobbles, (+3" ~ 15%) some boulders.
10							Stopped excavating at 10 feet. No Groundwater Observed.
15							
20							
25							

This test pit represents the conditions encountered on the date of excavation at this particular location. No other warranty is expressed or implied to the actual conditions which may exist within the vicinity of this test pit location.

TEST PIT LOG

Project: Skunk Creek Improvements 240+00 10'L TEST PIT: 38

Elevation: 1279 Datum: --- Date: 3-18-97

Depth, feet	Blows/Foot C	Blows/Foot N/R	Sample Type	Dry Density, pcf	Water Content, %	Unified Classification	Description
5						GP	Sandy Gravel with Cobbles; brown, nearly dry, medium dense to dense, trace non-plastic fines, (+3" ~ 15%) some boulders.
10						GP/ GW/ GC	Silty/Clayey Sandy Gravel; brown, nearly dry, some to trace low plasticity fines, with cobbles, (+3" ~ 15%) some boulders.
15							Stopped excavating at 10 feet. No Groundwater Observed.
20							
25							

This test pit represents the conditions encountered on the date of excavation at this particular location. No other warranty is expressed or implied to the actual conditions which may exist within the vicinity of this test pit location.

TEST PIT LOG

Project: Skunk Creek Improvements 240+00 90'L TEST PIT: 38A

Elevation: 1283 Datum: --- Date: 3-18-97

Depth, feet	Blows/Foot C	Blows/Foot N/R	Sample Type	Dry Density, pcf	Water Content, %	Unified Classification	Description
						GP	Sandy Gravel with Cobbles; brown, nearly dry, medium dense to dense, trace non-plastic fines, (+3" ~ 15%) some boulders.
5							
							Stopped excavating at 7 feet. No Groundwater Observed.
10							
15							
20							
25							

This test pit represents the conditions encountered on the date of excavation at this particular location. No other warranty is expressed or implied to the actual conditions which may exist within the vicinity of this test pit location.

TEST PIT LOG

Project: Skunk Creek Improvements 245+00 40'R

TEST PIT: 39

Elevation: 1276 Datum: ---

Date: 3-18-97

Depth, feet	Blows/Foot C	Blows/Foot N/R	Sample Type	Dry Density, pcf	Water Content, %	Unified Classification	Description
						SP	Gravelly Sand; brown, nearly dry, medium dense, trace non-plastic fines, some cobbles, (+3" ~ 5%).
5						GP/ GW/ GC	Silty/Clayey Sandy Gravel; brown, nearly dry, some to trace low plasticity fines, with cobbles, (+3" ~ 20%) some boulders.
10							Stopped excavating at 10 feet. No Groundwater Observed.
15							
20							
25							

This test pit represents the conditions encountered on the date of excavation at this particular location. No other warranty is expressed or implied to the actual conditions which may exist within the vicinity of this test pit location.

TEST PIT LOG

Project: Skunk Creek Improvements 250+00 30'L TEST PIT: 40

Elevation: 1280 Datum: --- Date: 3-18-97

Depth, feet	Blows/Foot C	Blows/Foot N/R	Sample Type	Dry Density, pcf	Water Content, %	Unified Classification	Description
						SM	Gravelly Silty Sand; brown, nearly dry, medium dense to dense, high plasticity silt (MH) fines, light to moderate cementation, (+3" ~ 10%) boulders.
5						SM	Silty Sand, trace Gravel; brown, nearly dry, medium dense, non-plastic fines.
10						GP	Sandy Gravel with Cobbles; brown, nearly dry, medium dense to dense, trace non-plastic fines, (+3" ~ 10%) some boulders.
15							Stopped excavating at 10 feet. No Groundwater Observed.
20							
25							

This test pit represents the conditions encountered on the date of excavation at this particular location. No other warranty is expressed or implied to the actual conditions which may exist within the vicinity of this test pit location.

TEST PIT LOG

Project: Skunk Creek Improvements 250+00 90'L TEST PIT: 40A

Elevation: 1281 Datum: --- Date: 3-18-97

Depth, feet	Blows/Foot C	Blows/Foot N/R	Sample Type	Dry Density, pcf	Water Content, %	Unified Classification	Description
						GP	Sandy Gravel with Cobbles; brown, nearly dry, medium dense to dense, trace non-plastic fines, (+3" ~ 15%) some boulders.
5							
							Stopped excavating at 7 feet. No Groundwater Observed.
10							Note: Toe-down from gabions extend to at least bottom.
15							
20							
25							

This test pit represents the conditions encountered on the date of excavation at this particular location. No other warranty is expressed or implied to the actual conditions which may exist within the vicinity of this test pit location.

TEST PIT LOG

Project: Skunk Creek Improvements 255+00 50'R

TEST PIT: 41

Elevation: 1287 Datum: ---

Date: 3-18-97

Depth, feet	Blows/Foot C	Blows/Foot N/R	Sample Type	Dry Density, pcf	Water Content, %	Unified Classification	Description
						SP	Gravelly Sand; brown, nearly dry, medium dense, trace non-plastic fines, some cobbles, (+3" ~ 5%).
5						SP/ SW/ SC	Clayey Gravelly Sand; brown, nearly dry, medium dense to dense, some medium plasticity fines, with cobbles, (+3" ~ 10%) trace boulders.
10							Stopped excavating at 10 feet. No Groundwater Observed.
15							
20							
25							

This test pit represents the conditions encountered on the date of excavation at this particular location. No other warranty is expressed or implied to the actual conditions which may exist within the vicinity of this test pit location.

APPENDIX B
LABORATORY ANALYSIS

R·A·M

LABORATORY TEST RESULTS

Date: 7-Apr-97

SAMPLE SOURCE: As noted below

TESTING PERFORMED: Sieve Analysis, Percent Passing No. 200 Sieve, Atterberg Limits (ASTM C136, D1140, D4318)

SAMPLED BY: RAM/Miller

RESULTS:

Sample	Atterberg Limits		Sieve Size - Accumulative Percent Passing											Soil
Source	LL	PI	200	100	50	30	16	8	4	3/4"	1"	2"	3"	Class.*
4 @ 0'-3'		NP	3	4	7	17	28	39	49	71	76	83	100	GP
4 @ 3'-10'	53	28	9	11	14	23	34	50	62	76	80	88	97	SW-SC
5 @ 0'-8'	23	6	8	10	13	18	24	31	38	57	63	85	96	GW-GC
6 @ 0'-3'		NP	1	2	4	14	25	35	44	67	74	88	100	GP
6 @ 3'-10'	45	16	35	42	48	56	64	75	83	97	98	100		SM
7 @ 0'-10'	42	18	78	85	89	91	94	96	97	100				CL
8 @ 1'-6'	22	4	45	58	70	77	82	85	88	97	98	100		SC-SM
8 @ 6'-10'	22	5	8	11	15	23	33	43	53	72	75	89	100	GP-GC
9 @ 0'-10'		NP	2	3	7	20	37	53	65	81	83	93	100	SP
10 @ 0'-10'		NP	6	11	22	36	47	57	65	78	81	87	93	SP-SM
11 @ 0'-10'	26	11	15	20	26	38	44	47	50	65	69	76	93	GC
12 @ 0'-9'		NP	2	4	9	27	45	57	63	73	75	82	93	SP
13 @ 0'-10'		NP	4	7	15	31	46	58	65	81	84	94	100	SP
14 @ 0'-3'		NP	3	4	8	17	29	44	56	77	81	90	97	SP
14 @ 3'-10'	38	23	7	8	10	16	25	38	49	80	86	99	100	GW-GC
15 @ 0'-9'		NP	3	3	7	20	37	53	64	80	84	90	91	SP
16 @ 0'-3'	28	13	8	9	13	22	38	54	67	84	87	93	100	SW-SC
16 @ 3'-10'	33	18	6	7	10	20	33	47	58	80	85	100		SP-SC
17 @ 0'-4'		NP	4	4	6	13	30	47	57	77	82	90	100	GP
17 @ 4'-10'	59	37	6	7	8	11	18	30	43	65	71	86	93	GP-GC
18 @ 0'-5'	29	7	4	6	9	16	25	35	46	66	71	84	88	GP
19 @ 0'-10'	28	13	5	6	8	14	23	34	45	67	72	87	90	GP-GC
20 @ 0'-7'	28	11	17	19	21	26	33	42	51	69	72	90	96	GC
21 @ 0'-7'	57	35	7	8	10	14	20	31	42	65	71	86	97	GP-GC
22 @ 0'-10'	32	16	11	13	16	21	29	39	49	72	80	93	100	GP-GC
23 @ 0'-10	20	3	7	10	14	24	32	40	47	60	63	71	93	GP-GM
24 @ 0'-10'	24	8	23	28	34	41	48	55	60	72	75	93	100	GC
25 @ 0'-10'	35	17	9	11	15	25	37	45	52	66	69	78	95	GP-GC

NP = Non-Plastic

* Unified Soil Classification System

LABORATORY TEST RESULTS

Date: 7-Apr-97

SAMPLE SOURCE: As noted below

TESTING PERFORMED: Sieve Analysis, Percent Passing No. 200 Sieve, Atterberg Limits (ASTM C136, D1140, D4318)

SAMPLED BY: RAM/Miller

RESULTS:

Sample	Atterberg Limits		Sieve Size - Accumulative Percent Passing											Soil
Source	LL	PI	200	100	50	30	16	8	4	3/4"	1"	2"	3"	Class.*
26 @ 0'-7'	29	11	14	18	22	27	35	43	50	67	70	79	90	GC
27 @ 0'-10'	25	11	9	11	15	23	31	39	47	68	73	83	91	GP-GC
28 @ 0'-10'	38	21	7	8	10	15	23	35	48	75	80	88	93	GW-GC
29 @ 0'-6'		NP	3	4	8	17	32	48	60	77	80	91	100	SP
29 @ 6'-10'	30	15	5	6	8	14	24	39	51	72	77	91	100	GP-GC
30 @ 0'-10'	35	15	5	6	8	13	20	29	39	58	63	79	88	GP-GC
31 @ 0'-10'	41	22	5	7	10	19	31	46	62	86	90	97	100	SW-SC
32 @ 0'-10'	38	18	5	6	9	18	29	41	51	70	72	81	92	GP
33 @ 0'-3'		NP	6	8	19	36	45	53	61	76	80	87	92	GP-GM
33 @ 3'-10'	41	21	6	7	11	21	32	44	54	70	73	87	93	GP-GC
34 @ 0'-4'	21	3	8	10	14	24	36	48	56	78	83	93	100	GP-GM
34 @ 4'-10'	27	11	15	19	24	31	41	54	63	77	80	88	93	SC
35 @ 0'-10'	34	16	32	37	42	49	55	61	68	86	89	93	93	SC
36 @ 0'-4'	25	7	12	16	23	34	44	53	60	74	78	86	89	SC-SM
36 @ 4'-10'	41	18	8	10	15	27	47	65	77	90	92	98	100	SW-SC
37 @ 0'-3'		NP	7	8	12	22	37	54	64	81	83	90	100	SW-SM
37 @ 3'-10'	32	15	7	9	15	27	38	47	53	82	85	90	100	GP-GC
38 @ 0'-6'	22	4	4	4	7	14	23	34	43	65	69	79	88	GP
38 @ 6'-10'	43	23	5	6	7	12	21	33	44	75	82	97	100	GP-GC
39 @ 0'-2'		NP	3	4	10	26	41	57	72	89	92	97	100	SP
40 @ 0'-3'		NP	13	20	31	43	54	64	71	81	84	93	96	SM
40 @ 3'-6'		NP	46	66	78	84	88	93	96	100				SM
41 @ 0'-2'		NP	2	4	9	26	46	66	84	97	98	100		SP
41 @ 2'-10'	39	21	10	13	16	24	34	47	59	85	85	100		SW-SC

NP = Non-Plastic

* Unified Soil Classification System

LABORATORY TEST RESULTS

Date: 7-Apr-97

SAMPLE SOURCE: As noted below

TESTING PERFORMED: Sieve Analysis, Percent Passing No. 200 Sieve, Atterberg Limits (ASTM C136, D1140, D4318)

SAMPLED BY: RAM/Miller

RESULTS:

Sample	Atterberg Limits		Sieve Size - Accumulative Percent Passing											Soil
Source	LL	PI	200	100	50	30	16	8	4	3/4"	1"	2"	3"	Class.*
14A @ 0'-3'		NP	21	25	31	41	51	61	68	80	82	91	100	SM
17A @ 0'-8'		NP	5	7	13	25	37	47	57	73	77	83	100	SP
30A @ 0'-8'		NP	4	6	10	20	31	43	57	79	83	92	94	SP
32A @ 0'-2'	35	15	25	28	31	34	37	40	43	51	53	100		GC
32A @ 2'-9'		NP	6	9	13	22	31	44	57	81	85	95	100	SP-SM

NP = Non-Plastic

* Unified Soil Classification System

LABORATORY TEST RESULTS

Date: 7-Apr-97

SAMPLE SOURCE: As noted below

TESTING PERFORMED: pH, Minimum Resistivity (ADOT 236a)

SAMPLED BY: RAM/Miller

RESULTS:

Sample Source	pH	Minimum Resistivity (ohm-cm)
4A @ 0'-8'	8.5	5352
6A @ 0'-10'	8.5	2244
10A @ 0'-7.5'	8.5	5544
12A @ 0'-6'	8.4	2025
14A @ 3'-8'	8.2	1700
17A @ 0'-8'	8.5	5883
30A @ 0'-8'	9.4	2590
32A @ 2'-9'	9.2	332
34A @ 0'-7'	8.7	9495
38A @ 0'-7'	8.7	9163
40A @ 0'-7'	8.6	4781

APPENDIX F

GABION DESIGN CALCULATIONS

Reno Mattress

size selected

Thickness = 0.75 ft. (9 in.)
dm = 0.375 ft (4.5 in) } Rock size estimated using 5"-6" range.
dso = 0.475 ft (5.7 in)

γ_w = 62.4 lbf/ft³
γ_{rock} = 150 lbf/ft³

Side slope = 18.4°
dso base = 0.01 ft

From HEC2 output (station 94+05)

Q = 11000 cfs
VCH = 8.26 ft/s
Depth = 6.59 ft
F = 0.58
Slope = 0.008

Find Tractive Shear Stress for banks

$\tau_m = 0.75\,\gamma_w\,y\,i$

$= 0.75\,(62.4\ \text{lbf/ft}^3)(6.59\ \text{ft})(0.008)$

$\tau_m = 2.467\ \text{lbf/ft}^2$

$\tau_c = 0.10\,(\gamma_s - \gamma_w)\,dm$

$= 0.10\,(150\ \text{lbf/ft}^3 - 62.4\ \text{lbf/ft}^3)\ 0.375\ \text{ft}$

$\tau_c = 3.285\ \text{lbf/ft}^2$

$\tau_s = \tau_c \sqrt{1 - \frac{\sin^2\theta}{\sin^2 41^\circ}}$

$= 3.285\ \text{lbf/ft}^2 \sqrt{1 - \frac{\sin^2 18.4^\circ}{\sin^2 41^\circ}}$

$\tau_s = 2.88\ \text{lbf/ft}^2$

Check $T_m < T_s$

$2.467\ lbf/ft^3 < 2.88\ lbf/ft^2$

- OK, selected mattress (0.75 ft) is sufficient to protect liners.

	Size					
9"	dm (ft) =	0.39 ft	γώ	62.4 lb/ft^3		
18"	dm (ft) =	0.62 ft	γτ	150 lb/ft^3		
24"	dm (ft) =	0.9 ft	side slope	18.4 deg.		26.6

	SECNO	Q	VCH	DEPTH	TOPWID	AREA	ELMIN	FRCH	Ts/Tm	Tc/Tb	Slope	Tractive Shear Stress Tb	Vc	Tc	Tm	Ts	Banks Tm < Ts	Bed Tb < Tc	C'* bed	C'* bank
	7377	11000	7.2	10.11	181.41	1527	1194.77	0.44	**2.8145462**	**2.4079281**	0.00225	1.4188	16.4828	3.4164	1.0641	2.9950	Yes	Yes	-0.0585	-0.0689
	7500	11000	4.49	10.18	271.09	2449	1195.39	0.26	**7.9675393**	**6.8164671**	0.00079	0.5012	16.4828	3.4164	0.3759	2.9950	Yes	Yes	-0.0853	-0.0890
	7700	11000	4.96	9.32	265.87	2216.5	1196.39	0.3	**6.4052827**	**5.47991**	0.00107	0.6234	16.4828	3.4164	0.4676	2.9950	Yes	Yes	-0.0818	-0.0863
*																				
	7900	11000	5.49	8.5	260.99	2002	1197.39	0.35	**5.1356581**	**4.3937084**	0.00147	0.7776	16.4828	3.4164	0.5832	2.9950	Yes	Yes	-0.0772	-0.0829
*																				
	8000	11000	5.75	8.13	260.61	1913.3	1197.89	0.37	**4.6303043**	**3.9613631**	0.0017	0.8624	16.4828	3.4164	0.6468	2.9950	Yes	Yes	-0.0748	-0.0811
*																				
	8200	11000	6.36	7.44	254.67	1730.2	1198.89	0.43	**3.7316863**	**3.1925687**	0.00231	1.0701	16.4828	3.4164	0.8026	2.9950	Yes	Yes	-0.0687	-0.0765
	8400	11000	6.93	6.89	251.3	1588.4	1199.89	0.49	**3.0867936**	**2.6408438**	0.00301	1.2937	16.4828	3.4164	0.9703	2.9950	Yes	Yes	-0.0621	-0.0716
*																				
	8500	11000	7.18	6.67	249.95	1531.3	1200.39	0.51	**2.8436627**	**2.4328381**	0.00337	1.4043	16.4828	3.4164	1.0532	2.9950	Yes	Yes	-0.0589	-0.0692
	8700	11000	7.58	6.33	247.99	1450.5	1201.39	0.55	**2.5293629**	**2.1639452**	0.004	1.5788	16.4828	3.4164	1.1841	2.9950	Yes	Yes	-0.0538	-0.0653
	8900	11000	7.85	6.13	246.78	1400.7	1202.39	0.58	**2.3402179**	**2.0021261**	0.00446	1.7064	16.4828	3.4164	1.2798	2.9950	Yes	Yes	-0.0501	-0.0625
*																				
	9000	11000	7.91	6.08	247.84	1390.9	1202.89	0.59	**2.2931514**	**1.9618593**	0.00459	1.7414	16.4828	3.4164	1.3061	2.9950	Yes	Yes	-0.0490	-0.0618
	9100	11000	8	6.03	246.16	1375	1203.39	0.6	**2.2446789**	**1.9203896**	0.00473	1.7790	16.4828	3.4164	1.3343	2.9950	Yes	Yes	-0.0479	-0.0609
*																				
	9271	11000	8.09	5.97	245.81	1360.1	1204.25	0.61	**2.1907834**	**1.8742805**	0.00489	1.8228	16.4828	3.4164	1.3671	2.9950	Yes	Yes	-0.0466	-0.0600
*																				
	9295	11000	8.9	5.88	210	1235.6	1204.36	0.65	**1.8722824**	**1.6017933**	0.00581	2.1329	16.4828	3.4164	1.5996	2.9950	Yes	Yes	-0.0376	-0.0532
GC	**9405**	11000	9.2	5.7	210	1196.3	1204.91	0.68	**1.7376984**	**1.4866527**	0.00646	2.2980	16.4828	3.4164	1.7235	2.9950	Yes	Yes	-0.0327	-0.0496
*																				
	9471	11000	7.76	6.2	247.06	1417	1205.24	0.57	**2.4009873**	**2.0541161**	0.0043	1.6632	16.4828	3.4164	1.2474	2.9950	Yes	Yes	-0.0513	-0.0635
	9500	11000	7.81	6.17	247.09	1409.4	1205.39	0.58	**2.3696668**	**2.0273205**	0.00438	1.6852	16.4828	3.4164	1.2639	2.9950	Yes	Yes	-0.0507	-0.0630
*																				
	9700	11000	8.34	6.03	237.44	1319.7	1206.39	0.62	**2.0539659**	**1.757229**	0.00517	1.9442	16.4828	3.4164	1.4581	2.9950	Yes	Yes	-0.0431	-0.0573
	9800	11000	8.24	6.06	238.18	1334.5	1206.89	0.61	**2.1112161**	**1.8062082**	0.005	1.8915	16.4828	3.4164	1.4186	2.9950	Yes	Yes	-0.0446	-0.0585
	10000	11000	8.54	6.05	231.09	1288.6	1207.89	0.64	**1.9588441**	**1.6758494**	0.0054	2.0386	16.4828	3.4164	1.5290	2.9950	Yes	Yes	-0.0403	-0.0552
	10025	11000	8.03	6.31	239.43	1370.3	1207.9	0.59	**2.2018904**	**1.8837828**	0.00461	1.8136	16.4828	3.4164	1.3602	2.9950	Yes	Yes	-0.0469	-0.0602

	Size					
9"	dm (ft) =	0.39 ft	γώ	62.4 lb/ft^3		
18"	dm (ft) =	0.62 ft	γτ	150 lb/ft^3		
24"	dm (ft) =	0.9 ft	side slope	18.4 deg.	26.6	

	SECNO	Q	VCH	DEPTH	TOPWID	AREA	ELMIN	FRCH	Ts/Tm	Tc/Tb	Slope	Tractive Shear Stress Tb	Vc	Tc	Tm	Ts	Banks Tm < Ts	Bed Tb < Tc	C'* bed	C'* bank
	10100	11000	8.69	6.08	226.46	1265.2	1208.39	0.65	**1.8832644**	**1.6111888**	0.00559	2.1204	16.4828	3.4164	1.5903	2.9950	Yes	Yes	-0.0379	-0.0535
	10200	11000	8.8	6.12	222.72	1250.6	1208.89	0.65	**1.8400089**	**1.5741824**	0.00568	2.1703	16.4828	3.4164	1.6277	2.9950	Yes	Yes	-0.0365	-0.0524
	10400	11000	9.06	6.23	213.34	1213.7	1209.89	0.67	**1.7310651**	**1.4809778**	0.00593	2.3069	16.4828	3.4164	1.7301	2.9950	Yes	Yes	-0.0325	-0.0494
	10600	11000	9.1	6.4	208.33	1208.8	1210.89	0.67	**1.7151435**	**1.4673563**	0.00583	2.3283	16.4828	3.4164	1.7462	2.9950	Yes	Yes	-0.0319	-0.0489
*	10800	11000	8.91	6.58	207.43	1234.1	1211.89	0.64	**1.7967393**	**1.537164**	0.00541	2.2225	16.4828	3.4164	1.6669	2.9950	Yes	Yes	-0.0349	-0.0512
*	10900	11000	8.93	6.62	206.28	1231.4	1212.39	0.64	**2.8396205**	**2.4293799**	0.00541	2.2356	22.8584	5.4312	1.6767	4.7613	Yes	Yes	-0.0935	-0.1099
	11000	11000	9.48	6.57	196.18	1159.8	1212.9	0.69	**2.503635**	**2.1419342**	0.00619	2.5357	22.8584	5.4312	1.9017	4.7613	Yes	Yes	-0.0848	-0.1033
	11095	11000	9.52	6.65	193.75	1155.8	1213.4	0.69	**2.4851684**	**2.1261356**	0.00616	2.5545	22.8584	5.4312	1.9159	4.7613	Yes	Yes	-0.0842	-0.1029
*	**11100**	11000	12.42	5.23	187.3	885.89	1216.9	1.01	**1.3679644**	**1.1703343**	0.01422	4.6407	22.8584	5.4312	3.4805	4.7613	Yes	Yes	-0.0231	-0.0571
GC	**11150**	11000	10.06	6.61	185.32	1093	1216.9	0.73	**1.3842735**	**1.1842872**	0.00699	2.8848	16.4828	3.4164	2.1636	2.9950	Yes	Yes	-0.0156	-0.0367
	11230	11000	9.53	7.1	183.94	1154.4	1217.1	0.67	**1.5602288**	**1.3348222**	0.00578	2.5594	16.4828	3.4164	1.9196	2.9950	Yes	Yes	-0.0251	-0.0438
	11238	11000	9.41	7.18	184.31	1169.4	1217.1	0.66	**1.6062377**	**1.3741842**	0.00555	2.4861	16.4828	3.4164	1.8646	2.9950	Yes	Yes	-0.0272	-0.0454
	11305	11000	8.63	7.75	187.7	1274.5	1217.1	0.58	**1.9324773**	**1.6532919**	0.00427	2.0664	16.4828	3.4164	1.5498	2.9950	Yes	Yes	-0.0395	-0.0546
	11310	11000	8.77	7.64	186.93	1254.1	1217.2	0.6	**1.8680566**	**1.598178**	0.00448	2.1377	16.4828	3.4164	1.6033	2.9950	Yes	Yes	-0.0374	-0.0531
	11400	11000	7.95	8.33	191.3	1384.2	1217.1	0.52	**2.3070646**	**1.9737625**	0.00333	1.7309	16.4828	3.4164	1.2982	2.9950	Yes	Yes	-0.0493	-0.0620
	11500	11000	8.07	8.05	193.65	1363.6	1217.7	0.54	**2.2355859**	**1.9126103**	0.00356	1.7862	16.4828	3.4164	1.3397	2.9950	Yes	Yes	-0.0477	-0.0608
	11700	11000	7.68	8.41	195.46	1431.8	1218.1	0.5	**2.4851226**	**2.1260963**	0.00306	1.6069	16.4828	3.4164	1.2052	2.9950	Yes	Yes	-0.0530	-0.0647
	11900	11000	7.43	8.66	196.83	1481.1	1218.5	0.48	**2.6755152**	**2.2889829**	0.00276	1.4925	16.4828	3.4164	1.1194	2.9950	Yes	Yes	-0.0563	-0.0672
	12000	11000	7.35	8.75	197.33	1497.5	1218.7	0.47	**2.7371871**	**2.3417451**	0.00267	1.4589	16.4828	3.4164	1.0942	2.9950	Yes	Yes	-0.0573	-0.0680
*	12200	11000	7.3	8.79	197.94	1507.8	1219.2	0.47	**2.7766902**	**2.3755412**	0.00262	1.4382	16.4828	3.4164	1.0786	2.9950	Yes	Yes	-0.0579	-0.0684
	12400	11000	7.17	8.93	198.56	1533.4	1219.6	0.45	**2.878049**	**2.4622566**	0.00249	1.3875	16.4828	3.4164	1.0406	2.9950	Yes	Yes	-0.0594	-0.0695

	Size					
9"	dm (ft) =	0.39 ft	γώ	62.4 lb/ft^3		
18"	dm (ft) =	0.62 ft	γτ	150 lb/ft^3		
24"	dm (ft) =	0.9 ft	side slope	18.4 deg.		26.6

	SECNO	Q	VCH	DEPTH	TOPWID	AREA	ELMIN	FRCH	Ts/Tm	Tc/Tb	Slope	Tractive Shear Stress Tb	Vc	Tc	Tm	Ts	Banks Tm < Ts	Bed Tb < Tc	C'* bed	C'* bank
	12500	11000	7.12	8.99	198.93	1545.7	1219.8	0.45	2.9282243	2.5051831	0.00243	1.3637	16.4828	3.4164	1.0228	2.9950	Yes	Yes	-0.0601	-0.0701
	12645	11000	7.06	9.05	199.12	1557.1	1220.1	0.45	2.9761443	2.54618	0.00238	1.3418	16.4828	3.4164	1.0063	2.9950	Yes	Yes	-0.0607	-0.0705
	12650	11000	8.15	7.99	192.94	1350.1	1221	0.54	2.1895684	1.8732409	0.00366	1.8238	16.4828	3.4164	1.3678	2.9950	Yes	Yes	-0.0466	-0.0600
GC *	12660	11000	8.09	8.04	193.25	1360.1	1221	0.54	2.2252254	1.9037466	0.00358	1.7946	16.4828	3.4164	1.3459	2.9950	Yes	Yes	-0.0475	-0.0606
	12784	11000	7.27	8.45	208.68	1514.1	1221.2	0.48	2.7390323	2.3433237	0.00277	1.4579	16.4828	3.4164	1.0934	2.9950	Yes	Yes	-0.0573	-0.0680
	13500	11000	7.95	11.18	146.11	1383.2	1222.6	0.46	1.9893043	2.0413246	0.0024	1.6736	16.4828	3.4164	1.2552	2.4970	Yes	Yes	-0.0510	-0.0633
*	13600	11000	7.93	11.22	146.09	1387.6	1222.8	0.45	2.0039306	2.0563334	0.00237	1.6614	16.4828	3.4164	1.2461	2.4970	Yes	Yes	-0.0514	-0.0635
*	13700	11000	7.86	11.27	146.67	1398.6	1223	0.45	2.0371042	2.0903744	0.00232	1.6343	16.4828	3.4164	1.2258	2.4970	Yes	Yes	-0.0522	-0.0641
	13800	11000	7.86	11.31	146.34	1399.1	1223.2	0.45	2.0377912	2.0910794	0.00232	1.6338	16.4828	3.4164	1.2253	2.4970	Yes	Yes	-0.0522	-0.0641
	13900	11000	7.8	11.35	146.98	1410.1	1223.4	0.44	2.0717766	2.1259535	0.00227	1.6070	16.4828	3.4164	1.2052	2.4970	Yes	Yes	-0.0530	-0.0647
	14000	11000	7.81	11.38	146.53	1408.6	1223.6	0.44	2.067226	2.121284	0.00227	1.6105	16.4828	3.4164	1.2079	2.4970	Yes	Yes	-0.0529	-0.0646
	14100	11000	7.71	11.43	147.71	1426.6	1223.8	0.44	2.1256645	2.1812506	0.0022	1.5663	16.4828	3.4164	1.1747	2.4970	Yes	Yes	-0.0542	-0.0656
	14200	11000	7.75	11.44	146.88	1418.6	1224	0.44	2.0989553	2.153843	0.00222	1.5862	16.4828	3.4164	1.1896	2.4970	Yes	Yes	-0.0536	-0.0652
	14300	11000	7.7	11.48	147.64	1429.2	1224.2	0.44	2.1299855	2.1856846	0.00218	1.5631	16.4828	3.4164	1.1723	2.4970	Yes	Yes	-0.0542	-0.0657
*	14400	11000	7.69	11.5	147.55	1431	1224.4	0.43	2.1360707	2.1919289	0.00217	1.5586	16.4828	3.4164	1.1690	2.4970	Yes	Yes	-0.0544	-0.0658
	14500	11000	7.76	11.5	146.21	1416.8	1224.6	0.44	2.0908272	2.1455023	0.00222	1.5924	16.4828	3.4164	1.1943	2.4970	Yes	Yes	-0.0534	-0.0650
	14700	11000	8.26	11.61	149.49	1332.3	1224.9	0.49	1.9949678	1.7067544	0.00276	2.0017	16.4828	3.4164	1.5013	2.9950	Yes	Yes	-0.0414	-0.0561
	14900	11000	8.97	11.68	139.93	1226.4	1225.3	0.53	1.6389654	1.4021837	0.00334	2.4365	16.4828	3.4164	1.8274	2.9950	Yes	Yes	-0.0287	-0.0465
	15000	11000	9.32	11.76	135.57	1179.6	1225.5	0.56	1.4896766	1.2744627	0.00365	2.6807	16.4828	3.4164	2.0105	2.9950	Yes	Yes	-0.0215	-0.0412
	15200	11000	9.24	12.11	134.63	1190.1	1225.9	0.55	1.5021352	1.2851214	0.00352	2.6584	16.4828	3.4164	1.9938	2.9950	Yes	Yes	-0.0222	-0.0416
	15400	11000	9.67	12.36	129.14	1137.6	1226.3	0.57	3.0810633	2.6359414	0.00388	2.9910	30.6200	7.8840	2.2432	6.9115	Yes	Yes	-0.1432	-0.1651

	Size					
9"	dm (ft) =	0.39 ft	γώ	62.4 lb/ft^3		
18"	dm (ft) =	0.62 ft	γτ	150 lb/ft^3		
24"	dm (ft) =	0.9 ft	side slope	18.4 deg.		26.6

SECNO	Q	VCH	DEPTH	TOPWID	AREA	ELMIN	FRCH	Ts/Tm	Tc/Tb	Slope	Tractive Shear Stress Tb	Vc	Tc	Tm	Ts	Banks Tm < Ts	Bed Tb < Tc	C'* bed	C'* bank
15495	11000	9.4	12.6	130.78	1170.2	1226.5	0.55	**3.26484**	**2.7931678**	0.00359	2.8226	30.6200	7.8840	2.1170	6.9115	Yes	Yes	-0.1482	-0.1688
15500	11000	14.99	9.39	106.34	733.99	1228.5	1.01	**1.2232681**	**1.0465423**	0.01286	7.5334	30.6200	7.8840	5.6500	6.9115	Yes	Yes	-0.0103	-0.0654
15510	11000	12.82	10.52	113.12	857.99	1228.5	0.82	**1.6885003**	**1.4445623**	0.00831	5.4577	30.6200	7.8840	4.0933	6.9115	Yes	Yes	-0.0710	-0.1110
15700	11000	13.55	11.08	106.27	811.6	1229.4	0.86	**1.4404712**	**1.232366**	0.00925	6.3975	30.6200	7.8840	4.7981	6.9115	Yes	Yes	-0.0435	-0.0903
15900	11000	13.38	11.95	104.68	822.37	1230.4	0.84	**1.4185385**	**1.2136019**	0.00871	6.4964	30.6200	7.8840	4.8723	6.9115	Yes	Yes	-0.0406	-0.0882
16000	11000	10.98	13.11	115.82	1001.4	1230.9	0.66	**2.179725**	**1.8648196**	0.00517	4.2278	30.6200	7.8840	3.1708	6.9115	Yes	Yes	-0.1070	-0.1380
16100	11000	9	13.68	130.49	1222.5	1231.4	0.52	**3.4767959**	**2.9745024**	0.00311	2.6505	30.6200	7.8840	1.9879	6.9115	Yes	Yes	-0.1532	-0.1726
16200	11000	7.86	13.87	142.41	1399.4	1231.8	0.44	**4.8026921**	**4.1088461**	0.00222	1.9188	30.6200	7.8840	1.4391	6.9115	Yes	Yes	-0.1746	-0.1886
16400	11000	6.64	13.53	162.99	1656.2	1232.8	0.37	**3.1448748**	**2.690534**	0.0015	1.2698	16.4828	3.4164	0.9523	2.9950	Yes	Yes	-0.0628	-0.0721
16500	11000	6.25	13.26	172.55	1760.5	1233.3	0.34	**3.6534457**	**3.1256315**	0.00132	1.0930	16.4828	3.4164	0.8198	2.9950	Yes	Yes	-0.0680	-0.0760
16600	11000	6.49	12.86	170.38	1694.2	1233.8	0.36	**3.3737742**	**2.8863642**	0.00148	1.1836	16.4828	3.4164	0.8877	2.9950	Yes	Yes	-0.0654	-0.0740
16700	11000	6.75	12.48	168.1	1629.7	1234.3	0.38	**3.111553**	**2.6620262**	0.00165	1.2834	16.4828	3.4164	0.9625	2.9950	Yes	Yes	-0.0624	-0.0718
16800	11000	6.94	12.23	166.2	1585.5	1234.7	0.4	**2.9413492**	**2.5164118**	0.00178	1.3576	16.4828	3.4164	1.0182	2.9950	Yes	Yes	-0.0603	-0.0702
16900	11000	7.21	11.87	164.05	1526	1235.2	0.42	**2.71605**	**2.3236617**	0.00199	1.4703	16.4828	3.4164	1.1027	2.9950	Yes	Yes	-0.0570	-0.0677
17000	11000	7.99	11.46	147.27	1377.3	1235.7	0.46	**2.2783533**	**1.9491991**	0.00245	1.7527	16.4828	3.4164	1.3145	2.9950	Yes	Yes	-0.0487	-0.0615
17100	11000	8.19	11.2	146.6	1342.5	1236.18	0.48	**2.1569944**	**1.8453729**	0.00265	1.8513	16.4828	3.4164	1.3885	2.9950	Yes	Yes	-0.0458	-0.0594
17200	11000	9.07	10.85	130.61	1213.2	1236.66	0.52	**1.8243727**	**1.5608051**	0.00323	2.1889	16.4828	3.4164	1.6417	2.9950	Yes	Yes	-0.0359	-0.0519
17300	11000	9.22	10.67	128.72	1192.9	1237.14	0.53	**1.7802605**	**1.5230659**	0.00337	2.2431	16.4828	3.4164	1.6823	2.9950	Yes	Yes	-0.0343	-0.0508
17400	11000	9.59	10.47	129.08	1147.3	1237.62	0.57	**1.6017471**	**1.3703423**	0.00382	2.4931	16.4828	3.4164	1.8698	2.9950	Yes	Yes	-0.0270	-0.0453
17500	11000	9.88	10.33	125.72	1113.9	1238.1	0.58	**1.5169209**	**1.297771**	0.00408	2.6325	16.4828	3.4164	1.9744	2.9950	Yes	Yes	-0.0229	-0.0422
17700	11000	9.96	10.19	129.72	1104.2	1239.06	0.6	**1.4480561**	**1.2388551**	0.00434	2.7577	16.4828	3.4164	2.0683	2.9950	Yes	Yes	-0.0193	-0.0395

9" Gabions at the regular channel section

Size

dm (ft)	0.39	ft	γώ	62.4	lb/ft^3
		ft	γτ	150	lb/ft^3
thick (ft)	0.75	ft	side slope	18.4	deg.

	SECNO	Q	VCH	DEPTH	TOPWID	AREA	ELMIN	FRCH	Ts/Tm	Slope	Tractive Shear Stress Tb	Vc	Tc	Tm	Ts	Banks Tm < Ts	Bed Tb < Tc	C'* bed	C'* bank
*	17700	11000	14.07	7.59	118.85	782.08	1239.06	0.97	**1.7867231**	0.00472	2.2350	16.4828	3.4164	1.6762	2.9950	Yes	Yes	-0.0346	-0.0509
	17850	11000	14.7	7.45	113.83	748.24	1239.78	1.01	**1.652875**	0.0052	2.4160	16.4828	3.4164	1.8120	2.9950	Yes	Yes	-0.0293	-0.0470
*	18000	11000	12.16	7.37	135.66	904.53	1246	0.83	**2.5059839**	0.00347	1.5935	16.4828	3.4164	1.1951	2.9950	Yes	Yes	-0.0534	-0.0650
	18170	11000	14.3	6.85	122.45	768.98	1247	1.01	**1.7876769**	0.00523	2.2338	16.4828	3.4164	1.6754	2.9950	Yes	Yes	-0.0346	-0.0510
	18390	11000	10.78	9.02	131.41	1020.7	1248	0.68	**3.1772672**	0.00223	1.2568	16.4828	3.4164	0.9426	2.9950	Yes	Yes	-0.0632	-0.0724
	18500	11000	12.35	8.41	123.63	890.35	1248.5	0.81	**2.3363357**	0.00326	1.7092	16.4828	3.4164	1.2819	2.9950	Yes	Yes	-0.0500	-0.0625
	18710	11000	10.69	8.63	135.45	1029.1	1249.5	0.68	**3.2855391**	0.00226	1.2154	16.4828	3.4164	0.9116	2.9950	Yes	Yes	-0.0644	-0.0733
	18900	11000	12.44	7.23	134.14	884.2	1251	0.85	**2.4013495**	0.00369	1.6629	16.4828	3.4164	1.2472	2.9950	Yes	Yes	-0.0513	-0.0635
*	19000	11000	13.13	6.94	133.36	837.97	1251.5	0.92	**2.1169064**	0.00436	1.8864	16.4828	3.4164	1.4148	2.9950	Yes	Yes	-0.0448	-0.0586
*	19200	11000	11.6	7.81	138.07	948.03	1252	0.78	**2.7123594**	0.00302	1.4723	16.4828	3.4164	1.1042	2.9950	Yes	Yes	-0.0569	-0.0677
*	19400	11000	12.22	7.3	136.56	900.4	1253	0.84	**2.4708281**	0.00355	1.6162	16.4828	3.4164	1.2121	2.9950	Yes	Yes	-0.0527	-0.0645
	19500	11000	13.97	6.52	131.34	787.21	1253.8	1.01	**1.8628299**	0.00527	2.1437	16.4828	3.4164	1.6078	2.9950	Yes	Yes	-0.0373	-0.0529
*	19600	11000	12.65	7.17	132.44	869.73	1254.2	0.87	**2.3243344**	0.00384	1.7180	16.4828	3.4164	1.2885	2.9950	Yes	Yes	-0.0497	-0.0623
	19782	11000	9.62	8.49	149.52	1143.6	1254.5	0.61	**4.1691055**	0.00181	0.9578	16.4828	3.4164	0.7184	2.9950	Yes	Yes	-0.0720	-0.0790
	20200	11000	5.75	9.47	225.77	1913.9	1255.45	0.35	**12.220075**	0.00055	0.3268	16.4828	3.4164	0.2451	2.9950	Yes	Yes	-0.0904	-0.0928
*	20300	11000	6	9.02	227.65	1832.3	1255.93	0.37	**11.016829**	0.00064	0.3625	16.4828	3.4164	0.2719	2.9950	Yes	Yes	-0.0894	-0.0920
	20500	11000	6.81	8.1	219.49	1615.9	1256.89	0.44	**8.4589625**	0.00093	0.4721	16.4828	3.4164	0.3541	2.9950	Yes	Yes	-0.0862	-0.0896
*	20700	11000	7.39	7.27	231.14	1488	1257.85	0.51	**6.7350217**	0.00131	0.5929	16.4828	3.4164	0.4447	2.9950	Yes	Yes	-0.0826	-0.0870

9" Gabions at the regular channel section

Size

dm (ft)	0.39	ft	γώ	62.4	lb/ft^3
		ft	γτ	150	lb/ft^3
thick (ft)	0.75	ft	side slope	18.4	deg.

	SECNO	Q	VCH	DEPTH	TOPWID	AREA	ELMIN	FRCH	Ts/Tm	Slope	Tractive Shear Stress Tb	Vc	Tc	Tm	Ts	Banks Tm < Ts	Bed Tb < Tc	C'* bed	C'* bank
*	20900	11000	8.38	6.46	234.63	1312.5	1258.81	0.62	**4.8993146**	0.00202	0.8151	16.4828	3.4164	0.6113	2.9950	Yes	Yes	-0.0761	-0.0821
	21000	11000	8.68	6.14	237.03	1267	1259.29	0.66	**4.5217828**	0.00231	0.8831	16.4828	3.4164	0.6623	2.9950	Yes	Yes	-0.0742	-0.0806
*	21330	11000	10.29	5.22	223.53	1069	1260.87	0.83	**3.2683716**	0.00375	1.2218	16.4828	3.4164	0.9164	2.9950	Yes	Yes	-0.0642	-0.0732
	21700	11000	6.83	7.69	232.73	1609.8	1262.65	0.46	**8.1827956**	0.00102	0.4880	16.4828	3.4164	0.3660	2.9950	Yes	Yes	-0.0857	-0.0893
*	21900	11000	7.04	6.92	246.51	1562	1263.61	0.49	**7.6365774**	0.00121	0.5229	16.4828	3.4164	0.3922	2.9950	Yes	Yes	-0.0847	-0.0885
	22000	11000	5.68	6.83	304	1937.2	1264.09	0.4	**12.012508**	0.00078	0.3324	16.4828	3.4164	0.2493	2.9950	Yes	Yes	-0.0903	-0.0927
	22200	11000	5.95	6.01	325.64	1849.5	1265.05	0.44	**10.690923**	0.001	0.3735	16.4828	3.4164	0.2801	2.9950	Yes	Yes	-0.0891	-0.0918
	22400	11000	9.3	4.83	259.02	1182.7	1266.01	0.77	**4.066781**	0.00326	0.9819	16.4828	3.4164	0.7365	2.9950	Yes	Yes	-0.0713	-0.0784
	22500	11000	11.5	4.29	235.76	956.87	1266.49	1.01	**2.5617982**	0.00582	1.5588	16.4828	3.4164	1.1691	2.9950	Yes	Yes	-0.0544	-0.0658
	22510	11000	11.83	4.58	216.15	929.49	1266.5	1.01	**2.4415171**	0.00572	1.6356	16.4828	3.4164	1.2267	2.9950	Yes	Yes	-0.0521	-0.0641
	22520	11000	11.85	4.66	212.98	928.11	1266.6	1	**2.4357797**	0.00564	1.6394	16.4828	3.4164	1.2296	2.9950	Yes	Yes	-0.0520	-0.0640
	22540	11000	11.94	4.74	208.46	921.24	1266.7	1	**2.4027668**	0.00562	1.6620	16.4828	3.4164	1.2465	2.9950	Yes	Yes	-0.0514	-0.0635
*	22560	11000	12.02	4.83	203.97	914.83	1266.8	1	**2.3706517**	0.00559	1.6845	16.4828	3.4164	1.2634	2.9950	Yes	Yes	-0.0507	-0.0630
*	22580	11000	12.11	4.92	199.5	908.25	1266.9	1	**2.3394249**	0.00556	1.7070	16.4828	3.4164	1.2802	2.9950	Yes	Yes	-0.0500	-0.0625

9" Gabions at the regular channel section

Size

dm (ft)	0.39	ft	γω	62.4	lb/ft^3
		ft	γτ	150	lb/ft^3
thick (ft)	0.75	ft	side slope	18.4	deg.

	SECNO	Q	VCH	DEPTH	TOPWID	AREA	ELMIN	FRCH	Ts/Tm	Slope	Tractive Shear Stress Tb	Vc	Tc	Tm	Ts	Banks Tm < Ts	Bed Tb < Tc	C'* bed	C'* bank
	22600	11000	12.23	5.02	193.59	899.25	1267	1	**2.3060953**	0.00553	1.7316	16.4828	3.4164	1.2987	2.9950	Yes	Yes	-0.0493	-0.0620
	22620	11000	12.3	5.1	190.61	894.4	1267.1	1	**2.2760973**	0.00551	1.7545	16.4828	3.4164	1.3158	2.9950	Yes	Yes	-0.0486	-0.0615
*	22640	11000	12.39	5.2	186.21	887.56	1267.2	1	**2.2437219**	0.00549	1.7798	16.4828	3.4164	1.3348	2.9950	Yes	Yes	-0.0479	-0.0609
	22660	11000	12.49	5.31	181.85	880.77	1267.3	1	**2.2093256**	0.00546	1.8075	16.4828	3.4164	1.3556	2.9950	Yes	Yes	-0.0471	-0.0603
	22680	11000	9.93	6.26	189.26	1107.4	1267.4	0.72	**3.7806631**	0.0027	1.0562	16.4828	3.4164	0.7922	2.9950	Yes	Yes	-0.0691	-0.0768
	22700	11000	10.75	6.04	180.89	1023.7	1267.5	0.8	**3.1990552**	0.00331	1.2483	16.4828	3.4164	0.9362	2.9950	Yes	Yes	-0.0635	-0.0726
	22720	11000	10.92	6.07	178.26	1007.8	1267.5	0.81	**3.0827208**	0.00342	1.2954	16.4828	3.4164	0.9715	2.9950	Yes	Yes	-0.0621	-0.0716
	22740	11000	11.73	5.84	172.18	938	1267.6	0.89	**2.6424216**	0.00415	1.5112	16.4828	3.4164	1.1334	2.9950	Yes	Yes	-0.0558	-0.0668
	22760	11000	12.78	5.55	165.85	860.48	1267.7	0.99	**2.1929838**	0.00526	1.8210	16.4828	3.4164	1.3657	2.9950	Yes	Yes	-0.0467	-0.0600
	22780	11000	13.01	5.65	160.99	845.53	1267.8	1	**2.1119944**	0.00536	1.8908	16.4828	3.4164	1.4181	2.9950	Yes	Yes	-0.0447	-0.0585
	22800	11000	13.1	5.71	157.96	839.42	1267.9	1	**2.0886334**	0.00537	1.9119	16.4828	3.4164	1.4339	2.9950	Yes	Yes	-0.0440	-0.0580
	22820	11000	12.16	6.11	160.42	904.72	1268	0.9	**2.4540498**	0.00427	1.6272	16.4828	3.4164	1.2204	2.9950	Yes	Yes	-0.0524	-0.0643
	22840	11000	12.43	6.03	158.91	885.24	1268.1	0.93	**2.3422736**	0.00453	1.7049	16.4828	3.4164	1.2787	2.9950	Yes	Yes	-0.0501	-0.0626
*	22860	11000	12.97	5.87	156.11	848.34	1268.2	0.98	**2.1385089**	0.0051	1.8673	16.4828	3.4164	1.4005	2.9950	Yes	Yes	-0.0453	-0.0590
	22877	8400	7.01	7.84	171.58	1197.9	1268.3	0.47	**7.635812**	0.00107	0.5230	16.4828	3.4164	0.3922	2.9950	Yes	Yes	-0.0847	-0.0885
	22900	8400	7.68	7.66	157.07	1093.1	1268.4	0.51	**6.4314823**	0.0013	0.6209	16.4828	3.4164	0.4657	2.9950	Yes	Yes	-0.0818	-0.0864
	22920	8400	7.73	7.58	158.35	1086.3	1268.5	0.52	**6.3099175**	0.00134	0.6329	16.4828	3.4164	0.4746	2.9950	Yes	Yes	-0.0815	-0.0861
	22940	8400	7.93	7.48	156.71	1059.8	1268.6	0.54	**5.9745387**	0.00143	0.6684	16.4828	3.4164	0.5013	2.9950	Yes	Yes	-0.0804	-0.0853

9" Gabions at the regular channel section

Size

dm (ft)	0.39	ft	γώ	62.4	lb/ft^3
		ft	γτ	150	lb/ft^3
thick (ft)	0.75	ft	side slope	18.4	deg.

	SECNO	Q	VCH	DEPTH	TOPWID	AREA	ELMIN	FRCH	Ts/Tm	Slope	Tractive Shear Stress Tb	Vc	Tc	Tm	Ts	Banks Tm < Ts	Bed Tb < Tc	C'* bed	C'* bank
	22960	8400	8.12	7.37	155.09	1034.7	1268.7	0.55	**5.6753164**	0.00153	0.7036	16.4828	3.4164	0.5277	2.9950	Yes	Yes	-0.0794	-0.0846
*	22980	8400	7.79	7.39	163.77	1077.7	1268.8	0.54	**6.0642396**	0.00143	0.6585	16.4828	3.4164	0.4939	2.9950	Yes	Yes	-0.0807	-0.0855
*	23000	8400	7.82	7.32	161.48	1074.8	1268.9	0.53	**6.1567224**	0.00142	0.6486	16.4828	3.4164	0.4865	2.9950	Yes	Yes	-0.0810	-0.0858
*	23100	8400	8.54	6.85	157.39	984.03	1269.4	0.6	**5.0773909**	0.00184	0.7865	16.4828	3.4164	0.5899	2.9950	Yes	Yes	-0.0770	-0.0827
	23200	8400	8.79	6.55	165.7	956.13	1269.85	0.64	**4.5527938**	0.00215	0.8771	16.4828	3.4164	0.6578	2.9950	Yes	Yes	-0.0743	-0.0807
	23400	8400	10.18	5.83	158.98	824.96	1270.81	0.79	**3.3082937**	0.00332	1.2071	16.4828	3.4164	0.9053	2.9950	Yes	Yes	-0.0647	-0.0735
*	23500	8400	11.21	5.49	152.94	749.31	1271.29	0.89	**2.6852632**	0.00434	1.4871	16.4828	3.4164	1.1153	2.9950	Yes	Yes	-0.0565	-0.0674
	23575	8400	12.52	5.35	141.33	670.77	1271.65	1.01	**2.1148804**	0.00566	1.8882	16.4828	3.4164	1.4161	2.9950	Yes	Yes	-0.0447	-0.0585
*	23645	8400	9.76	6.67	149.19	860.96	1271.65	0.72	**3.6164787**	0.00265	1.1042	16.4828	3.4164	0.8281	2.9950	Yes	Yes	-0.0677	-0.0758
	23800	8400	9.36	6.13	164.77	897.05	1272.73	0.71	**3.9649495**	0.00263	1.0072	16.4828	3.4164	0.7554	2.9950	Yes	Yes	-0.0705	-0.0779
	24000	8400	10.25	5.58	163.51	819.58	1273.69	0.81	**3.2609372**	0.00352	1.2246	16.4828	3.4164	0.9184	2.9950	Yes	Yes	-0.0642	-0.0731
	24200	8400	10.48	5.31	166.87	801.65	1274.65	0.84	**3.1013564**	0.00389	1.2876	16.4828	3.4164	0.9657	2.9950	Yes	Yes	-0.0623	-0.0717
	24365	8400	11.34	5.03	159.72	740.84	1275.44	0.93	**2.6611066**	0.00478	1.5006	16.4828	3.4164	1.1255	2.9950	Yes	Yes	-0.0561	-0.0671
*	24700	8400	8.86	5.99	174.43	947.89	1279.09	0.67	**4.5174258**	0.00237	0.8840	16.4828	3.4164	0.6630	2.9950	Yes	Yes	-0.0741	-0.0806

9" Gabions at the regular channel section

Size

dm (ft)	0.39	ft	γώ	62.4	lb/ft^3
		ft	γτ	150	lb/ft^3
thick (ft)	0.75	ft	side slope	18.4	deg.

	SECNO	Q	VCH	DEPTH	TOPWID	AREA	ELMIN	FRCH	Ts/Tm	Slope	Tractive Shear Stress Tb	Vc	Tc	Tm	Ts	Banks Tm < Ts	Bed Tb < Tc	C'* bed	C'* bank
*	24900	8400	8.31	6.57	170.64	1011.3	1279.09	0.6	**5.2481429**	0.00186	0.7609	16.4828	3.4164	0.5707	2.9950	Yes	Yes	-0.0777	-0.0833
	25000	8400	7.41	6.97	180.13	1133.4	1279.09	0.52	**6.7264136**	0.00137	0.5937	16.4828	3.4164	0.4453	2.9950	Yes	Yes	-0.0826	-0.0870
	25200	8400	7.19	6.98	184.8	1168.9	1279.4	0.5	**7.1965467**	0.00127	0.5549	16.4828	3.4164	0.4162	2.9950	Yes	Yes	-0.0838	-0.0878
	25400	8400	9.04	5.81	174.68	929.51	1280.59	0.69	**4.3536383**	0.00253	0.9172	16.4828	3.4164	0.6879	2.9950	Yes	Yes	-0.0732	-0.0799
	25500	8400	10.48	5.22	167.12	801.55	1281.19	0.84	**3.1410868**	0.0039	1.2713	16.4828	3.4164	0.9535	2.9950	Yes	Yes	-0.0628	-0.0721
	25700	8400	10.46	5.61	163.3	803.39	1283.09	0.83	**3.046031**	0.00375	1.3110	16.4828	3.4164	0.9832	2.9950	Yes	Yes	-0.0616	-0.0712
	25827	8400	8.97	6.48	168.74	936.07	1283.09	0.67	**4.1971265**	0.00235	0.9514	16.4828	3.4164	0.7136	2.9950	Yes	Yes	-0.0722	-0.0791
*	25830	8400	9.15	6.37	168.3	918.27	1283.17	0.69	**4.0201597**	0.0025	0.9933	16.4828	3.4164	0.7450	2.9950	Yes	Yes	-0.0709	-0.0782
	25870	8400	10.32	6	151.36	814.09	1283.41	0.78	**3.2717503**	0.00326	1.2205	16.4828	3.4164	0.9154	2.9950	Yes	Yes	-0.0643	-0.0732
	26000	8400	12.34	5.4	142.99	680.84	1284.19	1	**2.16615**	0.00547	1.8435	16.4828	3.4164	1.3826	2.9950	Yes	Yes	-0.0460	
Max	17850		14.7					Min	**1.652875**										

PHASE II GABION MATTRESS SIZE SUMMARY		
STATION	BANK PROTECTION	GCS
73+77 - 92+71	9"	
92+71 - 94+71	9"	18"
94+71 -109+10	9"	
109+10 - 111+28	18"	18"
111+28 - 126+05	9"	
126+05 - 128+00	9"	18"
128+00 - 134+00	existing CSA	
134+00 - 152+72	9"	
152+72 - 162+00	24"	24"
162+00 - 177+00	9"	

18" Gabions at grade control structures

Size

dm (ft) =	0.62	ft	γω	62.4	lb/ft^3
			γτ	150	lb/ft^3
thick (ft)	1.5	ft	side slope	18.4	deg.

	SECNO	Q	VCH	DEPTH	TOPWID	AREA	ELMIN	FRCH	Ts/Tm	Slope	Tractive Shear Stress Tb	Vc	Tc	Tm	Ts	Banks Tm < Ts	Bed Tb < Tc	C'* bed	C'* bank
*	**17950**	**11000**	**12.51**	**8.39**	**119.34**	**879**	**1240.26**	**0.81**	**3.7322**	0.00325	1.7010	22.8584	5.4312	1.2757	4.7613	Yes	Yes	-0.0687	-0.0765
	17955	11000	13.94	6.51	132.31	789.1	1245.8	1.01	**2.96766**	0.00527	2.1392	22.8584	5.4312	1.6044	4.7613	Yes	Yes	-0.0606	-0.0705
*	17960	11000	13.92	6.52	132.51	790.23	1245.9	1	**2.97157**	0.00525	2.1364	22.8584	5.4312	1.6023	4.7613	Yes	Yes	-0.0607	-0.0705
	19940	**11000**	**9.96**	**7.94**	**153.15**	**1104.8**	**1255.3**	**0.65**	**6.1395**	0.00209	1.0340	22.8584	5.4312	0.7755	4.7613	Yes	Yes	-0.0810	-0.0857
	20050	11000	10	8.01	149.69	1100.07	1255.4	0.65	**6.15069**	0.00207	1.0321	22.8584	5.4312	0.7741	4.7613	Yes	Yes	-0.0810	-0.0857
	20160	11000	6.77	9.22	195.53	1624.18	1255.42	0.41	**13.8971**	0.00079	0.4568	22.8584	5.4312	0.3426	4.7613	Yes	Yes	-0.0916	-0.0937
	21230	**11000**	**9.94**	**5.41**	**220.65**	**1106.3**	**1260.39**	**0.78**	**5.7072**	0.0033	1.1123	22.8584	5.4312	0.8343	4.7613	Yes	Yes	-0.0795	-0.0846
	21240	11000	10.2	5.28	220.3	1078.27	1260.5	0.81	**5.38219**	0.00358	1.1795	22.8584	5.4312	0.8846	4.7613	Yes	Yes	-0.0783	-0.0837
*	**21395**	**11000**	**10.9**	**4.36**	**273.53**	**1009.4**	**1264**	**1**	**3.93757**	0.00593	1.6123	22.8584	5.4312	1.2092	4.7613	Yes	Yes	-0.0703	-0.0777
*	21565	11000	7.57	5.97	312.04	1453.28	1264	0.62	**8.13037**	0.0021	0.7808	22.8584	5.4312	0.5856	4.7613	Yes	Yes	-0.0856	-0.0892
*	**23300**	**8400**	**9.39**	**6.19**	**163.11**	**894.3**	**1270.33**	**0.71**	**6.26118**	0.00263	1.0139	22.8584	5.4312	0.7604	4.7613	Yes	Yes	-0.0813	-0.0860
	23310	8400	9.39	6.19	163.14	894.86	1270.35	0.71	**6.27313**	0.00262	1.0120	22.8584	5.4312	0.7590	4.7613	Yes	Yes	-0.0814	-0.0860
*	**24500**	**8400**	**10.07**	**5.39**	**169.93**	**833.88**	**1276.09**	**0.8**	**5.40058**	0.0035	1.1755	22.8584	5.4312	0.8816	4.7613	Yes	Yes	-0.0784	-0.0838
	24510	8400	11.53	4.39	178.79	728.81	1279.09	1.01	**3.97097**	0.00584	1.5987	22.8584	5.4312	1.1990	4.7613	Yes	Yes	-0.0706	-0.0779
	25600	**8400**	**12.02**	**4.79**	**157.48**	**698.62**	**1281.79**	**1.01**	**3.72228**	0.00571	1.7055	22.8584	5.4312	1.2791	4.7613	Yes	Yes	-0.0686	-0.0764
*	25650	8400	11.99	4.88	156.85	700.32	1282.09	1	**3.70888**	0.00562	1.7117	22.8584	5.4312	1.2837	4.7613	Yes	Yes	-0.0685	-0.0764
	25660	8400	11.98	4.85	159.34	701.12	1283.09	1.01	**3.67365**	0.00571	1.7281	22.8584	5.4312	1.2961	4.7613	Yes	Yes	-0.0682	-0.0761
*	**27952**	**8400**	**6.34**	**5.54**	**239.69**	**1325.1**	**1298.2**	**0.48**	**4.6025**	0.00399	1.3793	22.8584	5.4312	1.0345	4.7613	Yes	Yes	-0.0746	-0.0810
*	27953	8400	4.83	7.26	239.79	1738.04	1296.9	0.32	**8.5187**	0.00165	0.7452	22.8584	5.4312	0.5589	4.7613	Yes	Yes	-0.0863	-0.0897
	27968	8400	4.81	7.29	239.79	1745.8	1296.9	0.31	**8.60925**	0.00162	0.7374	22.8584	5.4312	0.5530	4.7613	Yes	Yes	-0.0864	-0.0898
*	27969	8400	10.97	5.57	210.03	765.47	1299.8	1.01	**8.96664**	0.00204	0.7080	22.8584	5.4312	0.5310	4.7613	Yes	Yes	-0.0870	-0.0902

Max 17955 13.94 Min **2.96766**

APRON / TOEDOWN DESIGN.

Min. TOEDOWN, defined by SLA Analysis = 6.0'

- Aprons used to minimize depth of excavation req'd for toedown.

- Min. Apron length = 2' ± for constructability

Apron will settle to slope of 2:1 during scour event.

∴ Horiz. Design length = depth of Apron req'd × $\sqrt{5}$

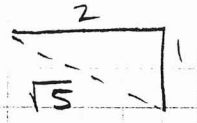

$h = \sqrt{5}$

- Since Min. Total Toedown = 6.0'
  And Min Apron Length = 2.0'

* Min. Depth to Top of Apron = 4.0' T.O.A.

- Req'd Total Toedown Depth = Standard Toedown Depth (with a minimum of 6.0')

<u>Top of Apron Elev. Set</u>:

Long Term Scour + 1.0' (Min 4.0) = Min. Depth Below D.I.

This Min. Depth used to set smooth constr. slopes

<u>Apron Length Set</u>: (S.T.D. Depth) − (Min. T.O.A. Depth) = A.D.

Apron length (Min) = A.D. ($\sqrt{5}$)

A.L. smoothed for constructability

REF. FILE KT51_25.XLS

GCS. DESIGN

GCS TOP ELEV. SET by KAAN T., with D.I design.

GCS D/S. TOE SET : (D.I. ELEV.) − (Total Drop Scour)

* NOTE:
IF TOTAL DROP SCOUR depth CAUSES CHANNEL BANKS to MEET below GRADE,

The TOE D/S ELEV. IS SET to PROVIDE A MIN. BOTTOM WIDTH OF 10' ± AT AN ELEV. AT LEAST 1' below LONG TERM SCOUR DEPTH.

[BORMAN]

G.C.S. u/s TOE ELEV. Set : (D.I. ELEV.) − (standard TOE DOWN DEPTH)

* Min. 6.0'

Min. S.D.D. determined by Q in SKUNK SCOUR ANALYSIS ETC. COSTA MESA input

Gabion Design 8/1/97

BANK TOE DOWN Elev.

MIN = Long Term Scour - 1.0'

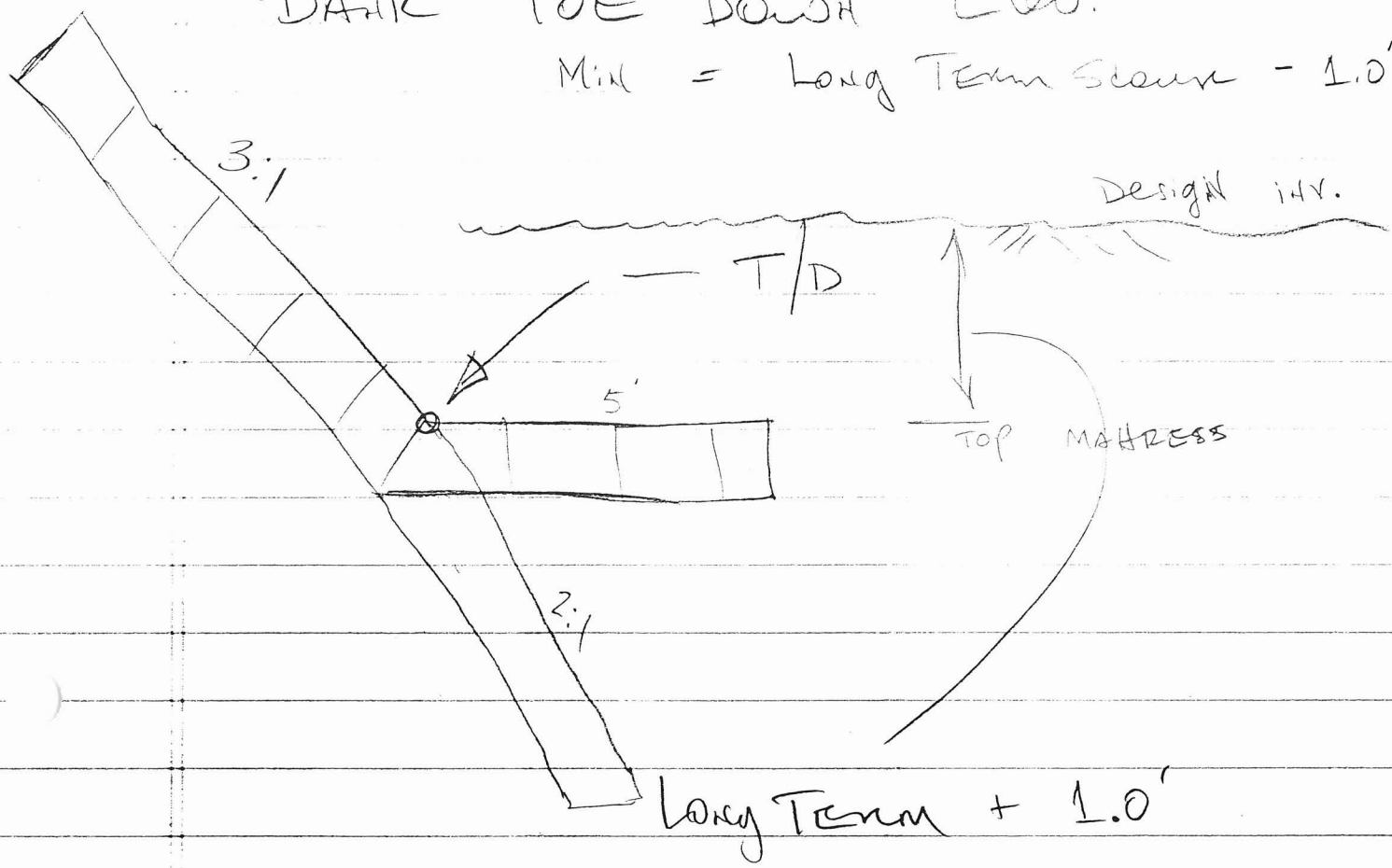

Marcelle -

8-1-97
Re: Skunk Crk.

Use a minimum Long-Term Scour of 3' and a minimum total scour of 6' for design. This will yield a minimum depth to the horizontal apron of 4' (3' + 1').

B.

If both conditions apply, forget the apron (2') and toe-down 6'??

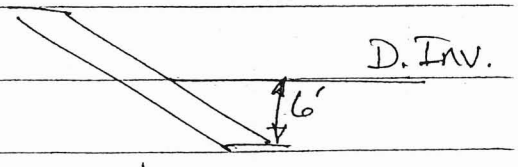

A 2' apron seems ridiculous!

Phase I

OFSTABL.XLS

100%

EACH BANK

1/2/98 8:28

Station	Top of Bank Bank Elevation N. Bank	Top of Bank Bank Elevation S. Bank	Design Invert Elevation	Design Invert Offset N. Bank	Design Invert Offset S. Bank	Top of Apron Elevation	Top of Apron Offset N. Bank	Top of Apron Offset S. Bank	Apron Length	Apron Length X √5
17700			1239.1	0.0	0.0		0.0	0.0	9	
17800			1239.5	0.0	0.0		0.0	0.0		
17900			1240.0	0.0	0.0		0.0	0.0		
18000			1246.0	0.0	0.0		0.0	0.0	2	
18100			1246.6	0.0	0.0		0.0	0.0		
18200			1247.1	0.0	0.0		0.0	0.0		
18300			1247.6	0.0	0.0		0.0	0.0		
18400			1248.0	0.0	0.0		0.0	0.0		
18500			1248.5	0.0	0.0		0.0	0.0	4	
18600			1249.0	0.0	0.0		0.0	0.0		
18700			1249.5	0.0	0.0		0.0	0.0		
18800			1250.5	0.0	0.0		0.0	0.0		
18900			1251.0	0.0	0.0		0.0	0.0	6	
19000			1251.5	0.0	0.0		0.0	0.0	6	
19100			1251.8	0.0	0.0		0.0	0.0		
19200			1252.0	0.0	0.0		0.0	0.0	6	
19300			1252.5	0.0	0.0		0.0	0.0		
19400			1253.0	0.0	0.0		0.0	0.0	6	
19500			1253.8	0.0	0.0		0.0	0.0	8	
19600			1254.2	0.0	0.0		0.0	0.0	8	
19700			1254.3	0.0	0.0		0.0	0.0		
19800			1254.5	0.0	0.0		0.0	0.0		
[illegible]00			1255.1	0.0	0.0		0.0	0.0		
20000		1268.3	1255.4	0.0	38.7		0.0	0.0		
20100		1268.5	1255.4	0.0	39.3		0.0	0.0		0.0
20200		1268.7	1255.5	0.0	39.8	1251.5	0.0	51.6	2	5 ~~4.5~~
20300		1268.9	1255.9	0.0	38.9	1251.9	0.0	51.0	2	4.5
20400		1269.1	1256.4	0.0	38.1	1252.3	0.0	50.4	2	4.5
20500		1269.3	1256.9	0.0	37.2	1252.7	0.0	49.8	2	4.5
20600		1269.5	1257.4	0.0	36.4	1253.1	0.0	49.2	2	4.5
20700		1269.7	1257.9	0.0	35.6	1253.5	0.0	48.6	2	4.5
20800		1269.9	1258.3	0.0	34.7	1253.9	0.0	48.0	4	9 ~~8.9~~
20900		1270.1	1258.8	0.0	33.9	1254.3	0.0	47.4	4	8.9
21000		1270.3	1259.3	0.0	33.0	1254.7	0.0	46.8	4	8.9
21100		1270.5	1259.8	0.0	32.2	1255.1	0.0	46.2	4	8.9
21200		1270.7	1260.3	0.0	31.4	1255.5	0.0	45.6	4	8.9
21300		1271.1	1260.8	0.0	31.0	1256.1	0.0	45.1	4	8.9
21400		1272.1	1264.0	0.0	24.4	1256.7	0.0	46.3	4	8.9
21500		1273.1	1264.0	0.0	27.4	1257.3	0.0	47.5	4	8.9
21600		1273.9	1264.0	0.0	29.7	1257.9	0.0	48.0	4	8.9
21700	1274.1	1274.2	1262.7	34.3	34.7	1258.5	46.8	47.1	2	5 ~~4.5~~
21800	1274.6	1274.5	1263.1	34.5	34.1	1259.0	46.8	46.4	2	4.5
21900	1275.2	1275.0	1263.6	34.7	34.3	1259.5	46.9	46.5	2	4.5
22000	1275.7	1275.6	1264.1	34.8	34.4	1260.0	47.0	46.6	2	4.5
22100	1276.2	1276.1	1264.6	35.0	34.6	1260.5	47.0	46.7	2	4.5
22200	1276.8	1276.6	1265.1	35.1	34.8	1261.0	47.1	46.8	2	4.5
[illegible]00	1277.3	1277.2	1265.5	35.3	35.0	1260.4	50.5	50.2	6	14 ~~13.4~~

Station	Top of Bank Bank Elevation N. Bank	Top of Bank Bank Elevation S. Bank	Design Invert Elevation	Design Invert Offset N. Bank	Design Invert Offset S. Bank	Top of Apron Elevation	Top of Apron Offset N. Bank	Top of Apron Offset S. Bank	Apron Length	Apron Length XYZ
22400	1277.8	1277.7	1266.0	35.4	35.2	1259.8	53.9	53.7	6	14 ~~13.4~~
22500	1278.3	1278.3	1266.5	35.5	35.3	1259.8	55.6	55.4	6	13.4
22600	1278.9	1278.8	1267.0	35.6	35.4	1259.8	57.2	57.0	6	13.4
22700	1279.4	1279.3	1267.5	35.7	35.5	1259.8	58.8	58.6	6	13.4
22800	1279.9	1279.9	1267.9	36.1	36.0	1259.8	60.4	60.3	6	13.4
22900	1280.5	1280.4	1268.4	36.2	36.1	1259.8	62.0	61.9	6	13.4
23000	1281.0	1281.0	1268.9	36.3	36.2	1259.8	63.6	63.5	6	13.4
23100	1281.5	1281.5	1269.4	36.5	36.4	1259.8	65.2	65.1	6	13.4
23200	1282.1	1282.0	1269.9	36.6	36.6	1259.8	66.8	66.7	6	13.4
23300	1282.6	1282.6	1270.3	36.8	36.8	1266.2	49.1	49.2	6	13.4
23400	1283.1	1283.1	1270.8	36.9	37.0	1266.5	50.0	50.0	2	5 ~~4.5~~
23500	1283.6	1283.7	1271.3	37.0	37.1	1266.8	50.7	50.8	2	4.5
23600	1284.2	1284.2	1271.7	37.4	37.5	1267.1	51.4	51.5	3	7 ~~6.7~~
23700	1284.7	1284.7	1272.1	37.8	37.9	1267.4	52.1	52.2	3	6.7
23800	1285.2	1285.3	1272.7	37.5	37.7	1267.7	52.7	52.9	3	6.7
23900	1285.8	1285.8	1273.2	37.6	37.9	1268.0	53.4	53.6	5	12 ~~11.2~~
24000	1286.3	1286.4	1273.7	37.8	38.0	1268.3	54.1	54.4	5	11.2
24100	1286.8	1286.7	1274.2	37.9	37.7	1268.6	54.8	54.6	5	11.2
24200	1287.4	1287.1	1274.7	38.1	37.3	1268.9	55.5	54.7	5	11.2
24300	1287.9	1287.4	1275.1	38.3	36.9	1269.2	56.2	54.9	5	11.2
24400	1288.4	1287.8	1275.6	38.4	36.6	1269.5	56.9	55.0	5	11.2
24500	1288.9	1288.1	1276.1	38.5	36.1	1269.8	57.6	55.2	5	11.2
24600	1289.5	1288.5	1279.1	31.1	28.2	1275.1 1270.8	~~56.2~~	~~53.2~~	5	11.2
[illegible]00	1290.0	1288.8	1279.1	32.7	29.2	1275.1 1271.8	~~54.8~~	~~51.3~~	2	5 ~~4.5~~
24800	1290.3	1289.2	1279.1	33.6	30.3	1275.1 1272.8	~~52.6~~	~~49.3~~	2	4.5
24900	1290.6	1289.5	1279.1	34.5	31.2	1275.1 1273.6	~~51.1~~	~~47.8~~	2	4.5
25000	1290.9	1289.8	1279.1	35.4	32.1	1275.1 1274.2	~~50.3~~	~~46.9~~	2	4.5
25100	1291.2	1290.1	1279.3	35.7	32.4	1275.1 1274.8	~~49.4~~	~~46.0~~	2	4.5
25200	1291.5	1290.4	1279.4	36.3	33.0	1275.4	48.5	45.1	2	4.5
25300	1291.8	1290.7	1280.0	35.4	32.1	1276.0	47.5	44.2	2	4.5
25400	1292.1	1290.9	1280.6	34.5	30.9	1276.6	46.6	43.1	2	4.5
25500	1292.4	1291.4	1281.2	33.6	30.6	1277.2	45.8	42.8	2	4.5
25600	1292.7	1291.9	1281.8	32.7	30.3	1277.8	44.9	42.5	4	8.9
25700	1293.0	1292.4	1283.1	29.7	27.9	1278.4	44.0	42.2	2	9 ~~4.5~~
25800	1293.3	1292.9	1283.1	30.6	29.4	1279.0	43.0	41.9	4	9 8.9
25900	1293.6	1293.4	1283.6	30.0	29.4	1279.6	42.1	41.6	4	8.9
26000	1293.9	1293.9	1284.2	29.1	29.1	1280.2	41.3	41.3	4	8.9

X-Sect Rev. ✓

1/4/95

100% Plan View Offsets

	North Bank						South Bank					
	Top of Bank		Design Invert		Top of Apron		Top of Bank		Design Invert		Top of Apron	
Station	Elevation	Offset	Elevation	Offset	Elevation	Offset	Elevation	Offset	Elevation	Offset	Elevation	Offset
19900												
20000												
20100												
20200			1255.5		1251.5		1268.7	119.2	1255.5	79.5	1251.5	67.6
20300			1255.9		1251.9		1268.9	119.1	1255.9	80.2	1251.9	68.1
20400			1256.4		1252.3		1269.1	134.0	1256.4		1252.3	
20500	1268.7	131.8	1256.9	96.4	1252.7	83.8	1269.3	133.9	1256.9		1252.7	
20600	1268.8	132.3	1257.4	98.0	1253.1	85.2	1269.5	133.8	1257.4		1253.1	
20700	1268.9	136.4	1257.9	103.3	1253.5	90.2	1269.7	118.6	1257.9	83.1	1253.5	70.0
20800	1269.1	140.2	1258.3	107.9	1253.9	94.6	1269.9	118.5	1258.3	83.8	1253.9	70.5
20900	1269.2	143.9	1258.8	112.7	1254.3	99.2	1270.1	118.4	1258.8	84.6	1254.3	71.0
21000	1269.3	142.6	1259.3	112.6	1254.7	98.8	1270.3	118.3	1259.3	85.3	1254.7	71.5
21100	1269.6	143.4	1259.8	113.9	1255.1	99.9	1270.5	118.2	1259.8		1255.1	
21200	1269.9	139.9	1260.3	111.0	1255.5	96.7	1270.7	118.1	1260.3		1255.5	
21300	1270.1	142.6	1260.8	114.7	1256.1	100.6	1271.1	118.0	1260.8	87.1	1256.1	73.0
21400	1270.0	140.3	1264.0	122.3	1256.7	100.4	1272.1	117.9	1264.0	93.6	1256.7	71.7
21500	1271.4	143.8	1264.0	121.6	1257.3	101.5	1273.8	117.8	1264.0	88.4	1257.3	68.3
21600							1274.0	117.7				
21700	1274.1	136.5	1262.7	102.1	1258.5	89.7	1274.2	117.6	1262.7	83.0	1258.5	70.5
21800	1274.3	148.0	1263.1	114.5	1259.0	102.2	1274.4	117.5	1263.1	83.7	1259.0	71.4
21900	1274.5	164.1	1263.6	131.4	1259.5	119.2	1274.6	119.6	1263.6	86.7	1259.5	74.4
22000	1274.7	181.6	1264.1	149.8	1260.0	137.6	1274.8	125.6	1264.1	93.4	1260.0	81.3
22100	1274.9	188.5	1264.6	157.5	1260.5	145.4	1275.0	153.0	1264.6	121.7	1260.5	109.6
22200	1275.1	186.9	1265.1	156.7	1261.0	144.7	1275.2	145.6	1265.1	115.2	1261.0	103.1
22300	1275.3	176.6	1265.5	147.3	1260.4	132.1	1275.4	144.6	1265.5	115.0	1260.4	99.7
22400	1275.5	157.4	1266.0	129.0	1259.8	110.5	1275.6	135.9	1266.0	107.1	1259.8	88.6
22500	1275.7	145.6	1266.5	118.0	1259.8	97.9	1275.8	127.8	1266.5	99.9	1259.8	79.8
22600	1275.9	142.0	1267.0	115.3	1259.8	93.7	1276.0	119.6	1267.0	92.6	1259.8	71.0
22700	1276.1	146.7	1267.5	120.9	1259.8	97.8	1277.2	111.4	1267.5	82.4	1259.8	59.3
22800	1278.5	71.6	1267.9	39.8	1259.8	15.5	1278.3	103.2	1267.9	72.0	1259.8	47.7
22900	1278.9	73.6	1268.4	42.1	1259.8	16.3	1278.7	95.1	1268.4	64.2	1259.8	38.4
23000	1279.3	76.0	1268.9	44.8	1259.8	17.5	1279.1	86.9	1268.9	56.3	1259.8	29.0
23100	1279.7	78.5	1269.4	47.6	1259.8	18.8	1279.5	91.7	1269.4	61.4	1259.8	32.6
23200	1280.1	81.0	1269.9	50.4	1259.8	20.1	1279.9	96.5	1269.9	66.5	1259.8	36.2

	N.B						S.D					
	T.O.B		D.I		T.O.A 10 S							
23300	1280.5	83.5	1270.3	52.9			1280.3	101.3	1270.3	71.3		
23400	1280.9	86.0	1270.8	55.7	1266.5	42.6	1280.7		1270.8		1266.5	
23500	1281.3	88.7	1271.3	58.7	1266.8	45.1	1281.1		1271.3		1266.8	
23600	1281.7		1271.7		1267.1		1281.5		1271.7		1267.1	
23700	1282.1		1272.1		1267.4		1281.9	88.7	1272.1	59.3	1267.4	45.0
23800	1282.5	106.2	1272.7	76.8	1267.7	61.7	1282.3	85.3	1272.7	56.5	1267.7	41.4
23900	1282.9	109.5	1273.2	80.4	1268.0	64.7	1282.7	83.8	1273.2	55.3	1268.0	39.6
24000	1283.3	110.9	1273.7	82.1	1268.3	65.8	1283.1	84.6	1273.7	56.4	1268.3	40.1
24100	1283.7	110.4	1274.2	81.9	1268.6	64.9	1283.5	87.7	1274.2	59.8	1268.6	42.8
24200	1284.1	107.5	1274.7	79.3	1268.9	61.7	1283.9	92.6	1274.7	65.0	1268.9	47.4
24300	1284.5	104.5	1275.1	76.3	1269.2	58.5	1284.3	97.8	1275.1	70.2	1269.2	52.4
24400	1284.9	101.6	1275.6	73.6	1269.5	55.2	1284.7	102.9	1275.6	75.6	1269.5	57.2
24500	1286.6	98.6	1276.1	67.1	1269.8	48.1						
24600	1288.3	100.5	1279.1	72.9	1270.8	47.9	1288.5	116.7	1279.1	88.6	1270.8	63.5
24700	1290.0	102.4	1279.1	69.7	1271.8	47.7	1288.8	116.0	1279.1	86.8	1271.8	64.8
24800	1290.3	104.4	1279.1	70.8	1272.8	51.7	1289.2	115.3	1279.1	85.1	1272.8	66.0
24900	1290.6	106.3	1279.1	71.8	1273.6	55.1	1289.5	114.6	1279.1	83.5	1273.6	66.8
25000	1290.9	108.2	1279.1	72.8	1274.2	58.0	1289.8	104.1	1279.1	72.0	1274.2	57.2
25100	1291.2	110.1	1279.3	74.4	1274.8	60.7	1290.1	113.5	1279.3	81.1	~~1274.8~~	67.4
25200	1291.5	110.8	1279.4	74.5	1275.4	62.3	1290.4		1279.4		1~~275~~.4	
25300	1291.8	110.4	1280.0	75.0	1276.0	62.8	1290.7		1280.0		1~~276~~.0	
25400	1292.1	109.0	1280.6	74.5	1276.6	62.3	1290.9	101.1	1280.6	70.2	1276.6	58.1
25500	1292.4	106.5	1281.2	72.9	1277.2	60.8	1291.4	99.5	1281.2		1277.2	
25600	1292.7	103.1	1281.8	70.4	1277.8	58.2	1291.9	92.3	1281.8		1277.8	
25700							1292.4	94.4	1283.1		1278.4	
25800							1292.9	103.6	1283.1		1279.0	

COMPLETE PHASE II WORKSHEET - 90%

	Design Invert				Top of North Bank			Top of South Bank			Top of Apron				CWSEL	APRON
Sec. No.	Elevation	Slope	NB-Offset	SB-Offset	Elevation	Slope	Offset	Elevation	Slope	Offset	Elevation	Slope	NB-Offset	SB-Offset	Elevation	Width
73+77	1194.8	0.50%	50.0	33.1	1207.6	0.50%	88.5	1207.6	0.50%	71.6	1190.8	0.35%	38.0	21.1	1204.9	5
74+00	1194.9	0.50%	69.5	56.0	1207.7	0.50%	95.2	1207.7	0.50%	81.7	1190.9	0.35%	61.5	48.0	1205.0	5
74+12	1194.9	0.50%			1207.8	0.50%		1207.8	0.50%		1190.9	0.35%				
75+00	1195.4	0.50%	98.5	105.0	1208.2	0.15%	124.2	1208.2	0.15%	130.7	1191.2	0.35%	90.2	96.7	1205.6	5
76+00	1195.9	0.50%	105.0	117.4	1208.4	0.15%	130.0	1208.4	0.15%	142.4	1191.6	0.35%	79.6	92.0	1205.7	5
77+00	1196.4	0.50%	105.0	117.1	1208.5	0.15%	129.3	1208.5	0.15%	141.4	1191.9	0.35%	79.5	91.6	1205.7	5
78+00	1196.9	0.50%	105.0	105.0	1208.7	0.15%	140.3	1208.7	0.15%	140.3	1192.3	0.35%	91.1	91.1	1205.8	5
79+00	1197.4	0.50%	105.0	105.0	1208.8	0.15%	139.3	1208.8	0.15%	139.3	1192.6	0.35%	90.7	90.7	1205.9	5
80+00	1197.9	0.50%	105.0	105.0	1209.0	0.15%	138.2	1209.0	0.15%	138.2	1193.0	0.35%	90.2	90.2	1206.1	5
81+00	1198.4	0.50%	105.0	105.0	1209.1	0.15%	137.2	1209.1	0.15%	137.2	1193.3	0.35%	89.8	89.8	1206.3	9
82+00	1198.9	0.50%	105.0	105.0	1209.3	0.15%	136.1	1209.3	0.15%	136.1	1193.7	0.35%	89.3	89.3	1206.5	9
83+00	1199.4	0.50%	105.0	105.0	1209.4	0.15%	135.1	1209.4	0.15%	135.1	1194.0	0.35%	88.9	88.9	1206.8	9
84+00	1199.9	0.50%	105.0	105.0	1209.6	0.15%	134.0	1209.6	0.15%	134.0	1194.4	0.35%	88.4	88.4	1207.0	9
85+00	1200.4	0.50%	105.0	105.0	1209.7	0.15%	133.0	1209.7	0.15%	133.0	1194.7	0.35%	88.0	88.0	1207.3	9
86+00	1200.9	0.50%	105.0	105.0	1209.9	0.15%	131.9	1209.9	0.15%	131.9	1195.1	0.35%	87.5	87.5	1207.7	9
87+00	1201.4	0.50%	105.0	105.0	1210.0	0.50%	130.9	1210.0	0.50%	130.9	1195.4	0.55%	87.1	87.1	1208.0	9
88+00	1201.9	0.50%	105.0	105.0	1210.5	0.50%	130.9	1210.5	0.50%	130.9	1196.0	0.55%	87.2	87.2	1208.4	9
89+00	1202.4	0.50%	105.0	105.0	1211.0	0.50%	130.9	1211.0	0.50%	130.9	1196.5	0.55%	87.4	87.4	1208.7	9
90+00	1202.9	0.50%	105.0	105.0	1211.5	0.50%	130.9	1211.5	0.50%	130.9	1197.1	0.55%	87.5	87.5	1209.1	9
91+00	1203.4	0.50%	105.0	105.0	1212.0	0.50%	130.9	1212.0	0.50%	130.9	1197.6	0.55%	87.7	87.7	1209.6	9
92+00	1203.9	0.50%	105.0	105.0	1212.5	0.50%	130.9	1212.5	0.50%	130.9	1198.2	0.55%	87.8	87.8	1210.1	9
92+71	1204.2	0.50%			1212.9	0.50%		1212.9	0.50%		1198.5	0.55%			1210.5	9
92+95	1204.4	0.50%			1213.0	0.50%		1213.0	0.50%		1198.7	0.55%			1210.5	
93+00	1204.4	0.50%			1213.0	0.50%		1213.0	0.50%			0.55%			1210.5	
94+00	1204.9	0.50%			1213.5	0.50%		1213.5	0.50%			0.55%			1210.8	
94+05	1204.9	0.50%			1213.5	0.50%		1213.5	0.50%			0.55%			1210.8	
94+71	1205.2	0.50%			1213.9	0.50%		1213.9	0.50%		1201.3	0.50%			1211.6	
95+00	1205.4	0.50%	105.0	105.0	1214.0	0.50%	130.9	1214.0	0.50%	130.9	1201.4	0.50%	93.1	93.1	1211.7	5
96+00	1205.9	0.50%	105.0	105.0	1214.5	0.50%	130.9	1214.5	0.50%	130.9	1201.9	0.50%	93.1	93.1	1212.1	5
97+00	1206.4	0.50%	100.0	100.0	1215.0	0.50%	125.9	1215.0	0.50%	125.9	1202.4	0.50%	88.1	88.1	1212.5	5
98+00	1206.9	0.50%	100.0	100.0	1215.5	0.50%	125.9	1215.5	0.50%	125.9	1202.9	0.50%	88.1	88.1	1213.0	5
99+00	1207.4	0.50%	98.7	98.7	1216.0	0.50%	124.6	1216.0	0.50%	124.6	1203.4	0.50%	86.8	86.8	1213.5	9
100+00	1207.9	0.50%	97.5	97.5	1216.5	0.50%	123.4	1216.5	0.50%	123.4	1203.9	0.50%	85.6	85.6	1214.0	9
100+25	1208.0	0.50%			1216.6	0.50%		1216.6	0.50%		1204.0	0.50%			1214.2	9
101+00	1208.4	0.50%	95.0	95.0	1217.0	0.50%	120.9	1217.0	0.50%	120.9	1204.4	0.00%	83.1	83.1	1214.5	9
102+00	1208.9	0.50%	93.0	93.0	1217.5	0.50%	118.9	1217.5	0.50%	118.9	1204.4	0.00%	79.6	79.6	1215.0	14
103+00	1209.4	0.50%	90.4	90.4	1218.0	0.50%	116.3	1218.0	0.50%	116.3	1204.4	0.00%	75.5	75.5	1215.6	14
104+00	1209.9	0.50%	87.9	87.9	1218.5	0.50%	113.8	1218.5	1.20%	113.8	1204.4	0.00%	71.5	71.5	1216.1	14
105+00	1210.4	0.50%	86.4	86.4	1219.0	0.50%	112.3	1219.7	1.20%	114.4	1204.4	0.00%	68.5	68.5	1216.7	14
106+00	1210.9	0.50%	85.0	85.0	1219.5	0.50%	110.9	1220.9	1.20%	115.1	1204.4	0.00%	65.6	65.6	1217.3	14
107+00	1211.4	0.50%	84.5	84.5	1220.0	0.50%	110.4	1222.1	1.20%	116.7	1204.4	0.00%	63.6	63.6	1217.9	14
108+00	1211.9	0.50%	84.0	84.0	1220.5	1.55%	109.9	1223.3	1.20%	118.3	1204.4	0.00%	61.6	61.6	1218.5	14
109+00	1212.4	0.50%	83.1	83.0	1222.1	1.55%	112.1	1224.5	1.20%	119.4	1195.0	0.00%	30.9	30.9	1219.2	17
110+00	1212.9	0.50%	78.3	78.3	1223.6	1.55%	110.5	1225.7	1.20%	116.8	1193.2	0.00%	19.3	19.3	1219.5	17

COMPLETE PHASE II WORKSHEET - 90%

	Design Invert				Top of North Bank			Top of South Bank			Top of Apron				CWSEL	APRON
Sec. No.	Elevation	Slope	NB-Offset	SB-Offset	Elevation	Slope	Offset	Elevation	Slope	Offset	Elevation	Slope	NB-Offset	SB-Offset	Elevation	Width
110+95	1213.4	0.50%			1225.1	1.55%		1226.9	1.20%			0.00%			1220.1	17
111+00	1216.9	0.10%	75.8	75.9	1225.2	1.55%	100.6	1226.9	1.20%	105.9	1212.3	0.25%	61.9	62.0	1222.1	12
111+50	1217.0	0.10%			1225.9	1.55%		1227.5	1.20%		1212.4	0.25%			1223.5	
112+00	1217.0	0.10%	70.7		1226.7	1.55%	99.8	1228.1	1.20%		1212.5	0.25%	57.2		1224.0	5
112+30	1217.0	0.10%			1227.2	1.55%		1228.5	1.20%		1212.6	0.25%			1224.3	5
112+38	1217.0	0.10%			1227.3	1.55%		1228.6	1.20%		1212.6	0.25%			1224.4	5
113+00	1217.1	0.22%	73.2	69.3	1228.3	0.30%	106.7	1229.3	0.25%	105.9	1212.8	0.25%	60.2	56.3	1224.9	5
113+05	1217.1	0.22%			1228.3	0.30%		1229.3	0.25%		1212.8	0.25%			1224.9	5
113+10	1217.1	0.22%			1228.3	0.30%		1229.3	0.25%		1212.8	0.25%			1224.8	5
114+00	1217.3	0.22%	74.8	71.0	1228.6	0.30%	108.5	1229.6	0.25%	107.7	1213.0	0.25%	61.9	58.1	1225.4	5
115+00	1217.5	0.22%	71.8	74.2	1228.9	0.30%	105.8	1229.8	0.25%	111.0	1213.3	0.25%	59.0	61.4	1225.8	5
116+00	1217.8	0.22%	69.5	75.5	1229.2	0.30%	103.7	1230.1	0.25%	112.4	1213.5	0.25%	56.8	62.8	1226.2	5
117+00	1218.0	0.22%	70.2	75.8	1229.5	0.30%	104.7	1230.3	0.25%	112.8	1213.8	0.25%	57.6	63.2	1226.5	5
118+00	1218.2	0.22%	72.2	72.3	1229.8	0.30%	106.9	1230.6	0.25%	109.4	1214.0	0.25%	59.7	59.8	1226.9	5
119+00	1218.4	0.22%	73.3	72.2	1230.1	0.30%	108.2	1230.8	0.25%	109.4	1214.3	0.25%	60.8	59.8	1227.2	5
120+00	1218.6	0.22%	73.8	72.7	1230.4	0.30%	109.0	1231.1	0.25%	110.0	1214.5	0.25%	61.5	60.4	1227.5	5
121+00	1218.9	0.22%	77.2	69.5	1230.7	0.30%	112.6	1231.3	0.25%	106.9	1214.8	0.25%	64.9	57.3	1227.8	5
122+00	1219.1	0.22%	77.7	67.0	1231.0	0.30%	113.4	1231.6	0.25%	104.5	1215.0	0.25%	65.6	54.9	1228.0	5
123+00	1219.3	0.22%	74.5	69.6	1231.3	0.30%	110.4	1231.8	0.25%	107.1	1215.3	0.25%	62.4	57.5	1228.3	5
124+00	1219.5	0.22%	67.6	77.1	1231.6	0.30%	103.7	1232.1	0.25%	114.7	1215.5	0.25%	55.6	65.1	1228.5	5
125+00	1219.7	0.22%	70.7	73.7	1231.9	0.30%	107.1	1232.3	0.25%	111.4	1215.8	0.25%	58.8	61.8	1228.8	5
126+00	1220.0	0.22%	71.7	71.6	1232.2	0.30%	108.3	1232.6	0.25%	109.4	1216.0	0.25%	59.9	59.8	1229.1	5
126+45	1220.1	0.22%			1232.3	0.30%		1232.7	0.25%		1216.1	0.25%			1229.2	5
126+50	1221.0	0.20%			1232.3	0.30%		1232.7	0.25%		1216.2	0.20%			1229.0	12
126+60	1221.0	0.20%			1232.3	0.30%		1232.7	0.25%		1217.0	0.20%			1229.1	
127+00	1221.1	0.20%	72.9	72.8	1232.5	0.30%	107.0	1232.8	0.25%	107.9	1217.1	0.20%	60.9	60.8	1229.3	7
127+84	1221.3	0.20%			1232.7	0.30%		1233.0	0.25%		1217.3	0.20%			1229.7	7
128+00	1221.3	0.20%			1232.8	0.30%		1233.1	0.25%		1217.3	0.20%			1229.7	7
128+22	1221.3	0.20%			1232.8	0.30%		1233.1	0.25%		1217.3	0.20%			1229.8	7
128+53	1221.4	0.20%			1232.9	0.30%		1233.2	0.25%		1217.4	0.20%			1229.7	7
128+84	1221.5	0.20%			1233.0	0.30%		1233.3	0.25%		1217.5	0.20%			1229.8	7
129+00	1221.5	0.20%			1233.1	0.65%		1233.3	0.70%		1217.5	0.20%			1229.8	7
129+81	1221.7	0.20%			1233.6	0.65%		1233.9	0.70%		1217.7	0.20%			1229.9	7
130+00	1221.7	0.20%			1233.7	0.65%		1234.0	0.70%		1217.7	0.20%			1230.3	7
130+50	1221.8	0.20%			1234.0	0.65%		1234.4	0.70%		1217.8	0.20%			1231.2	5
131+00	1221.9	0.20%			1234.4	0.65%		1234.7	0.70%		1217.9	0.20%			1231.4	5
131+31	1222.0	0.20%			1234.6	0.65%		1234.9	0.70%		1218.0	0.20%			1231.6	5
132+00	1222.1	0.20%			1235.0	0.65%		1235.4	0.70%		1218.1	0.20%			1231.6	5
132+06	1222.1	0.20%			1235.1	0.65%		1235.5	0.70%		1218.1	0.20%			1231.6	5
133+00	1222.3	0.20%			1235.7	0.65%		1236.1	0.70%		1218.3	0.20%			1232.1	9
134+00	1222.5	0.20%	59.2	41.5	1236.3	0.65%	86.8	1236.8	0.70%	70.1	1218.5	0.20%	51.2	33.5	1232.5	9
135+00	1222.7	0.20%	58.4	42.4	1237.0	0.65%	86.9	1237.5	0.20%	72.0	1218.7	0.20%	50.4	34.4	1233.8	5
136+00	1222.9	0.20%	51.5	50.2	1237.6	0.25%	80.9	1237.7	0.20%	79.8	1218.9	0.20%	43.5	42.2	1234.0	5
137+00	1223.1	0.20%	43.2	58.4	1237.9	0.25%	72.7	1237.9	0.20%	88.0	1219.1	0.20%	35.2	50.4	1234.3	5

COMPLETE PHASE II WORKSHEET - 90%

	Design Invert				Top of North Bank			Top of South Bank			Top of Apron				CWSEL	APRON
Sec. No.	Elevation	Slope	NB-Offset	SB-Offset	Elevation	Slope	Offset	Elevation	Slope	Offset	Elevation	Slope	NB-Offset	SB-Offset	Elevation	Width
138+00	1223.3	0.20%	34.6	66.3	1238.1	0.25%	64.2	1238.1	0.20%	95.9	1219.3	0.20%	26.6	58.3	1234.5	5
139+00	1223.5	0.20%	27.4	71.9	1238.4	0.25%	57.1	1238.3	0.20%	101.5	1219.5	0.20%	19.4	63.9	1234.8	5
140+00	1223.7	0.20%	21.4	77.0	1238.6	0.25%	51.2	1238.5	0.20%	106.6	1219.7	0.20%	13.4	69.0	1235.0	5
141+00	1223.9	0.20%	15.3	82.2	1238.9	0.25%	45.2	1238.7	0.20%	111.8	1219.9	0.20%	7.3	74.2	1235.2	5
142+00	1224.1	0.20%	20.9	81.8	1239.1	0.25%	50.9	1238.9	0.20%	111.4	1220.1	0.20%	12.9	73.8	1235.4	5
143+00	1224.3	0.20%	19.1	81.3	1239.4	0.25%	49.2	1239.1	0.20%	110.9	1220.3	0.20%	11.1	73.3	1235.7	5
144+00	1224.5	0.20%	17.3	80.9	1239.6	0.25%	47.5	1239.3	0.20%	110.5	1220.5	0.20%	9.3	72.9	1235.9	9
144+50	1224.6	0.20%			1239.7	0.25%		1239.4	0.20%		1220.6	0.01%				
145+00	1224.7	0.20%	15.5	80.4	1239.9	0.25%	45.8	1239.5	0.20%	110.0	1220.6	0.01%	7.3	72.2	1236.1	9
146+00	1224.9	0.20%	-1.5	73.8	1240.1	0.25%	44.1	1239.7	0.20%	118.2	1220.6	0.01%	-14.4	60.9	1236.3	9
147+00	1225.1	0.20%	-3.5	81.9	1240.4	0.25%	42.3	1239.9	0.20%	126.3	1220.6	0.01%	-16.9	68.4	1236.5	9
148+00	1225.3	0.20%	-5.3	82.2	1240.6	0.25%	40.6	1240.1	0.20%	126.6	1220.6	0.01%	-19.3	68.2	1236.7	12
149+00	1225.5	0.20%	-7.2	82.5	1240.9	0.25%	38.9	1240.3	0.20%	126.9	1220.6	0.01%	-21.8	67.9	1237.0	12
150+00	1225.7	0.20%	-9.0	82.8	1241.1	0.25%	37.2	1240.5	0.75%	127.2	1220.7	0.01%	-24.2	67.6	1237.3	12
151+00	1225.9	0.20%			1241.4	0.25%	35.5	1241.3	0.75%	127.5	1220.7	0.01%	-26.6	65.7	1237.6	
152+00	1226.1	0.20%	-12.7	80.1	1241.6	0.80%	33.8	1242.0	0.75%	127.8	1220.7	0.01%	-29.0	63.8	1238.0	12
153+00	1226.3	0.20%	-16.2	78.7	1242.4	0.80%	32.1	1242.8	0.75%	128.1	1220.7	0.01%	-33.1	61.9	1238.3	12
154+00	1226.5	0.20%	-19.8	77.4	1243.2	0.80%	30.3	1243.5	0.75%	128.4	1220.7	0.01%	-37.3	59.9	1238.7	12
154+95	1226.7	0.20%			1244.0	0.80%		1244.2	0.75%		1220.7	0.01%			1239.1	12
155+00	1228.5	0.48%	-17.9	77.4	1244.0	0.80%	28.6	1244.3	0.75%	124.7	1220.7	0.01%	-41.3	54.0	1237.9	12
155+10	1228.5	0.48%			1244.1	0.80%		1244.3	0.75%						1239.0	18
156+00	1229.0	0.48%	-20.6	72.8	1244.8	0.80%	26.9	1245.0	0.75%	120.9	1224.8	0.50%	-33.1	60.3	1239.8	16
157+00	1229.5	0.48%	-22.3	63.3	1245.6	0.80%	26.2	1245.8	0.75%	112.2	1225.3	0.50%	-34.7	50.8	1240.7	16
158+00	1229.9	0.48%	-14.6	53.7	1246.4	0.80%	34.8	1246.5	0.75%	103.4	1225.8	0.50%	-27.0	41.3	1241.6	16
159+00	1230.4	0.48%	-6.1	44.2	1247.2	0.80%	44.3	1247.3	0.75%	94.7	1226.3	0.50%	-18.4	31.8	1242.4	16
160+00	1230.9	0.48%	2.6	34.6	1248.0	0.80%	53.9	1248.0	0.75%	85.9	1226.8	0.50%	-9.7	22.3	1244.0	16
161+00	1231.4	0.48%	23.3	719.8	1248.8	0.80%	75.6	1248.8	0.75%	772.0	1227.3	0.50%	11.1	707.6	1245.1	16
161+50	1231.6	0.48%			1249.2	0.80%		1249.1	0.75%		1227.6	0.03%				
162+00	1231.9	0.48%	15.3	44.8	1249.6	0.16%	68.6	1249.5	0.25%	97.8	1227.6	0.03%	2.5	31.9	1245.7	10
163+00	1232.3	0.48%	16.2	54.0	1249.8	0.16%	68.5	1249.8	0.25%	106.3	1227.6	0.03%	2.0	39.8	1246.0	10
164+00	1232.8	0.48%	17.1	62.6	1249.9	0.16%	68.4	1250.0	0.25%	114.2	1227.6	0.03%	1.5	47.0	1246.3	10
165+00	1233.3	0.48%	17.9	72.6	1250.1	0.16%	68.3	1250.3	0.25%	123.5	1227.7	0.03%	1.0	55.7	1246.6	10
166+00	1233.8	0.48%	18.8	71.8	1250.3	0.16%	68.2	1250.5	0.25%	122.0	1227.7	0.03%	0.5	53.5	1246.7	10
167+00	1234.3	0.48%	19.6	71.1	1250.4	0.16%	68.1	1250.8	0.25%	120.6	1227.7	0.03%	0.0	51.4	1246.8	10
168+00	1234.7	0.48%	20.5	70.3	1250.6	0.16%	68.0	1251.0	0.25%	119.1	1227.7	0.03%	-0.5	49.3	1246.9	10
169+00	1235.2	0.48%	21.4	69.5	1250.7	0.16%	67.9	1251.3	0.25%	117.6	1227.8	0.03%	-1.0	47.1	1247.1	10
170+00	1235.7	0.48%		67.8				1251.5	0.25%	115.2	1227.8	0.03%		44.1	1247.2	10
171+00	1236.2	0.48%		63.1				1251.8	0.25%	109.9	1227.8	0.03%		38.1	1247.4	10
172+00	1236.7	0.48%									1227.9	0.03%			1247.5	15
173+00	1237.1	0.48%									1227.9	0.03%			1247.8	15
174+00	1237.6	0.48%									1227.9	0.03%			1248.1	15
175+00	1238.1	0.48%									1228.0	0.03%			1248.4	19
176+00	1238.6	0.48%									1228.0	0.03%			1248.8	19
177+00	1239.1	0.48%									1228.0	0.03%			1249.2	19

APRON.Y scour table

Sec. No.*	LONG-TERM SCOUR		Remarks	Design ELMIN	Standard Toe-Down Elevation	Standard Toe-Down Depth (STDD)	STDD (with min. 6ft)	* Depth to Top of Apron (TOA)	Design Apron Elevation	Design Depth to Top of Apron	** Depth from TOA to STDD (AL)	Smooth AL	*** Total Apron Length 2* (AL*sqrt5)	Design Channel BW	Channel BW - Apron Length
	Armoring (ft)	Equilibrium (ft)		D.I.		(ft)									
5724	12.9	0.00		1181.00	1177.0	4.0	6.0	4.0			2.0		both sides		
5814	12.9	0.37		1181.39	1176.2	5.2	6.0	4.0			2.0				
5970	12.9	0.55		1181.60	1176.7	4.9	6.0	4.0			2.0				
6070	12.9	0.73		1181.80	1176.7	5.1	6.0	4.0			2.0				
6170	9.1	0.91		1182.00	1176.8	5.2	6.0	4.0			2.0				
6236	9.1	1.06		1182.16	1177.0	5.1	6.0	4.0			2.0				
6370	9.1	1.38		1182.50	1176.9	5.6	6.0	4.0			2.0				
6570	15.4	1.84		1183.00	1176.7	6.3	6.3	4.0			2.3				
6670	15.4	2.02		1183.20	1176.7	6.5	6.5	4.0			2.5				
6852	10.6	2.36		1183.58	1176.4	7.2	7.2	4.0			3.2				
6940	10.6	2.56		1183.79	1176.6	7.2	7.2	4.0			3.2				
7070	7.6	2.80		1184.06	1176.4	7.6	7.6	4.0			3.6				
7170	7.6	2.83		1184.11	1176.3	7.8	7.8	4.0			3.8				
7223	7.6	2.85		1184.14	1176.3	7.8	7.8	4.0			3.8				
7260	1.2	2.85		1184.15	1180.0	4.2	6.0	4.0			2.0				
7305	1.2	2.87		1184.18	1180.0	4.2	6.0	4.0			2.0				
7310	1.2	4.53		1185.84	1181.3	4.5	6.0	4.0			2.0				
7330	37.3	10.94	Dibble GCS	1192.25	1173.0	19.3	19.3	11.9			7.3				
7339				1192.25		3.7	6.0				6.0				
7340		0.00		1194.77		3.7	6.0				6.0				
*			Dibble GCS												
7350	2.3	0.00		1194.77	1191.5	3.3	6.0	4.0			2.0				
7377	2.3	-0.01		1194.77	1192.3	2.4	6.0	4.0	1190.8	4.0	2.0	2.0	8.9	120.8	111.9
7400	1.9	0.09		1194.89	1192.4	2.5	6.0	4.0	1190.9	4.0	2.0	2.0	8.9	137.5	128.5
7500	0.4	0.56		1195.39	1192.7	2.7	6.0	4.0	1191.2	4.2	2.0	2.0	8.9	210.0	201.1
7600	0.4	1.02		1195.89	1193.2	2.7	6.0	4.0	1191.6	4.3	2.0	2.0	8.9	210.0	201.1
7700	0.4	1.48		1196.39	1193.8	2.6	6.0	4.0	1191.9	4.5	2.0	2.0	8.9	210.0	201.1
7800	1.5	1.94		1196.89	1193.0	3.9	6.0	4.0	1192.3	4.6	2.0	2.0	8.9	210.0	201.1
7900	2.6	2.41		1197.39	1192.2	5.2	6.0	4.0	1192.6	4.8	2.0	2.0	8.9	210.0	201.1
8000	2.6	2.87		1197.89	1192.3	5.6	6.0	4.0 = 2.0	1193.0	4.9	2.0	2.0	8.9	210.0	201.1
8100	3.6	3.33		1198.39	1191.9	6.5	6.5	4.3	1193.3	5.1	2.1	4.0	17.9	210.0	192.1
8200	4.6	3.79		1198.89	1191.5	7.3	7.3	4.8	1193.7	5.2	2.6	4.0	17.9	210.0	192.1
8300	4.6	4.25		1199.39	1191.4	8.0	8.0	5.3	1194.0	5.4	2.8	4.0	17.9	210.0	192.1
8400	4.6	4.72		1199.89	1191.2	8.7	8.7	5.6	1194.4	5.5	3.1	4.0	17.9	210.0	192.1
8500	4.6	5.18		1200.39	1191.5	8.9	8.9	5.6	1194.7	5.7	3.3	4.0	17.9	210.0	192.1
8600	4.7	5.64		1200.89	1191.7	9.2	9.2	5.7	1195.1	5.8	3.5	4.0	17.9	210.0	192.1

* 4.0' MIN, OR LT. + 1'

** DIFF. = STD. TOE-D DEPTH − DEPTH T.O.A.

*** N B + S B. TOTAL LENGTH

Sec. No.	LONG-TERM SCOUR		Remarks	Design ELMIN	Standard Toe-Down Elevation	Standard Toe-Down Depth (STDD) (ft)	STDD (with min. 6ft)	Depth to Top of Apron (TOA)	Design Apron Elevation	Design Depth to Top of Apron	Depth from TOA to STDD (AL)	Smooth AL	Total Apron Length 2 * (AL*sqrt5)	Design Channel BW	Channel BW - Apron Length
	Armoring (ft)	Equilibrium (ft)													
8700	4.7	6.10		1201.39	1191.9	9.5	9.5	5.7	1195.4	6.0	3.8	4.0	17.9	210.0	192.1
8800	4.7	6.56		1201.89	1192.3	9.6	9.6	5.7	1196.0	5.9	3.9	4.0	17.9	210.0	192.1
8900	4.7	7.02		1202.39	1192.7	9.7	9.7	5.7	1196.5	5.9	4.0	4.0	17.9	210.0	192.1
9000	4.4	7.49		1202.89	1193.6	9.3	9.3	5.4	1197.1	5.8	3.9	4.0	17.9	210.0	192.1
9100	4.4	7.95		1203.39	1194.1	9.3	9.3	5.4	1197.6	5.8	3.9	4.0	17.9	210.0	192.1
9200	3.7	8.41		1203.89	1195.5	8.4	8.4	4.7	1198.2	5.7	3.7	4.0	17.9	210.0	192.1
9271	3.2	8.74	Bell GCS	1204.25	1196.5	7.8	7.8	4.2			3.6	4.0	17.9	210.0	192.1
9295	3.2			1204.36		6.7									
9300															
9400															
9405	3.2			1204.91		5.6									
9471	3.2	0.00		1205.24		1.2									
*			Bell GCS												
9500	4.2	0.14		1205.39	1202.3	3.0	6.0	4.0	1201.4	4.0	2.0	2.0	8.9	210.0	201.1
9600	4.2	0.60		1205.89	1201.9	4.0	6.0	4.0	1201.9	4.0	2.0	2.0	8.9	210.0	201.1
9700	4.2	1.06		1206.39	1201.5	4.9	6.0	4.0	1202.4	4.0	2.0	2.0	8.9	200.0	191.1
9800	4.2	1.52		1206.89	1201.3	5.6	6.0	4.0	1202.9	4.0	2.0	2.0	8.9	200.0	191.1
9900	4.8	1.98		1207.39	1201.0	6.4	6.4	4.0	1203.4	4.0	2.4	4.0	17.9	197.5	179.6
10000	5.3	2.44		1207.89	1200.7	7.2	7.2	4.0	1203.9	4.0	3.2	4.0	17.9	195.0	177.1
10025	5.3	2.44		1207.90	1201.5	6.4	6.4	4.0			2.4	4.0	17.9	195.0	177.1
10100	5.3	2.90		1208.39	1200.8	7.6	7.6	4.0	1204.4	4.0	3.6	4.0	17.9	190.0	172.1
10200	9.1	3.36		1208.89	1200.0	8.9	8.9	4.4	1204.4	4.5	4.6	6.0	26.8	186.0	159.2
10300	9.1	3.82		1209.39	1199.8	9.6	9.6	4.8	1204.4	5.0	4.8	6.0	26.8	180.9	154.1
10400	9.1	4.28		1209.89	1199.6	10.3	10.3	5.3	1204.4	5.5	5.0	6.0	26.8	175.8	149.0
10500	9.4	4.74		1210.39	1199.3	11.1	11.1	5.7	1204.4	6.0	5.3	6.0	26.8	172.9	146.1
10600	9.7	5.20		1210.89	1199.0	11.9	11.9	6.2	1204.4	6.5	5.7	6.0	26.8	170.0	143.2
10700	9.7	5.66		1211.39	1198.9	12.4	12.4	6.7	1204.4	7.0	5.8	6.0	26.8	169.0	142.2
10800	9.7	6.12		1211.89	1198.9	13.0	13.0	7.1	1204.4	7.5	5.9	6.0	26.8	168.0	141.2
10900	16.6	6.58		1212.39	1198.4	14.0	14.0	7.6	1195.0	17.4	6.4	7.5	33.5	166.1	132.6
11000	16.6	7.05		1212.90	1197.7	15.2	15.2	8.1	1193.2	19.7	7.1	7.5	33.5	156.7	123.2
11095	16.0	7.52		1213.40	1197.6	15.8	15.8	8.5			7.3	7.5	33.5	153.7	120.2
11100			69th GCS	1216.90		2.7	6.0	4.0			2.0	5.0	22.4	151.7	129.3
11150		0.00		1216.90		2.4		4.0							
11200	2.3	0.11		1217.10	1212.1	5.0	6.0	4.0			2.0	2.0	8.9	141.2	132.3
11230	3.0	0.18		1217.10	1212.7	4.4	6.0	4.0			2.0	2.0	8.9	141.2	132.3
11238	3.0	0.17		1217.10	1212.9	4.2	6.0	4.0			2.0	2.0	8.9	141.2	132.3

Sec. No.	LONG-TERM SCOUR		Remarks	Design ELMIN	Standard Toe-Down Elevation	Standard Toe-Down Depth (STDD) (ft)	STDD (with min. 6ft)	Depth to Top of Apron (TOA)	Design Apron Elevation	Design Depth to Top of Apron	Depth from TOA to STDD (AL)	Smooth AL	Total Apron Length 2 * (AL*sqrt5)	Design Channel BW	Channel BW - Apron Length
	Armoring (ft)	Equilibrium (ft)													
11300	3.0	0.15		1217.10	1213.3	3.8	6.0	4.0			2.0	2.0	8.9	141.2	132.3
11305	3.0	0.15		1217.10	1213.4	3.7	6.0	4.0			2.0	2.0	8.9	141.2	132.3
11310	3.0	0.25		1217.20	1213.2	4.0	6.0	4.0			2.0	2.0	8.9	141.2	132.3
11400	1.9	0.12		1217.10	1213.9	3.2	6.0	4.0			2.0	2.0	8.9	141.2	132.3
11500	1.9	0.69		1217.70	1213.6	4.1	6.0	4.0			2.0	2.0	8.9	145.2	136.3
11600	1.9	0.86		1217.90	1213.7	4.2	6.0	4.0			2.0	2.0	8.9	145.1	136.2
11700	1.9	1.03		1218.10	1213.7	4.4	6.0	4.0			2.0	2.0	8.9	145.0	136.1
11800	1.9	1.20		1218.30	1213.7	4.6	6.0	4.0			2.0	2.0	8.9	145.0	136.1
11900	1.9	1.37		1218.50	1213.7	4.8	6.0	4.0			2.0	2.0	8.9	145.0	136.1
12000	1.9	1.54		1218.70	1213.7	5.0	6.0	4.0			2.0	2.0	8.9	145.0	136.1
12100	2.0	1.76		1218.95	1213.6	5.3	6.0	4.0			2.0	2.0	8.9	145.0	136.1
12200	2.0	1.98		1219.20	1213.6	5.6	6.0	4.0			2.0	2.0	8.9	145.0	136.1
12300	2.0	2.15		1219.40	1213.8	5.6	6.0	4.0			2.0	2.0	8.9	145.0	136.1
12400	2.0	2.32		1219.60	1214.0	5.6	6.0	4.0			2.0	2.0	8.9	145.0	136.1
12500	1.9	2.49		1219.80	1214.2	5.6	6.0	4.0			2.0	2.0	8.9	145.0	136.1
12600	1.9	2.66		1220.01	1214.4	5.6	6.0	4.0			2.0	2.0	8.9	145.0	136.1
12645	1.9	2.74		1220.10	1214.5	5.6	6.0	4.0			2.0	2.0	8.9	145.0	136.1
12650	17.8	3.64	67th GCS	1221.00	1212.1	8.9	8.9	4.6			4.2	5.0	22.4	145.0	122.6
12660		0.00		1221.00		2.3		4.0							
12700	12.0	0.05		1220.98	1217.7	3.3	6.0	4.0			2.0	3.0	13.4		
12784	2.3	0.17		1221.20	1217.9	3.3	6.0	4.0			2.0	3.0	13.4	INCA	
12800	2.3	0.21		1221.24	1217.9	3.3	6.0	4.0			2.0	3.0	13.4		
12822	2.3	0.26		1221.30	1217.9	3.4	6.0	4.0			2.0	3.0	13.4	INCA	
12853	2.3	0.35		1221.40	1217.3	4.1	6.0	4.0			2.0	3.0	13.4	INCA	
12884	16.8	0.34		1221.40	1215.7	5.7	6.0	4.0			2.0	3.0	13.4	INCA	
12900	16.8	0.37		1221.43	1215.6	5.9	6.0	4.0			2.0	3.0	13.4		
12981	16.8	0.52		1221.60	1214.9	6.7	6.7	4.0			2.7	3.0	13.4	INCA	
13000	16.8	0.57		1221.66	1215.4	6.2	6.2	4.0			2.2	3.0	13.4		
13050	16.8	0.70		1221.80	1216.8	5.0	6.0	4.0			2.0	2.0	8.9	INCA	
13100	9.8	0.75		1221.86	1217.0	4.9	6.0	4.0			2.0	2.0	8.9		
13131	5.4	0.78		1221.90	1217.1	4.8	6.0	4.0			2.0	2.0	8.9	INCA	
13200	5.4	0.95		1222.08	1216.4	5.7	6.0	4.0			2.0	2.0	8.9		
13206	5.4	0.96		1222.10	1216.3	5.8	6.0	4.0			2.0	2.0	8.9	INCA	
13300	5.4	1.04		1222.20	1215.9	6.3	6.3	4.0			2.3	4.0	17.9	INCA	
13400	5.4	1.21		1222.40	1215.0	7.4	7.4	4.0			3.4	4.0	17.9	INCA	
13500	1.3	1.39		1222.60	1217.7	4.9	6.0	4.0	2:1 slope		2.0	2.0	8.9	~~92.0~~ 101.5	83.1

Sec. No.	LONG-TERM SCOUR		Remarks	Design ELMIN	Standard Toe-Down Elevation	Standard Toe-Down Depth (STDD) (ft)	STDD (with min. 6ft)	Depth to Top of Apron (TOA)	Design Apron Elevation	Design Depth to Top of Apron	Depth from TOA to STDD (AL)	Smooth AL	Total Apron Length 2* (AL*sqrt5)	Design Channel BW	Channel BW - Apron Length
	Armoring (ft)	Equilibrium (ft)													
13600	1.3	1.56		1222.80	1218.4	4.4	6.0	4.0			2.0	2.0	8.9	106.0	97.1
13700	0.6	1.74		1223.00	1219.9	3.1	6.0	4.0			2.0	2.0	8.9	120.0	111.1
13800	0.6	1.91		1223.20	1220.2	3.0	6.0	4.0			2.0	2.0	8.9	130.0	121.1
13900	0.6	2.09		1223.40	1220.4	3.0	6.0	4.0			2.0	2.0	8.9	140.0	131.1
14000	0.7	2.26		1223.60	1220.5	3.1	6.0	4.0			2.0	2.0	8.9	150.0	141.1
14100	0.7	2.44		1223.80	1220.7	3.1	6.0	4.0			2.0	2.0	8.9	140.0	131.1
14200	0.7	2.61		1224.00	1220.8	3.2	6.0	4.0			2.0	2.0	8.9	130.0	121.1
14300	2.5	2.79		1224.20	1218.5	5.7	6.0	4.0			2.0	2.0	8.9	120.0	111.1
14400	2.5	2.96		1224.40	1218.3	6.1	6.1	4.0			2.1	4.0	17.9	105.0	87.1
14500	19.9	3.13		1224.60	1217.0	7.6	7.6	4.1			3.4	4.0	17.9	86.0	68.1
14600	19.9	3.26		1224.75	1216.9	7.8	7.8	4.3			3.6	4.0	17.9	83.0	65.1
14700	19.9	3.38		1224.90	1216.8	8.1	8.1	4.4			3.7	4.0	17.9	80.0	62.1
14800	22.2	3.56		1225.10	1216.5	8.6	8.6	4.6			4.1	5.5	24.6	75.0	50.4
14900	24.5	3.73		1225.30	1216.1	9.2	9.2	4.7			4.4	5.5	24.6	70.0	45.4
15000	24.5	3.91		1225.50	1215.8	9.7	9.7	4.9			4.8	5.5	24.6	65.0	40.4
15200	21.0	4.26		1225.90	1215.8	10.1	10.1	5.3			4.8	5.5	24.6	62.0	37.4
15300	21.0	4.43		1226.10	1215.6	10.5	10.5	5.4			5.0	5.5	24.6	58.5	33.9
15400	21.0	4.61		1226.30	1215.5	10.8	10.8	5.6			5.2	5.5	24.6	55.0	30.4
15495	21.0	4.78		1226.50	1215.9	10.6	10.6	5.8			4.8	5.5	24.6	55.0	30.4
15500	40.7	6.78	Trial GCS	1228.50	1214.2	14.3	14.3	7.8			6.5	8.0	35.8	50.0	14.2
15510	40.7	0.00		1228.50		4.6		4.0							
15600	44.0	0.41		1228.90	1220.7	8.2	8.2	4.0			4.2	7.0	31.3	43.5	12.2
15700	47.7	0.86		1229.40	1220.5	8.9	8.9	4.0			4.9	7.0	31.3	40.0	8.7
15800	47.7	1.33		1229.90	1220.3	9.6	9.6	4.0			5.6	7.0	31.3	36.5	5.2
15900	47.7	1.81		1230.40	1220.0	10.4	10.4	4.0			6.4	7.0	31.3	33.0	1.7
16000	47.7	2.28		1230.90	1221.8	9.1	9.1	4.0			5.1	7.0	31.3	37.0	5.7
16100	3.2	2.76		1231.40	1224.3	7.1	7.1	4.0			3.1	4.5	20.1	48.2	28.1
16200	3.2	3.14		1231.80	1224.8	7.0	7.0	4.1			2.9	4.5	20.1	59.4	39.3
16100	4.1	2.66		1231.30	1222.9	8.4	8.4	4.0			4.4	4.5	20.1	48.2	28.1
16400	1.4	4.09		1232.80	1228.5	4.3	6.0	4.0			2.0	2.0	8.9	81.8	72.9
16500	1.4	4.57		1233.30	1229.1	4.2	6.0	4.0			2.0	2.0	8.9	93.0	84.1
16600	1.4	5.04		1233.80	1229.5	4.3	6.0	4.0			2.0	2.0	8.9	93.0	84.1
16700	8.2	5.52		1234.30	1224.6	9.7	9.7	6.5			3.2	4.0	17.9	93.0	75.1
16800	8.2	5.90		1234.70	1224.4	10.3	10.3	6.9			3.4	4.0	17.9	93.0	75.1
16900	8.2	6.37		1235.20	1224.1	11.1	11.1	7.4			3.7	4.0	17.9	93.0	75.1
17000	8.2	6.85		1235.70	1223.7	12.0	12.0	7.8			4.2	6.0	26.8	93.0	66.2

Sec. No. * * *	LONG-TERM SCOUR		Remarks	Design ELMIN	Standard Toe-Down Elevation	Standard Toe-Down Depth (STDD) (ft)	STDD (with min. 6ft)	Depth to Top of Apron (TOA)	Design Apron Elevation	Design Depth to Top of Apron	Depth from TOA to STDD (AL)	Smooth AL	Total Apron Length 2 * (AL*sqrt5)	Design Channel BW	Channel BW - Apron Length
	Armoring (ft)	Equilibrium (ft)													
17100	23.8	7.31		1236.18	1223.4	12.8	12.8	8.3			4.5	6.0	26.8	93.0	66.2
17200	23.8	7.76		1236.66	1222.7	13.9	13.9	8.8			5.2	6.0	26.8	93.0	66.2
17300	23.8	8.22		1237.14	1222.5	14.7	14.7	9.2			5.5	6.0	26.8	95.0	68.2
17400	28.4	8.68		1237.62	1221.5	16.1	16.1	9.7			6.5	8.5	38.0	90.0	52.0
17500	28.4	9.13		1238.10	1221.1	17.0	17.0	10.1			6.9	8.5	38.0	90.0	52.0
17600	28.3	9.59		1238.58	1220.5	18.1	18.1	10.6			7.5	8.5	38.0	88.5	50.5
17700	28.1	10.05		1239.06	1219.9	19.2	19.2	11.0			8.2	8.5	38.0	87.0	49.0
	28.1	10.73		1239.78	1220.9	18.9									
	27.3	11.19		1240.26	1223.0	17.3									
	27.3			1245.80		4.9									
	27.3	0.00		1245.90		4.9									
	23.9	0.09		1246.00	1240.6	5.4									
	23.9	1.04		1247.00	1239.4	7.6									
	18.0	1.98		1248.00	1241.4	6.6									
	18.0	2.45		1248.50	1240.6	7.9									
	21.4	3.40		1249.50	1240.8	8.7									
	21.4	4.84		1251.00	1239.7	11.3									
	17.0	5.32		1251.50	1239.8	11.7									
	17.0	5.76		1252.00	1240.4	11.6									
	24.2	6.71		1253.00	1239.3	13.7									
	24.2	7.48		1253.80	1238.2	15.6									
	5.3	7.85		1254.20	1241.8	12.4									
	5.3	8.10		1254.50	1243.6	10.9									
	2.4	8.86		1255.30	1248.9	6.4									
	2.4			1255.40		6.4									
	2.4	0.00		1255.42		2.3									
	0.5	0.02		1255.45	1253.3	2.2									
	0.5	0.46		1255.93	1253.2	2.7									
	2.5	1.35		1256.89	1252.8	4.1									
	2.5	2.24		1257.85	1252.5	5.4									
	5.2	3.13		1258.81	1251.4	7.5									
	5.2	3.57		1259.29	1251.2	8.1									
	7.0	4.59		1260.39		9.2									
	7.0	0.00		1260.50		3.3									
	3.4	0.34		1260.87	1256.7	4.2									
	3.4	3.44		1264.00	1255.7	8.3									

APPENDIX G

LOCAL DRAINAGE DATA

CURRENT DATE: 07-13-1998 FILE DATE: 12-9-97
CURRENT TIME: 10:02:09 FILE NAME: 146D

FHWA CULVERT ANALYSIS
HY-8, VERSION 4.1

CULVERT	SITE DATA: INLET ELEV. (FT)	OUTLET ELEV. (FT)	CULVERT LENGTH (FT)	CULVERT SHAPE, MATERIAL, INLET: BARRELS	SHAPE MATERIAL	SPAN (FT)	RISE (FT)	MANNING n	INLET TYPE
1	1228.40	1224.80	68.10	2	CSP	3.50	3.50	.024	CONVENTIONAL
2									
3									
4									
5									
6									

FILE: 146D CULVERT HEADWATER ELEVATION (FT) DATE: 12-9-97

DISCHARGE	1	2	3	4	5	6	ROADWAY
0	1230.04	0.00	0.00	0.00	0.00	0.00	1239.80
20	1230.09	0.00	0.00	0.00	0.00	0.00	1240.08
40	1230.38	0.00	0.00	0.00	0.00	0.00	1240.25
60	1230.94	0.00	0.00	0.00	0.00	0.00	1240.38
80	1231.49	0.00	0.00	0.00	0.00	0.00	1240.50
100	1232.06	0.00	0.00	0.00	0.00	0.00	1240.60
120	1232.69	0.00	0.00	0.00	0.00	0.00	1240.70
140	1233.42	0.00	0.00	0.00	0.00	0.00	1240.79
160	1234.26	0.00	0.00	0.00	0.00	0.00	1240.88
180	1235.23	0.00	0.00	0.00	0.00	0.00	1240.96
200	1236.34	0.00	0.00	0.00	0.00	0.00	1241.04
280	1242.25	0.00	0.00	0.00	0.00	0.00	0.00

The above Q and HW are for a point above the roadway.

CURRENT DATE: 07-13-1998 FILE DATE: 12-9-97
CURRENT TIME: 10:02:09 FILE NAME: 146D

PERFORMANCE CURVE FOR CULVERT # 1 - 2 (3.5 BY 3.5) CSP

DIS-CHARGE FLOW (cfs)	HEAD-WATER ELEV. (ft)	INLET CONTROL DEPTH (ft)	OUTLET CONTROL DEPTH (ft)	FLOW TYPE <F4>	NORMAL DEPTH (ft)	CRITICAL DEPTH (ft)	OUTLET VEL. (fps)	OUTLET DEPTH (ft)	TAILWATER VEL. (fps)	TAILWATER DEPTH (ft)
0	1230.04	0.00	1.64	0-NF	0.00	0.00	0.00	0.00	0.00	5.24
20	1230.09	1.34	1.69	1-S1f	0.66	0.94	1.04	3.50	0.00	5.24
40	1230.38	1.98	1.98	1-S1f	0.93	1.37	2.08	3.50	0.00	5.24
60	1230.94	2.54	2.54	1-S1f	1.16	1.69	3.12	3.50	0.00	5.24
80	1231.49	3.09	3.09	1-S1f	1.35	1.96	4.16	3.50	0.00	5.24
100	1232.06	3.66	3.66	1-S1f	1.53	2.20	5.20	3.50	0.00	5.24
120	1232.69	4.29	3.60	4-FFt	1.70	2.42	6.24	3.50	0.00	5.24
140	1233.42	5.02	4.31	4-FFt	1.87	2.61	7.28	3.50	0.00	5.24
160	1234.26	5.86	5.13	4-FFt	2.03	2.79	8.32	3.50	0.00	5.24
180	1235.23	6.83	6.06	4-FFt	2.19	2.92	9.35	3.50	0.00	5.24
200	1236.34	7.94	7.10	4-FFt	2.36	3.05	10.39	3.50	0.00	5.24

El. inlet face invert 1228.40 ft El. outlet invert 1224.80 ft
El. inlet throat invert 0.00 ft El. inlet crest 0.00 ft

** SITE DATA ***** CULVERT INVERT **********

INLET STATION (FT)	0.00
INLET ELEVATION (FT)	1228.40
OUTLET STATION (FT)	68.00
OUTLET ELEVATION (FT)	1224.80
NUMBER OF BARRELS	2
SLOPE (V-FT/H-FT)	0.0529
CULVERT LENGTH ALONG SLOPE (FT)	68.10

***** CULVERT DATA SUMMARY **********

BARREL SHAPE	CIRCULAR
BARREL DIAMETER	3.50 FT
BARREL MATERIAL	CORRUGATED STEEL
BARREL MANNING'S N	0.024
INLET TYPE	CONVENTIONAL
INLET EDGE AND WALL	THIN EDGE PROJECTING
INLET DEPRESSION	NONE

CURRENT DATE: 07-13-1998 FILE DATE: 12-9-97
CURRENT TIME: 10:02:09 FILE NAME: 146D

TAILWATER

CONSTANT WATER SURFACE ELEVATION
1230.04

ROADWAY OVERTOPPING DATA

ROADWAY SURFACE	GRAVEL
EMBANKMENT TOP WIDTH (FT)	15.00
CREST LENGTH (FT)	50.00
OVERTOPPING CREST ELEVATION (FT)	1239.80

CURRENT DATE: 07-13-1998 FILE DATE: 12-9-97
CURRENT TIME: 10:02:44 FILE NAME: 150D

FHWA CULVERT ANALYSIS
HY-8, VERSION 4.1

CULV	SITE DATA: INLET ELEV. (FT)	OUTLET ELEV. (FT)	CULVERT LENGTH (FT)	CULVERT SHAPE, MATERIAL, INLET: BARRELS SHAPE MATERIAL	SPAN (FT)	RISE (FT)	MANNING n	INLET TYPE
1	1230.00	1225.70	66.14	1 CSP	2.00	2.00	.024	CONVENTIONAL
2								
3								
4								
5								
6								

FILE: 150D CULVERT HEADWATER ELEVATION (FT) DATE: 12-9-97

DISCHARGE	1	2	3	4	5	6	ROADWAY
0	1230.00	0.00	0.00	0.00	0.00	0.00	1241.50
4	1230.99	0.00	0.00	0.00	0.00	0.00	1241.60
8	1231.52	0.00	0.00	0.00	0.00	0.00	1241.66
10	1231.77	0.00	0.00	0.00	0.00	0.00	1241.68
16	1232.63	0.00	0.00	0.00	0.00	0.00	1241.75
20	1233.39	0.00	0.00	0.00	0.00	0.00	1241.78
24	1234.34	0.00	0.00	0.00	0.00	0.00	1241.82
28	1235.51	0.00	0.00	0.00	0.00	0.00	1241.85
32	1237.04	0.00	0.00	0.00	0.00	0.00	1241.89
36	1239.04	0.00	0.00	0.00	0.00	0.00	1241.92
40	1241.28	0.00	0.00	0.00	0.00	0.00	1241.94
44	1243.76	0.00	0.00	0.00	0.00	0.00	0.00

The above Q and HW are for a point above the roadway.

CURRENT DATE: 07-13-1998 FILE DATE: 12-9-97
CURRENT TIME: 10:02:44 FILE NAME: 150D

PERFORMANCE CURVE FOR CULVERT # 1 - 1 (2 BY 2) CSP

DIS-CHARGE FLOW (cfs)	HEAD-WATER ELEV. (ft)	INLET CONTROL DEPTH (ft)	OUTLET CONTROL DEPTH (ft)	FLOW TYPE <F4>	NORMAL DEPTH (ft)	CRITICAL DEPTH (ft)	OUTLET VEL. (fps)	OUTLET DEPTH (ft)	TAILWATER VEL. (fps)	TAILWATER DEPTH (ft)
0	1230.00	0.00	0.00	0-NF	0.00	0.00	0.00	0.00	0.00	3.80
4	1230.99	0.99	0.99	1-S1f	0.47	0.69	1.27	2.00	0.00	3.80
8	1231.52	1.52	1.52	1-S1f	0.68	1.01	2.55	2.00	0.00	3.80
10	1231.77	1.77	1.77	1-S1f	0.77	1.13	3.18	2.00	0.00	3.80
16	1232.63	2.63	2.63	1-S1f	1.01	1.44	5.09	2.00	0.00	3.80
20	1233.39	3.39	2.44	4-FFt	1.16	1.60	6.37	2.00	0.00	3.80
24	1234.34	4.34	3.74	4-FFt	1.31	1.72	7.64	2.00	0.00	3.80
28	1235.51	5.51	5.27	4-FFt	1.48	1.84	8.91	2.00	0.00	3.80
32	1237.04	6.90	7.04	4-FFt	1.70	1.96	10.19	2.00	0.00	3.80
36	1239.04	8.50	9.04	4-FFt	2.00	2.00	11.46	2.00	0.00	3.80
40	1241.28	10.28	11.28	4-FFt	2.00	2.00	12.73	2.00	0.00	3.80

El. inlet face invert 1230.00 ft El. outlet invert 1225.70 ft
El. inlet throat invert 0.00 ft El. inlet crest 0.00 ft

** SITE DATA ***** CULVERT INVERT **********

INLET STATION (FT)	0.00
INLET ELEVATION (FT)	1230.00
OUTLET STATION (FT)	66.00
OUTLET ELEVATION (FT)	1225.70
NUMBER OF BARRELS	1
SLOPE (V-FT/H-FT)	0.0652
CULVERT LENGTH ALONG SLOPE (FT)	66.14

***** CULVERT DATA SUMMARY **********

BARREL SHAPE	CIRCULAR
BARREL DIAMETER	2.00 FT
BARREL MATERIAL	CORRUGATED STEEL
BARREL MANNING'S N	0.024
INLET TYPE	CONVENTIONAL
INLET EDGE AND WALL	THIN EDGE PROJECTING
INLET DEPRESSION	NONE

```
CURRENT DATE: 07-13-1998                                 FILE DATE: 12-9-97
CURRENT TIME: 10:02:44                                   FILE NAME: 150D

áááááááááááááááááááááááááááááááááááááááááááááááááááááááááááááááááááááááááááááááá
áááááááááááááááááááááááááá          TAILWATER         áááááááááááááááááááááááááá
áááááááááááááááááááááááááááááááááááááááááááááááááááááááááááááááááááááááááááááááá
áááááááááááááááááááááááááááááááááááááááááááááááááááááááááááááááááááááááááááááááá

           CONSTANT WATER SURFACE ELEVATION
                    1229.50

áááááááááááááááááááááááááááááááááááááááááááááááááááááááááááááááááááááááááááááááá
áááááááááááááááááááááááááá  ROADWAY OVERTOPPING DATA  áááááááááááááááááááááááááá
áááááááááááááááááááááááááááááááááááááááááááááááááááááááááááááááááááááááááááááááá

      ROADWAY SURFACE                           GRAVEL
      EMBANKMENT TOP WIDTH (FT)                  15.00
      CREST LENGTH (FT)                          50.00
      OVERTOPPING CREST ELEVATION (FT)         1241.50

áááááááááááááááááááááááááááááááááááááááááááááááááááááááááááááááááááááááááááááááá
```

CURRENT DATE: 07-13-1998 FILE DATE: 06-28-1998
CURRENT TIME: 10:03:32 FILE NAME: 155D

FHWA CULVERT ANALYSIS
HY-8, VERSION 4.1

CULV	SITE DATA: INLET ELEV. (FT)	OUTLET ELEV. (FT)	CULVERT LENGTH (FT)	CULVERT SHAPE, MATERIAL, INLET: BARRELS	SHAPE MATERIAL	SPAN (FT)	RISE (FT)	MANNING n	INLET TYPE
1	1237.00	1229.80	68.38	1	CSP	2.00	2.00	.024	CONVENTIONAL
2									
3									
4									
5									
6									

FILE: 155D CULVERT HEADWATER ELEVATION (FT) DATE: 06-28-1998

DISCHARGE	1	2	3	4	5	6	ROADWAY
0	1237.00	0.00	0.00	0.00	0.00	0.00	1244.00
4	1237.94	0.00	0.00	0.00	0.00	0.00	1244.10
8	1238.47	0.00	0.00	0.00	0.00	0.00	1244.16
10	1238.73	0.00	0.00	0.00	0.00	0.00	1244.18
16	1239.59	0.00	0.00	0.00	0.00	0.00	1244.25
20	1240.35	0.00	0.00	0.00	0.00	0.00	1244.28
24	1241.30	0.00	0.00	0.00	0.00	0.00	1244.32
28	1242.47	0.00	0.00	0.00	0.00	0.00	1244.35
32	1243.86	0.00	0.00	0.00	0.00	0.00	1244.39
36	1245.46	0.00	0.00	0.00	0.00	0.00	1244.42
40	1247.24	0.00	0.00	0.00	0.00	0.00	1244.44
40	1247.24	0.00	0.00	0.00	0.00	0.00	0.00

The above Q and HW are for a point above the roadway.

CURRENT DATE: 07-13-1998 FILE DATE: 06-28-1998
CURRENT TIME: 10:03:32 FILE NAME: 155D

PERFORMANCE CURVE FOR CULVERT # 1 - 1 (2 BY 2) CSP

DIS-CHARGE FLOW (cfs)	HEAD-WATER ELEV. (ft)	INLET CONTROL DEPTH (ft)	OUTLET CONTROL DEPTH (ft)	FLOW TYPE <F4>	NORMAL DEPTH (ft)	CRITICAL DEPTH (ft)	OUTLET VEL. (fps)	OUTLET DEPTH (ft)	TAILWATER VEL. (fps)	TAILWATER DEPTH (ft)
0	1237.00	0.00	0.00	0-NF	0.00	0.00	0.00	0.00	0.00	3.53
4	1237.94	0.95	0.95	1-S1f	0.42	0.69	1.27	2.00	0.00	3.53
8	1238.47	1.47	1.47	1-S1f	0.61	1.01	2.55	2.00	0.00	3.53
10	1238.73	1.73	1.73	1-S1f	0.68	1.13	3.18	2.00	0.00	3.53
16	1239.59	2.59	2.59	1-S1f	0.88	1.44	5.09	2.00	0.00	3.53
20	1240.35	3.35	3.35	1-S1f	1.00	1.60	6.37	2.00	0.00	3.53
24	1241.30	4.30	4.30	1-S1f	1.12	1.72	7.64	2.00	0.00	3.53
28	1242.47	5.47	2.18	4-FFt	1.24	1.84	8.91	2.00	0.00	3.53
32	1243.86	6.86	3.99	4-FFt	1.36	1.96	10.19	2.00	0.00	3.53
36	1245.46	8.46	6.03	4-FFt	1.49	2.00	11.46	2.00	0.00	3.53
40	1247.24	10.24	8.32	4-FFt	1.65	2.00	12.73	2.00	0.00	3.53

El. inlet face invert 1237.00 ft El. outlet invert 1229.80 ft
El. inlet throat invert 0.00 ft El. inlet crest 0.00 ft

```
*** SITE DATA ***** CULVERT INVERT **************
    INLET STATION (FT)                          0.00
    INLET ELEVATION (FT)                     1237.00
    OUTLET STATION (FT)                        68.00
    OUTLET ELEVATION (FT)                    1229.80
    NUMBER OF BARRELS                          1
    SLOPE (V-FT/H-FT)                          0.1059
    CULVERT LENGTH ALONG SLOPE (FT)           68.38

***** CULVERT DATA SUMMARY ************************
    BARREL SHAPE          CIRCULAR
    BARREL DIAMETER         2.00 FT
    BARREL MATERIAL       CORRUGATED STEEL
    BARREL MANNING'S N    0.024
    INLET TYPE            CONVENTIONAL
    INLET EDGE AND WALL   THIN EDGE PROJECTING
    INLET DEPRESSION      NONE
```

CURRENT DATE: 07-13-1998 FILE DATE: 06-28-1998
CURRENT TIME: 10:03:32 FILE NAME: 155D

áá
áááááááááááááááááááááááááá TAILWATER áááááááááááááááááááááááááá
áá
áá

CONSTANT WATER SURFACE ELEVATION
1233.33

áá
áááááááááááááááááááááááááá ROADWAY OVERTOPPING DATA áááááááááááááááááááááááááá
áá

ROADWAY SURFACE	GRAVEL
EMBANKMENT TOP WIDTH (FT)	15.00
CREST LENGTH (FT)	50.00
OVERTOPPING CREST ELEVATION (FT)	1244.00

áá

CURRENT DATE: 07-13-1998 FILE DATE: 12-9-97
CURRENT TIME: 10:04:01 FILE NAME: 158D

FHWA CULVERT ANALYSIS
HY-8, VERSION 4.1

CULV	SITE DATA: INLET ELEV. (FT)	OUTLET ELEV. (FT)	CULVERT LENGTH (FT)	CULVERT SHAPE, MATERIAL, INLET: BARRELS / SHAPE / MATERIAL	SPAN (FT)	RISE (FT)	MANNING n	INLET TYPE
1	1237.00	1229.80	68.38	1 CSP	2.00	2.00	.024	CONVENTIONAL
2								
3								
4								
5								
6								

FILE: 158D CULVERT HEADWATER ELEVATION (FT) DATE: 12-9-97

DISCHARGE	1	2	3	4	5	6	ROADWAY
0	1237.00	0.00	0.00	0.00	0.00	0.00	1244.00
4	1237.94	0.00	0.00	0.00	0.00	0.00	1244.10
8	1238.47	0.00	0.00	0.00	0.00	0.00	1244.16
10	1238.73	0.00	0.00	0.00	0.00	0.00	1244.18
16	1239.59	0.00	0.00	0.00	0.00	0.00	1244.25
20	1240.35	0.00	0.00	0.00	0.00	0.00	1244.28
24	1241.30	0.00	0.00	0.00	0.00	0.00	1244.32
28	1242.47	0.00	0.00	0.00	0.00	0.00	1244.35
32	1243.86	0.00	0.00	0.00	0.00	0.00	1244.39
36	1245.46	0.00	0.00	0.00	0.00	0.00	1244.42
40	1247.24	0.00	0.00	0.00	0.00	0.00	1244.44
40	1247.24	0.00	0.00	0.00	0.00	0.00	0.00

The above Q and HW are for a point above the roadway.

CURRENT DATE: 07-13-1998 FILE DATE: 12-9-97
CURRENT TIME: 10:04:01 FILE NAME: 158D

PERFORMANCE CURVE FOR CULVERT # 1 - 1 (2 BY 2) CSP

DIS-CHARGE FLOW (cfs)	HEAD-WATER ELEV. (ft)	INLET CONTROL DEPTH (ft)	OUTLET CONTROL DEPTH (ft)	FLOW TYPE <F4>	NORMAL DEPTH (ft)	CRITICAL DEPTH (ft)	OUTLET VEL. (fps)	OUTLET DEPTH (ft)	TAILWATER VEL. (fps)	TAILWATER DEPTH (ft)
0	1237.00	0.00	0.00	0-NF	0.00	0.00	0.00	0.00	0.00	3.53
4	1237.94	0.95	0.95	1-S1f	0.42	0.69	1.27	2.00	0.00	3.53
8	1238.47	1.47	1.47	1-S1f	0.61	1.01	2.55	2.00	0.00	3.53
10	1238.73	1.73	1.73	1-S1f	0.68	1.13	3.18	2.00	0.00	3.53
16	1239.59	2.59	2.59	1-S1f	0.88	1.44	5.09	2.00	0.00	3.53
20	1240.35	3.35	3.35	1-S1f	1.00	1.60	6.37	2.00	0.00	3.53
24	1241.30	4.30	4.30	1-S1f	1.12	1.72	7.64	2.00	0.00	3.53
28	1242.47	5.47	2.18	4-FFt	1.24	1.84	8.91	2.00	0.00	3.53
32	1243.86	6.86	3.99	4-FFt	1.36	1.96	10.19	2.00	0.00	3.53
36	1245.46	8.46	6.03	4-FFt	1.49	2.00	11.46	2.00	0.00	3.53
40	1247.24	10.24	8.32	4-FFt	1.65	2.00	12.73	2.00	0.00	3.53

El. inlet face invert 1237.00 ft El. outlet invert 1229.80 ft
El. inlet throat invert 0.00 ft El. inlet crest 0.00 ft

***** SITE DATA ***** CULVERT INVERT **********

INLET STATION (FT)	0.00
INLET ELEVATION (FT)	1237.00
OUTLET STATION (FT)	68.00
OUTLET ELEVATION (FT)	1229.80
NUMBER OF BARRELS	1
SLOPE (V-FT/H-FT)	0.1059
CULVERT LENGTH ALONG SLOPE (FT)	68.38

***** CULVERT DATA SUMMARY **********

BARREL SHAPE	CIRCULAR
BARREL DIAMETER	2.00 FT
BARREL MATERIAL	CORRUGATED STEEL
BARREL MANNING'S N	0.024
INLET TYPE	CONVENTIONAL
INLET EDGE AND WALL	THIN EDGE PROJECTING
INLET DEPRESSION	NONE

```
CURRENT DATE: 07-13-1998                                   FILE DATE: 12-9-97
CURRENT TIME: 10:04:01                                     FILE NAME: 158D

áááááááááááááááááááááááááááááááááááááááááááááááááááááááááááááááááááááááá
áááááááááááááááááááááááá          TAILWATER          áááááááááááááááááááááááá
áááááááááááááááááááááááááááááááááááááááááááááááááááááááááááááááááááááááá
áááááááááááááááááááááááááááááááááááááááááááááááááááááááááááááááááááááááá

           CONSTANT WATER SURFACE ELEVATION
                    1233.33

áááááááááááááááááááááááááááááááááááááááááááááááááááááááááááááááááááááááá
áááááááááááááááááááááááá  ROADWAY OVERTOPPING DATA  áááááááááááááááááááááááá
áááááááááááááááááááááááááááááááááááááááááááááááááááááááááááááááááááááááá

      ROADWAY SURFACE                          GRAVEL
      EMBANKMENT TOP WIDTH (FT)                 15.00
      CREST LENGTH (FT)                         50.00
      OVERTOPPING CREST ELEVATION (FT)        1244.00

áááááááááááááááááááááááááááááááááááááááááááááááááááááááááááááááááááááááá
```

CURRENT DATE: 07-13-1998 FILE DATE: 12-8-97
CURRENT TIME: 10:04:35 FILE NAME: 163D

FHWA CULVERT ANALYSIS
HY-8, VERSION 4.1

CULV	SITE DATA: INLET ELEV. (FT)	OUTLET ELEV. (FT)	CULVERT LENGTH (FT)	CULVERT SHAPE, MATERIAL, INLET: BARRELS / SHAPE / MATERIAL	SPAN (FT)	RISE (FT)	MANNING n	INLET TYPE
1	1242.20	1232.80	140.32	3 CSP	5.00	5.00	.024	CONVENTIONAL
2								
3								
4								
5								
6								

FILE: 163D CULVERT HEADWATER ELEVATION (FT) DATE: 12-8-97

DISCHARGE	1	2	3	4	5	6	ROADWAY
0	1242.80	0.00	0.00	0.00	0.00	0.00	1247.00
40	1243.47	0.00	0.00	0.00	0.00	0.00	1247.26
80	1244.00	0.00	0.00	0.00	0.00	0.00	1247.41
120	1244.48	0.00	0.00	0.00	0.00	0.00	1247.54
160	1244.91	0.00	0.00	0.00	0.00	0.00	1247.65
200	1245.32	0.00	0.00	0.00	0.00	0.00	1247.76
240	1245.70	0.00	0.00	0.00	0.00	0.00	1247.85
280	1246.07	0.00	0.00	0.00	0.00	0.00	1247.94
320	1246.44	0.00	0.00	0.00	0.00	0.00	1248.04
360	1246.81	0.00	0.00	0.00	0.00	0.00	1248.12
400	1247.19	0.00	0.00	0.00	0.00	0.00	1248.20
520	1248.45	0.00	0.00	0.00	0.00	0.00	0.00

The above Q and HW are for a point above the roadway.

CURRENT DATE: 07-13-1998 FILE DATE: 12-8-97
CURRENT TIME: 10:04:35 FILE NAME: 163D

PERFORMANCE CURVE FOR CULVERT # 1 - 3 (5 BY 5) CSP

DIS-CHARGE FLOW (cfs)	HEAD-WATER ELEV. (ft)	INLET CONTROL DEPTH (ft)	OUTLET CONTROL DEPTH (ft)	FLOW TYPE <F4>	NORMAL DEPTH (ft)	CRITICAL DEPTH (ft)	OUTLET VEL. (fps)	OUTLET DEPTH (ft)	TAILWATER VEL. (fps)	TAILWATER DEPTH (ft)
0	1242.80	0.00	0.60	0-NF	0.00	0.00	0.00	0.00	0.00	10.00
40	1243.47	1.27	1.27	1-S1f	0.62	1.00	0.68	5.00	0.00	10.00
80	1244.00	1.80	1.80	1-S1f	0.89	1.42	1.36	5.00	0.00	10.00
120	1244.48	2.28	2.28	1-S1f	1.10	1.75	2.04	5.00	0.00	10.00
160	1244.91	2.71	2.71	1-S1f	1.27	2.04	2.72	5.00	0.00	10.00
200	1245.32	3.12	3.12	1-S1f	1.44	2.29	3.40	5.00	0.00	10.00
240	1245.70	3.50	3.50	1-S1f	1.58	2.53	4.07	5.00	0.00	10.00
280	1246.07	3.87	3.87	1-S1f	1.71	2.73	4.75	5.00	0.00	10.00
320	1246.44	4.24	4.24	1-S1f	1.84	2.94	5.43	5.00	0.00	10.00
360	1246.81	4.61	4.61	1-S1f	1.97	3.12	6.11	5.00	0.00	10.00
400	1247.19	4.99	4.99	1-S1f	2.08	3.30	6.79	5.00	0.00	10.00

El. inlet face invert 1242.20 ft El. outlet invert 1232.80 ft
El. inlet throat invert 0.00 ft El. inlet crest 0.00 ft

***** SITE DATA ***** CULVERT INVERT *****

INLET STATION (FT)	0.00
INLET ELEVATION (FT)	1242.20
OUTLET STATION (FT)	140.00
OUTLET ELEVATION (FT)	1232.80
NUMBER OF BARRELS	3
SLOPE (V-FT/H-FT)	0.0671
CULVERT LENGTH ALONG SLOPE (FT)	140.32

***** CULVERT DATA SUMMARY *****

BARREL SHAPE	CIRCULAR
BARREL DIAMETER	5.00 FT
BARREL MATERIAL	CORRUGATED STEEL
BARREL MANNING'S N	0.024
INLET TYPE	CONVENTIONAL
INLET EDGE AND WALL	SQUARE EDGE WITH HEADWALL
INLET DEPRESSION	NONE

CURRENT DATE: 07-13-1998 FILE DATE: 12-8-97
CURRENT TIME: 10:04:35 FILE NAME: 163D

áá
áááááááááááááááááááááááááá TAILWATER áááááááááááááááááááááááááá
áá
áá

CONSTANT WATER SURFACE ELEVATION
1242.80

áá
áááááááááááááááááááááááááá ROADWAY OVERTOPPING DATA áááááááááááááááááááááááááá
áá

ROADWAY SURFACE	PAVED
EMBANKMENT TOP WIDTH (FT)	15.00
CREST LENGTH (FT)	100.00
OVERTOPPING CREST ELEVATION (FT)	1247.00

áá

APPENDIX G

LOCAL DRAINAGE DATA

Discharge - Frequency Curves for Scatter Wash

Figure C.1 Discharge-Frequency Curves for Scatter Wash

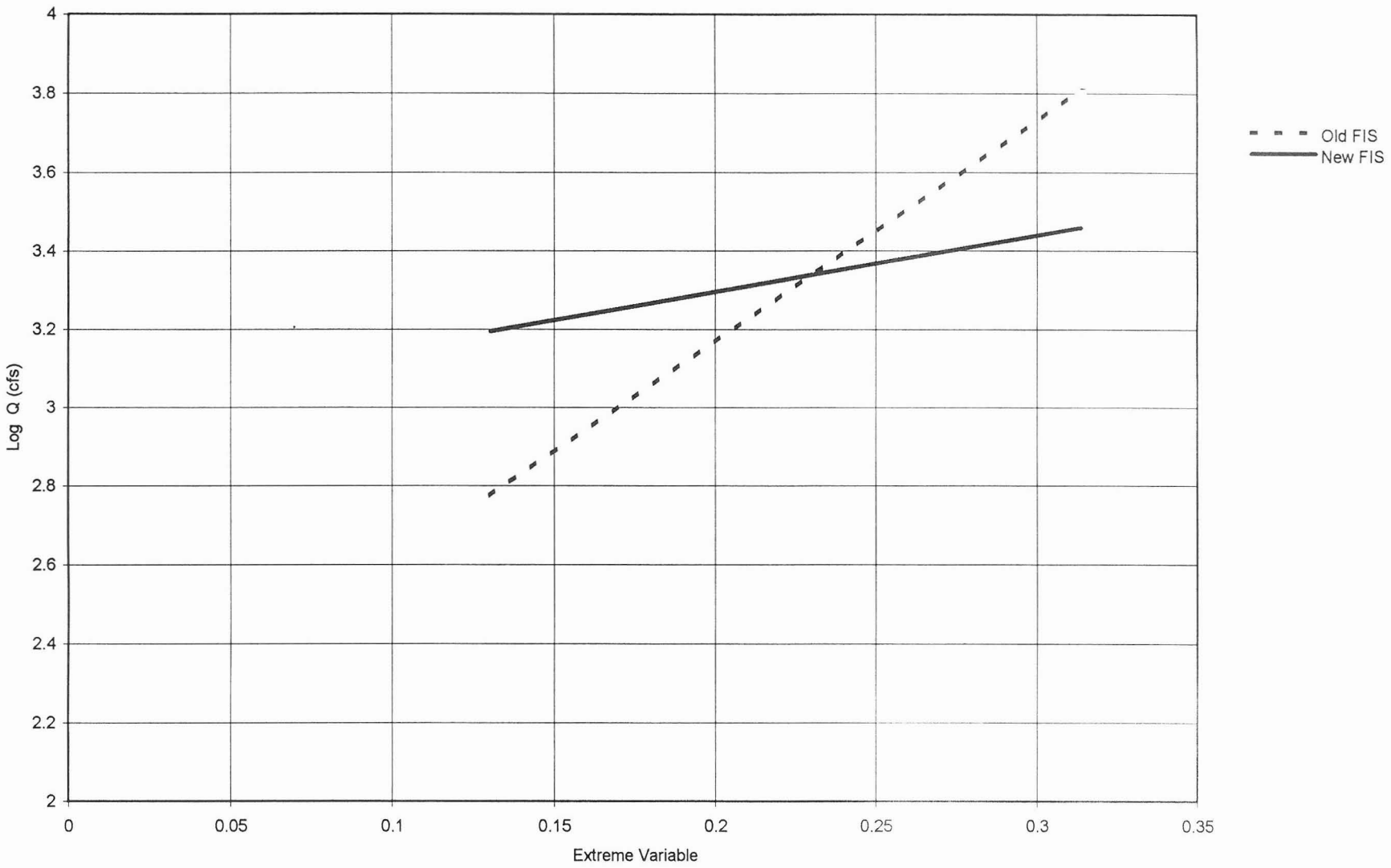

APPENDIX H

CONSTRUCTION QUANTITIES

APPENDIX H

CONSTRUCTION QUANTITIES

Phase II

phase II

Channel Excavation (Sect. 215)

= Bank Exca + Toe Exca + C. C. Exca.

= (126,253 + 223,511) + (70,369 + 79,851) + (43,683)

= 543,667 (CY)

Borrow (Sect. 210)

Fill Required = 1.1 x (Bank channel fill

+ Back slope fill + Toe Exca + C. C. Exca)

= 1.1 x ((25,703 + 24,978) + (2,804 + 16,237)

+ (70,369 + 79,851) + (43,683))

= 289,988 (CY)

Cover Req'd = 1.1 x (12,518 + 12,966) = 28,032 (CY

Total Fill = 289,988 + 28,032 = 318,020 (CY

< Channel Exca = 543,677 (CY)

Total Excess Material = 225,657 (CY)

SIMONS, LI & ASSOCIATES, INC.

CLIENT MC Flood Control District JOB NO. MC-17 PAGE
PROJECT Skunk Creek Design DATE CHECKED DATE 6/25/98
DETAIL 100% Submittal phase II CHECKED BY COMPUTED BY LX

Phase II:

Gabions Volume:

9" Gabions 10,341 + 13,506 = 23,847 (CY)

12" Gabions 8989 + (1,112 + 84) = 10185 (CY

18" Gabions 1661 + (6960 + 649) = 9270 (CY

9" PVC coated 2053 (CY)

Shotcrete Area 14,164 + 1,425 = 15,589 (SY

Quantity Sheet by Sheet							
	Cut	Fill	9" Gabions	12" Gabions	18" Gabions	9" PVC Gabions	Shotcrete Area
	(CY)	(CY)	(CY)	(CY)	(CY)	(CY)	(SY)
Sta: 70+00 to 80+00	53,466	11,646	1520		371		
Sta: 80+00 to 87+00	71,885	17,263	2222				
Sta: 87+00 to 97+00	86,803	41,333	2324		4,024		7,574
Sta: 97+00 to 107+00	55,665	31,993	2614		451		902
Sta: 107+00 to 117+00	43,547	62,310	1807		2,824	520	3,431
Sta: 117+00 to 127+00	39,162	41,044	1466		1,180	1,414	2,001
Sta: 127+00 to 137+00	17,466	7,224	772		422	120	
Sta: 137+00 to 147+00	40,758	19,726	2837				
Sta: 147+00 to 157+00	35,593	25,108	2290	4,886			1,681
Sta: 157+00 to 167+00	41,741	23,551	2248	5,298			
Sta: 167+00 to 177+00	57,582	36,821	3746				
Total	543,667	318,019	23,846	10,184	9,272	2,054	15,589

Station	Ch-cut	Toe-ex	GC Cut	Total cut	Ch-fill	Extra fill	Soil Cove	Total Fill	9" gabion
Sta: 70+00 to 80+00	45012	8455		53466	776	0	1357	11646	1520
Sta: 80+00 to 87+00	57976	13909		71885	169	0	1616	17263	2222
Sta: 87+00 to 97+00	51549	15299	19955	86803	300	0	2022	41333	2324
Sta: 97+00 to 107+00	35744	19054	866	55665	3493	3613	2058	31993	2614
Sta: 107+00 to 117+00	17611	11937	13999	43547	15281	13213	2216	62310	2037
Sta: 117+00 to 127+00	22306	9744	7112	39162	15399	2215	2843	41044	1466
Sta: 127+00 to 137+00	12798	4668		17466	1041		857	7224	772
Sta: 137+00 to 147+00	27288	13470		40758	1838		2625	19726	2837
Sta: 147+00 to 157+00	22716	11126	1751	35593	6256		3692	25108	2922
Sta: 157+00 to 167+00	29905	11836		41741	5594		3980	23551	4233
Sta: 167+00 to 177+00	26860	30722		57582	534		2217	36821	3746
Total	349763	150221	43683	**543667**	50681	19041	25483	**318019**	**26693**

END AREA VOLUME CACULATIONS: PHASE II

For Channel Excavation

Project: Skunk Creek Final Design 100% Summital ##########

		NORTH BANK						SOUTH BANK							
			CUT			FILL			CUT			FILL			
Station	Distance	Area	Average	Volume	Area	Average	Volume	Area	Average	Volume	Area	Average	Volume		
7300		0			0			0			0				
	40		0	0		0	0		0	0		0	0		
7340		0			0			0			0				
	37		0	0		0	0		0	0		0	0		
7377		0			0			0			0				
	23		0	0		0	0		0	0		0	0		
7400		0			0			0			0				
	12		0	0		0	0		0	0		0	0		
7412		0			0			0			0				
	88		166	14,608		0	0		12	1,056		0	0		
7500		332			0			24			0				
	100		792	79,238		0	0		728	72,825		26	2600		
7600		1253			0			1433			52				
	100		1301	130,063		0	0		1383	138,313		53	5300		
7700		1349			0			1334			54				
	100		1367	136,738		0	0		1247	124,713		46	4600		
7800		1386			0			1161			38				
	100		1464	146,413		0	0		1110	111,038		41	4050		
7900		1542			0			1060			43				
	100		1522	152,175		0	0		1081	108,138		44	4400		
8000		1502			0			1103			45				
Subtotal				659,233			0			556,081			20,950	45011.63	776
8000		1502			0			1103			45				
	100		1465	146,475		0	0		1249	124,938		34	3400		
8100		1428			0			1396			23				
	100		1388	138,838		0	0		1555	155,500		12	1150		
8200		1349			0			1714			0				
	100		1023	102,338		0	0		1717	171,725		0	0		
8300		698			0			1721			0				
	100		629	62,913		0	0		1679	167,888		0	0		
8400		560			0			1637			0				
	100		560	56,000		0	0		1435	143,525		0	0		
8500		560			0			1234			0				
	100		507	50,663		0	0		1115	111,475		0	0		
8600		454			0			996			0				
	100		485	48,450		0	0		846	84,625		0	0		
8700		516			0			697			0				
Subtotal				605,675			0			959,675			4,550	57975.93	169
8700		516			0			697			0				
	100		565	56,450		0	0		730	73,013		0	0		
8800		614			0			764			0				
	100		622	62,213		0	0		794	79,363		0	0		
8900		631			0			824			0				
	100		637	63,650		6	600		894	89,350		0	0		
9000		642			12			964			0				
	100		631	63,088		17	1650		995	99,500		0	0		
9100		620			21			1027			0				
	100		642	64,188		11	1050		997	99,650		0	0		
9200		664			0			967			0				
	100		630	63,013		0	0		910	91,038		7	650		
9300		596			0			854			13				
	100		562	56,163		0	0		881	88,125		21	2100		
9400		527			0			908			29				
	100		451	45,063		3	300		876	87,613		15	1450		
9500		374			6			844			0				
	100		187	18,700		3	300		876	87,600		0	0		
9600		0			0			908			0				
	100		0	0		0	0		1041	104,050		0	0		
9700		0			0			1173			0				
Subtotal				492,525			5,900			899,300			4,200	51549.07	300
9700		0			0			1173			0				
	100		0	0		0	0		1163	116,300		0	0		
9800		0			0			1153			0				
	100		0	0		0	0		1094	109,400		0	0		
9900		0			0			1035			0				
	100		0	0		0	0		909	90,850		0	0		
10000		0			0			782			0				

		NORTH BANK						SOUTH BANK							
			CUT			FILL			CUT			FILL			
Station	Distance	Area	Average	Volume	Area	Average	Volume	Area	Average	Volume	Area	Average	Volume		
	100		220	22,000		0	0		596	59,600		0	0		
10100		499			0			410			0				
	100		550	55,000		0	0		329	32,850		0	0		
10200		666			0			247			0				
	100		672	67,200		0	0		240	24,000		69	6863		
10300		738			0			233			137				
	100		709	70,900		0	0		240	24,000		150	14950		
10400		739			0			247			162				
	100		710	71,000		0	0		259	25,850		194	19438		
10500		745			0			270			227				
	100		690	69,000		0	0		275	27,500		248	24813		
10600		713			0			280			269				
	100		711	71,100		0	0		286	28,550		283	28250		
10700		768			0			291			296				
Subtotal				426,200			0			538,900			94,313	35744.44	3493
10700		768			0			291			296				
	100		731	73,100		0	0		377	37,700		319	31913		
10800		776			0			463			343				
	100		734	73,413		0	0		480	48,025		377	37650		
10900		693			0			498			411				
	100		728	72,800		9	900		403	40,250		433	43313		
11000		763			9			308			456				
	100		480	48,038		7	725		179	17,875		523	52288		
11100		198			6			50			590				
	100		207	20,663		3	275		44	4,438		576	57613		
11200		216			0			39			562				
	100		231	23,075		53	5313		19	1,938		485	48488		
11300		246			106			0			408				
	100		166	16,625		74	7400		62	6,200		372	37188		
11400		87			42			124			336				
	100		49	4,875		106	10600		185	18,475		280	28038		
11500		11			170			246			225				
	100		51	5,125		249	24900		257	25,650		156	15563		
11600		92			328			268			87				
	100		112	11,213		372	37213		368	36,813		51	5125		
11700		133			417			469			16				
Subtotal				275,825			87,325			199,663			325,263	17610.65	15281
11700		133			417			469			16				
	100		170	16,963		438	43788		476	47,563		15	1450		
11800		207			459			483			13				
	100		103	10,338		449	44938		574	57,425		13	1313		
11900		0			440			666			13				
	100		106	10,625		630	63025		562	56,188		7	650		
12000		213			821			458			0				
	100		218	21,775		711	71138		475	47,488		1	50		
12100		223			602			492			1				
	100		185	18,500		524	52400		469	46,875		3	325		
12200		147			446			446			6				
	100		143	14,325		400	39950		446	44,550		27	2700		
12300		140			353			446			49				
	100		151	15,075		280	27988		482	48,200		57	5650		
12400		162			207			519			65				
	100		177	17,650		170	16988		423	42,338		64	6388		
12500		191			133			328			63				
	100		202	20,175		131	13113		285	28,538		45	4488		
12600	.	213			130			243			27				
	100		215	21,538		126	12575		161	16,125		69	6850		
12700		218			122			80			111				
Subtotal				166,963			385,900			435,288			29,863	22305.56	15399
12700		218			122			80			111				
	100		174	17,413		61	6100		105	10,500		55	5525		
12800		130			0			130			0				
	100		129	12,875		0	0		129	12,875		0	0		
12900		128			0			128			0				
	100		155	15,500		0	0		155	15,500		0	0		
13000		183			0			183			0				
	100		151	15,125		0	0		151	15,125		0	0		
13100		120			0			120			0				
	100		60	6,000		0	0		60	6,000		0	0		
13200		0			0			0			0				
	100		44	4,375		0	0		44	4,375		0	0		
13300		88			0			88			0				

		NORTH BANK						SOUTH BANK							
			CUT			FILL			CUT			FILL			
Station	Distance	Area	Average	Volume	Area	Average	Volume	Area	Average	Volume	Area	Average	Volume		
	100		171	17,075		10	1000		184	18,388		21	2100		
13400		254			20			280			42				
	100		277	27,713		19	1900		254	25,363		40	3963		
13500		300			18			227			37				
	100		300	29,975		13	1300		271	27,125		31	3063		
13600		299			8			316			24				
	100		255	25,463		8	775		388	38,775		24	2388		
13700		210			8			460			24				
Subtotal				171,513			11,075			174,025			17,038	12797.69	1041
13700		210			8			460			24				
	100		168	16,788		16	1563		472	47,238		19	1863		
13800		126			24			485			14				
	100		154	15,350		24	2388		483	48,263		12	1150		
13900		181			24			481			10				
	100		193	19,325		24	2425		529	52,888		11	1075		
14000		205			25			577			12				
	100		153	15,313		60	6025		624	62,350		15	1475		
14100		101			96			670			18				
	100		142	14,238		71	7050		683	68,263		12	1175		
14200		184			45			696			6				
	100		163	16,275		39	3925		725	72,525		3	300		
14300		142			34			755			0				
	100		149	14,938		35	3450		740	74,013		0	0		
14400		157			36			725			0				
	100		175	17,513		42	4175		636	63,600		0	0		
14500		193			48			547			0				
	100		149	14,925		41	4100		489	48,900		17	1700		
14600		105			34			431			34				
	100		68	6,775		17	1700		473	47,313		41	4088		
14700		30			0			515			48				
Subtotal				151,438			36,800			585,350			12,825	27288.43	1838
14700		30			0			515			48				
	100		57	5,713		24	2413		550	55,013		61	6063		
14800		84			48			585			74				
	100		85	8,475		73	7300		606	60,588		68	6825		
14900		86			98			627			63				
	100		82	8,188		87	8663		568	56,775		55	5525		
15000		78			76			509			48				
	100		88	8,788		53	5275		565	56,513		46	4638		
15100		98			30			621			45				
	100		98	9,750		31	3088		618	61,838		97	9688		
15200		98			32			616			149				
	100		72	7,150		46	4638		627	62,738		134	13375		
15300		46			61			639			119				
	100		37	3,675		71	7063		665	66,463		124	12350		
15400		28			80			690			128				
	100		14	1,400		131	13063		558	55,800		96	9563		
15500		0			181			426			63				
	100		0	0		200	19963		422	42,238		58	5775		
15600		0			218			419			52				
	100		0	0		197	19713		422	42,225		40	3950		
15700		0			176			426			27				
Subtotal				53,138			91,175			560,188			77,750	22715.74	6256
15700		0			176			426			27				
	100		0	0		151	15113		399	39,863		67	6713		
15800		0			126			372			108				
	100		8	800		158	15838		367	36,663		80	8038		
15900		16			191			362			53				
	100		56	5,575		193	19288		326	32,613		48	4813		
16000		96			195			291			43				
	100		172	17,175		108	10763		339	33,850		38	3813		
16100		248			20			387			33				
	100		213	21,313		29	2888		517	51,713		44	4413		
16200		178			38			648			55				
	100		190	18,988		38	3763		728	72,775		52	5188		
16300		202			38			808			49				
	100		209	20,863		26	2625		790	79,013		199	19913		
16400		216			15			773			350				
	100		211	21,125		14	1413		926	92,638		206	20600		
16500		207			13			1080			63				
	100		163	16,338		7	663		1149	114,863		35	3513		
16600		120			0			1217			8				

		NORTH BANK						SOUTH BANK							
			CUT			FILL			CUT			FILL			
Station	Distance	Area	Average	Volume	Area	Average	Volume	Area	Average	Volume	Area	Average	Volume		
	100		122	12,163		10	1038		1191	119,100		7	650		
16700		123			21			1165			5				
Subtotal				134,338			73,388			673,088			77,650	29904.63	5594
16700		123			21			1165			5				
	100		132	13,175		27	2725		1110	111,013		3	263		
16800		140			34			1055			0				
	100		198	19,763		17	1688		844	84,350		6	600		
16900		255			0			632			12				
	100		291	29,138		0	0		480	47,975		36	3550		
17000		328			0			328			59				
	100		341	34,138		0	0		341	34,138		43	4275		
17100		355			0			355			27				
	100		308	30,825		0	0		308	30,825		13	1325		
17200		262			0			262			0				
	100		283	28,263		0	0		283	28,263		0	0		
17300		304			0			304			0				
	100		288	28,825		0	0		288	28,825		0	0		
17400		273			0			273			0				
	100		285	28,450		0	0		285	28,450		0	0		
17500		296			0			296			0				
	100		298	29,838		0	0		298	29,838		0	0		
17600		301			0			301			0				
	100		296	29,563		0	0		296	29,563		0	0		
17700		291			0			291			0				
Subtotal				271,975			4,413			453,238			10,013	26859.72	534
Total Volume (Cubic Ft)				3,408,821			693,975			6,034,794			674,413		
Total Volume (Cubic Yd)				126,253			25,703			223,511			24,978		

TOE EXCAVATION PHASE II 100% SUMBITTAL									6/25/98 10:23		
									10 FT WORK AREA		
	Design Invert	Top of Apron	APRON		NORTH BANK			SOUTH BANK			
Sec. No.	Elevation	Elevation	Width	AREA (SP FT)	AVERAGE	VOLUME (CU FT)	AREA (SP FT)	AVERAGE	VOLUME (CU FT)		
7412	1194.9	1190.9	5.0	173.6			173.6				
					176.6	15536.5		176.6	15536.5		
7500	1195.4	1191.2	5.0	179.6			179.6				
					183.0	18301.5		183.0	18301.5		
7600	1195.9	1191.6	5.0	186.5			186.5				
					190.0	18999.7		190.0	18999.7		
7700	1196.4	1191.9	5.0	193.5			193.5				
					197.1	19709.2		197.1	19709.2		
7800	1196.9	1192.3	5.0	200.7			200.7				
					204.3	20429.9		204.3	20429.9		
7900	1197.4	1192.6	5.0	207.9			207.9				
					211.6	21161.8		211.6	21161.8		
8000	1197.9	1193.0	5.0	215.3			215.3				
Subtotal						114138.6			114138.6	8454.712	
8000	1197.9	1193.0	5.0	215.3			215.3				
					232.2	23222.0		232.2	23222.0		
8100	1198.4	1193.3	9.0	249.1			249.1				
					253.2	25323.3		253.2	25323.3		
8200	1198.9	1193.7	9.0	257.3			257.3				
					261.5	26149.0		261.5	26149.0		
8300	1199.4	1194.0	9.0	265.6			265.6				
					269.9	26986.0		269.9	26986.0		
8400	1199.9	1194.4	9.0	274.1			274.1				
					278.3	27834.2		278.3	27834.2		
8500	1200.4	1194.7	9.0	282.6			282.6				
					286.9	28693.7		286.9	28693.7		
8600	1200.9	1195.1	9.0	291.3			291.3				
					295.6	29564.4		295.6	29564.4		
8700	1201.4	1195.4	9.0	300.0			300.0				
Subtotal						187772.6			187772.6	13909.08	
8700	1201.4	1195.4	9.0	300.0			300.0				
					298.6	29855.9		298.6	29855.9		
8800	1201.9	1196.0	9.0	297.1			297.1				
					295.6	29563.1		295.6	29563.1		
8900	1202.4	1196.5	9.0	294.2			294.2				
					292.7	29271.6		292.7	29271.6		
9000	1202.9	1197.1	9.0	291.3			291.3				
					289.8	28981.4		289.8	28981.4		
9100	1203.4	1197.6	9.0	288.4			288.4				
					286.9	28692.4		286.9	28692.4		
9200	1203.9	1198.2	9.0	285.5			285.5				
					284.5	20196.8		284.5	20196.8		
9271	1204.2	1198.5	9.0	283.4			283.4				
					141.7	3401.3		141.7	3401.3		
9295	1204.4	1198.7		0.0			0.0				
9300	1204.4									GCS	

9400	1204.9										
9405	1204.9										
9471	1205.2	1201.3		0.0			0.0				
					85.3	2472.5		85.3	2472.5		
9500	1205.4	1201.4	5.0	170.5			170.5				
					170.5	17051.5		170.5	17051.5		
9600	1205.9	1201.9	5.0	170.5			170.5				
					170.5	17051.5		170.5	17051.5		
9700	1206.4	1202.4	5.0	170.5			170.5				
Subtotal						206538.1			206538.1	15299.12	
9700	1206.4	1202.4	5.0	170.5			170.5				
					170.5	17051.5		170.5	17051.5		
9800	1206.9	1202.9	5.0	170.5			170.5				
					181.5	18148.5		181.5	18148.5		
9900	1207.4	1203.4	9.0	192.5			192.5				
					192.5	19245.5		192.5	19245.5		
10000	1207.9	1203.9	9.0	192.5			192.5				
					192.5	4811.4		192.5	4811.4		
10025	1208.0	1204.0	9.0	192.5			192.5				
					192.5	14434.1		192.5	14434.1		
10100	1208.4	1204.4	9.0	192.5			192.5				
					219.9	21993.0		219.9	21993.0		
10200	1208.9	1204.4	14.0	247.4			247.4				
					261.8	26179.2		261.8	26179.2		
10300	1209.4	1204.4	14.0	276.2			276.2				
					291.2	29119.2		291.2	29119.2		
10400	1209.9	1204.4	14.0	306.2			306.2				
					321.8	32184.2		321.8	32184.2		
10500	1210.4	1204.4	14.0	337.5			337.5				
					353.7	35374.2		353.7	35374.2		
10600	1210.9	1204.4	14.0	370.0			370.0				
					386.9	38689.2		386.9	38689.2		
10700	1211.4	1204.4	14.0	403.8			403.8				
Subtotal						257230.2			257230.2	19054.09	
10700	1211.4	1204.4	14.0	403.8			403.8				
					421.3	42129.2		421.3	42129.2		
10800	1211.9	1204.4	14.0	438.8			438.8				
					219.4	21940.2		219.4	21940.2		
10900	1212.4	1195.0	17.0	0.0			0.0				
11000	1212.9	1193.2	17.0								
										GCS	
11095	1213.4		17.0								
11100	1216.9	1212.3	12.0								
11150	1217.0	1212.4		0.0			0.0				
					96.5	4826.7		96.5	4826.7		

11200	1217.0	1212.5	5.0	193.1			193.1				
					192.0	5760.2		192.0	5760.2		
11230	1217.0	1212.6	5.0	190.9			190.9				
					190.7	1525.3		190.7	1525.3		
11238	1217.0	1212.6	5.0	190.4			190.4				
					188.2	11669.0		188.2	11669.0		
11300	1217.1	1212.8	5.0	186.0			186.0				
					186.0	930.0		186.0	930.0		
11305	1217.1	1212.8	5.0	186.0			186.0				
					185.9	929.7		185.9	929.7		
11310	1217.1	1212.8	5.0	185.9			185.9				
					185.3	16674.3		185.3	16674.3		
11400	1217.3	1213.0	5.0	184.6			184.6				
					183.9	18394.9		183.9	18394.9		
11500	1217.5	1213.3	5.0	183.3			183.3				
					182.6	18256.3		182.6	18256.3		
11600	1217.8	1213.5	5.0	181.9			181.9				
					181.2	18118.2		181.2	18118.2		
11700	1218.0	1213.8	5.0	180.5			180.5				
Subtotal						161154.0			161154.0	11937.33	
11700	1218.0	1213.8	5.0	180.5			180.5				
					179.8	17980.5		179.8	17980.5		
11800	1218.2	1214.0	5.0	179.1			179.1				
					178.4	17843.2		178.4	17843.2		
11900	1218.4	1214.3	5.0	177.7			177.7				
					177.1	17706.4		177.1	17706.4		
12000	1218.6	1214.5	5.0	176.4			176.4				
					175.7	17570.1		175.7	17570.1		
12100	1218.9	1214.8	5.0	175.0			175.0				
					174.3	17434.2		174.3	17434.2		
12200	1219.1	1215.0	5.0	173.7			173.7				
					173.0	17298.7		173.0	17298.7		
12300	1219.3	1215.3	5.0	172.3			172.3				
					171.6	17163.7		171.6	17163.7		
12400	1219.5	1215.5	5.0	171.0			171.0				
					85.5	8548.2		85.5	8548.2		
12500	1219.7	1215.8	5.0	0.0			0.0				
12600	1220.0	1216.0	5.0							GCS	
12645	1220.1	1216.1	5.0								
12650	1221.0	1216.2	12.0								
12660	1221.0	1217.0									
12700	1221.1	1217.1	7.0	0.0			0.0				
Subtotal						131544.9			131544.9	9744.063	
12700	1221.1	1217.1	7.0	0.0			0.0				
					91.1	7651.9		91.1	7651.9		
12784	1221.3	1217.3	7.0	182.2			182.2				

					182.2	2915.0		182.2	2915.0	XISTING	
12800	1221.3	1217.3	7.0	182.2			182.2			CSA	
12822	1221.3	1217.3	7.0								
12853	1221.4	1217.4	7.0								
12884	1221.5	1217.5	7.0								
12900	1221.5	1217.5	7.0								
12981	1221.7	1217.7	7.0								
13000	1221.7	1217.7	7.0								
13050	1221.8	1217.8	5.0								
13100	1221.9	1217.9	5.0								
13131	1222.0	1218.0	5.0								
13200	1222.1	1218.1	5.0								
13206	1222.1	1218.1	5.0								
13300	1222.3	1218.3	9.0								
13400	1222.5	1218.5	9.0	193.2			193.2				
					182.2	18218.8		182.2	18218.8		
13500	1222.7	1218.7	5.0	171.2			171.2				
					171.2	17118.8		171.2	17118.8		
13600	1222.9	1218.9	5.0	171.2			171.2				
					171.2	17118.8		171.2	17118.8		
13700	1223.1	1219.1	5.0	171.2			171.2				
Subtotal						63023.1			63023.1	4668.38	
13700	1223.1	1219.1	5.0	171.2			171.2				
					171.2	17118.8		171.2	17118.8		
13800	1223.3	1219.3	5.0	171.2			171.2				
					171.2	17118.8		171.2	17118.8		
13900	1223.5	1219.5	5.0	171.2			171.2				
					171.2	17118.8		171.2	17118.8		
14000	1223.7	1219.7	5.0	171.2			171.2				
					171.2	17118.8		171.2	17118.8		
14100	1223.9	1219.9	5.0	171.2			171.2				
					171.2	17118.8		171.2	17118.8		
14200	1224.1	1220.1	5.0	171.2			171.2				
					171.2	17118.8		171.2	17118.8		
14300	1224.3	1220.3	5.0	171.2			171.2				
					182.2	18218.8		182.2	18218.8		
14400	1224.5	1220.5	9.0	193.2			193.2				
					193.2	9659.4		193.2	9659.4		
14450	1224.6	1220.6	9.0	193.2			193.2				

					195.5	9776.0		195.5	9776.0		
14500	1224.7	1220.6	9.0	197.9			197.9				
					202.6	20258.7		202.6	20258.7		
14600	1224.9	1220.6	9.0	207.3			207.3				
					212.1	21214.4		212.1	21214.4		
14700	1225.1	1220.6	9.0	217.0			217.0				
Subtotal						181839.7			181839.7	13469.6	
14700	1225.1	1220.6	9.0	217.0			217.0				
					231.1	23112.9		231.1	23112.9		
14800	1225.3	1220.6	12.0	245.3			245.3				
					250.6	25057.9		250.6	25057.9		
14900	1225.5	1220.6	12.0	255.9			255.9				
					261.2	26124.8		261.2	26124.8		
15000	1225.7	1220.7	12.0	266.6			266.6				
					272.1	27209.7		272.1	27209.7		
15100	1225.9	1220.7	12.0	277.6			277.6				
					283.1	28312.6		283.1	28312.6		
15200	1226.1	1220.7	12.0	288.7			288.7				
					144.3	14434.3		144.3	14434.3		
15300	1226.3	1220.7	12.0	0.0			0.0				
15400	1226.5	1220.7	12.0								
										GCS	
15495	1226.7	1220.7	12.0								
15500	1228.5	1220.7	12.0								
15550	1228.5	1224.6	18.0	45.0			45.0				
					44.0	2200.0		44.0	2200.0		
15600	1229.0	1224.8	16.0	43.0			43.0				
					37.5	3750.0		37.5	3750.0		
15700	1229.5	1225.3	16.0	32.0			32.0				
Subtotal						150202.1			150202.1	11126.08	
15700	1229.5	1225.3	16.0	32.0			32.0				
					32.0	3200.0		32.0	3200.0		
15800	1229.9	1225.8	16.0	32.0			32.0				
					32.0	3200.0		32.0	3200.0		
15900	1230.4	1226.3	16.0	32.0			32.0				
					32.0	3200.0		32.0	3200.0		
16000	1230.9	1226.8	16.0	32.0			32.0				
					32.0	3200.0		32.0	3200.0		
16100	1231.4	1227.3	16.0	32.0			32.0				
					46.0	2300.0		46.0	2300.0		
16150	1231.6	1227.6		60.0			60.0				
					136.8	6840.5		136.8	6840.5		
16200	1231.9	1227.6	10.0	213.6			213.6				
					225.4	22542.5		225.4	22542.5		
16300	1232.3	1227.6	10.0	237.2			237.2				
					249.5	24954.5		249.5	24954.5		
16400	1232.8	1227.6	10.0	261.9			261.9				
					274.7	27467.8		274.7	27467.8		

16500	1233.3	1227.7	10.0	287.5			287.5				
					300.8	30082.3		300.8	30082.3		
16600	1233.8	1227.7	10.0	314.1			314.1				
					328.0	32798.0		328.0	32798.0		
16700	1234.3	1227.7	10.0	341.8			341.8				
Subtotal						159785.5			159785.5	11835.96	
16700	1234.3	1227.7	10.0	341.8			341.8				
					356.2	35615.0		356.2	35615.0		
16800	1234.7	1227.7	10.0	370.5			370.5				
					385.3	38533.3		385.3	38533.3		
16900	1235.2	1227.8	10.0	400.2			400.2				
					392.0	39204.0		415.5	41552.8		
17000	1235.7	1227.8	5.0	383.9			430.9				
					408.5	40848.0		446.7	44673.5		
17100	1236.2	1227.8	7.0	433.1			462.6				
					448.7	44874.5		504.7	50469.3		
17200	1236.7	1227.9	7.0	464.4			546.8				
					330.7	33071.7		564.8	56478.8		
17300	1237.1	1227.9	15.0	197.0			197.0				
					156.0	15600.0		601.3	60128.3		
17400	1237.6	1227.9	15.0	115.0			115.0				
					120.0	12000.0		662.1	66208.0		
17500	1238.1	1228.0	19.0	125.0			125.0				
					130.0	13000.0		724.8	72479.0		
17600	1238.6	1228.0	19.0	135.0			135.0				
					140.0	14000.0		766.1	76612.3		
17700	1239.1	1228.0	19.0	145.0			145.0				
Subtotal						286746.4			542750.1	30722.09	
Total (cu ft)						1899975			2155979		
Total (Cu yd)						70369			79851		
173-177 closed bottom											

GRADE CONTROL EXCAVATION VOLUME Phase II 100% submittal

6/25/98 10:23

				Downstream						Upstream	
	L1	Toe Depth	Channel Width at Invert	Channel Width at Toe	Grade Control Excavation	L2	Crest Length	Tow Depth	Channel Width at Invert	Channel Width at Toe	Grade Control Excavation
	FT	FT	FT	FT	CY	FT	FT	FT	FT	FT	CY
Bell Road	185	12.7	190	150	14,285	282	225	6	190	250	5,669
69th Ave	190	19.7	152	43	12,816	28	10	6	152	116	1,183
67th Ave	128	13.8	147	46	5,973	28	10	6	147	111	1,139
Sta 155	227	4.7	60	10	1,369	28	10	6	60	24	382
71st Ave Ch	115	4.2	60	8	597	22	10	4	60	36	269
Total Volume					35,040						8,643

Area1=column volume which base is trapezoil area

Area 2 = Cone area at both side.

Area 3= crest area

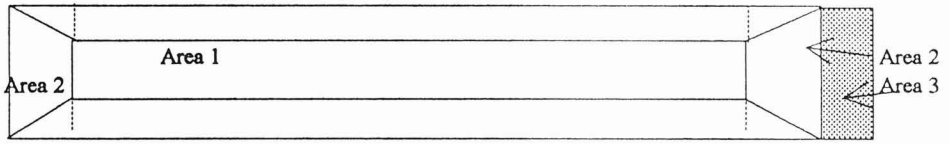

EXTRA FILL FOR PHASE II

Project: Skunk Creek Final Design 100% Summital

		NORTH BANK			SOUTH BANK			
Station	Distance	Area	Average	Volume	Area	Average	Volume	
7412		0			0			
	23		0	0		0	0	
7435		0			0			
	65		0	0		0	0	
7500		0			0			
	100		0	0		0	0	
7600		0			0			
	100		0	0		0	0	
7700		0			0			
	100		0	0		0	0	
7800		0			0			
	100		0	0		0	0	
7900		0			0			
	100		0	0		0	0	
8000		0			0			
Subtotal				**0**			**0**	**0**
8000		0			0			
	100		0	0		0	0	
8100		0			0			
	100		0	0		0	0	
8200		0			0			
	100		0	0		0	0	
8300		0			0			
	100		0	0		0	0	
8400		0			0			
	100		0	0		0	0	
8500		0			0			
	100		0	0		0	0	
8600		0			0			
	100		0	0		0	0	
8700		0			0			
Subtotal				**0**			**0**	**0**
8700		0			0			
	100		0	0		0	0	
8800		0			0			
	100		0	0		0	0	
8900		0			0			
	100		0	0		0	0	
9000		0			0			
	100		0	0		0	0	
9100		0			0			
	100		0	0		0	0	
9200		0			0			
	100		0	0		0	0	
9300		0			0			
	100		0	0		0	0	
9400		0			0			
	100		0	0		0	0	
9500		0			0			
	100		0	0		0	0	
9600		0			0			
	100		0	0		0	0	
9700		0			0			
Subtotal				**0**			**0**	**0**
9700		0			0			
	100		0	0		0	0	
9800		0			0			
	100		0	0		0	0	
9900		0			0			
	100		0	0		0	0	
10000		0			0			
	100		0	0		0	0	
10100		0			0			
	100		0	0		0	0	
10200		0			0			
	100		0	0		8	800	
10300		0			16			
	100		0	0		59	5850	

		NORTH BANK			SOUTH BANK			
Station	Distance	Area	Average	Volume	Area	Average	Volume	
10400		0			101			
	100		0	0		193	19300	
10500		0			285			
	100		0	0		302	30200	
10600		0			319			
	100		0	0		414	41400	
10700		0			509			
Subtotal				**0**			**97,550**	**3612.96**
10700		0			509			
	100		0	0		510	51000	
10800		0			511			
	100		0	0		516	51550	
10900		0			520			
	100		0	0		471	47050	
11000		0			589			
	100		0	0		374	37350	
11100		0			352			
	100		0	0		374	37350	
11200		0			395			
	100		0	0		682	68150	
11300		0			968			
	100		19	1900		484	48400	
11400		38			0			
	100		27	2650		0	0	
11500		15			0			
	100		36	3550		0	0	
11600		56			0			
	100		78	7800		0	0	
11700		100			0			
Subtotal				**15,900**			**340,850**	**13213**
11700		100			0			
	100		213	21250		0	0	
11800		325			0			
	100		274	27400		0	0	
11900		223			0			
	100		112	11150		0	0	
12000		0			0			
	100		0	0		0	0	
12100		0			0			
	100		0	0		0	0	
12200		0			0			
	100		0	0		0	0	
12300		0			0			
	100		0	0		0	0	
12400		0			0			
	100		0	0		0	0	
12500		0			0			
	100		0	0		0	0	
12600		0			0			
	100		0	0		0	0	
12700		0			0			
Subtotal				**59,800**			**0**	**2214.81**
12700		0			0			
	100		0	0		0	0	
12800		0			0			
	100		0	0		0	0	
12900		0			0			
	100		0	0		0	0	
13000		0			0			
	100		0	0		0	0	
13100		0			0			
	100		0	0		0	0	
13200		0			0			
	100		0	0		0	0	
13300		0			0			
	100		0	0		0	0	
13400		0			0			
	100		0	0		0	0	
13500		0			0			
	100		0	0		0	0	
13600		0			0			
	100		0	0		0	0	

		NORTH BANK			SOUTH BANK		
Station	Distance	Area	Average	Volume	Area	Average	Volume
13700		0			0		
Subtotal				**0**			**0**
13700							
	100			0			0
13800							
	100			0			0
13900							
	100			0			0
14000							
	100			0			0
14100							
	100			0			0
14200							
	100			0			0
14300							
	100			0			0
14400							
	100			0			0
14500							
	100			0			0
14600							
	100			0			0
14700							
Subtotal				0			**0**
14700							
	100			0			0
14800							
	100			0			0
14900							
	100			0			0
15000							
	100			0			0
15100							
	100			0			0
15200							
	100			0			0
15300							
	100			0			0
15400							
	100			0			0
15500							
	100			0			0
15600							
	100			0			0
15700							
Subtotal				**0**			**0**
15700							
	100			0			0
15800							
	100			0			0
15900							
	100			0			0
16000							
	100			0			0
16100							
	100			0			0
16200							
	100			0			0
16300							
	100			0			0
16400							
	100			0			0
16500							
	100			0			0
16600							
	100			0			0
16700							
Subtotal				**0**			**0**
16700							
	100			0			0
16800							

		NORTH BANK			SOUTH BANK			
Station	Distance	Area	Average	Volume	Area	Average	Volume	
	100			0			0	
16900								
	100			0			0	
17000								
	100			0			0	
17100								
	100			0			0	
17200								
	100			0			0	
17300								
	100			0			0	
17400								
	100			0			0	
17500								
	100			0			0	
17600								
	100			0			0	
17700								
Subtotal				**0**			**0**	
Total Volume (Cubic Ft)				75,700			438,400	
Total Volume (Cubic Yd				2,804			16,237	

Bank Protection Gabion Volume Phase II 100% Submittal

6/25/98 15:49

[illegible]on	Top of Bank Elevation N. Bank	Top of Bank Elevation S. Bank	Design Invert	Top of Apron Elevation	Apron Length	North Bank Gabion Length	North Bank Gabion Average	North Bank Gabion Volume	South Bank Gabion Length	South Bank Gabion Average	South Bank Gabion Volume			9" Gabions	
74+40	*1207.8*	*1207.8*	*1194.9*	*1190.9*	0	28.7			40.6			18" gabion closed bottom			
							33.4	1901.9		39.3	2240.6	7581	CF		
75+16	1208.2	1208.2	*1195.4*	1191.2	0	38.0			38.0			281	CY		
							40.3	2540.3		40.3	2540.3				
76+00	1208.4	1208.4	*1195.9*	1191.6	5	42.6			42.6			Counterfort			
							42.4	3178.1		50.1	3755.2	sta74+40 3X3			
77+00	1208.5	1208.5	*1196.4*	1191.9	5	42.2			57.5			36	CY		
							49.5	3714.7		57.2	4291.8				
78+00	1208.7	1208.7	*1196.9*	1192.3	5	56.9			56.9			sta75+16 6X3			
							56.6	4244.3		56.6	4244.3	54	CY		
79+00	1208.8	1208.8	*1197.4*	1192.6	5	56.3			56.3						
							56.0	4196.9		56.0	4196.9				
80+00	1209.0	1209.0	*1197.9*	1193.0	5	55.6			55.6						
Subtotal								19776.2			21269.0			1520.195	CY
80+00	1209.0	1209.0	*1197.9*	1193.0	5	55.6			55.6						
							57.3	4299.5		57.3	4299.5				
81+00	1209.1	1209.1	*1198.4*	1193.3	9	59.0			59.0						
							58.7	4402.0		58.7	4402.0				
82+00	1209.3	1209.3	*1198.9*	1193.7	9	58.4			58.4						
							58.1	4354.6		58.1	4354.6				
83+00	1209.4	1209.4	*1199.4*	1194.0	9	57.7			57.7						
							57.4	4307.2		57.4	4307.2				
84+00	1209.6	1209.6	*1199.9*	1194.4	9	57.1			57.1						
							56.8	4259.7		56.8	4259.7				
85+00	1209.7	1209.7	*1200.4*	1194.7	9	56.5			56.5						
							56.2	4212.3		56.2	4212.3				
86+00	1209.9	1209.9	*1200.9*	1195.1	9	55.8			55.8						
							55.5	4164.9		55.5	4164.9				
87+00	1210.0	1210.0	*1201.4*	1195.4	9	55.2			55.2						
Subtotal								30000.1			30000.1			2222.227	CY
87+00	1210.0	1210.0	*1201.4*	1195.4	9	55.2			55.2						
							55.1	4135.2		55.1	4135.2				
88+00	1210.5	1210.5	*1201.9*	1196.0	9	55.1			55.1						
							55.0	4123.3		55.0	4123.3				
[illegible]00	1211.0	1211.0	*1202.4*	1196.5	9	54.9			54.9						
							54.8	4111.5		54.8	4111.5				
[illegible]+00	1211.5	1211.5	*1202.9*	1197.1	9	54.7			54.7						
							54.7	4099.6		54.7	4099.6				
91+00	1212.0	1212.0	*1203.4*	1197.6	9	54.6			54.6						
							54.5	4087.8		54.5	4087.8				
92+00	1212.5	1212.5	*1203.9*	1198.2	9	54.4			54.4						
							45.4	2415.3		54.4	2895.1				
92+71	*1212.9*	*1212.9*	*1204.2*	1198.5	9	36.3			54.3			92+71-94+71			
							31.8	572.2		40.8	734.4	18" gabions			
92+95	*1213.0*	*1213.0*	*1204.4*	1198.7		27.3			27.3			0.0	cu ft		
							27.3	102.3		27.3	102.3	0	cu yard		
93+00	1213.0	1213.0	*1204.4*			27.3			27.3						
							27.3	2046.8		27.3	2046.8				
94+00	1213.5	1213.5	*1204.9*			27.3			27.3						
							27.3	102.3		27.3	102.3				
94+05	*1213.5*	*1213.5*	*1204.9*			27.3			27.3						
							27.3	1350.9		27.3	1350.9				
94+71	*1213.9*	*1213.9*	*1205.2*	1201.3		27.3			27.3						
							13.6	296.8		36.1	785.0				
95+00	1214.0	1214.0	*1205.4*	1201.4	5	0.0			44.9						
							0.0	0.0		44.9	3366.9	existing bank			
96+00	1214.5	1214.5	*1205.9*	1201.9	5	0.0			44.9			95+00-100+00			
							0.0	0.0		44.9	3366.9				
97+00	1215.0	1215.0	*1206.4*	1202.4	5	0.0			44.9						
Subtotal								27444.1			35308.1			2324.155	CY
97+00	1215.0	1215.0	*1206.4*	1202.4	5	0.0			44.9						
							0.0	0.0		44.9	3366.9				
98+00	1215.5	1215.5	*1206.9*	1202.9	5	0.0			44.9						
							0.0	0.0		46.9	3516.9				
99+00	1216.0	1216.0	*1207.4*	1203.4	9	0.0			48.9						
							0.0	0.0		48.9	3666.9				
100+00	1216.5	1216.5	*1207.9*	1203.9	9	0.0			48.9						
							24.4	458.4		48.9	916.7				
100+25	*1216.6*	*1216.6*	*1208.0*	1204.0	9	48.9			48.9						
							48.9	2750.2		48.9	2750.2				
101+00	1217.0	1217.0	*1208.4*	1204.4	9	48.9			48.9						
							52.2	3913.7		52.2	3913.7				
[illegible]00	1217.5	1217.5	*1208.9*	1204.4	14	55.5			55.5						
							56.3	4219.8		56.3	4219.8				
[illegible]00	1218.0	1218.0	*1209.4*	1204.4	14	57.1			57.1						
							57.8	4338.4		57.8	4338.4				

Station	Top of Bank		Design	Top of Apron	Apron	North Bank			South Bank					9" Gabions	
	Bank Elevation		Invert	Elevation	Length		Gabion			Gabion					
	N. Bank	S. Bank				Length	Average	Volume	Length	Average	Volume				
00	1218.5	1218.5	1209.9	1204.4	14	58.6			58.6						
							59.4	4457.0		60.5	4540.0				
105+00	1219.0	1219.7	1210.4	1204.4	14	60.2			62.4						
							61.0	4575.5		64.3	4824.6				
106+00	1219.5	1220.9	1210.9	1204.4	14	61.8			66.2						
							62.6	4694.1		68.1	5109.2				
107+00	1220.0	1222.1	1211.4	1204.4	14	63.4			70.0						
Subtotal								29407.0			41163.2			2613.714	CY
107+00	1220.0	1222.1	1211.4	1204.4	14	63.4			70.0						
							64.2	4812.7		71.9	5393.8				
108+00	1220.5	1223.3	1211.9	1204.4	14	65.0			73.8			109+10-111+28			
							47.8	3942.3		56.1	4627.1	18" gabions			
109+10	1222.1	1224.5	1212.4	1195.0	17	30.6			38.4			23461.3	cu ft		
							32.3	2904.4		39.5	3551.9	869	cu yard		
110+30	1223.6	1225.7	1212.9	1193.2	17	33.9			40.6						
							35.5	1731.0		41.6	2029.1				
110+95	1225.1	1226.9	1213.4		17	37.1			42.7						
							31.6	118.5		37.2	139.4				
111+00	1225.2	1226.9	1216.9	1212.3	12	26.1			31.7						
							27.3	572.9		32.5	683.3				
111+28	1225.9	1227.5	1217.0	1212.4		28.4			33.4						
							39.2	2114.1		43.9	2368.2				
112+00	1226.7	1228.1	1217.0	1212.5	5	49.9			54.3						
							57.4	1292.3		27.1	610.9	69th. Ave Terminals			
112+30	1227.2	1228.5	1217.0	1212.6	5	65.0			0.0						
							65.0	6337.5		0.0	0.0				
112+38	1227.3	1228.6	1217.0	1212.6	5	65.0			0.0						
							0.0	0.0		0.0	0.0				
113+00	1228.3	1229.3	1217.1	1212.8	5	0.0			0.0						
							0.0	0.0		0.0	0.0				
113+05	1228.3	1229.3	1217.1	1212.8	5	0.0			65.0						
							0.0	0.0		65.0	6825.0				
113+10	1228.3	1229.3	1217.1	1212.8	5	0.0			65.0						
							19.9	1341.5		53.5	3610.7	PVC Coated			
114+00	1228.6	1229.6	1217.3	1213.0	5	39.7			42.0						
							39.8	2985.3		42.0	3148.8				
115+00	1228.9	1229.8	1217.5	1213.3	5	39.9			42.0						
							39.9	2993.7		42.0	3148.8	station 113+00-128+00			
00	1229.2	1230.1	1217.8	1213.5	5	40.0			42.0			pvc			
							47.3	3547.1		49.6	3723.3	14036			
117+00	1229.5	1230.3	1218.0	1213.8	5	54.6			57.3						
Subtotal								14791.8			33995.1			1806.923	CY
117+00	1229.5	1230.3	1218.0	1213.8	5	54.6			57.3						
							54.7	4102.1		57.3	4297.8				
118+00	1229.8	1230.6	1218.2	1214.0	5	54.8			57.3						
							54.9	4114.0		57.3	4297.8				
119+00	1230.1	1230.8	1218.4	1214.3	5	54.9			57.3						
							55.0	4125.9		57.3	4297.8				
120+00	1230.4	1231.1	1218.6	1214.5	5	55.1			57.3						
							55.2	4137.7		57.3	4297.8				
121+00	1230.7	1231.3	1218.9	1214.8	5	55.2			57.3						
							55.3	4149.6		57.3	4297.8				
122+00	1231.0	1231.6	1219.1	1215.0	5	55.4			57.3						
							55.5	4161.4		57.3	4297.8	pvc			
123+00	1231.3	1231.8	1219.3	1215.3	5	55.6			57.3			36164.9			
							55.6	4173.3		57.3	4297.8				
124+00	1231.6	1232.1	1219.5	1215.5	5	55.7			57.3						
							47.0	3527.5		48.5	3640.1	18" gabions			
125+00	1231.9	1232.3	1219.7	1215.8	5	38.3			39.8			0.0	cu ft		
							38.5	3029.4		39.8	3135.3	0	cu yard		
126+05	1232.2	1232.6	1220.0	1216.0	5	38.6			39.9						
							38.7	1159.6		39.9	1196.5				
126+45	1232.3	1232.7	1220.1	1216.1	5	38.7			39.9						
							37.2	139.7		38.4	144.1				
126+50	1232.3	1232.7	1221.0	1216.2	12	35.8			37.0						
							35.8	268.5		37.0	277.3				
126+60	1232.3	1232.7	1221.0	1217.0		35.8			37.0						
							35.9	1076.3		37.0	1110.4				
127+00	1232.5	1232.8	1221.1	1217.1	7	35.9			37.0						
Subtotal								0.0			39568.4			1466.236	CY
127+00	1232.5	1232.8	1221.1	1217.1	7	35.9			37.0						
							45.9	2891.5		46.9	2957.0	pvc			
127+84	1232.7	1233.0	1221.3	1217.3	7	55.9			56.8						
							27.9	335.1		28.4	341.0	3226.6			
128+00	1232.8	1233.1	1221.3	1217.3	7										
							0.0	0.0		0.0	0.0	Counterfort			
22	1232.8	1233.1	1221.3	1217.3	7							station 128+20 3x3			
							0.0	0.0		0.0	0.0	25	CY		

Station	Top of Bank		Design	Top of Apron	Apron	North Bank			South Bank					9" Gabions	
	Bank Elevation		Invert	Elevation	Length	Gabion			Gabion						
	N. Bank	S. Bank				Length	Average	Volume	Length	Average	Volume				
...+53	1232.9	1233.2	1221.4	1217.4	7										
							0.0	0.0		0.0	0.0	station 134+00 3x3			
128+84	1233.0	1233.3	1221.5	1217.5	7							30	CY		
							0.0	0.0		0.0	0.0				
129+00	1233.1	1233.3	1221.5	1217.5	7							Existing CSA			
							0.0	0.0		0.0	0.0				
129+81	1233.6	1233.9	1221.7	1217.7	7										
							0.0	0.0		0.0	0.0	18" gabions pier protection			
130+00	1233.7	1234.0	1221.7	1217.7	7							9912	CF		
							0.0	0.0		0.0	0.0	367	CY		
130+50	1234.0	1234.4	1221.8	1217.8	5										
							0.0	0.0		0.0	0.0				
131+00	1234.4	1234.7	1221.9	1217.9	5							concrete wall			
							0.0	0.0		0.0	0.0		CY		
131+31	1234.6	1234.9	1222.0	1218.0	5										
							0.0	0.0		0.0	0.0				
132+00	1235.0	1235.4	1222.1	1218.1	5										
							0.0	0.0		0.0	0.0				
132+06	1235.1	1235.5	1222.1	1218.1	5										
							0.0	0.0		0.0	0.0				
133+00	1235.7	1236.1	1222.3	1218.3	9										
							0.0	0.0		0.0	0.0				
134+00	1236.3	1236.8	1222.5	1218.5	9										
							22.9	1719.1		23.5	1765.2				
135+00	1237.0	1237.5	1222.7	1218.7	5	45.8			47.1						
							46.3	3475.9		47.1	3530.4				
136+00	1237.6	1237.7	1222.9	1218.9	5	46.8			47.1						
							46.9	3517.8		47.1	3530.4				
137+00	1237.9	1237.9	1223.1	1219.1	5	47.0			47.1						
Subtotal								8712.7			12123.9			771.7281	CY
137+00	1237.9	1237.9	1223.1	1219.1	5	47.0			47.1						
							47.0	3526.2		47.1	3530.4				
138+00	1238.1	1238.1	1223.3	1219.3	5	47.1			47.1						
							47.1	3534.6		47.1	3530.4				
139+00	1238.4	1238.3	1223.5	1219.5	5	47.2			47.1						
							47.2	3542.9		47.1	3530.4				
...+00	1238.6	1238.5	1223.7	1219.7	5	47.3			47.1						
							47.4	3551.3		47.1	3530.4				
...00	1238.9	1238.7	1223.9	1219.9	5	47.4			47.1						
							47.5	3559.7		47.1	3530.4				
142+00	1239.1	1238.9	1224.1	1220.1	5	47.5			47.1						
							47.6	3568.1		47.1	3530.4				
143+00	1239.4	1239.1	1224.3	1220.3	5	47.6			47.1						
							49.7	3726.5		49.1	3680.4				
144+00	1239.6	1239.3	1224.5	1220.5	9	51.7			51.1						
							47.3	1772.6		46.6	1746.4				
144+50	1239.7	1239.4	1224.6	1220.6		42.8			42.1						
							47.4	1778.7		46.7	1750.4				
145+00	1239.9	1239.5	1224.7	1220.6	9	52.1			51.3						
							61.4	4602.4		60.3	4525.6				
146+00	1240.1	1239.7	1224.9	1220.6	9	70.7			69.4						
							71.0	5328.3		69.7	5227.5				
147+00	1240.4	1239.9	1225.1	1220.6	9	71.4			70.0						
Subtotal								36491.4			38112.6			2837.185	CY
147+00	1240.4	1239.9	1225.1	1220.6	9	71.4			70.0						
							73.3	5497.7		71.8	5385.1				
148+00	1240.6	1240.1	1225.3	1220.6	12	75.2			73.6						
							75.6	5667.1		73.9	5542.6				
149+00	1240.9	1240.3	1225.5	1220.6	12	75.9			74.2						
							76.3	5724.1		74.5	5587.7				
150+00	1241.1	1240.5	1225.7	1220.7	12	76.7			74.8						
							71.1	5331.0		70.0	5248.0				
151+00	1241.4	1241.3	1225.9	1220.7		65.5			65.1						
							71.8	5387.9		72.3	5423.5				
152+00	1241.6	1242.0	1226.1	1220.7	12	78.2			79.5						
							64.6	3487.8		65.8	3551.8	double 12" gabions			
152+72	1242.4	1242.8	1226.3	1220.7	12	51.0			52.1			99641.5	cu ft		
							51.9	4983.2		52.9	5081.9	3690	cu yard		
154+00	1243.2	1243.5	1226.5	1220.7	12	52.9			53.8						
							53.8	3630.3		54.6	3892.6				
154+95	1244.0	1244.2	1226.7	1220.7	12	54.7			55.5						
							51.9	194.5		52.7	197.5				
155+00	1244.0	1244.3	1228.5	1220.7	12	49.1			49.9						
							49.1	1031.4		49.9	1047.8				
156+28	1244.1	1244.3	1228.5		18	49.2			49.9						
							60.0	3238.8		60.7	3276.8				
...00	1244.8	1245.0	1229.0	1224.8	7.5	70.8			71.4						
							70.0	5251.3		70.6	5292.8				
157+00	1245.6	1245.8	1229.5	1225.3	5	69.2			69.7			double 12" gabions			

Station	Top of Bank		Design	Top of Apron	Apron	North Bank			South Bank					9" Gabions	
	Bank Elevation		Invert	Elevation	Length	Gabion			Gabion						
	N. Bank	S. Bank				Length	Average	Volume	Length	Average	Volume				
Subtotal								31095.6			30738.6	143059	cu ft	2290.157	CY
												5298	cu yard		
157+00	1245.6	1245.8	*1229.5*	1225.3	5	69.2			69.7						
							69.7	5228.7		70.1	5258.3				
158+00	1246.4	1246.5	*1229.9*	1225.8	5	70.2			70.5						
							70.7	5299.9		70.9	5317.6				
159+00	1247.2	1247.3	*1230.4*	1226.3	5	71.1			71.3						
							71.6	5371.0		71.7	5376.9				
160+00	1248.0	1248.0	*1230.9*	1226.8	5	72.1			72.1						
							72.6	5442.2		72.5	5436.2				
161+00	1248.8	1248.8	*1231.4*	1227.3	5	73.0			72.9						
							70.8	2654.0		70.6	2646.6				
161+50	*1249.2*	*1249.1*	*1231.6*	1227.6		68.5			68.3						
							74.1	2779.5		73.8	2769.1				
162+00	1249.6	1249.5	*1231.9*	1227.6	10	79.7			79.4						
							79.9	5995.0		79.8	5982.0				
163+00	1249.8	1249.8	*1232.3*	1227.6	10	80.1			80.1						
							80.3	6025.9		80.5	6034.2				
164+00	1249.9	1250.0	*1232.8*	1227.6	10	80.6			80.8						
							80.8	6056.7		81.2	6086.3				
165+00	1250.1	1250.3	*1233.3*	1227.7	10	81.0			81.5						
							81.2	6087.5		81.8	6138.5				
166+00	1250.3	1250.5	*1233.8*	1227.7	10	81.4			82.2						
							81.6	6118.4		82.5	6190.7				
167+00	1250.4	1250.8	*1234.3*	1227.7	10	81.8			82.9						
Subtotal								30283.5			30431.7			2248.711	CY
167+00	1250.4	1250.8	*1234.3*	1227.7	10	81.8			82.9						
							82.0	6149.2		83.2	6242.9				
168+00	1250.6	1251.0	*1234.7*	1227.7	10	82.2			83.6						
							82.4	6180.0		83.9	6295.1				
169+00	1250.7	1251.3	*1235.2*	1227.8	10	82.6			84.3						
							80.5	6035.8		82.1	6159.7				
170+00	1251.0	1251.5	*1235.7*	1227.8	5	78.3			80.0						
							65.1	4880.4		81.3	6099.4				
171+00	1242.0	1251.8	*1236.2*	1227.8	7	51.8			82.7						
							51.7	3881.0		67.2	5039.0				
172+00	1242.0	1242.0	*1236.7*	1227.9	7	51.7			51.7						
							53.0	3971.7		53.0	3971.7				
[illegible]00	1242.0	1242.0	*1237.1*	1229.6	15	54.2			54.2						
							51.4	3855.8		51.4	3855.8				
174+00	1244.0	1244.0	*1237.6*	1231.0	7.5	48.6			48.6						
							49.9	3745.6		49.9	3745.6				
175+00	1245.0	1245.0	*1238.1*	1231.0	7	51.3			51.3						
							52.4	3926.5		52.4	3926.5				
176+00	1246.0	1246.0	*1238.6*	1231.0	6	53.4			53.4						
							55.9	6586.2		55.9	6586.2				
177+57	1246.0	1246.0	*1239.1*	1231.0	11	58.4			58.4						
Subtotal								49212.1			51921.8			3745.7	CY
Total	(cu ft)				55428			279215			364653	40954	242700		
Total	(cu yard)		145		2053			10341			13506	1661	8989		
			Counterfort		pvc coated			9" Gabions			9" Gabions	18' Gabions	12" gabions		

* 170-177 just existing bank extension

GRADE CONTROL GABION VOLUME Phase II 100% submittal															6/25/98 13:36	
	Drop	Channel Close	Crest Length	L1	Toe Depth	Channel Width at Invert	Downstream Channel Width at Toe	Ramps length	Grade Control Gabion Vol.	Grade Control Shotcrete Area.	L2	Toe Depth	Channel Width at Invert	Upstream Channel Width at Toe	Grade Contro Gabion Vol.	Grade Control Shotcrete Area
	FT		FT	FT	FT	FT	FT	ft	CY	SY	FT	FT	FT	FT	CY	SY
Bell Road	0	0	225	185	12.7	190	150	285	3,732	6,990	282	6	190	250	292	584
69th Ave	3.5	0	10	190	19.7	152	43	287	1,795	3,111	28	6	152	116	160	320
67th Ave	1	0	10	128	13.8	147	46	215	1,025	1,691	28	6	147	111	155	310
Sta 155	2	30	10	227	4.7	60	10	68	834	1,555	28	6	60	24	63	126
71 Ave Channel	4.4	35	10	115	4.2	60	8	0	409	818	22	4	60	36	42	84
Total Volume	18"								6,960	14,164					649	1,425
	12"								1,112						84	

1' Soil Cover on Top of Bank Protection Gabion Phase II 100% Submittal

6/25/98 11:14

ion	op of Bank		Design	Top of Apron	Apron	North Bank			South Bank			
	Bank Elevation		Invert	Elevation	Length	Soil			Soil			
	N. Bank	S. Bank				Length	Average	Volume	Length	Average	Volume	
74+40	*1207.8*	*1207.8*	*1194.9*	*1190.9*	5	28.7			28.7			
							28.7	2180.3		28.7	2180.3	
75+16	1208.2	1208.2	*1195.4*	1191.2	5	28.7			28.7			
							28.3	2377.0		28.3	2377.0	
76+00	1208.4	1208.4	*1195.9*	1191.6	5	27.9			27.9			
							27.5	2751.5		33.1	3313.2	
77+00	1208.5	1208.5	*1196.4*	1191.9	5	27.1			38.4			
							32.2	3218.8		37.8	3780.5	
78+00	1208.7	1208.7	*1196.9*	1192.3	5	37.3			37.3			
							36.7	3669.8		36.7	3669.8	
79+00	1208.8	1208.8	*1197.4*	1192.6	5	36.1			36.1			
							35.6	3559.1		35.6	3559.1	
80+00	1209.0	1209.0	*1197.9*	1193.0	5	35.0			35.0			
Subtotal								17756.5			18880.0	1356.9
80+00	1209.0	1209.0	*1197.9*	1193.0	5	35.0			35.0			
							34.5	3448.5		34.5	3448.5	
81+00	1209.1	1209.1	*1198.4*	1193.3	9	33.9			33.9			
							33.4	3337.8		33.4	3337.8	
82+00	1209.3	1209.3	*1198.9*	1193.7	9	32.8			32.8			
							32.3	3227.1		32.3	3227.1	
83+00	1209.4	1209.4	*1199.4*	1194.0	9	31.7			31.7			
							31.2	3116.4		31.2	3116.4	
84+00	1209.6	1209.6	*1199.9*	1194.4	9	30.6			30.6			
							30.1	3005.7		30.1	3005.7	
85+00	1209.7	1209.7	*1200.4*	1194.7	9	29.5			29.5			
							29.0	2895.1		29.0	2895.1	
86+00	1209.9	1209.9	*1200.9*	1195.1	9	28.4			28.4			
							27.8	2784.4		27.8	2784.4	
87+00	1210.0	1210.0	*1201.4*	1195.4	9	27.3			27.3			
otal								21815.0			21815.0	1615.9
87+00	1210.0	1210.0	*1201.4*	1195.4	9	27.3			27.3			
							27.3	2729.0		27.3	2729.0	
88+00	1210.5	1210.5	*1201.9*	1196.0	9	27.3			27.3			
							27.3	2729.0		27.3	2729.0	
89+00	1211.0	1211.0	*1202.4*	1196.5	9	27.3			27.3			
							27.3	2729.0		27.3	2729.0	
90+00	1211.5	1211.5	*1202.9*	1197.1	9	27.3			27.3			
							27.3	2729.0		27.3	2729.0	
91+00	1212.0	1212.0	*1203.4*	1197.6	9	27.3			27.3			
							27.3	2729.0		27.3	2729.0	
92+00	1212.5	1212.5	*1203.9*	1198.2	9	27.3			27.3			
							27.3	1937.6		27.3	1937.6	
92+71	*1212.9*	*1212.9*	*1204.2*	1198.5	9	27.3			27.3			
							27.3	655.0		27.3	655.0	
92+95	*1213.0*	*1213.0*	*1204.4*	1198.7		27.3			27.3			
							27.3	136.5		27.3	136.5	
93+00	1213.0	1213.0	*1204.4*			27.3			27.3			
							27.3	2729.0		27.3	2729.0	
94+00	1213.5	1213.5	*1204.9*			27.3			27.3			
							27.3	136.5		27.3	136.5	
94+05	*1213.5*	*1213.5*	*1204.9*			27.3			27.3			
							27.3	1801.2		27.3	1801.2	
94+71	*1213.9*	*1213.9*	*1205.2*	1201.3		27.3			27.3			
							27.3	791.4		27.3	791.4	
95+00	1214.0	1214.0	*1205.4*	1201.4	5	27.3			27.3			
							27.3	2729.0		27.3	2729.0	
96+00	1214.5	1214.5	*1205.9*	1201.9	5	27.3			27.3			
							27.3	2729.0		27.3	2729.0	
97+00	1215.0	1215.0	*1206.4*	1202.4	5	27.3			27.3			
Subtotal								27290.5			27290.5	2021.5
00	1215.0	1215.0	*1206.4*	1202.4	5	27.3			27.3			
							27.3	2729.0		27.3	2729.0	
98+00	1215.5	1215.5	*1206.9*	1202.9	5	27.3			27.3			

Station	op of Bank Bank Elevation		Design Invert	Top of Apron Elevation	Apron Length	North Bank Soil			South Bank Soil			
	N. Bank	S. Bank				Length	Average	Volume	Length	Average	Volume	
							27.3	2729.0		27.3	2729.0	
99+00	1216.0	1216.0	1207.4	1203.4	9	27.3			27.3			
							27.3	2729.0		27.3	2729.0	
100+00	1216.5	1216.5	1207.9	1203.9	9	27.3			27.3			
							27.3	682.3		27.3	682.3	
100+25	1216.6	1216.6	1208.0	1204.0	9	27.3			27.3			
							27.3	2046.8		27.3	2046.8	
101+00	1217.0	1217.0	1208.4	1204.4	9	27.3			27.3			
							27.3	2729.0		27.3	2729.0	
102+00	1217.5	1217.5	1208.9	1204.4	14	27.3			27.3			
							27.3	2729.0		27.3	2729.0	
103+00	1218.0	1218.0	1209.4	1204.4	14	27.3			27.3			
							27.3	2729.0		27.3	2729.0	
104+00	1218.5	1218.5	1209.9	1204.4	14	27.3			27.3			
							27.3	2729.0		28.4	2839.7	
105+00	1219.0	1219.7	1210.4	1204.4	14	27.3			29.5			
							27.3	2729.0		30.6	3061.1	
106+00	1219.5	1220.9	1210.9	1204.4	14	27.3			31.7			
							27.3	2729.0		32.8	3282.4	
107+00	1220.0	1222.1	1211.4	1204.4	14	27.3			33.9			
Subtotal								27290.5			28286.6	2058.4
107+00	1220.0	1222.1	1211.4	1204.4	14	27.3			33.9			
							27.3	2729.0		35.0	3503.8	
108+00	1220.5	1223.3	1211.9	1204.4	14	27.3			36.1			
							29.0	2895.1		37.3	3725.2	
109+00	1222.1	1224.5	1212.4	1195.0	17	30.6			38.4			
							32.3	3227.1		39.5	3946.5	
110+00	1223.6	1225.7	1212.9	1193.2	17	33.9			40.6			
							35.5	3373.3		41.6	3954.2	
110+95	1225.1	1226.9	1213.4		17	37.1			42.7			
							31.6	158.1		37.2	185.9	
[illegible]+00	1225.2	1226.9	1216.9	1212.3	12	26.1			31.7			
							27.3	1364.1		32.5	1627.0	
111+50	1225.9	1227.5	1217.0	1212.4		28.4			33.4			
							29.6	1478.8		34.3	1714.0	
112+00	1226.7	1228.1	1217.0	1212.5	5	30.7			35.1			
							47.9	1435.8		17.6	527.2	
112+30	1227.2	1228.5	1217.0	1212.6	5	65.0			0.0			
							65.0	1040.0		0.0	0.0	
112+38	1227.3	1228.6	1217.0	1212.6	5	65.0			0.0			
							0.0	0.0		0.0	0.0	
113+00	1228.3	1229.3	1217.1	1212.8	5	0.0			0.0			
							0.0	0.0		0.0	0.0	
113+05	1228.3	1229.3	1217.1	1212.8	5	0.0			65.0			
							0.0	0.0		65.0	675.0	
113+10	1228.3	1229.3	1217.1	1212.8	5	0.0			65.0			
							12.6	1131.5		46.2	4157.1	
114+00	1228.6	1229.6	1217.3	1213.0	5	25.1			27.4			
							25.2	2523.4		27.4	2741.4	
115+00	1228.9	1229.8	1217.5	1213.3	5	25.3			27.4			
							25.4	2541.3		27.5	2748.1	
116+00	1229.2	1230.1	1217.8	1213.5	5	25.5			27.5			
							30.9	3091.1		33.3	3326.1	
117+00	1229.5	1230.3	1218.0	1213.8	5	36.3			39.0			
Subtotal								26988.5			32831.5	2215.6
117+00	1229.5	1230.3	1218.0	1213.8	5	36.3			39.0			
							36.4	3644.5		39.1	3905.4	
118+00	1229.8	1230.6	1218.2	1214.0	5	36.6			39.1			
							36.7	3669.8		39.1	3914.9	
119+00	1230.1	1230.8	1218.4	1214.3	5	36.8			39.2			
							37.0	3695.1		39.2	3924.4	
120+00	1230.4	1231.1	1218.6	1214.5	5	37.1			39.3			
							37.2	3720.4		39.3	3933.9	
[illegible]00	1230.7	1231.3	1218.9	1214.8	5	37.3			39.4			
							37.5	3745.7		39.4	3943.4	

Station	op of Bank		Design	Top of Apron	Apron	North Bank			South Bank			
	Bank Elevation		Invert	Elevation	Length		Soil			Soil		
	N. Bank	S. Bank				Length	Average	Volume	Length	Average	Volume	
122+00	1231.0	1231.6	*1219.1*	1215.0	5	37.6			39.5			
							37.7	3771.0		39.5	3952.8	
123+00	1231.3	1231.8	*1219.3*	1215.3	5	37.8			39.6			
							38.0	3796.3		39.6	3962.3	
124+00	1231.6	1232.1	*1219.5*	1215.5	5	38.1			39.7			
							38.2	3821.6		39.7	3971.8	
125+00	1231.9	1232.3	*1219.7*	1215.8	5	38.3			39.8			
							38.5	3846.9		39.8	3981.3	
126+00	1232.2	1232.6	*1220.0*	1216.0	5	38.6			39.9			
							38.7	1739.4		39.9	1794.7	
126+45	1232.3	1232.7	*1220.1*	1216.1	5	38.7			39.9			
							37.2	186.2		38.4	192.2	
126+50	1232.3	1232.7	1221.0	1216.2	12	35.8			37.0			
							35.8	358.0		37.0	369.7	
126+60	1232.3	1232.7	*1221.0*	1217.0		35.8			37.0			
							35.9	1435.0		37.0	1480.6	
127+00	1232.5	1232.8	*1221.1*	1217.1	7	35.9			37.0			
Subtotal								37430.1			39327.4	2842.9
127+00	1232.5	1232.8	*1221.1*	1217.1	7	35.9			37.0			
							36.1	3030.1		37.1	3117.4	
127+84	*1232.7*	*1233.0*	*1221.3*	1217.3	7	36.2			37.2			
							18.1	289.6		18.6	297.4	
128+00	1232.8	1233.1	*1221.3*	1217.3	7							
							0.0	0.0		0.0	0.0	
128+22	*1232.8*	*1233.1*	*1221.3*	1217.3	7							
							0.0	0.0		0.0	0.0	
128+53	*1232.9*	*1233.2*	*1221.4*	1217.4	7							
							0.0	0.0		0.0	0.0	
128+84	*1233.0*	*1233.3*	*1221.5*	1217.5	7							
							0.0	0.0		0.0	0.0	
[illegible]00	1233.1	1233.3	*1221.5*	1217.5	7							
							0.0	0.0		0.0	0.0	
[illegible]+81	*1233.6*	*1233.9*	*1221.7*	1217.7	7							
							0.0	0.0		0.0	0.0	
130+00	1233.7	1234.0	*1221.7*	1217.7	7							
							0.0	0.0		0.0	0.0	
130+50	*1234.0*	*1234.4*	*1221.8*	1217.8	5							
							0.0	0.0		0.0	0.0	
131+00	1234.4	1234.7	*1221.9*	1217.9	5							
							0.0	0.0		0.0	0.0	
131+31	*1234.6*	*1234.9*	*1222.0*	1218.0	5							
							0.0	0.0		0.0	0.0	
132+00	1235.0	1235.4	*1222.1*	1218.1	5							
							0.0	0.0		0.0	0.0	
132+06	*1235.1*	*1235.5*	*1222.1*	1218.1	5							
							0.0	0.0		0.0	0.0	
133+00	1235.7	1236.1	*1222.3*	1218.3	9							
							0.0	0.0		0.0	0.0	
134+00	1236.3	1236.8	*1222.5*	1218.5	9							
							15.9	1594.9		16.6	1656.4	
135+00	1237.0	1237.5	*1222.7*	1218.7	5	31.9			33.1			
							32.4	3240.1		33.1	3312.7	
136+00	1237.6	1237.7	*1222.9*	1218.9	5	32.9			33.1			
							33.0	3296.0		33.1	3312.7	
137+00	1237.9	1237.9	*1223.1*	1219.1	5	33.0			33.1			
Subtotal								11450.6			11696.7	857.3
137+00	1237.9	1237.9	*1223.1*	1219.1	5	33.0			33.1			
							33.1	3307.1		33.1	3312.7	
138+00	1238.1	1238.1	*1223.3*	1219.3	5	33.1			33.1			
							33.2	3318.3		33.1	3312.7	
139+00	1238.4	1238.3	*1223.5*	1219.5	5	33.2			33.1			
							33.3	3329.5		33.1	3312.7	
[illegible]+00	1238.6	1238.5	*1223.7*	1219.7	5	33.4			33.1			
							33.4	3340.7		33.1	3312.7	
[illegible]00	1238.9	1238.7	*1223.9*	1219.9	5	33.5			33.1			

Station	op of Bank		Design	Top of Apron	Apron	North Bank			South Bank			
	Bank Elevation		Invert	Elevation	Length		Soil			Soil		
	N. Bank	S. Bank				Length	Average	Volume	Length	Average	Volume	
							33.5	3351.9		33.1	3312.7	
142+00	1239.1	1238.9	*1224.1*	1220.1	5	33.6			33.1			
							33.6	3363.0		33.1	3312.7	
143+00	1239.4	1239.1	*1224.3*	1220.3	5	33.7			33.1			
							33.7	3374.2		33.1	3312.7	
144+00	1239.6	1239.3	*1224.5*	1220.5	9	33.8			33.1			
							33.8	1691.3		33.1	1656.4	
144+50	*1239.7*	*1239.4*	*1224.6*	1220.6		33.9			33.1			
							33.9	1694.1		33.1	1656.4	
145+00	1239.9	1239.5	*1224.7*	1220.6	9	33.9			33.1			
							41.0	4101.2		40.0	3998.8	
146+00	1240.1	1239.7	*1224.9*	1220.6	9	48.1			46.8			
							48.2	4819.3		46.8	4684.9	
147+00	1240.4	1239.9	*1225.1*	1220.6	9	48.3			46.8			
Subtotal								35690.7			35185.6	2625.0
147+00	1240.4	1239.9	*1225.1*	1220.6	9	48.3			46.8			
							48.4	4835.1		46.8	4684.9	
148+00	1240.6	1240.1	*1225.3*	1220.6	12	48.4			46.8			
							48.5	4850.9		46.8	4684.9	
149+00	1240.9	1240.3	*1225.5*	1220.6	12	48.6			46.8			
							48.7	4866.7		46.8	4684.9	
150+00	1241.1	1240.5	*1225.7*	1220.7	12	48.7			46.8			
							48.8	4882.6		47.7	4771.9	
151+00	1241.4	1241.3	*1225.9*	1220.7		48.9			48.6			
							49.0	4898.4		49.5	4945.8	
152+00	1241.6	1242.0	*1226.1*	1220.7	12	49.1			50.3			
							50.0	5001.1		51.2	5119.7	
153+00	1242.4	1242.8	*1226.3*	1220.7	12	51.0			52.1			
							51.9	5190.9		52.9	5293.7	
154+00	1243.2	1243.5	*1226.5*	1220.7	12	52.9			53.8			
							53.8	5107.1		54.6	5190.1	
-95	*1244.0*	*1244.2*	*1226.7*	1220.7	12	54.7			55.5			
							51.9	259.3		52.7	263.3	
155+00	1244.0	1244.3	*1228.5*	1220.7	12	49.1			49.9			
							49.1	491.1		49.9	499.0	
155+10	*1244.1*	*1244.3*	*1228.5*		18	49.2			49.9			
							49.6	4465.7		50.3	4529.1	
156+00	1244.8	1245.0	*1229.0*	1224.8	16	50.1			50.7			
							50.6	5058.1		51.1	5113.4	
157+00	1245.6	1245.8	*1229.5*	1225.3	16	51.1			51.6			
Subtotal								49907.1			49760.6	3692.1
157+00	1245.6	1245.8	*1229.5*	1225.3	16	51.1			51.6			
							51.6	5159.3		52.0	5198.8	
158+00	1246.4	1246.5	*1229.9*	1225.8	16	52.1			52.4			
							52.6	5260.4		52.8	5284.2	
159+00	1247.2	1247.3	*1230.4*	1226.3	16	53.1			53.3			
							53.6	5361.6		53.7	5369.5	
160+00	1248.0	1248.0	*1230.9*	1226.8	16	54.1			54.1			
							54.6	5462.8		54.5	5454.9	
161+00	1248.8	1248.8	*1231.4*	1227.3	16	55.1			55.0			
							55.4	2769.4		55.2	2759.5	
161+50	*1249.2*	*1249.1*	*1231.6*	1227.6		55.6			55.4			
							55.9	2794.7		55.6	2780.8	
162+00	1249.6	1249.5	*1231.9*	1227.6	10	56.1			55.8			
							55.6	5564.0		55.5	5546.6	
163+00	1249.8	1249.8	*1232.3*	1227.6	10	55.1			55.1			
							54.6	5462.8		54.7	5473.9	
164+00	1249.9	1250.0	*1232.8*	1227.6	10	54.1			54.4			
							53.6	5361.6		54.0	5401.2	
165+00	1250.1	1250.3	*1233.3*	1227.7	10	53.1			53.6			
							52.6	5260.4		53.3	5328.4	
166+00	1250.3	1250.5	*1233.8*	1227.7	10	52.1			52.9			
							51.6	5159.3		52.6	5255.7	
-00	1250.4	1250.8	*1234.3*	1227.7	10	51.1			52.2			
otal								53616.4			53853.6	3980.4

Station	op of Bank		Design	Top of Apron	Apron	North Bank			South Bank				
	Bank Elevation		Invert	Elevation	Length	Soil			Soil				
	N. Bank	S. Bank				Length	Average	Volume	Length	Average	Volume		
167+00	1250.4	1250.8	*1234.3*	1227.7	10	51.1			52.2				
							50.6	5058.1		51.8	5183.0		
168+00	1250.6	1251.0	*1234.7*	1227.7	10	50.1			51.5				
							49.6	4956.9		51.1	5110.2		
169+00	1250.7	1251.3	*1235.2*	1227.8	10	49.1			50.7				
							48.7	4872.3		50.4	5037.5		
170+00	1251.0	1251.5	*1235.7*	1227.8	5	48.4			50.0				
							33.4	2504.5		49.6	4964.8		
171+00	1242.0	1251.8	*1236.2*	1227.8	7	18.4			49.3				
							17.6	1323.4		33.1	3308.5		
172+00	1242.0	1242.0	*1236.7*	1227.9	7	16.9			16.9				
							16.1	1612.8		16.1	1209.6		
173+00	1242.0	1242.0	*1237.1*	1229.6	15	15.4			15.4				
							17.8	1777.2		17.8	1332.9		
174+00	1244.0	1244.0	*1237.6*	1231.0	7.5	20.2			20.2				
							21.0	2099.8		21.0	1574.8		
175+00	1245.0	1245.0	*1238.1*	1231.0	7	21.8			21.8				
							22.6	2264.2		22.6	1698.1		
176+00	1246.0	1246.0	*1238.6*	1231.0	6	23.5			23.5				
							22.7	2270.5		22.7	1702.9		
177+00	1246.0	1246.0	*1239.1*	1231.0	11	21.9			21.9				
Subtotal								28739.6			31122.3		2217.1
Total	(cu ft)							337975			350070		
Total	(cu yard)							12518			12966		

Concrete

wall: 310' long $A = 2 * 6/12 + 8/12 * 12/12$
$= 1.67\ ft^2$

$V = 310 \times 1.67 / 27 = 19.1\ (CY)$

~~Head~~ wall: Triple 60"
Concrete 10.4CY + 2 * ~~4.7~~ 4.8 = 20 CY

steel: 2 * 260 * 6.08 = 1128 lbs

Wall
#5 $23''/12 * 155 = 297'$ * 1.043 = 310 lbs

#4 $310 * 16''/12 = 413'$

$4 * 4 * 310' = 4960'$ > 5373 * 0.668 = 3589 lb

steel Total 5027 lbs
concrete 39 CY

APPENDIX H

CONSTRUCTION QUANTITIES

Phase I

Phase I

1) Special Excavation (Sect. 209)

Landfill + upstream 54th Ave

= 15,138 + 23,587 = 38,725 (CY)

2) Sect. 210.2 Borrow ~~(Type 2)~~

(3,478 + 3,261) * 1.1 = 7413 (CY)

3) Channel Excavation (Sect. 215)

Bank Excavation + Toe Excavation + G.C. Excavation

= (19,074 + 29,718) + (32,763 + 17,579) + (57,582)

= 156,716 (CY)

4) Sect. 210.1 Borrow (Type I)

Fill Avaiable = Sect. 215 = 156,716 (CY)

Fill Req'd = 1.1 x (Bank & Channel fill + Toe Exca + G.C. Exca)

= 1.1 x (43,234 + 50,342 + 57,582)

= 166,274 (CY)

Cover Req'd = 1.1 X (1' soil over gabion)

= 1.1 X (6145 + 6476)

= 13,883 (CY)

Sect. 210.1 Type I = (166,274 + 13,883) − 156,716

= 23,441 (CY)

18" Gabion Volume = (1,039 + 6,590 + 957)

= 8,586 (CY)

9" Gabion Volume = (6,623 + 5,677 + 680)

= 12,980 (CY)

9" PVC coated Gabion = 1,250 (CY)

Shotcrete = 15,095 (SY)

Total Borrow = 7,413 + 23,441

= 30,854 (CY)

This Volume will be borrowed from phase II
From Section 95+00 to Section 105+00
(Avaiable Cut 32,683 C.Y.)

Quantity Sheet by Sheet						
	Cut	fill	9" Gabions	18" Gabions	9" PVC Gabions	Shotcrete Area
	(CY)	(CY)	(CY)	(CY)	(CY)	(SY)
Sta: 177+00 to 187+00	4779	250	250	939		1541
Sta: 187+00 to 197+00	0	1122	1122			
Sta: 197+00 to 207+00	13929	11300	1251	2594	156	4856
Sta: 207+00 to 217+00	29693	9150	1563	1288	1094	2270
Sta: 217+00 to 227+00 NB	24605	2220	1302			
Sta: 217+00 to 227+00 SB	20617	1750	1194			
Sta: 227+00 to 237+00	26030	2814	2442	1159		1958
Sta: 237+00 to 247+00	10375	8290	2055			
Sta: 247+00 to 253+00	14891	15562	818	1155		1974
Sta: 253+00 to 258+60	8046	3396	463	893		1506
55th Ave Channel	3752	0	160	559		991
Total	156717	55854	12620	8587	1250	15096

1 foot Soil Cover on Top of Gabion Volume Phase I 100% Submittal

3/18/98 14:22

n	Top of Bank Bank Elevation		Design Invert	Top of Apron Elevation	Apron Length	North Bank Gabion				South Bank Gabion				
	N. Bank	S. Bank				Length	Average	Distance	Volume	Length	Average	Distance	Volume	
17700			1239.1			0				0				
							0.0	100	0		0.0	100	0	
17800			1239.5			0				0				
							0.0	100	0		0.0	100	0	
17900			1240.0			0				0				
							0.0	100	0		0.0	100	0	
18000			1246.0			0				0				
							0.0	100	0		0.0	100	0	
18100			1246.6			0				0				
							0.0	100	0		8.0	465	3720	
18200			1247.1			0				0				
							0.0	100	0		0.0	100	0	
18300			1247.6			0				0				
							0.0	100	0		0.0	100	0	
18400			1248.0			0				0				
							6.0	255	1530		0.0	100	0	
18500			1248.5			0				0				
							0.0	100	0		0.0	100	0	
18600			1249.0			0				0				
							0.0	100	0		10.0	150	1500	
18700			1249.5			0				0				
Subtotal									57				193	
18700			1249.5			0				0				
							6.0	105	630		10.0	105	1050	
18800			1250.5			0				0				
							10.0	495	4950		0.0	100	0	
18900			1251.0			0				0				
							0.0	100	0		0.0	100	0	
19000			1251.5			0				0				
							0.0	100	0		0.0	100	0	
19100			1251.8			0				0				
							0.0	100	0		16.0	495	7920	
0			1252.0			0				0				
							0.0	100	0		0.0	100	0	
19300			1252.5			0				0				
							18.0	150	2700		0.0	100	0	
19400			1253.0			0				0				
							0.0	100	0		25.0	250	6250	
19500			1253.8			0				0				
							20.0	100	2000		0.0	100	0	
19600			1254.2			0				0				
							12.0	150	1800		20.0	150	3000	
19700			1254.3	1244.3		0								
Subtotal									447				675	
19700	1266.3		1254.3	1244.3		37.9				0				
							37.6	100	3763		0.0	100	0	
19800	1266.3		1254.5	1240		37.3				0				Rebuild the bank
							36.4	100	3637		0.0	100	0	
19900	1266.3		1255.1	1240		35.4				0				
							35.3	40	1410		0.0	100	0	
19940	1266.3		1255.2	1242		35.1								
							23.5	100	2351		0.0	100	0	
20000		1268.3	1255.4			0				0				
							0.0	100	0		0.0	100	0	
20100		1268.5	1255.4		0.0	0				0				
							0.0	100	0		0.0	100	0	
20150		1268.6	1255.4	1251.3	4.5	0				41.7				start of S.B.
							0.0	100	0		27.9	100	2788	
20200		1268.7	1255.5	1251.5	4.5	0				41.9				
							0.0	100	0		41.5	100	4146	
20300		1268.9	1255.9	1251.9	4.5	0				41.0				
							0.0	100	0		40.6	100	4057	
20400		1269.1	1256.4	1252.3	4.5	0				40.1				
							0.0	100	0		39.7	100	3969	
20500		1269.3	1256.9	1252.7	4.5	0				39.2				
							0.0	100	0		38.8	100	3880	
0		1269.5	1257.4	1253.1	4.5	0				38.4				
							0.0	100	0		37.9	100	3792	PVC coated

Station	Top of Bank Bank Elevation N. Bank	S. Bank	Design Invert	Top of Apron Elevation	Apron Length	North Bank Gabion Length	Average	Distance	Volume	South Bank Gabion Length	Average	Distance	Volume		
20700		1269.7	1257.9	1253.5	4.5	0				37.5				140	
Subtotal									413				838		
20700		1269.7	1257.9	1253.5	4.5	0				37.5					
							3.0	100	450		37.0	100	3703		
20800		1269.9	1258.3	1253.9	8.9	0				36.6					
							0.0	100	0		36.1	100	3614		
20900		1270.1	1258.8	1254.3	8.9	0				35.7				PVC coated	
							10.0	223	3345		35.3	100	3526	973	
21000		1270.3	1259.3	1254.7	8.9	0				34.8					
							0.0	100	0		34.4	100	3437		
21100		1270.5	1259.8	1255.1	8.9	0				33.9					
							0.0	100	0		33.5	100	3349		
21200		1270.7	1260.3	1255.5	8.9	0				33.0					
							0.0	95.6			32.8	95.6	3137		
21295.6		1271.1	1260.8	1256.1	8.9	0				32.6				starting NW 57th	
							0.0	4.4	0		32.8	0	0		
21300		1271.1	1260.8	1256.1	8.9	0				32.7					
							0.0	100	0		29.2	188	5492		
21400		1272.1	1264.0	1256.7	8.9	0				25.7					
							0.0	100	0		28.4	197	5587		
21500		1273.8	1264.0	1257.3	8.9	0				31.0					
							0.0	100	0		31.3	100	3131		
21600		1274.0	1264.0	1257.9	8.9	0				31.6					
							0.0	100	0		34.1	100	3408		
21700	1274.1	1274.2	1262.7	1258.5	4.5	36.2				36.5					
Subtotal									141				1422		
21700	1274.1	1274.2	1262.7	1258.5	4.5	36.2				36.5					
							35.8	273	9764		36.1	100	3609		
21800	1274.3	1274.4	1263.1	1259.0	4.5	35.3				35.6					
							34.9	100	3488		35.2	100	3520		
21900	1274.5	1274.6	1263.6	1259.5	4.5	34.4				34.8					
							34.0	100	3399		34.3	100	3431		
[illegible]0	1274.7	1274.8	1264.1	1260.0	4.5	33.6				33.9					
							33.1	100	3311		33.4	100	3343		
22100	1274.9	1275.0	1264.6	1260.5	4.5	32.7				33.0					
							32.2	100	3222		32.5	100	3254		
22200	1275.1	1275.2	1265.1	1261.0	4.5	31.8				32.1					
							31.3	100	3134		31.7	100	3165		
22300	1275.3	1275.4	1265.5	1260.4	13.4	30.9				31.2					
							30.5	100	3045		30.8	100	3077		
22400	1275.5	1275.6	1266.0	1259.8	13.4	30.0				30.3					
							29.6	100	2957		29.9	100	2988		
22500	1275.7	1275.8	1266.5	1259.8	13.4	29.1				29.4					
							28.6	100	2863		29.0	100	2895		
22600	1275.9	1276.0	1267.0	1259.8	13.4	28.1				28.5					
							27.7	155.5	4303		29.6	100	2957	55th Ave. Chanel	
22700	1276.1	1277.2	1267.5	1259.8	13.4	27.2				30.7					
Subtotal									1462				1194		
22700	1276.1	1277.2	1267.5	1259.8	13.4	27.2				30.7					
							30.4	170	5161		31.8	100	3178		
22800	1278.5	1278.3	1267.9	1259.8	13.4	33.5				32.9					
							33.4	100	3336		32.7	100	3273		
22900	1278.9	1278.7	1268.4	1259.8	13.4	33.2				32.6					
							33.1	100	3306		32.4	100	3243		
23000	1279.3	1279.1	1268.9	1259.8	13.4	32.9				32.3					
							32.8	100	3279		32.2	100	3216		
23100	1279.7	1279.5	1269.4	1259.8	13.4	32.7				32.0					
							32.5	100	3254		31.9	100	3191		
23200	1280.1	1279.9	1269.9	1259.8	13.4	32.4				31.8					
							32.3	100	3229		31.7	100	3165		
23300	1280.5	1280.3	1270.3	1266.2	13.4	32.2				31.5					
							32.0	100	3205		31.4	249	7823		
23400	1280.9	1280.7	1270.8	1266.5	4.5	31.9				31.3					
							31.8	100	3178		31.1	0	0		
23500	1281.3	1281.1	1271.3	1266.8	4.5	31.6				31.0					
							31.6	185	5850		31.0	0	0		
[illegible]0	1281.7	1281.5	1271.7	1267.1	6.7	31.6				31.0					
							31.6	0	0		31.0	163	5051		

Station	Top of Bank Elevation		Design Invert	Top of Apron Elevation	Apron Length	North Bank Gabion				South Bank Gabion				
	N. Bank	S. Bank				Length	Average	Distance	Volume	Length	Average	Distance	Volume	
23700	1282.1	1281.9	1272.1	1267.4	6.7	31.6				31.0				
Subtotal									1252				1190	
23700	1282.1	1281.9	1272.1	1267.4	6.7	31.6				31.0				
							31.3	0	0		30.6	100	3063	
23800	1282.5	1282.3	1272.7	1267.7	6.7	30.9				30.3				
							30.8	288	8861		30.1	100	3014	
23900	1282.9	1282.7	1273.2	1268.0	11.2	30.6				30.0				
							30.5	100	3052		29.9	100	2988	
24000	1283.3	1283.1	1273.7	1268.3	11.2	30.4				29.8				
							30.3	100	3026		29.6	100	2963	
24100	1283.7	1283.5	1274.2	1268.6	11.2	30.1				29.5				
							30.0	100	3001		29.4	100	2938	
24200	1284.1	1283.9	1274.7	1268.9	11.2	29.9				29.3				
							29.8	100	2976		29.1	100	2912	
24300	1284.5	1284.3	1275.1	1269.2	11.2	29.6				29.0				
							29.5	100	2952		28.9	100	2889	
24400	1284.9	1284.7	1275.6	1269.5	11.2	29.4				28.8				
							31.3	100	3131		14.4	100	1439	
24500	1286.6	1286.7	1276.1	1269.8	11.2	33.2				0.0				
							31.1	100	3115		0.0	100	0	
24600	1288.3	1288.5	1279.1	1270.8	11.2	29.1				0.0				
							31.8	100	3180		0.0	100	0	
24700	1290.0	1288.8	1279.1	1271.8	4.5	34.5				0.0				
Subtotal									1233				822	
24700	1290.0	1288.8	1279.1	1271.8	4.5	34.5				0.0				
							35.0	100	3496		0.0	100	0	
24800	1290.3	1289.2	1279.1	1272.8	4.5	35.4				0.0				
							35.9	100	3591		0.0	100	0	
24900	1290.6	1289.5	1279.1	1273.6	4.5	36.4				0.0				
							36.9	100	3687		0.0	100	0	
25000	1290.9	1289.8	1279.1	1274.2	4.5	37.3				0.0				
							37.5	100	3749		0.0	100	0	
[illegible]0	1291.2	1290.1	1279.3	1274.8	4.5	37.6				0.0				
							37.9	100	3795		0.0	100	0	
25200	1291.5	1290.4	1279.4	1275.4	4.5	38.3				0.0				
							37.8	100	3779		0.0	100	0	
25300	1291.8	1290.7	1280.0	1276.0	4.5	37.3				0.0				
Subtotal									818				0	
25300	1291.8	1290.7	1280.0	1276.0	4.5	37.3				0.0				
							36.8	100	3684		0.0	100	0	
25400	1292.1	1290.9	1280.6	1276.6	4.5	36.4				0.0				
							35.9	100	3591		0.0	100	0	
25500	1292.4	1291.4	1281.2	1277.2	4.5	35.4				0.0				
							35.0	40	1399		0.0	100	0	
25600	1292.7	1291.9	1281.8	1277.8	9.0	34.5				0.0				
							33.4	0	0		15.3	0.0	0	
25660	1292.7	1292.2	1282.5	1278.2	9.0	32.3				30.7				rebuild S.B.
							0.0	100	0		20.0	40	801	
25700	1293.0	1292.4	1283.1	1278.4	9.0	31.3				29.4				
							0.0	100	0		30.2	100	3020	
25800	1293.3	1292.9	1283.1	1279.0	9.0	32.3				31.0				
							0.0	60	0		0.0	100	0	
25860	1293.6	1293.4	1283.6	1279.6	9.0	31.6				0.0				
Subtotal									321				142	
						Total Volume (Cubic Yd)			6145				6476	

Notice: At GC Sections, the Gabions below the Invert is calculated in the GC Sheet

Bank Protection Gabion Volume Phase I 100% Submittal

3/18/98 14:22

n	Top of Bank Bank Elevation		Design Invert	Top of Apron Elevation	Apron Length	North Bank Gabion				South Bank Gabion				
	N. Bank	S. Bank				Length	Average	Distance	Volume	Length	Average	Distance	Volume	
17700			1239.1			0				0				
							0.0	100	0		0.0	100	0	
17800			1239.5			0				0				
							0.0	100	0		0.0	100	0	
17900			1240.0			0				0				
							0.0	100	0		0.0	100	0	
18000			1246.0			0				0				
							0.0	100	0		0.0	100	0	
18100			1246.6			0				0				
							0.0	100	0		0.0	100	0	
18200			1247.1			0				0				
							0.0	100	0		0.0	100	0	
18300			1247.6			0				0				
							0.0	100	0		0.0	100	0	
18400			1248.0			0				0				
							0.0	100	0		0.0	100	0	
18500			1248.5			0				0				
							0.0	100	0		0.0	100	0	
18600			1249.0			0				0				
							0.0	100	0		0.0	100	0	
18700			1249.5			0				0				
Subtotal									0				0	
18700			1249.5			0				0				
							0.0	100	0		0.0	100	0	
18800			1250.5			0				0				
							0.0	100	0		0.0	100	0	
18900			1251.0			0				0				
							0.0	100	0		0.0	100	0	
19000			1251.5			0				0				
							0.0	100	0		0.0	100	0	
19100			1251.8			0				0				
							0.0	100	0		0.0	100	0	
19200			1252.0			0				0				
							0.0	100	0		0.0	100	0	
19300			1252.5			0				0				
							0.0	100	0		0.0	100	0	
19400			1253.0			0				0				
							0.0	100	0		0.0	100	0	
19500			1253.8			0				0				
							0.0	100	0		0.0	100	0	
19600			1254.2			0				0				
							0.0	100	0		0.0	100	0	
19700			1254.3	1244.3		0								
Subtotal									0				0	
19700	1266.3		1254.3	1244.3		37.9				0				
							37.6	100	2822		0.0	100	0	
19800	1266.3		1254.5	1240		37.3				0				Rebuild the bank
							36.4	100	2727		0.0	100	0	
19900	1266.3		1255.1	1240		35.4				0				
							35.3	40	1058		0.0	100	0	
19940	1266.3		1255.2	1242		35.1								
							23.5	100	1763		0.0	100	0	
20000		1268.3	1255.4			0				0				
							0.0	100	0		0.0	100	0	
20100		1268.5	1255.4		0.0	0				0				
							0.0	100	0		0.0	100	0	
20150		1268.6	1255.4	1251.3	4.5	0				59.2				start of S.B.
							0.0	100	0		39.4	100	2952	
20200		1268.7	1255.5	1251.5	4.5	0				58.9				
							0.0	100	0		58.5	100	4391	
20300		1268.9	1255.9	1251.9	4.5	0				58.2				
							0.0	100	0		57.9	100	4344	
20400		1269.1	1256.4	1252.3	4.5	0				57.6				
							0.0	100	0		57.3	100	4296	
20500		1269.3	1256.9	1252.7	4.5	0				57.0				
							0.0	100	0		56.6	100	4249	
20600		1269.5	1257.4	1253.1	4.5	0				56.3				
							0.0	100	0		56.0	100	4201	PVC coated

Station	Top of Bank		Design	Top of Apron	Apron	North Bank				South Bank				
	Bank Elevation		Invert	Elevation	Length	Gabion				Gabion				
	N. Bank	S. Bank				Length	Average	Distance	Volume	Length	Average	Distance	Volume	
...700		1269.7	1257.9	1253.5	4.5	0				55.7				156
Subtotal									310				749	
20700		1269.7	1257.9	1253.5	4.5	0				55.7				
							0.0	100	0		57.6	100	4322	
20800		1269.9	1258.3	1253.9	8.9	0				59.5				
							0.0	100	0		59.2	100	4442	
20900		1270.1	1258.8	1254.3	8.9	0				58.9				PVC coated
							0.0	100	0		58.6	100	4394	1094
21000		1270.3	1259.3	1254.7	8.9	0				58.3				
							0.0	100	0		46.1	100	3458	
21100		1270.5	1259.8	1255.1	8.9	0				33.9				
							0.0	100	0		33.5	100	2512	
21200		1270.7	1260.3	1255.5	8.9	0				33.0				
							0.0	95.6			32.8	95.6	2352	
21295.6		1271.1	1260.8	1256.1	8.9	0				32.6				starting NW 57th
							0.0	4.4	0		40.7	0	0	
21300		1271.1	1260.8	1256.1	8.9	0				56.5				
							0.0	100	0		57.1	188	8055	
21400		1272.1	1264.0	1256.7	8.9	0				57.8				
							0.0	100	0		59.4	197	8783	
21500		1273.8	1264.0	1257.3	8.9	0				61.1				
							0.0	100	0		60.5	100	4537	
21600		1274.0	1264.0	1257.9	8.9	0				59.9				
							0.0	100	0		57.0	100	4275	
21700	1274.1	1274.2	1262.7	1258.5	4.5	53.8				54.1				
Subtotal									0				652	
21700	1274.1	1274.2	1262.7	1258.5	4.5	53.8				54.1				
							53.3	273	10907		53.6	100	4020	
21800	1274.3	1274.4	1263.1	1259.0	4.5	52.7				53.1				
							52.3	100	3920		52.6	100	3943	
21900	1274.5	1274.6	1263.6	1259.5	4.5	51.8				52.1				
							51.3	100	3848		51.6	100	3872	
...0	1274.7	1274.8	1264.1	1260.0	4.5	50.8				51.2				
							50.4	100	3777		50.7	100	3801	
22100	1274.9	1275.0	1264.6	1260.5	4.5	49.9				50.2				
							49.4	100	3706		49.7	100	3730	
22200	1275.1	1275.2	1265.1	1261.0	4.5	48.9				49.3				
							54.7	100	4101		55.0	100	4125	
22300	1275.3	1275.4	1265.5	1260.4	13.4	60.4				60.7				
							61.7	100	4626		62.0	100	4650	
22400	1275.5	1275.6	1266.0	1259.8	13.4	62.9				63.3				
							63.3	100	4749		63.6	100	4773	
22500	1275.7	1275.8	1266.5	1259.8	13.4	63.7				64.0				
							64.0	100	4801		64.3	100	4825	
22600	1275.9	1276.0	1267.0	1259.8	13.4	64.3				64.6				
							64.6	155.5	7539		66.5	100	4991	55th Ave. Chanel
22700	1276.1	1277.2	1267.5	1259.8	13.4	65.0				68.4				
Subtotal									1925				1583	
22700	1276.1	1277.2	1267.5	1259.8	13.4	65.0				68.4				
							68.8	170	8766		70.2	100	5263	
22800	1278.5	1278.3	1267.9	1259.8	13.4	72.6				71.9				
							73.2	100	5489		72.6	100	5441	
22900	1278.9	1278.7	1268.4	1259.8	13.4	73.8				73.2				
							74.4	100	5584		73.8	100	5536	
23000	1279.3	1279.1	1268.9	1259.8	13.4	75.1				74.4				
							53.9	100	4041		53.2	100	3993	
23100	1279.7	1279.5	1269.4	1259.8	13.4	32.7				32.0				
							32.5	100	2440		31.9	100	2393	
23200	1280.1	1279.9	1269.9	1259.8	13.4	32.4				31.8				
							32.3	100	2422		31.7	100	2374	
23300	1280.5	1280.3	1270.3	1266.2	13.4	32.2				31.5				
							41.2	100	3087		40.5	249	7569	
23400	1280.9	1280.7	1270.8	1266.5	4.5	50.2				49.5				
							50.3	100	3774		49.7	0	0	
23500	1281.3	1281.1	1271.3	1266.8	4.5	50.5				49.9				
							51.8	185	7182		51.1	0	0	
...0	1281.7	1281.5	1271.7	1267.1	6.7	53.0				52.4				
							53.2	0	0		52.6	163	6426	

Station	Top of Bank Bank Elevation N. Bank	Top of Bank Bank Elevation S. Bank	Design Invert	Top of Apron Elevation	Apron Length	North Bank Gabion Length	North Bank Gabion Average	North Bank Gabion Distance	North Bank Gabion Volume	South Bank Gabion Length	South Bank Gabion Average	South Bank Gabion Distance	South Bank Gabion Volume	
[illegible]	1282.1	1281.9	1272.1	1267.4	6.7	53.4				52.7				
Subtotal									1585				1444	
23700	1282.1	1281.9	1272.1	1267.4	6.7	53.4				52.7				
							53.5	0	0		52.9	100	3966	
23800	1282.5	1282.3	1272.7	1267.7	6.7	53.7				53.0				
							56.1	288	12109		55.4	100	4157	
23900	1282.9	1282.7	1273.2	1268.0	11.2	58.5				57.8				
							58.6	100	4396		58.0	100	4349	
24000	1283.3	1283.1	1273.7	1268.3	11.2	58.8				58.1				
							58.9	100	4420		58.3	100	4372	
24100	1283.7	1283.5	1274.2	1268.6	11.2	59.1				58.5				
							59.2	100	4444		58.6	100	4396	
24200	1284.1	1283.9	1274.7	1268.9	11.2	59.4				58.8				
							59.6	100	4467		58.9	100	4420	
24300	1284.5	1284.3	1275.1	1269.2	11.2	59.7				59.1				
							44.6	100	3342		43.9	100	3295	
24400	1284.9	1284.7	1275.6	1269.5	11.2	29.4				28.8				
							31.3	100	2348		14.4	100	1079	
24500	1286.6	1286.7	1276.1	1269.8	11.2	33.2				0.0				
							31.1	100	2336		0.0	100	0	
24600	1288.3	1288.5	1279.1	1270.8	11.2	29.1				0.0				
							45.6	100	3423		0.0	100	0	
24700	1290.0	1288.8	1279.1	1271.8	4.5	62.2				0.0				
Subtotal									1529				1112	
24700	1290.0	1288.8	1279.1	1271.8	4.5	62.2				0.0				
							61.1	100	4581		0.0	100	0	
24800	1290.3	1289.2	1279.1	1272.8	4.5	60.0				0.0				
							59.2	100	4438		0.0	100	0	
24900	1290.6	1289.5	1279.1	1273.6	4.5	58.4				0.0				
							57.9	100	4344		0.0	100	0	
25000	1290.9	1289.8	1279.1	1274.2	4.5	57.4				0.0				
							57.0	100	4272		0.0	100	0	
[illegible]	1291.2	1290.1	1279.3	1274.8	4.5	56.5				0.0				
							56.0	100	4201		0.0	100	0	
25200	1291.5	1290.4	1279.4	1275.4	4.5	55.5				0.0				
							55.1	100	4130		0.0	100	0	
25300	1291.8	1290.7	1280.0	1276.0	4.5	54.6				0.0				
Subtotal									962				0	
25300	1291.8	1290.7	1280.0	1276.0	4.5	54.6				0.0				
							54.1	100	4059		0.0	100	0	
25400	1292.1	1290.9	1280.6	1276.6	4.5	53.6				0.0				
							44.5	100	3341		0.0	100	0	
25500	1292.4	1291.4	1281.2	1277.2	4.5	35.4				0.0				
							35.0	40	1049		0.0	100	0	
25600	1292.7	1291.9	1281.8	1277.8	9.0	34.5				0.0				
							33.4	0	0		15.3	0.0	0	
25660	1292.7	1292.2	1282.5	1278.2	9.0	32.3				30.7				rebuild S.B
							0.0	100	0		20.0	40	601	
25700	1293.0	1292.4	1283.1	1278.4	9.0	55.3				29.4				
							0.0	100	0		41.3	100	3095	
25800	1293.3	1292.9	1283.1	1279.0	9.0	54.4				53.1				
							0.0	60	0		0.0	100	0	
25860	1293.6	1293.4	1283.6	1279.6	9.0	53.4				0.0				
Subtotal									313				137	
						Total Volume (Cubic Yd)			6623				5677	

Notice: At GC Sections, the Gabions below the Invert is calculated in the GC Sheet

GRADE CONTROL EXCAVATION VOLUME Phase I 100% submittal

3/18/98 14:30

			Downstream						Upstream		
	L1	Toe Depth	Channel Width at Invert	Channel Width at Toe	Grade Control Excavation	L2	Crest Length	Tow Depth	Channel Width at Invert	Channel Width at Toe	Grade Control Excavation
	FT	FT	FT	FT	CY	FT	FT	FT	FT	FT	CY
Union Hills	200	9.3	109	9	3,970	28	10	6	109	73	809
59th Ave	193	15.2	125	9	6,993	238	220	6	125	89	3,379
57th Ave	178	14.1	200	100	13,409	28	10	6	200	164	1,601
54th Ave	210	16.3	120	9	7,860	28	10	6	120	84	904
Sta 245	198	13.8	138	40	8,703	28	10	6	138	102	1,061
Sta 256	163	12.0	129	42	5,966	28	10	6	129	93	983
55th Ave	60	14.1	87	9	1,327	28	10	6	87	51	617
Total Volume					48,228						9,354

Area1=column volume which base is trapezoil area

Area 2 = Cone area at both side.

Area 3= crest area

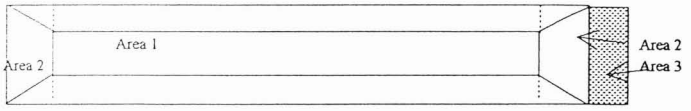

EXCA.XLS toe-ex-ph1

TOE EXCAVATION CALCULATION phase I 100% 3/18/98 14:30 10 FT WORK SPACE

Station	Design Apron Depth	Apron Length South Bank	Apron Length North Bank	Toe excavation area(sq ft) South Bank	Toe excavation area(sq ft) North Bank	Toe excavation volume (cu. ft) South Bank	Toe excavation volume (cu. ft) North Bank	
20200	4.0	4.5		161.5				
						14813		
20300	4.0	4.5		134.8				
						13641		
20400	4.1	4.5		138.0				
						13965		
20500	4.2	4.5		141.3				
						14293		
20600	4.3	4.5		144.6				
						14624		
20700	4.3	4.5		147.9				
Subtotal (CY)						2642	0	
20700	4.3	4.5		147.9				
						16123		
20800	4.4	9		174.6				
						17644		
20900	4.5	9		178.3				
						18020		
21000	4.6	9		182.1				
						9481		
21052	4.6	9		182.6				
						0		GCS
21100	4.7	9		0.0				
						0		
21200	4.7	9		0.0				
						0		
21281	4.7	9		187.3				
						3554		
21300	4.7	9		186.8				
21400	7.3	9		286.0		108680		57th Ave
21500	6.7		9		254.2		68634	Terminal
21600	5.4	9		223.5				
						19258		
21700	4.2	9		161.7				
Subtotal (CY)						7139	2542	
21700	4.2	9		161.7				
						14950		
21800	4.1	4.5	4.5	137.3	137.3			
						13689	13689	
21900	4.1	4.5	4.5	136.5	136.5			
						13609	13609	
22000	4.1	4.5	4.5	135.7	135.7			
						13528	13528	
22100	4.0	4.5	4.5	134.9	134.9			
						13448	13448	
22200	4.0	4.5	4.5	134.1	134.1			
						18346	18346	
22300	5.1	13.5	13.5	232.8	232.8			
						26371	26371	
22400	6.2	13.5	13.5	294.6	294.6			
						31041	31041	
22500	6.7	13.5	13.5	326.2	326.2			
						34152	34152	
22600	7.2	13.5	13.5	356.8	356.8			
						37265		
22700	7.7	13.5		388.5	275.1		66024	55th channnel
Subtotal (CY)						8015	8526	
22700	7.7	13.5		388.5	275.1		0	
						40493		
22800	8.1	13.5	13.5	421.4	0.0			
						43837	0	
22900	8.6	13.5	13.5	455.4	0.0			
						47296	0	
23000	9.1	13.5	13.5	490.5	0.0			
						50868	0	
23100	9.6	13.5	13.5	526.8	0.0			
						0	0	
23200	10.1	13.5	13.5	0.0	0.0			GCS
						0	0	
23300	10.2	13.5	13.5	0.0	0.0			
						0		
23332	10.2	13.5	13.5	576.2	0.0			
						15804	0	
23400	4.4	4.5	4.5	121.0	0.0	50215		54th Ave
							0	
23500	4.5		4.5		0.0			Terminal

Station	Design Apron Depth	Apron Length South Bank	Apron Length North Bank	Toe excavation area(sq ft) South Bank	Toe excavation area(sq ft) North Bank	Toe excavation volume (cu. ft) South Bank	Toe excavation volume (cu. ft) North Bank	
23600	4.7							
23700	4.8	7	4.5	178.8	0.0		0	
Subtotal (CY)						9204	0	
23700	4.8	7	4.5	178.8	1.0		0	
						18652		
23800	5.1	7		194.3				
						21216		
23900	5.3	11.5	11.5	230.0	0.0			
						23487	0	
24000	5.4	11.5	11.5	239.7	0.0			
						24463	0	
24100	5.6	11.5	11.5	249.5	0.0			
						25454	0	
24200	5.8	11.5	11.5	259.5	0.0			
						26462	0	
24300	6.0	11.5	11.5	269.7	0.0			
						15848	0	
24359	6.1	11.5	11.5	276.6	0.0			
						0	0	
24400	6.2	11.5	11.5	0.0	0.0			**GCS**
						0	0	
24500	6.3	11.5	11.5	0.0	0.0			
						0	0	
24587	6.3	11.5	11.5	288.2	0.0			
						0	0	
24600	8.3	11.5	11.5	0.0	0.0			
						0	14783	
24700	7.4	4.5	4.5	0.0	295.7			
Subtotal (CY)						5762	548	
24700	7.4	4.5	4.5	0.0	295.7			
						0	26827	
24800	6.3	4.5	4.5	0.0	240.9			
						0	22852	
24850	5.9	4.5	4.5	0.0	216.2			
						0	20864	
24900	5.5	4.5	4.5		201.1			
							18726	
25000	4.9		4.5		173.4			
							16488	
25100	4.6		4.5		156.4			
							14598	
25200	4.1		4.5		135.6			
							13560	
25300	4.1		4.5		135.6			
Subtotal (CY)						0	4960	
25300	4.1		4.5		135.6			
							13560	
25400	4.1		4.5		135.6			
							13540	
25500	4.0		4.5		135.2			
							0	**GCS**
25600	4.0		9		0.0			
							0	
25700	4.7		9		0.0			
							0	
25735	4.5		9		0.0			
							0	
25800	4.2		9		0.0			
							0	
25860	4.1		9		0.0			
							0	
Subtotal (CY)						0	1004	
				Total Volume (cu yd)		32763	17579	
umption	Bank Slope	Excavation slope	Gabion height (ft)					
	3	2	0.75					
At GCS Section, The toe excavation volume is calculated in the GCS sheet.								

GRADE CONTROL GABION VOLUME Phase I 100% submittal															3/18/98 15:36	
							Downstream							Upstream		
	Drop	Channel	Crest	L1	Toe	Channel Widt	Chann]el Width	Ramps	Grade Control	Grade Control	L2	Toe	Channel Width	Channel Width	Grade Contro	Grade Control
		Close	Length		Depth	at Invert	at Toe		Gabion Vol.	Shotcrete Area.		Depth	at Invert	at Toe	Gabion Vol.	Shotcrete Area
	FT		FT	FT	FT	FT	FT	CY	CY	SY	FT	FT	FT	FT	CY	SY
Union Hills	5.6	9	10	200	9.3	109	9	169	655	1,311	28	6	109	73	115	230
59th Ave	0	9	220	193	15.2	125	9	166	2,296	4,592	238	6	125	89	132	264
57th Ave	0	0	10	178	14.1	200	100	153	924	1,848	28	6	200	164	211	422
54th Ave	0	0	10	210	16.3	120	9	180	853	1,705	28	6	120	84	126	253
Sta 245	3	0	10	198	13.8	138	40	169	841	1,683	28	6	138	102	145	291
Sta 256	1	0	10	163	12.0	129	42	140	617	1,234	28	6	129	93	136	272
55th Ave	5	9	10	60	14.1	87	9	63	404	808	28	6	87	51	92	183
Total Volume								1,039	6,590	13,181					957	1,914

END AREA VOLUME CALCULATIONS - EXCAVATION

For Channel Excavation

Project: Skunk Creek Final Design 100% Summital 3/18/98

		NORTH BANK						SOUTH BANK					
			CUT			FILL			CUT			FILL	
on	Distance	Area	Average	Volume	Area	Average	Volume	Area	Average	Volume	Area	Average	Volume
700		0			0			0			0		
	100		0	0		0	0		0	0		0	0
17800		0			0			0			0		
	100		0	0		0	0		0	0		0	0
17900		0			0			0			0		
	100		0	0		0	0		0	0		0	0
18000		0			0			0			0		
	100		0	0		0	0		0	0		0	0
18100		0			0			0			0		
	100		0	0		0	0		0	0		0	0
18200		0			0			0			0		
	100		0	0		0	0		0	0		0	0
18300		0			0			0			0		
	100		0	0		0	0		0	0		0	0
18400		0			0			0			0		
	100		0	0		0	0		0	0		0	0
18500		0			0			0			0		
	100		0	0		0	0		0	0		0	0
18600		0			0			0			0		
	100		0	0		0	0		0	0		0	0
18700		0			0			0			0		
Sub Total				0			0			0			0
18700		0			0			0			0		
	100		0	0		0	0		0	0		0	0
18800		0			0			0			0		
	100		0	0		0	0		0	0		0	0
18900		0			0			0			0		
	100		0	0		0	0		0	0		0	0
19000		0			0			0			0		
	100		0	0		0	0		0	0		0	0
00		0			0			0			0		
	100		0	0		0	0		0	0		0	0
19200		0			0			0			0		
	100		0	0		0	0		0	0		0	0
19300		0			0			0			0		
	100		0	0		0	0		0	0		0	0
19400		0			0			0			0		
	100		0	0		0	0		0	0		0	0
19500		0			0			0			0		
	100		0	0		0	0		0	0		0	0
19600		0			0			0			0		
	100		0	0		0	0		0	0		0	0
19700		0			0			0			0		
Sub Total				0			0			0			0
19700		0			0			0			0		
	100		0	0		0	0		0	0		0	0
19800		0			0			0			0		
	100		0	0		0	0		0	0		0	0
19900		0			0			0			0		
	100		0	0		0	0		0	0		0	0
20000		0			0			0			0		
	100		0	0		0	0		0	0		0	0
20100		0			0			0			0		
	100		0	0		0	0		33	3250		82	8238
20200		0			0			65			165		
	100		0	0		0	0		64	6400		298	29788
20300		0			0			63			431		
	100		0	0		0	0		60	6025		481	48100
20400		0			0			58			531		
	100		0	0		0	0		42	4200		544	54350
00		0			0			27			556		
	100		2	200		25	2450		24	2425		588	58800
20600		4			49			22			620		
	100		5	500		64	6400		17	1700		632	63200
20700		6			79			12			644		
Sub Total				26			328			889			9721
20700		6			79			12			644		
	100		8	800		82	8200		6	600		561	56100

EXCA.XLS channel-ph1

		NORTH BANK						SOUTH BANK						
			CUT			FILL			CUT			FILL		
Station	Distance	Area	Average	Volume	Area	Average	Volume	Area	Average	Volume	Area	Average	Volume	
20800		10			85			0			478			
	100		11	1100		122	12150		0	0		263	26300	
20900		12			158			0			48			
	100		10	950		140	14000		18	1800		47	4700	
[illegible]000		7			122			36			46			
	100		10	950		151	15050		88	8750		39	3900	
21100		12			179			139			32			
	100		10	1000		144	14350		185	18500		22	2150	
21200		8			108			231			11			
	100		10	1000		124	12350		269	26900		12	1200	
21300		12			139			307			13			54TH
	100		9	900		94	9350		159	29798		7	1222	TERMINAL
21400		6			48			10			0			
	100		3	300		95	9500		51	9949		47	9161	
21500		0			142			91			93			
	100		0	0		0	0		130	6475		49	4900	
21600		0			0			168			5			
	100		0	0		0	0		253	25300		3	250	
21700		10			0			338			0			
Sub Total				259			3517			4743			4070	
21700		10			0			338			0			
	100		104	28419		0	0		425	42500		0	0	
21800		198			252			512			0			
	100		215	21460		156	15550		460	45950		0	0	
21900		231			59			407			0			
	100		290	28950		30	2950		315	31450		10	950	
22000		348			0			222			19			
	100		404	40400		0	0		185	18500		13	1250	
22100		460			0			148			6			
	100		468	46800		0	0		209	20850		9	900	
22200		476			0			269			12			
	100		486	48550		0	0		235	23450		31	3100	
22300		495			0			200			50			
	100		533	53300		0	0		200	19950		57	5650	
[illegible]400		571			0			199			63			
	100		765	76450		0	0		353	35250		32	3150	
22500		958			0			506			0			
	100		891	89050		6	613		498	49750		0	0	
22600		823			12			489			0			
	100		662	743		14	1363		526	52600		0	0	
22700		500			15			563			0			
Sub Total				16079			758			12602			556	
22700		500			23			563			0			55th
	100		150	48825		0	0		494	49400		6	550	CHANNEL
22800		347			75			425			11			
	100		174	17350		38	3750		467	46650		6	550	
22900		0			0			508			0			
	100		0	0		0	0		339	33850		0	0	
23000		0			0			169			0			
	100		0	0		0	0		85	8450		24	2350	
23100		0			0			0			47			
	100		0	0		0	0		56	5600		24	2350	
23200		0			0			112			0			
	100		0	0		0	0		149	14850		0	0	
23300		0			0			185			0			
	100		0	0		0	0		122	4277		5	500	
23400		0			0			58			10			
	100		0	0		0	0		34	8466		0	0	54TH AVE
23500		0			0			10			0			TERMINAL
	100		0	0		0	0		0	0		0	0	
23600		0			0			10			0			
	100		0	0		0	0		177	28770		0	0	
23700		0			0			343			53			
Sub Total				2451			139			7419			233	
[illegible]00		0			0			343			53			
	100		0	0		0	0		396	39550		57	5650	
23800		0			0			448			60			
	100		0	0		0	0		396	39550		55	5450	
23900		0			0			343			49			
	100		0	0		0	0		172	17150		93	9300	
24000		0			0			0			137			
	100		0	0		0	0		0	0		226	22550	
24100		0			0			0			314			

		NORTH BANK						SOUTH BANK					
			CUT			FILL			CUT			FILL	
Station	Distance	Area	Average	Volume	Area	Average	Volume	Area	Average	Volume	Area	Average	Volume
	100		0	0		0	0		15	1500		253	25250
24200		0			0			30			191		
	100		0	0		0	0		68	6750		116	11600
24300		0			0			105			41		
	100		0	0		0	0		53	5250		21	2050
24400		0			0			0			0		
	100		0	0		0	0		0	0		0	0
24500		0			0			0			0		
	100		0	0		224	22350		0	0		0	0
24600		0			447			0			0		
	100		0	0		642	64150		0	0		0	0
24700		0			836			0			0		
Sub Total				0			3204			4065			3031
24700		0			836			0			0		
	100		0	0		779	77900		0	0		0	0
24800		0			722			0			0		
	100		0	0		768	76750		0	0		0	0
24900		0			813			0			0		
	100		0	0		728	72800		0	0		0	0
25000		0			643			0			0		
	100		0	0		614	61350		0	0		0	0
100		0			584			0			0		
	100		23	2250		558	55800		0	0		0	0
25200		45			532			0			0		
	100		23	2250		535	53500		0	0		0	0
25300		0			438			0			0		
Sub Total				167			14744			0			0
25300		0			538			0			0		
	100		0	0		507	50700		0	0		0	0
25400		0			476			0			0		
	100		13	1250		262	26150		0	0		0	0
25500		25			47			0			0		
	100		13	1250		24	2350		0	0		0	0
25600		0			0			0			0		
	100		0	0		0	0		0	0		0	0
25700		0			0			0			0		
	100		0	0		0	0		0	0		0	0
25800		0			0			0			0		
	60		0	0		0	0		0	0		0	0
25860		0			0			0			0		
Sub Total				93			2933			0			0
Total Volume (Cubic Yd)				19,074			25,623			29,718			17,611

d Cover Phase I 100% Submittal			
Station	channel	Area	
	bottom width		
	ft	Acre	
17700	109.1		
17800	108.6	0.24937	
17900	107.7	0.247766	
18000	109.6	0.248912	
18100	108.6	0.249943	
18200	100.7	0.239748	
18300	101.2	0.231271	
18400	95.9	0.225773	
18500	85.9	0.208247	
18600	106.1	0.219931	
18700	105.3	0.242153	
18800	106.1	0.242153	
18900	109	0.246392	
19000	109.9	0.250745	
19100	109.4	0.251203	
19200	109.5	0.250745	
19300	107.8	0.248912	
19400	111.5	0.251203	
19500	113.2	0.257388	
19600	112.6	0.258648	
700	118.3	0.26449	
800	126.7	0.280641	
19900	131	0.294616	
20000	127	0.295418	
20100	158	0.326919	
20200	185	0.393127	
20300	173	0.41008	
20400	182	0.406529	
20500	187	0.42291	
20600	190	0.432188	
20700	186	0.431317	
20800	192	0.433058	
20900	197	0.445601	
21000	198	0.452646	
21100	193	0.447732	
21200	199	0.448797	
21300	202	0.458797	
21400	216	0.478396	
21500	210	0.487869	
21600	201	0.47079	
21700	185	0.442211	
21800	198	0.438969	
21900	218	0.476793	
22000	243	0.528419	
22100	279	0.598477	
200	272	0.631294	

Station	channel bottom width ft	Area Acre	
22300	262	0.611924	
22400	236	0.570928	
22500	218	0.519977	
22600	208	0.487721	
22700	203	0.4711	
22800	112	0.360974	
22900	106	0.249828	
23000	101	0.237572	
23100	109	0.240664	
23200	117	0.258763	
23300	124	0.276174	
23400	126	0.286598	
23500	128	0.290836	
23600	129	0.294273	
23700	131	0.297824	
23800	133	0.302749	
23900	136	0.308179	
24000	139	0.314181	
24100	142	0.320997	
24200	144	0.327549	
24300	147	0.33307	
24400	149	0.338786	
24500	155	0.348511	
24600	161	0.362532	
24700	157	0.364307	
24800	156	0.357801	
24900	155	0.3563	
25000	145	0.343677	
25100	155	0.343929	
25200	147	0.34646	
25300	149	0.339061	
25400	145	0.336426	
25500	150	0.337572	
25600	130	0.320733	
25700	120	0.286369	
25800	124	0.279496	
Total		28.24243	