ENGINEERING DIVISION
LIBRARY

CITY OF PHOENIX
Street Transporation Department

Property of
Flood Control District of MC Library
Please Return to:
2801 W. Durango
Phoenix, AZ 85009

PROJECT NO. BR-885806
INCA # 6915

STRUCTURAL CALCULATIONS

FOR

51ST AVENUE BRIDGE OVER SKUNK CREEK

60% SUBMITTAL
OCTOBER 5, 1990

INCA ENGINEERS INC.

INCA ENGINEERS INC.

Sheet No 1 of

Job Number 6915

TITLE 51st AVE. BRIDGE

SUBJECT INDEX

MADE BY CG DATE 10/1/90 CHECKED BY DATE

INDEX

TITLE	PAGE
DESIGN CRITERIA	2
SLAB DESIGN	4
GIRDER DESIGN	16
BEARING PAD DESIGN	53
ABUTMENT DESIGN	57

INCA ENGINEERS INC.

Sheet No 2 of

Job Number 6915

TITLE 51st AVE. BRIDGE

SUBJECT DESIGN CRITERIA

MADE BY CG DATE 8/7/90 CHECKED BY MI DATE 9/90

DESIGN & CONSTRUCTION SPECIFICATIONS

1. AASHTO, "Standard specifications for highway bridges", 14th edition, 1989. & ADOT criteria, as applicable.

2. AASHTO, "Guide specifications for seismic design of highway bridges", 1983 edition with 1985 supplement.

3. Maricopa Association of Governments, "Uniform Standard Specification for Public Works Construction", 1986 edition.

LOADING

A. DEAD LOADS

1. 25 pounds per square foot allowance for future wearing surface.
2. 12"-ϕ water line to be attached to bottom of deck.

B. LIVE LOADS

1. AASHTO HS20-44 loading

All other forces will be as specified by AASHTO

DESIGN METHODS

1. Prestressed concrete superstructure - Service load design and capacity check by load factor design.

2. Columns and drilled shafts - Load factor design. All others by service load design.

INCA ENGINEERS INC.

Sheet No 3 of

Job Number 6915

TITLE 51st AVE. BRIDGE

SUBJECT DESIGN CRITERIA

MADE BY CG DATE 8/7/90 CHECKED BY MS DATE 9/90

MATERIALS

A. CONCRETE - MAG CLASS "AA" *

1. Deck slab and Diaphragms - $f'_c = 4000$ psi ; $f_c = 1400$ psi & $n = 8$

2. Columns & pier caps - $f'_c = 4000$ psi

3. All other class "A" concrete - $f'_c = 3000$ psi

B. REINFORCING STEEL (ASTM A615)

1. #6 and smaller - $f_s = 20{,}000$ psi

2. #7 and greater - $f_s = 24{,}000$ psi

3. Bars in deck slab - $f_s = 20{,}000$ psi

C. PRESTRESSING STEEL (ASTM A416)

1. Low-relaxation, 7-wire strands - $f_{pu} = 270$ ksi

* See page 16 for girder concrete strengths.

INCA ENGINEERS INC.

Sheet No 4 of

Job Number 6915

TITLE 51st AVE. BRIDGE

SUBJECT SLAB DESIGN

MADE BY CG DATE 8/8/90 CHECKED BY MI DATE 9/90

DESIGN CRITERIA

1. Service Load Design

2. Provide 25 psf for future wearing surface

3. Neglect top ½" as wearing surface in strength calcs.

4. f'_c = 3,500 psi (for design only); f_c = 1,400 psi

5. f_s = 20,000 psi

6. n = 8

7. Top bar cover = 2½" CL.

8. Bottom bar cover = 1" CL.

9. 12"ϕ Water line attached to bottom of deck.

INCA ENGINEERS INC.

Sheet No 5 of _____

Job Number 6915

TITLE 51st AVE. BRIDGE

SUBJECT SLAB DESIGN

MADE BY CG DATE 8/8/90 CHECKED BY MI DATE 9/90

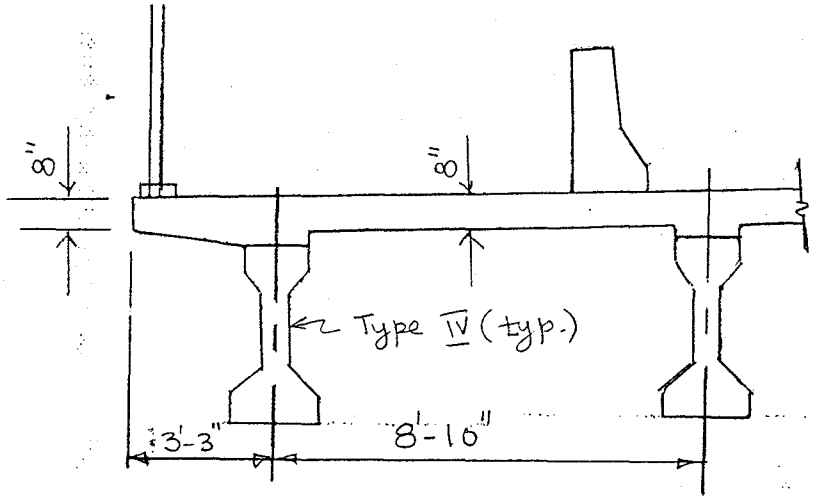

SPAN (ADOT criteria)

Design span shall be the clear distance between the inside edge of top flanges for other sizes of AASHTO girders than types V & VI.

$\therefore$ Span = 8.83' − 1.67' (top flange width of type IV) = 7.16'

LOADS

1. Dead Load = $\frac{8''}{12} \times 0.15\ k/ft^3 + 0.025\ k/ft^2 = 0.13\ k/ft^2$

2. Live Load = $P_{20} = 16^k$ (AASHTO 3.24.3)

3. Impact = $\frac{50}{L+125}$ (AASHTO 3.8.2) = $\frac{50}{7.16+125} = 0.38$; Use 30%

4. 12"ϕ Water line = 40.2 lbs/ft (ductile iron pipe)
+ 48.7 lbs/ft (water)
88.9 + fittings ≅ 100 lbs/ft

Supports at 9' apart; $\therefore$ conc. load = 0.9 K

INCA ENGINEERS INC.

Sheet No 6 of

Job Number 6915

TITLE 51st AVE. BRIDGE

SUBJECT SLAB DESIGN

MADE BY CG DATE 8/8/90 CHECKED BY MI DATE 9/90

SERVICE MOMENTS

assuming fixed supports @ girders

$$DLM = \frac{ws^2}{10} + \frac{2 \times P \times (L/2)^4}{L^3}$$

$$= \frac{0.13 \times 7.16^2}{10} + \frac{2 \times 0.9 \times 3.58^4}{(7.16)^3} = 1.48 \text{ k-ft/ft}$$

$$(LL+I)M = \left(\frac{S+2}{40}\right) P_{20} \times 1.3$$ (AASHTO 3.24.3.1, includes continuity factor)

$$= \left(\frac{7.16+2}{40}\right) \times 16 \times 1.3 = 4.8 \text{ k-ft/ft}$$

Total Moment $= 1.48 + 4.8 = 6.28 \simeq$ 6.3 k-ft/ft

BENDING REINFORCEMENT (TOP SLAB)

BOTTOM TRANSVERSE STEEL

Try #5 @ 9" & #5 Truss bars @ 9" o/c

Concrete stress $f_c = \frac{2M}{bd^2kj}$

Steel stress $f_s = \frac{M}{A_s j d}$

where M = Total moment
b = width of slab
d = distance from extreme compression face to tension steel
A_s - steel area

$$k = \sqrt{2pn + (pn)^2} - pn$$

$$j = 1 - k/3$$

where $p = A_s/bd$

n = modular ratio = 8

INCA ENGINEERS INC.

Sheet No 7 of

Job Number 6915

TITLE 51st AVE. BRIDGE

SUBJECT SLAB DESIGN

MADE BY CG DATE 8/8/90 CHECKED BY MI DATE 9/90

A_s = #5 @ 9" + #5 (Truss bars) @ 9" = 0.83 in²/ft

$$\rho = \frac{0.83}{12 \times 6.19} = 0.011 \qquad \left(d = 7\tfrac{1}{2}'' - 1'' - \frac{0.625}{2} = 6.19''\right)$$

$$k = \sqrt{2 \times 0.011 \times 8 + (0.011 \times 8)^2} - 0.011 \times 8 = 0.34$$

$$j = 1 - 0.34/3 = 0.89$$

$$f_c = \frac{2 \times 6.3 \times 12 \times 10^3}{12 \times 6.19^2 \times 0.34 \times 0.89} = 1087 \text{ psi} < 1400 \text{ psi} \quad \underline{\text{ok.}}$$

$$f_s = \frac{6.3 \times 12 \times 10^3}{0.83 \times 0.89 \times 6.19} = 16{,}533 \text{ psi} < 20{,}000 \text{ psi} \quad \underline{\text{ok.}}$$

<u>Minimum reinforcement</u> (AASHTO 8.17.1)

$$1.2\, M_{cr} = 1.2 \times S \times 7.5\sqrt{f'_c}$$

$$= 1.2 \times \left(\frac{12 \times 7.5^2}{6}\right) \times 7.5\sqrt{3{,}500} \times \frac{1}{10^3} \times \frac{1}{12} = \underline{5.3 \text{ k-ft}}/\text{ft}$$

$$\phi M_n = 0.9 A_s f_y (d - a/2); \text{ where } a = \frac{A_s f_y}{0.85 f'_c b} = \frac{0.83 \times 40}{0.85 \times 3.5 \times 12} = 0.93$$

$$\therefore \phi M_n = \frac{0.9}{12} \times 0.83 \times 40 \left(6.19 - \frac{0.93}{2}\right) = \underline{14.2 \text{ k-ft}}/\text{ft} > 5.3 \text{ k-ft}/\text{ft}$$

ok

Use #5 Straight & #5 Truss bars @ 9" o/c (eq. of #5 @ 4½" o/c)

INCA ENGINEERS INC.

Sheet No 8 of

Job Number 6915

TITLE 51st AVE. BRIDGE

SUBJECT SLAB DESIGN

MADE BY CG DATE 8/8/90 CHECKED BY MI DATE 9/90

TOP TRANSVERSE STEEL

Try #6 @ 9" & #5 truss bars @ 9" ⇒ $A_s = 1.00\ in^2/ft$

$$\rho = \frac{1.00}{12'' \times 5.12} = 0.0163 \quad \left(d = 8'' - 2\tfrac{1}{2}'' - 0.75/2 = 5.12''\right)$$

$$k = \sqrt{2 \times 0.0163 \times 8 + (0.0163 \times 8)^2} - (0.0163 \times 8) = 0.40$$

$$j = 1 - 0.40/3 = 0.87$$

$$f_c = \frac{2 \times 6.3 \times 12 \times 10^3}{12 \times 5.12^2 \times 0.40 \times 0.87} = 1381 \text{ psi} < 1400 \text{ psi} \quad \underline{ok}$$

$$f_s = \frac{6.3 \times 12 \times 10^3}{1.00 \times 0.87 \times 5.12} = 16{,}972 \text{ psi} < 20{,}000 \text{ psi} \quad \underline{ok.}$$

Minimum reinforcement (AASHTO 8.17.1)

$1.2\, M_{cr} = 5.3\ k\text{-}ft/ft$ (from page 7)

$$\phi M_n = 0.9 A_s f_y (d - a/2)\ ; \text{ where } a = \frac{A_s f_y}{0.85 f'_c b} = \frac{1.00 \times 40}{0.85 \times 3.5 \times 12} = 1.12$$

$$\phi M_n = \frac{0.9 \times 1.0 \times 40}{12}\left(5.12 - \frac{1.12}{2}\right) = \underline{13.6\ k\text{-}ft/ft} > 5.3\ k\text{-}ft/ft$$

ok

$\boxed{\text{Use \#6 Straight bars and \#5 Truss bars @ 9" o/c}}$

INCA ENGINEERS INC.

Sheet No 9 of

Job Number 6915

TITLE 51st AVE. BRIDGE

SUBJECT SLAB DESIGN

MADE BY CG DATE 8/8/90 CHECKED BY MI DATE 9/90

CANTILEVER STEEL

Design for worst case, assuming sidewalk in future could be turned into a traffic lane.

$$DLM = \underbrace{\left(\frac{8+11}{2}\right) \times \frac{1}{12} \times 0.15\ k/ft^3 \times \frac{2.42}{2}}_{\text{slab}} + \underbrace{0.4\ k/ft\ (\overset{(1'\text{-}7''-CG)}{0.91} + 0.84)}_{\text{future barrier (if any)}}$$

$$+ \underbrace{0.025 \times \frac{0.84^2}{2}}_{WS} = \underline{0.86\ k\text{-}ft/ft}$$

Railing Loads (AASHTO 3.24.5.2)

$$E = 0.8X + 5.0 = 0.8\left(\frac{1'\text{-}5''}{2} + 0.84\right) + 5 = 6.24'$$

$$(LL+I)M = \left(\frac{P}{E}\right)X = \frac{10}{6.24} \times 1.55 \times 1.3 = \underline{3.22\ k\text{-}ft/ft}$$

Total Moment = 0.86 + 3.22 = 4.1 k-ft/ft

Use the same top transverse steel. Adequate per calculations on page 8.

INCA ENGINEERS INC.

Sheet No 10 of _____

Job Number 6915

TITLE 51st AVE. BRIDGE

SUBJECT SLAB DESIGN

MADE BY CG DATE 8/8/90 CHECKED BY MI DATE 9/90

DISTRIBUTION STEEL (AASHTO 3.24.10.2)

Percentage of steel $= \frac{220}{\sqrt{S}}$; S - effective span in ft.

$= \frac{220}{\sqrt{7.16}} = 82\% \not> 67\%$

$\therefore A_s = 0.67 \times 0.83 = 0.560 \text{ in}^2/\text{ft}$

No. of #5 bars reqd. in the middle half $= 0.56 \times \frac{7.16}{2} \times \frac{1}{0.31}$

$= 6.50$ say 7

No. of #5 bars reqd. in the outer quarters $= 0.5 \times 7$

$= 3.5$ say 4

PROVIDE 4-#5 @ 7" o/c @ EA. END

PROVIDE 7-#5 @ EQ. SPACING IN BETWEEN

} Provide #5 @ 7" o/c.

SHRINKAGE & TEMP. REINFORCEMENT (AASHTO 8.20)

Area of steel needed $= 1/8 \text{ in}^2/\text{ft}$; #5 @ 12" $= 0.31 \text{ in}^2/\text{ft}$.

Use #5 @ 12" o/c

Actual spacing may be less in order to match the negative reinforcement.

INCA
INCA ENGINEERS INC.

Sheet No 11 of _____
Job Number 6915

TITLE 51st AVE. BRIDGE
SUBJECT SLAB DESIGN
MADE BY CG DATE 8/10/90 CHECKED BY MI DATE 9/90

CONTINUITY REINFORCEMENT

Negative reinforcement @ piers (in deck slab - AASHTO 9.7.2.3)

$M_u = 1.3 \times M_{DL} + 2.17 \times M_{LL}$ — AASHTO 8.8.2

$= 1.3 \times 274 + 2.17 \times 714 = 1906$ k-ft : Design Moment = 1530 k-ft

page 34 page 36 See Page 14

for rectangular sections,

$$A_s = \frac{M_u}{\phi f_y (d - a/2)} \quad \text{(AASHTO 8.16.3.2)}$$

$$d = 54'' + 8'' - 2.5'' - 0.75'' - \frac{0.875}{2} = 58.3''$$

(#6 bar, #7 bar, cover)

Assume $a = 2.70$; $\therefore A_s = \dfrac{1530 \times 12}{0.9 \times 60 \left(58.3 - \frac{2.70}{2}\right)} = 5.97 \text{ in}^2$

Check for 'a' $= \dfrac{A_s f_y}{0.85 f'_c b} = \dfrac{5.97 \times 60}{0.85 \times 6 \times 26} = 2.70$ ok.

Use 11 #7 bars ; Capacity = 1687 k-ft > 1530 k-ft ok.

CHECK FOR MAX. REINFORCEMENT (AASHTO 8.16.3.1)

$$\rho = A_s/bd = \frac{6.6}{26 \times 58.3} = 0.0044$$

$$\rho_b = \frac{0.85 \beta_1 f'_c}{f_y}\left(\frac{87{,}000}{87{,}000 + f_y}\right) = \frac{0.85 \times 0.75 \times 6}{60}\left(\frac{87{,}000}{87{,}000 + 60{,}000}\right) = 0.038$$

$0.75 \rho_b = 0.75 \times 0.038 = 0.029 > 0.0044$ ok

INCA ENGINEERS INC.

Sheet No 12 of _____

Job Number 6915

TITLE 51st AVE. BRIDGE

SUBJECT SLAB DESIGN

MADE BY CG DATE 8/10/90 CHECKED BY MI DATE 9/90

CRACK CONTROL CHECK

$$f_s = \frac{Z}{(d_c A)^{1/3}} \leq 0.6 f_y \quad \text{(AASHTO eqn. 8-61)}$$

where A = effective tension area (in^2) of concrete surrounding the flexural tension reinforcement and having the same centroid as that reinforcement, divided by the number of bars.

d_c = Thickness of concrete cover measured from extreme tension fiber to center of closest bar.

$$d_c = 2'' + \frac{d_b}{2} = 2 + \frac{0.875}{2} = 2.44''$$

$$A = \frac{2 \times 2.44 \times 106}{11} = 46.98 \text{ in}^2$$

$$f_s = \frac{170}{(2.44 \times 46.98)^{1/3}} = \underbrace{35.0 \text{ ksi}}_{\text{governs}} < 0.6 \times 60 = 36 \text{ ksi}$$

$$\text{Actual } f_s = \frac{M \text{ (service)}}{A_s j d}$$

$$k = \sqrt{(2 \times 0.0044 \times 8) + (0.0044 \times 8)^2} - 0.0044 \times 8 = 0.23$$

$$j = 1 - \frac{0.23}{3} = 0.92$$

$$f_s = \frac{(274 + 714) \times 12}{0.6 \times 11 \times 0.92 \times 58.3} = \underline{33.5 \text{ ksi}} < 35.0 \text{ ksi} \quad \underline{\text{OK}}$$

NOTE: Crack control criteria is satisfied even if a value of 130 is used for "Z" (very severe exposure conditions) with a moment at the face of the support as shown on sheet 14.

BAR CUTOFFS

Moment capacities of bar groups:

11 - # 7 bars $M_u = \frac{0.9}{12} \times \overset{f_y}{60} \times \overbrace{11 \times 0.60}^{A_s} \left(\overset{d}{58.3} - \frac{\overset{a}{2.99}}{2} \right)$

$= \underline{1687 \text{ k-ft}}$

3 - # 7 bars $M_u = \frac{0.9}{12} \times 60 \times 3 \times 0.6 \left(58.3 - \frac{0.82}{2} \right)$

$= \underline{469 \text{ k-ft}}$

Development of flexural reinforcement (AASHTO 8.24.1.2.1)

Effective depth of member = 58" ← governs.

15 × bar dia = 15 × 0.875 = 13.1"

1/20 of clear span = $\frac{75'}{20} \times 12 = 45"$

Ultimate (Negative) Moments along the span (moments from pages 34 & 36)

@ $0.5L_1$ = 1.3 × 137 + 2.17 × (−244) = −352 k-ft

@ $0.6L_1$ = 1.3 × 99 + 2.17 × (−293) = −507 k-ft

@ $0.7L_1$ = 1.3 × 38 + 2.17 × (−342) = −693 k-ft

@ $0.8L_1$ = 1.3 × (−44) + 2.17 × (−390) = −904 k-ft

@ $0.9L_1$ = 1.3 × (−148) + 2.17 × (−439) = −1145 k-ft

@ $1.0L_1$ = 1.3 × (−274) + 2.17 × (−714) = −1906 k-ft

INCA ENGINEERS INC.

TITLE 51st AVE. BRIDGE

SUBJECT SLAB DESIGN

MADE BY CG DATE 8/10/90 CHECKED BY MI DATE 9/90

Sheet No 14 of

Job Number 6915

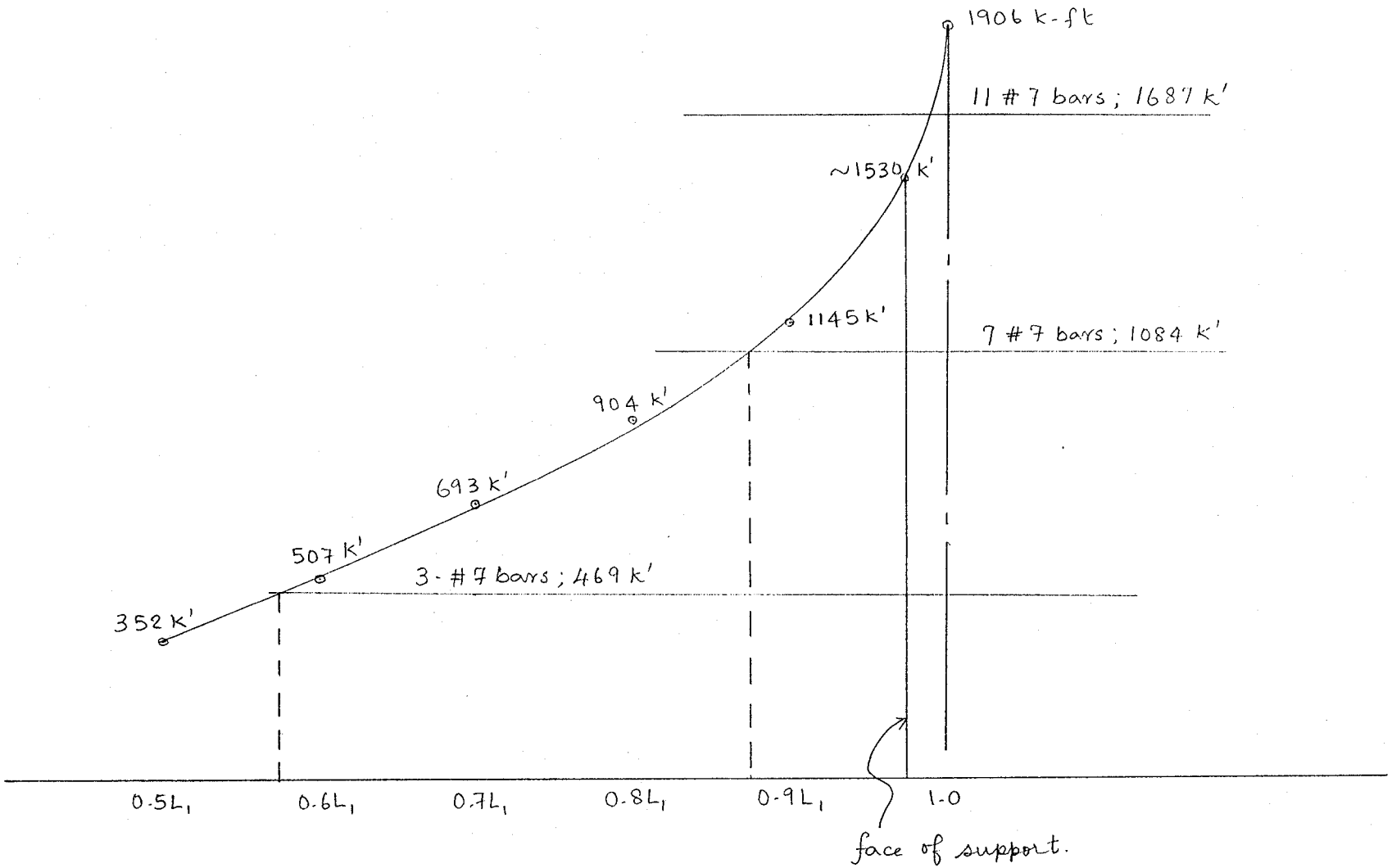

Make 3-#7 bars continuous.

Cut-off length for 1st group of 4 = $(1-0.875)\times 75 + 5' = 14.4' \simeq 20'$

Cut-off length for 2nd group of 4 bars = $(1-0.575)\times 75 + 5' = 36.9' \simeq 40'$

} considering the lengths of bars available & ease of placing.

INCA ENGINEERS INC.

Sheet No 15 of _____

Job Number 6915

TITLE 51st AVE. BRIDGE

SUBJECT SLAB DESIGN (SUMMARY)

MADE BY CG DATE 8/8/90 CHECKED BY MI DATE 9/90

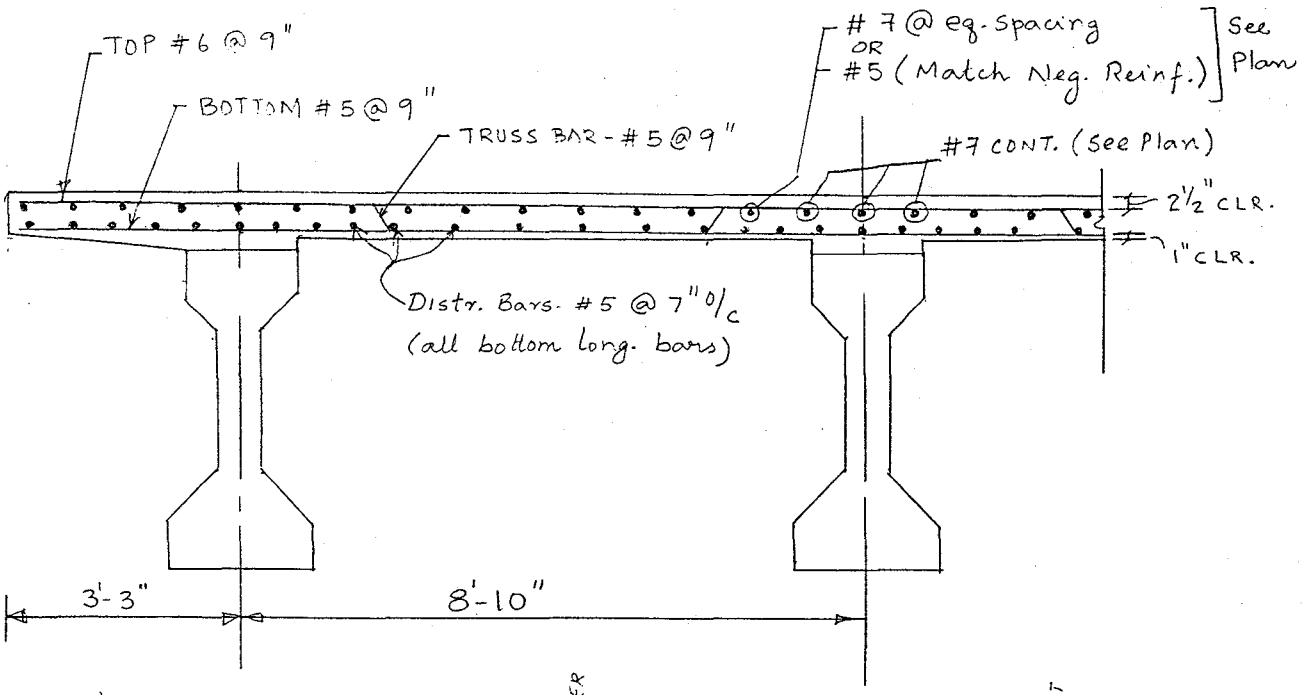

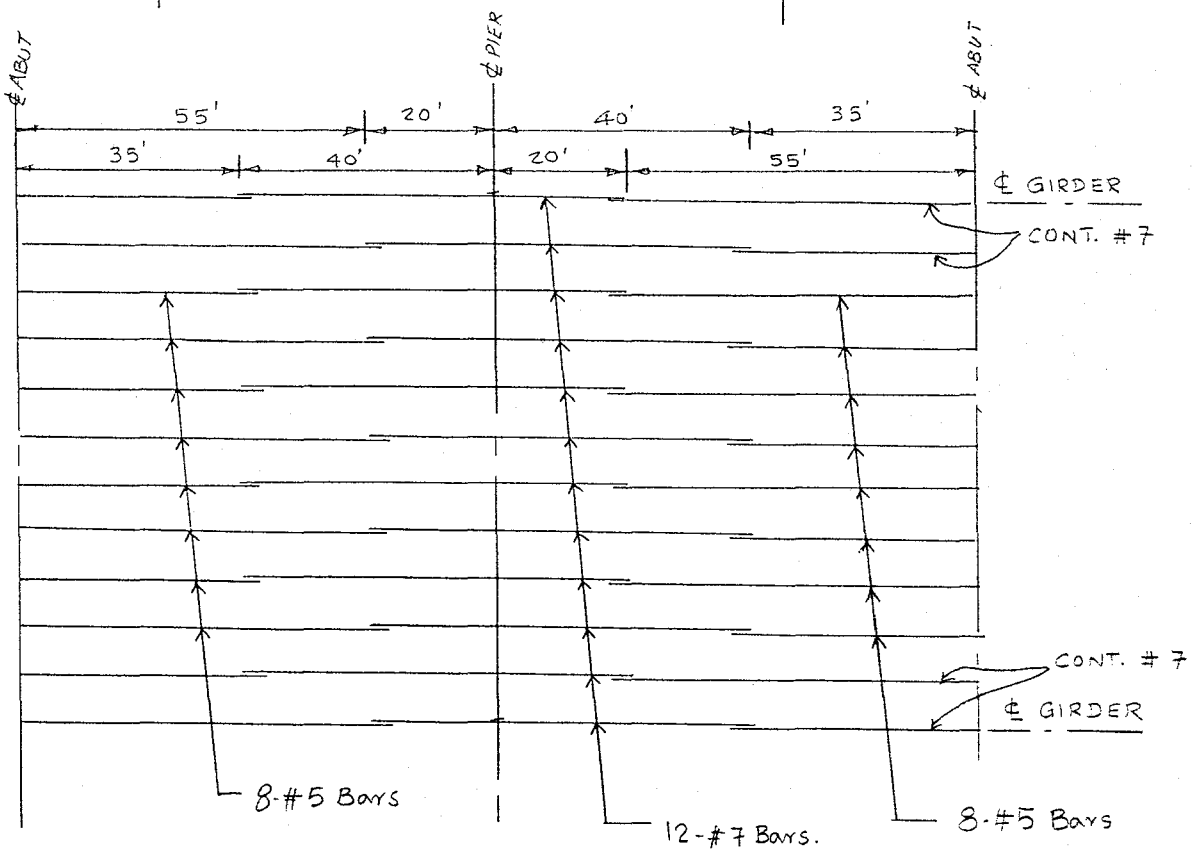

TYP. INTERIOR BAY

INCA
INCA ENGINEERS INC.

Sheet No 16 of _____
Job Number 6915

TITLE 51st AVE. BRIDGE
SUBJECT GIRDER DESIGN
MADE BY CG DATE 8/7/90 CHECKED BY MI DATE 9/90

BASIC DATA:

(1) Two-span configuration : 75'-75'.

(2) Total width of bridge : 94'-10" (constant)

(3) Skew : 18°0'00" Lt.

(4) Intermediate diaphragms at mid section of both spans.

DESIGN CRITERIA

(1) Concrete strength : 4000 psi - at release (24 hrs)
6000 psi - at 28 days.

(2) Strand : ASTM A416 Grade 270, Low Lax, 1/2" dia

(3) Girders are designed as composite-section, simply supported beams for Live load + impact and all superimposed dead loads. Negative Moment reinforcement is designed over intermediate support considering span continuity for all composite dead loads and live load + impact.

(4) The structural slab thickness is the total slab thickness minus 1/2-inch.

(5) Allowable stresses:

	Compression	Tension
@ Release	$0.6f'_{ci}$	$3\sqrt{f'_{ci}}$
@ Service	$0.4f'_c$	$3\sqrt{f'_c}$

INCA ENGINEERS INC.

Sheet No 17 of _____

Job Number 6915

TITLE 51st AVE. BRIDGE

SUBJECT GIRDER DESIGN

MADE BY CG DATE 8/7/90 CHECKED BY MI DATE 9/90

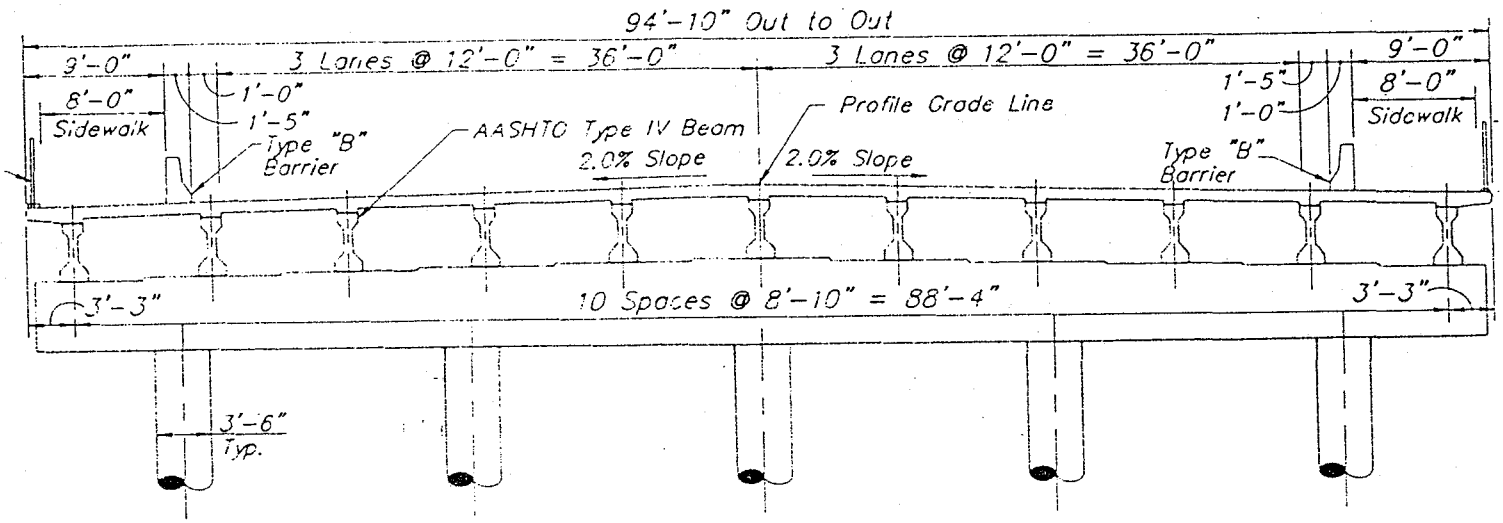

TYPICAL SECTION

FLANGE WIDTH (AASHTO 8.10.1.1)

(1) Total width < $\frac{1}{4}$ x span

ie $\frac{1}{4} \times 75' \times 12 = \underline{225''}$

(2) Total width < (6 x slab thickness) x 2 + 1'-8" (top width of girder)

overhang

ie $(6 \times 7.5) \times 2 + 20'' = \underline{110''}$

(3) Total width < clear distance to next web + 1'-8"

ie 8'-10" = $\underline{106''}$ ← Governs.

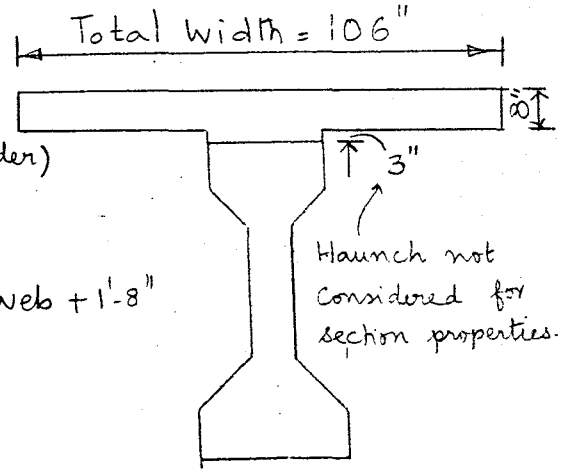

INCA ENGINEERS INC.

Sheet No 18 of _____

Job Number 6915

TITLE 51st AVE. BRIDGE

SUBJECT GIRDER DESIGN

MADE BY CG DATE 8/7/90 CHECKED BY MI DATE 9/90

LOADS:

Dead Loads: (Non-Composite)

(a) Self-wt. of girder = 0.150 k/ft³ or 0.822 k/ft

(b) Wt. of 8" thick concrete = $\frac{8''}{12} \times \frac{106''}{12} \times 0.15\ k/ft^3 = 0.883\ k/ft$

(c) Wt. of 3" haunch = $\frac{3''}{12} \times \frac{20''}{12} \times 0.15\ k/ft^3 = 0.063\ k/ft$

(d) Wt. of intermediate diaphragm (10" thick) = $\frac{10}{12} \times 31.6 \times 0.15\ k/ft^3$ (see page A-1)

= 3.95 say 4 k

Dead Loads: (Composite)

Distribute to all 11 girders (AASHTO 3.23.2.3.1.1)

(a) Future wearing surface = $\frac{25^{psf}}{1000} \times \frac{94.83'}{11} = 0.22\ k/ft$

(b) Barriers (Type B) = $2 \times (2.50\ ft^2 \times 0.15\ k/ft^3)/11 = 0.07\ k/ft$

(c) 12" ϕ Water line (see page 5) = 0.10 k/ft

Live Loads: (Composite)

Distribution of wheel loads (AASHTO Table 3.23.1)

No. of wheels/girder = $\frac{S}{5.5} = \frac{8.83'}{5.5} = 1.61$ wheels/girder

ie 0.805 lanes/girder

or 80.5% lane load.

**********DESIGN DATA********** SHEET # 19

I.D. : 51ST AVENUE BRIDGE - GIRDER DESIGN
ESIGNED BY : NTS JOB NO. 6915
ATE : 8 / 13 /90;
SECTION NAME: AASHTO4+7.5
MASTER LIBRARY FOR I GIRDERS

NAME	AREA IN.^2	I IN.^4	Y-B IN.	DEPTH IN.	WEB WIDTH IN.	<FLANGE WIDTH> TOP IN.	BOT IN.	<FLG.EDGE> TOP IN.	BOT IN.	<FILLET DEPTH> TOP IN.	BOTTOM IN.
AASHTO4	789	260730	24.73	54.00	8.00	20.00	26.00	8.0	8.0	6.00	9.00

PAN= 74 (FT.)

REFERENCE POINT LOCATIONS (FEET FROM LEFT END):

1	2	3	4	5	6	7	8	9	10	11
0.00	3.70	7.40	11.10	14.80	18.50	22.20	25.90	29.60	33.30	37.00
12	13	14	15	16	17	18	19	20	21	
40.70	44.40	48.10	51.80	55.50	59.20	62.90	66.60	70.30	74.00	

LOADS ON PRECAST X-SECTION:
SELF WEIGHT = 0.822 KIP/FT
SUPERIMPOSED DEAD LOAD = .946 KIP/FT
POINT LOAD= 4 KIPS AT 37.5 FT. FROM L.END (D.LOAD)
LOADS ON COMPOSITE X-SECTION:
SUPERIMPOSED DEAD LOAD = .39 KIP/FT
LIVE LOAD = 80.5 % OF AASHO HS20-44 LANE LOAD
MILITARY LOADING NOT INCLUDED

**********DESIGN DATA********** SHEET #

I.D. : 51ST AVENUE BRIDGE - GIRDER DESIGN
IGNED BY : NTS JOB NO. 6915
DATE : 8 / 13 /90;
SECTION NAME: AASHTO4+7.5
MASTER LIBRARY FOR I GIRDERS

NAME	AREA IN.^2	I IN.^4	Y-B IN.	DEPTH IN.	WEB WIDTH IN.	<FLANGE WIDTH> TOP IN.	BOT IN.	<FLG.EDGE> TOP IN.	BOT IN.	<FILLET DEPTH> TOP IN.	BOTTOM IN.
AASHTO4	789	260730	24.73	54.00	8.00	20.00	26.00	8.0	8.0	6.00	9.00

PAN= 74 (FT.)

REFERENCE POINT LOCATIONS (FEET FROM LEFT END):

1	2	3	4	5	6	7	8	9	10	11
0.00	3.70	7.40	11.10	14.80	18.50	22.20	25.90	29.60	33.30	37.00
12	13	14	15	16	17	18	19	20	21	
40.70	44.40	48.10	51.80	55.50	59.20	62.90	66.60	70.30	74.00	

LOADS ON PRECAST X-SECTION:
SELF WEIGHT = 0.822 KIP/FT
SUPERIMPOSED DEAD LOAD = .946 KIP/FT
POINT LOAD= 4 KIPS AT 37 FT. FROM L.END (D.LOAD)
LOADS ON COMPOSITE X-SECTION:
SUPERIMPOSED DEAD LOAD = .39 KIP/FT
LIVE LOAD = 80.5 % OF AASHO HS20-44 LANE LOAD
MILITARY LOADING NOT INCLUDED

CROSS SECTION DATA

	PRECAST	COMPOSITE	
AREA.....=	789.000	1584.000	IN^2
MOMENT OF INERTIA.=	260730.000	652065.000	IN^4
Y-B.....=	24.730	39.630	IN.
Y-T.....=	29.270	21.870	IN.

ACTUAL SLAB WIDTH X THICKNESS= 106.00X 7.50INCHES
EFFECTIVE SLAB WIDTH= 86.55INCHES
SLAB C.G. ABOVE BEAM TOP= 3.75INCHES
CONTACT WIDTH= 20.00INCHES

	DEAD LOAD	LIVE LOAD	TOTAL LOAD	ULTIMATE
EFT REACTION=	81.84	~~0.00~~ 63.4	~~81.84~~ 145.24	243.92
RIGHT REACTION=	81.84	~~0.00~~ 63.4	~~81.84~~ 145.24	243.92

C.G.S. ZONE FOR 29 STRANDS (WSD SOLUTION)

Sheet # 20

DIS=FEET FROM LEFT END, MIN & MAX=INCHES FROM BOTTOM

DIS	0.00	7.40	14.80	22.20	29.60	37.00	44.40	51.80	59.20	66.60	74.00
MAX	54.00	28.69	18.88	12.01	7.83	6.48	7.83	12.01	18.88	28.69	54.00
MIN	0.00	8.54	6.29	4.68	3.72	3.40	3.72	4.68	6.29	8.54	0.00
(USD)	54.00	42.53	30.17	21.75	16.72	15.32	16.72	21.75	30.17	42.53	54.00
	MAX.	MAX.	MAX.	MAX.	MAX.	MAX.	MAX.	MAX.	MAX.	MAX.	MAX.

HARP POINTS = 2

HARP PT.	DIST(FT.)	C.G.S.(IN.)	ECCENT.(IN.)
LEFT END	0.000	18.276	6.454
1	29.500	4.000	20.730
2	44.500	4.000	20.730
RIGHT END	74.000	18.276	6.454

*** ALL LOSSES CALCULATED AT POINT 11 ***

ASSUMING R.H.= 38 %, AND THE INITIAL RELAXATION LOSS = .7 %,
SH= 11.3 ES= 14 CR(C)= 16.6 CR(S)= 2.2 KSI
***BY 1975 AASHTO, INIT %LOSS= 7.6 FINAL % LOSS= 21.8

LOSSES IN PERCENT CALCULATED BY P.C.I. METHOD WITH ADD BACKS
USING LOW-RELAXATION STRAND WITH PULL/FPU= 0.75 AND VOLUME/SURFACE= 4.741

PERIOD	CREEP	SHRINK	RELAX	ELASTIC	ADD-DEAD	ADD-LIVE	TOTAL
RELEASE W/ SELF WGT	0.00	0.22	0.74	6.87	0.00	0.00	7.8
30 DAYS W/ SELF WGT	2.52	1.91	1.49	6.87	0.00	0.00	12.8
30 DAYS W/ SUS. LOAD	2.52	1.91	1.49	6.87	-2.58	0.00	10.2
1 YEAR W/ SUS. LOAD	3.94	3.91	1.92	6.87	-2.58	0.00	14.1
10 YRS W/ SUS. LOAD	4.79	4.54	2.43	6.87	-2.58	0.00	16.1
10 YRS W/ FULL LOAD	4.79	4.54	2.43	6.87	-2.58	-2.08	14.0
P.C.I. INITIAL LOSSES ASSUMED TO BE 10%							
P.C.I. FINAL LOSSES	5.73	5.10	1.77	6.67	0.00	0.00	19.3

***USER SPECIFIED INIT %LOSS= 6.5 FINAL % LOSS= 18.52

***NEW % LOSS VALUES IMPOSED:
INIT % LOSS= 7.6 FINAL % LOSS= 21.8

C.G.S. ZONE FOR 29 STRANDS (WSD SOLUTION)
DIS=FEET FROM LEFT END, MIN & MAX=INCHES FROM BOTTOM

DIS	0.00	7.40	14.80	22.20	29.60	37.00	44.40	51.80	59.20	66.60	74.00
MAX	54.00	28.30	18.07	10.91	6.56	5.15	6.56	10.91	18.07	28.30	54.00
MIN	0.00	8.48	6.20	4.58	3.60	3.28	3.60	4.58	6.20	8.48	0.00
(USD)	54.00	42.53	30.17	21.75	16.72	15.32	16.72	21.75	30.17	42.53	54.00
	MAX.	MAX.	MAX.	MAX.	MAX.	MAX.	MAX.	MAX.	MAX.	MAX.	MAX.

MAX. POS. STRESS IN TOPPING = 0.511 AT 33.30 FT FROM LEFT ALLOW= 1.800
TRANSFER & SERVICE STRESSES, KSI (-)=TENS, (+)=COMP.

PNT #	DIS.TO L.E.FT	<-TRANSFER-> TOP	BOT	<--SERVICE--> TOP	BOT	PNT #	DIS.TO L.E.FT	<-TRANSFER-> TOP	BOT	<--SERVICE--> TOP	BOT
1	0.00	0.000	0.000	0.000	0.000	12	40.70	-0.130	2.052	1.310	-0.134
2	3.70	0.428	1.581	0.632	0.973	13	44.40	-0.153	2.072	1.242	-0.061
3	7.40	0.390	1.613	0.841	0.675	14	48.10	-0.028	1.966	1.272	-0.054
4	11.10	0.337	1.658	1.009	0.428	15	51.80	0.086	1.870	1.267	-0.007
5	14.80	0.268	1.716	1.136	0.232	16	55.50	0.184	1.787	1.222	0.087
6	18.50	0.184	1.787	1.222	0.087	17	59.20	0.268	1.716	1.136	0.232
7	22.20	0.086	1.870	1.267	-0.007	18	62.90	0.337	1.658	1.009	0.428
8	25.90	-0.028	1.966	1.272	-0.054	19	66.60	0.390	1.613	0.841	0.675
9	29.60	-0.153	2.072	1.242	-0.061	20	70.30	0.428	1.581	0.632	0.973
10	33.30	-0.130	2.052	1.310	-0.134	21	74.00	0.000	0.000	0.000	0.000
11	37.00	-0.123	2.046	1.336	-0.156						

ALLOW. STRESS @ TRANSFER,F(C)= 2.400 = 0.600 FCI,F(T)=-0.190 = 3.000*RFCI
ALLOW. STRESS @ SERVICE,F(C)= 2.400 = 0.400 F'C,F(T)=-0.232 = 3.000*RF'C
WSD STRESS @ TRANSFER & SERVICE HAVE BEEN CHECKED & ARE OK

MOMENTS PNT	DIS.TO L.E.FT	<----------WSD UNITS KIP-FT----------> DEAD SELF WT	D.INCR.ON PRECAST	D.INCR.ON COMPOSITE	LIVE LOAD	<------USD------> DESIGN ULTIMATE	CAPACITY ULTIMATE	1.2 X CRACKING
1	0.00	0.00	0.00	0.00	0.00	0.00	0.00	0.00
2	3.70	106.89	130.43	50.72	221.07	854.19	3054.79	3167.06
3	7.40	202.53	247.91	96.10	415.31	1611.74	4378.25	3220.15
4	11.10	286.91	352.44	136.15	582.72	2272.66	4556.76	3289.52
5	14.80	360.05	444.02	170.85	723.29	2836.95	4735.30	3375.18
6	18.50	421.93	522.65	200.22	837.03	3304.60	4913.86	3477.12
7	22.20	472.56	588.33	224.24	923.94	3675.63	5092.44	3595.34
8	25.90	511.94	641.06	242.93	989.65	3962.26	5271.04	3729.84

9	29.60	540.07	680.84	256.28	1039.82	4176.74	5444.83	3875.31
10	33.30	556.95	707.66	264.29	1063.14	4294.59	5444.83	3845.91
11	37.00	562.57	721.54	266.95	1059.64	4315.80	5444.83	3832.79
12	40.70	556.95	707.66	264.29	1063.14	4294.59	5444.83	3845.91
13	44.40	540.07	680.84	256.28	1039.82	4176.74	5444.83	3875.31
14	48.10	511.94	641.06	242.93	989.65	3962.26	5271.04	3729.84
15	51.80	472.56	588.33	224.24	923.94	3675.63	5092.44	3595.33
16	55.50	421.93	522.65	200.22	837.03	3304.60	4913.86	3477.12
17	59.20	360.05	444.02	170.85	723.29	2836.95	4735.30	3375.18
18	62.90	286.91	352.44	136.15	582.72	2272.66	4556.76	3289.52
19	66.60	202.53	247.91	96.10	415.31	1611.74	4378.25	3220.15
20	70.30	106.89	130.43	50.72	221.07	854.19	3054.79	3167.06
21	74.00	0.00	0.00	0.00	0.00	0.00	0.00	0.00

MAX POS MOMENT A BLOCK= 3.2 INCHES AT POINT # 9

WSD DEAD & USD DESIGN SHEARS,KIPS

PNT	DIST.	D.L. WSD	TOTAL USD	PNT	DIST.	D.L. WSD	TOTAL USD
1	0.00	81.84	243.92	12	40.70	-9.98	-82.28
2	3.70	73.86	226.16	13	44.40	-17.97	-100.55
3	7.40	65.87	208.37	14	48.10	-25.95	-118.66
4	11.10	57.89	190.53	15	51.80	-33.94	-136.71
5	14.80	49.90	172.64	16	55.50	-41.92	-154.70
6	18.50	41.92	154.70	17	59.20	-49.90	-172.64
7	22.20	33.94	136.71	18	62.90	-57.89	-190.53
8	25.90	25.95	118.66	19	66.60	-65.87	-208.37
9	29.60	17.97	100.55	20	70.30	-73.86	-226.16
10	33.30	9.98	82.28	21	74.00	-81.84	-243.92
11	37.00	-2.00	-61.13				

ACI HORIZONTAL SHEAR RESULTS (PSI & IN^2/IN) CONTACT WIDTH= 20.00

PNT	DIST	V(UH)	A(V)/S	SPAC(#3)	PNT	DIST	V(UH)	A(V)/S	SPAC(#3)
1	0.00	291.63	0.02500	0.0	12	40.70	84.18	0.02500	0.0
2	3.70	270.40	0.02500	0.0	13	44.40	102.87	0.02500	0.0
3	7.40	249.12	0.02500	0.0	14	48.10	125.18	0.02500	0.0
4	11.10	227.79	0.02500	0.0	15	51.80	149.01	0.02500	0.0
5	14.80	201.55	0.02500	0.0	16	55.50	174.41	0.02500	0.0
6	18.50	174.41	0.02500	0.0	17	59.20	201.55	0.02500	0.0
7	22.20	149.01	0.02500	0.0	18	62.90	227.79	0.02500	0.0
8	25.90	125.18	0.02500	0.0	19	66.60	249.12	0.02500	0.0
9	29.60	102.87	0.02500	0.0	20	70.30	270.40	0.02500	0.0
10	33.30	84.18	0.02500	0.0	21	74.00	291.63	0.02500	0.0
11	37.00	62.54	0.00000	0.0					

TOTAL AREA OF HORZ. SHEAR STIRRUPS REQD= 21.09

HORIZONTAL SHEAR PER PCI 3.3.4 2ND ED W/ACI LIMITS FOR F(H) CONTACT WIDTH= 20.00
C(C)= 2703.00 T= 1169.30 F(H)MAX= 7104.00 F(H) 1169.30
A(CS)CALC= 4.53 A(CS)MIN120=26.64 A(CS)MIN50= 11.10 A(CS)= 11.10
TOTAL AREA OF HORZ. SHEAR TIES REQD = A(CS)*2 = 22.20
TOTAL NUMBER OF STIRRUPS WITH A(V)= 0.40 IN^2= 55.50
AVERAGE CALCULATED SPACING= 16.00 MAXIMUM SPACING= 24.00

SHEAR RESULTS (PSI & IN^2/IN) * INDICATES MAXIMUM SPACING CONTROLS # MEANS>4 SQR

PNT	DIST	V(U)	V(C)	A(V)/S	SPAC	PNT	DIST	V(U)	V(C)	A(V)/S	SPAC
1	0.00	688.6	271.1	0.0189	21.2	12	40.70	198.8	154.9	0.0175	22.9
2	3.70	638.4	559.9	0.0189	21.2	13	44.40	242.9	191.5	0.0175	22.9
3	7.40	588.2	582.2	0.0189	21.2	14	48.10	295.6	230.4	0.0177	22.6
4	11.10	537.8	599.5	0.0189	21.2	15	51.80	351.8	279.6	0.0180	22.2
5	14.80	475.9	444.7	0.0187	21.4	16	55.50	411.8	346.2	0.0183	21.8
6	18.50	411.8	346.2	0.0183	21.8	17	59.20	475.9	444.7	0.0187	21.4
7	22.20	351.8	279.6	0.0180	22.2	18	62.90	537.8	599.5	0.0189	21.2
8	25.90	295.6	230.4	0.0177	22.6	19	66.60	588.2	582.2	0.0189	21.2
9	29.60	242.9	191.5	0.0175	22.9	20	70.30	638.4	559.9	0.0189	21.2
10	33.30	198.8	154.9	0.0175	22.9	21	74.00	688.6	271.1	0.0189	21.2
11	37.00	147.7	154.9	0.0175	22.9						

PROVIDE SHEAR STIRRUPS WITH A(V)= .4 IN^2
DESIGN CAMBER IN INCHES: +/- 1/2 INCH TOLERANCE

PNT	DIST FROM LE(FT)	ESTIMATED AT RELEASE	<---ESTIMATED AT ERECTION---> SELF WEIGHT	NON-COMP. D.L.	TDL + 0%PERM.LL	<---ESTIMATED LONG TIME----> WITH TDL ONLY	WITH TDL + 0%PERM.LL	TDL + 0%PERM.LL 100%INST.LL
1	0.00	0.000	0.000	0.000	0.000	0.000	0.000	0.000
2	3.70	0.151	0.267	0.177	0.164	0.087	0.087	0.039
3	7.40	0.292	0.518	0.340	0.313	0.160	0.160	0.066
4	11.10	0.422	0.747	0.487	0.448	0.221	0.221	0.081
5	14.80	0.539	0.955	0.619	0.568	0.272	0.272	0.090
6	18.50	0.642	1.138	0.734	0.673	0.315	0.315	0.096
7	22.20	0.730	1.294	0.833	0.763	0.353	0.353	0.101
8	25.90	0.801	1.419	0.912	0.836	0.384	0.384	0.105

Sheet # 22

9	29.60	0.853	1.511	0.971	0.889	0.406	0.406	0.108
10	33.30	0.884	1.566	1.005	0.921	0.419	0.419	0.108
11	37.00	0.895	1.585	1.017	0.931	0.423	0.423	0.107
12	40.70	0.884	1.566	1.005	0.921	0.419	0.419	0.107
13	44.40	0.853	1.511	0.971	0.889	0.406	0.406	0.105
14	48.10	0.801	1.419	0.912	0.836	0.384	0.384	0.102
15	51.80	0.730	1.294	0.833	0.763	0.353	0.353	0.097
16	55.50	0.642	1.138	0.734	0.673	0.315	0.315	0.093
17	59.20	0.539	0.955	0.619	0.568	0.272	0.272	0.087
18	62.90	0.422	0.747	0.487	0.448	0.221	0.221	0.079
19	66.60	0.292	0.518	0.340	0.313	0.160	0.160	0.064
20	70.30	0.151	0.267	0.177	0.164	0.087	0.087	0.038
21	74.00	0.000	0.000	0.000	0.000	0.000	0.000	0.000

PNT.	DIST	I(CR)	RATIO	PNT.	DIST	I(CR)	RATIO
1	0.00	42831.16	1.00	12	40.70	77390.73	1.00
2	3.70	46599.38	1.00	13	44.40	77390.73	1.00
3	7.40	50529.70	1.00	14	48.10	72618.94	1.00
4	11.10	54622.29	1.00	15	51.80	67875.50	1.00
5	14.80	58877.33	1.00	16	55.50	63295.02	1.00
6	18.50	63295.02	1.00	17	59.20	58877.33	1.00
7	22.20	67875.50	1.00	18	62.90	54622.28	1.00
8	25.90	72618.94	1.00	19	66.60	50529.70	1.00
9	29.60	77390.73	1.00	20	70.30	46599.38	1.00
10	33.30	77390.73	1.00	21	74.00	42831.16	1.00
11	37.00	77390.73	1.00				

NOTE: RATIO OF 1.00 MEANS CRACKING NEVER OCCURED
RATIO BETWEEN 1 & 2 MEANS CRACKING WITH SUS. LOADS WITH DECIMAL INDICATING PORTION OF SUS. LOAD TILL CRACKING
RATIO >=2 INDICATES CRACKING WITH INST LL ONLY

VOLUME TO SURFACE RATIO= 4.741

ELASTIC SHORTENING @ CG	+	SHRINKAGE	+	CREEP	=	TOTAL	TOP	BOTTOM
0.221		0.173		0.379		0.773	0.421	1.071

```
<-----------PRESTRESSED CONCRETE MEMBER DESIGN SUMMARY-----------SHEET NO. 23

OB I.D.     : 51ST AVENUE BRIDGE - GIRDER DESIGN
ATE         :   8/13/90; DESIGNED BY:NTS    CHECKED BY:CG   JOB NO. 6915
 TION NAME: AASHTO4+7.5 , ACTUAL TOPPING WIDTH= 106.0 IN. EFF.=  86.5 IN.
            ==================================================
            <------------------SPAN=  74.000 FT---------------->

RECAST X-SECTION LOADS:
  SELF WEIGHT.............=    0.822 KIP/FT
  SUPERIMPOSED DEAD LOAD..=    0.946 KIP/FT
  P =   4.000K @  37.000 FT FROM LE
OMPOSITE X-SECTION LOADS:
  SUPERIMPOSED DEAD LOAD..=    0.390 KIP/FT
  SUPERIMPOSED LIVE LOAD..=    0.000 KIP/FT
  LIVE LOAD INCLUDES 80.50 % OF HS20-44 LANE LOAD

<--------SECTION PROPERTIES---------><-----------SERVICE LOAD MOMENTS---------->
   PLAIN                COMPOSITE        PRECAST SECTION:
  =     789.00 IN.^2 =    1584.00 IN.^2    D.L.=1284.1 K-FT AT  37.0 FT FROM LE
  = 260730.00 IN.^4 = 652065.00 IN.^4
  =      54.00 IN.   =      61.50 IN.    COMPOSITE SECTION:
YB=      24.73 IN    =      39.63 IN.      D.L.=   267.0 K-FT AT    37.0 FT FROM LE
YT=      29.27 IN.   =      21.87 IN.      L.L.=  1063.1 K-FT AT    40.7 FT FROM LE
B=   10543.07 IN.^3 =   16453.82 IN.^3
T=    8907.75 IN.^3 =   29815.50 IN.^3
WT=    821.88 PLF   =    1650.00 PLF
<------------------------------------------------------------------------------>
   CONCRETE DATA:              STRAND DATA: PULL= 0.75 FPU=270 KSI LOW-RELAXATION
   BEAM:                       DIA.= 0.500 IN.;AREA PER STRAND= 0.1531 IN.^2
T  =   150 PCF                 NO. =    29     ;TOTAL AREA     = 4.4399 IN.^2
FCI =  4.00 KSI
F'C =  6.00 KSI                AASHTO LOSSES; INITIAL=  7.60%; FINAL= 21.80%
   TOPPING                     PI=   899 KIPS; PO=   831 KIPS; PE=   703 KIPS
T  =   150 PCF                 ECCENTRICITY DATA: NUMBER OF HARP POINTS=     2
F'C =  4.00 KSI                ECCENTRICITY AT ENDS              =  6.45,  6.45 IN.
PRESTRESS STEEL ECCENTRICITIES & DEPRESSION FORCE @ HARP POINTS
NTS: DIS.LE=FT. -E-=INCHES, DEP.FORCE=KIPS
 P#    DIS.LE    ---E---  DEP.FORCE     HARP#    DIS.LE    ---E---  DEP.FORCE
.END    0.000     6.454     36.228       1      29.500    20.730     36.236
 2     44.500    20.730     36.236     R.END    74.000     6.454     36.228
<------------------------------------------------------------------------------>
LTIMATE MOMENT AT CRITICAL SECTION: ( 1.30 DL + 2.17 LL)
        CRITICAL MOMENT =  4315.8 KIP-FT    37.0 FT FROM LEFT END
        RESISTING MOMENT=  5444.8 KIP-FT
<------------------------------------------------------------------------------>
RANSFER STRESSES:
 CRITICAL TENSILE     AT TOP  29.6 FT FROM LT END= 0.153 KSI; ALLOW= 0.190 KSI
 CRITICAL COMPRESSIVE AT BOT  29.6 FT FROM LT END= 2.072 KSI; ALLOW= 2.400 KSI
SERVICE STRESSES:
 CRITICAL TENSILE     AT BOT  37.0 FT FROM LT END= 0.156 KSI; ALLOW= 0.232 KSI
 CRITICAL COMPRESSIVE AT TOP  37.0 FT FROM LT END= 1.336 KSI; ALLOW= 2.400 KSI
<------------------------------------------------------------------------------>
DESIGN CAMBER IN INCHES: +/- 1/2 INCH TOLERANCE     <---ESTIMATED LONG TIME---->
    DIST  ESTIMATED  <---ESTIMATED AT ERECTION---> WITH      WITH      TDL +
    FROM     AT       SELF    NON-COMP.  TDL +     TDL       TDL +    0%PERM.LL
   LE(FT) RELEASE    WEIGHT     D.L.    0%PERM.LL ONLY   0%PERM.LL 100%INST.LL
   37.00   0.895     1.585     1.017     0.931     0.423     0.423     0.107
<------------------------------------------------------------------------------>
HEAR STIRRUPS: WITH A(V)= 0.400 IN.^2 & FY =  40.0 KSI
  MEASURED FROM LEFT END   MEASURED FROM RIGHT END
     5 AT  2 IN.              5 AT  2 IN.
     6 AT  4 IN.              6 AT  4 IN.
     6 AT  8 IN.              6 AT  8 IN.
    23 AT 16 IN.             23 AT 16 IN.
<------------------------------------------------------------------------------>
ORIZONTAL SHEAR STIRRUPS: WITH A(V)=  0.40 IN.^2 & FY =  40.0 KSI
    USE SAME SPACING AS SHEAR REINFORCEMENT
<------------------------------------------------------------------------------>
GS AT ENDS= 18.276 , 18.276 IN.,  CGS AT DEPRESS POINTS=  4.000 ,  4.000IN.
<------------------------------------------------------------------------------>
F CTIONS IN KIPS= (WSD)  [illegible] ,  [illegible] ;  (USD) 243.92 , 243.92
<------------------------------------------------------------------------------>
ESIGN COMPLETED          145.24    145.24
```

INCA ENGINEERS INC.

Sheet No 24 of

Job Number 6915

TITLE 51st AVE. BRIDGE

SUBJECT GIRDER DESIGN SUMMARY

MADE BY NTS DATE 8/13/90 CHECKED BY CG DATE 8/14/90

$f'_{ci} = 4000$

$f'_c = 6000$

@Ends

6@2 = 12
8@4 = 32
6@6 = 36
9@50 = 450
29 530

c.g.s. = 18.276"

6@2 = 12
8@4 = 32
6@6 = 36
9@4 = 36
29 116

c.g.s = 4.000"

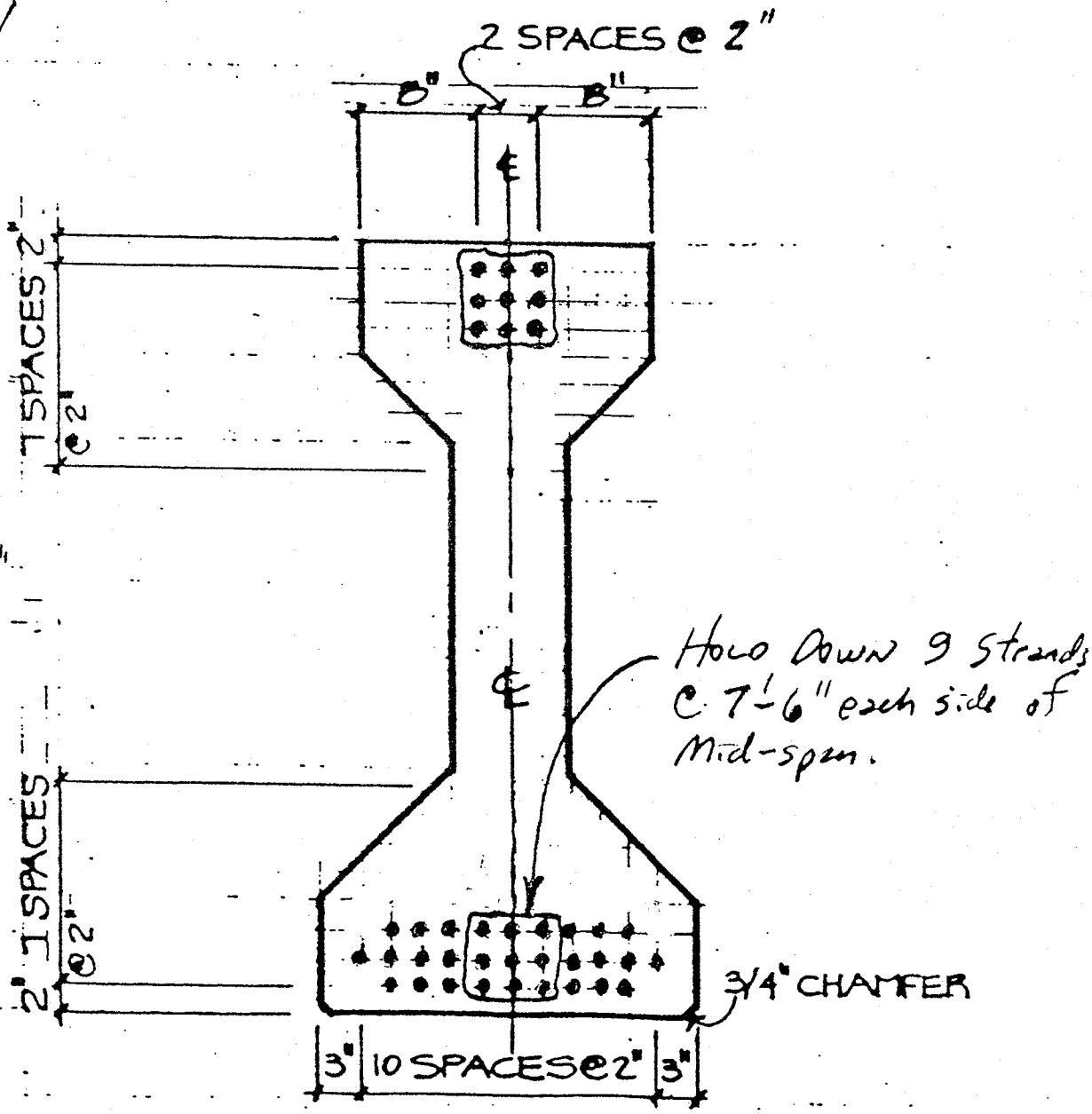

```
1[redacted]AVEN    01 1 2R G 750          4300     150                          7310 ] FRAME
1[redacted]AVEN    02 2 3 RG 750          4300     150                          7310 ] DESCRIPTION
1STAVEN    01       +01  067  217  000  000                                    7312 ]
1[redacted]AVEN    01       +01  067  167  025  383                             7312
1[redacted]AVEN    01       +06  075  075  075  067                             7312
1[redacted]YEN     01       +05  075  075  142  067                             7312 ] CROSS SECTION
1S[redacted]AVEN   01       +07  050  050  075  383                             7312 ] GIRDER + SLAB
1[redacted]AVEN    01       +08  050  050  142  383                             7312
1[redacted]AVEN    01       +01  025  136  025  450                             7312
1STAVEN    01       +01  317  067  075  067                                     7312
1[redacted]AVEN    01       +02  063  725  471  450                  01         7312
1[redacted]AVEN    02    01                                                     7312 ]
1STAVEN    01 1    0390U                          COMPOSITE DEAD LOAD          7316 ] COMP. D.L
1[redacted]AVEN    01 2    0390U                  COMPOSITE DEAD LOAD          7316 ]
1[redacted]AVEN    01 0805 0805                                                7320 ] LIVE LOAD
1STAVEN    02 0805 0805                                                        7320 ]
```

ANALYSIS FOR CONTINUITY

FRAME DESCRIPTION

LINE MEM NO	JOINT NO. LT	JOINT NO. RT	END COND LT	END COND RT	DIR	SPAN	I	SUPPORT OR HINGE	E	DEAD LOAD UNIFORM	DEAD LOAD SEC	K LT	K RT	CARRY OVER FACTORS LT	CARRY OVER FACTORS RT	R M
1	1	2	R		G	75.0	.00	.0	4300.	.000	150.	.00	.00	.00	.00	
2	2	3		R	G	75.0	.00	.0	4300.	.000	150.	.00	.00	.00	.00	

SECTION PROPERTIES

LINE MEM	LOC	RECALL + -	CODE	V	H	X	Y	INERTIAS OF PARTS AREA	IXX	IYY	STORE
1	.0	+	1	.67	2.17	.00	.00	.00	.00	.00	
1	.0	+	1	.67	1.67	.25	3.83	.00	.00	.00	
1	.0	+	6	.75	.75	.75	.67	.00	.00	.00	
1	.0	+	5	.75	.75	1.42	.67	.00	.00	.00	
1	.0	+	7	.50	.50	.75	3.83	.00	.00	.00	
1	.0	+	8	.50	.50	1.42	3.83	.00	.00	.00	
1	.0	+	1	.25	1.36	.25	4.50	.00	.00	.00	
1	.0	+	1	3.17	.67	.75	.67	.00	.00	.00	
1	.0	+	2	.63	7.25	4.71	4.50	.00	.00	.00	01

AREA	CENTROID LOCATION X	CENTROID LOCATION Y	MOMENT OF INERTIA ABOUT CENTROID X-X	MOMENT OF INERTIA ABOUT CENTROID Y-Y
10.42	1.08	3.35	32.26	21.25

EMBER 1 PROPERTIES

LENGTH	MIN INERTIA	STIFFNESS LT	STIFFNESS RT	CARRY OVER LT	CARRY OVER RT
75.0	32.26	4.000	4.000	.500	.500

SECTION PROPERTIES

LINE	MEM	LOC	RECALL	+ - CODE	V	H	X	Y	INERTIAS OF PARTS AREA	IXX	IYY	STORE
	2	.0	01	0	.00	.00	.00	.00	.00	.00	.00	
		RECALL	1				1.08	3.35	10.42	32.26	21.25	

AREA	CENTROID LOCATION X	CENTROID LOCATION Y	MOMENT OF INERTIA ABOUT CENTROID X-X	MOMENT OF INERTIA ABOUT CENTROID Y-Y
10.42	1.08	3.35	32.26	21.25

MEMBER 2 PROPERTIES

LENGTH	MIN INERTIA	STIFFNESS LT	STIFFNESS RT	CARRY OVER LT	CARRY OVER RT
75.0	32.26	4.000	4.000	.500	.500

FRAME DIAGNOSTICS

NO ERRORS FOUND

RAME PROPERTIES

M M NO	JT LT	JT RT	END COND LT	END COND RT	DIR	SPAN	I	SUPPORT OR HINGE	E	CARRY OVE R FACTORS LT	CARRY OVE R FACTORS RT	DISTRIBUTION FACTORS LT	DISTRIBUTION FACTORS RT
1	1	2	R		G	75.0	32.26	.0	4300.	.500	.000	.000	.500
2	2	3		R	G	75.0	32.26	.0	4300.	.000	.500	.500	.000

I D END MOMENTS TRIAL 0

MEM NO	FIXED END MOMENTS LT	RT	MEM NO	FIXED END MOMENTS LT	RT	MEM NO	FIXED END MOMENTS LT	RT
1	0.	-1099.	2	-1099.	0.			

VOID

*** SIDESWAY NOT CONSIDERED. ***

HORIZONTAL MEMBER MOMENTS TRIAL 0

M M	LEFT	.1 PT	.2 PT	.3 PT	.4 PT	.5 PT	.6 PT	.7 PT	.8 PT	.9 PT	RI
1	0.	286.	483.	593.	615.	549.	396.	154.	-176.	-593.	-
2	-1099.	-593.	-176.	154.	396.	549.	615.	593.	483.	286.	

A NING - MEMBER DEPTHS WERE NOT USED FOR ALL MEMBERS SO STRESSES WERE NOT CALC.

ORIZONTAL MEMBER SHEARS TRIAL 0

M M	LEFT	.1 PT	.2 PT	.3 PT	.4 PT	.5 PT	.6 PT	.7 PT	.8 PT	.9 PT	RI
	43.9	32.2	20.5	8.8	-2.9	-14.6	-26.4	-38.1	-49.8	-61.5	-
2	73.2	61.5	49.8	38.1	26.4	14.6	2.9	-8.8	-20.5	-32.2	-

VOID

A GENTIAL ROTATIONS - RADIANS - CLOCKWISE POSITIVE

SPAN	LT. END	RT. END	SPAN	LT. END	RT. END	SPAN	LT. END	RT. END
1	.000688	.000000	2	.000000	-.000688			

ORIZONTAL MEMBER DEFLECTIONS IN FEET AT 1/ 4 POINTS FROM LEFT END - DOWNWARD POSITIVE

MEMBER 1	E= 4300.	.000	.011	.013	.006	.000
MEMBER 2	E= 4300.	.000	.006	.013	.011	.000

VOID

LOAD DATA TRIAL 1

ONE MEM	W OR P	LOAD CODE	A	B	FIXED END MOMENTS LEFT	RIGHT	DEFLT	COMMENTS
1	.390	U	.0	.0	0.	0.		COMPOSITE DEAD L
		ASSUMED DATA	75.0					
2	.390	U	.0	.0	0.	0.		COMPOSITE DEAD L
		ASSUMED DATA	75.0					

IXED END MOMENTS TRIAL 1

MEM NO	FIXED END MOMENTS LT	RT	MEM NO	FIXED END MOMENTS LT	RT	MEM NO	FIXED END MOMENTS LT	RT
1	0.	-274.	2	-274.	0.			

*** SIDESWAY NOT CONSIDERED. ***

HORIZONTAL MEMBER MOMENTS TRIAL 1

M	LEFT	.1 PT	.2 PT	.3 PT	.4 PT	.5 PT	.6 PT	.7 PT	.8 PT	.9 PT	RI
	0.	71.	121.	148.	154.	137.	99.	38.	-44.	-148.	
2	-274.	-148.	-44.	38.	99.	137.	154.	148.	121.	71.	

A ING - MEMBER DEPTHS WERE NOT USED FOR ALL MEMBERS SO STRESSES WERE NOT CALC.

ORIZONTAL MEMBER SHEARS TRIAL 1

M NO	LEFT	.1 PT	.2 PT	.3 PT	.4 PT	.5 PT	.6 PT	.7 PT	.8 PT	.9 PT	RI
	11.0	8.0	5.1	2.2	-.7	-3.7	-6.6	-9.5	-12.4	-15.4	-
2	18.3	15.4	12.4	9.5	6.6	3.7	.7	-2.2	-5.1	-8.0	-

LIVE LOAD DIAGNOSTICS

NO ERRORS FOUND

SUPERSTRUCTURE LIVE LOAD

LINE NO.	MEM NO.	NUMBER OF LIVE LOAD LANES SUPERSTRUCTURE LT.END	SUPERSTRUCTURE RT.END	SUBSTRUCTURE LT.END	SUBSTRUCTURE RT.END	RESISTING MONENT OF UNIT STEEL POSITIVE	NEGATIVE	PLOT M & S ENV.	PLOT M & S SCALE	INFLUENCE LINES
	1	.805	.805	1.0	1.0	0.	0.	0	0	NO
	2	.805	.805	1.0	1.0	0.	0.			

LINE NO.	LIVE LOAD NO.	TRUCK P1	D1	P2	D2	P3	LANE UNIFORM	MOM. RIDER	SHEAR RIDER	IMPACT	NO. LL LNS.	LIVE LOAD SIDESWAY	COMM
	1.	8.0	14.0	32.0	14.0	32.0	.640	18.0	26.0	YES	.00	NO	HS20-44 AASH WITHOUT AL

L NO. 1. NEGATIVE LIVE LOAD MOMENT ENVELOPE AND ASSOCIATED SHEARS

EM NO	LEFT	.1 PT	.2 PT	.3 PT	.4 PT	.5 PT	.6 PT	.7 PT	.8 PT	.9 PT	RIG
	0.	-49.	-98.	-146.	-195.	-244.	-293.	-342.	-390.	-439.	-
SHEAR	.0	-6.5	-6.5	-6.5	-6.5	-6.5	-6.5	-6.5	-6.5	-6.5	
	-714.	-439.	-390.	-342.	-293.	-244.	-195.	-146.	-98.	-49.	
SHEAR	44.5	6.5	6.5	6.5	6.5	6.5	6.5	6.5	6.5	6.5	

L NO. 1. DEAD LOAD PLUS NEGATIVE LIVE LOAD MOMENT ENVELOPE

EM NO	LEFT	.1 PT	.2 PT	.3 PT	.4 PT	.5 PT	.6 PT	.7 PT	.8 PT	.9 PT	RIG
	0.	237.	386.	447.	420.	305.	103.	-188.	-566.	-1033.	-1
	-1812.	-1033.	-566.	-188.	103.	305.	420.	447.	386.	237.	

L NO. 1. POSITIVE LIVE LOAD MOMENT ENVELOPE AND ASSOCIATED SHEARS

EM NO	LEFT	.1 PT	.2 PT	.3 PT	.4 PT	.5 PT	.6 PT	.7 PT	.8 PT	.9 PT	RIGH
	0.	394.	660.	805.	870.	851.	766.	597.	368.	92.	
SHEAR	.0	52.5	44.0	32.7	24.7	-29.7	-37.4	-48.2	-55.0	-23.8	
	0.	92.	368.	597.	766.	851.	870.	805.	660.	394.	
SHEAR	.0	23.8	55.0	48.2	37.4	29.7	-24.7	-32.7	-44.0	-52.5	

L NO. 1. DEAD LOAD PLUS POSITIVE LIVE LOAD MOMENT ENVELOPE

EM NO	LEFT	.1 PT	.2 PT	.3 PT	.4 PT	.5 PT	.6 PT	.7 PT	.8 PT	.9 PT	RIGH
	0.	680.	1143.	1398.	1485.	1400.	1161.	751.	192.	-501.	-1(
	-1099.	-501.	192.	751.	1161.	1400.	1485.	1398.	1143.	680.	

L NO. 1. LIVE LOAD SHEAR ENVELOPES AND ASSOCIATED MOMENTS

E R 1	LEFT	.1 PT	.2 PT	.3 PT	.4 PT	.5 PT	.6 PT	.7 PT	.8 PT	.9 PT
PC V	61.3	52.5	44.0	35.8	28.0	20.9	14.4	8.6	3.9	1.6
M ENT	.0	394.0	659.6	804.8	840.8	781.9	646.0	453.9	94.1	26.2
N S. V	-6.5	-6.6	-10.7	-16.4	-24.4	-32.8	-40.7	-48.2	-55.0	-61.2
MOMENT	.0	213.5	398.4	629.0	766.5	812.4	750.9	596.8	368.1	86.4
R GE	67.8	59.1	54.7	52.2	52.4	53.6	55.1	56.8	59.0	62.8

L NO. 1. LIVE LOAD SHEAR ENVELOPES AND ASSOCIATED MOMENTS

EMBER 2	LEFT	.1 PT	.2 PT	.3 PT	.4 PT	.5 PT	.6 PT	.7 PT	.8 PT	.9 PT
POS. V	66.4	61.2	55.0	48.2	40.7	32.8	24.4	16.4	10.7	6.6
M ENT	-223.6	86.4	368.1	596.8	750.9	812.4	766.5	629.0	398.4	213.5
N S. V	.0	-1.6	-3.9	-8.6	-14.4	-20.9	-28.0	-35.8	-44.0	-52.5
MOMENT	.0	110.0	235.4	453.9	646.0	781.9	840.8	804.8	659.6	394.0
R GE	66.4	62.8	59.0	56.8	55.1	53.6	52.4	52.2	54.7	59.1

LL NO. 1. DEAD LOAD PLUS LIVE LOAD SHEAR ENVELOPE

EMBER 1	LEFT	.1 PT	.2 PT	.3 PT	.4 PT	.5 PT	.6 PT	.7 PT	.8 PT	.9 PT
P V	105.3	84.8	64.5	44.6	25.1	6.2	-12.0	-29.4	-45.9	-59.9
NE. V	37.4	25.6	9.8	-7.6	-27.3	-47.4	-67.1	-86.3	-104.8	-122.7

LL NO. 1. DEAD LOAD PLUS LIVE LOAD SHEAR ENVELOPE

EMBER 2	LEFT	.1 PT	.2 PT	.3 PT	.4 PT	.5 PT	.6 PT	.7 PT	.8 PT	.9 PT
P. V	139.7	122.7	104.8	86.3	67.1	47.4	27.3	7.6	-9.8	-25.6
NEG. V	73.2	59.9	45.9	29.4	12.0	-6.2	-25.1	-44.6	-64.5	-84.8

LL NO. 1.

LIVE LOAD SUPPORT RESULTS

	MAX. AXIAL LOAD	MAX. AXIAL LOAD MOMENT TOP	MAX. AXIAL LOAD MOMENT BOT.	MAX. LONGITUDINAL MOMENT AXIAL LOAD	MAX. LONGITUDINAL MOMENT MOMENT TOP	MAX. LONGITUDINAL MOMENT MOMENT BOT.
SUPPORT JT. 1						
POSITIVE	76.2	0.	0.	.0	0.	0.
NEGATIVE	-8.1	0.	0.	.0	0.	0.
SUPPORT JT. 2						
POSITIVE	107.5	0.	0.	.0	0.	0.
NEGATIVE	.0	0.	0.	.0	0.	0.
SUPPORT JT. 3						
POSITIVE	76.2	0.	0.	.0	0.	0.
NEGATIVE	-8.1	0.	0.	.0	0.	0.

THE RATIO OF SUBSTRUCTURE / SUPERSTRUCTURE LOADING IS 1.242

POSITIVE MOMENT REINFORCEMENT @ PIER

(Ref: "Design of Continuous Highway Bridges with Precast, Prestressed Concrete Girders" (PCA Bulletin); PCI Journal, Vol. 14, No. 2, April 1969)

DERIVATION OF GENERAL FORMULAS - TWO EQUAL CONTINUOUS SPAN

The conjugate beam theory is used to calculate the various fixed-end restraint moments. The final restraint moments are then obtained by moment distribution.

SHRINKAGE RESTRAINT MOMENTS: The differential shrinkage between the deck slab and the prestressed beam causes the following moment on the composite section:

$M_s = \epsilon_s E_b A_b (e'_2 + t/2)$ where ϵ_s - differential shrinkage strain

E_b - elastic modulus for the deck slab concrete.

A_b - cross-sectional area of deck slab

t - slab thickness

e'_2 - Top of girder to centroid of composite section.

This moment would cause bending as shown below:

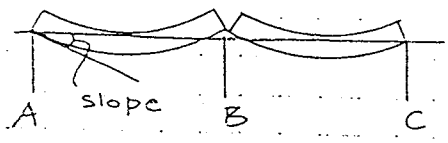

INCA ENGINEERS INC.

Sheet No 44 of _____

Job Number 6915

TITLE 51st AVE. BRIDGE

SUBJECT GIRDER DESIGN

MADE BY CG DATE 8/13/90 CHECKED BY MI DATE 9/90

The slope at the ends of the simple-span beams may be obtained as the reaction of $M/_{EI}$ diagram.

$$\text{Slope} = \frac{M_s L}{2EI}$$

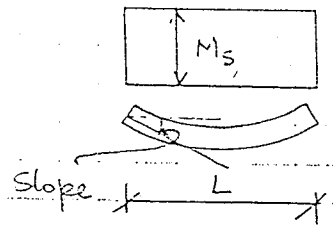

Apply moments at B to return the beam ends to a horizontal position:

$$\text{Slope @ B} = \frac{-M_B L}{2EI} \times \frac{2}{3}$$

$$= \frac{-M_B L}{3EI}$$

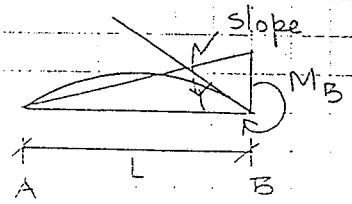

Set slope equal to slope due to shrinkage:

$$\frac{-M_B L}{3EI} = \frac{M_s L}{2EI} \quad \text{or} \quad M_B = -\frac{3}{2} M_s$$

Since M_B is the only moment required to bring both beams to a horizontal position, moment distribution is not necessary.

∴ Final shrinkage restraint moment (not reduced by the creep effect factor) is $-1.5 M_s$ @ B.

INCA ENGINEERS INC.

Sheet No 45 of

Job Number 6915

TITLE 51st AVE. BRIDGE

SUBJECT GIRDER DESIGN

MADE BY CG DATE 8/13/90 CHECKED BY MI DATE 9/90

CREEP RESTRAINT MOMENTS : The creep restraint moment is broken into two components, one due to dead load and the other due to prestress

Dead Load Creep Restraint Moment

$$\text{Slope} = \frac{M_D L}{3EI}$$

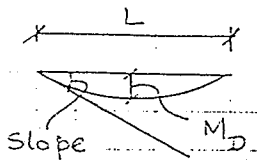

Apply moments to return beam ends to horizontal.

$$\frac{-M_B L}{3EI} = \frac{M_D L}{3EI}$$

ie $M_B = -M_D$

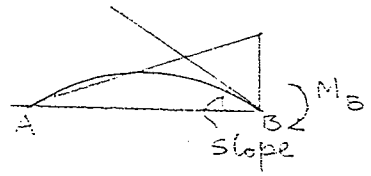

Prestress Creep Restraint Moment

The creep under the prestress force depends on the location of the various forces with respect to the center of gravity of the composite section. The tendons will be replaced by the equivalent forces exerted on the member.

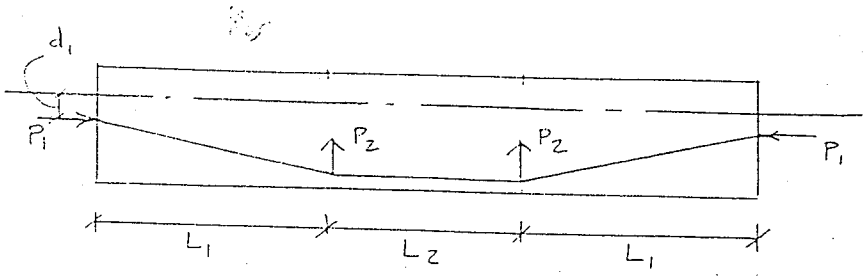

The moment diagram by parts is as follows:

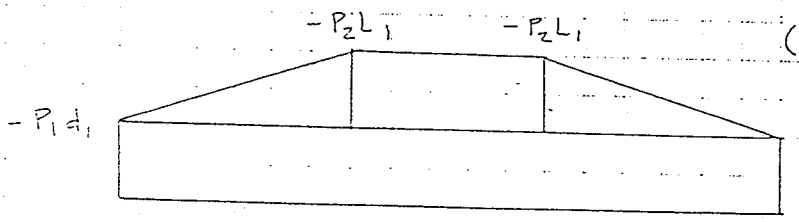

(transfer length not considered)

Prestress slope [P/S slope] $= \left(-P_1 d_1 L - P_2 L_1^2 - P_2 L_1 L_2\right) / 2EI$

Apply moment to bring beam ends to horizontal:

$$\frac{M_B L}{3EI} = -\left[P/S \text{ slope}\right]$$

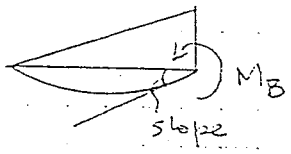

$$\therefore M_B = -\frac{3EI}{L}\left[P/S \text{ slope}\right]$$

Summing up various restraint moments and multiplying by the appropriate factors, final restraint moment due to creep and shrinkage is

$$@\ B = \left(-\frac{3EI}{L}\left[P/S \text{ slope}\right] - M_D\right)\left(1 - e^{-\phi}\right) - \left(1.5\, M_S\right)\left(\frac{1 - e^{-\phi}}{\phi}\right)$$

INCA ENGINEERS INC.

Sheet No 47 of _____

Job Number 6915

TITLE 51st AVE. BRIDGE

SUBJECT GIRDER DESIGN

MADE BY CG DATE 8/13/90 CHECKED BY MI DATE 9/90

Table 1. Creep data for AASHO-PCI I-beams

AASHO-PCI girder type	Volume/surface ratio in.	Creep volume/surface ratio correction factor (from Fig. 7)
I	3.0	1.28
II	3.4	1.25
III	4.0	1.20
IV	4.7	1.16
V	4.4	1.18
VI	4.4	1.18

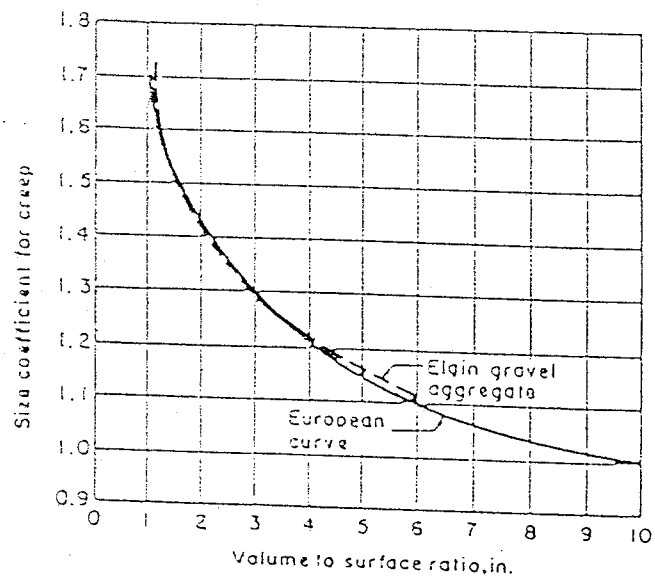

Fig. 7. Creep vs. volume-to-surface ratio

INCA ENGINEERS INC.

Sheet No 48 of

Job Number 6915

TITLE 51st AVE. BRIDGE

SUBJECT GIRDER DESIGN

MADE BY CG DATE 8/13/90 CHECKED BY MI DATE 9/90

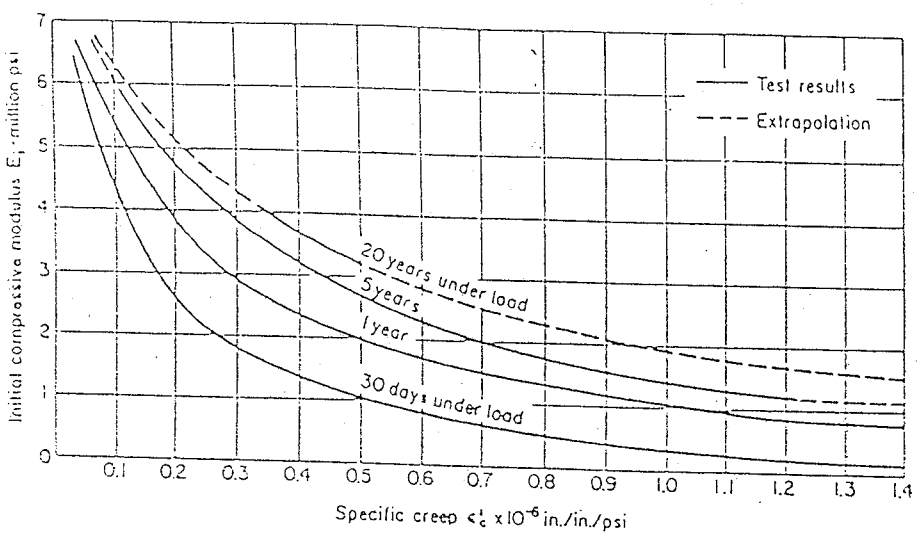

Fig. 5. Prediction of basic creep from elastic modulus

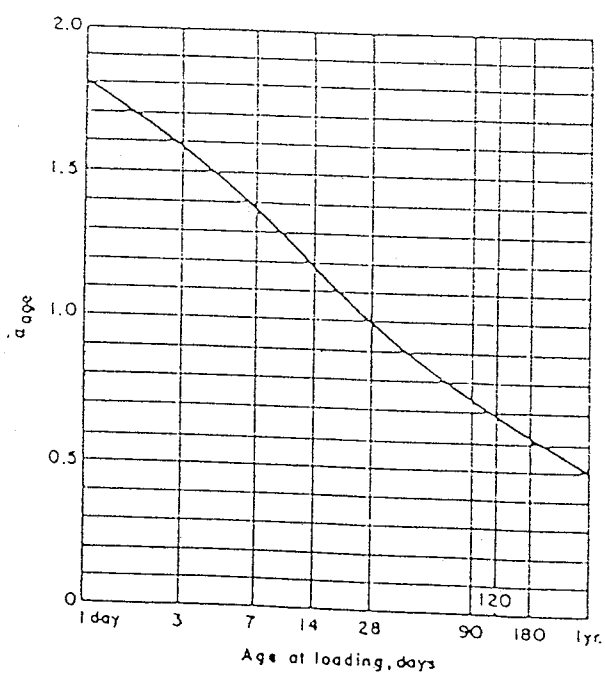

Fig. 6. Creep vs. age at loading

INCA ENGINEERS INC.

Sheet No 49 of

Job Number 6915

TITLE 51st AVE. BRIDGE

SUBJECT GIRDER DESIGN

MADE BY CG DATE 8/13/90 CHECKED BY NI DATE 9/90

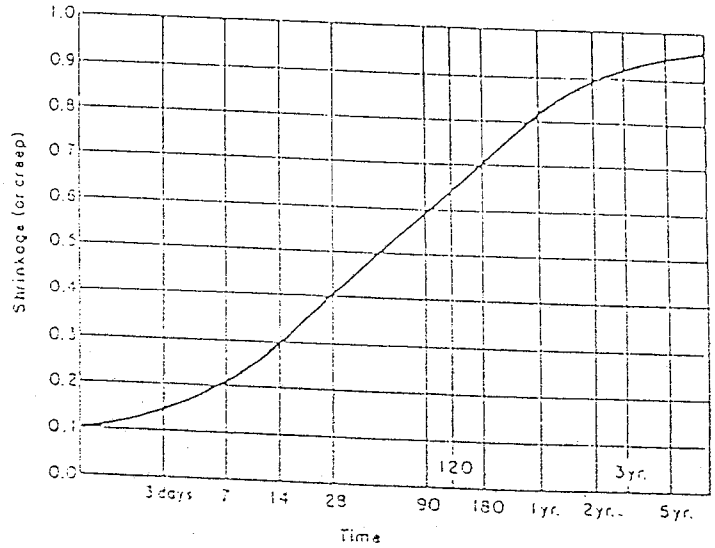

Fig. 8. Proportion of final shrinkage or creep vs. time

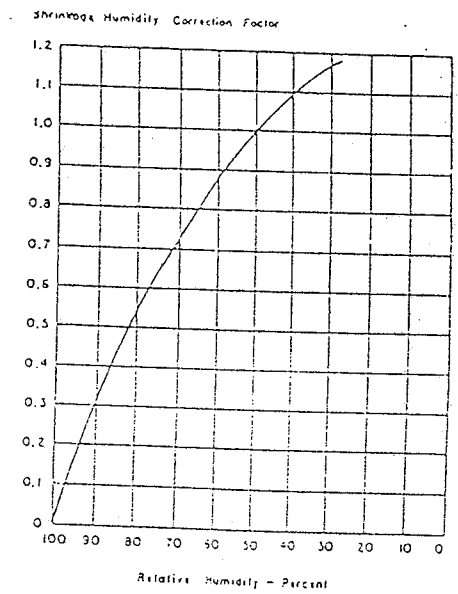

Fig. 10. Shrinkage humidity correction factor

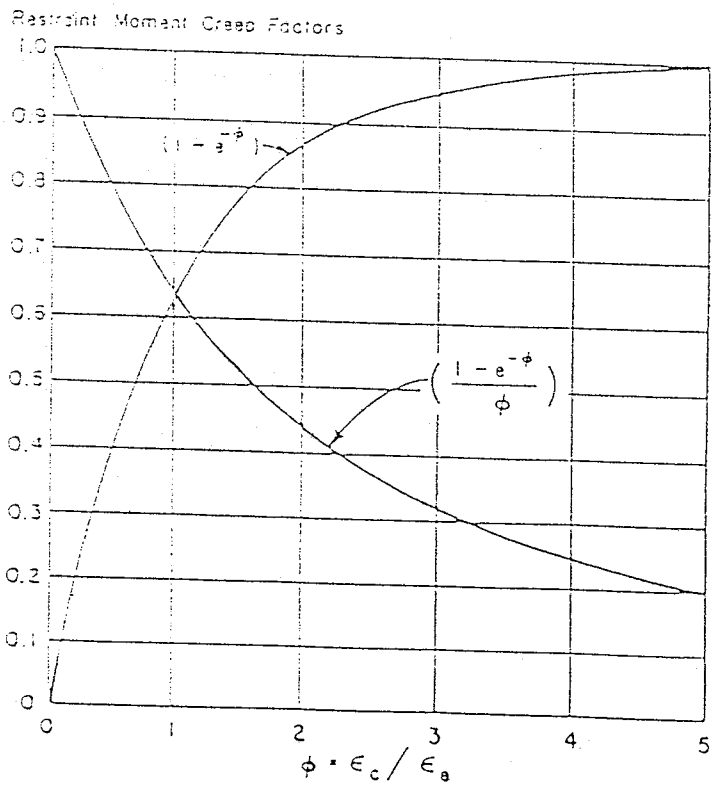

Fig. 9. Variations in restraint moment creep effect factors for both creep and shrinkage

Prestress Creep Restraint Moments (not adjusted by creep effect factor)

$$[\text{P/S slope}] = \left(-P_1 d_1 L - P_2 L_1^2 - P_2 L_1 L_2\right) / 2EI$$

$P_1 = 703$ kips (page 23) ; $d_1 = 39.63 - 18.28 = 21.35$

P_2 = Vertical component of the harped strands' force

$$= \left(\frac{703}{29}\right) \frac{\times 9 \times (50'' - 4'')}{29.5' \times 12} = 28.35^{k}$$

$$\therefore [\text{P/S slope}] = \frac{-703 \times 21.35 \times 74 \times 12 - 28.35 \times (29.5 \times 12)^2 - 28.35 \times 29.5 \times 15 \times 12^2}{2EI}$$

$$= -18{,}687{,}207 / 2EI$$

$$\therefore \text{Restraint Moments due to prestress} = -\frac{3EI}{74 \times 12}\left(\frac{-18{,}687{,}207}{2EI}\right)$$

$$= 31{,}566 \text{ k-in} = \underline{2631 \text{ k-ft}}$$

Dead Load Creep Restraint Moments (not adjusted by creep factor)

@ pier = 1284 + 267 = $\underline{-1551 \text{ k-ft.}}$

Shrinkage Restraint Moment (not adjusted by creep factor)

Assuming continuity connection made 28 days after prestress release, exposure @ 40% RH and ultimate shrinkage = 0.0006 in/in. [estimated by research @ 50% RH. This value should be corrected using fig. 10 for 40% RH]

$$\therefore \epsilon_s = \underset{(\text{fig. 8})}{0.0006} \times \underset{(\text{fig 10})}{0.4} \times 1.1 = 0.00026 \text{ in/in}$$

$$M_s = \epsilon_s \times E_b \times A_b \left(e'_2 + t/2 \right)$$

$$= \frac{0.00026}{12} \times 3834 \times 106 \times 7.5 \left(14.37 + \frac{7.5}{2} \right) = \underline{1197 \text{ k-ft}}$$

Final shrinkage restraint moment $= -1.5 \times 1197 = \underline{-1795 \text{ k-ft}}$

Live Load Positive Moment

@ pier = 0 (Page 38)

EVALUATION OF CREEP FACTORS

From fig. 5, for an elastic modulus at strand release $= 3.8 \times 10^6$ psi, specific creep @ 20 years $= 0.4 \times 10^{-6}$ in/in/psi

For release of the prestress force @ 1 day, the value of specific creep is adjusted by fig. 6 to

$$1.8 \times 0.4 \times 10^{-6} = 0.72 \times 10^{-6} \text{ in/in/psi}$$

From fig. 7 & Table 1, the volume/surface ratio correction revises the specific creep to:

$$1.16 \times 0.72 \times 10^{-6} = 0.835 \times 10^{-6} \text{ in/in/psi}$$

From fig. 8, at 28 days 0.4 of the creep has occured, leaving 0.6 remaining to occur, ie

$$0.6 \times 0.835 \times 10^{-6} = 0.501 \times 10^{-6} \text{ in/in/psi}$$

$$\phi = \epsilon_c \times E = 0.501 \times 10^{-6} \times 4.69 \times 10^6 = 2.35$$

From fig. 9, for $\phi = 2.35$,

$$(1 - e^{-\phi}) = 0.9 \quad \& \quad \left(\frac{1 - e^{-\phi}}{\phi} \right) = 0.4$$

∴ Summation of Positive Restraint Moments @ pier

$$= (2631 - 1551) \times 0.9 - 1795 \times 0.4 = \underline{254 \text{ k-ft}}$$

DESIGN OF POSITIVE MOMENT CONNECTION

Embedment length needed for a 270 ksi, ½"φ strand, (when standard hooks are provided)

$$l_e = \frac{0.04 A_b f_h}{\sqrt{f'_c}} \quad \text{\& not less than } 0.0004 d_b f_h \text{ (AASHTO 8.25.1)}$$

where $f_h = \xi \sqrt{f'_c}$ (AASHTO 8-29)

$$\xi = \underset{\text{for 60 ksi bar}}{540} \times \frac{270}{60} = 2430$$

$$\therefore l_e = 0.04 \times 0.153 \times 2430 = 14.9''$$

but not less than $0.0004 \times 0.5 \times 2430 \times \sqrt{4{,}000} = 31''$ ← governs.

Embedment length available = 16"

∴ Max. Stress developed $= \frac{16}{31} \times 270 = 140$ ksi

Allowable stress = 0.6 × 140 = 84 ksi

$A_s = \frac{M}{f_s j d}$; Assume $j = 0.9$; $d = 54 + 7.5 - 4 = 57.5$

$$A_s = \frac{254 \times 10^3 \times 12}{84 \times 10^3 \times 0.9 \times 57.5} = 0.70 \text{ in}^2 \Rightarrow \text{No. of Strands} = \frac{0.70}{0.153} = 4.6 \simeq 5$$

Project out 12 strands (increase by 140%) to take into account that prestressing strands are not deformed.

INCA ENGINEERS INC.

Sheet No 53 of _____

Job Number 6915

TITLE 51st AVE. BRIDGE

SUBJECT BEARING PAD DESIGN

MADE BY CG DATE 8/15/90 CHECKED BY MI DATE 9/90

Ref: AASHTO section 14 & PCI design handbook - 3rd ed.

Loads

Page 18

Dead load reaction $= \frac{(0.822 + 0.883 + 0.063) \times 75}{2} + \frac{4}{2} = 68.3^k$

Composite D.L reaction $= 1.1 \times \frac{WL}{2} = 1.1 \times 0.39 \times \frac{75}{2} = 16.1^k$

Live Load reaction (page 42) = 76.2 (per lane) x 0.805 = 61.3^k

Total Reaction = 68.3 + 16.1 + 61.3 = 145.7 ≃ 146^k

Horizontal strain: Due to creep, shrinkage and prestress will be calculated based on the procedure in PCI design handbook. (3rd ed.)

Design temperature = 50° F

Average ambient R.H = 40

Page 23

$\frac{P_o}{A} = \frac{831^k}{789} = 1053$ psi

Volume / surface ratio = 4.74 in (Page 22)

(a) @ 60 days

From table 3.3.1

creep strain = 169×10^{-6} in/in ; Shrinkage strain = 292×10^{-6} in/in

From table 3.3.2 (for prestress & conc. strength)

Creep Correction factor $= 1.56 + \left(\frac{53}{200}\right)(1.87 - 1.56) = 1.64$

From table 3.3.3 (for R.H)
Creep Correction = 1.25 & Shrinkage Correction = 1.43

From table 3.3.4 (for volume/surface)
Creep correction = $0.48 - 0.7(0.48 - 0.36) = 0.4$
Shrinkage Correction = $0.46 - 0.7(0.46 - 0.31) = 0.36$

Total strain = $169 \times 10^{-6} \times 1.64 \times 1.25 \times 0.4 + 292 \times 10^{-6} \times 1.43 \times 0.36$

$= \underline{2.89 \times 10^{-4}}$ in/in

(b) @ Final

Creep strain = 315×10^{-6} in/in ; Shrinkage strain = 560×10^{-6} in/in

Factors from tables 3.3.2 & 3.3.3 are same as for 60 days.

From table 3.3.4 (for volume/surface)
Creep Correction = $0.77 - 0.7(0.77 - 0.74) = 0.75$
Shrinkage correction = $0.75 - 0.7(0.75 - 0.64) = 0.67$

Total strain = $315 \times 10^{-6} \times 1.64 \times 1.25 \times 0.75 + 560 \times 10^{-6} \times 1.43 \times 0.67$

$= \underline{10.21 \times 10^{-4}}$ in/in

Difference from final to 60 days = $(10.21 - 2.89) \times 10^{-4} = \underline{7.32 \times 10^{-4}}$ in/in

Temp. Strain = $6 \times 10^{-6} \times 40^\circ$ (drop) = $\underline{2.4 \times 10^{-4}}$ in/in

Total shortening = $(7.32 \times 10^{-4} + 2.4 \times 10^{-4}) \times 75 \times 12 = \underline{0.88''}$

INCA ENGINEERS INC.

Sheet No 55 of _____

Job Number 6915

TITLE 51st AVE. BRIDGE

SUBJECT BEARING PAD DESIGN

MADE BY CG DATE 8/16/90 CHECKED BY MI DATE 9/90

From page 6-15 ("Design Recommendations"), PCI design handbook, the volume change strains may be reduced by one half when calculating horizontal movement, Δ, because of compensating creep and slip in the bearing pad.

$$\therefore \Delta = \frac{0.88}{2} = 0.44''$$

Bearing pad thickness $T \geq 2\Delta$ (AASHTO 14.2.6)

ie $T \geq 0.88''$

"N" steel laminates of 14 guage thickness needed per ADOT specs.

$$N = \frac{\text{Total pad thickness}}{0.5} = \frac{1''}{0.5} = 2 \quad \text{assume}$$

$\therefore$ Total pad thickness $= 0.88'' + 2 \times 0.0785 = 1.04'' > 1''$ $\therefore$ Use $1\frac{1}{2}''$

Try a $1\frac{1}{2}'' \times 24'' \times 12''$ pad.

COMPRESSIVE STRESS (AASHTO 14.2.3)

$$\text{Actual stress} = \frac{146 \times 10^3}{24 \times 12} = 507 \text{ psi}$$

$$\text{Shape factor } S = \frac{LW}{2t(L+W)} = \frac{12 \times 24}{2 \times \frac{1}{2} \times (12+24)} = 8$$

$$\frac{GS}{\beta} = \frac{110 \times 8}{1.4} = 629 \text{ psi} > 507 \text{ psi} \quad \text{ok.}$$

INCA ENGINEERS INC.

Sheet No 56 of _____

Job Number 6915

TITLE 51st AVE. BRIDGE

SUBJECT BEARING PAD DESIGN

MADE BY CG DATE 8/16/90 CHECKED BY MI DATE 9/90

COMPRESSIVE DEFLECTION (AASHTO 14.2.4)

For a 60 durometer and 500 psi of compressive stress, from figure 14.2.4A, compressive strain = 2.75% < 7% ok.

STABILITY (AASHTO 14.2.7)

Pad thickness = 1½" < 4" (L/3) ok

ANCHORAGE (AASHTO 14.2.9)

Shear force induced by a Δ of 0.585" (volume changes)

$$= \frac{GA\Delta}{T} = \frac{110 \times 12 \times 24 \times 0.585}{1.5 \times 1000} = 12.4^k$$

Compressive stress (w/o Live Load) $= \frac{84.4}{5} = 16.9^k > 12.4^k$ ok.

Use 60-DURO 1½" x 24" x 12" Pad.

INCA ENGINEERS INC.

Sheet No 57 of

Job Number 6915

TITLE 51st AVE. BRIDGE

SUBJECT ABUTMENT DESIGN

MADE BY CG DATE 8/22/90 CHECKED BY HE DATE 9/90

DESIGN CRITERIA

1. Service Load Design

2. $f'_c = 4{,}000$ psi ; $f_c = 1{,}600$ psi

3 $f_s = 20{,}000$ psi ($\leq \#6$) ; 24,000 ($\geq \#7$)

4. Abutment Wall treated as a cantilever for the horizontal earth pressure.

5. For Gravity loads, the abutment wall is treated as a continuous beam supported over the drilled shafts.

INCA ENGINEERS INC.

Sheet No 58 of _____

Job Number 6915

TITLE 51st AVE. BRIDGE

SUBJECT ABUTMENT DESIGN

MADE BY CG DATE 8/22/90 CHECKED BY MI DATE 9/90

TOP OF ABUT. CAP ELEVATIONS

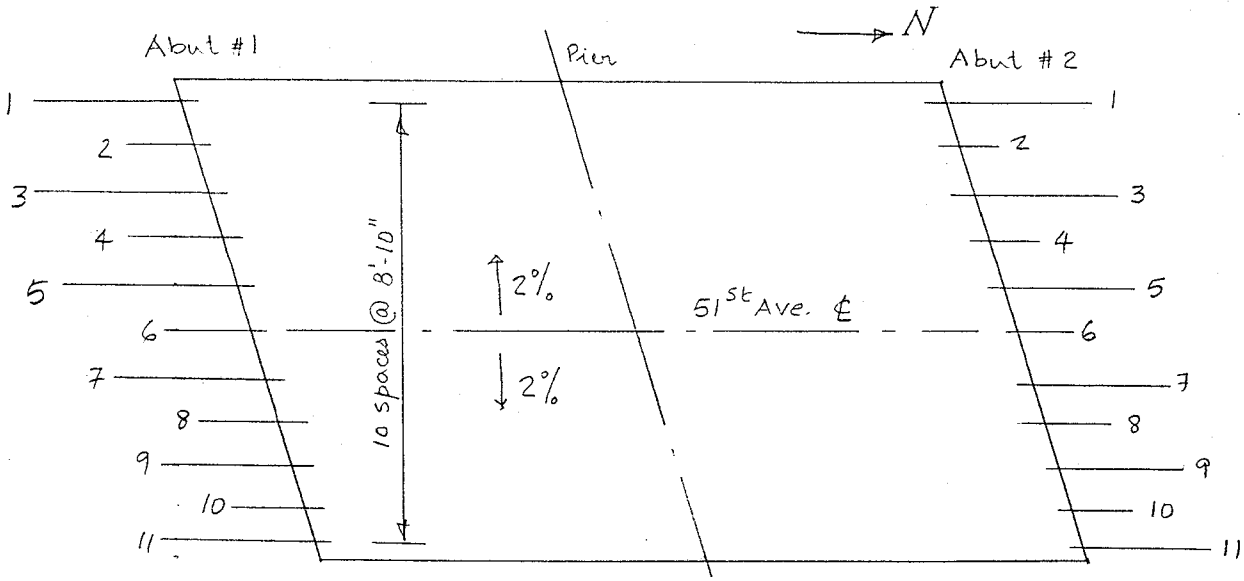

Deck + haunch + depth of girder + pad = 8" + 3" + 54" + 1½" = 66.5" = 5.542'

Girder	Elev. @ ℄ (deck)	Offset (ft.)	0.02 × Offset (ft)	Elev. @ Girder (deck)	Cap Elev.	
1	1302.154	44.15	0.883	1301.271	1295.729	
2	1302.165	35.32	0.706	1301.459	1295.917	
3	1302.176	26.49	0.530	1301.646	1296.104	
4	1302.187	17.66	0.353	1301.834	1296.292	ABUT. #1
5	1302.197	8.83	0.177	1302.020	1296.478	
6	1302.21	0.00	0.000	1302.210	1296.670	
1	1302.359	44.15	0.883	1301.476	1295.934	
2	1302.355	35.32	0.706	1301.649	1296.107	
3	1302.351	26.49	0.530	1301.821	1296.279	
4	1302.347	17.66	0.353	1301.994	1296.452	ABUT # 2
5	1302.342	8.83	0.177	1302.165	1296.623	
6	1302.337	0.00	0.000	1302.337	1296.795	

See next page for 7 to 11

INCA ENGINEERS INC.

Sheet No 58-A of _____

Job Number 6915

TITLE 51st AVE. BRIDGE

SUBJECT ABUTMENT DESIGN

MADE BY CG DATE 8/22/90 CHECKED BY MI DATE 9/90

Girder	Elev. @ ℄ (deck)	offset (ft.)	0.02 x offset (ft.)	Elev. @ Girder (deck)	Cap Elev.	
7	1302.217	8.83	0.177	1302.040	1296.498	
8	1302.227	17.66	0.353	1301.874	1296.332	
9	1302.236	26.49	0.530	1301.706	1296.164	ABUT. # 1
10	1302.245	35.32	0.706	1301.539	1295.997	
11	1302.254	44.15	0.883	1301.371	1295.829	
7	1302.332	8.83	0.177	1302.155	1296.613	
8	1302.327	17.66	0.353	1301.974	1296.432	
9	1302.321	26.49	0.530	1301.791	1296.249	ABUT. # 2
10	1302.315	35.32	0.706	1301.609	1296.067	
11	1302.308	44.15	0.883	1301.425	1295.883	

INCA ENGINEERS INC.

Sheet No 59 of _____

Job Number 6915

TITLE 51st AVE. BRIDGE

SUBJECT ABUTMENT DESIGN

MADE BY CG DATE 8/22/90 CHECKED BY MI DATE 9/90

PRELIMINARY DIMENSIONS

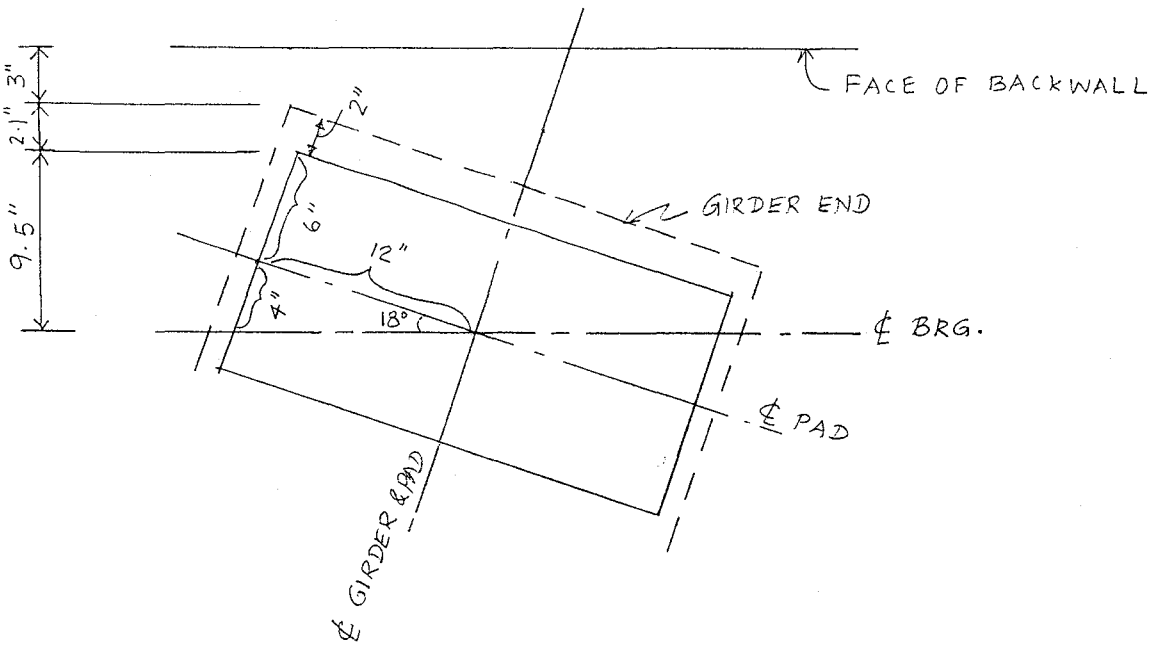

℄ Bearing to back of backwall = 9.5 + 2.1 + 3 + 12 = 26.6" = 2.22'

In order to make the ℄ bearing coincide with the ℄ abut. cap, make the cap width 2 × 2.22' = 4.44' ≃ 4.5'

Minimum bearing support length N = 8 + 0.02L + 0.08H (in)
(Section 4.9.1 - Guide specs. for seismic design of highway bridges)

where L = Length, in feet, of the bridge to the adjacent expansion joint, or to the end of bridge deck.

H = Average height, in feet, of columns supporting the bridge deck to the next expansion joint

∴ N = 8 + 0.02 × 150 + 0.08 × 36' = 13.9" = 1.16' < 3' provided. ok

10' below preliminary scour depth

INCA ENGINEERS INC.

Sheet No 60 of _____

Job Number 6915

TITLE 51st AVE. BRIDGE

SUBJECT ABUTMENT DESIGN

MADE BY CG DATE 8/22/90 CHECKED BY MI DATE 9/90

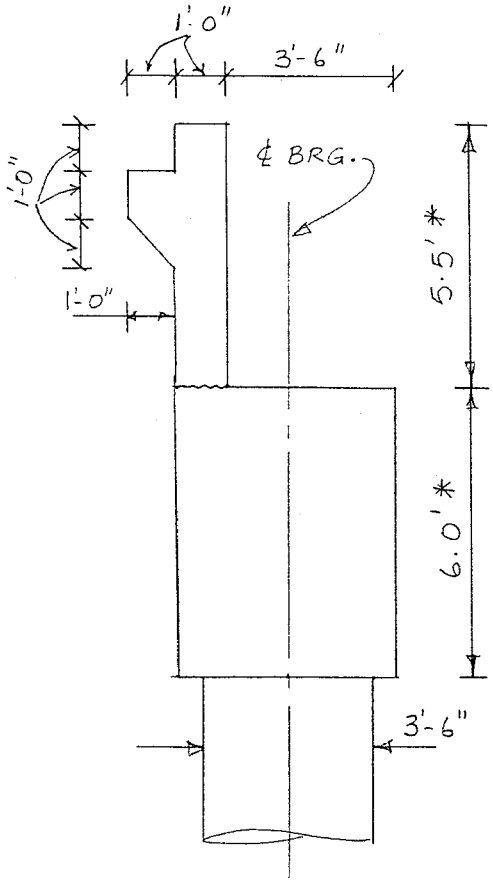

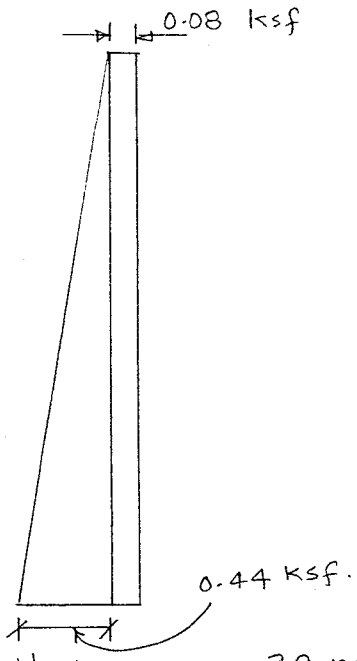

Eq. fluid pressure = 38 pcf (av. for restrained & unrestrained cond.)

Live Load surcharge = 2' of earth.

* - Design dimensions; Actual dimensions may vary a little.

CANTILEVER BENDING

Max. Moment @ base of cap = Moment (due to soil pressure + shear force from pad)

$$\text{Max. Moment} = 0.08 \times 11.5 \times \frac{11.5}{2} + \frac{1}{2} \times 0.44 \times 11.5 \times \frac{11.5}{3} + 12.4^{k} \times 6.0 \times \frac{1}{8.33}$$

$$= \underline{23.4 \text{ k-ft/ft}}.$$

STEEL REQUIREMENT:

$$A_s = \frac{M}{f_s j d} = \frac{23.4 \times 12}{20 \times 7/8 \times 51.7} = \underline{0.31 \text{ in}^2/\text{ft}}$$

$(54'' - 2'' - 0.625/2)$

MINIMUM REINFORCEMENT (AASHTO 8.17.1)

$$\phi M_n \geq 1.2 M_{cr}$$

$$\phi M_n = \phi A_s f_y (d - a/2) \quad \text{where} \quad a = \frac{A_s f_y}{0.85 f'_c b}$$

$$a = \frac{0.31 \times 40}{0.85 \times 4.0 \times 12} = 0.30$$

$$\phi M_n = \frac{0.9}{12} \times 0.31 \times 40 \left(51.7 - \frac{0.3}{2}\right) = \underline{47.9 \text{ k-ft}}$$

$$1.2 M_{cr} = 1.2 \times 7.5 \sqrt{f'_c} \times S$$

$$= 1.2 \times 7.5 \sqrt{4{,}000} \times 12 \times \frac{54^2}{6} \times \frac{1}{1{,}000} \times \frac{1}{12} = \underline{277 \text{ k-ft}}$$

Provide 1/3rd more reinf. than required by analysis (AASHTO 8.17.1.2)

$$\therefore A_s = 0.31 \times 1.33 = \underline{0.41 \text{ in}^2/\text{ft}}$$

CHECK STRESSES

$$\rho = \frac{A_s}{bd} = \frac{0.41}{12 \times 51.7} = 0.0007$$

$$k = \sqrt{2 \times 0.0007 \times 8 + (0.0007 \times 8)^2} - 0.0007 \times 8 = 0.10$$

$$j = 1 - k/3 = 1 - \frac{0.10}{3} = 0.97$$

$$\therefore f'_c = \frac{2 \times 23.4 \times 12 \times 10^3}{12 \times 51.7^2 \times 0.10 \times 0.97} = 181 \text{ psi} < 0.4 \times f'_c \quad \underline{ok.}$$

$$f_s = \frac{23.4 \times 12 \times 10^3}{0.41 \times 0.97 \times 51.7} = 13{,}657 \text{ psi} < 20{,}000 \text{ psi} \quad \underline{ok}$$

This reinforcement ($0.41 \text{ in}^2/\text{ft}$) needs to be added to the shear reinforcement required for vertical bending.

VERTICAL BENDING

No. of Supports:

Self-wt. of abutment cap $= 4.5' \times \overset{\text{average}}{5.5'} \times \frac{94.83'}{\cos 18^\circ} \times 0.150 = 370.2^k$

Wt. of backwall $= 5.5' \times 1.0' \times 99.71' \times 0.150 = 82.3^k$

Wt. of abut. diaphragm $= 4.83' \times 3' \times 99.71' \times 0.150 = 216.7^k$

Reduction for girder area $= \frac{789}{144} \times 3' \times 11 (\text{\# of girders}) \times 0.150 = -27.1$

Dead Load from girders $= \overset{\text{page 19}}{81.84} \times 11 = 900.2^k$

Live Load from girders $= \frac{\overset{\text{page 19}}{63.4}}{\underset{\text{impact reduction (AASHTO 3.12.1)}}{1.25}} \times 0.75 \times 11 = 418.4^k$

Total Vertical Load $= \underline{1960.7^k}$

From Geotechnical report, Axial capacity of a 4'-ϕ drilled shaft with an embedment length of 34' below scour depth $= \underline{400^k}$

$\therefore$ No. of shafts needed $= \frac{1961}{400} = \underline{4.9 \text{ say } 5}$

INCA ENGINEERS INC.

Sheet No 63 of _____

Job Number 6915

TITLE 51st AVE. BRIDGE

SUBJECT ABUTMENT DESIGN

MADE BY CG DATE 8/24/90 CHECKED BY MI DATE 9/90

LOADS:

(1) Self-wt. of abutment cap + back wall + diaphragm.

(2) Dead load (Slab + Girder + int. diaphragm + SDL + utilities)

(3) Live Load:

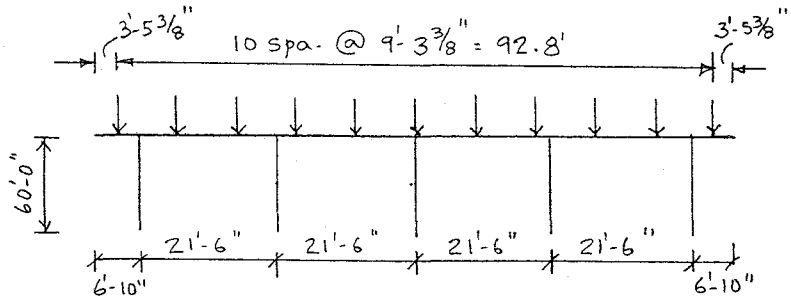

CASE 1: All Lanes Loaded

LL = 63.4 (page 19) × 0.75 = 47.6 k/girder

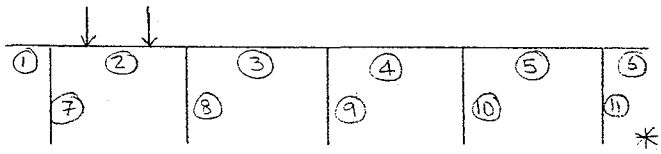

CASE 2: Max. Pos. Moment

1 Lane over ext. span loaded.

* LL = $\frac{63.4}{0.805} \times 0.5$ = 39.4 k/girder

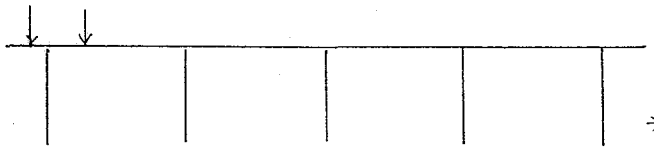

CASE 3: Max. Neg. Moment

* LL = 39.4 k/girder

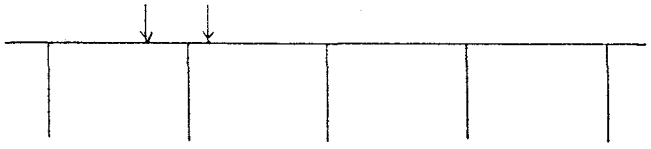

CASE 4: Max. Neg. Moment

* LL = 39.4 k/girder

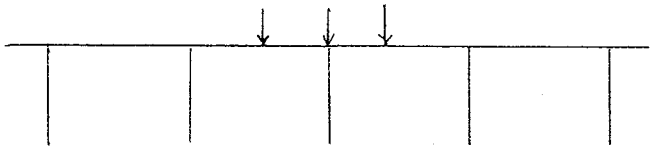

CASE 5: Max. Neg. Moment

* LL = 53.6 k for center girder

= 52 k/girder of 2 outer girders.

* Based on ADOT criteria of assuming simple spans of deck between girders.

```
51STABUT     01 1 2C G  68            3834     150                          7310
51STABUT     02 2 3  G 215            3834     150                          7310
51STABUT     03 3 4  G 215            3834     150                          7310
51STABUT     04 4 5  G 215            3834     150                          7310
51STABUT     05 5 6  G 215            3834     150                          7310
51STABUT     06 6 7 CG  68            3834     150                          7310
51STABUT     07 8 2    600        40 3834     150                          7310
51STABUT     08 9 3    600        40 3834     150                          7310
51STABUT     0910 4    600        40 3834     150                          7310
51STABUT     1011 5    600        40 3834     150                          7310
51STABUT     1112 6    600        40 3834     150                          7310
51STABUT     01       +02  500  450  000  000                             7312
51STABUT     02  00   +02  500  450  000  000                             7312
51STABUT     02 215   +02  550  450  000  000                             7312
51STABUT     03  00   +02  550  450  000  000                             7312
51STABUT     03 215   +02  600  450  000  000                             7312
51STABUT     04  00   +02  600  450  000  000                             7312
51STABUT     04 215   +02  550  450  000  000                             7312
51STABUT     05  00   +02  550  450  000  000                             7312
51STABUT     05 215   +02  500  450  000  000                             7312
51STABUT     06       +02  500  450  000  000                             7312
51STABUT     07       +21  200  200  000  000                             7312
51STABUT     08       +21  200  200  000  000                             7312
51STABUT     09       +21  200  200  000  000                             7312
51STABUT     10       +21  200  200  000  000                             7312
51STABUT     11       +21  200  200  000  000                             7312
51STABUT       01    0830U                          BACK WALL             7316
51STABUT       02    0830U                          BACK WALL             7316
51STABUT       03    0830U                          BACK WALL             7316
51STABUT       04    0830U                          BACK WALL             7316
51STABUT       05    0830U                          BACK WALL             7316
51STABUT       06    0830U                          BACK WALL             7316
51STABUT       01    1900U                          ABUT DIAPHRAGM        7316
51STABUT       02    1900U                          ABUT DIAPHRAGM        7316
51STABUT       03    1900U                          ABUT DIAPHRAGM        7316
51STABUT       04    1900U                          ABUT DIAPHRAGM        7316
51STABUT       05    1900U                          ABUT DIAPHRAGM        7316
51STABUT       06    1900U                          ABUT DIAPHRAGM        7316
51STABUT     01 1  81840P  35                       GIRDER DL             7316
51STABUT     01 2  81840P  60                       GIRDER DL             7316
51STABUT     01 2  81840P 153                       GIRDER DL             7316
51STABUT     01 3  81840P  30                       GIRDER DL             7316
51STABUT     01 3  81840P 123                       GIRDER DL             7316
51STABUT     01 4  81840P  00                       GIRDER DL             7316
51STABUT     01 4  81840P  92                       GIRDER DL             7316
51STABUT     01 4  81840P 185                       GIRDER DL             7316
51STABUT     01 5  81840P  62                       GIRDER DL             7316
51STABUT     01 5  81840P 155                       GIRDER DL             7316
51STABUT     01 6  81840P  33                       GIRDER DL             7316
51STABUT     02 1  47600P  35                       ALL LANES LOADED      7316
51STABUT     02 2  47600P  60                       ALL LANES LOADED      7316
51STABUT     02 2  47600P 153                       ALL LANES LOADED      7316
51STABUT     02 3  47600P  30                       ALL LANES LOADED      7316
51STABUT     02 3  47600P 123                       ALL LANES LOADED      7316
51STABUT     02 4  47600P  00                       ALL LANES LOADED      7316
51STABUT     02 4  47600P  92                       ALL LANES LOADED      7316
51STABUT     02 4  47600P 185                       ALL LANES LOADED      7316
51STABUT     02 5  47600P  62                       ALL LANES LOADED      7316
51STABUT     02 5  47600P 155                       ALL LANES LOADED      7316
51STABUT     02 6  47600P  33                       ALL LANES LOADED      7316
51STABUT     03 2  39400P  60                       MAX POS. MOMENT       7316
51STABUT     03 2  39400P 153                       MAX POS. MOMENT       7316
51STABUT     04 1  39400P  35                       NEGATIVE MOMENT 1     7316
51STABUT     04 2  39400P  60                       NEGATIVE MOMENT 1     7316
```

51STABUT	05	2	39400P	153	NEGATIVE MOMENT	2	7316
51STABUT	05	3	39400P	30	NEGATIVE MOMENT	2	7316
51STABUT	06	3	52000P	123	NEGATIVE MOMENT	3	7316
51STABUT	06	4	53600P	00	NEGATIVE MOMENT	3	7316
51STABUT	06	4	52000P	92	NEGATIVE MOMENT	3	7316

FRAME DIAGNOSTICS

NO ERRORS FOUND

FRAME PROPERTIES

MEM NO	JT LT	JT RT	END COND LT	END COND RT	DIR	SPAN	I	SUPPORT OR HINGE	E	CARRY OVE R FACTORS LT	CARRY OVE R FACTORS RT	DISTRIBUTI FACTORS LT	DISTRIBUTI FACTORS RT
1	1	2	C		G	6.8	46.88	.0	3834.	.000	.000	.000	.0
2	2	3			G	21.5	46.88	.0	3834.	.536	.465	.918	.4
3	3	4			G	21.5	62.39	.0	3834.	.533	.468	.515	.4
4	4	5			G	21.5	62.39	.0	3834.	.468	.533	.486	.5
5	5	6			G	21.5	46.88	.0	3834.	.465	.536	.450	.5
6	6	7		C	G	6.8	46.88	.0	3834.	.000	.000	.000	.0
7	8	2				60.0	12.57	4.0	3834.	.500	.500	.000	.0
8	9	3				60.0	12.57	4.0	3834.	.500	.500	.000	.0
9	10	4				60.0	12.57	4.0	3834.	.500	.500	.000	.0
10	11	5				60.0	12.57	4.0	3834.	.500	.500	.000	.0
11	12	6				60.0	12.57	4.0	3834.	.500	.500	.000	.0

LOAD DATA TRIAL 0

LINE	MEM	W OR P	LOAD CODE	A	B	FIXED END MOMENTS LEFT	RIGHT	DEFLT	COMMENTS
	1	.830	U	.0	.0	0.	0.		BACK WALL
			ASSUMED DATA		6.8				
	2	.830	U	.0	.0	0.	0.		BACK WALL
			ASSUMED DATA		21.5				
	3	.830	U	.0	.0	0.	0.		BACK WALL
			ASSUMED DATA		21.5				
	4	.830	U	.0	.0	0.	0.		BACK WALL
			ASSUMED DATA		21.5				
	5	.830	U	.0	.0	0.	0.		BACK WALL
			ASSUMED DATA		21.5				
	6	.830	U	.0	.0	0.	0.		BACK WALL
			ASSUMED DATA		6.8				
	1	1.900	U	.0	.0	0.	0.		ABUT DIAPHRAGM
			ASSUMED DATA		6.8				
	2	1.900	U	.0	.0	0.	0.		ABUT DIAPHRAGM
			ASSUMED DATA		21.5				
	3	1.900	U	.0	.0	0.	0.		ABUT DIAPHRAGM
			ASSUMED DATA		21.5				
	4	1.900	U	.0	.0	0.	0.		ABUT DIAPHRAGM
			ASSUMED DATA		21.5				
	5	1.900	U	.0	.0	0.	0.		ABUT DIAPHRAGM
			ASSUMED DATA		21.5				
	6	1.900	U	.0	.0	0.	0.		ABUT DIAPHRAGM
			ASSUMED DATA		6.8				

FIXED END MOMENTS TRIAL 0

MEM NO	FIXED END MOMENTS LT	RT	MEM NO	FIXED END MOMENTS LT	RT	MEM NO	FIXED END MOMENT LT	RT
1	0.	-141.	2	-227.	-257.	3	-240.	-269
4	-269.	-240.	5	-257.	-227.	6	-141.	0
7	0.	0.	8	0.	0.	9	0.	0
10	0.	0.	11	0.	0.			

*** SIDESWAY NOT CONSIDERED. ***

HORIZONTAL MEMBER MOMENTS TRIAL 0

MEM NO	LEFT	.1 PT	.2 PT	.3 PT	.4 PT	.5 PT	.6 PT	.7 PT	.8 PT	.9 PT
0 1	0.	-1.	-6.	-13.	-23.	-35.	-51.	-69.	-90.	-114.
										(
2	-149.	-32.	56.	116.	147.	150.	123.	68.	-17.	-132.
(	-126.)									(
3	-274.	-135.	-26.	53.	101.	119.	107.	64.	-10.	-115.
(	-232.)									(
4	-251.	-115.	-10.	64.	107.	119.	101.	53.	-26.	-135.
(	-213.)									(
5	-276.	-132.	-17.	68.	123.	150.	147.	116.	56.	-32.
(	-234.)									(
6	-141.	-114.	-90.	-69.	-51.	-35.	-23.	-13.	-6.	-1.
(	-119.)									

ARNING - MEMBER DEPTHS WERE NOT USED FOR ALL MEMBERS SO STRESSES WERE NOT CALC.

VERTICAL MEMBER MOMENTS TRIAL 0

MEM NO	LEFT	.1 PT	.2 PT	.3 PT	.4 PT	.5 PT	.6 PT	.7 PT	.8 PT	.9 PT
7	4.	3.	2.	0.	-1.	-2.	-3.	-4.	-6.	-7.
0 8	-1.	-1.	-0.	-0.	0.	1.	1.	1.	2.	2.
9	0.	0.	0.	0.	0.	0.	0.	0.	0.	0.
0 10	1.	1.	0.	0.	-0.	-1.	-1.	-1.	-2.	-2.
11	-4.	-3.	-2.	-0.	1.	2.	3.	4.	6.	7.

*** SIDESWAY NOT CONSIDERED. ***

HORIZONTAL MEMBER SHEARS TRIAL 0

MEM NO	LEFT	.1 PT	.2 PT	.3 PT	.4 PT	.5 PT	.6 PT	.7 PT	.8 PT	.9 PT
1	.0	-4.2	-8.3	-12.5	-16.6	-20.8	-24.9	-29.1	-33.2	-37.4
2	60.9	47.8	34.5	21.2	7.9	-5.6	-19.1	-32.7	-46.4	-60.1
3	71.5	57.6	43.7	29.6	15.5	1.4	-12.9	-27.2	-41.6	-56.1
4	70.6	56.1	41.6	27.2	12.9	-1.4	-15.5	-29.6	-43.7	-57.6
5	73.9	60.1	46.4	32.7	19.1	5.6	-7.9	-21.2	-34.5	-47.8
6	41.5	37.4	33.2	29.1	24.9	20.8	16.6	12.5	8.3	4.2

VERTICAL MEMBER SHEARS TRIAL 0

MEM NO	LEFT	.1 PT	.2 PT	.3 PT	.4 PT	.5 PT	.6 PT	.7 PT	.8 PT	.9 PT
7	-.2	-.2	-.2	-.2	-.2	-.2	-.2	-.2	-.2	-.2
8	.1	.1	.1	.1	.1	.1	.1	.1	.1	.1
9	.0	.0	.0	.0	.0	.0	.0	.0	.0	.0
10	-.1	-.1	-.1	-.1	-.1	-.1	-.1	-.1	-.1	-.1
	.2	.2	.2	.2	.2	.2	.2	.2	.2	.2

VERTICAL MEMBER REACTIONS TRIAL 0

EM	LT REACTION	RT REACTION	MEMBER WEIGHT
7	215.5	102.5	113.1
8	258.6	145.5	113.1
9	254.3	141.2	113.1
10	258.6	145.5	113.1
11	215.5	102.5	113.1

TANGENTIAL ROTATIONS - RADIANS - CLOCKWISE POSITIVE

SPAN	LT. END	RT. END	SPAN	LT. END	RT. END	SPAN	LT. END	RT. END
1	.000005	.000018	2	.000018	-.000005	3	-.000005	.000000
4	.000000	.000005	5	.000005	-.000018	6	-.000018	-.000005
7	.000000	.000018	8	.000000	-.000005	9	.000000	.000000
10	.000000	.000005	11	.000000	-.000018			

IRIZONTAL MEMBER DEFLECTIONS IN FEET AT 1/ 4 POINTS FROM LEFT END - DOWNWARD POSITIVE

MEMBER 1	E= 3834.	.000	.000	.000	.000	.000
MEMBER 2	E= 3834.	.000	.000	.000	.000	.000
MEMBER 3	E= 3834.	.000	.000	.000	.000	.000
MEMBER 4	E= 3834.	.000	.000	.000	.000	.000
MEMBER 5	E= 3834.	.000	.000	.000	.000	.000
MEMBER 6	E= 3834.	.000	.000	.000	.000	.000

RTICAL MEMBER DEFLECTIONS IN FEET AT 1/ 4 POINTS FROM LEFT END.

MEMBER 7	E= 3834.	.000	.000	-.000	-.000	.000

MEMBER 8	E= 3834.	.000	.000	.000	.000	.000
MEMBER 9	E= 3834.	.000	.000	.000	.000	.000
MEMBER 10	E= 3834.	.000	.000	.000	.000	.000
MEMBER 11	E= 3834.	.000	.000	.000	.000	.000

LOAD DATA TRIAL 1

LINE	MEM	W OR P	LOAD CODE	A	B	FIXED END MOMENTS LEFT	RIGHT	DEFLT	COMMENTS
	1	81.840	P	3.5	.0	0.	0.		GIRDER DL
	2	81.840	P	6.0	.0	0.	0.		GIRDER DL
	2	81.840	P	15.3	.0	0.	0.		GIRDER DL
	3	81.840	P	3.0	.0	0.	0.		GIRDER DL
	3	81.840	P	12.3	.0	0.	0.		GIRDER DL
	4	81.840	P	.0	.0	0.	0.		GIRDER DL
	4	81.840	P	9.2	.0	0.	0.		GIRDER DL
	4	81.840	P	18.5	.0	0.	0.		GIRDER DL
	5	81.840	P	6.2	.0	0.	0.		GIRDER DL
	5	81.840	P	15.5	.0	0.	0.		GIRDER DL
	6	81.840	P	3.3	.0	0.	0.		GIRDER DL

XED END MOMENTS TRIAL 1

MEM NO	FIXED END MOMENTS LT	RT	MEM NO	FIXED END MOMENTS LT	RT	MEM NO	FIXED END MOMENT LT	RT
1	0.	-270.	2	-339.	-376.	3	-349.	-293
4	-293.	-349.	5	-376.	-339.	6	-270.	0
7	0.	0.	8	0.	0.	9	0.	0
10	0.	0.	11	0.	0.			

*** SIDESWAY NOT CONSIDERED. ***

HORIZONTAL MEMBER MOMENTS TRIAL 1

MEM NO	LEFT	.1 PT	.2 PT	.3 PT	.4 PT	.5 PT	.6 PT	.7 PT	.8 PT	.9 PT
1	0.	0.	0.	0.	0.	0.	-47.	-103.	-159.	-214.
2	-277.	-110.	56.	186.	177.	168.	158.	149.	-16.	-201.
	(-235.)									
3	-384.	-146.	-15.	47.	108.	170.	183.	68.	-46.	-160.
	(-326.)									
4	-274.	-160.	-46.	68.	183.	170.	108.	47.	-15.	-146.
	(-233.)									
5	-386.	-201.	-16.	149.	158.	168.	177.	186.	56.	-110.
	(-328.)									
6	-270.	-214.	-159.	-103.	-47.	0.	0.	0.	0.	0.
	(-229.)									

ARNING - MEMBER DEPTHS WERE NOT USED FOR ALL MEMBERS SO STRESSES WERE NOT CALC.

VERTICAL MEMBER MOMENTS TRIAL 1

MEM NO	LEFT	.1 PT	.2 PT	.3 PT	.4 PT	.5 PT	.6 PT	.7 PT	.8 PT	.9 PT
7	3.	2.	1.	0.	-1.	-2.	-3.	-4.	-5.	-6.
8	-1.	-1.	-0.	-0.	0.	1.	1.	1.	2.	2.
9	0.	0.	0.	0.	0.	0.	0.	0.	0.	0.
10	1.	1.	0.	0.	-0.	-1.	-1.	-1.	-2.	-2.
11	-3.	-2.	-1.	-0.	1.	2.	3.	4.	5.	6.

*** SIDESWAY NOT CONSIDERED. ***

HORIZONTAL MEMBER SHEARS TRIAL 1

MEM NO	LEFT	.1 PT	.2 PT	.3 PT	.4 PT	.5 PT	.6 PT	.7 PT	.8 PT	.9 PT
1	.0	.0	.0	.0	.0	.0	-81.8	-81.8	-81.8	-81.8
2	77.5	77.5	77.5	-4.3	-4.3	-4.3	-4.3	-4.3	-86.2	-86.2
3	110.5	110.5	28.7	28.7	28.7	28.7	-53.1	-53.1	-53.1	-53.1
4	135.0	53.1	53.1	53.1	53.1	-28.7	-28.7	-28.7	-28.7	-110.5
5	86.2	86.2	86.2	4.3	4.3	4.3	4.3	4.3	-77.5	-77.5
6	81.8	81.8	81.8	81.8	81.8	.0	.0	.0	.0	.0

VERTICAL MEMBER SHEARS TRIAL 1

MEM NO	LEFT	.1 PT	.2 PT	.3 PT	.4 PT	.5 PT	.6 PT	.7 PT	.8 PT	.9 PT
7	-.2	-.2	-.2	-.2	-.2	-.2	-.2	-.2	-.2	-.2
8	.1	.1	.1	.1	.1	.1	.1	.1	.1	.1
9	.0	.0	.0	.0	.0	.0	.0	.0	.0	.0
10	-.1	-.1	-.1	-.1	-.1	-.1	-.1	-.1	-.1	-.1
	.2	.2	.2	.2	.2	.2	.2	.2	.2	.2

VERTICAL MEMBER REACTIONS TRIAL 1

EM	LT REACTION	RT REACTION	MEMBER WEIGHT
7	159.3	159.3	
8	196.7	196.7	
9	188.1	188.1	
10	196.7	196.7	
11	159.3	159.3	

LOAD DATA TRIAL 2

LINE	MEM	W OR P	LOAD CODE	A	B	FIXED END MOMENTS LEFT	RIGHT	DEFLT	COMMENTS
	1	47.600	P	3.5	.0	0.	0.		ALL LANES LOADED
	2	47.600	P	6.0	.0	0.	0.		ALL LANES LOADED
	2	47.600	P	15.3	.0	0.	0.		ALL LANES LOADED
	3	47.600	P	3.0	.0	0.	0.		ALL LANES LOADED
	3	47.600	P	12.3	.0	0.	0.		ALL LANES LOADED
	4	47.600	P	.0	.0	0.	0.		ALL LANES LOADED
	4	47.600	P	9.2	.0	0.	0.		ALL LANES LOADED
	4	47.600	P	18.5	.0	0.	0.		ALL LANES LOADED
	5	47.600	P	6.2	.0	0.	0.		ALL LANES LOADED
	5	47.600	P	15.5	.0	0.	0.		ALL LANES LOADED
	6	47.600	P	3.3	.0	0.	0.		ALL LANES LOADED

IXED END MOMENTS TRIAL 2

MEM NO	FIXED END MOMENTS LT	RT	MEM NO	FIXED END MOMENTS LT	RT	MEM NO	FIXED END MOMENT LT	RT
1	0.	-157.	2	-197.	-219.	3	-203.	-171
4	-171.	-203.	5	-219.	-197.	6	-157.	0
7	0.	0.	8	0.	0.	9	0.	0
10	0.	0.	11	0.	0.			

*** SIDESWAY NOT CONSIDERED. ***

HORIZONTAL MEMBER MOMENTS TRIAL 2

MEM NO	LEFT	.1 PT	.2 PT	.3 PT	.4 PT	.5 PT	.6 PT	.7 PT	.8 PT	.9 PT
1	0.	0.	0.	0.	0.	0.	-28.	-60.	-92.	-125.
2	-161.	-64.	33.	108.	103.	97.	92.	87.	-9.	-117.
	(-136.)									
3	-223.	-85.	-9.	27.	63.	99.	106.	40.	-27.	-93.
	(-189.)									
4	-160.	-93.	-27.	40.	106.	99.	63.	27.	-9.	-85.
	(-135.)									
5	-225.	-117.	-9.	87.	92.	97.	103.	108.	33.	-64.
	(-191.)									
6	-157.	-125.	-92.	-60.	-28.	0.	0.	0.	0.	0.
	(-133.)									

ARNING - MEMBER DEPTHS WERE NOT USED FOR ALL MEMBERS SO STRESSES WERE NOT CALC.

VERTICAL MEMBER MOMENTS TRIAL 2

MEM NO	LEFT	.1 PT	.2 PT	.3 PT	.4 PT	.5 PT	.6 PT	.7 PT	.8 PT	.9 PT
7	2.	1.	1.	0.	-0.	-1.	-2.	-2.	-3.	-3.
8	-1.	-0.	-0.	0.	0.	0.	1.	1.	1.	1.
9	0.	0.	0.	0.	0.	0.	0.	0.	0.	0.
10	1.	0.	0.	0.	-0.	-0.	-1.	-1.	-1.	-1.
11	-2.	-1.	-1.	-0.	0.	1.	2.	2.	3.	3.

*** SIDESWAY NOT CONSIDERED. ***

HORIZONTAL MEMBER SHEARS TRIAL 2

MEM NO	LEFT	.1 PT	.2 PT	.3 PT	.4 PT	.5 PT	.6 PT	.7 PT	.8 PT	.9 PT
1	.0	.0	.0	.0	.0	.0	-47.6	-47.6	-47.6	-47.6
2	45.1	45.1	45.1	-2.5	-2.5	-2.5	-2.5	-2.5	-50.1	-50.1
3	64.3	64.3	16.7	16.7	16.7	16.7	-30.9	-30.9	-30.9	-30.9
4	78.5	30.9	30.9	30.9	30.9	-16.7	-16.7	-16.7	-16.7	-64.3
5	50.1	50.1	50.1	2.5	2.5	2.5	2.5	2.5	-45.1	-45.1
6	47.6	47.6	47.6	47.6	47.6	.0	.0	.0	.0	.0

VERTICAL MEMBER SHEARS TRIAL 2

MEM NO	LEFT	.1 PT	.2 PT	.3 PT	.4 PT	.5 PT	.6 PT	.7 PT	.8 PT	.9 PT
7	-.1	-.1	-.1	-.1	-.1	-.1	-.1	-.1	-.1	-.1
8	.0	.0	.0	.0	.0	.0	.0	.0	.0	.0
9	.0	.0	.0	.0	.0	.0	.0	.0	.0	.0
10	-.0	-.0	-.0	-.0	-.0	-.0	-.0	-.0	-.0	-.0
	.1	.1	.1	.1	.1	.1	.1	.1	.1	.1

VERTICAL MEMBER REACTIONS TRIAL 2

EM	LT REACTION	RT REACTION	MEMBER WEIGHT
7	92.7	92.7	
8	114.4	114.4	
9	109.4	109.4	
10	114.4	114.4	
11	92.7	92.7	

LOAD DATA TRIAL 3

LINE	MEM	W OR P	LOAD CODE	A	B	FIXED END MOMENTS LEFT	RIGHT	DEFLT	COMMENTS
	2	39.400	P	6.0	.0	0.	0.		MAX POS. MOMENT
	2	39.400	P	15.3	.0	0.	0.		MAX POS. MOMENT

FIXED END MOMENTS TRIAL 3

MEM NO	FIXED END MOMENTS LT	RT	MEM NO	FIXED END MOMENTS LT	RT	MEM NO	FIXED END MOMENT LT	RT
1	0.	0.	2	-163.	-181.	3	0.	0
4	0.	0.	5	0.	0.	6	0.	0
7	0.	0.	8	0.	0.	9	0.	0
10	0.	0.	11	0.	0.			

*** SIDESWAY NOT CONSIDERED. ***

HORIZONTAL MEMBER MOMENTS TRIAL 3

MEM NO	LEFT	.1 PT	.2 PT	.3 PT	.4 PT	.5 PT	.6 PT	.7 PT	.8 PT	.9 PT
1	0.	0.	0.	0.	0.	0.	0.	0.	0.	0.
2	-19.	53.	126.	180.	167.	155.	142.	130.	42.	-55.
	(-16.)									(
3	-141.	-123.	-105.	-86.	-68.	-50.	-32.	-13.	5.	23.
	(-120.)									
4	39.	34.	29.	24.	20.	15.	10.	5.	1.	-4.
										(
5	-8.	-7.	-6.	-6.	-5.	-4.	-3.	-2.	-1.	-0.
	(-7.)									
6	0.	0.	0.	0.	0.	0.	0.	0.	0.	0.

WARNING - MEMBER DEPTHS WERE NOT USED FOR ALL MEMBERS SO STRESSES WERE NOT CALC.

ERTICAL MEMBER MOMENTS TRIAL 3

MEM NO	LEFT	.1 PT	.2 PT	.3 PT	.4 PT	.5 PT	.6 PT	.7 PT	.8 PT	.9 PT
7	9.	7.	4.	1.	-2.	-5.	-7.	-10.	-13.	-16.
8	-5.	-4.	-2.	-1.	1.	3.	4.	6.	8.	9.
9	1.	1.	1.	0.	-0.	-1.	-1.	-1.	-2.	-2.
10	-0.	-0.	-0.	0.	0.	0.	0.	0.	1.	1.
11	0.	0.	0.	0.	0.	-0.	-0.	-0.	-0.	-0.

*** SIDESWAY NOT CONSIDERED. ***

HORIZONTAL MEMBER SHEARS TRIAL 3

MEM NO	LEFT	.1 PT	.2 PT	.3 PT	.4 PT	.5 PT	.6 PT	.7 PT	.8 PT	.9 PT
1	.0	.0	.0	.0	.0	.0	.0	.0	.0	.0
2	33.6	33.6	33.6	-5.8	-5.8	-5.8	-5.8	-5.8	-45.2	-45.2
3	8.5	8.5	8.5	8.5	8.5	8.5	8.5	8.5	8.5	8.5
4	-2.2	-2.2	-2.2	-2.2	-2.2	-2.2	-2.2	-2.2	-2.2	-2.2
5	.4	.4	.4	.4	.4	.4	.4	.4	.4	.4
6	.0	.0	.0	.0	.0	.0	.0	.0	.0	.0

VERTICAL MEMBER SHEARS TRIAL 3

MEM NO	LEFT	.1 PT	.2 PT	.3 PT	.4 PT	.5 PT	.6 PT	.7 PT	.8 PT	.9 PT
7	-.5	-.5	-.5	-.5	-.5	-.5	-.5	-.5	-.5	-.5
8	.3	.3	.3	.3	.3	.3	.3	.3	.3	.3
9	-.1	-.1	-.1	-.1	-.1	-.1	-.1	-.1	-.1	-.1
10	.0	.0	.0	.0	.0	.0	.0	.0	.0	.0
	-.0	-.0	-.0	-.0	-.0	-.0	-.0	-.0	-.0	-.0

VERTICAL MEMBER REACTIONS TRIAL 3

EM	LT REACTION	RT REACTION	MEMBER WEIGHT
7	33.6	33.6	
8	53.7	53.7	
9	-10.7	-10.7	
10	2.6	2.6	
11	-.4	-.4	

LOAD DATA TRIAL 4

LINE	MEM	W OR P	LOAD CODE	A	B	FIXED END MOMENTS LEFT	RIGHT	DEFLT	COMMENTS
	1	39.400	P	3.5	.0	0.	0.		NEGATIVE MOMENT 1
	2	39.400	P	6.0	.0	0.	0.		NEGATIVE MOMENT 1

FIXED END MOMENTS TRIAL 4

MEM NO	FIXED END MOMENTS LT	RT	MEM NO	FIXED END MOMENTS LT	RT	MEM NO	FIXED END MOMENT LT	RT
1	0.	-130.	2	-118.	-53.	3	0.	0
4	0.	0.	5	0.	0.	6	0.	0
7	0.	0.	8	0.	0.	9	0.	0
10	0.	0.	11	0.	0.			

*** SIDESWAY NOT CONSIDERED. ***

HORIZONTAL MEMBER MOMENTS TRIAL 4

MEM NO	LEFT	.1 PT	.2 PT	.3 PT	.4 PT	.5 PT	.6 PT	.7 PT	.8 PT	.9 PT
1	0.	0.	0.	0.	0.	0.	-23.	-50.	-76.	-103.
2	-130.	-59.	13.	66.	53.	40.	26.	13.	-0.	-14.
	(-110.)									
3	-25.	-22.	-19.	-15.	-12.	-9.	-6.	-2.	1.	4.
	(-21.)									
4	7.	6.	5.	4.	4.	3.	2.	1.	0.	-1.
5	-1.	-1.	-1.	-1.	-1.	-1.	-1.	-0.	-0.	0.
	(-1.)									
6	0.	0.	0.	0.	0.	0.	0.	0.	0.	0.

WARNING - MEMBER DEPTHS WERE NOT USED FOR ALL MEMBERS SO STRESSES WERE NOT CALC.

VERTICAL MEMBER MOMENTS TRIAL 4

MEM NO	LEFT	.1 PT	.2 PT	.3 PT	.4 PT	.5 PT	.6 PT	.7 PT	.8 PT	.9 PT
7	0.	0.	0.	0.	0.	0.	0.	0.	0.	0.
8	-1.	-1.	-0.	0.	0.	0.	1.	1.	1.	2.
9	0.	0.	0.	0.	0.	-0.	-0.	-0.	-0.	-0.
10	0.	0.	0.	0.	0.	0.	0.	0.	0.	0.
11	0.	0.	0.	0.	0.	0.	0.	0.	0.	0.

*** SIDESWAY NOT CONSIDERED. ***

HORIZONTAL MEMBER SHEARS TRIAL 4

MEM NO	LEFT	.1 PT	.2 PT	.3 PT	.4 PT	.5 PT	.6 PT	.7 PT	.8 PT	.9 PT
1	.0	.0	.0	.0	.0	.0	-39.4	-39.4	-39.4	-39.4
2	33.2	33.2	33.2	-6.2	-6.2	-6.2	-6.2	-6.2	-6.2	-6.2
3	1.5	1.5	1.5	1.5	1.5	1.5	1.5	1.5	1.5	1.5
4	-.4	-.4	-.4	-.4	-.4	-.4	-.4	-.4	-.4	-.4
5	.1	.1	.1	.1	.1	.1	.1	.1	.1	.1
6	.0	.0	.0	.0	.0	.0	.0	.0	.0	.0

VERTICAL MEMBER SHEARS TRIAL 4

MEM NO	LEFT	.1 PT	.2 PT	.3 PT	.4 PT	.5 PT	.6 PT	.7 PT	.8 PT	.9 PT
7	.0	.0	.0	.0	.0	.0	.0	.0	.0	.0
8	.0	.0	.0	.0	.0	.0	.0	.0	.0	.0
9	-.0	-.0	-.0	-.0	-.0	-.0	-.0	-.0	-.0	-.0
10	.0	.0	.0	.0	.0	.0	.0	.0	.0	.0
	.0	.0	.0	.0	.0	.0	.0	.0	.0	.0

VERTICAL MEMBER REACTIONS TRIAL 4

EM	LT REACTION	RT REACTION	MEMBER WEIGHT
7	72.6	72.6	
8	7.7	7.7	
9	-1.9	-1.9	
10	.5	.5	
11	-.1	-.1	

LOAD DATA TRIAL 5

LINE	MEM	W OR P	LOAD CODE	A	B	FIXED END MOMENTS LEFT	RIGHT	DEFLT	COMMENTS
	2	39.400	P	15.3	.0	0.	0.		NEGATIVE MOMENT 2
	3	39.400	P	3.0	.0	0.	0.		NEGATIVE MOMENT 2

FIXED END MOMENTS TRIAL 5

MEM NO	FIXED END MOMENTS LT	RT	MEM NO	FIXED END MOMENTS LT	RT	MEM NO	FIXED END MOMENT LT	RT
1	0.	0.	2	-45.	-129.	3	-86.	-16
4	0.	0.	5	0.	0.	6	0.	0
7	0.	0.	8	0.	0.	9	0.	0
10	0.	0.	11	0.	0.			

*** SIDESWAY NOT CONSIDERED. ***

HORIZONTAL MEMBER MOMENTS TRIAL 5

MEM NO	LEFT	.1 PT	.2 PT	.3 PT	.4 PT	.5 PT	.6 PT	.7 PT	.8 PT	.9 PT
1	0.	0.	0.	0.	0.	0.	0.	0.	0.	0.
2	-5.	7.	20.	32.	45.	57.	69.	82.	19.	-53.
	(-4.)									(
3	-123.	-37.	-3.	-3.	-2.	-1.	-1.	0.	1.	1.
	(-104.)									
4	2.	2.	1.	1.	1.	1.	1.	0.	0.	-0.
5	-0.	-0.	-0.	-0.	-0.	-0.	-0.	-0.	0.	0.
6	0.	0.	0.	0.	0.	0.	0.	0.	0.	0.

WARNING - MEMBER DEPTHS WERE NOT USED FOR ALL MEMBERS SO STRESSES WERE NOT CALC.

VERTICAL MEMBER MOMENTS TRIAL 5

MEM NO	LEFT	.1 PT	.2 PT	.3 PT	.4 PT	.5 PT	.6 PT	.7 PT	.8 PT	.9 PT
7	2.	2.	1.	0.	-0.	-1.	-2.	-3.	-3.	-4.
8	-1.	-1.	-1.	-0.	0.	1.	1.	1.	2.	2.
9	0.	0.	0.	0.	0.	0.	0.	0.	0.	-0.
10	0.	0.	0.	0.	0.	0.	0.	0.	0.	0.
11	0.	0.	0.	0.	0.	0.	0.	0.	0.	0.

*** SIDESWAY NOT CONSIDERED. ***

HORIZONTAL MEMBER SHEARS TRIAL 5

MEM NO	LEFT	.1 PT	.2 PT	.3 PT	.4 PT	.5 PT	.6 PT	.7 PT	.8 PT	.9 PT
1	.0	.0	.0	.0	.0	.0	.0	.0	.0	.0
2	5.8	5.8	5.8	5.8	5.8	5.8	5.8	5.8	-33.6	-33.6
3	39.7	39.7	.3	.3	.3	.3	.3	.3	.3	.3
4	-.1	-.1	-.1	-.1	-.1	-.1	-.1	-.1	-.1	-.1
5	.0	.0	.0	.0	.0	.0	.0	.0	.0	.0
6	.0	.0	.0	.0	.0	.0	.0	.0	.0	.0

VERTICAL MEMBER SHEARS TRIAL 5

MEM NO	LEFT	.1 PT	.2 PT	.3 PT	.4 PT	.5 PT	.6 PT	.7 PT	.8 PT	.9 PT
7	-.1	-.1	-.1	-.1	-.1	-.1	-.1	-.1	-.1	-.1
8	.1	.1	.1	.1	.1	.1	.1	.1	.1	.1
9	.0	.0	.0	.0	.0	.0	.0	.0	.0	.0
10	.0	.0	.0	.0	.0	.0	.0	.0	.0	.0
[illegible]	.0	.0	.0	.0	.0	.0	.0	.0	.0	.0

VERTICAL MEMBER REACTIONS TRIAL 5

EM	LT REACTION	RT REACTION	MEMBER WEIGHT
7	5.8	5.8	
8	73.3	73.3	
9	-.4	-.4	
10	.1	.1	
11	-.0	-.0	

LOAD DATA TRIAL 6

LINE	MEM	W OR P	LOAD CODE	A	B	FIXED END MOMENTS LEFT	RIGHT	DEFLT	COMMENTS
	3	52.000	P	12.3	.0	0.	0.		NEGATIVE MOMENT 3
	4	53.600	P	.0	.0	0.	0.		NEGATIVE MOMENT 3
	4	52.000	P	9.2	.0	0.	0.		NEGATIVE MOMENT 3

IXED END MOMENTS TRIAL 6

MEM NO	FIXED END MOMENTS LT	RT	MEM NO	FIXED END MOMENTS LT	RT	MEM NO	FIXED END MOMENT LT	RT
1	0.	0.	2	0.	0.	3	-109.	-165
4	-165.	-109.	5	0.	0.	6	0.	0
7	0.	0.	8	0.	0.	9	0.	0
10	0.	0.	11	0.	0.			

*** SIDESWAY NOT CONSIDERED. ***

HORIZONTAL MEMBER MOMENTS TRIAL 6

MEM NO	LEFT	.1 PT	.2 PT	.3 PT	.4 PT	.5 PT	.6 PT	.7 PT	.8 PT	.9 PT
1	0.	0.	0.	0.	0.	0.	0.	0.	0.	0.
2	2.	-2.	-7.	-11.	-16.	-20.	-24.	-29.	-33.	-38.
3	-46.	-14.	19.	52.	84.	117.	118.	39.	-40.	-119.
	(-39.)									(
4	-199.	-119.	-40.	39.	118.	117.	84.	52.	19.	-14.
	(-168.)									(
5	-42.	-38.	-33.	-29.	-24.	-20.	-16.	-11.	-7.	-2.
	(-37.)									
6	0.	0.	0.	0.	0.	0.	0.	0.	0.	0.

WARNING - MEMBER DEPTHS WERE NOT USED FOR ALL MEMBERS SO STRESSES WERE NOT CALC.

ERTICAL MEMBER MOMENTS TRIAL 6

MEM NO	LEFT	.1 PT	.2 PT	.3 PT	.4 PT	.5 PT	.6 PT	.7 PT	.8 PT	.9 PT
7	-1.	-1.	-0.	-0.	0.	1.	1.	1.	1.	2.
8	2.	1.	1.	0.	-0.	-1.	-2.	-2.	-3.	-4.
9	0.	0.	0.	0.	0.	0.	0.	0.	0.	0.
10	-2.	-1.	-1.	-0.	0.	1.	2.	2.	3.	4.
11	1.	1.	0.	0.	-0.	-1.	-1.	-1.	-1.	-2.

*** SIDESWAY NOT CONSIDERED. ***

HORIZONTAL MEMBER SHEARS TRIAL 6

MEM NO	LEFT	.1 PT	.2 PT	.3 PT	.4 PT	.5 PT	.6 PT	.7 PT	.8 PT	.9 PT
1	.0	.0	.0	.0	.0	.0	.0	.0	.0	.0
2	-2.0	-2.0	-2.0	-2.0	-2.0	-2.0	-2.0	-2.0	-2.0	-2.0
3	15.2	15.2	15.2	15.2	15.2	15.2	-36.8	-36.8	-36.8	-36.8
4	90.4	36.8	36.8	36.8	36.8	-15.2	-15.2	-15.2	-15.2	-15.2
5	2.0	2.0	2.0	2.0	2.0	2.0	2.0	2.0	2.0	2.0
6	.0	.0	.0	.0	.0	.0	.0	.0	.0	.0

VERTICAL MEMBER SHEARS TRIAL 6

MEM NO	LEFT	.1 PT	.2 PT	.3 PT	.4 PT	.5 PT	.6 PT	.7 PT	.8 PT	.9 PT
7	.1	.1	.1	.1	.1	.1	.1	.1	.1	.1
8	-.1	-.1	-.1	-.1	-.1	-.1	-.1	-.1	-.1	-.1
9	.0	.0	.0	.0	.0	.0	.0	.0	.0	.0
10	.1	.1	.1	.1	.1	.1	.1	.1	.1	.1
	-.1	-.1	-.1	-.1	-.1	-.1	-.1	-.1	-.1	-.1

VERTICAL MEMBER REACTIONS TRIAL 6

EM	LT REACTION	RT REACTION	MEMBER WEIGHT
7	-2.0	-2.0	
8	17.2	17.2	
9	127.3	127.3	
10	17.2	17.2	
11	-2.0	-2.0	

ND OF JOB

INCA ENGINEERS INC.

Sheet No 98 of _____

Job Number 6915

TITLE 51st AVE. BRIDGE

SUBJECT ABUTMENT DESIGN

MADE BY CG DATE 8/28/90 CHECKED BY MT DATE 9/90

Member moment = self-wt. mom. (~ page 69) + superstructure DL (~ page 75) + LL (~ pages 79, 83, 87, 91 & 95)

Max. -ve Moment

(5) (member No.) = 234 + 328 + 191 (~ p.79) = 753 k-ft ← governs.

(4) = 213 + 233 + 168 (~ p.95) = 614 k-ft

Max. +ve Moment

(2) = 116 + 186 + 180 (~ p.83) = 482 k-ft (@ 0.3L)

(2) = 147 + 177 + 167 (~ p.83) = 491 k-ft (@ 0.4L) ← governs

(2) = 150 + 168 + 155 (~ p.83) = 473 k-ft (@ 0.5L)

Negative Moment Steel Requirement

$$A_s = \frac{M}{f_s j d} = \frac{753 \times 12}{24 \times 0.9 \times 56.8} = \underline{7.4 \text{ in}^2}$$; Try 10-#8 bars.

$(5'-2" - 0.75" - \frac{1.0"}{2})$

Minimum Reinforcement (AASHTO 8.17.1)

$$\phi M_n = \phi A_s f_y (d - a/2) \quad \text{where} \quad a = \frac{A_s f_y}{0.85 f'_c b}$$

$$a = \frac{7.9 \times 60}{0.85 \times 4 \times 54} = 2.6 \text{ in}$$

$$\phi M_n = \frac{0.9 \times 7.9 \times 60}{12}\left(56.8 - \frac{2.6}{2}\right) = \underline{1973 \text{ k-ft}}$$

$$1.2 M_{cr} = 1.2 \times 7.5 \sqrt{f'_c} \times S = \frac{1.2 \times 7.5}{12} \frac{\sqrt{4{,}000}}{1{,}000} \times 54 \times \frac{56.8^2}{6} = \underline{1377 \text{ k-ft}}$$

$\phi M_n > 1.2 M_{cr}$. ok

INCA ENGINEERS INC.

Sheet No 99 of _____

Job Number 6915

TITLE 51st AVE. BRIDGE

SUBJECT ABUTMENT DESIGN

MADE BY CG DATE 8/28/90 CHECKED BY MI DATE 9/90

Check Stresses

$$\rho = \frac{A_s}{bd} = \frac{7.90}{54 \times 56.8} = 0.0026$$

$$k = \sqrt{2 \times 0.0026 \times 8 + (0.0026 \times 8)^2} - 0.0026 \times 8 = 0.19$$

$$j = 1 - k/3 = 1 - \frac{0.19}{3} = 0.94$$

$$f_c = \frac{2 \times 753 \times 12 \times 10^3}{54 \times 56.8^2 \times 0.19 \times 0.94} = 581 \text{ psi} < 1600 \text{ psi}$$ ok.

$$f_s = \frac{753 \times 12 \times 10^3}{0.94 \times 56.8 \times 8.0} = 21{,}155 \text{ psi} < 24{,}000 \text{ psi}$$ ok

USE 10-#8 CONT. @ TOP

Positive Moment Steel Requirement

$$A_s = \frac{M}{f_s j d} = \frac{491 \times 12}{24 \times 0.9 \times 55.8} = 4.9 \text{ in}^2$$; Try 10-#7 bars.

$\left(5' - 3'' - 0.75'' - \frac{0.875}{2}\right)$

Minimum Reinforcement (AASHTO 8.17.1)

$$a = \frac{A_s f_y}{0.85 f'_c b} = \frac{6.0 \times 60}{0.85 \times 4 \times 54} = 1.96''$$

$$\phi M_n = \frac{0.9}{12} \times 6.0 \times 60 \left(55.8 - \frac{1.96}{2}\right) = 1494 \text{ k-ft} > 1377 \text{ k-ft } (1.2 M_{cr}).$$

ok.

Check Stresses

$$\rho = \frac{6.0}{54 \times 55.8} = 0.0020$$

$$k = \sqrt{2 \times 0.002 \times 8 + (0.002 \times 8)^2} - 0.002 \times 8 = 0.16$$

$$j = 1 - \frac{0.16}{3} = 0.95$$

$$f_c = \frac{2 \times 491 \times 12 \times 10^3}{54 \times 55.8^2 \times 0.16 \times 0.95} = 461 \text{ psi} < 1600 \text{ psi} \quad \underline{ok}$$

$$f_s = \frac{491 \times 12 \times 10^3}{0.95 \times 55.8 \times 6.0} = 18{,}525 \text{ psi} < 24{,}000 \text{ psi} \quad \underline{ok}$$

$\boxed{\text{USE 10-\#7 CONT. @ BOTTOM}}$

SHEAR

Max. shear occurs in members 3 & 4 where the conc. load is located within 'd' from face of support

$$\text{Shear} = \underset{(@\,0.3L)}{\overset{\leftarrow p.70}{29.6^k}} + \underset{\nwarrow p.76}{110.5^k} + \underset{\nwarrow p.80}{64.3^k} = \underline{204.4^k}$$

$$\text{Shear stress} = \frac{V}{bd} = \frac{204.4}{54 \times 55.8} = \underline{0.068 \text{ ksi}}$$

Allowable shear stress in concrete $= 0.95\sqrt{f'_c}$ (AASHTO 8.15.5.2)

$$= 0.95\frac{\sqrt{4{,}000}}{1{,}000} = \underline{0.060 \text{ ksi}} \simeq 0.068 \text{ ksi}$$

Hence, minimum reinf. will govern.

$$\text{Min. } A_v = \frac{50 b_w s}{f_y} \text{ (AASHTO 8.19.1.2)} = \frac{50 \times 54 \times 12}{40{,}000} = \underline{0.81 \text{ in}^2/\text{ft}}$$

INCA ENGINEERS INC.

Sheet No 101 of _____

Job Number 6915

TITLE 51st AVE. BRIDGE

SUBJECT ABUTMENT DESIGN

MADE BY CG DATE 8/28/90 CHECKED BY MI DATE 9/90

Spacing of shear reinforcement $\not> 28''(d/2)$ or $24''$ (AASHTO 8.19.3)

Area of steel reqd. per calcs. on page 61 = $0.41\ in^2/ft$.

$\therefore$ Total area of steel = $0.41 + 0.81 = \underline{1.22\ in^2/ft}$.

Provide 4-legged #6 stirrups @ 12" o/c. $\Rightarrow A_s = 1.76\ in^2/ft$ ok.

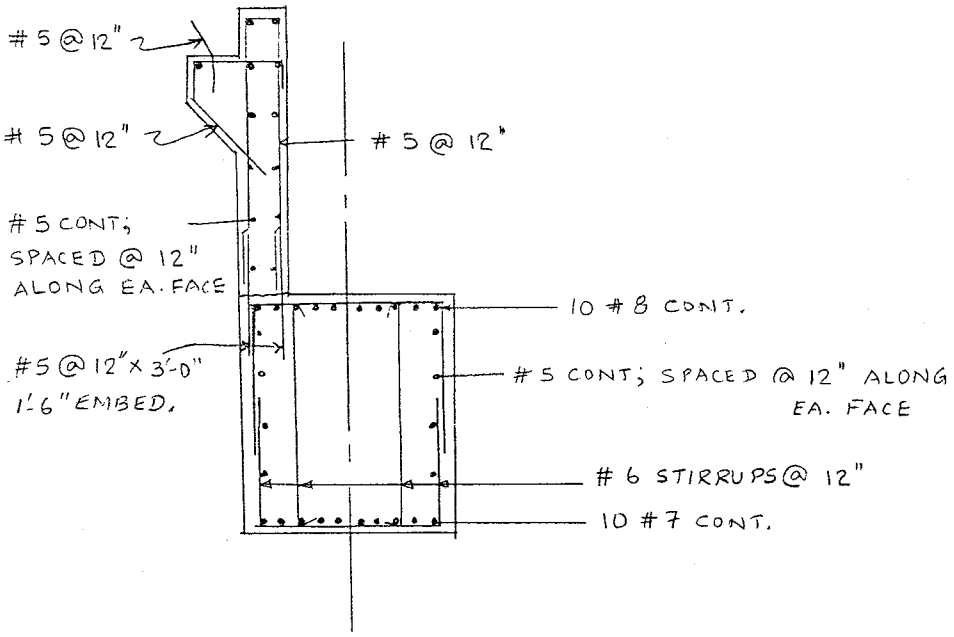

INCA ENGINEERS INC.

Sheet No A-1 of _____

Job Number _____

TITLE 51st AVE. BRIDGE

SUBJECT INTERMEDIATE DIAPHRAGM

MADE BY CG DATE 8/7/90 CHECKED BY MI DATE 9/90

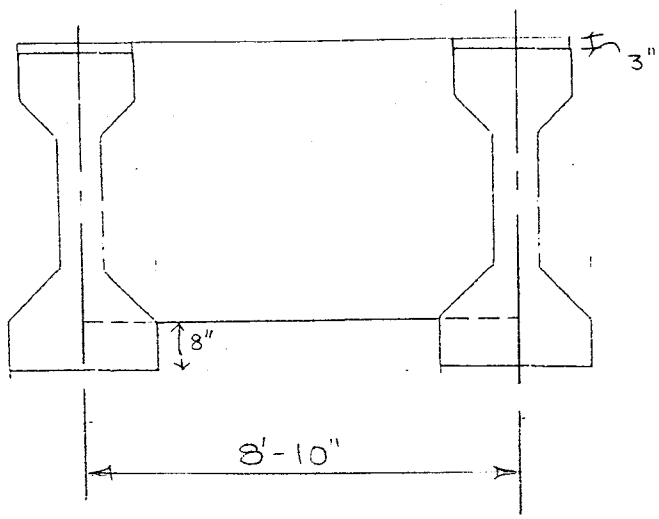

haunch area of girder

Area of diaphragm = $(54'' + 3'' - 8'') \times 8.83' - (1.67' \times 3'') - 5.48\ ft^2$

$+ \ 8'' \times 2.17'$

$= \underline{31.6\ ft^2}$