JACOBS

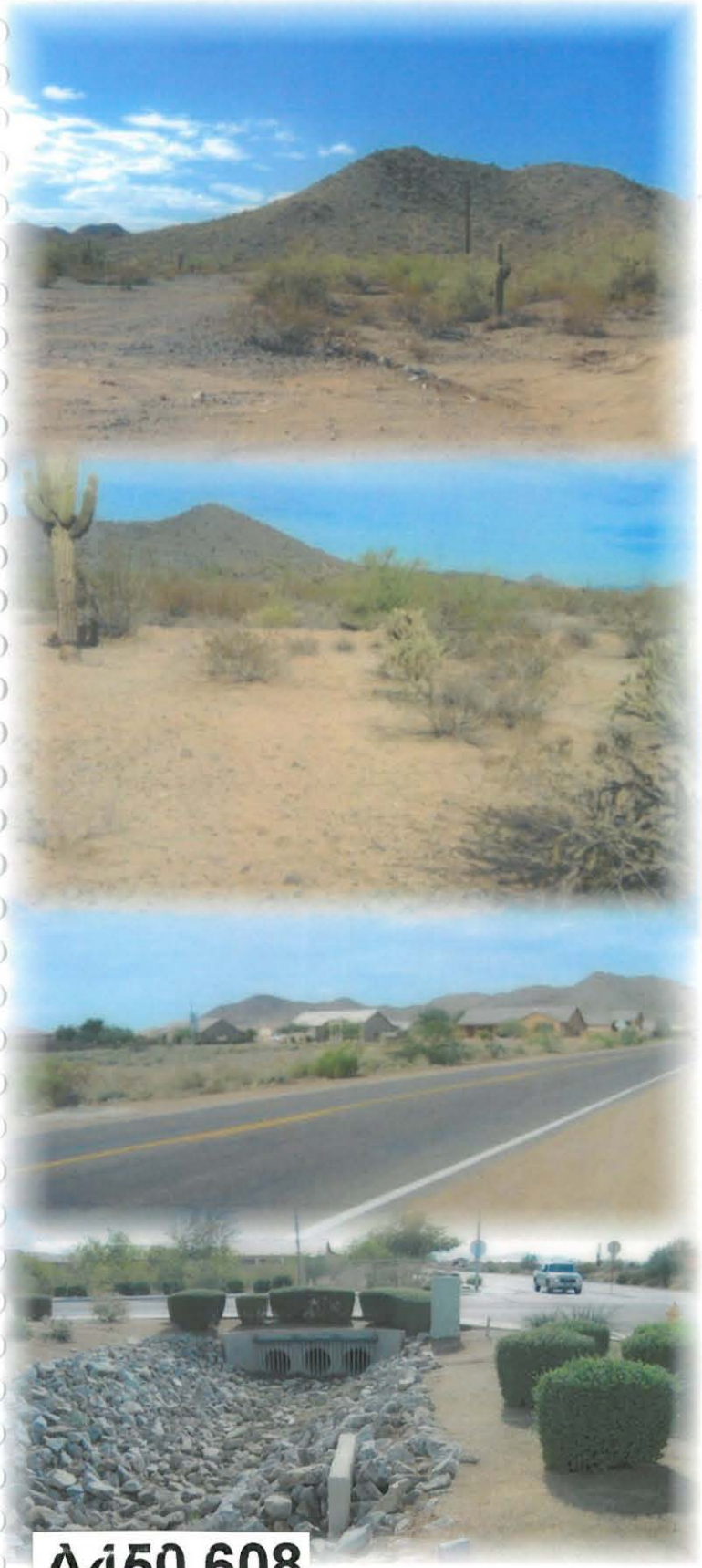

Submitted to:

Flood Control District of Maricopa County

City of Peoria

Maricopa County Department of Transportation

Structural Design Calculations and Analyses

83rd Avenue / Pinnacle Peak Road Drainage Improvements
FCDMC Contract No. 2006C005
Project Control No. 450.02.33

February, 2007

Submitted by:

JACOBS
875 West Elliot Road, Suite 201
Tempe, AZ 85284
480.763.8600 Fax 480.763.8601

A450.608

Table of Contents

Registered Professional Engineer (Civil)
CERTIFICATE NO.
20940
OSCAR A.
OLIDEN
Date Signed 2/16/10
ARIZONA, U.S.A.

1. Quantities

2. Plan Sheets

3. Structural Calculations

4. Check Sheets

1. Quantities

83rd Avenue / Pinnacle Peak Road
Drainage Improvements
Quantities for Non-standard Buried Structures (Manhole Bases and Vaults)

Project No.: W7X74300

			Concrete			Reinforcement			
Detail No.	Type	Location	Quantity	Unit Cost	TOTAL	Quantity	Unit Cost	TOTAL	Detail No.
2	Vault	83rd Ave: Sta. 100+05	10.0 CY	$ 400	$ 3,989	1803 lbs	Included	$ -	2
3	Manhole	83rd Ave: Sta. 102+00	5.3 CY	$ 400	$ 2,136	1188 lbs	Included	$ -	3
4	Vault	83rd Ave.: Sta. 104+75	7.2 CY	$ 400	$ 2,886	1371 lbs	Included	$ -	4
5	Manhole	83rd Ave.: Sta. 134+86	13.7 CY	$ 400	$ 5,481	2497 lbs	Included	$ -	5
6	Vault	Pinnacle Peak Rd: Sta. 199+60	8.9 CY	$ 400	$ 3,544	1532 lbs	Included	$ -	6
7	Manhole	Pinnacle Peak Rd: Sta. 226+64	9.9 CY	$ 400	$ 3,961	1676 lbs	Included	$ -	7
9	Manhole	Pinnacle Peak Rd: Sta. 244+40	16.8 CY	$ 400	$ 6,734	2872 lbs	Included	$ -	9
10	Manhole	Pinnacle Peak Rd: Sta. 245+65	23.5 CY	$ 400	$ 9,405	5289 lbs	Included	$ -	10
11	Manhole	87th Ave.: Sta. 313+52	25.0 CY	$ 400	$ 9,986	4471 lbs	Included	$ -	11
12	Stilling Basin	87th Ave.: Sta.61+62	96.1 CY	$ 400	$ 38,440	14775 lbs	Included	$ -	12
13	Manhole	87th Ave.: Sta. 326+40	21.8 CY	$ 400	$ 8,701	5129 lbs	Included	$ -	13
14	Manhole	89th Ave.: Sta. 416+56	12.5 CY	$ 400	$ 5,000	2020 lbs	Included	$ -	14
15	Vault	Calle Lejos: Sta. 336+55	13.8 CY	$ 400	$ 5,522	2205 lbs	Included	$ -	15
16	Vault	Calle Lejos: Sta. 339+55	17.4 CY	$ 400	$ 6,955	3488 lbs	Included	$ -	16
17	Vault	Cielo Grande: Sta. 400+30	10.5 CY	$ 400	$ 4,213	1729 lbs	Included	$ -	17
18	Manhole	89th Ave.: Sta. 413+23	12.4 CY	$ 400	$ 4,977	2447 lbs	Included	$ -	18
19	Manhole	83rd Ave.: Sta. 142+46	8.4 CY	$ 400	$ 3,350	1722 lbs	Included	$ -	19
20	Inlet Structure	Ventana Picacho RB Sta. 81+37	9.9 CY	$ 400	$ 3,950	1411 lbs	Included	$ -	20
21	Inlet Structure	Ventana Picacho RB Sta. 85+77	42.6 CY	$ 400	$ 17,044	4928 lbs	Included	$ -	21
22	Inlet Structure	Calle Lajos: Sta. 340+27	6.2 CY	$ 400	$ 2,464	1257 lbs	Included	$ -	22
23	Manhole	87th Ave.: Sta. 307+50	5.8 CY	$ 400	$ 2,306	1350 lbs	Included	$ -	23
24	Manhole	87th Ave.: Sta. 61+37	15.1 CY	$ 400	$ 6,037	2332 lbs	Included	$ -	24

Vault	83rd Ave: Sta. 100+05

Vault	83rd Ave: Sta. 100+05	
SUMMARY:	CONCRETE	10.0 CY
	REBAR	1802.7 lbs

GEOMETRY	Outside	Inside	Wall
Width (ft.)	10.00	8.17	0.92 ft.
Length (ft.)	12.00	10.17	
Height (ft.)	4.67	3.00	
Volume (ft.^{3})	560	249.0833	

OPENINGS	TOP	SIDE 1	SIDE 2	SIDE 3	SIDE 4	SIDE 5	SIDE 6	TOTAL
Diameter (ft.)	2.5	3.0	3.0	3.0	3.0			
Skew (deg)	0.0	27.5	27.5	0.0	0.0			
Bar Perimeter (ft.)	10.4	15.7	15.7	14.1	14.1	0.0	0.0	
Area (ft.^{2})	4.9	11.9	11.9	10.6	10.6	0.0	0.0	
Volume (ft.^{3})	4.1	10.9	10.9	9.7	9.7	0.0	0.0	45.3
SUNDRY	3.7	ft.^{3}						
CONCRETE	**10.0**	**CY**						

REBAR	Size	Dim.	Hook	Length	Weight/ft.	Number	Weight
Bot Slab BB	#5	9.67	0.83	11.33	1.043	13	154 lbs
Bot Slab B	#4	11.67	0.67	13.00	0.668	11	96 lbs
Bot Slab TT	#5	9.67	0.83	11.33	1.043	13	154 lbs
Bot Slab T	#4	11.67	0.67	13.00	0.668	11	96 lbs
Wall Vert	#5	4.33	1.17 *	6.67	1.043	80	556 lbs
Wall Horiz	#4	9.67	0.67	11.00	0.668	12	88 lbs
Wall Horiz	#4	11.67	0.67	13.00	0.668	12	104 lbs
Top Slab BB	#5	9.67	0.83	11.33	1.043	13	154 lbs
Top Slab B	#4	11.67	0.67	13.00	0.668	11	96 lbs
Top Slab TT	#5	9.67	0.83	11.33	1.043	13	154 lbs
Top Slab T	#4	11.67	0.67	13.00	0.668	11	96 lbs
Additional #6's	#6	0.00	0.00	0.00	1.502	0	0 lbs
Trimmer Bars	#6			69.87	1.502	2	210 lbs
REBAR	**1802.7**	**lbs**					

* Adds 4" to represent the longer hook on the outside bars

size	lbs/ft	Hook
#4	0.668	0.67
#5	1.043	0.83
#6	1.502	1.00
#7	2.044	1.17
#8	2.67	1.33

Legend:

SUNDRY:	18 lbs
OPENINGS:	-171 lbs

Manhole	83rd Ave: Sta. 102+00

Manhole	83rd Ave: Sta. 102+00	
SUMMARY:	CONCRETE	5.3 CY
	REBAR	1187.8 lbs

GEOMETRY	Outside	Inside	Wall
Width (ft.)	6.00	4.17	0.92 ft.
Length (ft.)	11.00	9.17	
Height (ft.)	4.67	3.00	
Volume (ft.^{3})	308	114.5833	

OPENINGS	TOP	SIDE 1	SIDE 2	SIDE 3	SIDE 4	SIDE 5	SIDE 6	TOTAL
Diameter (ft.)	4.0	3.0	3.0	3.0	3.0			
Skew (deg)	0.0	0.0	0.0	0.0	0.0			
Bar Perimeter (ft.)	15.1	14.1	14.1	14.1	14.1	0.0	0.0	
Area (ft.^{2})	12.6	10.6	10.6	10.6	10.6	0.0	0.0	
Volume (ft.^{3})	10.5	9.7	9.7	9.7	9.7	0.0	0.0	49.2

SUNDRY 0.0 ft.^{3}

CONCRETE 5.3 CY

REBAR	Size	Dim.	Hook	Length	Weight/ft.	Number	Weight
Bot Slab BB	#5	5.67	0.83	7.33	1.043	12	92 lbs
Bot Slab B	#4	10.67	0.67	12.00	0.668	7	56 lbs
Bot Slab TT	#5	5.67	0.83	7.33	1.043	12	92 lbs
Bot Slab T	#4	10.67	0.67	12.00	0.668	7	56 lbs
Wall Vert	#5	4.33	1.17 *	6.67	1.043	60	417 lbs
Wall Horiz	#4	5.67	0.67	7.00	0.668	12	56 lbs
Wall Horiz	#4	10.67	0.67	12.00	0.668	12	96 lbs
Top Slab BB	#5	5.67	0.83	7.33	1.043	12	92 lbs
Top Slab B	#4	10.67	0.67	12.00	0.668	7	56 lbs
Top Slab TT	#5	5.67	0.83	7.33	1.043	12	92 lbs
Top Slab T	#4	10.67	0.67	12.00	0.668	7	56 lbs
Additional #6's	#6	0.00	0.00	0.00	1.502	0	0 lbs
Trimmer Bars	#6			71.38	1.502	2	214 lbs

REBAR 1187.8 lbs

* Adds 4" to represent the longer hook on the outside bars

size	lbs/ft	Hook
#4	0.668	0.67
#5	1.043	0.83
#6	1.502	1.00
#7	2.044	1.17
#8	2.67	1.33

Legend:

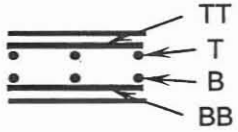

SUNDRY:	0 lbs
OPENINGS:	-188 lbs

Vault	83rd Ave.: Sta. 104+75

Vault	83rd Ave.: Sta. 104+75	
SUMMARY:	CONCRETE	7.2 CY
	REBAR	1371.2 lbs

GEOMETRY	Outside	Inside	Wall
Width (ft.)	6.00	4.17	0.92 ft.
Length (ft.)	11.00	9.17	
Height (ft.)	5.83	4.08	
Volume (ft.^{3})	385	155.9606	

OPENINGS	TOP	SIDE 1	SIDE 2	SIDE 3	SIDE 4	SIDE 5	SIDE 6	TOTAL
Diameter (ft.)	2.5	3.0	3.0	4.0				
Skew (deg)	0.0	0.0	0.0	0.0				
Bar Perimeter (ft.)	10.4	14.1	14.1	17.7	0.0	0.0	0.0	
Area (ft.^{2})	4.9	10.6	10.6	18.3	0.0	0.0	0.0	
Volume (ft.^{3})	4.1	9.7	9.7	16.8	0.0	0.0	0.0	40.3
SUNDRY	6.1	ft.^{3}						
CONCRETE	**7.2 CY**							

REBAR	Size	Dim.	Hook	Length	Weight/ft.	Number	Weight
Bot Slab BB	#5	5.67	0.83	7.33	1.043	12	92 lbs
Bot Slab B	#4	10.67	0.67	12.00	0.668	7	56 lbs
Bot Slab TT	#5	5.67	0.83	7.33	1.043	12	92 lbs
Bot Slab T	#4	10.67	0.67	12.00	0.668	7	56 lbs
Wall Vert	#5	5.50	1.17 *	7.83	1.043	60	490 lbs
Wall Horiz	#4	5.67	0.67	7.00	0.668	20	94 lbs
Wall Horiz	#4	10.67	0.67	12.00	0.668	20	160 lbs
Top Slab BB	#5	5.67	0.83	7.33	1.043	12	92 lbs
Top Slab B	#4	10.67	0.67	12.00	0.668	7	56 lbs
Top Slab TT	#5	5.67	0.83	7.33	1.043	12	92 lbs
Top Slab T	#4	10.67	0.67	12.00	0.668	7	56 lbs
Additional #6's	#6	0.00	0.00	0.00	1.502	0	0 lbs
Trimmer Bars	#6			56.27	1.502	2	169 lbs
REBAR	**1371.2 lbs**						

* Adds 4" to represent the longer hook on the outside bars

size	lbs/ft	Hook
#4	0.668	0.67
#5	1.043	0.83
#6	1.502	1.00
#7	2.044	1.17
#8	2.67	1.33

Legend:

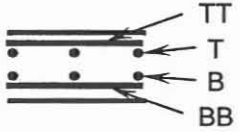

SUNDRY:	19 lbs
OPENINGS:	-152 lbs

Manhole	83rd Ave.: Sta. 134+86

Manhole	83rd Ave.: Sta. 134+86	
SUMMARY:	CONCRETE	13.7 CY
	REBAR	2496.6 lbs

GEOMETRY	Outside	Inside	Wall
Width (ft.)	9.00	7.17	0.92 ft.
Length (ft.)	9.00	7.17	
Height (ft.)	11.00	9.33	
Volume (ft.^{3})	891	479.3704	

OPENINGS	TOP	SIDE 1	SIDE 2	SIDE 3	SIDE 4	SIDE 5	SIDE 6	TOTAL
Diameter (ft.)	4.0	2.0	3.5	3.5				
Skew (deg)	0.0	0.0	13.5	10.5				
Bar Perimeter (ft.)	15.1	10.4	16.3	16.1	0.0	0.0	0.0	
Area (ft.^{2})	12.6	4.9	14.6	14.4	0.0	0.0	0.0	
Volume (ft.^{3})	10.5	4.5	13.4	13.2	0.0	0.0	0.0	41.6

SUNDRY 0.0 ft.^{3}

CONCRETE 13.7 CY

REBAR	Size	Dim.	Hook	Length	Weight/ft.	Number	Weight
Bot Slab BB	#5	8.67	0.83	10.33	1.043	14	151 lbs
Bot Slab B	#4	8.67	0.67	10.00	0.668	10	67 lbs
Bot Slab TT	#5	8.67	0.83	10.33	1.043	14	151 lbs
Bot Slab T	#4	8.67	0.67	10.00	0.668	10	67 lbs
Wall Vert	#5	10.67	1.17 *	13.00	1.043	80	1085 lbs
Wall Horiz	#4	8.67	0.67	10.00	0.668	40	267 lbs
Wall Horiz	#4	8.67	0.67	10.00	0.668	40	267 lbs
Top Slab BB	#5	8.67	0.83	10.33	1.043	10	108 lbs
Top Slab B	#4	8.67	0.67	10.00	0.668	10	67 lbs
Top Slab TT	#5	8.67	0.83	10.33	1.043	10	108 lbs
Top Slab T	#4	8.67	0.67	10.00	0.668	10	67 lbs
Additional #6's	#6	8.67	0.00	8.67	1.502	6	78 lbs
Trimmer Bars	#6			57.97	1.502	2	174 lbs

REBAR 2496.6 lbs

* Adds 4" to represent the longer hook on the outside bars

size	lbs/ft	Hook
#4	0.668	0.67
#5	1.043	0.83
#6	1.502	1.00
#7	2.044	1.17
#8	2.67	1.33

Legend:

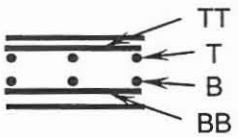

SUNDRY:	0 lbs
OPENINGS:	-159 lbs

Vault	Pinnacle Peak Rd: Sta. 199+60

Vault	Pinnacle Peak Rd: Sta. 199+60	
SUMMARY:	CONCRETE	8.9 CY
	REBAR	1532.0 lbs

GEOMETRY	Outside	Inside	Wall
Width (ft.)	8.00	6.17	0.92 ft.
Length (ft.)	9.00	7.17	
Height (ft.)	6.75	4.92	
Volume (ft.^{3})	486	217.2894	

OPENINGS	TOP	SIDE 1	SIDE 2	SIDE 3	SIDE 4	SIDE 5	SIDE 6	TOTAL
Diameter (ft.)	2.5	2.5	4.5					
Skew (deg)	0.0	0.0	0.0					
Bar Perimeter (ft.)	10.4	12.2	19.6	0.0	0.0	0.0	0.0	
Area (ft.^{2})	4.9	7.5	23.0	0.0	0.0	0.0	0.0	
Volume (ft.^{3})	4.1	6.8	21.1	0.0	0.0	0.0	0.0	32.1

SUNDRY 2.6 ft.^{3}

CONCRETE 8.9 CY

REBAR	Size	Dim.	Hook	Length	Weight/ft.	Number	Weight
Bot Slab BB	#5	7.67	0.83	9.33	1.043	10	97 lbs
Bot Slab B	#4	8.67	0.67	10.00	0.668	9	60 lbs
Bot Slab TT	#5	7.67	0.83	9.33	1.043	10	97 lbs
Bot Slab T	#4	8.67	0.67	10.00	0.668	9	60 lbs
Wall Vert	#5	6.42	1.17 *	8.75	1.043	60	548 lbs
Wall Horiz	#4	7.67	0.67	9.00	0.668	20	120 lbs
Wall Horiz	#4	8.67	0.67	10.00	0.668	20	134 lbs
Top Slab BB	#5	7.67	0.83	9.33	1.043	10	97 lbs
Top Slab B	#4	8.67	0.67	10.00	0.668	9	60 lbs
Top Slab TT	#5	7.67	0.83	9.33	1.043	10	97 lbs
Top Slab T	#4	8.67	0.67	10.00	0.668	9	60 lbs
Additional #6's	#6	8.67	0.00	8.67	1.502	6	78 lbs
Trimmer Bars	#6			42.20	1.502	2	127 lbs
REBAR	**1532.0 lbs**						

* Adds 4" to represent the longer hook on the outside bars

size	lbs/ft	Hook
#4	0.668	0.67
#5	1.043	0.83
#6	1.502	1.00
#7	2.044	1.17
#8	2.67	1.33

Legend:

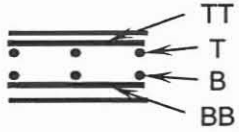

SUNDRY:	17 lbs
OPENINGS:	-122 lbs

Manhole	Pinnacle Peak Rd: Sta. 226+64

Manhole	Pinnacle Peak Rd: Sta. 226+64	
SUMMARY:	CONCRETE	9.9 CY
	REBAR	1676.4 lbs

GEOMETRY	Outside	Inside	Wall
Width (ft.)	8.00	6.17	0.92 ft.
Length (ft.)	10.00	8.17	
Height (ft.)	8.67	6.67	
Volume (ft.^{3})	693.3333	335.7407	

OPENINGS	TOP	SIDE 1	SIDE 2	SIDE 3	SIDE 4	SIDE 5	SIDE 6	TOTAL
Diameter (ft.)	4.0	5.0	4.0	6.0				
Skew (deg)	0.0	0.0	0.0	0.0				
Bar Perimeter (ft.)	15.1	21.4	17.7	25.1	0.0	0.0	0.0	
Area (ft.^{2})	12.6	28.3	18.3	40.3	0.0	0.0	0.0	
Volume (ft.^{3})	10.5	25.9	16.8	37.0	0.0	0.0	0.0	90.2

SUNDRY 0.0 ft.^{3}

CONCRETE 9.9 CY

REBAR	Size	Dim.	Hook	Length	Weight/ft.	Number	Weight
Bot Slab BB	#5	7.67	0.83	9.33	1.043	11	107 lbs
Bot Slab B	#4	9.67	0.67	11.00	0.668	9	66 lbs
Bot Slab TT	#5	7.67	0.83	9.33	1.043	11	107 lbs
Bot Slab T	#4	9.67	0.67	11.00	0.668	9	66 lbs
Wall Vert	#5	8.33	1.17 *	10.67	1.043	64	712 lbs
Wall Horiz	#4	7.67	0.67	9.00	0.668	28	168 lbs
Wall Horiz	#4	9.67	0.67	11.00	0.668	28	206 lbs
Top Slab BB	#5	7.67	0.83	9.33	1.043	11	107 lbs
Top Slab B	#4	9.67	0.67	11.00	0.668	9	66 lbs
Top Slab TT	#5	7.67	0.83	9.33	1.043	11	107 lbs
Top Slab T	#4	9.67	0.67	11.00	0.668	9	66 lbs
Additional #6's	#6	0.00	0.00	0.00	1.502	0	0 lbs
Trimmer Bars	#6			79.30	1.502	2	238 lbs
REBAR	**1676.4 lbs**						

size	lbs/ft	Hook
#4	0.668	0.67
#5	1.043	0.83
#6	1.502	1.00
#7	2.044	1.17
#8	2.67	1.33

Legend:

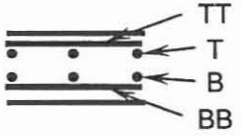

SUNDRY:	0 lbs
OPENINGS:	-341 lbs

* Adds 4" to represent the longer hook on the outside bars

DETAIL 8 DELETED:

THIS SHEET LEFT

BLANK INTENTIONALLY

Manhole	Pinnacle Peak Rd: Sta. 244+40

Manhole	Pinnacle Peak Rd: Sta. 244+40	
SUMMARY:	CONCRETE	16.8 CY
	REBAR	2871.9 lbs

GEOMETRY	Outside	Inside	Wall
Width (ft.)	9.00	7.17	0.92 ft.
Length (ft.)	14.00	12.17	
Height (ft.)	10.00	8.00	
Volume (ft.^{3})	1260	697.5556	

OPENINGS	TOP	SIDE 1	SIDE 2	SIDE 3	SIDE 4	SIDE 5	SIDE 6	TOTAL
Diameter (ft.)	4.0	6.5	7.0					
Skew (deg)	0.0	0.0	22.5					
Bar Perimeter (ft.)	15.1	26.9	31.0	0.0	0.0	0.0	0.0	
Area (ft.^{2})	12.6	47.2	59.0	0.0	0.0	0.0	0.0	
Volume (ft.^{3})	10.5	43.2	54.1	0.0	0.0	0.0	0.0	107.9
SUNDRY	0.0	ft.^{3}						
CONCRETE	**16.8**	**CY**						

REBAR	Size	Dim.	Hook	Length	Weight/ft.	Number	Weight
Bot Slab BB	#5	8.67	0.83	10.33	1.043	22	237 lbs
Bot Slab B	#4	13.67	0.67	15.00	0.668	10	100 lbs
Bot Slab TT	#5	8.67	0.83	10.33	1.043	22	237 lbs
Bot Slab T	#4	13.67	0.67	15.00	0.668	10	100 lbs
Wall Vert	#5	9.67	1.17 *	12.00	1.043	106	1327 lbs
Wall Horiz	#4	8.67	0.67	10.00	0.668	32	214 lbs
Wall Horiz	#4	13.67	0.67	15.00	0.668	32	321 lbs
Top Slab BB	#5	8.67	0.83	10.33	1.043	15	162 lbs
Top Slab B	#4	13.67	0.67	15.00	0.668	10	100 lbs
Top Slab TT	#5	8.67	0.83	10.33	1.043	15	162 lbs
Top Slab T	#4	13.67	0.67	15.00	0.668	10	100 lbs
Additional #6's	#6	0.00	0.00	0.00	1.502	0	0 lbs
Trimmer Bars	#6			72.98	1.502	2	219 lbs
REBAR	**2871.9**	**lbs**					

size	lbs/ft	Hook
#4	0.668	0.67
#5	1.043	0.83
#6	1.502	1.00
#7	2.044	1.17
#8	2.67	1.33

Legend:

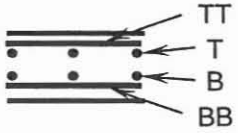

SUNDRY:	0 lbs
OPENINGS:	-407 lbs

* Adds 4" to represent the longer hook on the outside bars

Manhole	Pinnacle Peak Rd: Sta. 245+65

Manhole	Pinnacle Peak Rd: Sta. 245+65	
SUMMARY:	CONCRETE	23.5 CY
	REBAR	5288.5 lbs

GEOMETRY	Outside	Inside	Wall
Width (ft.)	12.50	10.67	0.92 ft.
Length (ft.)	14.00	12.17	
Height (ft.)	11.00	9.00	
Volume (ft.^{3})	1925	1168	

OPENINGS	TOP	SIDE 1	SIDE 2	SIDE 3	SIDE 4	SIDE 5	SIDE 6	TOTAL
Diameter (ft.)	4.0	7.0	7.0	2.0				
Skew (deg)	0.0	22.5	19.5	0.0				
Bar Perimeter (ft.)	15.1	31.0	30.4	10.4	0.0	0.0	0.0	
Area (ft.^{2})	12.6	59.0	57.9	4.9	0.0	0.0	0.0	
Volume (ft.^{3})	10.5	54.1	53.0	4.5	0.0	0.0	0.0	122.2

SUNDRY 0.0 ft.^{3}

CONCRETE 23.5 CY

REBAR	Size	Dim.	Hook	Length	Weight/ft.	Number	Weight
Bot Slab BB	#6	12.17	1.00	14.17	1.502	22	468 lbs
Bot Slab B	#4	13.67	0.67	15.00	0.668	14	140 lbs
Bot Slab TT	#6	12.17	1.00	14.17	1.502	22	468 lbs
Bot Slab T	#4	13.67	0.67	15.00	0.668	14	140 lbs
Wall Vert	#6	10.67	1.33 *	13.33	1.502	130	2603 lbs
Wall Horiz	#4	12.17	0.67	13.50	0.668	36	325 lbs
Wall Horiz	#4	13.67	0.67	15.00	0.668	36	361 lbs
Top Slab BB	#6	12.17	1.00	14.17	1.502	15	319 lbs
Top Slab B	#4	13.67	0.67	15.00	0.668	14	140 lbs
Top Slab TT	#6	12.17	1.00	14.17	1.502	15	319 lbs
Top Slab T	#4	13.67	0.67	15.00	0.668	14	140 lbs
Additional #6's	#6	7.00	0.00	7.00	1.502	6	63 lbs
Trimmer Bars	#6			86.87	1.502	2	261 lbs
REBAR	**5288.5 lbs**						

* Adds 4" to represent the longer hook on the outside bars

size	lbs/ft	Hook
#4	0.668	0.67
#5	1.043	0.83
#6	1.502	1.00
#7	2.044	1.17
#8	2.67	1.33

Legend:

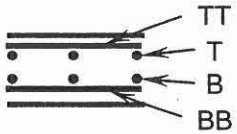

SUNDRY:	0 lbs
OPENINGS:	-460 lbs

Manhole	87th Ave.: Sta. 313+52

Manhole	87th Ave.: Sta. 313+52	
SUMMARY:	CONCRETE	25.0 CY
	REBAR	4470.8 lbs

GEOMETRY	Outside	Inside	Wall
Width (ft.)	12.00	10.17	0.92 ft.
Length (ft.)	16.00	14.17	
Height (ft.)	11.33	9.33	
Volume (ft.^{3})	2176	1344.259	

OPENINGS	TOP	SIDE 1	SIDE 2	SIDE 3	SIDE 4	SIDE 5	SIDE 6	TOTAL
Diameter (ft.)	4.0	6.5	6.5	7.0				
Skew (deg)	0.0	0.0	0.0	34.5				
Bar Perimeter (ft.)	15.1	26.9	26.9	34.5	0.0	0.0	0.0	
Area (ft.^{2})	12.6	47.2	47.2	66.2	0.0	0.0	0.0	
Volume (ft.^{3})	10.5	43.2	43.2	60.7	0.0	0.0	0.0	157.7
SUNDRY	0.0 ft.^{3}							
CONCRETE	**25.0 CY**							

REBAR	Size	Dim.	Hook	Length	Weight/ft.	Number	Weight
Bot Slab BB	#6	11.67	1.00	13.67	1.502	17	349 lbs
Bot Slab B	#4	15.67	0.67	17.00	0.668	13	148 lbs
Bot Slab TT	#6	11.67	1.00	13.67	1.502	17	349 lbs
Bot Slab T	#4	15.67	0.67	17.00	0.668	13	148 lbs
Wall Vert	#6	11.00	1.33 *	13.67	1.502	90	1847 lbs
Wall Horiz	#4	11.67	0.67	13.00	0.668	40	347 lbs
Wall Horiz	#4	15.67	0.67	17.00	0.668	40	454 lbs
Top Slab BB	#6	11.67	1.00	13.67	1.502	17	349 lbs
Top Slab B	#4	15.67	0.67	17.00	0.668	13	148 lbs
Top Slab TT	#6	11.67	1.00	13.67	1.502	17	349 lbs
Top Slab T	#4	15.67	0.67	17.00	0.668	13	148 lbs
Additional #6's	#6	6.50	0.00	6.50	1.502	12	117 lbs
Trimmer Bars	#6			103.44	1.502	2	311 lbs
REBAR	**4470.8 lbs**						

* Adds 4" to represent the longer hook on the outside bars

size	lbs/ft	Hook
#4	0.668	0.67
#5	1.043	0.83
#6	1.502	1.00
#7	2.044	1.17
#8	2.67	1.33

Legend:

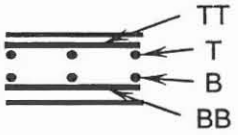

SUNDRY:	0 lbs
OPENINGS:	-593 lbs

Stilling Basin	87th Ave.: Sta.61+62

Stilling Basin	87th Ave.: Sta.61+62		
SUMMARY:	CONCRETE	96.1	CY
	REBAR	14775.2	lbs

GEOMETRY	Outside	Inside	Wall
Width (ft.)	22.33	20.00	1.17 ft.
Length (ft.)	28.50	26.17	
Height (ft.)	16.67	15.50	
Volume (ft.^{3})	10608.33	8111.667	

OPENINGS	TOP	SIDE 1	SIDE 2	SIDE 3	SIDE 4	SIDE 5	SIDE 6	TOTAL
Diameter (ft.)		7.0						
Skew (deg)		0.0						
Bar Perimeter (ft.)	0.0	28.7	0.0	0.0	0.0	0.0	0.0	
Area (ft.^{2})	0.0	54.5	0.0	0.0	0.0	0.0	0.0	
Volume (ft.^{3})	0.0	63.6	0.0	0.0	0.0	0.0	0.0	63.8

SUNDRY 2594.7 ft.^{3} from separate calculation

CONCRETE 96.1 CY

REBAR	Size	Dim.	Hook	Length	Weight/ft.	Number	Weight
Slab Transverse	#5	22.00	0.00	22.00	1.043	68	1560 lbs
Slab Longitudinal	#5	28.17	0.00	28.17	1.043	86	2540 lbs
Wall Verts	#5	16.33	0.83	18.00	1.043	140	2628 lbs
Wall Verts	#5	13.58	0.83	15.25	1.043	92	1462 lbs
Back Wall Horiz	#5	22.00	0.83	23.67	1.043	46	1147 lbs
Side Horiz	#5	28.17	0.83	29.83	1.043	60	1866 lbs
Side Horiz	#5	20.33	0.83	21.17	1.043	33	728 lbs
Int. Wall Verts	#5	8.83	0.83	10.50	1.043	60	657 lbs
Int. Wall Horiz	#5	22.00	0.83	23.67	1.043	37	913 lbs
Int. Wall Horiz	#5	4.67	0.83	6.33	1.043	60	396 lbs
Shelf	#5	2.50	0.00	2.50	1.043	64	167 lbs
Shelf	#5	45.00	0.00	45.00	1.043	5	235 lbs
Trimmer Bars	#6			28.73	1.502	2	86 lbs

REBAR 14775.2 lbs

size	lbs/ft	Hook
#4	0.668	0.67
#5	1.043	0.83
#6	1.502	1.00
#7	2.044	1.17
#8	2.67	1.33

Cutoff Wall:	732 lbs
OPENINGS:	-342 lbs

Manhole	87th Ave.: Sta. 326+40

Manhole	87th Ave.: Sta. 326+40	
SUMMARY:	CONCRETE	21.8 CY
	REBAR	5129.3 lbs

GEOMETRY	Outside	Inside	Wall
Width (ft.)	10.00	8.17	0.92 ft.
Length (ft.)	11.00	9.17	
Height (ft.)	16.00	14.00	
Volume (ft.^{3})	1760	1048.056	

OPENINGS	TOP	SIDE 1	SIDE 2	SIDE 3	SIDE 4	SIDE 5	SIDE 6	TOTAL
Diameter (ft.)	4.0	6.5	6.5	5.0				
Skew (deg)	0.0	0.0	0.0	20.0				
Bar Perimeter (ft.)	15.1	26.9	26.9	22.7	0.0	0.0	0.0	
Area (ft.^{2})	12.6	47.2	47.2	30.1	0.0	0.0	0.0	
Volume (ft.^{3})	10.5	43.2	43.2	27.6	0.0	0.0	0.0	124.6

SUNDRY 0.0 ft.^{3}

CONCRETE 21.8 CY

REBAR	Size	Dim.	Hook	Length	Weight/ft.	Number	Weight
Bot Slab BB	#6	9.67	1.00	11.67	1.502	21	368 lbs
Bot Slab B	#4	10.67	0.67	12.00	0.668	12	96 lbs
Bot Slab TT	#5	9.67	0.83	11.33	1.043	11	130 lbs
Bot Slab T	#4	10.67	0.67	12.00	0.668	12	96 lbs
Wall Vert	#6	15.67	1.33 *	18.33	1.502	108	2974 lbs
Wall Horiz	#4	9.67	0.67	11.00	0.668	56	411 lbs
Wall Horiz	#4	10.67	0.67	12.00	0.668	56	449 lbs
Top Slab BB	#5	9.67	0.83	11.33	1.043	11	130 lbs
Top Slab B	#4	10.67	0.67	12.00	0.668	12	96 lbs
Top Slab TT	#6	9.67	1.00	11.67	1.502	21	368 lbs
Top Slab T	#4	10.67	0.67	12.00	0.668	12	96 lbs
Additional #6's	#6	6.00	0.00	6.00	1.502	12	108 lbs
Trimmer Bars	#6			91.58	1.502	2	275 lbs
REBAR	**5129.3 lbs**						

size	lbs/ft	Hook
#4	0.668	0.67
#5	1.043	0.83
#6	1.502	1.00
#7	2.044	1.17
#8	2.67	1.33

Legend:

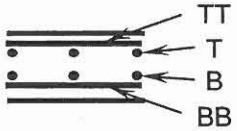

SUNDRY:	0 lbs
OPENINGS:	-469 lbs

* Adds 4" to represent the longer hook on the outside bars

Manhole	89th Ave.: Sta. 416+56

Manhole	89th Ave.: Sta. 416+56	
SUMMARY:	CONCRETE	12.5 CY
	REBAR	2019.7 lbs

GEOMETRY	Outside	Inside	Wall
Width (ft.)	10.00	8.17	0.92 ft.
Length (ft.)	10.00	8.17	
Height (ft.)	8.67	6.67	
Volume (ft.^{3})	866.6667	444.6296	

OPENINGS	TOP	SIDE 1	SIDE 2	SIDE 3	SIDE 4	SIDE 5	SIDE 6	TOTAL
Diameter (ft.)	4.0	6.0	6.0					
Skew (deg)	0.0	0.0	0.0					
Bar Perimeter (ft.)	15.1	25.1	25.1	0.0	0.0	0.0	0.0	
Area (ft.^{2})	12.6	40.3	40.3	0.0	0.0	0.0	0.0	
Volume (ft.^{3})	10.5	37.0	37.0	0.0	0.0	0.0	0.0	84.5
SUNDRY	0.0 ft.^{3}							
CONCRETE	**12.5 CY**							

REBAR	Size	Dim.	Hook	Length	Weight/ft.	Number	Weight
Bot Slab BB	#5	9.67	0.83	11.33	1.043	11	130 lbs
Bot Slab B	#4	9.67	0.67	11.00	0.668	11	81 lbs
Bot Slab TT	#5	9.67	0.83	11.33	1.043	11	130 lbs
Bot Slab T	#4	9.67	0.67	11.00	0.668	11	81 lbs
Wall Vert	#5	8.33	1.17 *	10.67	1.043	72	801 lbs
Wall Horiz	#4	9.67	0.67	11.00	0.668	28	206 lbs
Wall Horiz	#4	9.67	0.67	11.00	0.668	28	206 lbs
Top Slab BB	#5	9.67	0.83	11.33	1.043	11	130 lbs
Top Slab B	#4	9.67	0.67	11.00	0.668	11	81 lbs
Top Slab TT	#5	9.67	0.83	11.33	1.043	11	130 lbs
Top Slab T	#4	9.67	0.67	11.00	0.668	11	81 lbs
Additional #6's	#6	9.67	0.00	9.67	1.502	6	87 lbs
Trimmer Bars	#6			65.24	1.502	2	196 lbs
REBAR	**2019.7 lbs**						

* Adds 4" to represent the longer hook on the outside bars

size	lbs/ft	Hook
#4	0.668	0.67
#5	1.043	0.83
#6	1.502	1.00
#7	2.044	1.17
#8	2.67	1.33

Legend:

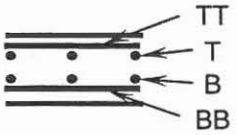

SUNDRY:	0 lbs
OPENINGS:	-319 lbs

Vault	Calle Lejos: Sta. 336+55

Vault	Calle Lejos: Sta. 336+55	
SUMMARY:	CONCRETE	13.8 CY
	REBAR	2205.4 lbs

GEOMETRY	Outside	Inside	Wall
Width (ft.)	7.50	5.67	0.92 ft.
Length (ft.)	14.00	12.17	
Height (ft.)	8.67	6.67	
Volume (ft.^{3})	910	459.6296	

OPENINGS	TOP	SIDE 1	SIDE 2	SIDE 3	SIDE 4	SIDE 5	SIDE 6	TOTAL
Diameter (ft.)	2.5	6.0	2.5	4.0	4.0			
Skew (deg)	0.0	0.0	4.5	0.0	0.0			
Bar Perimeter (ft.)	10.4	25.1	12.3	17.7	17.7	0.0	0.0	
Area (ft.^{2})	4.9	40.3	7.5	18.3	18.3	0.0	0.0	
Volume (ft.^{3})	4.1	37.0	6.9	16.8	16.8	0.0	0.0	81.6

SUNDRY 4.0 ft.^{3}

CONCRETE 13.8 CY

REBAR	Size	Dim.	Hook	Length	Weight/ft.	Number	Weight
Bot Slab BB	#5	7.17	0.83	8.83	1.043	15	138 lbs
Bot Slab B	#4	13.67	0.67	15.00	0.668	9	90 lbs
Bot Slab TT	#5	7.17	0.83	8.83	1.043	15	138 lbs
Bot Slab T	#4	13.67	0.67	15.00	0.668	9	90 lbs
Wall Vert	#5	8.33	1.17 *	10.67	1.043	80	890 lbs
Wall Horiz	#4	7.17	0.67	8.50	0.668	28	159 lbs
Wall Horiz	#4	13.67	0.67	15.00	0.668	28	281 lbs
Top Slab BB	#5	7.17	0.83	8.83	1.043	15	138 lbs
Top Slab B	#4	13.67	0.67	15.00	0.668	9	90 lbs
Top Slab TT	#5	7.17	0.83	8.83	1.043	15	138 lbs
Top Slab T	#4	13.67	0.67	15.00	0.668	9	90 lbs
Additional #6's	#6	0.00	0.00	0.00	1.502	0	0 lbs
Trimmer Bars	#6			83.19	1.502	2	250 lbs
REBAR	**2205.4 lbs**						

* Adds 4" to represent the longer hook on the outside bars

size	lbs/ft	Hook
#4	0.668	0.67
#5	1.043	0.83
#6	1.502	1.00
#7	2.044	1.17
#8	2.67	1.33

Legend:

SUNDRY:	19 lbs
OPENINGS:	-306 lbs

Vault	Calle Lejos: Sta. 339+55

Vault	Calle Lejos: Sta. 339+55	
SUMMARY:	CONCRETE	17.4 CY
	REBAR	3488.2 lbs

GEOMETRY	Outside	Inside	Wall
Width (ft.)	14.00	12.17	0.92 ft.
Length (ft.)	14.00	12.17	
Height (ft.)	5.83	4.08	
Volume (ft.^{3})	1143.333	604.4468	

OPENINGS	TOP	SIDE 1	SIDE 2	SIDE 3	SIDE 4	SIDE 5	SIDE 6	TOTAL
Diameter (ft.)	2.5	4.0	4.0	4.0	4.0			
Skew (deg)	0.0	0.0	0.0	6.0	6.0			
Bar Perimeter (ft.)	10.4	17.7	17.7	17.8	17.8	0.0	0.0	
Area (ft.^{2})	4.9	18.3	18.3	18.4	18.4	0.0	0.0	
Volume (ft.^{3})	4.1	16.8	16.8	16.9	16.9	0.0	0.0	71.6
SUNDRY	2.2	ft.^{3}						
CONCRETE	**17.4 CY**							

REBAR	Size	Dim.	Hook	Length	Weight/ft.	Number	Weight
Bot Slab BB	#6	13.67	1.00	15.67	1.502	15	353 lbs
Bot Slab B	#4	13.67	0.67	15.00	0.668	15	150 lbs
Bot Slab TT	#6	13.67	1.00	15.67	1.502	15	353 lbs
Bot Slab T	#4	13.67	0.67	15.00	0.668	15	150 lbs
Wall Vert	#6	5.50	1.33 *	8.17	1.502	90	1104 lbs
Wall Horiz	#4	13.67	0.67	15.00	0.668	16	160 lbs
Wall Horiz	#4	13.67	0.67	15.00	0.668	16	160 lbs
Top Slab BB	#6	13.67	1.00	15.67	1.502	15	353 lbs
Top Slab B	#4	13.67	0.67	15.00	0.668	15	150 lbs
Top Slab TT	#6	13.67	1.00	15.67	1.502	15	353 lbs
Top Slab T	#4	13.67	0.67	15.00	0.668	15	150 lbs
Additional #6's	#6	6.50	0.00	6.50	1.502	6	59 lbs
Trimmer Bars	#6			81.51	1.502	2	245 lbs
REBAR	**3488.2 lbs**						

size	lbs/ft	Hook
#4	0.668	0.67
#5	1.043	0.83
#6	1.502	1.00
#7	2.044	1.17
#8	2.67	1.33

Legend:

SUNDRY:	16 lbs
OPENINGS:	-269 lbs

* Adds 4" to represent the longer hook on the outside bars

Vault	Cielo Grande: Sta. 400+30

Vault	Cielo Grande: Sta. 400+30	
SUMMARY:	CONCRETE	10.5 CY
	REBAR	1728.8 lbs

GEOMETRY	Outside	Inside	Wall
Width (ft.)	7.00	5.17	0.92 ft.
Length (ft.)	11.00	9.17	
Height (ft.)	8.08	6.08	
Volume (ft.^{3})	622.4167	288.1134	

OPENINGS	TOP	SIDE 1	SIDE 2	SIDE 3	SIDE 4	SIDE 5	SIDE 6	TOTAL
Diameter (ft.)	2.5	2.5	2.5	5.5				
Skew (deg)	0.0	40.5	0.0	0.0				
Bar Perimeter (ft.)	10.4	15.6	12.2	23.2	0.0	0.0	0.0	
Area (ft.^{2})	4.9	9.8	7.5	34.0	0.0	0.0	0.0	
Volume (ft.^{3})	4.1	9.0	6.8	31.2	0.0	0.0	0.0	51.2
SUNDRY	1.3	ft.^{3}						
CONCRETE	**10.5**	**CY**						

REBAR	Size	Dim.	Hook	Length	Weight/ft.	Number	Weight
Bot Slab BB	#5	6.67	0.83	8.33	1.043	12	104 lbs
Bot Slab B	#4	10.67	0.67	12.00	0.668	8	64 lbs
Bot Slab TT	#5	6.67	0.83	8.33	1.043	12	104 lbs
Bot Slab T	#4	10.67	0.67	12.00	0.668	8	64 lbs
Wall Vert	#5	7.75	1.17 *	10.08	1.043	64	673 lbs
Wall Horiz	#4	6.67	0.67	8.00	0.668	28	150 lbs
Wall Horiz	#4	10.67	0.67	12.00	0.668	28	224 lbs
Top Slab BB	#5	6.67	0.83	8.33	1.043	12	104 lbs
Top Slab B	#4	10.67	0.67	12.00	0.668	8	64 lbs
Top Slab TT	#5	6.67	0.83	8.33	1.043	12	104 lbs
Top Slab T	#4	10.67	0.67	12.00	0.668	8	64 lbs
Additional #6's	#6	0.00	0.00	0.00	1.502	0	0 lbs
Trimmer Bars	#6			61.48	1.502	2	185 lbs
REBAR	**1728.8**	**lbs**					

* Adds 4" to represent the longer hook on the outside bars

size	lbs/ft	Hook
#4	0.668	0.67
#5	1.043	0.83
#6	1.502	1.00
#7	2.044	1.17
#8	2.67	1.33

Legend:

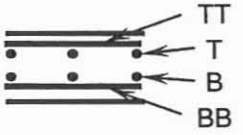

SUNDRY:	16 lbs
OPENINGS:	-193 lbs

Manhole	89th Ave.: Sta. 413+23

Manhole	89th Ave.: Sta. 413+23	
SUMMARY:	CONCRETE	12.4 CY
	REBAR	2447.0 lbs

GEOMETRY	Outside	Inside	Wall
Width (ft.)	10.00	8.17	0.92 ft.
Length (ft.)	10.00	8.17	
Height (ft.)	8.67	6.67	
Volume (ft.^{3})	866.6667	444.6296	

OPENINGS	TOP	SIDE 1	SIDE 2	SIDE 3	SIDE 4	SIDE 5	SIDE 6	TOTAL
Diameter (ft.)	4.0	6.0	5.5	2.5				
Skew (deg)	0.0	0.0	0.0	22.5				
Bar Perimeter (ft.)	15.1	25.1	23.2	13.1	0.0	0.0	0.0	
Area (ft.^{2})	12.6	40.3	34.0	8.1	0.0	0.0	0.0	
Volume (ft.^{3})	10.5	37.0	31.2	7.4	0.0	0.0	0.0	86.1

SUNDRY 0.0 ft.^{3}

CONCRETE 12.4 CY

REBAR	Size	Dim.	Hook	Length	Weight/ft.	Number	Weight
Bot Slab BB	#5	9.67	0.83	11.33	1.043	16	189 lbs
Bot Slab B	#4	9.67	0.67	11.00	0.668	11	81 lbs
Bot Slab TT	#5	9.67	0.83	11.33	1.043	16	189 lbs
Bot Slab T	#4	9.67	0.67	11.00	0.668	11	81 lbs
Wall Vert	#5	8.33	1.17 *	10.67	1.043	92	1024 lbs
Wall Horiz	#4	9.67	0.67	11.00	0.668	32	235 lbs
Wall Horiz	#4	9.67	0.67	11.00	0.668	32	235 lbs
Top Slab BB	#5	9.67	0.83	11.33	1.043	11	130 lbs
Top Slab B	#4	9.67	0.67	11.00	0.668	11	81 lbs
Top Slab TT	#5	9.67	0.83	11.33	1.043	11	130 lbs
Top Slab T	#4	9.67	0.67	11.00	0.668	11	81 lbs
Additional #6's	#6	9.67	0.00	9.67	1.502	6	87 lbs
Trimmer Bars	#6			76.52	1.502	2	230 lbs
REBAR	**2447.0 lbs**						

* Adds 4" to represent the longer hook on the outside bars

size	lbs/ft	Hook
#4	0.668	0.67
#5	1.043	0.83
#6	1.502	1.00
#7	2.044	1.17
#8	2.67	1.33

Legend:

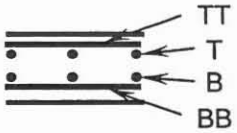

SUNDRY:	0 lbs
OPENINGS:	-325 lbs

Manhole	83rd Ave.: Sta. 142+46

Manhole	83rd Ave.: Sta. 142+46	
SUMMARY:	CONCRETE	8.4 CY
	REBAR	1721.8 lbs

GEOMETRY	Outside	Inside	Wall
Width (ft.)	6.00	4.17	0.92 ft.
Length (ft.)	13.00	11.17	
Height (ft.)	6.00	4.17	
Volume (ft.^{3})	468	193.8657	

OPENINGS	TOP	SIDE 1	SIDE 2	SIDE 3	SIDE 4	SIDE 5	SIDE 6	TOTAL
Diameter (ft.)	4.0	3.5	3.0	3.0				
Skew (deg)	0.0	0.0	26.0	45.0				
Bar Perimeter (ft.)	15.1	15.9	15.5	19.3	0.0	0.0	0.0	
Area (ft.^{2})	12.6	14.2	11.7	14.9	0.0	0.0	0.0	
Volume (ft.^{3})	10.5	13.0	10.8	13.7	0.0	0.0	0.0	48.0

SUNDRY 0.0 ft.^{3}

CONCRETE 8.4 CY

REBAR	Size	Dim.	Hook	Length	Weight/ft.	Number	Weight
Bot Slab BB	#5	5.67	0.83	7.33	1.043	20	153 lbs
Bot Slab B	#4	12.67	0.67	14.00	0.668	7	65 lbs
Bot Slab TT	#5	5.67	0.83	7.33	1.043	20	153 lbs
Bot Slab T	#4	12.67	0.67	14.00	0.668	7	65 lbs
Wall Vert	#5	5.67	1.17 *	8.00	1.043	84	701 lbs
Wall Horiz	#4	5.67	0.67	7.00	0.668	16	75 lbs
Wall Horiz	#4	12.67	0.67	14.00	0.668	16	150 lbs
Top Slab BB	#5	5.67	0.83	7.33	1.043	14	107 lbs
Top Slab B	#4	12.67	0.67	14.00	0.668	7	65 lbs
Top Slab TT	#5	5.67	0.83	7.33	1.043	14	107 lbs
Top Slab T	#4	12.67	0.67	14.00	0.668	7	65 lbs
Additional #6's	#6	0.00	0.00	0.00	1.502	0	0 lbs
Trimmer Bars	#6			65.77	1.502	2	198 lbs
REBAR	**1721.8 lbs**						

size	lbs/ft	Hook
#4	0.668	0.67
#5	1.043	0.83
#6	1.502	1.00
#7	2.044	1.17
#8	2.67	1.33

Legend:

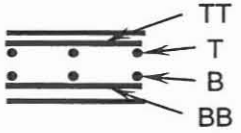

* Adds 4" to represent the longer hook on the outside bars

SUNDRY:	0 lbs
OPENINGS:	-183 lbs

Inlet Structure	Ventana Picacho RB Sta. 81+37

Inlet Structure	Ventana Picacho RB Sta. 81+37	
SUMMARY:	CONCRETE	9.9 CY
	REBAR	1411.3 lbs

GEOMETRY	Outside	Inside	Wall
Width (ft.)	4.83	3.00	0.92 ft.
Length (ft.)	11.83	10.00	
Height (ft.)	8.60	7.43	
Volume (ft.^{3})	491.6816	222.9	

OPENINGS	TOP	SIDE 1	SIDE 2	SIDE 3	SIDE 4	SIDE 5	SIDE 6	TOTAL
Diameter (ft.)		5.0						
Skew (deg)		0.0						
Bar Perimeter (ft.)	0.0	21.4	0.0	0.0	0.0	0.0	0.0	
Area (ft.^{2})	0.0	28.3	0.0	0.0	0.0	0.0	0.0	
Volume (ft.^{3})	0.0	25.9	0.0	0.0	0.0	0.0	0.0	26.0

SUNDRY 23.9 ft.^{3}

CONCRETE 9.9 CY

REBAR	Size	Dim.	Hook	Length	Weight/ft.	Number	Weight
Bot Slab BB	#5	4.50	0.83	6.17	1.043	13	84 lbs
Bot Slab B	#4	11.50	0.67	12.83	0.668	6	51 lbs
Bot Slab TT	#5	4.50	0.83	6.17	1.043	13	84 lbs
Bot Slab T	#4	11.50	0.67	12.83	0.668	6	51 lbs
Wall Vert	#5	8.26	0.83	9.93	1.043	60	621 lbs
Wall Horiz	#4	4.50	0.67	5.83	0.668	32	125 lbs
Wall Horiz	#4	11.50	0.67	12.83	0.668	36	309 lbs
Top Slab BB	#4	4.50	0.67	5.83	0.668	0	0 lbs
Top Slab B	#4	11.50	0.67	12.83	0.668	0	0 lbs
Top Slab TT	#4	4.50	0.67	5.83	0.668	0	0 lbs
Top Slab T	#4	11.50	0.67	12.83	0.668	0	0 lbs
Additional #6's	#6	0.00	0.00	0.00	1.502	0	0 lbs
Trimmer Bars	#6			21.40	1.502	2	64 lbs
REBAR	**1411.3 lbs**						

size	lbs/ft	Hook
#4	0.668	0.67
#5	1.043	0.83
#6	1.502	1.00
#7	2.044	1.17
#8	2.67	1.33

Legend:

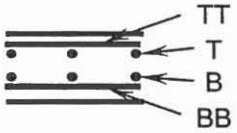

SUNDRY:	119 lbs
OPENINGS:	-97 lbs

Inlet Structure	Ventana Picacho RB Sta. 85+77

Inlet Structure	Ventana Picacho RB Sta. 85+77	
SUMMARY:	CONCRETE	42.6 CY
	REBAR	4928.0 lbs

GEOMETRY	Outside	Inside	Wall
Width (ft.)	6.83	5.00	0.92 ft.
Length (ft.)	46.83	45.00	
Height (ft.)	9.17	8.00	
Volume (ft.^{3})	2933.588	1800	

OPENINGS	TOP	SIDE 1	SIDE 2	SIDE 3	SIDE 4	SIDE 5	SIDE 6	TOTAL
Diameter (ft.)		5.0						
Skew (deg)		0.0						
Bar Perimeter (ft.)	0.0	21.4	0.0	0.0	0.0	0.0	0.0	
Area (ft.^{2})	0.0	28.3	0.0	0.0	0.0	0.0	0.0	
Volume (ft.^{3})	0.0	25.9	0.0	0.0	0.0	0.0	0.0	26.0

SUNDRY 42.9 ft.^{3}

CONCRETE 42.6 CY

REBAR	Size	Dim.	Hook	Length	Weight/ft.	Number	Weight
Bot Slab BB	#5	6.50	0.83	8.17	1.043	48	409 lbs
Bot Slab B	#4	46.50	0.67	47.83	0.668	8	256 lbs
Bot Slab TT	#5	6.50	0.83	8.17	1.043	48	409 lbs
Bot Slab T	#4	46.50	0.67	47.83	0.668	8	256 lbs
Wall Vert	#5	8.83	0.83	10.50	1.043	208	2278 lbs
Wall Horiz	#4	6.50	0.67	7.83	0.668	32	167 lbs
Wall Horiz	#4	46.50	0.67	47.83	0.668	34	1086 lbs
Top Slab BB	#4	6.50	0.67	7.83	0.668	0	0 lbs
Top Slab B	#4	46.50	0.67	47.83	0.668	0	0 lbs
Top Slab TT	#4	6.50	0.67	7.83	0.668	0	0 lbs
Top Slab T	#4	46.50	0.67	47.83	0.668	0	0 lbs
Additional #6's	#6	0.00	0.00	0.00	1.502	0	0 lbs
Trimmer Bars	#6			21.40	1.502	2	64 lbs

REBAR 4928.0 lbs

size	lbs/ft	Hook
#4	0.668	0.67
#5	1.043	0.83
#6	1.502	1.00
#7	2.044	1.17
#8	2.67	1.33

Legend:

SUNDRY:	100 lbs
OPENINGS:	-97 lbs

Inlet Structure	Calle Lajos: Sta. 340+27

Inlet Structure	Calle Lajos: Sta. 340+27	
SUMMARY: CONCRETE	6.2	CY
REBAR	1256.6	lbs

GEOMETRY	Outside	Inside	Wall
Width (ft.)			0.00 ft.
Length (ft.)			
Height (ft.)			
Volume (ft.^{3})	0	0	

OPENINGS	TOP	SIDE 1	SIDE 2	SIDE 3	SIDE 4	SIDE 5	SIDE 6	TOTAL
Diameter (ft.)								
Skew (deg)								
Bar Perimeter (ft.)	0.0	0.0	0.0	0.0	0.0	0.0	0.0	
Area (ft.^{2})	0.0	0.0	0.0	0.0	0.0	0.0	0.0	
Volume (ft.^{3})	0.0	0.0	0.0	0.0	0.0	0.0	0.0	0.0

SUNDRY 166.3 ft.^{3}

CONCRETE 6.2 CY

REBAR	Size	Dim.	Hook	Length	Weight/ft.	Number	Weight
Bot Slab BB	#4	-0.33	0.67	1.00	0.668		0 lbs
Bot Slab B	#4	-0.33	0.67	1.00	0.668		0 lbs
Bot Slab TT	#4	-0.33	0.67	1.00	0.668		0 lbs
Bot Slab T	#4	-0.33	0.67	1.00	0.668		0 lbs
Wall Vert	#4	-0.33	0.67	1.00	0.668		0 lbs
Wall Horiz	#4	-0.33	0.67	1.00	0.668		0 lbs
Wall Horiz	#4	-0.33	0.67	1.00	0.668		0 lbs
Top Slab BB	#4	-0.33	0.67	1.00	0.668		0 lbs
Top Slab B	#4	-0.33	0.67	1.00	0.668		0 lbs
Top Slab TT	#4	-0.33	0.67	1.00	0.668		0 lbs
Top Slab T	#4	-0.33	0.67	1.00	0.668		0 lbs
Additional #6's	#6		0.00	0.00	1.502		0 lbs
Trimmer Bars	#6			0.00	1.502	2	0 lbs

REBAR 1256.6 lbs

size	lbs/ft	Hook
#4	0.668	0.67
#5	1.043	0.83
#6	1.502	1.00
#7	2.044	1.17
#8	2.67	1.33

Legend:

SUNDRY: 1257 lbs
OPENINGS: 0 lbs

Manhole	87th Ave.: Sta. 307+50

Manhole	87th Ave.: Sta. 307+50	
SUMMARY:	CONCRETE	5.8 CY
	REBAR	1349.6 lbs

GEOMETRY	Outside	Inside	Wall
Width (ft.)	7.33	5.50	0.92 ft.
Length (ft.)	8.00	6.17	
Height (ft.)	6.00	4.17	
Volume (ft.^{3})	352	141.3194	

OPENINGS	TOP	SIDE 1	SIDE 2	SIDE 3	SIDE 4	SIDE 5	SIDE 6	TOTAL
Diameter (ft.)	4.0	3.5	3.5	4.0				
Skew (deg)	0.0	0.0	22.0	16.0				
Bar Perimeter (ft.)	15.1	15.9	17.0	18.4	0.0	0.0	0.0	
Area (ft.^{2})	12.6	14.2	15.3	19.1	0.0	0.0	0.0	
Volume (ft.^{3})	10.5	13.0	14.0	17.5	0.0	0.0	0.0	55.1

SUNDRY 0.0 ft.^{3}

CONCRETE 5.8 CY

REBAR	Size	Dim.	Hook	Length	Weight/ft.	Number	Weight
Bot Slab BB	#5	7.00	0.83	8.67	1.043	13	118 lbs
Bot Slab B	#4	7.67	0.67	9.00	0.668	8	48 lbs
Bot Slab TT	#5	7.00	0.83	8.67	1.043	13	118 lbs
Bot Slab T	#4	7.67	0.67	9.00	0.668	8	48 lbs
Wall Vert	#5	5.67	1.17 *	8.00	1.043	70	584 lbs
Wall Horiz	#4	7.00	0.67	8.33	0.668	16	89 lbs
Wall Horiz	#4	7.67	0.67	9.00	0.668	16	96 lbs
Top Slab BB	#5	7.00	0.83	8.67	1.043	9	81 lbs
Top Slab B	#4	7.67	0.67	9.00	0.668	8	48 lbs
Top Slab TT	#5	7.00	0.83	8.67	1.043	9	81 lbs
Top Slab T	#4	7.67	0.67	9.00	0.668	8	48 lbs
Additional #6's	#6	0.00	0.00	0.00	1.502	0	0 lbs
Trimmer Bars	#6			66.43	1.502	2	200 lbs
REBAR	**1349.6 lbs**						

* Adds 4" to represent the longer hook on the outside bars

size	lbs/ft	Hook
#4	0.668	0.67
#5	1.043	0.83
#6	1.502	1.00
#7	2.044	1.17
#8	2.67	1.33

Legend:

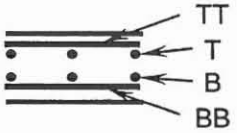

SUNDRY:	0 lbs
OPENINGS:	-209 lbs

Manhole	87th Ave.: Sta. 61+37

Manhole	87th Ave.: Sta. 61+37	
SUMMARY:	CONCRETE	15.1 CY
	REBAR	2331.9 lbs

GEOMETRY	Outside	Inside	Wall
Width (ft.)	9.00	7.17	0.92 ft.
Length (ft.)	11.00	9.17	
Height (ft.)	12.00	10.00	
Volume (ft.^{3})	1188	656.9444	

OPENINGS	TOP	SIDE 1	SIDE 2	SIDE 3	SIDE 4	SIDE 5	SIDE 6	TOTAL
Diameter (ft.)	4.0	7.0	3.5	7.0				
Skew (deg)	0.0	0.0	0.0	0.0				
Bar Perimeter (ft.)	15.1	28.7	15.9	28.7	0.0	0.0	0.0	
Area (ft.^{2})	12.6	54.5	14.2	54.5	0.0	0.0	0.0	
Volume (ft.^{3})	10.5	50.0	13.0	50.0	0.0	0.0	0.0	123.5
SUNDRY	0.0	ft.^{3}						
CONCRETE	**15.1 CY**							

REBAR	Size	Dim.	Hook	Length	Weight/ft.	Number	Weight
Bot Slab BB	#5	8.67	0.83	10.33	1.043	12	129 lbs
Bot Slab B	#4	10.67	0.67	12.00	0.668	10	80 lbs
Bot Slab TT	#5	8.67	0.83	10.33	1.043	12	129 lbs
Bot Slab T	#4	10.67	0.67	12.00	0.668	10	80 lbs
Wall Vert	#5	11.67	1.17 *	14.00	1.043	72	1051 lbs
Wall Horiz	#4	8.67	0.67	10.00	0.668	40	267 lbs
Wall Horiz	#4	10.67	0.67	12.00	0.668	40	321 lbs
Top Slab BB	#5	8.67	0.83	10.33	1.043	12	129 lbs
Top Slab B	#4	10.67	0.67	12.00	0.668	10	80 lbs
Top Slab TT	#5	8.67	0.83	10.33	1.043	12	129 lbs
Top Slab T	#4	10.67	0.67	12.00	0.668	10	80 lbs
Additional #6's	#6	6.00	0.00	6.00	1.502	6	54 lbs
Trimmer Bars	#6			88.47	1.502	2	266 lbs
REBAR	**2331.9 lbs**						

* Adds 4" to represent the longer hook on the outside bars

size	lbs/ft	Hook
#4	0.668	0.67
#5	1.043	0.83
#6	1.502	1.00
#7	2.044	1.17
#8	2.67	1.33

Legend:

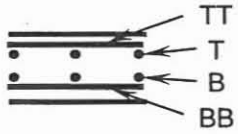

SUNDRY:	0 lbs
OPENINGS:	-465 lbs

2. Plan Sheets

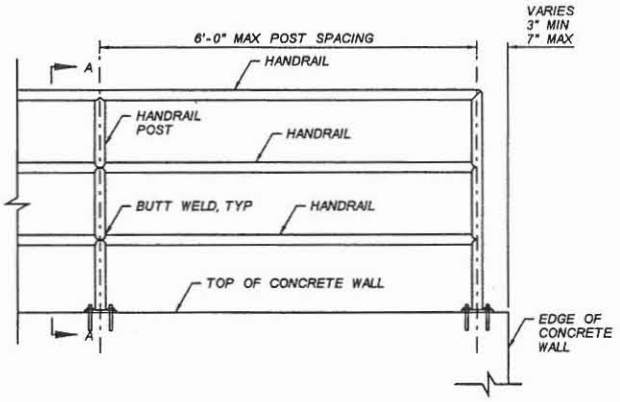

ELEVATION
TYPICAL HANDRAIL ON WALL
NTS

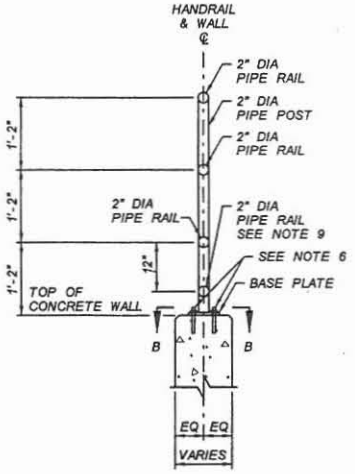

SECTION A-A
HANDRAIL ON WALL
NTS

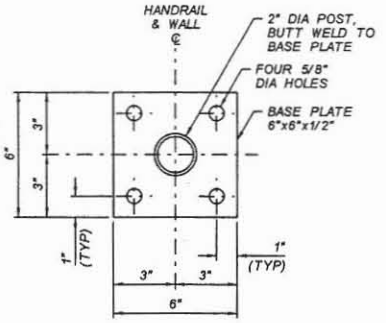

SECTION B-B
BASE PLATE
NTS

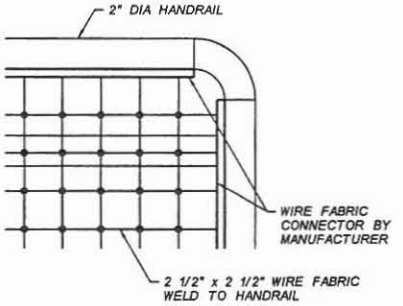

NOTES:
1) ALL WELDING SHALL BE IN ACCORDANCE WITH AMERICAN WELDING SOCIETY (AWS) D1.1 USING E70XX ELECTRODES.
2) ALL WIRE FABRIC SHALL BE NO. 10 WIRE 2 1/2" x 2 1/2" SQUARE WIRE FABRIC WELDED TO HANDRAIL.
3) ALL HANDRAIL AND WIRE FABRIC SHALL BE SPRAYED WITH ONE COAT OF RUST INHIBITIVE RED OXIDE PRIMER AND 2 COATS OF WEATHERED SANDSTONE.

RAILING DETAIL - DTL 01A
NTS

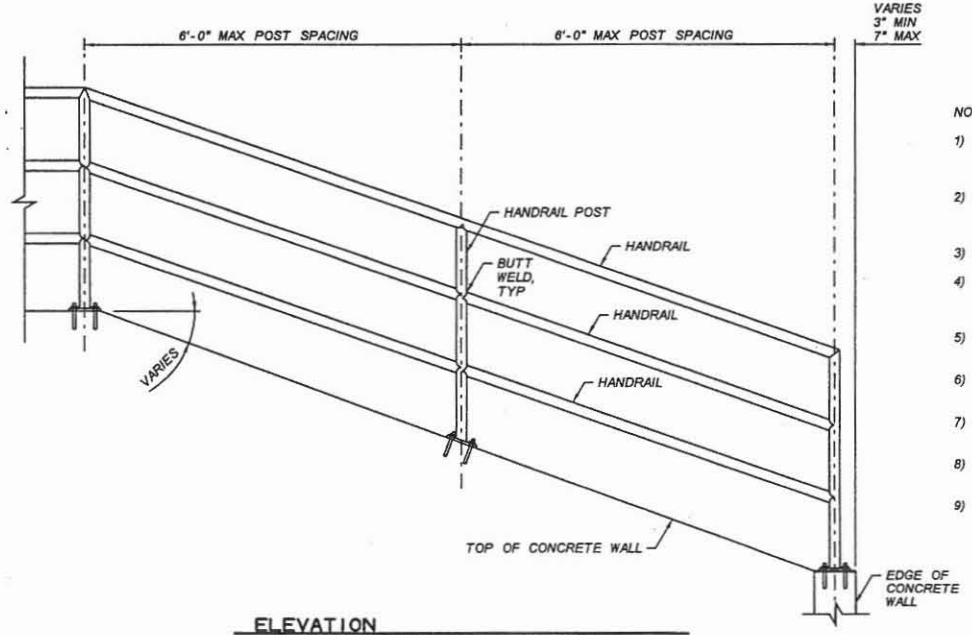

ELEVATION
TYPICAL HANDRAIL ON SLOPED WALL
NTS

NOTES:

1) ALL RAILS, POSTS AND FITTINGS SHALL BE STEEL, CONFORMING TO ALL REQUIREMENTS OF AASHTO M 181 FOR GRADE 2 PIPE. 2" N.D. PIPE IS SCHEDULE 40 PER ASTM A-53.
2) FITTINGS AND RAILS SHALL BE WELDED WITH CONTINOUS WELDS. ALL CUT EDGES SHALL BE GROUND SMOOTH AND ALL VISIBLE WELDS, WHEN COMPLETED, SHALL PRESENT A SMOOTH, EVEN APPEARANCE.
3) SPACING OF POSTS SHALL BE 6' OR LESS AS REQUIRED IN THE FIELD.
4) CONTRACTOR SHALL SUBMIT WORKING DRAWINGS FOR APPROVAL. WORKING DRAWINGS SHALL CONSIST OF SHOP DRAWINGS AND FIELD HORIZONTAL AND VERTICAL INSTALLATION.
5) PAINT STEEL ORIFICE PLATES AND HANDRAIL COLOR "WEATHERED SANDSTONE, #320-4", SEE SPECIFICATIONS.
6) FOUR STAINLESS STEEL EXPANSION ANCHORS, 0.5" DIAMETER x 5" LONG, EMBEDDED 3.5", WITH WASHERS AND LOCKING NUTS.
7) POSTS ON SLOPING WINGWALL WILL BE VERTICAL. DISTANCES SHOWN ARE HORIZONTAL DISTANCE BETWEEN POSTS.
8) AT DROP INLETS, HANDRAIL SHALL BE ON ALL SIDES. AT HEADWALLS, HANDRAIL SHALL BE ON THREE SIDES (BACK AND WING WALLS).
9) ADDITIONAL RAIL REQUIRED FOR WIRE FABRIC SHOWN IN DTL 01A.

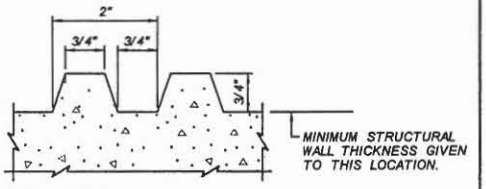

TYPICAL FORM LINER DETAIL FOR EXPOSED CONCRETE SURFACES.

NOTES:
1) SURFACES BELOW TRASH RACKS NEED NOT BE TREATED WITH THE FORM LINER.
2) DO NOT USE FORM LINER ON FACE OF HEADWALLS WITH ACCESS BARRIERS.
3) SEE DTL 12 FOR SURFACES TO BE TREATED WITH FORM LINER ON STILLING BASIN.

DETAIL
FORM LINER RUSTICATION
NTS

NO.	REVISION	BY	DATE
3			
2			
1			

FLOOD CONTROL DISTRICT OF MARICOPA COUNTY
ENGINEERING DIVISION

83RD AVENUE / PINNACLE PEAK ROAD
DRAINAGE IMPROVEMENTS
PCN 450.02.33 FCD CONTRACT NO. 2006C005

	BY	DATE
DESIGNED	O. OLIDEN	5/2007
DRAWN	A. JOHNSON	5/2007
CHECKED	M. RATHBONE	5/2007

JACOBS CIVIL INC.

DRAWING NO. D01 | DTL 01 & DTL 01A STEEL HANDRAIL | SHEET OF 22 161

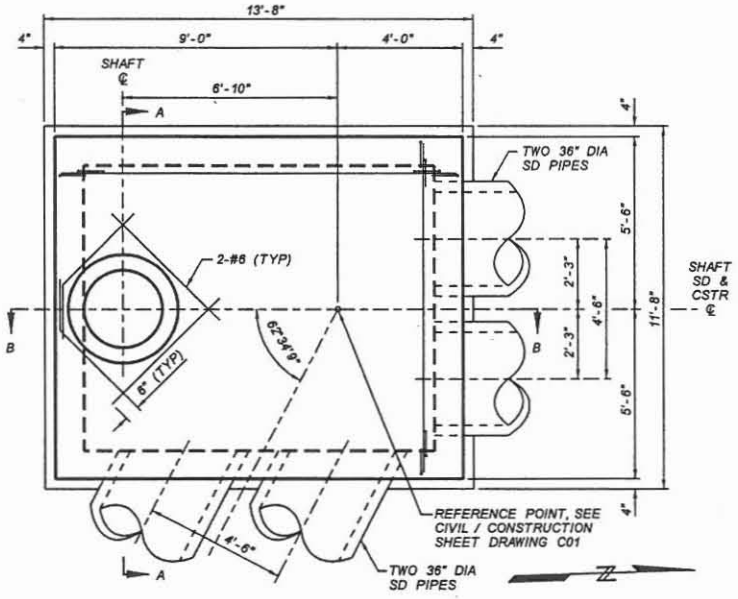

PLAN
CONCRETE VAULT
83RD AVENUE STA 100+05
NTS

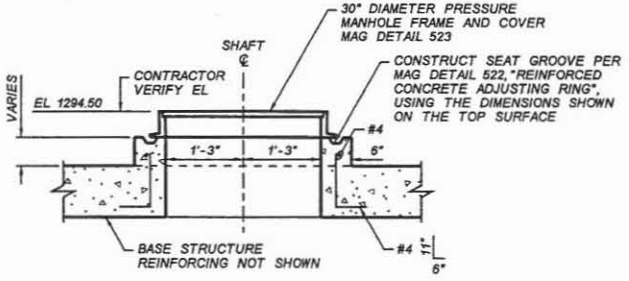

SHAFT DETAIL
CONCRETE VAULT
83RD AVENUE STA 100+05
NTS

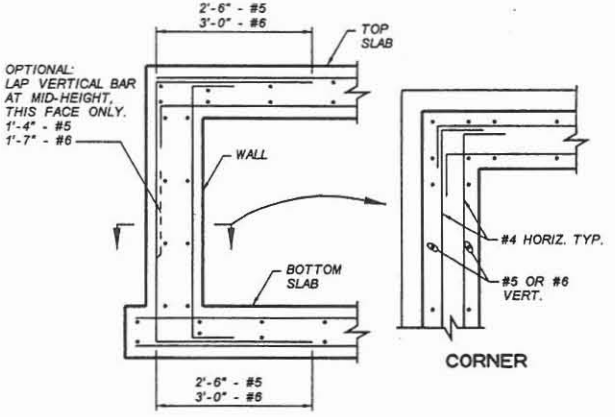

WALL REINFORCING DETAILS
TYPICAL AT ALL CONCRETE VAULTS AND STORM DRAIN MANHOLE BASES
NTS

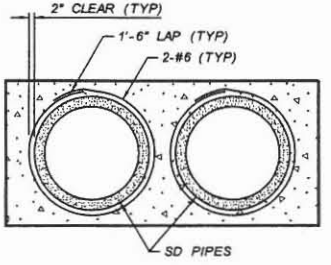

REINFORCING AT SD PIPE
CONCRETE VAULT AND STORM DRAIN MANHOLE BASE TYPICAL AT ALL LOCATIONS, ALL PIPES AND SHAFTS
NTS

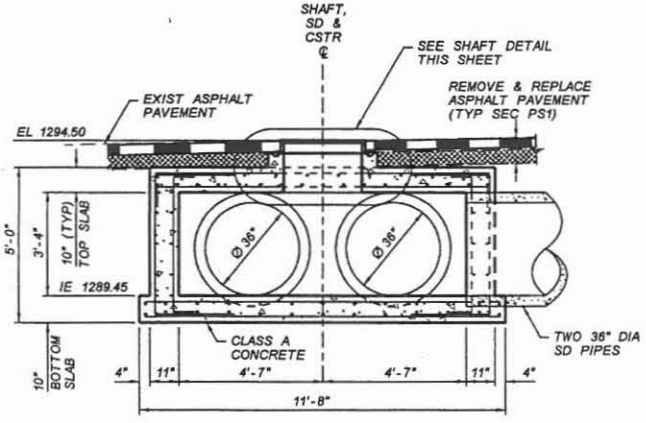

SECTION A-A
CONCRETE VAULT
83RD AVENUE STA 100+05
NTS

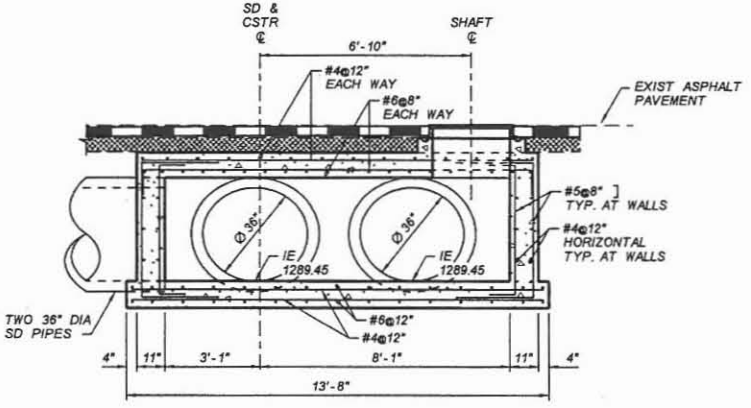

SECTION B-B
CONCRETE VAULT
83RD AVENUE STA 100+05
NTS

NO.	REVISION	BY	DATE
3			
2			
1			

FLOOD CONTROL DISTRICT OF MARICOPA COUNTY
ENGINEERING DIVISION

83RD AVENUE / PINNACLE PEAK ROAD
DRAINAGE IMPROVEMENTS
PCN 450.02.33 FCD CONTRACT NO. 2006C005

	BY	DATE
DESIGNED	D. OLIDEN	1/2007
DRAWN	A. JOHNSON	1/2007
CHECKED	M. RATHBONE	1/2007

JE JACOBS CIVIL INC.

DRAWING NO.		SHEET OF
D02	DTL 02 CONCRETE VAULT	23 161

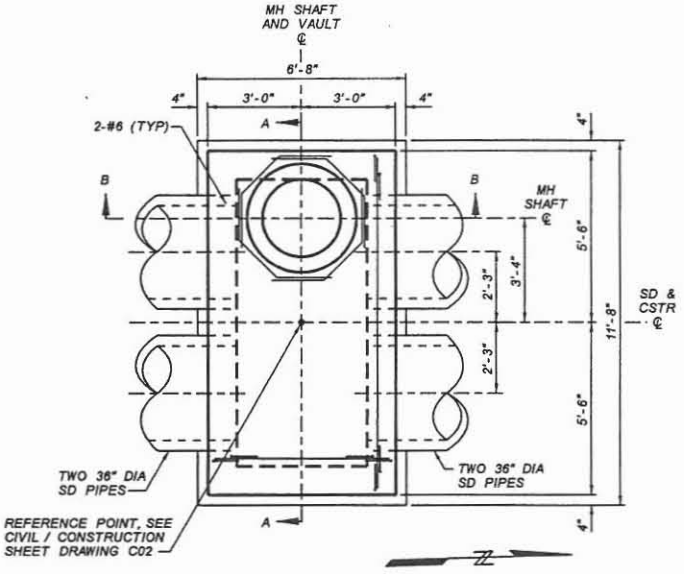

PLAN
CONCRETE VAULT
83RD AVENUE STA 102+00
NTS

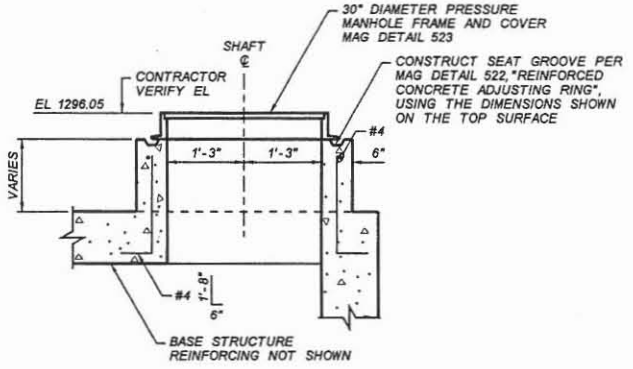

SHAFT DETAIL
CONCRETE VAULT
83RD AVENUE STA 102+00
NTS

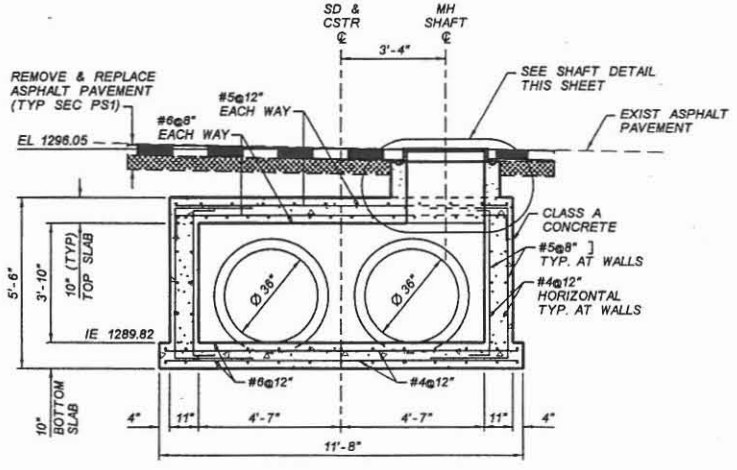

SECTION A-A
CONCRETE VAULT
83RD AVENUE STA 102+00
NTS

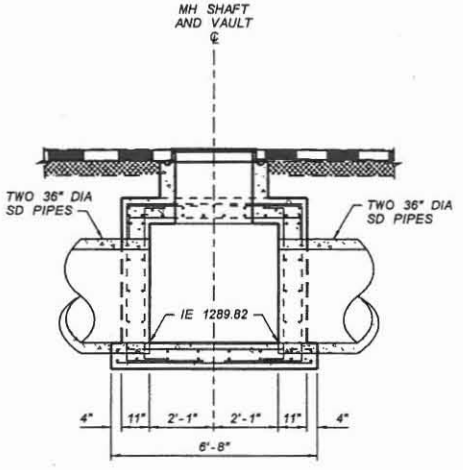

SECTION B-B
CONCRETE VAULT
83RD AVENUE STA 102+00
NTS

NO.	REVISION	BY	DATE
3			
2			
1			

FLOOD CONTROL DISTRICT OF MARICOPA COUNTY
ENGINEERING DIVISION

83RD AVENUE / PINNACLE PEAK ROAD
DRAINAGE IMPROVEMENTS
PCN 450.02.33 FCD CONTRACT NO. 2006C005

	BY	DATE
DESIGNED	O. OLIDEN	1/2007
DRAWN	A. JOHNSON	1/2007
CHECKED	M. RATHBONE	1/2007

JACOBS CIVIL INC.

DRAWING NO.		SHEET OF
D03	DTL 03 CONCRETE VAULT	24 161

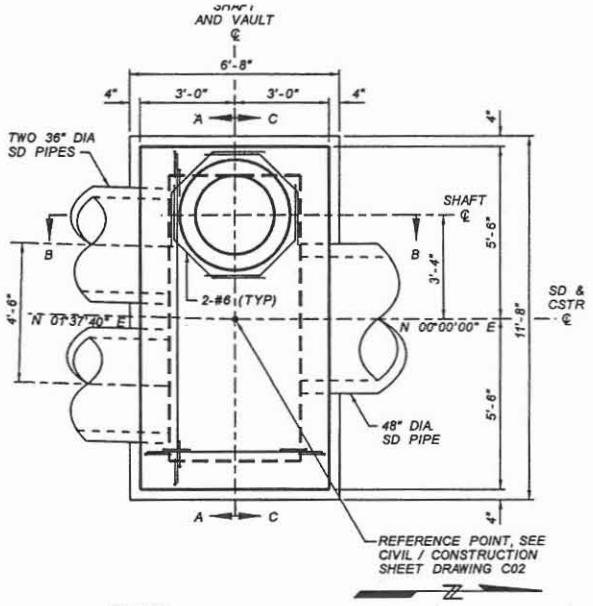

PLAN
CONCRETE VAULT
83RD AVENUE STA 104+75
NTS

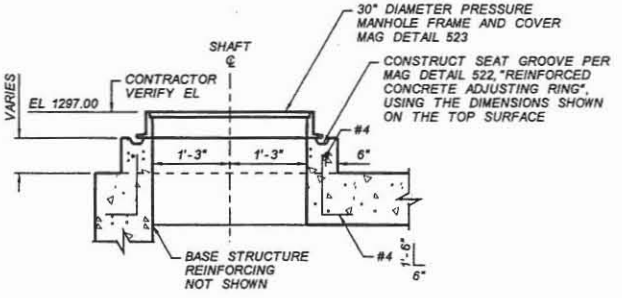

SHAFT DETAIL
CONCRETE VAULT
83RD AVENUE STA 104+75
NTS

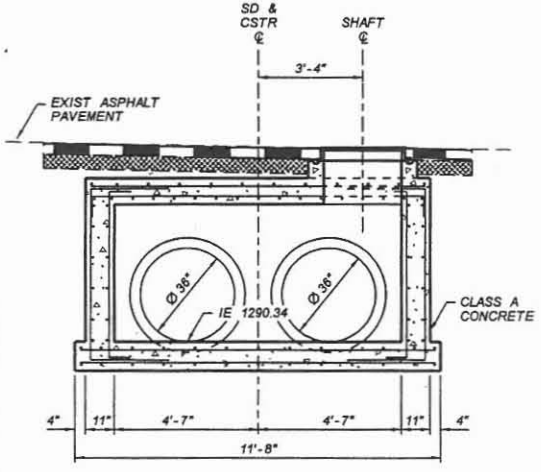

SECTION A-A
CONCRETE VAULT
83RD AVENUE STA 104+75
NTS

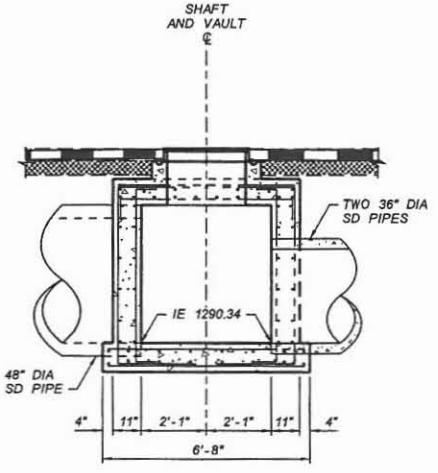

SECTION B-B
CONCRETE VAULT
83RD AVENUE STA 104+75
NTS

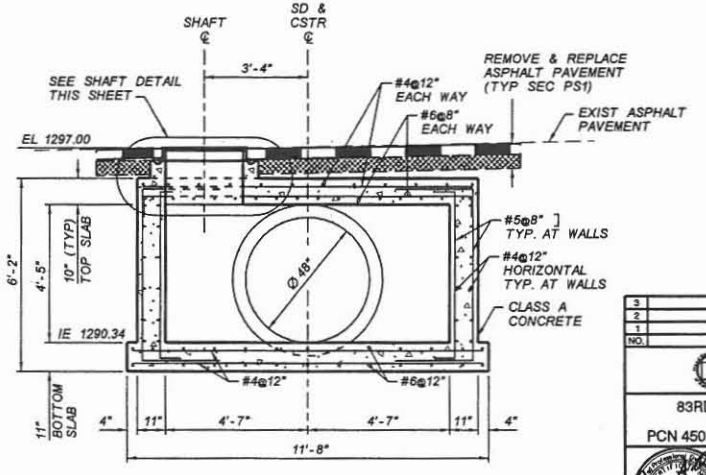

SECTION C-C
CONCRETE VAULT
83RD AVENUE STA 104+75
NTS

NO.	REVISION	BY	DATE
3			
2			
1			

FLOOD CONTROL DISTRICT OF MARICOPA COUNTY
ENGINEERING DIVISION

83RD AVENUE / PINNACLE PEAK ROAD
DRAINAGE IMPROVEMENTS
PCN 450.02.33 FCD CONTRACT NO. 2006C005

	BY	DATE
DESIGNED	O. OLIDEN	1/2007
DRAWN	A. JOHNSON	1/2007
CHECKED	M. RATHBONE	1/2007

JE JACOBS CIVIL INC.

DRAWING NO. D04 | DTL 04 CONCRETE VAULT | SHEET OF 25 161

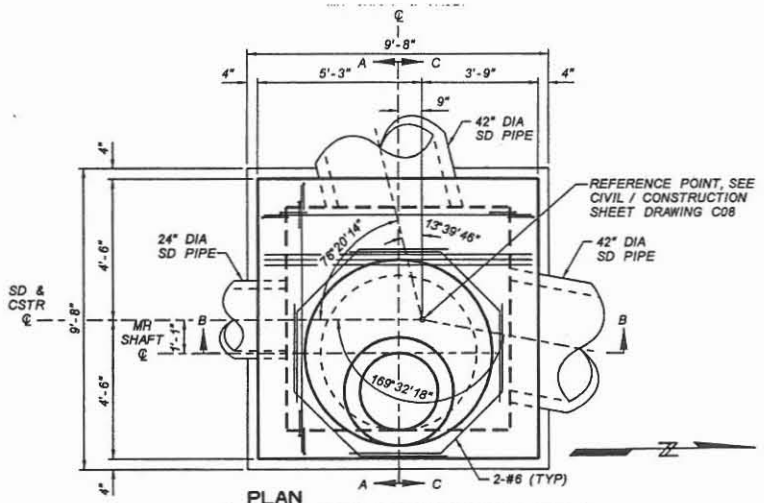

PLAN
STORM DRAIN MANHOLE BASE
83RD AVENUE STA 134+86
NTS

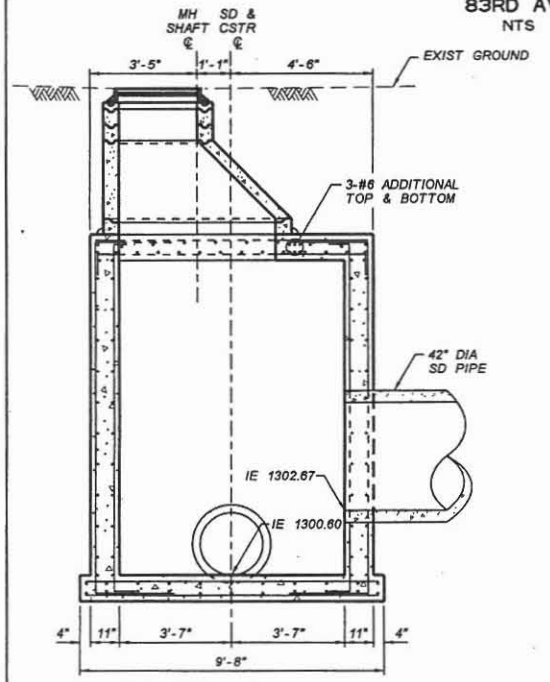

SECTION A-A
STORM DRAIN MANHOLE BASE
83RD AVENUE STA 134+86
NTS

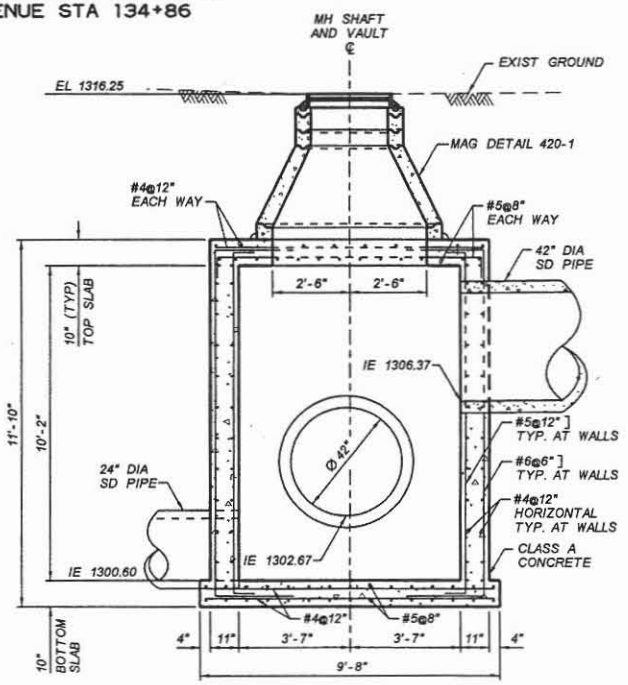

SECTION B-B
STORM DRAIN MANHOLE BASE
83RD AVENUE STA 134+86
NTS

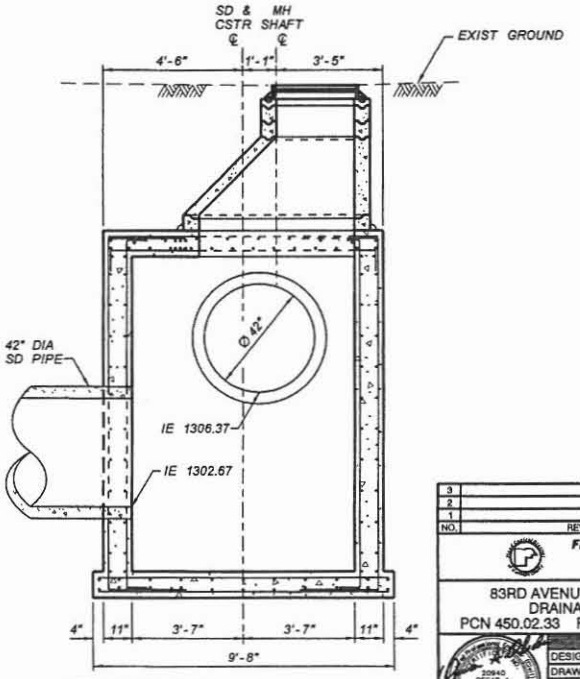

SECTION C-C
STORM DRAIN MANHOLE BASE
83RD AVENUE STA 134+86
NTS

NO.	REVISION	BY	DATE
3			
2			
1			

FLOOD CONTROL DISTRICT OF MARICOPA COUNTY
ENGINEERING DIVISION

83RD AVENUE / PINNACLE PEAK ROAD
DRAINAGE IMPROVEMENTS
PCN 450.02.33 FCD CONTRACT NO. 2006C005

	BY	DATE
DESIGNED	O. OLIDEN	5/2007
DRAWN	A. JOHNSON	5/2007
CHECKED	M. RATHBONE	5/2007

JACOBS CIVIL INC.

DRAWING NO. D05

DTL 05
STORM DRAIN MANHOLE BASE

SHEET OF 26 161

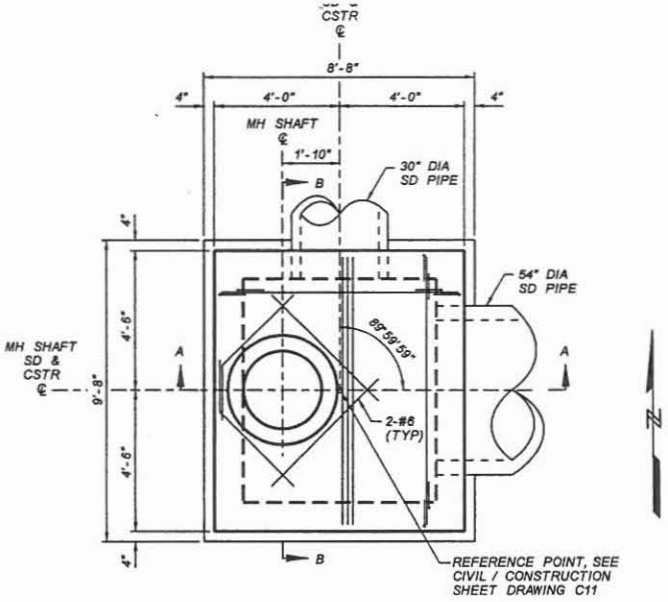

PLAN
CONCRETE VAULT
PINNACLE PEAK ROAD STA 199+60
NTS

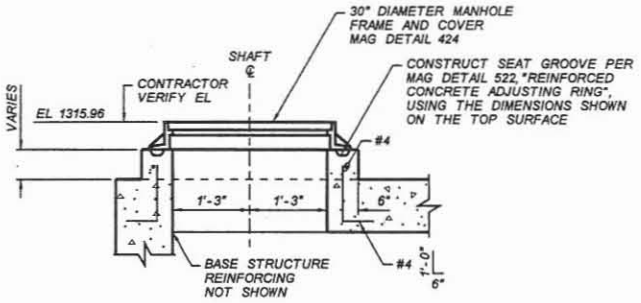

SHAFT DETAIL
CONCRETE VAULT
PINNACLE PEAK ROAD STA 199+60
NTS

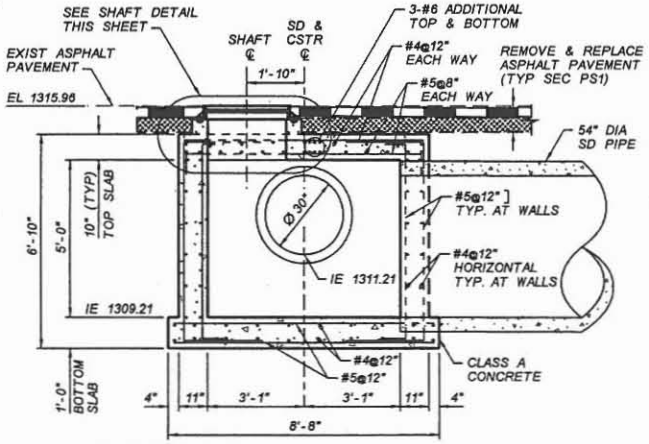

SECTION A-A
CONCRETE VAULT
PINNACLE PEAK ROAD STA 199+60
NTS

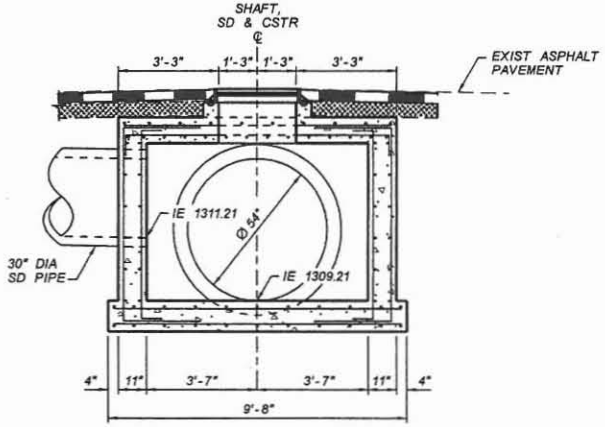

SECTION B-B
CONCRETE VAULT
PINNACLE PEAK ROAD STA 199+60
NTS

NO.	REVISION	BY	DATE
3			
2			
1			

FLOOD CONTROL DISTRICT OF MARICOPA COUNTY
ENGINEERING DIVISION

83RD AVENUE / PINNACLE PEAK ROAD
DRAINAGE IMPROVEMENTS
PCN 450.02.33 FCD CONTRACT NO. 2006C005

	BY	DATE
DESIGNED	O. OLIDEN	5/2007
DRAWN	A. JOHNSON	5/2007
CHECKED	M. RATHBONE	5/2007

JACOBS CIVIL INC.

DRAWING NO. D06 | DTL 06 CONCRETE VAULT | SHEET 27 OF 161

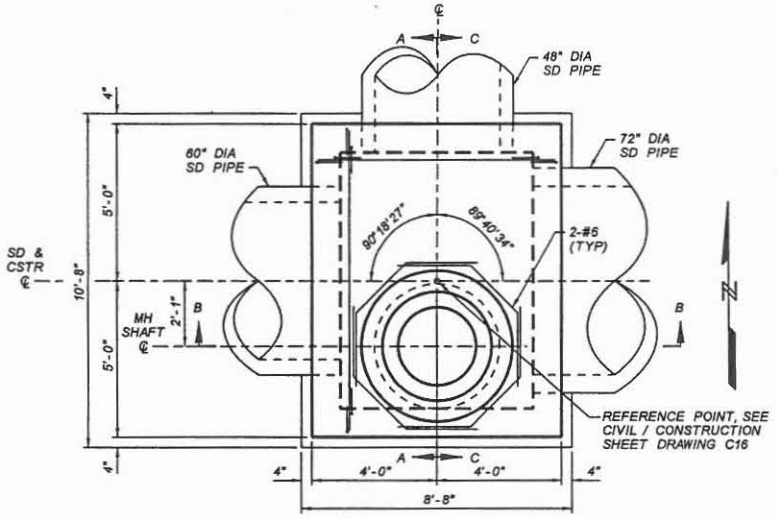

PLAN
STORM DRAIN MANHOLE BASE
PINNACLE PEAK ROAD STA 226+64
NTS

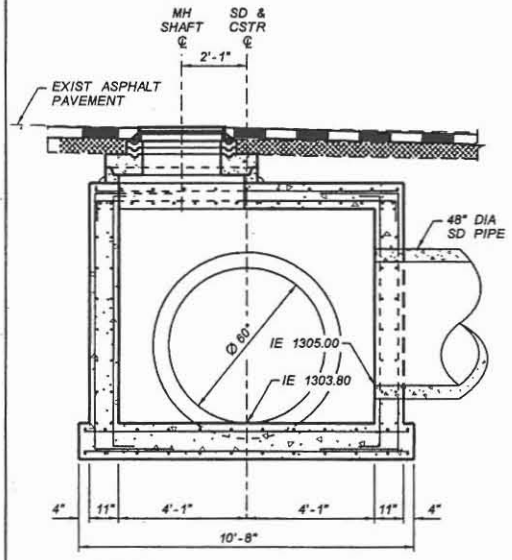

SECTION A-A
STORM DRAIN MANHOLE BASE
PINNACLE PEAK ROAD STA 226+64
NTS

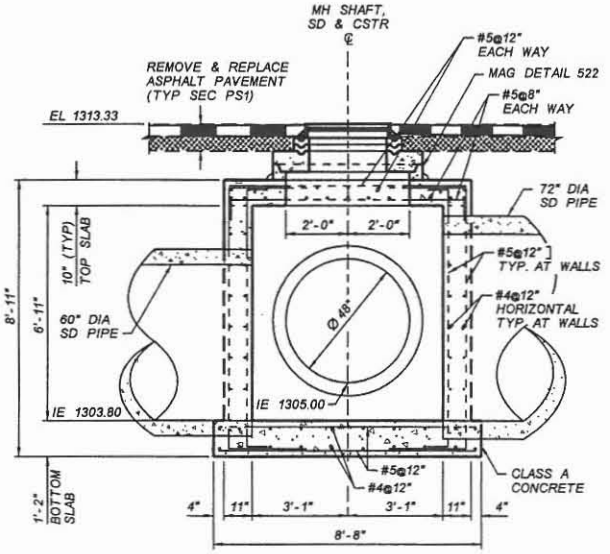

SECTION B-B
STORM DRAIN MANHOLE BASE
PINNACLE PEAK ROAD STA 226+64
NTS

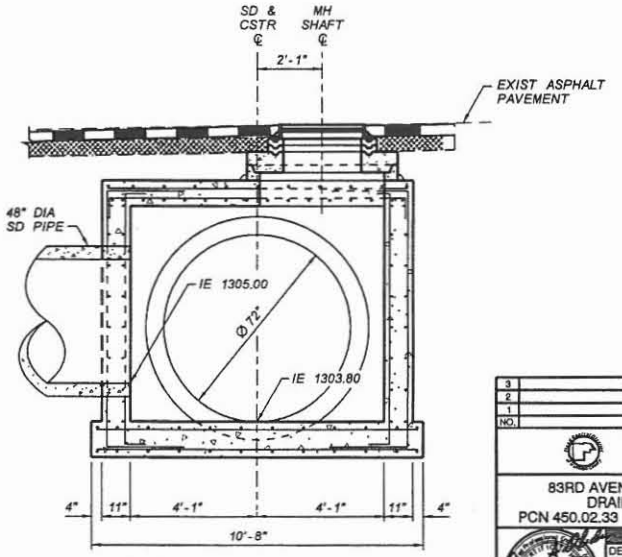

SECTION C-C
STORM DRAIN MANHOLE BASE
PINNACLE PEAK ROAD STA 226+64
NTS

NO.	REVISION	BY	DATE
3			
2			
1			

FLOOD CONTROL DISTRICT OF MARICOPA COUNTY
ENGINEERING DIVISION

83RD AVENUE / PINNACLE PEAK ROAD
DRAINAGE IMPROVEMENTS
PCN 450.02.33 FCD CONTRACT NO. 2006C005

	BY	DATE
DESIGNED	O. OLDEN	5/2007
DRAWN	A. JOHNSON	5/2007
CHECKED	M. RATHBONE	5/2007

JACOBS CIVIL INC.

DRAWING NO.		SHEET OF
D07	DTL 07 STORM DRAIN MANHOLE BASE	28 161

NOTES

1. APRON SHALL BE PORTLAND CEMENT CONCRETE, CLASS B.
2. SEE CATCH BASIN AND TRENCH DRAIN DETAILS.

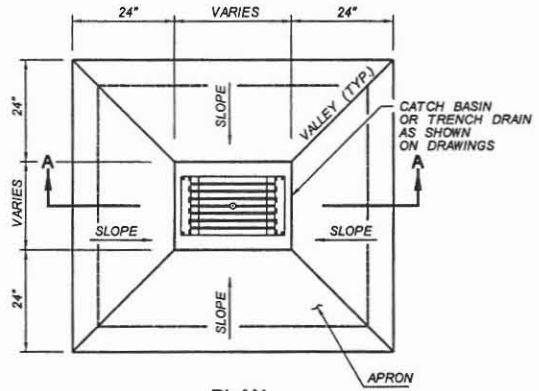

PLAN

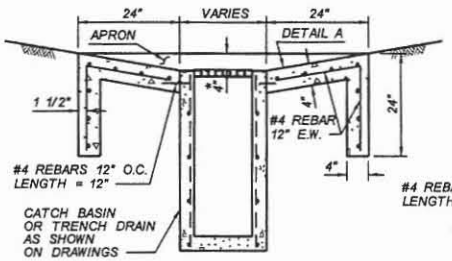

SECTION A-A

* SUMP = 0" WITH NO SLOPE ON APRON AT STA 236+54, 25' LT TRENCH DRAIN

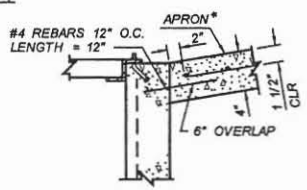

DETAIL A

CONCRETE APRON

NTS

NO.	REVISION	BY	DATE
3			
2			
1			

FLOOD CONTROL DISTRICT OF MARICOPA COUNTY
ENGINEERING DIVISION

83RD AVENUE / PINNACLE PEAK ROAD
DRAINAGE IMPROVEMENTS
PCN 450.02.33 FCD CONTRACT NO. 2006C005

	BY	DATE
DESIGNED	O. OLIDEN	1/2007
DRAWN	S. RIVIERA	1/2007
CHECKED	M. RATHBONE	1/2007

JACOBS CIVIL INC.

DRAWING NO.		SHEET OF
D08	DTL 08 CONCRETE APRON	29 161

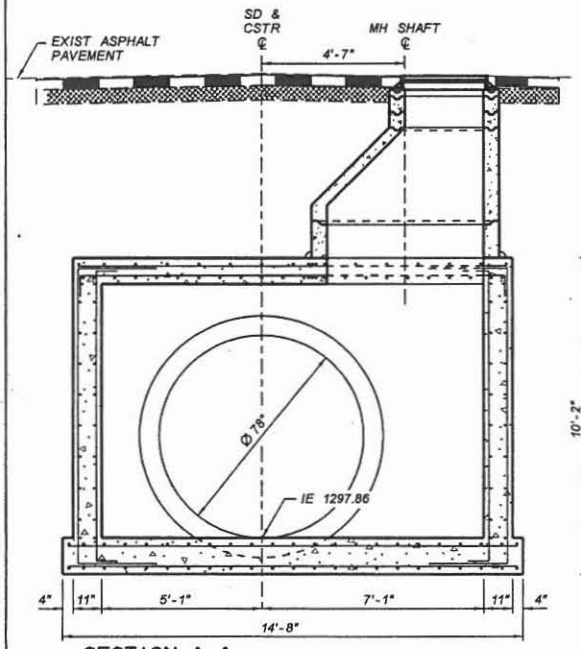

SECTION A-A
STORM DRAIN MANHOLE BASE
PINNACLE PEAK ROAD STA 244+40
NTS

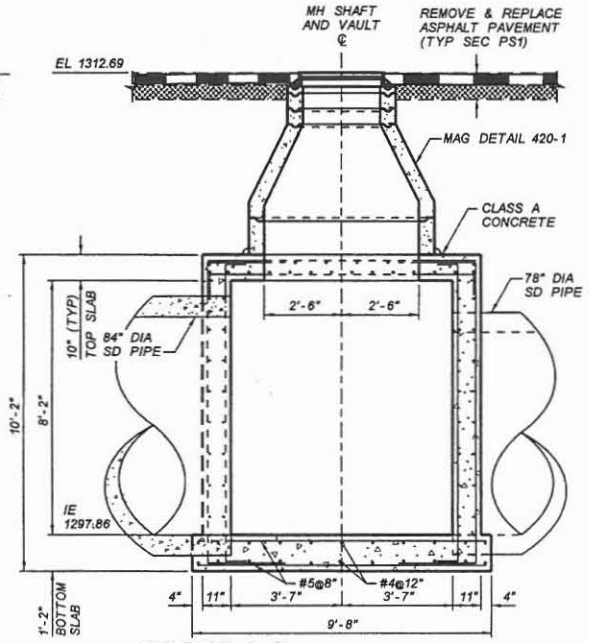

SECTION B-B
STORM DRAIN MANHOLE BASE
PINNACLE PEAK ROAD STA 244+40
NTS

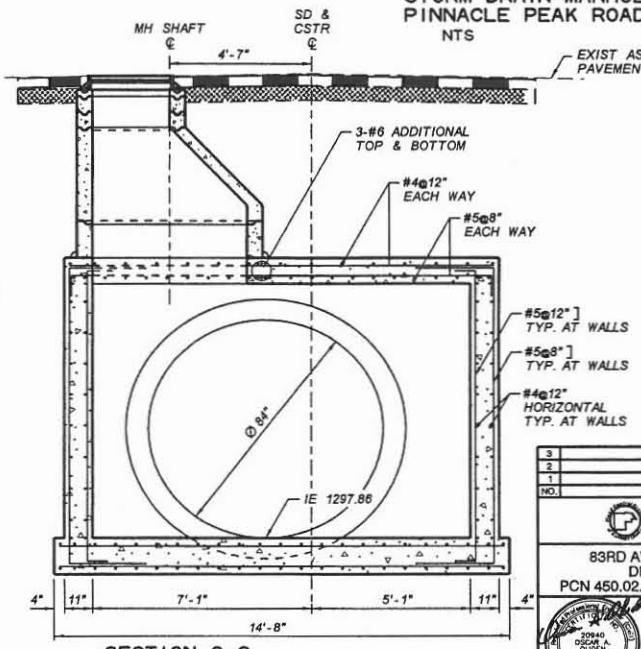

SECTION C-C
STORM DRAIN MANHOLE BASE
PINNACLE PEAK ROAD STA 244+40
NTS

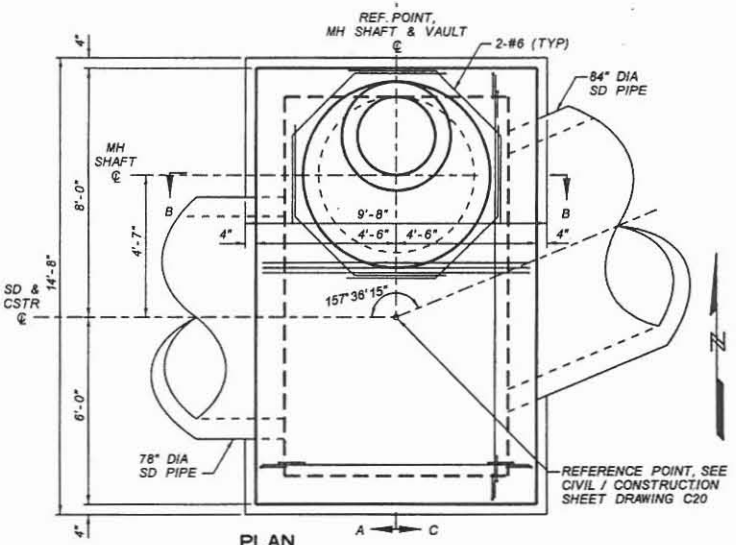

PLAN
STORM DRAIN MANHOLE BASE
PINNACLE PEAK ROAD STA 244+40
NTS

NO.	REVISION	BY	DATE
3			
2			
1			

FLOOD CONTROL DISTRICT OF MARICOPA COUNTY
ENGINEERING DIVISION

83RD AVENUE / PINNACLE PEAK ROAD
DRAINAGE IMPROVEMENTS
PCN 450.02.33 FCD CONTRACT NO. 2006C005

	BY	DATE
DESIGNED	O. OLIDEN	1/2007
DRAWN	A. JOHNSON	1/2007
CHECKED	M. RATHBONE	1/2007

JACOBS CIVIL INC.

DRAWING NO. 009 | DTL 09 STORM DRAIN MANHOLE BASE | SHEET OF 30 161

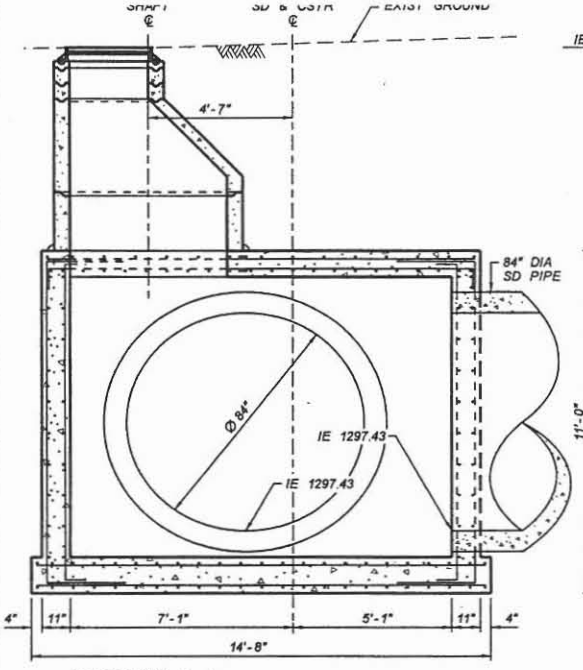

SECTION A-A
STORM DRAIN MANHOLE BASE
PINNACLE PEAK ROAD STA 245+65
NTS

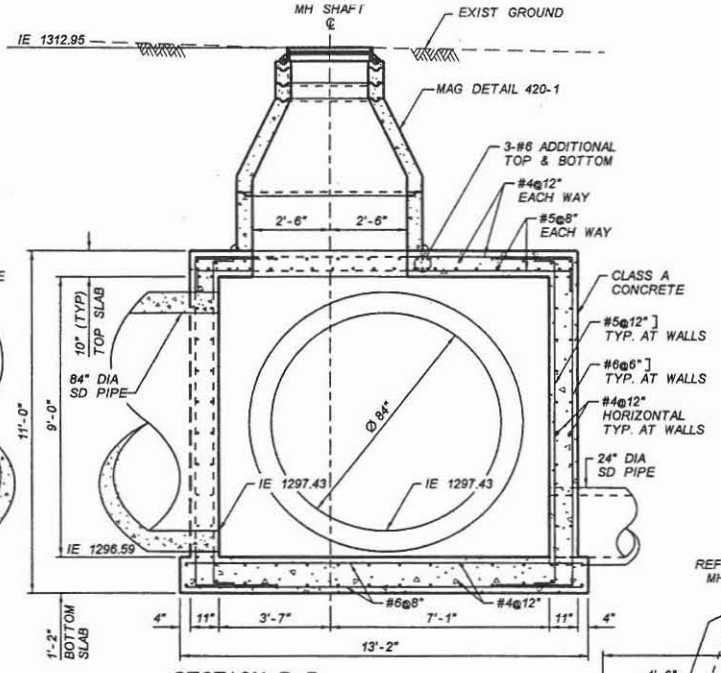

SECTION B-B
STORM DRAIN MANHOLE BASE
PINNACLE PEAK ROAD STA 245+65
NTS

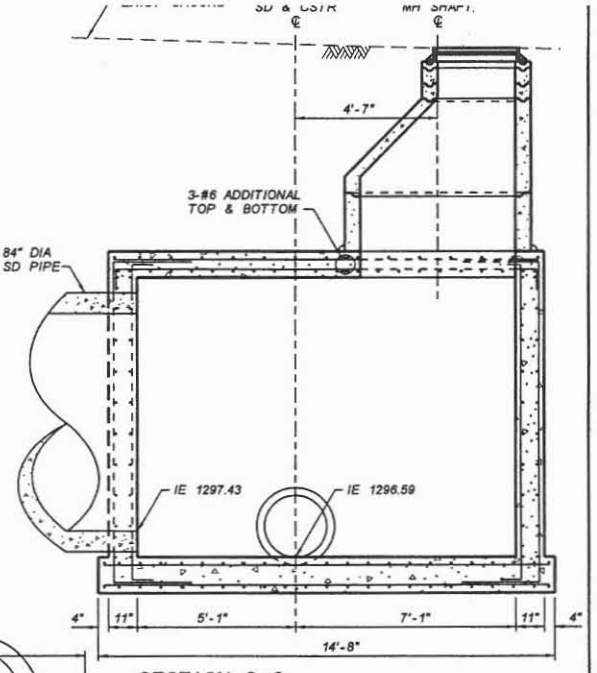

SECTION C-C
STORM DRAIN MANHOLE BASE
PINNACLE PEAK ROAD STA 245+65
NTS

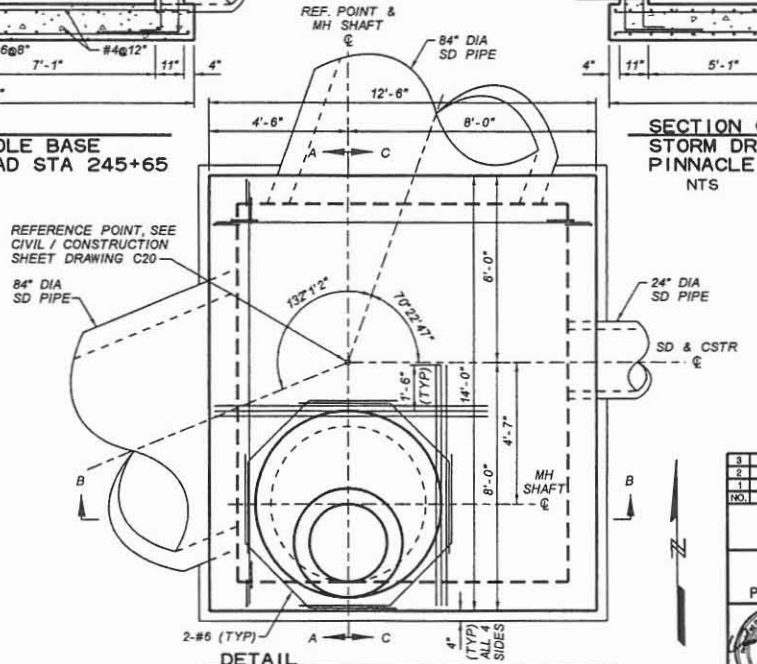

DETAIL
STORM DRAIN MANHOLE BASE
PINNACLE PEAK ROAD STA 245+65
NTS

NO.	REVISION	BY	DATE
3			
2			
1			

FLOOD CONTROL DISTRICT OF MARICOPA COUNTY
ENGINEERING DIVISION

83RD AVENUE / PINNACLE PEAK ROAD
DRAINAGE IMPROVEMENTS
PCN 450.02.33 FCD CONTRACT NO. 2006C005

	BY	DATE
DESIGNED	O. OLIDEN	5/2007
DRAWN	A. JOHNSON	5/2007
CHECKED	M. RATHBONE	5/2007

JACOBS CIVIL INC.

DRAWING NO.		SHEET OF
D10	DTL 10 STORM DRAIN MANHOLE BASE	31 161

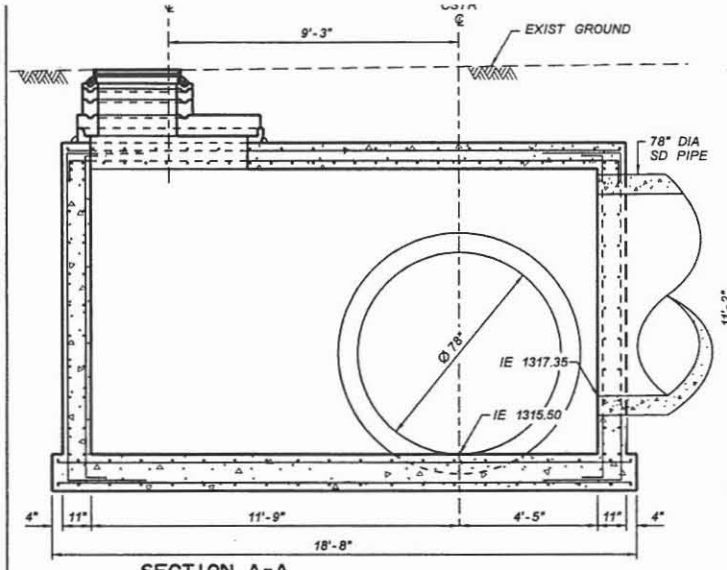

SECTION A-A
STORM DRAIN MANHOLE BASE
87TH AVENUE STA 313+37
NTS

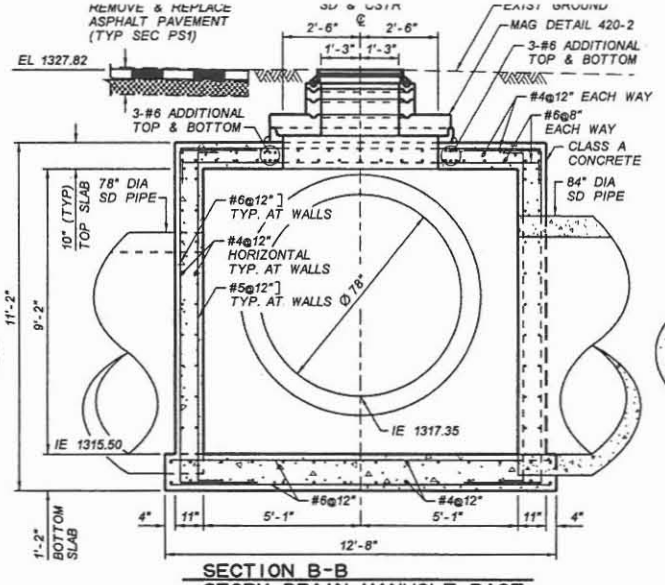

SECTION B-B
STORM DRAIN MANHOLE BASE
87TH AVENUE STA 313+37
NTS

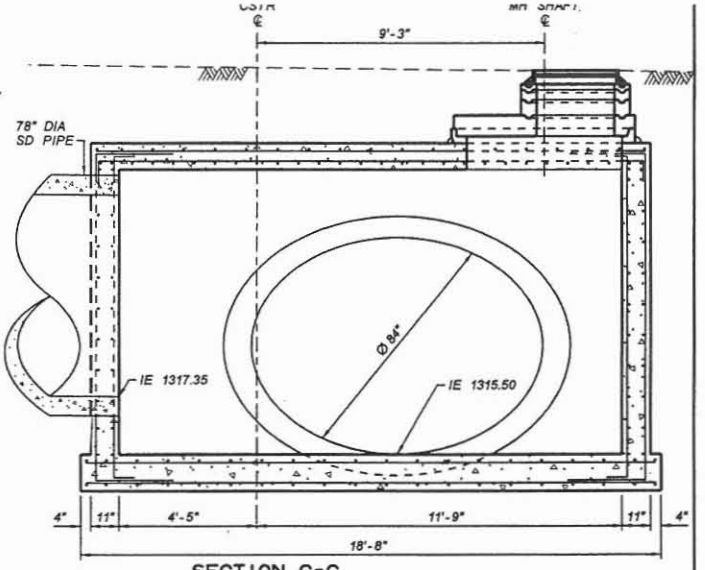

SECTION C-C
STORM DRAIN MANHOLE BASE
87TH AVENUE STA 313+37
NTS

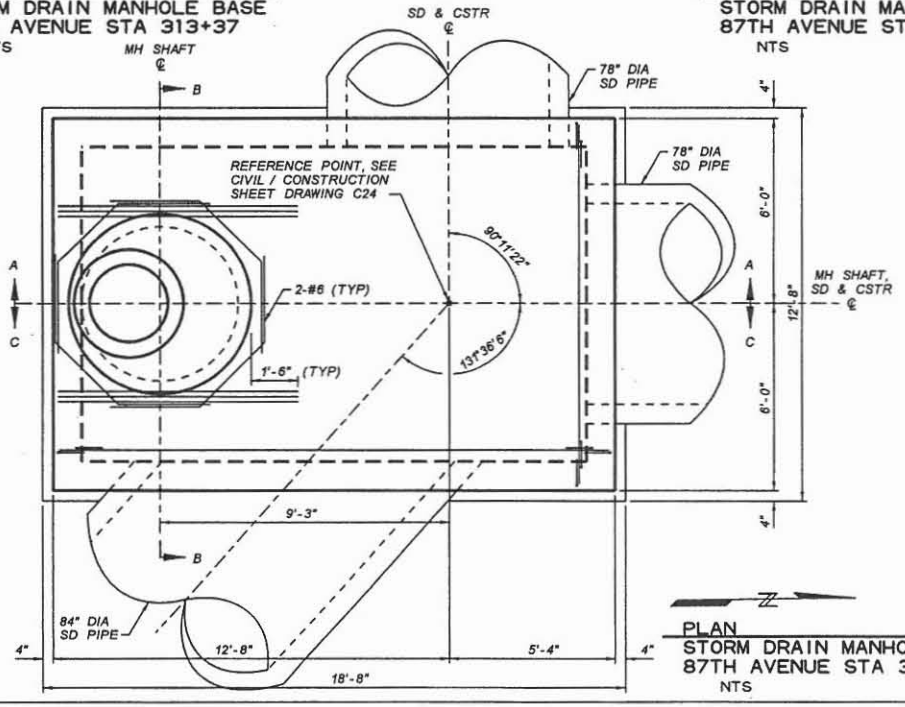

PLAN
STORM DRAIN MANHOLE BASE
87TH AVENUE STA 313+37
NTS

NO.	REVISION	BY	DATE
3			
2			
1			

FLOOD CONTROL DISTRICT OF MARICOPA COUNTY
ENGINEERING DIVISION

83RD AVENUE / PINNACLE PEAK ROAD
DRAINAGE IMPROVEMENTS
PCN 450.02.33 FCD CONTRACT NO. 2006C005

	BY	DATE
DESIGNED	O. OLIDEN	1/2007
DRAWN	A. JOHNSON	1/2007
CHECKED	M. RATHBONE	1/2007

JACOBS CIVIL INC.

DRAWING NO. D11 | DTL 11 STORM DRAIN MANHOLE BASE | SHEET OF 32 161

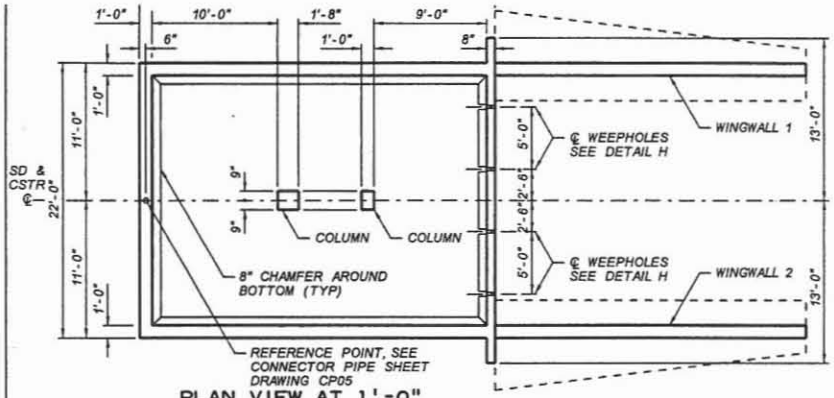

PLAN VIEW AT 1'-0" ABOVE TOP OF CONCRETE
STILLING BASIN
87TH AVENUE BASIN STA 61+49
NTS

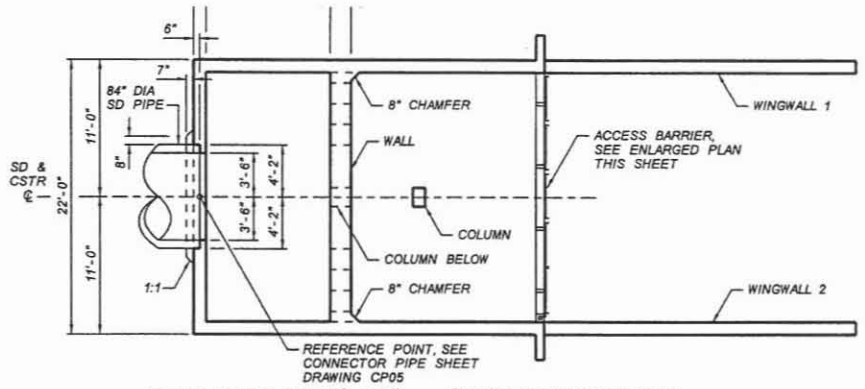

PLAN VIEW AT 6'-10" ABOVE TOP OF CONCRETE
STILLING BASIN
87TH AVENUE BASIN STA 61+49
NTS

CHAMFER AT BOTTOM OF WALLS NOT SHOWN FOR CLARITY

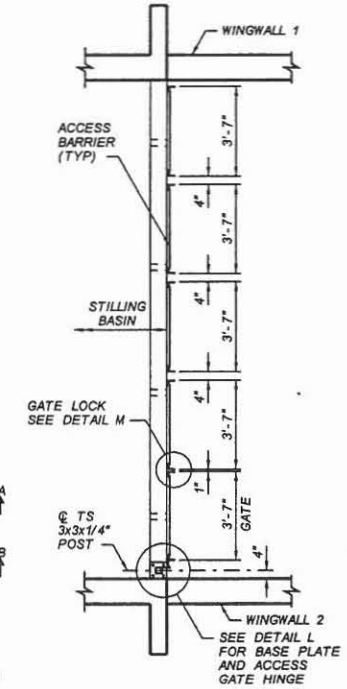

ACCESS BARRIER PLAN
STILLING BASIN
87TH AVENUE BASIN
STA 61+49
NTS

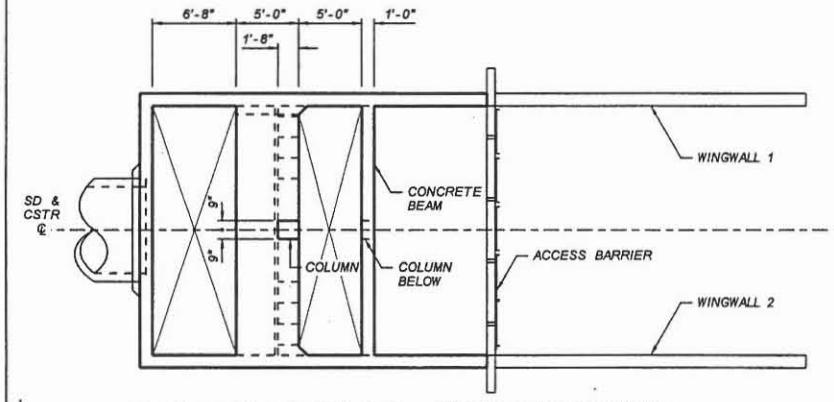

PLAN VIEW AT 12'-10" ABOVE TOP OF CONCRETE
STILLING BASIN
87TH AVENUE BASIN STA 61+49
NTS

CHAMFER AT BOTTOM OF WALLS NOT SHOWN FOR CLARITY

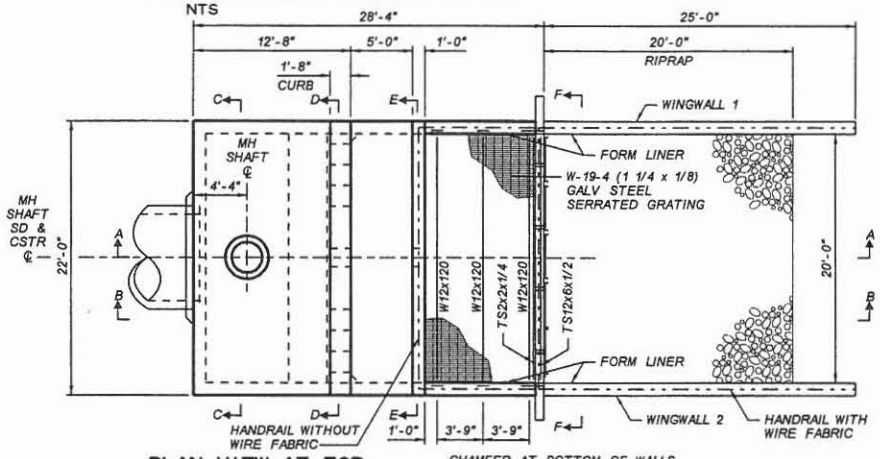

PLAN VIEW AT TOP OF STILLING BASIN
STILLING BASIN
87TH AVENUE BASIN STA 61+49
NTS

CHAMFER AT BOTTOM OF WALLS NOT SHOWN FOR CLARITY

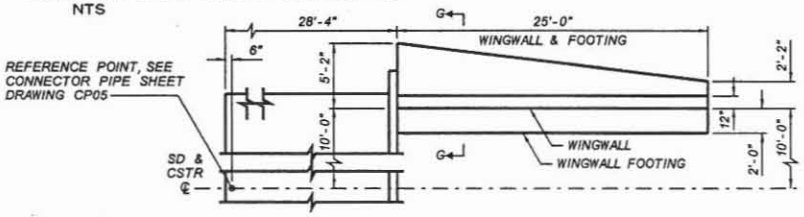

PLAN WINGWALL 1 SHOWN
WINGWALL 2 OPP. HAND
STILLING BASIN
87TH AVENUE BASIN STA 61+49
NTS

NOTE:
1) STAIN ALL EXPOSED SURFACES, SEE SPECIFICATIONS.

SEE SHEET D27 AND D28 FOR STILLING BASIN SECTIONS AND DETAILS

NO.	REVISION	BY	DATE
3			
2			
1			

FLOOD CONTROL DISTRICT OF MARICOPA COUNTY
ENGINEERING DIVISION

83RD AVENUE / PINNACLE PEAK ROAD
DRAINAGE IMPROVEMENTS
PCN 450.02.33 FCD CONTRACT NO. 2006C005

	BY	DATE
DESIGNED	O. OLIDEN	5/2007
DRAWN	A. JOHNSON	5/2007
CHECKED	M. RATHBONE	5/2007

JACOBS CIVIL INC.

DRAWING NO.		SHEET OF
D12	DTL 12 STILLING BASIN	33 161

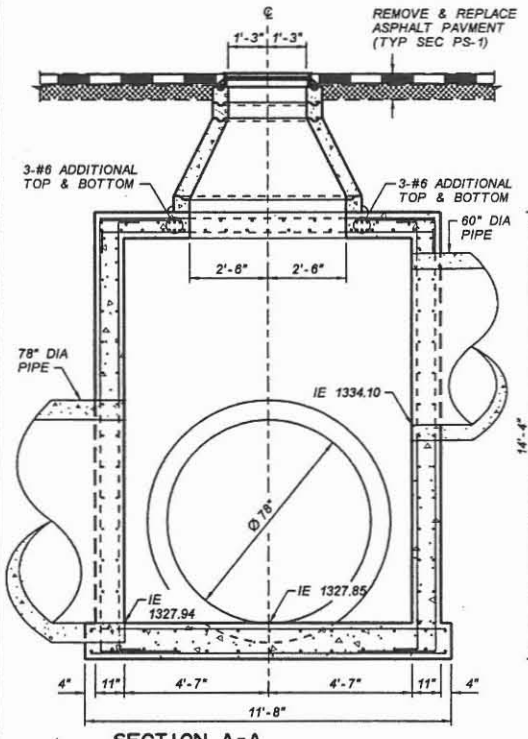

SECTION A-A
STORM DRAIN MANHOLE BASE
87TH AVENUE STA 326+61
NTS

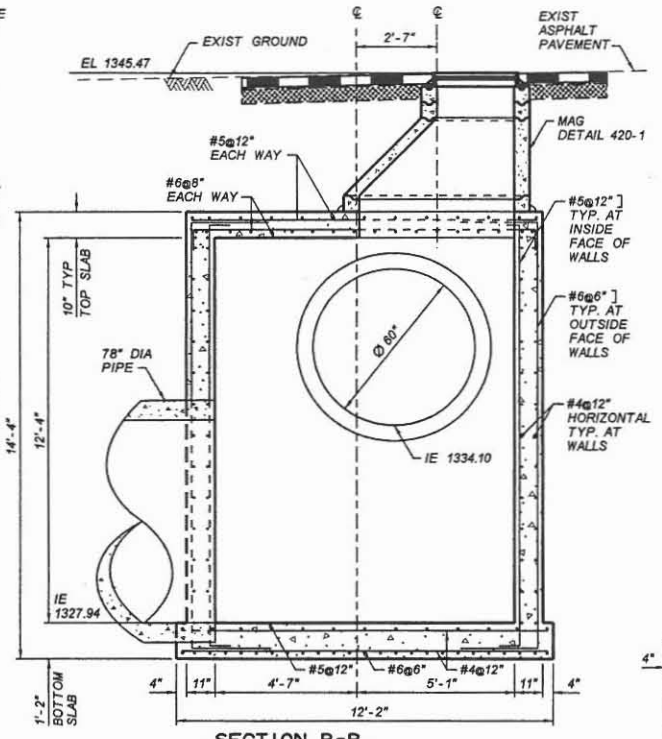

SECTION B-B
STORM DRAIN MANHOLE BASE
87TH AVENUE STA 326+61
NTS

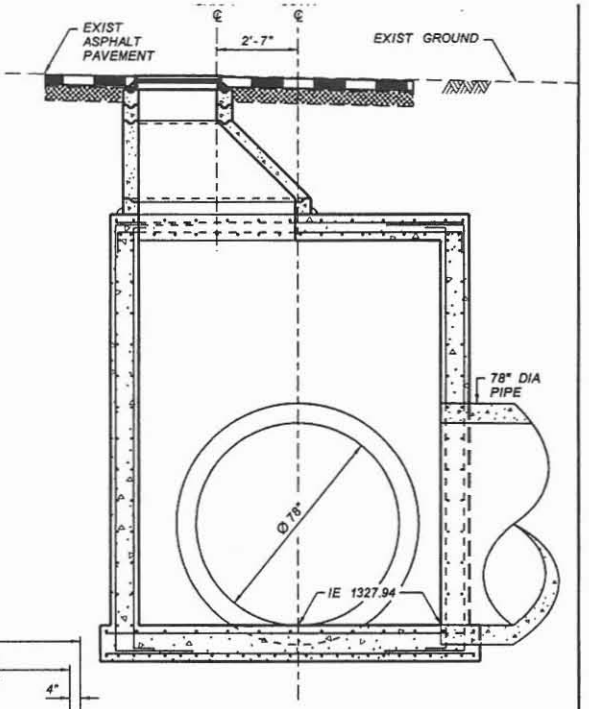

SECTION C-C
STORM DRAIN MANHOLE BASE
87TH AVENUE STA 326+61
NTS

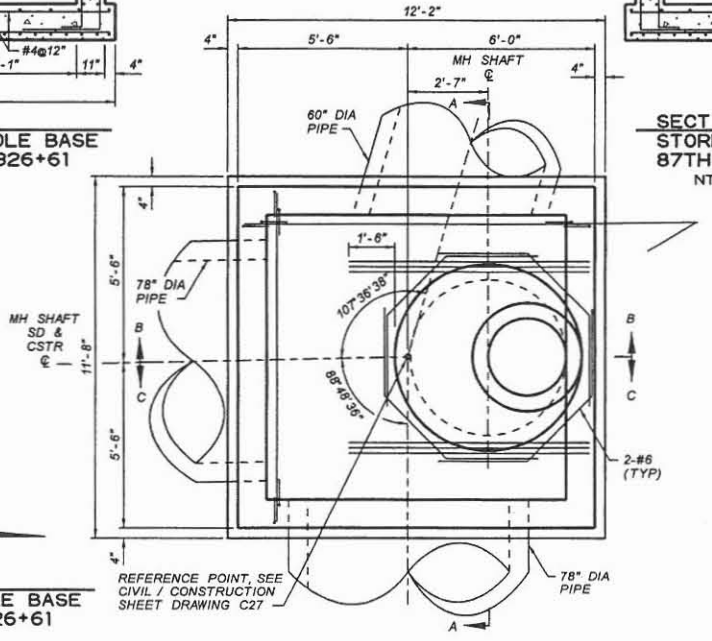

PLAN
STORM DRAIN MANHOLE BASE
87TH AVENUE STA 326+61
NTS

NO.	REVISION	BY	DATE
3			
2			
1			

FLOOD CONTROL DISTRICT OF MARICOPA COUNTY
ENGINEERING DIVISION

83RD AVENUE / PINNACLE PEAK ROAD
DRAINAGE IMPROVEMENTS
PCN 450.02.33 FCD CONTRACT NO. 2006C005

	BY	DATE
DESIGNED	O. OLIDEN	1/2007
DRAWN	A. JOHNSON	1/2007
CHECKED	M. RATHBONE	1/2007

JACOBS CIVIL INC.

DRAWING NO.		SHEET OF
D13	DTL 13 STORM DRAIN MANHOLE BASE	34 161

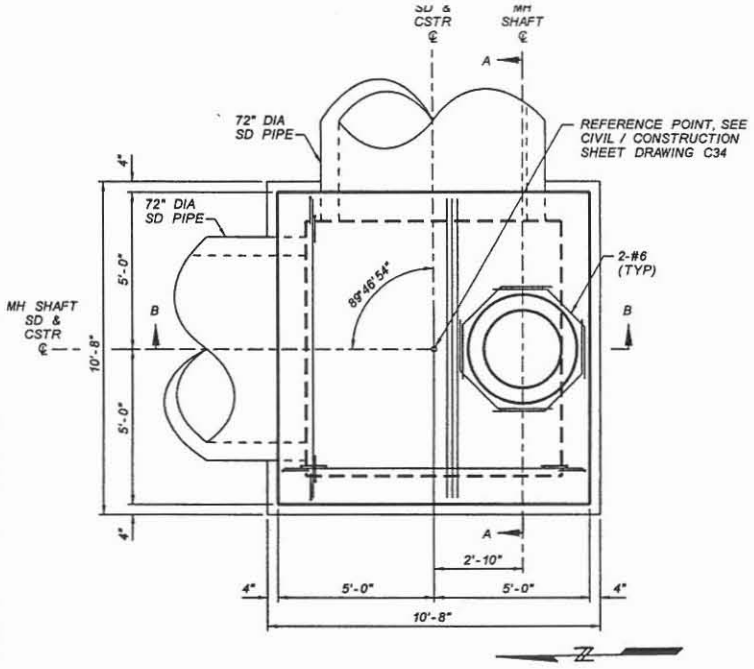

PLAN
CONCRETE VAULT
89TH AVENUE STA 416+55
NTS

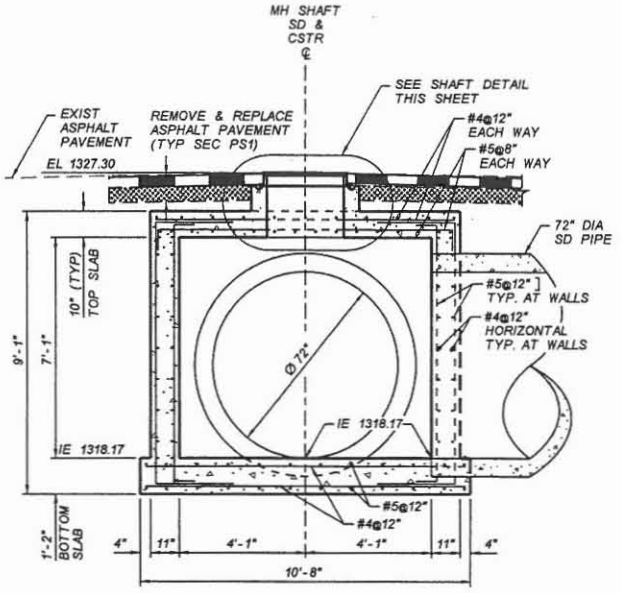

SECTION A-A
CONCRETE VAULT
89TH AVENUE STA 416+55
NTS

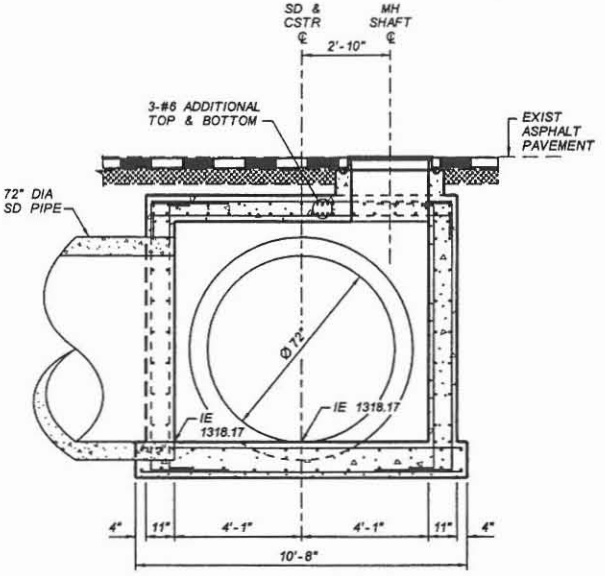

SECTION B-B
CONCRETE VAULT
89TH AVENUE STA 416+55
NTS

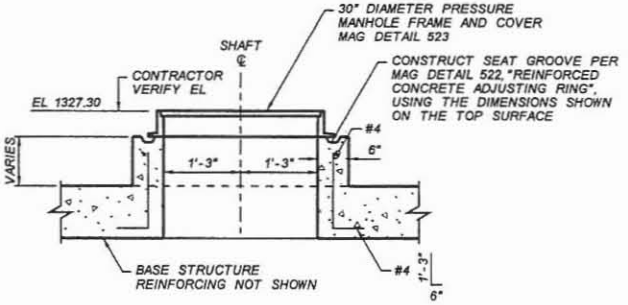

SHAFT DETAIL
CONCRETE VAULT
89TH AVENUE STA 416+55
NTS

NO.	REVISION	BY	DATE
3			
2			
1			

FLOOD CONTROL DISTRICT OF MARICOPA COUNTY
ENGINEERING DIVISION

83RD AVENUE / PINNACLE PEAK ROAD
DRAINAGE IMPROVEMENTS
PCN 450.02.33 FCD CONTRACT NO. 2006C005

	BY	DATE
DESIGNED	O. OLIDEN	1/2007
DRAWN	A. JOHNSON	1/2007
CHECKED	M. RATHBONE	1/2007

JACOBS CIVIL INC.

DRAWING NO. D14

DTL 14
CONCRETE VAULT

SHEET OF 35 161

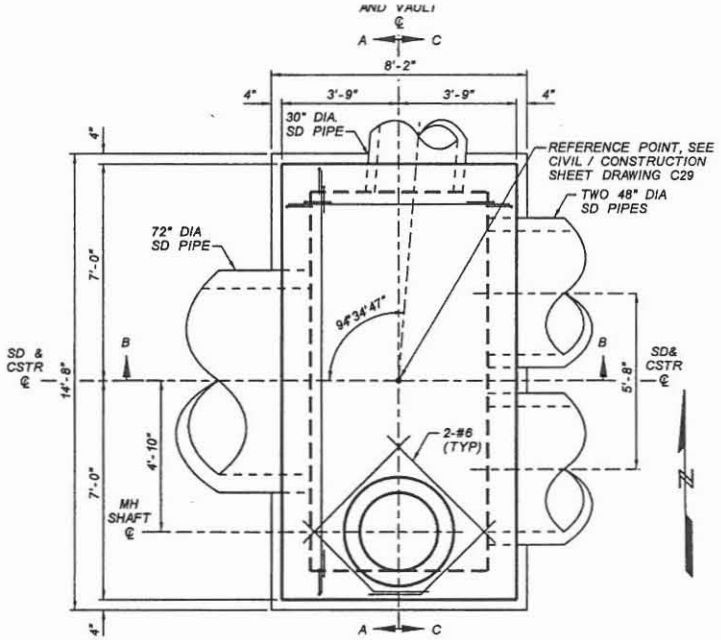

PLAN
CONCRETE VAULT
CALLE LEJOS STA 336+62
NTS

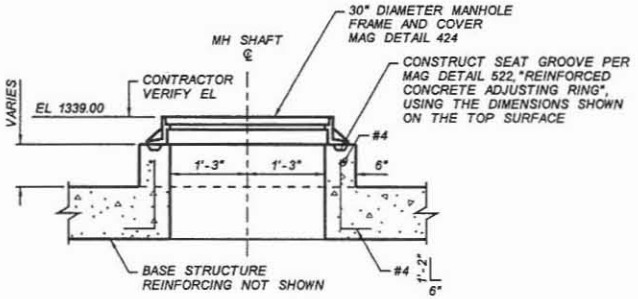

SHAFT DETAIL
CONCRETE VAULT
CALLE LEJOS STA 336+62
NTS

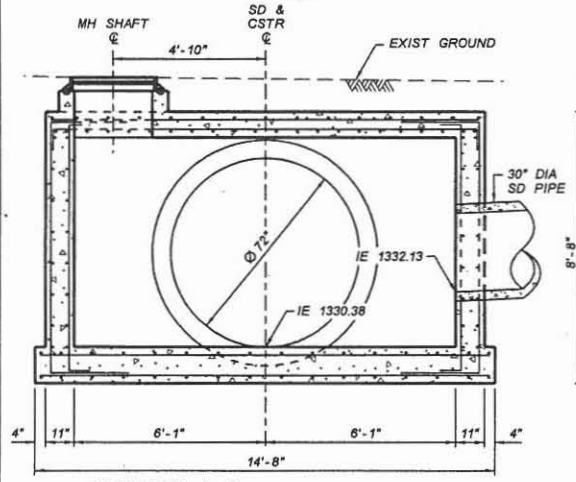

SECTION A-A
CONCRETE VAULT
CALLE LEJOS STA 336+62
NTS

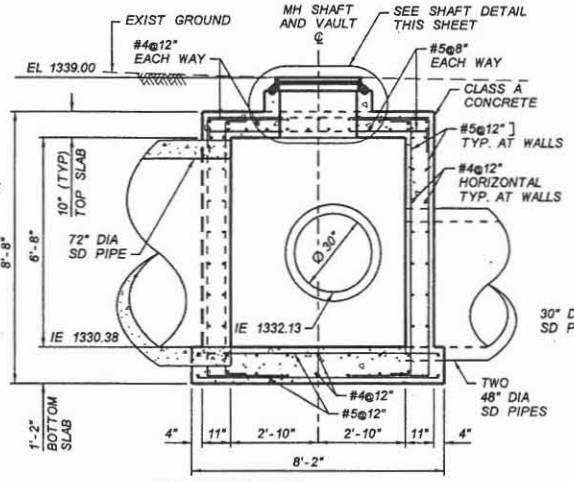

SECTION B-B
CONCRETE VAULT
CALLE LEJOS STA 336+62
NTS

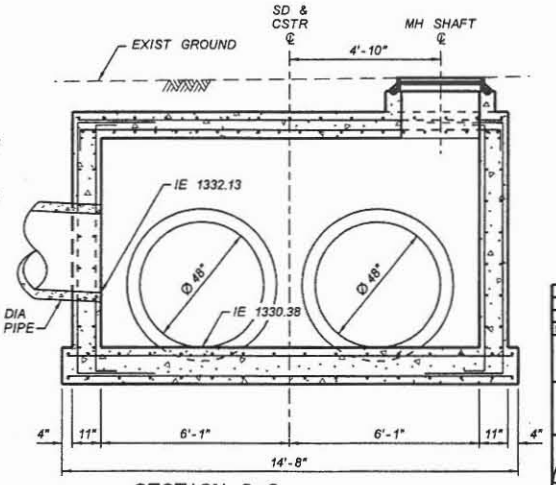

SECTION C-C
CONCRETE VAULT
CALLE LEJOS STA 336+62
NTS

NO.	REVISION	BY	DATE
3			
2			
1			

FLOOD CONTROL DISTRICT OF MARICOPA COUNTY
ENGINEERING DIVISION

83RD AVENUE / PINNACLE PEAK ROAD
DRAINAGE IMPROVEMENTS
PCN 450.02.33 FCD CONTRACT NO. 2006C005

	BY	DATE
DESIGNED	O. OLIDEN	1/2007
DRAWN	A. JOHNSON	1/2007
CHECKED	M. RATHBONE	1/2007

JACOBS CIVIL INC.

DRAWING NO.		SHEET OF
D15	DTL 15 CONCRETE VAULT	36 161

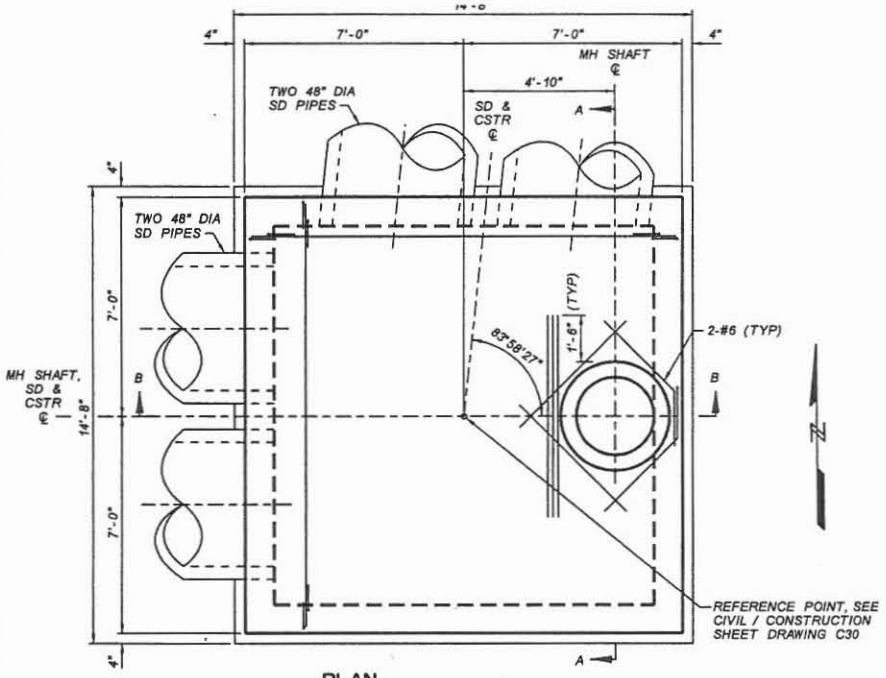

PLAN
CONCRETE VAULT
CALLE LEJOS STA 339+62
NTS

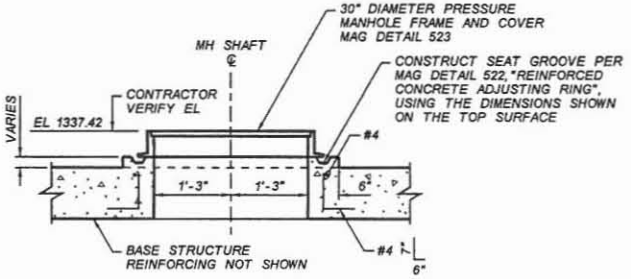

SHAFT DETAIL
CONCRETE VAULT
CALLE LEJOS STA 339+62
NTS

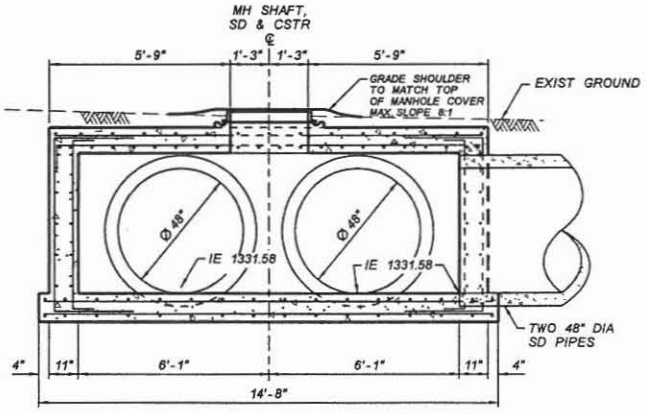

SECTION A-A
CONCRETE VAULT
CALLE LEJOS STA 339+62
NTS

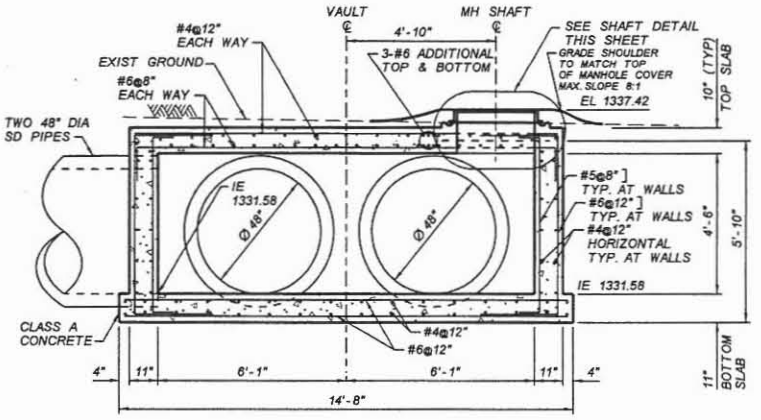

SECTION B-B
CONCRETE VAULT
CALLE LEJOS STA 339+62
NTS

NO.	REVISION	BY	DATE
3			
2			
1			

FLOOD CONTROL DISTRICT OF MARICOPA COUNTY
ENGINEERING DIVISION

83RD AVENUE / PINNACLE PEAK ROAD
DRAINAGE IMPROVEMENTS
PCN 450.02.33 FCD CONTRACT NO. 2006C005

	BY	DATE
DESIGNED	O. OLIDEN	1/2007
DRAWN	A. JOHNSON	1/2007
CHECKED	M. RATHBONE	1/2007

JACOBS CIVIL INC.

DRAWING NO.		SHEET OF
D16	DTL 16 CONCRETE VAULT	37 161

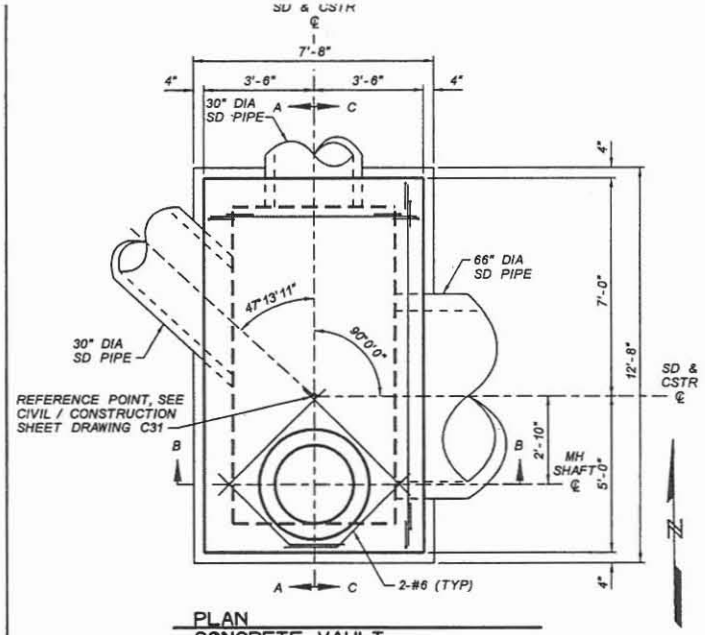

PLAN
CONCRETE VAULT
CIELO GRANDE STA 400+30
NTS

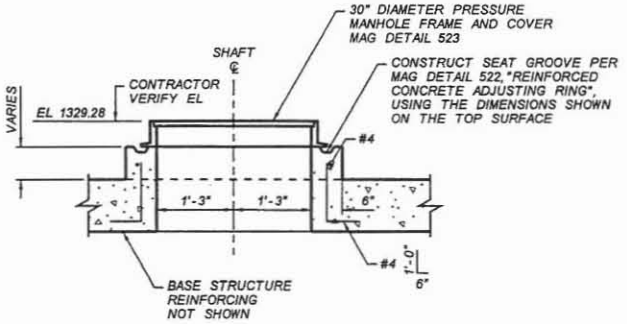

SHAFT DETAIL
CONCRETE VAULT
CIELO GRANDE STA 400+30
NTS

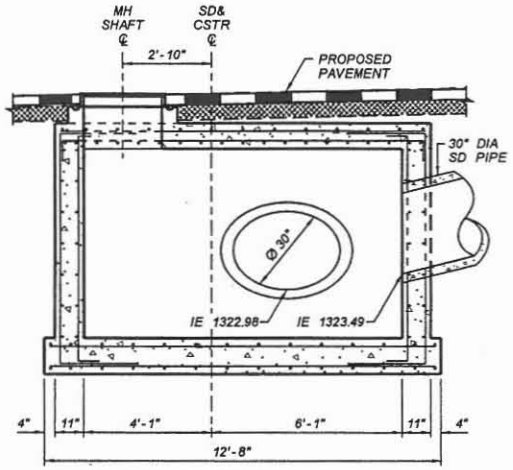

SECTION A-A
CONCRETE VAULT
CIELO GRANDE STA 400+30
NTS

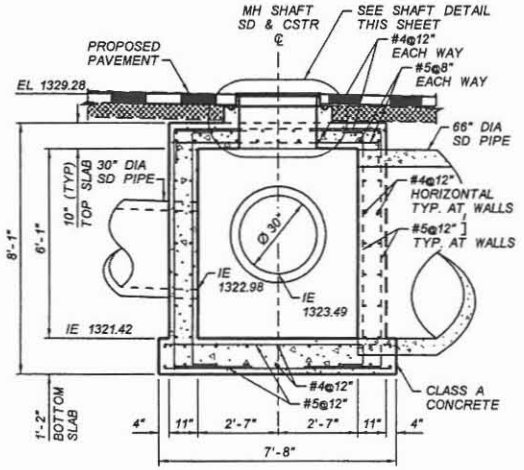

SECTION B-B
CONCRETE VAULT
CIELO GRANDE STA 400+30
NTS

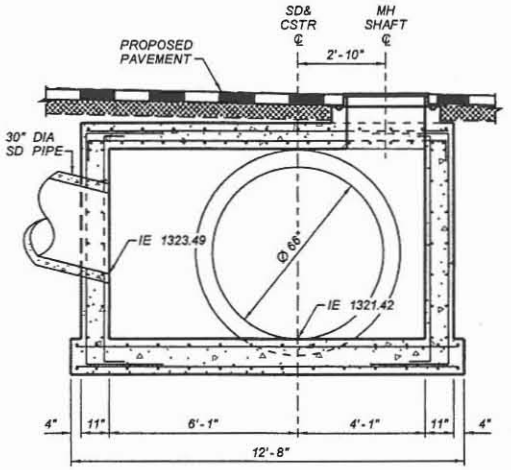

SECTION C-C
CONCRETE VAULT
CIELO GRANDE STA 400+30
NTS

NO.	REVISION	BY	DATE
3			
2			
1			

FLOOD CONTROL DISTRICT OF MARICOPA COUNTY
ENGINEERING DIVISION

83RD AVENUE / PINNACLE PEAK ROAD
DRAINAGE IMPROVEMENTS
PCN 450.02.33 FCD CONTRACT NO. 2006C005

	BY	DATE
DESIGNED	O. OLIDEN	1/2007
DRAWN	A. JOHNSON	1/2007
CHECKED	M. RATHBONE	1/2007

JACOBS CIVIL INC.

DRAWING NO. D17 | DTL 17 CONCRETE VAULT | SHEET OF 38 161

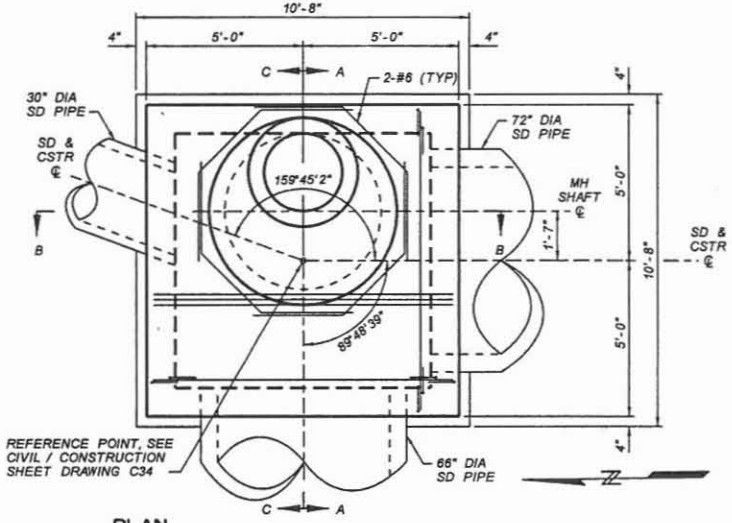

PLAN
STORM DRAIN MANHOLE BASE
89TH AVENUE STA 413+23
NTS

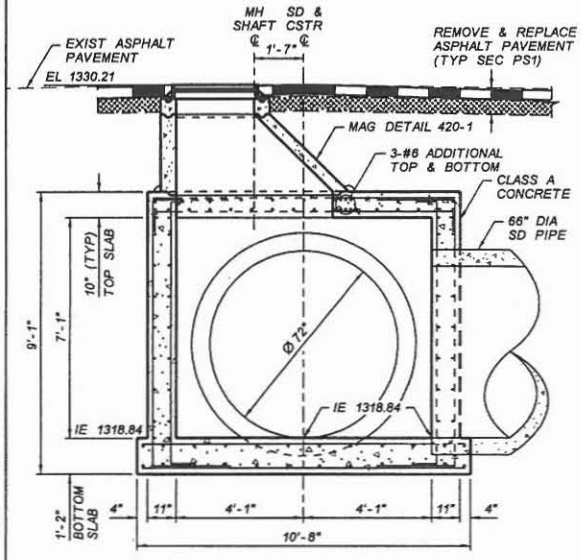

SECTION A-A
STORM DRAIN MANHOLE BASE
89TH AVENUE STA 413+23
NTS

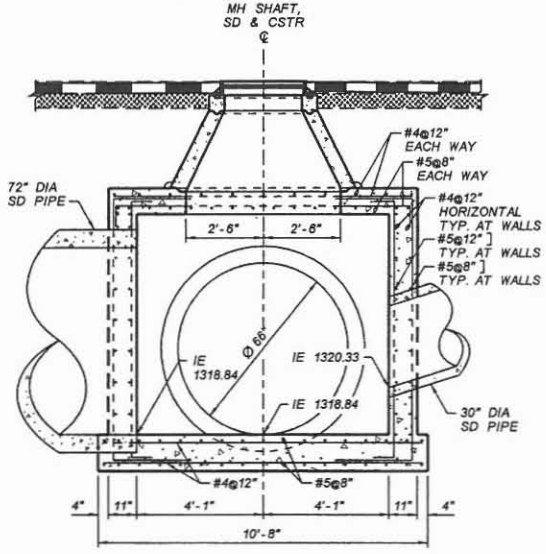

SECTION B-B
STORM DRAIN MANHOLE BASE
89TH AVENUE STA 413+23
NTS

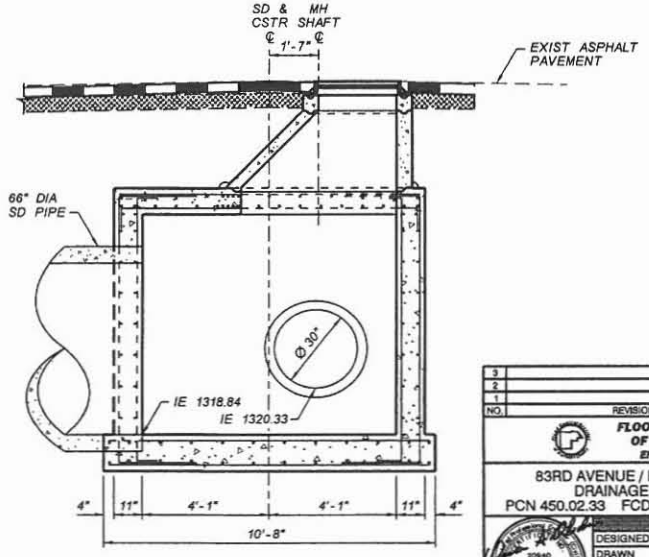

SECTION C-C
STORM DRAIN MANHOLE BASE
89TH AVENUE STA 413+23
NTS

NO.	REVISION	BY	DATE
3			
2			
1			

FLOOD CONTROL DISTRICT OF MARICOPA COUNTY
ENGINEERING DIVISION

83RD AVENUE / PINNACLE PEAK ROAD
DRAINAGE IMPROVEMENTS
PCN 450.02.33 FCD CONTRACT NO. 2006C005

	BY	DATE
DESIGNED	O. OLIDEN	5/2007
DRAWN	A. JOHNSON	5/2007
CHECKED	M. RATHBONE	5/2007

JACOBS CIVIL INC.

DRAWING NO.		SHEET OF
D18	DTL 18 STORM DRAIN MANHOLE BASE	39 161

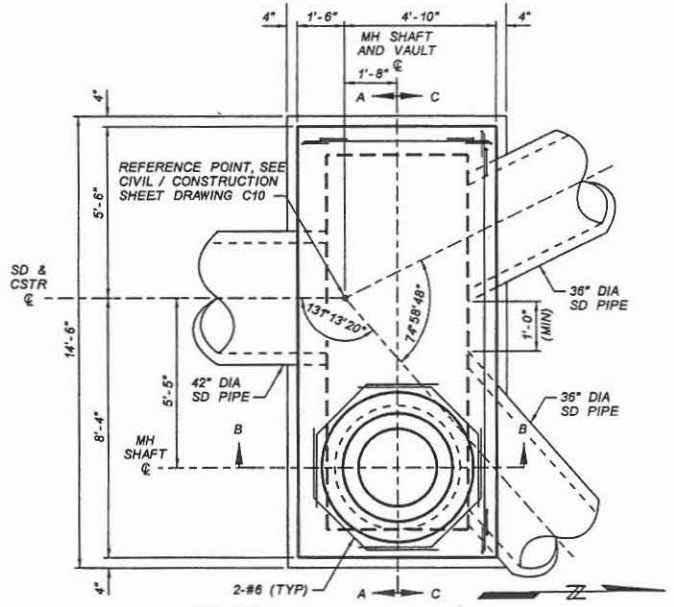

PLAN
STORM DRAIN MANHOLE BASE
83RD AVENUE STA 142+46
NTS

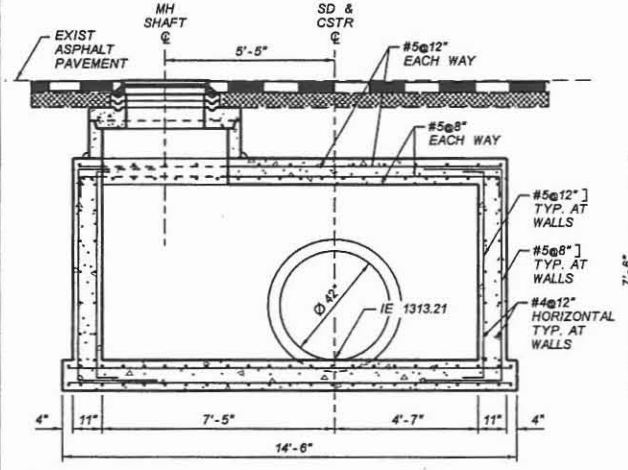

SECTION A-A
STORM DRAIN MANHOLE BASE
83RD AVENUE STA 142+46
NTS

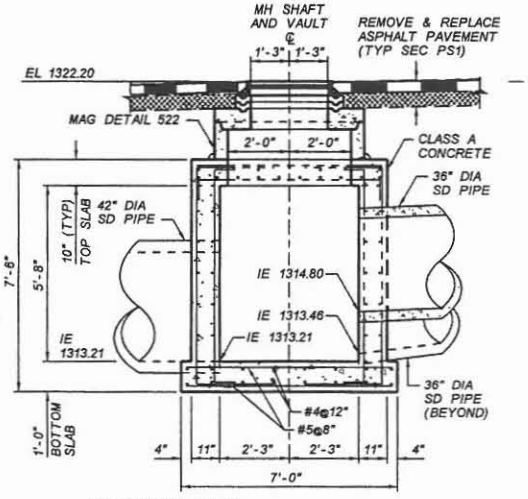

SECTION B-B
STORM DRAIN MANHOLE BASE
83RD AVENUE STA 142+46
NTS

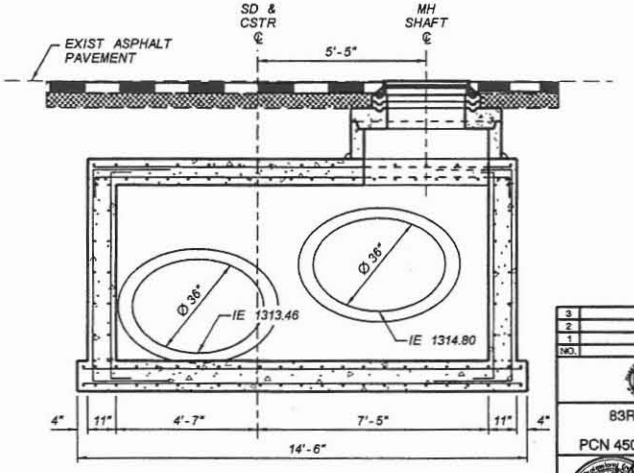

SECTION C-C
STORM DRAIN MANHOLE BASE
83RD AVENUE STA 142+46
NTS

NO.	REVISION	BY	DATE
3			
2			
1			

FLOOD CONTROL DISTRICT OF MARICOPA COUNTY
ENGINEERING DIVISION

83RD AVENUE / PINNACLE PEAK ROAD
DRAINAGE IMPROVEMENTS
PCN 450.02.33 FCD CONTRACT NO. 2006C005

	BY	DATE
DESIGNED	O. OLIDEN	1/2007
DRAWN	A. JOHNSON	1/2007
CHECKED	M. RATHBONE	1/2007

JACOBS CIVIL INC.

DRAWING NO.		SHEET OF
D19	DTL 19 STORM DRAIN MANHOLE BASE	40 161

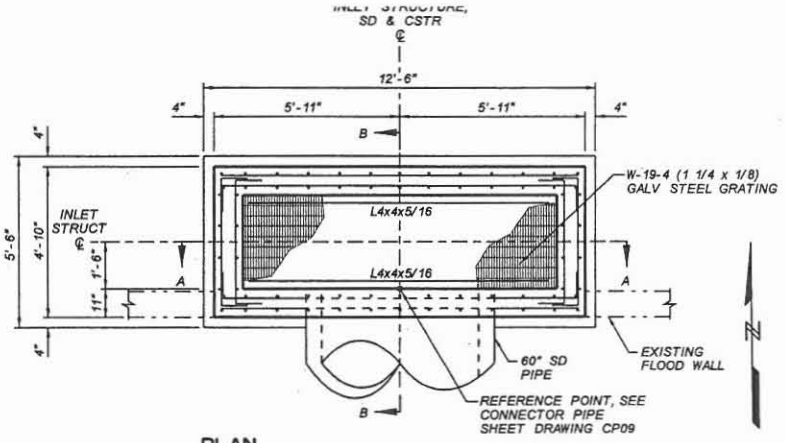

PLAN
INLET STRUCTURE
VENTANA PICACHOS
RETENTION BASIN STA 81+13
NTS

NOTES:
1) STAIN ALL EXPOSED SURFACES, SEE SPECIFICATIONS.
2) ALL EXPOSED SURFACES SHALL BE CONSTRUCTED WITH FORM LINER PER DTL 01.
3) BOLT GRATING TO STEEL ANGLE PER MFR'S RECOMMENDATIONS. PROVIDE A MINIMUM OF TWO BOLTED CONNECTIONS PER SECTION OF GRATING PER SIDE.
4) FINISH OF STEEL ANGLES AND PLATES SHALL MATCH FINISH OF GRATING.

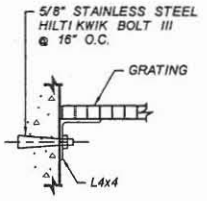

DETAIL C
INLET STRUCTURE
VENTANA PICACHOS
RETENTION BASIN
STA 85+56
NTS

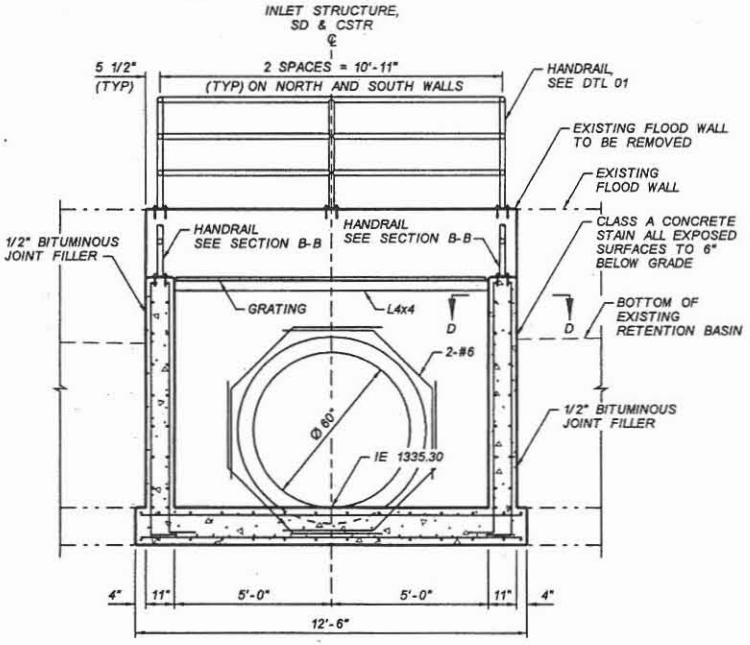

SECTION A-A
INLET STRUCTURE
VENTANA PICACHOS
RETENTION BASIN STA 81+13
NTS

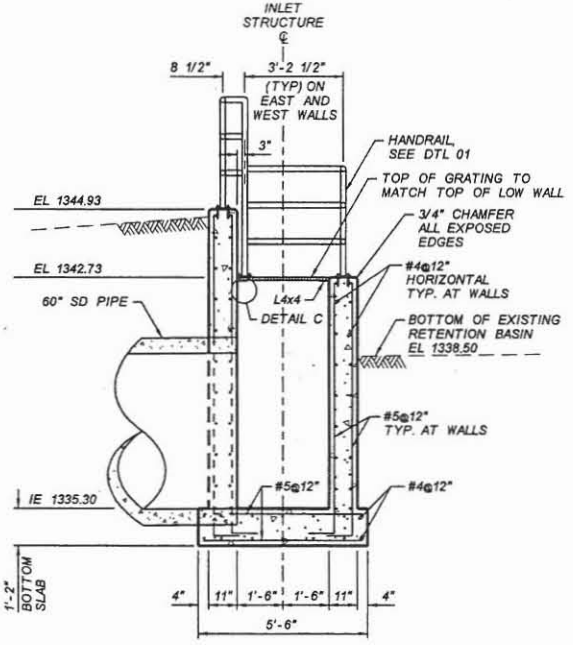

SECTION B-B
INLET STRUCTURE
VENTANA PICACHOS
RETENTION BASIN STA 81+13
NTS

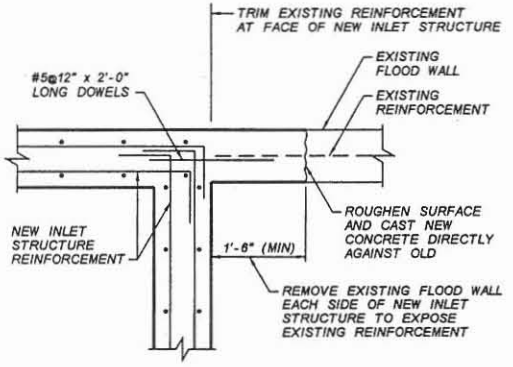

SECTION D-D
TYPICAL TIE-IN AT ALL
FLOOD WALL LOCATIONS
NTS

NO.	REVISION	BY	DATE
3			
2			
1			

FLOOD CONTROL DISTRICT OF MARICOPA COUNTY
ENGINEERING DIVISION

83RD AVENUE / PINNACLE PEAK ROAD
DRAINAGE IMPROVEMENTS
PCN 450.02.33 FCD CONTRACT NO. 2006C005

	BY	DATE
DESIGNED	O. OLDEN	1/2007
DRAWN	A. JOHNSON	1/2007
CHECKED	M. RATHBONE	1/2007

JACOBS CIVIL INC.

DRAWING NO. D20 | DTL 20 INLET STRUCTURE | SHEET OF 41 161

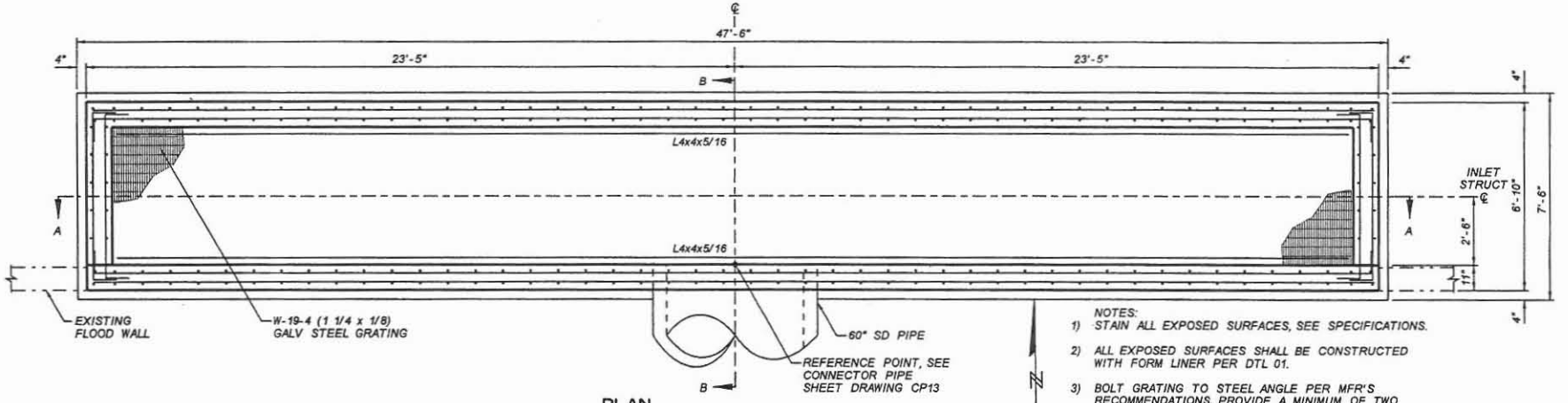

PLAN
INLET STRUCTURE
VENTANA PICACHOS
RETENTION BASIN STA 85+56
NTS

NOTES:
1) STAIN ALL EXPOSED SURFACES, SEE SPECIFICATIONS.
2) ALL EXPOSED SURFACES SHALL BE CONSTRUCTED WITH FORM LINER PER DTL 01.
3) BOLT GRATING TO STEEL ANGLE PER MFR'S RECOMMENDATIONS. PROVIDE A MINIMUM OF TWO BOLTED CONNECTIONS PER SECTION OF GRATING PER SIDE.
4) FINISH OF STEEL ANGLES AND PLATES SHALL MATCH FINISH OF GRATING.

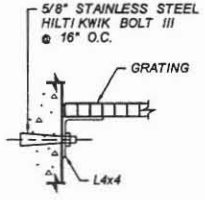

DETAIL C
INLET STRUCTURE
VENTANA PICACHOS
RETENTION BASIN
STA 85+56
NTS

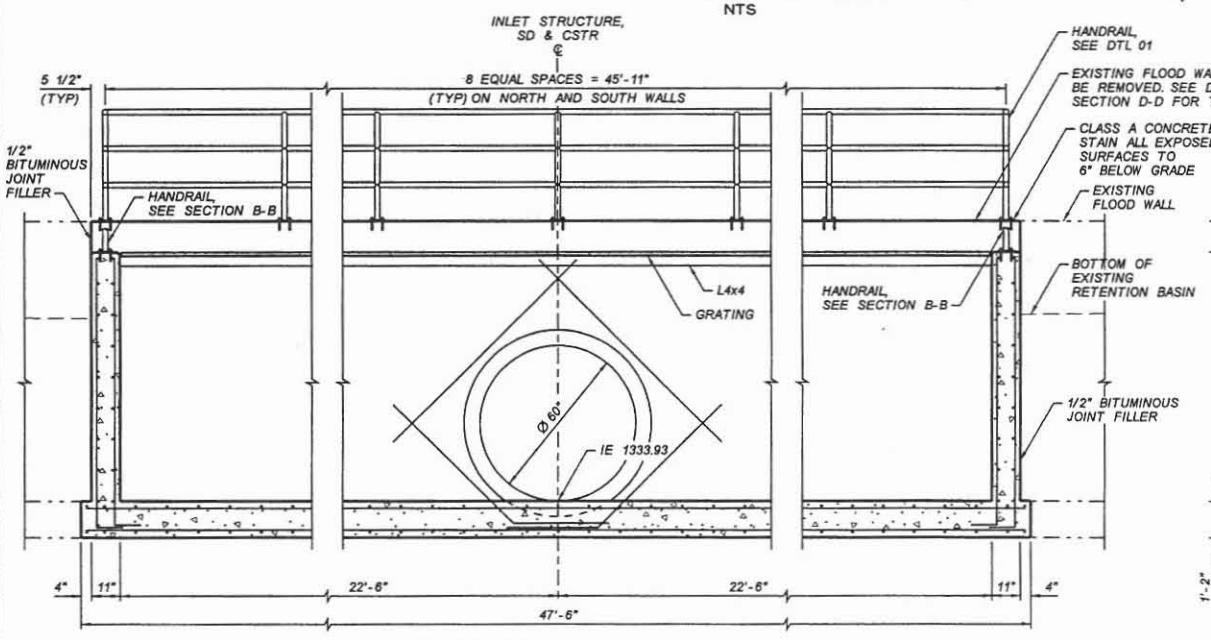

SECTION A-A
INLET STRUCTURE
VENTANA PICACHOS
RETENTION BASIN STA 85+56
NTS

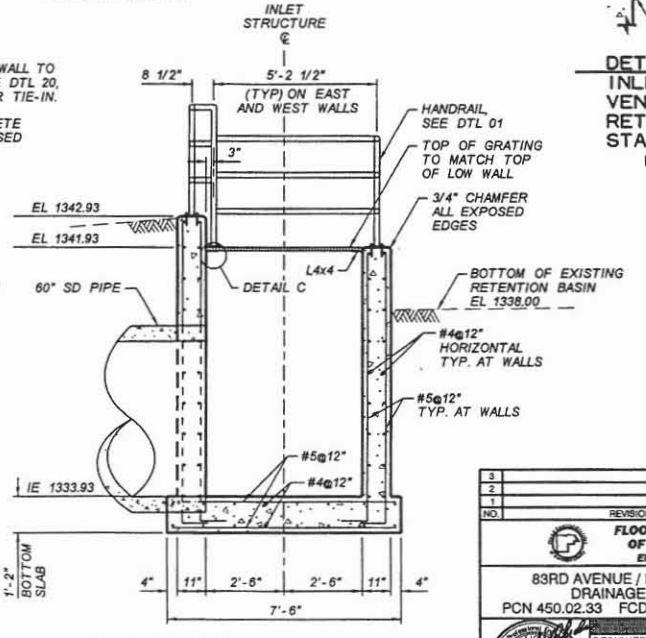

SECTION B-B
INLET STRUCTURE
VENTANA PICACHOS
RETENTION BASIN STA 85+56
NTS

NO.	REVISION	BY	DATE
3			
2			
1			

FLOOD CONTROL DISTRICT OF MARICOPA COUNTY
ENGINEERING DIVISION

83RD AVENUE / PINNACLE PEAK ROAD
DRAINAGE IMPROVEMENTS
PCN 450.02.33 FCD CONTRACT NO. 2006C005

	BY	DATE
DESIGNED	O. OLIDEN	2/2007
DRAWN	A. JOHNSON	2/2007
CHECKED	M. RATHBONE	2/2007

JACOBS CIVIL INC.

DRAWING NO. D21 | DTL 21 INLET STRUCTURE | SHEET OF 42 161

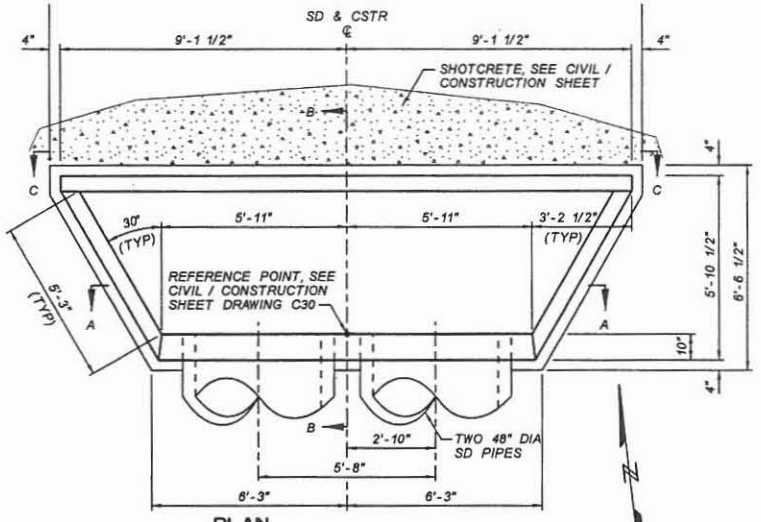

PLAN
DROP INLET
CALLE LEJOS STA 340+27
NTS

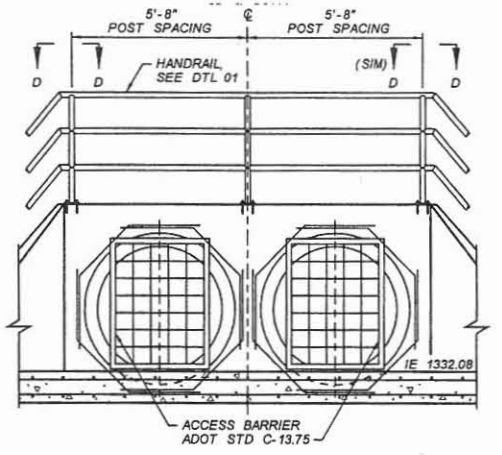

SECTION A-A
DROP INLET
CALLE LEJOS STA 340+27
NTS

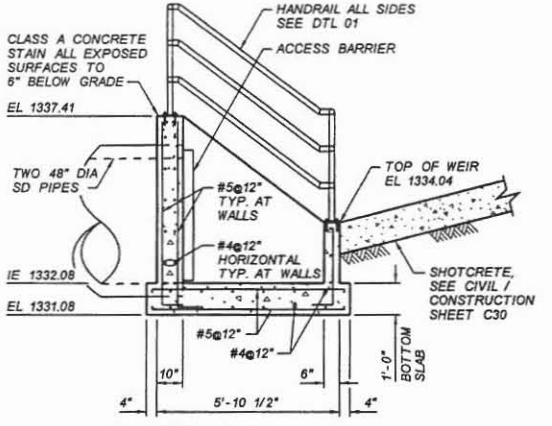

SECTION B-B
DROP INLET
CALLE LEJOS STA 340+27
NTS

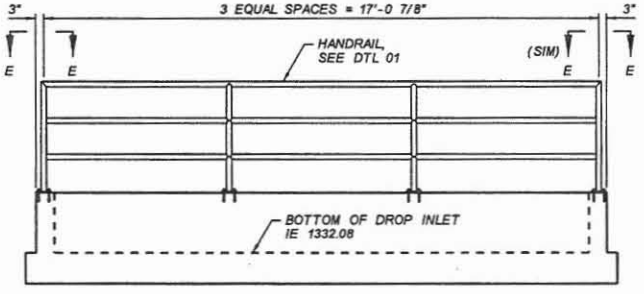

SECTION C-C
DROP INLET
CALLE LEJOS STA 340+27
NTS

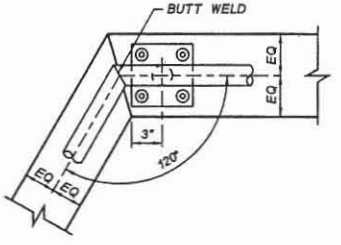

SECTION D-D
HANDRAIL AT
DROP INLET
CALLE LEJOS STA 340+27
NTS

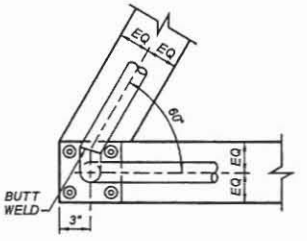

SECTION E-E
HANDRAIL AT
DROP INLET
CALLE LEJOS STA 340+27
NTS

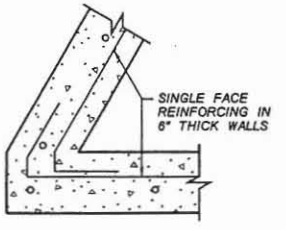

CORNER REINFORCING PLAN
DROP INLET
CALLE LEJOS STA 340+27
NTS

NOTES:

1) STAIN ALL EXPOSED SURFACES, SEE SPECIFICATIONS.

NO.	REVISION	BY	DATE
3			
2			
1			

FLOOD CONTROL DISTRICT OF MARICOPA COUNTY
ENGINEERING DIVISION

83RD AVENUE / PINNACLE PEAK ROAD
DRAINAGE IMPROVEMENTS
PCN 450.02.33 FCD CONTRACT NO. 2006C005

	BY	DATE
DESIGNED	O. OLIDEN	1/2007
DRAWN	A. JOHNSON	1/2007
CHECKED	M. RATHBONE	1/2007

JACOBS CIVIL INC.

DRAWING NO.		SHEET OF
D22	DTL 22 DROP INLET	43 161

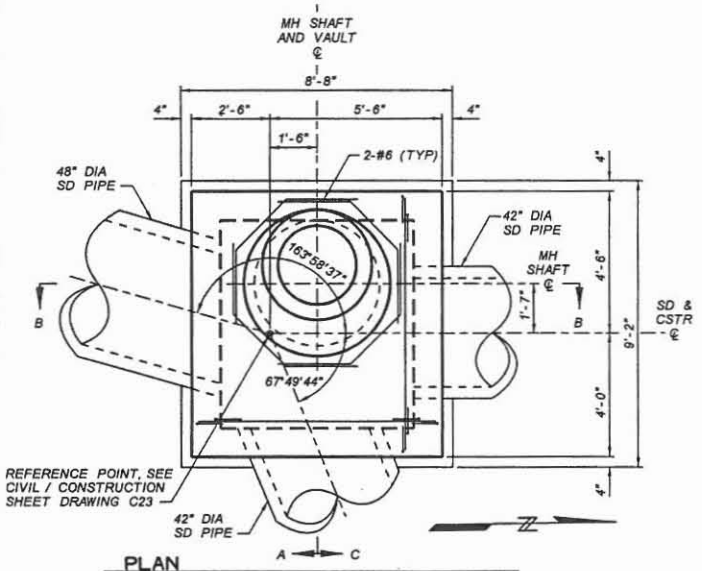

PLAN
STORM DRAIN MANHOLE BASE
87TH AVENUE BASIN STA 307+50
NTS

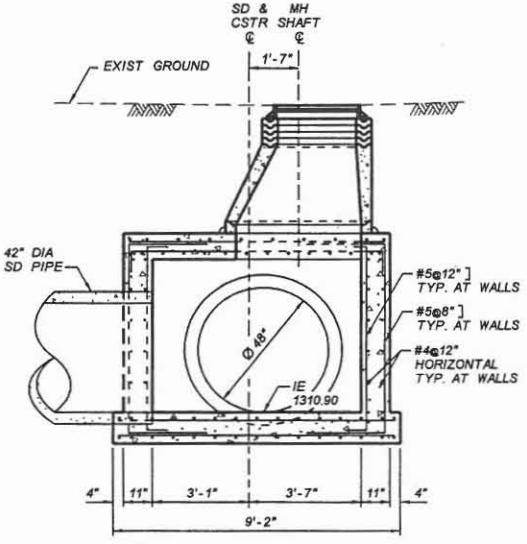

SECTION A-A
STORM DRAIN MANHOLE BASE
87TH AVENUE BASIN STA 307+50
NTS

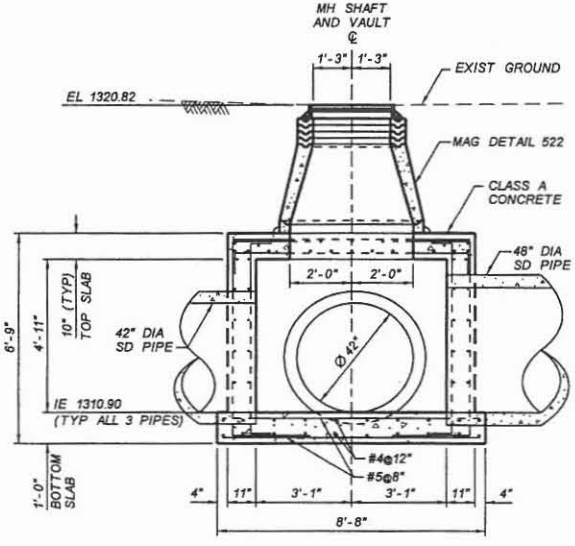

SECTION B-B
STORM DRAIN MANHOLE BASE
87TH AVENUE BASIN STA 307+50
NTS

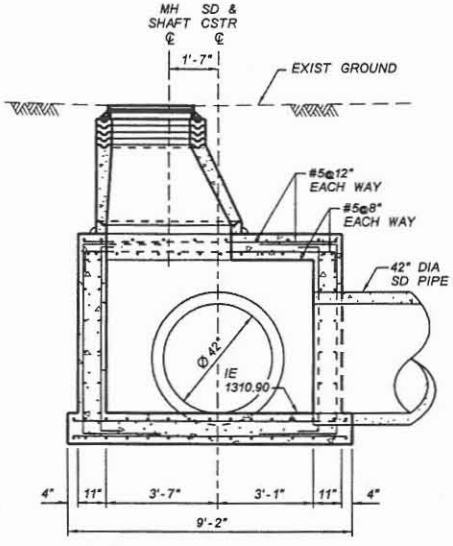

SECTION C-C
STORM DRAIN MANHOLE BASE
87TH AVENUE BASIN STA 307+50
NTS

NO.	REVISION	BY	DATE
3			
2			
1			

FLOOD CONTROL DISTRICT
OF MARICOPA COUNTY
ENGINEERING DIVISION

83RD AVENUE / PINNACLE PEAK ROAD
DRAINAGE IMPROVEMENTS
PCN 450.02.33 FCD CONTRACT NO. 2006C005

	BY	DATE
DESIGNED	O. OLIDEN	1/2007
DRAWN	A. JOHNSON	1/2007
CHECKED	M. RATHBONE	1/2007

JACOBS CIVIL INC.

DRAWING NO. D23 | DTL 23 STORM DRAIN MANHOLE BASE | SHEET 44 OF 161

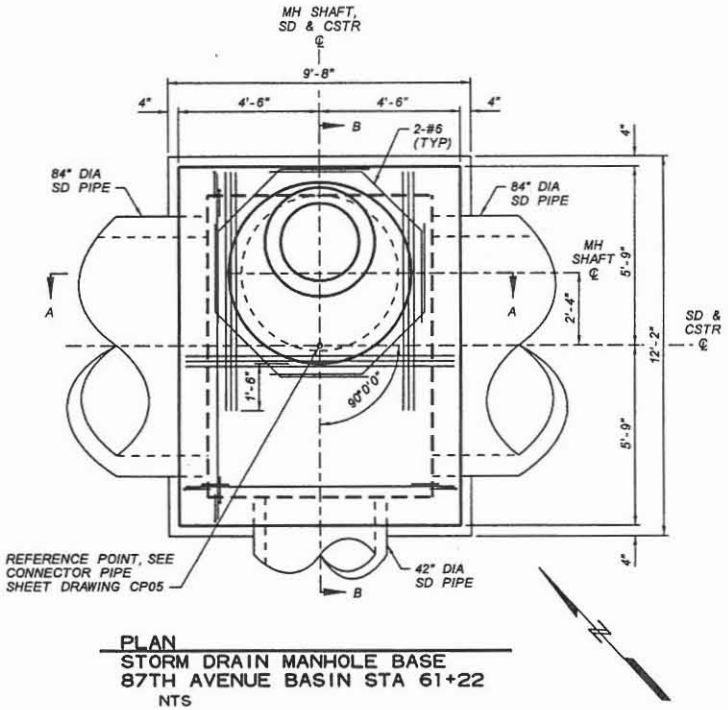

PLAN
STORM DRAIN MANHOLE BASE
87TH AVENUE BASIN STA 61+22
NTS

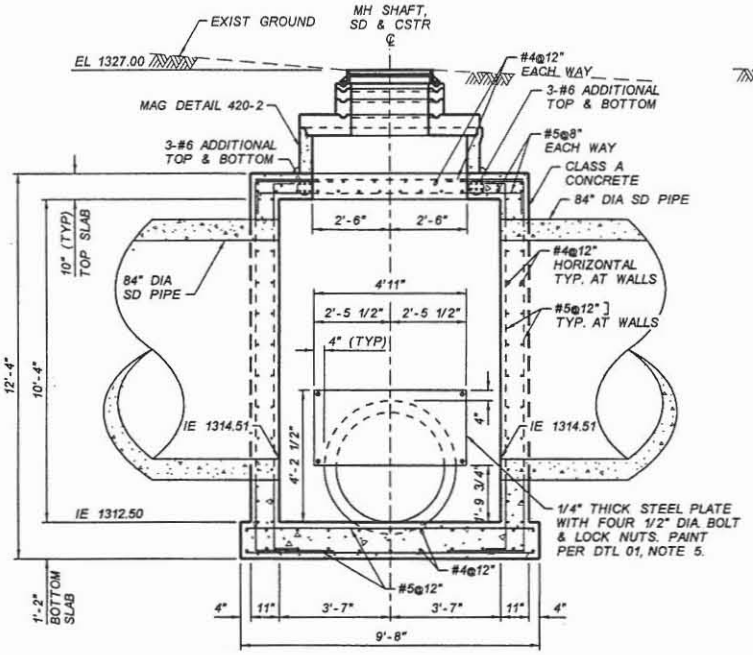

SECTION A-A
STORM DRAIN MANHOLE BASE
87TH AVENUE BASIN STA 61+22
NTS

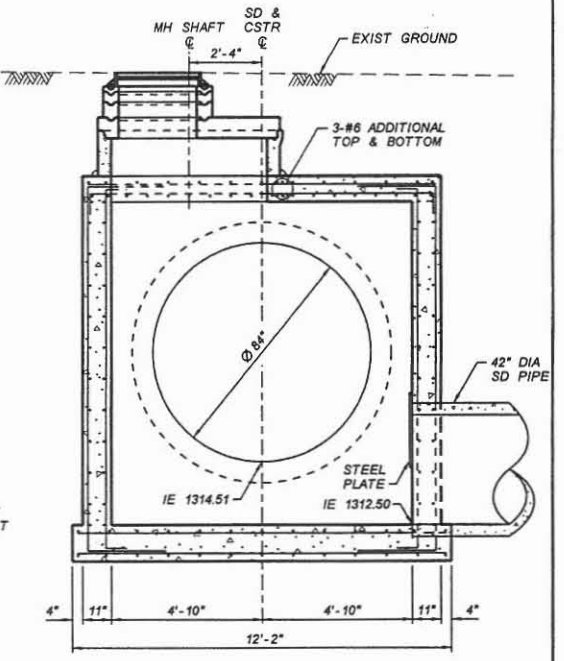

SECTION B-B
STORM DRAIN MANHOLE BASE
87TH AVENUE BASIN STA 61+22
NTS

NO.	REVISION	BY	DATE
3			
2			
1			

FLOOD CONTROL DISTRICT OF MARICOPA COUNTY
ENGINEERING DIVISION

83RD AVENUE / PINNACLE PEAK ROAD
DRAINAGE IMPROVEMENTS
PCN 450.02.33 FCD CONTRACT NO. 2006C005

	BY	DATE
DESIGNED	Q. OLIDEN	5/2007
DRAWN	A. JOHNSON	5/2007
CHECKED	M. RATHBONE	5/2007

JACOBS CIVIL INC.

DRAWING NO.		SHEET OF
D24	DTL 24 STORM DRAIN MANHOLE BASE	45 161

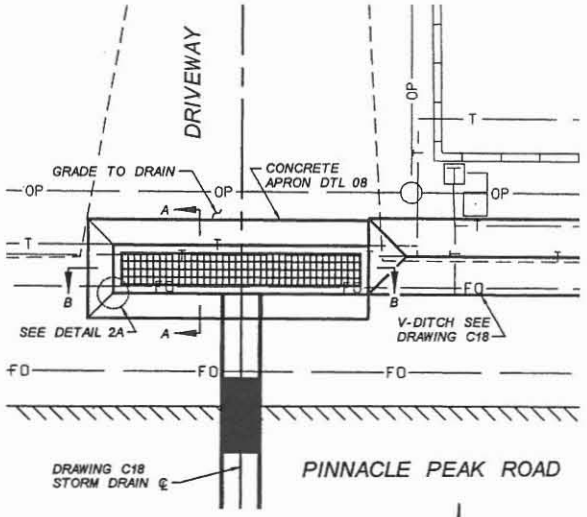

PLAN
TRENCH DRAIN
STA 236+54
NTS

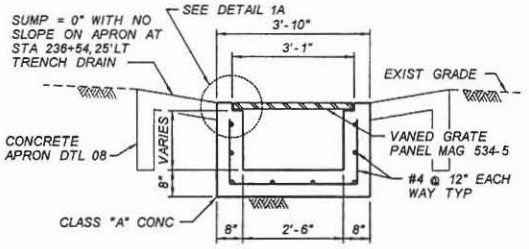

SECTION A-A
NTS

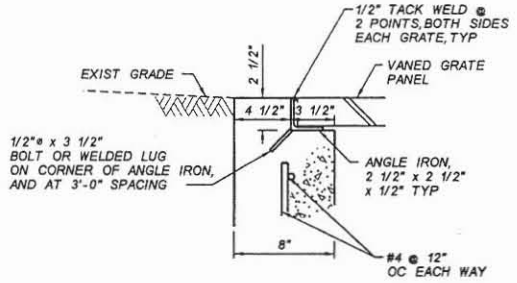

DETAIL 1A
END WALL
NTS

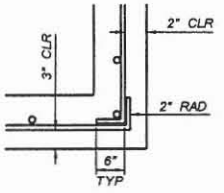

DETAIL 2A
REBAR AT CORNER
NTS

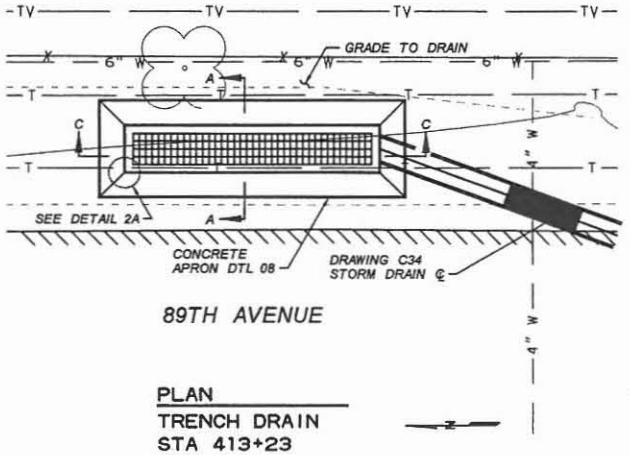

PLAN
TRENCH DRAIN
STA 413+23
NTS

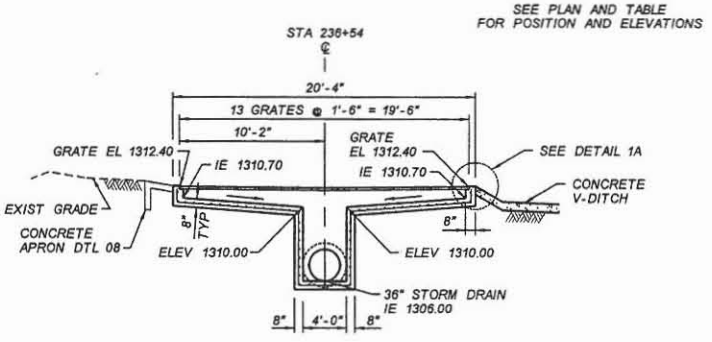

SECTION B-B
NTS

NOTES

1. ALL CONCRETE SHALL BE CLASS A.
2. REINFORCING STEEL BARS SHALL BE ASTM A615 GRADE 60. ALL REBARS SHALL BE #4.
3. VANED GRATE PANELS SHALL BE ORIENTED SUCH THAT VANES SLOPE UPWARD TOWARD NORTH SIDE.
4. ALL ANGLE IRON SHALL BE MILD STEEL A-36 OR APPROVED EQUAL.

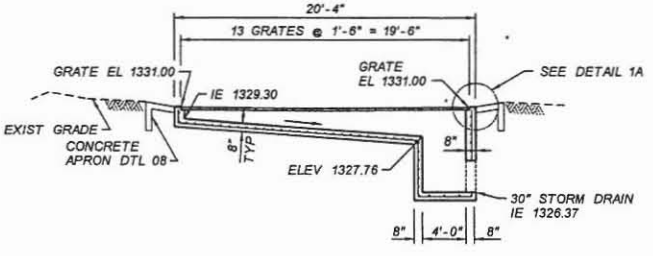

SECTION C-C
NTS

TWO WORKING DAYS BEFORE YOU DIG, CALL 263-1100 BLUE STAKE

NO.	REVISION	BY	DATE
3			
2			
1			

FLOOD CONTROL DISTRICT OF MARICOPA COUNTY
ENGINEERING DIVISION

83RD AVENUE / PINNACLE PEAK ROAD
DRAINAGE IMPROVEMENTS
PCN 450.02.33 FCD CONTRACT NO. 2006C005

	BY	DATE
DESIGNED	O. OLIDEN	1/2007
DRAWN	S. RIVERA	1/2007
CHECKED	M. RATHBONE	1/2007

JACOBS CIVIL INC.

DRAWING NO. D26 | DTL 26 TRENCH DRAIN | SHEET OF 47 181

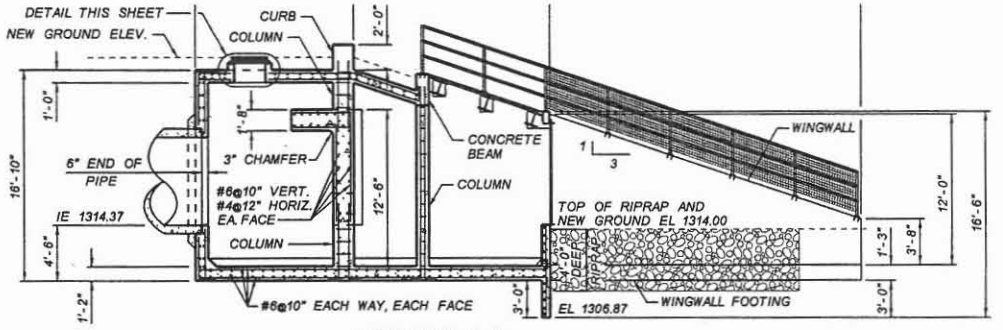

SECTION A-A
STILLING BASIN
87TH AVENUE BASIN STA 61+49
NTS

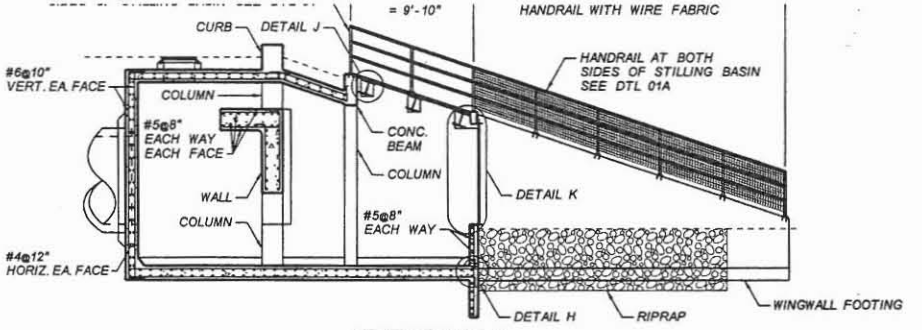

SECTION B-B
STILLING BASIN
87TH AVENUE BASIN STA 61+49
NTS

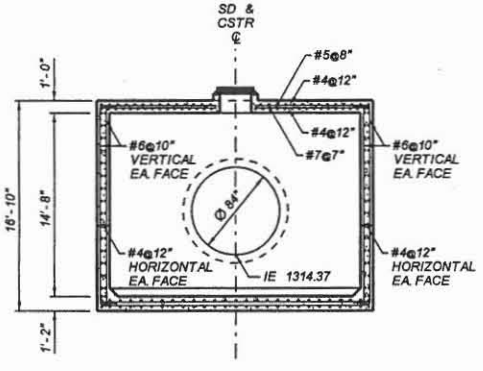

SECTION C-C
STILLING BASIN
87TH AVENUE BASIN STA 61+49
NTS

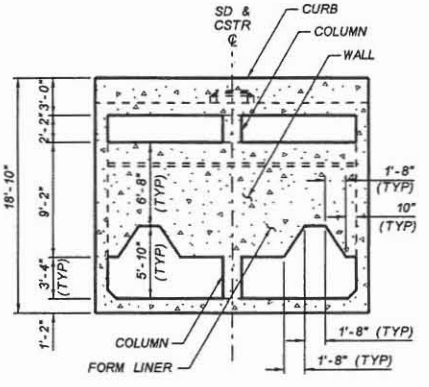

SECTION D-D
STILLING BASIN
87TH AVENUE BASIN STA 61+49
NTS

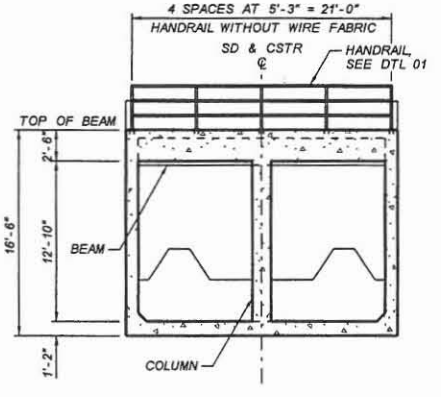

SECTION E-E
STILLING BASIN
87TH AVENUE BASIN STA 61+49
NTS

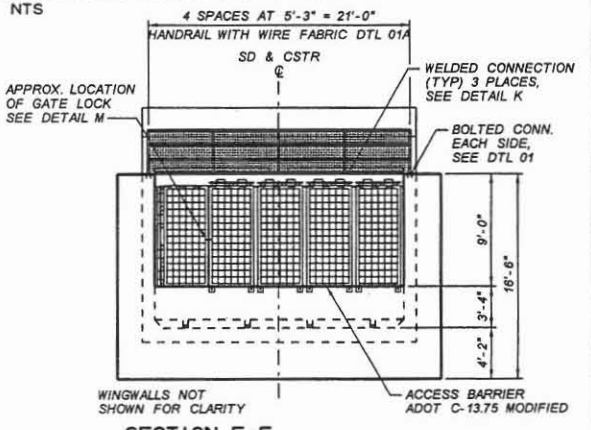

SECTION F-F
STILLING BASIN
87TH AVENUE BASIN STA 61+49
NTS

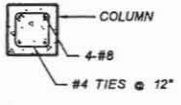

NOTE:
EXTEND COLUMN VERTICALS 1'-8"
INTO WALL, CURB AND BEAM.

TYP. COLUMN REINF.
STILLING BASIN
87TH AVENUE BASIN
STA 61+49
NTS

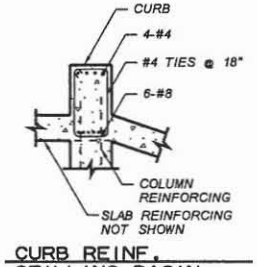

CURB REINF.
STILLING BASIN
87TH AVENUE BASIN
STA 61+49
NTS

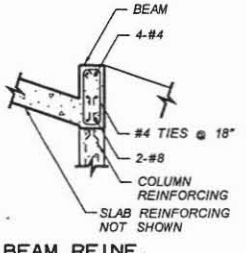

BEAM REINF.
STILLING BASIN
87TH AVENUE BASIN
STA 61+49
NTS

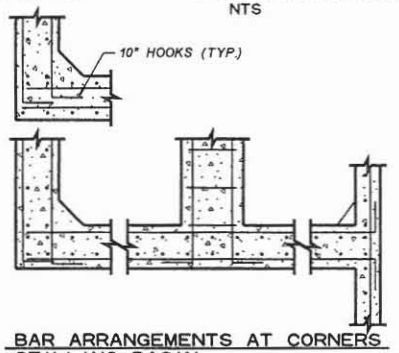

BAR ARRANGEMENTS AT CORNERS
STILLING BASIN
87TH AVENUE BASIN STA 61+49
NTS

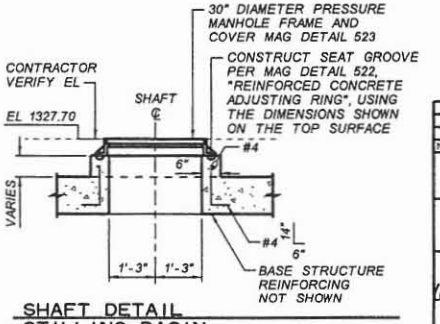

SHAFT DETAIL
STILLING BASIN
87TH AVENUE BASIN STA 61+49
NTS

SEE SHEET D12 AND D28 FOR
STILLING BASIN SECTIONS AND DETAILS

NO.	REVISION	BY	DATE
3			
2			
1			

FLOOD CONTROL DISTRICT
OF MARICOPA COUNTY
ENGINEERING DIVISION

83RD AVENUE / PINNACLE PEAK ROAD
DRAINAGE IMPROVEMENTS
PCN 450.02.33 FCD CONTRACT NO. 2006C005

	BY	DATE
DESIGNED	O. OLIDEN	1/2007
DRAWN	A. JOHNSON	1/2007
CHECKED	M. RATHBONE	1/2007

JACOBS CIVIL INC.

DRAWING NO.		SHEET OF
D27	DTL 27 STILLING BASIN	48 161

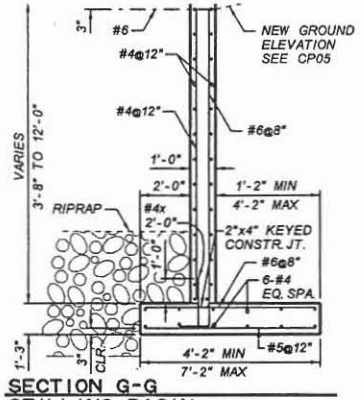

SECTION G-G
STILLING BASIN
87TH AVE BASIN STA 61+49
NTS

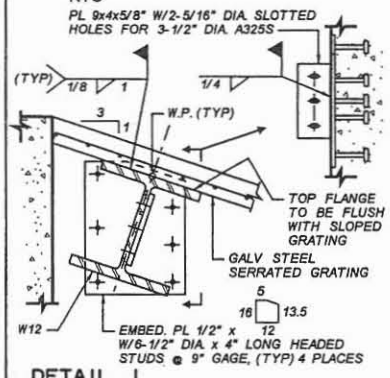

DETAIL J
STILLING BASIN
87TH AVE BASIN STA 61+49
NTS

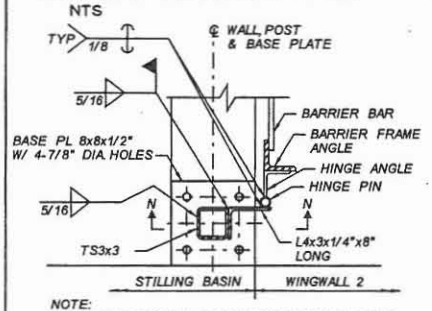

NOTE:
FABRICATE BARRIER BAR, BARRIER FRAME ANGLE, HINGE ANGLE AND HINGE PIN PER ADOT C-13.75.

DETAIL L
STILLING BASIN
87TH AVENUE BASIN STA 61+49
NTS

SEE SHEET D12 AND D27 FOR STILLING BASIN SECTIONS AND DETAILS

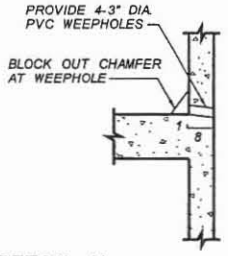

DETAIL H
STILLING BASIN
87TH AVE BASIN STA 61+49
NTS

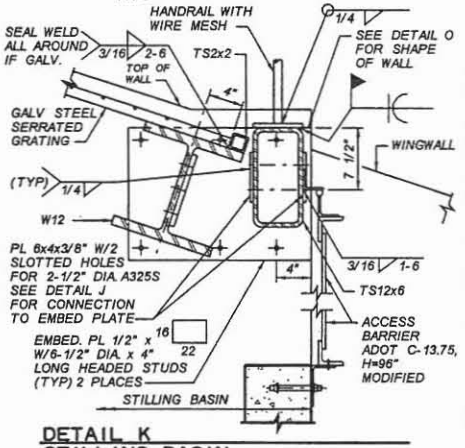

DETAIL K
STILLING BASIN
87TH AVENUE BASIN STA 61+49
NTS

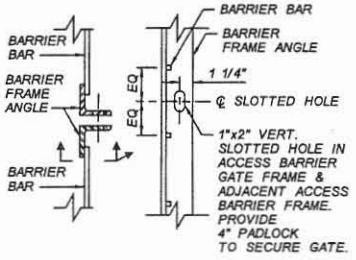

DETAIL M
STILLING BASIN
87TH AVENUE BASIN
STA 61+49
NTS

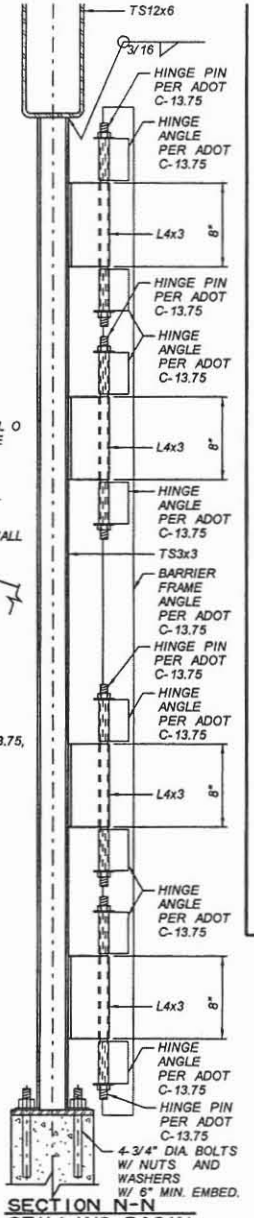

SECTION N-N
STILLING BASIN
87TH AVE BASIN
STA 61+49
NTS

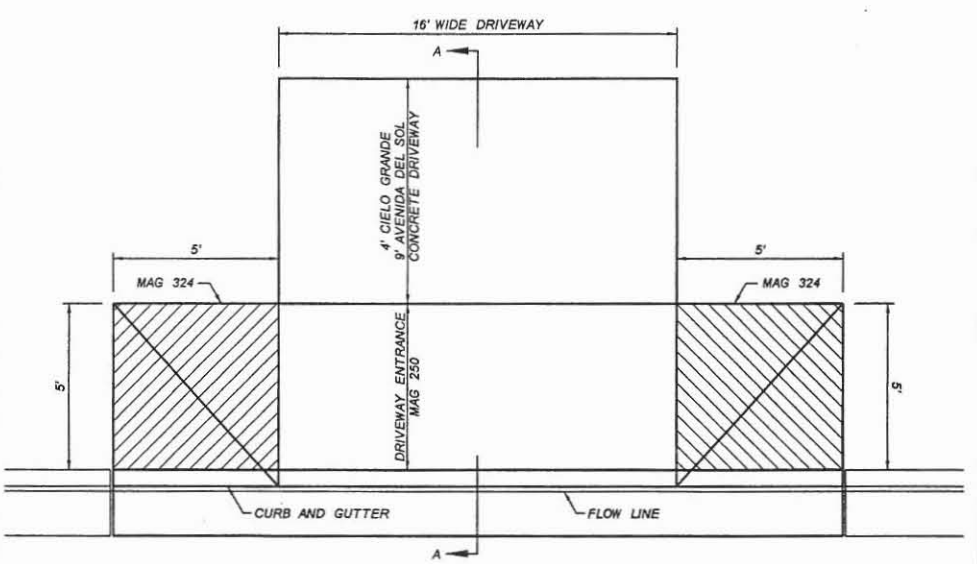

PLAN
NTS

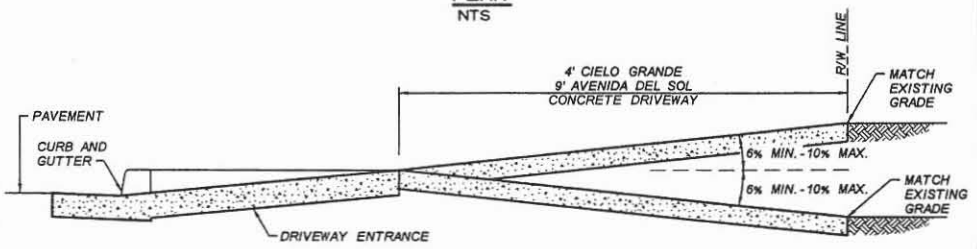

SECTION A-A
NTS

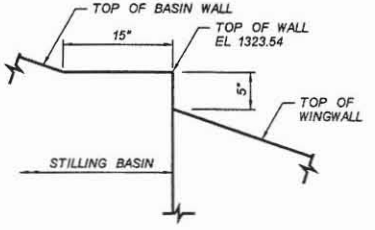

DETAIL O
STILLING BASIN
87TH AVENUE BASIN STA 61+49
NTS

TWO WORKING DAYS BEFORE YOU DIG CALL
263-1100
BLUE STAKE

NO.	REVISION	BY	DATE
3			
2			
1			

FLOOD CONTROL DISTRICT OF MARICOPA COUNTY
ENGINEERING DIVISION

83RD AVENUE / PINNACLE PEAK ROAD
DRAINAGE IMPROVEMENTS
PCN 450.02.33 FCD CONTRACT NO. 2006C005

	BY	DATE
DESIGNED	O. OLIDEN	9/2007
DRAWN	S. RIVERA	9/2007
CHECKED	M. RATHBONE	9/2007

JACOBS CIVIL INC.

DRAWING NO. D28
DTL 28
STILLING BASIN / DRIVEWAY DETAILS
SHEET OF 49 161

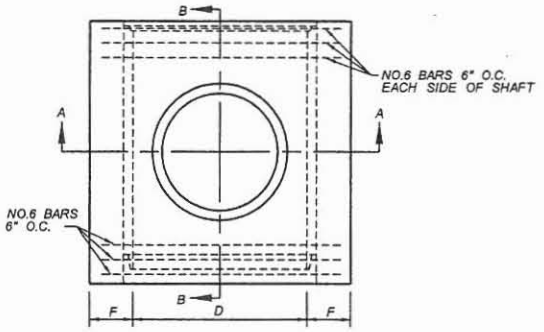

PLAN

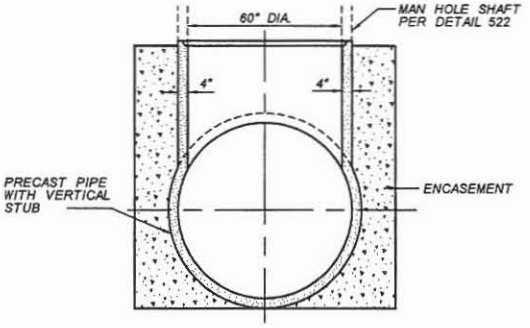

SECTION A-A

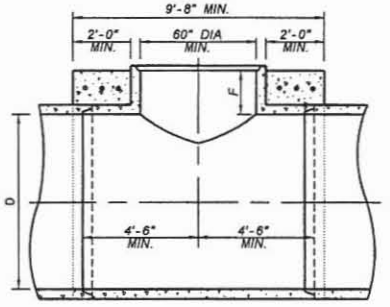

SECTION B-B

TABLE OF VALUES FOR 'F' & 'D'

D	51"	54"	57"	60"	63"	66"	69"	72"	78"	84"	90"	96"
F	13-3/4"	14-1/2"	15"	15-1/2"	16-1/4"	16-3/4"	17-1/2"	18"	19-1/4"	20-1/2"	21-3/4"	23"

NOTES:

1. LINE PIPE AND STUB MAY BE CAST MONOLITHICALLY OR STUB MAY BE CAST ON TO LINE PIPE SECTION PRIOR TO COMPLETE CURING.
2. ALL LINE PIPE REINFORCEMENT SHALL BE TURNED UP INTO STUB.
3. THE VERTICAL STUB TO BE A.S.T.M. C-76 CLASS II WALL 'A' AND THE HORIZONTAL PIPE TO BE EQUAL TO STRENGTH OF PIPE ENTERING MANHOLE.
4. ALL REINFORCING STEEL SHALL CLEAR FACE OF CONCRETE BY 1-1/2" UNLESS SHOWN OTHERWISE.
5. CONCRETE ENCASEMENT SHALL BE CLASS 'A' PER SECT. 725 AND 505.

TWO WORKING DAYS BEFORE YOU DIG, CALL 263-1100 BLUE STAKE

NO.	REVISION	BY	DATE
3			
2			
1			

FLOOD CONTROL DISTRICT OF MARICOPA COUNTY
ENGINEERING DIVISION

83RD AVENUE / PINNACLE PEAK ROAD
DRAINAGE IMPROVEMENTS
PCN 450.02.33 FCD CONTRACT NO. 2006C005

	BY	DATE
DESIGNED	O. OLIDEN	1/2007
DRAWN	S. RIVERA	1/2007
CHECKED	M. RATHBONE	1/2007

JE JACOBS CIVIL INC.

DRAWING NO. D29

DTL 29
STORM DRAIN MANHOLE BASE

SHEET OF 50 161

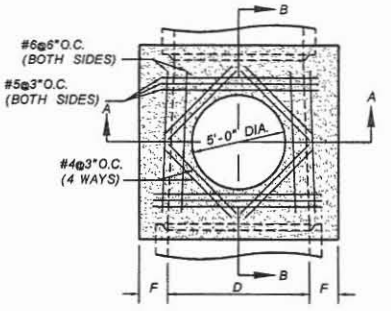

PLAN

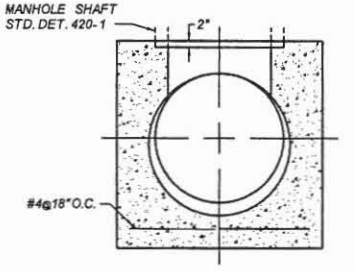

SECTION A-A

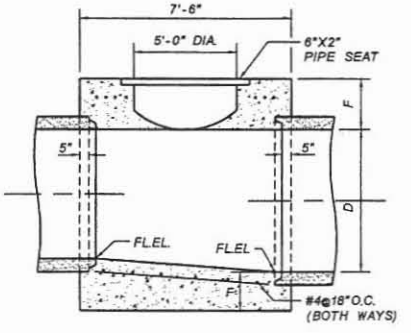

SECTION B-B

NOTES:

1. THICKNESS OF DECK SHALL VARY WHEN NECESSARY TO PROVIDE LEVEL PIPE SEAT BUT SHALL NOT BE LESS THAN 'F'.
2. FLOOR OF MANHOLE SHALL BE STEEL TROWELLED TO SPRING LINE.
3. BODY OF MANHOLE SHALL BE POURED IN ONE CONTINUOUS OPERATION, EXCEPT THAT A CONSTRUCTION JOINT WITH A LONGITUDINAL KEYWAY MAY BE PLACED AT THE SPRING LINE.
4. ALL REINFORCED STEEL SHALL CLEAR FACE OF CONCRETE BY 1-1/2" UNLESS SHOWN OTHERWISE.
5. CONCRETE SHALL BE CLASS 'A'.

"F" DIMENSION TABLE

D	51"	54"	57"	60"	63"	66"
F	13-3/4"	14-1/2"	15"	15-1/2"	16-1/4"	16-3/4"
D	69"	72"	78"	84"	90"	96"
F	17-1/2"	18"	19-1/4"	20-1/2"	21-3/4"*	23"

TWO WORKING DAYS BEFORE YOU DIG, CALL 263-1100 BLUE STAKE

NO.	REVISION	BY	DATE
3			
2			
1			

FLOOD CONTROL DISTRICT OF MARICOPA COUNTY
ENGINEERING DIVISION

83RD AVENUE / PINNACLE PEAK ROAD
DRAINAGE IMPROVEMENTS
PCN 450.02.33 FCD CONTRACT NO. 2006C005

	BY	DATE
DESIGNED	O. OLIDEN	1/2007
DRAWN	S. RIVERA	1/2007
CHECKED	M. RATHBONE	1/2007

REGISTERED PROFESSIONAL ENGINEER 20940 OSCAR A. OLIDEN ARIZONA, U.S.A.

JACOBS CIVIL INC.

DRAWING NO. D30

DTL 30
STORM DRAIN MANHOLE BASE

SHEET OF 51 161

3. Structural Calculations

83 RD AVE / PINNACLE PK

- CONCRETE VAULTS & MANHOLE BASES
- STRUCTURAL CALCS

JACOBS

Subject MANHOLES Project 83 RD AVE / PINNACLE PK
W7X74300 Sheet No. 1 Of
Authored by MJR Date 11/28/05 Checked by OAO Date 12/05

SUMMARY OF MANHOLE DIM'S. (EXTERNAL)

STA. (FILL)	L	W	H	PENETRATIONS LS	SS	TOP	
102+00	11	7.5	5	2/2	0/0	EX	
104+75	11	7.5	5.8	2/1	0/0	EX	
134+86 (5.5')	9	9	11	1/1	1/0	C	Taller
199+60	9	8	6.75	1/0	1/0	C	
226+64	10	8	9.33	1/1	1/0	C	
235+50	11	9	10	1/1	0/0	C	
244+40 (6.0')	14	9	10	1/1	0/0	C	
245+65 (6.5')	14	12.5	10	1/1	1/0	EX.	
313+52	16	12	11.33	1/1	1/0	EX.	
ANOMALY 326+40	21	14	16	1/1	1/1	EX.	
336+55	14	7.5	8.67	2/1	1/0	C	
339+55	14	14	5.91	2/0	2/0	C	Flatter
400+30	10	7	8.1	1/1	1/0	C	
413+23	13	10	8.2	1/1	1/0	C	
416+56	10	10	8.2	1/0	1/0	C	

WHEEL LOAD DIRECTLY ON SLAB,

(FOR MANHOLES WITH < 2' COVER)

FROM PRELIM. DETAILS, LONGEST SHALLOW SPAN IS 14 FEET AT SNA 339+55.

FROM AASHTO CHAPTER 3,

- AASHTO 3.8.2: USE $I = \frac{50}{14+125} = 0.36$, MAX 0.3

$$I = 0.3$$

- AASHTO 3.24.1.2 (a): 'S' WILL BE THE CLEAR SPAN = 12'-2"
- AASHTO 3.24.3.2 - CASE B REINF. PARALLEL TO TRAFFIC (MANHOLE IS SQUARE)

$$E = 4 + 0.06S$$
$$= 4 + 0.06(12.17)$$
$$= 4.73'$$

$$LLM = 900S \text{ ft-lbs (FOR SPANS} \leq 50')$$
$$= 900(12.17) \times 1/1000 \text{ ft-kips.}$$
$$= 10.95 \text{ ft-kips}$$

FOR A 1-ft WIDE DESIGN STRIP, WITH IMPACT

$$LLM = \frac{LLM}{E}(1+I)$$
$$= \frac{10.95}{4.73}(1+0.3)$$
$$= 3.01 \text{ ft-kips per foot.}$$

JACOBS

Subject _____ Project _____

Sheet No. _____ Of _____

Authored by MJR Date 12/29/05 Checked by DAO Date 12/05

ADDITIONAL MOMENT FROM DEAD LOAD:

FILL OVER: APPROX 2' = 2(120) = 240 #/ft.

SLAB (CONC.): 10" THK = $\frac{10}{12}$(150) = 125 #/ft.

DLM = (240 + 125) × $\frac{12.17^2}{12}$ × 1/1000 (FIXED-END)

= 4.50 ft-kips per foot. (2.96 FILL, 1.54 SLAB)

NOTE: THE DEAD LOAD MOMENT IS ALSO CALCULATED AUTOMATICALLY IN THE CULVERT SPREADSHEET. A LESSER VALUE IS PROVIDED AS A RESULT OF THE SOIL - STRUCTURE INTERACTION.

GRP I MOM GOVERNS: M = 2.96 + 1.54 + 3.01
= 7.51 f-k

(SPREADSHEET RETURNS 6.8 f-k AFTER ADDING LLM TO SOIL-STRUCTURE RESULT)

SPECIAL DETAILS

DTL 01
12
20
21
22
23

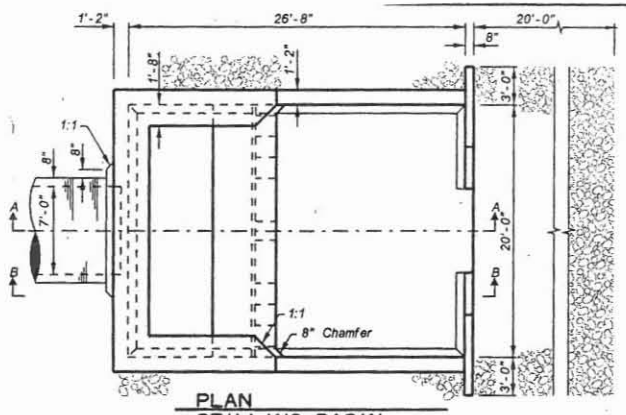

PLAN
STILLING BASIN
STA
NTS

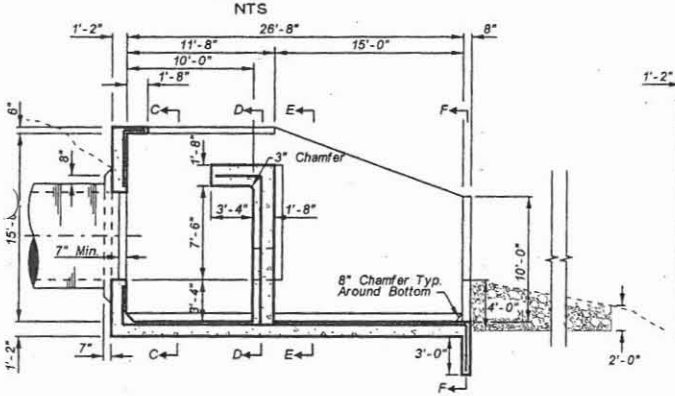

SECTION A-A
STILLING BASIN
STA
NTS

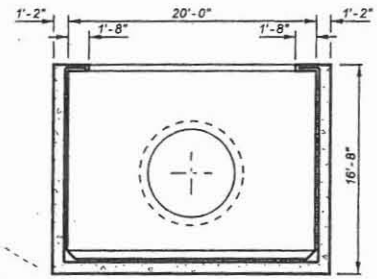

SECTION C-C
STILLING BASIN
STA
NTS

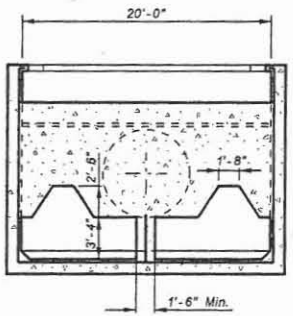

SECTION D-D
STILLING BASIN
STA
NTS

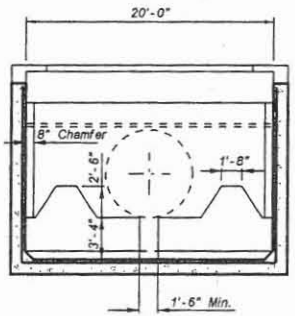

SECTION E-E
STILLING BASIN
STA
NTS

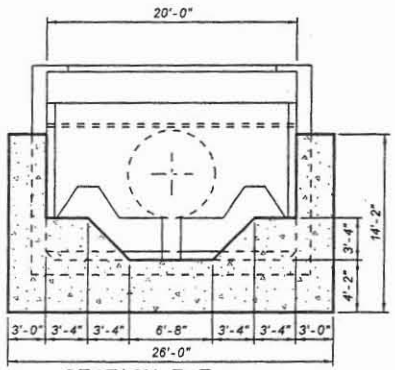

SECTION F-F
STILLING BASIN
STA
NTS

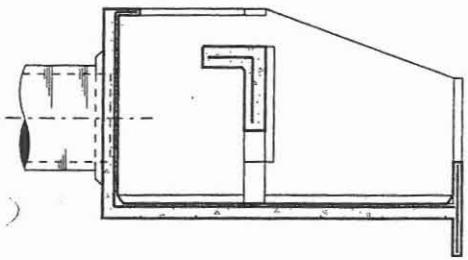

SECTION B-B
STILLING BASIN
STA
NTS

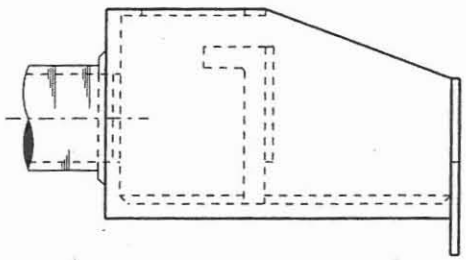

SIDE PROFILE
STILLING BASIN
STA
NTS

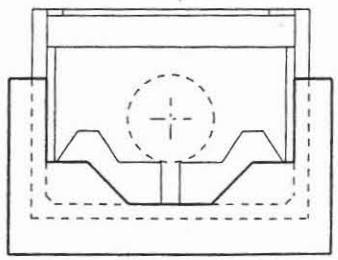

FRONT PROFILE
STILLING BASIN
STA
NTS

NO.	REVISION	BY	DATE
3			
2			
1			

FLOOD CONTROL DISTRICT OF MARICOPA COUNTY
ENGINEERING DIVISION

83RD AVENUE / PINNACLE PEAK ROAD
DRAINAGE IMPROVEMENTS
PCN 450.02.33 FCD CONTRACT NO. 2003C060

60%
PRELIMINARY NOT FOR CONSTRUCTION

	BY	DATE
DESIGNED	O. OLIGEN	11/05
DRAWN	A. JOHNSON	11/05
CHECKED	M. [illegible]	11/05

JACOBS CIVIL INC.

DRAWING NO. DTL 12 SHEET OF

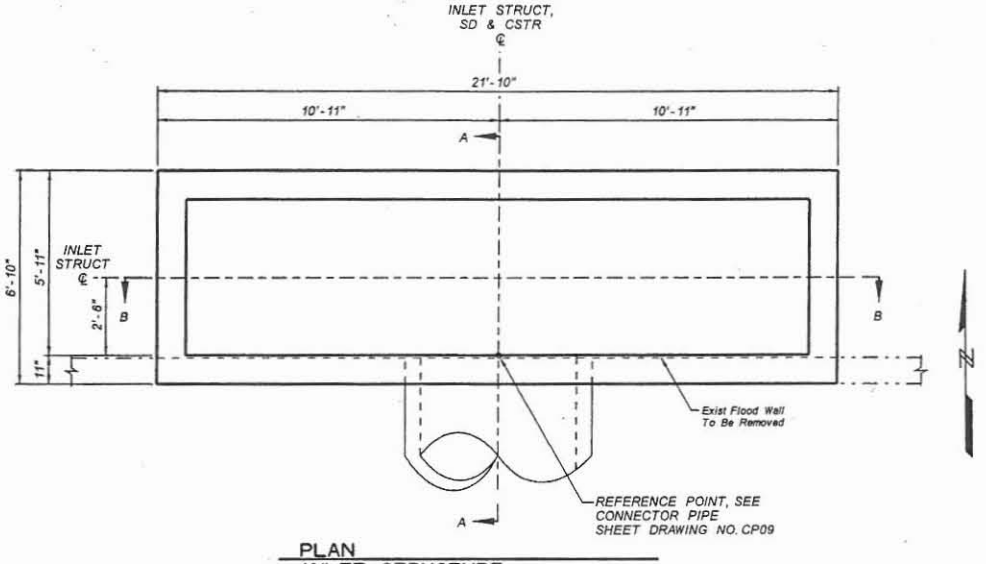

PLAN
INLET STRUCTURE
VENTANA PICACHOS
RETENTION BASIN STA 81+37
NTS

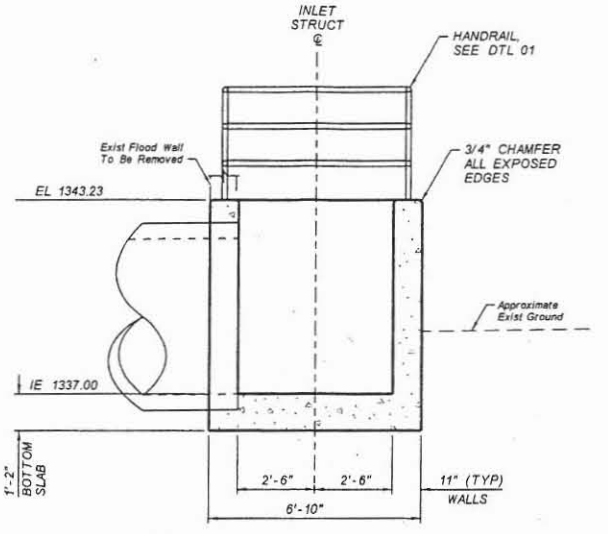

SECTION A-A
INLET STRUCTURE
VENTANA PICACHOS
RETENTION BASIN STA 81+37
NTS

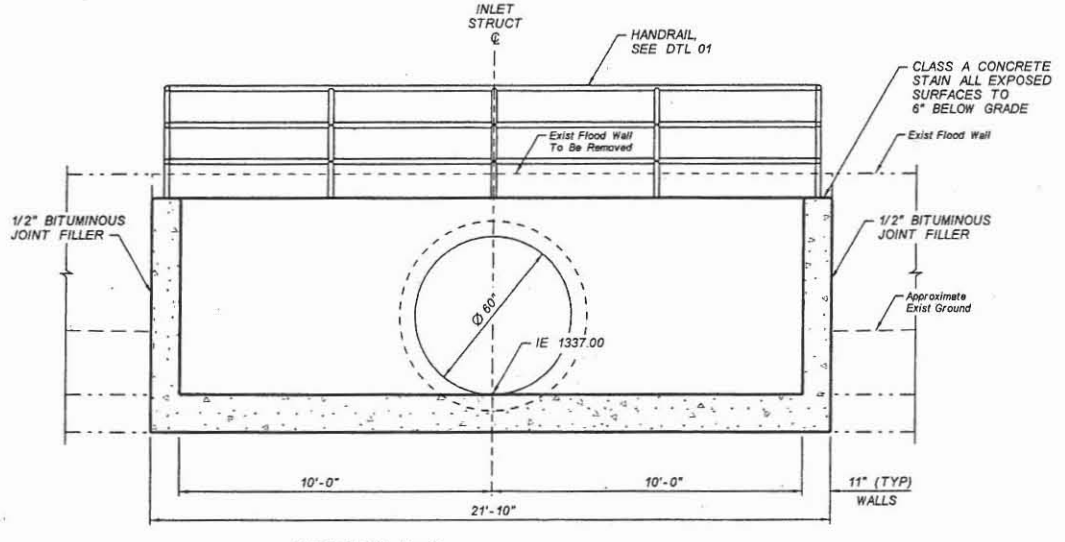

SECTION B-B
INLET STRUCTURE
VENTANA PICACHOS
RETENTION BASIN STA 81+37
NTS

NO.	REVISION	BY	DATE
3			
2			
1			

FLOOD CONTROL DISTRICT
OF MARICOPA COUNTY
ENGINEERING DIVISION

83RD AVENUE / PINNACLE PEAK ROAD
DRAINAGE IMPROVEMENTS
PCN 450.02.33 FCD CONTRACT NO. 2003C060

60%
PRELIMINARY
NOT FOR
CONSTRUCTION

	BY	DATE
DESIGNED	O. OLIDEN	11/05
DRAWN	A. JOHNSON	11/05
CHECKED	MJR	11/05

JE JACOBS CIVIL INC.

DRAWING NO. D20 | DTL 20 INLET STRUCTURE | SHEET OF

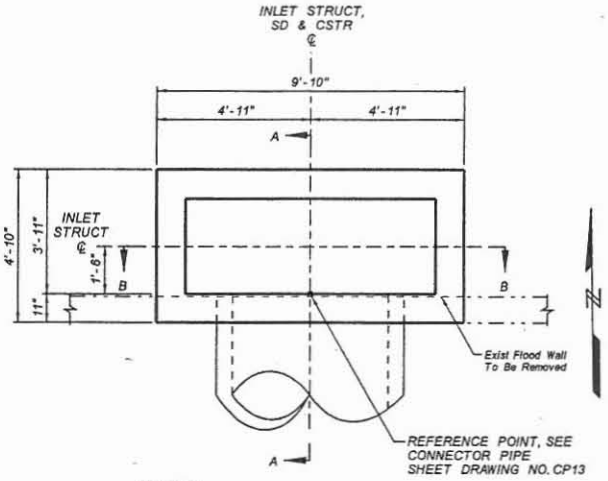

PLAN
INLET STRUCTURE
VENTANA PICACHOS
RETENTION BASIN STA 78+80
NTS

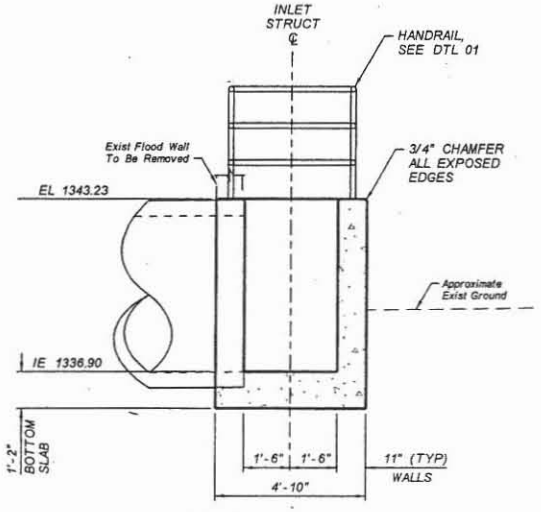

SECTION A-A
INLET STRUCTURE
VENTANA PICACHOS
RETENTION BASIN STA 78+80
NTS

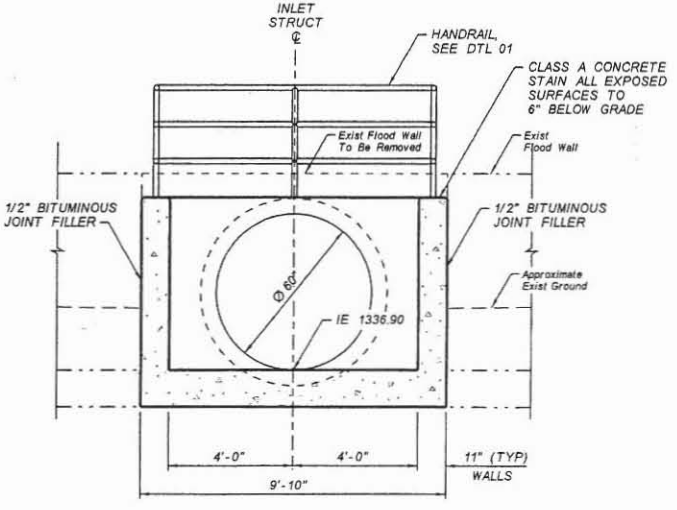

SECTION B-B
INLET STRUCTURE
VENTANA PICACHOS
RETENTION BASIN STA 78+80
NTS

NO.	REVISION	BY	DATE
3			
2			
1			

FLOOD CONTROL DISTRICT
OF MARICOPA COUNTY
ENGINEERING DIVISION

83RD AVENUE / PINNACLE PEAK ROAD
DRAINAGE IMPROVEMENTS
PCN 450.02.33 FCD CONTRACT NO. 2003C060

60%
PRELIMINARY
NOT FOR
CONSTRUCTION

	BY	DATE
DESIGNED	O. OLIDEN	11/05
DRAWN	A. JOHNSON	11/05
CHECKED	PJR	11/05

JACOBS CIVIL INC.

DRAWING NO. D21 | DTL 21 INLET STRUCTURE | SHEET OF

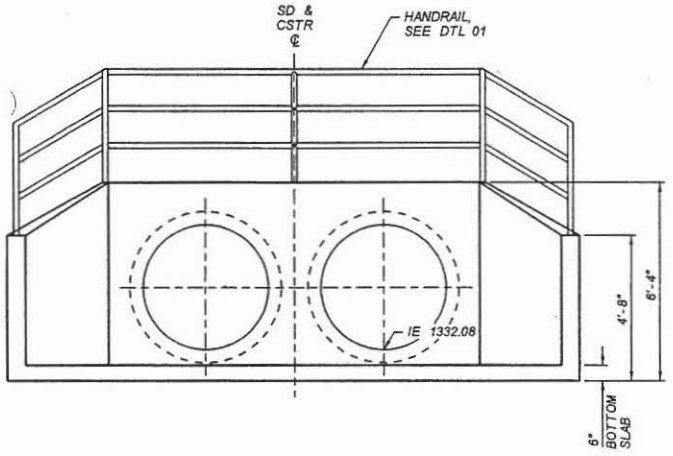

SECTION A-A
DROP INLET STRUCTURE
CALLE LEJOS STA 340+27
NTS

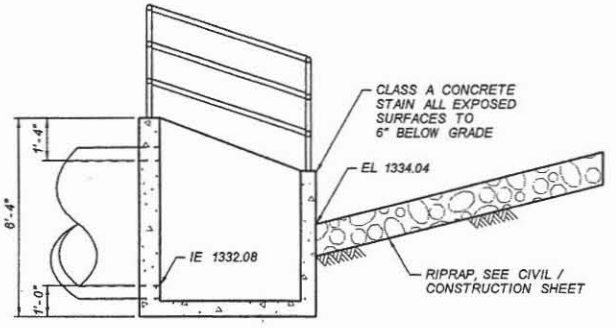

SECTION B-B
DROP INLET STRUCTURE
CALLE LEJOS STA 340+27
NTS

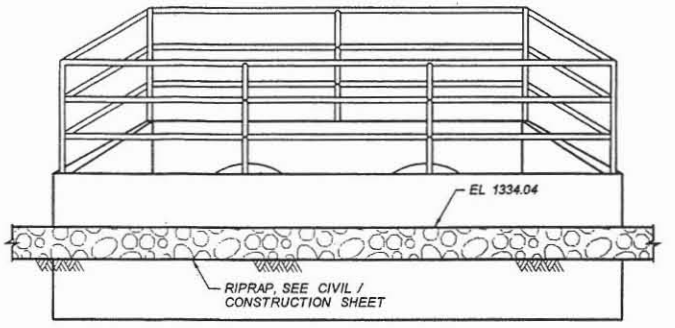

ELEVATION
DROP INLET STRUCTURE
CALLE LEJOS STA 340+27
NTS

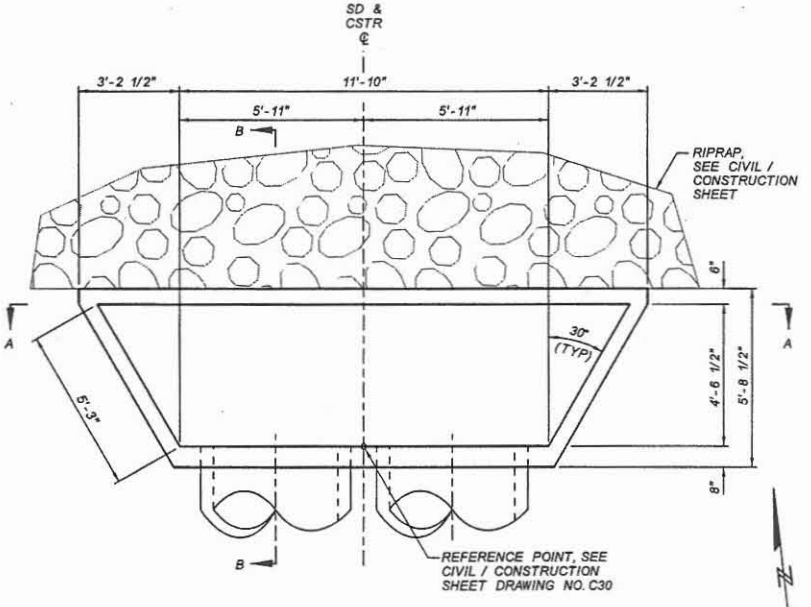

PLAN
DROP INLET STRUCTURE
CALLE LEJOS STA 340+27
NTS

NO.	REVISION	BY	DATE
3			
2			
1			

FLOOD CONTROL DISTRICT
OF MARICOPA COUNTY
ENGINEERING DIVISION

83RD AVENUE / PINNACLE PEAK ROAD
DRAINAGE IMPROVEMENTS
PCN 450.02.33 FCD CONTRACT NO. 2003C060

60%
PRELIMINARY
NOT FOR
CONSTRUCTION

	BY	DATE
DESIGNED	O. OLIDEN	11/05
DRAWN	A. JOHNSON	11/05
CHECKED	MJR	11/05

JE JACOBS CIVIL INC.

DRAWING NO. D22 | DTL 22 INLET STRUCTURE | SHEET OF

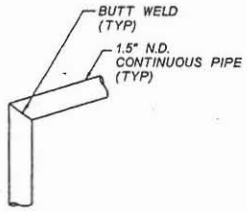

DETAIL A
TOP RAIL CONNECTION TO END POST ON WINGWALL
NTS

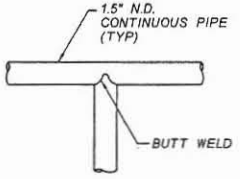

DETAIL B
TOP RAIL CONNECTION TO INTERMEDIATE POST
NTS

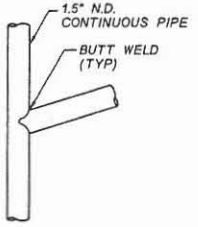

DETAIL C
MIDDLE OR LOWER RAIL CONNECTION TO END POST ON WINGWALL
NTS

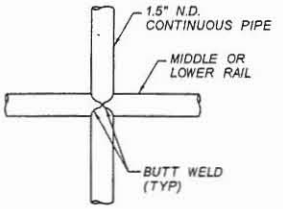

DETAIL D
MIDDLE OR LOWER RAIL CONNECTION TO INTERMEDIATE POST
NTS

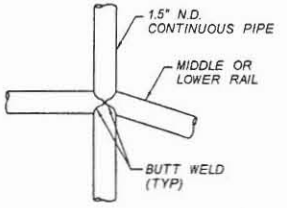

DETAIL E
MIDDLE OR LOWER RAIL CONNECTION TO INTERMEDIATE POST ON WINGWALL
NTS

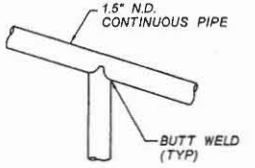

DETAIL F
TOP RAIL CONNECTION TO INTERMEDIATE POST ON WINGWALL
NTS

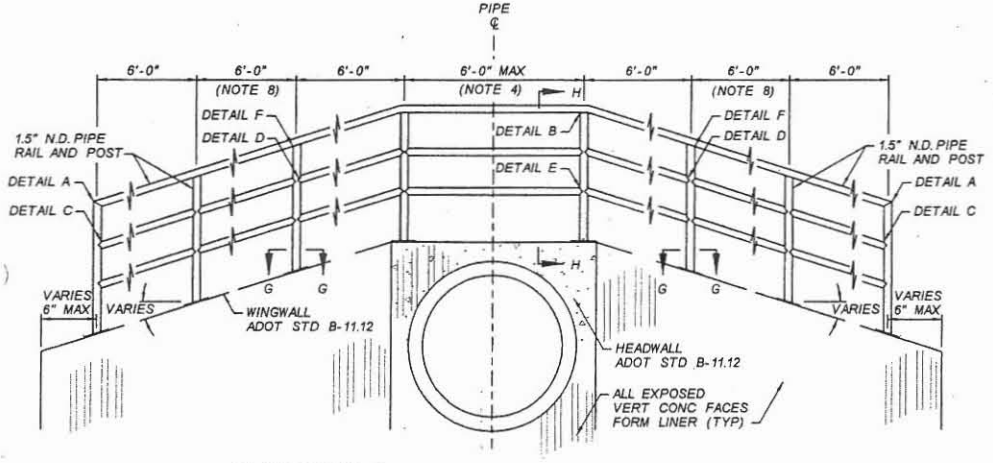

ELEVATION J
HANDRAIL ON HEADWALL, ADOT DET B-11.12
NTS

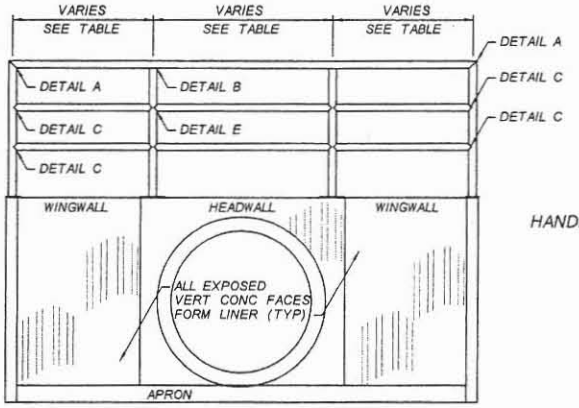

ELEVATION K
HEADWALL, MAG DET 501-4
NTS

HANDRAIL LENGTHS-HEADWALLS

PIPE ℄	W	L
24	4'-0"	2'-0"
30	4'-6"	3'-0"
36	5'-0"	4'-0"
42	5'-6"	5'-0"
48	6'-0"	6'-0"

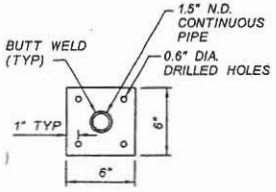

SECTION G-G
ANCHOR PLATE
NTS

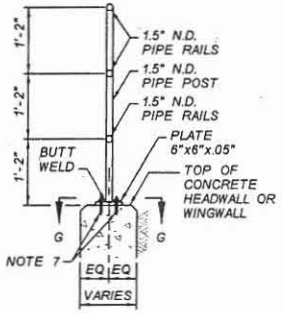

SECTION H-H
HANDRAIL POST ON HEADWALL
NTS

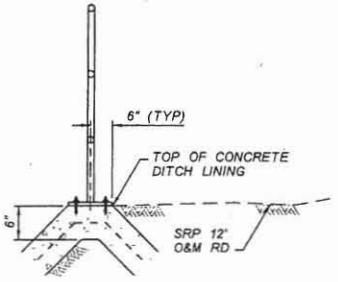

SECTION L-L
HANDRAIL POST ON DITCH LINING
NTS

NOTES:

1) ALL RAILS, POSTS AND FITTING SHALL BE STEEL, CONFORMING TO ALL REQUIREMENTS OF AASHTO M 181 FOR GRADE 2 PIPE. 1.5" N.D. PIPE IS SCHEDULE 40 (0.145" WALL THICKNESS) PER ASTM A-53.
2) FITTING AND RAILS SHALL BE WELDED WITH CONTINOUS WELDS. ALL CUT EDGES SHALL BE GROUND SMOOTH AND ALL VISIBLE WELDS, WHEN COMPLETED, SHALL PRESENT A SMOOTH, EVEN APPEARANCE.
3) USE FORM LINER ON ALL EXPOSED VERTICAL CONCRETE FACES PER TYP SEC X, SHEET 24. PAINT ALL EXPOSED SURFACES WITH ONE COAT OF PRIMER AND TWO FINISH COATS OF PAINT, COLOR "WEATHERED SANDSTONE, # 320-4, SEE SPECS.
4) SPACING OF POSTS SHALL BE 6', OR LESS AS REQUIRED IN THE FIELD.
5) CONTRACTOR SHALL SUBMIT WORKING DRAWINGS FOR APPROVAL. WORKING DRAWINGS SHALL CONSIST OF SHOP DRAWNINGS AND FIELD HORIZONTAL AND VERTICAL INSTALLATION.
6) ALL DIMENSIONS ARE IN INCHES, UNLESS NOTED OTHERWISE.
7) FOUR STAINLESS STEEL EXPANSION ANCHORS, 0.5" x 5" LONG, EMBEDDED 3.5".
8) POSTS ON SLOPING WINGWALL WILL BE VERTICAL. DISTANCES SHOWN ARE HORIZONTAL DISTANCE BETWEEN POSTS.

NO.	REVISION	BY	DATE
3			
2			
1			

FLOOD CONTROL DISTRICT OF MARICOPA COUNTY
ENGINEERING DIVISION

83RD AVENUE / PINNACLE PEAK ROAD
DRAINAGE IMPROVEMENTS
PCN 450.02.33 FCD CONTRACT NO. 2003C060

60%
PRELIMINARY NOT FOR CONSTRUCTION

	BY	DATE
DESIGNED	O. OLDEN	10/05
DRAWN	A. JOHNSON	10/05
CHECKED	MJC	11/06

JACOBS CIVIL INC.

DRAWING NO. D01 | DTL 01 STEEL HANDRAIL | SHEET OF

ENGINEERS' NOTEBOOK

Moments in buried box culverts

P. C. DAVE, A.M. ASCE, Senior Civil Engineer, The Kuljian Corp. Ind. Pvt. Ltd., Calcutta, India

Buried box culverts are subjected to four main types of loading: the total weight of two walls, W_1; total uniform vertical load due to weight of slab, fill and surcharge, W_2; total uniform lateral load due to soil and surcharge, W_3; and the total lateral triangular load due to soil, W_4 (see Fig. 1). Hydrostatic loads, if present, can be regarded as negative W_2, W_3, or W_4.

For the purpose of design, moments at the four corners and at mid-points of the four sides, corresponding to points 1 through 5 in Fig. 1, are required. Coefficients derived from slope-deflection equations are available to evaluate the moments resulting from the various kinds of loadings.[1] For example, for moments M_1 and M_2 resulting from W_1 through W_4:

$$M_1 = W_1 L \left[\frac{K}{12\,(K+1)\,(K+3)}\right]$$

$$M_2 = -W_1 L \left[\frac{2K+3}{12\,(K+1)\,(K+3)}\right]$$

$$M_1 = M_2 = -W_2 L/12\,(K+1)$$

$$M_1 = M_2 = -W_3 HK/12\,(K+1)$$

$$M_1 = -W_4 H \left[\frac{(2K+7)\,K}{30\,(K+1)\,(K+3)}\right]$$

$$M_2 = -W_4 H \left[\frac{(3K+8)\,K}{30\,(K+1)\,(K+3)}\right]$$

(See Fig. 1 for explanation of symbols.)

Mid-span moments can be obtained by deducting end moments from the simple span moments, or can be expressed in terms of W_1 to W_4 as is done here. Adding and simplifying the expressions gives:

$$M_1 = [L\,(AW_1 - W_2) - KH\,(W_3 + 0.9W_4)]\,/12C \quad \text{...Eq. 1}$$

$$M_2 = [-L\,[(A+1)W_1 + W_2] - KH\,(W_3 + 1.1W_4)]\,/12C \quad \text{...Eq. 2}$$

$$M_3 = [L\,(AW_1 + BW_2) - KH\,(W_3 + 0.9W_4)]\,/12C \quad \text{...Eq. 3}$$

$$M_4 = [L\,[(B-A)W_1 + BW_2] - KH\,(W_3 + 1.1W_4)]\,/12C \quad \text{...Eq. 4}$$

$$M_5 = [-L\,(\tfrac{1}{2}W_1 + W_2) + \tfrac{1}{2}CH\,(W_3 + W_4)]\,/12C \quad \text{...Eq. 5}$$

where $A = K/(K+3)$

$B = (3K+1)/2$

$C = (K+1)$

The constants 0.9 and 1.1 are average values of expressions

$D = 2(2K+7)/5\,(K+3)$ and

$E = 2(3K+8)/5(K+3)$,

for usual values of K. This approximation is justified because as K varies from 0 to ∞, D varies from 0.934 to 0.8, and E varies from 1.065 to 1.2—indeed an insignificant variation for routine values of K. Thus, Eqs. 1 to 5 give the required moments with very simple coefficients A, B, C to be evaluated. Curves showing the variation of all coefficients are given in Fig. 2, from which the values can be read directly.

The above discussion applies to culverts with both top and bottom slabs of identical thickness. As the moments for top slab do not vary greatly from those for bottom slab, it is usually convenient to vary reinforcement, keeping slab thickness the same. Coefficients for culverts with top slab thickness different from bottom slab thickness are available, but it is felt that in such cases moment distribution might be simpler.

Example: Find moments M_1 to M_5 for a culvert with $h = 14$ ft, $l = 9$ ft 2 in., $t_w = 1.0$ ft, and with loading (kips) $W_2 = 10$, $W_3 = 5$, $W_4 = 4$.

Solution: $L = 10$ ft, $H = 15$ ft, $W_1 = 2 \times 15 \times 10/12 \times 0.15 = 4$ kips (approx.) $K = 2.6$, $A = .46$, $B = 4.4$, $C = 3.6$. Substituting these values into Eqs. 1 through 5 gives:

$M_1 = -9.7$ kip-ft
$M_2 = -12.1$ kip-ft
$M_3 = 2.8$ kip-ft
$M_4 = 5.4$ kip-ft
$M_5 = 2.8$ kip-ft

It may be noted that the above calculations are only up to first significant figure after decimal point. ∇

References

[1] Reinforced Concrete Designer's Handbook, Charles E. Reynolds, sixth edition 1961, Concrete Publications, Ltd., London, Table No. 99, pp. 321.

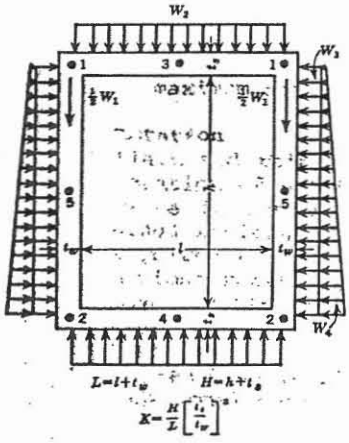

FIG. 1. Typical box culvert section.

FIG. 2. Variation in coefficients used in simplified moment equations.

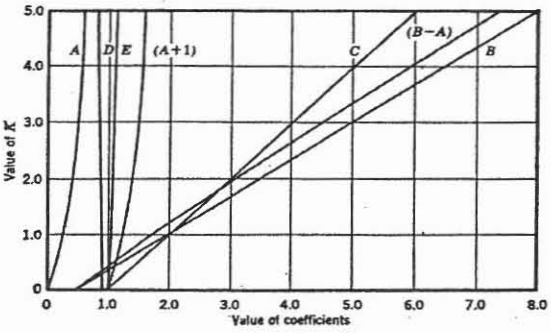

JACOBS CIVIL INC.

PROJECT:	83rd Avenue / Pinnacle Peak Rd Drainage Improvements	JOB NO: W7X74300	NO:
SUBJECT:	Storm Drain Manhole Reinforcement	DESIGNED BY MJR	CHECK BY: OAD
	Minimum W:H aspect Ratio (Example: Manhole @ Station 326+40)	DATE: 28-Nov-05	SHEET: OF

METHOD:

"Moments in Buried Box Culverts", P. C. Dave, A.M. ASCE, Civil Engineering-ASCE, 1967 (Attached)

GEOMETRY			LOADS			
l:	8.16667	ft.	W_1:	2.52083	kips	- Total weight of two walls
h:	8.33333	ft.	W_2:	3.3	kips	- Total uniform vertical load from slab, fill & surcharge
t_w:	0.91667	ft.	W_3:	1.1	kips	- Total uniform lateral load from soil & surcharge
t_s:	0.83	ft.	W_4:	2.52	kips	- Total lateral triangular load from soil
K_0:	0.5	Coefficient of lateral soil pressure at rest				
Fill Height:	2	ft.				
L =	9.08333		A =	0.20		
H =	9.16667		B =	1.6		
K =	0.8		C =	1.8		

	ASD		LFD	
M_1 =	-2.3	ft-kips	-3.0	ft-kips
M_2 =	-4.0	ft-kips	-5.2	ft-kips
M_3 =	1.4	ft-kips	1.9	ft-kips
M_4 =	2.6	ft-kips	3.4	ft-kips
M_5 =	-0.6	ft-kips	-0.8	ft-kips

INTERPOLATION OF MOMENTS AT HAUNCH/SLAB INTERFACE

TOP SLAB:

Haunch: 0 inches

Distance Ratio: 0.101 (CL Wall to End Haunch : CL Wall to Midspan)

Moment @ End Haunch: -1.94 ft-kips

BOTTOM SLAB:

Haunch: 0 inches

Distance Ratio: 0.101 (CL Wall to End Haunch : CL Wall to Midspan)

Moment @ End Haunch: -3.34 ft-kips

NOTE: Add 3.01 ft-k to top slab moment for direct wheel load on shallow structure.

FLEXURE CHECK

CONSTANTS (from computations):

Design width, b :	12	in.
Young's Modulus (concrete), E_c :	485,592	ksf
Young's Modulus (steel), E_s :	4,176,000	ksf
Modular ratio, n :	8	
Flexure reduction factor, $\phi_{fl.}$:	0.9	
Shear reduction factor, $\phi_{sh.}$:	0.85	
Wearing thickness (integral) :	0	in.

Material Stresses

Steel			Concrete		
f_s :	24,000	psi	f_c :	1,400	psi
f_y :	60,000	psi	f'_c :	3,500	psi
			f_r :	444	psi

FLEXURE	SECTION	SECTION	SECTION	SECTION	SECTION
	M1 - Top Corner	M2 - Bottom Corner	M3 - Top Slab	M4 - Bottom Slab	M5 - Walls
M_{max}	1.9 ft-kips	3.3 ft-kips	4.5 ft-kips	2.6 ft-kips	0.6 ft-kips
TRY	# 5 @ 12.0	# 5 @ 12.0	# 5 @ 12.00	# 5 @ 12.00	# 5 @ 12.0
Dia.	0.625 in.	0.625 in.	0.625 in.	0.625 in.	0.625 in.
D^+	10.0 in.	10.0 in.	10.0 in.	10.0 in.	11.0 in.
D	10.0 in.	10.0 in.	10.0 in.	10.0 in.	11.0 in.
A_g	120.0 sq.in.	120.0 sq.in.	120.0 sq.in.	120.0 sq.in.	132.0 sq.in.
cover	2.0 in.	3.0 in.	1.0 in.	2.0 in.	1.5 in.
d	7.69 in.	6.69 in.	8.69 in.	7.69 in.	9.19 in.
A_s	0.310 sq.in.	0.310 sq.in.	0.310 sq.in.	0.310 sq.in.	0.310 sq.in.
p	0.00336	0.00386	0.00297	0.00336	0.00281
k	0.2065	0.2196	0.1956	0.2065	0.1908
j	0.9312	0.9268	0.9348	0.9312	0.9364
f_s	10481 psi	20852 psi	21241 psi	14164 psi	2641 psi
f_c	341 psi	734 psi	646 psi	461 psi	78 psi
a	0.521 in.	0.521 in.	0.521 in.	0.521 in.	0.521 in.
ϕM_n	10.4 ft-kips	9.0 ft-kips	11.8 ft-kips	10.4 ft-kips	12.5 ft-kips
M_{cr}	7.4 ft-kips	7.4 ft-kips	7.4 ft-kips	7.4 ft-kips	8.9 ft-kips
$1.2M_{cr}$	8.87 ft-kips	8.87 ft-kips	8.87 ft-kips	8.87 ft-kips	10.74 ft-kips
A_s(min)	0.262 sq.in	0.301 sq.in	0.232 sq.in	0.262 sq.in	0.265 sq.in
CHECK:					
Steel:	44%	87%	89%	59%	11%
Concrete:	24%	52%	46%	33%	6%

NOTE: Cover should NOT include the integral wearing thickness.
D+ is the total depth of concrete, including the integral wearing thickness.
D is the structural depth, which excludes the integral wearing thickness.

SHALLOW 10 x 10

DTL [redacted]

06 ✓
07 ✓
14 ✓
15 ✓
17 ✓
24 ✓

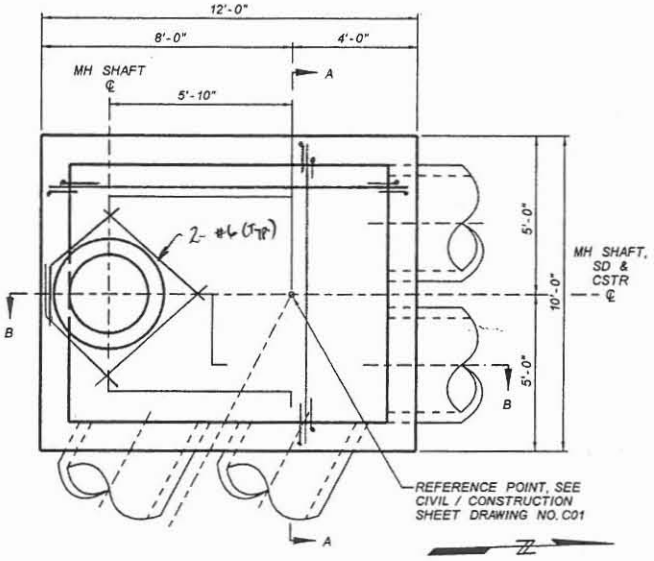

PLAN
CONCRETE VAULT
83RD AVENUE STA 100+00
NTS

Check general note:
f'_c = 3,500 psi (min)

MAKE THESE BARS ϕ+12" LONG TYPICALLY.

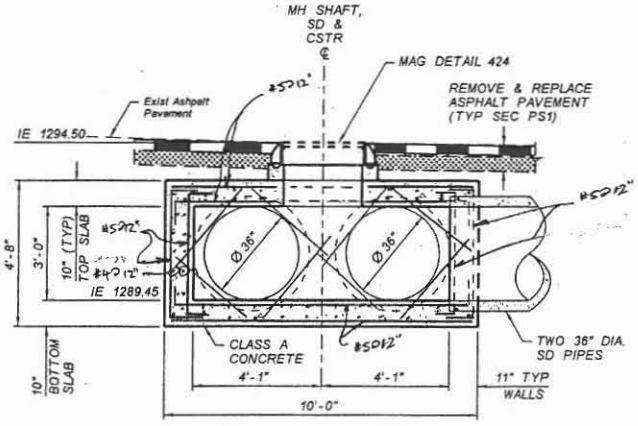

SECTION A-A
CONCRETE VAULT
83RD AVENUE STA 100+00
NTS

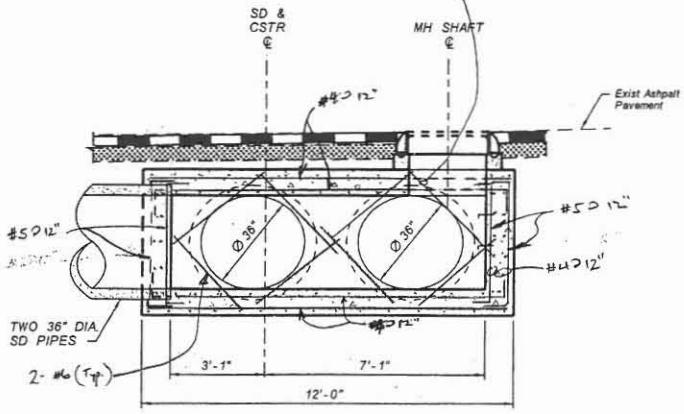

SECTION B-B
CONCRETE VAULT
83RD AVENUE STA 100+00
NTS

NO.	REVISION	BY	DATE
3			
2			
1			

FLOOD CONTROL DISTRICT OF MARICOPA COUNTY
ENGINEERING DIVISION

83RD AVENUE / PINNACLE PEAK ROAD
DRAINAGE IMPROVEMENTS
PCN 450.02.33 FCD CONTRACT NO. 2003C060

60%
PRELIMINARY NOT FOR CONSTRUCTION

	BY	DATE
DESIGNED	O. OLIDEN	11/05
DRAWN	A. JOHNSON	11/05
CHECKED	A.J.R.	11/05

JACOBS CIVIL INC.

DRAWING NO. D02 | DTL D2 CONCRETE VAULT | SHEET 01

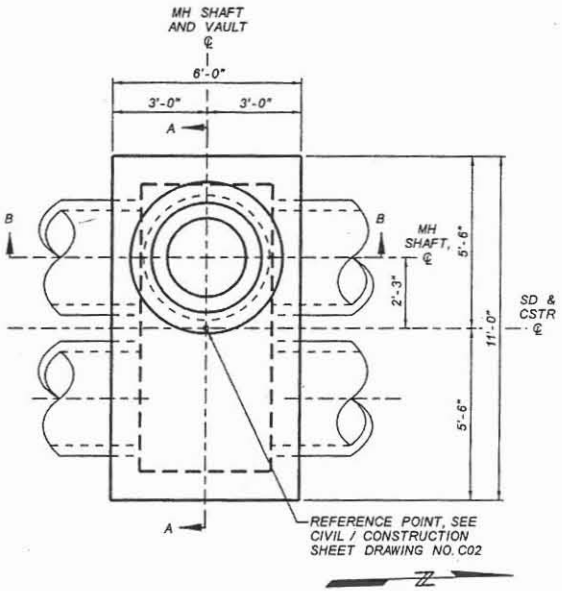

PLAN
STORM DRAIN MANHOLE BASE
83RD AVENUE STA 102+00
NTS

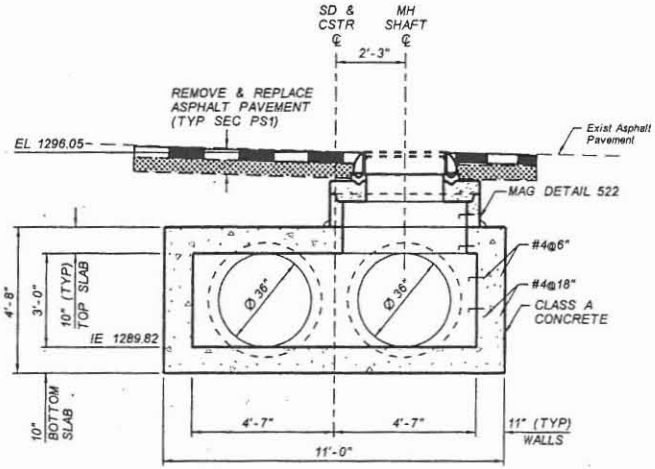

SECTION A-A
STORM DRAIN MANHOLE BASE
83RD AVENUE STA 102+00
NTS

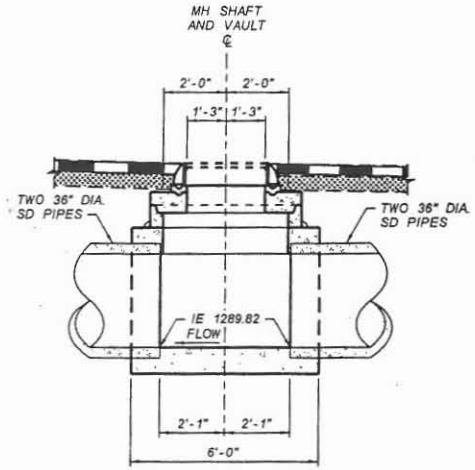

SECTION B-B
STORM DRAIN MANHOLE BASE
83RD AVENUE STA 102+00
NTS

NO.	REVISION	BY	DATE
3			
2			
1			

FLOOD CONTROL DISTRICT
OF MARICOPA COUNTY
ENGINEERING DIVISION

83RD AVENUE / PINNACLE PEAK ROAD
DRAINAGE IMPROVEMENTS
PCN 450.02.33 FCD CONTRACT NO. 2003C060

60%
PRELIMINARY
NOT FOR
CONSTRUCTION

	BY	DATE
DESIGNED	O. OLIDEN	11/05
DRAWN	A. JOHNSON	11/05
CHECKED	MJR	11/05

JACOBS CIVIL INC.

DRAWING NO. D03 | DTL 03 STORM DRAIN MANHOLE | SHEET OF

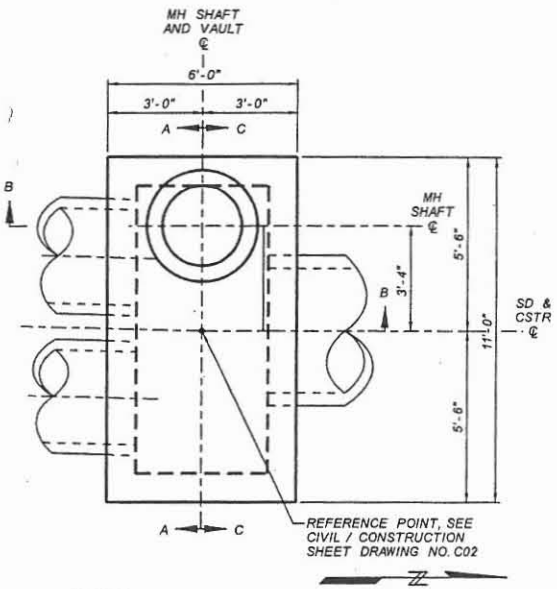

PLAN
STORM DRAIN MANHOLE BASE
83RD AVENUE STA 104+75
NTS

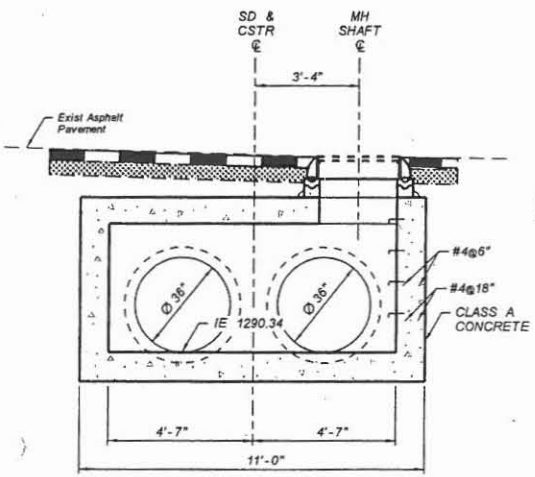

SECTION A-A
STORM DRAIN MANHOLE BASE
83RD AVENUE STA 104+75
NTS

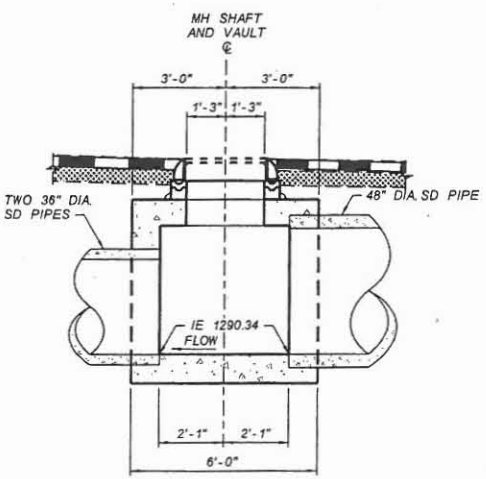

SECTION B-B
STORM DRAIN MANHOLE BASE
83RD AVENUE STA 104+75
NTS

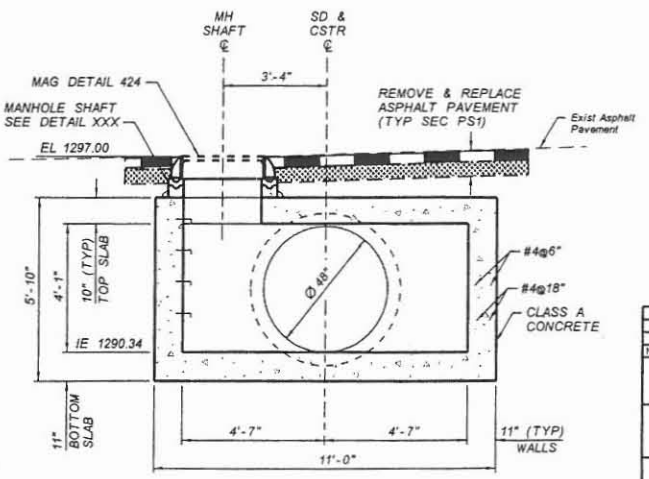

SECTION C-C
STORM DRAIN MANHOLE BASE
83RD AVENUE STA 104+75
NTS

NO.	REVISION	BY	DATE
3			
2			
1			

FLOOD CONTROL DISTRICT OF MARICOPA COUNTY
ENGINEERING DIVISION

83RD AVENUE / PINNACLE PEAK ROAD
DRAINAGE IMPROVEMENTS
PCN 450.02.33 FCD CONTRACT NO. 2003C060

60%
PRELIMINARY NOT FOR CONSTRUCTION

	BY	DATE
DESIGNED	O. OLIDEN	11/05
DRAWN	A. JOHNSON	11/05
CHECKED	MJK	11/05

JACOBS CIVIL INC.

DRAWING NO. D04 | DTL 04 STORM DRAIN MANHOLE | SHEET OF

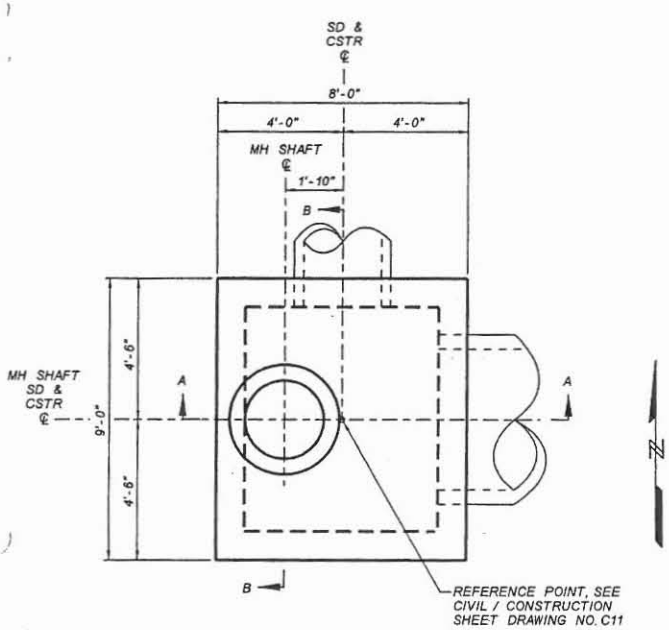

PLAN
STORM DRAIN MANHOLE BASE
PINNACLE PEAK ROAD STA 199+60
NTS

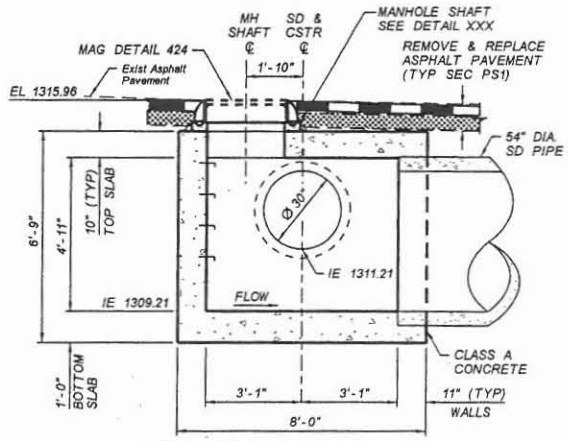

SECTION A-A
STORM DRAIN MANHOLE BASE
PINNACLE PEAK ROAD STA 199+60
NTS

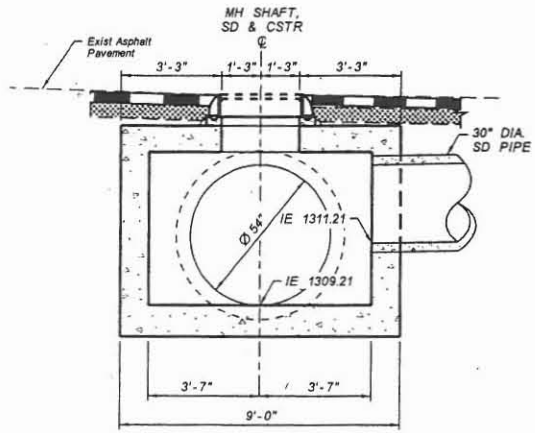

SECTION B-B
STORM DRAIN MANHOLE BASE
PINNACLE PEAK ROAD STA 199+60
NTS

NO.	REVISION	BY	DATE
3			
2			
1			

FLOOD CONTROL DISTRICT OF MARICOPA COUNTY
ENGINEERING DIVISION

83RD AVENUE / PINNACLE PEAK ROAD
DRAINAGE IMPROVEMENTS
PCN 450.02.33 FCD CONTRACT NO. 2003C060

60%
PRELIMINARY NOT FOR CONSTRUCTION

	BY	DATE
DESIGNED	O. OLIDEN	11/05
DRAWN	A. JOHNSON	11/05
CHECKED	RJG	11/05

JACOBS CIVIL INC.

DRAWING NO. D06 | DTL 06 STORM DRAIN MANHOLE | SHEET OF

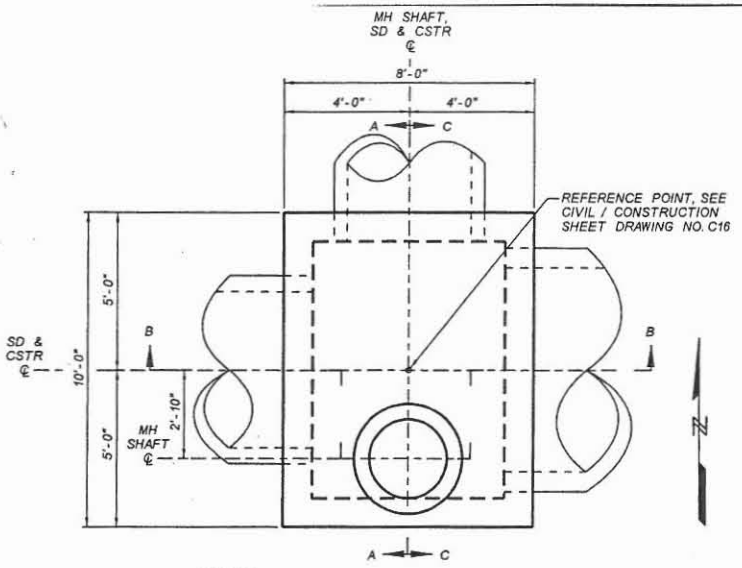

PLAN
STORM DRAIN MANHOLE BASE
PINNACLE PEAK ROAD STA 226+64
NTS

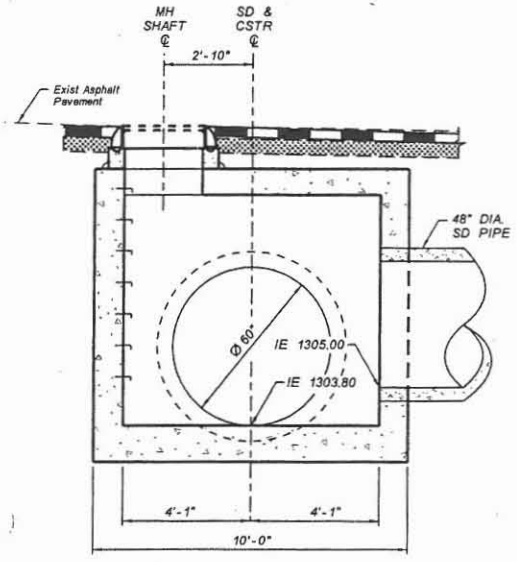

SECTION A-A
STORM DRAIN MANHOLE BASE
PINNACLE PEAK ROAD STA 226+64
NTS

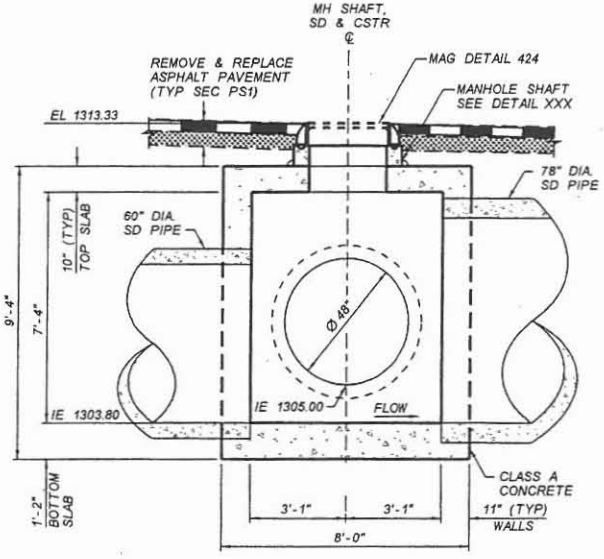

SECTION B-B
STORM DRAIN MANHOLE BASE
PINNACLE PEAK ROAD STA 226+64
NTS

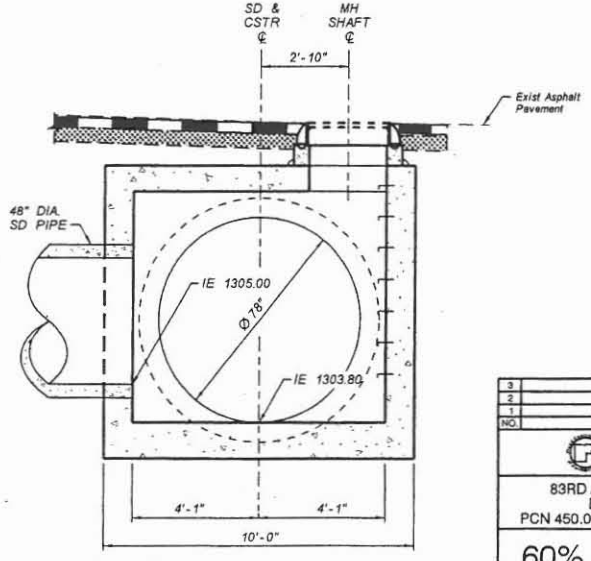

SECTION C-C
STORM DRAIN MANHOLE BASE
PINNACLE PEAK ROAD STA 226+64
NTS

NO.	REVISION	BY	DATE
3			
2			
1			

FLOOD CONTROL DISTRICT OF MARICOPA COUNTY
ENGINEERING DIVISION

83RD AVENUE / PINNACLE PEAK ROAD
DRAINAGE IMPROVEMENTS
PCN 450.02.33 FCD CONTRACT NO. 2003C060

60%
PRELIMINARY NOT FOR CONSTRUCTION

	BY	DATE
DESIGNED	O. OLIDEN	11/05
DRAWN	A. JOHNSON	11/05
CHECKED	MJR	11/05

JACOBS CIVIL INC.

DRAWING NO. D07 | DTL 07 STORM DRAIN MANHOLE | SHEET OF

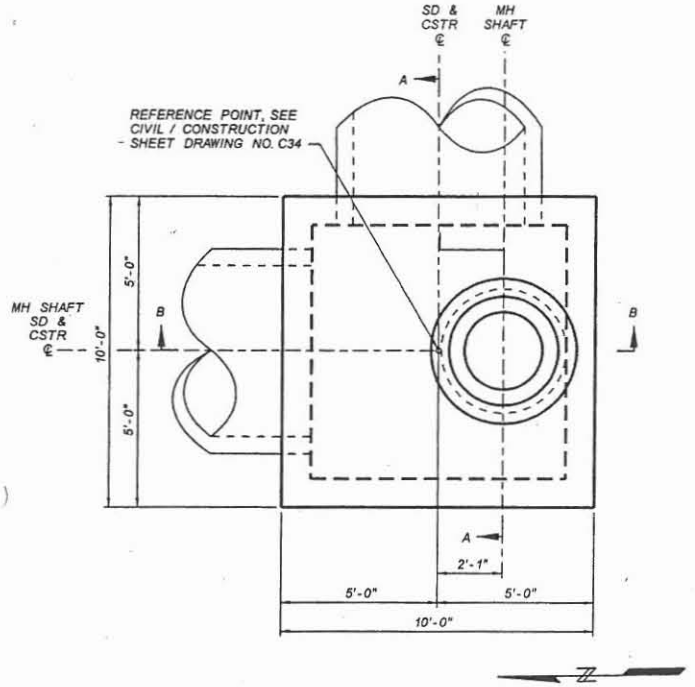

PLAN
STORM DRAIN MANHOLE BASE
89TH AVENUE STA 416+56
NTS

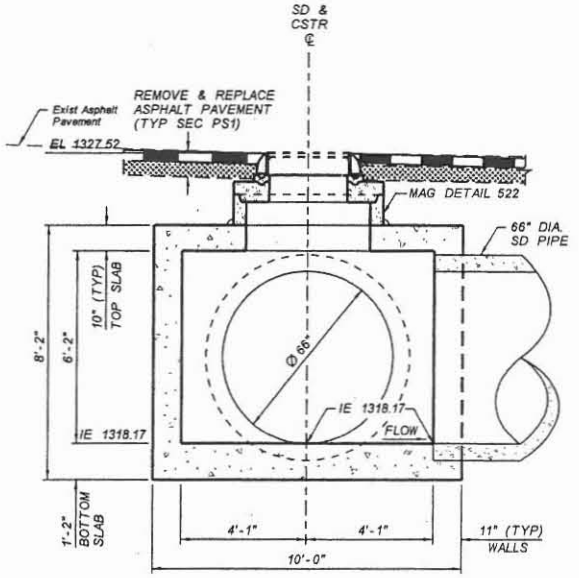

SECTION A-A
STORM DRAIN MANHOLE BASE
89TH AVENUE STA 416+56
NTS

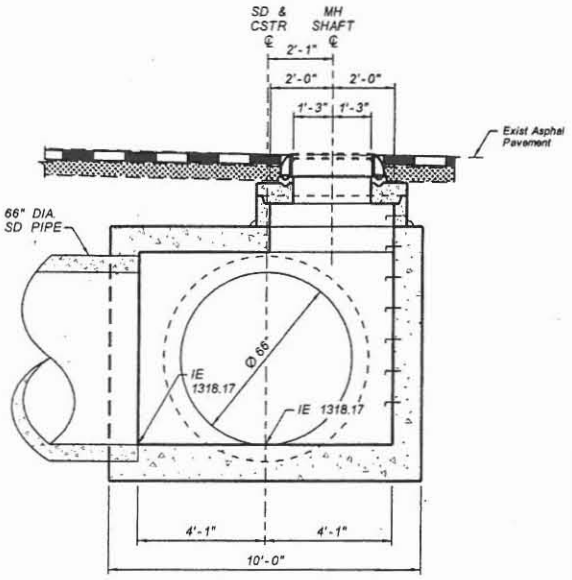

SECTION B-B
STORM DRAIN MANHOLE BASE
89TH AVENUE STA 416+56
NTS

NO.	REVISION	BY	DATE
3			
2			
1			

FLOOD CONTROL DISTRICT OF MARICOPA COUNTY
ENGINEERING DIVISION

83RD AVENUE / PINNACLE PEAK ROAD
DRAINAGE IMPROVEMENTS
PCN 450.02.33 FCD CONTRACT NO. 2003C060

60%
PRELIMINARY NOT FOR CONSTRUCTION

	BY	DATE
DESIGNED	O. OLIDEN	11/05
DRAWN	A. JOHNSON	11/05
CHECKED	MYR	11/05

JACOBS CIVIL INC.

DRAWING NO. D14 | DTL 14 STORM DRAIN MANHOLE | SHEET OF

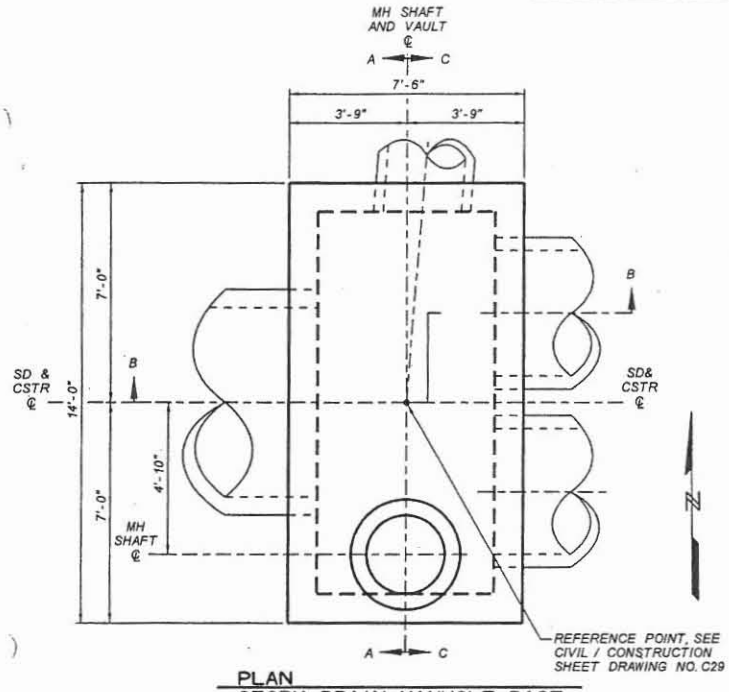

PLAN
STORM DRAIN MANHOLE BASE
CALLE LEJOS STA 336+55
NTS

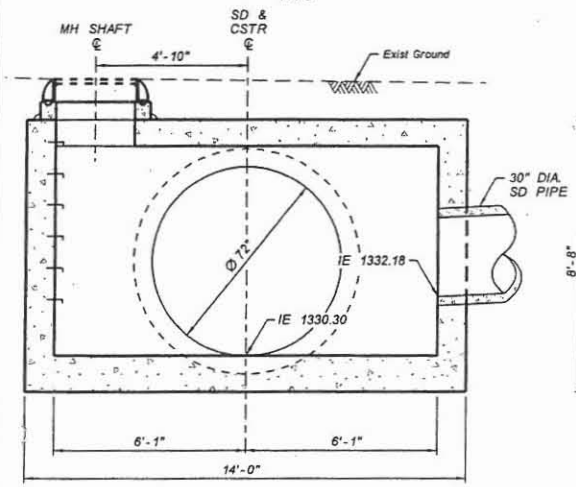

SECTION A-A
STORM DRAIN MANHOLE BASE
CALLE LEJOS STA 336+55
NTS

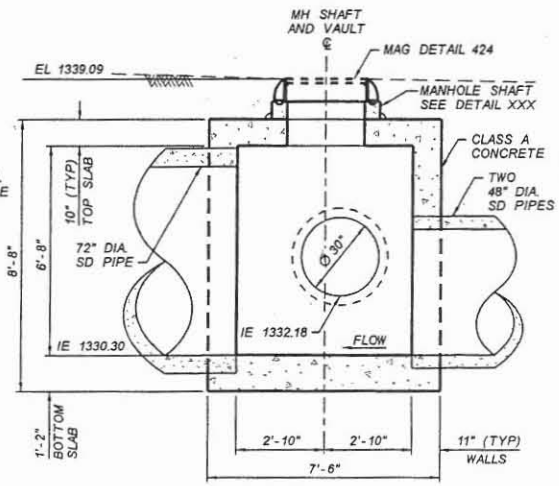

SECTION B-B
STORM DRAIN MANHOLE BASE
CALLE LEJOS STA 336+55
NTS

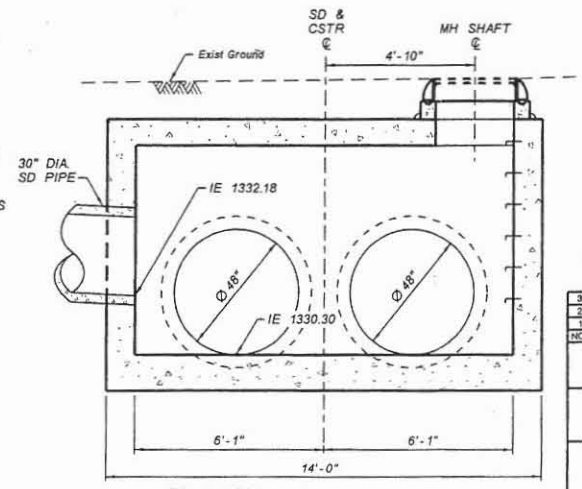

SECTION C-C
STORM DRAIN MANHOLE BASE
CALLE LEJOS STA 336+55
NTS

NO.	REVISION	BY	DATE
3			
2			
1			

FLOOD CONTROL DISTRICT OF MARICOPA COUNTY
ENGINEERING DIVISION

83RD AVENUE / PINNACLE PEAK ROAD
DRAINAGE IMPROVEMENTS
PCN 450.02.33 FCD CONTRACT NO. 2003C060

60%
PRELIMINARY NOT FOR CONSTRUCTION

	BY	DATE
DESIGNED	D. OLIDEN	11/05
DRAWN	A. JOHNSON	11/05
CHECKED	AJL	11/05

JACOBS CIVIL INC.

DRAWING NO. D15 | DTL 15 STORM DRAIN MANHOLE | SHEET OF

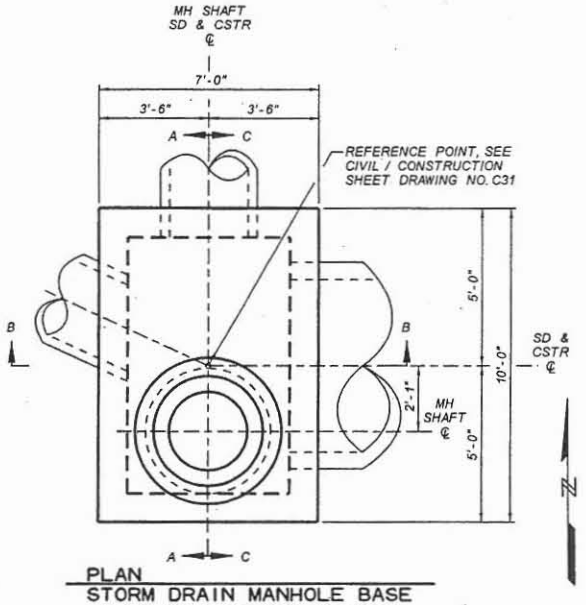

PLAN
STORM DRAIN MANHOLE BASE
CIELO GRANDE STA 400+30
NTS

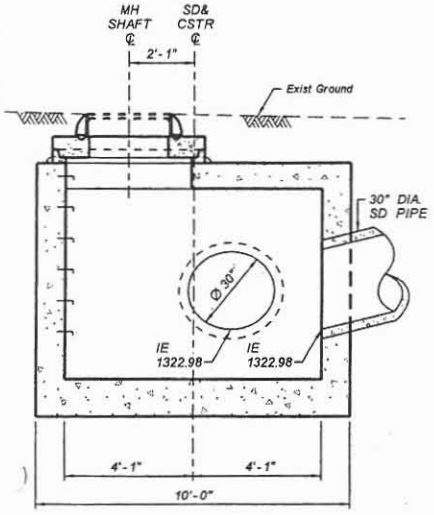

SECTION A-A
STORM DRAIN MANHOLE BASE
CIELO GRANDE STA 400+30
NTS

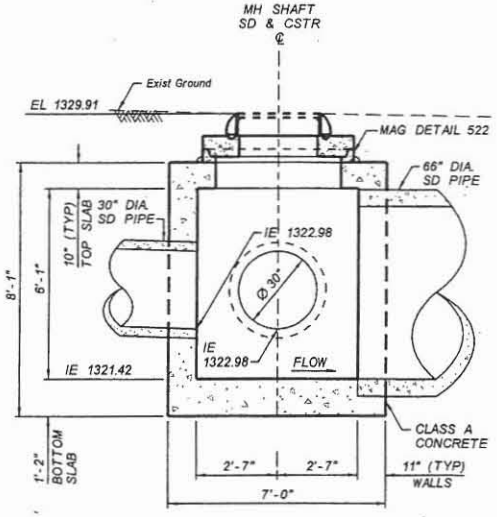

SECTION B-B
STORM DRAIN MANHOLE BASE
CIELO GRANDE STA 400+30
NTS

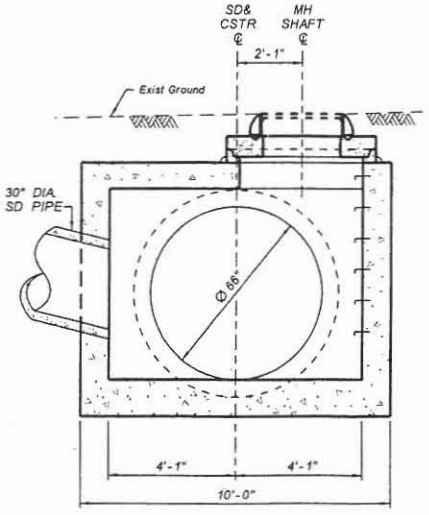

SECTION C-C
STORM DRAIN MANHOLE BASE
CIELO GRANDE STA 400+30
NTS

NO.	REVISION	BY	DATE
3			
2			
1			

FLOOD CONTROL DISTRICT OF MARICOPA COUNTY
ENGINEERING DIVISION

83RD AVENUE / PINNACLE PEAK ROAD
DRAINAGE IMPROVEMENTS
PCN 450.02.33 FCD CONTRACT NO. 2003C060

60%
PRELIMINARY NOT FOR CONSTRUCTION

	BY	DATE
DESIGNED	D. OLIDEN	11/05
DRAWN	A. JOHNSON	11/05
CHECKED	RJR	11/05

JACOBS CIVIL INC.

DRAWING NO. D17 | DTL 17 STORM DRAIN MANHOLE | SHEET OF

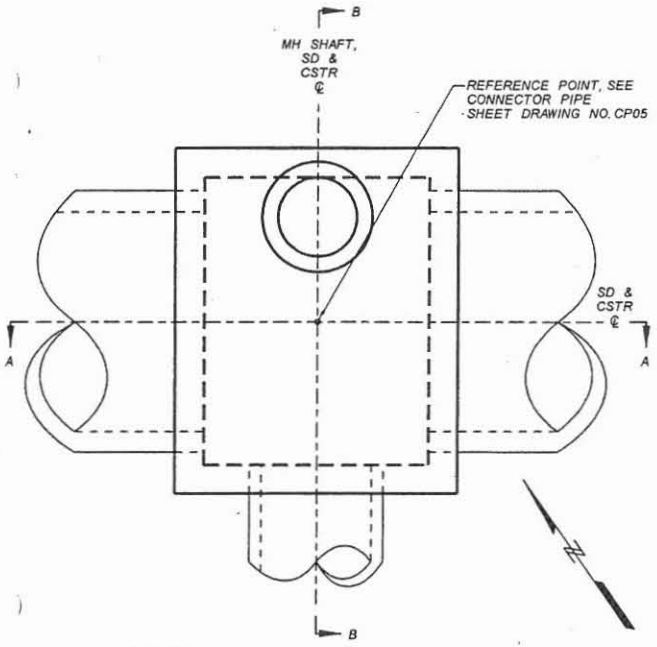

PLAN
STORM DRAIN MANHOLE BASE
87TH AVENUE BASIN STA 61+37
NTS

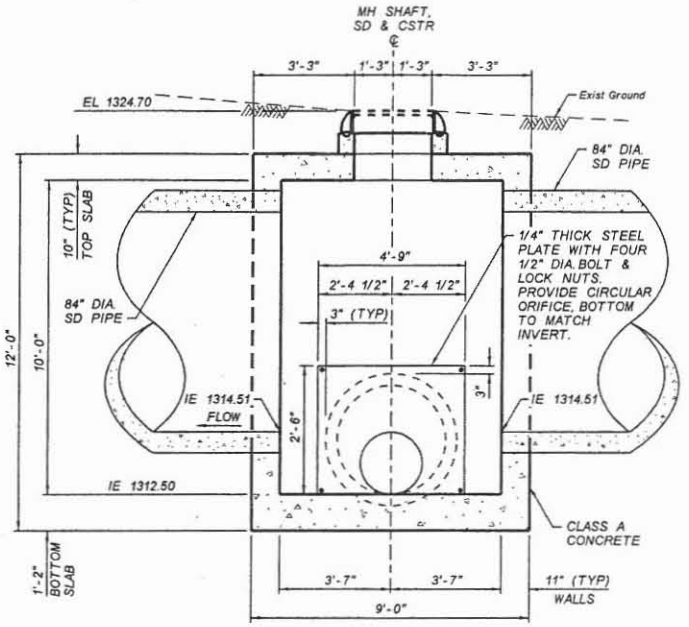

SECTION A-A
STORM DRAIN MANHOLE BASE
87TH AVENUE BASIN STA 61+37
NTS

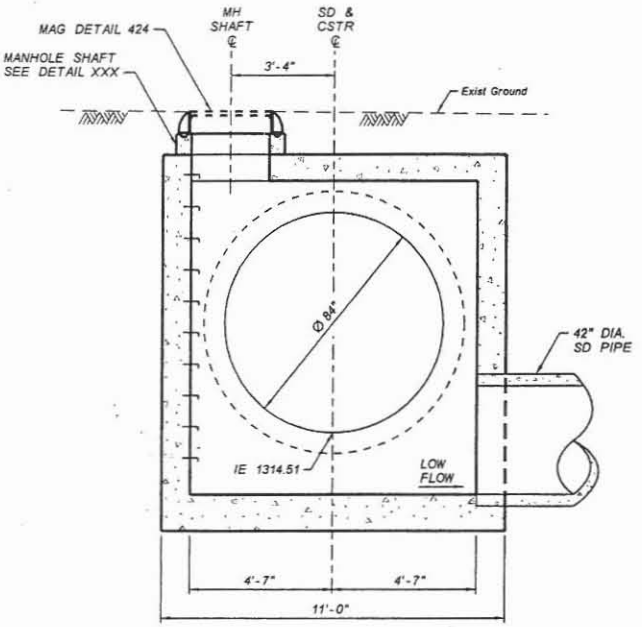

SECTION B-B
STORM DRAIN MANHOLE BASE
87TH AVENUE BASIN STA 61+37
NTS

NO.	REVISION	BY	DATE
3			
2			
1			

FLOOD CONTROL DISTRICT OF MARICOPA COUNTY
ENGINEERING DIVISION

83RD AVENUE / PINNACLE PEAK ROAD
DRAINAGE IMPROVEMENTS
PCN 450.02.33 FCD CONTRACT NO. 2003C060

60%
PRELIMINARY NOT FOR CONSTRUCTION

	BY	DATE
DESIGNED	D. OLIDEN	11/05
DRAWN	A. JOHNSON	11/05
CHECKED		11/05

JACOBS CIVIL INC.

DRAWING NO. D24 | DTL 24 STORM DRAIN MANHOLE | SHEET OF

JACOBS CIVIL INC.

PROJECT:	83rd Avenue / Pinnacle Peak Rd Drainage Improvements	JOB NO: W7X74300	NO:
SUBJECT:	Storm Drain Manhole Reinforcement	DESIGNED BY MJR	CHECK BY: DAD
	Minimum W:H aspect Ratio (Example: Manhole @ Station 326+40)	DATE: 28-Nov-05	SHEET: OF

METHOD:

"Moments in Buried Box Culverts", P. C. Dave, A.M. ASCE, Civil Engineering-ASCE, 1967 (Attached)

GEOMETRY			LOADS			
l:	8.16667	ft.	W_1:	2.52083	kips	- Total weight of two walls
h:	8.33333	ft.	W_2:	7.7	kips	- Total uniform vertical load from slab, fill & surcharge
t_w:	0.91667	ft.	W_3:	3.3	kips	- Total uniform lateral load from soil & surcharge
t_s:	0.83	ft.	W_4:	2.52	kips	- Total lateral triangular load from soil
K_0:	0.5	Coefficient of lateral soil pressure at rest				
Fill Height:	6	ft.				

L =	9.08333	A =	0.20
H =	9.16667	B =	1.6
K =	0.8	C =	1.8

	ASD		LFD	
M_1 =	-4.9	ft-kips	-6.4	ft-kips
M_2 =	-6.6	ft-kips	-8.6	ft-kips
M_3 =	3.8	ft-kips	4.9	ft-kips
M_4 =	5.0	ft-kips	6.5	ft-kips
M_5 =	-1.6	ft-kips	-2.1	ft-kips

INTERPOLATION OF MOMENTS AT HAUNCH/SLAB INTERFACE

TOP SLAB:

Haunch: 0 inches

Distance Ratio: 0.101 (CL Wall to End Haunch : CL Wall to Midspan)

Moment @ End Haunch: -4.04 ft-kips

BOTTOM SLAB:

Haunch: 0 inches

Distance Ratio: 0.101 (CL Wall to End Haunch : CL Wall to Midspan)

Moment @ End Haunch: -5.44 ft-kips

FLEXURE CHECK

CONSTANTS (from computations):

Design width, b :	12	in.
Young's Modulus (concrete), E_c :	485,592	ksf
Young's Modulus (steel), E_s :	4,176,000	ksf
Modular ratio, n :	8	
Flexure reduction factor, $\phi_{fl.}$:	0.9	
Shear reduction factor, $\phi_{sh.}$:	0.85	
Wearing thickness (integral) :	0	in.

Material Stresses

Steel			Concrete		
f_s :	24,000	psi	f_c :	1,400	psi
f_y :	60,000	psi	f'_c :	3,500	psi
			f_r :	444	psi

FLEXURE	SECTION	SECTION	SECTION	SECTION	SECTION
	M1 - Top Corner	M2 - Bottom Corner	M3 - Top Slab	M4 - Bottom Slab	M5 - Walls
M_{max}	4.0 ft-kips	5.4 ft-kips	3.8 ft-kips	5.0 ft-kips	1.6 ft-kips
TRY	# 5 @ 12.0	# 5 @ 8.0	# 5 @ 12.00	# 5 @ 8.00	# 5 @ 12.0
Dia.	0.625 in.	0.625 in.	0.625 in.	0.625 in.	0.625 in.
D^+	10.0 in.	10.0 in.	10.0 in.	10.0 in.	11.0 in.
D	10.0 in.	10.0 in.	10.0 in.	10.0 in.	11.0 in.
A_g	120.0 sq.in.	120.0 sq.in.	120.0 sq.in.	120.0 sq.in.	132.0 sq.in.
cover	2.0 in.	3.0 in.	1.0 in.	2.0 in.	1.5 in.
d	7.69 in.	6.69 in.	8.69 in.	7.69 in.	9.19 in.
A_s	0.310 sq.in.	0.465 sq.in.	0.310 sq.in.	0.465 sq.in.	0.310 sq.in.
p	0.00336	0.00579	0.00297	0.00504	0.00281
k	0.2065	0.2616	0.1956	0.2465	0.1908
j	0.9312	0.9128	0.9348	0.9178	0.9364
f_s	21850 psi	23002 psi	18089 psi	18170 psi	7306 psi
f_c	711 psi	1019 psi	550 psi	743 psi	215 psi
a	0.521 in.	0.782 in.	0.521 in.	0.782 in.	0.521 in.
ϕM_n	10.4 ft-kips	13.2 ft-kips	11.8 ft-kips	15.3 ft-kips	12.5 ft-kips
M_{cr}	7.4 ft-kips	7.4 ft-kips	7.4 ft-kips	7.4 ft-kips	8.9 ft-kips
$1.2M_{cr}$	8.87 ft-kips	8.87 ft-kips	8.87 ft-kips	8.87 ft-kips	10.74 ft-kips
A_s(min)	0.262 sq.in	0.301 sq.in	0.232 sq.in	0.262 sq.in	0.265 sq.in
CHECK:					
Steel:	91%	96%	75%	76%	30%
Concrete:	51%	73%	39%	53%	15%

NOTE: Cover should NOT include the integral wearing thickness.
D+ is the total depth of concrete, including the integral wearing thickness.
D is the structural depth, which excludes the integral wearing thickness.

"– DEEP"

DESP 10 x 10

DTL 05 ✓
09 ✓
18 ✓
19 ✓
23 ✓

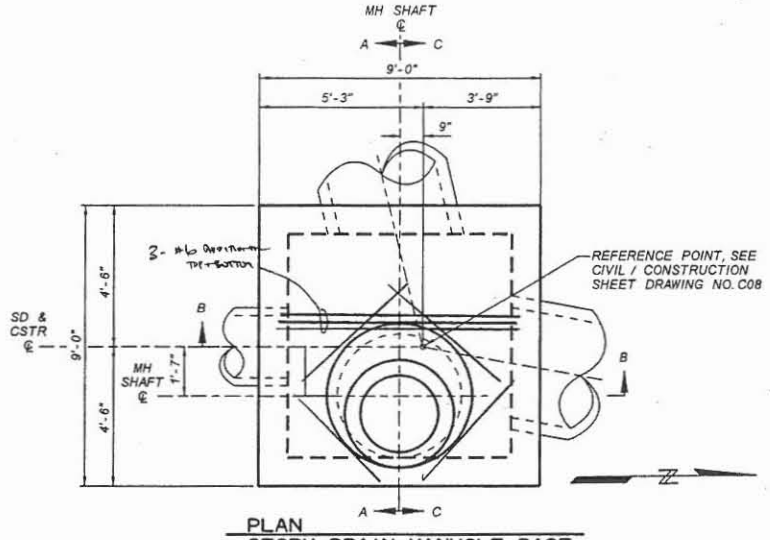

PLAN
STORM DRAIN MANHOLE BASE
83RD AVENUE STA 134+86
NTS

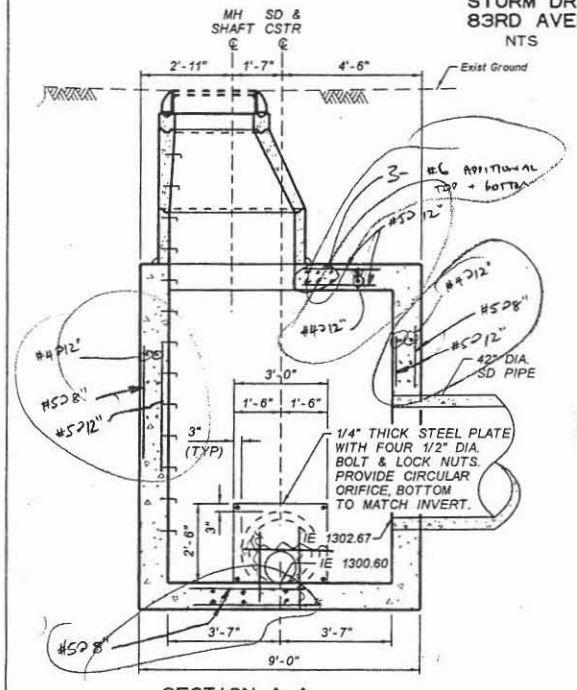

SECTION A-A
STORM DRAIN MANHOLE BASE
83RD AVENUE STA 134+86
NTS

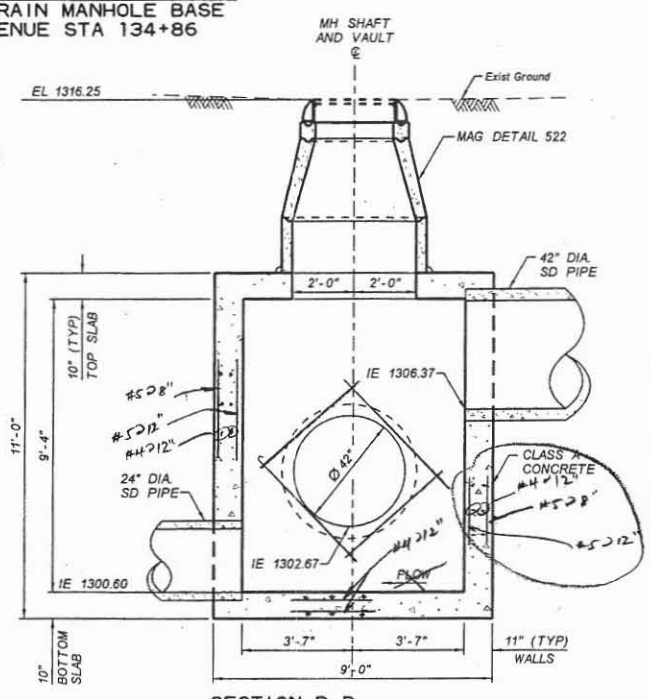

SECTION B-B
STORM DRAIN MANHOLE BASE
83RD AVENUE STA 134+86
NTS

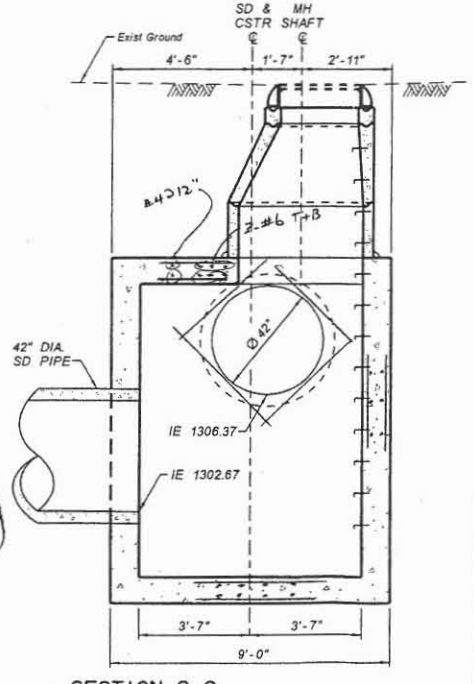

SECTION C-C
STORM DRAIN MANHOLE BASE
83RD AVENUE STA 134+86
NTS

NO.	REVISION	BY	DATE
3			
2			
1			

FLOOD CONTROL DISTRICT OF MARICOPA COUNTY
ENGINEERING DIVISION

83RD AVENUE / PINNACLE PEAK ROAD
DRAINAGE IMPROVEMENTS
PCN 450.02.33 FCD CONTRACT NO. 2003C060

60%
PRELIMINARY NOT FOR CONSTRUCTION

	BY	DATE
DESIGNED	O. OLIDEN	11/05
DRAWN	A. JOHNSON	11/05
CHECKED		11/05

JACOBS CIVIL INC.

DRAWING NO. D05 | DTL 05 STORM DRAIN MANHOLE | SHEET OF

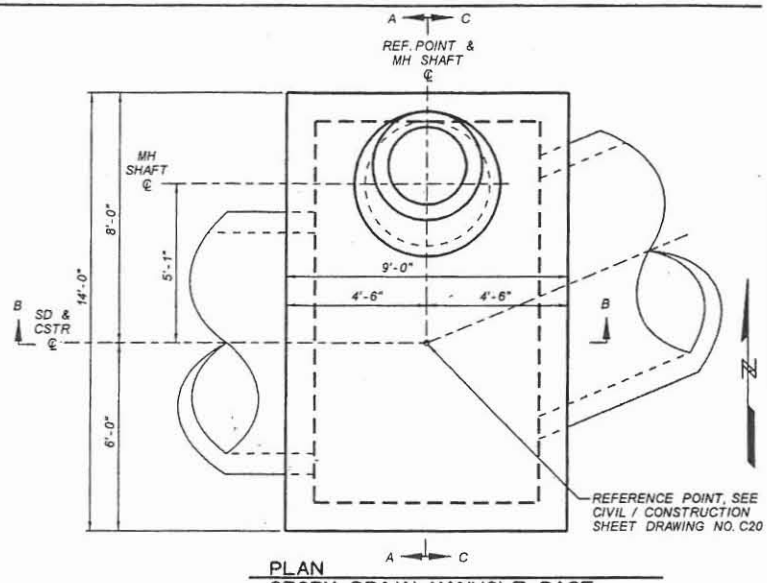

PLAN
STORM DRAIN MANHOLE BASE
PINNACLE PEAK ROAD STA 244+40
NTS

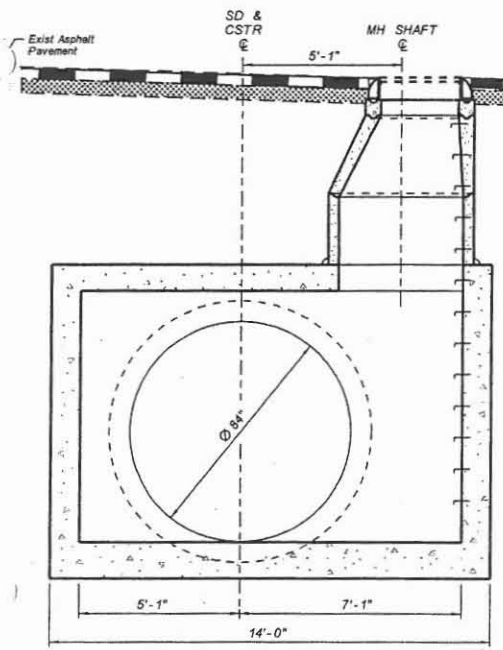

SECTION A-A
STORM DRAIN MANHOLE BASE
PINNACLE PEAK ROAD STA 244+40
NTS

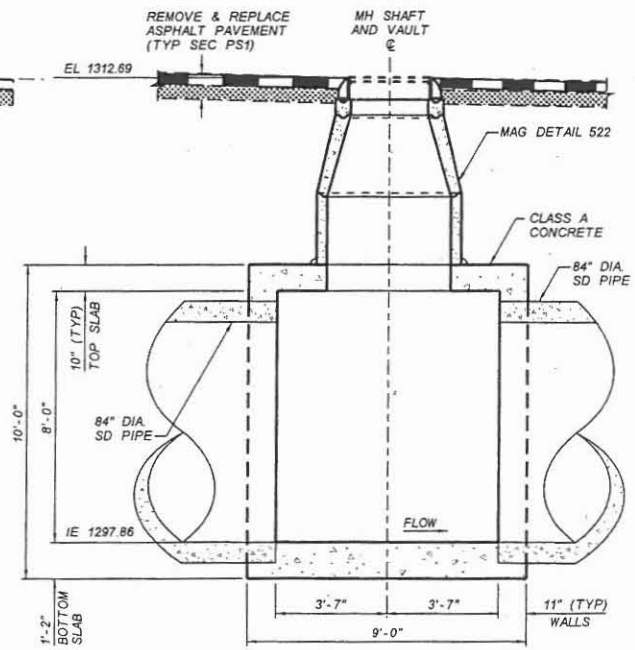

SECTION B-B
STORM DRAIN MANHOLE BASE
PINNACLE PEAK ROAD STA 244+40
NTS

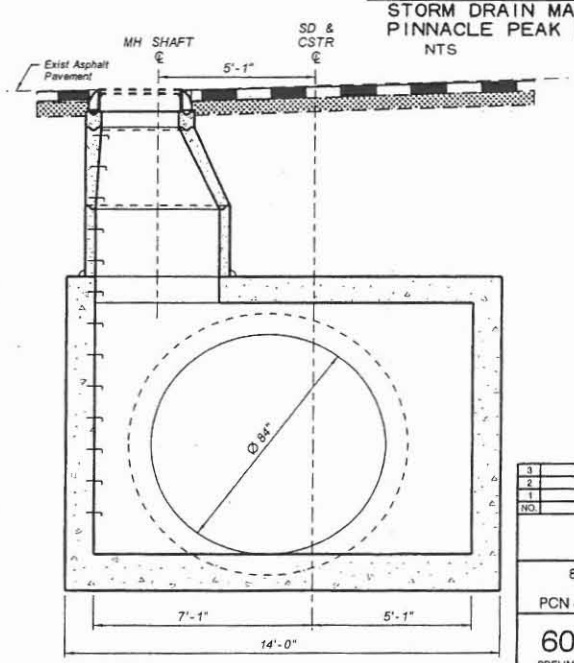

SECTION C-C
STORM DRAIN MANHOLE BASE
PINNACLE PEAK ROAD STA 244+40
NTS

NO.	REVISION	BY	DATE
3			
2			
1			

FLOOD CONTROL DISTRICT OF MARICOPA COUNTY
ENGINEERING DIVISION

83RD AVENUE / PINNACLE PEAK ROAD
DRAINAGE IMPROVEMENTS
PCN 450.02.33 FCD CONTRACT NO. 2003C060

60%
PRELIMINARY
NOT FOR
CONSTRUCTION

	BY	DATE
DESIGNED	O. OUDEN	11/05
DRAWN	A. JOHNSON	11/05
CHECKED	RAR	11/05

JACOBS CIVIL INC.

DRAWING NO. D09 | DTL 09 STORM DRAIN MANHOLE | SHEET OF

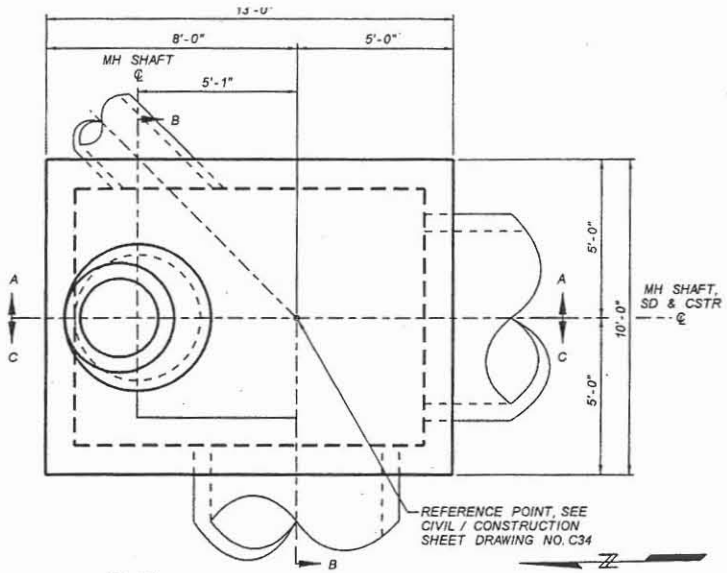

PLAN
STORM DRAIN MANHOLE BASE
89TH AVENUE STA 413+23
NTS

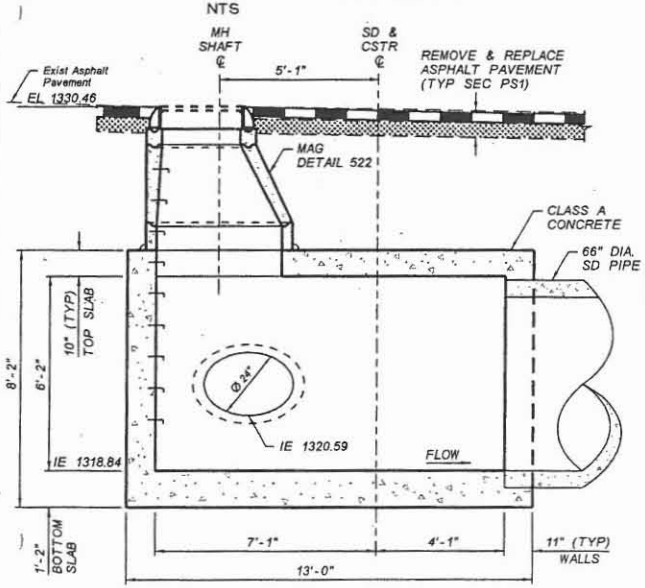

SECTION A-A
STORM DRAIN MANHOLE BASE
89TH AVENUE STA 413+23
NTS

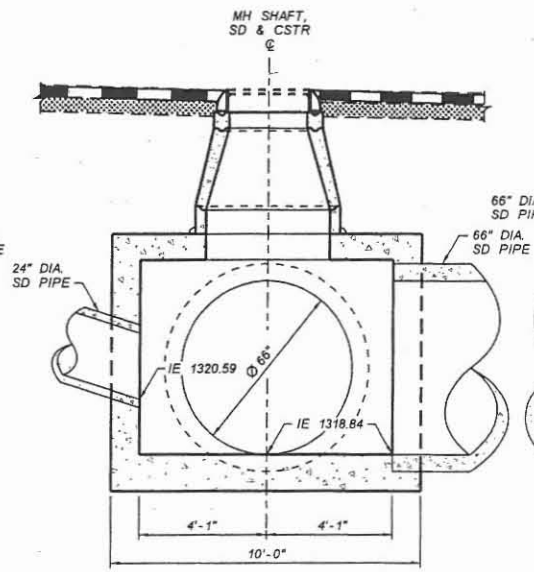

SECTION B-B
STORM DRAIN MANHOLE BASE
89TH AVENUE STA 413+23
NTS

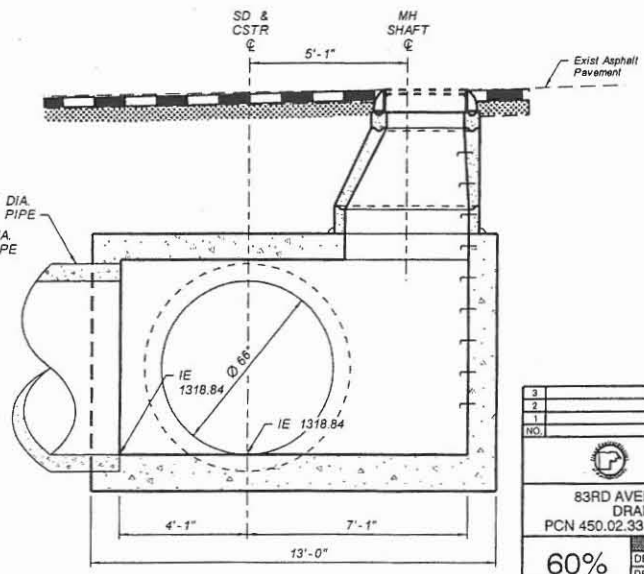

SECTION C-C
STORM DRAIN MANHOLE BASE
89TH AVENUE STA 413+23
NTS

NO.	REVISION	BY	DATE
3			
2			
1			

FLOOD CONTROL DISTRICT OF MARICOPA COUNTY
ENGINEERING DIVISION

83RD AVENUE / PINNACLE PEAK ROAD
DRAINAGE IMPROVEMENTS
PCN 450.02.33 FCD CONTRACT NO. 2003C060

60%
PRELIMINARY NOT FOR CONSTRUCTION

	BY	DATE
DESIGNED	O. OLIDEN	11/05
DRAWN	A. JOHNSON	11/05
CHECKED	AJK	11/05

JACOBS CIVIL INC.

DRAWING NO. D18 | DTL 18 STORM DRAIN MANHOLE | SHEET OF

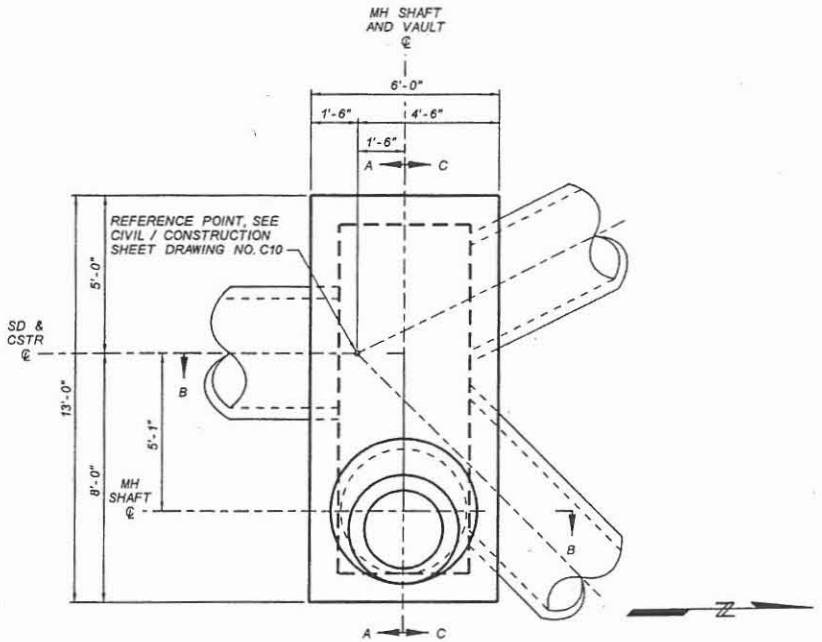

PLAN
STORM DRAIN MANHOLE BASE
83RD AVENUE STA 142+46
NTS

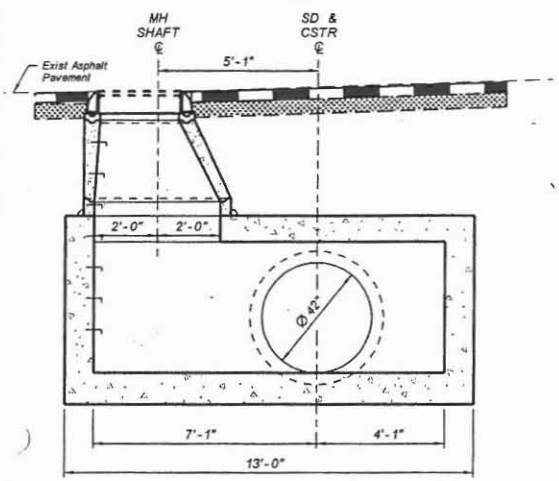

SECTION A-A
STORM DRAIN MANHOLE BASE
83RD AVENUE STA 142+46
NTS

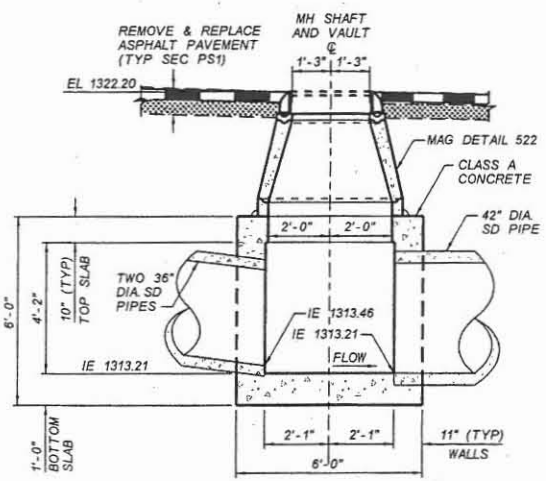

SECTION B-B
STORM DRAIN MANHOLE BASE
83RD AVENUE STA 142+46
NTS

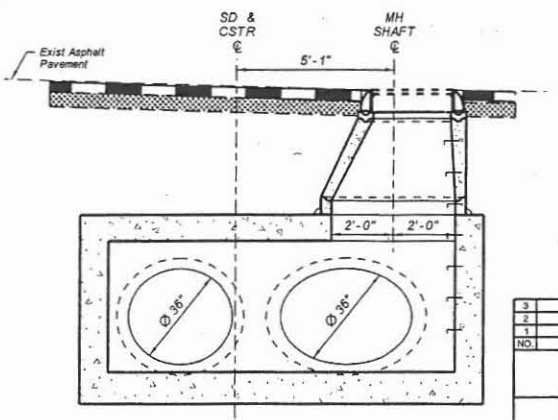

SECTION C-C
STORM DRAIN MANHOLE BASE
83RD AVENUE STA 142+46
NTS

NO.	REVISION	BY	DATE
3			
2			
1			

FLOOD CONTROL DISTRICT OF MARICOPA COUNTY
ENGINEERING DIVISION

83RD AVENUE / PINNACLE PEAK ROAD
DRAINAGE IMPROVEMENTS
PCN 450.02.33 FCD CONTRACT NO. 2003C060

60%
PRELIMINARY NOT FOR CONSTRUCTION

	BY	DATE
DESIGNED	D. OLIDEN	11/05
DRAWN	A. JOHNSON	11/05
CHECKED	RJR	11/05

JACOBS CIVIL INC.

DRAWING NO. D19 | DTL 19 STORM DRAIN MANHOLE | SHEET OF

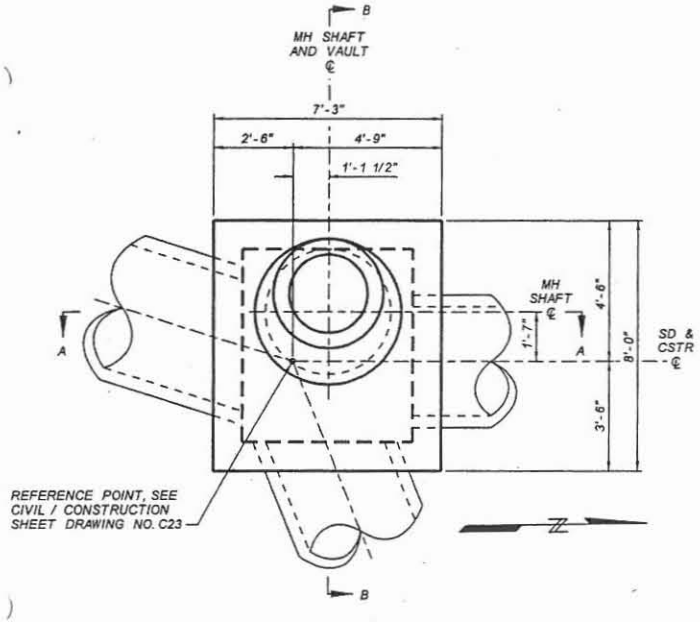

PLAN
STORM DRAIN MANHOLE BASE
87TH AVENUE BASIN STA 307+50
NTS

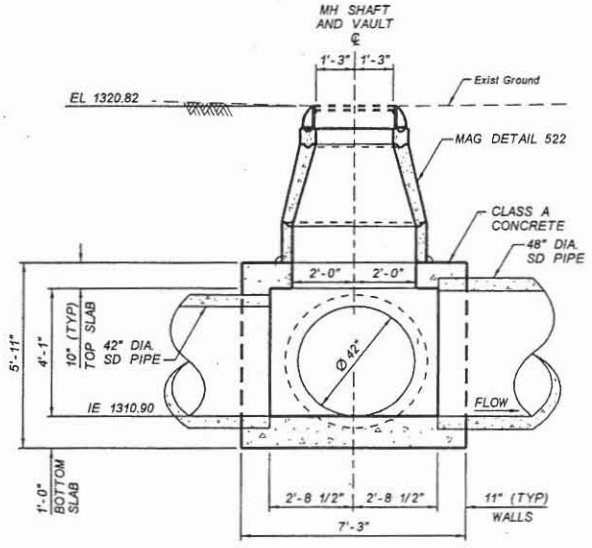

SECTION A-A
STORM DRAIN MANHOLE BASE
87TH AVENUE BASIN STA 307+50
NTS

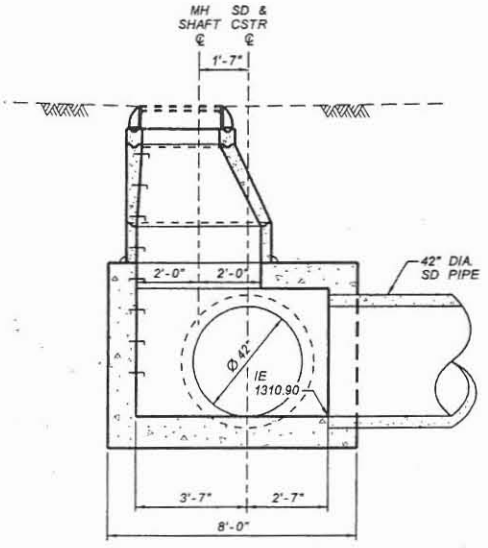

SECTION B-B
STORM DRAIN MANHOLE BASE
87TH AVENUE BASIN STA 307+50
NTS

NO.	REVISION	BY	DATE
3			
2			
1			

FLOOD CONTROL DISTRICT OF MARICOPA COUNTY
ENGINEERING DIVISION

83RD AVENUE / PINNACLE PEAK ROAD
DRAINAGE IMPROVEMENTS
PCN 450.02.33 FCD CONTRACT NO. 2003C060

60%
PRELIMINARY
NOT FOR
CONSTRUCTION

	BY	DATE
DESIGNED	O. OLIDEN	11/05
DRAWN	A. JOHNSON	11/05
CHECKED	MJR	11/05

JACOBS CIVIL INC.

DRAWING NO. D23 | DTL 23 STORM DRAIN MANHOLE | SHEET OF

JACOBS CIVIL INC.

PROJECT:	83rd Avenue / Pinnacle Peak Rd Drainage Improvements
SUBJECT:	Storm Drain Manhole Reinforcement
	Maximum W:H aspect Ratio (Example: Manhole @ Station 339+55)

JOB NO:	W7X74300	NO:	
DESIGNED BY	MJR	CHECK BY:	OAO
DATE:	28-Nov-05	SHEET: OF	

METHOD:

"Moments in Buried Box Culverts", P. C. Dave, A.M. ASCE, Civil Engineering-ASCE, 1967 (Attached)

GEOMETRY			LOADS			
l:	10.6667	ft.	W_1:	2.79583	kips	- Total weight of two walls
h:	9.33333	ft.	W_2:	9.8	kips	- Total uniform vertical load from slab, fill & surcharge
t_w:	0.91667	ft.	W_3:	3.66	kips	- Total uniform lateral load from soil & surcharge
t_s:	0.83	ft.	W_4:	3.10	kips	- Total lateral triangular load from soil
K_0:	0.5	Coefficient of lateral soil pressure at rest				
Fill Height:	6	ft.				
L =	11.5833		A =	0.18		
H =	10.1667		B =	1.5		
K =	0.7		C =	1.7		

	ASD		LFD	
M_1 =	-7.6	ft-kips	-9.8	ft-kips
M_2 =	-10.0	ft-kips	-13.0	ft-kips
M_3 =	6.6	ft-kips	8.6	ft-kips
M_4 =	8.2	ft-kips	10.7	ft-kips
M_5 =	-3.6	ft-kips	-4.7	ft-kips

INTERPOLATION OF MOMENTS AT HAUNCH/SLAB INTERFACE

TOP SLAB:

Haunch: 0 inches

Distance Ratio: 0.079 (CL Wall to End Haunch : CL Wall to Midspan)

Moment @ End Haunch: -6.45 ft-kips

BOTTOM SLAB:

Haunch: 0 inches

Distance Ratio: 0.079 (CL Wall to End Haunch : CL Wall to Midspan)

Moment @ End Haunch: -8.55 ft-kips

FLEXURE CHECK

CONSTANTS (from computations):

Design width, b :	12	in.
Young's Modulus (concrete), E_c :	485,592	ksf
Young's Modulus (steel), E_s :	4,176,000	ksf
12.5 lular ratio, n :	8	
11 ›n factor, $\phi_{fl.}$:	0.9	
Shear reduction factor, $\phi_{sh.}$:	0.85	
Wearing thickness (integral) :	0	in.

Material Stresses

Steel			Concrete		
f_s :	24,000	psi	f_c :	1,400	psi
f_y :	60,000	psi	f'_c :	3,500	psi
			f_r :	444	psi

6

FLEXURE	SECTION	SECTION	SECTION	SECTION	SECTION
	M1 - Top Corner	M2 - Bottom Corner	M3 - Top Slab	M4 - Bottom Slab	M5 - Walls
M_{max}	6.5 ft-kips	8.6 ft-kips	6.6 ft-kips	8.2 ft-kips	3.6 ft-kips
TRY	# 6 @ 8.0	# 6 @ 6.0	# 6 @ 12.00	# 6 @ 8.00	# 5 @ 12.0
Dia.	0.750 in.	0.750 in.	0.750 in.	0.750 in.	0.625 in.
D^+	10.0 in.	10.0 in.	10.0 in.	10.0 in.	11.0 in.
D	10.0 in.	10.0 in.	10.0 in.	10.0 in.	11.0 in.
A_g	120.0 sq.in.	120.0 sq.in.	120.0 sq.in.	120.0 sq.in.	132.0 sq.in.
cover	2.0 in.	3.0 in.	1.0 in.	2.0 in.	1.5 in.
d	7.63 in.	6.63 in.	8.63 in.	7.63 in.	9.19 in.
A_s	0.660 sq.in.	0.880 sq.in.	0.440 sq.in.	0.660 sq.in.	0.310 sq.in.
p	0.00721	0.01107	0.00425	0.00721	0.00281
k	0.2869	0.3415	0.2290	0.2869	0.1908
j	0.9044	0.8862	0.9237	0.9044	0.9364
f_s	17008 psi	19863 psi	22594 psi	21691 psi	16390 psi
f_c	855 psi	1288 psi	839 psi	1091 psi	483 psi
a	1.109 in.	1.479 in.	0.739 in.	1.109 in.	0.521 in.
ϕM_n	21.0 ft-kips	23.3 ft-kips	16.3 ft-kips	21.0 ft-kips	12.5 ft-kips
M_{cr}	7.4 ft-kips	7.4 ft-kips	7.4 ft-kips	7.4 ft-kips	8.9 ft-kips
$1.2M_{cr}$	8.87 ft-kips	8.87 ft-kips	8.87 ft-kips	8.87 ft-kips	10.74 ft-kips
A_s(min)	0.264 sq.in	0.304 sq.in	0.233 sq.in	0.264 sq.in	0.265 sq.in
CHECK:					
Steel:	71%	83%	94%	90%	68%
Concrete:	61%	92%	60%	78%	35%

NOTE: Cover should NOT include the integral wearing thickness.
D+ is the total depth of concrete, including the integral wearing thickness.
D is the structural depth, which excludes the integral wearing thickness.

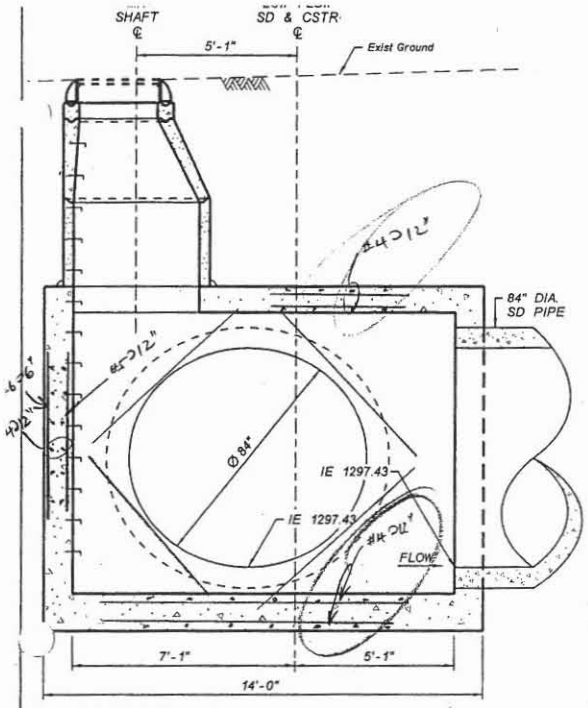

SECTION A-A
STORM DRAIN MANHOLE BASE
PINNACLE PEAK ROAD STA 245+65
NTS

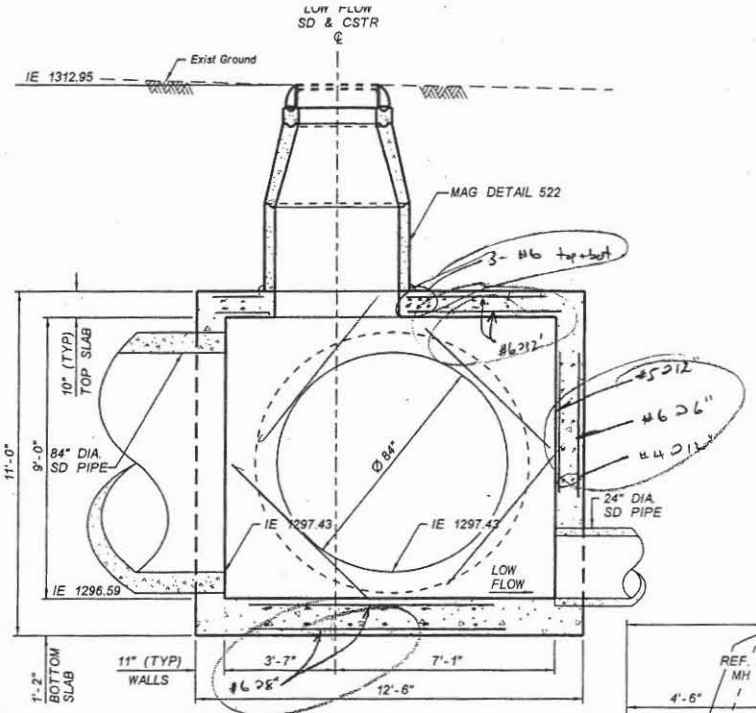

SECTION B-B
STORM DRAIN MANHOLE BASE
PINNACLE PEAK ROAD STA 245+65
NTS

DEEP, LARGER
DTL 10 ✓

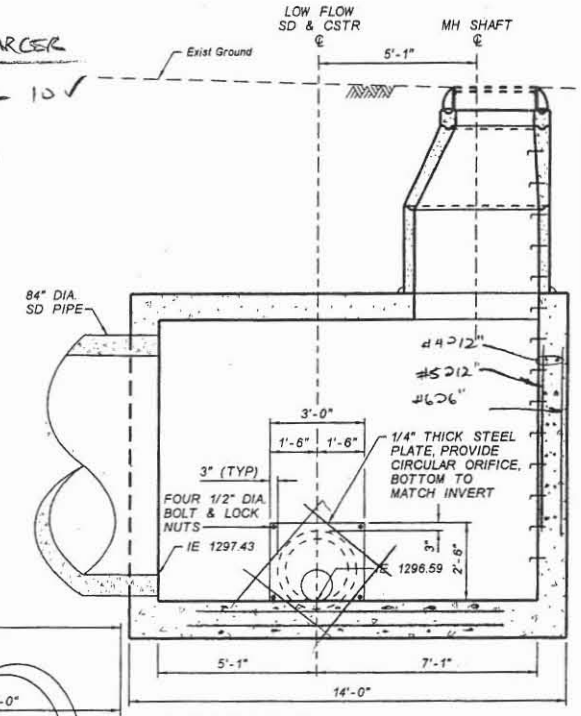

SECTION C-C
STORM DRAIN MANHOLE BASE
PINNACLE PEAK ROAD STA 245+65
NTS

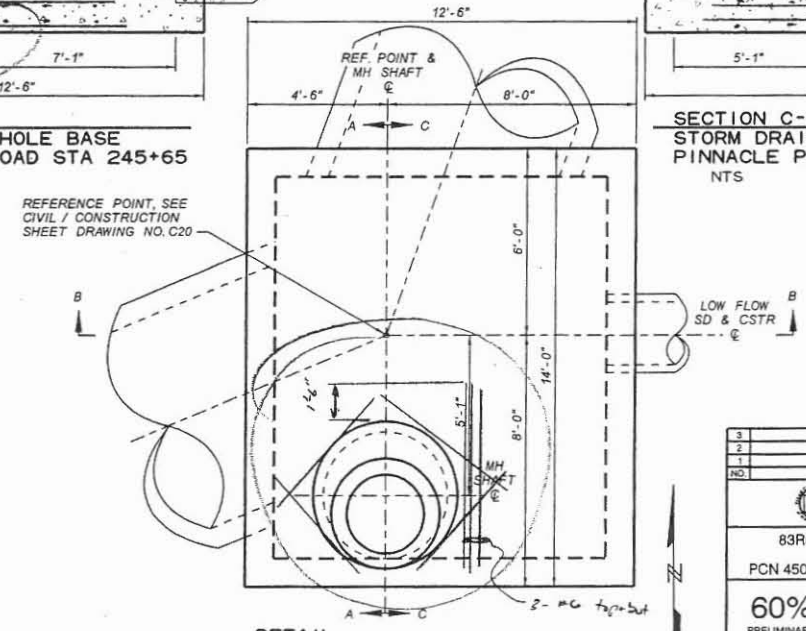

DETAIL
STORM DRAIN MANHOLE BASE
PINNACLE PEAK ROAD STA 245+65
NTS

NO.	REVISION	BY	DATE
3			
2			
1			

FLOOD CONTROL DISTRICT OF MARICOPA COUNTY
ENGINEERING DIVISION

83RD AVENUE / PINNACLE PEAK ROAD
DRAINAGE IMPROVEMENTS
PCN 450.02.33 FCD CONTRACT NO. 2003C060

60%
PRELIMINARY NOT FOR CONSTRUCTION

	BY	DATE
DESIGNED	D. OLIDEN	11/05
DRAWN	A. JOHNSON	11/05
CHECKED	AGR	8/05

JE JACOBS CIVIL INC.

DRAWING NO. D10 | DTL 10 STORM DRAIN MANHOLE | SHEET OF

JACOBS CIVIL INC.

PROJECT:	83rd Avenue / Pinnacle Peak Rd Drainage Improvements
SUBJECT:	Storm Drain Manhole Reinforcement
	Maximum W:H aspect Ratio (Example: Manhole @ Station 339+55)

JOB NO:	W7X74300	NO:	
DESIGNED BY	MJR	CHECK BY:	OAO
DATE:	28-Nov-05	SHEET:	OF

METHOD:

"Moments in Buried Box Culverts", P. C. Dave, A.M. ASCE, Civil Engineering-ASCE, 1967 (Attached)

GEOMETRY			LOADS			
l:	12.1667	ft.	W_1:	1.375	kips	- Total weight of two walls
h:	4.16667	ft.	W_2:	4.8	kips	- Total uniform vertical load from slab, fill & surcharge
t_w:	0.91667	ft.	W_3:	0.6	kips	- Total uniform lateral load from soil & surcharge
t_s:	0.83	ft.	W_4:	0.75	kips	- Total lateral triangular load from soil
K_0:	0.5	Coefficient of lateral soil pressure at rest				
Fill Height:	2	ft.				
L =	13.0833		A =	0.09		
H =	5		B =	0.9		
K =	0.3		C =	1.3		

	ASD		LFD	
M_1 =	-4.1	ft-kips	-5.3	ft-kips
M_2 =	-5.4	ft-kips	-7.1	ft-kips
M_3 =	3.7	ft-kips	4.9	ft-kips
M_4 =	4.6	ft-kips	6.0	ft-kips
M_5 =	-4.3	ft-kips	-5.7	ft-kips

INTERPOLATION OF MOMENTS AT HAUNCH/SLAB INTERFACE

TOP SLAB:

Haunch: 0 inches

Distance Ratio: 0.070 (CL Wall to End Haunch : CL Wall to Midspan)

Moment @ End Haunch: -3.51 ft-kips

BOTTOM SLAB:

Haunch: 0 inches

Distance Ratio: 0.070 (CL Wall to End Haunch : CL Wall to Midspan)

Moment @ End Haunch: -4.74 ft-kips

NOTE: Add 3.01 ft-k to top slab moment for direct application of wheel load.

FLEXURE CHECK

CONSTANTS (from computations):

Design width, b :	12	in.
Young's Modulus (concrete), E_c :	485,592	ksf
Young's Modulus (steel), E_s :	4,176,000	ksf
Modular ratio, n :	8	
Flexure reduction factor, $\phi_{fl.}$:	0.9	
Shear reduction factor, $\phi_{sh.}$:	0.85	
Wearing thickness (integral) :	0	in.

Material Stresses

Steel			Concrete		
f_s :	24,000	psi	f_c :	1,400	psi
f_y :	60,000	psi	f'_c :	3,500	psi
			f_r :	444	psi

FLEXURE	SECTION	SECTION	SECTION	SECTION	SECTION
	M1 - Top Corner	M2 - Bottom Corner	M3 - Top Slab	M4 - Bottom Slab	M5 - Walls
M_{max}	3.5 ft-kips	4.7 ft-kips	6.8 ft-kips	4.6 ft-kips	4.3 ft-kips
TRY	# 5 @ 12.0	# 6 @ 12.0	# 6 @ 12.00	# 6 @ 12.00	# 5 @ 12.0
Dia.	0.625 in.	0.750 in.	0.750 in.	0.750 in.	0.625 in.
D^+	10.0 in.	10.0 in.	10.0 in.	10.0 in.	11.0 in.
D	10.0 in.	10.0 in.	10.0 in.	10.0 in.	11.0 in.
A_g	120.0 sq.in.	120.0 sq.in.	120.0 sq.in.	120.0 sq.in.	132.0 sq.in.
cover	2.0 in.	3.0 in.	1.0 in.	2.0 in.	1.5 in.
d	7.69 in.	6.63 in.	8.63 in.	7.63 in.	9.19 in.
A_s	0.310 sq.in.	0.440 sq.in.	0.440 sq.in.	0.440 sq.in.	0.310 sq.in.
p	0.00336	0.00553	0.00425	0.00481	0.00281
k	0.2065	0.2566	0.2290	0.2416	0.1908
j	0.9312	0.9145	0.9237	0.9195	0.9364
f_s	19006 psi	21334 psi	23135 psi	17950 psi	19556 psi
f_c	618 psi	920 psi	859 psi	715 psi	576 psi
a	0.521 in.	0.739 in.	0.739 in.	0.739 in.	0.521 in.
ϕM_n	10.4 ft-kips	12.4 ft-kips	16.3 ft-kips	14.4 ft-kips	12.5 ft-kips
M_{cr}	7.4 ft-kips	7.4 ft-kips	7.4 ft-kips	7.4 ft-kips	8.9 ft-kips
$1.2M_{cr}$	8.87 ft-kips	8.87 ft-kips	8.87 ft-kips	8.87 ft-kips	10.74 ft-kips
A_s(min)	0.262 sq.in	0.304 sq.in	0.233 sq.in	0.264 sq.in	0.265 sq.in
CHECK:					
Steel:	79%	89%	96%	75%	81%
Concrete:	44%	66%	61%	51%	41%

NOTE: Cover should NOT include the integral wearing thickness.
D+ is the total depth of concrete, including the integral wearing thickness.
D is the structural depth, which excludes the integral wearing thickness.

JACOBS CIVIL INC.

PROJECT:	83rd Avenue / Pinnacle Peak Rd Drainage Improvements
SUBJECT:	Storm Drain Manhole Reinforcement
	Minimum W:H aspect Ratio (Example: Manhole @ Station 326+40)

JOB NO:	W7X74300	NO:	
DESIGNED BY	MJR	CHECK BY:	CAO
DATE:	28-Nov-05	SHEET:	OF

METHOD:

"Moments in Buried Box Culverts", P. C. Dave, A.M. ASCE, Civil Engineering-ASCE, 1967 (Attached)

GEOMETRY			LOADS			
l:	7.16667	ft.	W_1:	2.79583	kips	- Total weight of two walls
h:	9.33333	ft.	W_2:	3.0	kips	- Total uniform vertical load from slab, fill & surcharge
t_w:	0.91667	ft.	W_3:	1.22	kips	- Total uniform lateral load from soil & surcharge
t_s:	0.83	ft.	W_4:	3.10	kips	- Total lateral triangular load from soil
K_0:	0.5	Coefficient of lateral soil pressure at rest				
Fill Height:	2	ft.				

L =	8.08333	A =	0.24
H =	10.1667	B =	1.9
K =	0.9	C =	1.9

	ASD		LFD	
M_1 =	-2.4	ft-kips	-3.2	ft-kips
M_2 =	-4.1	ft-kips	-5.4	ft-kips
M_3 =	0.5	ft-kips	0.7	ft-kips
M_4 =	1.7	ft-kips	2.2	ft-kips
M_5 =	0.3	ft-kips	0.4	ft-kips

INTERPOLATION OF MOMENTS AT HAUNCH/SLAB INTERFACE

TOP SLAB:

Haunch: 0 inches

Distance Ratio: 0.113 (CL Wall to End Haunch : CL Wall to Midspan)

Moment @ End Haunch: -2.10 ft-kips

BOTTOM SLAB:

Haunch: 0 inches

Distance Ratio: 0.113 (CL Wall to End Haunch : CL Wall to Midspan)

Moment @ End Haunch: -3.47 ft-kips

NOTE: Includes 3.01 ft-k to top slab moment for direct application of wheel load.

FLEXURE CHECK

CONSTANTS (from computations):

Design width, b :	12	in.
Young's Modulus (concrete), E_c :	485,592	ksf
Young's Modulus (steel), E_s :	4,176,000	ksf
Modular ratio, n :	8	
Flexure reduction factor, $\phi_{fl.}$:	0.9	
Shear reduction factor, $\phi_{sh.}$:	0.85	
Wearing thickness (integral) :	0	in.

Material Stresses

Steel			Concrete		
f_s :	24,000	psi	f_c :	1,400	psi
f_y :	60,000	psi	f'_c :	3,500	psi
			f_r :	444	psi

FLEXURE	SECTION	SECTION	SECTION	SECTION	SECTION
	M1 - Top Corner	M2 - Bottom Corner	M3 - Top Slab	M4 - Bottom Slab	M5 - Walls
M_{max}	2.1 ft-kips	3.5 ft-kips	3.6 ft-kips	1.7 ft-kips	0.3 ft-kips
TRY	# 5 @ 12.0	# 5 @ 12.0	# 5 @ 12.00	# 5 @ 12.00	# 5 @ 12.0
Dia.	0.625 in.	0.625 in.	0.625 in.	0.625 in.	0.625 in.
D^+	10.0 in.	10.0 in.	10.0 in.	10.0 in.	11.0 in.
D	10.0 in.	10.0 in.	10.0 in.	10.0 in.	11.0 in.
A_g	120.0 sq.in.	120.0 sq.in.	120.0 sq.in.	120.0 sq.in.	132.0 sq.in.
cover	2.0 in.	3.0 in.	1.0 in.	2.0 in.	1.5 in.
d	7.69 in.	6.69 in.	8.69 in.	7.69 in.	9.19 in.
A_s	0.310 sq.in.	0.310 sq.in.	0.310 sq.in.	0.310 sq.in.	0.310 sq.in.
p	0.00336	0.00386	0.00297	0.00336	0.00281
k	0.2065	0.2196	0.1956	0.2065	0.1908
j	0.9312	0.9268	0.9348	0.9312	0.9364
f_s	11371 psi	21671 psi	16923 psi	9073 psi	1459 psi
f_c	370 psi	762 psi	514 psi	295 psi	43 psi
a	0.521 in.	0.521 in.	0.521 in.	0.521 in.	0.521 in.
ϕM_n	10.4 ft-kips	9.0 ft-kips	11.8 ft-kips	10.4 ft-kips	12.5 ft-kips
M_{cr}	7.4 ft-kips	7.4 ft-kips	7.4 ft-kips	7.4 ft-kips	8.9 ft-kips
$1.2M_{cr}$	8.87 ft-kips	8.87 ft-kips	8.87 ft-kips	8.87 ft-kips	10.74 ft-kips
A_s(min)	0.262 sq.in	0.301 sq.in	0.232 sq.in	0.262 sq.in	0.265 sq.in
CHECK:					
Steel:	47%	90%	71%	38%	6%
Concrete:	26%	54%	37%	21%	3%

NOTE: Cover should NOT include the integral wearing thickness.
D+ is the total depth of concrete, including the integral wearing thickness.
D is the structural depth, which excludes the integral wearing thickness.

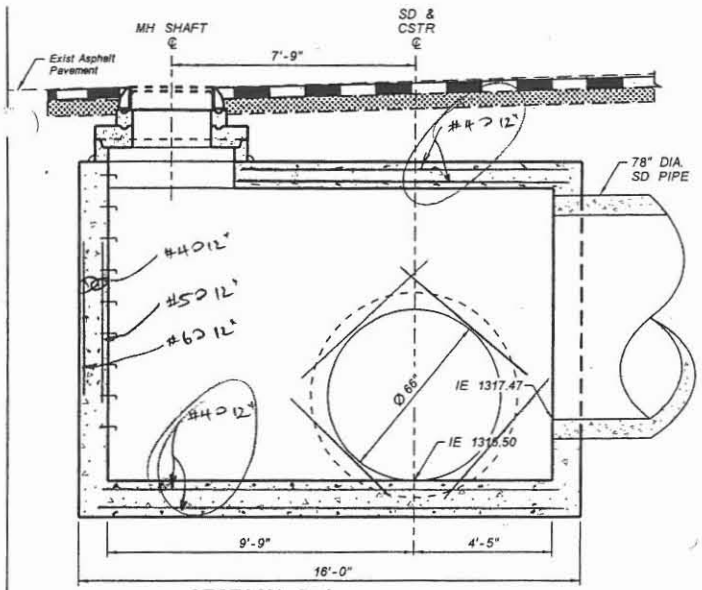

SECTION A-A
STORM DRAIN MANHOLE BASE
87TH AVENUE STA 313+52
NTS

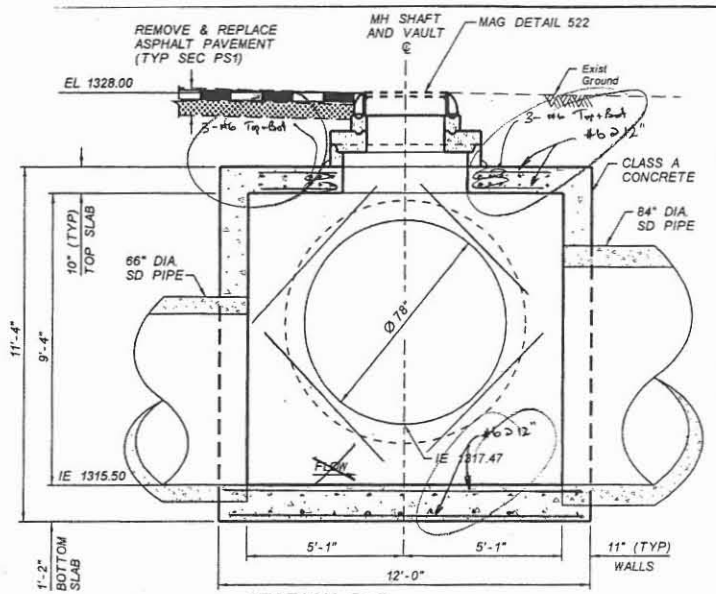

SECTION B-B
STORM DRAIN MANHOLE BASE
87TH AVENUE STA 313+52
NTS

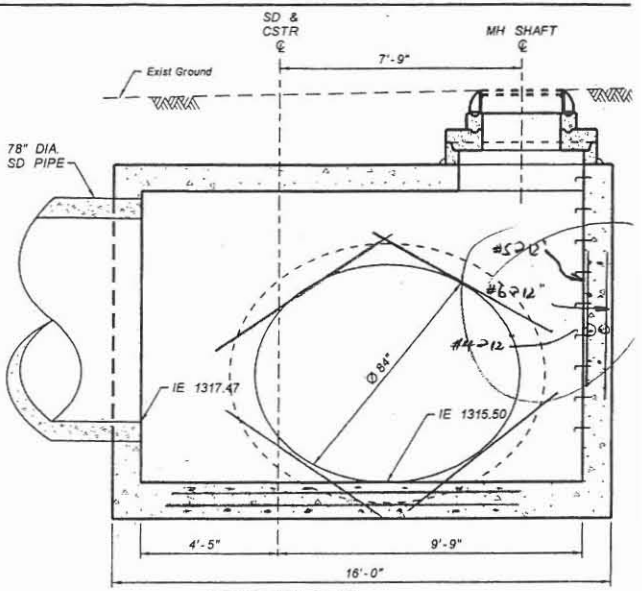

SECTION C-C
STORM DRAIN MANHOLE BASE
87TH AVENUE STA 313+52
NTS

SHALLOW LARGE
DTL 11 ✓
16 ✓

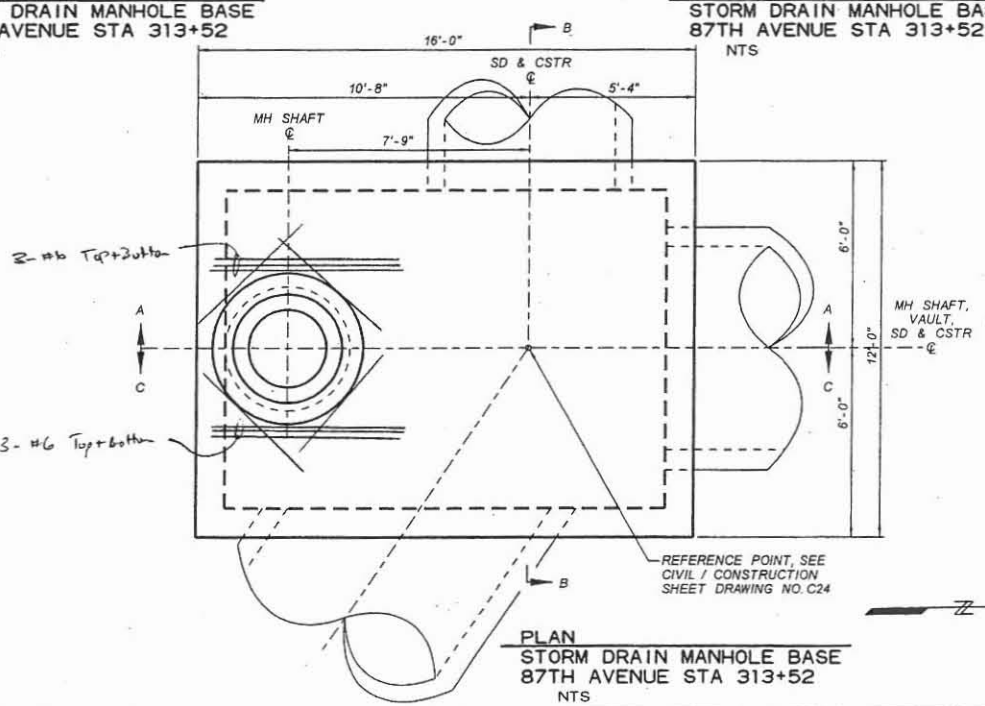

PLAN
STORM DRAIN MANHOLE BASE
87TH AVENUE STA 313+52
NTS

NO.	REVISION	BY	DATE
3			
2			
1			

FLOOD CONTROL DISTRICT OF MARICOPA COUNTY
ENGINEERING DIVISION

83RD AVENUE / PINNACLE PEAK ROAD
DRAINAGE IMPROVEMENTS
PCN 450.02.33 FCD CONTRACT NO. 2003C060

60%
PRELIMINARY NOT FOR CONSTRUCTION

	BY	DATE
DESIGNED	O. OLIDEN	11/05
DRAWN	A. JOHNSON	11/05
CHECKED	MJR	11/05

JACOBS CIVIL INC.

DRAWING NO. D11 | DTL 11 STORM DRAIN MANHOLE | SHEET OF

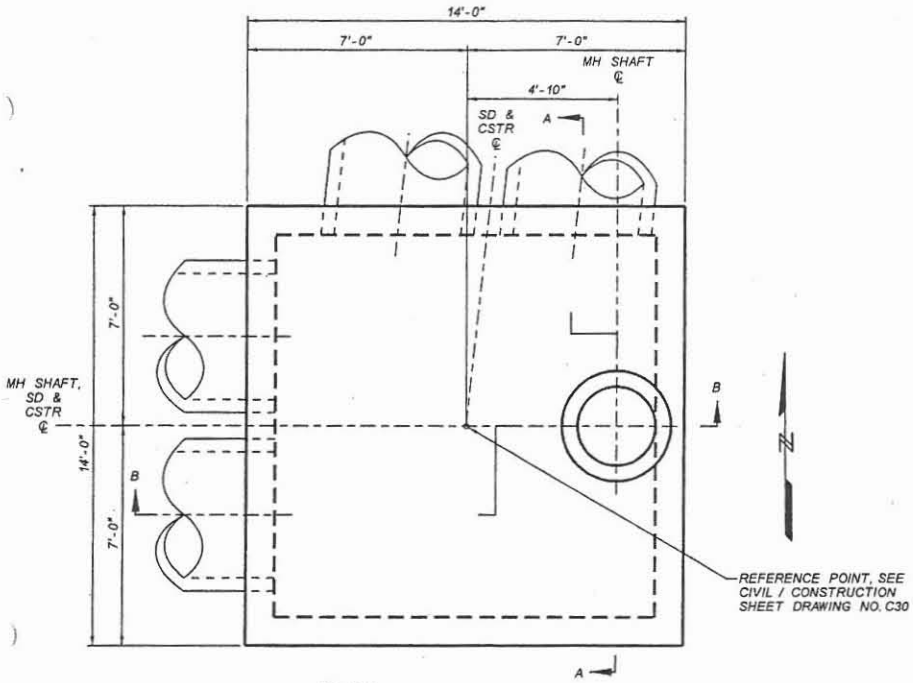

PLAN
STORM DRAIN MANHOLE BASE
CALLE LEJOS STA 339+55
NTS

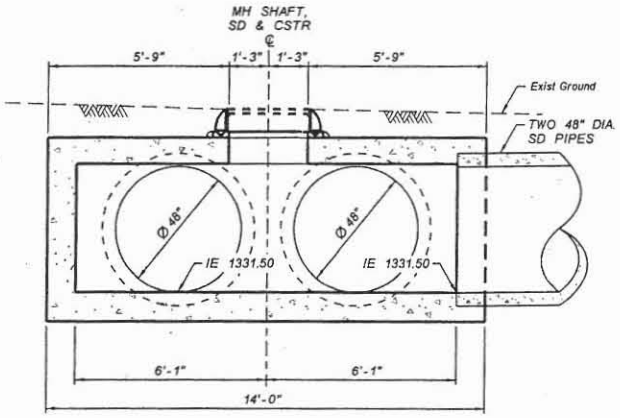

SECTION A-A
STORM DRAIN MANHOLE BASE
CALLE LEJOS STA 339+55
NTS

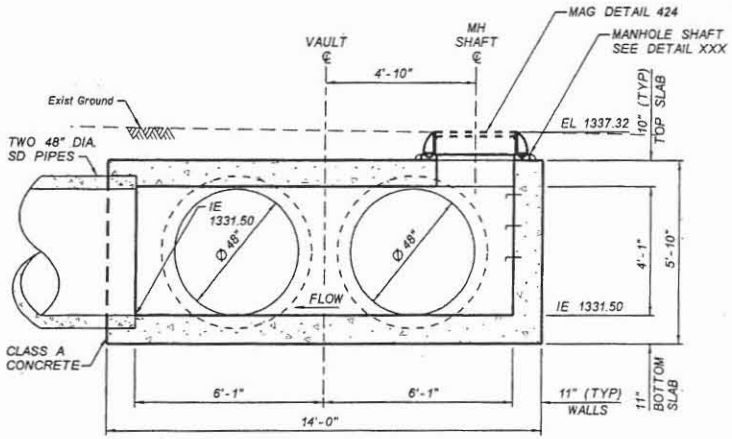

SECTION B-B
STORM DRAIN MANHOLE BASE
CALLE LEJOS STA 339+55
NTS

NO.	REVISION	BY	DATE
3			
2			
1			

FLOOD CONTROL DISTRICT OF MARICOPA COUNTY
ENGINEERING DIVISION

83RD AVENUE / PINNACLE PEAK ROAD
DRAINAGE IMPROVEMENTS
PCN 450.02.33 FCD CONTRACT NO. 2003C060

60%
PRELIMINARY NOT FOR CONSTRUCTION

	BY	DATE
DESIGNED	O. OLIDEN	11/05
DRAWN	A. JOHNSON	11/05
CHECKED	AJR	11/05

JACOBS CIVIL INC.

DRAWING NO. D16 | DTL 16 STORM DRAIN MANHOLE | SHEET OF

JACOBS CIVIL INC.

PROJECT:	83rd Avenue / Pinnacle Peak Rd Drainage Improvements
SUBJECT:	Storm Drain Manhole Reinforcement
	Minimum W:H aspect Ratio (Example: Manhole @ Station 326+40)

JOB NO:	W7X74300	NO:	
DESIGNED BY	MJR	CHECK BY:	OBB
DATE:	28-Nov-05	SHEET: OF	

METHOD:

"Moments in Buried Box Culverts", P. C. Dave, A.M. ASCE, Civil Engineering-ASCE, 1967 (Attached)

GEOMETRY			LOADS			
l:	7.16667	ft.	W_1:	2.79583	kips	- Total weight of two walls
h:	9.33333	ft.	W_2:	3.0	kips	- Total uniform vertical load from slab, fill & surcharge
t_w:	0.91667	ft.	W_3:	1.22	kips	- Total uniform lateral load from soil & surcharge
t_s:	0.83	ft.	W_4:	3.10	kips	- Total lateral triangular load from soil
K_0:	0.5	Coefficient of lateral soil pressure at rest				
Fill Height:	2	ft.				
L =	8.08333		A =	0.24		
H =	10.1667		B =	1.9		
K =	0.9		C =	1.9		

	ASD		LFD	
M_1 =	-2.4	ft-kips	-3.2	ft-kips
M_2 =	-4.1	ft-kips	-5.4	ft-kips
M_3 =	0.5	ft-kips	0.7	ft-kips
M_4 =	1.7	ft-kips	2.2	ft-kips
M_5 =	0.3	ft-kips	0.4	ft-kips

INTERPOLATION OF MOMENTS AT HAUNCH/SLAB INTERFACE

TOP SLAB:

Haunch: 0 inches

Distance Ratio: 0.113 (CL Wall to End Haunch : CL Wall to Midspan)

Moment @ End Haunch: -2.10 ft-kips

BOTTOM SLAB:

Haunch: 0 inches

Distance Ratio: 0.113 (CL Wall to End Haunch : CL Wall to Midspan)

Moment @ End Haunch: -3.47 ft-kips

NOTE: Add 3.01 ft-k to top slab moment for direct application of wheel load on structure.

FLEXURE CHECK

CONSTANTS (from computations):

Design width, b :	12	in.
Young's Modulus (concrete), E_c :	485,592	ksf
Young's Modulus (steel), E_s :	4,176,000	ksf
Modular ratio, n :	8	
Flexure reduction factor, $\phi_{fl.}$:	0.9	
Shear reduction factor, $\phi_{sh.}$:	0.85	
Wearing thickness (integral) :	0	in.

Material Stresses

Steel			Concrete		
f_s :	24,000	psi	f_c :	1,400	psi
f_y :	60,000	psi	f'_c :	3,500	psi
			f_r :	444	psi

FLEXURE	SECTION	SECTION	SECTION	SECTION	SECTION
	M1 - Top Corner	M2 - Bottom Corner	M3 - Top Slab	M4 - Bottom Slab	M5 - Walls
M_{max}	2.1 ft-kips	3.5 ft-kips	3.6 ft-kips	1.7 ft-kips	0.3 ft-kips
TRY	# 5 @ 12.0	# 5 @ 12.0	# 5 @ 12.00	# 5 @ 12.00	# 5 @ 12.0
Dia.	0.625 in.	0.625 in.	0.625 in.	0.625 in.	0.625 in.
D^+	10.0 in.	10.0 in.	10.0 in.	10.0 in.	11.0 in.
D	10.0 in.	10.0 in.	10.0 in.	10.0 in.	11.0 in.
A_g	120.0 sq.in.	120.0 sq.in.	120.0 sq.in.	120.0 sq.in.	132.0 sq.in.
cover	2.0 in.	3.0 in.	1.0 in.	2.0 in.	1.5 in.
d	7.69 in.	6.69 in.	8.69 in.	7.69 in.	9.19 in.
A_s	0.310 sq.in.	0.310 sq.in.	0.310 sq.in.	0.310 sq.in.	0.310 sq.in.
p	0.00336	0.00386	0.00297	0.00336	0.00281
k	0.2065	0.2196	0.1956	0.2065	0.1908
j	0.9312	0.9268	0.9348	0.9312	0.9364
f_s	11371 psi	21671 psi	16923 psi	9073 psi	1459 psi
f_c	370 psi	762 psi	514 psi	295 psi	43 psi
a	0.521 in.	0.521 in.	0.521 in.	0.521 in.	0.521 in.
ϕM_n	10.4 ft-kips	9.0 ft-kips	11.8 ft-kips	10.4 ft-kips	12.5 ft-kips
M_{cr}	7.4 ft-kips	7.4 ft-kips	7.4 ft-kips	7.4 ft-kips	8.9 ft-kips
$1.2M_{cr}$	8.87 ft-kips	8.87 ft-kips	8.87 ft-kips	8.87 ft-kips	10.74 ft-kips
A_s(min)	0.262 sq.in	0.301 sq.in	0.232 sq.in	0.262 sq.in	0.265 sq.in
CHECK:					
Steel:	47%	90%	71%	38%	6%
Concrete:	26%	54%	37%	21%	3%

NOTE: Cover should NOT include the integral wearing thickness.
D+ is the total depth of concrete, including the integral wearing thickness.
D is the structural depth, which excludes the integral wearing thickness.

SHALLOW, TALL

DTL 13

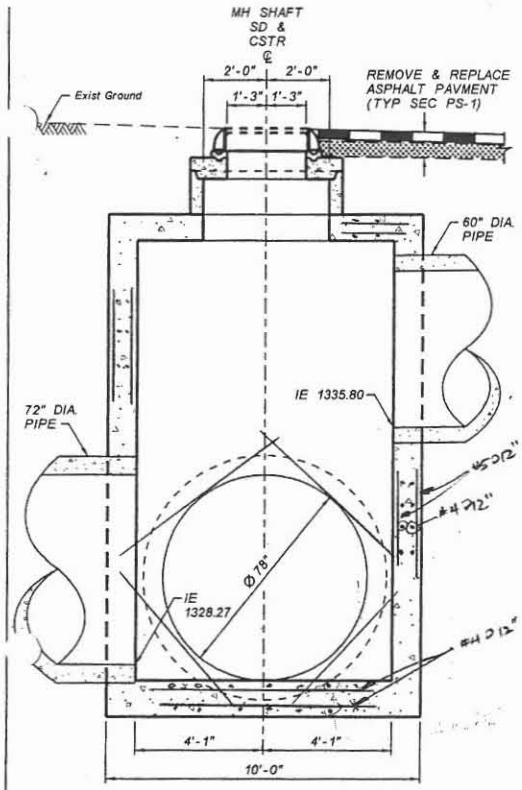

SECTION A-A
STORM DRAIN MANHOLE BASE
87TH AVENUE STA 326+40
NTS

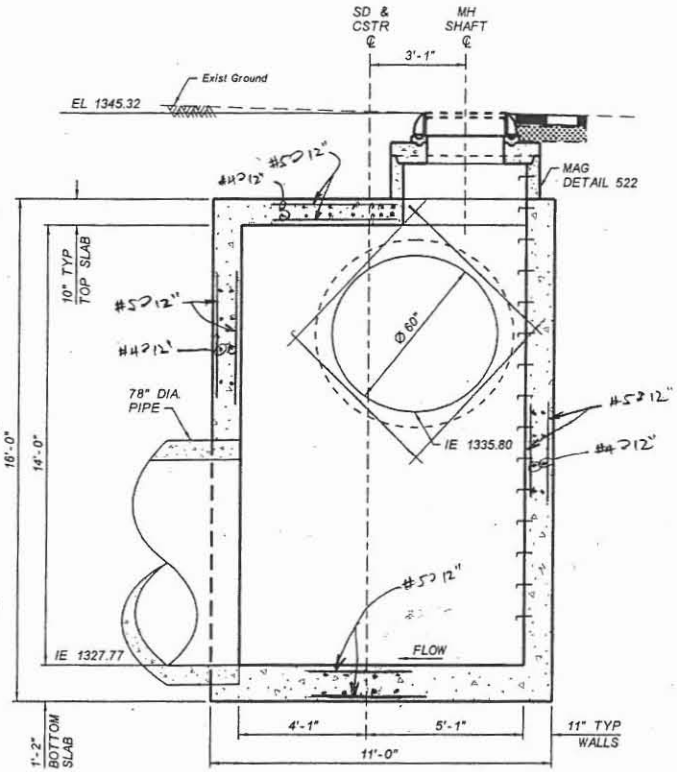

SECTION B-B
STORM DRAIN MANHOLE BASE
87TH AVENUE STA 326+40
NTS

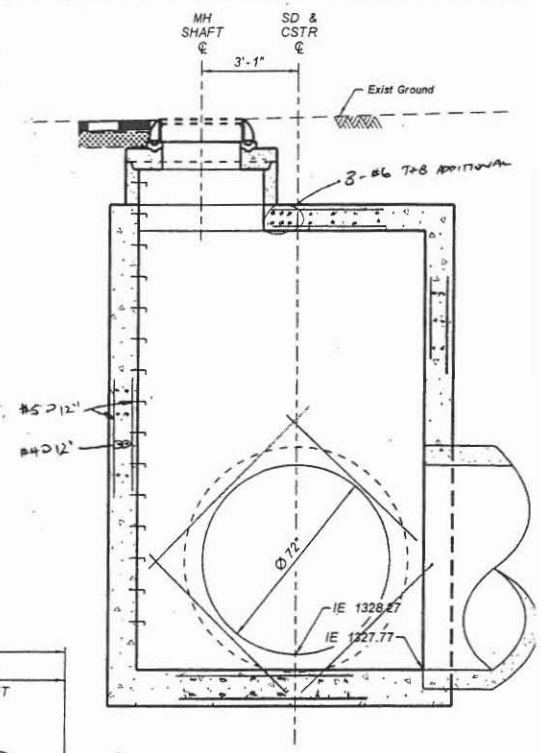

SECTION C-C
STORM DRAIN MANHOLE BASE
87TH AVENUE STA 326+40
NTS

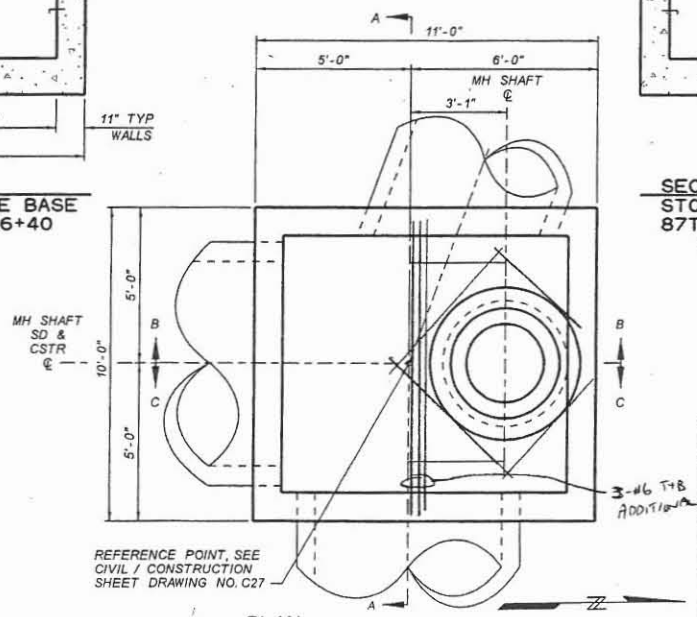

PLAN
STORM DRAIN MANHOLE BASE
87TH AVENUE STA 326+40
NTS

NO.	REVISION	BY	DATE
3			
2			
1			

FLOOD CONTROL DISTRICT
OF MARICOPA COUNTY
ENGINEERING DIVISION

83RD AVENUE / PINNACLE PEAK ROAD
DRAINAGE IMPROVEMENTS
PCN 450.02.33 FCD CONTRACT NO. 2003C060

60%
PRELIMINARY
NOT FOR
CONSTRUCTION

	BY	DATE
DESIGNED	O. OLIDEN	11/05
DRAWN	A. JOHNSON	11/05
CHECKED	MJR	11/05

JACOBS CIVIL INC.

DRAWING NO. D13 | DTL 13 STORM DRAIN MANHOLE | SHEET OF

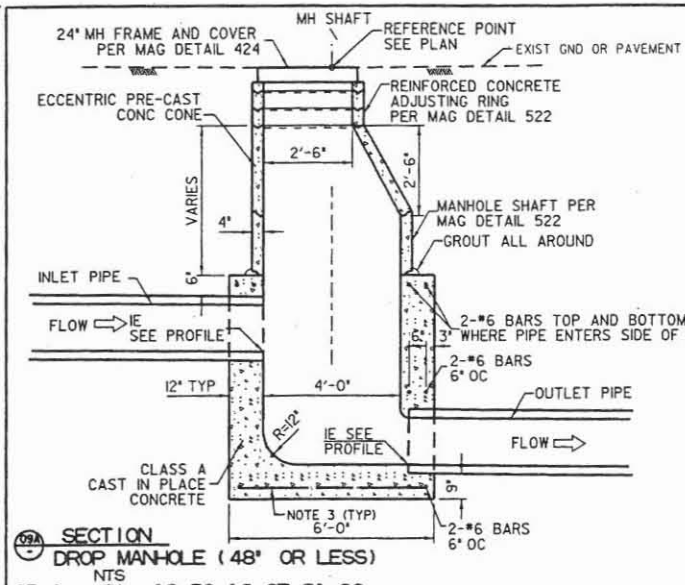

09A SECTION
DROP MANHOLE (48" OR LESS)
NTS

SD 1-- Sta 13+50, 16+67, 21+90
SD 1-1 -- Sta 14+00, 17+00
SD 2-1 -- Sta 19+60, Sta 24+80
SD 2-3 -- Sta 13+60, 16+60, 19+75, 22+60
SD 2-4 -- Sta 11+60, 14+40
SD 4 -- Sta 13+21
SD 9 -- Sta 11+46

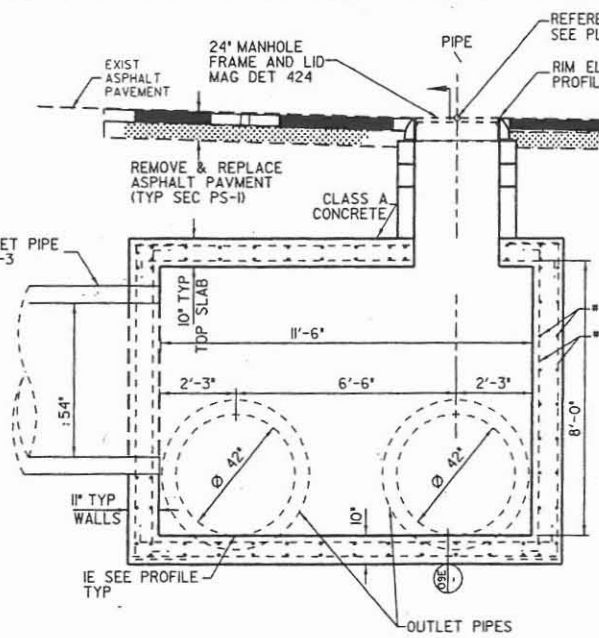

09E DETAIL
DROP MANHOLE
CONC VAULT
SD-3 STA 27+55 (C23 50)
NTS

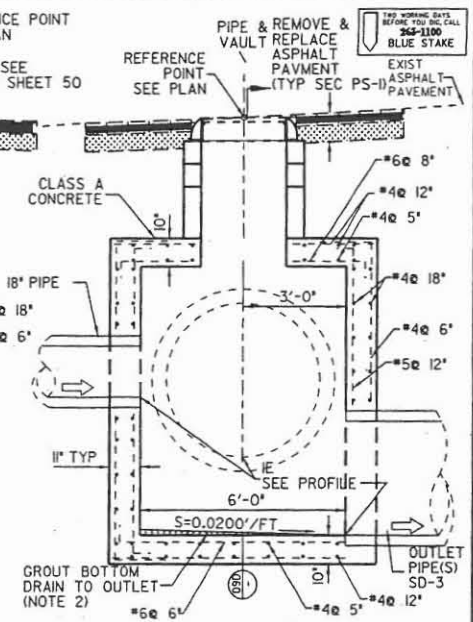

09D SECTION

NOTES

1. ALL CONCRETE SHALL BE CLASS A.
2. INVERT TO BE SHAPED BY HAND TO MAKE SMOOTH TRANSITION. FINISH WITH A RUBBER FLOAT.
3. ALL REINFORCING STEEL SHALL HAVE 2 INCHES CLEAR COVER UNLESS SHOWN OTHERWISE.
4. INVERTS OF ECCENTRIC PIPE SECTION AND ADJACENT PIPE SECTIONS SHALL BE ALIGNED AS SHOWN IN DET 09F.

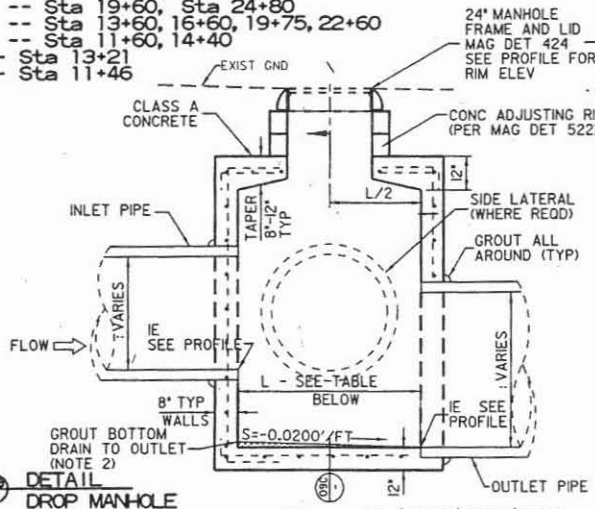

09B DETAIL
DROP MANHOLE
CONC VAULT
SD-3 -- STA 19+50.00 (C21 48)
SD-7 -- STA 12+00.83 (C40 67)
NTS

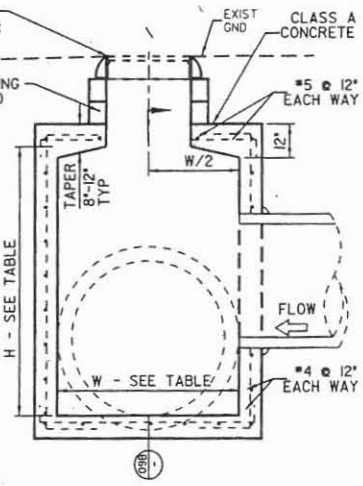

STA	W(FT)	L(FT)	H(FT)
19+50	5.50'	4.68'	10.74'
12+00	6.00'	5.00'	5.03'

09C SECTION

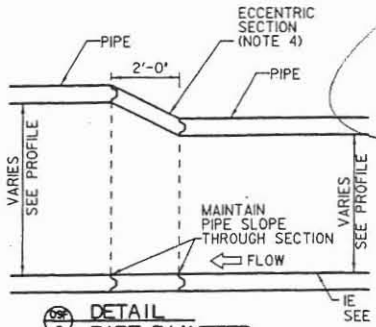

09F DETAIL
PIPE DIAMETER TRANSITION
SD-2 -- STA 14+44 TO 14+46 (C09 36)
SD-2 -- STA 19+04 TO 19+06 (C10 37)

EXAMPLE ONLY

DETAIL 09

NO.	REVISION	BY	DATE
3			
2			
1			

FLOOD CONTROL DISTRICT OF MARICOPA COUNTY

GUADALUPE DRAINAGE IMPROVEMENT
TOWN OF GUADALUPE
PROJECT CONTROL NO. 035-02-31

	BY	DATE
DESIGNED	D. STOUGH	11/01
DRAWN	K. PLATTE	11/01
CHECKED	B. OLBERT	11/01

Sverdrup

DRAWING NO. D09 | DETAIL SHEET STORM DRAIN DROP MANHOLE | SHEET OF 101 136

4. Check Sheets

83rd A ue / Pinnacle Peak Road
Drainage Improvements
Quantities for Non-standard Buried Structures (Manhole Bases and Vaults)

Project No.: W 74300

			Concrete			Reinforcement			
Detail No.	Type	Location	Quantity	Unit Cost	TOTAL	Quantity	Unit Cost	TOTAL	Detail No.
2	Vault	83rd Ave: Sta. 100+05	10.0 CY	$ 400	$ 3,989	1747 lbs	Included	$ -	2
3	Manhole	83rd Ave: Sta. 102+00	5.3 CY	$ 400	$ 2,136	1146 lbs	Included	$ -	3
4	Vault	83rd Ave.: Sta. 104+75	7.2 CY	$ 400	$ 2,886	1329 lbs	Included	$ -	4
5	Manhole	83rd Ave.: Sta. 134+86	13.7 CY	$ 400	$ 5,481	2441 lbs	Included	$ -	5
6	Vault	Pinnacle Peak Rd: Sta. 199+60	8.9 CY	$ 400	$ 3,544	1490 lbs	Included	$ -	6
7	Manhole	Pinnacle Peak Rd: Sta. 226+64	9.9 CY	$ 400	$ 3,961	1632 lbs	Included	$ -	7
9	Manhole	Pinnacle Peak Rd: Sta. 244+40	16.8 CY	$ 400	$ 6,734	2798 lbs	Included	$ -	9
10	Manhole	Pinnacle Peak Rd: Sta. 245+65	23.5 CY	$ 400	$ 9,405	5158 lbs	Included	$ -	10
11	Manhole	87th Ave.: Sta. 313+52	25.0 CY	$ 400	$ 9,986	4381 lbs	Included	$ -	11
12	Stilling Basin	87th Ave.: Sta.61+62	96.1 CY	$ 400	$38,440	14775 lbs	Included	$ -	12
13	Manhole	87th Ave.: Sta. 326+40	21.8 CY	$ 400	$ 8,701	5000 lbs	Included	$ -	13
14	Manhole	89th Ave.: Sta. 416+56	12.5 CY	$ 400	$ 5,000	1970 lbs	Included	$ -	14
15	Vault	Calle Lejos: Sta. 336+55	13.8 CY	$ 400	$ 5,522	2150 lbs	Included	$ -	15
16	Vault	Calle Lejos: Sta. 339+55	17.4 CY	$ 400	$ 6,955	3398 lbs	Included	$ -	16
17	Vault	Cielo Grande: Sta. 400+30	10.5 CY	$ 400	$ 4,213	1684 lbs	Included	$ -	17
18	Manhole	89th Ave.: Sta. 413+23	12.4 CY	$ 400	$ 4,977	2383 lbs	Included	$ -	18
19	Manhole	83rd Ave.: Sta. 142+46	8.4 CY	$ 400	$ 3,350	1663 lbs	Included	$ -	19
20	Inlet Structure	Ventana Picacho RB Sta. 81+37	9.9 CY	$ 400	$ 3,950	1411 lbs	Included	$ -	20
21	Inlet Structure	Ventana Picacho RB Sta. 85+77	42.6 CY	$ 400	$17,044	4928 lbs	Included	$ -	21
22	Inlet Structure	Calle Lajos: Sta. 340+27	6.2 CY	$ 400	$ 2,464	1257 lbs	Included	$ -	22
23	Manhole	87th Ave.: Sta. 307+50	5.8 CY	$ 400	$ 2,306	1301 lbs	Included	$ -	23
24	Manhole	87th Ave.: Sta. 61+37	15.1 CY	$ 400	$ 6,037	2282 lbs	Included	$ -	24

JACOBS CIVIL INC. LEVEL 1 CHECKPRINT

Job Number: _____ WBS ID: _____

Document Title: _____

	Name (Print)	Signature	Date
☑ Originator	MIKE RATHBONE		12/05
☑ Checker	AUDREY JOHNSON	Audrey Johnson	1/04
☑ Backchecker	MIKE RATHBONE		1/06
☑ Updater	MIKE RATHBONE		1/06
☑ Rechecker	OSCAR OLIDEN		1/06
☐ Designer*			1/17/2006 10:47 AM
☐ Reviewer*			
☐ Other*			

Vault	83rd Ave: Sta. 100+05

Vault	83rd Ave: Sta. 100+05	
SUMMARY:	CONCRETE	9.9 CY
	REBAR	1740.1 lbs

GEOMETRY	Outside	Inside	Wall
Width (ft.)	10.00	8.17	0.92 ft.
Length (ft.)	12.00	10.17	
Height (ft.)	4.67	3.00	
Volume (ft.^{3})	560	249.0833	

OPENINGS	TOP	SIDE 1	SIDE 2	SIDE 3	SIDE 4	SIDE 5	SIDE 6	TOTAL
Diameter (ft.)	2.5	3.0	3.0	3.0	3.0			
Skew (deg)	0.0	27.5	27.5	0.0	0.0			
Bar Perimeter (ft.)	10.4	15.7	15.7	14.1	14.1	0.0	0.0	
Area (ft.^{2})	4.9	11.9	11.9	10.6	10.6	0.0	0.0	
Volume (ft.^{3})	4.5 4.1	10.9	10.9	9.7	9.7	0.0	0.0	45.7
SUNDRY	3.7 ~~3.1~~ ft.^{3}							
CONCRETE	**9.9 CY**							

VOLUME OF TOP SHOULD BE CALC. W/ 10" (4.5)

← SHOULD BE CALCULATED USING 10" TOP SLAB, NOT 11"

FORMULA IS OKAY BUT THE NUMBER WILL CHANGE AFTER 10" TOP SLAB CHANGES ARE MADE.

REBAR	Size	Dim.	Hook	Length	Weight/ft.	Number	Weight
Bot Slab BB	#5	9.67	0.83	11.33	1.043	13	154 lbs
Bot Slab B	#4	11.67	0.67	13.00	0.668	11	96 lbs
Bot Slab TT	#5	9.67	0.83	11.33	1.043	13	154 lbs
Bot Slab T	#4	11.67	0.67	13.00	0.668	11	96 lbs
Wall Vert	#5	4.33	0.83	6.00	1.043	80	501 lbs
Wall Horiz	#4	9.67	0.67	11.00	0.668	~~12~~ 16	88 lbs
Wall Horiz	#4	11.67	0.67	13.00	0.668	~~12~~ 16	104 lbs
Top Slab BB	#5	9.67	0.83	11.33	1.043	13	154 lbs
Top Slab B	#4	11.67	0.67	13.00	0.668	11	96 lbs
Top Slab TT	#5	9.67	0.83	11.33	1.043	13	154 lbs
Top Slab T	#4	11.67	0.67	13.00	0.668	11	96 lbs
Additional #6's	#6	0.00	0.00	0.00	1.502	0	0 lbs
Trimmer Bars	#6			69.87	1.502	2	210 lbs
REBAR	**1740.1 lbs**						

size	lbs/ft	Hook
#4	0.668	0.67
#5	1.043	0.83
#6	1.502	1.00
#7	2.044	1.17
#8	2.67	1.33

Legend:

SUNDRY:	~~11 lbs~~ 14.1
OPENINGS:	-171 lbs

← ADD #4 HOOP TO THIS FORMULA

— TOTAL AREA * 2 * #4 WEIGHT + #5 WEIGHT

TO CHECK ALL SHEETS

Manhole	83rd Ave: Sta. 102+00

Manhole	83rd Ave: Sta. 102+00	
SUMMARY:	CONCRETE	5.3 CY
	REBAR	1146.1 lbs

GEOMETRY	Outside	Inside	Wall
Width (ft.)	6.00	4.17	0.92 ft.
Length (ft.)	11.00	9.17	
Height (ft.)	4.67	3.00	
Volume (ft.^{3})	308	114.5833	

OPENINGS	TOP	SIDE 1	SIDE 2	SIDE 3	SIDE 4	SIDE 5	SIDE 6	TOTAL
Diameter (ft.)	4.0	3.0	3.0	3.0	3.0			
Skew (deg)	0.0	0.0	0.0	0.0	0.0			
Bar Perimeter (ft.)	15.1	14.1	14.1	14.1	14.1	0.0	0.0	
Area (ft.^{2})	12.6	10.6	10.6	10.6	10.6	0.0	0.0	
Volume (ft.^{3})	~~11.5~~ 10.5	9.7	9.7	9.7	9.7	0.0	0.0	50.3
SUNDRY	0.0	ft.^{3}						
CONCRETE	**5.3 CY**							

REBAR	Size	Dim.	Hook	Length	Weight/ft.	Number	Weight
Bot Slab BB	#5	5.67	0.83	7.33	1.043	12	92 lbs
Bot Slab B	#4	10.67	0.67	12.00	0.668	7	56 lbs
Bot Slab TT	#5	5.67	0.83	7.33	1.043	12	92 lbs
Bot Slab T	#4	10.67	0.67	12.00	0.668	7	56 lbs
Wall Vert	#5	4.33	0.83	6.00	1.043	60	375 lbs
Wall Horiz	#4	5.67	0.67	7.00	0.668	~~12~~ 16	56 lbs
Wall Horiz	#4	10.67	0.67	12.00	0.668	~~12~~ 16	96 lbs
Top Slab BB	#5	5.67	0.83	7.33	1.043	12	92 lbs
Top Slab B	#4	10.67	0.67	12.00	0.668	7	56 lbs
Top Slab TT	#5	5.67	0.83	7.33	1.043	12	92 lbs
Top Slab T	#4	10.67	0.67	12.00	0.668	7	56 lbs
Additional #6's	#6	0.00	0.00	0.00	1.502	0	0 lbs
Trimmer Bars	#6			71.38	1.502	2	214 lbs
REBAR	**1146.1 lbs**						

size	lbs/ft	Hook
#4	0.668	0.67
#5	1.043	0.83
#6	1.502	1.00
#7	2.044	1.17
#8	2.67	1.33

Legend:

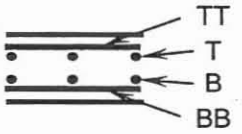

SUNDRY:	0 lbs
OPENINGS:	-188 lbs

Vault	83rd Ave.: Sta. 104+75

Vault	83rd Ave.: Sta. 104+75	
SUMMARY:	CONCRETE	7.2 CY
	REBAR	1322.6 lbs

GEOMETRY	Outside	Inside	Wall
Width (ft.)	6.00	4.17	0.92 ft.
Length (ft.)	11.00	9.17	
Height (ft.)	5.83	4.08	
Volume (ft.^{3})	385	155.9606	

OPENINGS	TOP	SIDE 1	SIDE 2	SIDE 3	SIDE 4	SIDE 5	SIDE 6	TOTAL
Diameter (ft.)	2.5	3.0	3.0	4.0				
Skew (deg)	0.0	0.0	0.0	0.0				
Bar Perimeter (ft.)	10.4	14.1	14.1	17.7	0.0	0.0	0.0	
Area (ft.^{2})	4.9	10.6	10.6	18.3	0.0	0.0	0.0	
Volume (ft.^{3})	~~4.5~~ 4.1	9.7	9.7	16.8	0.0	0.0	0.0	40.7
SUNDRY	6.1 ~~5.7~~ ft.^{3}							
CONCRETE	**7.2 CY**							

REBAR	Size	Dim.	Hook	Length	Weight/ft.	Number	Weight
Bot Slab BB	#5	5.67	0.83	7.33	1.043	12	92 lbs
Bot Slab B	#4	10.67	0.67	12.00	0.668	7	56 lbs
Bot Slab TT	#5	5.67	0.83	7.33	1.043	12	92 lbs
Bot Slab T	#4	10.67	0.67	12.00	0.668	7	56 lbs
Wall Vert	#5	5.50	0.83	7.17	1.043	60	448 lbs
Wall Horiz	#4	5.67	0.67	7.00	0.668	20	94 lbs
Wall Horiz	#4	10.67	0.67	12.00	0.668	20	160 lbs
Top Slab BB	#5	5.67	0.83	7.33	1.043	12	92 lbs
Top Slab B	#4	10.67	0.67	12.00	0.668	7	56 lbs
Top Slab TT	#5	5.67	0.83	7.33	1.043	12	92 lbs
Top Slab T	#4	10.67	0.67	12.00	0.668	7	56 lbs
Additional #6's	#6	0.00	0.00	0.00	1.502	0	0 lbs
Trimmer Bars	#6			56.27	1.502	2	169 lbs
REBAR	**1322.6 lbs**						

size	lbs/ft	Hook
#4	0.668	0.67
#5	1.043	0.83
#6	1.502	1.00
#7	2.044	1.17
#8	2.67	1.33

Legend:

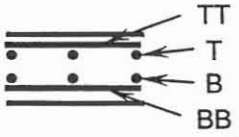

SUNDRY:	14.7 ~~121~~ lbs
OPENINGS:	-152 lbs

Manhole	83rd Ave.: Sta. 134+86

Manhole	83rd Ave.: Sta. 134+86	
SUMMARY:	CONCRETE	13.6 CY
	REBAR	2419.1 lbs

GEOMETRY	Outside	Inside	Wall
Width (ft.)	9.00	7.17	0.92 ft.
Length (ft.)	9.00	7.17	
Height (ft.)	11.00	9.33	
Volume (ft.^{3})	891	479.3704	

OPENINGS	TOP	SIDE 1	SIDE 2	SIDE 3	SIDE 4	SIDE 5	SIDE 6	TOTAL
Diameter (ft.)	4.0	2.0	3.5	3.5				
Skew (deg)	0.0	0.0	13.7 ~~13.5~~	10.5 ~~29.5~~				
Bar Perimeter (ft.)	15.1	10.4	16.3	16.9	0.0	0.0	0.0	
Area (ft.^{2})	12.6	4.9	14.6	15.1	0.0	0.0	0.0	
Volume (ft.^{3})	~~11.5~~ 10.5	4.5	13.4	13.9	0.0	0.0	0.0	43.3
SUNDRY	0.0 ft.^{3}							
CONCRETE	**~~13.6~~ CY**							

REBAR	Size	Dim.	Hook	Length	Weight/ft.	Number	Weight
Bot Slab BB	#5	8.67	0.83	10.33	1.043	~~14~~ 13	140 lbs
Bot Slab B	#4	8.67	0.67	10.00	0.668	10	67 lbs
Bot Slab TT	#5	8.67	0.83	10.33	1.043	~~14~~ 13	140 lbs
Bot Slab T	#4	8.67	0.67	10.00	0.668	10	67 lbs
Wall Vert	#5	10.67	0.83	12.33	1.043	80	1029 lbs
Wall Horiz	#4	8.67	0.67	10.00	0.668	~~40~~ 40	267 lbs
Wall Horiz	#4	8.67	0.67	10.00	0.668	~~40~~ 40	267 lbs
Top Slab BB	#5	8.67	0.83	10.33	1.043	10	108 lbs
Top Slab B	#4	8.67	0.67	10.00	0.668	10	67 lbs
Top Slab TT	#5	8.67	0.83	10.33	1.043	10	108 lbs
Top Slab T	#4	8.67	0.67	10.00	0.668	10	67 lbs
Additional #6's	#6	8.67	0.00	8.67	1.502	6	78 lbs
Trimmer Bars	#6			58.70	1.502	2	176 lbs
REBAR	**2419.1 lbs**						

size	lbs/ft	Hook
#4	0.668	0.67
#5	1.043	0.83
#6	1.502	1.00
#7	2.044	1.17
#8	2.67	1.33

Legend:

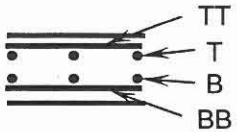

SUNDRY:	0 lbs
OPENINGS:	-162 lbs

Vault	Pinnacle Peak Rd: Sta. 199+60

Vault	Pinnacle Peak Rd: Sta. 199+60	
SUMMARY:	CONCRETE	8.8 CY
	REBAR	1449.6 lbs

GEOMETRY	Outside	Inside	Wall
Width (ft.)	8.00	6.17	0.92 ft.
Length (ft.)	9.00	7.17	
Height (ft.)	6.75	4.92	
Volume (ft.^{3})	486	217.2894	

OPENINGS	TOP	SIDE 1	SIDE 2	SIDE 3	SIDE 4	SIDE 5	SIDE 6	TOTAL
Diameter (ft.)	2.5	2.5	4.5					
Skew (deg)	0.0	0.0	0.0					
Bar Perimeter (ft.)	10.4	12.2	19.6	0.0	0.0	0.0	0.0	
Area (ft.^{2})	4.9	7.5	23.0	0.0	0.0	0.0	0.0	
Volume (ft.^{3})	~~4.5~~ 4.1	6.8	21.1	0.0	0.0	0.0	0.0	32.5
SUNDRY	2.6 ft.^{3}							
CONCRETE	~~8.8 CY~~							

REBAR	Size	Dim.	Hook	Length	Weight/ft.	Number	Weight
Bot Slab BB	#5	7.67	0.83	9.33	1.043	10	97 lbs
Bot Slab B	#4	8.67	0.67	10.00	0.668	9	60 lbs
Bot Slab TT	#5	7.67	0.83	9.33	1.043	10	97 lbs
Bot Slab T	#4	8.67	0.67	10.00	0.668	9	60 lbs
Wall Vert	#5	6.42	0.83	8.08	1.043	60 ~~56~~	472 lbs
Wall Horiz	#4	7.67	0.67	9.00	0.668	~~24 20~~	120 lbs
Wall Horiz	#4	8.67	0.67	10.00	0.668	~~24 20~~	134 lbs
Top Slab BB	#5	7.67	0.83	9.33	1.043	10	97 lbs
Top Slab B	#4	8.67	0.67	10.00	0.668	9	60 lbs
Top Slab TT	#5	7.67	0.83	9.33	1.043	10	97 lbs
Top Slab T	#4	8.67	0.67	10.00	0.668	9	60 lbs
Additional #6's	#6	8.67	0.00	8.67	1.502	6	78 lbs
Trimmer Bars	#6			42.20	1.502	2	127 lbs
REBAR	**1449.6 lbs**						

size	lbs/ft	Hook
#4	0.668	0.67
#5	1.043	0.83
#6	1.502	1.00
#7	2.044	1.17
#8	2.67	1.33

Legend:

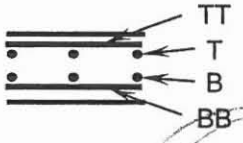

SUNDRY:	13.0 ~~10 lbs~~
OPENINGS:	~~122 lbs~~

Manhole	Pinnacle Peak Rd: Sta. 226+64

Manhole	Pinnacle Peak Rd: Sta. 226+64	
SUMMARY:	CONCRETE	9.9 CY
	REBAR	1548.4 lbs

GEOMETRY	Outside	Inside	Wall
Width (ft.)	8.00	6.17	0.92 ft.
Length (ft.)	10.00	8.17	
Height (ft.)	8.67	6.67	
Volume (ft.^{3})	693.3333	335.7407	

OPENINGS	TOP	SIDE 1	SIDE 2	SIDE 3	SIDE 4	SIDE 5	SIDE 6	TOTAL
Diameter (ft.)	4.0	5.0	4.0	6.0				
Skew (deg)	0.0	0.0	0.0	0.0				
Bar Perimeter (ft.)	15.1	21.4	17.7	25.1	0.0	0.0	0.0	
Area (ft.^{2})	12.6	28.3	18.3	40.3	0.0	0.0	0.0	
Volume (ft.^{3})	~~11.5~~ 10.5	25.9	16.8	37.0	0.0	0.0	0.0	91.3
SUNDRY	0.0 ft.^{3}							
CONCRETE	**9.9 CY**							

REBAR	Size	Dim.	Hook	Length	Weight/ft.	Number	Weight
Bot Slab BB	#5	7.67	0.83	9.33	1.043	11	107 lbs
Bot Slab B	#4	9.67	0.67	11.00	0.668	9	66 lbs
Bot Slab TT	#5	7.67	0.83	9.33	1.043	11	107 lbs
Bot Slab T	#4	9.67	0.67	11.00	0.668	9	66 lbs
Wall Vert	#5	8.33	0.83	10.00	1.043	64 ~~56~~	584 lbs
Wall Horiz	#4	7.67	0.67	9.00	0.668	32 ~~28~~	168 lbs
Wall Horiz	#4	9.67	0.67	11.00	0.668	32 ~~28~~	206 lbs
Top Slab BB	#5	7.67	0.83	9.33	1.043	11	107 lbs
Top Slab B	#4	9.67	0.67	11.00	0.668	9	66 lbs
Top Slab TT	#5	7.67	0.83	9.33	1.043	11	107 lbs
Top Slab T	#4	9.67	0.67	11.00	0.668	9	66 lbs
Additional #6's	#6	0.00	0.00	0.00	1.502	0	0 lbs
Trimmer Bars	#6			79.30	1.502	2	238 lbs
REBAR	**1548.4 lbs**						

size	lbs/ft	Hook
#4	0.668	0.67
#5	1.043	0.83
#6	1.502	1.00
#7	2.044	1.17
#8	2.67	1.33

Legend:

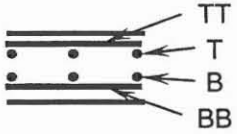

SUNDRY:	0 lbs
OPENINGS:	-341 lbs

Manhole	Pinnacle Peak Rd: Sta. 244+40

Manhole	Pinnacle Peak Rd: Sta. 244+40	
SUMMARY:	CONCRETE	16.8 CY
	REBAR	2798.2 lbs

GEOMETRY	Outside	Inside	Wall
Width (ft.)	9.00	7.17	0.92 ft.
Length (ft.)	14.00	12.17	
Height (ft.)	10.00	8.00	
Volume (ft.^{3})	1260	697.5556	

OPENINGS	TOP	SIDE 1	SIDE 2	SIDE 3	SIDE 4	SIDE 5	SIDE 6	TOTAL
Diameter (ft.)	4.0	6.5	7.0					
Skew (deg)	0.0	0.0	22.5					
Bar Perimeter (ft.)	15.1	26.9	31.0	0.0	0.0	0.0	0.0	
Area (ft.^{2})	12.6	47.2	59.0	0.0	0.0	0.0	0.0	
Volume (ft.^{3})	~~11.5~~ 10.5	43.2	54.1	0.0	0.0	0.0	0.0	109.0
SUNDRY	0.0 ft.^{3}							
CONCRETE	**16.8 CY**							

REBAR	Size	Dim.	Hook	Length	Weight/ft.	Number	Weight
Bot Slab BB	#5	8.67	0.83	10.33	1.043	22	237 lbs
Bot Slab B	#4	13.67	0.67	15.00	0.668	10	100 lbs
Bot Slab TT	#5	8.67	0.83	10.33	1.043	22	237 lbs
Bot Slab T	#4	13.67	0.67	15.00	0.668	10	100 lbs
Wall Vert	#5	9.67	0.83	11.33	1.043	106	1253 lbs
Wall Horiz	#4	8.67	0.67	10.00	0.668	~~32~~ 36	214 lbs
Wall Horiz	#4	13.67	0.67	15.00	0.668	~~32~~ 30	321 lbs
Top Slab BB	#5	8.67	0.83	10.33	1.043	15	162 lbs
Top Slab B	#4	13.67	0.67	15.00	0.668	10	100 lbs
Top Slab TT	#5	8.67	0.83	10.33	1.043	15	162 lbs
Top Slab T	#4	13.67	0.67	15.00	0.668	10	100 lbs
Additional #6's	#6	0.00	0.00	0.00	1.502	0	0 lbs
Trimmer Bars	#6			72.98	1.502	2	219 lbs
REBAR	**2798.2 lbs**						

size	lbs/ft	Hook
#4	0.668	0.67
#5	1.043	0.83
#6	1.502	1.00
#7	2.044	1.17
#8	2.67	1.33

Legend:

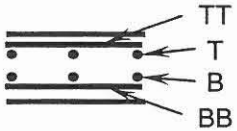

SUNDRY:	0 lbs
OPENINGS:	-407 lbs

Manhole	Pinnacle Peak Rd: Sta. 245+65

Manhole	Pinnacle Peak Rd: Sta. 245+65	
SUMMARY:	CONCRETE	23.5 CY
	REBAR	5118.3 lbs

GEOMETRY	Outside	Inside	Wall
Width (ft.)	12.50	10.67	0.92 ft.
Length (ft.)	14.00	12.17	
Height (ft.)	11.00	9.00	
Volume (ft.^{3})	1925	1168	

OPENINGS	TOP	SIDE 1	SIDE 2	SIDE 3	SIDE 4	SIDE 5	SIDE 6	TOTAL
Diameter (ft.)	4.0	7.0	7.0	2.0				
Skew (deg)	0.0	22.5	19.5	0.0				
Bar Perimeter (ft.)	15.1	31.0	30.4	10.4	0.0	0.0	0.0	
Area (ft.^{2})	12.6	59.0	57.9	4.9	0.0	0.0	0.0	
Volume (ft.^{3})	~~11.5~~ 10.5	54.1	53.0	4.5	0.0	0.0	0.0	123.2
SUNDRY	0.0 ft.^{3}							
CONCRETE	**23.5 CY**							

REBAR	Size	Dim.	Hook	Length	Weight/ft.	Number	Weight
Bot Slab BB	#6	12.17	1.00	14.17	1.502	22	468 lbs
Bot Slab B	#4	13.67	0.67	15.00	0.668	14 ~~13~~	130 lbs
Bot Slab TT	#6	12.17	1.00	14.17	1.502	22	468 lbs
Bot Slab T	#4	13.67	0.67	15.00	0.668	14 ~~13~~	130 lbs
Wall Vert	#6	10.67	1.00	12.67	1.502	106 ~~130~~	~~2473~~ 2017 1978 lbs
Wall Vert SHET	#5 SHET			SHET 1.043			46 608
Wall Horiz	#4	12.17	0.67	13.50	0.668	40 ~~36~~	325 lbs SHET.
Wall Horiz	#4	13.67	0.67	15.00	0.668	SHET 40 ~~36~~	361 lbs
Top Slab BB	#6	12.17	1.00	14.17	1.502	15	319 lbs
Top Slab B	#4	13.67	0.67	15.00	0.668	14 ~~13~~	130 lbs
Top Slab TT	#6	12.17	1.00	14.17	1.502	15	319 lbs
Top Slab T	#4	13.67	0.67	15.00	0.668	14 ~~13~~	130 lbs
Additional #6's	#6	~~6.67~~ 7.00	0.00	7.00	1.502	6	63 lbs
Trimmer Bars	#6	SHET		86.87	1.502	2	261 lbs
REBAR	**5118.3 lbs**						

size	lbs/ft	Hook
#4	0.668	0.67
#5	1.043	0.83
#6	1.502	1.00
#7	2.044	1.17
#8	2.67	1.33

Legend:

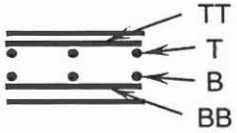

SUNDRY:	0 lbs
OPENINGS:	-460 lbs

To Preserve sheet format the quantity of #6 verts was modified to incorporate the #5's. This enables multiple-sheet editing.

Manhole	87th Ave.: Sta. 313+52

Manhole	87th Ave.: Sta. 313+52	
SUMMARY:	CONCRETE	24.9 CY
	REBAR	4380.7 lbs

GEOMETRY	Outside	Inside	Wall
Width (ft.)	12.00	10.17	0.92 ft.
Length (ft.)	16.00	14.17	
Height (ft.)	11.33	9.33	
Volume (ft.^{3})	2176	1344.259	

OPENINGS	TOP	SIDE 1	SIDE 2	SIDE 3	SIDE 4	SIDE 5	SIDE 6	TOTAL
Diameter (ft.)	4.0	6.5	6.5	7.0				
Skew (deg)	0.0	0.0	0.0	34.5				
Bar Perimeter (ft.)	15.1	26.9	26.9	34.5	0.0	0.0	0.0	
Area (ft.^{2})	12.6	47.2	47.2	66.2	0.0	0.0	0.0	
Volume (ft.^{3})	~~11.5~~ 10.5	43.2	43.2	60.7	0.0	0.0	0.0	158.7
SUNDRY	0.0 ft.^{3}							
CONCRETE	**24.9 CY**							

REBAR	Size	Dim.	Hook	Length	Weight/ft.	Number	Weight
Bot Slab BB	#6	11.67	1.00	13.67	1.502	17	349 lbs
Bot Slab B	#4	15.67	0.67	17.00	0.668	13	148 lbs
Bot Slab TT	#6	11.67	1.00	13.67	1.502	17	349 lbs
Bot Slab T	#4	15.67	0.67	17.00	0.668	13	148 lbs
Wall Vert	#6	11.00	1.00	13.00	1.502	STET ~~116~~ 90	1757 lbs
Wall Vert STET Wall Horiz	#4 #5	11.67	0.67	13.00	0.668	~~44~~ 40 44	347 lbs
Wall Horiz	#4	15.67	0.67	17.00	0.668	STET ~~44~~ 40	454 lbs
Top Slab BB	#6	11.67	1.00	13.67	1.502	17	349 lbs
Top Slab B	#4	15.67	0.67	17.00	0.668	13	148 lbs
Top Slab TT	#6	11.67	1.00	13.67	1.502	17	349 lbs
Top Slab T	#4	15.67	0.67	17.00	0.668	13	148 lbs
Additional #6's	#6	6.67 ~~6.50~~ STET	0.00	6.50	1.502	12	117 lbs
Trimmer Bars	#6			103.44	1.502	2	311 lbs
REBAR	**4380.7 lbs**						

size	lbs/ft	Hook
#4	0.668	0.67
#5	1.043	0.83
#6	1.502	1.00
#7	2.044	1.17
#8	2.67	1.33

Legend:

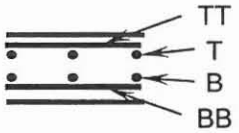

SUNDRY:	0 lbs
OPENINGS:	-593 lbs

12" SPACING IS CORRECT

- SEE NOTES IN DET. 10 RE #5 & #6

Stilling Basin	87th Ave.: Sta.61+62

Stilling Basin	87th Ave.: Sta.61+62		
SUMMARY:	CONCRETE	96.1	CY
	REBAR	14775.2	lbs

GEOMETRY	Outside	Inside	Wall
Width (ft.)	22.33	20.00	1.17 ft.
Length (ft.)	28.50	26.17	
Height (ft.)	16.67	15.50	
Volume (ft.^{3})	10608.33	8111.667	

OPENINGS	TOP	SIDE 1	SIDE 2	SIDE 3	SIDE 4	SIDE 5	SIDE 6	TOTAL
Diameter (ft.)		7.0						
Skew (deg)		0.0						
Bar Perimeter (ft.)	0.0	28.7	0.0	0.0	0.0	0.0	0.0	
Area (ft.^{2})	0.0	54.5	0.0	0.0	0.0	0.0	0.0	
Volume (ft.^{3})	0.0	63.6	0.0	0.0	0.0	0.0	0.0	63.8

SUNDRY 2594.7 ft.^{3} from separate calculation

CONCRETE 96.1 CY

REBAR	Size	Dim.	Hook	Length	Weight/ft.	Number	Weight
Slab Transverse	#5	22.00	0.00	22.00	1.043	68	1560 lbs
Slab Longitudinal	#5	28.17	0.00	28.17	1.043	86	2540 lbs
Wall Verts	#5	16.33	0.83	18.00	1.043	140	2628 lbs
Wall Verts	#5	13.58	0.83	15.25	1.043	92	1462 lbs
Back Wall Horiz	#5	22.00	0.83	23.67	1.043	46	1147 lbs
Side Horiz	#5	28.17	0.83	29.83	1.043	60	1866 lbs
Side Horiz	#5	20.33	0.83	21.17	1.043	33	728 lbs
Int. Wall Verts	#5	8.83	0.83	10.50	1.043	60	657 lbs
Int. Wall Horiz	#5	22.00	0.83	23.67	1.043	37	913 lbs
Int. Wall Horiz	#5	4.67	0.83	6.33	1.043	60	396 lbs
Shelf	#5	2.50	0.00	2.50	1.043	64	167 lbs
Shelf	#5	45.00	0.00	45.00	1.043	5	235 lbs
Trimmer Bars	#6			28.73	1.502	2	86 lbs
REBAR	**14775.2 lbs**						

size	lbs/ft	Hook
#4	0.668	0.67
#5	1.043	0.83
#6	1.502	1.00
#7	2.044	1.17
#8	2.67	1.33

Cutoff Wall:	732 lbs
OPENINGS:	-342 lbs

Manhole	87th Ave.: Sta. 326+40

Manhole	87th Ave.: Sta. 326+40	
SUMMARY:	CONCRETE	21.7 CY
	REBAR	5061.8 lbs

GEOMETRY	Outside	Inside	Wall
Width (ft.)	10.00	8.17	0.92 ft.
Length (ft.)	11.00	9.17	
Height (ft.)	16.00	14.00	
Volume (ft.^{3})	1760	1048.056	

OPENINGS	TOP	SIDE 1	SIDE 2	SIDE 3	SIDE 4	SIDE 5	SIDE 6	TOTAL
Diameter (ft.)	4.0	6.5	6.5	5.0				
Skew (deg)	0.0	0.0	0.0	20.0				
Bar Perimeter (ft.)	15.1	26.9	26.9	22.7	0.0	0.0	0.0	
Area (ft.^{2})	12.6	47.2	47.2	30.1	0.0	0.0	0.0	
Volume (ft.^{3})	~~11.5~~ 10.5	43.2	43.2	27.6	0.0	0.0	0.0	125.6
SUNDRY	~~0.0~~ ft.^{3}							
CONCRETE	**21.7 CY**							

REBAR	Size	Dim.	Hook	Length	Weight/ft.	Number	Weight
Bot Slab BB	#6	9.67	1.00	11.67	1.502	21 ~~23~~	403 lbs
Bot Slab B	#4	10.67	0.67	12.00	0.668	12 ~~11~~	88 lbs
Bot Slab TT	#5	9.67	0.83	11.33	1.043	11 ~~12~~	142 lbs
Bot Slab T	#4	10.67	0.67	12.00	0.668	12 ~~11~~	88 lbs
Wall Vert	#6	15.67	1.00	17.67	1.502	~~84~~ 108	2866 lbs
Wall Vert STD		#5 STEP					34 STEP
Wall Horiz	#4	9.67	0.67	11.00	0.668	60 ~~56~~	411 lbs
Wall Horiz	#4	10.67	0.67	12.00	0.668	~~60~~ 56	449 lbs
Top Slab BB	#5	9.67	0.83	11.33	1.043	11 ~~12~~	142 lbs
Top Slab B	#4	10.67	0.67	12.00	0.668	12 ~~11~~	88 lbs
Top Slab TT	#6	9.67	1.00	11.67	1.502	21 ~~23~~	403 lbs
Top Slab T	#4	10.67	0.67	12.00	0.668	12 ~~11~~	88 lbs
Additional #6's	#6	60 ~~9.67~~	0.00	9.67	1.502	12 ~~8~~	87 lbs
Trimmer Bars	#6			91.58	1.502	2	275 lbs
REBAR	**5061.8 lbs**						

size	lbs/ft	Hook
#4	0.668	0.67
#5	1.043	0.83
#6	1.502	1.00
#7	2.044	1.17
#8	2.67	1.33

Legend:

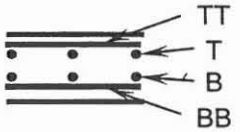

SUNDRY:	0 lbs
OPENINGS:	-469 lbs

SEE NOTE DETAIL 10 RE #5 - #6

Manhole	89th Ave.: Sta. 416+56

Manhole	89th Ave.: Sta. 416+56	
SUMMARY:	CONCRETE	12.5 CY
	REBAR	1882.5 lbs

GEOMETRY	Outside	Inside	Wall
Width (ft.)	10.00	8.17	0.92 ft.
Length (ft.)	10.00	8.17	
Height (ft.)	8.67	6.67	
Volume (ft.^{3})	866.6667	444.6296	

OPENINGS	TOP	SIDE 1	SIDE 2	SIDE 3	SIDE 4	SIDE 5	SIDE 6	TOTAL
Diameter (ft.)	4.0	6.0	6.0					
Skew (deg)	0.0	0.0	0.0					
Bar Perimeter (ft.)	15.1	25.1	25.1	0.0	0.0	0.0	0.0	
Area (ft.^{2})	12.6	40.3	40.3	0.0	0.0	0.0	0.0	
Volume (ft.^{3})	~~11.5~~ 10.5	~~37.0~~	37.0	0.0	0.0	0.0	0.0	85.6
SUNDRY	~~0.0~~ ft.^{3}							
CONCRETE	**12.5 CY**							

REBAR	Size	Dim.	Hook	Length	Weight/ft.	Number	Weight
Bot Slab BB	#5	9.67	0.83	11.33	1.043	11	130 lbs
Bot Slab B	#4	9.67	0.67	11.00	0.668	11	81 lbs
Bot Slab TT	#5	9.67	0.83	11.33	1.043	11	130 lbs
Bot Slab T	#4	9.67	0.67	11.00	0.668	11	81 lbs
Wall Vert	#5	8.33	0.83	10.00	1.043	72	751 lbs
Wall Horiz	#4	9.67	0.67	11.00	0.668	~~28~~ 32	206 lbs
Wall Horiz	#4	9.67	0.67	11.00	0.668	~~28~~ 32	206 lbs
Top Slab BB	#5	9.67	0.83	11.33	1.043	11	130 lbs
Top Slab B	#4	9.67	0.67	11.00	0.668	11	81 lbs
Top Slab TT	#5	9.67	0.83	11.33	1.043	11	130 lbs
Top Slab T	#4	9.67	0.67	11.00	0.668	11	81 lbs
Additional #6's	#6	9.67 ~~0.00~~	0.00	0.00	1.502	6 ~~0~~	0 lbs
Trimmer Bars	#6			65.24	1.502	2	196 lbs
REBAR	**1882.5 lbs**						

size	lbs/ft	Hook
#4	0.668	0.67
#5	1.043	0.83
#6	1.502	1.00
#7	2.044	1.17
#8	2.67	1.33

Legend:

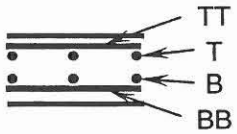

SUNDRY:	0 lbs
OPENINGS:	-319 lbs

Vault	Calle Lejos: Sta. 336+55

Vault	Calle Lejos: Sta. 336+55	
SUMMARY:	CONCRETE	13.8 CY
	REBAR	2142.9 lbs

GEOMETRY	Outside	Inside	Wall
Width (ft.)	7.50	5.67	0.92 ft.
Length (ft.)	14.00	12.17	
Height (ft.)	8.67	6.67	
Volume (ft.^{3})	910	459.6296	

OPENINGS	TOP	SIDE 1	SIDE 2	SIDE 3	SIDE 4	SIDE 5	SIDE 6	TOTAL
Diameter (ft.)	2.5	6.0	2.5	4.0	4.0			
Skew (deg)	0.0	0.0	4.5	0.0	0.0			
Bar Perimeter (ft.)	10.4	25.1	12.3	17.7	17.7	0.0	0.0	
Area (ft.^{2})	4.9	40.3	7.5	18.3	18.3	0.0	0.0	
Volume (ft.^{3})	~~4.5~~ 4.1	37.0	6.9	16.8	16.8	0.0	0.0	82.0
SUNDRY	~~4.0~~ ft.^{3}							
CONCRETE	**13.8 CY**							

REBAR	Size	Dim.	Hook	Length	Weight/ft.	Number	Weight
Bot Slab BB	#5	7.17	0.83	8.83	1.043	15	138 lbs
Bot Slab B	#4	13.67	0.67	15.00	0.668	9	90 lbs
Bot Slab TT	#5	7.17	0.83	8.83	1.043	15	138 lbs
Bot Slab T	#4	13.67	0.67	15.00	0.668	9	90 lbs
Wall Vert	#5	8.33	0.83	10.00	1.043	80	834 lbs
Wall Horiz	#4	7.17	0.67	8.50	0.668	~~28~~ 32	159 lbs
Wall Horiz	#4	13.67	0.67	15.00	0.668	~~28~~ 32	281 lbs
Top Slab BB	#5	7.17	0.83	8.83	1.043	15	138 lbs
Top Slab B	#4	13.67	0.67	15.00	0.668	9	90 lbs
Top Slab TT	#5	7.17	0.83	8.83	1.043	15	138 lbs
Top Slab T	#4	13.67	0.67	15.00	0.668	9	90 lbs
Additional #6's	#6	0.00	0.00	0.00	1.502	0	0 lbs
Trimmer Bars	#6			83.19	1.502	2	250 lbs
REBAR	**2142.9 lbs**						

size	lbs/ft	Hook
#4	0.668	0.67
#5	1.043	0.83
#6	1.502	1.00
#7	2.044	1.17
#8	2.67	1.33

Legend:

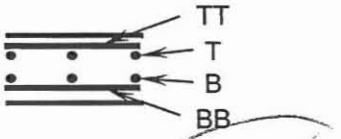

SUNDRY:	~~12 lbs~~ 14.7
OPENINGS:	-306 lbs

Vault	Calle Lejos: Sta. 339+55

Vault	Calle Lejos: Sta. 339+55	
SUMMARY:	CONCRETE	17.4 CY
	REBAR	3422.7 lbs

GEOMETRY	Outside	Inside	Wall
Width (ft.)	14.00	12.17	0.92 ft.
Length (ft.)	14.00	12.17	
Height (ft.)	5.83	4.08	
Volume (ft.^{3})	1143.333	604.4468	

OPENINGS	TOP	SIDE 1	SIDE 2	SIDE 3	SIDE 4	SIDE 5	SIDE 6	TOTAL
Diameter (ft.)	2.5	4.0	4.0	4.0	4.0			
Skew (deg)	0.0	0.0	0.0	6.0	6.0			
Bar Perimeter (ft.)	10.4	17.7	17.7	17.8	17.8	0.0	0.0	
Area (ft.^{2})	4.9	18.3	18.3	18.4	18.4	0.0	0.0	
Volume (ft.^{3})	~~4.5~~ 4.1	16.8	16.8	16.9	16.9	0.0	0.0	72.0
SUNDRY	~~2.2~~ ft.^{3}							
CONCRETE	**17.4 CY**							

REBAR	Size	Dim.	Hook	Length	Weight/ft.	Number	Weight
Bot Slab BB	#6	13.67	1.00	15.67	1.502	15	353 lbs
Bot Slab B	#4	13.67	0.67	15.00	0.668	15	150 lbs
Bot Slab TT	#6	13.67	1.00	15.67	1.502	15	353 lbs
Bot Slab T	#4	13.67	0.67	15.00	0.668	15	150 lbs
Wall Vert	#6	5.50	1.00	7.50	1.502	SHT 56 ~~90~~	1014 lbs
Wall Vert SHT	#5 SHT	13.67	0.67	15.00	0.668	SHT 20 ~~16~~	160 lbs
Wall Horiz	#4	13.67	0.67	15.00	0.668	20 ~~16~~	160 lbs
Wall Horiz	#4	13.67	1.00	15.67	1.502	15	353 lbs
Top Slab BB	#6	13.67	0.67	15.00	0.668	15	150 lbs
Top Slab B	#4	13.67	1.00	15.67	1.502	15	353 lbs
Top Slab TT	#6	13.67	0.67	15.00	0.668	15	150 lbs
Top Slab T	#4	13.67	0.00	5.00	1.502	6 ~~12~~	90 lbs
Additional #6's	#6	6.5 ~~5.00~~		81.51	1.502	2	245 lbs
Trimmer Bars	#6						
REBAR	**3422.7 lbs**						

size	lbs/ft	Hook
#4	0.668	0.67
#5	1.043	0.83
#6	1.502	1.00
#7	2.044	1.17
#8	2.67	1.33

Legend:

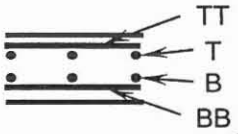

SUNDRY:	~~9 lbs~~ 11.9
OPENINGS:	-269 lbs

SEE NOTE DET. 10
#5 + #6

VAULT

~~Manhole~~	Cielo Grande: Sta. 400+30

Manhole	Cielo Grande: Sta. 400+30	
SUMMARY:	CONCRETE	10.2 CY
	REBAR	1602.9 lbs

GEOMETRY	Outside	Inside	Wall
Width (ft.)	7.00	5.17	0.92 ft.
Length (ft.)	11.00	9.17	
Height (ft.)	8.08	6.08	
Volume (ft.^{3})	622.4167	288.1134	

OPENINGS	TOP	SIDE 1	SIDE 2	SIDE 3	SIDE 4	SIDE 5	SIDE 6	TOTAL
Diameter (ft.)	2.5 ~~4.0~~	2.5	2.5	5.5				
Skew (deg)	0.0	40.5	0.0	0.0				
Bar Perimeter (ft.)	15.1	15.6	12.2	23.2	0.0	0.0	0.0	
Area (ft.^{2})	12.6	9.8	7.5	34.0	0.0	0.0	0.0	
Volume (ft.^{3})	~~11.5~~ 10.5	9.0	6.8	31.2	0.0	0.0	0.0	58.6

SUNDRY 1.3 ~~0.0~~ ft.^{3}

CONCRETE ~~10.2 CY~~

REBAR	Size	Dim.	Hook	Length	Weight/ft.	Number	Weight
Bot Slab BB	#5	6.67	0.83	8.33	1.043	12	104 lbs
Bot Slab B	#4	10.67	0.67	12.00	0.668	8	64 lbs
Bot Slab TT	#5	6.67	0.83	8.33	1.043	12	104 lbs
Bot Slab T	#4	10.67	0.67	12.00	0.668	8	64 lbs
Wall Vert	#5	7.75	0.83	9.42	1.043	64	629 lbs
Wall Horiz	#4	6.67	0.67	8.00	0.668	28 ~~24~~	128 lbs
Wall Horiz	#4	10.67	0.67	12.00	0.668	28 ~~24~~	192 lbs
Top Slab BB	#5	6.67	0.83	8.33	1.043	12	104 lbs
Top Slab B	#4	10.67	0.67	12.00	0.668	8	64 lbs
Top Slab TT	#5	6.67	0.83	8.33	1.043	12	104 lbs
Top Slab T	#4	10.67	0.67	12.00	0.668	8	64 lbs
Additional #6's	#6	0.00	0.00	0.00	1.502	0	0 lbs
Trimmer Bars	#6			66.19	1.502	2	199 lbs
REBAR	**1602.9 lbs**						

size	lbs/ft	Hook
#4	0.668	0.67
#5	1.043	0.83
#6	1.502	1.00
#7	2.044	1.17
#8	2.67	1.33

Legend:

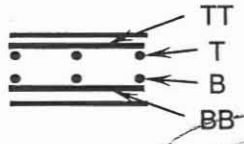

SUNDRY: 10.8 ~~0 lbs~~
OPENINGS: -219 lbs

Manhole	89th Ave.: Sta. 413+23

Manhole	89th Ave.: Sta. 413+23	
SUMMARY:	CONCRETE	12.4 CY
	REBAR	2324.3 lbs

GEOMETRY	Outside	Inside	Wall
Width (ft.)	10.00	8.17	0.92 ft.
Length (ft.)	10.00	8.17	
Height (ft.)	8.67	6.67	
Volume (ft.^{3})	866.6667	444.6296	

OPENINGS	TOP	SIDE 1	SIDE 2	SIDE 3	SIDE 4	SIDE 5	SIDE 6	TOTAL
Diameter (ft.)	4.0	6.0	5.5	2.5				
Skew (deg)	0.0	0.0	0.0	22.5				
Bar Perimeter (ft.)	15.1	25.1	23.2	13.1	0.0	0.0	0.0	
Area (ft.^{2})	12.6	40.3	34.0	8.1	0.0	0.0	0.0	
Volume (ft.^{3})	~~11.5~~ 10.5	37.0	31.2	7.4	0.0	0.0	0.0	87.2
SUNDRY	0.0 ft^3							
CONCRETE	~~12.4~~ **CY**							

REBAR	Size	Dim.	Hook	Length	Weight/ft.	Number	Weight
Bot Slab BB	#5	9.67	0.83	11.33	1.043	16	189 lbs
Bot Slab B	#4	9.67	0.67	11.00	0.668	11	81 lbs
Bot Slab TT	#5	9.67	0.83	11.33	1.043	16	189 lbs
Bot Slab T	#4	9.67	0.67	11.00	0.668	11	81 lbs
Wall Vert	#5	8.33	0.83	10.00	1.043	92	960 lbs
Wall Horiz	#4	9.67	0.67	11.00	0.668	32 ~~28~~	206 lbs
Wall Horiz	#4	9.67	0.67	11.00	0.668	32 ~~28~~	206 lbs
Top Slab BB	#5	9.67	0.83	11.33	1.043	11	130 lbs
Top Slab B	#4	9.67	0.67	11.00	0.668	11	81 lbs
Top Slab TT	#5	9.67	0.83	11.33	1.043	11	130 lbs
Top Slab T	#4	9.67	0.67	11.00	0.668	11	81 lbs
Additional #6's	#6	9.67	0.00	9.67	1.502	6	87 lbs
Trimmer Bars	#6			76.52	1.502	2	230 lbs
REBAR	**2324.3 lbs**						

size	lbs/ft	Hook
#4	0.668	0.67
#5	1.043	0.83
#6	1.502	1.00
#7	2.044	1.17
#8	2.67	1.33

Legend:

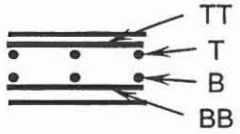

SUNDRY:	0 lbs
OPENINGS:	-325 lbs

Manhole	83rd Ave.: Sta. 142+46

Manhole	83rd Ave.: Sta. 142+46	
SUMMARY:	CONCRETE	8.3 CY
	REBAR	1777.5 lbs

GEOMETRY	Outside	Inside	Wall
Width (ft.)	6.00	4.17	0.92 ft.
Length (ft.)	13.00	11.17	
Height (ft.)	6.00	4.17	
Volume (ft.^{3})	468	193.8657	

OPENINGS	TOP	SIDE 1	SIDE 2	SIDE 3	SIDE 4	SIDE 5	SIDE 6	TOTAL
Diameter (ft.)	4.0	3.5	3.0	3.0				
Skew (deg)	0.0	0.0	26.0	45.0				
Bar Perimeter (ft.)	15.1	15.9	15.5	19.3	0.0	0.0	0.0	
Area (ft.^{2})	12.6	14.2	11.7	14.9	0.0	0.0	0.0	
Volume (ft.^{3})	~~11.5~~ 10.5	13.0	10.8	13.7	0.0	0.0	0.0	49.0
SUNDRY	0.0 ft.^{3}							
CONCRETE	**8.3 CY**							

REBAR	Size	Dim.	Hook	Length	Weight/ft.	Number	Weight
Bot Slab BB	#5	5.67	0.83	7.33	1.043	20	153 lbs
Bot Slab B	#4	12.67	0.67	14.00	0.668	7	65 lbs
Bot Slab TT	#5	5.67	0.83	7.33	1.043	SET ~~14~~ ~~20~~	153 lbs
Bot Slab T	#4	12.67	0.67	14.00	0.668	7	65 lbs
Wall Vert	#5	5.67	0.83	7.33	1.043	84 ~~82~~	627 lbs
Wall Horiz	#4	5.67	0.67	7.00	0.668	SET ~~20~~ ~~16~~	75 lbs
Wall Horiz	#4	12.67	0.67	14.00	0.668	SET ~~20~~ ~~16~~	150 lbs
Top Slab BB	#5	5.67	0.83	7.33	1.043	14	107 lbs
Top Slab B	#4 ~~#5~~	12.67	0.83	14.33	1.043	7	105 lbs
Top Slab TT	#5	5.67	0.83	7.33	1.043	14	107 lbs
Top Slab T	#4 ~~#5~~	12.67	0.83	14.33	1.043	7	105 lbs
Additional #6's	#6	0 ~~5.67~~	0.00	5.67	1.502	0 ~~6~~	51 lbs
Trimmer Bars	#6			65.77	1.502	2	198 lbs
REBAR	**1777.5 lbs**						

size	lbs/ft	Hook
#4	0.668	0.67
#5	1.043	0.83
#6	1.502	1.00
#7	2.044	1.17
#8	2.67	1.33

Legend:

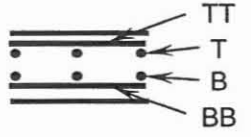

SUNDRY:	0 lbs
OPENINGS:	-183 lbs

Inlet Structure	Ventana Picacho RB Sta. 81+37

Inlet Structure	Ventana Picacho RB Sta. 81+37	
SUMMARY:	CONCRETE	9.9 CY
	REBAR	1342.7 lbs

GEOMETRY	Outside	Inside	Wall
Width (ft.)	4.83	3.00	0.92 ft.
Length (ft.)	11.83	10.00	
Height (ft.)	8.60	7.43	
Volume (ft.^{3})	491.6816	222.9	

OPENINGS	TOP	SIDE 1	SIDE 2	SIDE 3	SIDE 4	SIDE 5	SIDE 6	TOTAL
Diameter (ft.)		5.0						
Skew (deg)		0.0						
Bar Perimeter (ft.)	0.0	21.4	0.0	0.0	0.0	0.0	0.0	
Area (ft.^{2})	0.0	28.3	0.0	0.0	0.0	0.0	0.0	
Volume (ft.^{3})	0.0	25.9	0.0	0.0	0.0	0.0	0.0	26.0

SUNDRY 23.9 ft.^{3}

CONCRETE 9.9 CY

REBAR	Size	Dim.	Hook	Length	Weight/ft.	Number	Weight
Bot Slab BB	#5	4.50	0.83	6.17	1.043	13	84 lbs
Bot Slab B	#4	11.50	0.67	12.83	0.668	6	51 lbs
Bot Slab TT	#5	4.50	0.83	6.17	1.043	13	84 lbs
Bot Slab T	#4	11.50	0.67	12.83	0.668	6	51 lbs
Wall Vert	#5	8.26	0.83	9.93	1.043	60	621 lbs
Wall Horiz	#4	4.50	0.67	5.83	0.668	STET ~~34~~ 32	125 lbs
Wall Horiz	#4	11.50	0.67	12.83	0.668	ES 34 ~~28~~	240 lbs
Top Slab BB	#4	4.50	0.67	5.83	0.668	0	0 lbs
Top Slab B	#4	11.50	0.67	12.83	0.668	0	0 lbs
Top Slab TT	#4	4.50	0.67	5.83	0.668	0	0 lbs
Top Slab T	#4	11.50	0.67	12.83	0.668	0	0 lbs
Additional #6's	#6	0.00	0.00	0.00	1.502	0	0 lbs
Trimmer Bars	#6			21.40	1.502	2	64 lbs
REBAR	**1342.7 lbs**						

size	lbs/ft	Hook
#4	0.668	0.67
#5	1.043	0.83
#6	1.502	1.00
#7	2.044	1.17
#8	2.67	1.33

Legend:

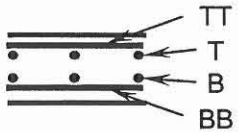

SUNDRY:	~~119~~ 85.8 STET lbs
OPENINGS:	-97 lbs

85+77

Inlet Structure	Ventana Picacho RB Sta. ~~78+80~~

Inlet Structure	Ventana Picacho RB Sta. 78+80	
SUMMARY:	CONCRETE	42.6 CY
	REBAR	4864.1 lbs

GEOMETRY	Outside	Inside	Wall
Width (ft.)	6.83	5.00	0.92 ft.
Length (ft.)	46.83	45.00	
Height (ft.)	9.17	8.00	
Volume (ft.^{3})	2933.588	1800	

OPENINGS	TOP	SIDE 1	SIDE 2	SIDE 3	SIDE 4	SIDE 5	SIDE 6	TOTAL
Diameter (ft.)		5.0						
Skew (deg)		0.0						
Bar Perimeter (ft.)	0.0	21.4	0.0	0.0	0.0	0.0	0.0	
Area (ft.^{2})	0.0	28.3	0.0	0.0	0.0	0.0	0.0	
Volume (ft.^{3})	0.0	25.9	0.0	0.0	0.0	0.0	0.0	26.0

SUNDRY 42.9 ft.^{3}

CONCRETE 42.6 CY

REBAR	Size	Dim.	Hook	Length	Weight/ft.	Number	Weight
Bot Slab BB	#5	6.50	0.83	8.17	1.043	48	409 lbs
Bot Slab B	#4	46.50	0.67	47.83	0.668	8	256 lbs
Bot Slab TT	#5	6.50	0.83	8.17	1.043	48	409 lbs
Bot Slab T	#4	46.50	0.67	47.83	0.668	8	256 lbs
Wall Vert	#5	8.83	0.83	10.50	1.043	208	2278 lbs
Wall Horiz	#4	6.50	0.67	7.83	0.668	~~32~~	167 lbs
Wall Horiz	#4	46.50	0.67	47.83	0.668	34 ~~32~~	1022 lbs
Top Slab BB	#4	6.50	0.67	7.83	0.668	0	0 lbs
Top Slab B	#4	46.50	0.67	47.83	0.668	0	0 lbs
Top Slab TT	#4	6.50	0.67	7.83	0.668	0	0 lbs
Top Slab T	#4	46.50	0.67	47.83	0.668	0	0 lbs
Additional #6's	#6	0.00	0.00	0.00	1.502	0	0 lbs
Trimmer Bars	#6			21.40	1.502	2	64 lbs
REBAR	**4864.1 lbs**						

size	lbs/ft	Hook
#4	0.668	0.67
#5	1.043	0.83
#6	1.502	1.00
#7	2.044	1.17
#8	2.67	1.33

Legend:

SUNDRY:	~~400 lbs~~ 145.2
OPENINGS:	-97 lbs

Inlet Structure	Calle Lajos: Sta. 340+27

Inlet Structure	Calle Lajos: Sta. 340+27	
SUMMARY: CONCRETE	6.2	CY
REBAR	1256.6	lbs

GEOMETRY	Outside	Inside	Wall
Width (ft.)			0.00 ft.
Length (ft.)			
Height (ft.)			
Volume (ft.^{3})	0	0	

OPENINGS	TOP	SIDE 1	SIDE 2	SIDE 3	SIDE 4	SIDE 5	SIDE 6	TOTAL
Diameter (ft.)								
Skew (deg)								
Bar Perimeter (ft.)	0.0	0.0	0.0	0.0	0.0	0.0	0.0	
Area (ft.^{2})	0.0	0.0	0.0	0.0	0.0	0.0	0.0	
Volume (ft.^{3})	0.0	0.0	0.0	0.0	0.0	0.0	0.0	0.0

SUNDRY 166.3 ft.^{3}

CONCRETE 6.2 CY

SEE SEPARATE CHECK

REBAR	Size	Dim.	Hook	Length	Weight/ft.	Number	Weight
Bot Slab BB	#4	-0.33	0.67	1.00	0.668		0 lbs
Bot Slab B	#4	-0.33	0.67	1.00	0.668		0 lbs
Bot Slab TT	#4	-0.33	0.67	1.00	0.668		0 lbs
Bot Slab T	#4	-0.33	0.67	1.00	0.668		0 lbs
Wall Vert	#4	-0.33	0.67	1.00	0.668		0 lbs
Wall Horiz	#4	-0.33	0.67	1.00	0.668		0 lbs
Wall Horiz	#4	-0.33	0.67	1.00	0.668		0 lbs
Top Slab BB	#4	-0.33	0.67	1.00	0.668		0 lbs
Top Slab B	#4	-0.33	0.67	1.00	0.668		0 lbs
Top Slab TT	#4	-0.33	0.67	1.00	0.668		0 lbs
Top Slab T	#4	-0.33	0.67	1.00	0.668		0 lbs
Additional #6's	#6		0.00	0.00	1.502		0 lbs
Trimmer Bars	#6			0.00	1.502	2	0 lbs
REBAR	**1256.6 lbs**						

size	lbs/ft	Hook
#4	0.668	0.67
#5	1.043	0.83
#6	1.502	1.00
#7	2.044	1.17
#8	2.67	1.33

Legend:

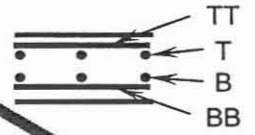

SUNDRY: 1257 lbs
OPENINGS: 0 lbs

Manhole	87th Ave.: Sta. 307+50

Manhole	87th Ave.: Sta. 307+50	
SUMMARY:	CONCRETE	5.7 CY
	REBAR	1348.7 lbs

GEOMETRY	Outside	Inside	Wall
Width (ft.)	7.33	5.50	0.92 ft.
Length (ft.)	8.00	6.17	
Height (ft.)	6.00	4.17	
Volume (ft.^{3})	352	141.3194	

OPENINGS	TOP	SIDE 1	SIDE 2	SIDE 3	SIDE 4	SIDE 5	SIDE 6	TOTAL
Diameter (ft.)	4.0	3.5	3.5	4.0				
Skew (deg)	0.0	0.0	22.0	16.0				
Bar Perimeter (ft.)	15.1	15.9	17.0	18.4	0.0	0.0	0.0	
Area (ft.^{2})	12.6	14.2	15.3	19.1	0.0	0.0	0.0	
Volume (ft.^{3})	11.5	13.0	14.0	17.5	0.0	0.0	0.0	56.1
SUNDRY	0.0 ft.^{3}	10" TOP SLAB						
CONCRETE	**5.7 CY**							

REBAR	Size	Dim.	Hook	Length	Weight/ft.	Number	Weight
Bot Slab BB	#5	7.00	0.83	8.67	1.043	13	118 lbs
Bot Slab B	#4	7.67	0.67	9.00	0.668	8	48 lbs
Bot Slab TT	#5	7.00	0.83	8.67	1.043	13	118 lbs
Bot Slab T	#4	7.67	0.67	9.00	0.668	8	48 lbs
Wall Vert	#5	5.67	0.83	7.33	1.043	~~66~~ 76	520 lbs
Wall Horiz	#4	7.00	0.67	8.33	0.668	~~16~~ 20	89 lbs
Wall Horiz	#4	7.67	0.67	9.00	0.668	~~10~~ 20	96 lbs
Top Slab BB	#5	7.00	0.83	8.67	1.043	9	81 lbs
Top Slab B	#4	7.67	0.67	9.00	0.668	8	48 lbs
Top Slab TT	#5	7.00	0.83	8.67	1.043	9	81 lbs
Top Slab T	#4	7.67	0.67	9.00	0.668	8	48 lbs
Additional #6's	#6	~~7.00~~ 0	0.00	7.00	1.502	~~6~~ 0	63 lbs
Trimmer Bars	#6			66.43	1.502	2	200 lbs
REBAR	**1348.7 lbs**						

size	lbs/ft	Hook
#4	0.668	0.67
#5	1.043	0.83
#6	1.502	1.00
#7	2.044	1.17
#8	2.67	1.33

Legend:

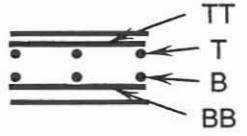

SUNDRY:	0 lbs
OPENINGS:	-209 lbs

MANHOLE

~~Vault~~	87th Ave.: Sta. 61+37

Vault	87th Ave.: Sta. 61+37	
SUMMARY:	CONCRETE	15.5 CY
	REBAR	2252.1 lbs

GEOMETRY	Outside	Inside	Wall
Width (ft.)	9.00	7.17	0.92 ft.
Length (ft.)	11.00	9.17	
Height (ft.)	12.00	10.00	
Volume (ft.^{3})	1188	656.9444	

OPENINGS	TOP	SIDE 1	SIDE 2	SIDE 3	SIDE 4	SIDE 5	SIDE 6	TOTAL
Diameter (ft.)	4.0 ~~2.5~~	7.0	3.5	7.0				
Skew (deg)	0.0	0.0	0.0	0.0				
Bar Perimeter (ft.)	10.4	28.7	15.9	28.7	0.0	0.0	0.0	
Area (ft.^{2})	4.9	54.5	14.2	54.5	0.0	0.0	0.0	
Volume (ft.^{3})	4.5	50.0	13.0	50.0	0.0	0.0	0.0	117.6

SUNDRY 0 ~~4.4~~ ft.^{3}

CONCRETE 15.5 CY

REBAR	Size	Dim.	Hook	Length	Weight/ft.	Number	Weight
Bot Slab BB	#5	8.67	0.83	10.33	1.043	~~#10, 12~~	129 lbs
Bot Slab B	#4	10.67	0.67	12.00	0.668	~~#12 10~~ SET	80 lbs
Bot Slab TT	#5	8.67	0.83	10.33	1.043	~~#10 12~~	129 lbs
Bot Slab T	#4	10.67	0.67	12.00	0.668	~~#12 10~~	80 lbs
Wall Vert	#5	11.67	0.83	13.33	1.043	72	1001 lbs
Wall Horiz	#4	8.67	0.67	10.00	0.668	SET ~~44 40~~	267 lbs
Wall Horiz	#4	10.67	0.67	12.00	0.668	~~44 40~~	321 lbs
Top Slab BB	#5	8.67	0.83	10.33	1.043	~~#10 12~~	129 lbs
Top Slab B	#4	10.67	0.67	12.00	0.668	~~#12 10~~ SET	80 lbs
Top Slab TT	#5	8.67	0.83	10.33	1.043	~~#10 12~~	129 lbs
Top Slab T	#4	10.67	0.67	12.00	0.668	~~#12 10~~	80 lbs
Additional #6's	#6	~~8.67 0.00~~	0.00	0.00	1.502	~~#12 8~~	0 lbs
Trimmer Bars	#6	6.0		83.75	1.502	2	252 lbs
REBAR	**2252.1 lbs**						

size	lbs/ft	Hook
#4	0.668	0.67
#5	1.043	0.83
#6	1.502	1.00
#7	2.044	1.17
#8	2.67	1.33

Legend:

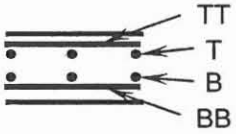

SUNDRY: 0 ~~12 lbs~~
OPENINGS: ~~-439 lbs~~

Rebar layers need to switched on Detail 24 sheet.

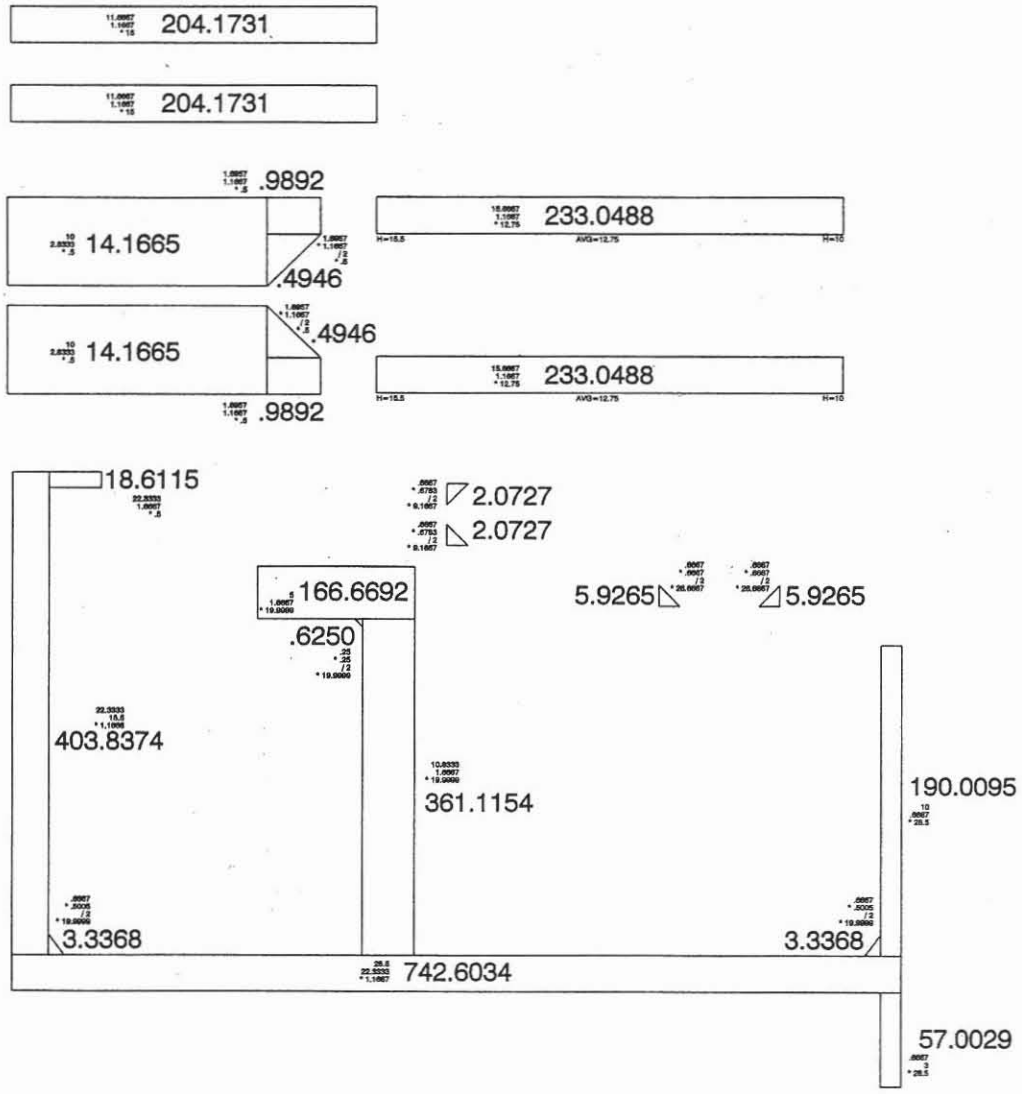

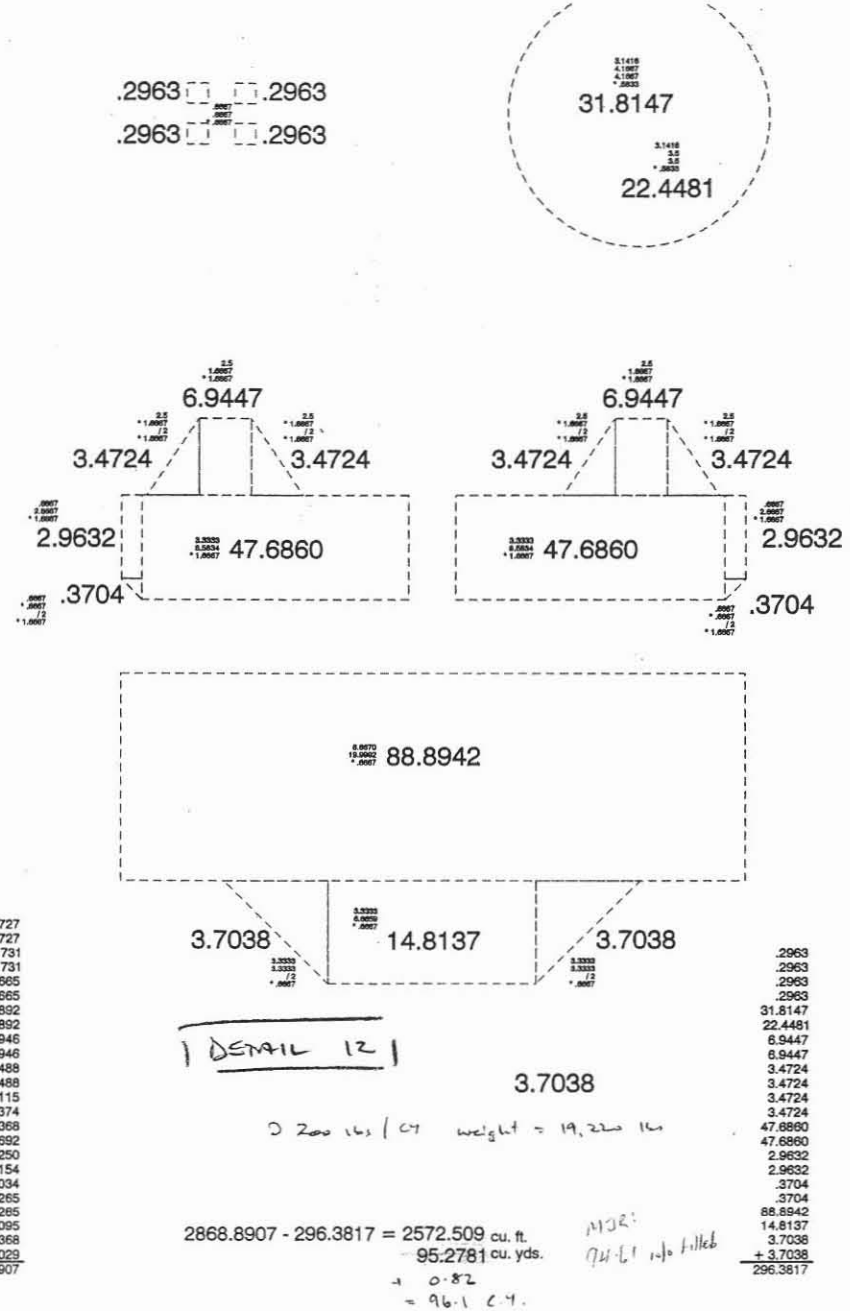

2.0727
2.0727
204.1731
204.1731
14.1665
14.1665
.9892
.9892
.4946
.4946
233.0488
233.0488
18.6115
403.8374
3.3368
166.6692
.6250
361.1154
742.6034
5.9265
5.9265
190.0095
3.3368
+ 57.0029
2868.8907

.2963
.2963
.2963
.2963
31.8147
22.4481
6.9447
6.9447
3.4724
3.4724
3.4724
3.4724
47.6860
47.6860
2.9632
2.9632
.3704
.3704
88.8942
14.8137
3.7038
+ 3.7038
296.3817

@ 200 lbs / CY weight = 19,220 lbs

2868.8907 - 296.3817 = 2572.509 cu. ft.

95.2781 cu. yds.

+ 0.82

= 96.1 C.Y.

MIR: 94.61 info filled

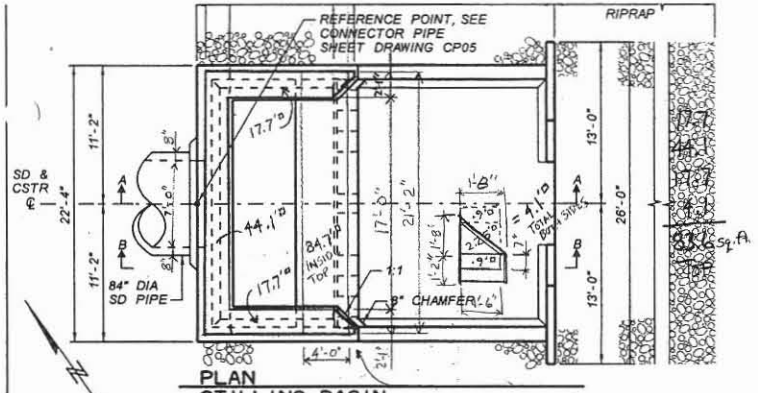

PLAN
STILLING BASIN
87TH AVENUE BASIN STA 61+62
NTS

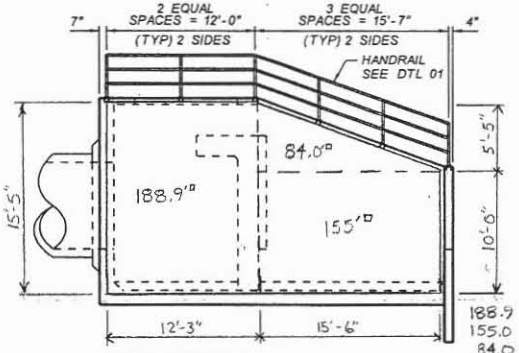

188.9
155.0
84.0
427.9
x 2 SIDES
855.8 sq.ft. SIDES

SIDE PROFILE
STILLING BASIN
87TH AVENUE BASIN STA 61+62
NTS

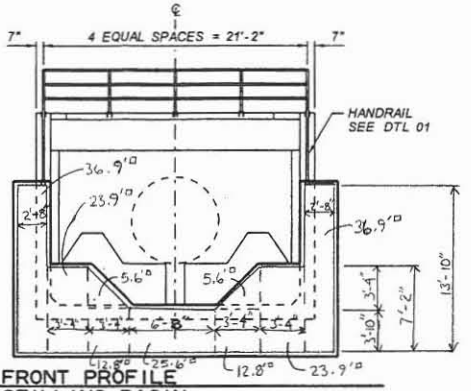

36.9
23.9
12.8
5.6
25.6
12.8
5.6
23.9
36.9
184 sq.ft.
FRONT FACE

FRONT PROFILE
STILLING BASIN
87TH AVENUE BASIN STA 61+62
NTS

INCLUDE:
$3(3.33') \times 3.33' \times \frac{8''}{12}$
= 22.2 cf
$\times 1/27$ = 0.82 cy. (Curve)
AND:
33.3 sf (FACE)

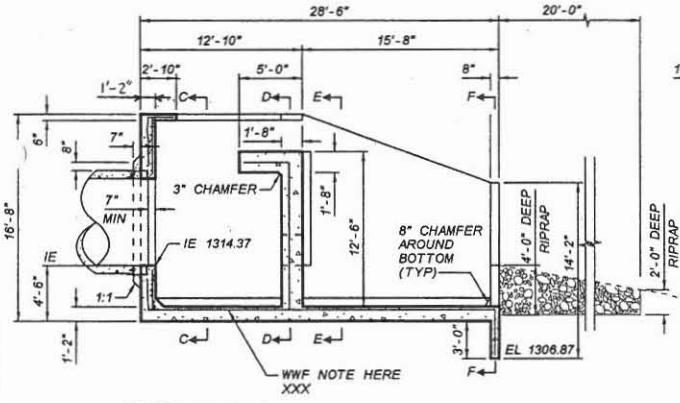

SECTION A-A
STILLING BASIN
87TH AVENUE BASIN STA 61+62
NTS

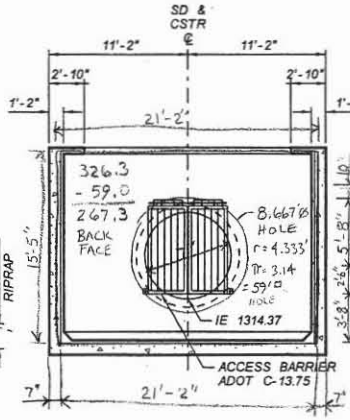

SECTION C-C
STILLING BASIN
87TH AVENUE BASIN
STA 61+62
NTS

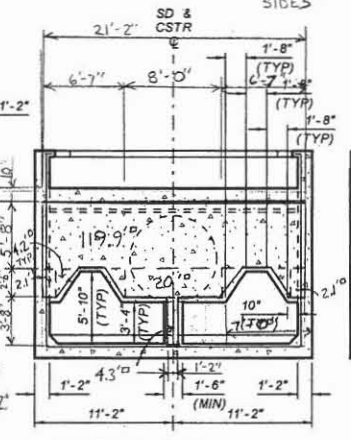

SECTION D-D
STILLING BASIN
87TH AVENUE BASIN
STA 61+62
NTS

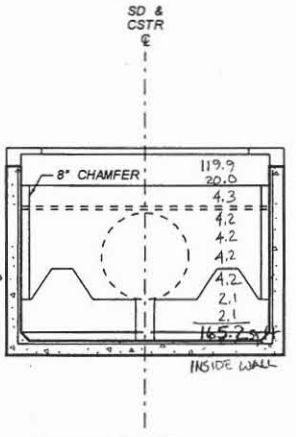

SECTION E-E
STILLING BASIN
87TH AVENUE BASIN
STA 61+62
NTS

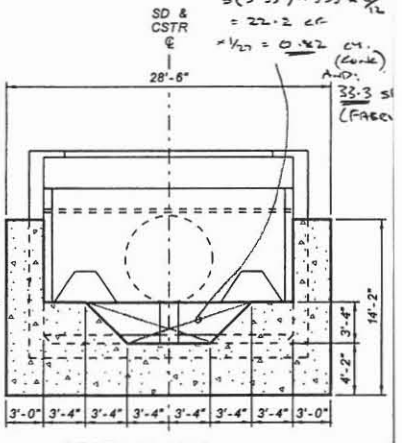

SECTION F-F
STILLING BASIN
87TH AVENUE BASIN
STA 61+62
NTS

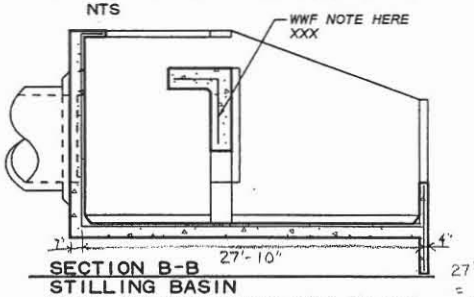

SECTION B-B
STILLING BASIN
87TH AVENUE BASIN STA 61+62
NTS

27'-10" x 21'-2"
= 589.1 sq.ft.
BOTTOM

CHECKED: MJR 1/2/06

D 200 lbs / cf:
weight = 96.1 x 200
= 19,220
weight per sf
= $\frac{19,220}{2263}$
= 8.49 psf.

FRONT FACE	184.0
SIDES	855.8
BOTTOM	589.1
BACK FACE	267.3
INSIDE WALL	165.2
INSIDE TOP	84.7
TOP	83.6
	2229.7 sq.ft.
+ 33.3	= 2263 sq.ft.

NO.	REVISION	BY	DATE
3			
2			
1			

FLOOD CONTROL DISTRICT OF MARICOPA COUNTY
ENGINEERING DIVISION

83RD AVENUE / PINNACLE PEAK ROAD
DRAINAGE IMPROVEMENTS
PCN 450.02.33 FCD CONTRACT NO. 2003C060

90%
PRELIMINARY NOT FOR CONSTRUCTION

	BY	DATE
DESIGNED	O. OLIDEN	01/06
DRAWN	A. JOHNSON	01/06
CHECKED	MJR	1/06

JACOBS CIVIL INC.

DRAWING NO. D12 | DTL 12 STILLING BASIN | SHEET OF

Detail 12 Stilling Basin		Detail 22 Inlet Struct.
2.0727		
2.0727		67.548
204.1731	0.2963	10.4473
204.1731	0.2963	10.4473
14.1665	0.2963	77.8756
14.1665	0.2963	
0.9892	31.8147	166.3182 cu. ft.
0.9892	22.4481	6.1599 cu. yds.
0.4946	6.9447	
0.4946	6.9447	
233.0488	3.4724	
233.0488	3.4724	
18.6115	3.4724	
403.8374	3.4724	
3.3368	47.686	
166.6692	47.686	
0.625	2.9632	
361.1154	2.9632	
742.6034	0.3704	
5.9265	0.3704	
5.9265	88.8942	
190.0095	14.8137	
3.3368	3.7038	
57.0029	3.7038	
2868.8907	296.3817	
	2572.51 cu. ft.	
	95.2781 cu. yds.	

+ 0.82

96.1

CHECKED: MJR

1/2/06

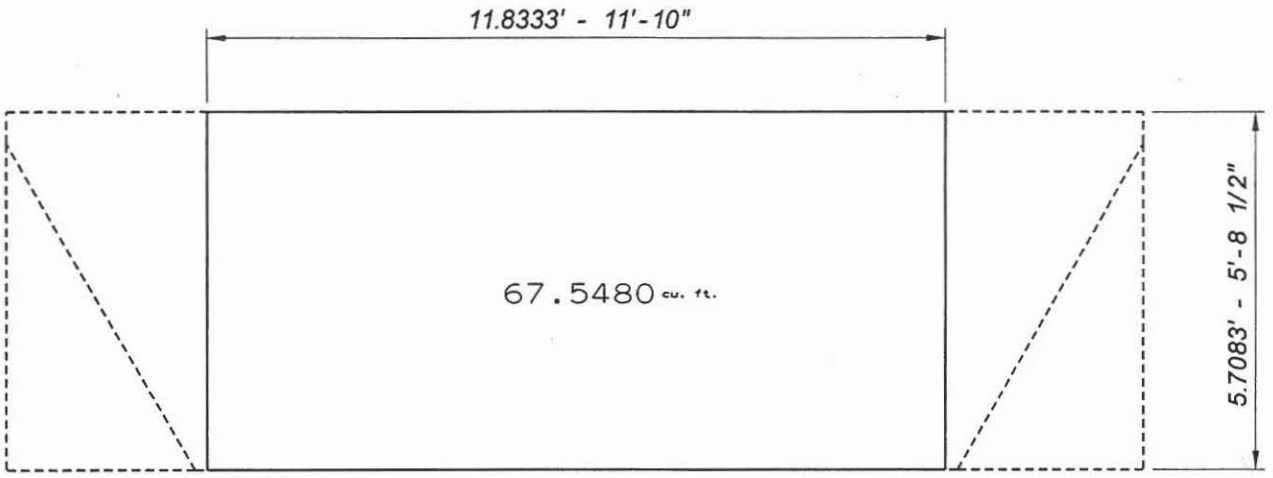

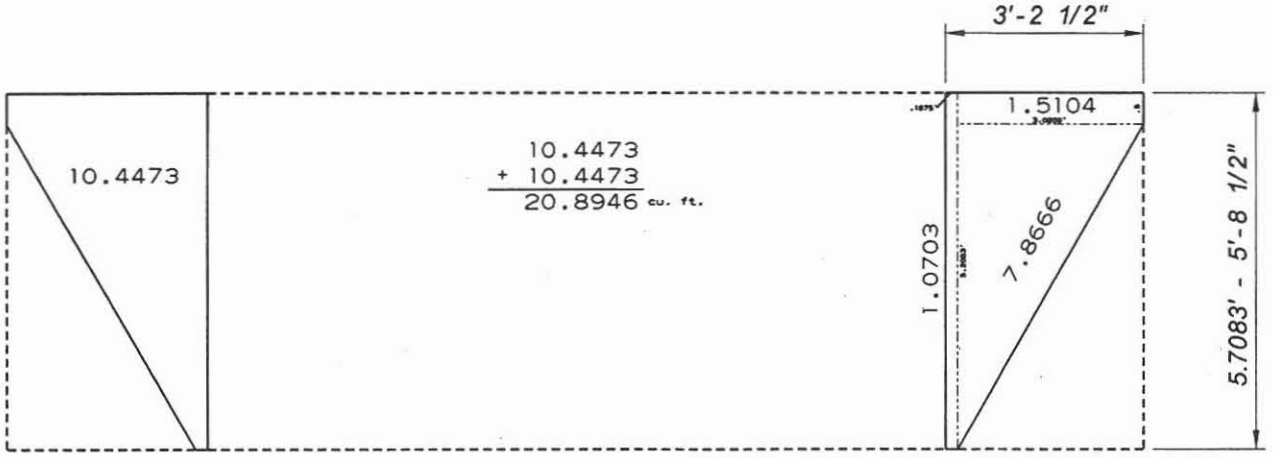

67.5480
+ 20.8946
88.4426 cu. ft.

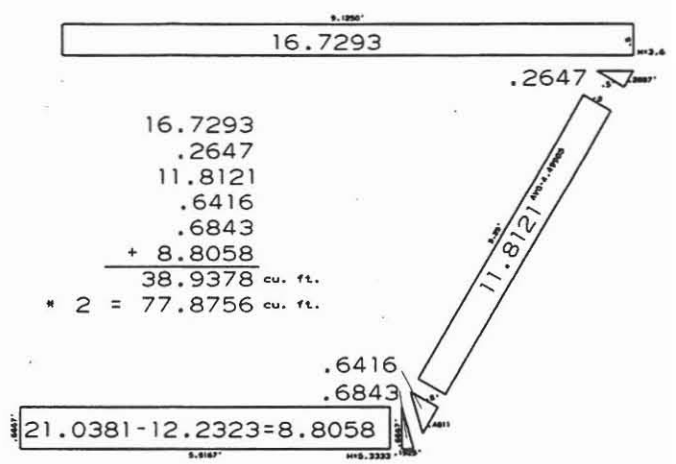

16.7293
.2647
11.8121
.6416
.6843
+ 8.8058
38.9378 cu. ft.
* 2 = 77.8756 cu. ft.

88.4426
+ 77.8756
166.3182 cu. ft.
6.1599 cu. yds.

CHECKED: MJR

1/2/06

DETAIL 22

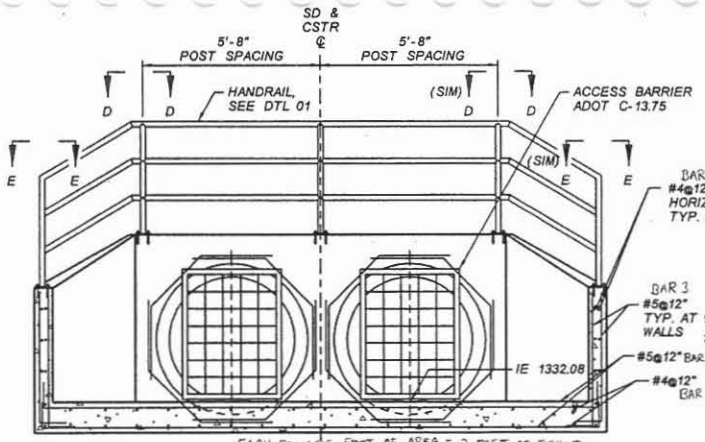

48" DIA PIPE
+ 5" THICKNESS OF PIPE
+ 2" COVER
55" Ø HOLE IN REBAR

SECTION A-A
DROP INLET STRUCTURE
CALLE LEJOS STA 340+27
NTS

$\pi R^2 = 3.14(2.29')^2 = 16.5'^{\square} = 8.25'$ OF #5 & 8.25' OF #4 PER FACE x 4 FACES = 33' #5, 33' #4

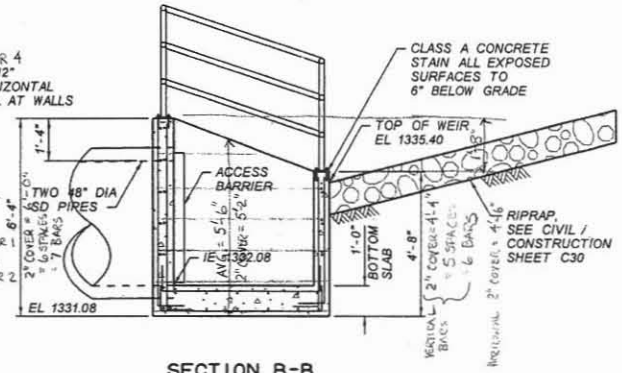

SECTION B-B
DROP INLET STRUCTURE
CALLE LEJOS STA 340+27
NTS

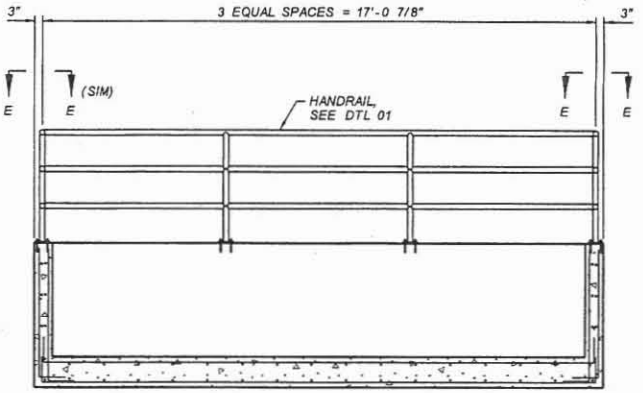

SECTION C-C
DROP INLET STRUCTURE
CALLE LEJOS STA 340+27
NTS

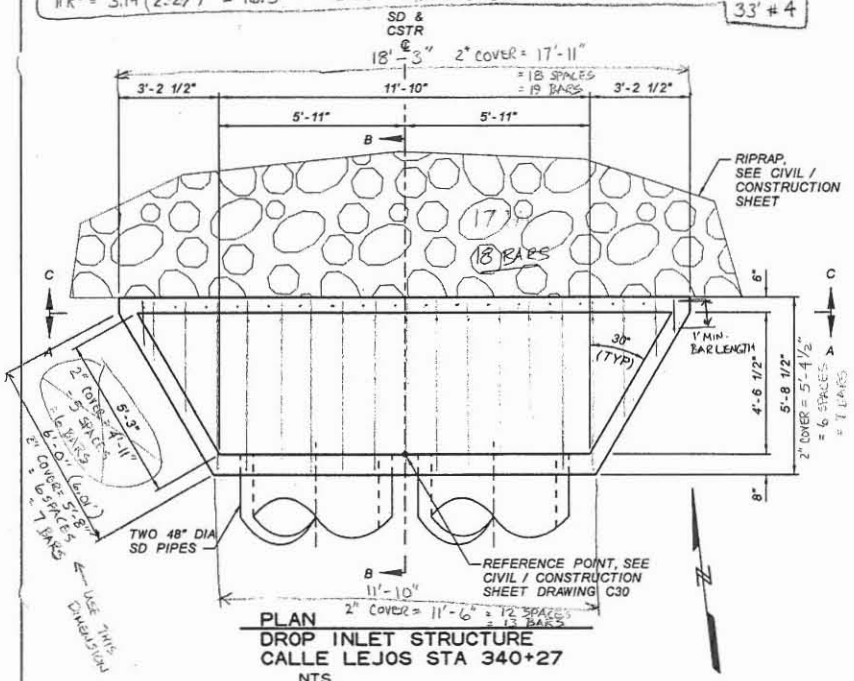

PLAN
DROP INLET STRUCTURE
CALLE LEJOS STA 340+27
NTS

			TOTAL BARS TOP & BOTTOM			
BOTTOM SLAB						
BAR 1 #5	AVG LENGTH = 14'-8½"	HOOK LENGTH = 10"x2 = 1'-8"	14	LBS/FT = 1.043	=	239.1 LBS.
BAR 2a #4	AVG LENGTH = 3'-4"	HOOK LENGTH = 8"x2 = 1'-4"	12	LBS/FT = .668	=	37.4 LBS.
BAR 2b #4	LENGTH = 5'-4½"	HOOK LENGTH = 8"x2 = 1'-4"	24	LBS/FT = .668	=	107.5 LBS.
			TOTAL BARS EACH FACE			
NORTH WALL						
BAR 3 #5	LENGTH = 6'-0"	HOOK LENGTH = 10"x1 = 10"	19x2 = 38	LBS/FT = 1.043	=	270.8 LBS.
BAR 4 #4	LENGTH = 17'-11"	NO HOOK	7x2 = 14	LBS/FT = .668	=	167.6 LBS.
SOUTH WALL						
BAR 3 #5	LENGTH = 4'-4"	HOOK LENGTH = 10"x1 = 10"	13x2 = 26	LBS/FT = 1.043	=	140.1 LBS.
BAR 4 #4	LENGTH = 11'-6"	NO HOOK	6x2 = 12	LBS/FT = .668	=	92.2 LBS.
EAST WALL						
BAR 3 #5	AVG. LENGTH = 5'-2"	HOOK LENGTH = 10"x1 = 10"	7x2 = 14	LBS/FT = 1.043	=	87.6 LBS.
BAR 4a #4	AVG. LENGTH = 2'-10"	NO HOOK	1x2 = 2	LBS/FT = .668	=	3.8 LBS.
BAR 4b #4	LENGTH = 5'-8"	NO HOOK	5x2 = 10	LBS/FT = .668	=	37.9 LBS
					=	87.6 LBS
					=	3.8 LBS
					=	37.9 LBS
						1313.3 LBS.

HOLE LENGTH			
33'	LBS/FT = 1.043	=	34.4 LB
33'	LBS/FT = .668	=	22.0 LB
			56.4 LB

1313.3
− 56.4
1256.9 LBS.

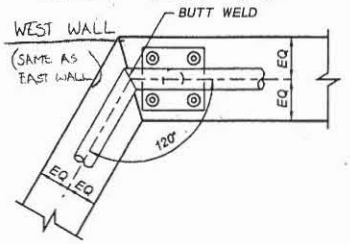

SECTION D-D
HANDRAIL AT
DROP INLET STRUCTURE
CALLE LEJOS STA 340+27

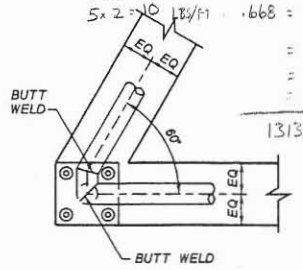

SECTION E-E
HANDRAIL AT
DROP INLET STRUCTURE
CALLE LEJOS STA 340+27

NO.	REVISION	BY	DATE
3			
2			
1			

FLOOD CONTROL DISTRICT OF MARICOPA COUNTY
ENGINEERING DIVISION

83RD AVENUE / PINNACLE PEAK ROAD
DRAINAGE IMPROVEMENTS
PCN 450.02.33 FCD CONTRACT NO. 2003C060

90% PRELIMINARY NOT FOR CONSTRUCTION

	BY	DATE
DESIGNED	O. OLDEN	01/06
DRAWN	A. JOHNSON	01/06
CHECKED	MJR	1/06

JE JACOBS CIVIL INC.

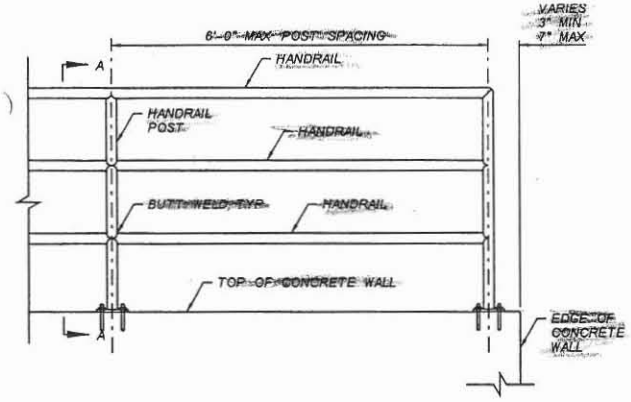

ELEVATION
TYPICAL HANDRAIL ON WALL
NTS

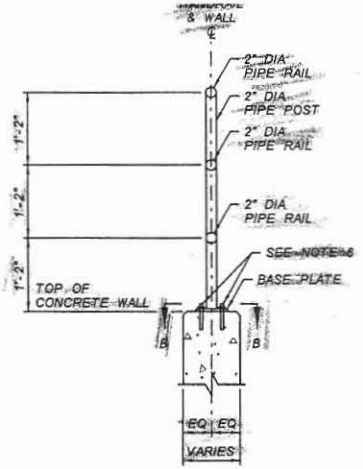

SECTION A-A
HANDRAIL ON WALL
NTS

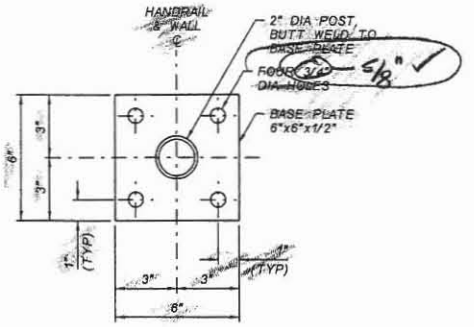

SECTION B-B
BASE PLATE
NTS

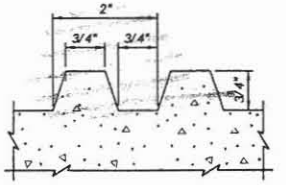

TYPICAL FORM LINER DETAIL FOR EXPOSED CONCRETE SURFACES. SURFACES BELOW TRASH RACKS NEED NOT BE TREATED WITH THE FORM LINER.

DETAIL
FORMLINER RUSTICATION
NTS

SPACE

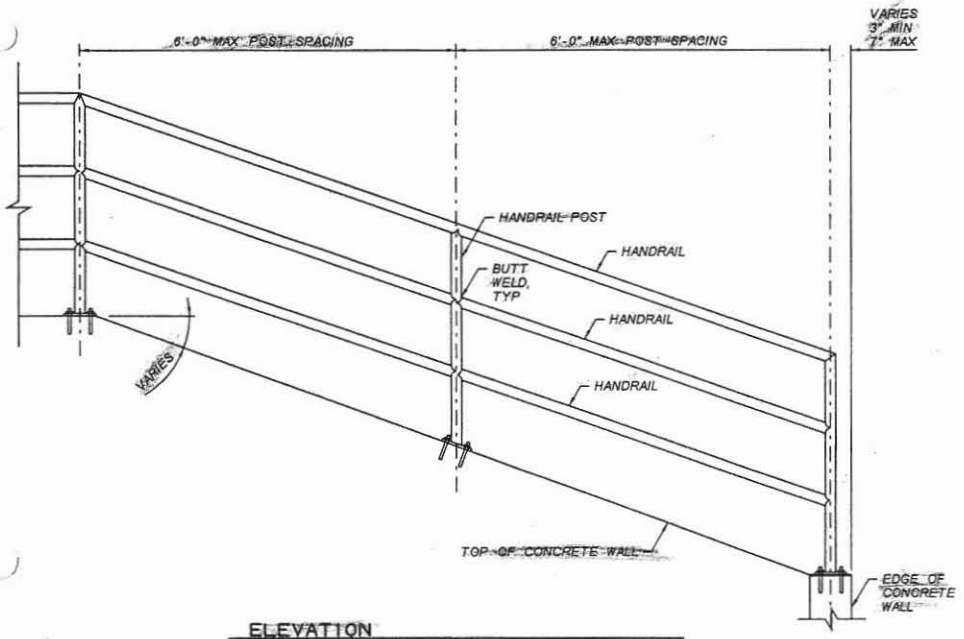

ELEVATION
TYPICAL HANDRAIL ON SLOPED WALL
NTS

JACOBS CIVIL INC. LEVEL 1 CHECKPRINT

Job Number: _____ WBS ID: _____

Document Title: _____

	Name (Print)	Signature	Date
☑ Originator	AUDREY JOHNSON	Audrey Johnson	12/28/05
☑ Checker	MIKE RATHBONE	[illegible]	1/4/06
☑ Backchecker	AUDREY JOHNSON	Audrey Johnson	1/16/06
☑ Updater	AUDREY JOHNSON	Audrey Johnson	1/16/06
☑ Rechecker	MIKE RATHBONE	[illegible]	1/06
☐ Designer*			
☐ Reviewer*			
☐ Other*			

*As required by the Job Specific Quality Plan

NOTES:

1) ALL RAILS, POSTS AND FITTINGS SHALL BE STEEL, CONFORMING TO ALL REQUIREMENTS OF AASHTO M 181 FOR GRADE 2 PIPE. 2" N.D. PIPE IS SCHEDULE 40 PER ASTM A-53.

2) FITTINGS AND RAILS SHALL BE WELDED WITH CONTINOUS WELDS. ALL CUT EDGES SHALL BE GROUND SMOOTH AND ALL VISIBLE WELDS, WHEN COMPLETED, SHALL PRESENT A SMOOTH, EVEN APPEARANCE.

3) SPACING OF POSTS SHALL BE 6' OR LESS AS REQUIRED IN THE FIELD.

4) CONTRACTOR SHALL SUBMIT WORKING DRAWINGS FOR APPROVAL. WORKING DRAWINGS SHALL CONSIST OF SHOP DRAWINGS AND FIELD HORIZONTAL AND VERTICAL INSTALLATION. ORIFICE PLATES (1-1/2)

5) PAINT STEEL HANDRAIL COLOR "WEATHERED SANDSTONE #320-4, SEE SPECS.

6) FOUR STAINLESS STEEL EXPANSION ANCHORS, 0.5" DIAMETER x 5" LONG, EMBEDDED 3.5" WITH WASHERS AND LOCKING NUTS.

7) POSTS ON SLOPING WINGWALL WILL BE VERTICAL. DISTANCES SHOWN ARE HORIZONTAL DISTANCE BETWEEN POSTS.

NO.	REVISION	BY	DATE
3			
2			
1			

FLOOD CONTROL DISTRICT OF MARICOPA COUNTY
ENGINEERING DIVISION

83RD AVENUE / PINNACLE PEAK ROAD
DRAINAGE IMPROVEMENTS
PCN 450.02.33 FCD CONTRACT NO. 2003C060

90%
PRELIMINARY NOT FOR CONSTRUCTION

	BY	DATE
DESIGNED	O. OLIDEN	01/06
DRAWN	A. JOHNSON	01/06
CHECKED	M. RATHBONE	01/06

JACOBS CIVIL INC.

DRAWING NO. D01 | DTL 01 STEEL HANDRAIL | SHEET OF

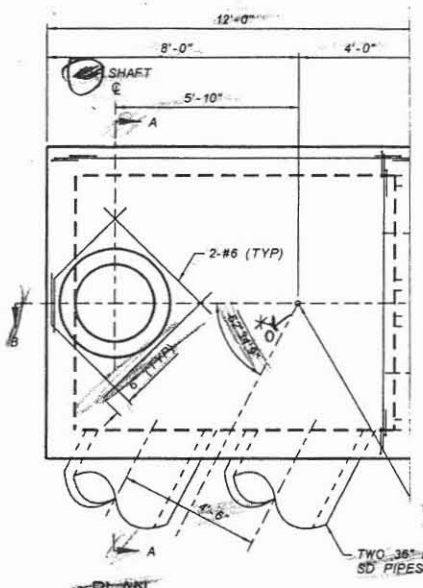

CIVIL / CONSTRUCTION SHEET DRAWING C01

PLAN
CONCRETE VAULT
83RD AVENUE STA 100+00
NTS

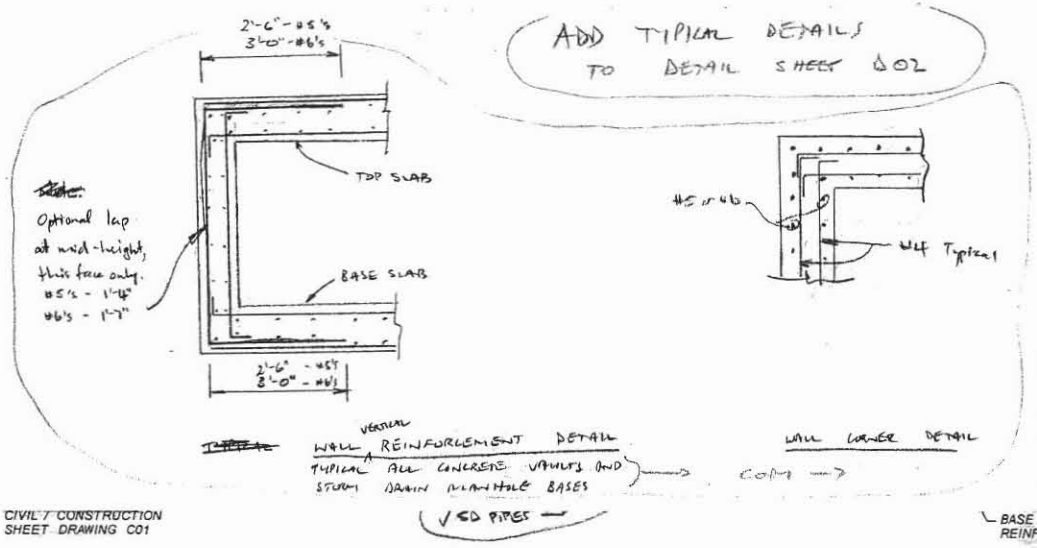

ADD TYPICAL DETAILS TO DETAIL SHEET D02

Optional lap at mid-height, this face only. #5's - 1'-4" #6's - 1'-7"

~~TYPICAL~~ WALL VERTICAL REINFORCEMENT DETAIL
TYPICAL ALL CONCRETE VAULTS AND STORM DRAIN MANHOLE BASES
SD PIPES

WALL CORNER DETAIL

K SHOULD WE EVEN SHOW ANGLES ON STRUCTURAL SHEETS WHEN THE BEARINGS ARE GIVEN ON THE PTP'S?
YES, PER PAT'S REDLINE.

SEAT GROOVE PER MAG DETAIL 522, CONCRETE ADJUSTING RING", USING SIGNS SHOWN ON THE TOP SURFACE

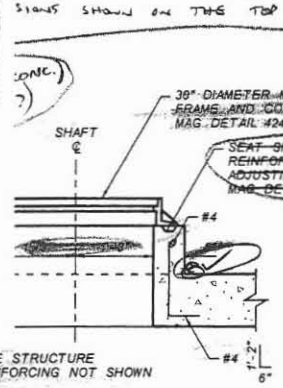

BASE STRUCTURE REINFORCING NOT SHOWN

REINFORCING AT SD PIPE
CONCRETE VAULT AND STORM DRAIN MANHOLE BASE
~~D02 AVENUE STA 100+00~~
NTS

TYPICAL ALL LOCATIONS, ALL PIPES AND SHAFTS

SHAFT DETAIL
CONCRETE VAULT
83RD AVENUE STA 100+00
NTS

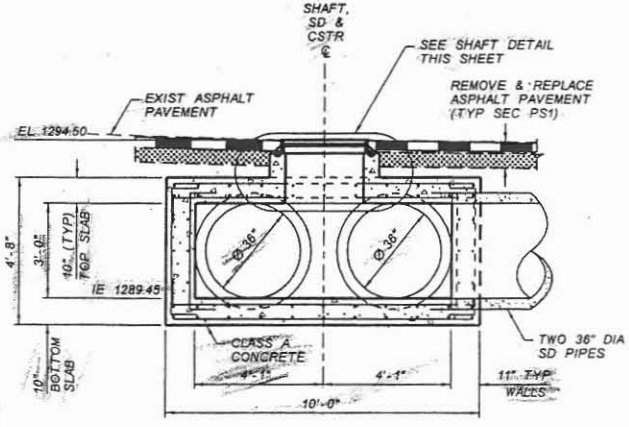

SECTION A-A
CONCRETE VAULT
83RD AVENUE STA 100+00
NTS

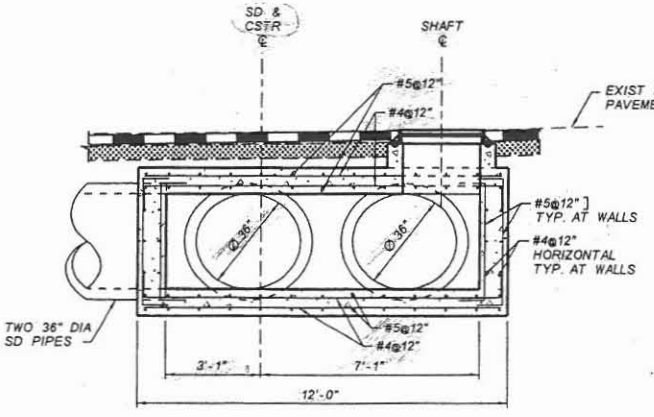

SECTION B-B
CONCRETE VAULT
83RD AVENUE STA 100+00
NTS

JACOBS CIVIL INC. LEVEL 1 CHECKPRINT

Job Number _____ WBS ID: _____

Document Title: _____

	Name (Print)	Signature	Date
☒ Originator	AUDREY JOHNSON	Audrey Johnson	12/22
☑ Checker	MIKE RATHBONE		1/10/06
☑ Backchecker	AUDREY JOHNSON	Audrey Johnson	1/4, 1/16/06
☑ Updater	AUDREY JOHNSON	Audrey Johnson	1/04, 1/16
☑ Rechecker	MIKE RATHBONE		1/06
☐ Designer*			
☐ Reviewer*			
☐ Other*			

*As required by the Job Specific Quality Plan

NO.	REVISION	BY	DATE
3			
2			
1			

FLOOD CONTROL DISTRICT OF MARICOPA COUNTY
ENGINEERING DIVISION

83RD AVENUE / PINNACLE PEAK ROAD
DRAINAGE IMPROVEMENTS
PCN 450.02.33 FCD CONTRACT NO. 2003C060

60%
PRELIMINARY NOT FOR CONSTRUCTION

	BY	DATE
DESIGNED	O. OLIDEN	11/05
DRAWN	A. JOHNSON	11/05
CHECKED	MJR	11/05

JACOBS CIVIL INC.

DRAWING NO. D02 | DTL 02 CONCRETE VAULT | SHEET OF

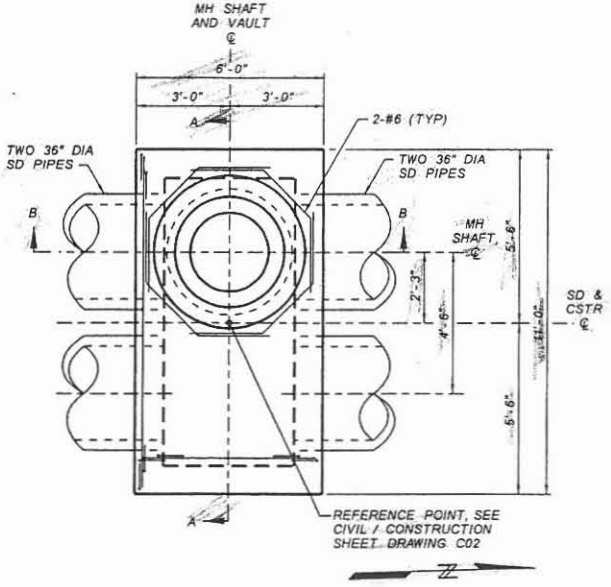

PLAN
STORM DRAIN MANHOLE BASE
83RD AVENUE STA 102+00
NTS

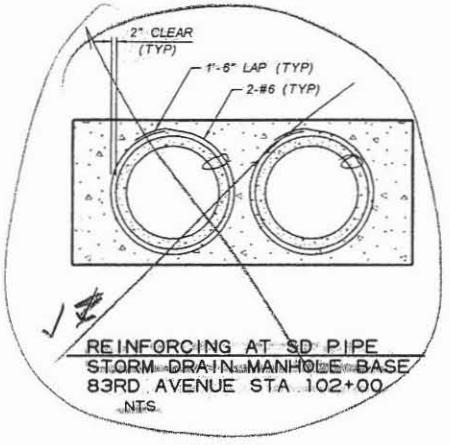

REINFORCING AT SD PIPE
STORM DRAIN MANHOLE BASE
83RD AVENUE STA 102+00
NTS

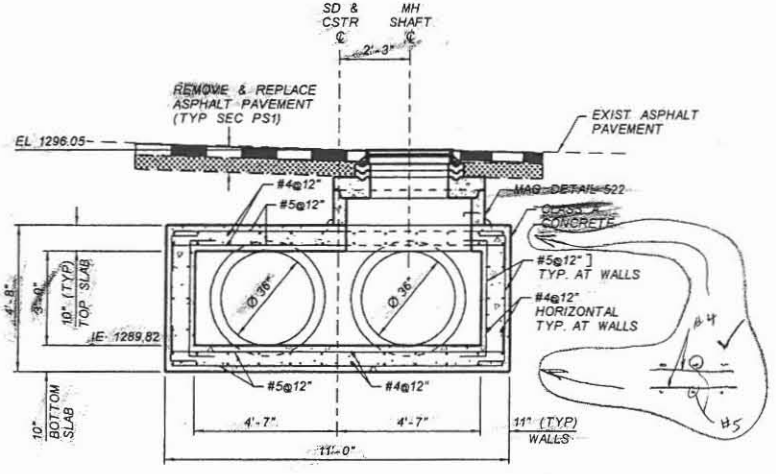

SECTION A-A
STORM DRAIN MANHOLE BASE
83RD AVENUE STA 102+00
NTS

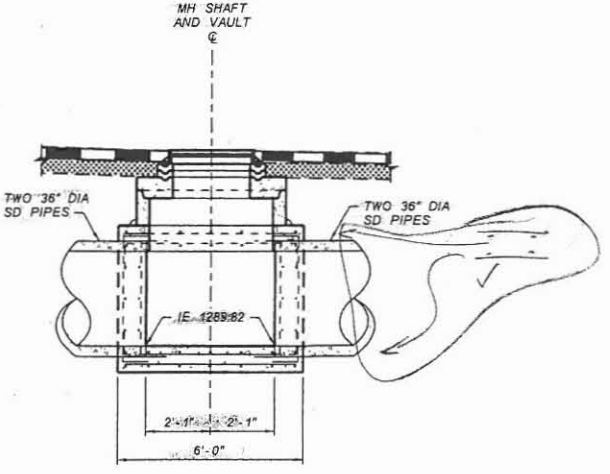

SECTION B-B
STORM DRAIN MANHOLE BASE
83RD AVENUE STA 102+00
NTS

JACOBS CIVIL INC. LEVEL 1 CHECKPRINT

Job Number: _____ WBS ID: _____

Document Title: _____

	Name (Print)	Signature	Date
☑ Originator	AUDREY JOHNSON	Audrey Johnson	12/22
☑ Checker	MIKE RATHBONE		1/4/06
☑ Backchecker	AUDREY JOHNSON	Audrey Johnson	1/4 1/16
☑ Updater	AUDREY JOHNSON	Audrey Johnson	1/04, 1/16
☑ Rechecker	MIKE RATHBONE		1/06
☐ Designer*			
☐ Reviewer*			
☐ Other*			

*As required by the Job Specific Quality Plan

NO.	REVISION	BY	DATE
3			
2			
1			

FLOOD CONTROL DISTRICT
OF MARICOPA COUNTY
ENGINEERING DIVISION

83RD AVENUE / PINNACLE PEAK ROAD
DRAINAGE IMPROVEMENTS
PCN 450.02.33 FCD CONTRACT NO. 2003C060

60%
PRELIMINARY
NOT FOR
CONSTRUCTION

	BY	DATE
DESIGNED	O. OLIDEN	11/05
DRAWN	A. JOHNSON	11/05
CHECKED	MJR	11/05

JACOBS CIVIL INC.

DRAWING NO. D03

DTL 03
STORM DRAIN MANHOLE

SHEET OF

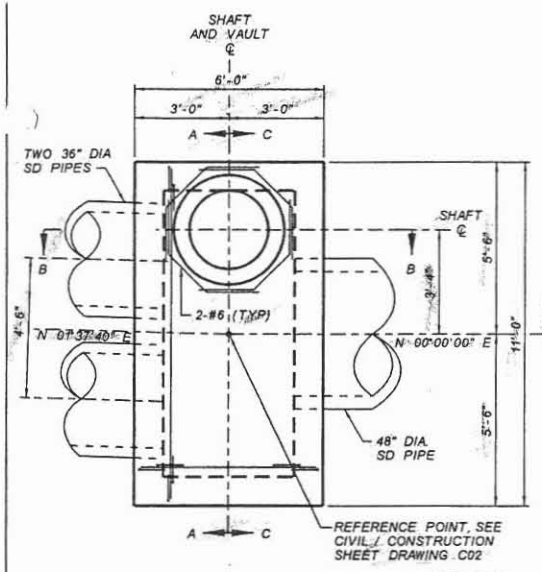

PLAN
~~STORM DRAIN MANHOLE BASE~~ CONCRETE VAULT
83RD AVENUE STA 104+75
NTS

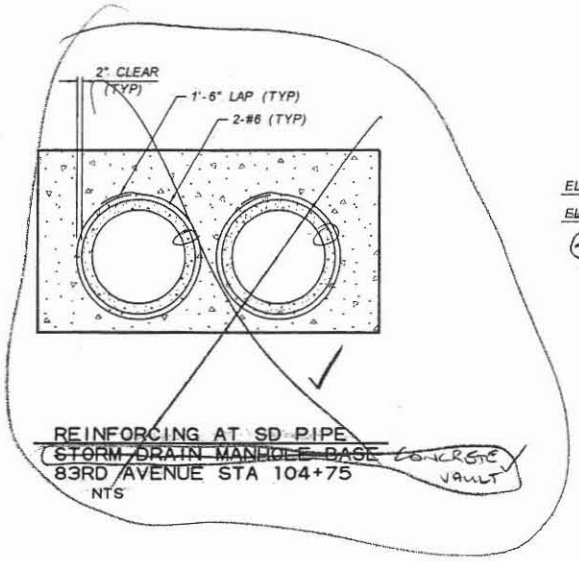

REINFORCING AT SD PIPE
~~STORM DRAIN MANHOLE BASE~~ CONCRETE VAULT
83RD AVENUE STA 104+75
NTS

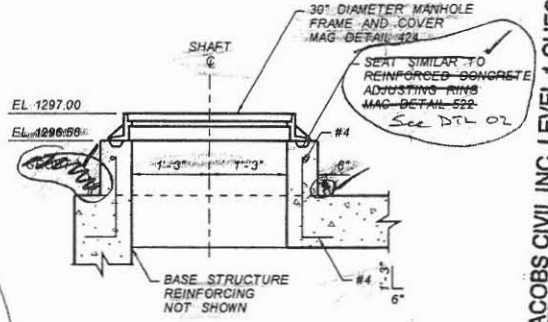

SHAFT DETAIL
~~STORM DRAIN MANHOLE BASE~~ CONCRETE VAULT
83RD AVENUE STA 104+75
NTS

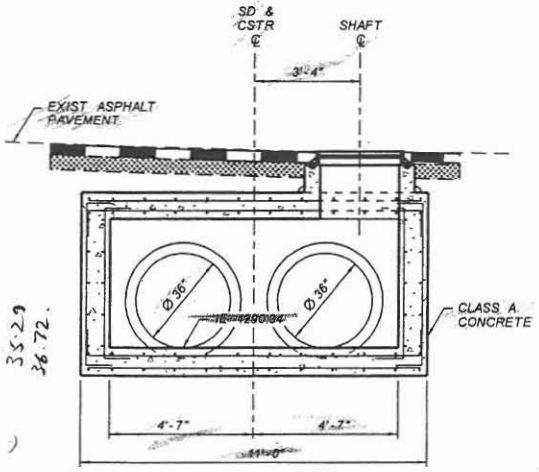

SECTION A-A
~~STORM DRAIN MANHOLE BASE~~ CONCRETE VAULT
83RD AVENUE STA 104+75
NTS

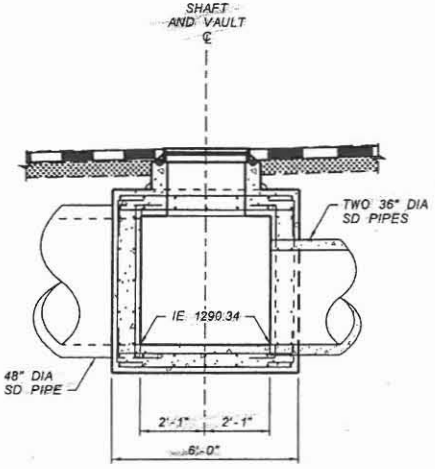

SECTION B-B
~~STORM DRAIN MANHOLE BASE~~ CONCRETE VAULT
83RD AVENUE STA 104+75
NTS

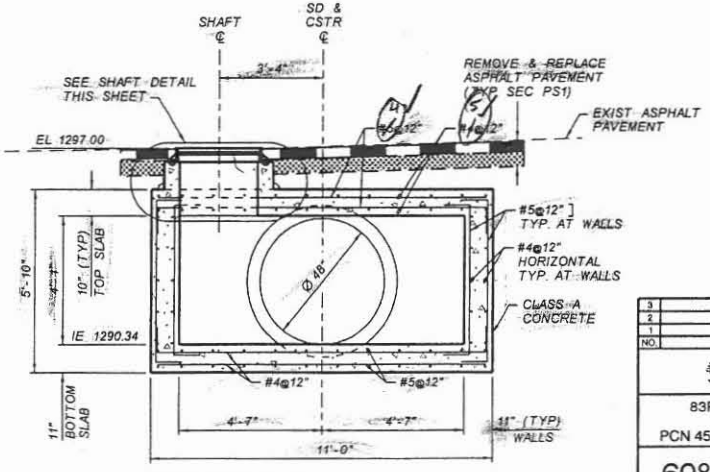

SECTION C-C
~~STORM DRAIN MANHOLE BASE~~ CONCRETE VAULT
83RD AVENUE STA 104+75
NTS

35.29
36.72

JACOBS CIVIL INC. LEVEL 1 CHECKPRINT

Job Number _____ WBS ID: _____
Document Title: _____

	Member (Print)	Signature	Date
☑ Originator	Audrey Johnson	Audrey Johnson	12/22
☑ Checker	Mike Rapkins		1/4/06
☑ Backchecker	Audrey Johnson	Audrey Johnson	1/04 Y16
☑ Updater	Audrey Johnson	Audrey Johnson	1/04 Y16
☑ Hechecker	Mike Rapkins		1/06
☐ Designer*			
☐ Reviewer*			
☐ Other*			

*As required by the Job Specific Quality Plan

NO.	REVISION	BY	DATE
3			
2			
1			

FLOOD CONTROL DISTRICT OF MARICOPA COUNTY
ENGINEERING DIVISION

83RD AVENUE / PINNACLE PEAK ROAD
DRAINAGE IMPROVEMENTS
PCN 450.02.33 FCD CONTRACT NO. 2003C060

60%
PRELIMINARY NOT FOR CONSTRUCTION

	BY	DATE
DESIGNED	D. DUDEN	11/05
DRAWN	A. JOHNSON	11/05
CHECKED	MJR	11/05

JACOBS CIVIL INC.

DRAWING NO. D04
TITLE STORM DRAIN MANHOLE
SHEET OF

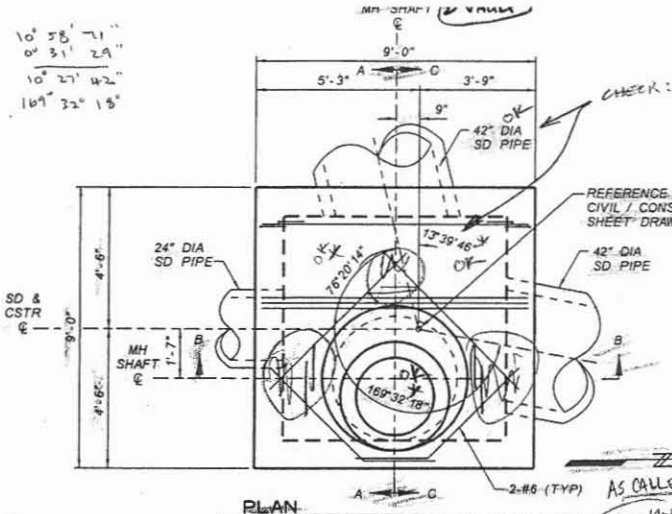

PLAN
STORM DRAIN MANHOLE BASE
83RD AVENUE STA 134+~~86~~ 85-81 STET
NTS

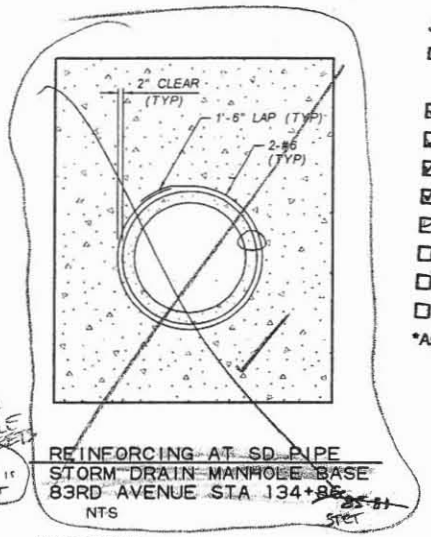

AS CALLED OUT ON PLAN & PROFILE SHEETS
UNLESS ROUNDED TO 0 DEC. PLACE IS CORRECT

REINFORCING AT SD PIPE
STORM DRAIN MANHOLE BASE
83RD AVENUE STA 134+~~86~~ 85-81 STET
NTS

JACOBS CIVIL INC. LEVEL 1 CHECKPRINT

Job Number: _____ WBS ID: _____

Document Title: _____

	Name (Print)	Signature	Date
☑ Originator	AUDREY JOHNSON	Audrey Johnson	12/22
☑ Checker	MIKE RATHBONE	MR	1/4/06
☑ Backchecker	AUDREY JOHNSON	Audrey Johnson	1/5 1/16
☑ Updater	AUDREY JOHNSON	Audrey Johnson	1/05 1/16
☑ Rechecker	MIKE RATHBONE	MR	1/17/06
☐ Designer*			
☐ Reviewer*			
☐ Other*			

*As required by the Job Specific Quality Plan

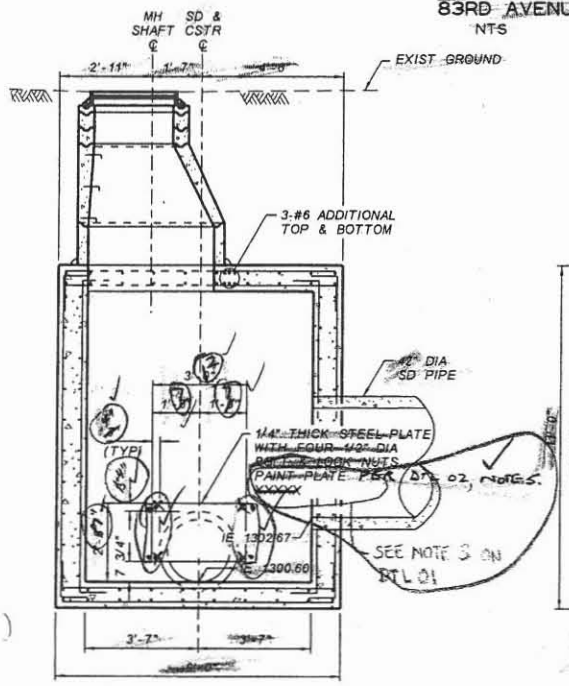

SECTION A-A
STORM DRAIN MANHOLE BASE
83RD AVENUE STA 134+~~86~~ 85-81 STET
NTS

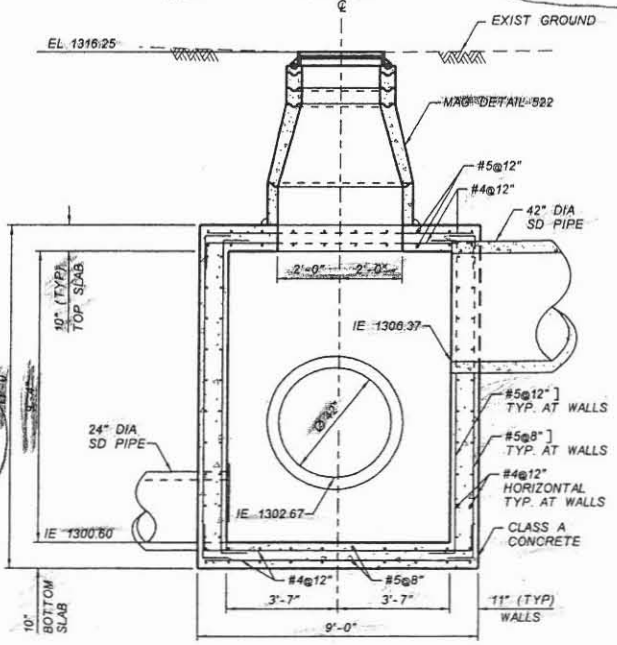

SECTION B-B
STORM DRAIN MANHOLE BASE
83RD AVENUE STA 134+~~86~~ 85-81 STET
NTS

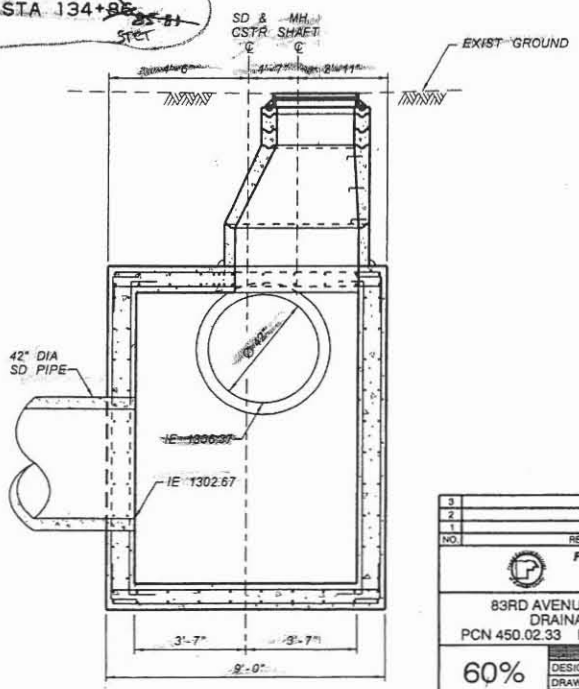

SECTION C-C
STORM DRAIN MANHOLE BASE
83RD AVENUE STA 134+~~86~~ 85-81 STET
NTS

NO.	REVISION	BY	DATE
3			
2			
1			

FLOOD CONTROL DISTRICT OF MARICOPA COUNTY
ENGINEERING DIVISION

83RD AVENUE / PINNACLE PEAK ROAD
DRAINAGE IMPROVEMENTS
PCN 450.02.33 FCD CONTRACT NO. 2003C060

60% PRELIMINARY NOT FOR CONSTRUCTION

	BY	DATE
DESIGNED	O. OLIDEN	11/05
DRAWN	A. JOHNSON	11/05
CHECKED	MJR	11/05

JACOBS CIVIL INC.

DRAWING NO. D05 — DTL 05 STORM DRAIN MANHOLE — SHEET OF

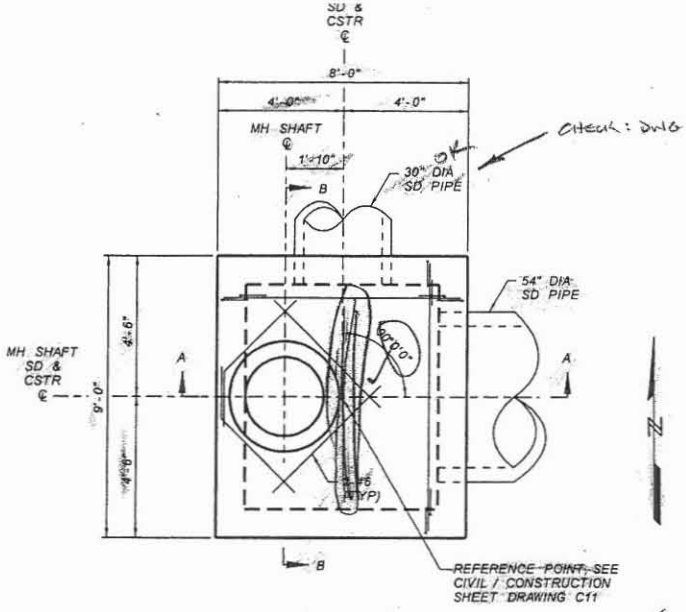

CHECK: DWG CP07

PLAN
~~STORM DRAIN MANHOLE BASE~~ CONCRETE VAULT
PINNACLE PEAK ROAD STA 199+60
NTS

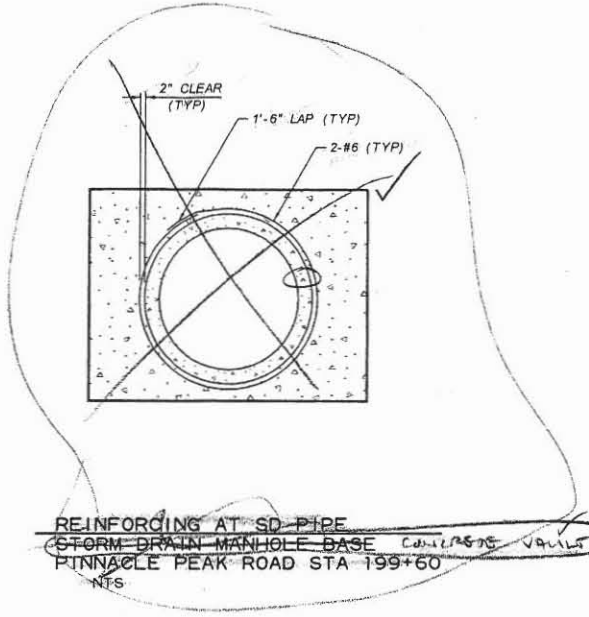

REINFORCING AT SD PIPE
~~STORM DRAIN MANHOLE BASE~~ CONCRETE VAULT
PINNACLE PEAK ROAD STA 199+60
NTS

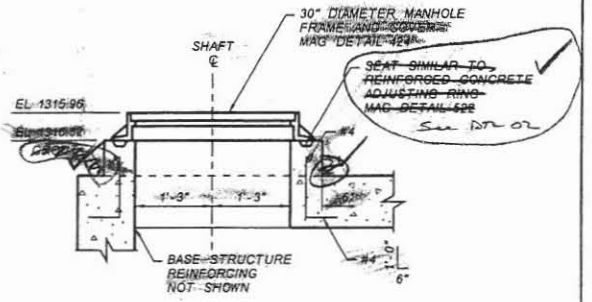

SHAFT DETAIL
~~STORM DRAIN MANHOLE BASE~~ CONCRETE VAULT
PINNACLE PEAK ROAD STA 199+60
NTS

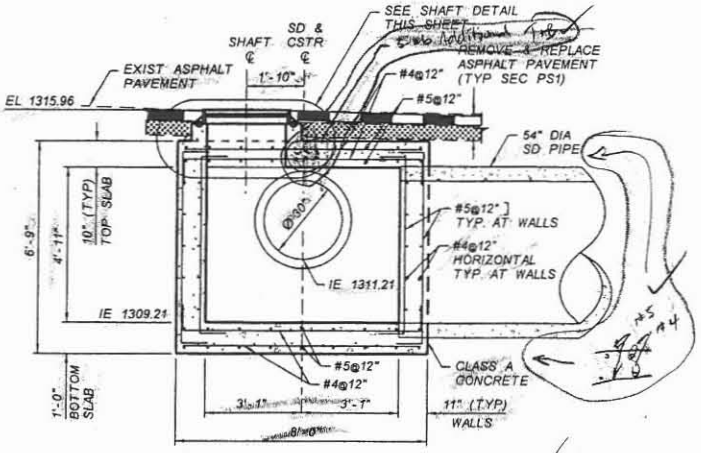

SECTION A-A
~~STORM DRAIN MANHOLE BASE~~ CONCRETE VAULT
PINNACLE PEAK ROAD STA 199+60
NTS

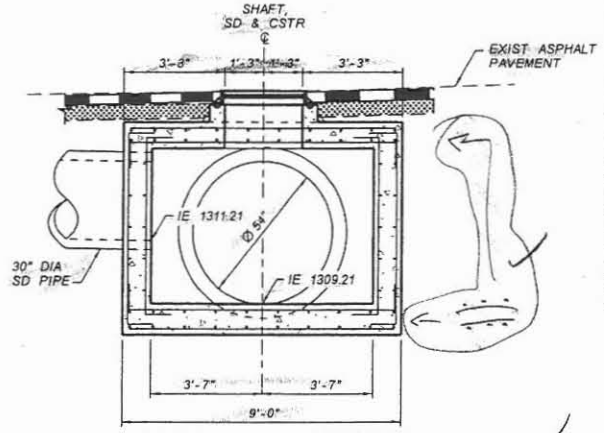

SECTION B-B
~~STORM DRAIN MANHOLE BASE~~ CONCRETE VAULT
PINNACLE PEAK ROAD STA 199+60
NTS

JACOBS CIVIL INC. LEVEL 1 CHECKPRINT

Job Number: _____ WBS ID: _____

Document Title: _____

	Name (Print)	Signature	Date
☑ Originator	AUDREY JOHNSON	Audrey Johnson	12/22
☑ Checker	MIKE RATHBONE	[illegible]	1/4/06
☑ Backchecker	AUDREY JOHNSON	Audrey Johnson	1/05 1/16
☑ Updater	AUDREY JOHNSON	Audrey Johnson	1/05 1/16
☑ Rechecker	MIKE RATHBONE	[illegible]	1/17/06
☐ Designer*			
☐ Reviewer*			
☐ Other*			

*As required by the Job Specific Quality Plan

NO	REVISION	BY	DATE
3			
2			
1			

FLOOD CONTROL DISTRICT OF MARICOPA COUNTY
ENGINEERING DIVISION

83RD AVENUE / PINNACLE PEAK ROAD
DRAINAGE IMPROVEMENTS
PCN 450.02.33 FCD CONTRACT NO. 2003C060

60%
PRELIMINARY NOT FOR CONSTRUCTION

	BY	DATE
DESIGNED	O. OLIDEN	11/05
DRAWN	A. JOHNSON	11/05
CHECKED	MJR	11/05

JACOBS CIVIL INC.

DRAWING NO. D06

DTL 06 STORM DRAIN MANHOLE

SHEET OF

THIS MANHOLE CHANGES SIZE DUE TO PIPE CHANGES. VERIFY THAT REINFORCING IS STILL CORRECT.

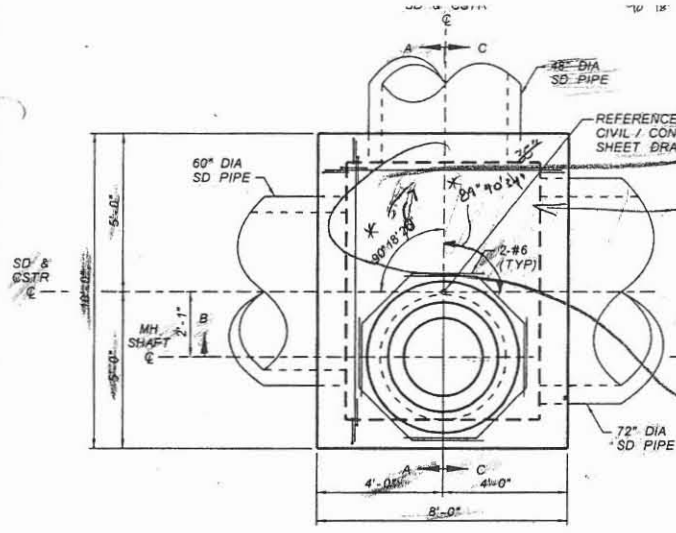

USE NUMBERS IN RED SO THAT THEY AGREE WITH THE PLAN/PROFILE SHEETS.
(THERE IS PROBABLY A ROUNDING ERROR)

PLAN
STORM DRAIN MANHOLE BASE
PINNACLE PEAK ROAD STA 226+64
NTS

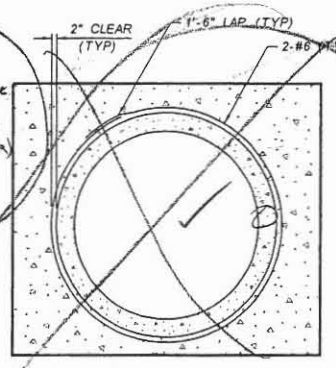

REINFORCING AT SD PIPE
STORM DRAIN MANHOLE BASE
PINNACLE PEAK ROAD STA 226+64
NTS

JACOBS CIVIL INC. LEVEL 1 CHECKPRINT

Job Number: _____ WBS ID: _____

Document Title: _____

	Name (Print)	Signature	Date
☑ Originator	AUDREY JOHNSON	Audrey Johnson	12/22
☑ Checker	MIKE RATHBONE	M	1/4/06
☑ Backchecker	AUDREY JOHNSON	Audrey Johnson	1/05 1/16
☑ Updater	AUDREY JOHNSON	Audrey Johnson	1/05 1/16
☑ Rechecker	MIKE RATHBONE	M	1/17/06
☐ Designer*			
☐ Reviewer*			
☐ Other*			

*As required by the Job Specific Quality Plan

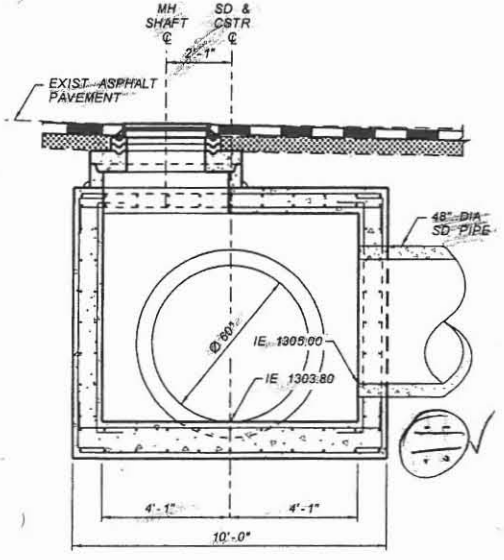

SECTION A-A
STORM DRAIN MANHOLE BASE
PINNACLE PEAK ROAD STA 226+64
NTS

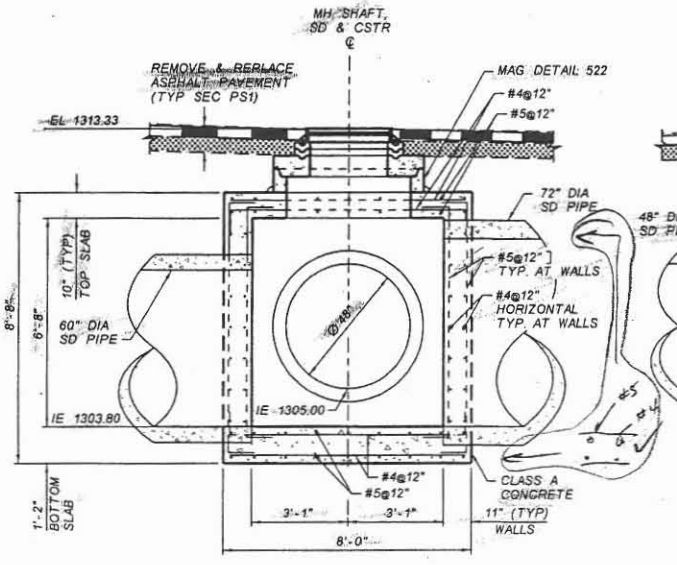

SECTION B-B
STORM DRAIN MANHOLE BASE
PINNACLE PEAK ROAD STA 226+64
NTS

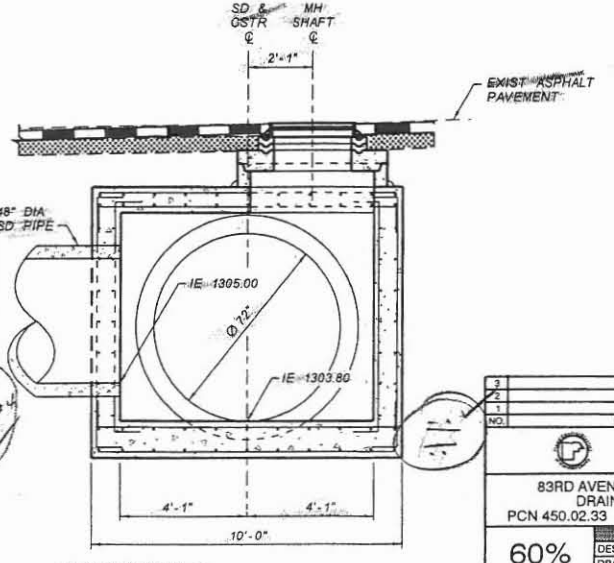

SECTION C-C
STORM DRAIN MANHOLE BASE
PINNACLE PEAK ROAD STA 226+64
NTS

NO.	REVISION	BY	DATE
3			
2			
1			

FLOOD CONTROL DISTRICT OF MARICOPA COUNTY
ENGINEERING DIVISION

83RD AVENUE / PINNACLE PEAK ROAD
DRAINAGE IMPROVEMENTS
PCN 450.02.33 FCD CONTRACT NO. 2003C060

60% PRELIMINARY NOT FOR CONSTRUCTION

	BY	DATE
DESIGNED	O. OLDEN	11/05
DRAWN	A. JOHNSON	11/05
CHECKED	M.R.	11/05

JE JACOBS CIVIL INC.

DRAWING NO. D07 | DTL07 STORM DRAIN MANHOLE | SHEET OF

JACOBS CIVIL INC. LEVEL 1 CHECKPRINT

Job Number: _____ WBS ID: _____

Document Title: _____

	Name (Print)	Signature	Date
☒ Originator	AUDREY JOHNSON	Audrey Johnson	12/22
☒ Checker	MIKE RATTENBUS		1/4/06
☒ Backchecker	AUDREY JOHNSON	Audrey Johnson	1/5
☒ Updater	AUDREY JOHNSON	Audrey Johnson	1/6
☐ Rechecker	MIKE RATTENBUS		1/6
☐ Designer*			1/7/06
☐ Reviewer*			
☐ Other*			

*As required by the Job Specific Quality Plan

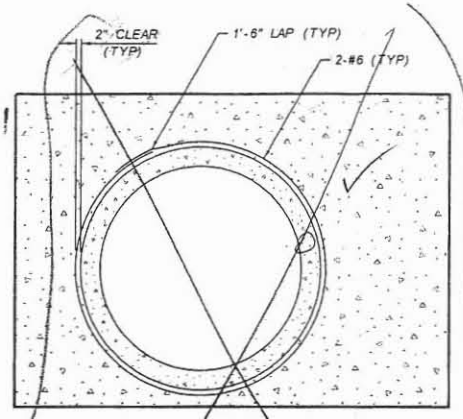

REINFORCING AT SD PIPE
STORM DRAIN MANHOLE BASE
PINNACLE PEAK ROAD STA 244+40
NTS

SECTION B LOOKS IN THE WRONG DIRECTION

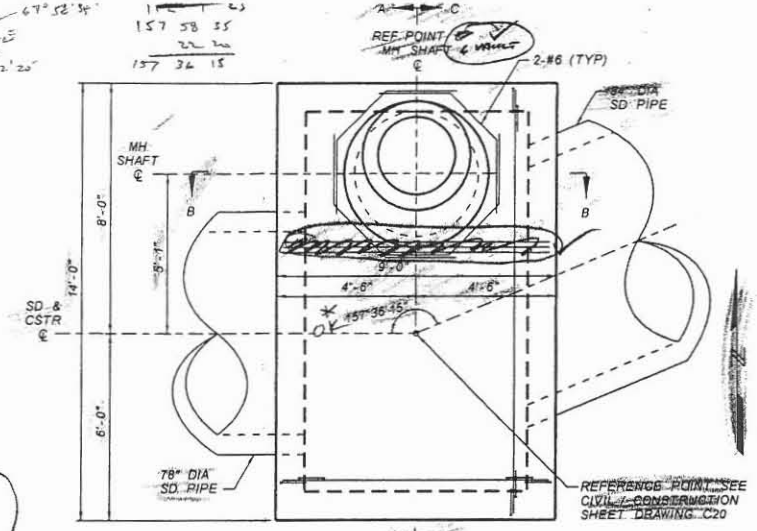

PLAN
STORM DRAIN MANHOLE BASE
PINNACLE PEAK ROAD STA 244+40
NTS

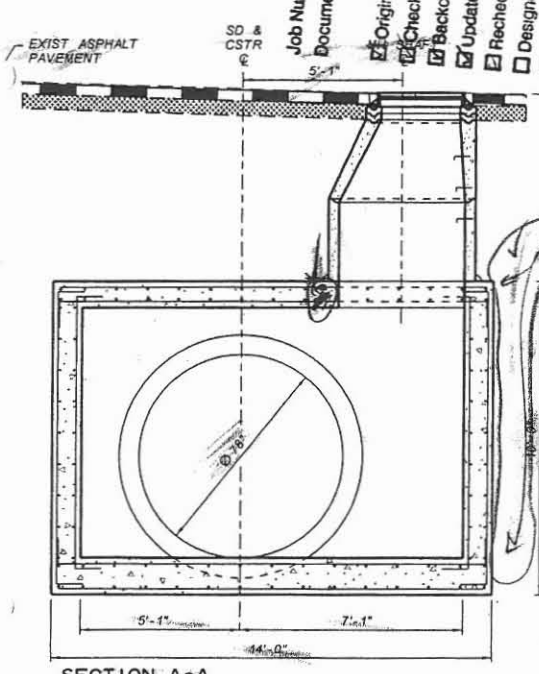

SECTION A-A
STORM DRAIN MANHOLE BASE
PINNACLE PEAK ROAD STA 244+40
NTS

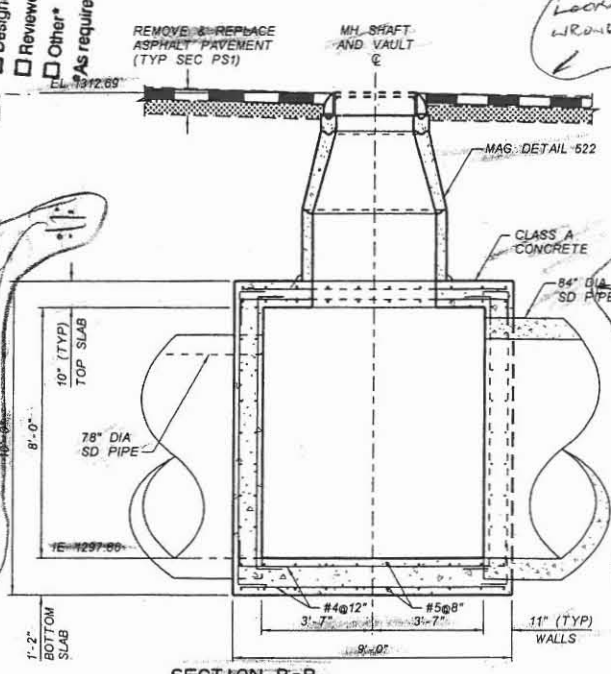

SECTION B-B
STORM DRAIN MANHOLE BASE
PINNACLE PEAK ROAD STA 244+40
NTS

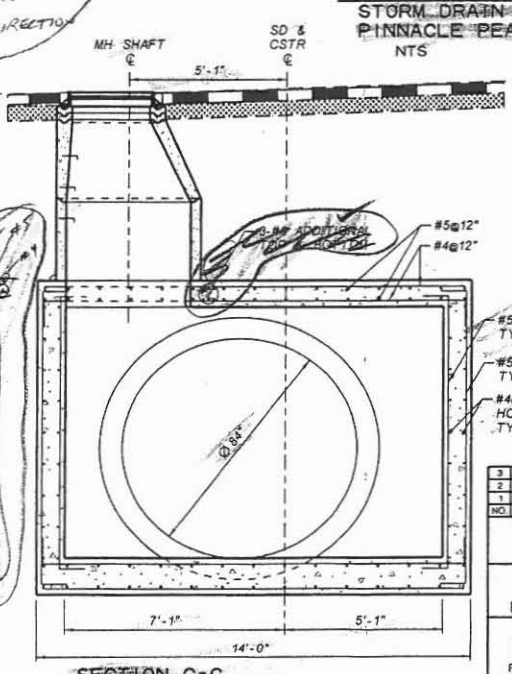

SECTION C-C
STORM DRAIN MANHOLE BASE
PINNACLE PEAK ROAD STA 244+40
NTS

NO.	REVISION	BY	DATE
3			
2			
1			

FLOOD CONTROL DISTRICT OF MARICOPA COUNTY
ENGINEERING DIVISION

83RD AVENUE / PINNACLE PEAK ROAD
DRAINAGE IMPROVEMENTS
PCN 450.02.33 FCD CONTRACT NO. 2003C060

60% PRELIMINARY NOT FOR CONSTRUCTION

	BY	DATE
DESIGNED	O. OLIDEN	11/05
DRAWN	A. JOHNSON	11/05
CHECKED	MJR	11/05

JACOBS CIVIL INC.

DRAWING NO. D09 | DTL 09 STORM DRAIN MANHOLE | SHEET OF

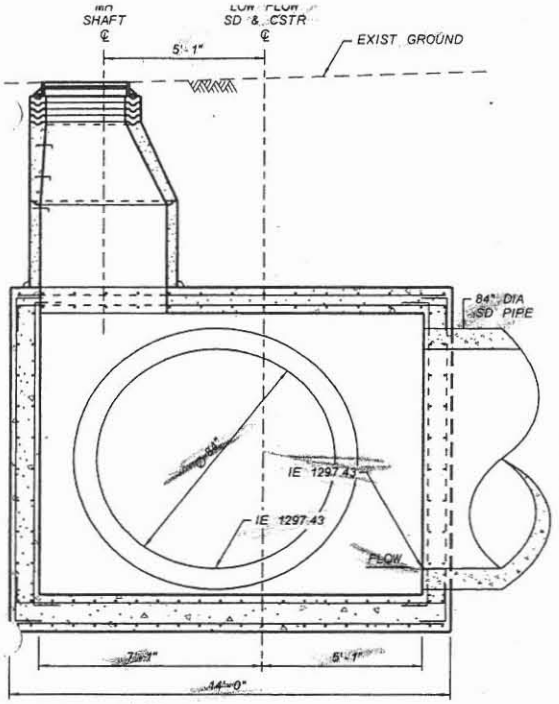

SECTION A-A
STORM DRAIN MANHOLE BASE
PINNACLE PEAK ROAD STA 245+65
NTS

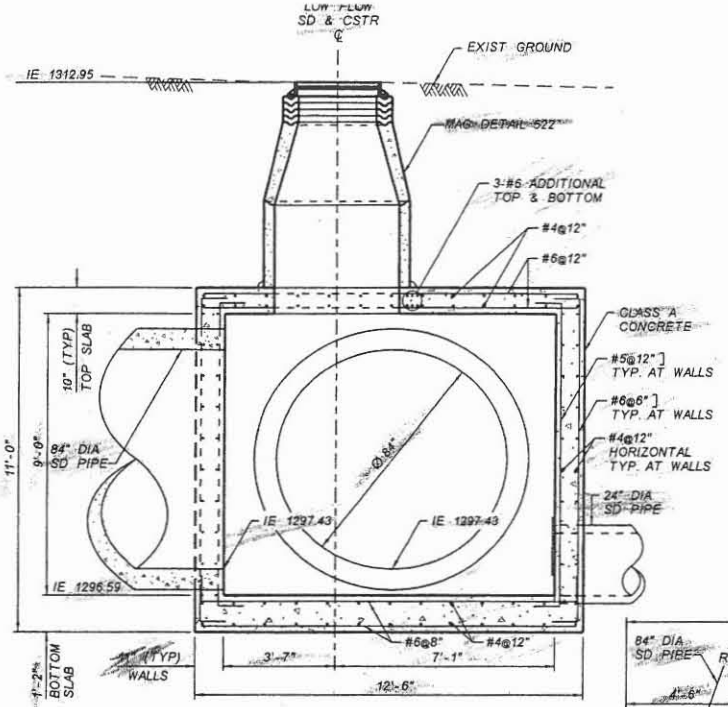

SECTION B-B
STORM DRAIN MANHOLE BASE
PINNACLE PEAK ROAD STA 245+65
NTS

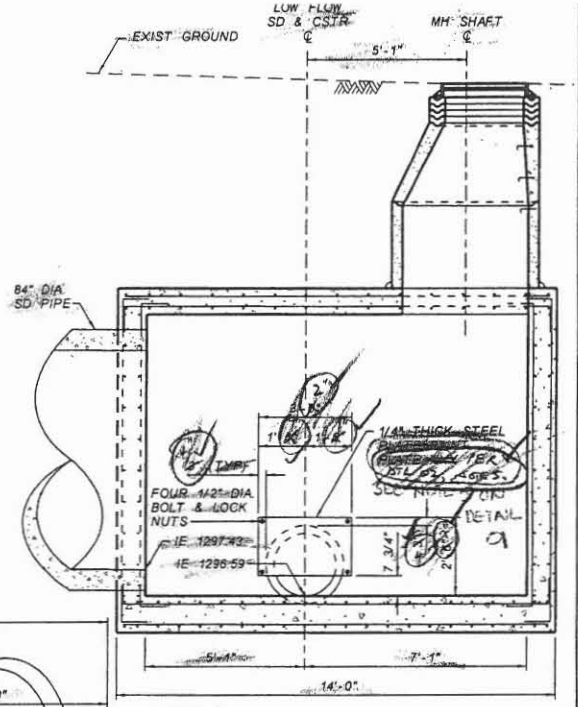

SECTION C-C
STORM DRAIN MANHOLE BASE
PINNACLE PEAK ROAD STA 245+65
NTS

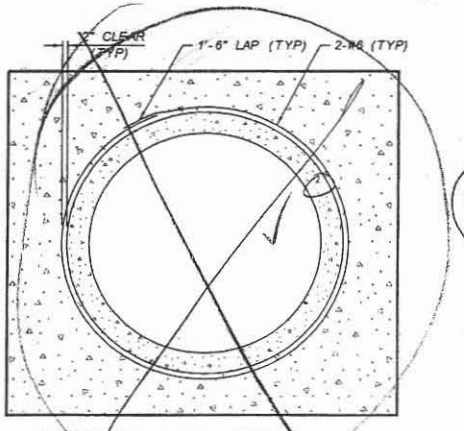

REINFORCING AT SD PIPE
STORM DRAIN MANHOLE BASE
PINNACLE PEAK ROAD STA 245+65
NTS

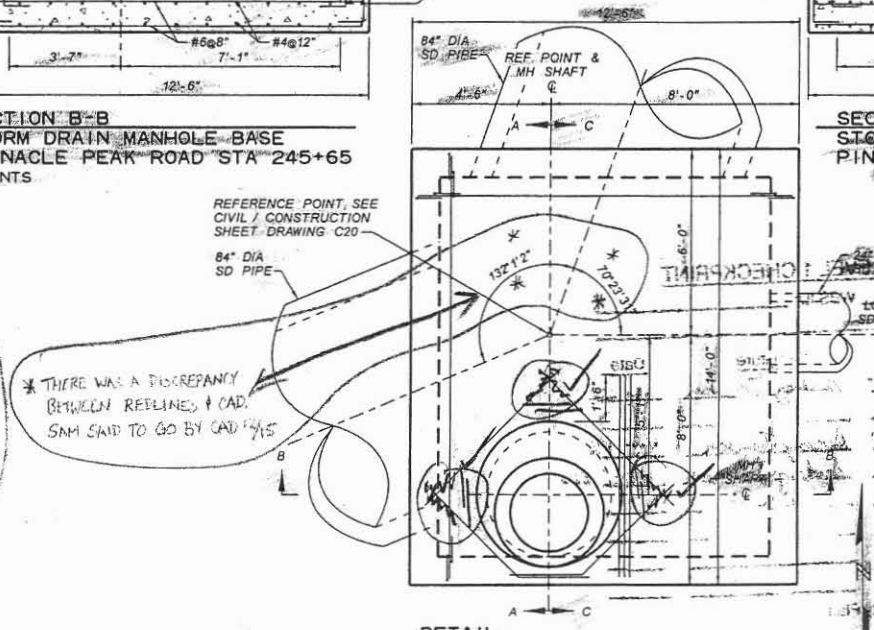

* THERE WAS A DISCREPANCY BETWEEN REDLINES & CAD. SAM SAID TO GO BY CAD 11/15

Checked DRO 11/05

NO.	REVISION	BY	DATE
3			
2			
1			

FLOOD CONTROL DISTRICT OF MARICOPA COUNTY
ENGINEERING DIVISION

83RD AVENUE / PINNACLE PEAK ROAD
DRAINAGE IMPROVEMENTS
PCN 450.02.33 FCD CONTRACT NO. 2003C060

60% PRELIMINARY NOT FOR CONSTRUCTION

	BY	DATE
DESIGNED	D. OLIDEN	11/05
DRAWN	A. JOHNSON	11/05
CHECKED	MSR	11/05

JACOBS CIVIL INC.

DRAWING NO. D10

DTL 10 STORM DRAIN MANHOLE

SHEET OF

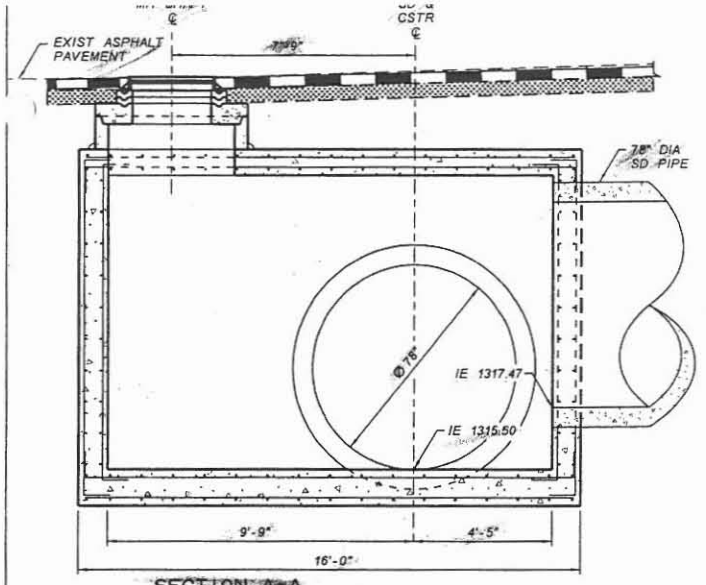

SECTION A-A
STORM DRAIN MANHOLE BASE
87TH AVENUE STA 313+52
NTS

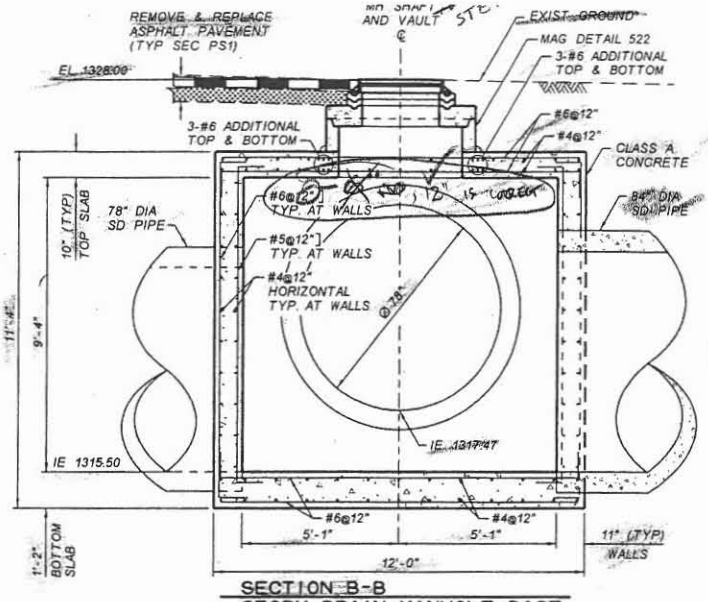

SECTION B-B
STORM DRAIN MANHOLE BASE
87TH AVENUE STA 313+52
NTS

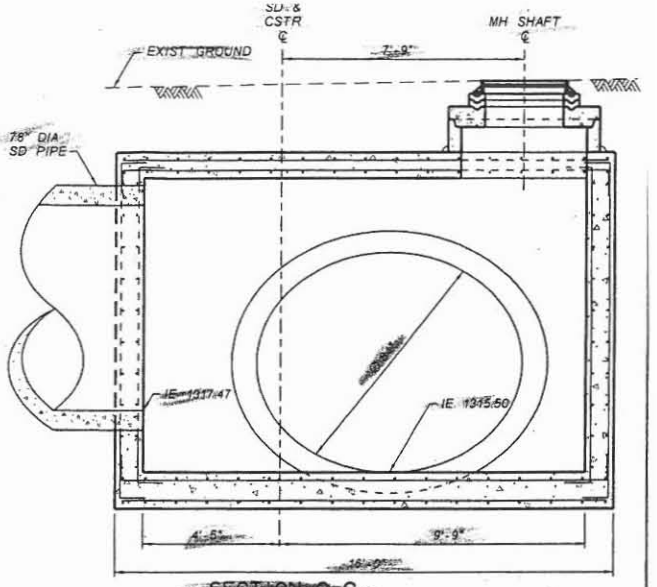

SECTION C-C
STORM DRAIN MANHOLE BASE
87TH AVENUE STA 313+52
NTS

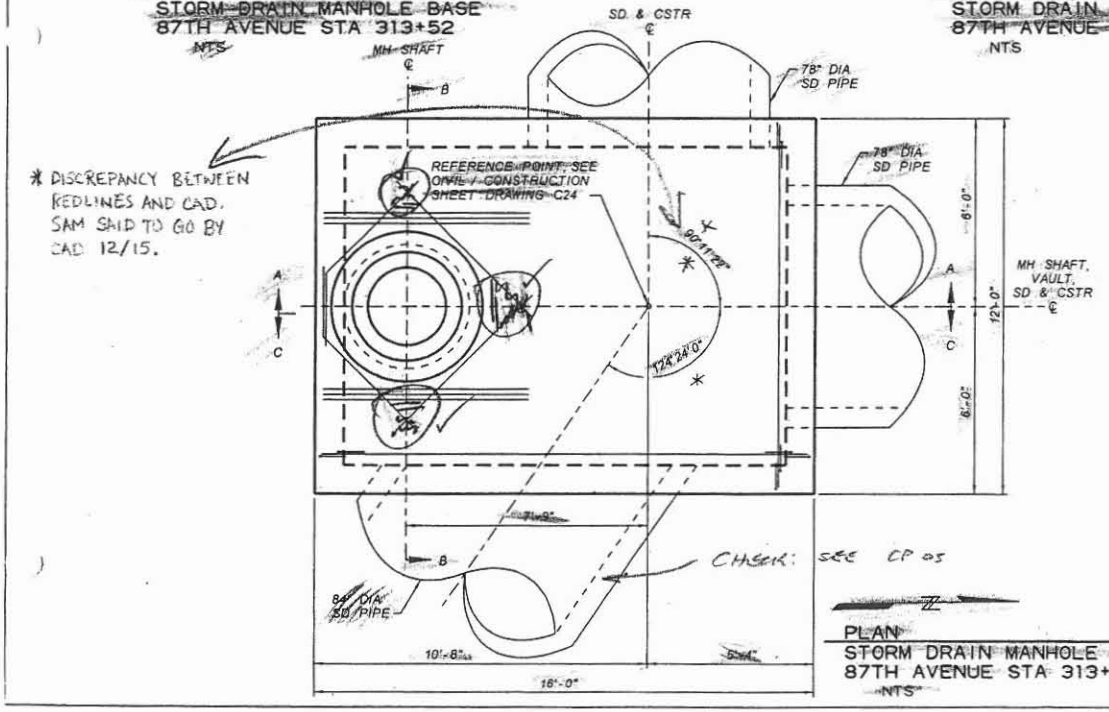

* DISCREPANCY BETWEEN REDLINES AND CAD. SAM SAID TO GO BY CAD 12/15.

PLAN
STORM DRAIN MANHOLE BASE
87TH AVENUE STA 313+52
NTS

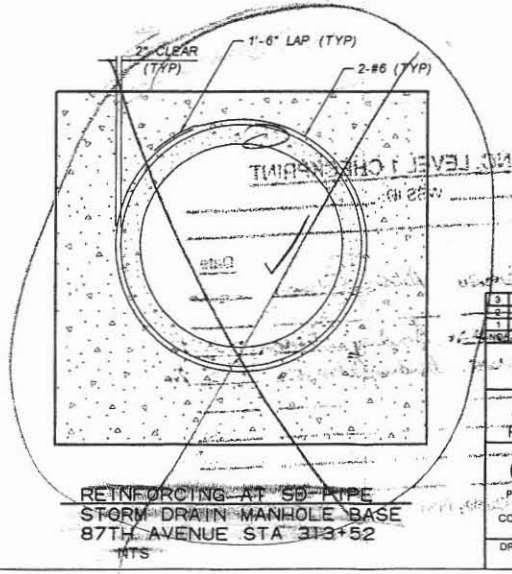

REINFORCING AT SD PIPE
STORM DRAIN MANHOLE BASE
87TH AVENUE STA 313+52
NTS

Checked DAO 11/05

REVISION	BY	DATE

FLOOD CONTROL DISTRICT OF MARICOPA COUNTY
ENGINEERING DIVISION

83RD AVENUE / PINNACLE PEAK ROAD
DRAINAGE IMPROVEMENTS
PCN 450.02.33 FCD CONTRACT NO. 2003C060

	BY	DATE
DESIGNED	D. DUPENT	11/05
DRAWN	A. JOHNSON	11/05
CHECKED		11/05

60%
PRELIMINARY NOT FOR CONSTRUCTION

JE JACOBS CIVIL INC.

DRAWING NO. D11 | DTL 11 STORM DRAIN MANHOLE | SHEET OF

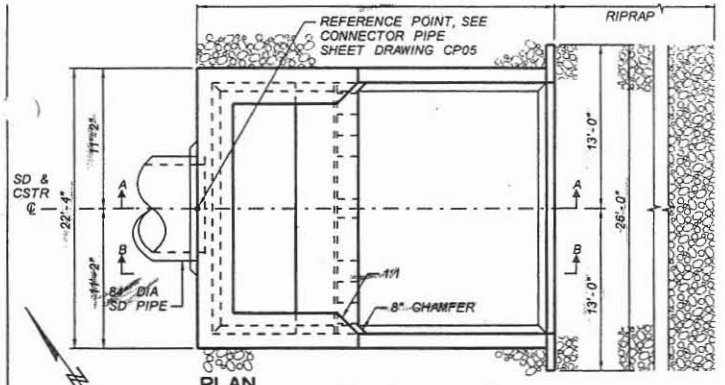

PLAN
STILLING BASIN
87TH AVENUE BASIN STA 61+62
NTS

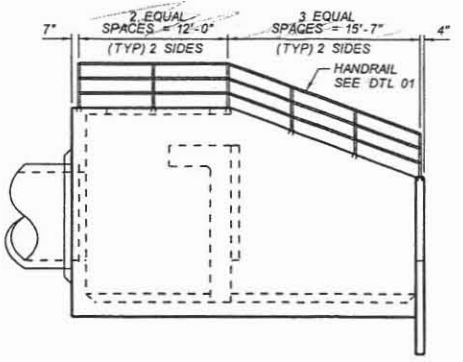

SIDE PROFILE
STILLING BASIN
87TH AVENUE BASIN STA 61+62
NTS

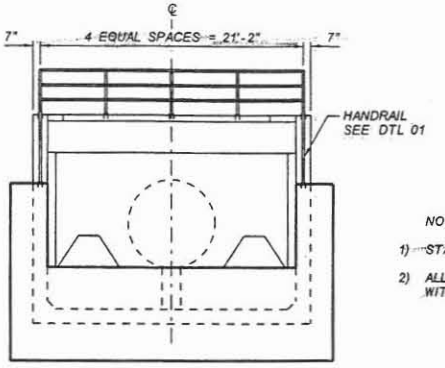

FRONT PROFILE
STILLING BASIN
87TH AVENUE BASIN STA 61+62
NTS

NOTES:

1) STAIN ALL EXPOSED SURFACES; SEE SPECIFICATIONS.

2) ALL EXPOSED SURFACES SHALL BE CONSTRUCTED WITH FORM LINER PER DTL 01.

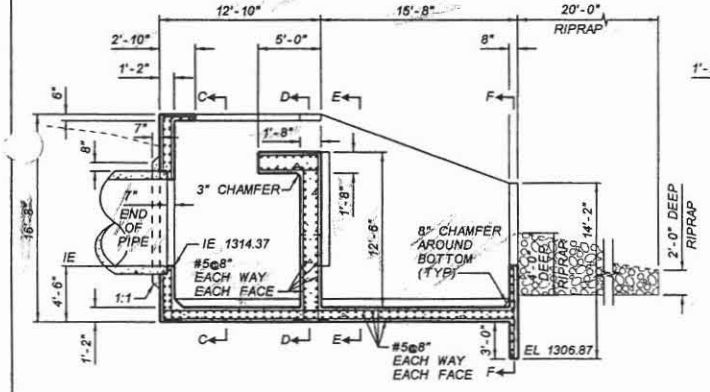

SECTION A-A
STILLING BASIN
87TH AVENUE BASIN STA 61+62
NTS

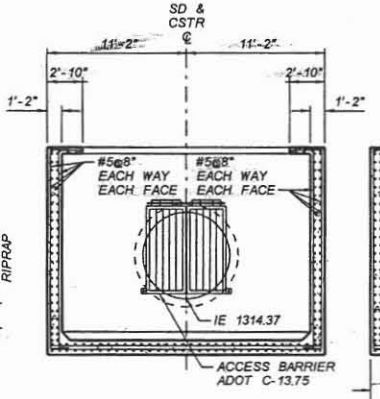

SECTION C-C
STILLING BASIN
87TH AVENUE BASIN
STA 61+62
NTS

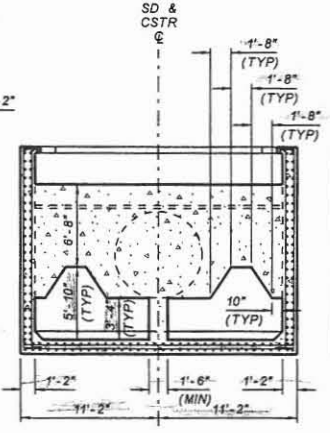

SECTION D-D
STILLING BASIN
87TH AVENUE BASIN
STA 61+62
NTS

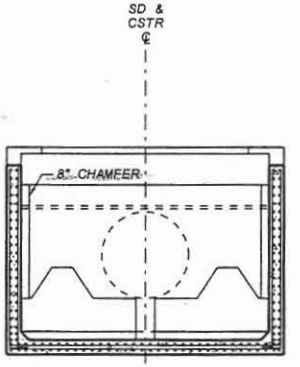

SECTION E-E
STILLING BASIN
87TH AVENUE BASIN
STA 61+62
NTS

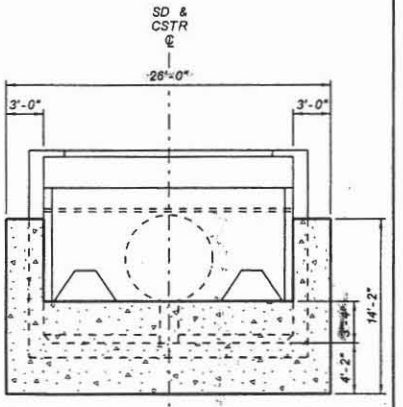

SECTION F-F
STILLING BASIN
87TH AVENUE BASIN
STA 61+62
NTS

Checked OAO 11/05

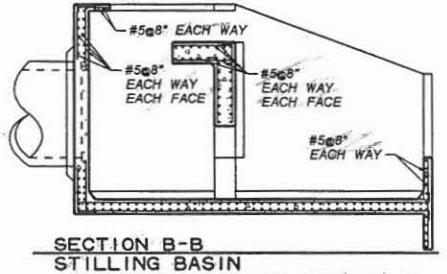

SECTION B-B
STILLING BASIN
87TH AVENUE BASIN STA 61+62
NTS

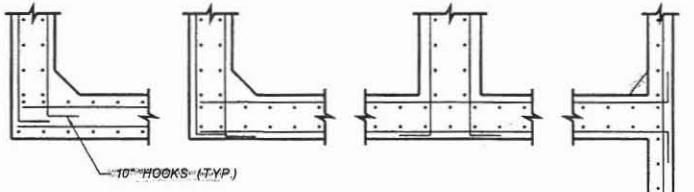

BAR ARRANGEMENTS AT CORNERS
STILLING BASIN
87TH AVENUE BASIN STA 61+62
NTS

NO.	REVISION	BY	DATE
3			
2			
1			

FLOOD CONTROL DISTRICT OF MARICOPA COUNTY
ENGINEERING DIVISION

83RD AVENUE / PINNACLE PEAK ROAD
DRAINAGE IMPROVEMENTS
PCN 450.02.33 FCD CONTRACT NO. 2003C060

90%
PRELIMINARY NOT FOR CONSTRUCTION

	BY	DATE
DESIGNED	O. OLIDEN	01/06
DRAWN	A. JOHNSON	01/06
CHECKED	M. RATHBONE	01/06

JE JACOBS CIVIL INC.

DRAWING NO. D12 | DTL 12 STILLING BASIN | SHEET OF

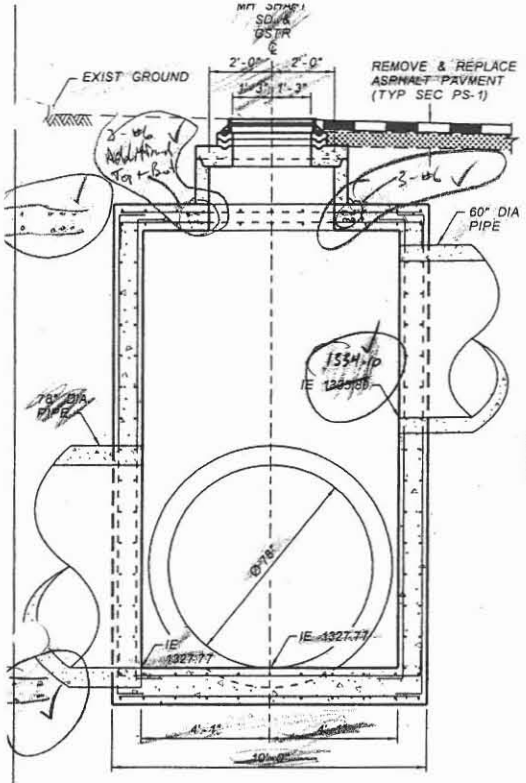

SECTION A-A
STORM DRAIN MANHOLE BASE
87TH AVENUE STA 326+40
NTS

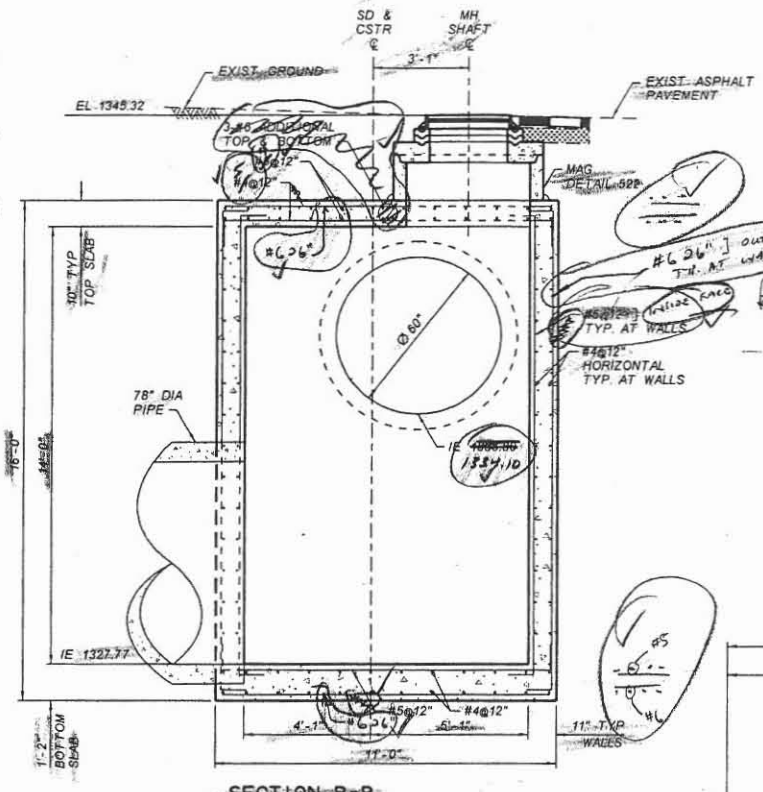

SECTION B-B
STORM DRAIN MANHOLE BASE
87TH AVENUE STA 326+40
NTS

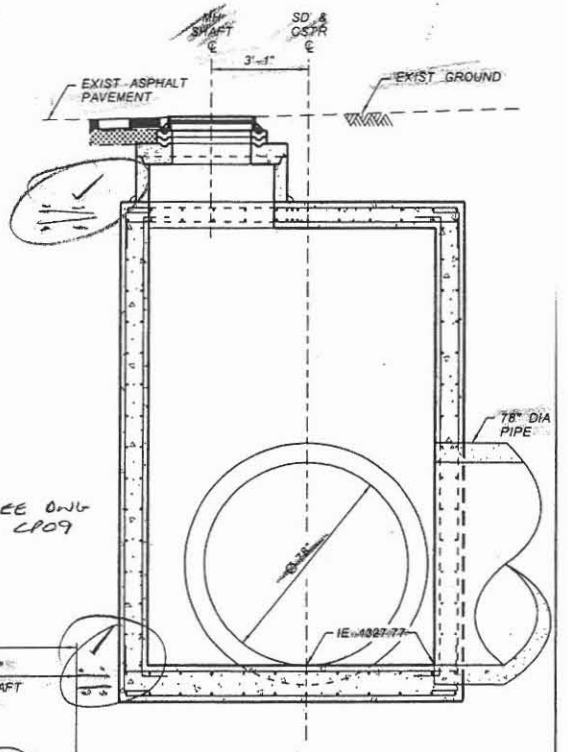

CHECK: SEE DWG CP09

SECTION C-C
STORM DRAIN MANHOLE BASE
87TH AVENUE STA 326+40
NTS

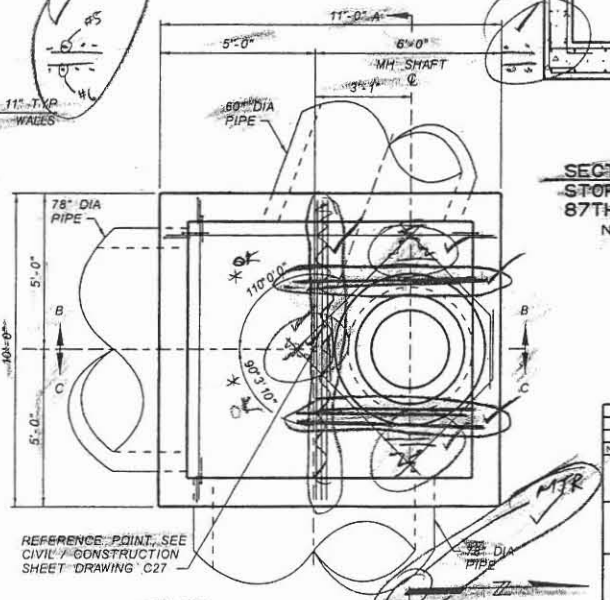

PLAN
STORM DRAIN MANHOLE BASE
87TH AVENUE STA 326+40
NTS

JACOBS CIVIL INC. LEVEL 1 CHECKPRINT

Job Number _____ WBS ID: _____

Document Title: _____

	Name (Print)	Signature	Date
☑ Originator	AUDREY JOHNSON	Audrey Johnson	12/22
☑ Checker	MIKE RATHBONE	[illegible]	1/4/06
☑ Backchecker	AUDREY JOHNSON	Audrey Johnson	1/05 1/16
☑ Updater	AUDREY JOHNSON	Audrey Johnson	1/05 1/16
☑ Backchecker	MIKE RATHBONE	[illegible]	1/27/06
☐ Designer*			
☐ Reviewer*			
☐ [illegible]*			

[illegible] required by the [illegible] Quality Plan

NO.	REVISION	BY	DATE
3			
2			
1			

FLOOD CONTROL DISTRICT OF MARICOPA COUNTY
ENGINEERING DIVISION

83RD AVENUE / PINNACLE PEAK ROAD
DRAINAGE IMPROVEMENTS
PCN 450.02.33 FCD CONTRACT NO. 2003C060

60%
PRELIMINARY NOT FOR CONSTRUCTION

	BY	DATE
DESIGNED	O. OLDEN	11/05
DRAWN	A. JOHNSON	11/05
CHECKED	M. J.	11/05

JE JACOBS CIVIL INC.

DRAWING NO. D13 | DTL 13 STORM DRAIN MANHOLE | SHEET OF

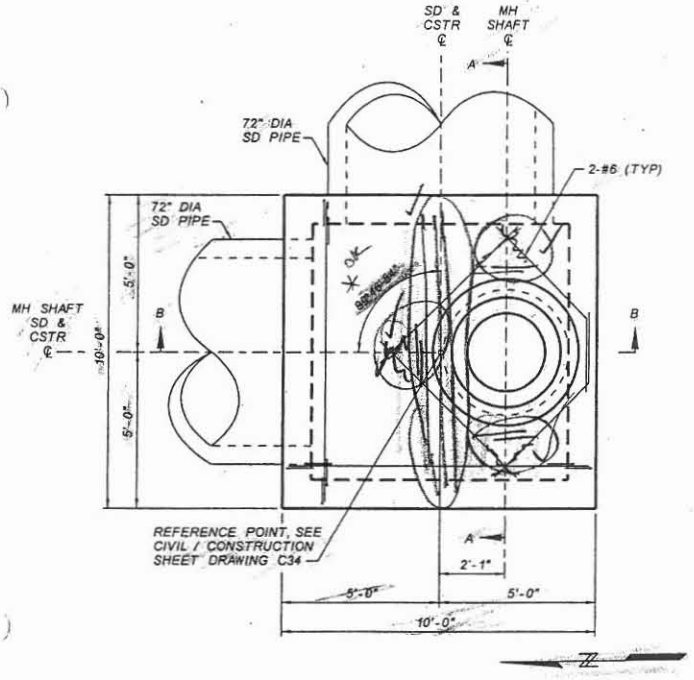

PLAN
STORM DRAIN MANHOLE BASE
89TH AVENUE STA 416+56
NTS

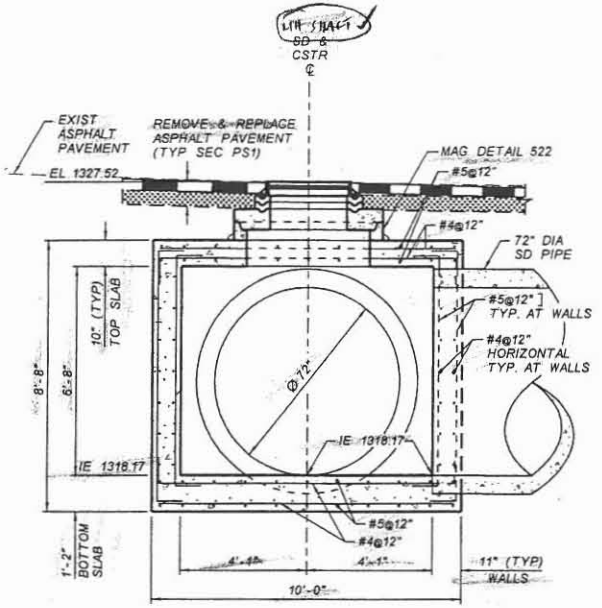

SECTION A-A
STORM DRAIN MANHOLE BASE
89TH AVENUE STA 416+56
NTS

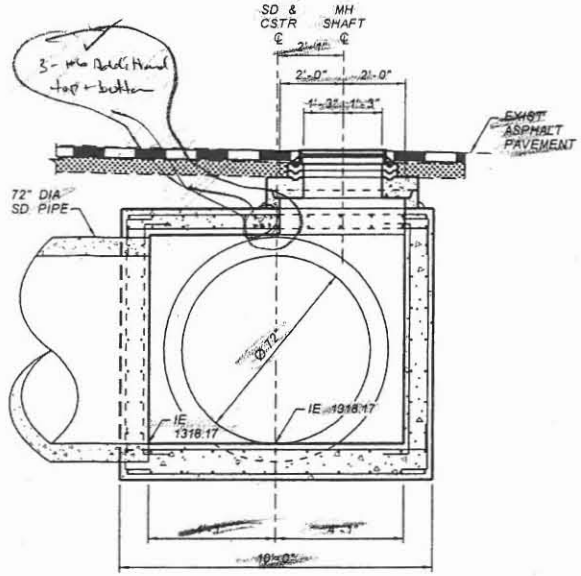

SECTION B-B
STORM DRAIN MANHOLE BASE
89TH AVENUE STA 416+56
NTS

THIS MANHOLE CHANGED SIZE DUE TO PIPE CHANGES. VERIFY THAT REINFORCING IS STILL CORRECT.

JACOBS CIVIL INC. LEVEL 1 CHECKPRINT

Job Number: _____ WBS ID: _____

Document Title: _____

	Name (Print)	Signature	Date
☑ Originator	AUDREY JOHNSON	Audrey Johnson	12/22
☑ Checker	MIKE RATHBONE	MR	1/4/06
☑ Backchecker	AUDREY JOHNSON	Audrey Johnson	1/05 1/16
☑ Updater	AUDREY JOHNSON	Audrey Johnson	1/05 1/16
☑ Rechecker	MIKE RATHBONE	MR	1/11/06
☐ Designer*			
☐ Reviewer*			
☐ Other*			

*As required by the Job Specific Quality Plan

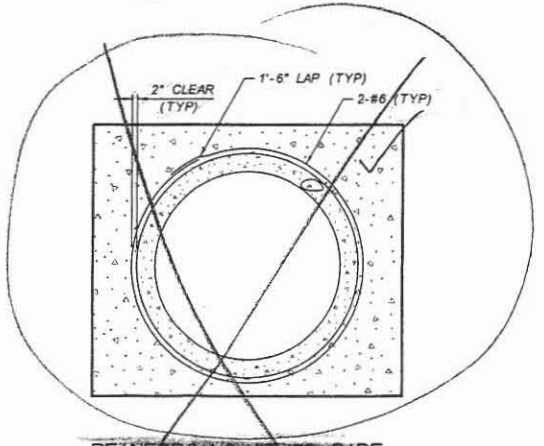

REINFORCING AT SD PIPE
STORM DRAIN MANHOLE BASE
89TH AVENUE STA 416+56
NTS

NO.	REVISION	BY	DATE
3			
2			
1			

FLOOD CONTROL DISTRICT OF MARICOPA COUNTY
ENGINEERING DIVISION

83RD AVENUE / PINNACLE PEAK ROAD
DRAINAGE IMPROVEMENTS
PCN 450.02.33 FCD CONTRACT NO. 2003C060

60% PRELIMINARY NOT FOR CONSTRUCTION

	BY	DATE
DESIGNED	D. OLIDEN	11/05
DRAWN	A. JOHNSON	11/05
CHECKED	MJR	11/05

JACOBS CIVIL INC.

DRAWING NO. D14 | DTL 14 STORM DRAIN MANHOLE | SHEET OF

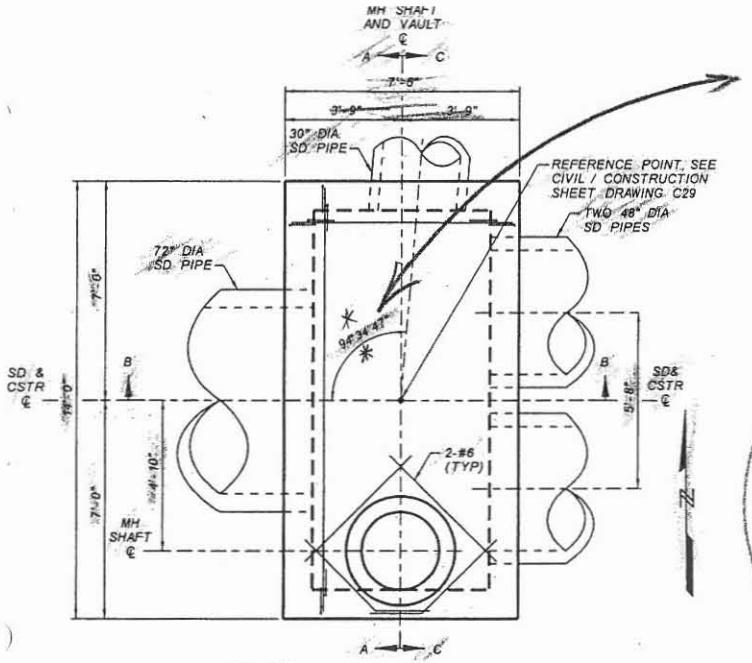

* DISCREPANCY BETWEEN REDLINE & CAD. SAM SAID TO GO BY CAD. 12/15

84 48 27
36 46
85 85 13
4 34 47

PLAN
~~STORM DRAIN MANHOLE BASE~~ CONCRETE VAULT
CALLE LEJOS STA 336+55
NTS

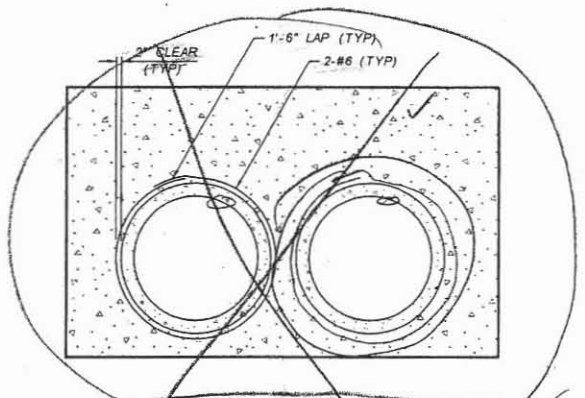

REINFORCING AT SD PIPE
~~STORM DRAIN MANHOLE BASE~~ CONCRETE VAULT
CALLE LEJOS STA 336+55
NTS

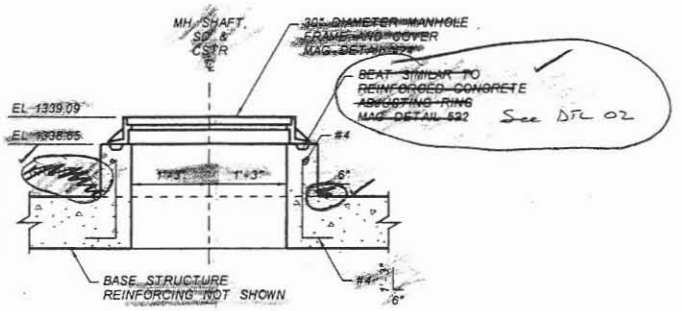

SHAFT DETAIL
~~STORM DRAIN MANHOLE BASE~~ CONCRETE VAULT
CALLE LEJOS STA 336+55
NTS

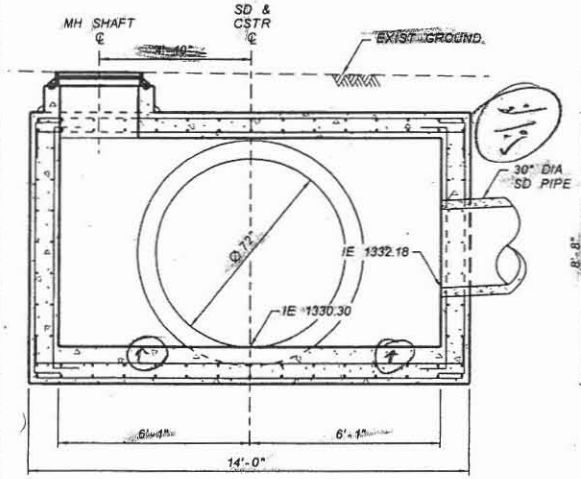

SECTION A-A
~~STORM DRAIN MANHOLE BASE~~ CONCRETE VAULT
CALLE LEJOS STA 336+55
NTS

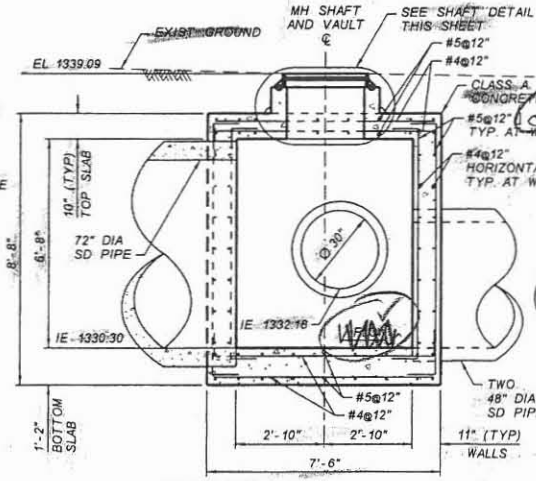

SECTION B-B
~~STORM DRAIN MANHOLE BASE~~ CONCRETE VAULT
CALLE LEJOS STA 336+55
NTS

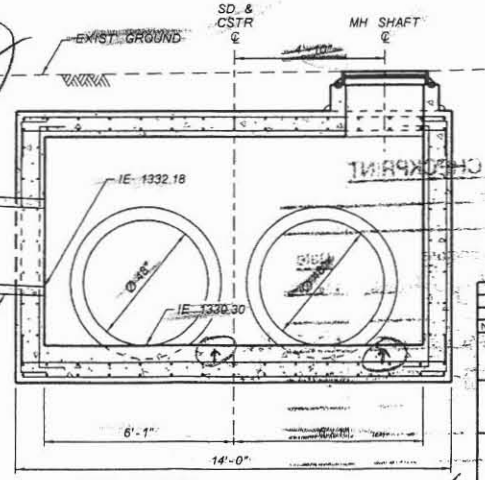

SECTION C-C
~~STORM DRAIN MANHOLE BASE~~ CONCRETE VAULT
CALLE LEJOS STA 336+55
NTS

checked OAO 11/05

NO.	REVISION	BY	DATE
3			
2			
1			

FLOOD CONTROL DISTRICT OF MARICOPA COUNTY
ENGINEERING DIVISION

83RD AVENUE / PINNACLE PEAK ROAD
DRAINAGE IMPROVEMENTS
PCN 450.02.33 FCD CONTRACT NO. 2003C060

60%
PRELIMINARY NOT FOR CONSTRUCTION

	BY	DATE
DESIGNED	D.OSDEN	11/05
DRAWN	A.JOHNSON	11/05
CHECKED	MAK	11/05

JACOBS CIVIL INC.

DRAWING NO. D15
DTL 15 STORM DRAIN MANHOLE
SHEET OF

JACOBS CIVIL INC. LEVEL 1 CHECKPRINT

Job Number: _____ WBS ID: _____

Document Title: _____

	Name (Print)	Signature	Date
☑ Originator	AUDREY JOHNSON	Audrey Johnson	12/22
☑ Checker	MIKE RATHBONE		1/4/06
☑ Backchecker	AUDREY JOHNSON	Audrey Johnson	1/05 1/16
☑ Updater	AUDREY JOHNSON	Audrey Johnson	1/05 1/16
☑ Rechecker	MIKE RATHBONE		1/17/06
☐ Designer*			
☐ Reviewer*			
☐ Other*			

*As required by the Job Specific Quality Plan

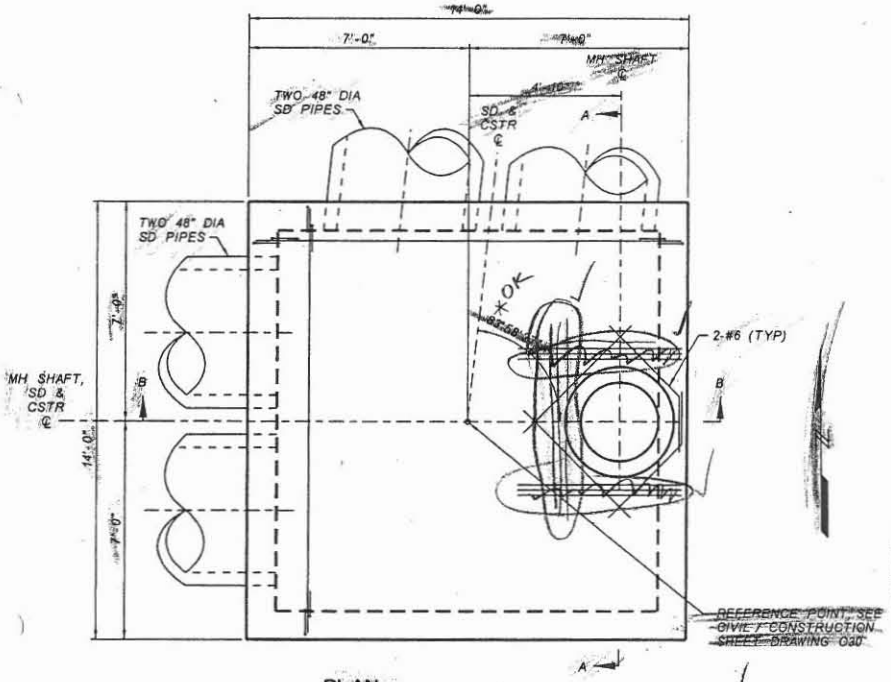

PLAN
STORM DRAIN MANHOLE BASE
CALLE LEJOS STA 339+55
NTS

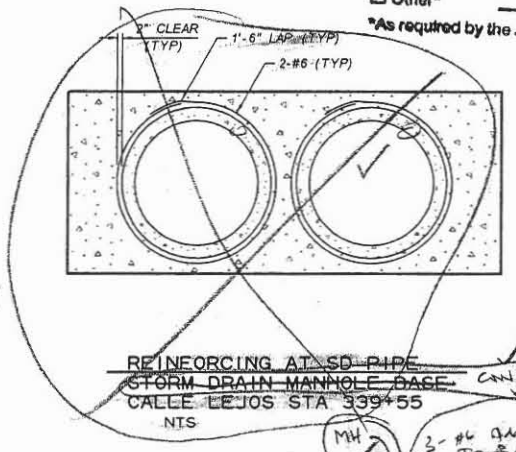

REINFORCING AT SD PIPE
STORM DRAIN MANHOLE BASE
CALLE LEJOS STA 339+55
NTS

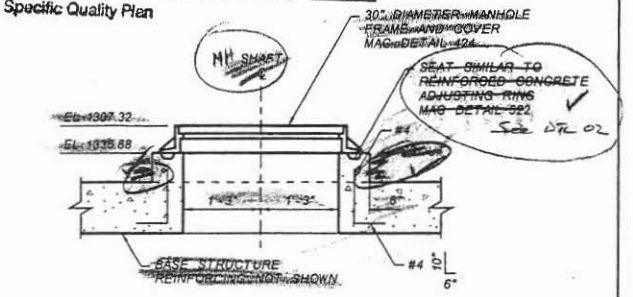

SHAFT DETAIL
STORM DRAIN MANHOLE BASE
CALLE LEJOS STA 339+55
NTS

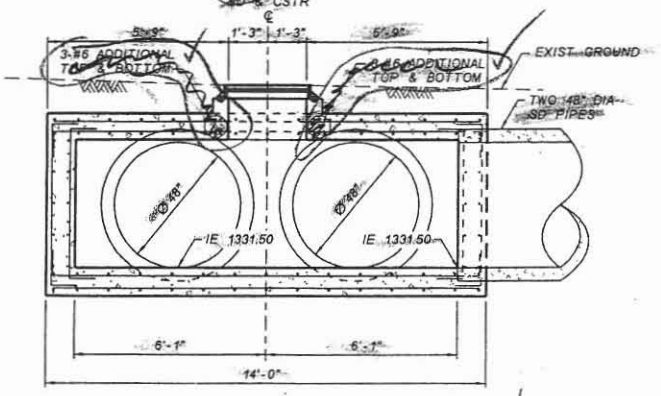

SECTION A-A
STORM DRAIN MANHOLE BASE
CALLE LEJOS STA 339+55
NTS

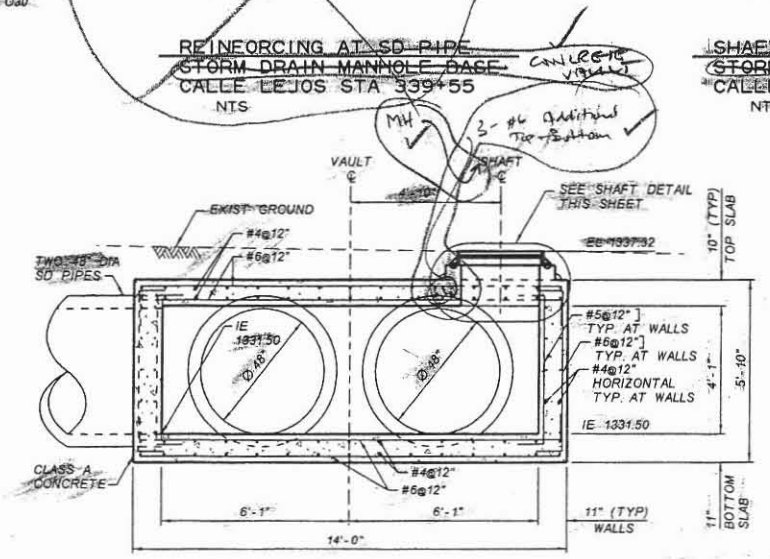

SECTION B-B
STORM DRAIN MANHOLE BASE
CALLE LEJOS STA 339+55
NTS

NO.	REVISION	BY	DATE
3			
2			
1			

FLOOD CONTROL DISTRICT OF MARICOPA COUNTY
ENGINEERING DIVISION

83RD AVENUE / PINNACLE PEAK ROAD
DRAINAGE IMPROVEMENTS
PCN 450.02.33 FCD CONTRACT NO. 2003C060

60%
PRELIMINARY NOT FOR CONSTRUCTION

	BY	DATE
DESIGNED	O. OLIDEN	11/05
DRAWN	A. JOHNSON	11/05
CHECKED	MJR	11/05

JACOBS CIVIL INC.

DRAWING NO. D16 — DTL 16 STORM DRAIN MANHOLE — SHEET OF

JACOBS CIVIL INC. LEVEL 1 CHECKPRINT

Job Number: _____ WBS ID: _____

Document Title: _____

	Name (Print)	Signature	Date
☑ Originator	AUDREY JOHNSON	Audrey Johnson	12/22
☑ Checker	MIKE RATHBONE	[illegible]	1/4/06
☑ Backchecker	AUDREY JOHNSON	Audrey Johnson	1/16
☑ Updater	AUDREY JOHNSON	Audrey Johnson	1/16
☑ Rechecker	MIKE RATHBONE	[illegible]	1/17/06
☐ Designer*			
☐ Reviewer*			
☐ Other*			

*As required by the Job Specific Quality Plan

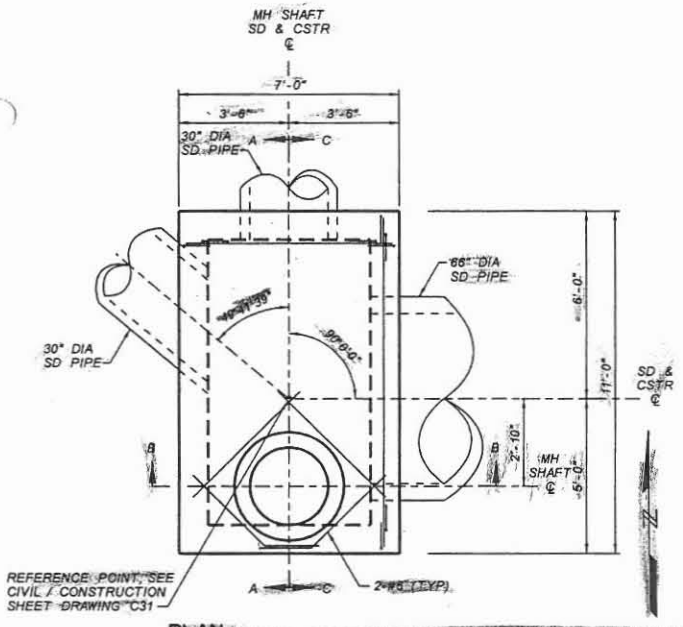

PLAN
STORM DRAIN MANHOLE BASE CONCRETE VAULT
CIELO GRANDE STA 400+30
NTS

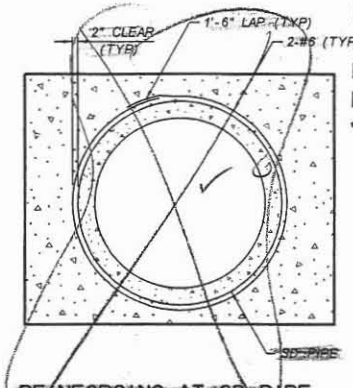

REINFORCING AT SD PIPE
STORM DRAIN MANHOLE BASE
CIELO GRANDE STA 400+30
NTS

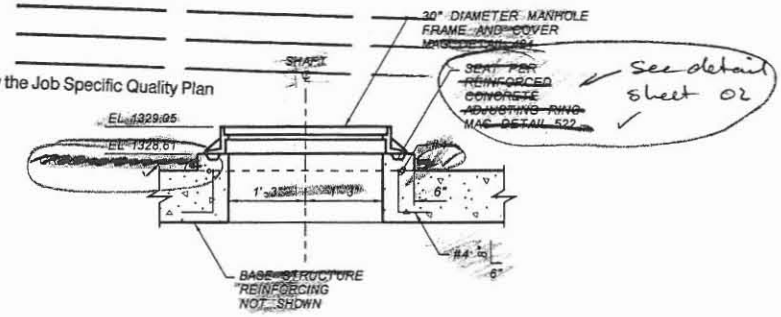

SHAFT DETAIL
STORM DRAIN MANHOLE BASE CONCRETE VAULT
CIELO GRANDE STA 400+30
NTS

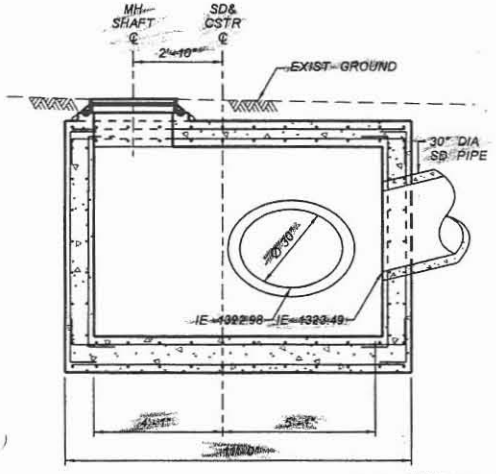

SECTION A-A
STORM DRAIN MANHOLE BASE CONCRETE VAULT
CIELO GRANDE STA 400+30
NTS

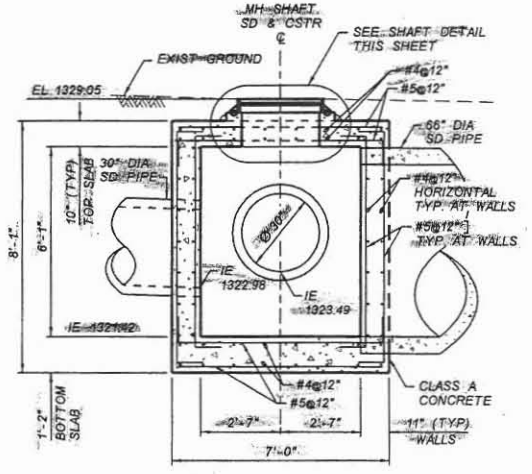

SECTION B-B
STORM DRAIN MANHOLE BASE
CIELO GRANDE STA 400+30
NTS

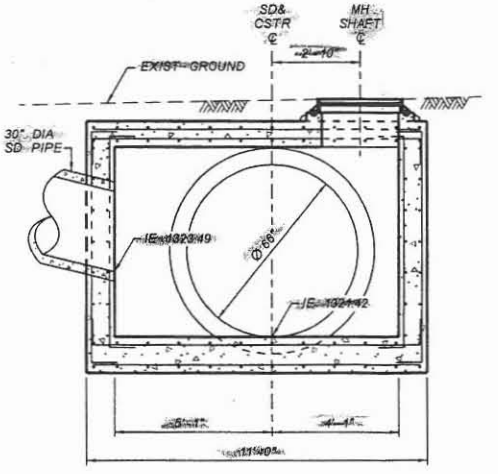

SECTION C-C
STORM DRAIN MANHOLE BASE
CIELO GRANDE STA 400+30
NTS

NO.	REVISION	BY	DATE
3			
2			
1			

FLOOD CONTROL DISTRICT OF MARICOPA COUNTY
ENGINEERING DIVISION

83RD AVENUE / PINNACLE PEAK ROAD
DRAINAGE IMPROVEMENTS
PCN 450.02.33 FCD CONTRACT NO. 2003C060

90%
PRELIMINARY NOT FOR CONSTRUCTION

	BY	DATE
DESIGNED	O. OLIDEN	01/06
DRAWN	A. JOHNSON	01/06
CHECKED	MJR	11/05

JACOBS CIVIL INC.

DRAWING NO. D17 | DTL 17 CONCRETE VAULT | SHEET OF

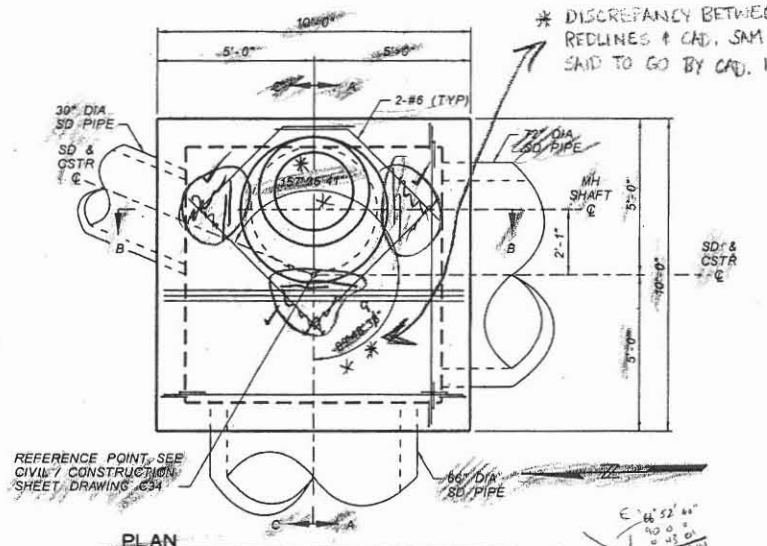

* DISCREPANCY BETWEEN REDLINES & CAD. SAM SAID TO GO BY CAD. 12/15

PLAN
STORM DRAIN MANHOLE BASE
89TH AVENUE STA 413+23 48 STET
NTS

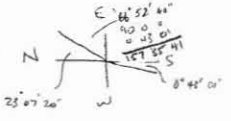

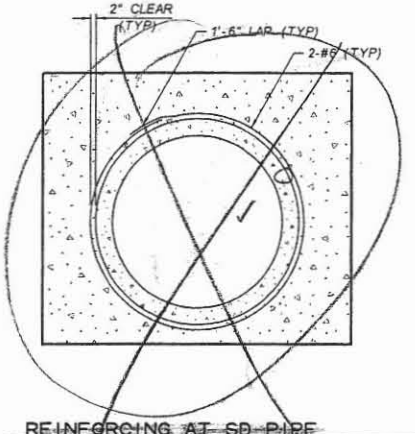

REINFORCING AT SD PIPE
STORM DRAIN MANHOLE BASE
89TH AVENUE STA 413+23 48 STET
NTS

- 89 28 20
- 90 31 40
- 48 01
- 89 48 39

THIS MANHOLE CHANGED SIZE DUE TO PIPE CHANGES. VERIFY THAT REINFORCING IS STILL ADEQUATE.

JACOBS CIVIL INC. LEVEL 1 CHECKPRINT

Job Number: _____ WBS ID: _____

Document Title: _____

	Name (Print)	Signature	Date
☑ Originator	AUDREY JOHNSON	Audrey Johnson	12/22
☑ Checker	MIKE RATHBONE	[illegible]	1/4/06
☑ Backchecker	AUDREY JOHNSON	Audrey Johnson	1/05 1/10
☑ Updater	AUDREY JOHNSON	Audrey Johnson	1/05 1/16
☑ Rechecker	MIKE RATHBONE	[illegible]	1/17/06
☐ Designer*			
☐ Reviewer*			
☐ Other*			

*As required by the Job Specific Quality Plan

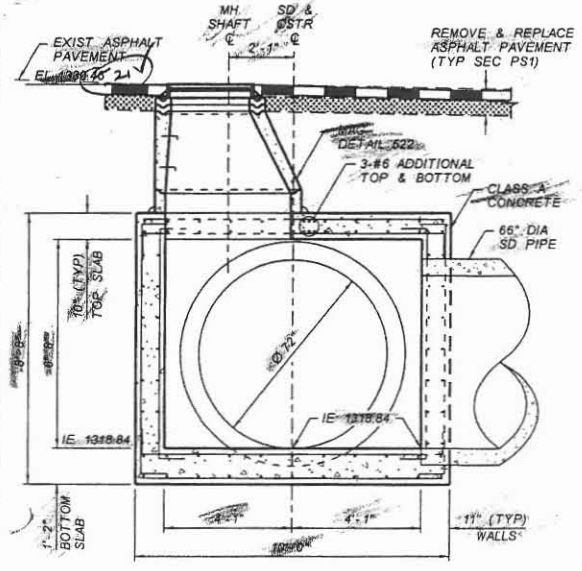

SECTION A-A
STORM DRAIN MANHOLE BASE
89TH AVENUE STA 413+23 48 STET
NTS

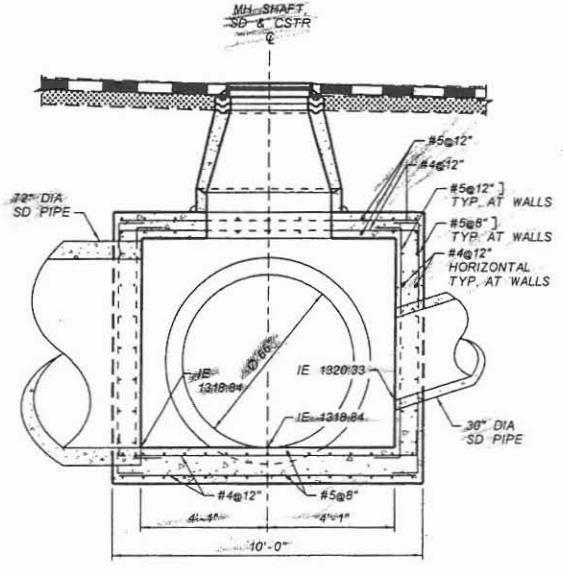

SECTION B-B
STORM DRAIN MANHOLE BASE
89TH AVENUE STA 413+23 48 STET
NTS

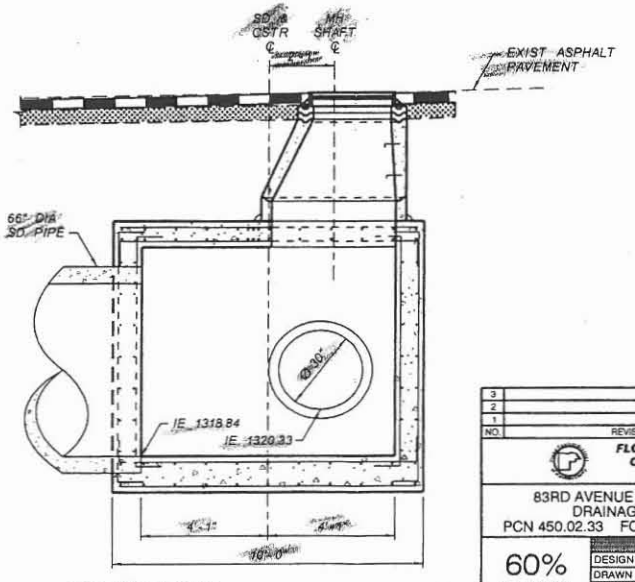

SECTION C-C
STORM DRAIN MANHOLE BASE
89TH AVENUE STA 413+23 48 STET
NTS

NO.	REVISION	BY	DATE
3			
2			
1			

FLOOD CONTROL DISTRICT OF MARICOPA COUNTY
ENGINEERING DIVISION

83RD AVENUE / PINNACLE PEAK ROAD
DRAINAGE IMPROVEMENTS
PCN 450.02.33 FCD CONTRACT NO. 2003C060

60% PRELIMINARY NOT FOR CONSTRUCTION

	BY	DATE
DESIGNED	D. OLDEN	11/05
DRAWN	A. JOHNSON	11/05
CHECKED	M.J.R.	11/05

JACOBS CIVIL INC.

DRAWING NO. D18 | DTL 18 STORM DRAIN MANHOLE | SHEET OF

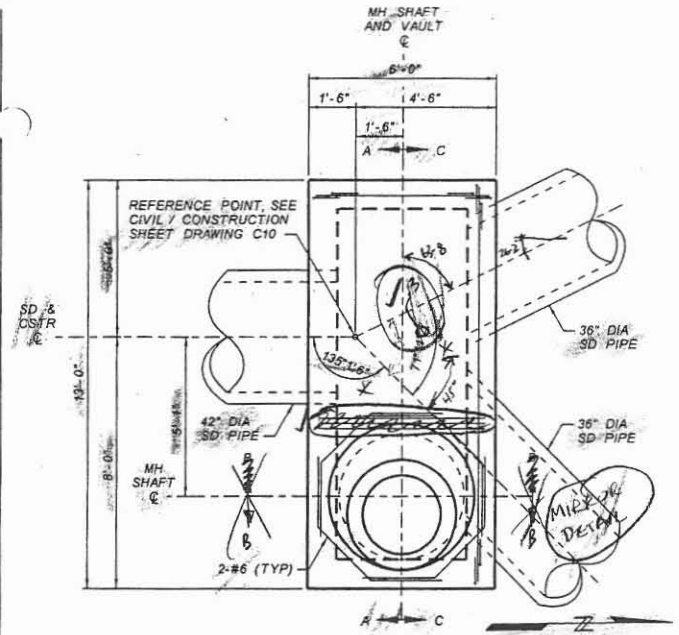

PLAN
STORM DRAIN MANHOLE BASE
83RD AVENUE STA 142+46
NTS

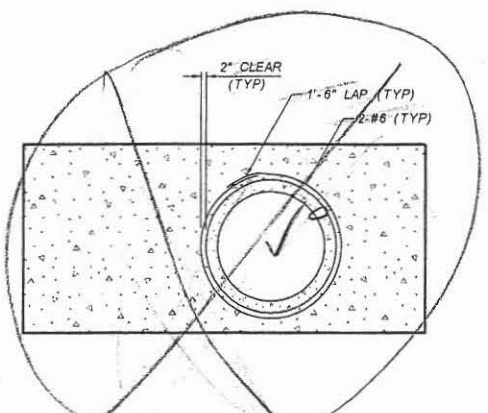

REINFORCING AT SD PIPE
STORM DRAIN MANHOLE BASE
83RD AVENUE STA 142+46
NTS

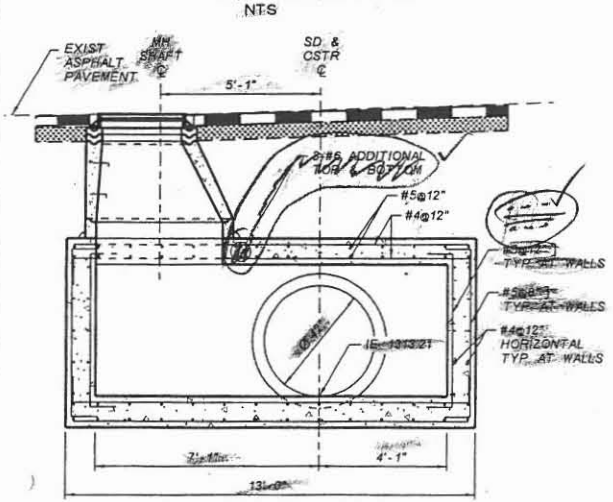

SECTION A-A
STORM DRAIN MANHOLE BASE
83RD AVENUE STA 142+46
NTS

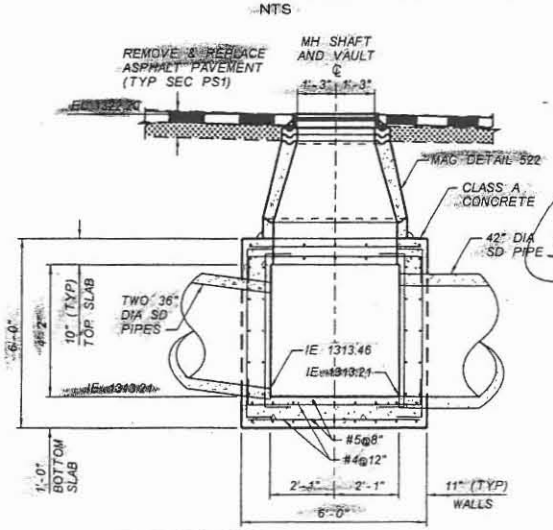

SECTION B-B
STORM DRAIN MANHOLE BASE
83RD AVENUE STA 142+46
NTS

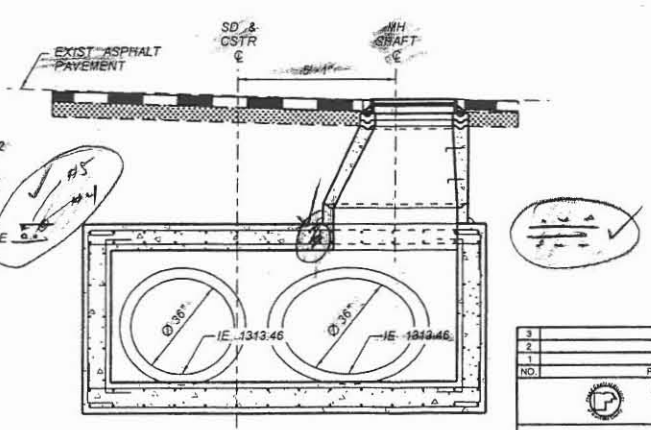

SECTION C-C
STORM DRAIN MANHOLE BASE
83RD AVENUE STA 142+46
NTS

JACOBS CIVIL INC. LEVEL 1 CHECKPRINT

Job Number: _____ WBS ID: _____

Document Title: _____

	(Print Name)	Signature	Date
☑ Originator	AUDREY JOHNSON	Audrey Johnson	12/22
☐ Checker	MIKE RAYMOND	[illegible]	1/4/06
☑ Backchecker	AUDREY JOHNSON	Audrey Johnson	1/05 1/16
☑ Updater	AUDREY JOHNSON	Audrey Johnson	1/05 1/16
☑ Rechecker	MIKE RAYMOND	[illegible]	1/17/06
☐ Designer*			
☐ Reviewer*			
☐ Other*			

*As required by the Job Specific Quality Plan

NO.	REVISION	BY	DATE
3			
2			
1			

FLOOD CONTROL DISTRICT OF MARICOPA COUNTY
ENGINEERING DIVISION

83RD AVENUE / PINNACLE PEAK ROAD
DRAINAGE IMPROVEMENTS
PCN 450.02.33 FCD CONTRACT NO. 2003C060

60%
PRELIMINARY NOT FOR CONSTRUCTION

	BY	DATE
DESIGNED	D. OLIDEN	11/05
DRAWN	A. JOHNSON	11/05
CHECKED	MJR	11/05

JACOBS CIVIL INC.

DRAWING NO. D19 | DTL 19 STORM DRAIN MANHOLE | SHEET OF

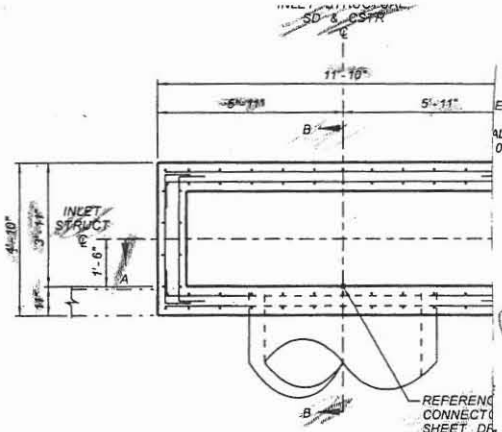

PLAN
INLET STRUCTURE
VENTANA PICACHOS
RETENTION BASIN STA 81+37
NTS

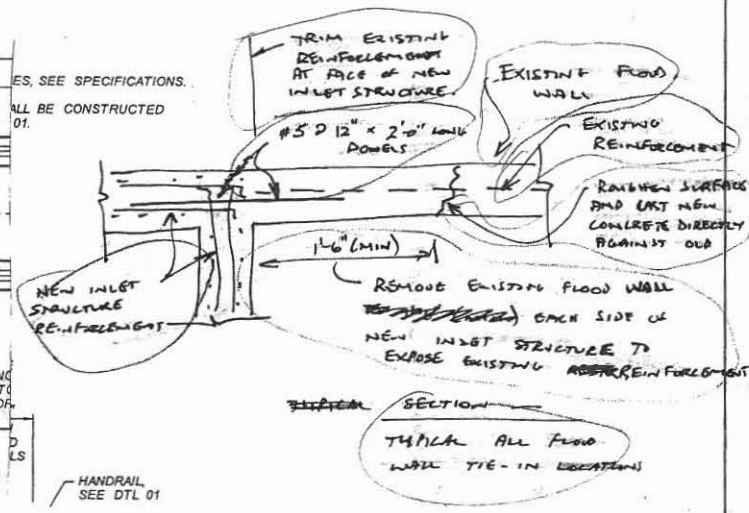

JACOBS CIVIL INC. LEVEL 1 CHECKPRINT

Job Number: _____ WBS ID: _____

Document Title: _____

	Name (Print)	Signature	Date
☑ Originator	AUDREY JOHNSON	Audrey Johnson	12/22
☑ Checker	MIKE RATHBONE	[illegible]	1/17/06
☑ Backchecker	AUDREY JOHNSON	Audrey Johnson	1/05 1/16
☑ Updater	AUDREY JOHNSON	Audrey Johnson	1/05 1/16
☑ Rechecker	MIKE RATHBONE	[illegible]	1/17/06
☐ Designer*			
☐ Reviewer*			
☐ Other*			

*As required by the Job Specific Quality Plan

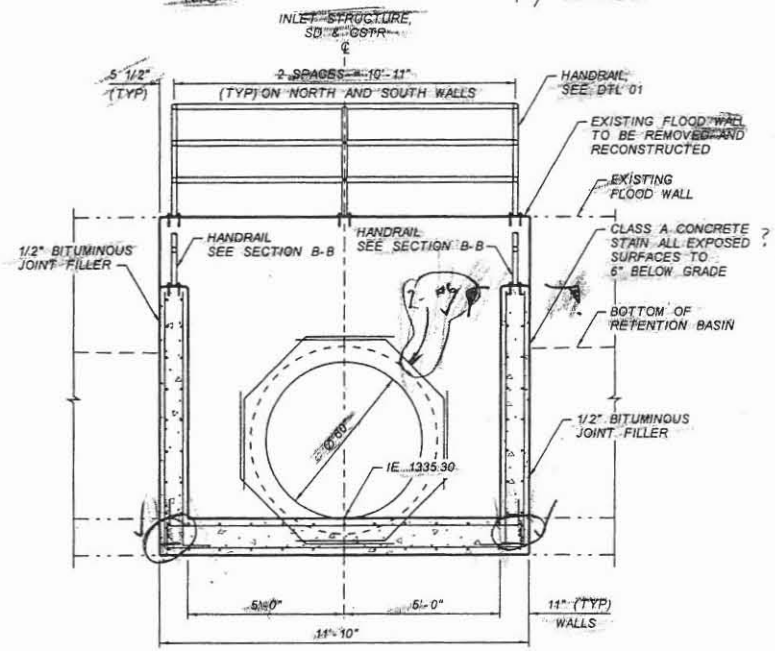

SECTION A-A
INLET STRUCTURE
VENTANA PICACHOS
RETENTION BASIN STA 81+37
NTS

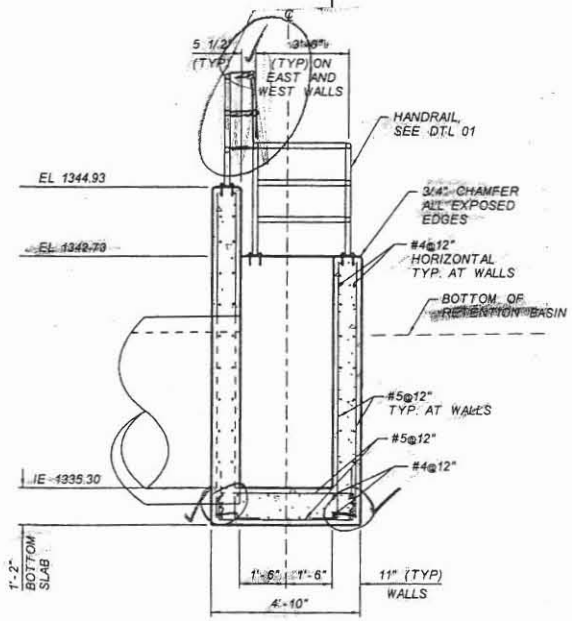

SECTION B-B
INLET STRUCTURE
VENTANA PICACHOS
RETENTION BASIN STA 81+37
NTS

CALL OUT PAINT OR STAIN SEE NOTE 3 ON DETAIL 01

NO.	REVISION	BY	DATE
3			
2			
1			

FLOOD CONTROL DISTRICT OF MARICOPA COUNTY
ENGINEERING DIVISION

83RD AVENUE / PINNACLE PEAK ROAD
DRAINAGE IMPROVEMENTS
PCN 450.02.33 FCD CONTRACT NO. 2003C060

60%
PRELIMINARY NOT FOR CONSTRUCTION

	BY	DATE
DESIGNED	D. OLDEN	11/05
DRAWN	A. JOHNSON	11/05
CHECKED	MJR	11/05

JACOBS CIVIL INC.

DRAWING NO. D20 | DTL 20 INLET STRUCTURE | SHEET OF

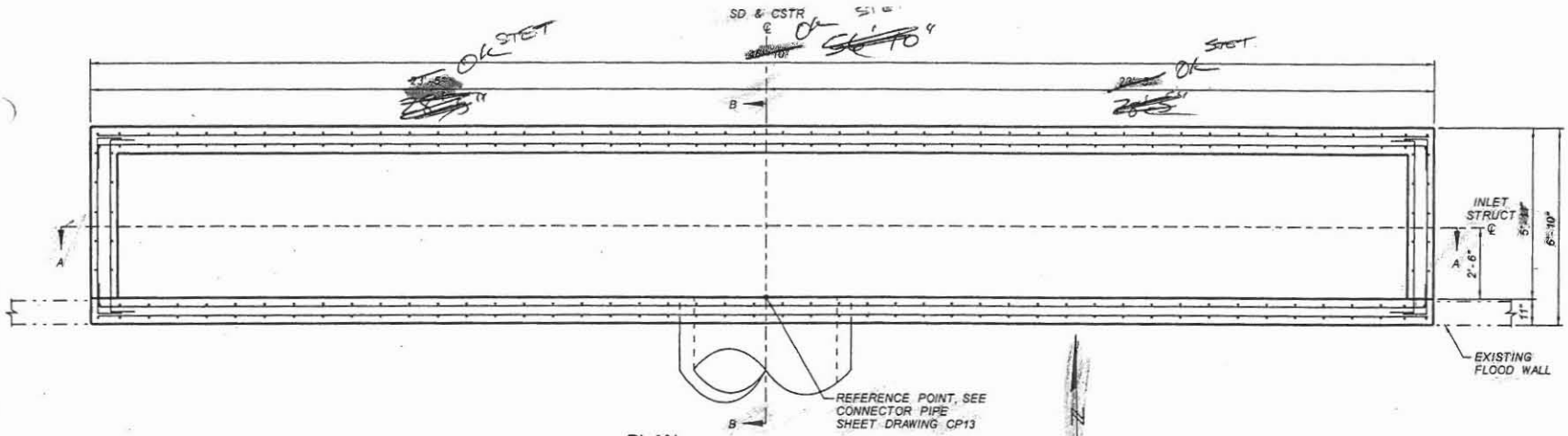

PLAN
INLET STRUCTURE
VENTANA PICACHOS
RETENTION BASIN STA ~~70+80~~ 85+77
NTS

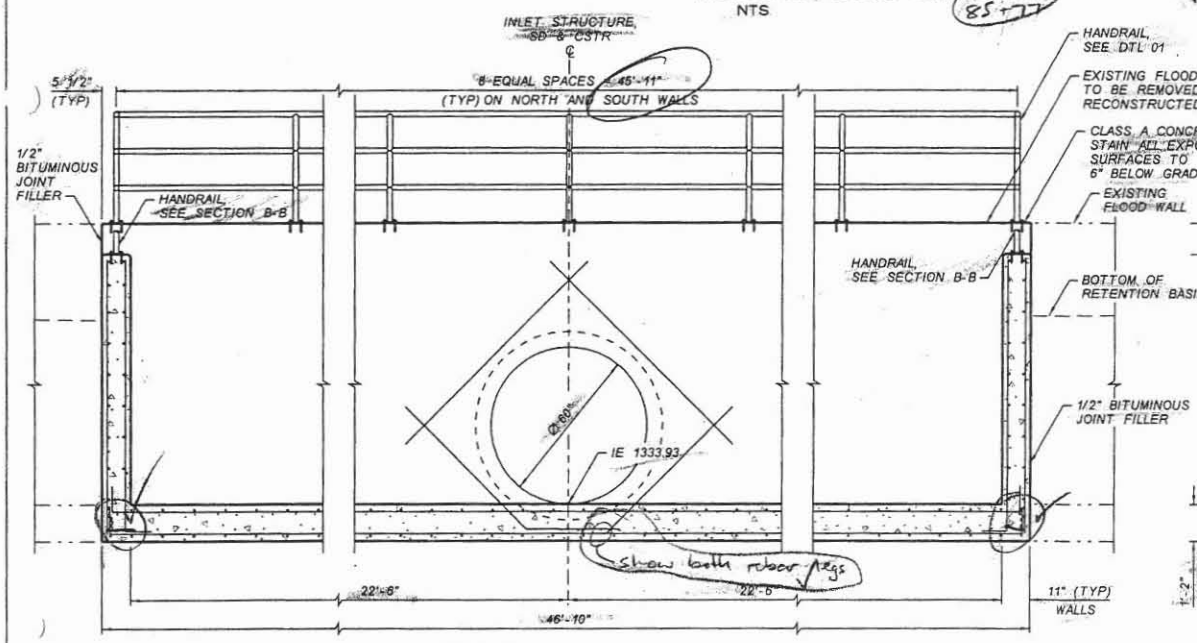

SECTION A-A
INLET STRUCTURE
VENTANA PICACHOS
RETENTION BASIN STA ~~70+80~~ 85+77
NTS

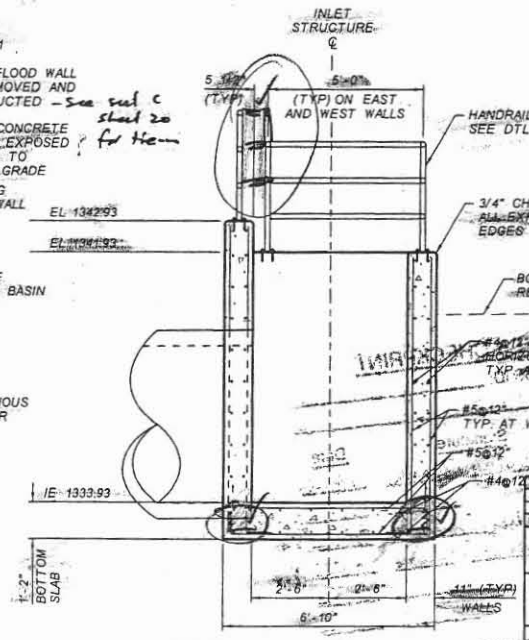

SECTION B-B
INLET STRUCTURE
VENTANA PICACHOS
RETENTION BASIN STA ~~70+80~~ 85+77
NTS

Checked OAO. 11/05

NO.	REVISION	BY	DATE
3			
2			
1			

FLOOD CONTROL DISTRICT OF MARICOPA COUNTY
ENGINEERING DIVISION

83RD AVENUE / PINNACLE PEAK ROAD
DRAINAGE IMPROVEMENTS
PCN 450.02.33 FCD CONTRACT NO. 2003C060

60%
PRELIMINARY - NOT FOR CONSTRUCTION

	BY	DATE
DESIGNED		11/05
DRAWN		11/05
CHECKED	MAK	11/05

JACOBS CIVIL INC.

DRAWING NO. D21 | DTL 21 INLET STRUCTURE | SHEET OF

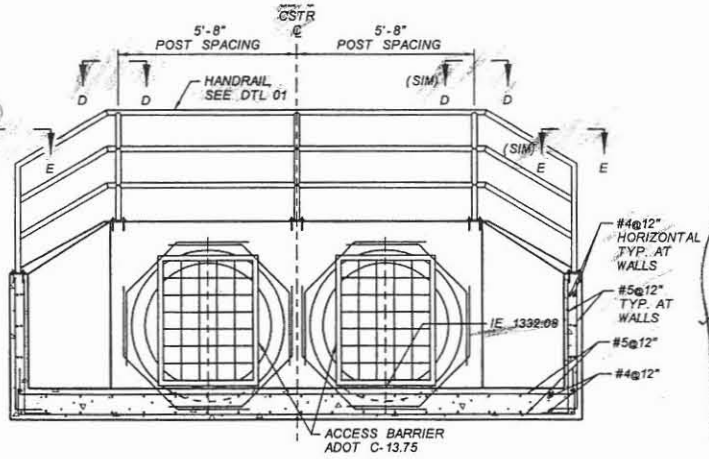

SECTION A-A
DROP INLET
CALLE LEJOS STA 340+27
NTS

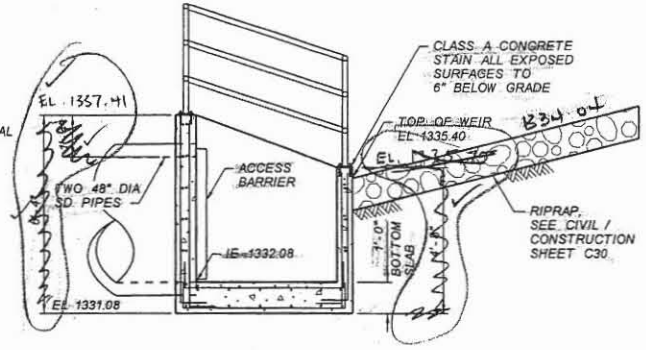

SECTION B-B
DROP INLET
CALLE LEJOS STA 340+27
NTS

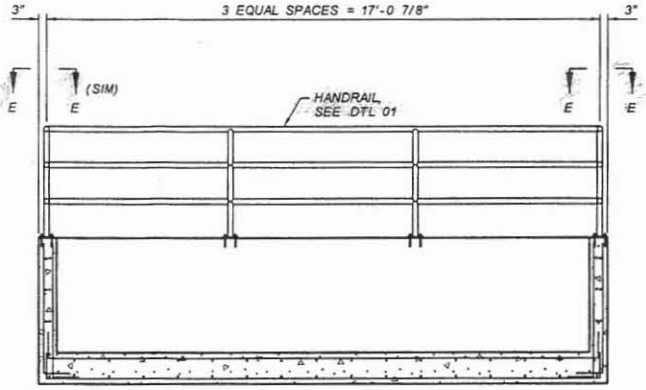

SECTION C-C
DROP INLET
CALLE LEJOS STA 340+27
NTS

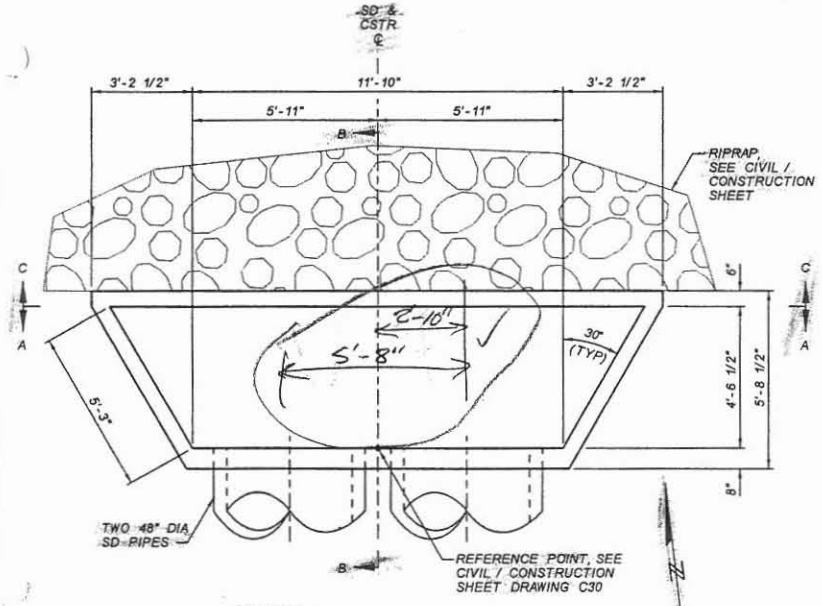

PLAN
DROP INLET
CALLE LEJOS STA 340+27
NTS

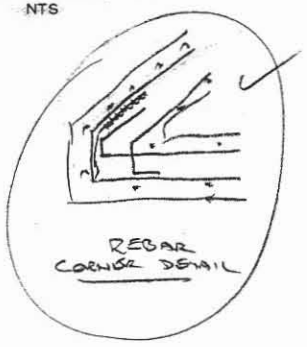

SECTION D-D
HANDRAIL AT
DROP INLET
CALLE LEJOS STA 340+27
NTS

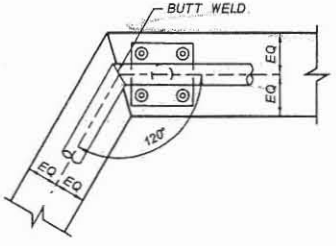

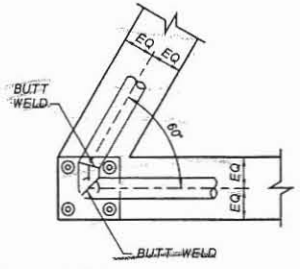

SECTION E-E
HANDRAIL AT
DROP INLET
CALLE LEJOS STA 340+27
NTS

JACOBS CIVIL INC. LEVEL 1 CHECKPRINT

Job Number: _____ WBS ID: _____

Document Title: _____

	Name (Print)	Signature	Date
☑ Originator	AUDREY JOHNSON	Audrey Johnson	12/22/05
☑ Checker	MIKE RATHBONE	[illegible]	1/4/06
☑ Backchecker	AUDREY JOHNSON	Audrey Johnson	1/16
☑ Updater	AUDREY JOHNSON	Audrey Johnson	1/16
☑ Rechecker	MIKE RATHBONE	[illegible]	1/17/06
☐ Designer*			
☐ Reviewer*			
☐ Other*			

*As required by the Job Specific Quality Plan

NO.	REVISION	BY	DATE
3			
2			
1			

FLOOD CONTROL DISTRICT OF MARICOPA COUNTY
ENGINEERING DIVISION

83RD AVENUE / PINNACLE PEAK ROAD
DRAINAGE IMPROVEMENTS
PCN 450.02.33 FCD CONTRACT NO. 2003C060

90%
PRELIMINARY NOT FOR CONSTRUCTION

	BY	DATE
DESIGNED	O. OLIDEN	01/06
DRAWN	A. JOHNSON	01/06
CHECKED	MJR	11/05

JACOBS CIVIL INC.

DRAWING NO. D22 | DTL 22 DROP INLET | SHEET OF

16 17 28
41 09
58 37

THIS MANHOLE CHANGED SIZE DUE TO PIPE CHANGES. VERIFY THAT REINFORCING IS STILL CORRECT.

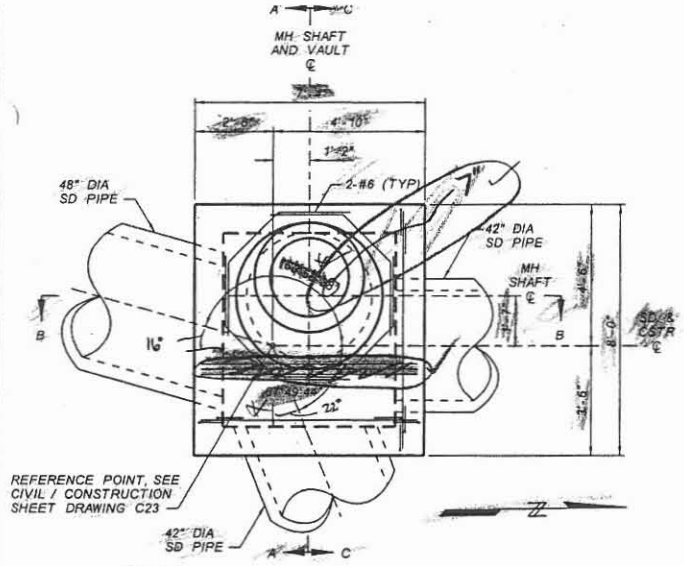

PLAN
STORM DRAIN MANHOLE BASE
87TH AVENUE BASIN STA 307+50
NTS

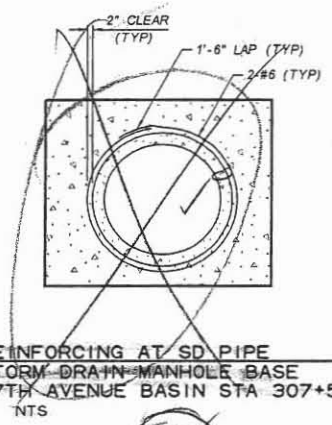

REINFORCING AT SD PIPE
STORM DRAIN MANHOLE BASE
87TH AVENUE BASIN STA 307+50
NTS

JACOBS CIVIL INC. LEVEL 1 CHECKPRINT

Job Number: _____ WBS ID: _____

Document Title: _____

	Name (Print)	Signature	Date
☑ Originator	AUDREY JOHNSON	Audrey Johnson	12/22 11/4/06
☑ Checker	MIKE RATHBUN		V05 1/16
☑ Backchecker	AUDREY JOHNSON	Audrey Johnson	V05 1/16
☑ Updater	AUDREY JOHNSON	Audrey Johnson	1/17/06
☑ Rechecker	MIKE RATHBUN		
☐ Designer*			
☐ Reviewer*			
☐ Other*			

*As required by the Job Specific Quality Plan

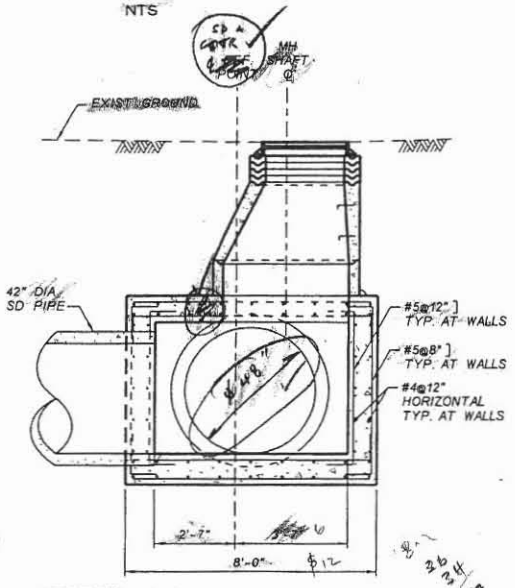

SECTION A-A
STORM DRAIN MANHOLE BASE
87TH AVENUE BASIN STA 307+50
NTS

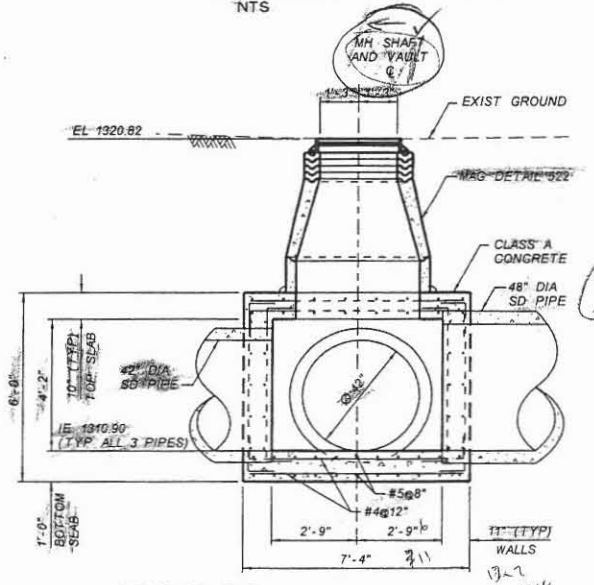

SECTION B-B
STORM DRAIN MANHOLE BASE
87TH AVENUE BASIN STA 307+50
NTS

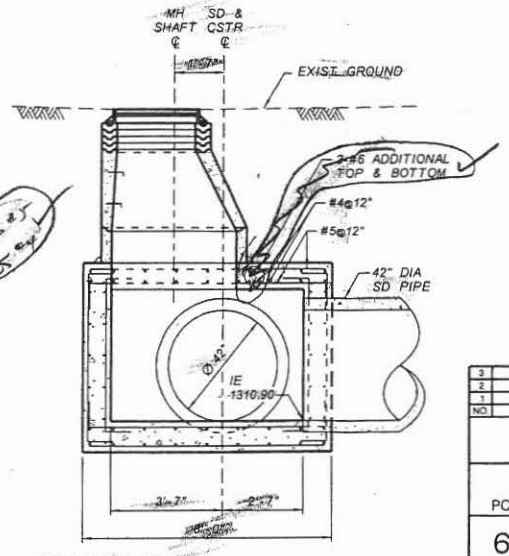

SECTION C-C
STORM DRAIN MANHOLE BASE
87TH AVENUE BASIN STA 307+50
NTS

NO	REVISION	BY	DATE
3			
2			
1			

FLOOD CONTROL DISTRICT OF MARICOPA COUNTY
ENGINEERING DIVISION

83RD AVENUE / PINNACLE PEAK ROAD
DRAINAGE IMPROVEMENTS
PCN 450.02.33 FCD CONTRACT NO. 2003C060

60% PRELIMINARY NOT FOR CONSTRUCTION

	BY	DATE
DESIGNED	O. OLDEN	11/05
DRAWN	A. JOHNSON	11/05
CHECKED	MJA	11/05

JACOBS CIVIL INC.

DRAWING NO. D23 — DTL 23 STORM DRAIN MANHOLE — SHEET OF

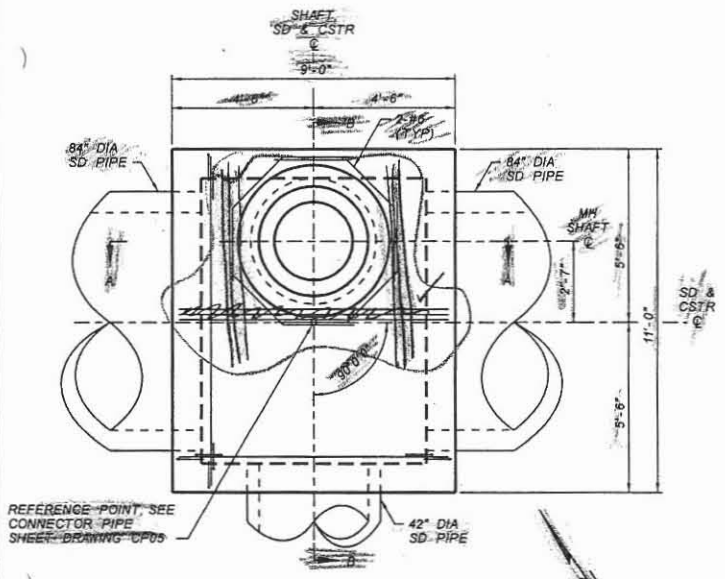

PLAN
STORM DRAIN MANHOLE BASE
87TH AVENUE BASIN STA 61+37
NTS

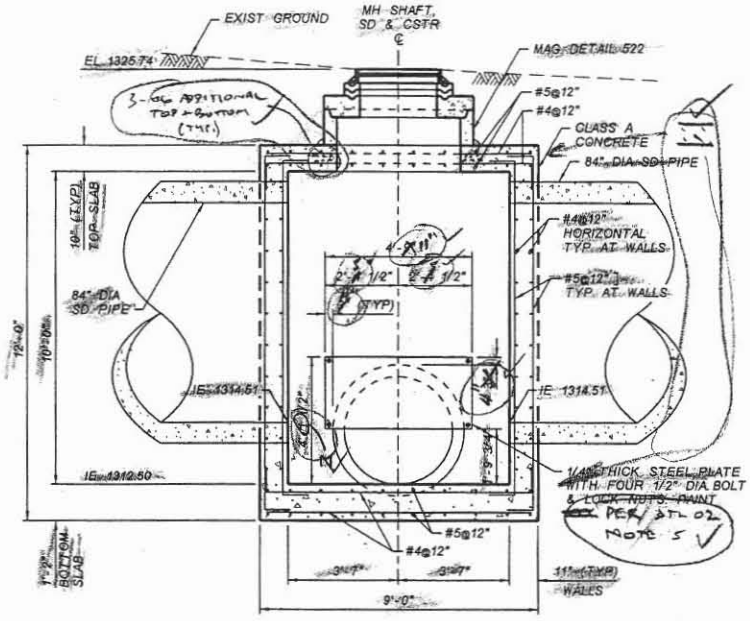

SECTION A-A
STORM DRAIN MANHOLE BASE
87TH AVENUE BASIN STA 61+37
NTS

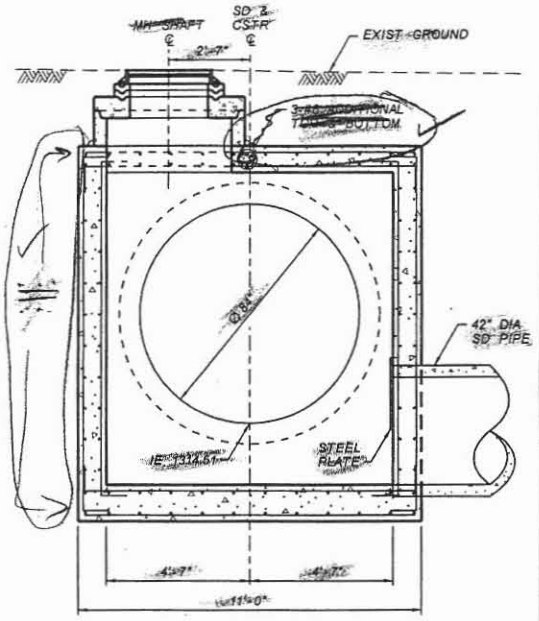

SECTION B-B
STORM DRAIN MANHOLE BASE
87TH AVENUE BASIN STA 61+37
NTS

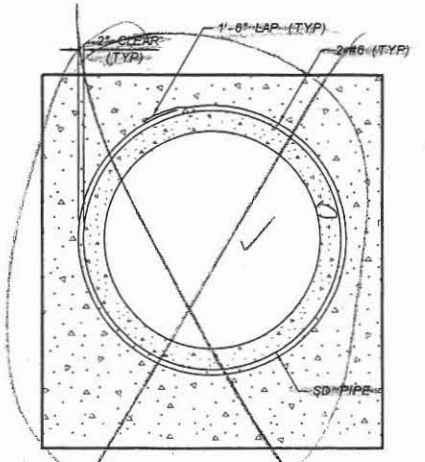

REINFORCING AT SD PIPE
STORM DRAIN MANHOLE BASE
87TH AVENUE BASIN STA 61+37
NTS

JACOBS CIVIL INC. LEVEL 1 CHECKPRINT

Job Number: _____ WBS ID: _____

Document Title: _____

	Name (Print)	Signature	Date
☑ Originator	AUDREY JOHNSON	Audrey Johnson	12/22
☑ Checker	MIKE RAMBOLD	MR	1/4/06
☑ Backchecker	AUDREY JOHNSON	Audrey Johnson	1/6
☑ Updater	AUDREY JOHNSON	Audrey Johnson	1/6
☑ Rechecker	MIKE RAMBOLD	MR	1/17/06
☐ Designer*			
☐ Reviewer*			
☐ Other*			

*As required by the Job Specific Quality Plan

NO.	REVISION	BY	DATE
3			
2			
1			

FLOOD CONTROL DISTRICT OF MARICOPA COUNTY
ENGINEERING DIVISION

83RD AVENUE / PINNACLE PEAK ROAD
DRAINAGE IMPROVEMENTS
PCN 450.02.33 FCD CONTRACT NO. 2003C060

90%
PRELIMINARY NOT FOR CONSTRUCTION

	BY	DATE
DESIGNED	O. OLIDEN	01/06
DRAWN	A. JOHNSON	01/06
CHECKED	MJR	11/05

JACOBS CIVIL INC.

DRAWING NO. D24 | DTL 24 STORM DRAIN MANHOLE BASE | SHEET OF