Property of
Flood Control District of MC Library
Please Return to
2801 W. Durango
Phoenix, AZ 85009

STRUCTURAL DESIGN CALCULATIONS FOR GLENDALE AVENUE STORM DRAINS-PHASE "B"

Prepared for
Flood Control District
Of Maricopa County

Submitted by
Harding Lawson Associates, Inc.

November 1998

Harding Lawson Associates
Infrastructure, Inc.

Alpha Engineering Group

SHEET _____ OF _____
JOB NO. 40049.2
DATE 9/8/98
COMPUTED BY Sivaji
CHECKED BY [illegible]

PROJECT GLENDALE STORM DRAIN, PHASE - "B"
SUBJECT CONFLICT STRUCTURE @ STA 26+95.42

Conflict Junction Box @ Sta. 26+95.42 (95th Ave)

Invert of Pipe : 1056.22 (96" pipe) per detail sheet/Table shows 1056.20

Height of Box above invert = 96" + 9" + 6" + 12"
(6" fillet, 12" slab)
= 123" or 10.25'

Top of Box Elevation : 1056.22 + 10.25' = 1066.47'

Finish Grade Elevation : 1067.92

Fill height on top of Box : 1067.92' − 1066.47'
= 1.45' (or) 17.4"

HLA Infrastructure, Inc.

Sheet No_1_of__
Job No._40049.2_

Title: Glendale Avenue Storm Drain
Conflict Structure @ STA 26+95.42

File :_SLB-MH2A.MCD_

Subject: 12" Top Slab Design

Designed by_Sivaji.S_ Date:_9/8/98_

Checked by OKE Date: 4/98

UNITS: $kip \equiv 1000 \cdot lbf$ $TOL \equiv 0.01$ $ft \equiv 12.0 \cdot in$

$plf \equiv \frac{lbf}{ft}$ $psf \equiv \frac{lbf}{ft^2}$ $pcf \equiv \frac{lbf}{ft^3}$ $psi \equiv \frac{lbf}{in^2}$ $pci \equiv \frac{lbf}{in^3}$ $pft \equiv lbf \cdot ft$

$kft \equiv kip \cdot ft$

$klf \equiv \frac{kip}{ft}$ $ksf \equiv \frac{kip}{ft^2}$ $kcf \equiv \frac{kip}{ft^3}$ $ksi \equiv \frac{kip}{in^2}$ $kci \equiv \frac{kip}{in^3}$ $CY := 27 \cdot ft^3$

Design of Slab for Junction Box (MH 2A) at STA. 26+95.42

Span length c/c: $GS := 10.5 \cdot ft$ $GS = 126 \cdot in$

Wall width: $GW := 12 \cdot in$

Effective span between walls (AASHTO_9.6): $S := GS - GW$ $S = 9.5 \cdot ft$

Actual thickness of the slab:
(From BDDM Section 1.3.2) $ST := 12 \cdot in$

Design thickness of the slab: $DS := ST - 0 \cdot in$

Depth of soil cover over box: $SD := 17.4 \cdot in$

Live Load moment paralle to Traffic:
(From AASHTO Sections 3.24.3 & 3.24.3.1) : $P_{L1} := 16000 \cdot lbf$ (Load on one rear wheel of truck)

Main reinforcement perpendicular to traffic for HS 20 Loading:

$$LLM := \left(\frac{S \cdot ft^{-1} + 2}{32}\right) \cdot P_{L1} \qquad LLM = 5.75 \cdot ft^{-1} \cdot kft$$

Impact factor:
(From AASHTO Section 3.8.2.3) $I := 1.30$

Live load moment perpendicular to bridge:

$$M_{LLI} := LLM \cdot I \qquad M_{LLI} = 7.48 \cdot ft^{-1} \cdot kft$$

HLA Infrastructure, Inc.

Sheet No_2_of__
Job No._40049.2_

Title: Glendale Avenue Storm Drain
Conflict Structure @ STA 26+95.42

File :_SLB-MH2A.MCD_

Subject: 12" Top Slab Design

Designed by_Sivaji.S_ Date:_9/8/98_

Checked by_GLE_Date: 4/98

DEAD LOAD MOMENTS

Concrete dead weight: $DL_{SL} := ST \cdot 0.15 \cdot kcf$ $DL_{SL} = 0.15 \cdot klf \cdot ft^{-1}$

Wearing Surface $DL_{WS} := 0 \cdot psf \cdot 1$ $DL_{WS} = 0 \cdot klf \cdot ft^{-1}$

Soil cover over the top slab: $DL_{soil} := SD \cdot 125 \cdot pcf$ $DL_{soil} = 0.18 \cdot ft^{-1} \cdot klf$

Total dead load: $W := DL_{SL} + DL_{WS} + DL_{soil}$ $W = 0.33 \cdot klf \cdot ft^{-1}$

(From LRFD-AISC 3-143)

Negative moment: $M_N := \frac{1}{12} \cdot W \cdot S^2$ $M_N = 2.49 \cdot kft \cdot ft^{-1}$

Positive moment: $M_P := \frac{1}{24} \cdot W \cdot S^2$ $M_P = 1.25 \cdot kft \cdot ft^{-1}$

TOP SLAB:

Design Moments

Negative moment: $M_{NT} := -M_{LLI} - M_N$ $M_{NT} = -9.97 \cdot kft \cdot ft^{-1}$

Positive moment: $M_{PT} := M_{LLI} + M_P$ $M_{PT} = 8.72 \cdot kft \cdot ft^{-1}$

MATERIAL PROPERTIES

Characteristic strength of concrete at 28 days: $f_{c28} := 3000 \cdot psi$

Allowable stress in concrete: $F_c := 0.40 \cdot f_{c28}$
(From BDDM Section 1.3.2)
use $F_c := if(F_c < 1400 \cdot psi, F_c, 1400 \cdot psi)$ $F_c = 1200 \cdot psi$

Use Grade 60 steel: $F_s := 20000 \cdot psi$

NOTE: BDDM Section 1.3.1 Reinforcement - All transverse deck reinforcing shall be designed using an allowable stress fs = 20000 psi. All other reinforcing bars shall be designed using an allowable stress fs = 24000 psi.

Elastic modulus of concrete: $E_c := 57000 \cdot \sqrt{f_{c28}} \cdot \sqrt{psi}$ $E_c = 3.12 \cdot 10^6 \cdot psi$

Elastic modulus of steel: $E_s := 29000 \cdot ksi$

HLA Infrastructure, Inc.

Sheet No_3_of__
Job No._40049.2_

Title: Glendale Avenue Storm Drain
Conflict Structure @ STA 26+95.42

File :_SLB-MH2A.MCD_

Subject: 12" Top Slab Design

Designed by_Sivaji.S_ Date:_9/8/98_

Checked by ME Date: 4/98

Modular ratio: $n := \frac{E_s}{E_c}$ $n = 9.29$ $k := \frac{F_c}{F_c + \frac{F_s}{n}}$ $k = 0.36$

Effective depth factor: $j := 1 - \frac{k}{3}$ $j = 0.88$

Diameter of top main bars (#6): $\phi_t := 0.75 \cdot in$ $A_t := 0.44 \cdot in^2$

Diameter of bottom main bars (#6): $\phi_b := 0.75 \cdot in$ $A_b := 0.44 \cdot in^2$

Clear Cover to top reinforcement: $C_t := 2.0 \cdot in$

Clear Cover to bottom reinforcement: $C_b := 1.0 \cdot in$

Effective depth to top main steel: $d_t := ST - C_t - \frac{\phi_t}{2}$ $d_t = 9.62 \cdot in$

Effective depth to bottom main steel: $d_b := ST - C_b - \frac{\phi_b}{2}$ $d_b = 10.63 \cdot in$

Area of steel required at top: $Ast := \frac{|M_{NT}|}{F_s \cdot j \cdot d_t} \cdot ft$ $Ast = 0.71 \cdot in^2$

Number of bars at top: $NB_T := \frac{Ast}{A_t}$ $NB_T = 1.6$

Provide #6 bars @ 6" spacing at top.

Area of steel required at bottom: $Asb := \frac{|M_{PT}|}{F_s \cdot j \cdot d_b} \cdot ft$ $Asb = 0.56 \cdot in^2$

Number of bars at bottom: $NB_B := \frac{Asb}{A_b}$ $NB_B = 1.27$

Provide #6 bars @ 6" spacing at bottom.

HLA Infrastructure, Inc.

Sheet No_4_of__
Job No._40049.2_

Title: Glendale Avenue Storm Drain
Conflict Structure @ STA 26+95.42

File :_SLB-MH2A.MCD_

Subject: 12" Top Slab Design

Designed by_Sivaji.S_ Date:_9/8/98_

Checked by [illegible] Date: 11/98

DISTRIBUTION REINFORCEMENT: AASHTO SECTION 3.24.10

For main steel parallel to traffic:

Percentage of main steel: $r := \left(\frac{220}{\sqrt{S}} \cdot \sqrt{ft}\right) \cdot \%$ $\quad r = 71.38 \cdot \%$

$r := if(r \le 50 \cdot \%, r, 50 \cdot \%)$ $\quad r = 50 \cdot \%$

Distribution steel: $Asd := r \cdot Asb$ $\quad Asd = 0.28 \cdot in^2$

Total number of bars required in single span:

$NB_D := \frac{Asd}{A_t} \cdot \frac{S}{ft}$ $\quad NB_D = 6.04$

NOTE: BDDM Section 1.3.1 Reinforcement - All transverse deck reinforcing shall be designed using an allowable stress fs = 20000 psi. All other reinforcing bars shall be designed using an allowable stress fs = 24000 psi.

$NB_D := NB_D \cdot \frac{F_s}{24000 \cdot psi}$ $\quad NB_D = 5.03$

HLA Infrastructure, Inc.

Sheet No_1_of__
Job No._40049.2_

Title: Glendale Avenue Storm Drain
Conflict Structures @ STA. 26+95.42

File :_WALL2A.MCD_

Subject: Wall Design

esigned by_Sivaji.S_ Date:_9/8/98_

Checked by JLE Date: 11/98

UNITS: $kip \equiv 1000 \cdot lbf$ $TOL \equiv 0.01$

$plf \equiv \frac{lbf}{ft}$ $psf \equiv \frac{lbf}{ft^2}$ $pcf \equiv \frac{lbf}{ft^3}$ $psi \equiv \frac{lbf}{in^2}$ $pci \equiv \frac{lbf}{in^3}$ $pft \equiv lbf \cdot ft$

$klf \equiv \frac{kip}{ft}$ $ksf \equiv \frac{kip}{ft^2}$ $kcf \equiv \frac{kip}{ft^3}$ $ksi \equiv \frac{kip}{in^2}$ $kci \equiv \frac{kip}{in^3}$ $kft \equiv kip \cdot ft$

CONFLICT JUNCTION BOX WALL DESIGN @ STA. 26+95.42

Dimensions

Clear height between top and bottom slabs: $H_c := 9.25 \cdot ft$

Thickness of top slab: $t_{ts} := 10 \cdot in$

Thickness of the bottom slab: $t_{bs} := 12 \cdot in$

Active Equivalent fluid pressure at rest: $EFP := 55 \cdot pcf$

Passive Equivalent fluid pressure: $EFP_p := 0 \cdot pcf$

Depth of surcharge: $SD := 17.4 \cdot in + t_{ts}$ $SD = 2.283 \cdot ft$

Total height of wall : $h_{aw} := H_c + t_{ts} + t_{bs}$ $h_{aw} = 11.083 \cdot ft$

Coefficient of friction for sliding: $\mu := 0.40$

wall thickness : $tw := 12 \cdot in$

Soil Forces on Wall

Height of soil pressure prism along the wall: $H := H_c$ $H = 9.25 \cdot ft$

Active soil force along the wall pre LF: $q := SD \cdot EFP \cdot H + EFP \cdot H^2 \cdot \frac{1}{2}$ $q = 3.515 \cdot klf$

Passive soil force along the wall pre LF: $q_p := EFP_p \cdot H^2 \cdot \frac{1}{2}$ $q_p = 0 \cdot klf$

From PCI Design Hand Book, Edition 4, Design Aid 11.1.5

Moment along wall per LF (As a beam): $M_s := SD \cdot EFP \cdot \frac{H^2}{12} + EFP \cdot \frac{H^2}{2} \cdot \frac{H}{10}$ $M_s = 3.072 \cdot ft^{-1} \cdot kft$

HLA Infrastructure, Inc.

Sheet No_3_of__
Job No._40049.2_

Title: Glendale Avenue Storm Drain
Conflict Structures @ STA. 26+95.42

File :_WALL2A.MCD_

Subject: Wall Design

esigned by_Sivaji.S_ Date:_9/8/98_

Checked by JLE Date: 11/98

Design width: $b \quad 12 \cdot in$

Spacing of bars: $s \quad 12 \cdot in$

Area of reinforcing steel per design width: $A_s \quad A_b \cdot \frac{b}{s}$ $\qquad A_s = 0.31 \cdot in^2$

Reinforcement ratio: $\rho \quad \frac{A_s}{b \cdot d}$ $\qquad \rho = 0.2667 \cdot \%$

Balanced ratio: $\rho_b \quad \frac{1}{2} \cdot \frac{F_c}{F_s} \cdot \left(1 \quad \frac{F_s}{n \cdot F_c}\right)^1$ $\qquad \rho_b = 0.793 \cdot \%$

(If RHO < RHO.b, Steel stress governs, otherwise concrete stress governs)

CHECK REQ'D CRACKING MOMENT CAPACITY

$f_r \quad 7.5 \cdot \sqrt{f_{c28}} \cdot psi$ $\qquad f_r = 410.792 \cdot psi$

$I \quad \frac{b \cdot tw^3}{12}$ $\qquad I = 1728 \cdot in^4$

$M_{cr} \quad \frac{I \cdot f_r}{0.5 \cdot tw \cdot b}$ $\qquad 1.2 \cdot M_{cr} = 11.83 \cdot \frac{kft}{ft}$ $\qquad M_{s2} = 3.072 \cdot ft^{-1} \cdot kft$

DESIGN STRESSES AASHTO 8.17.1.2

$k \quad \sqrt{n \cdot \rho^2 \quad 2 \cdot n \cdot \rho} \quad n \cdot \rho$ $\qquad k = 0.199$

$mmax \quad \text{if } M_{s2} > 1.2 \cdot M_{cr}, M_{s2}, 1.3 \cdot M_{s2}$ $\qquad mmax = 3.99 \cdot \frac{kft}{ft}$

$f_s \quad \frac{mmax \cdot b}{A_s \cdot j \cdot d}$ $\qquad f_s = 17843.79 \cdot psi$ $\qquad F_s = 24000 \cdot psi$

$f_c \quad \frac{2 \cdot mmax}{k \cdot j \cdot d^2}$ $\qquad f_c = 477.79 \cdot psi$ $\qquad F_c = 1200 \cdot psi$

HLA Infrastructure, Inc.

Sheet No_4_of__
Job No._40049.2_

Title: Glendale Avenue Storm Drain
Conflict Structures @ STA. 26+95.42

File :_WALL2A.MCD_

Subject: Wall Design

esigned by_Sivaji.S_ Date:_9/8/98_

Checked by MC Date: 4/98

CHECK SHEARING STRESSES

$q = 3.515 \cdot ft^{-1} \cdot kip$

$v_c \quad \frac{q}{b \cdot d}$ $\qquad v_c = 30.23 \frac{psi}{ft}$ $\qquad \frac{v_c}{f_{c28}} = 0.552 \frac{psi}{psi \cdot ft}$

Allowable Shearing Stress

$v_{all} \quad 0.9 \cdot f_{c28} \cdot psi \quad 1100 \cdot \rho \cdot \frac{q \cdot d}{M_s} \cdot psi$ $\qquad v_{all} = 52 \cdot psi$

$v_{all} \quad 0.95 \cdot f_{c28} \cdot psi$ $\qquad v_{all} = 52.03 \cdot psi$

HLA Infrastructure, Inc.

Sheet No_1_of__
Job No._40049.2_

Title: Glendale Avenue Storm Drain
Conflict Structure @ STA 26+95.42

File :_FLR-MH2A.MCD_

Subject: Floor Slab Design_MH 2A

Designed by_Sivaji.S_ Date:_9/8/98_

Checked by DRE Date: 4/98

UNITS: $kip \equiv 1000 \cdot lbf$ $TOL \equiv 0.01$ $ft \equiv 12.0 \cdot in$

$plf \equiv \frac{lbf}{ft}$ $psf \equiv \frac{lbf}{ft^2}$ $pcf \equiv \frac{lbf}{ft^3}$ $psi \equiv \frac{lbf}{in^2}$ $pci \equiv \frac{lbf}{in^3}$ $pft \equiv lbf \cdot ft$

$klf \equiv \frac{kip}{ft}$ $ksf \equiv \frac{kip}{ft^2}$ $kcf \equiv \frac{kip}{ft^3}$ $ksi \equiv \frac{kip}{in^2}$ $kci \equiv \frac{kip}{in^3}$ $kft \equiv kip \cdot ft$

$CY := 27 \cdot ft^3$

Design of FLoor Slab for Junction Box (MH 2A) at Sta. 26+95.42

Span length c/c: $GS := 10.5 \cdot ft$ $GS = 126 \cdot in$

Wall width: $TW := 12 \cdot in$

Effective span between walls (AASHTO_9.6): $S := GS - TW$ $S = 9.5 \cdot ft$

Actual thickness of the Floor slab:
(From BDDM Section 1.3.2) $ST := 12 \cdot in$

Design thickness of the Floor slab: $DS := ST - 0 \cdot in$

Depth of soil cover over box: $SD := 17.4 \cdot in$

Actual thickness of the top slab: $TS := 12 \cdot in$

Height of wall(between slabs): $HW := 9.25 \cdot ft$

Perimeter Length of the box: $PL := (9.5 \cdot ft + 10.5 \cdot ft) \cdot 2$ $PL = 40 \cdot ft$

Total bearing area of the box: $BA := 10.5 \cdot ft \cdot 11.5 \cdot ft$ $BA = 120.75 \cdot ft^2$

DEAD LOAD ~~MOMENTS~~

Concrete dead weight from slabs: $DL_{SL} := (TS + ST) \cdot BA \cdot 0.15 \cdot kcf$ $DL_{SL} = 36.22 \cdot kip$

Concrete wall: $DL_{wl} := PL \cdot TW \cdot HW \cdot 0.15 \cdot kcf$ $DL_{wl} = 55.5 \cdot kip$

Weight soil replaced by shaft: $DL_{WS} := SD \cdot \frac{\pi}{4} \cdot (0 \cdot ft)^2 \cdot 0.125 \cdot kcf$ $DL_{WS} = 0 \cdot kip$

Soil cover over the top slab: $DL_{soil} := SD \cdot BA \cdot 0.125 \cdot kcf$ $DL_{soil} = 21.89 \cdot kip$

Total dead load: $DL := DL_{SL} + DL_{wl} - DL_{WS} + DL_{soil}$ $DL = 113.61 \cdot kip$

HLA Infrastructure, Inc.

Sheet No_2_of__
Job No._40049.2_

Title: Glendale Avenue Storm Drain
Conflict Structure @ STA 26+95.42

File :_FLR-MH2A.MCD_

Subject: Floor Slab Design_MH 2A

Designed by_Sivaji.S_ Date:_9/8/98_

Checked by DME Date: 4/98

Total weight of water in the box: $HL := BA \cdot HW \cdot 64 \cdot pcf - PL \cdot HW \cdot TW \cdot 64 \cdot pcf$ $HL = 47.8 \cdot kip$

Live Load ~~moment paralle to Traffic~~:
(From AASHTO Sections 3.24.3 & 3.24.3.1) : $P_{L1} := 16000 \cdot lbf$ (Load on one rear wheel of truck)

Total DL Bearing pressure on floor slab per unit width: $W := \frac{DL + P_{L1} + HL}{BA}$ $W = 1.47 \cdot ksf$ < 5 ksf O.K.

(From LRFD-AISC 3-143)

Negative moment: $M_N := \frac{1}{12} \cdot W \cdot S^2$ $M_N = 11.05 \cdot kft \cdot ft^{-1}$

Positive moment: $M_P := \frac{1}{24} \cdot W \cdot S^2$ $M_P = 5.53 \cdot kft \cdot ft^{-1}$

FLLOR SLAB:

Design Moments

Negative moment: $M_{NT} := -M_N$ $M_{NT} = -11.05 \cdot kft \cdot ft^{-1}$

Positive moment: $M_{PT} := M_P$ $M_{PT} = 5.53 \cdot kft \cdot ft^{-1}$

MATERIAL PROPERTIES

Characteristic strength of concrete at 28 days: $f_{c28} := 3000 \cdot psi$

Allowable stress in concrete: $F_c := 0.40 \cdot f_{c28}$
(From BDDM Section 1.3.2) use $F_c := if(F_c < 1400 \cdot psi, F_c, 1400 \cdot psi)$ $F_c = 1200 \cdot psi$

Use Grade 60 steel: $F_s := 24000 \cdot psi$

Elastic modulus of concrete: $E_c := 57000 \cdot \sqrt{f_{c28}} \cdot \sqrt{psi}$ $E_c = 3.12 \cdot 10^6 \cdot psi$

Elastic modulus of steel: $E_s := 29000 \cdot ksi$

Modular ratio: $n := \frac{E_s}{E_c}$ $n = 9.29$ $k := \frac{F_c}{F_c + \frac{F_s}{n}}$ $k = 0.32$

HLA Infrastructure, Inc.

Sheet No_3_of__
Job No._40049.2_

Title: Glendale Avenue Storm Drain
Conflict Structure @ STA 26+95.42

File :_FLR-MH2A.MCD_

Subject: Floor Slab Design_MH 2A

Designed by_Sivaji.S_ Date:_9/8/98_

Checked by OKE Date: 1/98

Effective depth factor: $j := 1 - \frac{k}{3}$ $j = 0.89$

Diameter of top main bars (#6): $\phi_t := 0.75 \cdot in$ $A_t := 0.44 \cdot in^2$

Diameter of bottom main bars (#6): $\phi_b := 0.75 \cdot in$ $A_b := 0.44 \cdot in^2$

Clear Cover to top reinforcement: $C_t := 2.0 \cdot in$

Clear Cover to bottom reinforcement: $C_b := 3.0 \cdot in$

Effective depth to top main steel: $d_t := ST - C_t - \frac{\phi_t}{2}$ $d_t = 9.62 \cdot in$

Effective depth to bottom main steel: $d_b := ST - C_b - \frac{\phi_b}{2}$ $d_b = 8.63 \cdot in$

Area of steel required at top: $Ast := \frac{|M_{PT}|}{F_s \cdot j \cdot d_t} \cdot ft$ $Ast = 0.32 \cdot in^2$

Number of bars at top: $NB_T := \frac{Ast}{A_t}$ $NB_T = 0.73$

Provide #6 bars @ 12" spacing at top.

Area of steel required at bottom: $Asb := \frac{|M_{NT}|}{F_s \cdot j \cdot d_b} \cdot ft$ $Asb = 0.72 \cdot in^2$

Number of bars at bottom: $NB_B := \frac{Asb}{A_b}$ $NB_B = 1.63$

Provide #6 bars @ 6" spacing at bottom.

Harding Lawson Associates
Engineering
and
Environmental Services

SHEET _____ OF _____
JOB NO. 40049.2
DATE 9/[illegible]
COMPUTED BY S. Swa[illegible]
CHECKED BY OKE

PROJECT _____
SUBJECT CONFLICT STRUCTURE @ 7A 26+95.42

CONCRETE

Perimeter length along ℄ of Wall : $2 \times (9.5' + 10.5') = 40'$

Height of wall (excluding Top & Bottom Slabs)

$= 9.25' + 6'' = 9.75'$

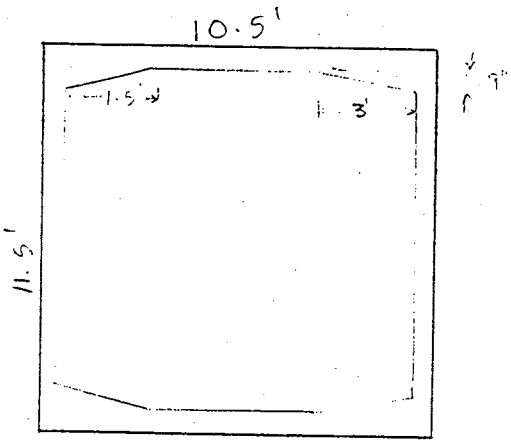

Excavating Area of Box :

$= 11.5 \times 10.5 = 120.75\ ft^2$

Thickness of Top slab : 1'

Thickness of Bottom Slab : 12"

Volume of Concrete excluding Openings :

$= 40 \times 9.75 + 120.75 \times (1' + 1') + 1.5' \times 9'' + 3' \times 9''$

$= 635.0\ CF$

Volume of Openings : $2 \times \left[\frac{\pi}{4}(5)^2 + \frac{\pi}{4}(2)^2 \right] \times 1' = 106.8\ CF$

Net Quantity of Concrete : $635.0 - 106.8 + 40 \times \frac{4'' \times 4''}{2} \times 2$

$= 533\ CF$

(or) 20 C.Y

Glendale Ave. Storm Drain, Phase 2
Special Box Structure @ STA 26+95.42

11/10/98

Item No.	Description	No. Bars	Length in mm	Length in ft	Weight per Lin feet	Total Wt. in Lbs	Weight in Kgs	Remarks
	Top Slab							
1	#6 @ 6 inches T&B	40		10.00	1.502	600.80	272.52	E_W Dir.
2	#6 @ 6 inches T&B at Opening	0		0.00	1.502	0.00	0.00	Top Slab
3	#6 @ 6 inches T&B	36		14.00	1.502	757.01	343.38	N_S Dir.
4	#6 @ 6 inches T&B at Opening	0		0.00	1.502	0.00	0.00	Top Slab
5	Edge Beam Adjacent to shaft	0		0.00	1.502	0.00	0.00	Top Slab
6	3-#6 @ T&B on two walls	12		11.00	1.502	198.26	89.93	
7	#4-Closed ties	11		4.00	0.668	29.39	13.33	edge beam East
8	#4-Closed ties	11		4.00	0.668	29.39	13.33	edge beam West
	Bottom Slab							
1	#6 @ 12 inches Top mat	10		10.00	1.502	150.20	68.13	E_W Dir.
2	#6 @ 6 inches Bot. mat	21		13.00	1.502	410.05	186.00	E_W Dir.
3	#6 @ 12 inches Top mat	9		11.00	1.502	148.70	67.45	N_S Dir.
4	#6 @ 6 inches Bot. mat	22		16.00	1.502	528.70	239.82	N_S Dir.
6	#5 @ 6 inches in east side footing	40		3.00	1.043	125.16	56.77	N_S Dir.
	Wall							
1	#6 @ 12 inches on Wall to full Ht.	28		11.00	1.502	462.62	209.84	Vertical
2	#6 @ 12 inches on Wall cut to fit 96 inch Pipes	26		7.00	1.502	273.36	124.00	Vertical
3	#5 @ 15 inches in wall	36		14.00	1.043	525.67	238.44	Horizontal E-W
4	#5 @15 inches in wall @ Opening	0		0.00	1.043	0.00	0.00	Horizontal E-W
5	#5 @15 inches in wall	0		0.00	1.043	0.00	0.00	Horizontal N-S
6	#5 @15 inches in wall @ Opening	36		6.00	1.043	225.29	102.19	Horizontal N-S
7	#5 @15 inches in wall @ Opening	0		0.00	1.043	0.00	0.00	Horizontal N-S
10	Diagonals at Pipe openings	32		8.00	1.502	384.51	174.41	
	Column Steel							
1	4-#6 vertical steel	0		0.00	1.502	0.00	0.00	
	Total					4849.12	2199.56	

Harding Lawson Associates
Engineering
and
Environmental Services

SHEET _____ OF _____
JOB NO. 40049.2
DATE 8/26/98
PROJECT GLENDALE STORM DRAIN, PHASE 'B'
COMPUTED BY S. Sivaji
SUBJECT CONFLICT JUNCTION BOX, STA 52+41.27
CHECKED BY DLE

Conflict Junction Box @ STA. 52+41.27 (91 Ave)
WALL 4

Invert of pipe: 1064.90 (90" Dia. pipe)

Height of Box above invert: 90" + 8.5" + 6" + 12"
Beam Slab.
= 116.5" or 9.708'

Top of Box Elevation: 1064.90 + 9.708 = 1074.608

Finished Grade Elev: 1078.26

Fill on Top of Box: 1078.26 − 1074.608
= 3.6517' or 43.82"

HLA Infrastructure, Inc.

Sheet No. 1 of __
Job No. 40049.2

Title: Glendale Avenue Storm Drain
Conflict Structure @ STA 52+41.27

File : SLB-MH4.MCD

Subject: 12" Top Slab Design

Designed by Sivaji.S Date: 9/8/98

Checked by DAE Date: 11/98

UNITS: $kip \equiv 1000 \cdot lbf$ $TOL \equiv 0.01$ $ft \equiv 12.0 \cdot in$

$plf \equiv \frac{lbf}{ft}$ $psf \equiv \frac{lbf}{ft^2}$ $pcf \equiv \frac{lbf}{ft^3}$ $psi \equiv \frac{lbf}{in^2}$ $pci \equiv \frac{lbf}{in^3}$ $pft \equiv lbf \cdot ft$

$klf \equiv \frac{kip}{ft}$ $ksf \equiv \frac{kip}{ft^2}$ $kcf \equiv \frac{kip}{ft^3}$ $ksi \equiv \frac{kip}{in^2}$ $kci \equiv \frac{kip}{in^3}$ $kft \equiv kip \cdot ft$

$CY := 27 \cdot ft^3$

Design of Slab for Junction Box (MH 4) at STA. 52+41.27

Span length c/c: $GS := 14.4 \cdot ft$ $GS = 172.8 \cdot in$

Wall width: $TW := 12 \cdot in$

Effective span between walls (AASHTO_9.6): $S := GS - TW$ $S = 13.4 \cdot ft$

Actual thickness of the slab:
(From BDDM Section 1.3.2) $ST := 12 \cdot in$

Design thickness of the slab: $DS := ST - 0 \cdot in$

Depth of soil cover over box: $SD := 43.82 \cdot in$

Live Load moment paralle to Traffic:
(From AASHTO Sections 3.24.3 & 3.24.3.1) : $P_{L1} := 16000 \cdot lbf$ (Load on one rear wheel of truck)

Width of the distributed area on top of slab: $WD := 1.75 \cdot SD$ $WD = 6.39 \cdot ft$

Distribution Area for track wheel load (AASHTO 6.4.1): $A := (1.75 \cdot SD)^2$ $A = 40.84 \cdot ft^2$

Live load on slab per unit width of slab: $LL := \frac{P_{L1}}{A}$ $LL = 0.39 \cdot ft^{-1} \cdot klf$

Impact factor:
(From AASHTO Section 3.8.2.1) $I := 1.0$

From PCI Design Hand Book, Edition 4, Design Aid 11.1.5

Max. -ve Moment in lb-ft per unit width of slab:

Factor a is $a1 := \frac{WD}{S}$ $LLN := \frac{LL \cdot S^2 \cdot a1 \cdot (6 - 8 \cdot a1 - 3 \cdot a1^2)}{12} \cdot I$ $LLN = 4.2 \cdot ft^{-1} \cdot kft$

HLA Infrastructure, Inc.

Sheet No_2_of__
Job No._40049.2_

Title: Glendale Avenue Storm Drain
Conflict Structure @ STA 52+41.27

File :_SLB-MH4.MCD_

Subject: 12" Top Slab Design

Designed by_Sivaji.S_ Date:_9/8/98_

Checked by MC Date: 4/98

Max. +ve Moment in lb-ft per unit width of slab:

Factor a is $a2 := \frac{S - WD}{2 \cdot S}$ $LLP := \frac{LL \cdot S^2 \cdot (1 + 2 \cdot a2 + 4 \cdot a2^2)}{24} \cdot I$ $LLP = 5.27 \cdot ft^{-1} \cdot kft$

DEAD LOAD MOMENTS

Concrete dead weight: $DL_{SL} := ST \cdot 0.15 \cdot kcf$ $DL_{SL} = 0.15 \cdot klf \cdot ft^{-1}$

Wearing Surface $DL_{WS} := 0 \cdot psf \cdot 1$ $DL_{WS} = 0 \cdot klf \cdot ft^{-1}$

Soil cover over the top slab: $DL_{soil} := SD \cdot 0.125 \cdot kcf$ $DL_{soil} = 0.46 \cdot ft^{-1} \cdot klf$

Total dead load: $W := DL_{SL} + DL_{WS} + DL_{soil}$ $W = 0.61 \cdot klf \cdot ft^{-1}$

(From LRFD-AISC 3-143)

Negative moment: $M_N := \frac{1}{12} \cdot W \cdot S^2$ $M_N = 9.07 \cdot kft \cdot ft^{-1}$

Positive moment: $M_P := \frac{1}{24} \cdot W \cdot S^2$ $M_P = 4.54 \cdot kft \cdot ft^{-1}$

TOP SLAB:

Design Moments

Negative moment: $M_{NT} := -LLN - M_N$ $M_{NT} = -13.28 \cdot kft \cdot ft^{-1}$

Positive moment: $M_{PT} := LLP + M_P$ $M_{PT} = 9.8 \cdot kft \cdot ft^{-1}$

MATERIAL PROPERTIES

Characteristic strength of concrete at 28 days: $f_{c28} := 3000 \cdot psi$

Allowable stress in concrete: $F_c := 0.40 \cdot f_{c28}$
(From BDDM Section 1.3.2) use $F_c := if(F_c < 1400 \cdot psi, F_c, 1400 \cdot psi)$ $F_c = 1200 \cdot psi$

Use Grade 60 steel: $F_s := 20000 \cdot psi$

NOTE: BDDM Section 1.3.1 Reinforcement - All transverse deck reinforcing shall be designed using an allowable stress fs = 20000 psi. All other reinforcing bars shall be designed using an allowable stress fs = 24000 psi.

HLA Infrastructure, Inc.

Sheet No_3_of__
Job No._40049.2_

Title: Glendale Avenue Storm Drain
Conflict Structure @ STA 52+41.27

File :_SLB-MH4.MCD_

Subject: 12" Top Slab Design

Designed by_Sivaji.S_ Date:_9/8/98_

Checked by DLE Date: 4/98

Elastic modulus of concrete: $E_c := 57000 \cdot \sqrt{f_{c28}} \cdot \sqrt{psi}$ $E_c = 3.12 \cdot 10^6 \cdot psi$

Elastic modulus of steel: $E_s := 29000 \cdot ksi$

Modular ratio: $n := \frac{E_s}{E_c}$ $n = 9.29$ $k := \frac{F_c}{F_c + \frac{F_s}{n}}$ $k = 0.36$

Effective depth factor: $j := 1 - \frac{k}{3}$ $j = 0.88$

Diameter of top main bars (#7): $\phi_t := 0.875 \cdot in$ $A_t := 0.60 \cdot in^2$

Diameter of bottom main bars (#6): $\phi_b := 0.75 \cdot in$ $A_b := 0.44 \cdot in^2$

Clear Cover to top reinforcement: $C_t := 2.0 \cdot in$

Clear Cover to bottom reinforcement: $C_b := 1.0 \cdot in$

Effective depth to top main steel: $d_t := ST - C_t - \frac{\phi_t}{2}$ $d_t = 9.56 \cdot in$

Effective depth to bottom main steel: $d_b := ST - C_b - \frac{\phi_b}{2}$ $d_b = 10.63 \cdot in$

Area of steel required at top: $Ast := \frac{|M_{NT}|}{F_s \cdot j \cdot d_t} \cdot ft$ $Ast = 0.95 \cdot in^2$

Number of bars at top: $NB_T := \frac{Ast}{A_t}$ $NB_T = 1.58$

Provide #7 bars @ 6" spacing at top.

Area of steel required at bottom: $Asb := \frac{|M_{PT}|}{F_s \cdot j \cdot d_b} \cdot ft$ $Asb = 0.63 \cdot in^2$

Number of bars at bottom: $NB_B := \frac{Asb}{A_b}$ $NB_B = 1.43$

Provide #6 bars @ 6" spacing at bottom.

HLA Infrastructure, Inc.

Sheet No_4_of__
Job No._40049.2_

Title: Glendale Avenue Storm Drain
Conflict Structure @ STA 52+41.27

File :_SLB-MH4.MCD_

Subject: 12" Top Slab Design

Designed by_Sivaji.S_ Date:_9/8/98_

Checked by GLE Date: 4/98

DISTRIBUTION REINFORCEMENT: AASHTO SECTION 3.24.10

For main steel parallel to traffic:

Percentage of main steel: $r := \left(\frac{220}{\sqrt{S}} \cdot \sqrt{ft}\right) \cdot \%$ $\quad r = 60.1 \cdot \%$

$r := if(r \le 50 \cdot \%, r, 50 \cdot \%)$ $\quad r = 50 \cdot \%$

Distribution steel: $Asd := r \cdot Asb$ $\quad Asd = 0.31 \cdot in^2$

Total number of bars required in single span:

$NB_D := \frac{Asd}{A_t} \cdot \frac{S}{ft}$ $\quad NB_D = 7.02$

NOTE: BDDM Section 1.3.1 Reinforcement - All transverse deck reinforcing shall be designed using an allowable stress fs = 20000 psi. All other reinforcing bars shall be designed using an allowable stress fs = 24000 psi.

$NB_D := NB_D \cdot \frac{F_s}{24000 \cdot psi}$ $\quad NB_D = 5.85$

HLA Infrastructure, Inc.

Sheet No_1_of__
Job No._40049.2_

Title: Glendale Avenue Storm Drain
Conflict Structure @ STA 52+41.27

File :_Flr-mh4.mcd_

Subject: Floor Slab Design_MH 4

Designed by_Sivaji.S_ Date:_9/8/98_

Checked by DHE Date: 4/98

UNITS: $kip \equiv 1000 \cdot lbf$ $TOL \equiv 0.01$ $ft \equiv 12.0 \cdot in$

$plf \equiv \frac{lbf}{ft}$ $psf \equiv \frac{lbf}{ft^2}$ $pcf \equiv \frac{lbf}{ft^3}$ $psi \equiv \frac{lbf}{in^2}$ $pci \equiv \frac{lbf}{in^3}$ $pft \equiv lbf \cdot ft$

$kft \equiv kip \cdot ft$

$klf \equiv \frac{kip}{ft}$ $ksf \equiv \frac{kip}{ft^2}$ $kcf \equiv \frac{kip}{ft^3}$ $ksi \equiv \frac{kip}{in^2}$ $kci \equiv \frac{kip}{in^3}$ $CY := 27 \cdot ft^3$

Design of FLoor Slab for Junction Box (MH 4) at Sta. 52+41.27

Span length c/c: $GS := 14.4 \cdot ft$ $GS = 172.8 \cdot in$

Wall width: $TW := 12 \cdot in$

Effective span between walls (AASHTO_9.6): $S := GS - TW$ $S = 13.4 \cdot ft$

Actual thickness of the Floor slab: $ST := 18 \cdot in$
(From BDDM Section 1.3.2)

Design thickness of the Floor slab: $DS := ST - 0 \cdot in$

Depth of soil cover over box: $SD := 43.82 \cdot in$

Actual thickness of the top slab: $TS := 12 \cdot in$

Height of wall(between slabs): $HW := 8.708 \cdot ft$

Perimeter Length of the box: $PL := (8.5 \cdot ft + 5 \cdot ft + 13.5 \cdot ft + 9 \cdot ft) \cdot 2$ $PL = 72 \cdot ft$

Total bearing area of the box: $BA := 24.7 \cdot ft \cdot 11 \cdot ft + \frac{2 \cdot (5 \cdot ft + 18 \cdot ft) \cdot 6 \cdot ft}{2}$ $BA = 409.7 \cdot ft^2$

DEAD LOAD MOMENTS

Concrete dead weight from slabs: $DL_{SL} := (TS + ST) \cdot BA \cdot 0.15 \cdot kcf$ $DL_{SL} = 153.64 \cdot kip$

Concrete wall: $DL_{wl} := PL \cdot TW \cdot HW \cdot 0.15 \cdot kcf$ $DL_{wl} = 94.05 \cdot kip$

Weight soil replaced by shaft: $DL_{WS} := SD \cdot \frac{\pi}{4} \cdot (5 \cdot ft)^2 \cdot 0.125 \cdot kcf$ $DL_{WS} = 8.96 \cdot kip$

Soil cover over the top slab: $DL_{soil} := SD \cdot BA \cdot 0.125 \cdot kcf$ $DL_{soil} = 187.01 \cdot kip$

Total dead load: $DL := DL_{SL} + DL_{wl} - DL_{WS} + DL_{soil}$ $DL = 425.73 \cdot kip$

HLA Infrastructure, Inc.

Sheet No_2_of__
Job No._40049.2_

Title: Glendale Avenue Storm Drain
Conflict Structure @ STA 52+41.27

File :_Flr-mh4.mcd_

Subject: Floor Slab Design_MH 4

Designed by_Sivaji.S_ Date:_9/8/98_

Checked by DAE Date: 4/98

Total weight of water in the box: $HL := BA \cdot HW \cdot 64 \cdot pcf - PL \cdot HW \cdot TW \cdot 64 \cdot pcf$ $HL = 188.2 \cdot kip$

Live Load moment paralle to Traffic:
(From AASHTO Sections 3.24.3 & 3.24.3.1) : $P_{L1} := 16000 \cdot lbf$ (Load on one rear wheel of truck)

Total DL Bearing pressure on floor slab per unit width: $W := \frac{DL + P_{L1} + HL}{BA}$ $W = 1.54 \cdot ksf$ < 5 ksf O.K.

(From LRFD-AISC 3-143)

Negative moment: $M_N := \frac{1}{12} \cdot W \cdot S^2$ $M_N = 23.01 \cdot kft \cdot ft^{-1}$

Positive moment: $M_P := \frac{1}{24} \cdot W \cdot S^2$ $M_P = 11.5 \cdot kft \cdot ft^{-1}$

FLOOR SLAB:

Design Moments

Negative moment: $M_{NT} := -M_N$ $M_{NT} = -23.01 \cdot kft \cdot ft^{-1}$

Positive moment: $M_{PT} := M_P$ $M_{PT} = 11.5 \cdot kft \cdot ft^{-1}$

MATERIAL PROPERTIES

Characteristic strength of concrete at 28 days: $f_{c28} := 3000 \cdot psi$

Allowable stress in concrete: $F_c := 0.40 \cdot f_{c28}$
(From BDDM Section 1.3.2) use $F_c := if(F_c < 1400 \cdot psi, F_c, 1400 \cdot psi)$ $F_c = 1200 \cdot psi$

Use Grade 60 steel: $F_s := 24000 \cdot psi$

Elastic modulus of concrete: $E_c := 57000 \cdot \sqrt{f_{c28}} \cdot \sqrt{psi}$ $E_c = 3.12 \cdot 10^6 \cdot psi$

Elastic modulus of steel: $E_s := 29000 \cdot ksi$

Modular ratio: $n := \frac{E_s}{E_c}$ $n = 9.29$ $k := \frac{F_c}{F_c + \frac{F_s}{n}}$ $k = 0.32$

Effective depth factor: $j := 1 - \frac{k}{3}$ $j = 0.89$

HLA Infrastructure, Inc.

Sheet No_3_of__
Job No._40049.2_

Title: Glendale Avenue Storm Drain
Conflict Structure @ STA 52+41.27

File :_Flr-mh4.mcd_

Subject: Floor Slab Design_MH 4

Designed by_Sivaji.S_ Date:_9/8/98_

Checked by DHE Date: 4/98

Diameter of top main bars (#6): $\phi_t := 0.75 \cdot in$ $A_t := 0.44 \cdot in^2$

Diameter of bottom main bars (#6): $\phi_b := 0.75 \cdot in$ $A_b := 0.44 \cdot in^2$

Clear Cover to top reinforcement: $C_t := 2.0 \cdot in$

Clear Cover to bottom reinforcement: $C_b := 3.0 \cdot in$

Effective depth to top main steel: $d_t := ST - C_t - \frac{\phi_t}{2}$ $d_t = 15.63 \cdot in$

Effective depth to bottom main steel: $d_b := ST - C_b - \frac{\phi_b}{2}$ $d_b = 14.63 \cdot in$

Area of steel required at top: $Ast := \frac{|M_{PT}|}{F_s \cdot j \cdot d_t} \cdot ft$ $Ast = 0.41 \cdot in^2$

Number of bars at top: $NB_T := \frac{Ast}{A_t}$ $NB_T = 0.94$

Provide #6 bars @ 12" spacing at top.

Area of steel required at bottom: $Asb := \frac{|M_{NT}|}{F_s \cdot j \cdot d_b} \cdot ft$ $Asb = 0.88 \cdot in^2$

Number of bars at bottom: $NB_B := \frac{Asb}{A_b}$ $NB_B = 2$

Provide #6 bars @ 6" spacing at bottom.

HLA Infrastructure, Inc.

Sheet No_1_of__
Job No._40049.2_

Title: Glendale Avenue Storm Drain
Conflict Structures @ STA. 52+41.27

File :_Wall4.mcd_

Subject: Wall Design

Designed by_Sivaji.S_ Date:_9/8/98_

Checked by GHE Date: 4/98

UNITS: $kip \equiv 1000 \cdot lbf$ $TOL \equiv 0.01$

$plf \equiv \frac{lbf}{ft}$ $psf \equiv \frac{lbf}{ft^2}$ $pcf \equiv \frac{lbf}{ft^3}$ $psi \equiv \frac{lbf}{in^2}$ $pci \equiv \frac{lbf}{in^3}$ $pft \equiv lbf \cdot ft$

$klf \equiv \frac{kip}{ft}$ $ksf \equiv \frac{kip}{ft^2}$ $kcf \equiv \frac{kip}{ft^3}$ $ksi \equiv \frac{kip}{in^2}$ $kci \equiv \frac{kip}{in^3}$ $kft \equiv kip \cdot ft$

CONFLICT JUNCTION BOX WALL DESIGN @ STA. 52+41.27

Dimensions

Clear height between top and bottom slabs: $H_c := 8.708 \cdot ft$

Thickness of top slab: $t_{ts} := 12 \cdot in$

Thickness of the bottom slab: $t_{bs} := 18 \cdot in$

Active Equivalent fluid pressure at rest: $EFP := 55 \cdot pcf$

Passive Equivalent fluid pressure: $EFP_p := 0 \cdot pcf$

Depth of surcharge: $SD := 43.82 \cdot in + t_{ts}$ $SD = 4.652 \cdot ft$

Total height of wall : $h_{aw} := H_c + t_{ts} + t_{bs}$ $h_{aw} = 11.208 \cdot ft$

Coefficient of friction for sliding: $\mu := 0.40$

wall thickness : $tw := 12 \cdot in$

Soil Forces on Wall

Height of soil pressure prism along the wall: $H := H_c$ $H = 8.708 \cdot ft$

Active soil force along the wall pre LF: $q := SD \cdot EFP \cdot H + EFP \cdot H^2 \cdot \frac{1}{2}$ $q = 4.313 \cdot klf$

Passive soil force along the wall pre LF: $q_p := EFP_p \cdot H^2 \cdot \frac{1}{2}$ $q_p = 0 \cdot klf$

From PCI Design Hand Book, Edition 4, Design Aid 11.1.5

Moment along wall per LF (As a beam): $M_s := SD \cdot EFP \cdot \frac{H^2}{12} + EFP \cdot \frac{H^2}{2} \cdot \frac{H}{10}$ $M_s = 3.433 \cdot ft^{-1} \cdot kft$

HLA Infrastructure, Inc.

Sheet No_2_of__
Job No._40049.2_

Title: Glendale Avenue Storm Drain
Conflict Structures @ STA. 52+41.27

File :_Wall4.mcd_

Subject: Wall Design

Designed by_Sivaji.S_ Date:_9/8/98_

Checked by DLE Date: 4/98

Material Properties

Allowable stress in reinforcing steel: $F_s = 24000 \cdot psi$

Elastic modulus of reinforcement: $E_s = 29 \cdot 10^6 \cdot psi$

Allowable stress in concrete: $f_{c28} = 3000 \cdot psi$ $\quad F_c = 0.4 \cdot f_{c28}$

Allowable working stress in concrete: $f_c = 0.4 \cdot f_{c28}$ $\quad f_c = 1200 \cdot psi$

Elastic modulus of concrete: $E_c = 57000 \cdot \sqrt{f_{c28}} \cdot psi$ $\quad E_c = 3122.02 \cdot ksi$

Modular ratio: $n = \frac{E_s}{E_c}$ $\quad k = \frac{f_c}{f_c + \frac{F_s}{n}}$ $\quad n = 9.289$ $\quad k = 0.317$

Effective depth factor: $j = 1 - \frac{k}{3}$ $\quad j = 0.894$

Unit weight of concrete: $\gamma_c = 150 \cdot pcf$

Moment due to soil pressure on wall: $M_{s1} = M_s$ $\quad M_{s1} = 3.433 \cdot ft^{-1} \cdot kft$

Design

Moment due to soil pressure on wall at bottom slab:

$$M_{s2} = SD \cdot EFP \cdot \frac{H^2}{12} + EFP \cdot \frac{H^2}{2} \cdot \frac{H}{10}$$

$M_{s2} = 3.433 \cdot ft^{-1} \cdot kft$

Cover to main reinforcment: $d_c = 2 \cdot in$

Diameter of main reinforcement (#5): $d_b = 0.625 \cdot in$ $\quad A_b = 0.31 \cdot in^2$

Depth to main reinforcement: $d = tw - d_c - \frac{d_b}{2}$ $\quad d = 9.688 \cdot in$

Steel required per LF: $Ast = \frac{M_{s2}}{F_s \cdot j \cdot d}$ $\quad Ast = 0.198 \cdot ft^{-1} \cdot in^2$

provide #5 bars @ 12"

Design width: $b = 12 \cdot in$

Spacing of bars: $s = 12 \cdot in$

Area of reinforcing steel per design width: $A_s = A_b \cdot \frac{b}{s}$ $\quad A_s = 0.31 \cdot in^2$

Reinforcement ratio: $\rho = \frac{A_s}{b \cdot d}$ $\quad \rho = 0.2667 \cdot \%$

Balanced ratio: $\rho_b = \frac{1}{2} \cdot \frac{F_c}{F_s} \cdot \left(1 + \frac{F_s}{n \cdot F_c}\right)^{-1}$ $\quad \rho_b = 0.793 \cdot \%$

(If RHO < RHO.b, Steel stress governs, otherwise concrete stress governs)

CHECK REQ'D CRACKING MOMENT CAPACITY

$f_r = 7.5 \cdot \sqrt{f_{c28}} \cdot \sqrt{psi}$ $\quad f_r = 410.792 \cdot psi$

$I = \frac{b \cdot tw^3}{12}$ $\quad I = 1728 \cdot in^4$

$M_{cr} = \frac{I \cdot f_r}{0.5 \cdot tw \cdot b}$ $\quad 1.2 \cdot M_{cr} = 11.83 \cdot \frac{kft}{ft}$ $\quad M_{s2} = 3.433 \cdot ft^{-1} \cdot kft$

DESIGN STRESSES AASHTO 8.17.1.2

$k = \sqrt{(n \cdot \rho)^2 + 2 \cdot n \cdot \rho} - n \cdot \rho$ $\quad k = 0.249$

$mmax = if(M_{s2} > 1.2 \cdot M_{cr}, M_{s2}, 1.3 \cdot M_{s2})$ $\quad mmax = 4.46 \cdot \frac{kft}{ft}$

$f_s = \frac{mmax \cdot b}{A_s \cdot j \cdot d}$ $\quad f_s = 19938.63 \cdot psi$ $\quad F_s = 24000 \cdot psi$

$f_c = \frac{2 \cdot mmax}{k \cdot j \cdot d^2}$ $\quad f_c = 427.54 \cdot psi$ $\quad F_c = 1200 \cdot psi$

CHECK SHEARING STRESSES

$q = 4.313 \cdot ft^{-1} \cdot kip$

$v_c = \frac{q}{b \cdot d}$ $\quad v_c = 37.1 \cdot \frac{psi}{ft}$ $\quad \frac{v_c}{\sqrt{f_{c28}}} = 0.677 \cdot \frac{psi}{\sqrt{psi \cdot ft}}$

Allowable Shearing Stress

$v_{all} = 0.9 \cdot \sqrt{f_{c28}} \cdot \sqrt{psi} + 1100 \cdot \rho \cdot \frac{q \cdot d}{M_s} \cdot psi$ $\quad v_{all} = 52.27 \cdot psi$

$v_{all} = 0.95 \cdot \sqrt{f_{c28}} \cdot \sqrt{psi}$ $\quad v_{all} = 52.03 \cdot psi$

Harding Lawson Associates
Engineering
and
Environmental Services

SHEET _____ OF _____
JOB NO. 40049.2
DATE 9/14/98
COMPUTED BY S. Singh
CHECKED BY [illegible] 1/98

PROJECT _____
SUBJECT CONFLICT STRUCTURE S @ STA 52+41.27

CONCRETE

Perimeter Length of Wall along ℄ $= 2[(6.61+5+12.18+1)+10]$

$= 69.58' \approx 70'$

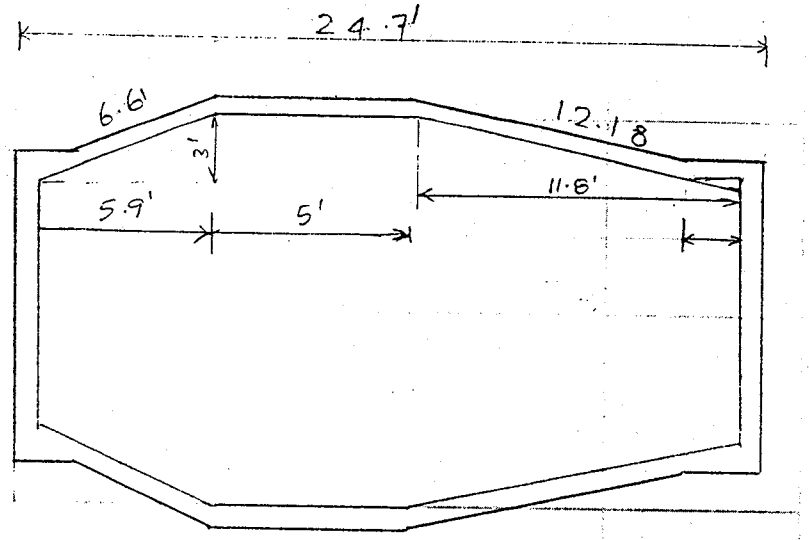

Height of Wall
(excluding Top & Bottom Slabs)

$= 8.708 + 6'' = 9.208'$

Bearing Area of Box:

$= 11 * 24.7' + \frac{6.9 * 4'}{2} * 2 + \frac{12.8 * 4}{2} * 2 + 4 * 5 = 370.5$ SF.

Top Slab thickness: 12"

Bottom Slab Thickness: 18"

Volume of Concrete excluding Openings:

$= 70 * 1 * 9.208 + 370.5 * 1.5 = 1200.31$ CF.

Volume of Openings: $2 * \left[\frac{\pi}{4}(7.5)^2 + \frac{\pi}{4}(3)^2\right] + 2.5 * 4.33$

$= 113.32$ CF

Net Quantity of Concrete : $1200.3 - 113.32 = 1087$ CF

(or) 40 CY

Glendale Ave Storm Drain, Phase 2 52+41.85

Special Box Structure, @ STA 52+41.85

Item No.	Description	No. Bars	Length in mm	Length in ft	Weight per Lin feet	Total Wt. in Lbs	Weight in Kgs	Remarks
	Top Slab							
1	#7 @ 6 inches T&B, L-shape	66		7.75	2.044	1045.51	474.24	E_W Dir.
2	#5 @ 6 inches Lapped w/ #7 bars	33		5.00	1.043	172.10	78.06	E_W Dir. Lap Bars
3	#6 @ 6 inches T&B at Opening	22		21.00	1.502	693.92	314.76	Top Slab
4	#7 @ 6 inches T&B	66		15.00	2.044	2023.56	917.89	N_S Dir.
5	#6 @ 6 inches T&B at Opening	8		10.00	1.502	120.16	54.50	Top Slab
6	Edge Beam Adjacent to shaft	28		15.00	1.502	630.84	286.15	Top Slab
7	#4-Closed ties for 7-#6s	50		6.50	0.668	217.10	98.48	edge beam North
8	3-#6 @ T&B on two walls	12		10.50	1.502	189.25	85.84	
9	#4-Closed ties	10		4.00	0.668	26.72	12.12	edge beam East
10	#4-Closed ties	10		4.00	0.668	26.72	12.12	edge beam West
	Bottom Slab							
1	#6 @ 12 inches Top mat	14		24.00	1.502	504.67	228.92	E_W Dir.
2	#5 @ 12 inches Bot. Mat at walls	32		6.00	1.043	200.26	90.84	E_W Dir.
3	#5 @ 12 inches Bot. mat	16		22.00	1.043	367.14	166.53	E_W Dir.
4	#6 @ 12 inches Top mat	23		11.00	1.502	380.01	172.37	N_S Dir.
5	#6 @ 6 inches Bot. mat	48		13.00	1.502	937.25	425.14	N_S Dir.
6	#5 @ 6 inches in east side footing	22		3.00	1.043	68.84	31.22	N_S Dir.
	Wall							
1	#6 @ 12 inches on Wall to full Ht.	54		11.00	1.502	892.19	404.70	Vertical
2	#6 @ 12 inches on Wall cut to fit 90 inch Pipes	40		6.50	1.502	390.52	177.14	Vertical
3	#5 @ 15 inches in wall	36		23.00	1.043	863.60	391.73	Horizontal E-W
4	#5 @15 inches in wall @ Opening	0		0.00	1.043	0.00	0.00	Horizontal E-W
5	#5 @15 inches in wall	0		0.00	1.043	0.00	0.00	Horizontal N-S.
6	#5 @15 inches in wall @ Opening	36		6.00	1.043	225.29	102.19	Horizontal N-S
7	#5 @15 inches in wall @ Opening	0		0.00	1.043	0.00	0.00	Horizontal N-S
10	Diagonals at Pipe openings	32		8.00	1.502	384.51	174.41	
	Column Steel							
1	4-#6 vertical steel	0		0.00	1.502	0.00	0.00	
	Total					10360.15	4699.36	

Harding Lawson Associates
Engineering
and
Environmental Services

SHEET _____ OF _____
JOB NO. 40049.2
DATE 9/8/98
COMPUTED BY S. Sivaji
CHECKED BY [illegible]

PROJECT GLENDALE STORM DRAIN, PHASE-B
SUBJECT JUNCTION BOX @ STA 105+98.20

JUNCTION BOX @ STA 105+98.20 (83rd Ave) MH #9

Invert of pipe : 1082.90 (84" Dia. pipe)

Mininum Clear height required from plans : 8.67'

Height of wall on top of 84" Dia. pipe

= 8.67' − 84" − 8" = 1.00' o.k.

Assume top slab thickness : 12"

Total height of wall above floor slab

= 8.67' + 12" = 9.67'

Finished Grade Elevation : 1095.31

Fill height on top of Box : 1095.31 − 1082.90 − 9.67'

= 2.74' (or) 32.88"

HLA Infrastructure, Inc.

Sheet No_1_of__
Job No._40049.2_

Title: Glendale Avenue Storm Drain
Conflict Structure @ STA 105+98.20

File :_SLB-MH9.MCD_

Subject: 12" Top Slab Design

Designed by_Sivaji.S_ Date:_9/8/98_

Checked by DLE Date: 4/8/

UNITS: $kip \equiv 1000 \cdot lbf$ $TOL \equiv 0.01$ $ft \equiv 12.0 \cdot in$

$plf \equiv \frac{lbf}{ft}$ $psf \equiv \frac{lbf}{ft^2}$ $pcf \equiv \frac{lbf}{ft^3}$ $psi \equiv \frac{lbf}{in^2}$ $pci \equiv \frac{lbf}{in^3}$ $pft \equiv lbf \cdot ft$

$klf \equiv \frac{kip}{ft}$ $ksf \equiv \frac{kip}{ft^2}$ $kcf \equiv \frac{kip}{ft^3}$ $ksi \equiv \frac{kip}{in^2}$ $kci \equiv \frac{kip}{in^3}$ $kft \equiv kip \cdot ft$

$CY := 27 \cdot ft^3$

Design of Slab for Junction Box (MH 9) at STA. 105+98.20

Span length c/c: $GS := 10.33 \cdot ft$ $GS = 123.96 \cdot in$

Wall width: $TW := 12 \cdot in$

Effective span between walls (AASHTO_9.6): $S := GS - TW$ $S = 9.33 \cdot ft$

Actual thickness of the slab.
(From BDDM Section 1.3.2) $ST := 12 \cdot in$

Design thickness of the slab: $DS := ST - 0 \cdot in$

Depth of soil cover over box: $SD := 32.88 \cdot in$

Live Load moment paralle to Traffic:
(From AASHTO Sections 3.24.3 & 3.24.3.1) : $P_{L1} := 16000 \cdot lbf$ (Load on one rear wheel of truck)

Width of the distributed area on top of slab: $WD := 1.75 \cdot SD$ $WD = 4.79 \cdot ft$

Distribution Area for track wheel load (AASHTO 6.4.1): $A := (1.75 \cdot SD)^2$ $A = 22.99 \cdot ft^2$

Live load on slab per unit width of slab: $LL := \frac{P_{L1}}{A}$ $LL = 0.7 \cdot ft^{-1} \cdot klf$

Impact factor:
(From AASHTO Section 3.8.2.1) $I := 1.10$

From PCI Design Hand Book, Edition 4, Design Aid 11.1.5

Max. -ve Moment in lb-ft per unit width of slab:

Factor a is $a1 := \frac{WD}{S}$ $LLN := \frac{LL \cdot S^2 \cdot a1 \cdot (6 - 8 \cdot a1 - 3 \cdot a1^2)}{12} \cdot I$ $LLN = 3.13 \cdot ft^{-1} \cdot kft$

HLA Infrastructure, Inc.

Sheet No_2_of__
Job No._40049.2_

Title: Glendale Avenue Storm Drain
Conflict Structure @ STA 105+98.20

File :_SLB-MH9.MCD_

Subject: 12" Top Slab Design

Designed by_Sivaji.S_ Date:_9/8/98_

Checked by_____ Date:_____

Max. +ve Moment in lb-ft per unit width of slab:

Factor a is $a2 := \frac{S - WD}{2 \cdot S}$ $LLP := \frac{LL \cdot S^2 \cdot (1 + 2 \cdot a2 + 4 \cdot a2^2)}{24} \cdot I$ $LLP = 4.78 \cdot ft^{-1} \cdot kft$

DEAD LOAD MOMENTS

Concrete dead weight: $DL_{SL} := ST \cdot 0.15 \cdot kcf$ $DL_{SL} = 0.15 \cdot klf \cdot ft^{-1}$

Wearing Surface $DL_{WS} := 0 \cdot psf \cdot 1$ $DL_{WS} = 0 \cdot klf \cdot ft^{-1}$

Soil cover over the top slab: $DL_{soil} := SD \cdot 125 \cdot pcf$ $DL_{soil} = 0.34 \cdot ft^{-1} \cdot klf$

Total dead load: $W := DL_{SL} + DL_{WS} + DL_{soil}$ $W = 0.49 \cdot klf \cdot ft^{-1}$

(From LRFD-AISC 3-143)

Negative moment: $M_N := \frac{1}{12} \cdot W \cdot S^2$ $M_N = 3.57 \cdot kft \cdot ft^{-1}$

Positive moment: $M_P := \frac{1}{24} \cdot W \cdot S^2$ $M_P = 1.79 \cdot kft \cdot ft^{-1}$

TOP SLAB:

Design Moments

Negative moment: $M_{NT} := -LLN - M_N$ $M_{NT} = -6.7 \cdot kft \cdot ft^{-1}$

Positive moment: $M_{PT} := LLP + M_P$ $M_{PT} = 6.57 \cdot kft \cdot ft^{-1}$

MATERIAL PROPERTIES

Characteristic strength of concrete at 28 days: $f_{c28} := 3000 \cdot psi$

Allowable stress in concrete: $F_c := 0.40 \cdot f_{c28}$
(From BDDM Section 1.3.2)
use $F_c := if(F_c < 1400 \cdot psi, F_c, 1400 \cdot psi)$ $F_c = 1200 \cdot psi$

Use Grade 60 steel: $F_s := 20000 \cdot psi$

NOTE: BDDM Section 1.3.1 Reinforcement - All transverse deck reinforcing shall be designed using an allowable stress fs = 20000 psi. All other reinforcing bars shall be designed using an allowable stress fs = 24000 psi.

HLA Infrastructure, Inc.

Sheet No_3_of__
Job No._40049.2_

Title: Glendale Avenue Storm Drain
Conflict Structure @ STA 105+98.20

File :_SLB-MH9.MCD_

Subject: 12" Top Slab Design

Designed by_Sivaji.S_ Date:_9/8/98_

Checked by_____ Date:_11/98

Elastic modulus of concrete: $E_c := 57000 \cdot \sqrt{f_{c28}} \cdot \sqrt{psi}$ $E_c = 3.12 \cdot 10^6 \cdot psi$

Elastic modulus of steel: $E_s := 29000 \cdot ksi$

Modular ratio: $n := \frac{E_s}{E_c}$ $n = 9.29$ $k := \frac{F_c}{F_c + \frac{F_s}{n}}$ $k = 0.36$

Effective depth factor: $j := 1 - \frac{k}{3}$ $j = 0.88$

Diameter of top main bars (#6): $\phi_t := 0.75 \cdot in$ $A_t := 0.44 \cdot in^2$

Diameter of bottom main bars (#6): $\phi_b := 0.75 \cdot in$ $A_b := 0.44 \cdot in^2$

Clear Cover to top reinforcement: $C_t := 2.0 \cdot in$

Clear Cover to bottom reinforcement: $C_b := 1.0 \cdot in$

Effective depth to top main steel: $d_t := ST - C_t - \frac{\phi_t}{2}$ $d_t = 9.62 \cdot in$

Effective depth to bottom main steel: $d_b := ST - C_b - \frac{\phi_b}{2}$ $d_b = 10.63 \cdot in$

Area of steel required at top: $Ast := \frac{|M_{NT}|}{F_s \cdot j \cdot d_t} \cdot ft$ $Ast = 0.47 \cdot in^2$

Number of bars at top: $NB_T := \frac{Ast}{A_t}$ $NB_T = 1.08$

Provide #6 bars @ 12" spacing at top.

Area of steel required at bottom: $Asb := \frac{|M_{PT}|}{F_s \cdot j \cdot d_b} \cdot ft$ $Asb = 0.42 \cdot in^2$

Number of bars at bottom: $NB_B := \frac{Asb}{A_b}$ $NB_B = 0.96$

Provide #6 bars @ 12" spacing at bottom.

HLA Infrastructure, Inc.

Sheet No_4_of__
Job No._40049.2_

Title: Glendale Avenue Storm Drain
Conflict Structure @ STA 105+98.20

File :_SLB-MH9.MCD_

Subject: 12" Top Slab Design

Designed by_Sivaji.S_ Date:_9/8/98_

Checked by_____ Date:_____

DISTRIBUTION REINFORCEMENT: AASHTO SECTION 3.24.10

For main steel parallel to traffic:

Percentage of main steel: $r := \left(\frac{220}{\sqrt{S}} \cdot \sqrt{ft}\right) \cdot \%$ $\quad r = 72.02 \cdot \%$

$r := if(r \le 50 \cdot \%, r, 50 \cdot \%)$ $\quad r = 50 \cdot \%$

Distribution steel: $Asd := r \cdot Asb$ $\quad Asd = 0.21 \cdot in^2$

Total number of bars required in single span:

$NB_D := \frac{Asd}{A_t} \cdot \frac{S}{ft}$ $\quad NB_D = 4.47$

NOTE: BDDM Section 1.3.1 Reinforcement - All transverse deck reinforcing shall be designed using an allowable stress fs = 20000 psi. All other reinforcing bars shall be designed using an allowable stress fs = 24000 psi.

$NB_D := NB_D \cdot \frac{F_s}{24000 \cdot psi}$ $\quad NB_D = 3.72$

HLA Infrastructure, Inc.

Sheet No_1_of__
Job No._40049.2_

Title: Glendale Avenue Storm Drain
Conflict Structures @ STA. 105+98.20

File :_Wall9.mcd_

Subject: Wall Design

Designed by_Sivaji.S_ Date:_9/8/98_

Checked by Date: 4/28

UNITS: $kip \equiv 1000 \cdot lbf$ $TOL \equiv 0.01$

$plf \equiv \frac{lbf}{ft}$ $psf \equiv \frac{lbf}{ft^2}$ $pcf \equiv \frac{lbf}{ft^3}$ $psi \equiv \frac{lbf}{in^2}$ $pci \equiv \frac{lbf}{in^3}$ $pft \equiv lbf \cdot ft$

$klf \equiv \frac{kip}{ft}$ $ksf \equiv \frac{kip}{ft^2}$ $kcf \equiv \frac{kip}{ft^3}$ $ksi \equiv \frac{kip}{in^2}$ $kci \equiv \frac{kip}{in^3}$ $kft \equiv kip \cdot ft$

CONFLICT JUNCTION BOX WALL DESIGN @ STA. 105+98.20

Dimensions

Clear height between top and bottom slabs: $H_c := 8.67 \cdot ft$

Thickness of top slab: $t_{ts} := 10 \cdot in$

Thickness of the bottom slab: $t_{bs} := 12 \cdot in$

Active Equivalent fluid pressure at rest: $EFP := 55 \cdot pcf$

Passive Equivalent fluid pressure: $EFP_p := 0 \cdot pcf$

Depth of surcharge: $SD := 32.88 \cdot in + t_{ts}$ $SD = 3.573 \cdot ft$

Total height of wall : $h_{aw} := H_c + t_{ts} + t_{bs}$ $h_{aw} = 10.503 \cdot ft$

Coefficient of friction for sliding: $\mu := 0.40$

wall thickness : $tw := 12 \cdot in$

Soil Forces on Wall

Height of soil pressure prism along the wall: $H := H_c$ $H = 8.67 \cdot ft$

Active soil force along the wall pre LF: $q := SD \cdot EFP \cdot H + EFP \cdot H^2 \cdot \frac{1}{2}$ $q = 3.771 \cdot klf$

Passive soil force along the wall pre LF: $q_p := EFP_p \cdot H^2 \cdot \frac{1}{2}$ $q_p = 0 \cdot klf$

From PCI Design Hand Book, Edition 4, Design Aid 11.1.5 (10)

Moment along wall per LF (As a beam): $M_s := SD \cdot EFP \cdot \frac{H^2}{12} + EFP \cdot \frac{H^2}{2} \cdot \frac{H}{10}$ $M_s = 3.023 \cdot ft^{-1} \cdot kft$

HLA Infrastructure, Inc.

Sheet No_2_of__
Job No._40049.2_

Title: Glendale Avenue Storm Drain
Conflict Structures @ STA. 105+98.20

File :_Wall9.mcd_

Subject: Wall Design

Designed by_Sivaji.S_ Date:_9/8/98_

Checked by Date:

Material Properties

Allowable stress in reinforcing steel: $F_s = 24000 \cdot psi$

Elastic modulus of reinforcement: $E_s = 29 \cdot 10^6 \cdot psi$

Allowable stress in concrete: $f_{c28} = 3000 \cdot psi$ $\quad F_c = 0.4 \cdot f_{c28}$

Allowable working stress in concrete: $f_c = 0.4 \cdot f_{c28}$ $\quad f_c = 1200 \cdot psi$

Elastic modulus of concrete: $E_c = 57000 \cdot \sqrt{f_{c28}} \cdot psi$ $\quad E_c = 3122.02 \cdot ksi$

Modular ratio: $n = \frac{E_s}{E_c}$ $\quad k = \frac{f_c}{f_c + \frac{F_s}{n}}$ $\quad n = 9.289$ $\quad k = 0.317$

Effective depth factor: $j = 1 - \frac{k}{3}$ $\quad j = 0.894$

Unit weight of concrete: $\gamma_c = 150 \cdot pcf$

Moment due to soil pressure on wall: $M_{s1} = M_s$ $\quad M_{s1} = 3.023 \cdot ft^{-1} \cdot kft$

Design

Moment due to soil pressure on wall at bottom slab:

$$M_{s2} = SD \cdot EFP \cdot \frac{H^2}{12} + EFP \cdot \frac{H^2}{2} \cdot \frac{H}{10}$$

$M_{s2} = 3.023 \cdot ft^{-1} \cdot kft$

Cover to main reinforcment: $d_c = 2 \cdot in$

Diameter of main reinforcement (#5): $d_b = 0.625 \cdot in$ $\quad A_b = 0.31 \cdot in^2$

Depth to main reinforcement: $d = tw - d_c - \frac{d_b}{2}$ $\quad d = 9.688 \cdot in$

Steel required per LF: $Ast = \frac{M_{s2}}{F_s \cdot j \cdot d}$ $\quad Ast = 0.174 \cdot ft^{-1} \cdot in^2$

provide #5 bars @ 12"

HLA Infrastructure, Inc.

Sheet No_3_of__
Job No._40049.2_

Title: Glendale Avenue Storm Drain
Conflict Structures @ STA. 105+98.20

File :_Wall9.mcd_

Subject: Wall Design

Designed by_Sivaji.S_ Date:_9/8/98_

Checked by_____ Date:_____

Design width: $b = 12 \cdot in$

Spacing of bars: $s = 12 \cdot in$

Area of reinforcing steel per design width: $A_s = A_b \cdot \frac{b}{s}$ $\quad A_s = 0.31 \cdot in^2$

Reinforcement ratio: $\rho = \frac{A_s}{b \cdot d}$ $\quad \rho = 0.2667 \cdot \%$

Balanced ratio: $\rho_b = \frac{1}{2} \cdot \frac{F_c}{F_s} \cdot \left(1 - \frac{F_s}{n \cdot F_c}\right)^{-1}$ $\quad \rho_b = 0.793 \cdot \%$

(If RHO < RHO.b, Steel stress governs, otherwise concrete stress governs)

CHECK REQ'D CRACKING MOMENT CAPACITY

$f_r = 7.5 \cdot \sqrt{f_{c28} \cdot psi}$ $\quad f_r = 410.792 \cdot psi$

$I = \frac{b \cdot tw^3}{12}$ $\quad I = 1728 \cdot in^4$

$M_{cr} = \frac{I \cdot f_r}{0.5 \cdot tw \cdot b}$ $\quad 1.2 \cdot M_{cr} = 11.83 \cdot \frac{kft}{ft}$ $\quad M_{s2} = 3.023 \cdot ft^{-1} \cdot kft$

DESIGN STRESSES AASHTO 8.17.1.2

$k = \sqrt{(n \cdot \rho)^2 - 2 \cdot n \cdot \rho} - n \cdot \rho$ $\quad k = 0.249$

$mmax = \text{if}(M_{s2} > 1.2 \cdot M_{cr}, M_{s2}, 1.3 \cdot M_{s2})$ $\quad mmax = 3.93 \cdot \frac{kft}{ft}$

$f_s = \frac{mmax \cdot b}{A_s \cdot j \cdot d}$ $\quad f_s = 17561.38 \cdot psi$ $\quad F_s = 24000 \cdot psi$

$f_c = \frac{2 \cdot mmax}{k \cdot j \cdot d^2}$ $\quad f_c = 376.57 \cdot psi$ $\quad F_c = 1200 \cdot psi$

CHECK SHEARING STRESSES

$q = 3.771 \cdot ft^{-1} \cdot kip$

$v_c = \frac{q}{b \cdot d}$ $\quad v_c = 32.44 \cdot \frac{psi}{ft}$ $\quad \frac{v_c}{\sqrt{f_{c28}}} = 0.592 \cdot \frac{psi}{\sqrt{psi} \cdot ft}$

Allowable Shearing Stress

$v_{all} = 0.9 \cdot \sqrt{f_{c28} \cdot psi} \cdot 1100 \cdot \rho \cdot \frac{q \cdot d}{M_s} \cdot psi$ $\quad v_{all} = 52.25 \cdot psi$

$v_{all} = 0.95 \cdot \sqrt{f_{c28} \cdot psi}$ $\quad v_{all} = 52.03 \cdot psi$

HLA Infrastructure, Inc.

Sheet No_1_of__
Job No._40049.2_

Title: Glendale Avenue Storm Drain
Conflict Structure @ STA 105+98.20

File :_Flr-mh9.mcd_

Subject: Floor Slab Design_MH 9

Designed by_Sivaji.S_ Date:_9/8/98_

Checked by JHE Date: 4/98

UNITS: $kip \equiv 1000 \cdot lbf$ $TOL \equiv 0.01$ $ft \equiv 12.0 \cdot in$

$plf \equiv \frac{lbf}{ft}$ $psf \equiv \frac{lbf}{ft^2}$ $pcf \equiv \frac{lbf}{ft^3}$ $psi \equiv \frac{lbf}{in^2}$ $pci \equiv \frac{lbf}{in^3}$ $pft \equiv lbf \cdot ft$

$kft \equiv kip \cdot ft$

$klf \equiv \frac{kip}{ft}$ $ksf \equiv \frac{kip}{ft^2}$ $kcf \equiv \frac{kip}{ft^3}$ $ksi \equiv \frac{kip}{in^2}$ $kci \equiv \frac{kip}{in^3}$ $CY := 27 \cdot ft^3$

Design of FLoor Slab for Junction Box (MH 9) at Sta. 105+98.20

Span length c/c: $GS := 10.33 \cdot ft$ $GS = 123.96 \cdot in$

Wall width: $TW := 12 \cdot in$

Effective span between walls (AASHTO_9.6): $S := GS - TW$ $S = 9.33 \cdot ft$

Actual thickness of the Floor slab: (From BDDM Section 1.3.2) $ST := 12 \cdot in$

Design thickness of the Floor slab: $DS := ST - 0 \cdot in$

Depth of soil cover over box: $SD := 3.243 \cdot ft$

Actual thickness of the top slab: $TS := 12 \cdot in$

Height of wall(between slabs): $HW := 8.67 \cdot ft$

Perimeter Length of the box: $PL := (9.167 \cdot ft + 9.830 \cdot ft) \cdot 2$ $PL = 37.99 \cdot ft$

Total bearing area of the box: $BA := 10.167 \cdot ft \cdot 11.33 \cdot ft$ $BA = 115.19 \cdot ft^2$

DEAD LOAD MOMENTS

Concrete dead weight from slabs: $DL_{SL} := (TS + ST) \cdot BA \cdot 0.15 \cdot kcf$ $DL_{SL} = 34.56 \cdot kip$

Concrete wall: $DL_{wl} := PL \cdot TW \cdot HW \cdot 0.15 \cdot kcf$ $DL_{wl} = 49.41 \cdot kip$

Weight soil replaced by shaft: $DL_{WS} := SD \cdot \frac{\pi}{4} \cdot (5 \cdot ft)^2 \cdot 0.125 \cdot kcf$ $DL_{WS} = 7.96 \cdot kip$

Soil cover over the top slab: $DL_{soil} := SD \cdot BA \cdot 0.125 \cdot kcf$ $DL_{soil} = 46.7 \cdot kip$

Total dead load: $DL := DL_{SL} + DL_{wl} - DL_{WS} + DL_{soil}$ $DL = 122.71 \cdot kip$

HLA Infrastructure, Inc.

Sheet No_2_of__
Job No._40049.2_

Title: Glendale Avenue Storm Drain
Conflict Structure @ STA 105+98.20

File :_Flr-mh9.mcd_

Subject: Floor Slab Design_MH 9

Designed by_Sivaji.S_ Date:_9/8/98_

Checked by_____ Date:_____

Total weight of water in the box: $HL := BA \cdot HW \cdot 64 \cdot pcf - PL \cdot HW \cdot TW \cdot 64 \cdot pcf$ $HL = 42.84 \cdot kip$

Live Load moment paralle to Traffic:
(From AASHTO Sections 3.24.3 & 3.24.3.1) : $P_{L1} := 16000 \cdot lbf$ (Load on one rear wheel of truck)

Total DL Bearing pressure on floor slab per unit width: $W := \frac{DL + P_{L1} + HL}{BA}$ $W = 1.58 \cdot ksf$ < 5 ksf O.K.

(From LRFD-AISC 3-143)

Negative moment: $M_N := \frac{1}{12} \cdot W \cdot S^2$ $M_N = 11.43 \cdot kft \cdot ft^{-1}$

Positive moment: $M_P := \frac{1}{24} \cdot W \cdot S^2$ $M_P = 5.72 \cdot kft \cdot ft^{-1}$

FLOOR SLAB:

Design Moments

Negative moment: $M_{NT} := -M_N$ $M_{NT} = -11.43 \cdot kft \cdot ft^{-1}$

Positive moment: $M_{PT} := M_P$ $M_{PT} = 5.72 \cdot kft \cdot ft^{-1}$

MATERIAL PROPERTIES

Characteristic strength of concrete at 28 days: $f_{c28} := 3000 \cdot psi$

Allowable stress in concrete: $F_c := 0.40 \cdot f_{c28}$
(From BDDM Section 1.3.2) use $F_c := if(F_c < 1400 \cdot psi, F_c, 1400 \cdot psi)$ $F_c = 1200 \cdot psi$

Use Grade 60 steel: $F_s := 24000 \cdot psi$

Elastic modulus of concrete: $E_c := 57000 \cdot \sqrt{f_{c28}} \cdot \sqrt{psi}$ $E_c = 3.12 \cdot 10^6 \cdot psi$

Elastic modulus of steel: $E_s := 29000 \cdot ksi$

Modular ratio: $n := \frac{E_s}{E_c}$ $n = 9.29$ $k := \frac{F_c}{F_c + \frac{F_s}{n}}$ $k = 0.32$

Effective depth factor: $j := 1 - \frac{k}{3}$ $j = 0.89$

HLA Infrastructure, Inc.

Sheet No_3_of__
Job No._40049.2_

Title: Glendale Avenue Storm Drain
Conflict Structure @ STA 105+98.20

File :_Flr-mh9.mcd_

Subject: Floor Slab Design_MH 9

Designed by_Sivaji.S_ Date:_9/8/98_

Checked by_____ Date:_____

Diameter of top main bars (#6): $\phi_t := 0.75 \cdot in$ $A_t := 0.44 \cdot in^2$

Diameter of bottom main bars (#6): $\phi_b := 0.75 \cdot in$ $A_b := 0.44 \cdot in^2$

Clear Cover to top reinforcement: $C_t := 2.0 \cdot in$

Clear Cover to bottom reinforcement: $C_b := 3.0 \cdot in$

Effective depth to top main steel: $d_t := ST - C_t - \frac{\phi_t}{2}$ $d_t = 9.62 \cdot in$

Effective depth to bottom main steel: $d_b := ST - C_b - \frac{\phi_b}{2}$ $d_b = 8.63 \cdot in$

Area of steel required at top: $Ast := \frac{|M_{PT}|}{F_s \cdot j \cdot d_t} \cdot ft$ $Ast = 0.33 \cdot in^2$

Number of bars at top: $NB_T := \frac{Ast}{A_t}$ $NB_T = 0.75$

Provide #6 bars @ 12" spacing at top.

Area of steel required at bottom: $Asb := \frac{|M_{NT}|}{F_s \cdot j \cdot d_b} \cdot ft$ $Asb = 0.74 \cdot in^2$

Number of bars at bottom: $NB_B := \frac{Asb}{A_b}$ $NB_B = 1.68$

Provide #6 bars @ 6" spacing at bottom.

Harding Lawson Associates
Engineering
and
Environmental Services

SHEET _____ OF _____
JOB NO. 40049.2
DATE 9/14/98
COMPUTED BY S. Sivaj
CHECKED BY [illegible]

PROJECT GLENDALE STORM DRAIN, PHASE "B"
SUBJECT SPECIAL BOX STRUCTURE @ STA 105+98.20

CONCRETE

Perimeter length along ℄ of wall: $2 \times (9.167 + 10.33) = 39'$

Height of Wall (Excluding Top and bottom slabs)

$= 8.67' + 0.5' = 9.17'$

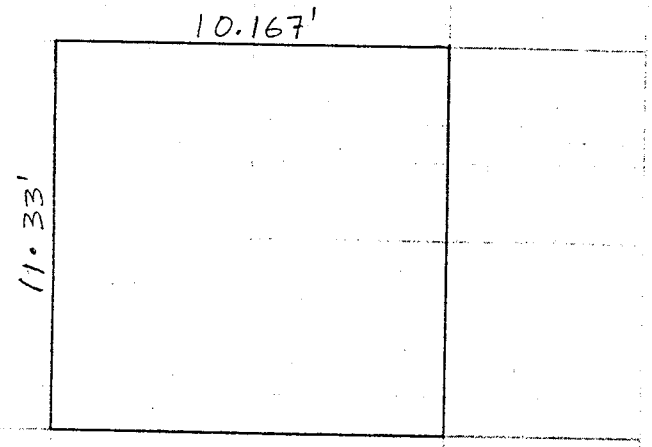

Bearing Area of Box

$= 11.33 \times 10.167 = 115.2\ ft^2$

Thickness of Top slab = 1'

Thickness of Bottom Slab = 1'

Volume of Concrete excluding openings:

$= 39' \times 9.17' \times 1' + 115.2\ ft^2 \times 1' + 115.2 \times 1' = 580.0$ CF.

Volume of openings: $\left[\frac{\pi}{4}(7)^2 + \frac{\pi}{4}(6)^2 + \frac{\pi}{4}(5.5)^2\right] \times 1' + 2.5 \times 4.33 \times 1'$

$= 101.342$ CF

Net Quantity of Concrete $= 580 - 101.34 + (39 \times 4'' \times \frac{4''}{2} \times) 2$ (fillet)

$= 483$ CF

(or) 18 CY

Glendale Ave Storm Drain, Phase 2
Special Box Structure, @ STA 105+98.20

11/10/98

Item No.	Description	No. Bars	Length in mm	Length in ft	Weight per Lin feet	Total Wt. in Lbs	Weight in Kgs	Remarks
	Top Slab							
1	7-#6 @ 3 inches T&B	28		13.34	1.502	560.90	254.42	E_W Dir.
2	#6 @ 6 inches T&B at Opening	22		10.51	1.502	347.19	157.49	Top Slab
3	#6 @ 6 inches T&B	24		12.75	1.502	459.61	208.48	N_S Dir.
4	#6 @ 6 inches T&B at Opening	8		9.84	1.502	118.24	53.63	Top Slab
5	Edge Beam Adjacent to shaft	12		0.00	1.502	0.00	0.00	Top Slab
6	3-#6 @ T&B on two walls	18		10.00	1.502	270.36	122.64	
7	#4-Closed ties for 7-#6s	54		6.50	0.668	234.47	106.35	edge beam North
8	#4-Closed ties	9		4.50	0.668	27.05	12.27	edge beam West
9	#4-Closed ties	9		4.50	0.668	27.05	12.27	edge beam East
10	#4-Closed ties	8		6.50	0.668	34.74	15.76	edge beam North
	Bottom Slab							
1	#6 @ 12 inches Top mat	10		9.50	1.502	142.69	64.72	E_W Dir.
2	#6 @ 6 inches Bot. mat	22		13.00	1.502	429.57	194.85	E_W Dir.
3	#6 @ 12 inches Top mat	9		10.00	1.502	135.18	61.32	N_S Dir.
4	#6 @ 6 inches Bot. mat	22		16.00	1.502	528.70	239.82	N_S Dir.
5	#6 @ 6 inches in east side footing	44		3.00	1.502	198.26	89.93	E_W Dir. & N_W Dir.
	Wall							
1	#6 @ 12 inches on Wall to full Ht.	32		11.00	1.502	528.70	239.82	Vertical
2	#6 @ 12 inches on Wall cut to fit top of 84 inch ipe	20		7.50	1.502	225.30	102.20	Vertical
3	#5 @ 15 inches in wall	20		14.00	1.043	292.04	132.47	Horizontal E-W
4	#5 @15 inches in wall @ Opening	12		11.50	1.043	143.93	65.29	Horizontal E-W
5	#5 @15 inches in wall	4		13.75	1.043	57.37	26.02	Horizontal N-S
6	#5 @15 inches in wall @ Opening	14		9.75	1.043	142.37	64.58	Horizontal N-S
7	#5 @15 inches in wall @ Opening	10		10.50	1.043	109.52	49.68	Horizontal N-S
10	Diagonals at Pipe openings	24		8.00	1.502	288.38	130.81	
	Column Steel							
1	4-#6 vertical steel	4		10.00	1.502	60.08	27.25	
	Total					5361.72	2432.07	

Qnty