DiLEO Engineering
Structural & Civil

ANDREW G. DILEO, P.E.
AZ Structural 14423
AZ Civil 9912
AZ R.L.S. 16523
Calif. R.C.E. 23810
Nev. Civil 9544
New Mexico P.E. 11878

2432 W. Peoria • Suite 1200 • Phoenix, Arizona 85029 • (602) 395-0756 • FAX (602) 395-1150

Structural Calculations

For A

Trench Shoring System

PROJECT:

Flood Control District of Maricopa County
Cactus Road Storm Drain
83rd Avenue to 75th Avenue

108" Storm Drain Pipeline Below a Box Culvert
Station 127 + 00

CONTRACTOR:

Pulice Construction, Inc.
2033 West Mountain View Road
Phoenix, Arizona 85021
(602) 944-2241

file:L9643A

Registered Professional Engineer (Structural)
CERTIFICATE NO.
14423
ANDREW G.
DILEO
Date Signed 7/2/96
ARIZONA, U.S.A.

A450.803

DiLEO Engineering
Structural & Civil

ANDREW G. DILEO, P.E.
AZ Structural 14423
AZ Civil 9912
AZ R.L.S. 16523
Calif. R.C.E. 23810
Nev. Civil 9544
New Mexico P.E. 11878

2432 W. Peoria • Suite 1200 • Phoenix, Arizona 85029 • (602) 395-0756 • FAX (602) 395-1150

Structural Calculations

For A

Trench Shoring System

PROJECT:

Flood Control District of Maricopa County
Cactus Road Storm Drain
83rd Avenue to 75th Avenue

108" Storm Drain Pipeline Below a Box Culvert
Station 127 + 00

CONTRACTOR:

Pulice Construction, Inc.
2033 West Mountain View Road
Phoenix, Arizona 85021
(602) 944-2241

file:L9643A

Registered Professional Engineer (Structural)
CERTIFICATE NO.
14423
ANDREW G.
DILEO
Date Signed 7/2/96
ARIZONA, U.S.A.

DiLEO Engineering
Structural & Civil
2432 W. Peoria • Phoenix, AZ 85029-4727
(602) 395-0756

JOB NO. 9643 SHT. 1 OF
DESC. BY AGD
DATE JULY 1, 1996

LOADING TO SHORING SYSTEM

NOTE: WT. OF BOX TO BE CARRIED BY 30" WIDE SLURRY WALLS BEHIND THE STEEL TRENCH SHIELDS

SOIL PRESSURE = 50 PCF

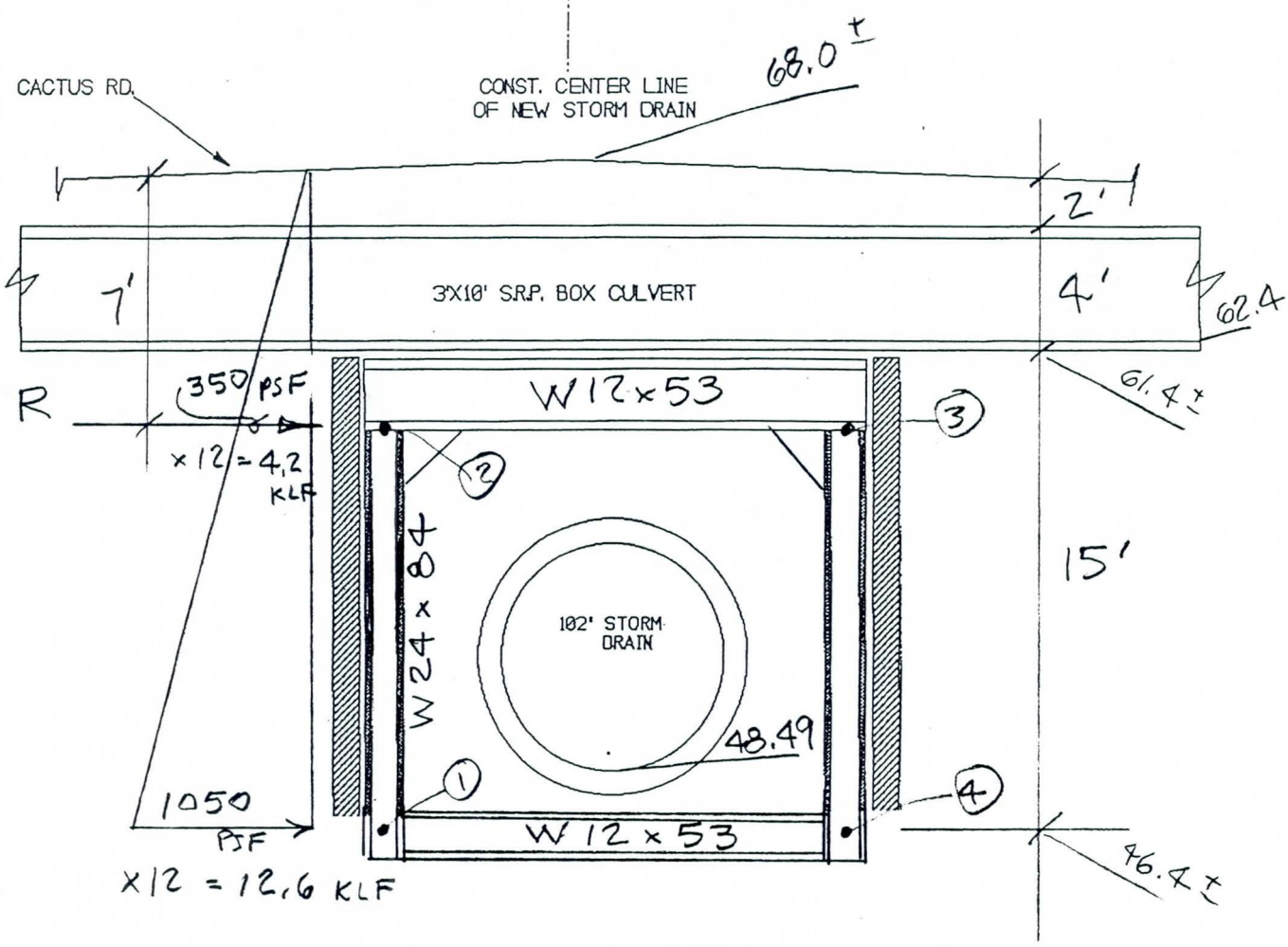

CACTUS RD STORM DRAIN
83 RD AVE TO 75 TH AVE

CULVERT LOCATION 127+00

DiLEO Engineering
Structural & Civil
2432 W. Peoria • Phoenix, AZ 85029-4727
(602) 395-0756

JOB NO. 9643 SHT. 2 OF
DESC. BY
DATE

R = RESULTANT OF FORCES AT NODE (2) AND ABOVE

= 1/2 x 350 PSF x 7 FT x 12' LENGTH OF BOX

= 14.70 KIPS

UNIFORM LOADING AT NODE (2)

350 PSF x 12' = 4.2 KLF

UNIFORM LOADING AT NODE (1)

1050 PSF x 12' = 12.6 KLF

SEE COMPUTER PRINTOUT FOR ANALYSIS

STEEL WALL SHIELDS ARE 8' HIGH x 24' LONG x 6" THK

END VIEW OF BOTTOM 8'

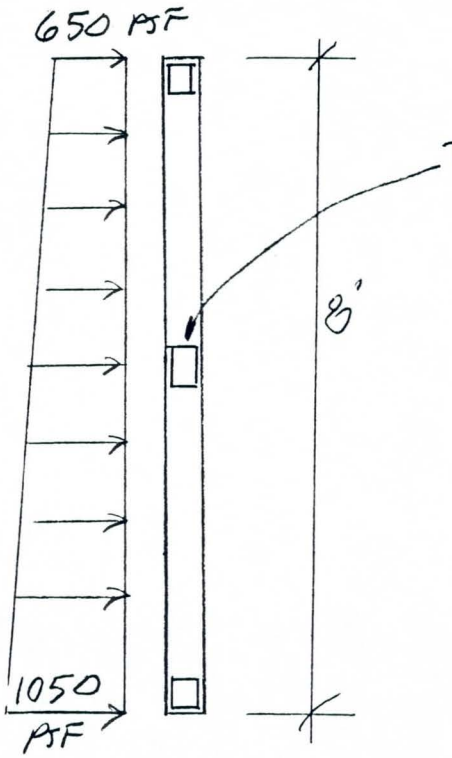

TS 5x5x3/6

$S = 5.36\ IN^3$

UNIFORM LOAD TO MIDDLE STEEL TUBE

$$\left(\frac{1050 + 650}{2}\right) \times 4' = 3{,}400\ PLF$$

DiLEO Engineering
Structural & Civil
2432 W. Peoria • Phoenix, AZ 85029-4727
(602) 395-0756

JOB NO. 9643 SHT. 3 OF
DESC. BY
DATE

PLAN VIEW OF STEEL WALL

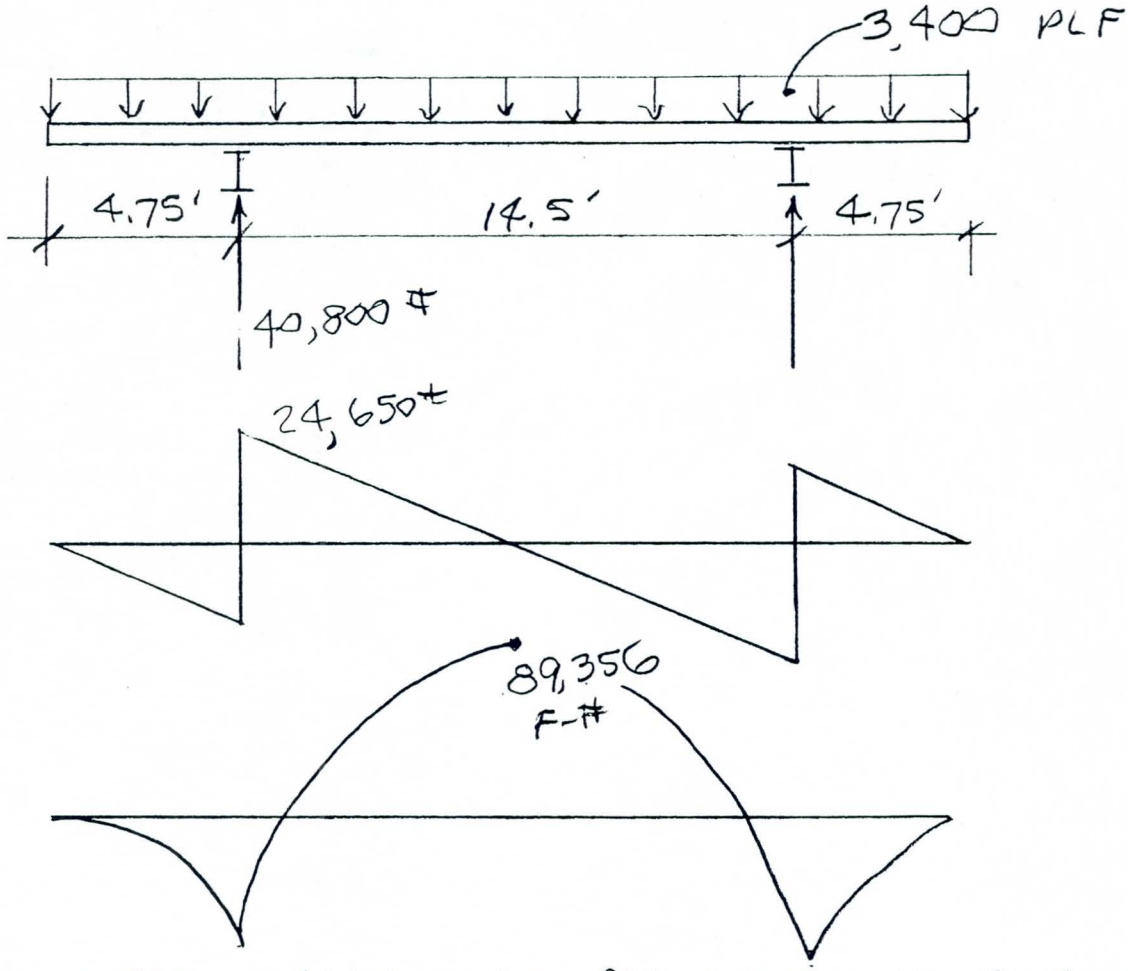

NOTE: STEEL WALLS WILL BE LEFT IN PLACE NOT TO BE REUSED.

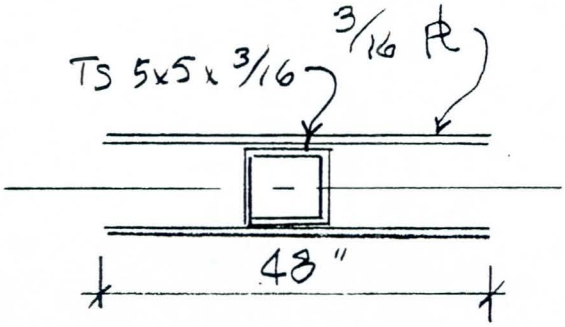

$I_{TS\ 5\times5\times3/16} = 13.4$

$I_{3/16\ PLATE} = 3/16 \times 48'' \times (2.5)^2$

$I = 13.4 + 2(56.25) = 125.9$

$f_b = \dfrac{89{,}356 \times 12 \times 2.5}{125.9}$

$= 21{,}292$ PSI

RISA-2D (R) Version 3.03

DiLeo Engineering

Job_____
Page_____
Date_____

C 9643A Shoring System

==========

Units Option : US Standard

AISC Code Checks : 9th Edition ASD

Shear Deformation: No

P-Delta Effects : No

Redesign : No

Edge Forces : No

A.S.I.F. : 1.333

Node No	X-Coord (ft)	Y-Coord (ft)	Boundary Conditions X-dof (in,K/in)	Y-dof (in,K/in)	Rotation (r,K-ft/r)	Temp. (F)
1	0.00	0.00		R		0.00
2	0.00	14.00				0.00
3	15.00	14.00	R	R		0.00
4	15.00	0.00	R	R		0.00

Material Label	Elastic Modulus (Ksi)	Poisson's Ratio	Thermal Coefficient (F)	Weight Density (K/ft3)	Yield Stress (Fy) (Ksi)
Steel	29000.00	0.30000	0.65000	0.490	36.000

Section Label	Database Shape	Matl. Set	Area (in^2)	Moment of Inertia (in^4)	As Coef	y/y
Pile	W24X84	Steel	24.70	2370.000	1.20	
Beam	W12X53	Steel	15.60	425.000	1.20	

No	I Node	J Node	Section	I Releases x	y	z	J x	y	z	Sec	Sway	End Offsets I (in)	J (in)	Length (ft)
1	1 -	2	Pile											14.00
2	2 -	3	Beam											15.00
3	3 -	4	Pile											14.00
4	1 -	4	Beam											15.00

RISA-2D (R) Version 3.03

DiLeo Engineering

Job_____
Page_____
Date_____

C 9643A Shoring System

No	I Node	J Node	Unbraced Lengths Lb-in (ft)	Lb-out (ft)	Lc (ft)	K Factors In	Out	Bending Coefs Cm	Cb
1	1 -	2							
2	2 -	3							
3	3 -	4							
4	1 -	4							

BLC No.	Basic Load Case Description	Load Totals Nodal	Point	Dist.
1	Lateral Loads	1		1

Nodal Loads, BLC 1: Lateral Loads

Node Number	Global X (K)	Global Y (K)	Moment (K-ft)
2	14.700	0.000	0.000

Member Distributed Loads,BLC 1: Lateral Loads

Memb No	I Node	J Node	Dir	Start Magnitude (K/ft,F)	End Magnitude (K/ft,F)	Start Location (ft)	End Location (ft)
1	1 -	2	X	12.600	4.200	0.000	14.000

Load Combination No.	Description	Self Wt Dir	Fac	BLC Fac	BLC Fac	BLC Fac	BLC Fac	BLC Fac	DYNA	W S	E V
1	Lateral Loads			1	1						

Dynamic Analysis Data

Number of modes (frequencies) : 3
Basic Load Case for masses : None
BLC mass direction of action : X only
Acceleration of Gravity : 32.20 ft/sec**2

Load Combination is 1 : Lateral Loads
Nodal Displacements

Node	Global X (in)	Global Y (in)	Rotation (rad)
1	0.02736	0.00000	-0.00158

C 9643A Shoring System

Node	Global X (in)	Global Y (in)	Rotation (rad)
2	0.02528	-0.00069	0.00148
3	0.00000	0.00000	-0.00019
4	0.00000	-0.00000	0.00019

Load Combination is 1 : Lateral Loads
Reactions

Node	Global X (K)	Global Y (K)	Moment (K-ft)
1	0.00000	-0.22881	0.00000
3	-63.45485	-2.93723	0.00000
4	-68.84515	3.16604	0.00000
Totals	-132.30000	-0.00000	0.00000

Load Combination is 1 : Lateral Loads
Member End Forces

Nodes			I-End			J-End		
No	I	J	Axial (K)	Shear (K)	Moment (K-ft)	Axial (K)	Shear (K)	Moment (K-ft)
1	1-	2	2.94	68.76	33.88	-2.94	48.84	-31.57
2	2-	3	63.54	2.94	31.57	-63.54	-2.94	12.49
3	3-	4	-0.00	0.08	-12.49	0.00	-0.08	13.61
4	1-	4	68.76	-3.17	-33.88	-68.76	3.17	-13.61

Load Combination is 1 : Lateral Loads
AISC Code Checks

Nodes				Member Quarter Points					
No	I	J	Maximum	0	1/4	1/2	3/4	L	Shear
1	1-	2	0.5211	0.1085	0.4050	0.5211	0.3322	0.1017	0.4216
2	2-	3	0.4374	0.4374	0.3506	0.2864	0.2574	0.2971	0.0490
3	3-	4	0.0404	0.0370	0.0379	0.0387	0.0395	0.0404	0.0005
4	1-	4	0.4711	0.4711	0.3775	0.3092	0.2791	0.3217	0.0528

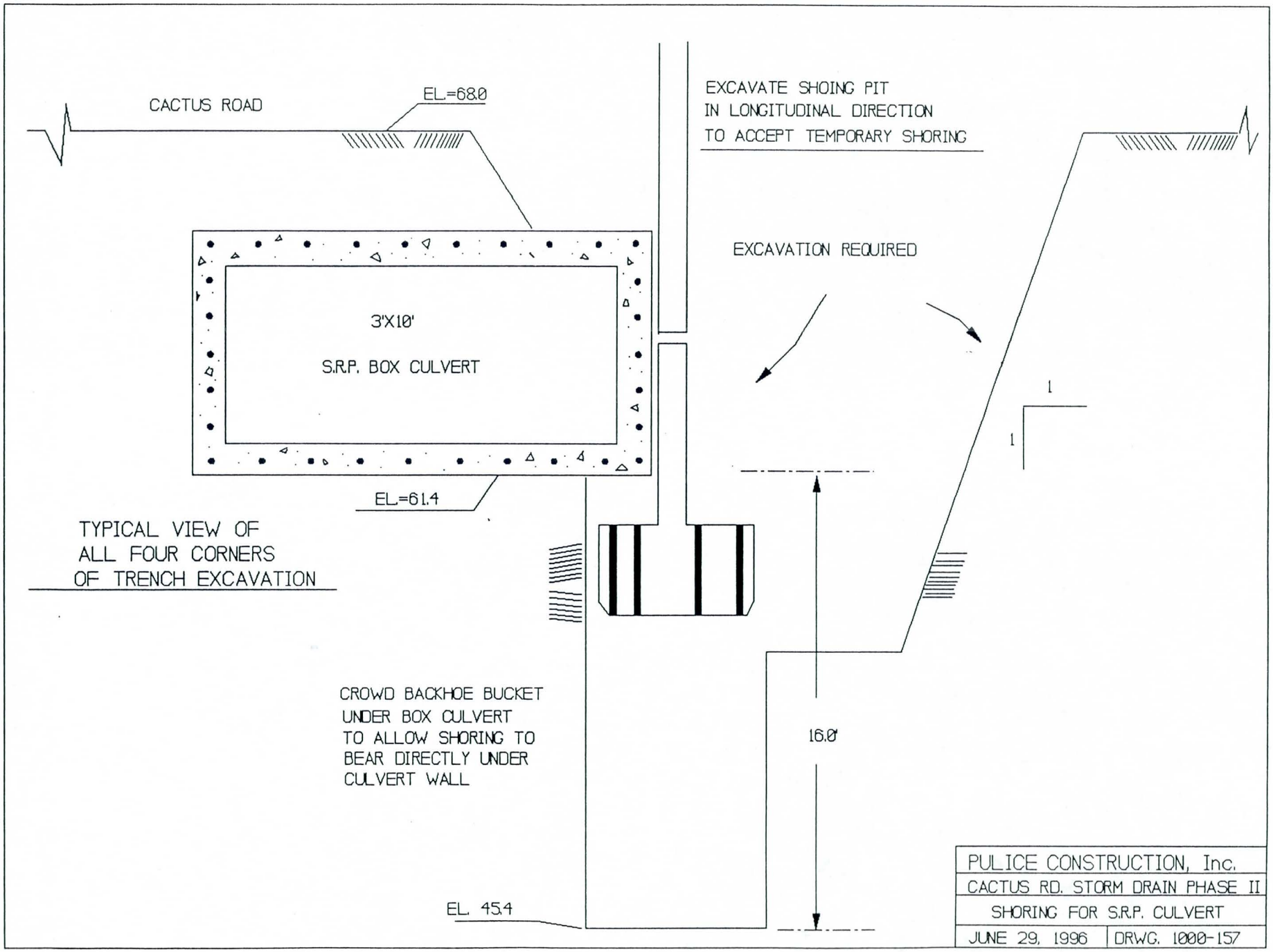
CACTUS ROAD
EL.=68.0
EXCAVATE SHOING PIT
IN LONGITUDINAL DIRECTION
TO ACCEPT TEMPORARY SHORING
EXCAVATION REQUIRED
3'X10'
S.R.P. BOX CULVERT
1
1
EL.=61.4
TYPICAL VIEW OF
ALL FOUR CORNERS
OF TRENCH EXCAVATION
CROWD BACKHOE BUCKET
UNDER BOX CULVERT
TO ALLOW SHORING TO
BEAR DIRECTLY UNDER
CULVERT WALL
16.0'
EL. 45.4
PULICE CONSTRUCTION, Inc.
CACTUS RD. STORM DRAIN PHASE II
SHORING FOR S.R.P. CULVERT
JUNE 29, 1996
DRWG. 1000-157

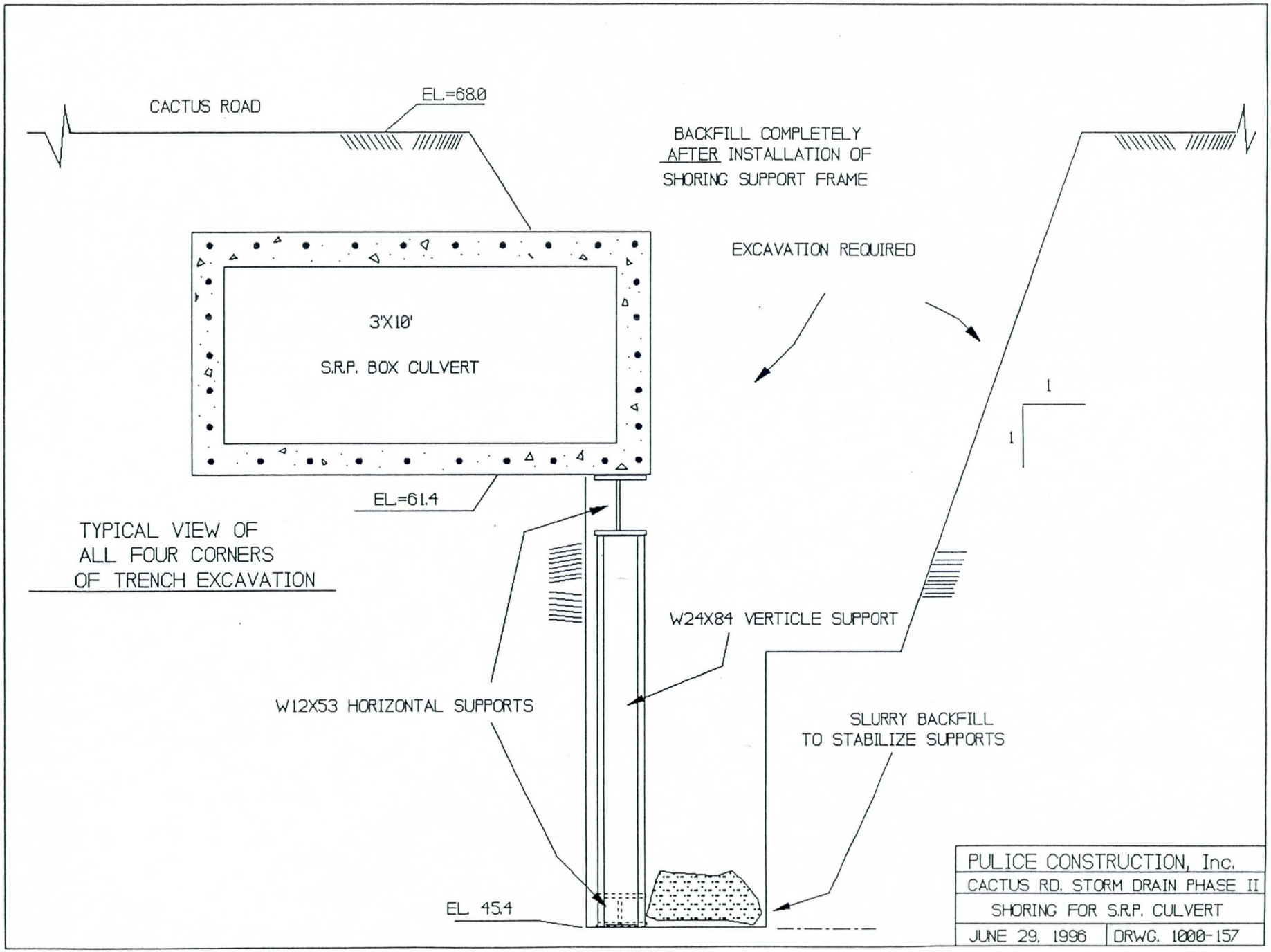
CACTUS ROAD
EL.=68.0
BACKFILL COMPLETELY
AFTER INSTALLATION OF
SHORING SUPPORT FRAME
EXCAVATION REQUIRED
3'X10'
S.R.P. BOX CULVERT
1
1
EL.=61.4
TYPICAL VIEW OF
ALL FOUR CORNERS
OF TRENCH EXCAVATION
W24X84 VERTICLE SUPPORT
W12X53 HORIZONTAL SUPPORTS
SLURRY BACKFILL
TO STABILIZE SUPPORTS
EL. 45.4
PULICE CONSTRUCTION, Inc.
CACTUS RD. STORM DRAIN PHASE II
SHORING FOR S.R.P. CULVERT
JUNE 29, 1996
DRWG. 1000-157

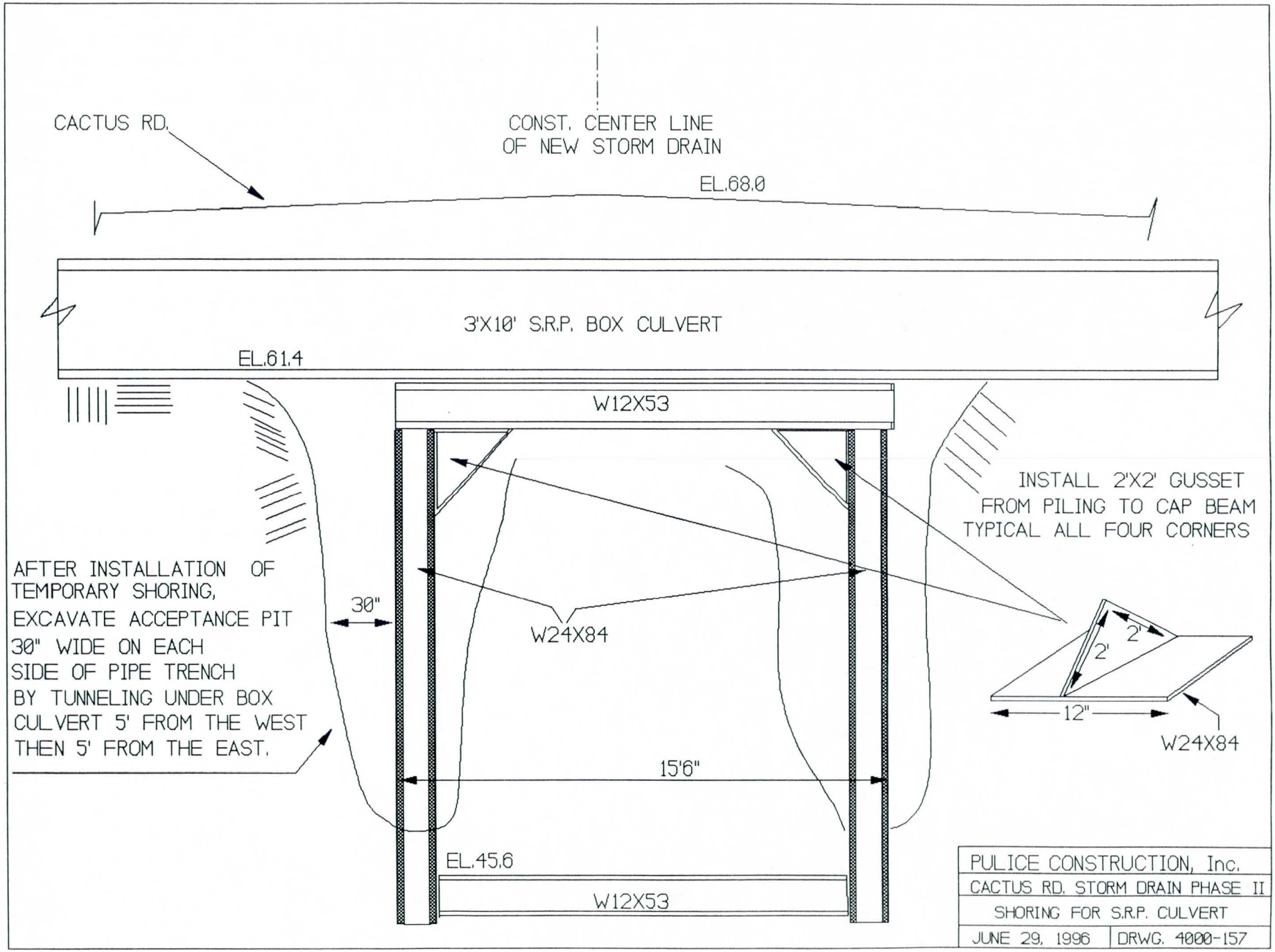
CACTUS RD.
CONST. CENTER LINE
OF NEW STORM DRAIN
EL.68.0
3'X10' S.R.P. BOX CULVERT
EL.61.4
W12X53
INSTALL 2'X2' GUSSET
FROM PILING TO CAP BEAM
TYPICAL ALL FOUR CORNERS
AFTER INSTALLATION OF
TEMPORARY SHORING,
EXCAVATE ACCEPTANCE PIT
30" WIDE ON EACH
SIDE OF PIPE TRENCH
BY TUNNELING UNDER BOX
CULVERT 5' FROM THE WEST
THEN 5' FROM THE EAST.
30"
W24X84
2'
2'
12"
W24X84
15'6"
EL.45.6
W12X53
PULICE CONSTRUCTION, Inc.
CACTUS RD. STORM DRAIN PHASE II
SHORING FOR S.R.P. CULVERT
JUNE 29, 1996
DRWG. 4000-157

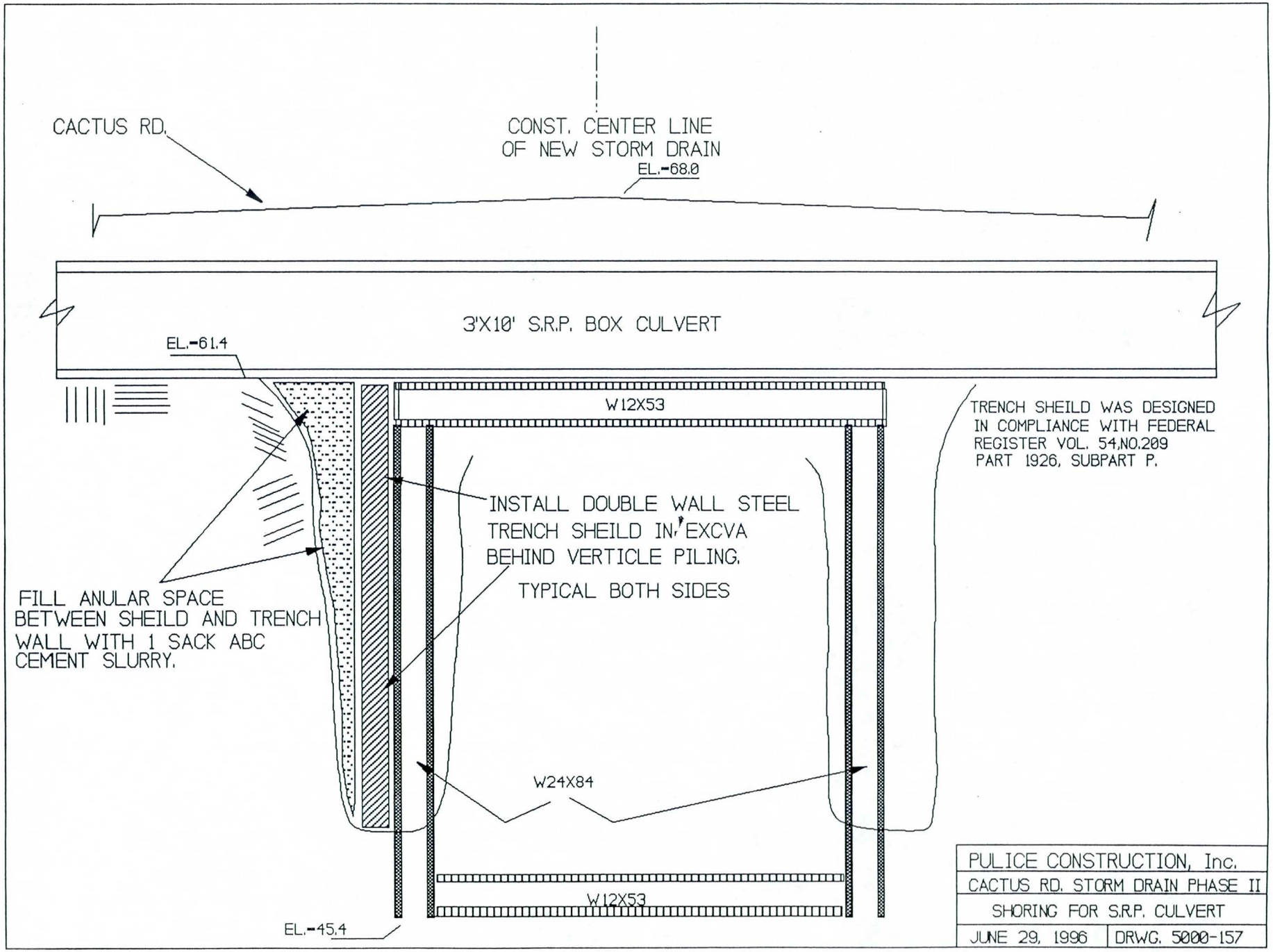
CACTUS RD.
CONST. CENTER LINE
OF NEW STORM DRAIN
EL.-68.0
3'X10' S.R.P. BOX CULVERT
EL.-61.4
W12X53
TRENCH SHEILD WAS DESIGNED
IN COMPLIANCE WITH FEDERAL
REGISTER VOL. 54,NO.209
PART 1926, SUBPART P.
INSTALL DOUBLE WALL STEEL
TRENCH SHEILD IN EXCVA
BEHIND VERTICLE PILING.
TYPICAL BOTH SIDES
FILL ANULAR SPACE
BETWEEN SHEILD AND TRENCH
WALL WITH 1 SACK ABC
CEMENT SLURRY.
W24X84
W12X53
EL.-45.4
PULICE CONSTRUCTION, Inc.
CACTUS RD. STORM DRAIN PHASE II
SHORING FOR S.R.P. CULVERT
JUNE 29, 1996
DRWG. 5000-157

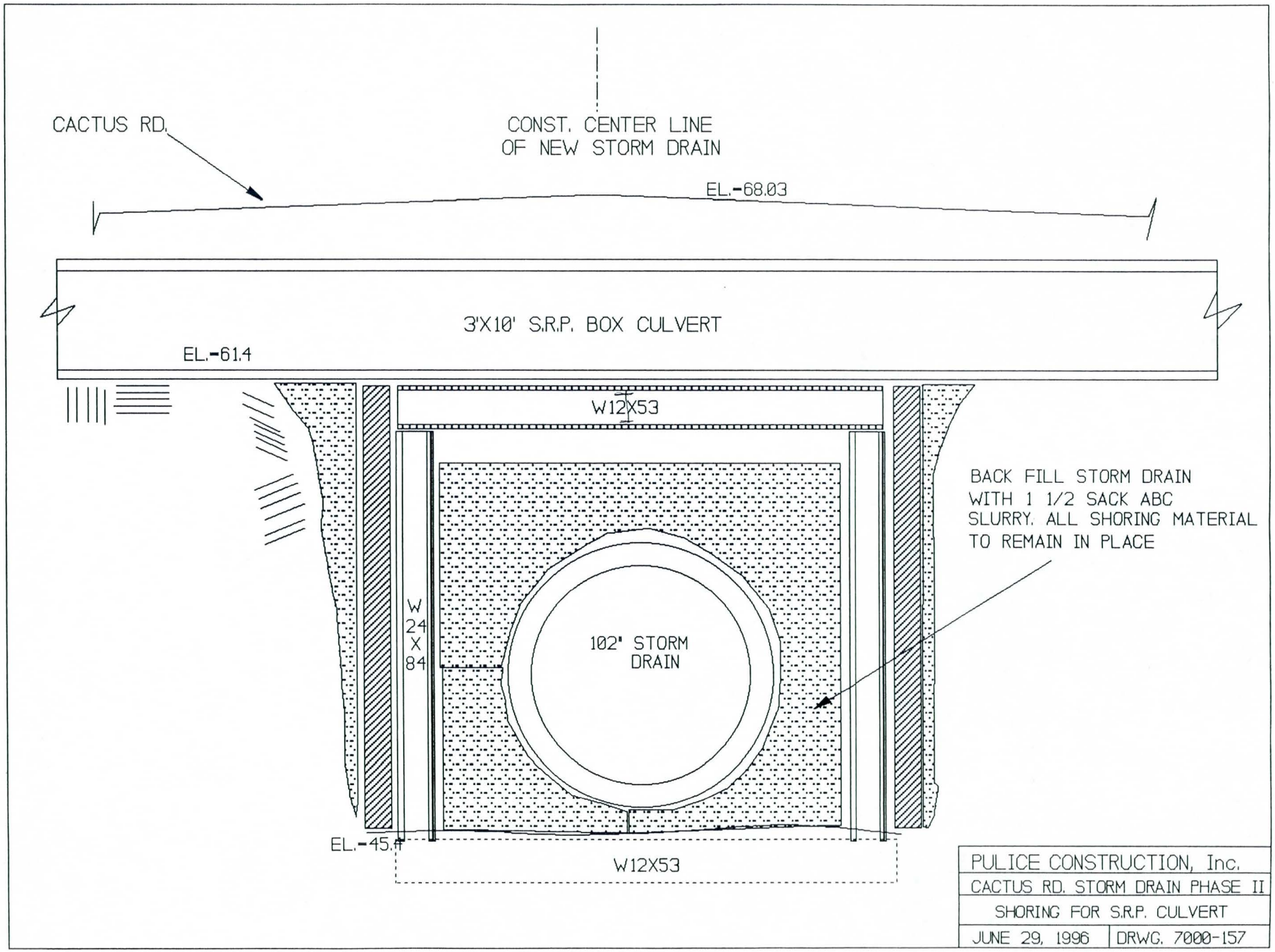
CACTUS RD.
CONST. CENTER LINE
OF NEW STORM DRAIN
EL.-68.03
3'X10' S.R.P. BOX CULVERT
EL.-61.4
W12X53
BACK FILL STORM DRAIN
WITH 1 1/2 SACK ABC
SLURRY. ALL SHORING MATERIAL
TO REMAIN IN PLACE
W
24
X
84
102" STORM
DRAIN
EL.-45.4
W12X53
PULICE CONSTRUCTION, Inc.
CACTUS RD. STORM DRAIN PHASE II
SHORING FOR S.R.P. CULVERT
JUNE 29, 1996
DRWG. 7000-157

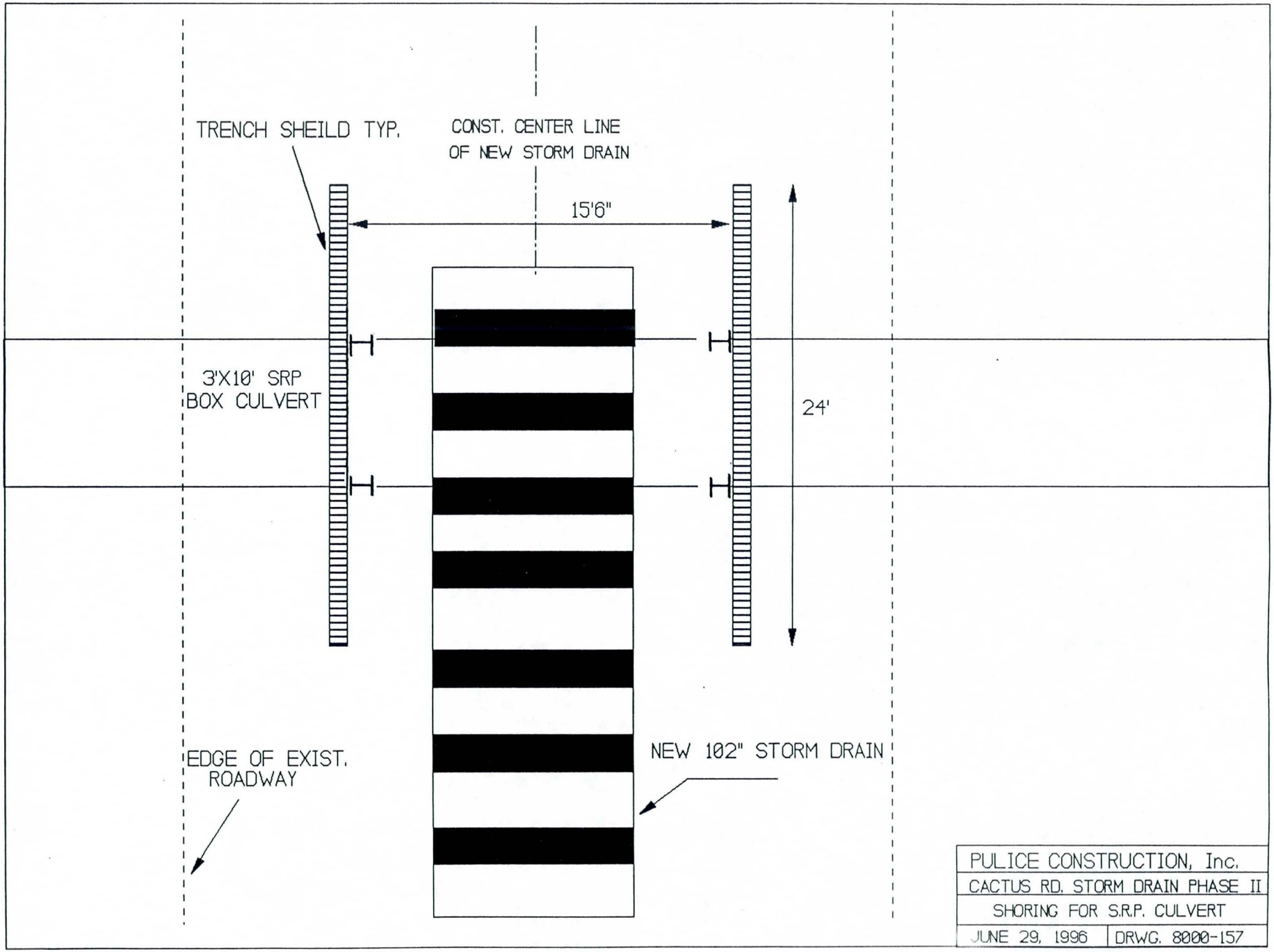
TRENCH SHEILD TYP.
CONST. CENTER LINE
OF NEW STORM DRAIN
15'6"
3'X10' SRP
BOX CULVERT
24'
EDGE OF EXIST.
ROADWAY
NEW 102" STORM DRAIN
PULICE CONSTRUCTION, Inc.
CACTUS RD. STORM DRAIN PHASE II
SHORING FOR S.R.P. CULVERT
JUNE 29, 1996
DRWG. 8000-157