CACTUS ROAD
STORM DRAIN STRUCTURES

FLOOD CONTROL DISTRICT OF MARICOPA COUNTY

PROJECT Cactus Drain PAGE ____ OF ____

DETAIL Special Box Str. COMPUTED KVH DATE 12/96

CHECKED BY ____ DATE ____

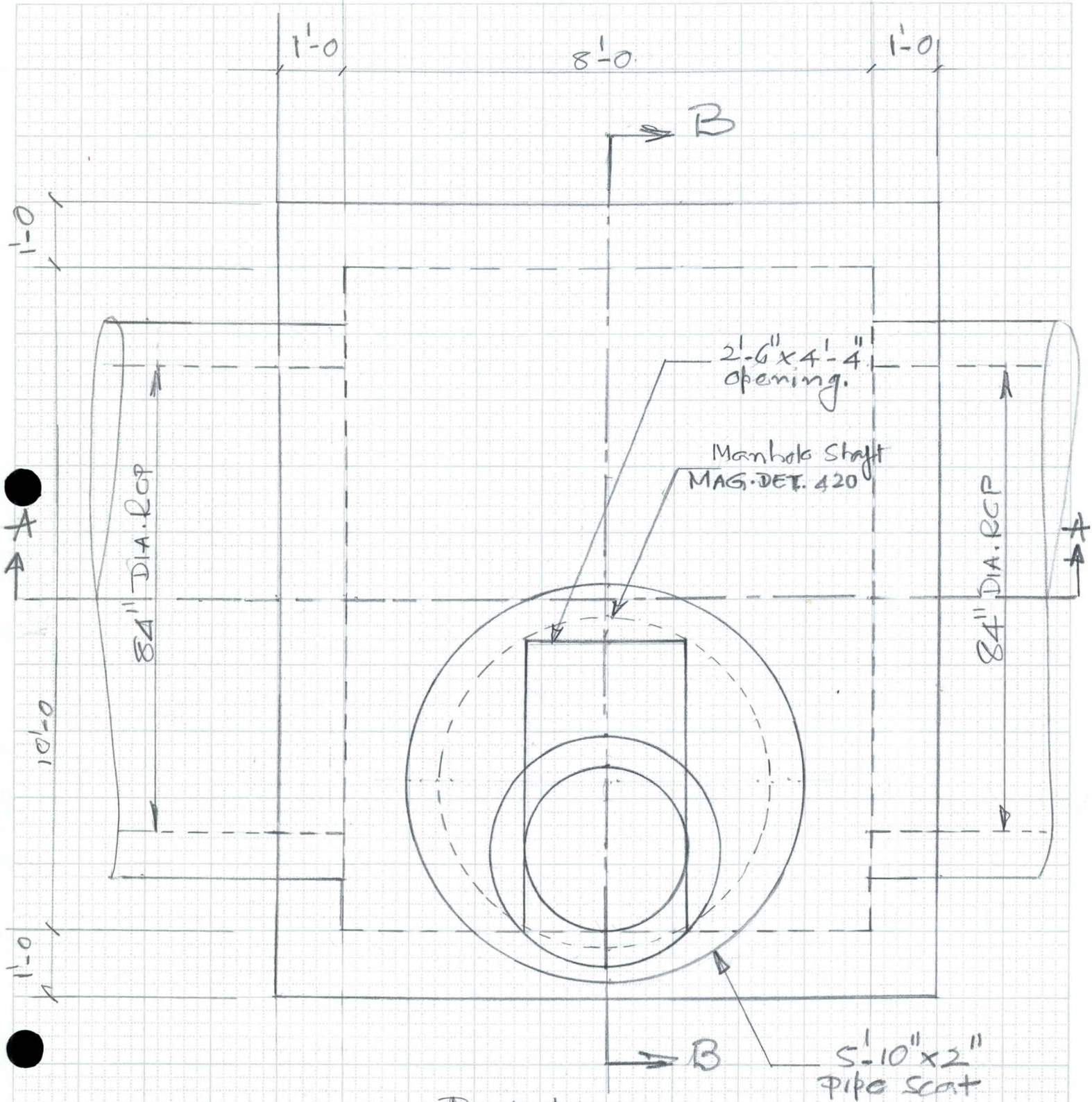

PLAN:
1/2" = 1'-0

6910-153 4-90

FLOOD CONTROL DISTRICT OF MARICOPA COUNTY

PROJECT Cactus Drain PAGE ____ OF ____

DETAIL Special Box Str. COMPUTED KVH DATE 12/96

CHECKED BY ____ DATE ____

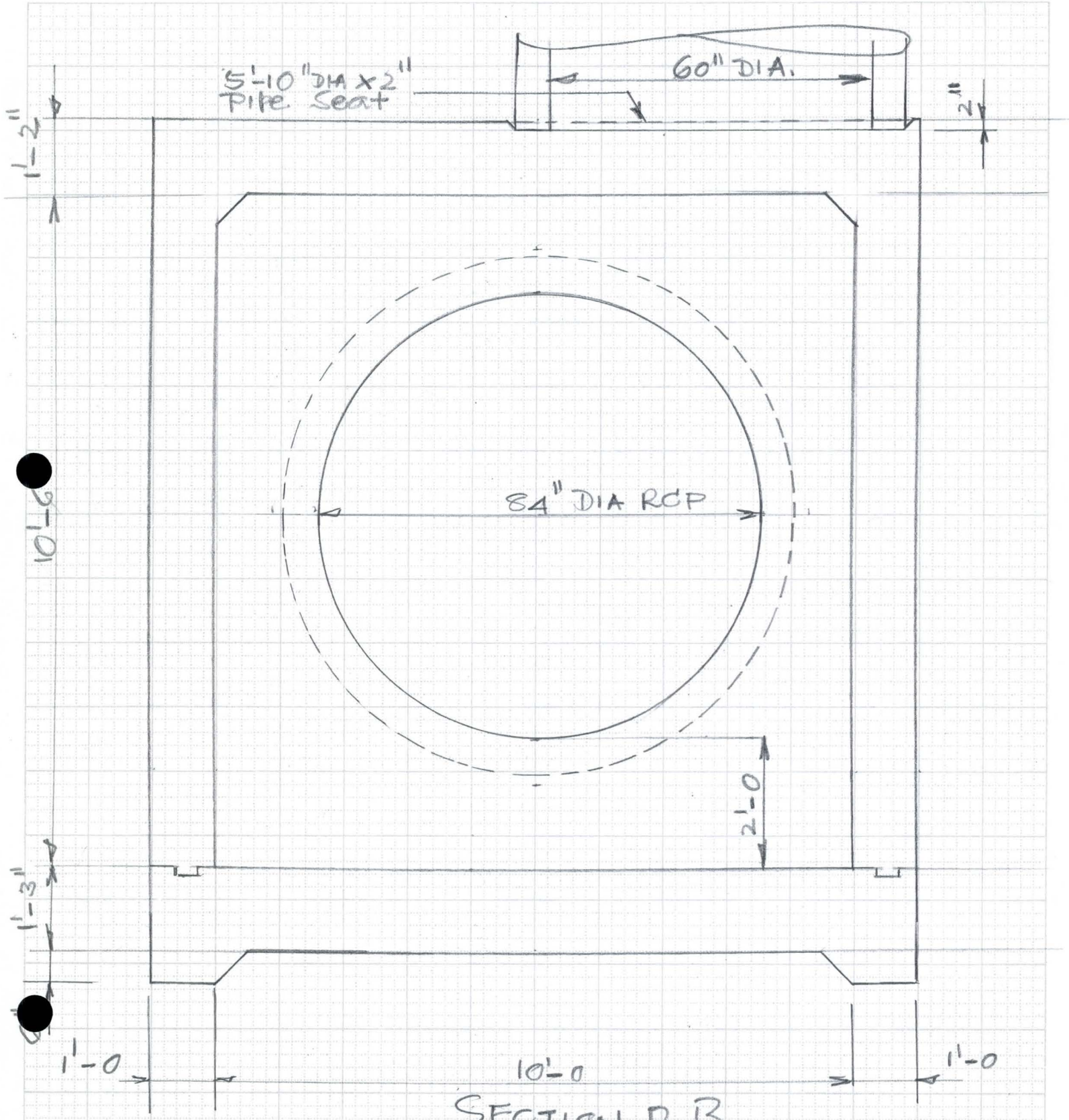

SECTION B-B

½" = 1'-0

6910-153 4-90

FLOOD CONTROL DISTRICT OF MARICOPA COUNTY

PROJECT Cactus Drain PAGE ____ OF ____

DETAIL Special Box Str. COMPUTED KVH DATE 12/96

CHECKED BY ____ DATE ____

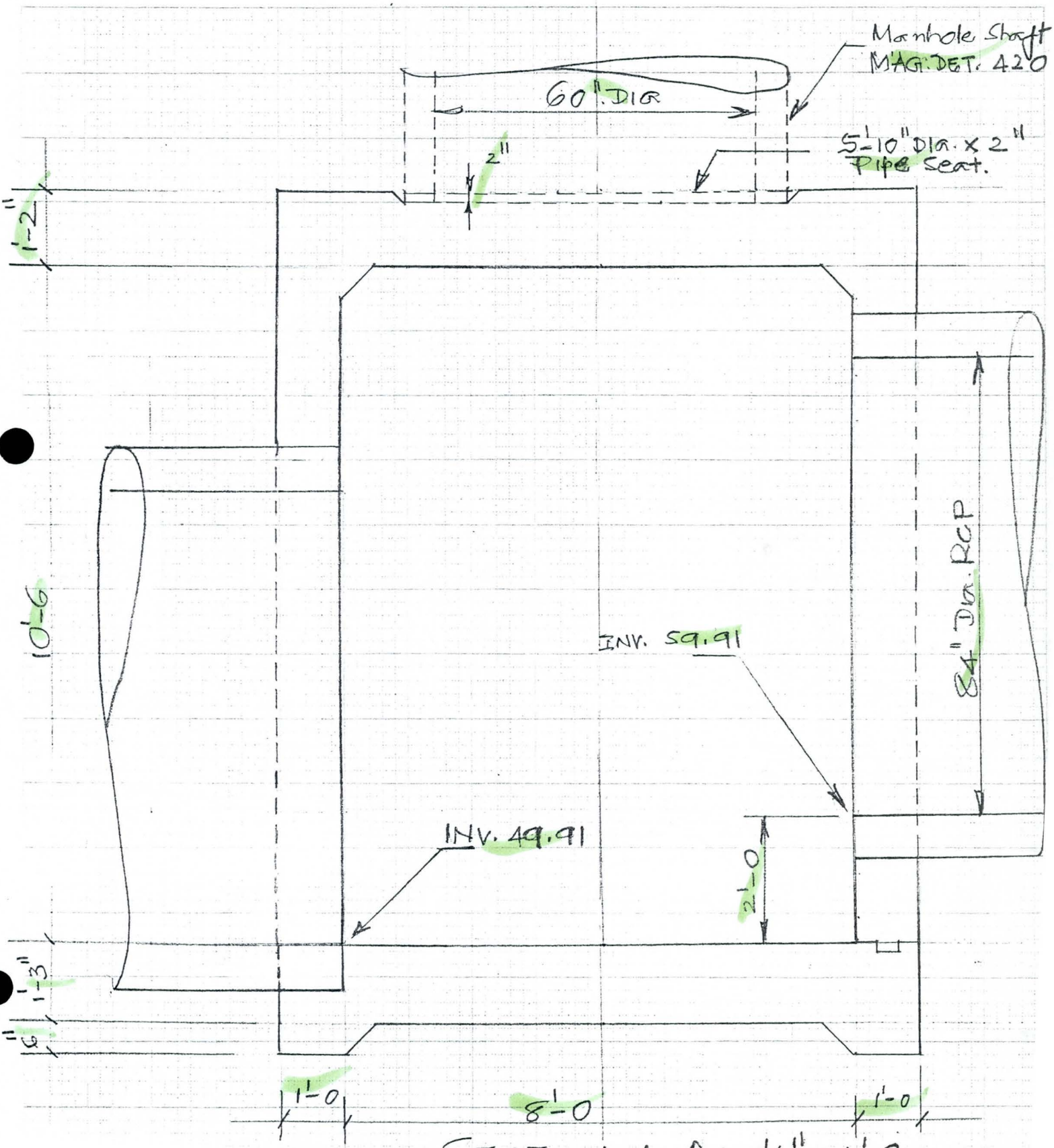

SECTION A-A: 1/2" = 1'-0

FLOOD CONTROL DISTRICT OF MARICOPA COUNTY

PROJECT Cactus Drain PAGE ____ OF ____

DETAIL Special Box Str. COMPUTED KVH DATE 12/96

CHECKED BY ____ DATE ____

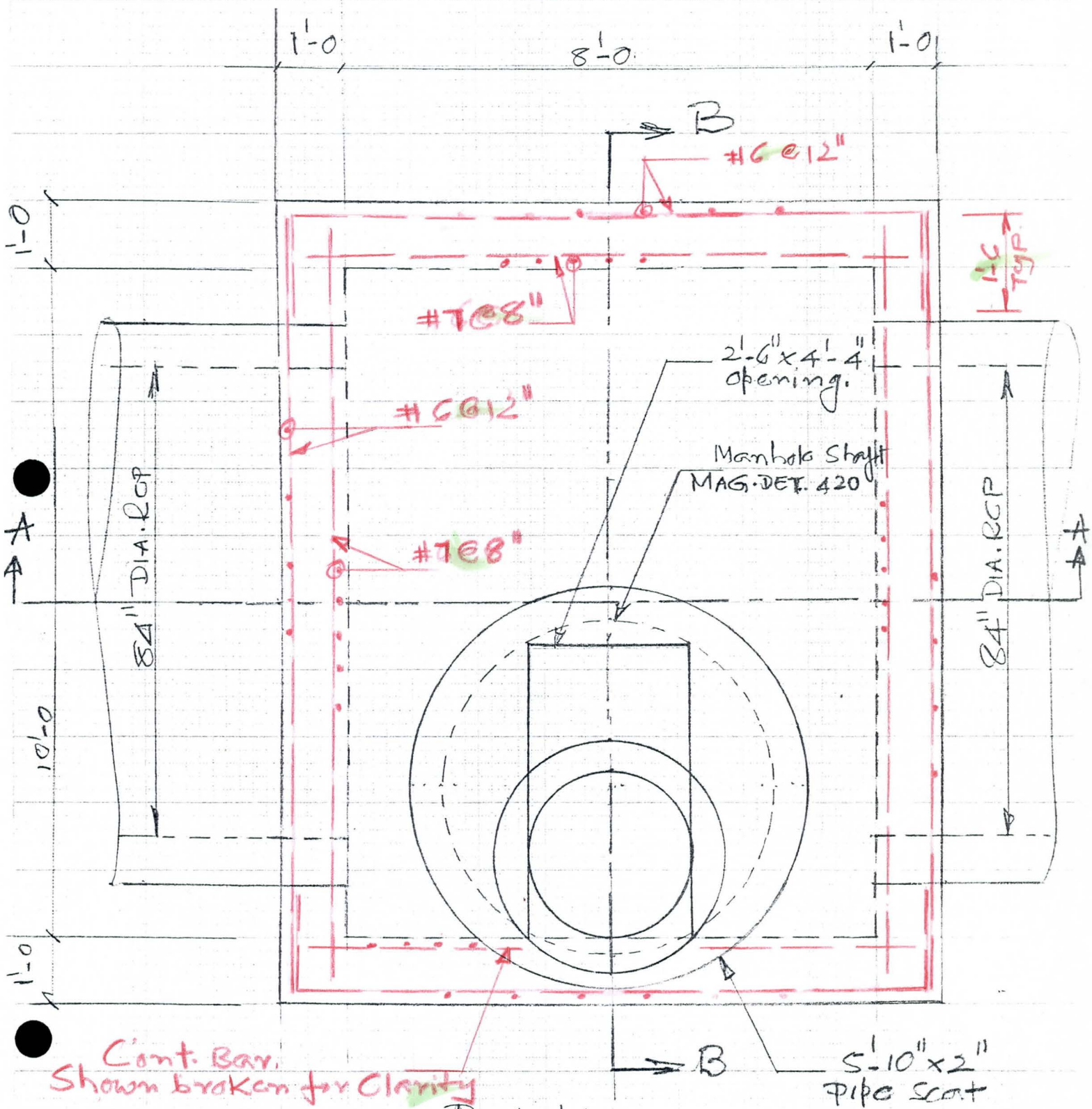

PLAN:
1/2" = 1'-0

FLOOD CONTROL DISTRICT OF MARICOPA COUNTY

PROJECT Cactus Drain PAGE ____ OF ____

DETAIL Special Box Str. COMPUTED KVH DATE 12/96

CHECKED BY ____ DATE ____

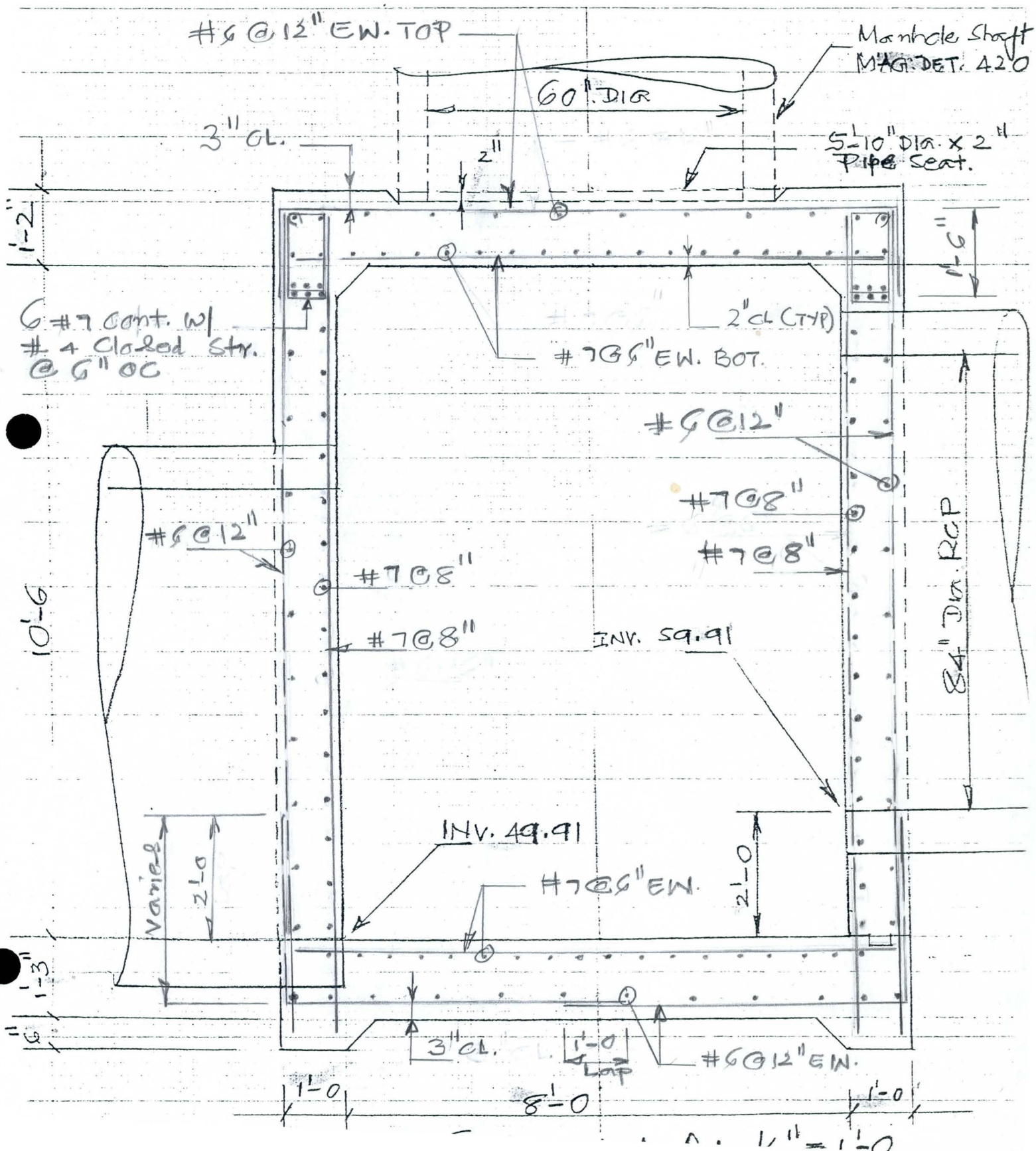

FLOOD CONTROL DISTRICT OF MARICOPA COUNTY

PROJECT Cactus Drain PAGE ____ OF ____

DETAIL Special Box Str. COMPUTED KWH DATE 12/96

STATION 134+08 CHECKED BY ____ DATE ____

Sheet G4

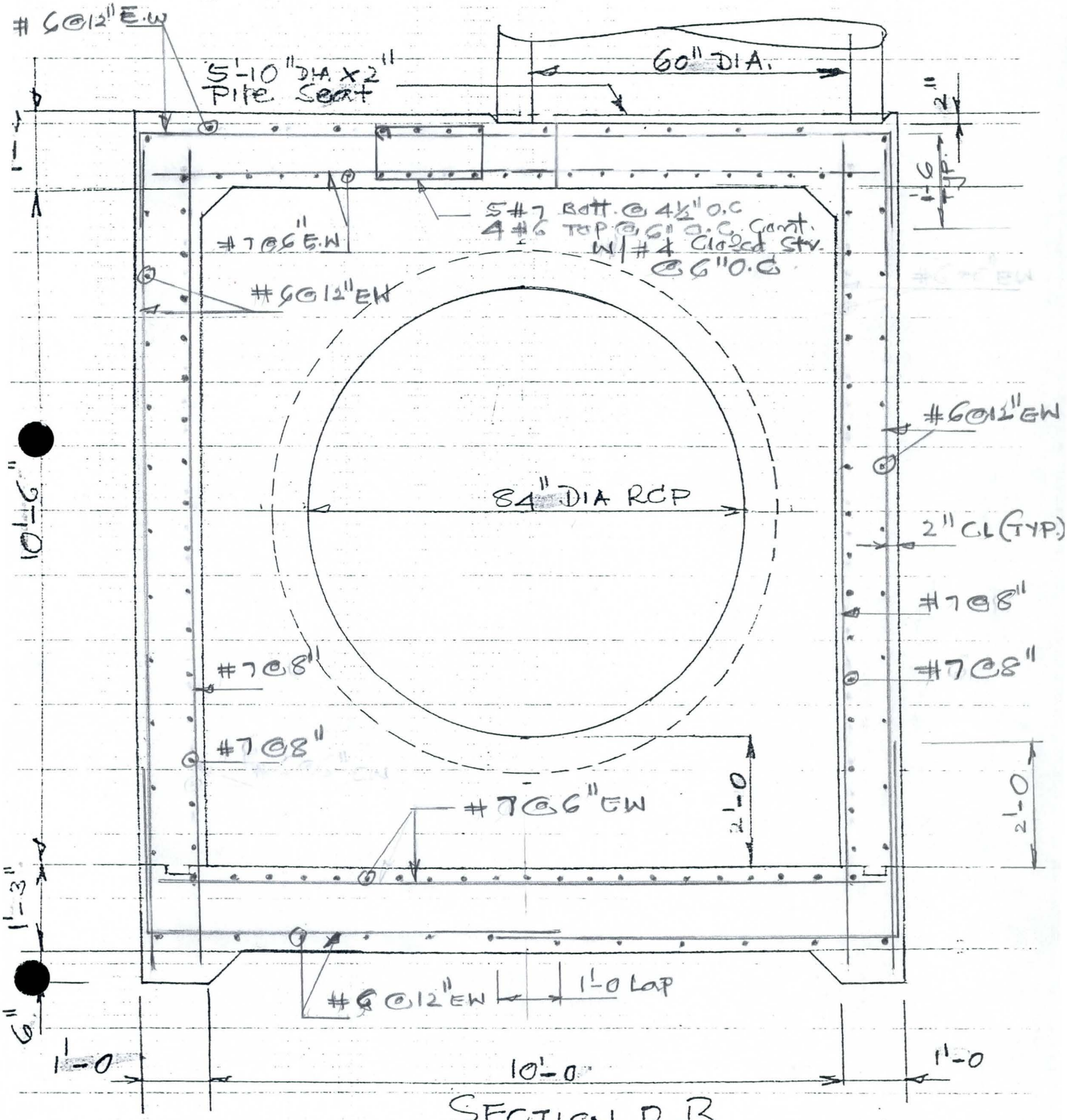

SECTION B-B

FLOOD CONTROL DISTRICT OF MARICOPA COUNTY

PROJECT Cactus Drain PAGE 1 OF 4

DETAIL 67th Ave to 75th Av COMPUTED KVH DATE 9/96

Special Box CHECKED BY DATE

Slab Check

Span = 10' C to C.

Ht. of fill = 12'

wt/ft = (12 x 120) = 1.44 K/ft

wt. of 1'-2" slab = (1.17 x 0.15) = 0.18

1.62

L.L is Negligable

M_s = (1.62 x 10²/8) = 20.3 K/ft

d = [(1'-2") - 2 - 1 - 0.5] = 10.5"

Try #8 bars.

$$A_s = \frac{20.3 \times 12}{24 \times 0.88 \times 10.5}$$

= 1.10 in²

Use #7@6, A_s = 1.20

Shear Check:

V = (1.62 x 10/2) = 8.1 K

b = 12, d = (10.5 - 2) v = 8.1 / (12 x 8.5) = 79 psi

Notch

Shear @ "d" from support

= 8.1 - 1.62 (0.5 + 8.5)/12 = 6.89 K

v = 6.89 / (12 x 8.5) = 67.5 psi

FLOOD CONTROL DISTRICT OF MARICOPA COUNTY

PROJECT Cactus Drain PAGE 2 OF 4

DETAIL 67th Av. to 75th Av COMPUTED KVH DATE 9/96

Special Box CHECKED BY _____ DATE _____

Check Shear using full depth = 1'-2

$d_{eff} = 14 - 2 - 1 - 0.5 = 10.5''$

using # 8 Bars

Shear at "d" $= 8.1 - 1.62\left(\frac{0.5+10.5}{12}\right) = 6.62^K$

$v = \frac{6.62 \times 1000}{12 \times 10.5} = 52.5$ psi

$v(\text{Allow}) = 0.95\sqrt{f'c} = 0.95\sqrt{3000}$

$= 52$ psi

≈ 52.5 psi, lay ok

FLOOD CONTROL DISTRICT OF MARICOPA COUNTY

PROJECT Cactus Drain PAGE 3 OF 4

DETAIL 67th Av to 75th Av COMPUTED KVH DATE 9/96

CHECKED BY _____ DATE _____

Beam Design Check

Span = 10' c to c

$w = 8.1$ K/ft

Self wt = $(1.67 \times 1.0)\,0.15 = 0.25$

$w_{total} = (8.1 + 0.25) = 8.35$ K/ft

$M_s = \frac{8.35 \times 10^2}{8} = 104.4$ K/ft

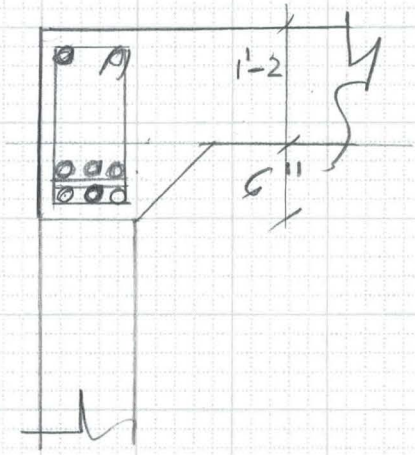

$d_{eff} = (20 - 1.5 - 0.5 - 1.0 - 0.5)$
$= 16.5''$

$A_s = \frac{104.4 \times 12}{24 \times 0.88 \times 16.5}$
$= 3.6$ sq''

using #7 Bars, $3.6/0.6 = 6$
use 6 #7 Bars.

Shear Check:

$V = (8.35 \times \frac{10}{2}) = 41.8^K$

$b = 12$, $d = 16.5$ $\quad v = \left(\frac{41.8}{12 \times 16.5}\right) = 211$ psi

$V @ "d" = 41.8 - 8.35\left(\frac{6'' + 16.5}{12}\right)$ (1.875)
$= 26.1^K$

$v_c = 0.95\sqrt{3000} = 52$ psi

$v - v_c = (211 - 52) = 159$ psi

$S = \frac{A_v f_s}{(v - v_c)\,b} = \frac{(0.2 \times 2)\,24}{159 \times 12} = 5.0''$

$v @ d = (26.1/12 \times 16.5) = 132$ psi. $\quad S = \frac{0.4 \times 24}{132 \times 12} = 6.1''$

use #4 @ 6" Spg.

FLOOD CONTROL DISTRICT OF MARICOPA COUNTY

PROJECT Cactus Drain PAGE 4 OF 4

DETAIL 67th Ave to 75th Av COMPUTED KNH DATE 9/96

CHECKED BY _____ DATE _____

Wall Design Check

Assume At Rest pr

$K = 1 - \sin\phi$

$= 0.5$

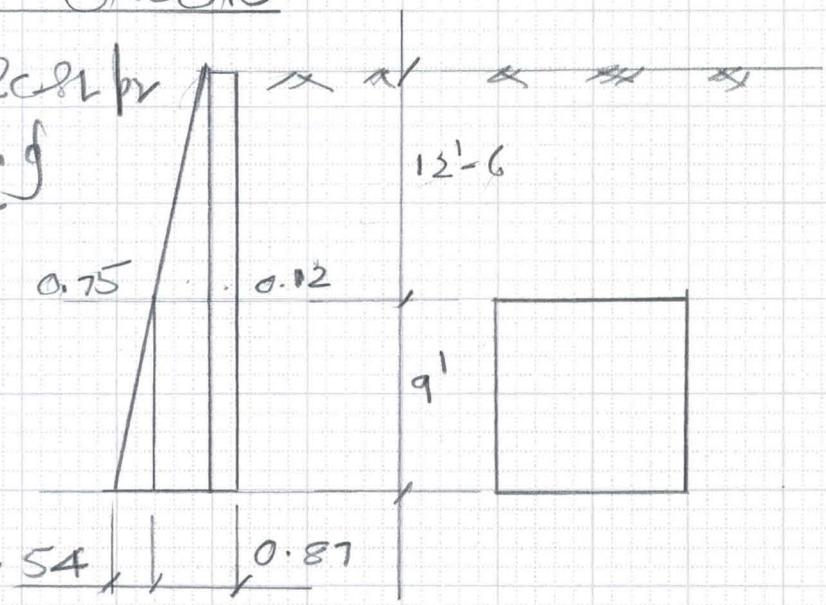

$pr_1 = (0.12 \times 0.5 \times 12.5) = 0.75$ K/ft

$pr_2 = (0.12 \times 0.5 \times 9) = 0.54$

Surch = 2',

$pr_3 = 0.12 \times 0.5 \times 2 = 0.12$

$w_{unif} = 0.87$ K/ft, $M_1 = \frac{wl^2}{10} = \frac{0.87 \times 9^2}{10} = 7.1$ K/ft

Triang. Load: $P = (\frac{0.54}{2} \times 9) = 2.43^K$

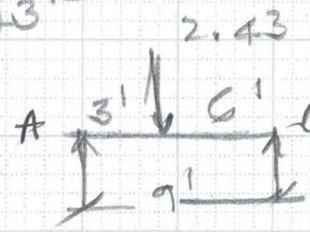

$M_3 = (1.62 \times 3) = 4.86$ K/ft

$R_A = \frac{2.43 \times 6}{9} = 1.62^K$

Using 20% for Neg. Mom.

$M_2 = 0.80(4.86) = 3.9$ K/ft

$M = (7.1 + 3.9) = 11.0$ K/ft

$d_{eff} = (12 - 2 - \frac{0.75}{2}) = 9.625''$, $A_s = \frac{11.0 \times 12}{24 \times 0.88 \times 9.625}$

$= 0.65$ sq''

Use #6 @ 8'' E.W. Inside

#6 @ 12'' E.W. Outside

FLOOD CONTROL DISTRICT OF MARICOPA COUNTY

PROJECT _____ PAGE ____ OF ____

DETAIL _____ COMPUTED _____ DATE ____

_____ CHECKED BY _____ DATE ____

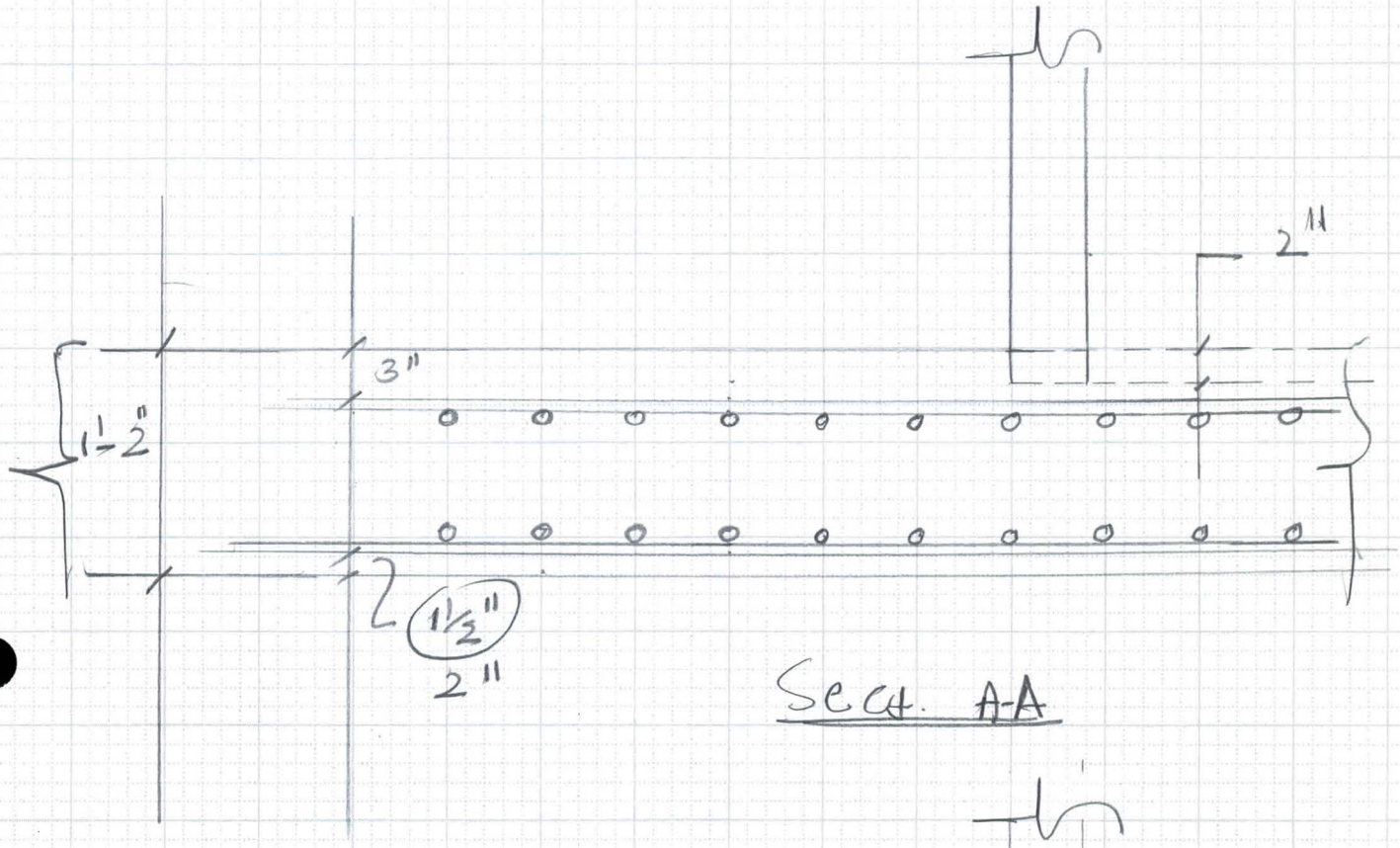

Sect. A-A

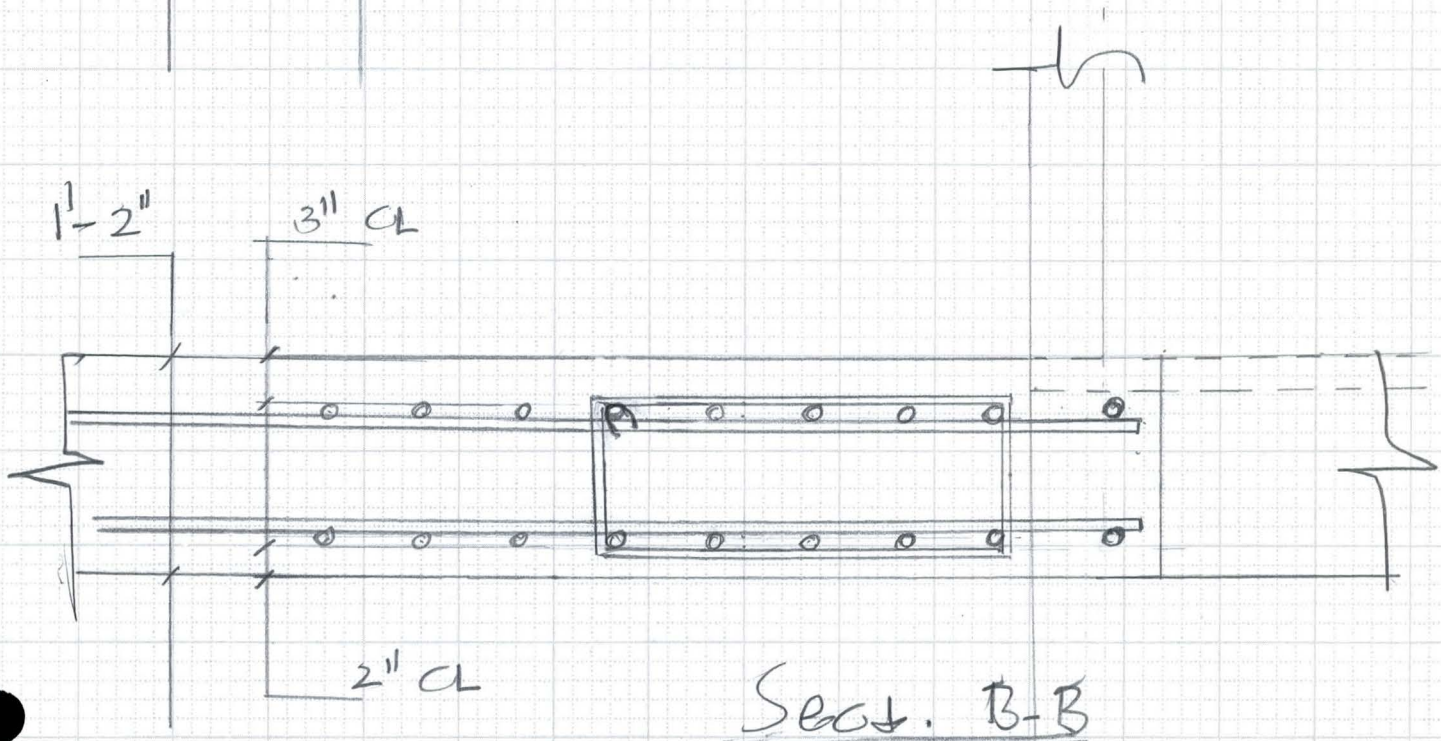

Sect. B-B

FLOOD CONTROL DISTRICT OF MARICOPA COUNTY

PROJECT Cactus Drain PAGE 3 OF

DETAIL Special Box Str. COMPUTED KVH DATE 1/97

Stat. 134+08 CHECKED BY DATE

Wall Design Check:

Assume At rest pr. for the Box Str.

$K = 1 - \sin\phi = 0.5$

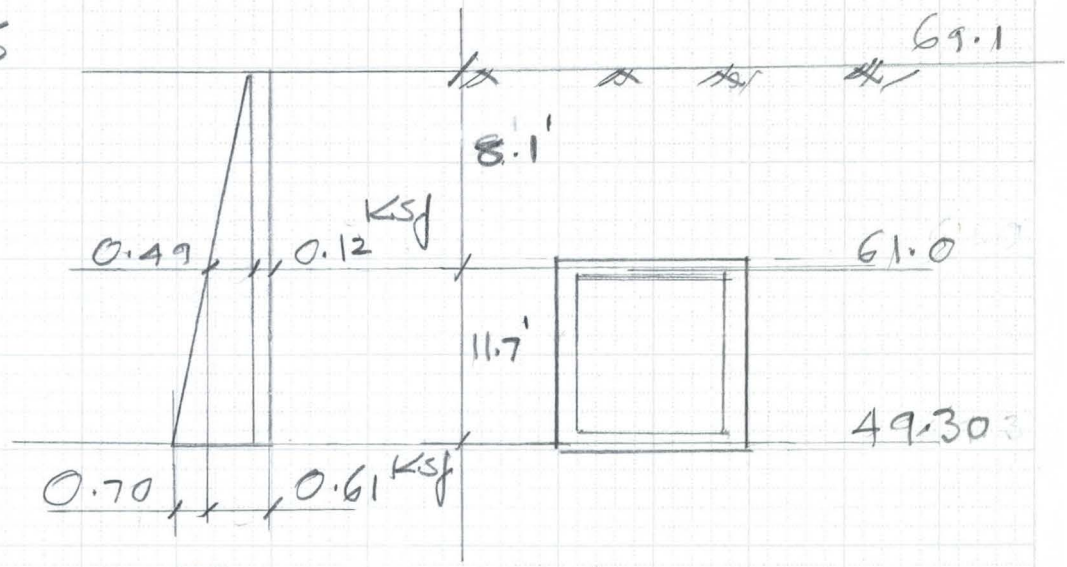

$pr_1 = (0.12 \times 0.5 \times 8.1) = 0.49$ KSF

$pr_2 = (0.12 \times 0.5 \times 11.7) = 0.70$

$pr(\text{Surch}) = (0.12 \times 0.5 \times 2) = 0.12$

$w_{unif} = 0.61$ $M_1 = 0.61 \times 11.7^2/10 = 8.4$ K'

Triang. Load: $P = \frac{0.70}{2} \times 11.7 = 4.1$ K

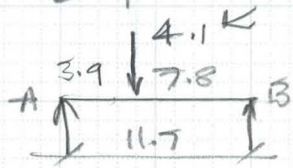

$R_A = \frac{(4.1 \times 7.8)}{11.7} = 2.73$ K

$M_{simple} = (2.73 \times 3.9) = 10.7$ K'

Using 20% for Neg. Mom $M_2 = 0.8 \times 10.7 = 8.6$ K'

$M_{total} = (8.4 + 8.6) = 17.0$ K'

$d_{eff} = (12 - 2 - \frac{0.75}{2}) = 9.625$ $A_s = \frac{17 \times 12}{24 \times 0.88 \times 9.625}$

1.00 in²

Use #7 @ 8" EW. $A_s = 0.90$, as there will be load distribution both ways.

FLOOD CONTROL DISTRICT OF MARICOPA COUNTY

PROJECT Cactus Drain PAGE 1 OF ____

DETAIL Special Box Str. COMPUTED KVH DATE 1/97

Stat. 134+08 CHECKED BY ____ DATE ____

Slab Check:

Span = 11' c to c

Ht. of fill = 8.1'

Soil wt = (8.1 × 0.12) = 0.972 ksf.

Slab wt = (1.17 × 0.15) = 0.176

L.L. may be negligable: (Check)

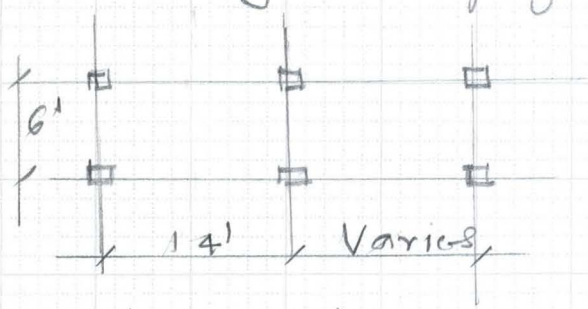

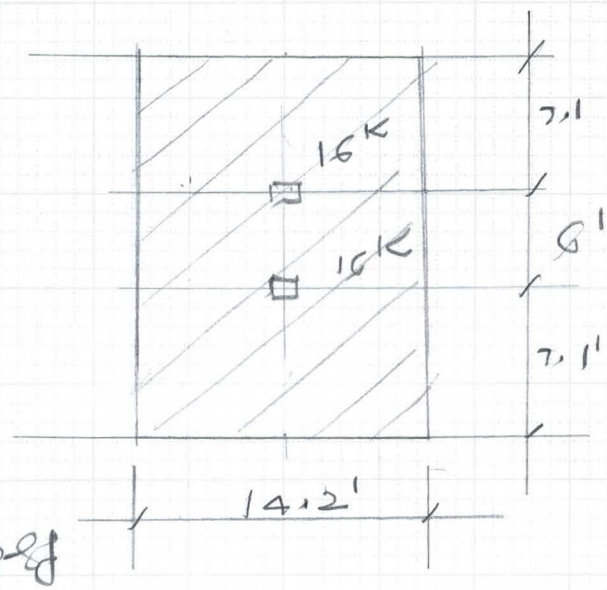

1 3/4 times fill ht

= 1.75 × 8.1 = 14.2'

$$UDL = \frac{16000 \times 2}{14.2 \times 20.2} = 112 \text{ lbs/sf}$$

Wtotal = (0.972 + 0.176 + 0.112) = 1.26 ksf

Try #8 Bars deff = (12 − 2 − 1 − 0.5) = 8.5"

$M_s = 1.26 \times 11^2/8 = 19.1$ k'/'

$$As = \frac{19.1 \times 12}{24 \times 0.88 \times 8.5} = 1.28 \text{ in}^2$$

using #7 @ 6" As = 1.20

say ok

FLOOD CONTROL DISTRICT OF MARICOPA COUNTY

PROJECT Cactus Drain PAGE 2 OF

DETAIL Special Box Str. COMPUTED KVH DATE 1/97

Stat. 134+08 CHECKED BY DATE

Shear Check:

Clear Span = 10'-0

$w = 1.26$ ksf

$V = \left(1.26 \times \frac{10}{2}\right) = 6.3^{K}$

V at 'd' from face of support $= 6.3 - 1.26 \times \frac{8.5}{12}$

$= 5.41^{K}$

$v = \frac{(5.41 \times 1000)}{12 \times 8.5} = 53$ psi

v_c (Allow) $= 0.95\sqrt{f'_c} = 0.95\sqrt{3000} = 52$ psi

Say OK.

6910-153 4-90

FLOOD CONTROL DISTRICT OF MARICOPA COUNTY

PROJECT Cactus Drain PAGE 4 OF

DETAIL Special Box COMPUTED KVH DATE 1/97

Stat. 134+08 CHECKED BY DATE

Beam Design Check.

Beam Spanning over the pipe Span 11' c to c.

W UDL = 1.26 Kip from Page 1

Slab: (4 x 1.26) = 5.04 Kip

Self wt. Bm. (2 x 1.0) 0.15 = 0.30

5.34 Kip

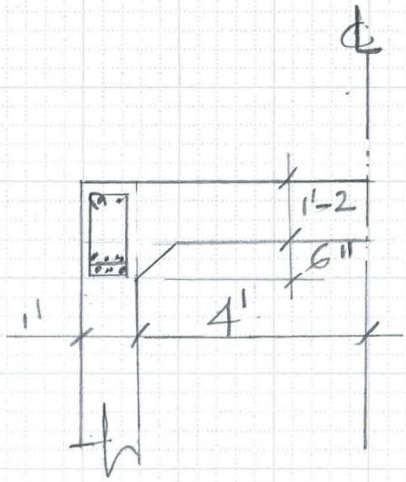

$M_S = 5.34 \times 11^2/8 = 80.8$ Kip

$d_{eff} = (20 - 1.5 - 0.5 - 1 - 0.5) = 16''$

$$A_s = \frac{80.8 \times 12}{24 \times 0.88 \times 16}$$

$= 2.9$ sq''

Using #7 Bars, $A_s = 0.6$

No. of #7 Bars $= \frac{2.9}{0.6} \simeq 5$ #7 Bars.

Using #6 Bars $A_s = 0.44$

No. of #6 Bars $= \frac{2.9}{0.44} \simeq 7$ #6 Bars

∴ Used 6 #7 are ok.

6910-153 4-90

FLOOD CONTROL DISTRICT OF MARICOPA COUNTY

PROJECT Cactus Drain PAGE ____ OF ____

DETAIL Special Box. Str. COMPUTED KVH DATE 1/97

Stat. 134 + 08 CHECKED BY ____ DATE ____

Check walls using PCA Coeff.:

$b = 11.7,\ a = 9$

$\frac{b}{a} = \left(\frac{11.7}{9}\right) = 1.3$

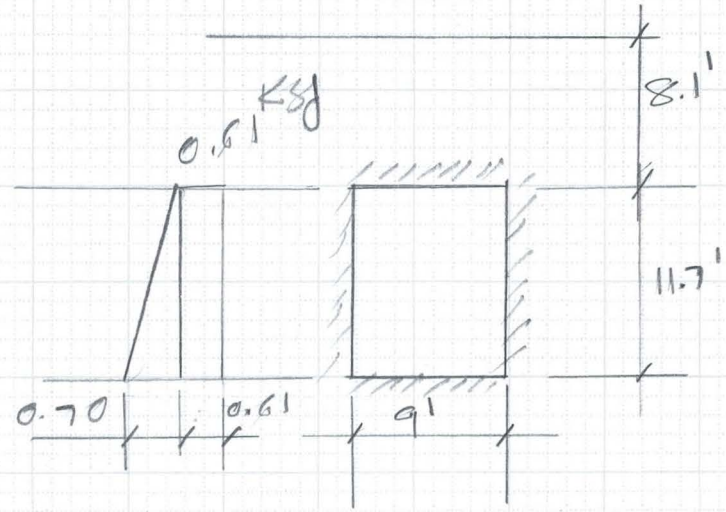

Eqv. triangular Load to UDL

$P = \left(\frac{0.70}{2}\right) 11.7 = 4.1^K$

$M_{max} = 0.1283\ WL = 0.1283 \times 4.1 \times 11.7 = 6.2$

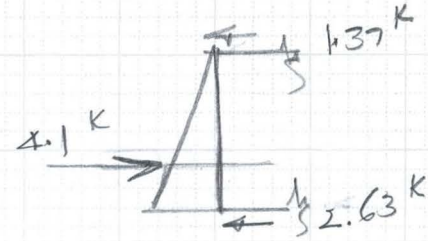

$M = 6.2 = w \times \frac{11.7^2}{8}$

Eqv. UDL. $w = 0.36$

Total UDL $= (0.36 + 0.61) = 0.97^{Ksf}$

6910-153 4-90

FLOOD CONTROL DISTRICT OF MARICOPA COUNTY

PROJECT Cactus Drain PAGE 1 OF

DETAIL Trench Shoring COMPUTED KVH DATE 7/96

Below SRP Box. Culvert CHECKED BY DATE

$$f_c = \frac{2M}{jkbd^2}$$

$b = 13''$, $d = 56''$, $d_{eff} = 52''$

$M = 168.8$ kft

By Each Bm. = 84.4

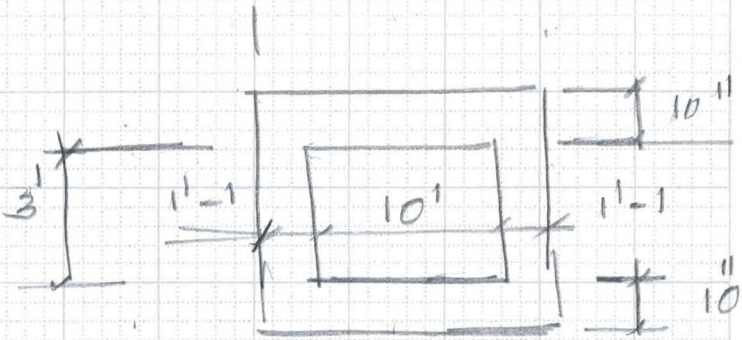

$$f_c = \frac{2(84.4 \times 12)}{0.97 \times 0.096 \times 13 \times 52^2} = 618 \text{ psi}$$

Temp Condition:

Span (Clear) = 10'

Wt/ft = 3 × 62.4 = 187 lbs/ft + (150 × 10/12) = 312 lbs/ft

Spanning Betw^n Beam: $M_s = \frac{0.312 \times 10^2}{8} = 3.9$

$$f_c = \frac{2 \times 3.9 \times 12}{0.97 \times 0.096 \times 12 \times 10^2} = 837 \text{ psi}$$

Very High for Conc. in Ten.

$$M_s = \frac{0.312 \times 7.5^2}{8} = 2.19$$

with an Intermediate Beam Supp. bet^n two main frames

$$f_c = \frac{2 \times 2.19 \times 12}{0.97 \times 0.096 \times 12 \times 10^2} = 470 \text{ psi}$$

Still too High for Tension in Concrete.

6910-153 4-90

FLOOD CONTROL DISTRICT OF MARICOPA COUNTY

PROJECT Cactus Drain PAGE 2 OF

DETAIL Trench Shoring COMPUTED KVH DATE 7/96

Below Sep. Box Culvert CHECKED BY DATE

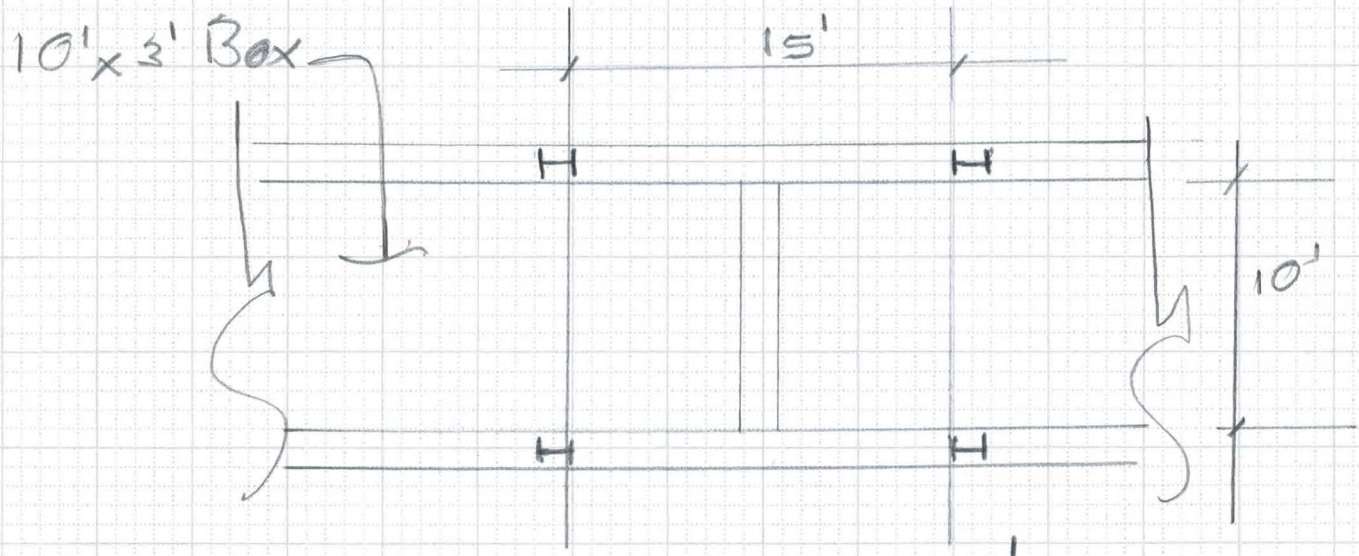

Unif. Load on Bottom Slab : 312 lbs/ft

$M_s = \frac{0.312 \times 10^2}{8} = 3.9$ K'

Using a 1/2" Steel ft, $S = \frac{12 \times 0.5^2}{6} = 0.5$

$M = fS$, $S = \frac{3.9 \times 12}{24} = 1.95$

Try 1" Steel ft, $S = \frac{12 \times 1^2}{6} = 2.00$

Need a 1" Steel ft to Span 10' Betn the two Frames

6910-153 4-90

FLOOD CONTROL DISTRICT OF MARICOPA COUNTY

PROJECT Cactus Drain PAGE 3 OF ____

DETAIL Trench Shoring COMPUTED KVH DATE 7/96

Below SRP. Box Culvert CHECKED BY ____ DATE ____

Using a Beam in the middle Betn the two W12x53

Loading on the Beam:

Conc. Slab: $(7.5 \times \frac{10}{12})0.15 = 0.94$ K/ft

water: $(7.5 \times 3 \times 62.4) = 1.40$ kpf

2.34 kpf

$M_s = 2.34 \times 10^2/8 = 29.3$ kft

$M = fS$ $S_{reqd} = \frac{29.3 \times 12}{24} = 14.7$ in^3

Using W12x19, $S_x = 21.3$ $I = 130$

Check Defln:

$\Delta_{max} = \frac{5}{384} \frac{wl^4}{EI}$ $wL = (2.34 \times 10) = 23.4$ K

$= \frac{5}{384} \times \frac{23.4 \times (10 \times 12)^3}{(29 \times 10^3)(130)} = 0.14''$

Allow Defln $\frac{L}{360} = \frac{10 \times 12}{360} = 0.33$

Try W8x24, $I = 82.8$, $S_x = 20.9 > 14.7$

$\Delta_{max} = (0.14 \times \frac{130}{82.8}) = 0.22''$

Still Less than Allow. 0.33

6910-153 4-90

FLOOD CONTROL DISTRICT
of
MARICOPA COUNTY

Interoffice memorandum

DATE: **APR. 3, 1996**
TO: **MAL** MAL
FROM: **KVH** KVH.
SUB: **CACTUS ROAD STORM DRAIN**

The following are the review comments for the shop drawings of Cactus road storm drain from 83rd Ave. To 75th Ave.

Dwg.No.12: At Sta.94+95, shows a dimension of V=5.37' and should be corrected to 2.37', as shown on sht.47 of 75 of Contract drawings. Therefore dimension of Left "A"=86.68" and Left "B"=23.22" should also be corrected.

Sht.1&2: Joint details showing longitudinal bars, does not show proper clearance from the end of the unit.

Why is the bottom longitudinal bar shown for the left unit, not extended to the end with a proper clearance ?

Conn.Pipe: Connector pipe summary sht. at Sta.86+74, shows a 18" Dia.pipe and should be corrected to 15".

Sta.100+98, shows the run length of the connector pipe as 67',which differs from 61' as shown on sht.48 of 75 of contract drawings.

Sta.106+00,shows the run length of the connector pipe as 29',which differs from 32' as shown on the contract drawings.

Sta.126+27, shows a 15" Dia.pipe and should be corrected to 24".

PULICE CONSTRUCTION INC.

2033 WEST MOUNTAIN VIEW ROAD
PHOENIX, ARIZONA 85021
(602) 944-2241

LETTER OF TRANSMITTAL

DATE 07/03/96	JOB NO. 160-OC-024
ATTENTION Mr. Duke Yager, Const.Coord.	
REGARDING Cactus Road, 75th to 83rd Avenue	
Project No. FCD 95-42	

TO Flood Control District
2801 West Durango Street
Phoenix, Arizona 85009

WE ARE SENDING YOU ☒ Attached ☐ Under separate cover via _____ the following items:

☐ Shop drawings ☐ Prints ☐ Plans ☐ Samples ☐ Specifications
☐ Copy of letter ☐ Change order ☐ _____

COPIES	DATE	NO.	DESCRIPTION
1			108" Storm Drain Pipeline Below a Box Culvert

THESE ARE TRANSMITTED as checked below:

☒ For approval ☐ Approved as submitted ☐ Resubmit _____ copies for approval
☐ For your use ☐ Approved as noted ☐ Submit _____ copies for distribution
☐ As requested ☐ Returned for corrections ☐ Return _____ corrected prints
☐ For review and comment ☐ _____
☐ FOR BIDS DUE _____ 19_____ ☐ PRINTS RETURNED AFTER LOAN TO US

REMARKS

FLOOD CONTROL DISTRICT
RECEIVED
JUL 30 1996
CENG | P&PM
DEP | REC
ADMIN | LMGT
FINANCE | FILE
C&M
ENGR
REMARKS

COPY TO _____ SIGNED: Mimi K Sankey

FORM NO. 125

If enclosures are not noted, kindly notify us at once

FLOOD CONTROL DISTRICT
of
MARICOPA COUNTY

Interoffice memorandum

DATE: **APR. 3, 1996**
TO: **MAL**
FROM: **KVH**
SUB: **CACTUS ROAD STORM DRAIN**

The following are the review comments for the shop drawings of Cactus road storm drain from 83rd Ave. To 75th Ave.

Dwg.No.12: At Sta.94+95, shows a dimension of V=5.37' and should be corrected to 2.37', as shown on sht.47 of 75 of Contract drawings. Therefore dimension of Left "A"=86.68" and Left "B"=23.22" should also be corrected.

Sht.1&2: Joint details showing longitudinal bars, does not show proper clearance from the end of the unit.

Why is the bottom longitudinal bar shown for the left unit, not extended to the end with a proper clearance ?

Conn.Pipe: Connector pipe summary sht. at Sta.86+74, shows a 18" Dia.pipe and should be corrected to 15".

Sta.100+98, shows the run length of the connector pipe as 67',which differs from 61' as shown on sht.48 of 75 of contract drawings.

Sta.106+00,shows the run length of the connector pipe as 29',which differs from 32' as shown on the contract drawings.

Sta.126+27, shows a 15" Dia.pipe and should be corrected to 24".

FLOOD CONTROL DISTRICT
of
MARICOPA COUNTY

Interoffice memorandum

Revised

DATE: **APR. 3, 1996**
TO: **MAL**
FROM: **KVH**
SUB: **CACTUS ROAD STORM DRAIN**

The following are the review comments for the shop drawings of Cactus road storm drain from 83rd Ave. To 75th Ave.

Dwg.No.12: At Sta.94+95, shows a dimension of V=5.37' and should be corrected to 2.37', as shown on sht.47 of 75 of Contract drawings. Therefore dimension of Left "A"=86.68" and Left "B"=23.22" should also be corrected.

Sht.1&2: Joint details showing longitudinal bars, does not show proper clearance from the end of the unit.

Why is the bottom longitudinal bar shown for the left unit, not extended to the end with a proper clearance ?

Conn.Pipe: Connector pipe summary sht. at Sta.86+74, shows a 18" Dia.pipe and should be corrected to 15".

FLOOD CONTROL DISTRICT OF MARICOPA COUNTY

PROJECT Cactus Drain PAGE ____ OF ____

DETAIL Manhole Base COMPUTED KVH DATE 10/96

CHECKED BY ____ DATE ____

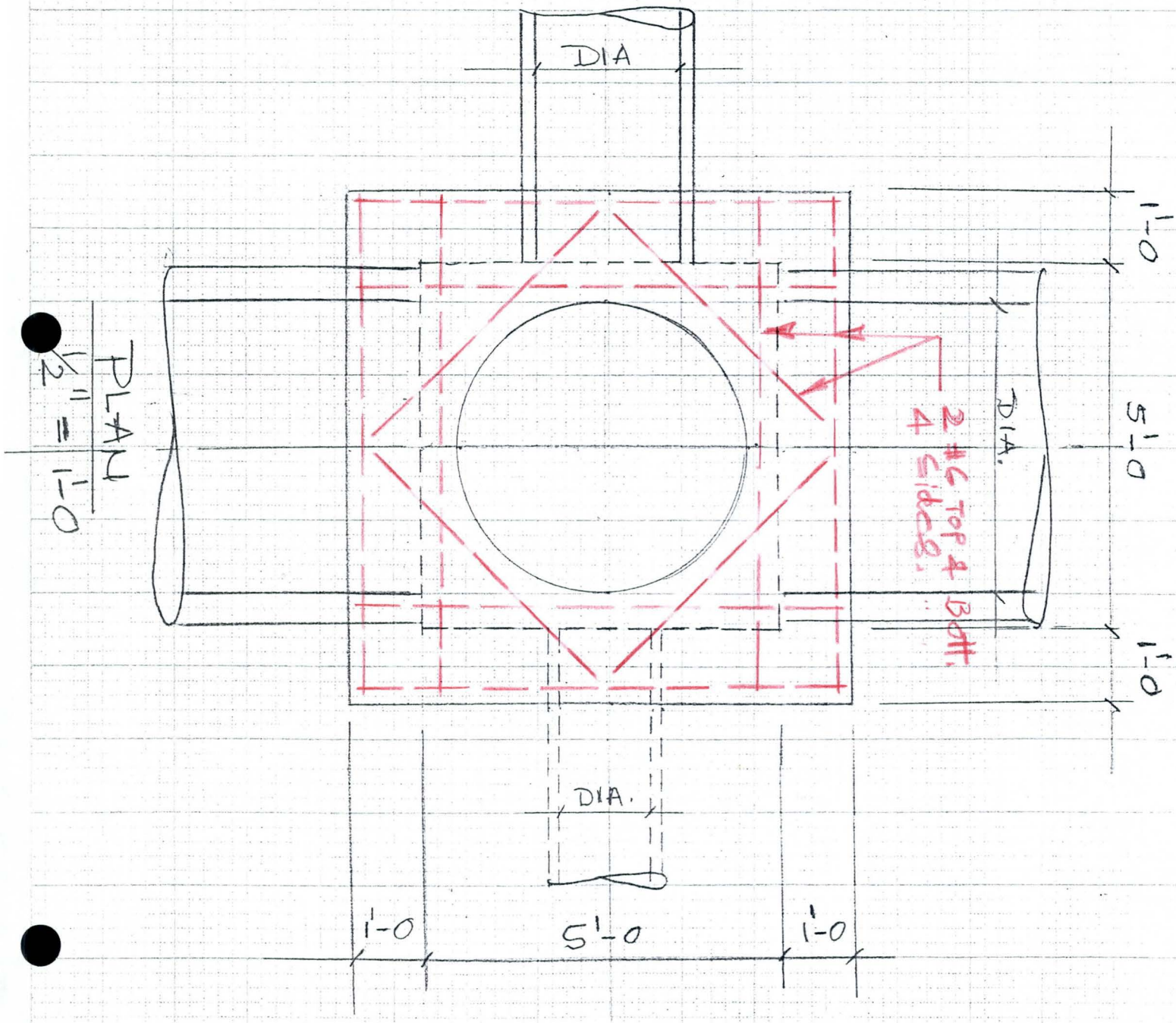

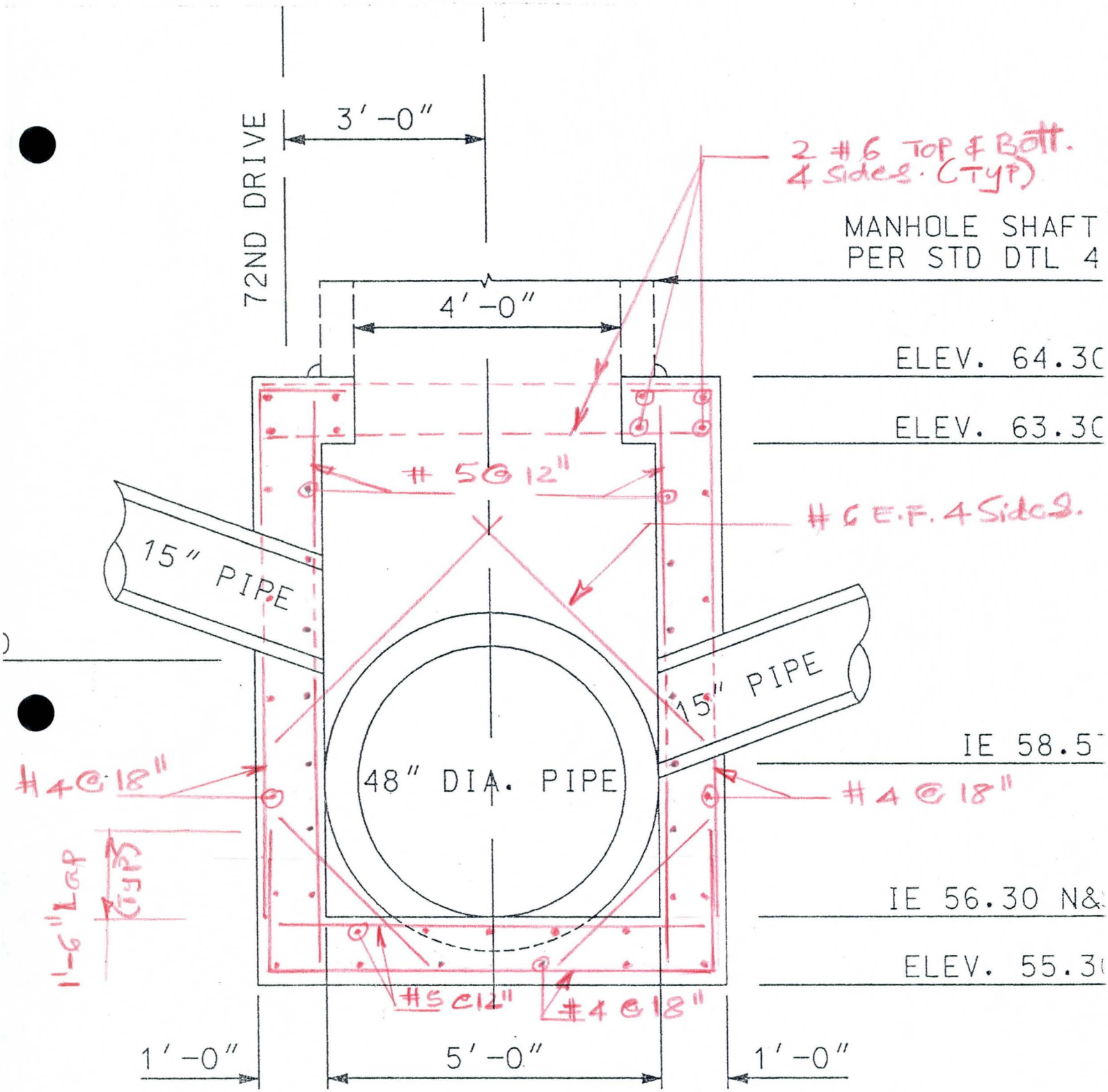

MANHOLE BASE

STA. 141+90 LT, STA. 142+22 LT

SCALE : ~~1" = 2'-0"~~

1/2" = 1'-0

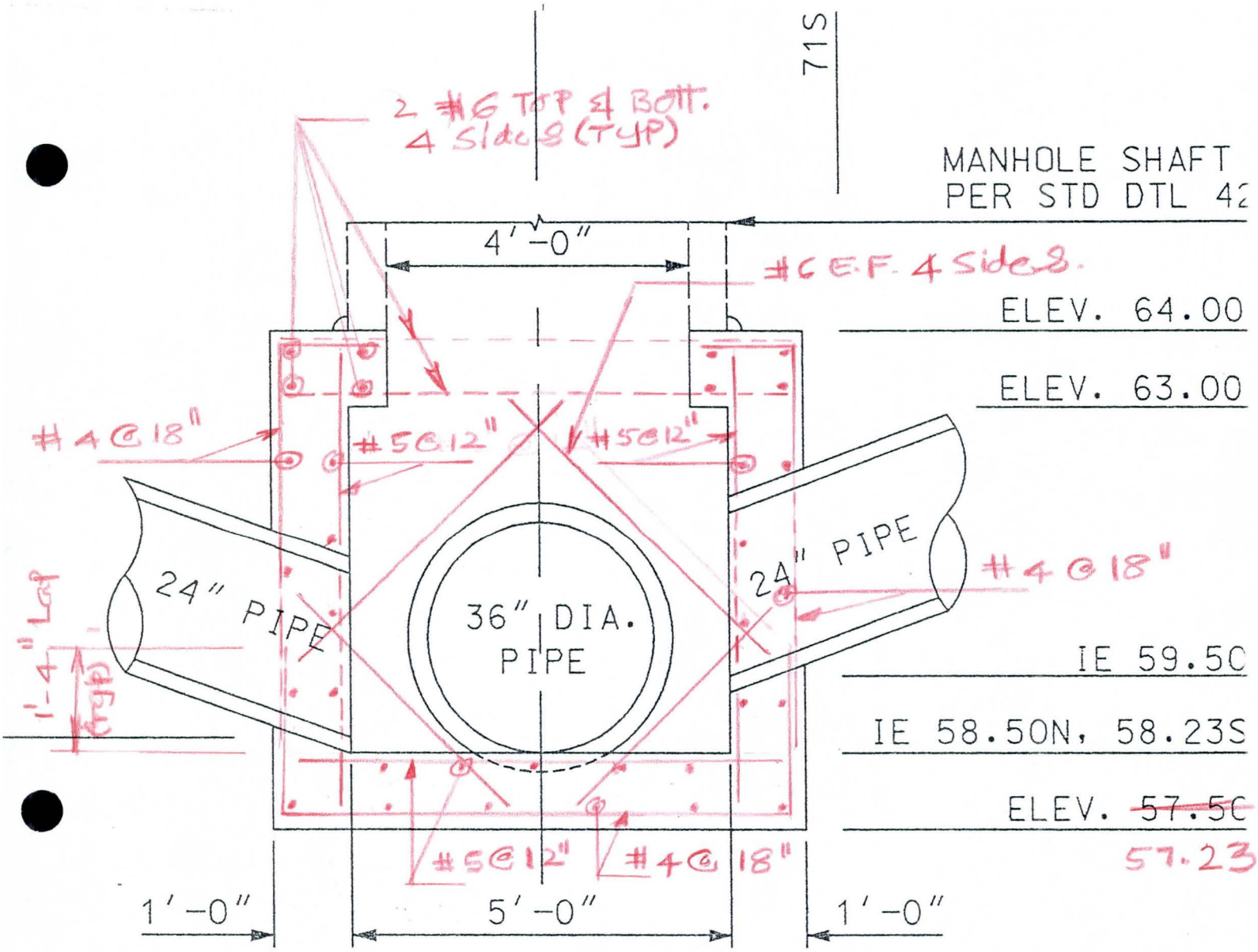

MANHOLE BASE

STA. 153+68 LT, STA. 154+38 LT

SCALE : ~~1" = 2'-0"~~

1/2" = 1'-0

4" A.C. (1 1/2" D-1/2 OVER 2 1/2" C-3/4)
PAVEMENT REPLACEMENT

UNIFORM CUT LINE ASPHALT/CONCRETE

FLOOD CONTROL DISTRICT OF MARICOPA COUNTY

PROJECT Cactus Drain PAGE ___ OF 9/96

DETAIL Manhole Base COMPUTED Kurt DATE ___

67th Ave to 75th Ave. CHECKED BY ___ DATE ___

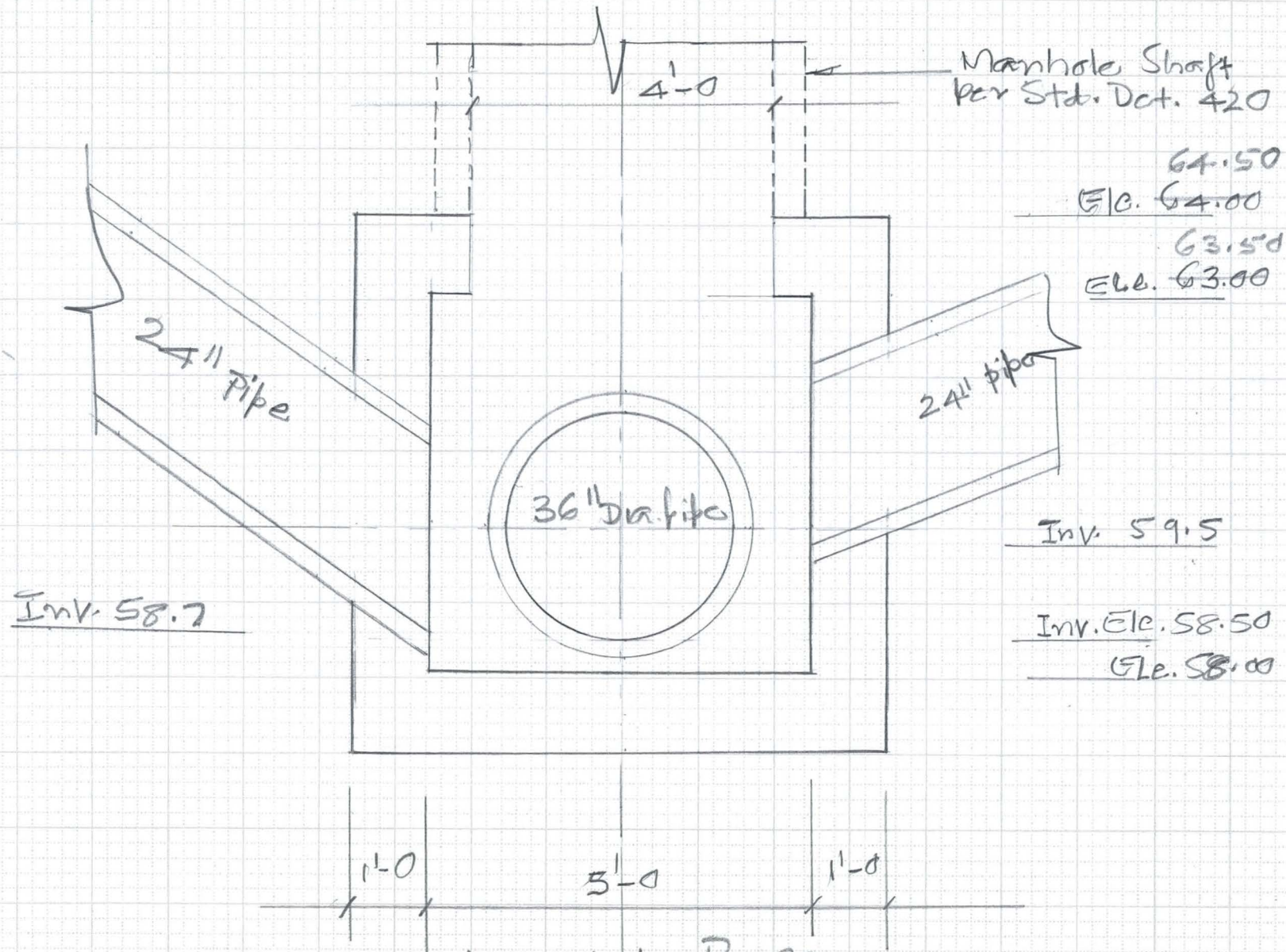

Manhole Base.

Sta. 153+68 LT, Sta. 154+38 LT

Scale: 1/2" = 1'-0

6910-153 4-90

FLOOD CONTROL DISTRICT OF MARICOPA COUNTY

PROJECT Cactus Drain PAGE ___ OF ___

DETAIL Manhole Base COMPUTED KVH DATE 9/96

67th AVE To 75th AVE CHECKED BY ___ DATE ___

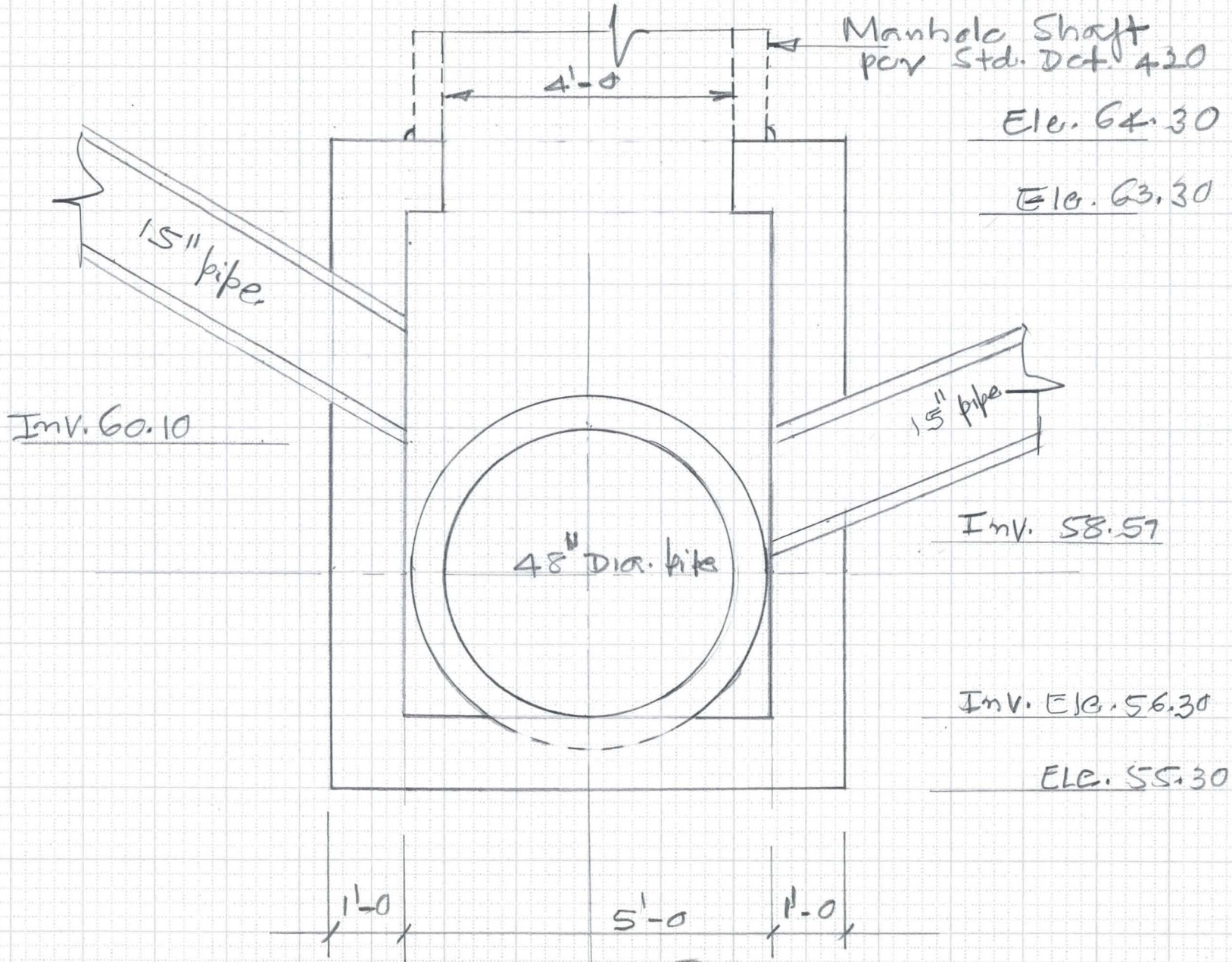

Manhole Base

Sta. 141+90 LT, Sta. 142+22 LT

Scale: ½" = 1'-0

6910-153 4-90

FLOOD CONTROL DISTRICT OF MARICOPA COUNTY

PROJECT Cactus Drain PAGE ____ OF ____

DETAIL Manhole Base COMPUTED KVH DATE 10/96

CHECKED BY ____ DATE ____

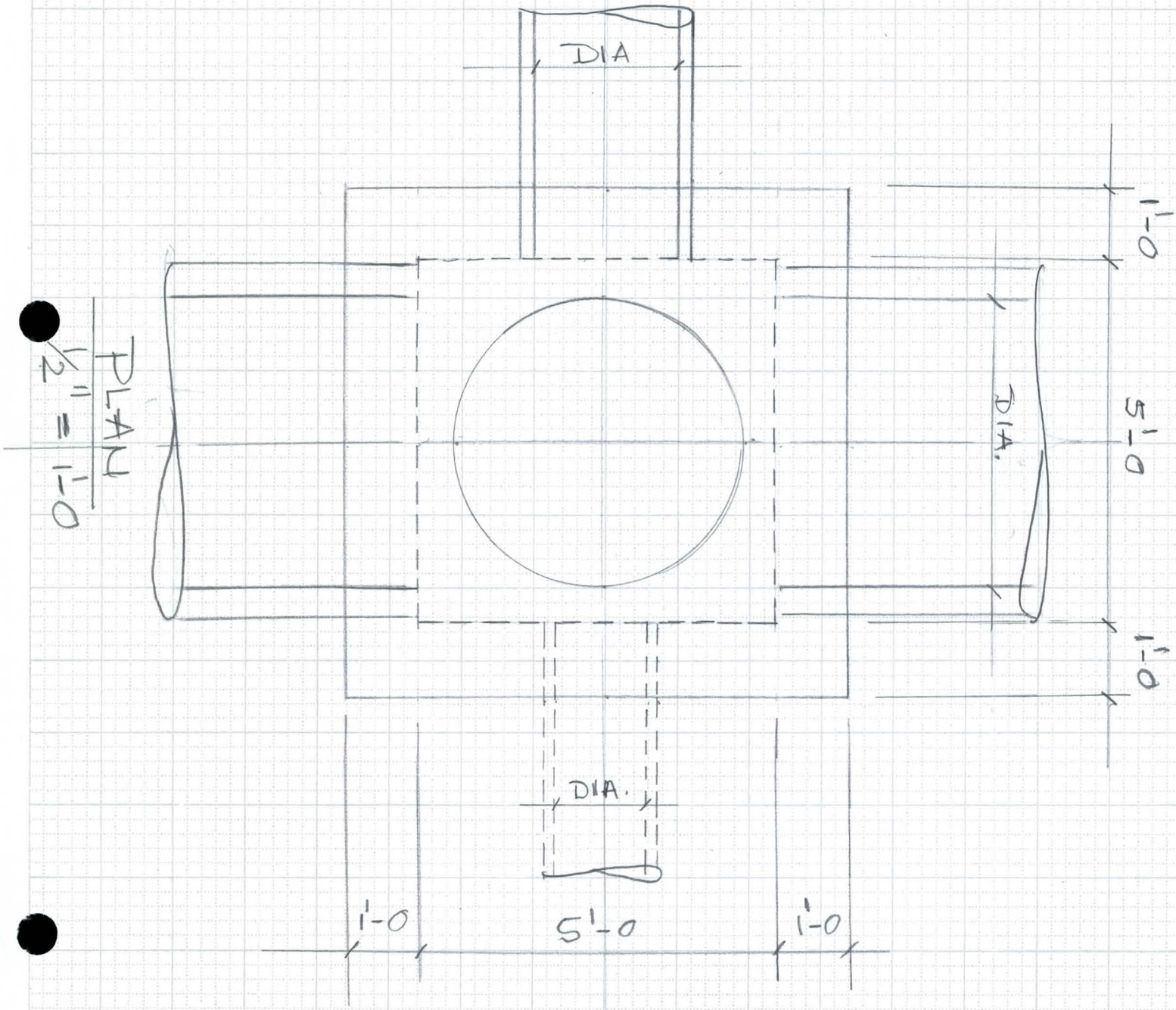

6910-153 4-90

FLOOD CONTROL DISTRICT OF MARICOPA COUNTY

PROJECT Cactus Drown PAGE 1 OF 5

DETAIL Manhole Base COMPUTED KVH DATE 9/96

Stat (141+90) & (142+22) CHECKED BY _____ DATE _____

Manhole Base at 141+90 LT

71.0
56.3
14.7 Say 15'

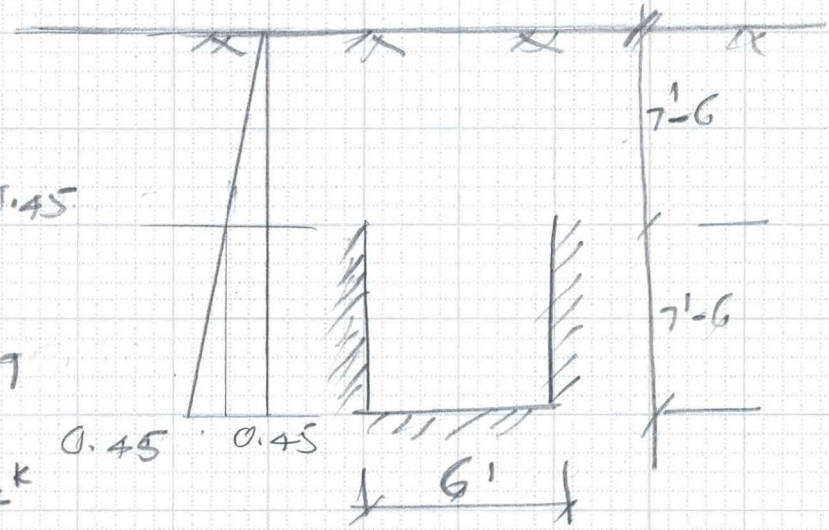

$p_{v1} = 0.12 \times 0.5 \times 7.5 = 0.45$

At Resp. pr Coeff

$p_{v2} = 0.12 \times 0.5 \times 15 = 0.9$

$P_1 = 0.45 \times 7.5 = 3.4^k$

$P_2 = \frac{0.45}{2} \times 7.5 = 1.7^k$

$M_{cant} = \left(3.4 \times \frac{7.5}{2}\right) + \left(1.7 \times \frac{7.5}{3}\right) = (12.8 + 4.3)$
$= 17.1$ Kft

$d = 6''$

$A_s = \frac{17.1 \times 12}{24 \times 0.88 \times 6} = 1.6$

Too High

Using 2 Rows of Steel:

$d_{eff} = 12 - 2 - 0.5 = 9.5$

$A_s = \frac{17.1 \times 12}{24 \times 0.88 \times 9.5} = 1.0$

Still Too High

Spanning Horizontally:

Max. pr = 0.9 Ksf

Span = 6',

$M = \frac{0.9 \times 6^2}{10} = 3.24^{Kft}$

$A_s = \frac{3.24 \times 12}{24 \times 0.88 \times 6} = 0.31 \text{ in}^2$

6910-153 4-90

FLOOD CONTROL DISTRICT OF MARICOPA COUNTY

PROJECT Cactus Drain PAGE 2 OF 5

DETAIL Manhole Base COMPUTED KVH DATE 9/96

Stat (14+90) & (142+22) CHECKED BY _____ DATE _____

Check using 2' Sinch:

$p_y = 0.12 \times 0.5 \times 2 = 0.12$ Kif

Total p_y on the Base $= (0.9 + 0.12) = 1.02$ Kif

$$M = \frac{1.02 \times 6^2}{10} = 3.7 \text{ Kft}$$

$$A_s = \frac{3.7 \times 12}{24 \times 0.88 \times 6} = 0.35$$

use # 6 @ 12"

Check Spanning Vertically:

Span = 7.5'

$$p_{y(Ave)} = \left(\frac{1.02 + 0.57}{2}\right) = 0.8 \text{ Kif}$$

$$M = \frac{(0.8 \times 7.5)^2}{10} = 4.5 \text{ Kft}$$

$$A_s = \frac{4.5 \times 12}{24 \times 0.88 \times 6}$$

$$= 0.43 \text{ in}^2$$

use #6 @ 12" E.W.

6910-153 4-90

FLOOD CONTROL DISTRICT OF MARICOPA COUNTY

PROJECT Cactus Drain PAGE 3 OF 5

DETAIL Manhole Base COMPUTED KVH DATE 9/96

67th Ave to 75th Ave. CHECKED BY _____ DATE _____

Manhole Base at 153+68.00

$$\begin{array}{r} 76.5 \\ 63.5 \\ \hline 13.0 \end{array} \qquad \begin{array}{r} 63.5 \\ 57.5 \\ \hline 6.0 \end{array}$$

$pr_1 = 0.12 \times 0.5 \times 13 = 0.78$

At Rest pr

$pr_2 = 0.12 \times 0.5 \times 19 = 1.14$

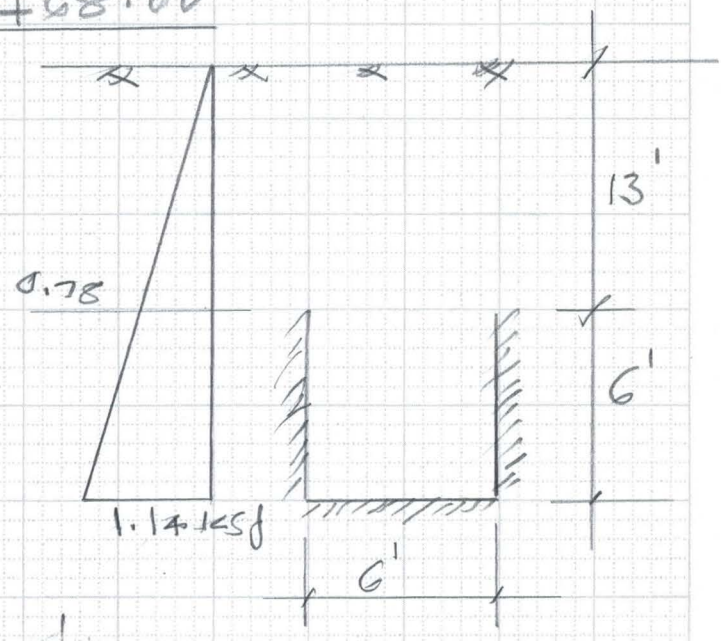

Sunch = 2', $pr = 0.12 \times 0.5 \times 2 = 0.12$

Tot. pr. at the Base $= (1.14 + 0.12) = 1.26$ ksf

$$M = \frac{1.26 \times 6^2}{10} = 4.54 \text{ k'}$$

$$As = \frac{4.54 \times 12}{24 \times 0.88 \times 6} = 0.43 \text{ in}^2$$

use #6 @ 12 E.W

6910-153 4-90

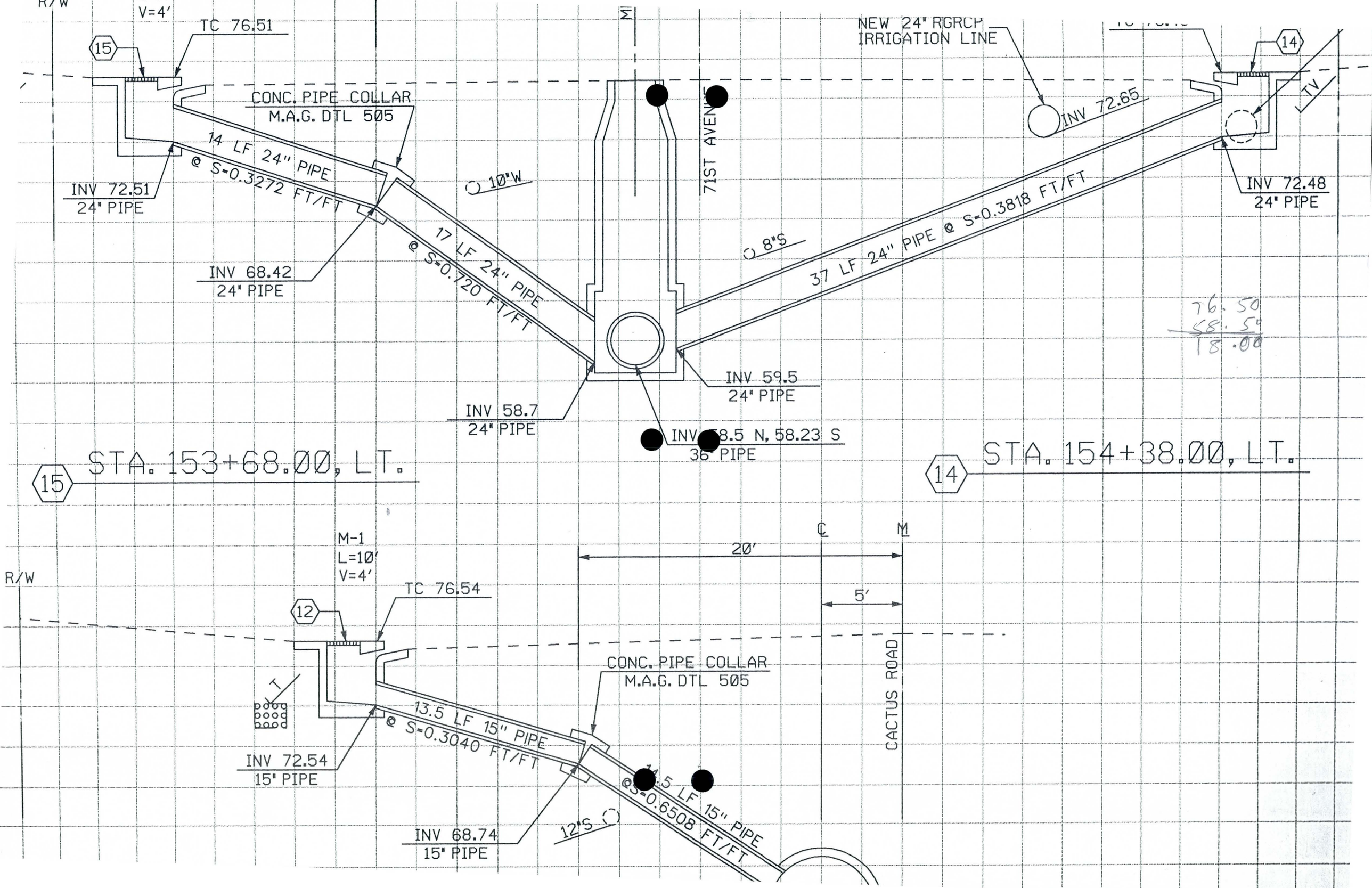
R/W
V=4'
TC 76.51
15
CONC. PIPE COLLAR
M.A.G. DTL 505
14 LF 24" PIPE
@ S=0.3272 FT/FT
INV 72.51
24" PIPE
INV 68.42
24" PIPE
10"W
17 LF 24" PIPE
@ S=0.720 FT/FT
71ST AVENUE
NEW 24" RGRCP
IRRIGATION LINE
INV 72.65
14
TV
INV 72.48
24" PIPE
8"S
37 LF 24" PIPE @ S=0.3818 FT/FT
76.50
58.54
18.00
INV 59.5
24" PIPE
INV 58.7
24" PIPE
INV 58.5 N, 58.23 S
36" PIPE
15 STA. 153+68.00, LT.
14 STA. 154+38.00, LT.
M-1
L=10'
V=4'
TC 76.54
12
R/W
20'
5'
CONC. PIPE COLLAR
M.A.G. DTL 505
CACTUS ROAD
13.5 LF 15" PIPE
@ S=0.3040 FT/FT
INV 72.54
15" PIPE
14.5 LF 15" PIPE
@S=0.6508 FT/FT
12"S
INV 68.74
15" PIPE

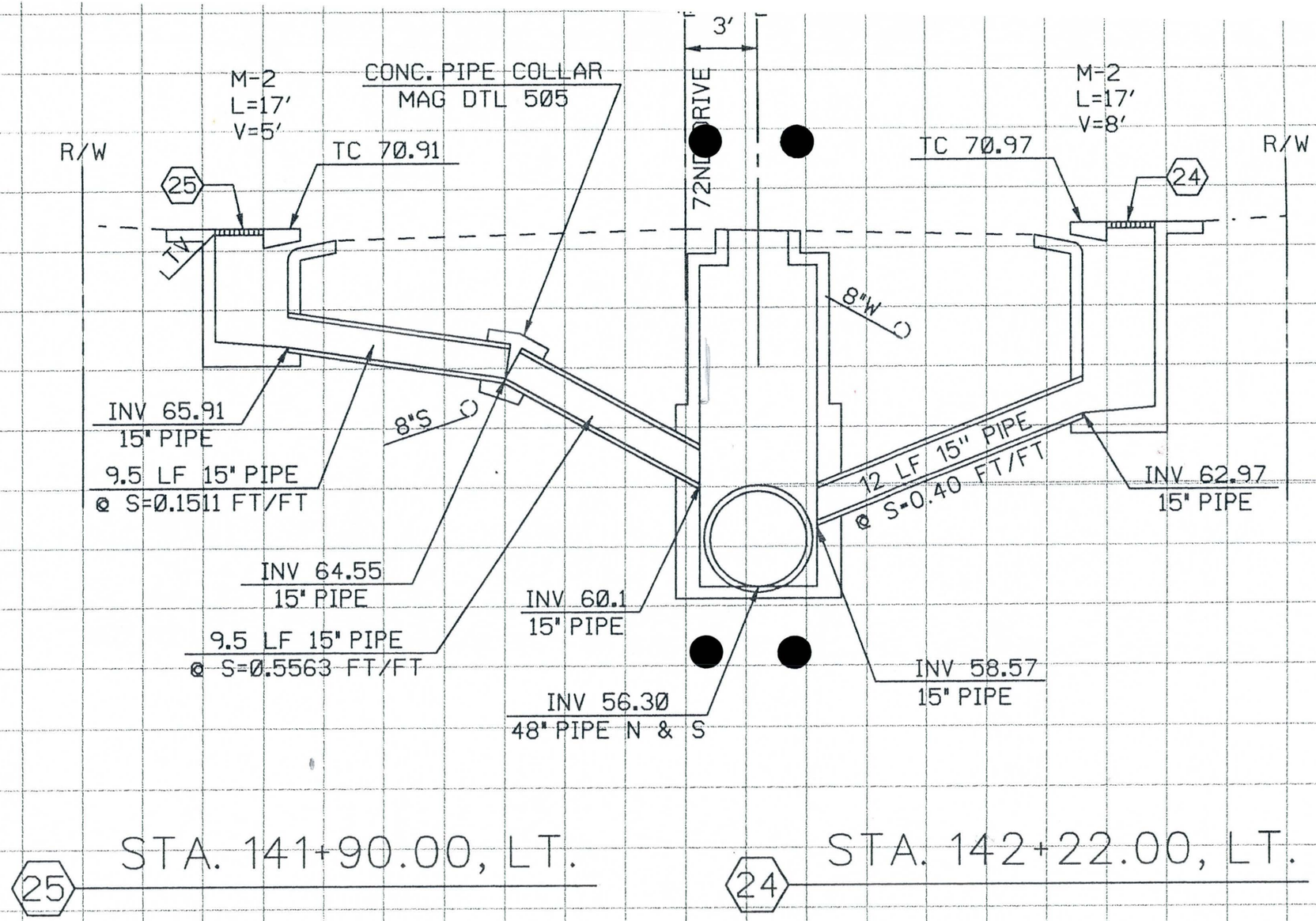

71.00
56.3
14.7 15

FLOOD CONTROL DISTRICT OF MARICOPA COUNTY

PROJECT Cactus Drain PAGE 1 OF 2

DETAIL Check on 24" Dia. Class IV pipe COMPUTED KVH DATE 9/96

CHECKED BY _____ DATE _____

Existing 24" Class-IV pipe.

1. Earth Load W_E:

$$W_d = W H B_c$$

$$= 145 \times 0.5 \times 2.5 = 181 \text{ lbs/Lft}$$

Slurry wt — 6" Cover — outside Dia.

2. Live Load W_L:

From Table 4.5 for H = 6", D = 24"

HS-20 Highway AASHTO Loading = 4100

3. Bedding factor B_f =

from fig. 227, for plain Conc. $B_f = 2.8$

4. D-Load

$$D_{0.01} = \left(\frac{W_L + W_E}{B_f \times D}\right) F.S$$

$$= \left(\frac{4100 + 181}{2.8 \times 2.0}\right) 1.0 = 765 \text{ lbs/Lft.}$$

Allowable D-Load for Class IV. pipe = 2000 lbs/L.ft

$$F.S = \frac{2000}{765} = 2.6$$

∴ EXIST. Class IV. pipe is OK

Not to scale

FLOOD CONTROL DISTRICT OF MARICOPA COUNTY

PROJECT Cactus Drain PAGE 2 OF 2

DETAIL Check on 24" DIA. Class. IV pipe COMPUTED KVH DATE 9/96

CHECKED BY _____ DATE _____

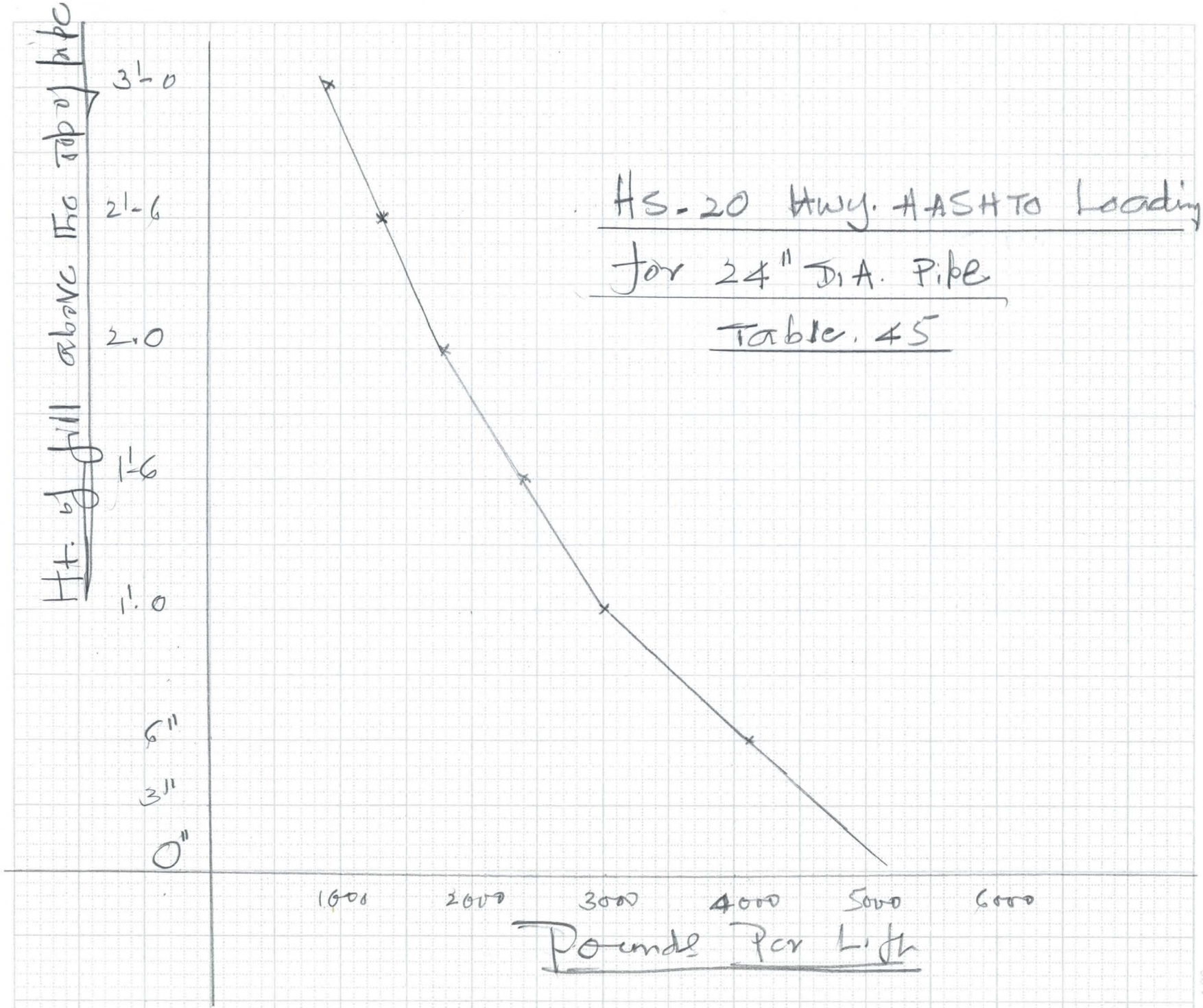

FLOOD CONTROL DISTRICT OF MARICOPA COUNTY

6910-153 4-90

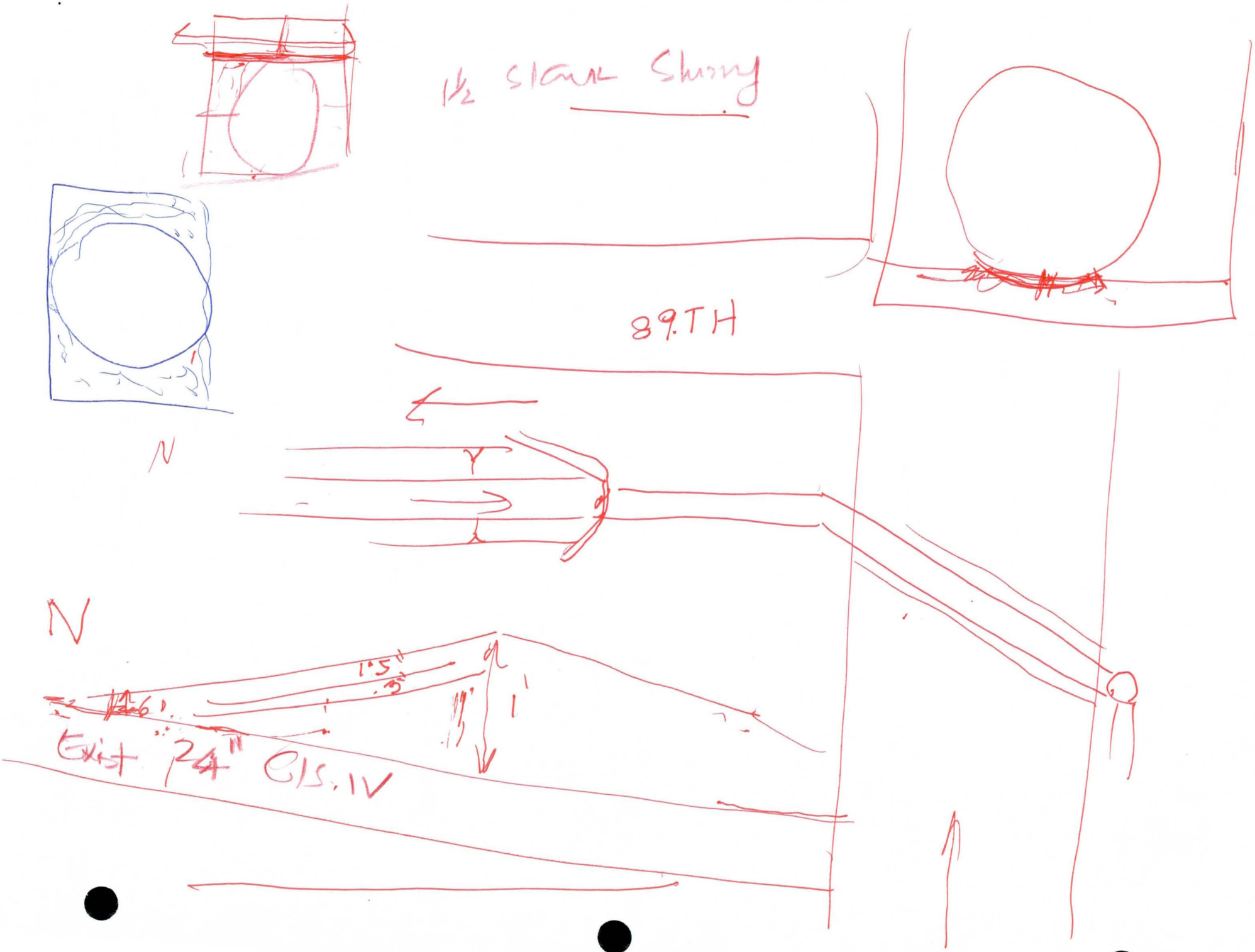
1½ SIGNAL SHINY
89TH
N
N
1'5"
3"
Exist 24" CIS. IV

FLOOD CONTROL DISTRICT OF MARICOPA COUNTY

PROJECT Cactus Drain PAGE 1 OF

DETAIL Catch Basin COMPUTED KVH DATE 11/95

CHECKED BY DATE

Inlet Box:

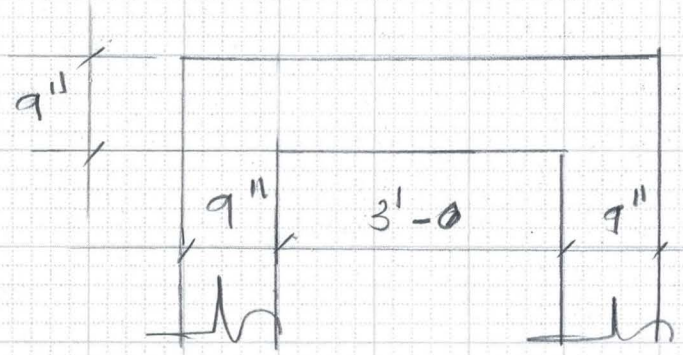

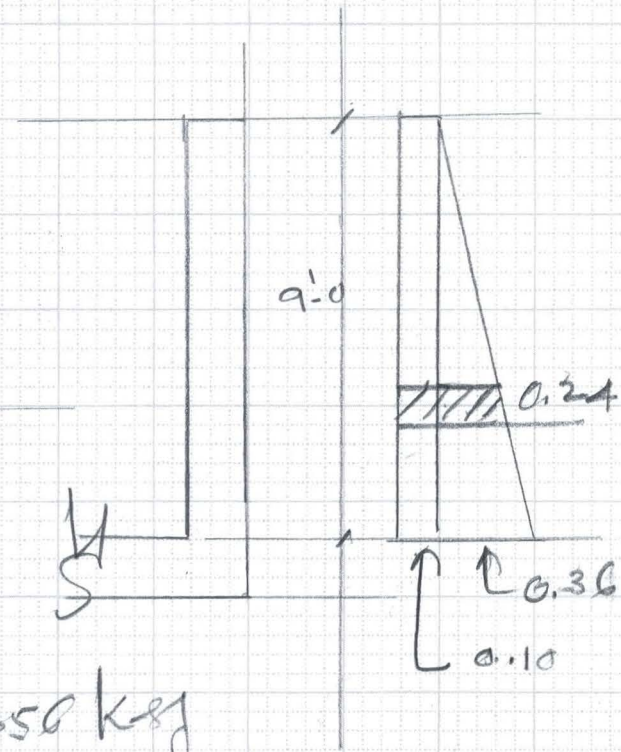

$pr = wth$

$= (0.12 \times 0.33 \times 9) = 0.356$ Kef

pr_1 @ 2/3 (9') $= 6' - 0.12 \times 0.33 \times 6 = 0.238$ Kef

Surcharge = 2', $pr_2 = 0.12 \times 0.33 \times 2 = 0.08$

Say 0.10 Kef

Span = 3.75' o/c,

1) $pr = (0.24 + 0.10) = 0.34$

$M = \left(\frac{0.34 \times 3.75^2}{8}\right) = 0.60$ Kfr

$d_{eff} = (9 - 4.5) = 4.5$ $\quad A_s = \frac{0.60 \times 12}{24 \times 0.88 \times 4.5}$

$= 0.09 \text{ in}^2$

use #4 @ 18" $A_s = 0.13$

Check using 8" wall $\quad A_s = \frac{0.60 \times 12}{24 \times 0.88 \times 4.0} = 0.09 \text{ in}^2$

$d_{eff} = (8 - 4) = 4$

∴ 8" wall is OK

6910-153 4-90

FLOOD CONTROL DISTRICT OF MARICOPA COUNTY

PROJECT Cactus Drain PAGE 2 (A) OF
DETAIL Catch Basin COMPUTED KVH DATE 11/95
CHECKED BY DATE

Check Top Slab:

Span = (3 - 9) + ~~9"~~ 8" + 1'-6 = 6'-0

wheel load P = 16 K

E = (4 + 0.06 S)

= (4 + 0.06 × 6) = 4.36'

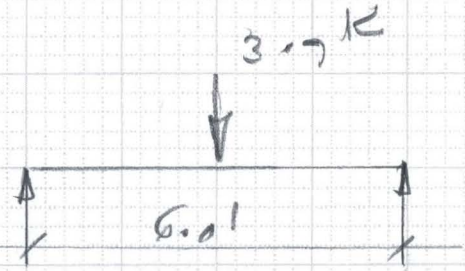

P/ft = 16.0/4.36 = 3.7 K

$M = \left(\frac{3.7 \times 6}{4}\right) = 5.55$ K-ft

deff = 8 - 1.5 - 0.75 - $\frac{0.75}{2}$

= 5.38"

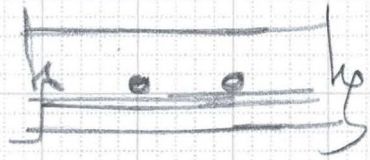

$A_s = \frac{5.55 \times 12}{24 \times 0.88 \times 5.38} = 0.59 \text{ in}^2$

Adding D.L of 8" Slab

$w = \frac{8}{12}(0.150) = 0.10$ ksf

$M_{uniif} = \left(\frac{0.10 \times 6^2}{8}\right) = 0.45$ K-ft

$M_{total} = (5.55 + 0.45) = 6$ K-ft

$A_s = \frac{6.0 \times 12}{24 \times 0.88 \times 5.38} = 0.63 \text{ in}^2$

As the Span may vary a little use
#6 @ 6" Both ways

6910-153 4-90

FLOOD CONTROL DISTRICT OF MARICOPA COUNTY

PROJECT Cactus Drain PAGE 2 (B) OF

DETAIL COMPUTED KVH DATE 1/96

CHECKED BY DATE

Sta. 14+00

F/G to pipe	=	3-6"
Min. Clearance	=	6"
Wall	=	8"
Slab	=	9
		5-5"

Use 6'-0 for Max Varying Dimension.

Span 1: (6'-0) + 9" = 6.75 Clear Span

Span 2: (6-9") + 1'-3 = 8'-0 Clear Span

6910-153 4-90

FLOOD CONTROL DISTRICT OF MARICOPA COUNTY

PROJECT Cactus Drain PAGE 2(C) OF

DETAIL Catch Basin COMPUTED KVH DATE 11/95

CHECKED BY DATE

Check Top Slab:

Span = (3 - 9) + ~~9"~~ 8" + 1'-6 = 6'-0

wheel Load P = 16 K

3.7 K

E = (4 + 0.06 S)

= (4 + 0.06 × ~~6~~ 8) = ~~4.36~~ 4.48'

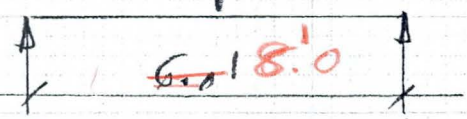

P/ft = 16.0 / ~~4.36~~ 4.48 = ~~3.7~~ 3.57 K

M = (~~3.7~~ 3.57 × ~~6~~ 8 / 4) = ~~5.55~~ 7.14 K'

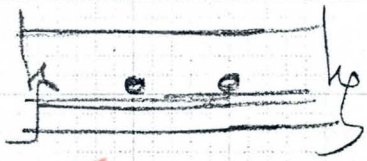

deff = 8 - 1.5 - 0.75 - 0.75/2

= 5.38"

As = ~~5.55~~ 7.14 × 12 / (24 × 0.88 × 5.38) = ~~0.59~~ 0.75 in²

Adding D.L of 8" Slab

w = 8/12 (.150) = 0.10 ksf

M unif = (0.10 × ~~6~~ 8² / 8) = ~~0.45~~ 0.80 K'

M total = (~~5.55~~ 7.14 + ~~0.45~~ 0.80) = ~~6~~ 7.94 K'

As = ~~6.0~~ 7.94 × 12 / (24 × 0.88 × 5.38) = ~~0.63~~ 0.84 in

Use the Span may vary a little use

#6 @ 6" Both ways

Check Top Slab:

Span = (6 + 3) = 9'-0 clear

Span c/c = (9' + 3" + 3") = 9.5'

Wheel Load = 16 K

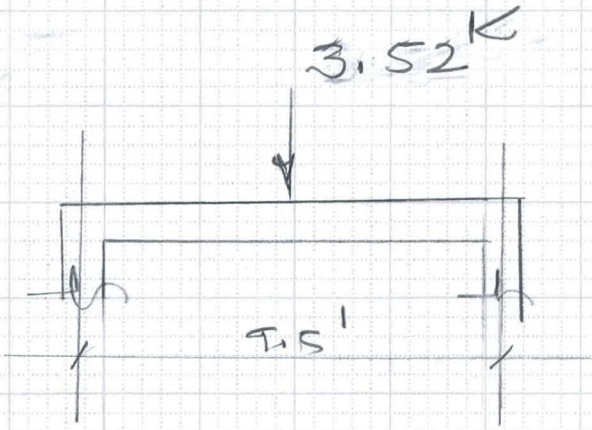

E = (4 + 0.06 S)

= 4 + 0.06 × 9

= 4.54'

Load / ft = $\frac{16}{4.54}$ = 3.52 K

M L.L = $\frac{(3.52 \times 9.5)}{4}$ = 8.36 K-ft

Assuming 8" Top Slab

deff = (8 − 1.5 − $\frac{0.75}{2}$)

= 6.13"

$A_s = \frac{8.36 \times 12}{24 \times 0.88 \times 6.13}$

= 0.77 in²

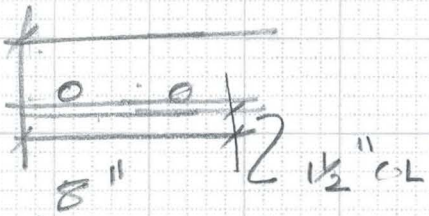

Use #6 @ 6"

A_s = 0.88

Adding 8" Slab D.L:

w = $\frac{8}{12}$ × 150 = 0.1 K/sq ft

M = (0.1 × 9.5²/8) = 1.13 K-ft

M total = (8.36 + 1.13)

= 9.49

$A_s = \frac{9.49 \times 12}{24 \times 0.88 \times 6.13}$

= 0.88 in²

∴ #6 @ 6" is still OK

FLOOD CONTROL DISTRICT OF MARICOPA COUNTY

PROJECT Cactus Drain PAGE 4 OF

DETAIL Catch Basin COMPUTED KVH DATE 11/95

CHECKED BY DATE

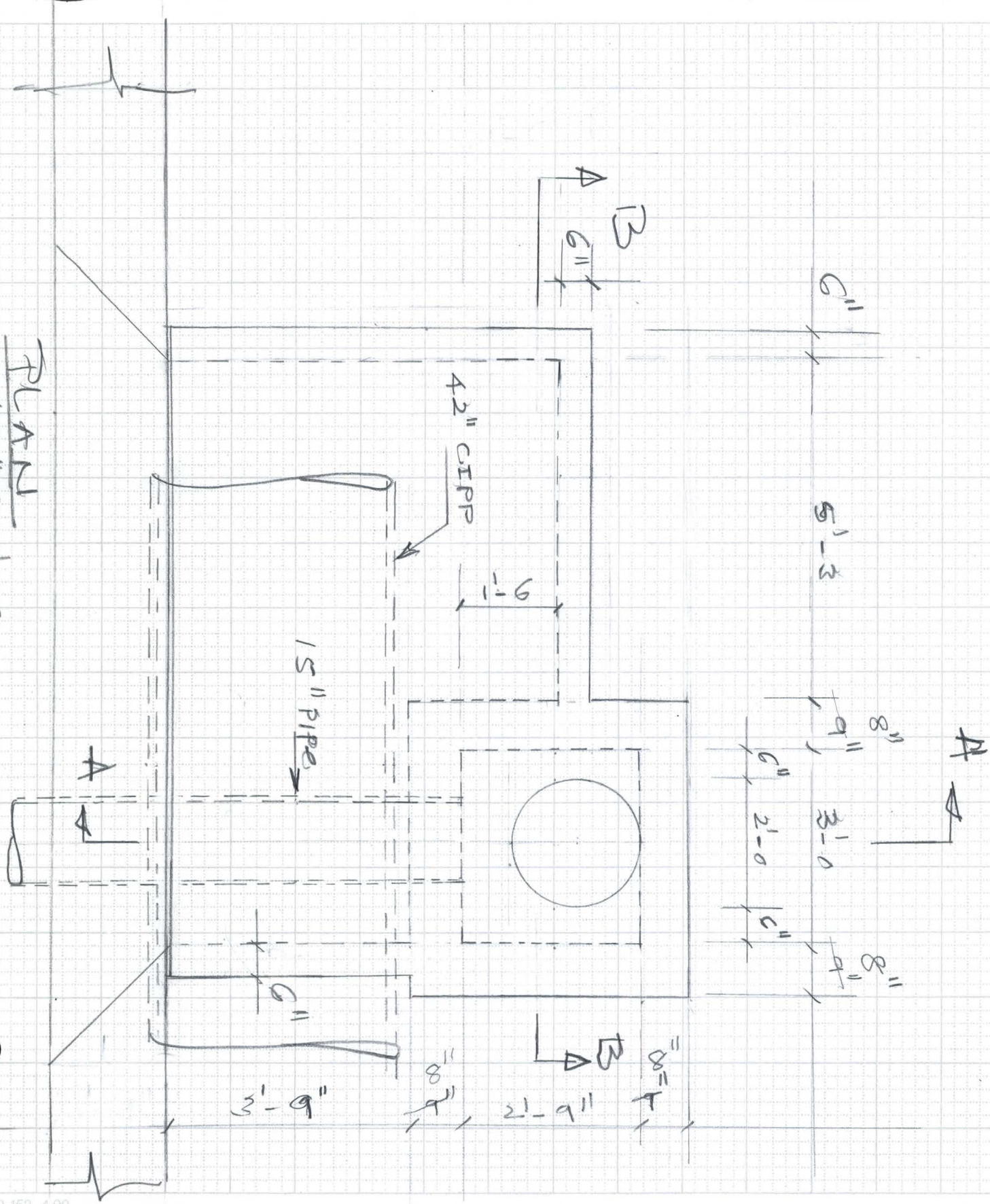

6910-153 4-90

3 : 1 Slope

3 - 9
4
4 - 6

3H — 1V
4 · 5/3 = 6.6"
Angle 4"
of ang 6
2 - 4

10 : 1 Slope
10" — 1V
6'/10 = 1.6
7"

9"
1'-0
1 - 9"
7"
2 - 4

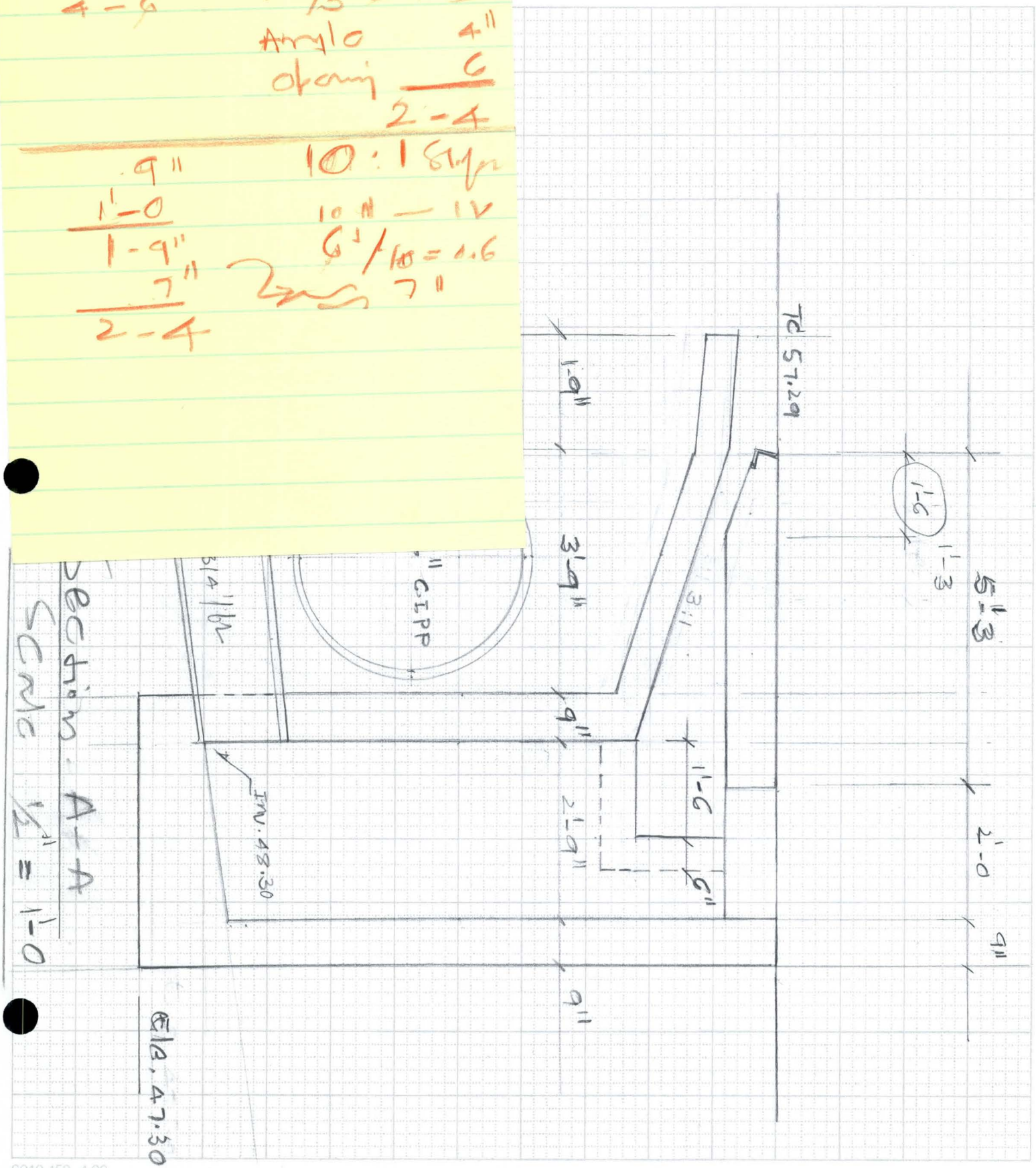

6910-153 4-90

FLOOD CONTROL DISTRICT OF MARICOPA COUNTY

PROJECT Cactus Drain PAGE 5 OF

DETAIL Catch Basin COMPUTED KVH DATE 11/95

CHECKED BY DATE

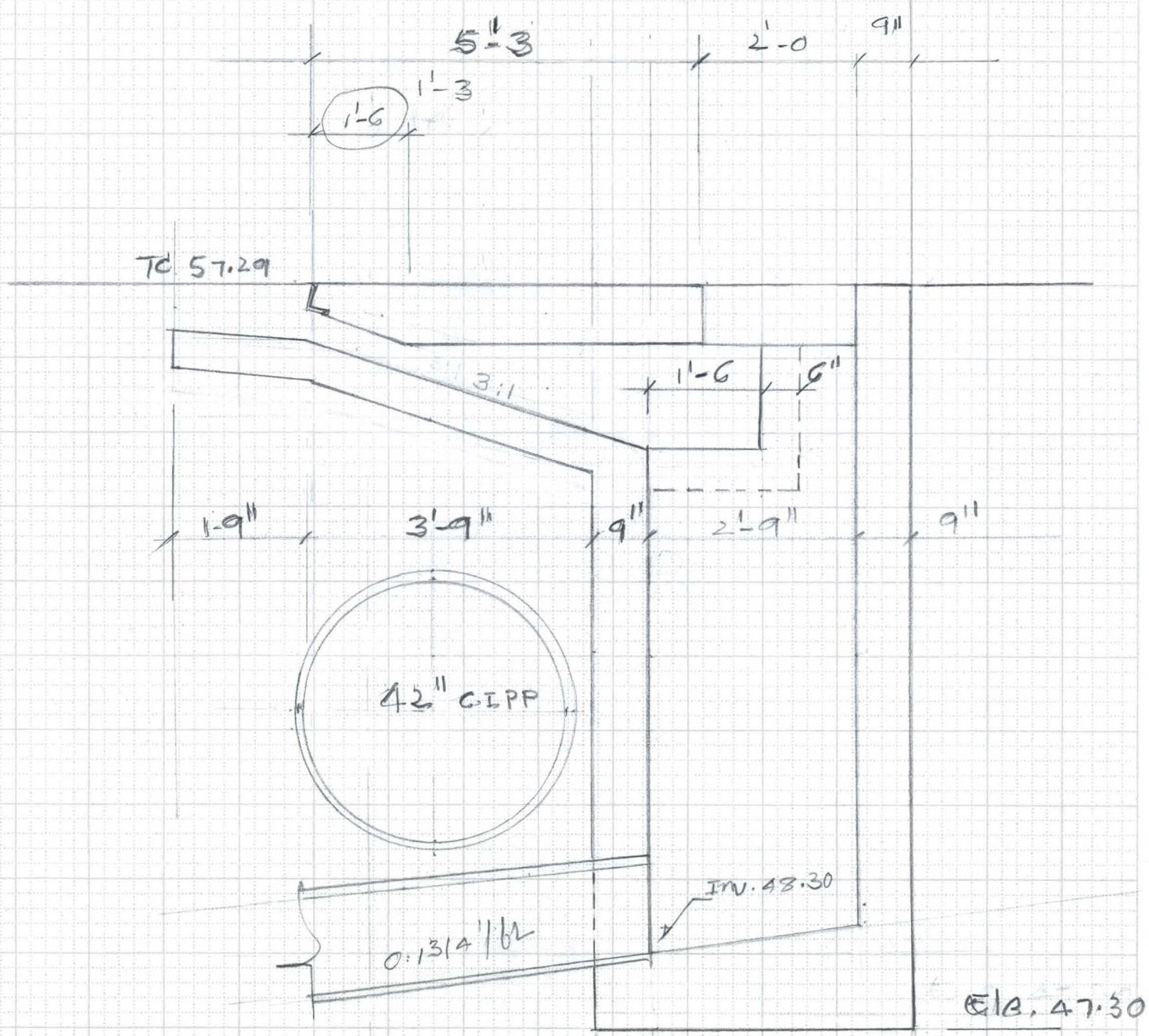

Section A-A

Scale 1/2" = 1'-0

FLOOD CONTROL DISTRICT OF MARICOPA COUNTY

PROJECT Cactus Drain PAGE 6 OF

DETAIL Catch Basin COMPUTED KNH DATE 11/95

CHECKED BY DATE

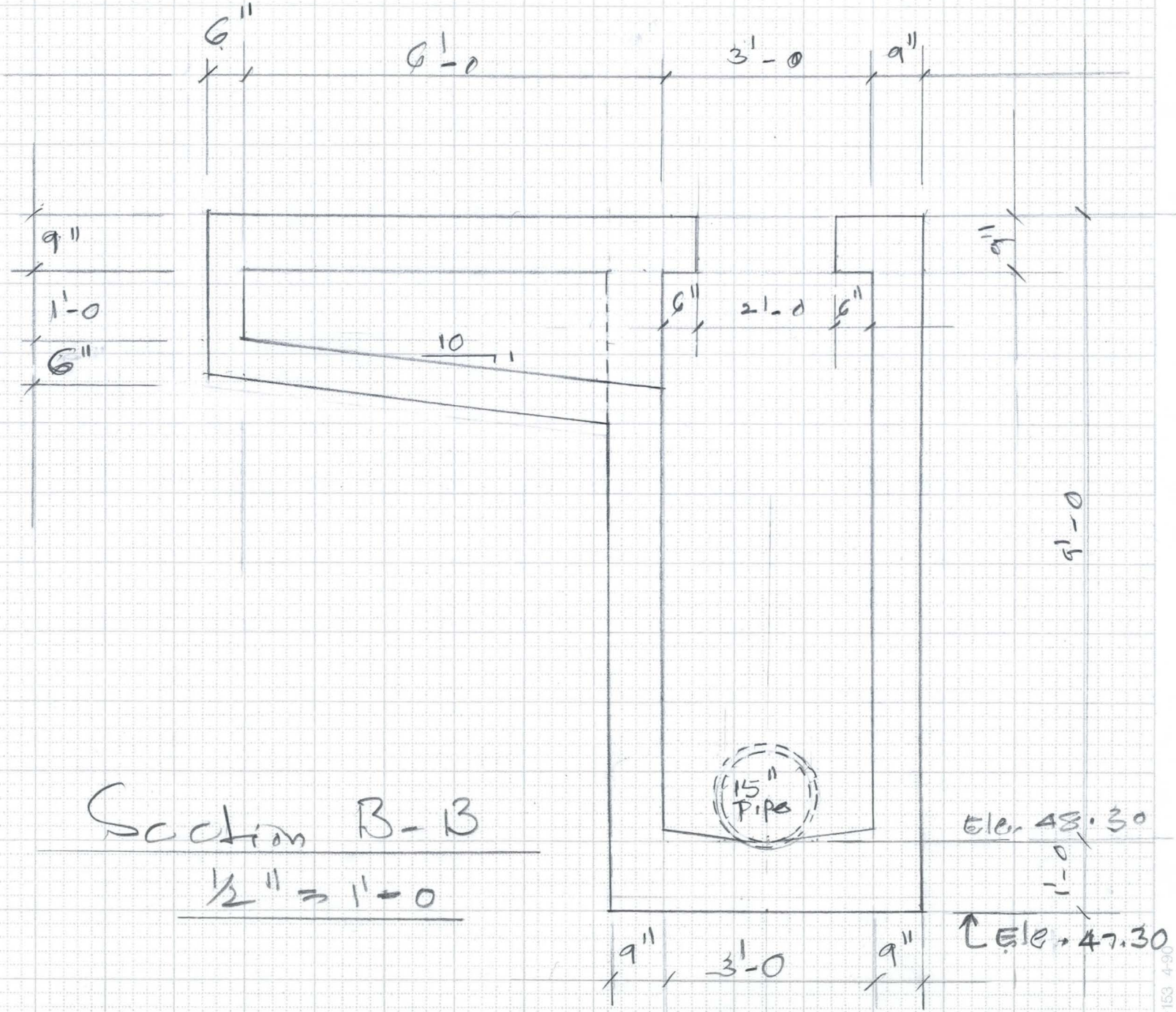

Section B-B

½" = 1'-0

FLOOD CONTROL DISTRICT OF MARICOPA COUNTY

6910-153 4-90

FLOOD CONTROL DISTRICT OF MARICOPA COUNTY

PROJECT Cactus Drain PAGE 4 OF

DETAIL Catch Basin COMPUTED KVH DATE 11/95

CHECKED BY DATE

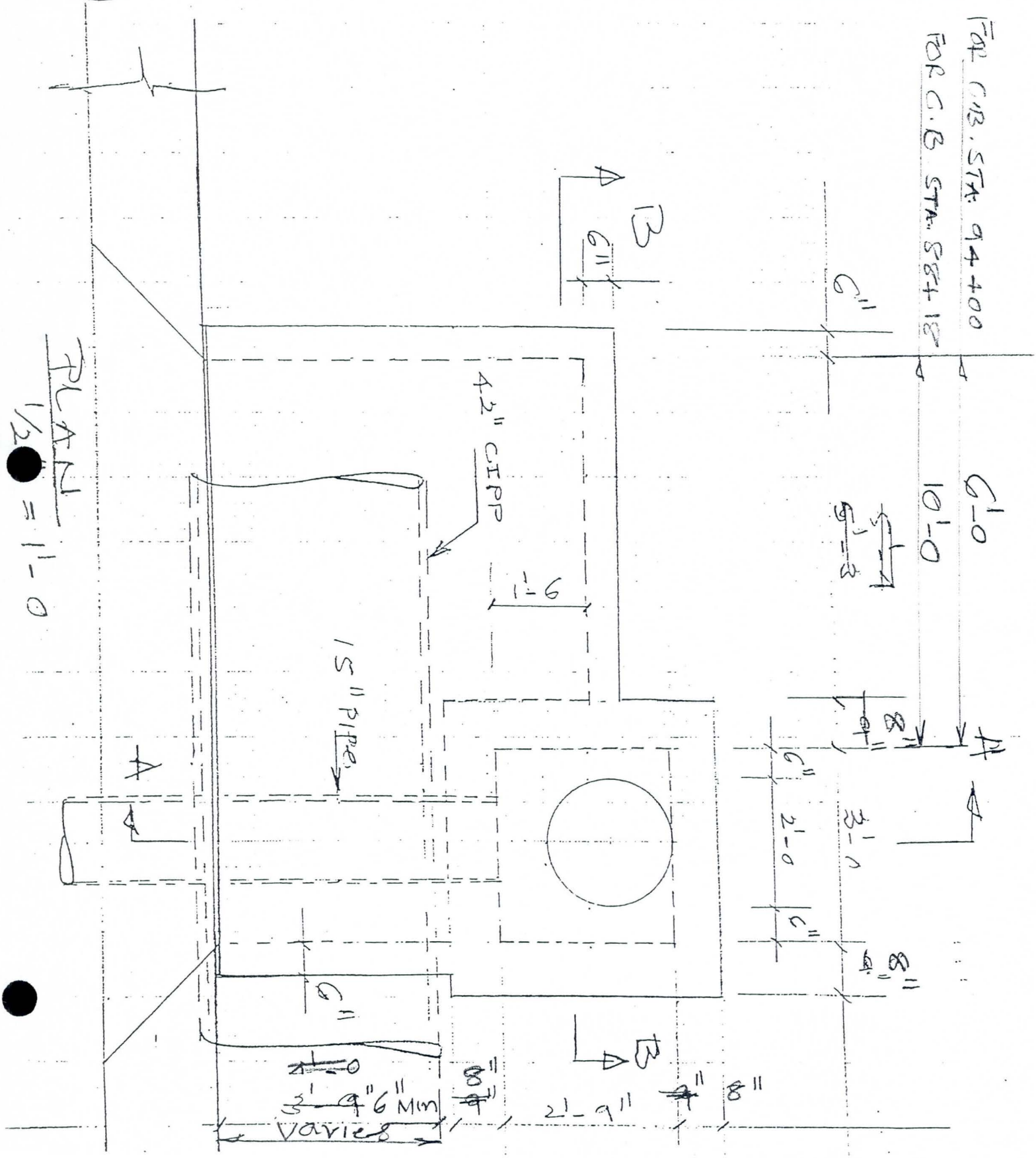

FLOOD CONTROL DISTRICT OF MARICOPA COUNTY

PROJECT Cactus Drain PAGE 5 OF

DETAIL Catch Basin COMPUTED KVH DATE 11/95

CHECKED BY DATE

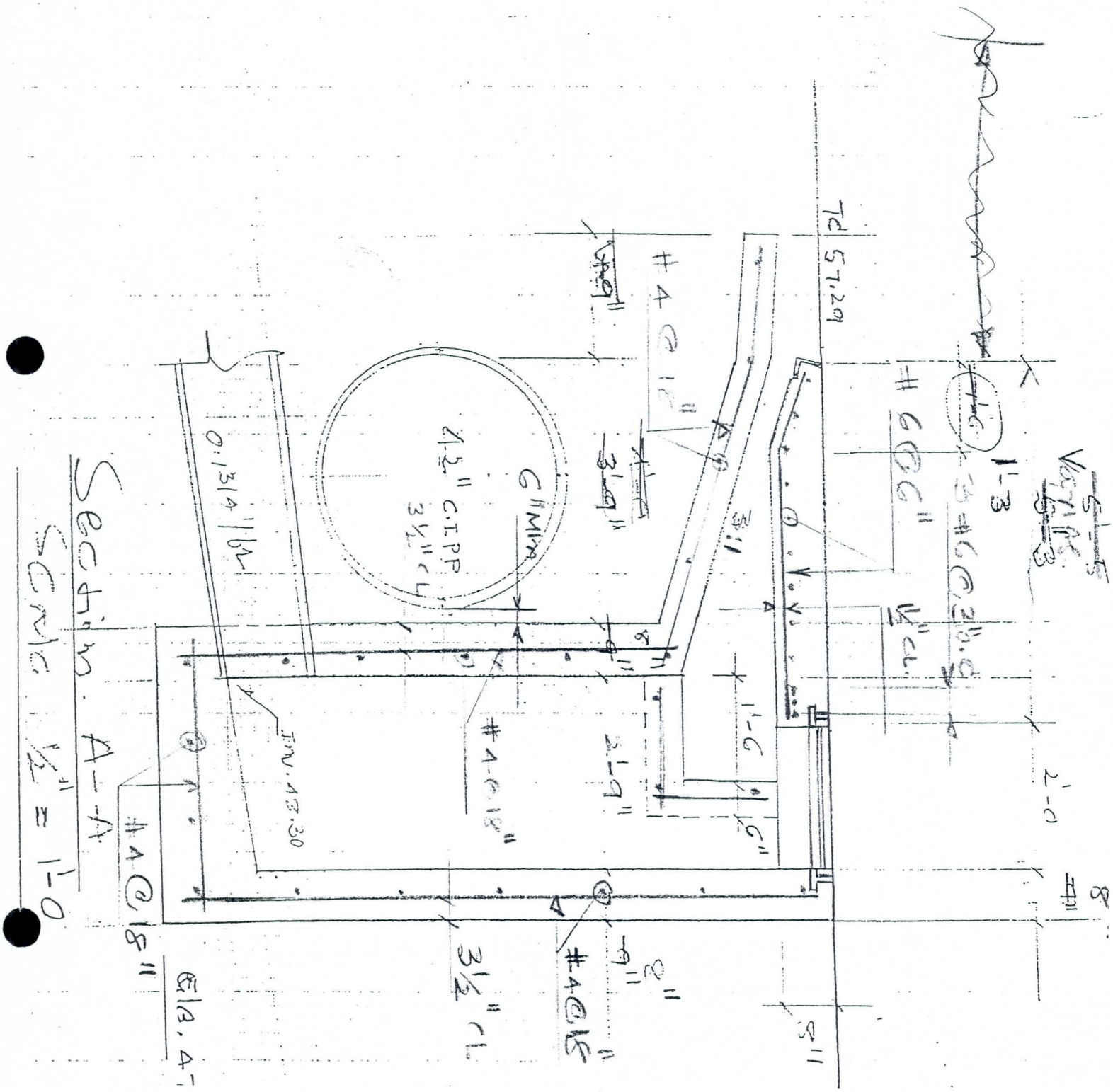

FLOOD CONTROL DISTRICT OF MARICOPA COUNTY

PROJECT Cactus Drain PAGE 6 OF

DETAIL Catch Basin COMPUTED KNH DATE 11/95

CHECKED BY DATE

FOR C.B. STA. 94+00 6'-0

FOR C.B. STA. 88+18 10'-0

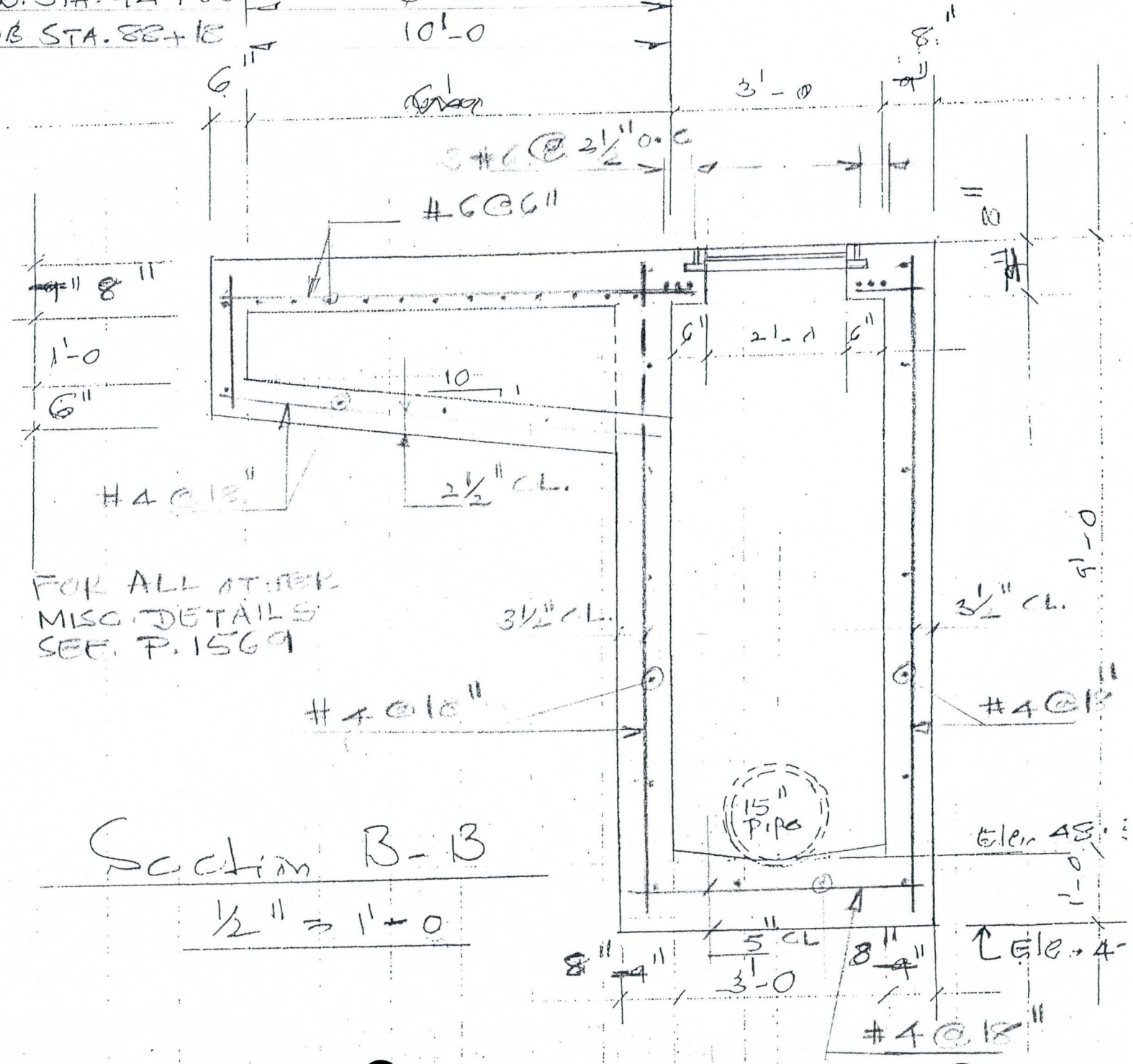

NOTE: FOR ALL OTHER MISC. DETAILS SEE P. 1569

Section B-B

½" = 1'-0

FLOOD CONTROL DISTRICT OF MARICOPA COUNTY

PROJECT Cactus Drain PAGE ____ OF ____

DETAIL Manhole Base COMPUTED KVH DATE 10/96

CHECKED BY ____ DATE ____

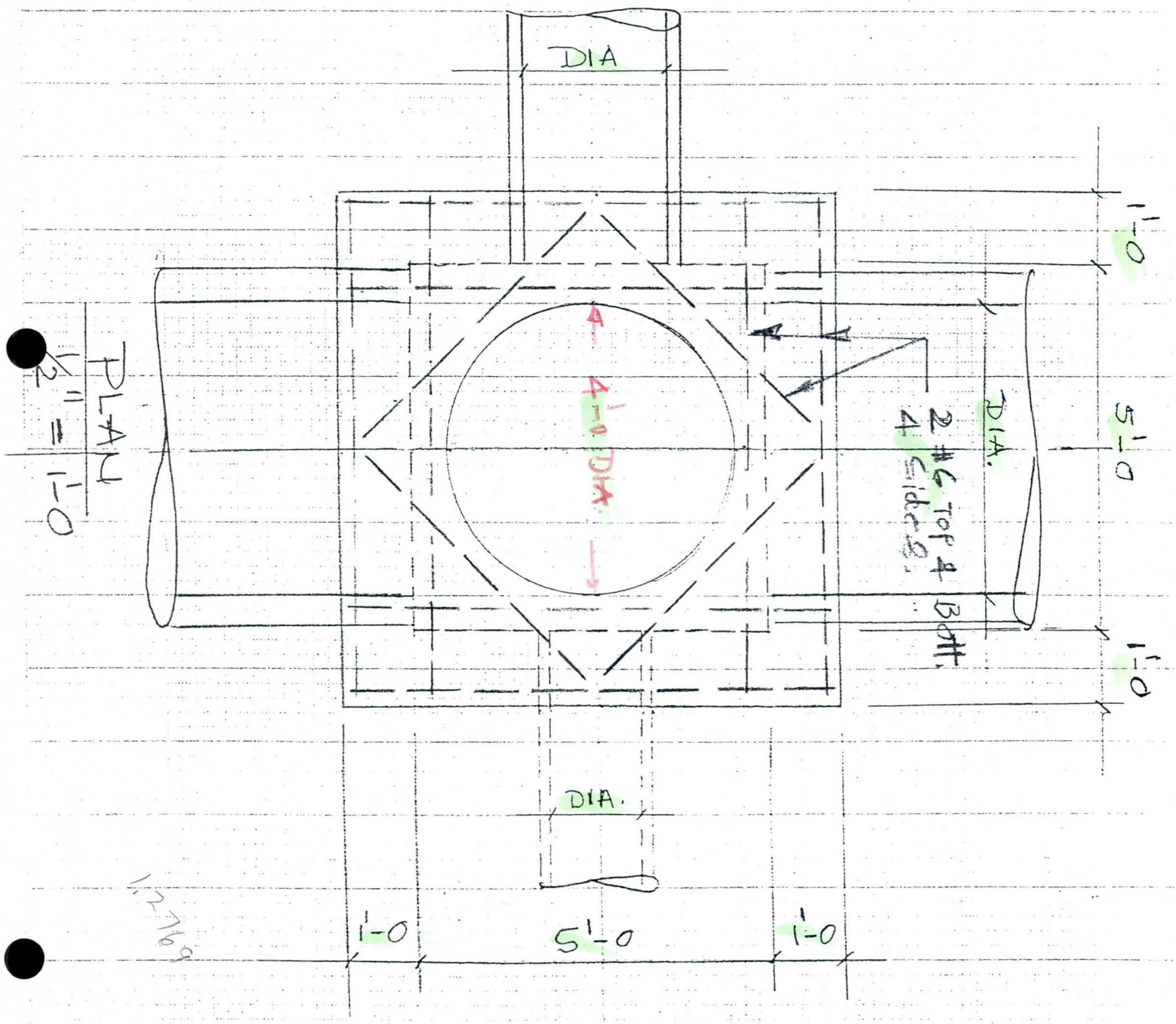

1:2769

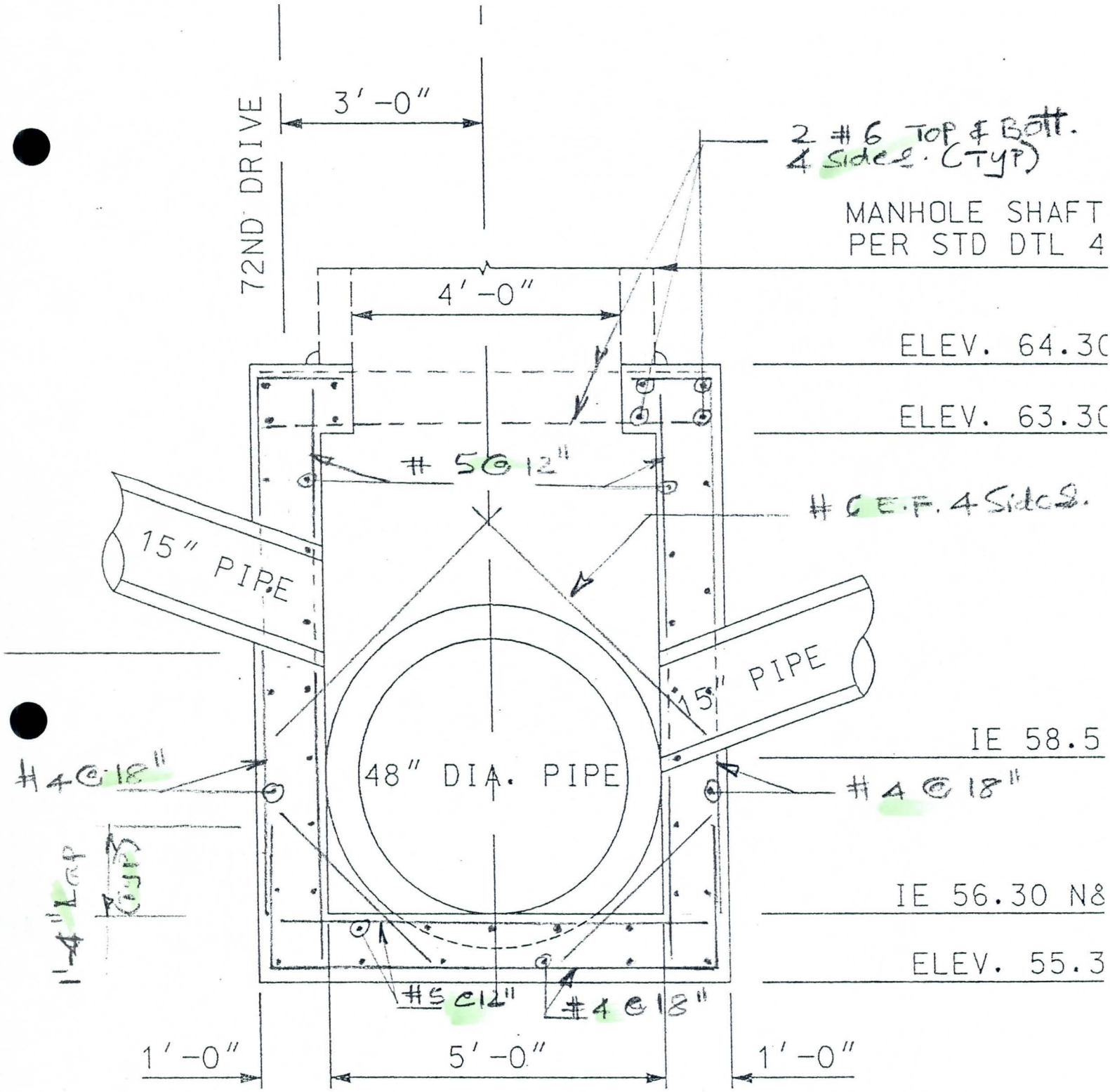

MANHOLE BASE

STA. 141+80 LT, STA. 142+22 LT

SCALE : ~~4" = 2'-0"~~

1/2" = 1'-0

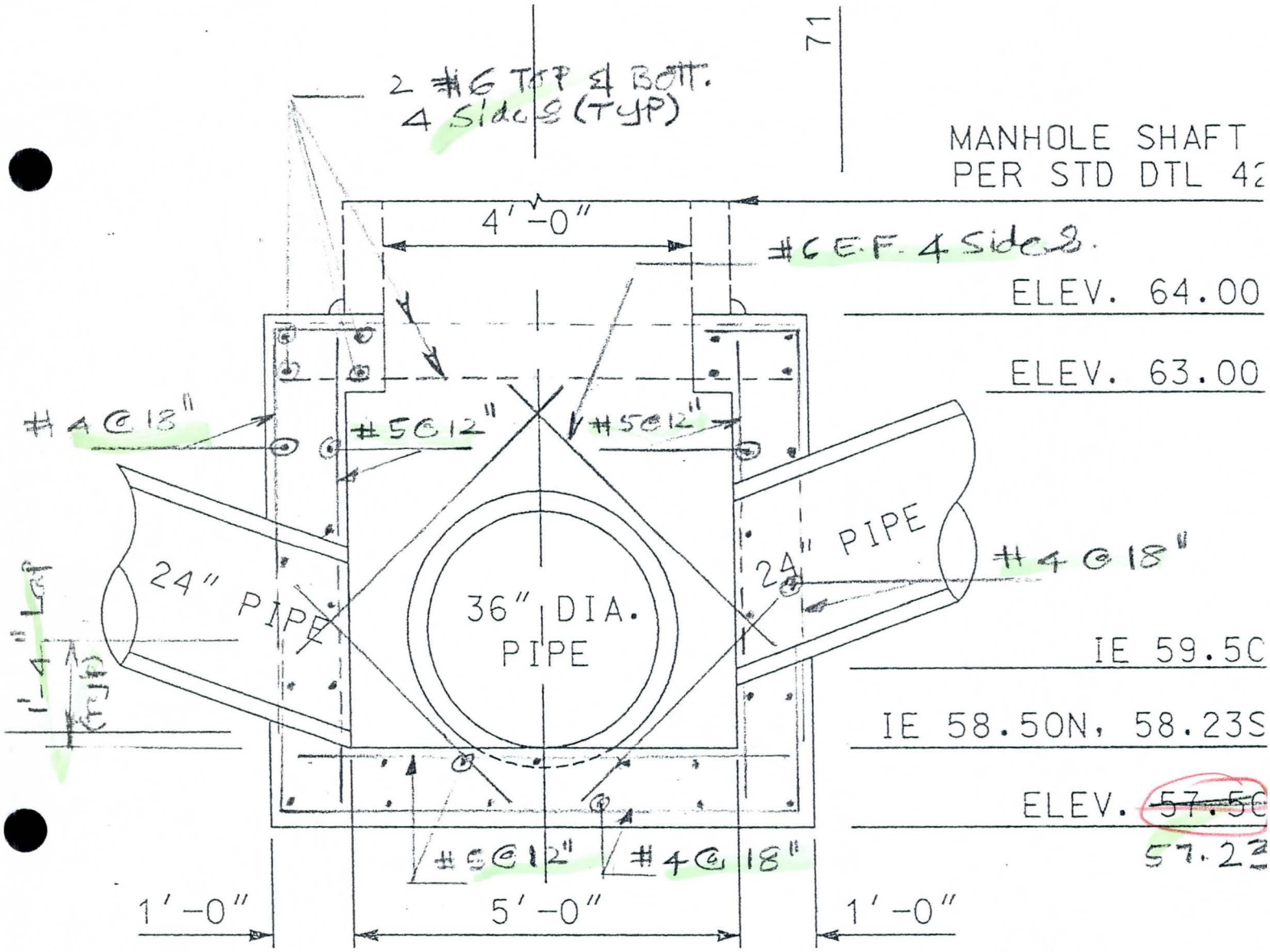

MANHOLE BASE

STA. 153+68 LT, STA. 154+38 LT

SCALE : ~~1" = 2'-0"~~

1/2" = 1'-0

4" A.C. (1½" D-1/2 OVER 2½" C-3/4)
PAVEMENT REPLACEMENT

UNIFORM CUT LINE ASPHALT/CONCRETE

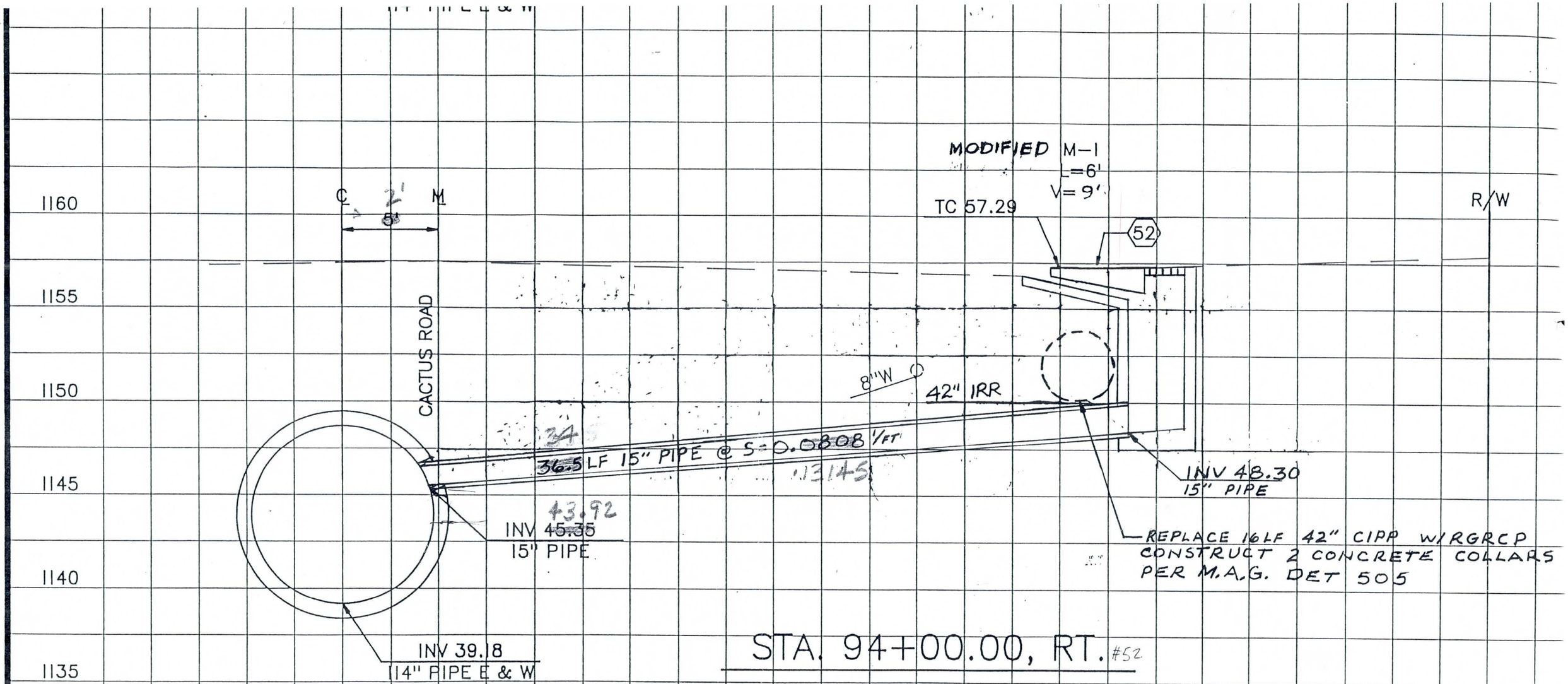
MODIFIED M-1
L=6'
V=9'
TC 57.29
52
R/W
1160
1155
1150
1145
1140
1135
C
2'
M
5'
CACTUS ROAD
8"W
42" IRR
34
36.5 LF 15" PIPE @ S=0.0808'/FT
.03145
INV 48.30
15" PIPE
43.92
INV 45.35
15" PIPE
REPLACE 16LF 42" CIPP W/RGRCP
CONSTRUCT 2 CONCRETE COLLARS
PER M.A.G. DET 505
INV 39.18
114" PIPE E & W
STA. 94+00.00, RT. #52

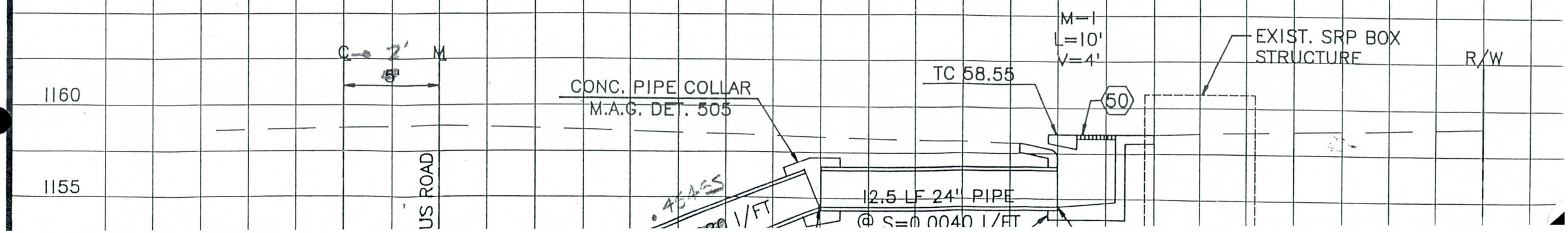
M-1
L=10'
V=4'
EXIST. SRP BOX
STRUCTURE
R/W
TC 58.55
50
1160
1155
C
2'
M
5'
CONC. PIPE COLLAR
M.A.G. DET. 505
US ROAD
12.5 LF 24" PIPE
@ S=0.0040 1/FT

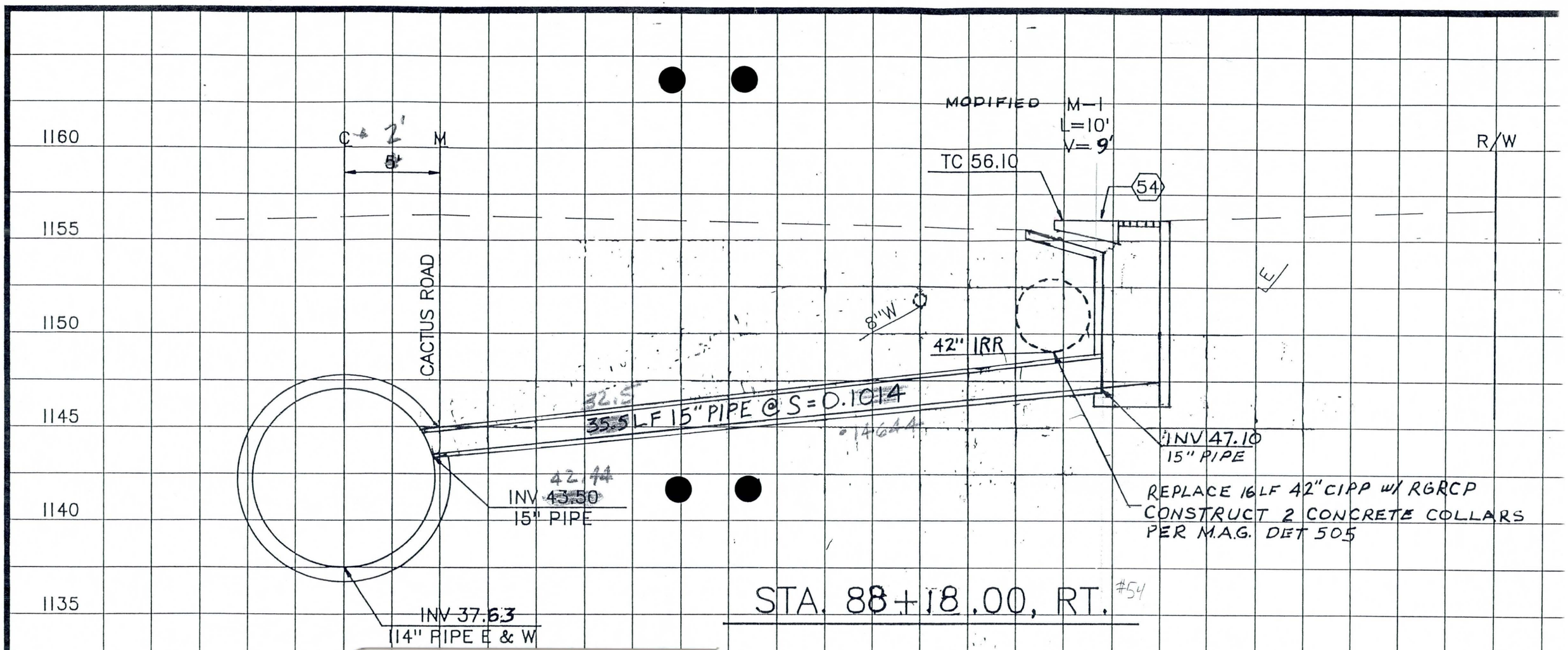
MODIFIED M-1
L=10'
V= 9'
TC 56.10
54
R/W
1160
1155
1150
1145
1140
1135
C
2'
M
8'
CACTUS ROAD
8"W
42" IRR
35.5 LF 15" PIPE @ S=0.1014
INV 47.10
15" PIPE
INV 43.50
15" PIPE
INV 37.63
14" PIPE E & W
REPLACE 16LF 42" CIPP w/ RGRCP
CONSTRUCT 2 CONCRETE COLLARS
PER M.A.G. DET 505
STA. 88+18.00, RT.

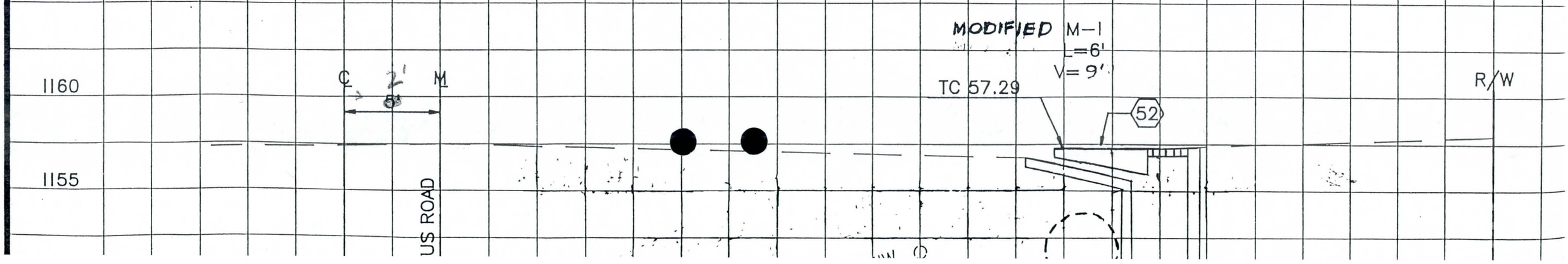
MODIFIED M-1
L=6'
V= 9'
TC 57.29
52
R/W
1160
1155
C
2'
M
8'
US ROAD

FLOOD CONTROL DISTRICT OF MARICOPA COUNTY

PROJECT Cactus Drain PAGE 5 OF

DETAIL Catch Basin COMPUTED KVH DATE 11/95

CHECKED BY DATE

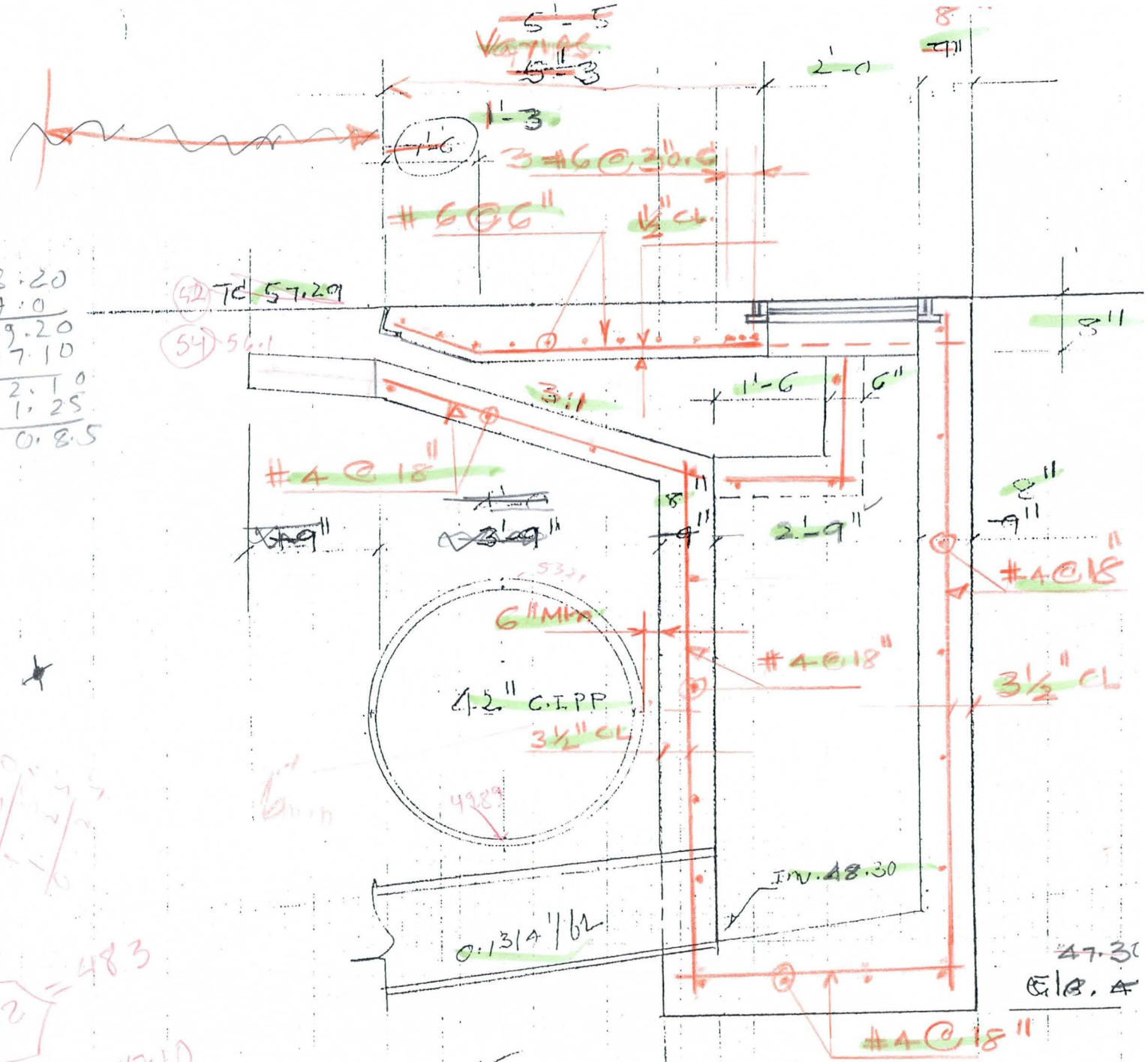

Section A-A

Scale ½" = 1'-0

FLOOD CONTROL DISTRICT OF MARICOPA COUNTY

PROJECT Cactus Drain PAGE 4 OF

DETAIL Cactus Basin COMPUTED KVH DATE 11/95

CHECKED BY DATE

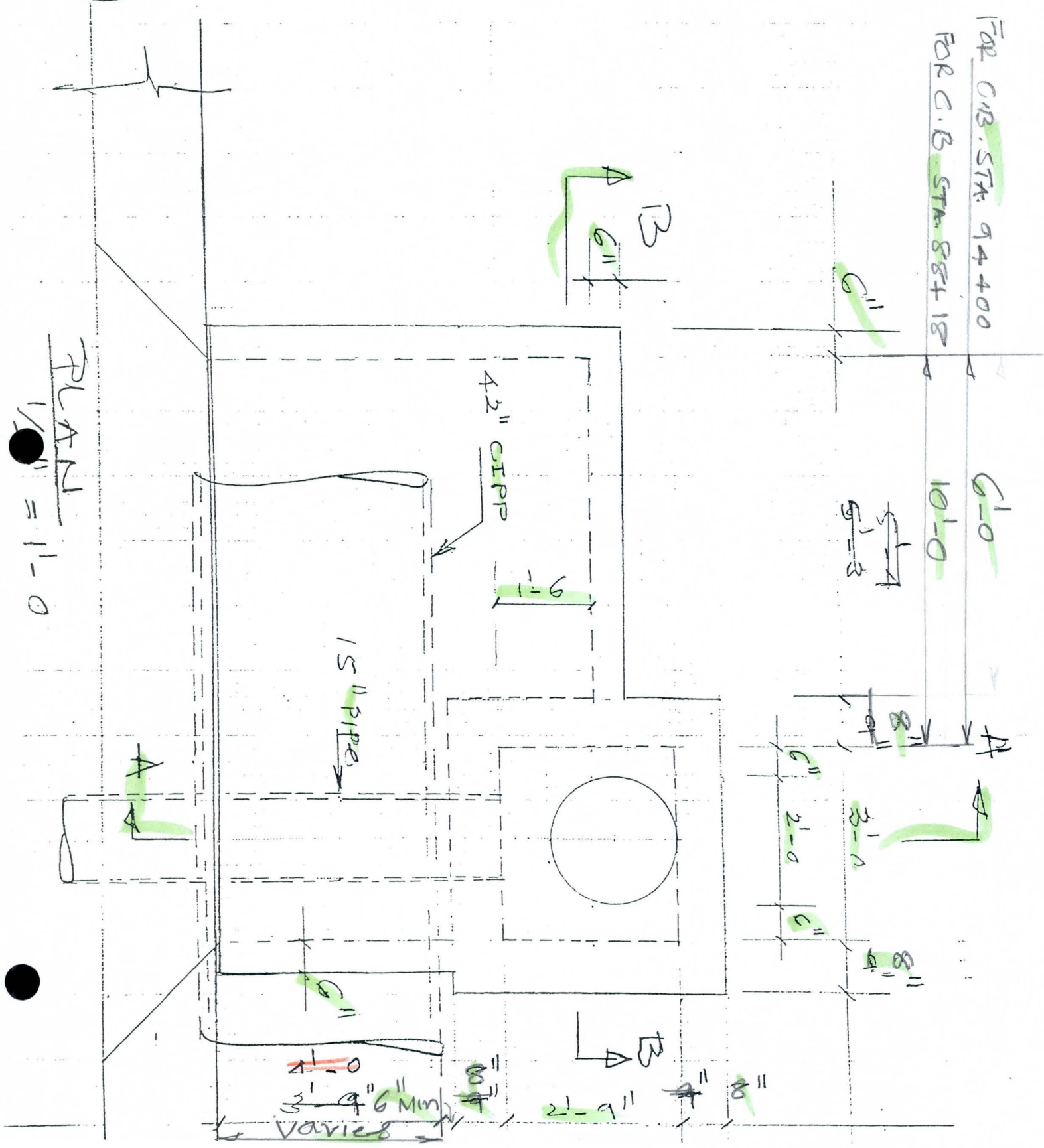

FLOOD CONTROL DISTRICT OF MARICOPA COUNTY

PROJECT Cactus Drain PAGE 6 OF 115

DETAIL Catch Basin COMPUTED KNH DATE

CHECKED BY DATE

52 FOR C.B. STA. 94+00 6'-0

54 FOR C.B. STA. 88+18 10'-0

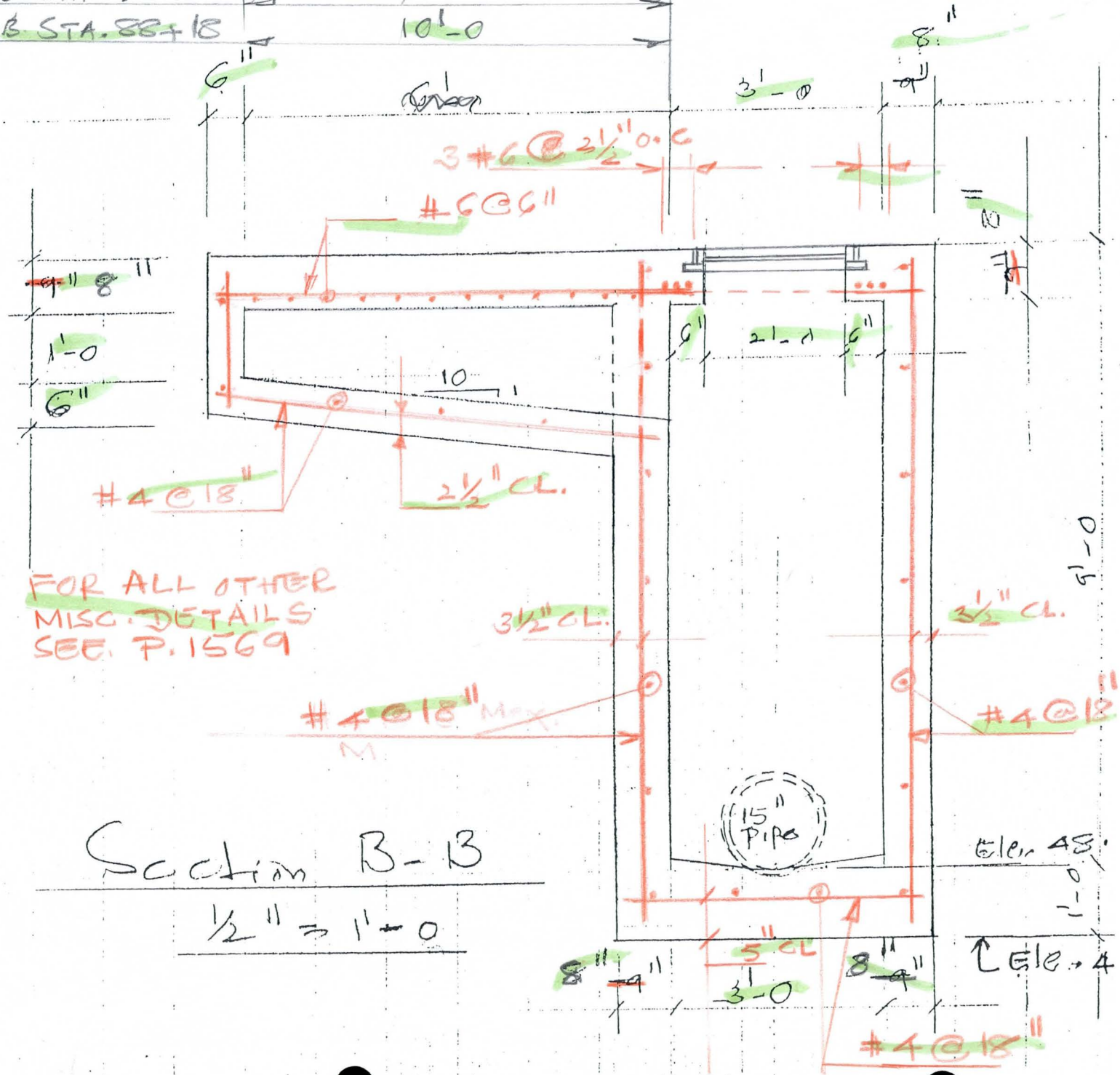

Section B-B

½" = 1'-0

GUTTER TRANSITION	
CURB HEIGHT	DIM 'A'
4"	3'-3"
5"	2'-6"
6"	1'-9"

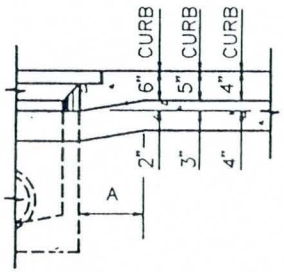

DEPRESSED GUTTER

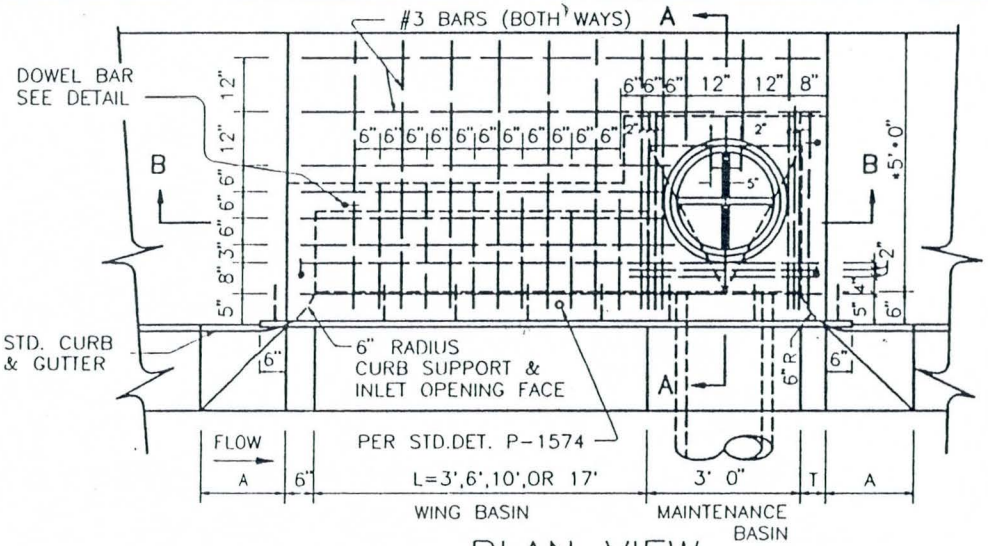

PLAN VIEW

TRANSITION (BOTH SIDES)

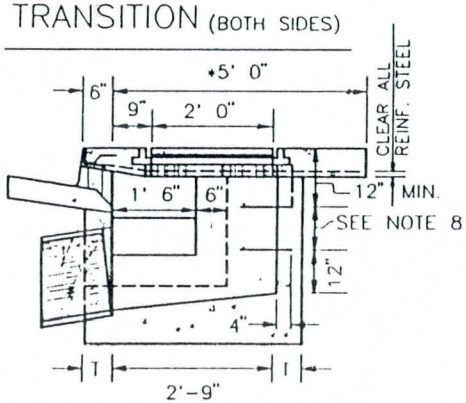

SECTION A - A

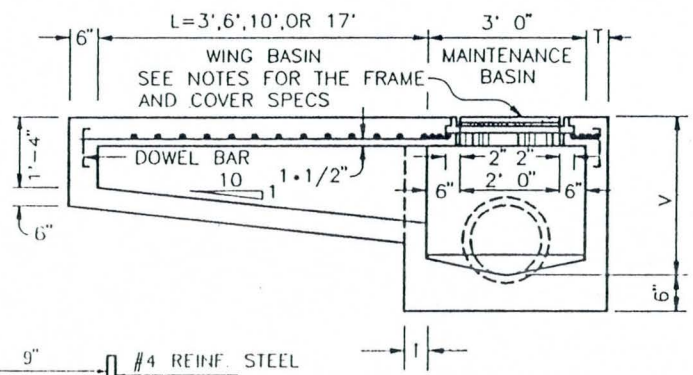

SECTION B - B

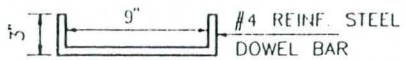

DOWEL BAR
DETAIL

NOTES

1. TYPES ARE DESIGNATES AS FOLLOWS: 'M'.. NO WING, 'M-1'.. ONE WING, 'M-2'.. TWO WINGS.
2. ALL CONCRETE SHALL BE CLASS 'A'.
3. ALL REINFORCING STEEL SHALL BE DEFORMED BARS AMD SHALL CONFORM TO A.S.T.M. SPECIFICATION 615.
4. CONNECTOR PIPES SHALL BE PLACED IN THE APPROPRIATE WALL OF THE MAINTENANCE BASIN.
5. FLOOR OF BASIN SHALL BE TROWLLED TO A HARD, SMOOTH SURFACE AND SHALL SLOPE FROM ALL DIRECTIONS TO OUTLET.
6. CONSTRUCTION DRAINS SHALL BE INSTALLED IN ALL INLETS BUILT WITH PAVING PROJECTS. (SEE DET. P-1575.)
7. LOCATE WING BASIN ON UPSTREAM SIDE OF MAINTENANCE BASIN FOR TYPE M-1. WING BASINS FOR TYPE M-2 SHALL BE BOTH SIDES OF MAINTENANCE BASIN.
8. STEPS (M.A.G. DET. 428 POLYPROPYLENE)- V=3' (INCL.), PLACE ONE STEP 12" ABOVE THE FLOOR OF THE BASIN. V OVER 3', PLACE STEPS AT 12" INTERVALS FROM THE FLOOR OF THE BASIN WITH THE TOP STEP AT 12" (MIN.) BELOW THE TOP OF THE GRATE.
9. ACCESS FRAME AND COVER PER DET. P-1561

CATCH BASIN WALL THICKNESS
T = 6" IF V = 4' OR LESS T = 8" IF V = 4' TO 8' (IF V EXCEEDS 8', SPECIAL DESIGN IS REQUIRED.)
L = 0' UNLESS SPECIFIED ON THE PLANS V = 3'-6" MIN. WHEN L = 0:3' OR 6' V = 4'-0" MIN WHEN L = 10' OR 17'

*4'-0" IN LOCATIONS WHERE 4' SIDEWALK IS REQ'D.

REVISED 03-01-92

DETAIL NO.	City of Phoenix STANDARD DETAIL	CATCH BASIN TYPE 'M'	APPROVED Kenny W Harris CITY ENGINEER 7-9-92 DATE	DETAIL NO.
P1569-1				P1569-1

Dwg Chg Log 10/11/95

Flood Control District of Maricopa County
Interoffice Memorandum

September 25, 1995

To: TDJ

From: EAR
CC: MAL, KVH

Subject: Cactus Road Storm Drain - Phase I, Cost Reduction Incentive No. 1

Per your request, I offer the following additional information to supplement the August 24 and September 15 memos from Engineering.

The VE proposal from Sundt for the Manhole Base is not acceptable. It does not provide an equivalent structure to the one that was specified. It further does not appear to provide adequate structural support for the 120" pipe to resist the effect of the manhole.

I am particularly concerned that the manhole will transfer its load through the proposed concrete cap directly onto the 120" pipe at a section that is weakened by a 4' diameter hole, and there is no additional support proposed around the pipe. The MAG detail handles this by encasing the pipe in concrete to provide support just as do the ADOT standard details and Phoenix standard details. The VE detail places concrete around the perimeter of the manhole on top of the pipe. My best guess is that the intent is to distribute the loading from the manhole to the top of the pipe as a footing. I am concerned that if placed in that fashion, the concrete cap will merely act as additional dead load on the crown of the pipe above the springline, while providing no support to the 120" pipe to allow it to resist the applied direct loading caused by the manhole at the weakened section.

In Brad Sando's written statement on behalf of Ameron, he says the VE proposal very nearly matches a concrete arch detail from the Concrete Pipe Design Manual. This statement is incorrect. The detail from the manual shows encasement over the crown of the pipe to the springline and special bedding below, and there is not a 4' hole in the pipe in the detail. If the detail were followed as shown in the manual, it would in our case translate to a concrete arch 15 feet wide by 8-1/2 feet deep measured along the outside edge, along with special bedding. The VE proposal calls for a concrete cap that is 8' wide by 28" deep measured at the crown of the pipe, all placed well above the springline. Further, the concrete arch detail in the manual appears to be for the case of a load applied above the top of the concrete arch. This is not our situation. The manhole bears on and transfers loads directly to the top of the 120" pipe.

FLOOD CONTROL DISTRICT
of
Maricopa County

2801 West Durango Street • Phoenix, Arizona 85009
Telephone (602) 506-1501
Fax (602) 506-4601
TT (602) 506-5859

BOARD OF DIRECTORS
Betsey Bayless
Ed King
Tom Rawles
Don Stapley
Mary Rose Garrido Wilcox

Mr. "Stoney" Moore, Senior Estimator
SundtCorp
2604 S. 20th Place
Phoenix, AZ 85034

SUBJECT: Cactus Road Storm Drain, Phase I - Cost Reduction Incentive #1

Dear Mr. Moore:

The District has reviewed Sundts' proposal for the revision of the manhole bases required for bid item 625-1. We regret to inform you that this proposal for revision of the bases is not acceptable.

This following are the reasons this proposal was not approved.

1. A wider base provides a better distribution of the loads.

2. The original design provides better protection of the pipe around the manhole.

3. Utilization of the MAG Standard detail will avoid any issues that might arise with this modification.

If you have any questions please call me.

Sincerely,

H. Scott Clement, P.E.
Construction Inspector

COORD: TLJ

INFO: FBF
HSC
FILE: 93-52

FLOOD CONTROL DISTRICT
of
Maricopa County

Interoffice Memorandum

RECEIVED 9/14/95

DATE: August 24, 1995

TO: TDJ

FROM: KVH
VIA: MAL

SUBJECT: Cactus Road Storm Drain-Phase I, Cost Reduction Incentive No. 1.

Engineering has reviewed SundtCorp's VE proposal to modify the manhole base and do not recommend accepting this proposal for the following reasons:

1. There is a better distribution of the loads with the wider base.
2. The original design provides better protection of the pipe around the manhole.
3. Staying with the MAG Standards will avoid any problems that may arise with this modification.

Folder: io-mem51

To: HSC
MAL
EAR
KVH

From: Kumar Hanumaiah:TALOS
Postmark: 09/15/95 03:06PM
Status: Previously read

Host: TALOS
Delivered: 09/15/95 03:06PM

Subject: Cactus Road Storm Drain-Cost Reduction Incentive

Message:

The proposal for the revision of the Manhole bases is not acceptable, because of the use of slender section may lead to possible rotation around the manhole opening.

Therefore utilization of the MAG Standard Detail will avoid any issues that might arise with this modification.

To: HSC
MAL
EAR
KVH

From: Kumar Hanumaiah:TALOS
Postmark: 09/15/95 03:06PM
Status: Previously read

Host: TALOS
Delivered: 09/15/95 03:06PM

Subject: Cactus Road Storm Drain-Cost Reduction Incentive

Message:

The proposal for the revision of the Manhole bases is not acceptable, because of the use of slender section may lead to possible rotation around the manhole opening.

Therefore utilization of the MAG Standard Detail will avoid any issues that might arise with this modification.

SundtCorp
BUILDING INTEGRITY SINCE 1890

AUG 1 4 1995

August 9, 1995

Flood Control District
Of Maricopa County
2801 West Durango Street
Phoenix, Arizona 85009

Attn: Tom Johnson, P.E., R.L.S.
Construction and Maintenance Division Manager

Ref: Cactus Road Storm Drain-Phase I, FCD 93-52
Cost Reduction Incentive No. 1 (Manholes)

Dear Mr. Johnson

Sundt Corp is pleased to submit the following Cost Reduction Incentive for your approval. This purpose of this proposal is to revise the manhole bases required for Bid Item 625-1 Manhole MAG Det. 522 & "A" from the original base has specified to a revised base as shown on the enclosed detail. Included in this request is a letter from Ameron Concrete Pipe Co. stating that the proposed base has no adverse effect on the structural integrity of the pipe. Nine such manholes were required for this project, however one such manhole has been completed to date leaving eight manholes which would be affected by this proposal.

If you have any questions, please contact me at 253-2972.

Sincerely,

Fred "Stoney" Moore, Jr.
Senior Estimator

Sundt Corp. 2604 S. 20th PLACE • PHOENIX, AZ 85034 • (602) 253-2972 • FAX (602) 253-7266
Arizona Contractor Licenses 068012-A and 068013-B-01 • Nevada Contractor License 0022067-AB • California License 453175-AB

Cost Summary

TOTAL COST SUMMARY

ITEM	DESCRIPTION	QUANTITY	U.M.	TOTAL PRICE
1	DIRECT COST ADJUSTMENT	1	L.S.	$16,035.00
2	GENERAL COST ADJUSTMENTS			
	TOTAL GENERAL COST			$0.00

TOTAL REDESIGN DIRECT COST SAVINGS **$16,035.00**

COST REDUCTION DISTRIBUTION	SUNDT CORP		MCFCD
TOTAL SAVING SPLIT	$8,017.50		$8,017.50
BASE CONTRACT ADJUSTMENT			$8,017.50
MARGIN (5%)			$400.88
SUBTOTAL BASE/MARGIN			$8,418.38
BOND (.4%)			$33.67
SUBTOTAL BASE/MARGIN/BOND			$8,452.05
SALES TAXES (4.225%)			$357.10
TOTAL CHANGE ORDER AMOUNT (DEDUCTIVE)			**$8,809.15**

Statement of Affect on Pipe

Ameron
Concrete & Steel Pipe Systems
Southern Division

Wednesday, August 09, 1995

Stoney Moore
Sundt Corp.
2604 S. 20th Place
Phoenix, AZ 85034

Dear Stoney:

In response to your inquiry regarding the 48" manhole structures and subsequent request to modify the design from that shown in the contract documents. I have enclosed a copy of page 440 figure no. 227 of the Concrete Pipe Design manual. What you have proposed very nearly matches the concrete arch shown in the upper right, and ultimately increases the bedding factor by roughly 50 percent. As a matter of fact, we would recommend this type of installation should it not be specifically addressed in the project documents. In this case however, it was detailed in the project specs as encasement. Should you decide to use an arch type installation by pouring a concrete collar on the pipe it will have no adverse affects on the pipe or its design. As a general rule that collar should be a minimum of twice the diameter of the outlet. Should you have any further questions please contact my office.

Sincerely,

Brad Sando

Brad Sando
Project Engineer

cc File

Southwest District • 2325 S. Seventh Street • P.O. Box 20505 • Phoenix, Arizona 85036 • 602/252-7111 • Fax: 602/258-8456

FIGURE 227

TRENCH BEDDINGS
CIRCULAR PIPE

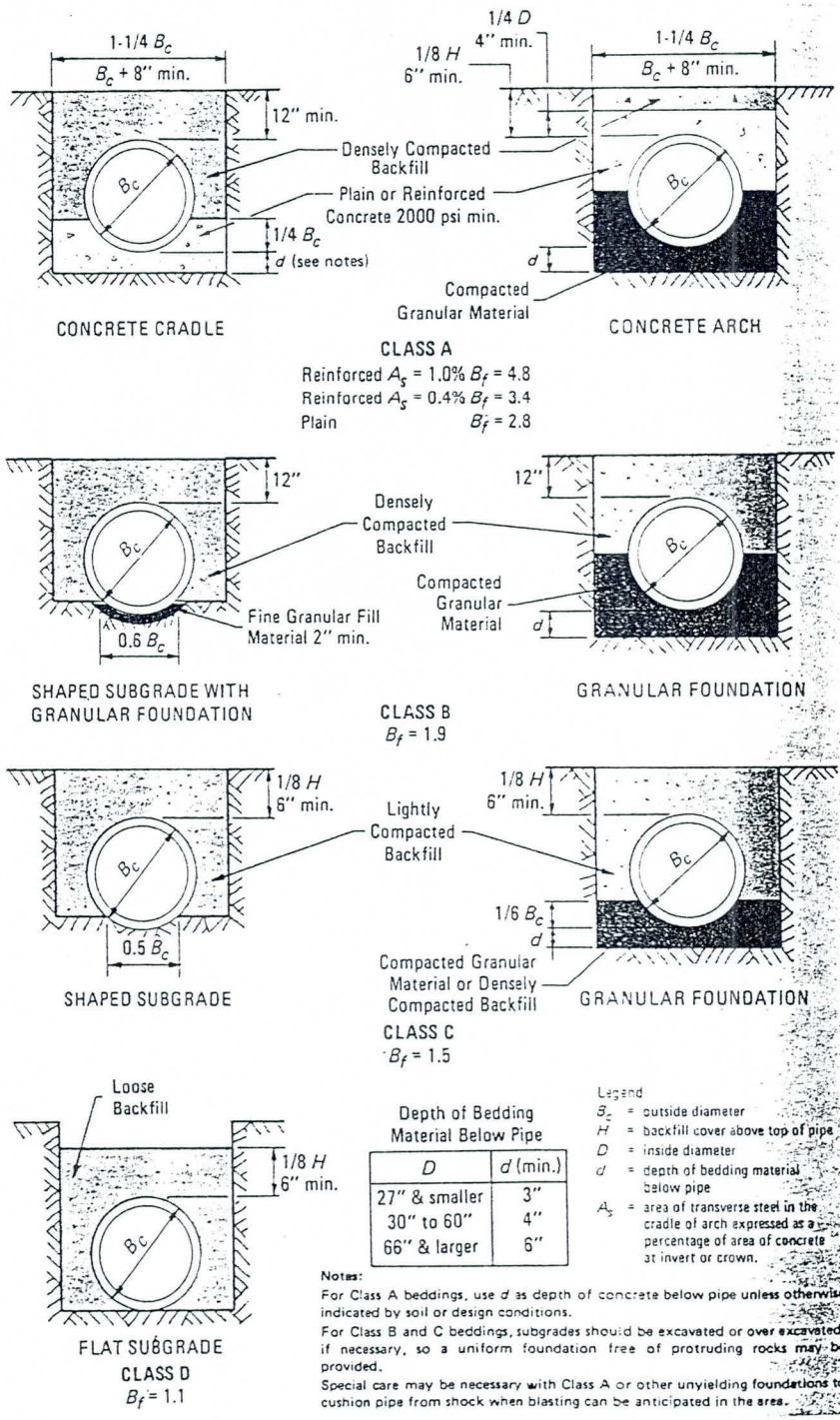

Depth of Bedding Material Below Pipe

D	d (min.)
27" & smaller	3"
30" to 60"	4"
66" & larger	6"

Legend
B_c = outside diameter
H = backfill cover above top of pipe
D = inside diameter
d = depth of bedding material below pipe
A_s = area of transverse steel in the cradle of arch expressed as a percentage of area of concrete at invert or crown.

Notes:
For Class A beddings, use d as depth of concrete below pipe unless otherwise indicated by soil or design conditions.
For Class B and C beddings, subgrades should be excavated or over excavated, if necessary, so a uniform foundation free of protruding rocks may be provided.
Special care may be necessary with Class A or other unyielding foundations to cushion pipe from shock when blasting can be anticipated in the area.

Revised Detail

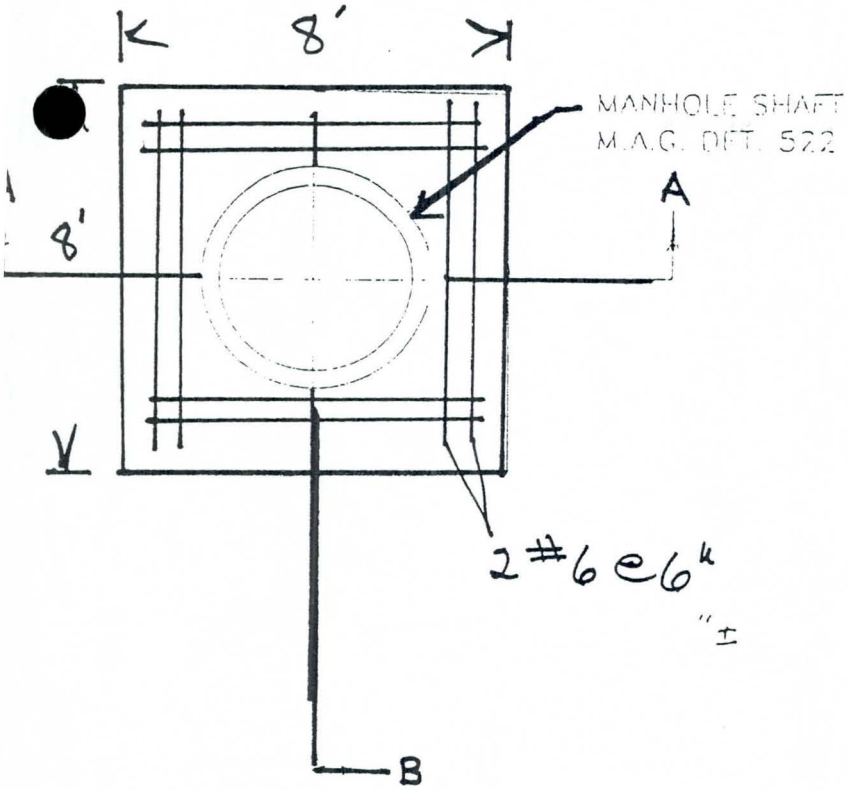

PLAN

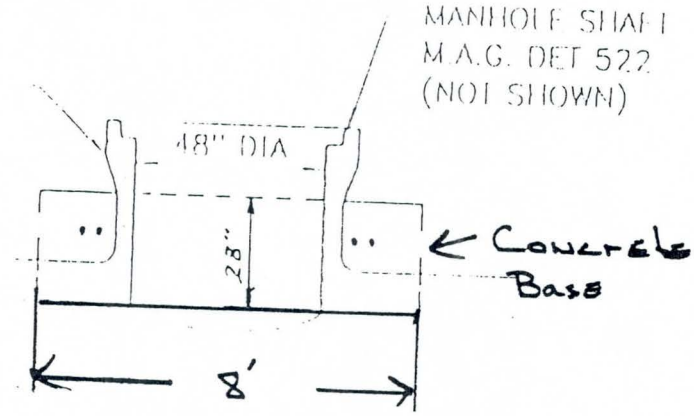

Section A-A

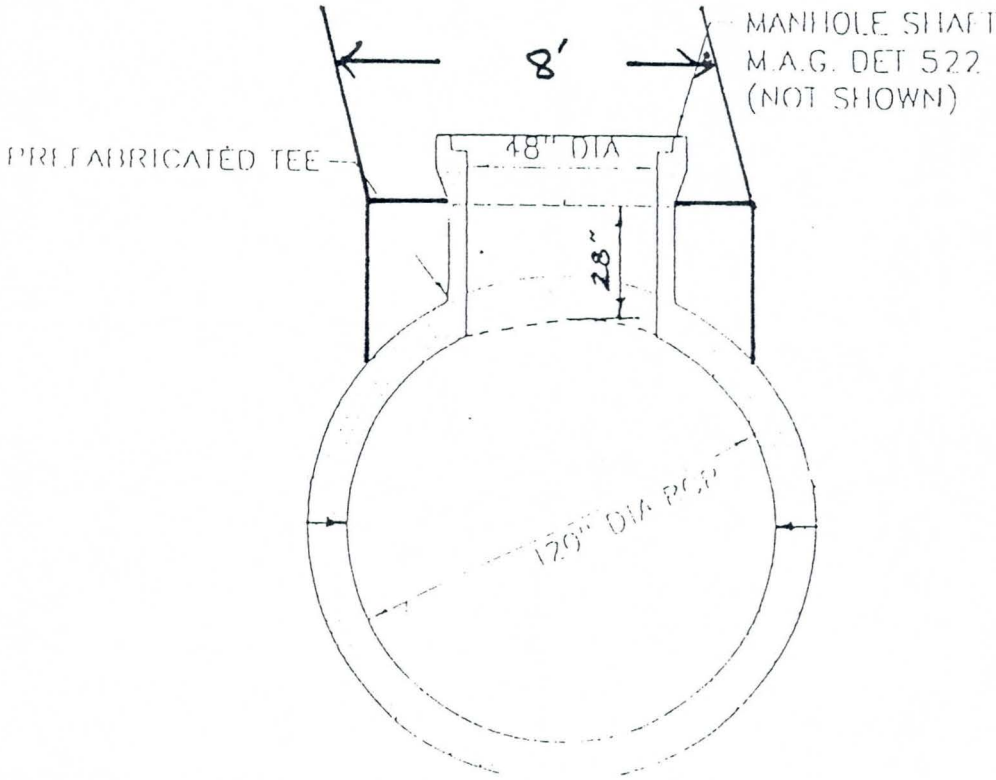

SECTION B - B

Original Cost

BID ITEM = 10 CLIENT# = 625-1 Land Item SCHEDULE: 1 1 100
DESCRIPTION = MANHOLE DETAIL 522 & "A" Unit = EA TAKEOFF QUAN: 8.000 ENGR QUAN: 8.000

Activity Detail	Description	Pcs	Quantity	Curr Unit	Unit Cost	Labor	All Equipment	Permanent Matl/Exp	Construct Matl/Exp	Truck Hauling	Sub-Contract	Total
.05	BUY MANHOLE MATERIAL		8.00 EA	Hrs/Shift = 8.00 WC Code = 1			* Factored *					
230	30" MANHOLE RING & COVER		8.00 EA	US$	175.000			1,400				1,400
2C01	CL A CONCRETE		285.00 CY	US$	45.900			13,082				13,082
2MH	4' DIA MANHOLE SHAFT		36.00 VF	US$	45.000			1,620				1,620
4ADJMH	MANHOLE FINAL ADJUSTMENT		8.00 EA	US$	200.000						1,600	1,600
$17,701.50				[ ]				16,102			1,600	17,702
0.0000 Un/Shift		0.0000 Units/Hr		0.0000 Unit/MH				2,012.69			200.00	2,212.69
.10	SHORE MANHOLE		8.00 EA	Hrs/Shift = 8.00 WC Code = 1			* Factored *					
8PIBX1	SMALL TRNCH BOX		128.00 HR	US$	7.500		960					960
$960.00				[ ]			960					960
0.0000 Un/Shift		0.0000 Units/Hr		0.0000 Unit/MH			120.00					120.00
.15	INSTALL MANHOLE		8.00 EA	Hrs/Shift = 8.00 WC Code = 1			* Factored *					
8CT18H	18 TON HYD CRANE	8.00	64.00 HR		27.000		1,728					1,728
8MEMX6	6 SACK MIXER	8.00	64.00 HR		5.270		337					337
8TRFL2	2.5 TON FLATRACK	8.00	64.00 HR		13.650		874					874
AAP503	MANHOLES > 96"1.0000uh 001d0		8.00 CH		0.000							
LAB3	LABOR TOOL,RIGGER,PREC	24.00	192.00 MH	* US$	17.405	3,341						3,341
LAB4	LABOR RAKER,PIPE,CHUCK	24.00	192.00 MH	* US$	18.096	3,474						3,474
OP4	OP 992,LCRANE,UNIV,D10	8.00	64.00 MH	* US$	25.706	1,645						1,645
$11,398.26	56.0000 MH/EA		448.00 MH	[	704.000]	8,459	2,939					11,398
8.0000 Un/Shift		1.0000 Units/Hr *		0.0179 Unit/MH		1,057.42	367.36					1,424.78
========>	ITEM TOTALS:	10 - MANHOLE DETAIL 522 & "A"				==========						
$30,059.76	56.0000 MH/EA		448.00 MH	[	704.000]	8,459	3,899	16,102			1,600	30,060
3,757.470	8 EA					1,057.42	487.36	2,012.69			200.00	3,757.47

Proposed Cost

BID ITEM = 20 CLIENT# = 625-1 Land Item SCHEDULE: 1 1 100
DESCRIPTION = PROPOSE MANHOLE FOR 120" PIPE Unit = EA TAKEOFF QUAN: 8.000 ENGR QUAN: 8.000

Activity Detail	Description	Pcs	Quantity	Curr Unit	Unit Cost	Labor	All Equipment	Permanent Matl/Exp	Construct Matl/Exp	Truck Hauling	Sub-Contract	Total
.05	PROPOSED MANHOLE MATERIAL		8.00	EA	Hrs/Shift = 8.00 WC Code = 1		* Factored *					
230	30" MANHOLE RING & COVER		8.00	EA US$	175.000			1,400				1,400
2C01	CL A CONCRETE		56.00	CY US$	45.900			2,570				2,570
2MH	4' DIA MANHOLE SHAFT		36.00	VF US$	45.000			1,620				1,620
4ADJMH	MANHOLE FINAL ADJUSTMENT		8.00	EA US$	200.000						1,600	1,600
$7,190.40					[ ]			5,590			1,600	7,190
0.0000 Un/Shift		0.0000 Units/Hr			0.0000 Unit/MH			698.80			200.00	898.80
.15	INSTALL MANHOLE		8.00	EA	Hrs/Shift = 8.00 WC Code = 1		* Factored *					
8CT18H	18 TON HYD CRANE	4.00	32.00	HR	27.000		864					864
8MEMX6	6 SACK MIXER	4.00	32.00	HR	5.270		169					169
8TRFL2	2.5 TON FLATRACK	4.00	32.00	HR	13.650		437					437
AAP501	MANHOLES 24" T1.0000uh 001d0		8.00	CH	0.000							
LAB3	LABOR TOOL,RIGGER,PREC	16.00	128.00	MH * US$	17.405	2,227						2,227
LAB4	LABOR RAKER,PIPE,CHUCK	16.00	128.00	MH * US$	18.096	2,316						2,316
OP4	OP 992,LCRANE,UNIV,D10	4.00	32.00	MH * US$	25.706	822						822
$6,834.88	36.0000 MH/EA		288.00	MH	[446.000]	5,365	1,469					6,835
8.0000 Un/Shift		1.0000 Units/Hr *			0.0278 Unit/MH	670.68	183.68					854.36
========>	ITEM TOTALS:	20 -	PROPOSE MANHOLE FOR 120" PIPE			==========						
$14,025.28	36.0000 MH/EA		288.00	MH	[446.000]	5,365	1,469	5,590			1,600	14,025
1,753.160	8 EA					670.68	183.68	698.80			200.00	1,753.16

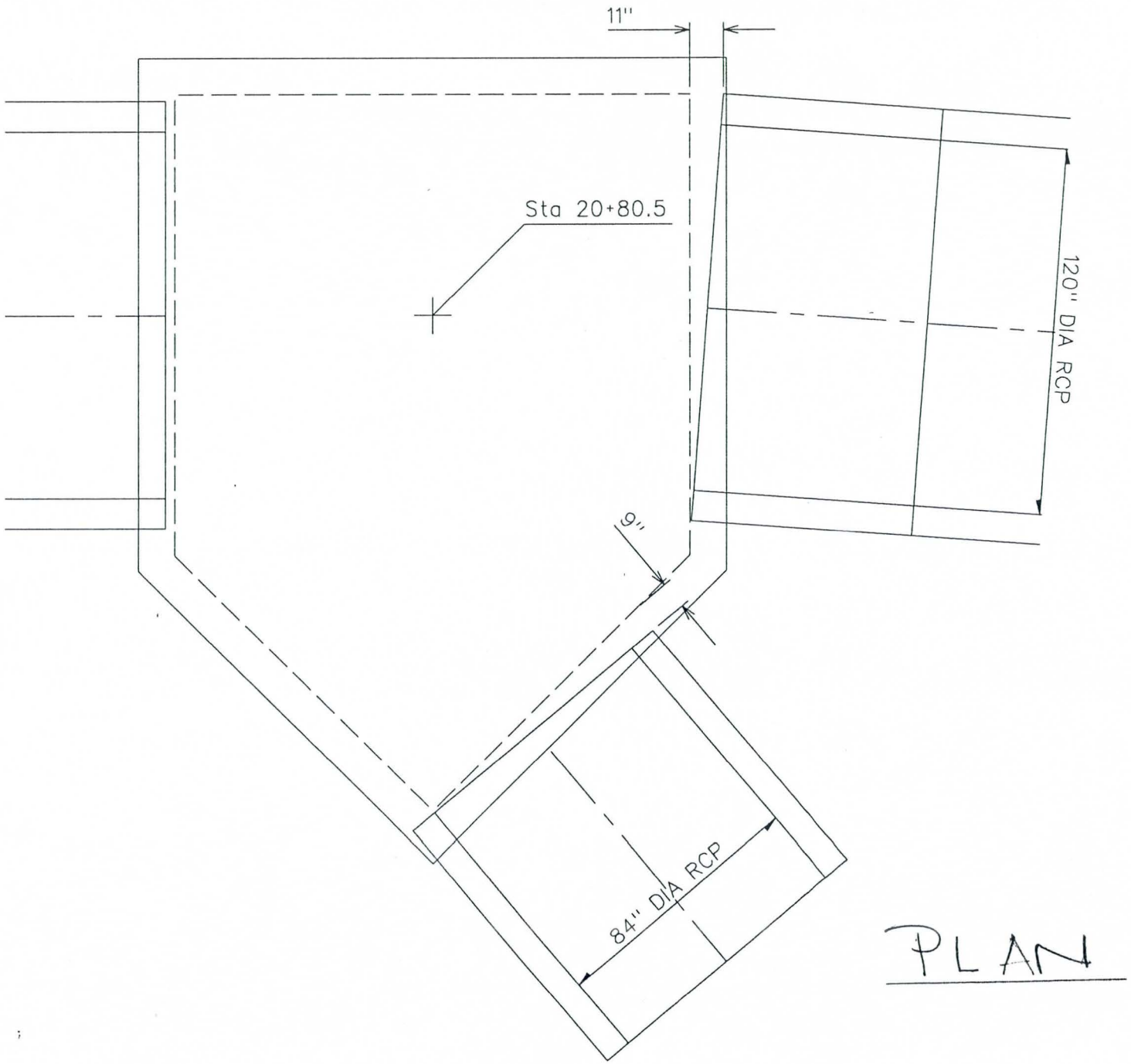

PLAN

c:/cactus/cactus.dgn Sep. 1, 1995 13:24:05

FLOOD CONTROL DISTRICT OF MARICOPA COUNTY

PROJECT Cactus Drain PAGE 2 OF

DETAIL Box Revisions COMPUTED KVH DATE 8/95

CHECKED BY DATE

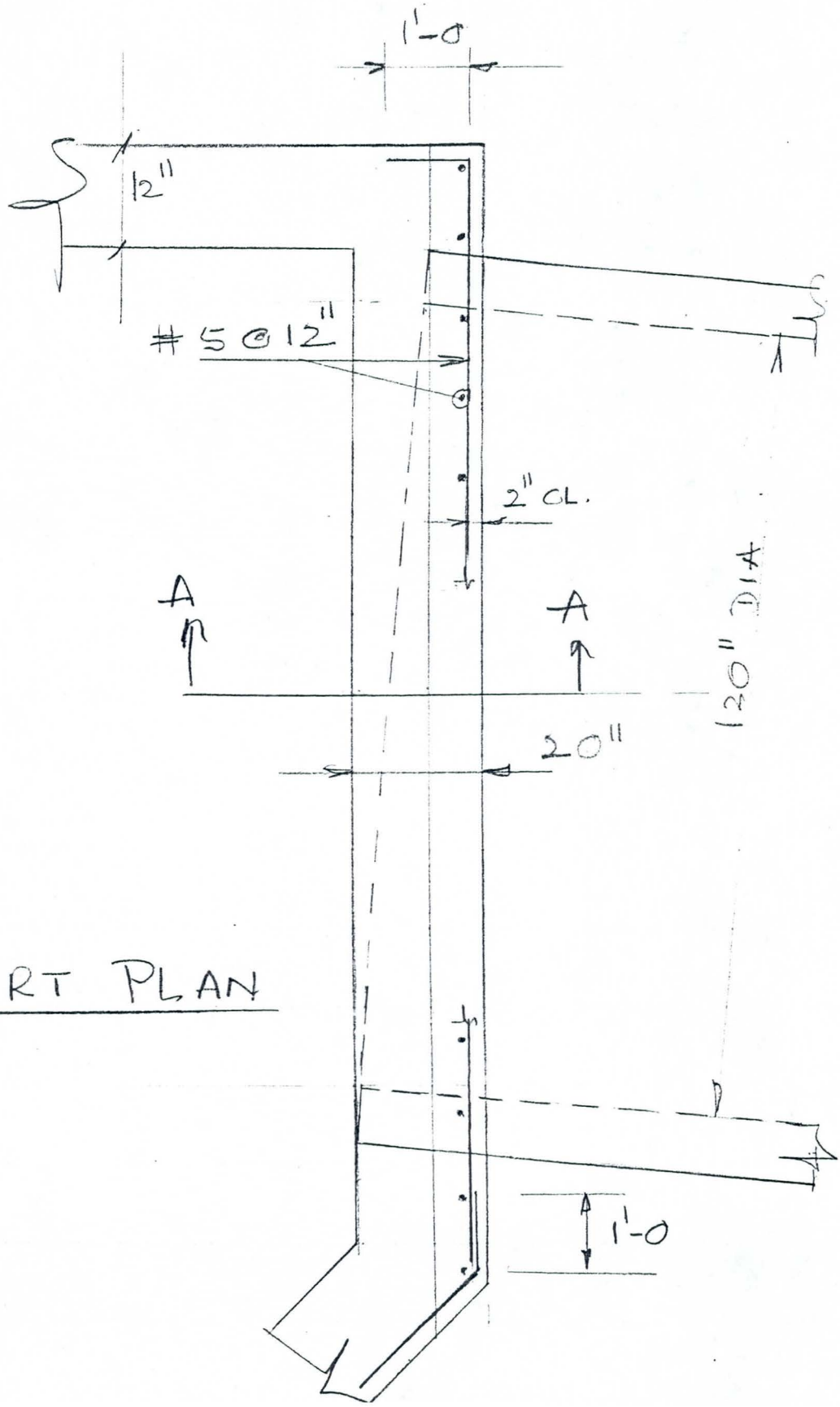

PART PLAN

FLOOD CONTROL DISTRICT OF MARICOPA COUNTY

PROJECT Cactus Drain PAGE 3 OF

DETAIL Box Revision COMPUTED KVH DATE 8/95

CHECKED BY DATE

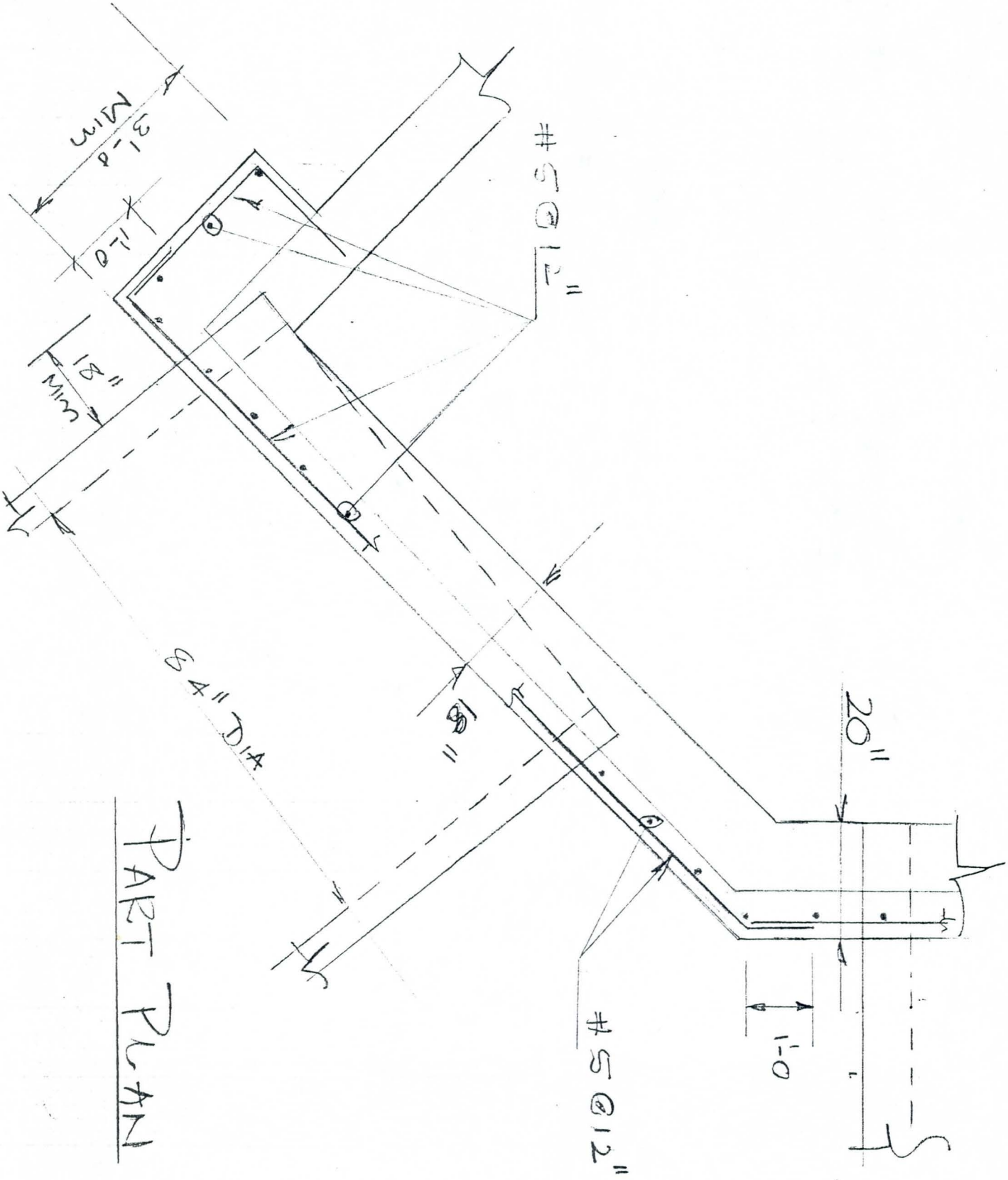

FLOOD CONTROL DISTRICT OF MARICOPA COUNTY

PROJECT Cactus Drain PAGE 4 OF

DETAIL Box Revisions COMPUTED KVH DATE 8/95

CHECKED BY DATE

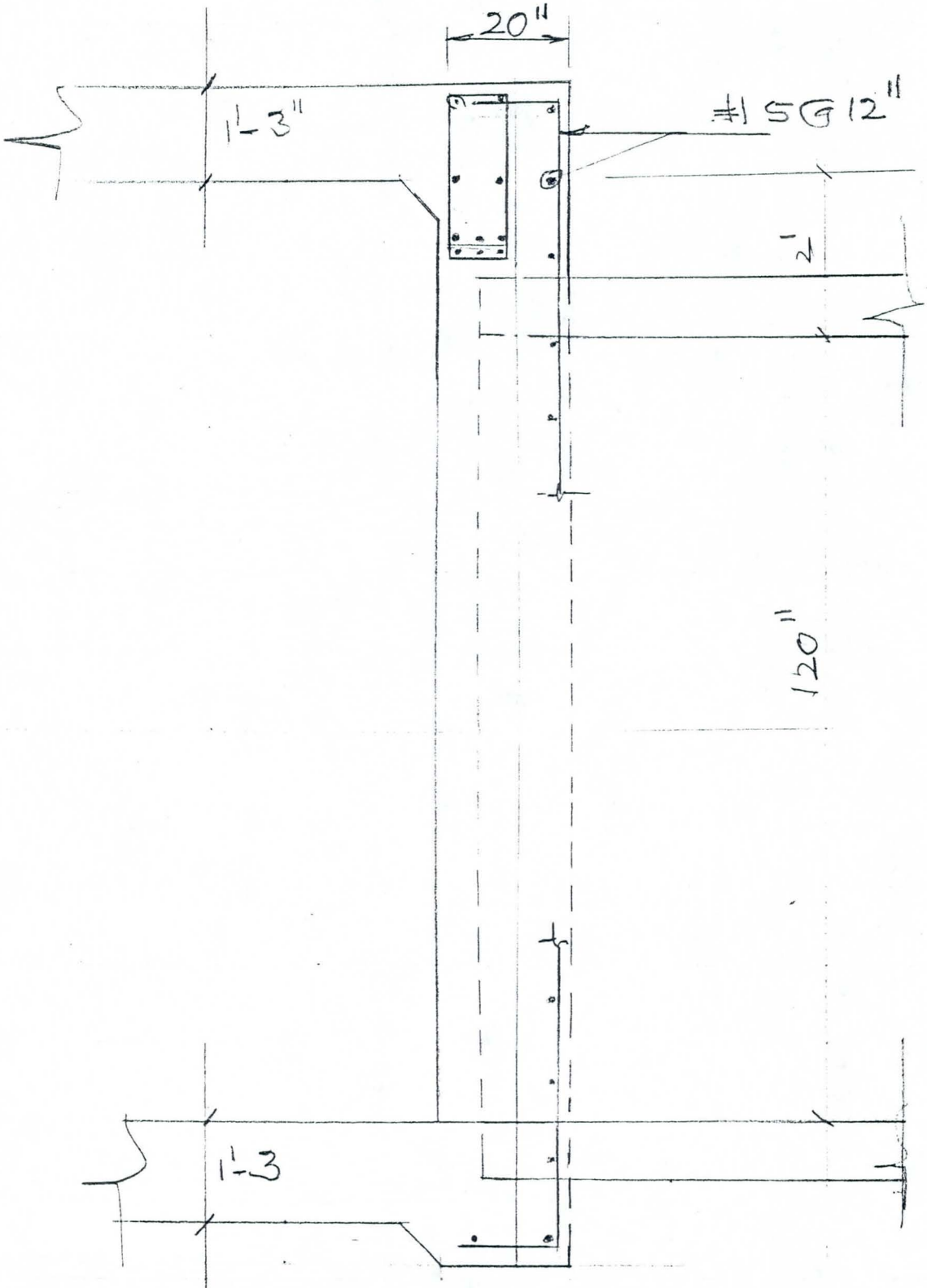

SECTION- AA

To: MAL
KVH
FBF
Cc: EAR
RWS

From: Scott Clement:TALOS Host: TALOS
Postmark: 09/06/95 03:55PM Delivered: 09/06/95 03:55PM
Status: Previously read Certified

Subject: Cactus Rd

Message:
The owner of the property on the south west corner of Cactus & 91st Ave has asked why there is no drain from his property into the 120" storm drain.

Some history on this property. Everytime it rains this property is flooded. It is a storage facility built prior to codes requiring elevated pads ie. his pad is at grade & the whole parcel is low. The owner is in litigation (multi-million dollar lawsuit) with the City of Peoria sueing for damages caused by flooding in past years. He has been flooded once since the NTP of this project. Sundt was made aware of this parcels tendenacy to flood & informed of their responsibility for damages during the construction of the sotrm drain. This property did flood last month. Sundt has assumed responsibility for this flooding incident & is worked with him to settle claims for damages.

Originally we thought that a drain might not have been installed here because his property was lower than the hydraulic grade line of the 120". On Friday John Hughes & I shot elevations & found that the low point on his property is approximatley 1 foot above the hydraulic grade lineof the 120".

I need to respond to this query by September 20th. As I see it, we either explain to him why a drain isn't needed on his property into the 120" line, or we modify the contract & install a drain into the 120" from his property.

To: MAL
RWS
FBF
KVH

Cc: EAR
LLY

From: Scott Clement:TALOS Host: TALOS
Postmark: 09/07/95 06:14AM Delivered: 09/07/95 06:14AM
Status: Previously read Certified

Subject: Forwarded: Reply to: Cactus Rd

Comments:
This property will not drain to the the south. Flows enter this property from both Cactus & 91st Ave. If RW's response is going to be the Districts' repsonse we ought to be prepared to recieve a bit of criticism for constructing a multimillion dollar project to resolve regional flooding while someone immediatly adjacent to the project still floods. The City of Peoria is aware of this individuals request to install a drain from the subject property into the 120" line & have not voiced any objections.

Previous Comments:
From: R W Shobe:TALOS
Date: 09/06/95 04:11PM
The project is designed to accept flows only from the north and east. properties to the south drain south to Grand Avenue to proposed pipes 635 and 634 which are to be built by others. The 84" pipe in 91st Avenue is the outfall for that system.

From: Scott Clement:TALOS
Date: 09/06/95 03:55PM
The owner of the property on the south west corner of Cactus & 91st Ave has asked why there is no drain from his property into the 120" storm drain.

Some history on this property. Everytime it rains this property is flooded. It is a storage facility built prior to codes requiring elevated pads ie. his pad is at grade & the whole parcel is low. The owner is in litigation (multi-million dollar lawsuit) with the City of Peoria sueing for damages caused by flooding in past years. He has been flooded once since the NTP of this project. Sundt was made aware of this parcels tendenacy to flood & inf

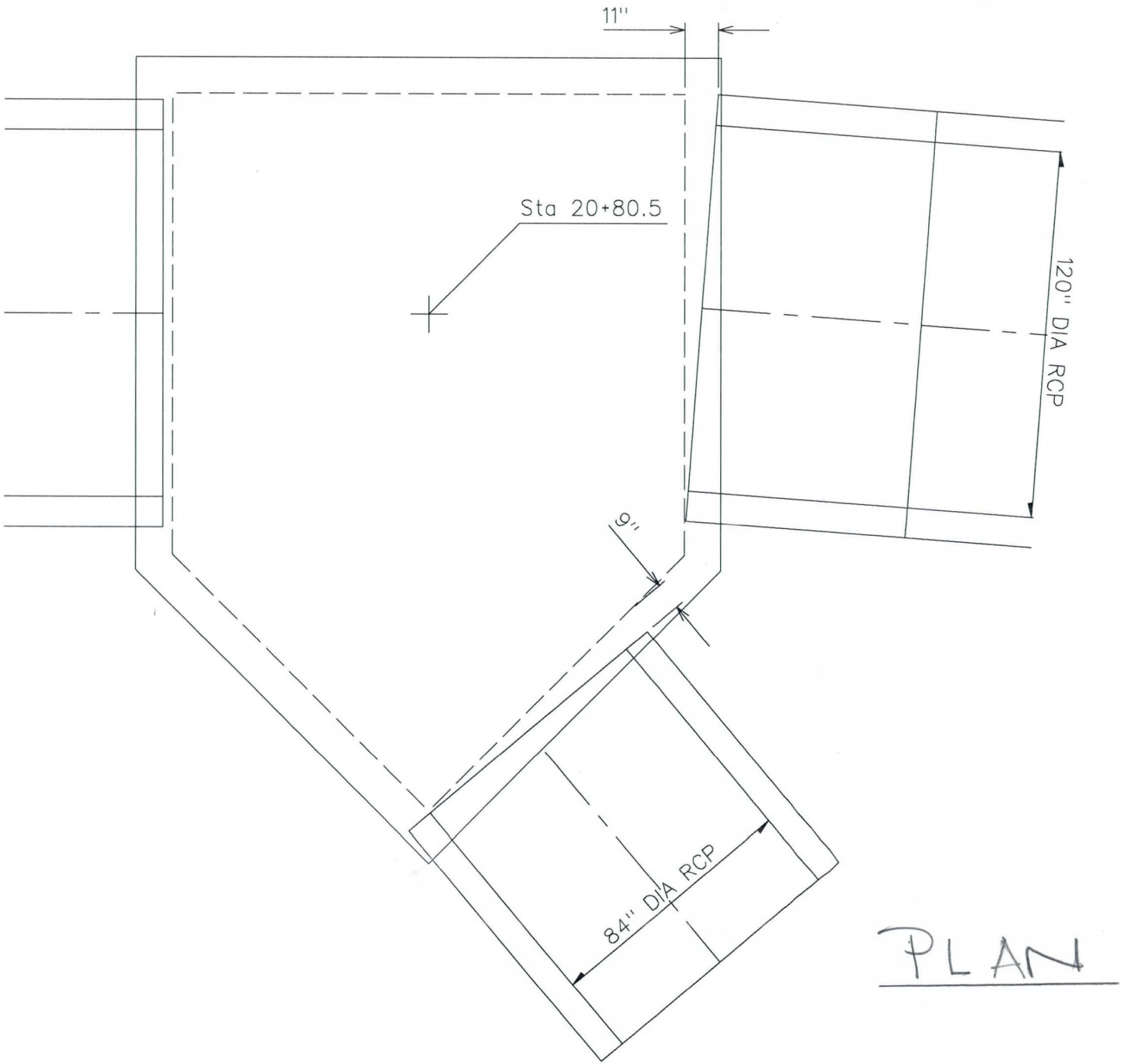

PLAN

c:/cactus/cactus.dgn Sep. 1, 1995 13:24:05

FLOOD CONTROL DISTRICT OF MARICOPA COUNTY

PROJECT Cactus Drain PAGE 2 OF

DETAIL Box Revisions COMPUTED KVH DATE 8/95

CHECKED BY DATE

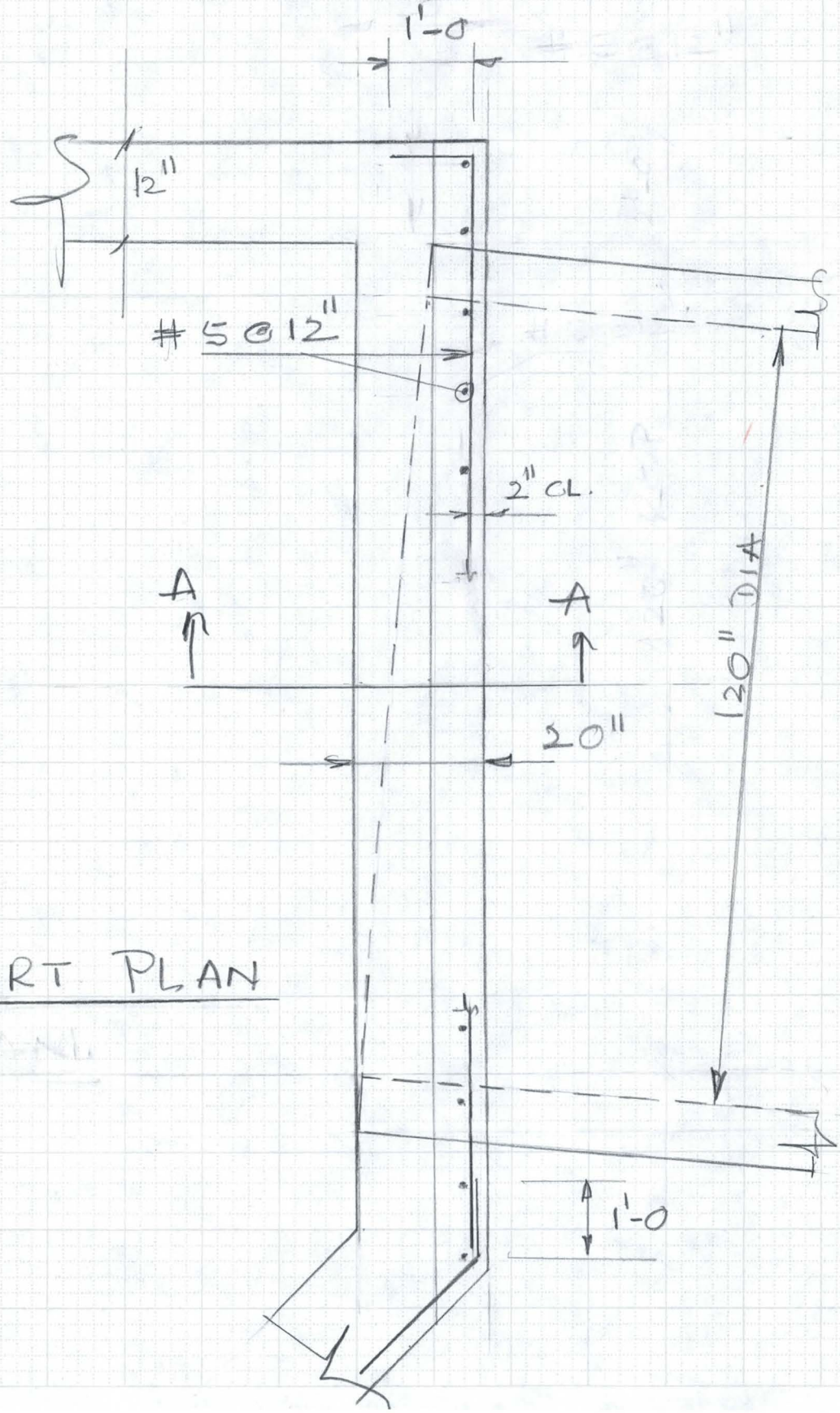

PART PLAN

6910-153 4-90

FLOOD CONTROL DISTRICT OF MARICOPA COUNTY

PROJECT Cactus Drain PAGE 3 OF

DETAIL Box · Revision COMPUTED KVH DATE 8/95

CHECKED BY DATE

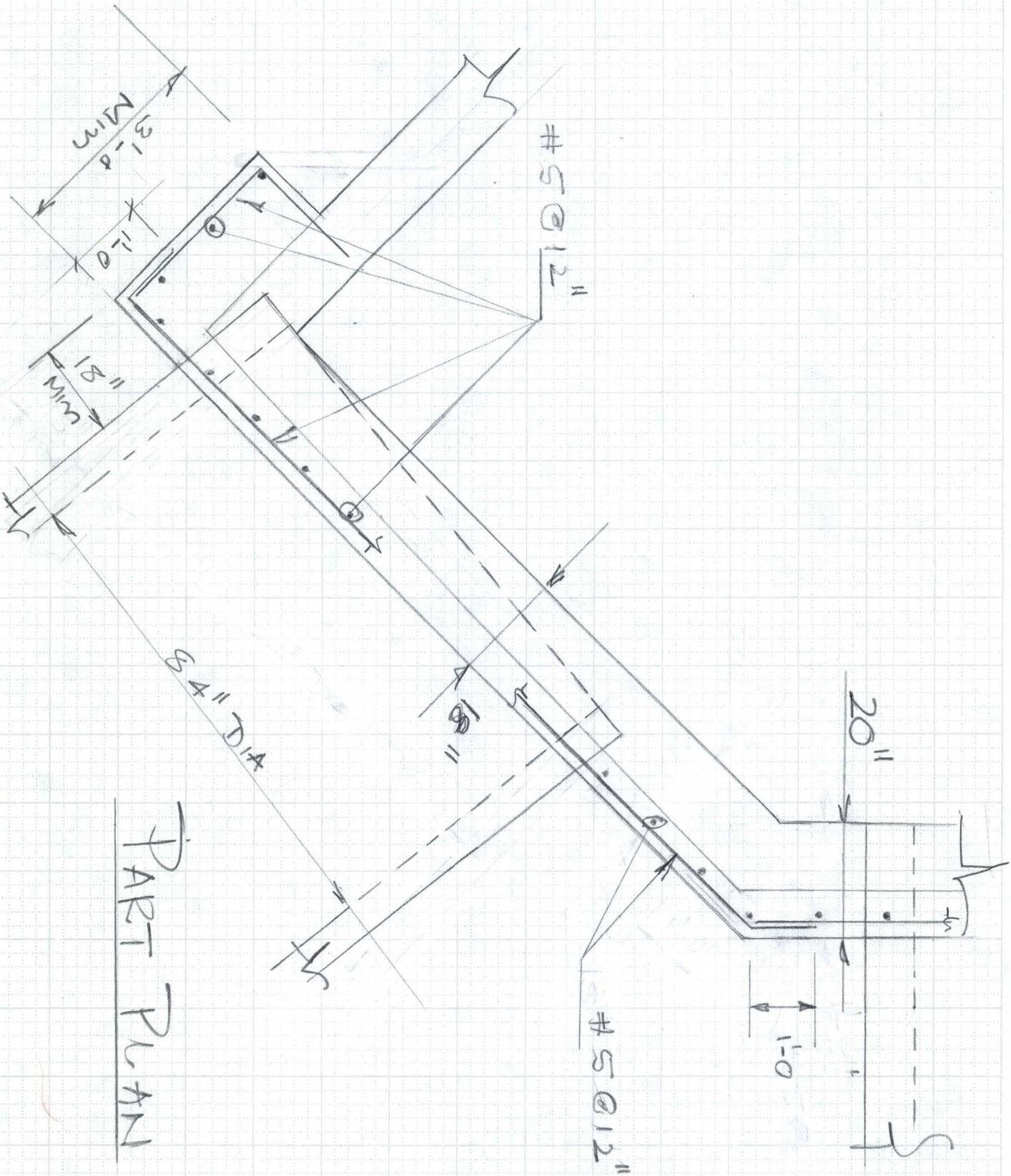

6910-153 4-90

FLOOD CONTROL DISTRICT OF MARICOPA COUNTY

PROJECT Cactus Drain PAGE 4 OF

DETAIL Box Revisions COMPUTED KVH DATE 8/95

CHECKED BY DATE

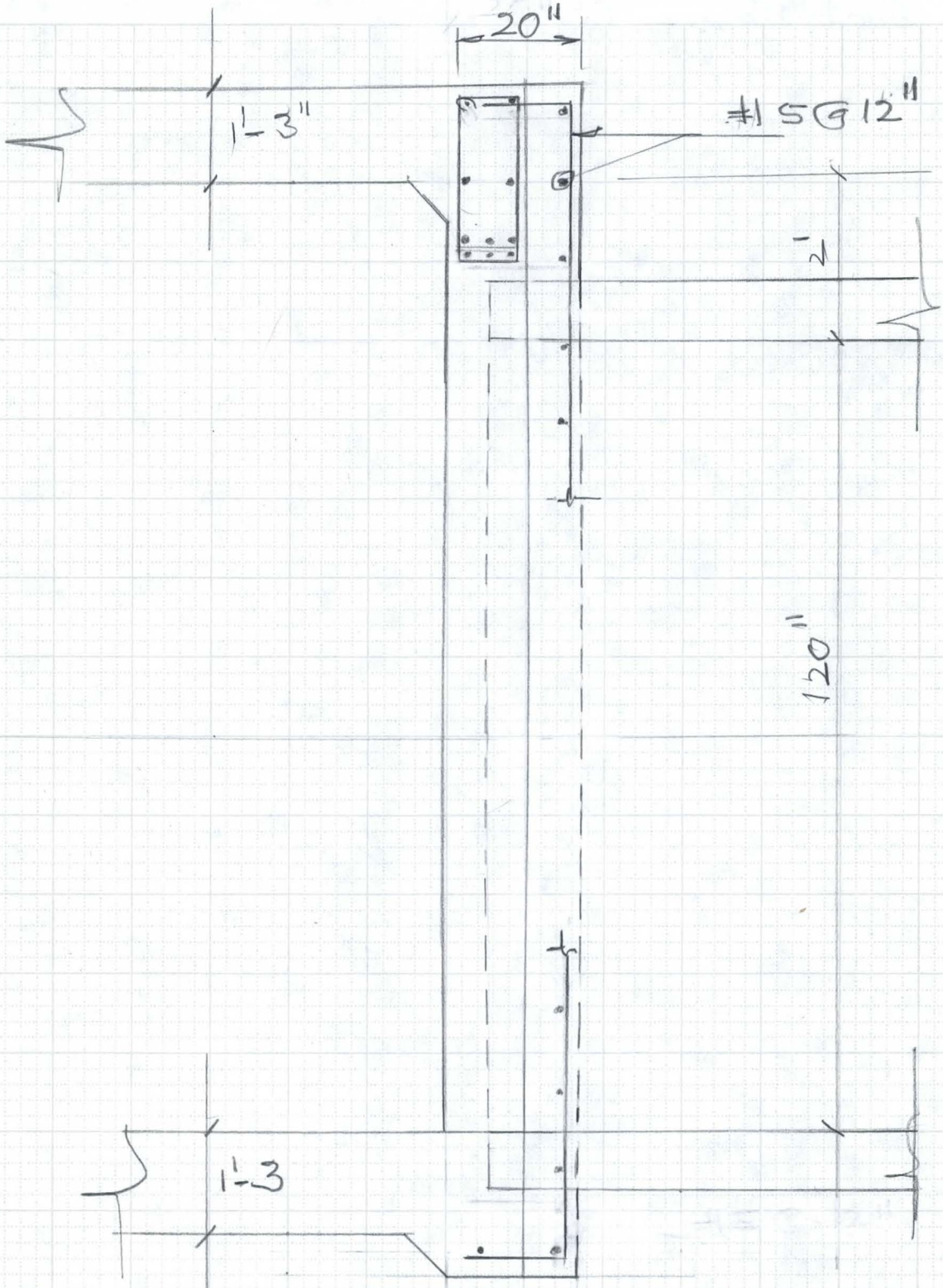

SECTION- AA

6910-153 4-90

PROPOSED DESIGN CHANGES
TO SPECIAL STRUCTURE STA 20+80.5

* NOT TO SCALE

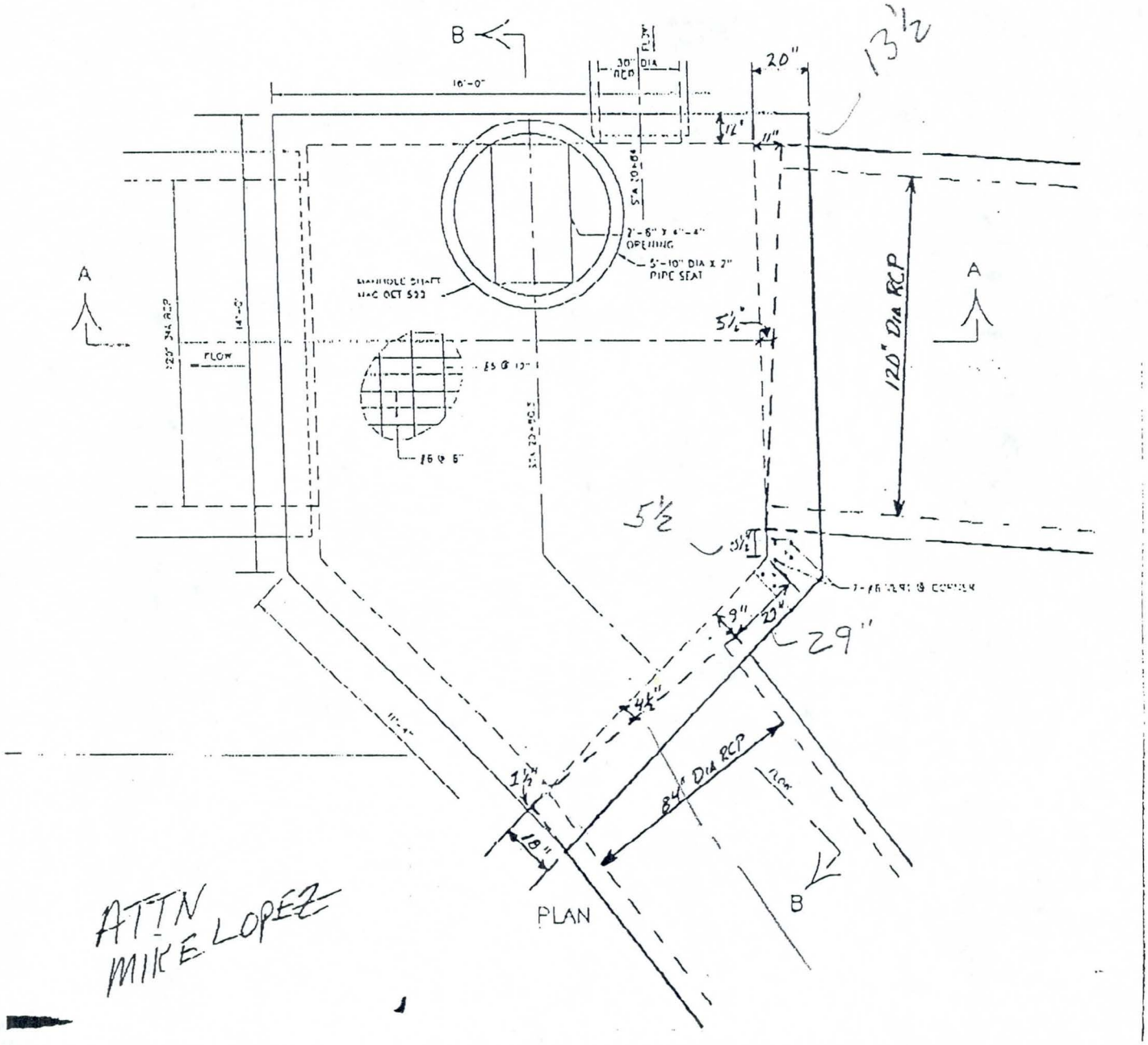

ATTN
MIKE LOPEZ

PROPOSED DESIGN CHANGES
TO SPECIAL STRUCTURE STA 20+80.5

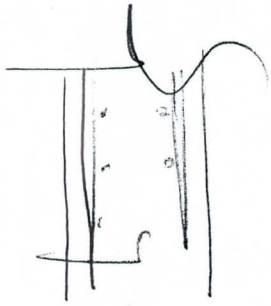

* NOT TO SCALE

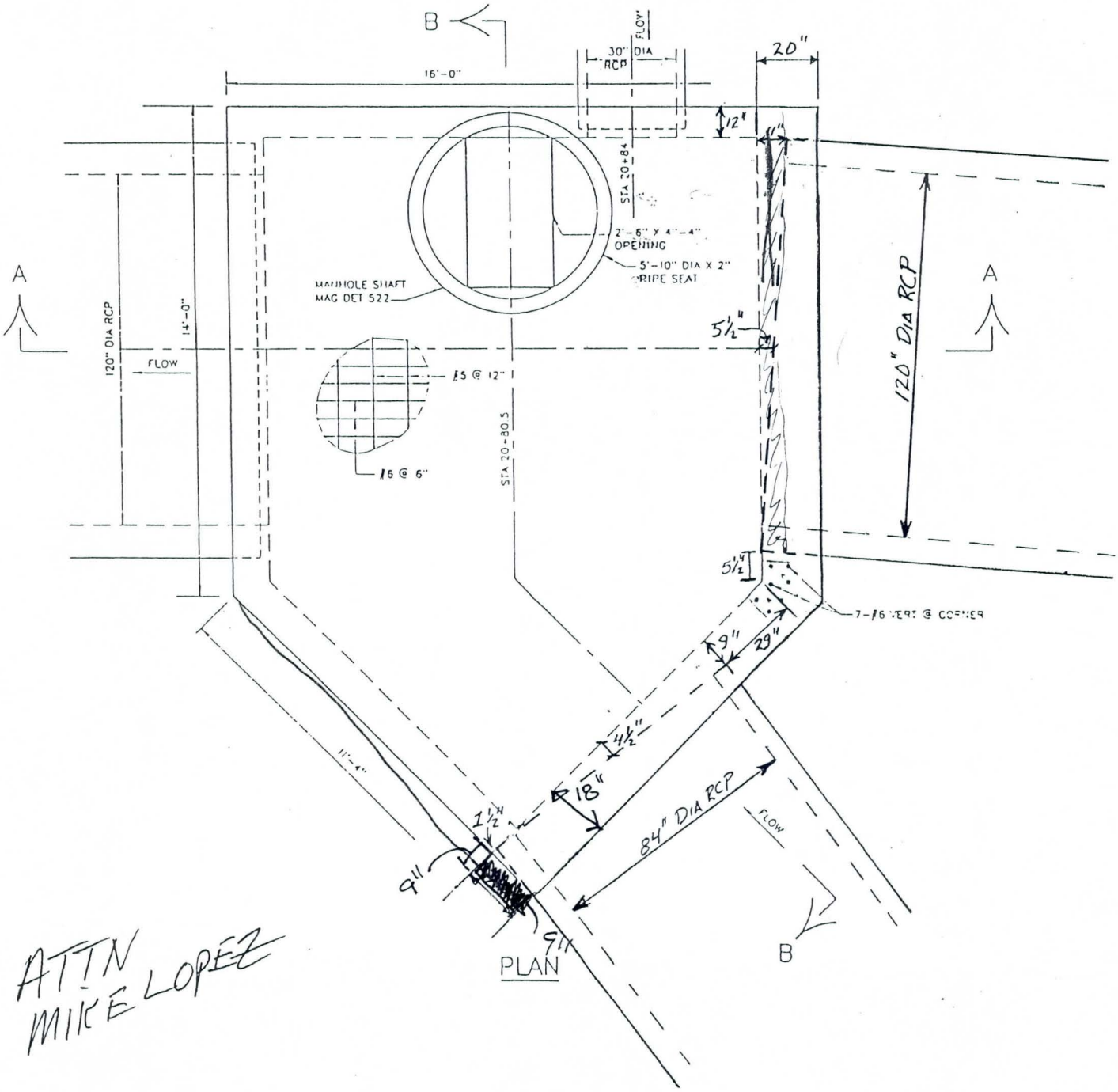

ATTN
MIKE LOPEZ

PROPOSED DESIGN CHANGES
TO SPECIAL STRUCTURE STA 20+80.5

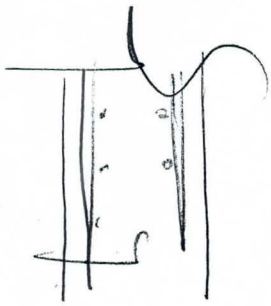

* NOT TO SCALE

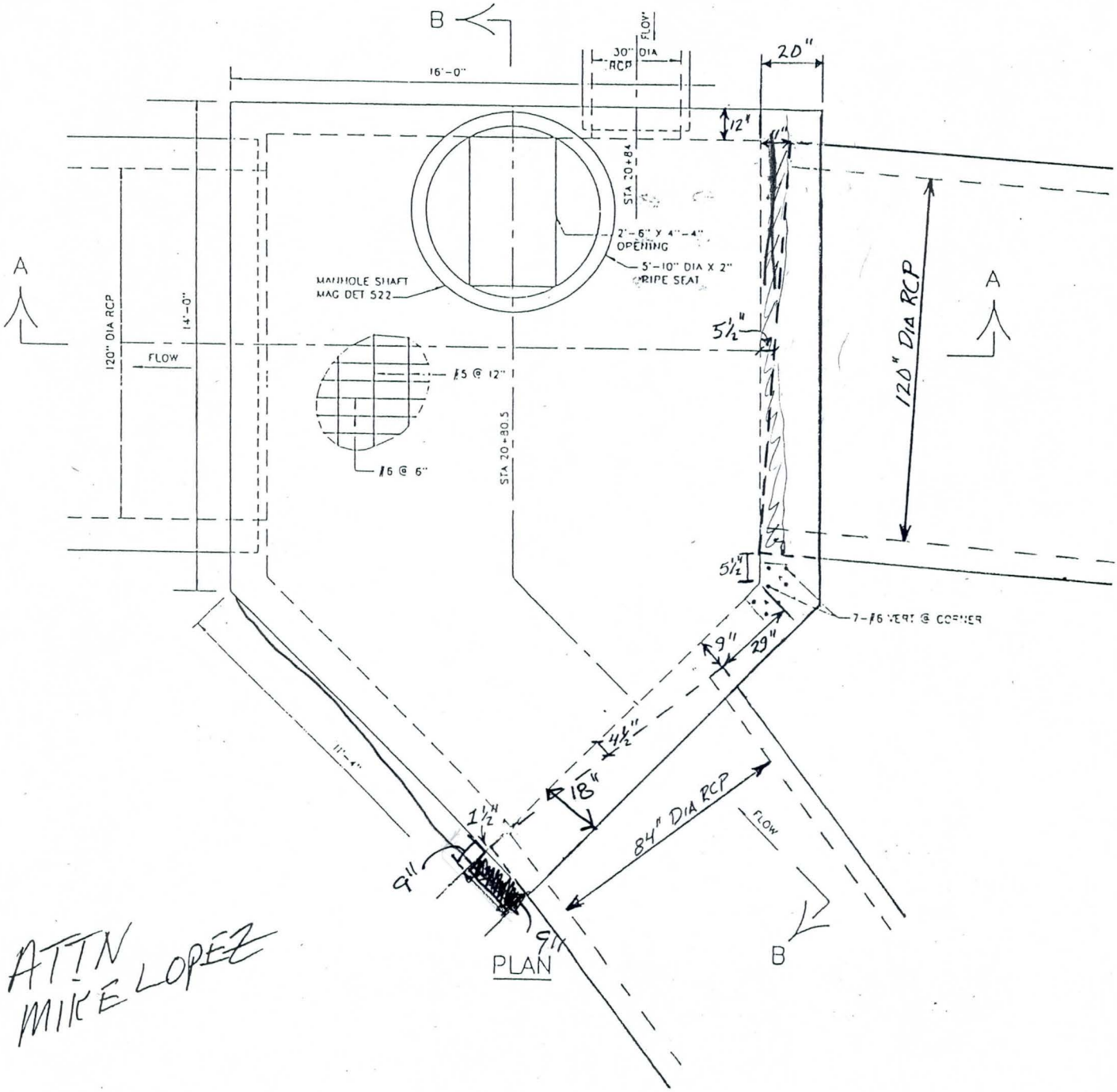

ATTN
MIKE LOPEZ

PROPOSED DESIGN CHANGES
TO SPECIAL STRUCTURE STA 20+80.5

* NOT TO SCALE

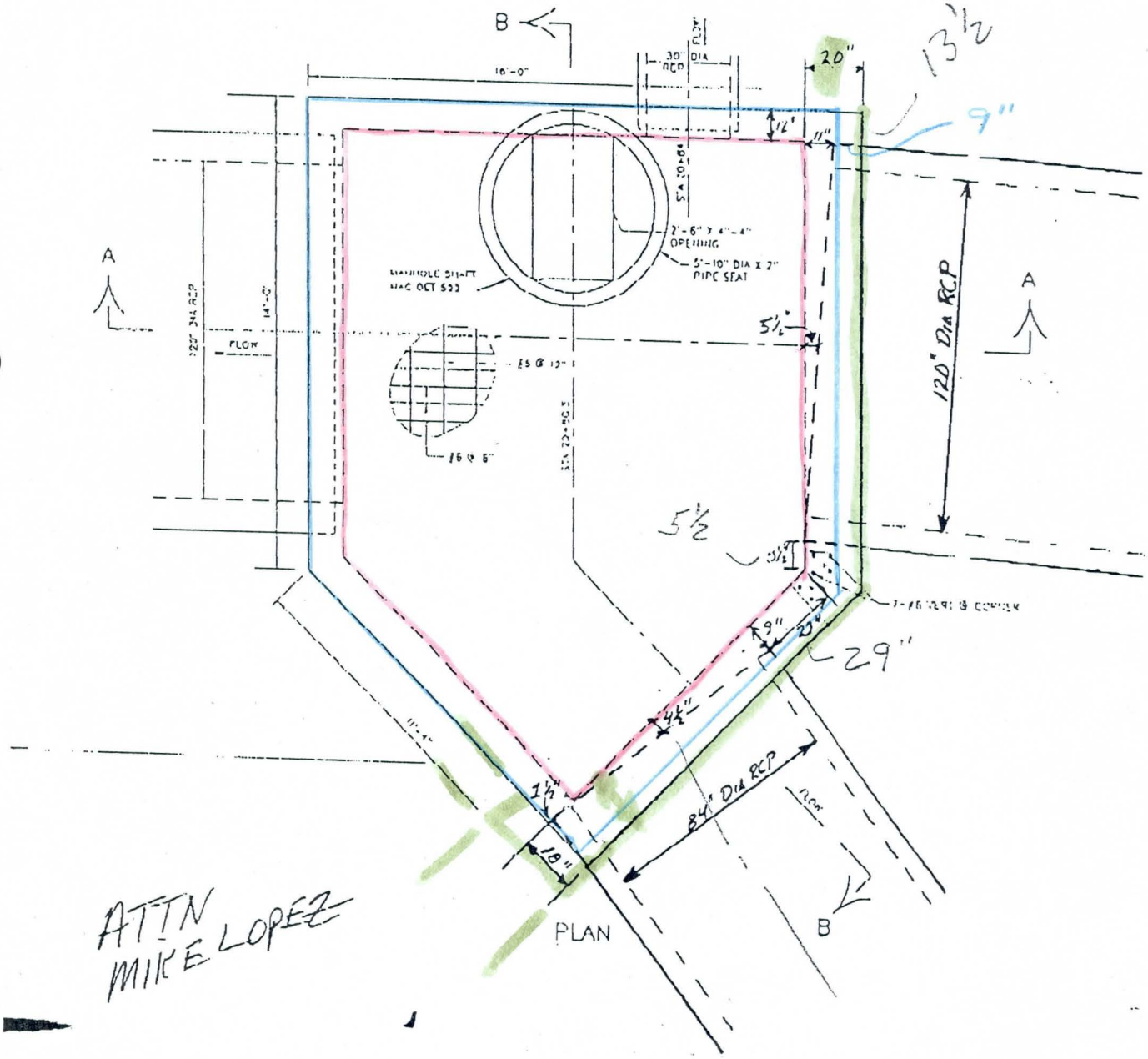

ATTN
MIKE LOPEZ

FLOOD CONTROL DISTRICT OF MARICOPA COUNTY

PROJECT _____ PAGE ____ OF ____

DETAIL _____ COMPUTED _____ DATE ____

_____ CHECKED BY _____ DATE ____

$A = \frac{(3.14 \times 14.66^2)}{4} - \frac{(3.14 \times 12^2)}{4} = 55.7$ sq ft

Av. width $= 4.5'$

$Q_{dy} = (55.7 \times 4.5) = 250.7$ cfs 9.3 CY

3-0-CL
0.5-#4
0.25
3.75" x 2 = 7.50" (14.66 x 12 − 7.5) = 14.04'

D = 14.04, 3.14 x 14.04 = 44.09'

(12 x 44.09) 0.668 = 353.4 = 353 lbs

Add

12' + (3.5" x 2) = 12.42' = D

(3.14 x 12.42) = 40.0'

374

(14 x 40.0) 0.668 =

Long. Bars:

(16 x 2) 4.5' x 0.668 = 96

(12 x 2) 4.5 x 0.668 = 72

$l_d = 0.0003 \times 0.5 \times 60000 = 9''$

$0.02 \times 0.5 \times \frac{60000}{\sqrt{5000}} = 8.5$

70.7

1.3 x 9" = 11.7 say 12", use

Use 18" Lap

6910-153 4-90

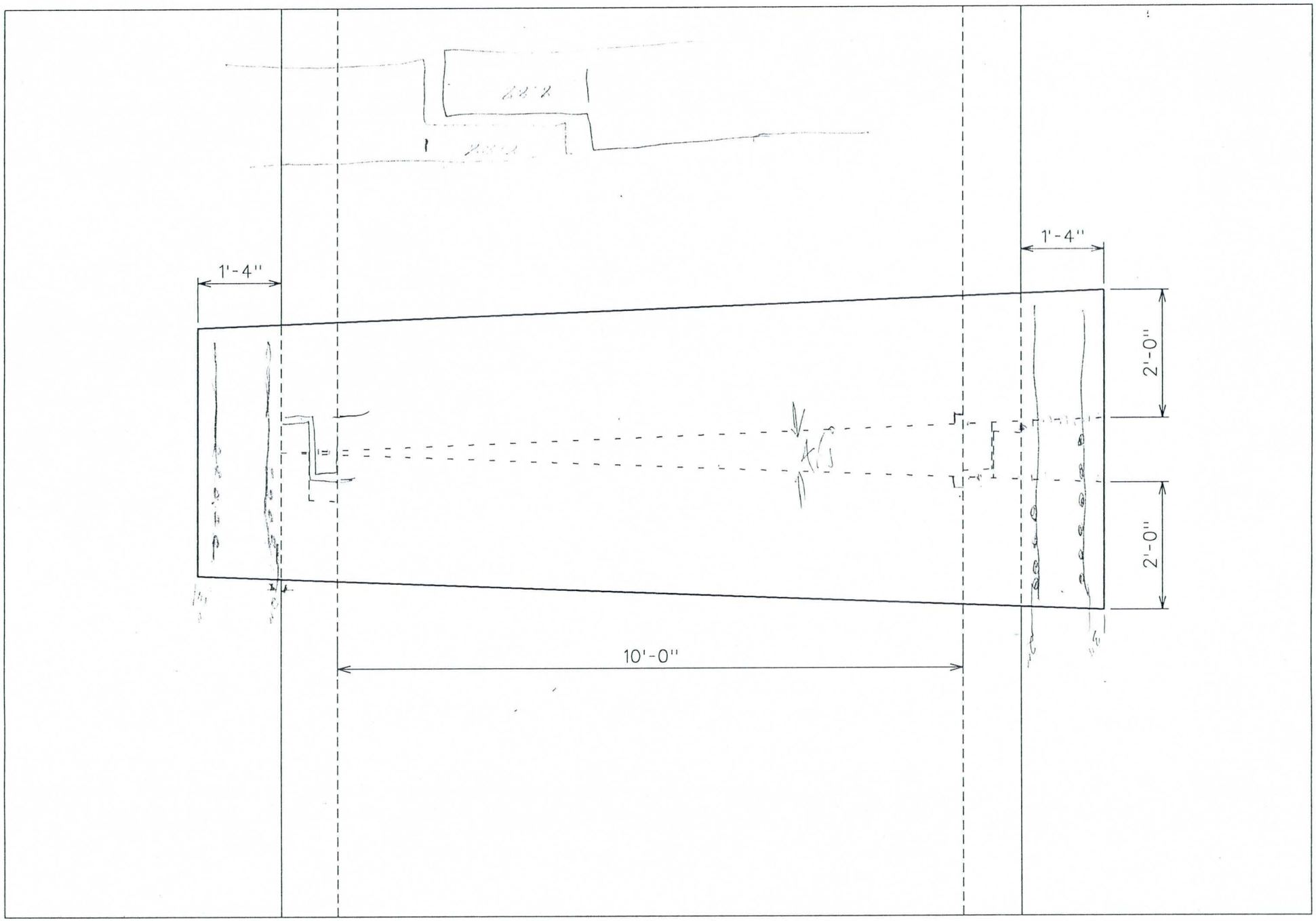

c:/dgn/casandro/pipe10.dgn Aug. 16, 1995 13:49:05

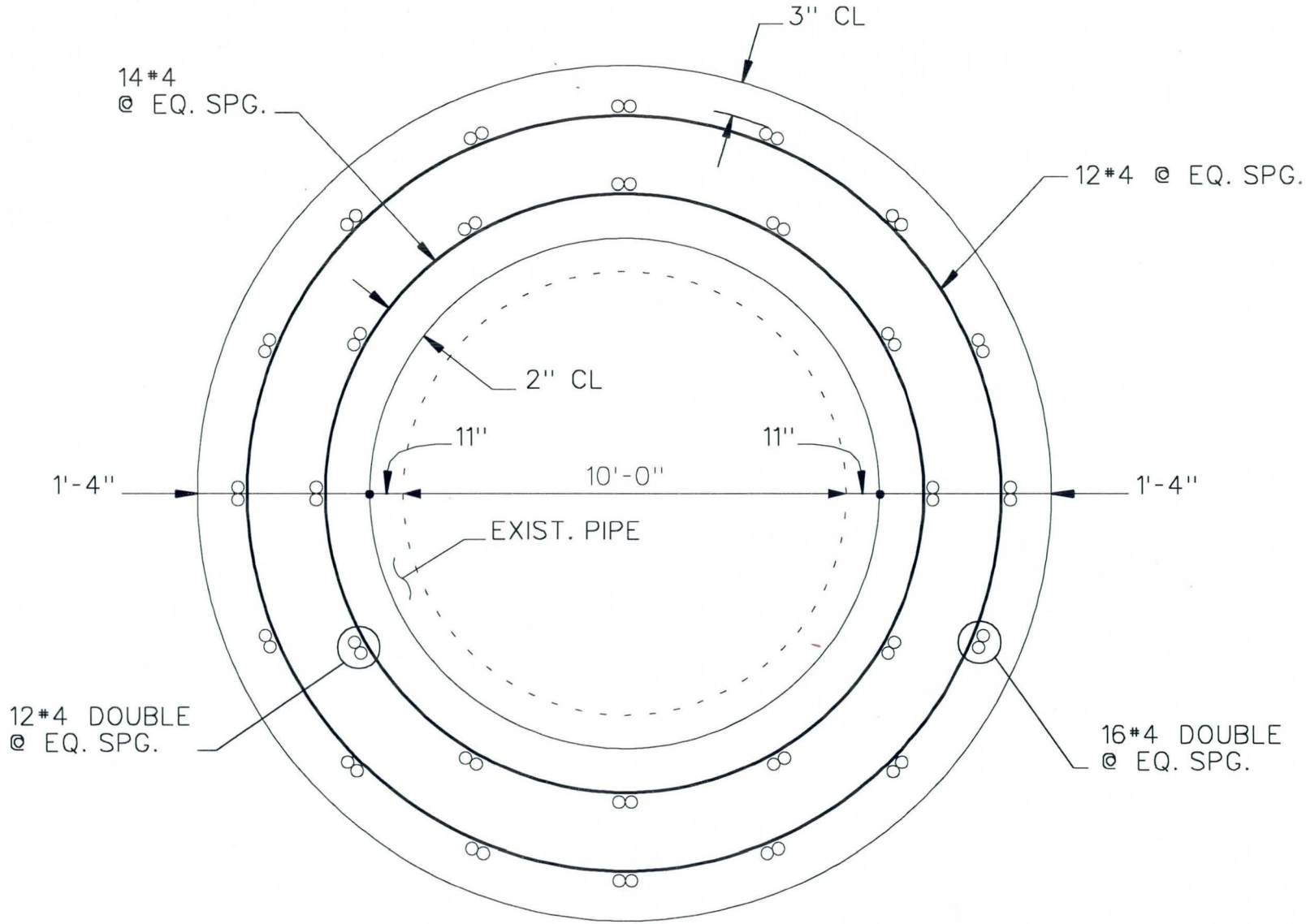

SECTION THRU CONCRETE COLLAR
NTS

c:/dgn/pipe10.dgn Aug. 17, 1995 09:47:45

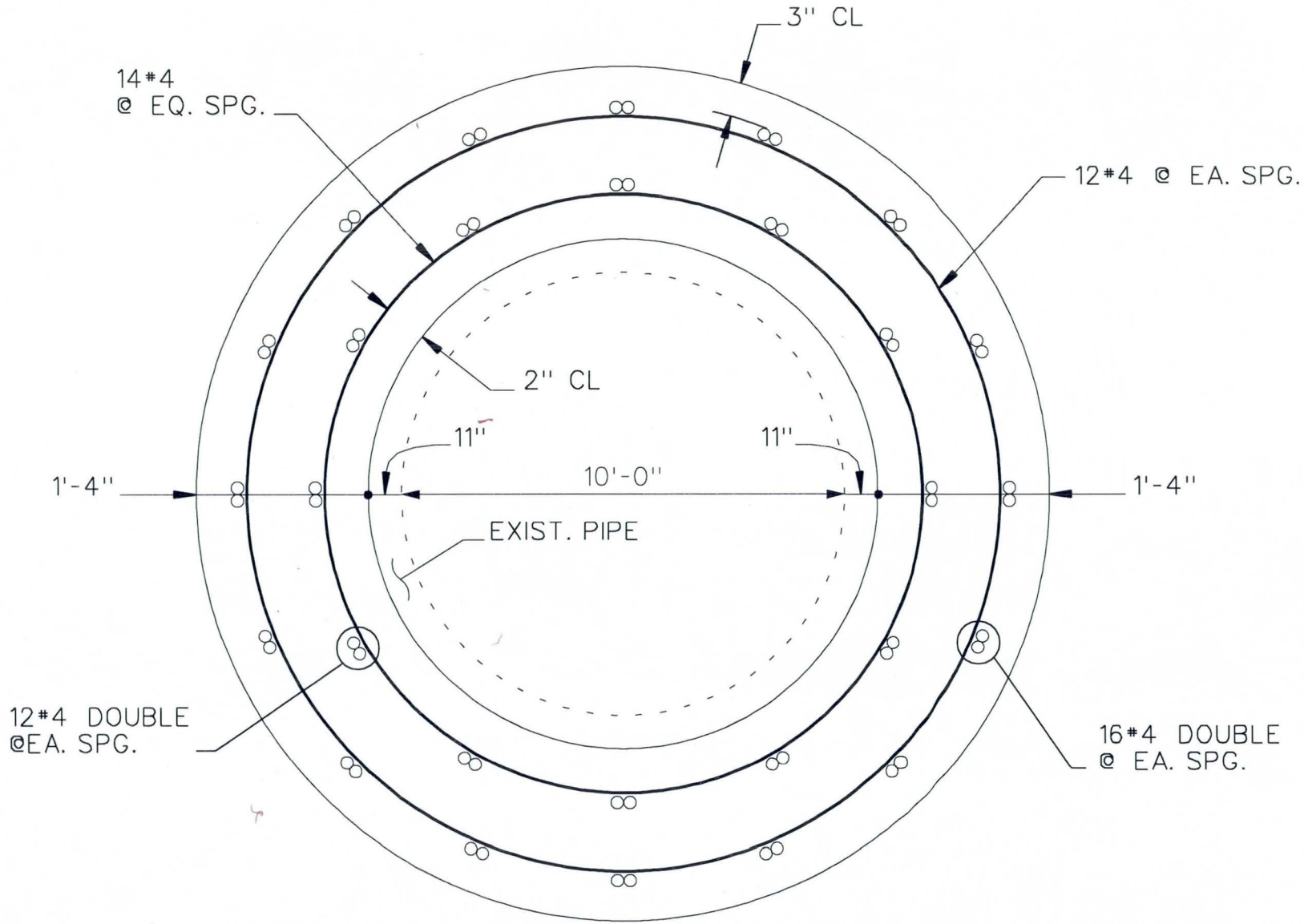

SECTION THRU CONCRETE COLLAR
NTS

c:/dgn/pipe10.dgn Aug. 17, 1995 09:38:34

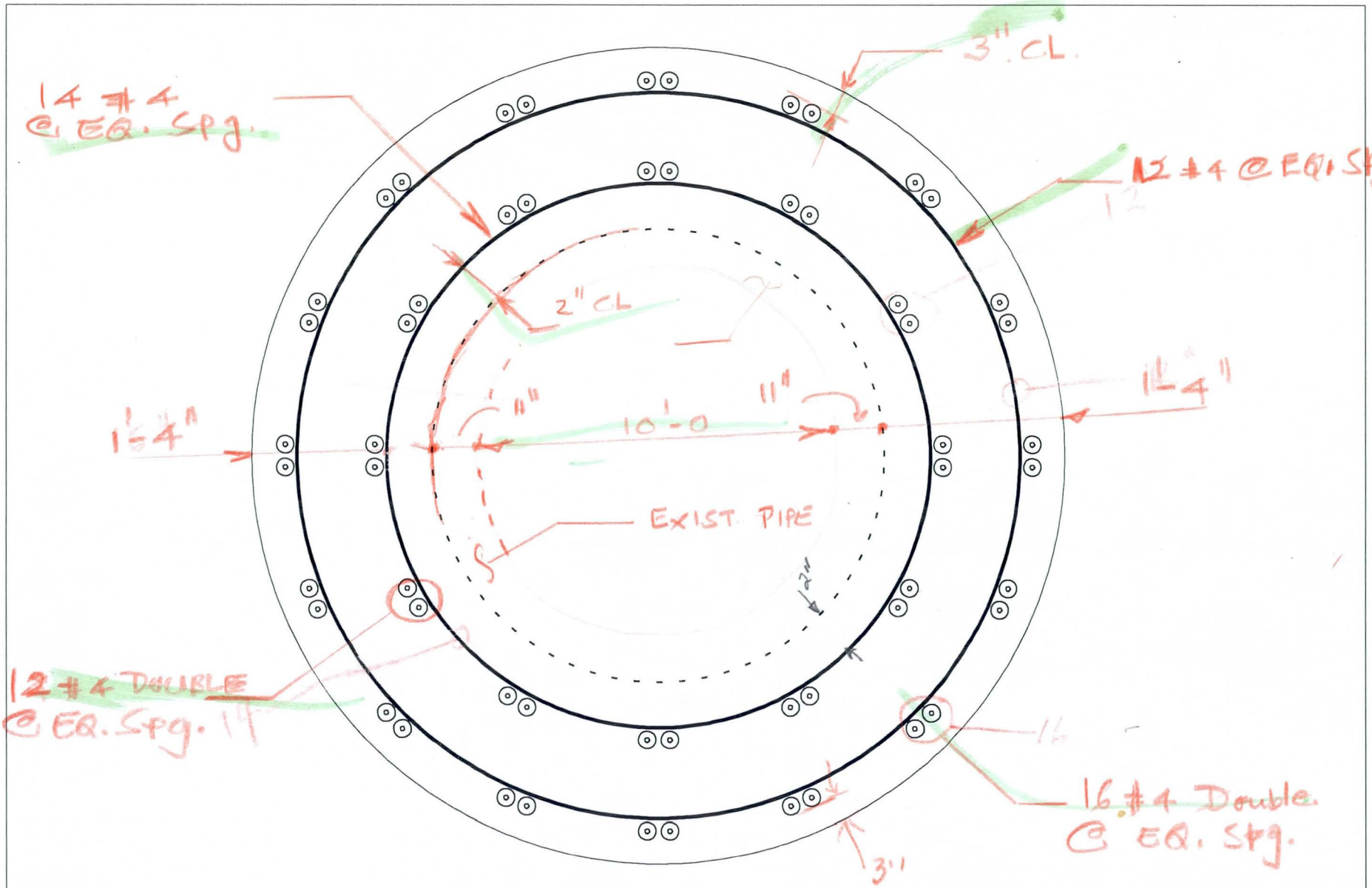

SECTION THRU COND. COLLAR

10' DIA. PIPE
NTS

c:/dgn/casandro/pipe10.dgn Aug. 17, 1995 07:27:11

AGUA FRIA
OF MARICOPA COUNTY
ANY

DRAWING INDEX

REMARKS

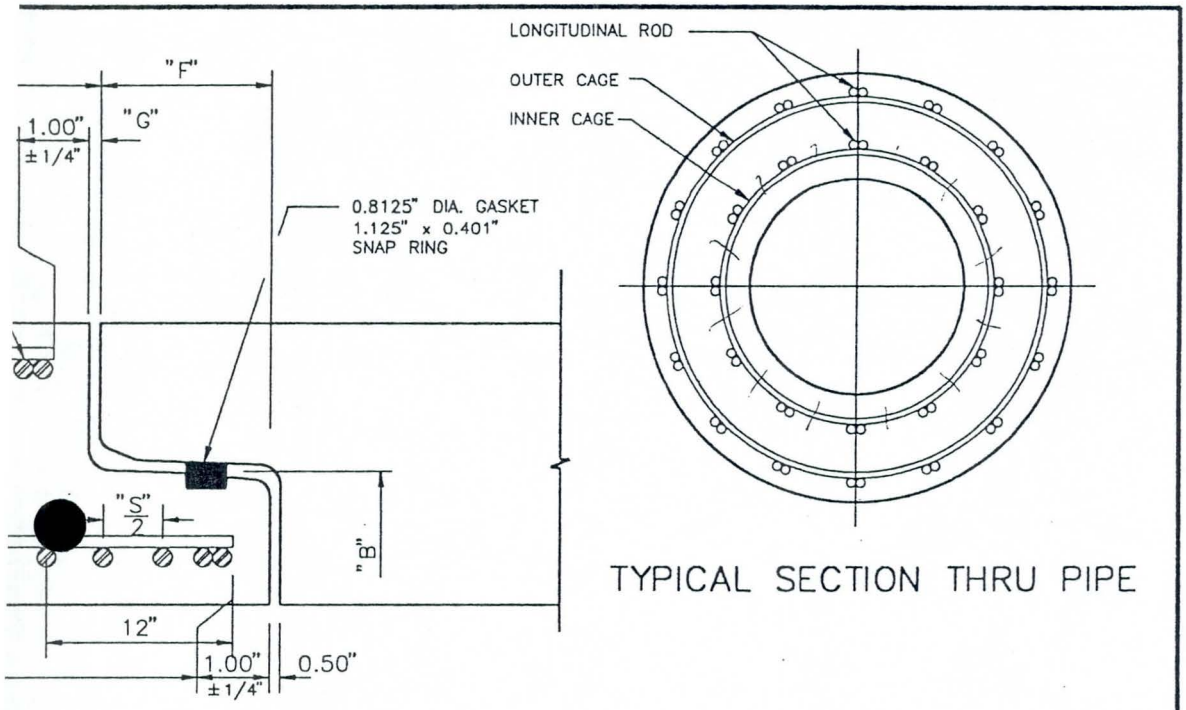

TYPICAL SECTION THRU PIPE

CAGE REINFORCEMENT					LONG RODS			INSTALLATION DATA							
		S	C_1	C_2				J	F	G					
ROD SIZE IN.	COILS PER FT. NO.	SPACING C TO C IN.	COVER IN.	COVER IN.	NO. OF RODS	NO. OF PRS.	ROD SIZE IN.	LAY LENGTH FT.	JOINT LAP IN.	OUTSIDE JOINT SPACE IN.	MAXIMUM PULL PER JOINT ANGLE	PULLED JT. SPACE @ MAX. POINT IN.	OFFSET USING MAX PULL FT.	MINIMUM RADIUS FT.	SHIP WEIGHT FOR STD LENGTH PIPE TONS
0.50	3.72	3.23	1.25	X	12		.375	12.02	8.375	0.75	0.66	2.00	0.138	1041	28.3
0.438	3.00	4.00	X	1.25	16		.375								
				X											
			X												

Ameron Concrete & Steel Pipe Systems
Southern Division/Southwest District

CACTUS ROAD STORM DRAIN
F.C.D. MARICOPA COUNTY – SPEC 93-52

DRAWN	JO	03-15-95	SUNDT CORPORATION
CHECKED			B11765 10.0
APPV'D			

BY | APPV'D | DWG SCALE: NOT TO SCALE

PRE MAR 1 '7 1995

FLOOD CONTROL DISTRICT OF MARICOPA COUNTY

PROJECT _____ PAGE ____ OF ____

DETAIL _____ COMPUTED _____ DATE ____

_____ CHECKED BY _____ DATE ____

$A = \left(\frac{3.14 \times 14.66^2}{4}\right) - \left(\frac{3.14 \times 12^2}{4}\right) = 55.7$ sq ft

Av. width $= 4.5'$

Qdy $= (55.7 \times 4.5) = 250.7$ cf | 9.3 CY

3-0-OL
0.5-#4
0.25
.75" x 2 = 7.50" (14.66 x 12 − 7.5) = 14.04'

D = 14.04, 3.14 x 14.04 = 44.09'

(12 x ~~44.09~~ 45.59) 0.668 = 353.4 = ~~353~~ 365 lbs

Rdl

12' + (2.5" x 2) = 12.42' = D

(3.14 x 12.42) = 40.0'

(14 x ~~40.0~~ 41.5) 0.668 = ~~374~~ 388

Long. Bars:

(16 x 2) 4.5' x 0.668 = 96

(12 x 2) 4.5 x 0.668 = 72

921 lbs

$l_d = 0.0003 \times 0.5 \times 60000 = 9''$

$0.02 \times 0.5 \times \frac{60000}{\sqrt{5000}} = 8.5$ (70.7)

1.3 x 9" = 11.7 say 12", ie

the 18" Lap

Concrete = 9.5 CY
Slab = 950 lbs

FLOOD CONTROL DISTRICT OF MARICOPA COUNTY

PROJECT _____ PAGE ____ OF ____

DETAIL _____ COMPUTED _____ DATE ____

_____ CHECKED BY _____ DATE ____

14' − 6 =

− 14.50
− 0.625

13.875' × 12 / 4" = 42 #4 @ 4"

10 1 − 0
1 − 10
11 − 10 = 11.83'
+ 0.42
12.25'

3.0
0.5
0.25
3.75 × 2 = 7.5" = 0.625'

2.5" × 2 = 5" = 0.42

12.25 × 12 / 3.25" = 45 #4 @ 3¼"

~~4'~~ 3.5 × 12 / 4.0 = 12 #4 @ 4" ±

3.5 × 12 / 3.25 = 14 #4 @ 3¼"

4.5

3.5 × 12 / 12.84 = 3½" o/c 4½"

4.5 3.5 × 12 / 14 = 3" o/c 3.9"

6910-153 4-90

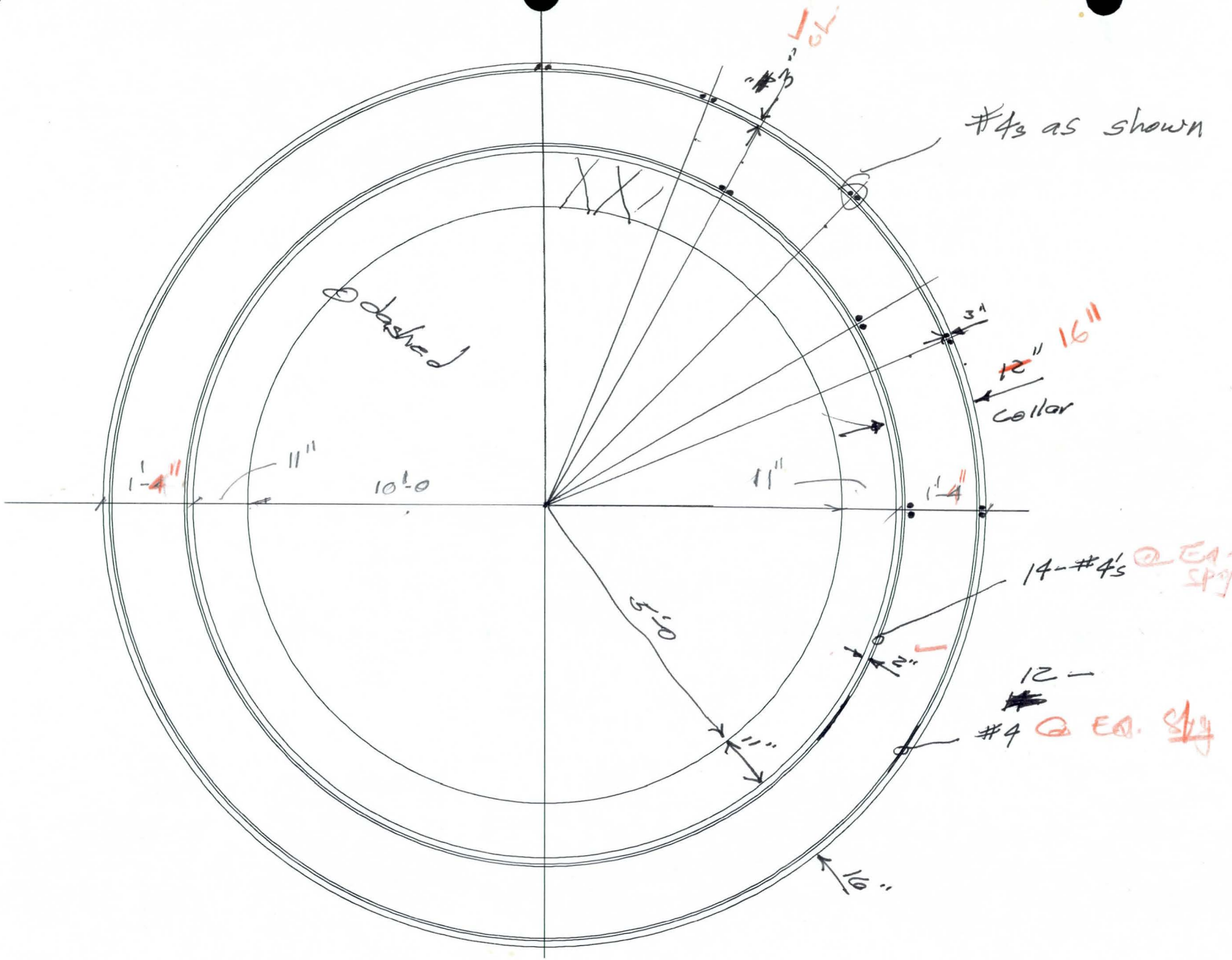
#4s as shown
dashed
3"
12" 16"
collar
1'-4"
11"
10'-0
11"
1'-4"
14-#4's @ EQ. SPA
5'-0
2"
12 -
#4 @ EQ. SPA
11"
16"

FLOOD CONTROL DISTRICT OF MARICOPA COUNTY

PROJECT Cactus Drain PAGE ___ OF ___

DETAIL Concrete Collar COMPUTED KVH DATE 8/95

CHECKED BY ___ DATE ___

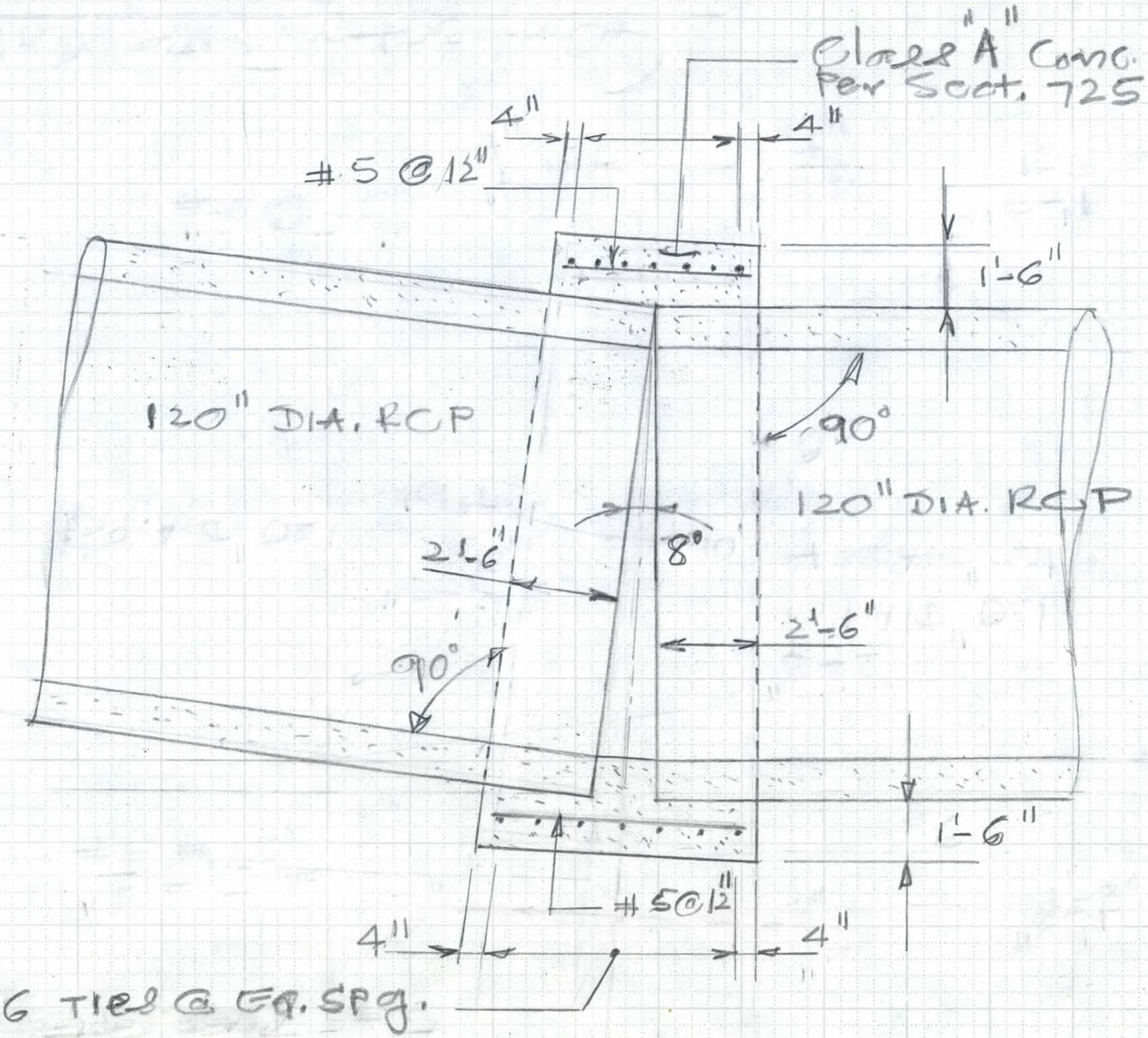

Concrete Pipe Collar

Scale: 1/4" = 1'-0

FLOOD CONTROL DISTRICT OF MARICOPA COUNTY

PROJECT Cactus Drain PAGE ____ OF ____

DETAIL ____ COMPUTED KVH DATE 8/15/95

____ CHECKED BY ____ DATE ____

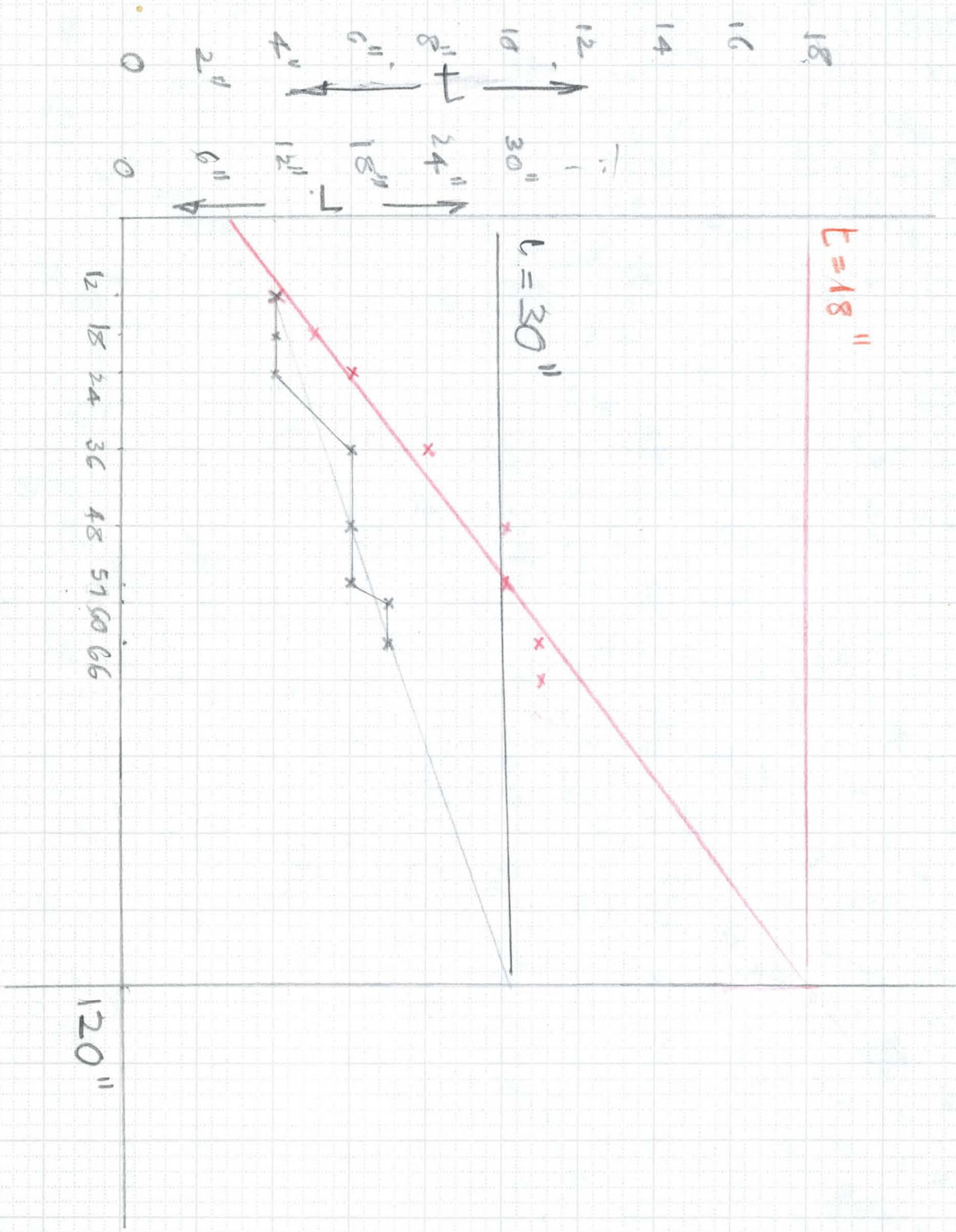

6910-153 4-90

FLOOD CONTROL DISTRICT OF MARICOPA COUNTY

PROJECT _____ PAGE ____ OF ____

DETAIL _____ COMPUTED _____ DATE ____

_____ CHECKED BY _____ DATE ____

#5 @12" ; L = (4.5 + 6.0)/2 = 5.25'

13.5' — (14 × 5.25) 2 = 147 lb
Slab

(14 × 4.5) = 63

(14 × 6.0) = 84

294 lb

(294) 1.043 = 307 lbs

Tied: L = 13.5

(13.5 × 4) 7 = 378 lb

(378) 1.502 = 568

875 lbs

6910-153 4-90

FLOOD CONTROL DISTRICT OF MARICOPA COUNTY

PROJECT Cactus Drain PAGE ___ OF ___

DETAIL Concrete Collar COMPUTED KVH DATE 8/95

CHECKED BY ___ DATE ___

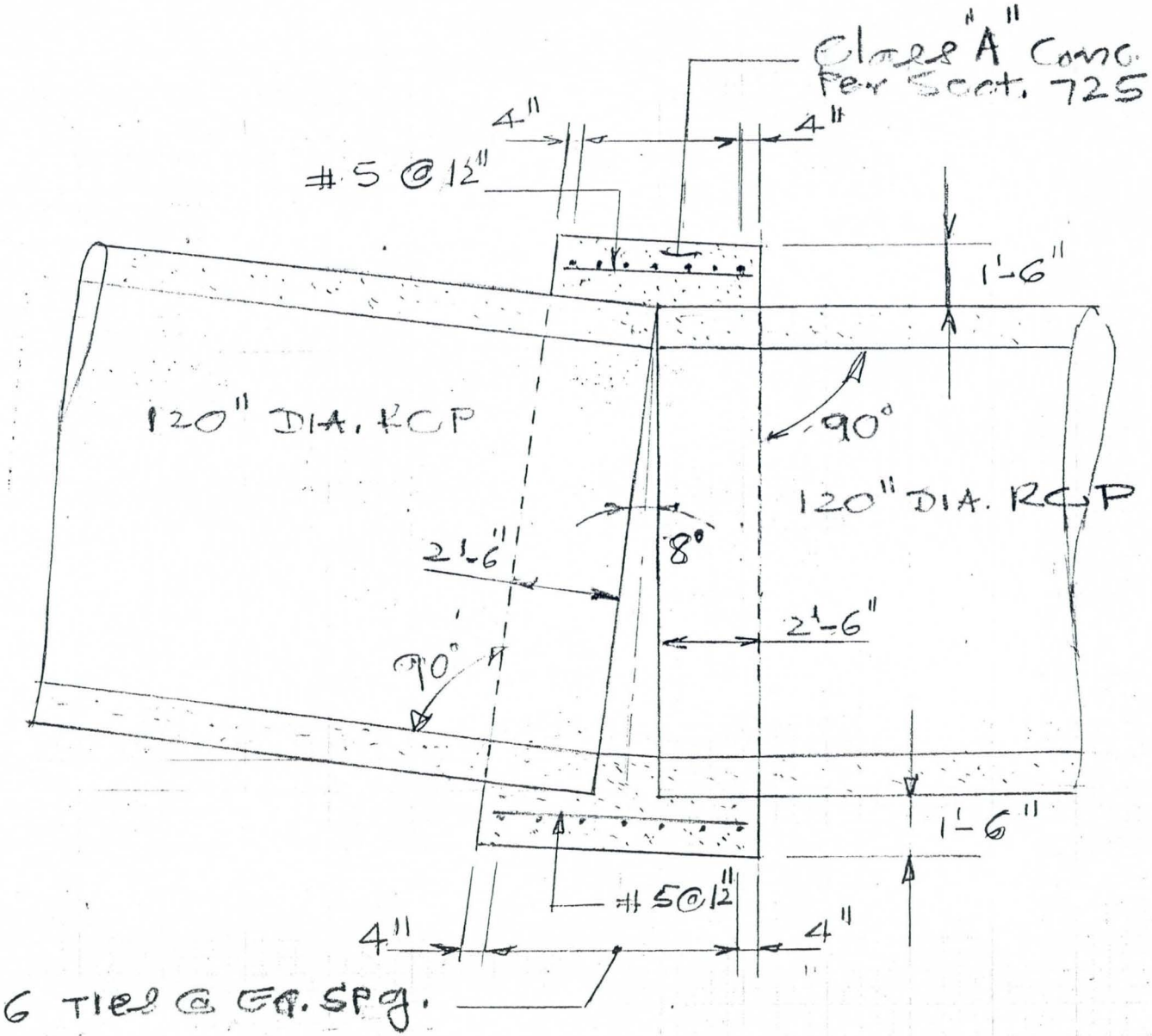

Concrete Pipe Collar

Scale: 1/4" = 1'-0

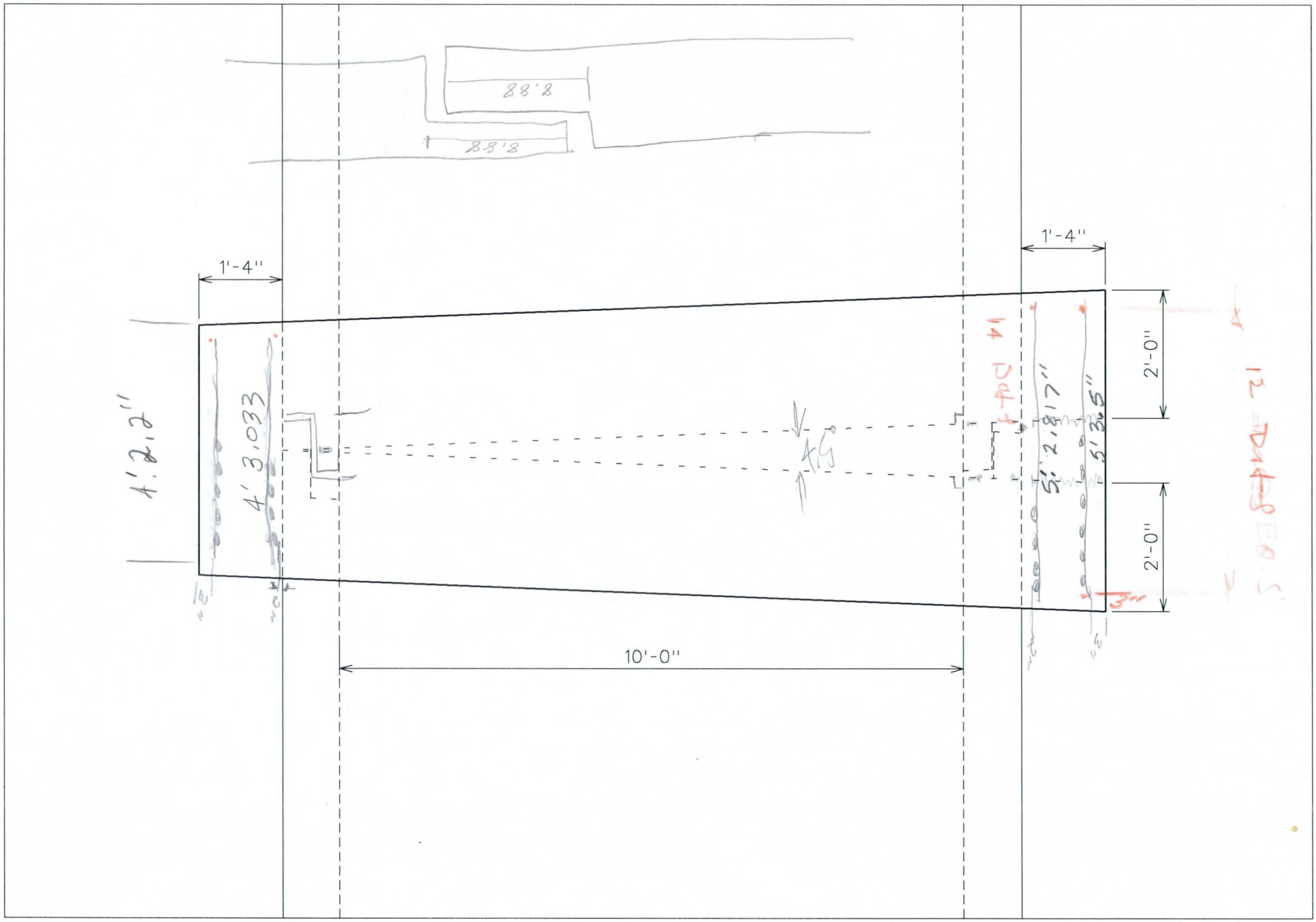

c:/dgn/casandro/pipe10.dgn Aug. 16, 1995 13:49:05

Ameron
Steel Pipe Systems
Division/Southwest Dist.

PROJECT TITLE: CACTUS ROAD STORM DRAIN
PHASE-1 83RD AVE TO THE AGUA FRIA FWY

AGENCY : FLOOD CONTROL DISTRICT OF MARICOPA COUNTY

ENGINEER : S.F.C. ENGINEERING COMPANY

CONTRACTOR : SUNDT CORPORATION

DRAWING INDEX

DESCRIPTION

CHECKED	PREPARED
DSE	GGS
ADMIN	TMG
FINANCE	BUL
CAD	
REMARKS	

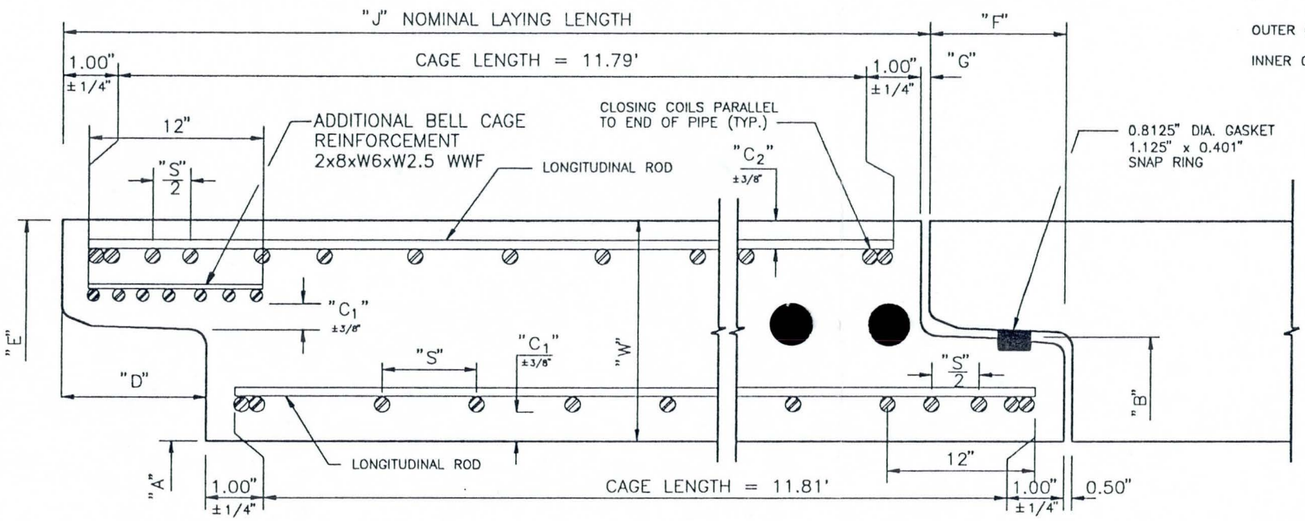

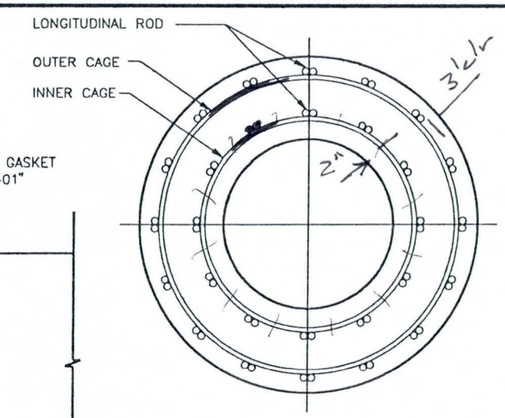

TYPICAL SECTION THRU PIPE

REINFORCED CONCRETE PIPE

VERTICALY CAST – FLUSH BELL JOINT DESIGN

MANUFACTURING DATA

GENERAL											DOUBLE CAGE REINFORCEMENT							LONG RODS			INSTALLATION DATA							
A	PIPE CLASS				B	D	E		W		TYPE				S	C_1	C_2				J	F	G					
NOM. PIPE DIAMETER	COVER		S.O. LINE NUMBER	APPROX. FOOTAGE	NOMINAL JOINT DIAMETER	SOCKET DEPTH	BELL O.D.	CONCRETE STRENGTH @ 28-DAYS	WALL THICKNESS	OVERALL LENGTH STD PIPE	DOUBLE CIRCULAR	As/FT.	ROD SIZE	COILS PER FT.	SPACING C TO C	COVER	COVER	NO. OF RODS	NO. OF PRS.	ROD SIZE	LAY LENGTH	JOINT LAP	OUTSIDE JOINT SPACE	MAXIMUM PULL PER JOINT	PULLED JT. SPACE @ MAX. POINT	OFFSET USING MAX PULL	MINIMUM RADIUS	SHIP WEIGHT FOR STD LENGTH PIPE
-IN.	FT			FT.	IN.	IN.	IN.	PSI	IN.	FT. – IN.		IN^2	IN.	NO.	IN.	IN.	IN.			IN.	FT.	IN.	IN.	ANGLE	IN.	FT.	FT.	TONS
120	5-FT		2	1623	129.813	8.88	142.0	5000	11.00	12-8 5/8	IN	0.73	0.50	3.72	3.23	1.25		12		.375	12.02	8.375	0.75	0.66	2.00	0.138	1041	28.3
											OUT	0.45	0.438	3.00	4.00		1.25	16		.375								
											IN																	
											OUT																	

GASKET CODE: 40M-120X125
PART NUMBER: B11765-901

SYMBOL	REVISION	DATE	BY	APPV'D

DWG SCALE: NOT TO SCALE

Ameron Concrete & Steel Pipe Systems
Southern Division/Southwest District

CACTUS ROAD STORM DRAIN
F.C.D. MARICOPA COUNTY – SPEC 93-52

DRAWN	JO	03-15-95	SUNDT CORPORATION
CHECKED			B11765 10.0
APPV'D			

PRE MAR 1 7 1995