DESIGN DATA REPORT

Volume 2

Bullard Wash Channel Improvements - Final Design

Flood Control District of Maricopa County
Contract FCD 98-15

Sverdrup Project No. 013884

October 1998

Sverdrup

Property of
Flood Control District of MC Library
Please Return to
2801 W. Durango
Phoenix, AZ 85009

DESIGN DATA REPORT

Volume 2

Bullard Wash Channel Improvements - Final Design

Flood Control District of Maricopa County
Contract FCD 98-15

Sverdrup Project No. 013884

Bradford D. Olbert

Registered Professional Engineer (Sanitary)
CERTIFICATE NO.
13955
BRADFORD D.
OLBERT
Date Signed 10/14/98
ARIZONA, U.S.A.

October 1998

Sverdrup

TABLE OF CONTENTS – Volume 2

Bullard Wash Interior Drainage Hydrology ..... **Section 11**

Additional Calculations and Supporting Documentation ..... **Section 12**

- Box Culvert Hydraulics
- Spillway Hydraulics (at Buckeye Irrigation Canal)
- Pipe Culvert Inlet to East Tributary Channel
- East Tributary and Low Flow Channel Hydraulic Calculations
- Cost Comparison for Toe Down (Gabion Baskets vs. Gabion Mattress)
- Gabion Basket Design
- Standard Maintenance Procedures
- Channel Roughness Memorandum
- Gabion Basket Longevity and Maintenance
- Side Slope Stability for Channel Lining (with Fax Cover)

Environmental Permitting ..... **Section 13**

- Corps of Engineers Letter
- FCDMC Letter
- FCDMC Memorandum

Structural Calculations ..... **Section 14**

- Overchute Structural Calculations
- Buoyancy Uplift Check on Overchute
- Channel Lining Reinforcement Calculations
- Side Slope Stability for Channel Lining

Survey Data ..... **Section 15**

Bradford D. Olbert

Registered Professional Engineer (Sanitary)
CERTIFICATE NO. 13955
BRADFORD D. OLBERT
Date Signed 10/14/98
ARIZONA, U.S.A.

AVERY

INTRODUCTION

Sverdrup was selected to prepare Construction Documents for a joint project with the Flood Control District of Maricopa County (FCDMC) and Maricopa County Department Of Transportation (MCDOT). The project, identified as the Bullard Wash Channel Improvement - Final Design, is a combined Flood Control and Roadway Design project. See figure 1 for the location of the project within Maricopa County. The flood control portion of this project includes the design of 2 miles of Outfall Channel including a 0.5 mile long tributary channel, a canal overchute structure, three drop structures, four irrigation siphon structures and a spillway structure. The Bullard Wash Channel is designed to discharge the runoff from the 100-year design storm into the Gila River. The roadway design portion of this project includes the design of approximately 5 miles of 4-lane divided roadway with a raised median. See figure 2 for a vicinity map of the proposed improvements. The roadway work includes the design of a new bridge over the Bullard Wash Channel and a new at-grade railroad crossing. The project includes coordination with the Union Pacific Railroad (UPRR) for the design of a new railroad bridge over the Bullard Wash Channel and two at-grade crossings. UPRR will prepare the design of the bridge and at-grade crossings. Additional tasks include preparation of roadway Right-of-Way Plans, a Conditional Letter of Map Revision (CLOMR) for FEMA, preparation for a public information meeting, an Selected Alternative Report, a Sediment Transport and Scour Analysis, an Operation and Maintenance Manual for the channel, a drainage report for the roadway, and right-of-way plans for the roadway.

The project is identified by the Flood Control District as Contract FCD 98-15. This Design Data Report is only for the Flood Control portion of the above described project.

BULLARD WASH INTERIOR DRAINAGE HYDROLOGY

An interior drainage sediment basin and surface water inlet to the Buckeye Irrigation District Canal is located at the northwest corner of the intersection of the Bullard Wash alignment and the Buckeye Irrigation District Canal. It has been estimated that the magnitude of the 100-year 24-hour runoff collecting at this location is 355 cfs. Refer to the supporting documentation that follows.

The White Tanks Area Drainage Master Study reveals that there are two sub basins contributing to this location, sub basins 364 and 365. The Bullard Wash alignment traverses sub basin 364, thus the sub basin area was revised and unit hydrograph recomputed utilizing the Flood Control District of Maricopa County (FCDMC) microcomputer program MCUHP2. This information was then input to the U.S. Army Corps of Engineers HEC-1 microcomputer program. The following FCDMC criteria was utilized. Refer to the HEC-1 output file for further details.

Summary of Hydrologic Parameters

Parameter	FCDMC Methods	Result
Rainfall Depth	NOAA Atlas 2	4.03 inches
Design Storm Frequency/Duration	100-Year , 24-hour(1)	per White Tanks ADMS
Design Storm Distribution	SCS Type II(2)- represents regions in which high rates of runoff are generated by large winter storm cells.	per FCDMC
Rainfall Losses	Green and Ampt	per White Tanks ADMS
Unit Hydrograph	S-Graph	Agricultural
Lag	$Lag = C(L\ L_{ca}/S^{p})^{m}$	per MCUHP2
Channel Routing	Normal depth	per FCDMC

Table Notes:

(1) FCDMC criteria is the greater of either the 100-year, 6-hour, or the 100-year 24-hour. For this Study, the 100-year, 24-hour storm controls.

(2) For the 100-year 24-hour storm, the SCS type II distribution is utilized.

Registered Professional Engineer (Civil) CERTIFICATE NO. 22208 JACK K. MOODY Date Signed 10/1/98 ARIZONA, U.S.A.

```
1*****************************************
 *                                       *
 *   FLOOD HYDROGRAPH PACKAGE  (HEC-1)   *
 *              MAY   1991               *
 *            VERSION 4.0.1E             *
 *     Lahey F77L-EM/32 version 5.01     *
 *       Dodson & Associates, Inc.       *
 *  RUN DATE  04/28/98  TIME  14:59:49   *
 *****************************************
```

```
*****************************************
*                                       *
*    U.S. ARMY CORPS OF ENGINEERS       *
*    HYDROLOGIC ENGINEERING CENTER      *
*          609 SECOND STREET            *
*       DAVIS, CALIFORNIA 95616         *
*           (916) 551-1748              *
*                                       *
*****************************************
```

```
X     X  XXXXXXX   XXXXX          X
X     X  X        X     X        XX
X     X  X        X              X
XXXXXXX  XXXX     X       XXXXX  X
X     X  X        X              X
X     X  X        X     X        X
X     X  XXXXXXX   XXXXX         XXX
```

THIS PROGRAM REPLACES ALL PREVIOUS VERSIONS OF HEC-1 KNOWN AS HEC1 (JAN 73), HEC1GS, HEC1DB, AND HEC1KW.

THE DEFINITIONS OF VARIABLES -RTIMP- AND -RTIOR- HAVE CHANGED FROM THOSE USED WITH THE 1973-STYLE INPUT STRUCTURE.
THE DEFINITION OF -AMSKK- ON RM-CARD WAS CHANGED WITH REVISIONS DATED 28 SEP 81. THIS IS THE FORTRAN77 VERSION
NEW OPTIONS: DAMBREAK OUTFLOW SUBMERGENCE , SINGLE EVENT DAMAGE CALCULATION, DSS:WRITE STAGE FREQUENCY,
DSS:READ TIME SERIES AT DESIRED CALCULATION INTERVAL LOSS RATE:GREEN AND AMPT INFILTRATION
KINEMATIC WAVE: NEW FINITE DIFFERENCE ALGORITHM

```
1                                          HEC-1 INPUT                                                    PAGE  1

  LINE          ID.......1.......2.......3.......4.......5.......6.......7.......8.......9......10

    1           ID   BULLARD WASH OUTFALL STUDY
    2           ID   FLOOD CONTROL DISTRICT OF MARICOPA COUNTY, FCD95-39
    3           ID   HEC-1 Modeling for SVERDRUP Inc. by Wood, Patel & Associates Inc.
    4           ID   100-yr 24-hr storm    File = V:\Projects\96464 - Bullard Wash\Surface.ih1
    5           ID                         Date = 27 APR 1998  by David T. Phelps
    6           ID
    7           ID   Base model from White Tanks ADMS as revised by Stanley Consultants Inc
    8           ID    for Bullard Wash Outfall Feasibility Study (FCD 94-06), HEC-1 file 12278H1A
    9           ID
   10           ID   Modeling for Interrior Sediment Basin located at Buckeye Canal & Bullard Wash
   11           ID     - Contributing area for interrior drain is local watershed.
   12           ID     - Bullard Wash intercepts 100% of watershed to north of MC85.
   13           ID
                *
                *DIAGRAM
                *
   14           IT       5                    300
   15           IO       5
   16           IN      15
                *
   17           JD    4.03     .001
   18           PC    .000     .002     .005     .008     .011     .014     .017     .020     .023     .026
   19           PC    .029     .032     .035     .038     .041     .044     .048     .052     .056     .060
   20           PC    .064     .068     .072     .076     .080     .085     .090     .095     .100     .105
   21           PC    .110     .115     .120     .126     .133     .140     .147     .155     .163     .172
   22           PC    .181     .191     .203     .218     .236     .257     .283     .387     .663     .707
   23           PC    .735     .758     .776     .791     .804     .815     .825     .834     .842     .849
   24           PC    .856     .863     .869     .875     .881     .887     .893     .898     .903     .908
   25           PC    .913     .918     .922     .926     .930     .934     .938     .942     .946     .950
   26           PC    .953     .956     .959     .962     .965     .968     .971     .974     .977     .980
   27           PC    .983     .986     .989     .992     .995     .998    1.00    1.000    1.000    1.000
   28           JD    3.99       10
   29           JD    3.83       50
   30           JD    3.76      100
   31           JD    3.70      200
                *

   32           KK     365
   33           KM        RUNOFF HYDROGRAPH FROM SUB-BASIN 365
   34           BA     .38
   35           LG     .50      .00     4.11      .73      .00
   36           UI     22.      22.      37.      78.      98.     114.     128.     145.     167.     200.
   37           UI    261.     272.     222.     192.     172.     148.     130.     111.      96.      71.
   38           UI     47.      38.      36.      29.      22.      22.       9.       7.       7.       7.
   39           UI      7.       7.       7.       7.       0.       0.       0.       0.       0.       0.
   40           UI      0.       0.       0.       0.       0.       0.       0.       0.       0.       0.
                *

   41           KK    R365
   42           KM        ROUTE FLOW FROM CP365 TO CP364
   43           RS       5               -1
   44           RC    .035     .035     .075     4000   0.0028
   45           RX    1000     1001     1015     1140     1560     1700     2009     2010
   46           RY     915      915      914    913.5    913.5      914      915      915
                *
1                                          HEC-1 INPUT                                                    PAGE  2

  LINE          ID.......1.......2.......3.......4.......5.......6.......7.......8.......9......10

   47           KK  364rev
   48           KM   BASIN 364rev
   49           KM    THE FOLLOWING PARAMETERS WERE PROVIDED FOR THIS BASIN
   50           KM    L=      1.1  Lca=       .6   S=    8.2  Kn= .080  LAG=  63.8
   51           KM    AGRICULTURAL S-GRAPH WAS USED FOR THIS BASIN
   52           BA     .49
   53           LG     .50      .00     4.22      .43      .00
   54           UI     28.      28.      38.      61.     112.     161.     154.     199.     217.     237.
   55           UI    237.     237.     227.     197.     210.     195.     148.     164.     122.     108.
   56           UI     88.      79.      85.      54.      48.      45.      35.      35.      26.      26.
   57           UI     26.      16.      16.      16.      16.      13.       4.       4.       4.       4.
   58           UI      4.       4.       4.       4.       4.       4.       4.       4.       4.       4.
   59           UI      4.       4.       4.       4.       4.       4.       4.       0.       0.       0.
   60           UI      0.       0.       0.       0.       0.       0.       0.       0.       0.       0.
                *
```

```
          61          KK   C@364
          62          KM        ADD HYDROGRAPHS AT CP364
          63          KM        Surface Drain Inlet Location @ Buckeye Canal & Bullard Wash
          64          HC       2
                      *
                      *
          65          ZZ
1
                SCHEMATIC DIAGRAM OF STREAM NETWORK
 INPUT
  LINE      (V) ROUTING          (--->) DIVERSION OR PUMP FLOW

   NO.      (.) CONNECTOR        (<---) RETURN OF DIVERTED OR PUMPED FLOW

   32         365
                V
                V
   41        R365
                .
                .
   47           .       364rev
                .           .
                .           .
   61       C@364............

 (***) RUNOFF ALSO COMPUTED AT THIS LOCATION
1****************************************
*                                      *
*   FLOOD HYDROGRAPH PACKAGE  (HEC-1)  *
*              MAY   1991              *
*           VERSION 4.0.1E             *
*     Lahey F77L-EM/32 version 5.01    *
*       Dodson & Associates, Inc.      *
*  RUN DATE  04/28/98  TIME  14:59:49  *
****************************************
```

```
****************************************
*                                      *
*    U.S. ARMY CORPS OF ENGINEERS      *
*    HYDROLOGIC ENGINEERING CENTER     *
*          609 SECOND STREET           *
*       DAVIS, CALIFORNIA 95616        *
*           (916) 551-1748             *
*                                      *
****************************************
```

```
BULLARD WASH OUTFALL STUDY
FLOOD CONTROL DISTRICT OF MARICOPA COUNTY, FCD95-39
HEC-1 Modeling for SVERDRUP Inc. by Wood, Patel & Associates Inc.
100-yr 24-hr storm   File = V:\Projects\96464 - Bullard Wash\Surface.ih1
                     Date = 27 APR 1998  by David T. Phelps

Base model from White Tanks ADMS as revised by Stanley Consultants Inc
 for Bullard Wash Outfall Feasibility Study (FCD 94-06), HEC-1 file 12278H1A

Modeling for Interrior Sediment Basin located at Buckeye Canal & Bullard Wash
  - Contributing area for interrior drain is local watershed.
  - Bullard Wash intercepts 100% of watershed to north of MC85.

 15 IO        OUTPUT CONTROL VARIABLES
                    IPRNT          5  PRINT CONTROL
                    IPLOT          0  PLOT CONTROL
                    QSCAL         0.  HYDROGRAPH PLOT SCALE

    IT        HYDROGRAPH TIME DATA
                     NMIN          5  MINUTES IN COMPUTATION INTERVAL
                    IDATE      1   0  STARTING DATE
                    ITIME       0000  STARTING TIME
                       NQ        300  NUMBER OF HYDROGRAPH ORDINATES
                   NDDATE      2   0  ENDING DATE
                   NDTIME       0055  ENDING TIME
                    ICENT         19  CENTURY MARK

                COMPUTATION INTERVAL    0.08 HOURS
                     TOTAL TIME BASE   24.92 HOURS

          ENGLISH UNITS
               DRAINAGE AREA          SQUARE MILES
               PRECIPITATION DEPTH    INCHES
               LENGTH, ELEVATION      FEET
               FLOW                   CUBIC FEET PER SECOND
               STORAGE VOLUME         ACRE-FEET
               SURFACE AREA           ACRES
               TEMPERATURE            DEGREES FAHRENHEIT

 17 JD        INDEX STORM NO. 1
                    STRM        4.03  PRECIPITATION DEPTH
                    TRDA        0.00  TRANSPOSITION DRAINAGE AREA

 18 PI          PRECIPITATION PATTERN
                  0.00      0.00      0.00      0.00      0.00      0.00      0.00      0.00      0.00      0.00
                  0.00      0.00      0.00      0.00      0.00      0.00      0.00      0.00      0.00      0.00
                  0.00      0.00      0.00      0.00      0.00      0.00      0.00      0.00      0.00      0.00
                  0.00      0.00      0.00      0.00      0.00      0.00      0.00      0.00      0.00      0.00
                  0.00      0.00      0.00      0.00      0.00      0.00      0.00      0.00      0.00      0.00
                  0.00      0.00      0.00      0.00      0.00      0.00      0.00      0.00      0.00      0.00
                  0.00      0.00      0.00      0.00      0.00      0.00      0.00      0.00      0.00      0.00
                  0.00      0.00      0.00      0.00      0.00      0.00      0.00      0.00      0.00      0.00
                  0.00      0.00      0.00      0.00      0.00      0.00      0.00      0.00      0.00      0.00
                  0.00      0.00      0.00      0.00      0.00      0.00      0.00      0.00      0.00      0.00
                  0.00      0.00      0.00      0.00      0.00      0.00      0.00      0.00      0.00      0.00
                  0.00      0.00      0.00      0.00      0.00      0.00      0.00      0.01      0.00      0.01
                  0.01      0.01      0.01      0.01      0.01      0.01      0.01      0.01      0.03      0.03
                  0.03      0.09      0.09      0.09      0.01      0.01      0.01      0.01      0.01      0.01
                  0.01      0.01      0.01      0.01      0.01      0.01      0.00      0.00      0.00      0.00
                  0.00      0.00      0.00      0.00      0.00      0.00      0.00      0.00      0.00      0.00
                  0.00      0.00      0.00      0.00      0.00      0.00      0.00      0.00      0.00      0.00
                  0.00      0.00      0.00      0.00      0.00      0.00      0.00      0.00      0.00      0.00
                  0.00      0.00      0.00      0.00      0.00      0.00      0.00      0.00      0.00      0.00
                  0.00      0.00      0.00      0.00      0.00      0.00      0.00      0.00      0.00      0.00
                  0.00      0.00      0.00      0.00      0.00      0.00      0.00      0.00      0.00      0.00
                  0.00      0.00      0.00      0.00      0.00      0.00      0.00      0.00      0.00      0.00
                  0.00      0.00      0.00      0.00      0.00      0.00      0.00      0.00      0.00      0.00
                  0.00      0.00      0.00      0.00      0.00      0.00      0.00      0.00      0.00      0.00
                  0.00      0.00      0.00      0.00      0.00      0.00      0.00      0.00      0.00      0.00
```

```
                 0.00     0.00     0.00     0.00     0.00     0.00     0.00     0.00     0.00     0.00
                 0.00     0.00     0.00     0.00     0.00     0.00     0.00     0.00

  28 JD        INDEX STORM NO. 2
                     STRM      3.99  PRECIPITATION DEPTH
                     TRDA     10.00  TRANSPOSITION DRAINAGE AREA

   0 PI          PRECIPITATION PATTERN
                 0.00     0.00     0.00     0.00     0.00     0.00     0.00     0.00     0.00     0.00
                 0.00     0.00     0.00     0.00     0.00     0.00     0.00     0.00     0.00     0.00
                 0.00     0.00     0.00     0.00     0.00     0.00     0.00     0.00     0.00     0.00
                 0.00     0.00     0.00     0.00     0.00     0.00     0.00     0.00     0.00     0.00
                 0.00     0.00     0.00     0.00     0.00     0.00     0.00     0.00     0.00     0.00
                 0.00     0.00     0.00     0.00     0.00     0.00     0.00     0.00     0.00     0.00
                 0.00     0.00     0.00     0.00     0.00     0.00     0.00     0.00     0.00     0.00
                 0.00     0.00     0.00     0.00     0.00     0.00     0.00     0.00     0.00     0.00
                 0.00     0.00     0.00     0.00     0.00     0.00     0.00     0.00     0.00     0.00
                 0.00     0.00     0.00     0.00     0.00     0.00     0.00     0.00     0.00     0.00
                 0.00     0.00     0.00     0.00     0.00     0.00     0.00     0.00     0.00     0.00
                 0.00     0.00     0.00     0.00     0.00     0.00     0.00     0.00     0.00     0.00
                 0.00     0.00     0.00     0.00     0.00     0.00     0.00     0.01     0.00     0.01
                 0.01     0.01     0.01     0.01     0.01     0.01     0.01     0.01     0.03     0.03
                 0.03     0.09     0.09     0.09     0.01     0.01     0.01     0.01     0.01     0.01
                 0.01     0.01     0.01     0.01     0.01     0.01     0.00     0.00     0.00     0.00
                 0.00     0.00     0.00     0.00     0.00     0.00     0.00     0.00     0.00     0.00
                 0.00     0.00     0.00     0.00     0.00     0.00     0.00     0.00     0.00     0.00
                 0.00     0.00     0.00     0.00     0.00     0.00     0.00     0.00     0.00     0.00
                 0.00     0.00     0.00     0.00     0.00     0.00     0.00     0.00     0.00     0.00
                 0.00     0.00     0.00     0.00     0.00     0.00     0.00     0.00     0.00     0.00
                 0.00     0.00     0.00     0.00     0.00     0.00     0.00     0.00     0.00     0.00
                 0.00     0.00     0.00     0.00     0.00     0.00     0.00     0.00     0.00     0.00
                 0.00     0.00     0.00     0.00     0.00     0.00     0.00     0.00     0.00     0.00
                 0.00     0.00     0.00     0.00     0.00     0.00     0.00     0.00     0.00     0.00
                 0.00     0.00     0.00     0.00     0.00     0.00     0.00     0.00     0.00     0.00
                 0.00     0.00     0.00     0.00     0.00     0.00     0.00     0.00     0.00     0.00
                 0.00     0.00     0.00     0.00     0.00     0.00     0.00     0.00     0.00     0.00
                 0.00     0.00     0.00     0.00     0.00     0.00     0.00     0.00

  29 JD        INDEX STORM NO. 3
                     STRM      3.83  PRECIPITATION DEPTH
                     TRDA     50.00  TRANSPOSITION DRAINAGE AREA

   0 PI          PRECIPITATION PATTERN
                 0.00     0.00     0.00     0.00     0.00     0.00     0.00     0.00     0.00     0.00
                 0.00     0.00     0.00     0.00     0.00     0.00     0.00     0.00     0.00     0.00
                 0.00     0.00     0.00     0.00     0.00     0.00     0.00     0.00     0.00     0.00
                 0.00     0.00     0.00     0.00     0.00     0.00     0.00     0.00     0.00     0.00
                 0.00     0.00     0.00     0.00     0.00     0.00     0.00     0.00     0.00     0.00
                 0.00     0.00     0.00     0.00     0.00     0.00     0.00     0.00     0.00     0.00
                 0.00     0.00     0.00     0.00     0.00     0.00     0.00     0.00     0.00     0.00
                 0.00     0.00     0.00     0.00     0.00     0.00     0.00     0.00     0.00     0.00
                 0.00     0.00     0.00     0.00     0.00     0.00     0.00     0.00     0.00     0.00
                 0.00     0.00     0.00     0.00     0.00     0.00     0.00     0.00     0.00     0.00
                 0.00     0.00     0.00     0.00     0.00     0.00     0.00     0.00     0.00     0.00
                 0.00     0.00     0.00     0.00     0.00     0.00     0.00     0.00     0.00     0.00
                 0.00     0.00     0.00     0.00     0.00     0.00     0.00     0.01     0.00     0.01
                 0.01     0.01     0.01     0.01     0.01     0.01     0.01     0.01     0.03     0.03
                 0.03     0.09     0.09     0.09     0.01     0.01     0.01     0.01     0.01     0.01
                 0.01     0.01     0.01     0.01     0.01     0.01     0.00     0.00     0.00     0.00
                 0.00     0.00     0.00     0.00     0.00     0.00     0.00     0.00     0.00     0.00
                 0.00     0.00     0.00     0.00     0.00     0.00     0.00     0.00     0.00     0.00
                 0.00     0.00     0.00     0.00     0.00     0.00     0.00     0.00     0.00     0.00
                 0.00     0.00     0.00     0.00     0.00     0.00     0.00     0.00     0.00     0.00
                 0.00     0.00     0.00     0.00     0.00     0.00     0.00     0.00     0.00     0.00
                 0.00     0.00     0.00     0.00     0.00     0.00     0.00     0.00     0.00     0.00
                 0.00     0.00     0.00     0.00     0.00     0.00     0.00     0.00     0.00     0.00
                 0.00     0.00     0.00     0.00     0.00     0.00     0.00     0.00     0.00     0.00
                 0.00     0.00     0.00     0.00     0.00     0.00     0.00     0.00     0.00     0.00
                 0.00     0.00     0.00     0.00     0.00     0.00     0.00     0.00     0.00     0.00
                 0.00     0.00     0.00     0.00     0.00     0.00     0.00     0.00     0.00     0.00
                 0.00     0.00     0.00     0.00     0.00     0.00     0.00     0.00     0.00     0.00
                 0.00     0.00     0.00     0.00     0.00     0.00     0.00     0.00

  30 JD        INDEX STORM NO. 4
                     STRM      3.76  PRECIPITATION DEPTH
                     TRDA    100.00  TRANSPOSITION DRAINAGE AREA

   0 PI          PRECIPITATION PATTERN
                 0.00     0.00     0.00     0.00     0.00     0.00     0.00     0.00     0.00     0.00
                 0.00     0.00     0.00     0.00     0.00     0.00     0.00     0.00     0.00     0.00
                 0.00     0.00     0.00     0.00     0.00     0.00     0.00     0.00     0.00     0.00
                 0.00     0.00     0.00     0.00     0.00     0.00     0.00     0.00     0.00     0.00
                 0.00     0.00     0.00     0.00     0.00     0.00     0.00     0.00     0.00     0.00
                 0.00     0.00     0.00     0.00     0.00     0.00     0.00     0.00     0.00     0.00
                 0.00     0.00     0.00     0.00     0.00     0.00     0.00     0.00     0.00     0.00
                 0.00     0.00     0.00     0.00     0.00     0.00     0.00     0.00     0.00     0.00
                 0.00     0.00     0.00     0.00     0.00     0.00     0.00     0.00     0.00     0.00
                 0.00     0.00     0.00     0.00     0.00     0.00     0.00     0.00     0.00     0.00
                 0.00     0.00     0.00     0.00     0.00     0.00     0.00     0.00     0.00     0.00
                 0.00     0.00     0.00     0.00     0.00     0.00     0.00     0.00     0.00     0.00
                 0.00     0.00     0.00     0.00     0.00     0.00     0.00     0.01     0.00     0.01
                 0.01     0.01     0.01     0.01     0.01     0.01     0.01     0.01     0.03     0.03
                 0.03     0.09     0.09     0.09     0.01     0.01     0.01     0.01     0.01     0.01
                 0.01     0.01     0.01     0.01     0.01     0.01     0.00     0.00     0.00     0.00
                 0.00     0.00     0.00     0.00     0.00     0.00     0.00     0.00     0.00     0.00
                 0.00     0.00     0.00     0.00     0.00     0.00     0.00     0.00     0.00     0.00
                 0.00     0.00     0.00     0.00     0.00     0.00     0.00     0.00     0.00     0.00
                 0.00     0.00     0.00     0.00     0.00     0.00     0.00     0.00     0.00     0.00
                 0.00     0.00     0.00     0.00     0.00     0.00     0.00     0.00     0.00     0.00
                 0.00     0.00     0.00     0.00     0.00     0.00     0.00     0.00     0.00     0.00
                 0.00     0.00     0.00     0.00     0.00     0.00     0.00     0.00     0.00     0.00
                 0.00     0.00     0.00     0.00     0.00     0.00     0.00     0.00     0.00     0.00
                 0.00     0.00     0.00     0.00     0.00     0.00     0.00     0.00     0.00     0.00
                 0.00     0.00     0.00     0.00     0.00     0.00     0.00     0.00     0.00     0.00
                 0.00     0.00     0.00     0.00     0.00     0.00     0.00     0.00     0.00     0.00
                 0.00     0.00     0.00     0.00     0.00     0.00     0.00     0.00     0.00     0.00
                 0.00     0.00     0.00     0.00     0.00     0.00     0.00     0.00

  31 JD        INDEX STORM NO. 5
                     STRM      3.70  PRECIPITATION DEPTH
                     TRDA    200.00  TRANSPOSITION DRAINAGE AREA

   0 PI          PRECIPITATION PATTERN
```

0.00	0.00	0.00	0.00	0.00	0.00	0.00	0.00	0.00	0.00
0.00	0.00	0.00	0.00	0.00	0.00	0.00	0.00	0.00	0.00
0.00	0.00	0.00	0.00	0.00	0.00	0.00	0.00	0.00	0.00
0.00	0.00	0.00	0.00	0.00	0.00	0.00	0.00	0.00	0.00
0.00	0.00	0.00	0.00	0.00	0.00	0.00	0.00	0.00	0.00
0.00	0.00	0.00	0.00	0.00	0.00	0.00	0.00	0.00	0.00
0.00	0.00	0.00	0.00	0.00	0.00	0.00	0.00	0.00	0.00
0.00	0.00	0.00	0.00	0.00	0.00	0.00	0.00	0.00	0.00
0.00	0.00	0.00	0.00	0.00	0.00	0.00	0.00	0.00	0.00
0.00	0.00	0.00	0.00	0.00	0.00	0.00	0.00	0.00	0.00
0.00	0.00	0.00	0.00	0.00	0.00	0.00	0.00	0.00	0.00
0.00	0.00	0.00	0.00	0.00	0.00	0.00	0.00	0.00	0.00
0.00	0.00	0.00	0.00	0.00	0.00	0.00	0.01	0.00	0.01
0.01	0.01	0.01	0.01	0.01	0.01	0.01	0.01	0.03	0.03
0.03	0.09	0.09	0.09	0.01	0.01	0.01	0.01	0.01	0.01
0.01	0.01	0.01	0.01	0.01	0.01	0.00	0.00	0.00	0.00
0.00	0.00	0.00	0.00	0.00	0.00	0.00	0.00	0.00	0.00
0.00	0.00	0.00	0.00	0.00	0.00	0.00	0.00	0.00	0.00
0.00	0.00	0.00	0.00	0.00	0.00	0.00	0.00	0.00	0.00
0.00	0.00	0.00	0.00	0.00	0.00	0.00	0.00	0.00	0.00
0.00	0.00	0.00	0.00	0.00	0.00	0.00	0.00	0.00	0.00
0.00	0.00	0.00	0.00	0.00	0.00	0.00	0.00	0.00	0.00
0.00	0.00	0.00	0.00	0.00	0.00	0.00	0.00	0.00	0.00
0.00	0.00	0.00	0.00	0.00	0.00	0.00	0.00	0.00	0.00
0.00	0.00	0.00	0.00	0.00	0.00	0.00	0.00	0.00	0.00
0.00	0.00	0.00	0.00	0.00	0.00	0.00	0.00	0.00	0.00
0.00	0.00	0.00	0.00	0.00	0.00	0.00	0.00	0.00	0.00
0.00	0.00	0.00	0.00	0.00	0.00	0.00	0.00	0.00	0.00
0.00	0.00	0.00	0.00	0.00	0.00	0.00	0.00	0.00	0.00
0.00	0.00	0.00	0.00	0.00	0.00	0.00	0.00	0.00	0.00
0.00	0.00	0.00	0.00	0.00	0.00	0.00	0.00	0.00	0.00

1

RUNOFF SUMMARY
FLOW IN CUBIC FEET PER SECOND
TIME IN HOURS, AREA IN SQUARE MILES

	OPERATION	STATION	PEAK FLOW	TIME OF PEAK	AVERAGE FLOW FOR MAXIMUM PERIOD 6-HOUR	24-HOUR	72-HOUR	BASIN AREA	MAXIMUM STAGE	TIME OF MAX STAGE
+	HYDROGRAPH AT	365	272.	12.83	47.	12.	11.	0.38		
+	ROUTED TO	R365	189.	13.58	47.	12.	11.	0.38		
+	HYDROGRAPH AT	364rev	315.	12.75	73.	18.	17.	0.49		
+	2 COMBINED AT	C0364	355.	13.25	119.	30.	29.	0.87		

*** NORMAL END OF HEC-1 ***

v:/980102/hydrol.dgn Apr. 29, 1998 11:04:44

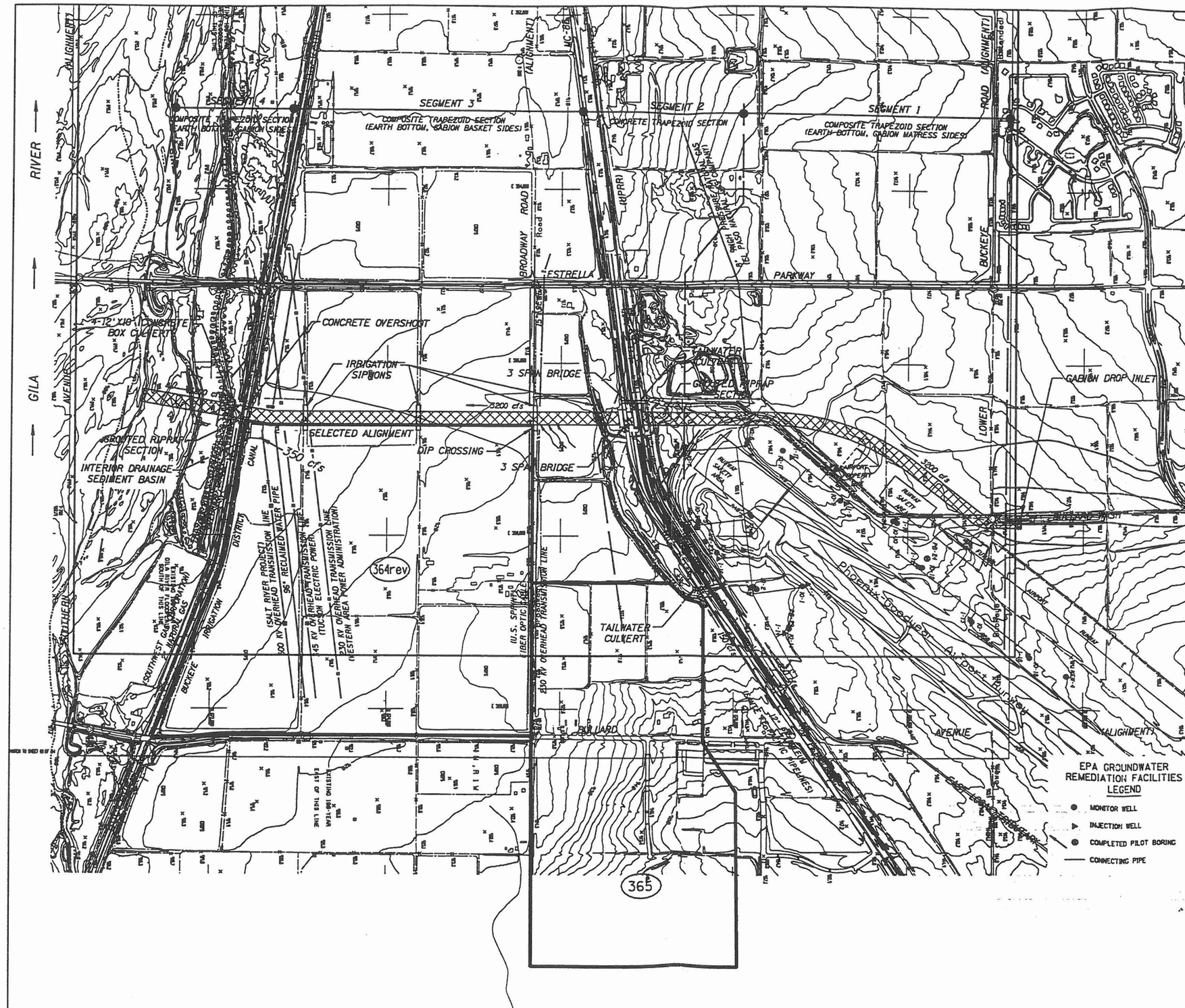

BULLARD WASH OUTFALL CHANNEL IMPROVEMENTS

FLOOD CONTROL DISTRICT OF MARICOPA COUNTY
CONTRACT FCD #95-39

NOTES:

1. CHANNEL ALIGNMENTS ARE ILLUSTRATIVE AND DO NOT REPRESENT ACTUAL WIDTH.
2. DESIGN DISCHARGES ARE BASED ON WHITE TANKS/AGUA FRIA ADMS HEC-1 MODEL BY THE WLB GROUP REVISED BY STANLEY CONSULTANTS TO REFLECT FUTURE DYSART DRAIN AND WHITE TANKS #2 FLOOD CONTROL PROJECTS.

LEGEND

- SELECTED CHANNEL ALIGNMENT LOCATION
- CULVERT OR BRIDGE
- 3200 cfs — DESIGN DISCHARGE AND FLOW DIRECTION
- SEGMENT LIMITS
- OVERHEAD ELECTRIC (WITH SELECTED POLES\TOWERS)
- FIBER OPTIC CABLE (U.S. SPRINT) — UTILITY / UTILITY OWNER
- CORPS 404 WATERS OF THE U.S. JURISDICTIONAL LIMIT
- BULLARD WASH OR LOCALIZED FLOODPLAIN LIMIT
- BULLARD WASH FLOODWAY LIMIT
- SUB BASIN BOUNDARY
- 365 — SUB BASIN ID

N

400 200 0 400 800 1200

CONTOUR INTERVAL=2'

BASE MAP: WHITE TANKS/AGUA FRIA ADMS AND BULLARD WASH OUTFAL FEASIBILITY STUDY

MAPPING COMPANY: COOPER AERIAL OF PHOENIX INC. FLIGHT DATE 12-22-89

FIGURE

SURFACE DRAINAGE MAP FOR INTERRIOR SEDIMENT BASIN

WOOD, PATEL & ASSOCIATES, INC.
1550 EAST MISSOURI, SUITE 203
PHOENIX, ARIZONA 85021 234-1344

DES. J.L.M.	CKD. A.C.P.
DRN. T.Y.	APP.
DATE 4-29-98	
SHEET 1 OF 1	
DWG.	
PROJ. NO. 95454	

AVERY

TABLE OF CONTENTS – Section 12

Additional Calculations and Supporting Documentation

Box Culvert Hydraulics
Spillway Hydraulics (at Buckeye Irrigation Canal)
Pipe Culvert Inlet to East Tributary Channel
East Tributary and Low Flow Channel Hydraulic Calculations
Cost Comparison for Toe Down (Gabion Baskets vs. Gabion Mattress)
Gabion Basket Design
Standard Maintenance Procedures
Channel Roughness Memorandum
Gabion Basket Longevity and Maintenance
Side Slope Stability for Channel Lining (with Fax Cover)

Bradford D. Olbert

Registered Professional Engineer (Sanitary)
CERTIFICATE NO.
13955
BRADFORD D.
OLBERT
Date Signed 10/14/98
ARIZONA, U.S.A.

checked By: GTF
Date: 5-6-98

PROJECT: 013884 Bullard Wash

DESIGNER: BDO

DATE: 4/5/98, Rev. 9/28/98

HYDROLOGIC AND CHANNEL INFORMATION

Q_1 = 3,200 cfs TW_1 = 907.30

Q_2 = _____ TW_2 = _____

(Q_1 = DESIGN DISCHARGE, SAY Q_{25}
Q_2 = CHECK DISCHARGE, SAY Q_{50} OR Q_{100})

SKETCH

STATION: _____

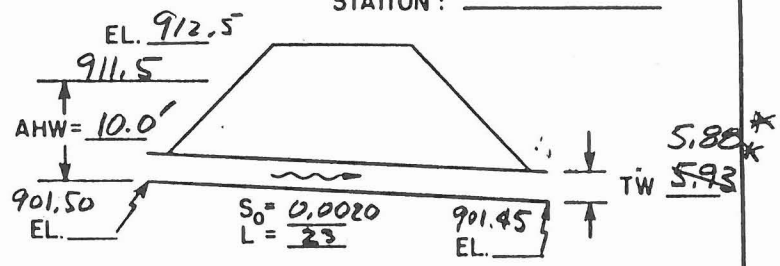

MEAN STREAM VELOCITY = _____
MAX. STREAM VELOCITY = _____

CULVERT DESCRIPTION (ENTRANCE TYPE)	Q cfs/LF	SIZE	HEADWATER COMPUTATION: INLET CONT. HW/D	INLET CONT. HW	OUTLET CONTROL HW=H+h_o−LS_o: K_e	H	d_c	$\frac{d_c+D}{2}$	TW	h_o	LS_o	HW	CONTROLLING HW	OUTLET VELOCITY	COST	COMMENTS
45° Wingwalls	66.7	4 barrel 10'x12'	0.78	7.8	0.2	.84	5.2	7.6	~~5.93~~ 5.88	7.6	0.05	~~8.39~~ 8.39	8.39	12.5		

SUMMARY & RECOMMENDATIONS:
Outlet velocity per Wood Patel HEC-RAS analysis. V = 12.5 fps
Controlling HW per HEC RAS Output file @ Sta 29+00 is 7.95 ft which is close to the HEC-5 calculation of 8.39'.

* Tailwater depth @ Sta 28+61 HEC-RAS Output by Wood Patel and Assoc., dated 9/21/98.

Figure 7

Designer : BDO Date : 4/5/98
Checked By : GTF Date : 5/6/98

CHART I

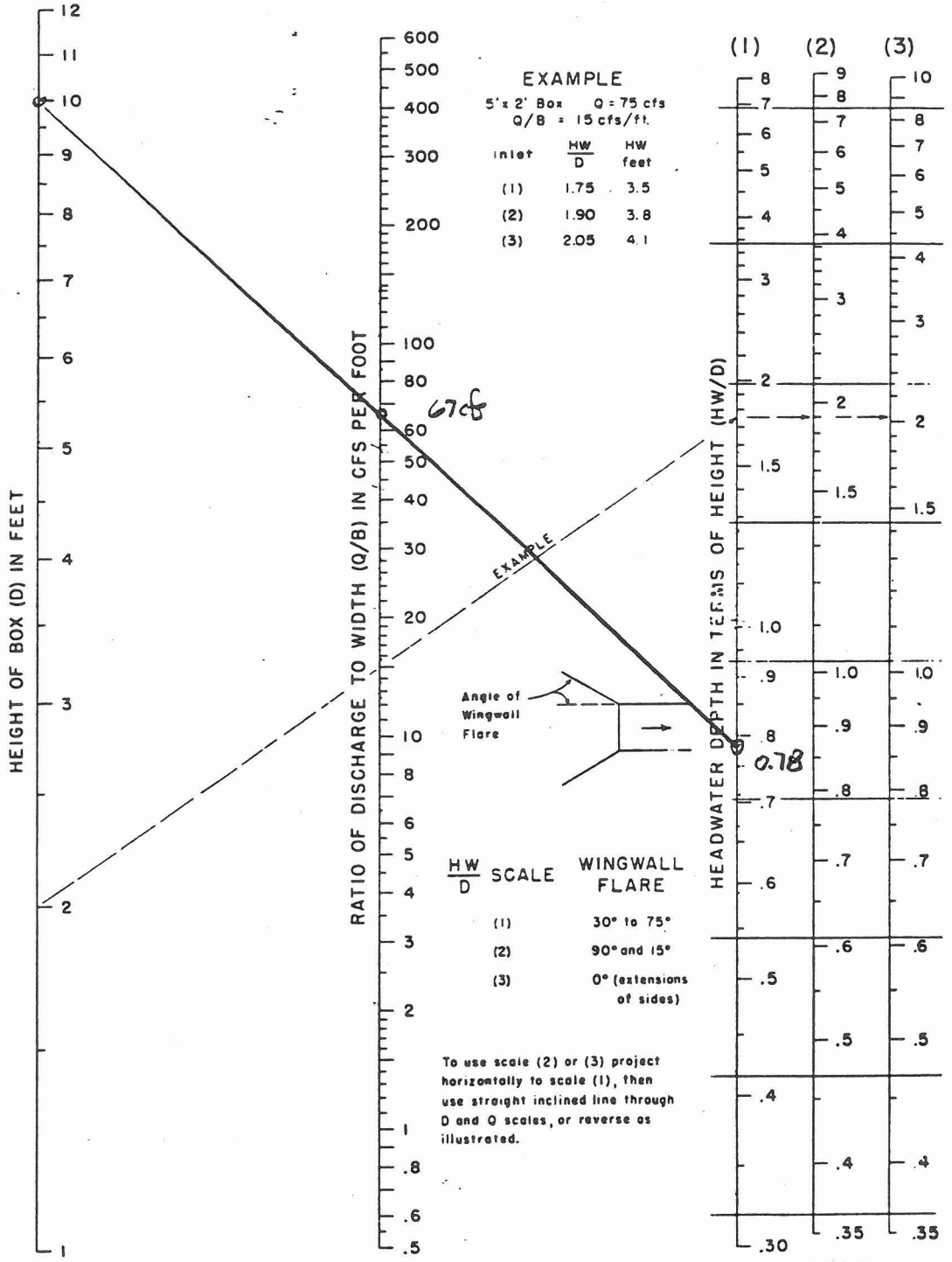

HEADWATER DEPTH FOR BOX CULVERTS WITH INLET CONTROL

BUREAU OF PUBLIC ROADS JAN. 1963

Designer: BDO Date: 4/5/98
Checked By: GTF Date: 5/6/98

CHART 8

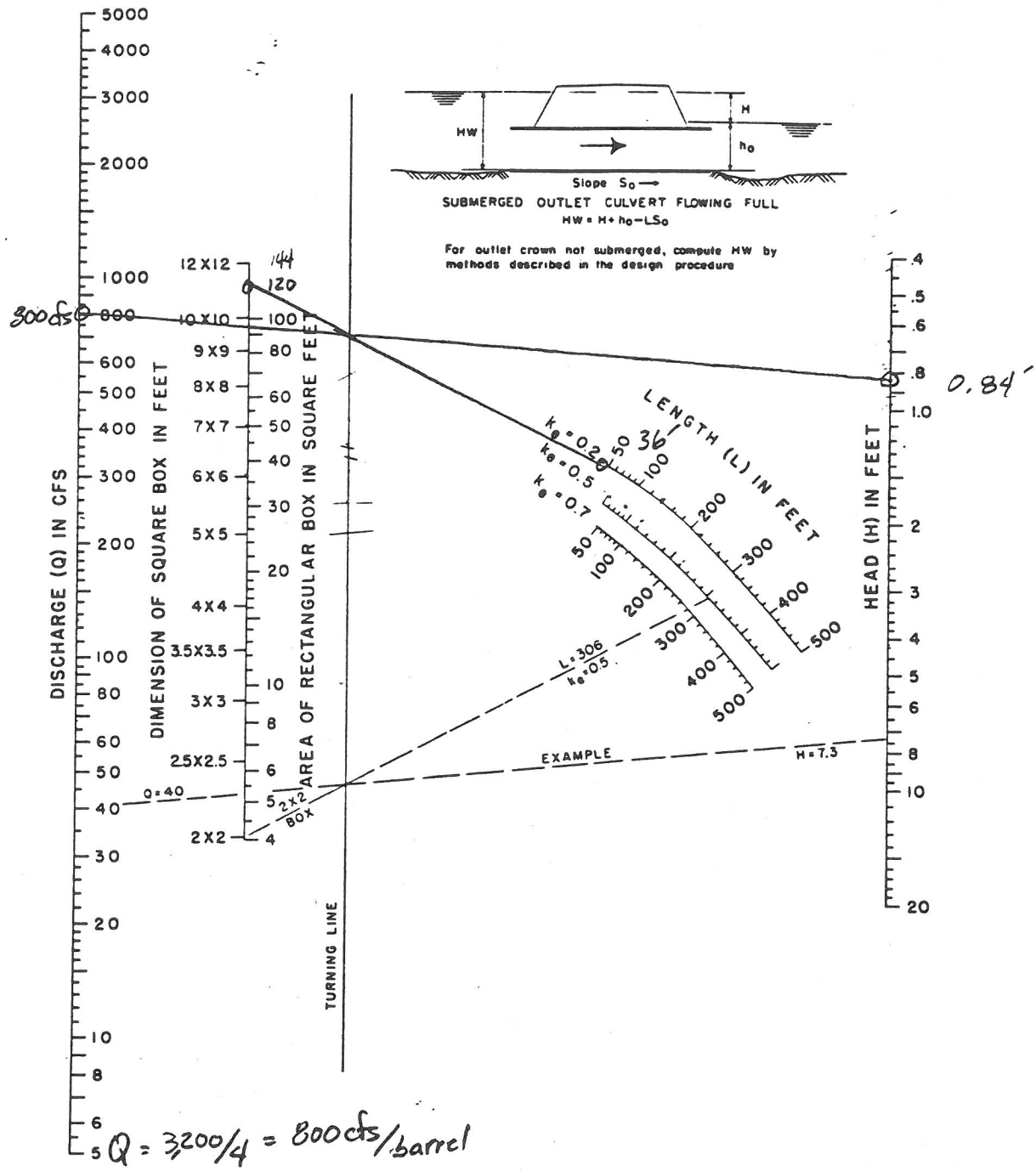

Q = 3,200/4 = 800 cfs/barrel

For increased roughness of box because of riprap increase culvert length

HEAD FOR
CONCRETE BOX CULVERTS
FLOWING FULL
n = 0.012

BUREAU OF PUBLIC ROADS JAN. 1963

$$L = L\left(\frac{n_1}{n}\right)^2 = 23\left(\frac{.015}{.012}\right)^2 = \underline{\underline{36'}}$$ 5-31

8 × 8, 12

walls @ .012
floor @ .015
.027/2 = .0135, Use .015 Conservative

Designer: BDO Date: 4/5/98
Checked by: GTF Date: 5/6/98

CHART 15

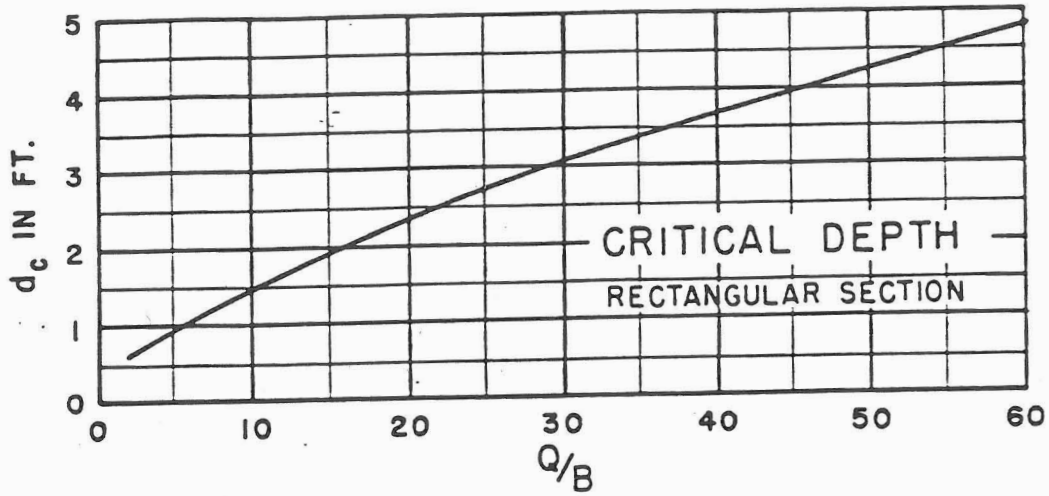

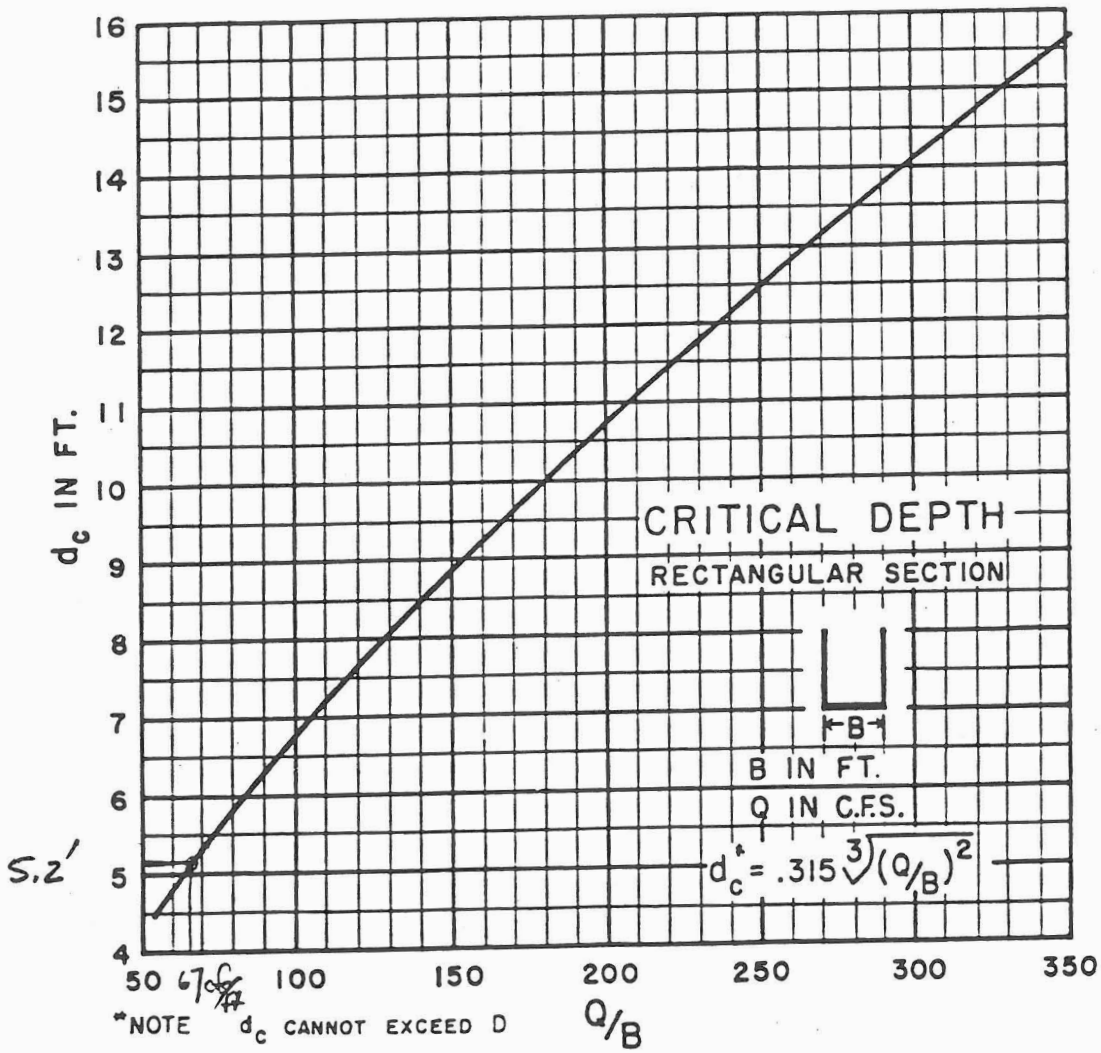

*NOTE d_c CANNOT EXCEED D

BUREAU OF PUBLIC ROADS JAN 1963

TABLE E5.1
HEC-RAS Output for Bullard Wash Outfall Channel Improvements
Final (99%) Hydraulic Profile (100-yr Q) for sub & supercritical flow conditions
Bullard Wash from Gila River to Lower Buckeye Road

Profile Output Table - Standard Table 1

HEC-RAS Plan: Final(9/98) River: Bullard Wash Reach: Outfall Channel Run Date: 21-Sep-98

Reach	River Sta	Q Total (ft/sec)	Min Ch El (ft)	W.S. Elev (ft)	Crit W.S. (ft)	E.G. Elev (ft)	E.G. Slope (ft/ft)	Vel Chnl (ft/sec)	Flow Area (sq ft)	Top Width (ft)	Froude # Chl
Outfall Channel	2500.00	3200.00	900.69	906.58	904.30	907.20	0.002001	6.33	505.71	91.78	0.48
Outfall Channel	2660.00	3200.00	901.02	906.90	904.63	907.52	0.002012	6.34	504.81	91.76	0.48
Outfall Channel	2860.56	3200.00	901.42	907.30	905.03	907.92	0.002008	6.33	505.14	91.76	0.48
Outfall Channel	2877.74	3200.00	901.45	906.45	906.38	908.87	0.003534	12.49	256.13	51.29	0.99
Outfall Channel	2901.4	Culvert									
Outfall Channel	2901.49	3200.00	901.50	909.45	906.43	910.41	0.000565	7.85	407.69	51.34	0.49
Outfall Channel	2911.00	3200.00	901.97	909.93	906.59	910.52	0.002140	6.19	517.19	76.95	0.42
Outfall Channel	2995.26	3200.00	906.15	909.69	910.46	912.71	0.027319	13.96	229.30	70.12	1.36
Outfall Channel	3002.33	3200.00	906.48	910.82	910.82	913.01	0.004132	11.87	269.55	62.12	1.00
Outfall Channel	3049.67	3200.00	906.56	911.59	910.90	913.22	0.002630	10.26	311.95	62.14	0.81
Outfall Channel	3064.67	3200.00	906.58	911.65	910.92	913.25	0.002564	10.17	314.59	62.14	0.80
Outfall Channel	3088.94	3200.00	906.62	912.81	910.65	913.55	0.000767	6.88	464.86	82.29	0.51
Outfall Channel	3141.00	3200.00	906.70	912.84	910.74	913.59	0.000800	6.98	458.73	82.15	0.52
Outfall Channel	3266.00	3200.00	906.90	912.92	910.94	913.71	0.000857	7.13	448.90	81.90	0.54
Outfall Channel	3330.00	3200.00	907.00	913.25	910.70	913.78	0.000544	5.84	547.68	98.51	0.44
Outfall Channel	3372.00	3200.00	907.06	913.35	910.61	913.82	0.001435	5.49	582.76	105.31	0.41
Outfall Channel	3562.61*	3200.00	907.34	913.62	910.89	914.09	0.001440	5.50	582.08	105.28	0.41
Outfall Channel	3753.23*	3200.00	907.62	913.90	911.17	914.37	0.001444	5.50	581.51	105.26	0.41
Outfall Channel	3943.84*	3200.00	907.89	914.17	911.45	914.64	0.001441	5.50	581.89	105.23	0.41
Outfall Channel	4134.46*	3200.00	908.17	914.45	911.72	914.92	0.001445	5.50	581.33	105.21	0.41
Outfall Channel	4325.07*	3200.00	908.45	914.72	912.00	915.19	0.001449	5.51	580.85	105.19	0.41
Outfall Channel	4515.69*	3200.00	908.73	915.00	912.28	915.47	0.001452	5.51	580.45	105.18	0.41
Outfall Channel	4706.30*	3200.00	909.00	915.28	912.56	915.75	0.001447	5.51	580.99	105.15	0.41
Outfall Channel	4896.92*	3200.00	909.28	915.55	912.83	916.02	0.001450	5.51	580.55	105.14	0.41
Outfall Channel	5087.53*	3200.00	909.56	915.83	913.11	916.30	0.001453	5.52	580.18	105.12	0.41
Outfall Channel	5278.15*	3200.00	909.84	916.11	913.39	916.58	0.001456	5.52	579.87	105.11	0.41
Outfall Channel	5468.76*	3200.00	910.11	916.38	913.67	916.85	0.001450	5.51	580.48	105.09	0.41
Outfall Channel	5659.38*	3200.00	910.39	916.66	913.95	917.13	0.001453	5.52	580.11	105.08	0.41
Outfall Channel	5850.00	3200.00	910.67	916.94	914.23	917.41	0.001456	5.52	579.79	105.06	0.41
Outfall Channel	5900.00	3200.00	910.74	917.01	914.30	917.48	0.001453	5.52	580.08	105.07	0.41
Outfall Channel	6020.00	3200.00	910.92	917.18	914.48	917.66	0.001458	5.52	579.49	105.05	0.41
Outfall Channel	6220.00	3200.00	911.21	917.47	914.77	917.95	0.001457	5.52	579.65	105.06	0.41
Outfall Channel	6322.00	3200.00	911.36	917.62	914.92	918.10	0.001464	5.53	578.67	105.02	0.42
Outfall Channel	6400.00	3200.00	911.45	917.74	915.00	918.21	0.001434	5.49	582.59	105.17	0.41

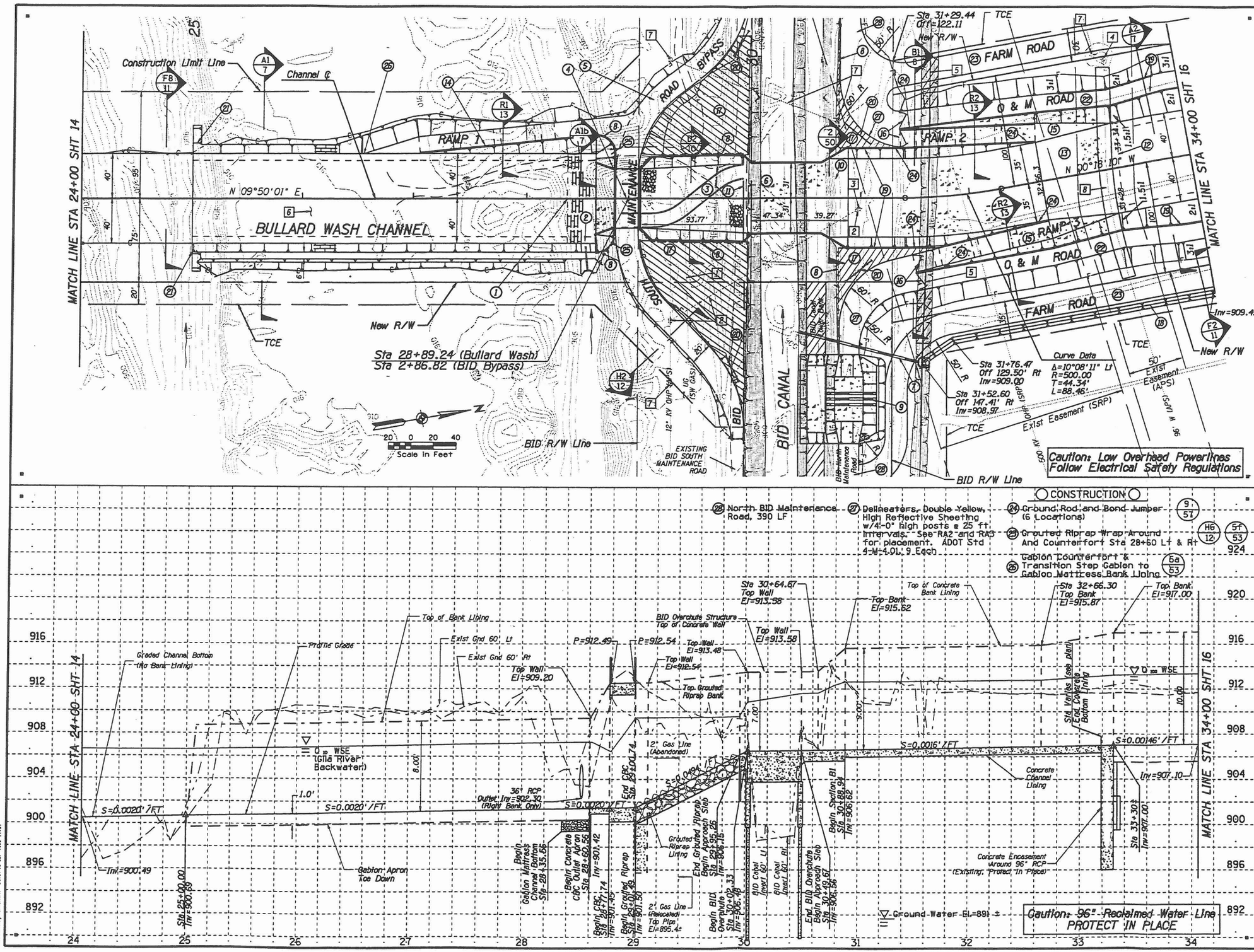

REMOVAL/RELOCATE

1. Relocate 2" Gas (Buried) by SW Gas
2. Relocate Service Pole & Overhead Service Line (APS)
3. Relocate UG Service Line (by APS)
4. Protect In Place Manhole Structure (APS)
5. Fill & Compact Exist Dirt Irr Ditch
6. Clear & Grub Existing Underbrush Sta 24+00 to 29+00, 75' Lt & Rt (1.72 Acres)
7. Protect In Place O/H Power Poles & U/G Services
8. Protect In Place Exist Conc. Pipe Encasement for 96" Pipeline (APS)

CONSTRUCTION

1. New Gabion Mattress Channel Bottom See A1b/7 A2c/7
2. New 36" RGRCP 24 LF with Hdwl, See P1/38 (MAG Std Det 501-4)
3. New Grouted Riprap Grade Control Structure @ 1 496 CY and Concrete O & M Path 104 LF, See 3/51
4. New (4) 12'x10' CBC, See BC1/38
5. New 20' Wide BID Bypass Road, See See Also Sheet 31 Plan & Profile H2/12
6. New BID Canal Overchute Structure, See Plan Sheet 73
7. New 24" DIP, 112 LF, with Headwall, See P2/39 (MAG Std Det 501-5)
8. New 4-Wire Fence 520 LF See Detail for Locations 7a/55
9. New (3) 24" RGRCP 45 LF (Ea) and Concrete Spillway, 715 SY P12/39
10. New Concrete Approach Slab, See 2/50
11. New Concrete Cutoff wall See 3a/51
12. Existing Concrete Pipe Encasement (Protect In Place, APS) and Gabion Erosion Apron 1/49
13. Trans Sec B1 to Sec A2, Sta 32+66.3 to 33+80 Lt & Rt. See Det 1 Sheet 49.
14. New Maintenance Ramp #1, See See Plan & Profile, Sheet 32 R1/13 and RA1/32
15. New Maintenance Ramp #2 & 3, See See Plan & Profile Sheet 32 & 33 R2/13 RA2/32 RA3/33
16. New Access Gate, Sta 31+36, 60.0' Lt, 62.7' Lt; Sta 31+50, 65.6' Rt & 69.0' Rt ; see 6/54
17. Regrade Infield Area (NPI) See Sheet 31 and 50.
18. New Graded V-Ditch 600 LF @ Rt F2/11
19. New Handrail 516' LF @ Lt, 447 LF @ Rt, See 7b/55
20. New Barricade, 55 LF @ Lt, 55 LF @ Rt, see MAG Std Dtl 130, Type "B" 7d/55
21. Step Gabion Bank Lining Terminus 10e/58
22. 15' O & M Road 350 LF @ Lt & 350 LF @ Rt, W/ 4" AB
23. New 20' Farm Road 271 LF @ Lt, 409 LF @ Rt Also See Sec. B1, Sheet 8. A2/7
24. Ground Rod and Bond Jumper (6 Locations) 9/57
25. Grouted Riprap Wrap Around And Counterfort Sta 28+60 Lt & Rt H6/12 5f/53
26. Gabion Counterfort & Transition Step Gabion to Gabion Mattress Bank Lining 6a/53
27. North BID Maintenance Road, 390 LF
28. Delineators, Double Yellow, High Reflective Sheeting w/4'-0" high posts @ 25 ft. Intervals. See RA2 and RA3 for placement. ADOT Std 4-W-4.01, 9 Each

NO.	REVISION	BY	DATE
1			
2			
3			

FLOOD CONTROL DISTRICT OF MARICOPA COUNTY
ENGINEERING DIVISION

BULLARD WASH
CHANNEL IMPROVEMENTS PROJECT
PROJECT NO. 4700731

PRELIMINARY NOT FOR CONSTRUCTION

	BY	DATE
DESIGNED	D. STOUGH	8/25/98
DRAWN	B. EDGAR	9/08/98
CHECKED	R. MILES/B. OLBERT	9/08/98

Sverdrup CORPORATION

PLAN AND PROFILE
STA 24+00.00 TO STA 34+00.00

SHEET 15 OF 81

Filename: pr401584420001100cos04102civil101Copy4589110p02.dgn
Plotted By: ahshirk Date: 10-SEP-1998 11:31

Culvert Designer/Analyzer Report
Pipe P12, Sta 30+65 Rt, BID Spillway

Comments: Spillway is located on north bank of BID Canal and east of new Bullard Wash Channel.

The high water at the inlet exceeds the elevation of the farm road that separates Pipe 2 from Pipe 12. Therefore, both sets of of pipes are modeled together.

Pipe 12 inlets and outlets are mitered to conform to 2:1 spillway banks. Pipe 12 will discharge onto spillway to spread flows before entering the canal.

Overtopping wier is concrete, trapezoidal, 40' bottom width, and approximately 7 percent sideslopes to North Maintenance Road grade.

A 4:1 slope on shotcrete spillway into BID canal.

Tailwater elevation is BID overchute structure low chord elevation = 905.5 (Plunge flow at outlet).

Pipe 2 overtops the farm road (approximately 26 cfs). Design flow for Pipe 12 is the condition where the spillway crest is just overtopped. Check flow is 100-yr, 24-hr storm with 100% saturation in the watershed.

Analysis Component			
Storm Event	Design	Discharge	105.00 cfs

Peak Discharge Method: User-Specified			
Design Discharge	105.00 cfs	Check Discharge	366.00 cfs

Tailwater Conditions: Constant Tailwater	
Tailwater Elevation	903.50 ft

Name	Description	Discharge	HW Elev	Velocity
Culvert-1	3-24 inch Circular	77.42 cfs	912.04 ft	8.73 ft/s
Culvert-2	1-24 inch Circular	26.64 cfs	912.04 ft	13.05 ft/s
Weir	Roadway	0.97 cfs	912.04 ft	N/A
Total	----------	105.03 cfs	912.04 ft	N/A

Culvert Designer/Analyzer Report
Pipe P12, Sta 30+65 Rt, BID Spillway

Component:Culvert-1

Culvert Summary			
Computed Headwater Elevation	912.04 ft	Discharge	77.42 cfs
Inlet Control HW Elev	912.04 ft	Tailwater Elevation	903.50 ft
Outlet Control HW Elev	911.85 ft	Control Type	Inlet Control
Headwater Depth/ Height	2.01		

Grades			
Upstream Invert	908.02 ft	Downstream Invert	907.79 ft
Length	45.00 ft	Constructed Slope	0.005111 ft/ft

Hydraulic Profile			
Profile	CompositeM2Pressure	Depth, Downstream	1.78 ft
Slope Type	Mild	Normal Depth	N/A ft
Flow Regime	Subcritical	Critical Depth	1.78 ft
Velocity Downstream	8.73 ft/s	Critical Slope	0.011563 ft/ft

Section			
Section Shape	Circular	Mannings Coefficient	0.013
Section Material	Concrete	Span	2.00 ft
Section Size	24 inch	Rise	2.00 ft
Number Sections	3		

Outlet Control Properties			
Outlet Control HW Elev	911.85 ft	Upstream Velocity Head	1.05 ft
Ke	0.50	Entrance Loss	0.52 ft

Inlet Control Properties			
Inlet Control HW Elev	912.04 ft	Flow Control	Submerged
Inlet Type	End-Section Conforming to fill slope	Area Full	9.4 ft^2
K	0.00980	HDS 5 Chart	1
M	2.00000	HDS 5 Scale	1
C	0.03980	Equation Form	1
Y	0.67000		

Culvert Designer/Analyzer Report
Pipe P12, Sta 30+65 Rt, BID Spillway

Component:Culvert-2

Culvert Summary			
Computed Headwater Elevation	912.04 ft	Discharge	26.64 cfs
Inlet Control HW Elev	912.04 ft	Tailwater Elevation	903.50 ft
Outlet Control HW Elev	911.53 ft	Control Type	Inlet Control
Headwater Depth/ Height	2.09		

Grades			
Upstream Invert	907.87 ft	Downstream Invert	904.50 ft
Length	112.00 ft	Constructed Slope	0.030089 ft/ft

Hydraulic Profile			
Profile	S2	Depth, Downstream	1.24 ft
Slope Type	Steep	Normal Depth	1.21 ft
Flow Regime	Supercritical	Critical Depth	1.80 ft
Velocity Downstream	13.05 ft/s	Critical Slope	0.012202 ft/ft

Section			
Section Shape	Circular	Mannings Coefficient	0.013
Section Material	Concrete	Span	2.00 ft
Section Size	24 inch	Rise	2.00 ft
Number Sections	1		

Outlet Control Properties			
Outlet Control HW Elev	911.53 ft	Upstream Velocity Head	1.24 ft
Ke	0.50	Entrance Loss	0.62 ft

Inlet Control Properties			
Inlet Control HW Elev	912.04 ft	Flow Control	Submerged
Inlet Type	Square edge w/headwall	Area Full	3.1 ft^2
K	0.00980	HDS 5 Chart	1
M	2.00000	HDS 5 Scale	1
C	0.03980	Equation Form	1
Y	0.67000		

Culvert Designer/Analyzer Report
Pipe P12, Sta 30+65 Rt, BID Spillway

Component:Weir

Hydraulic Component(s): Roadway					
Discharge	0.97	cfs	Allowable HW Elevation	912.04	ft
Roadway Width	26.00	ft	Overtopping Coefficient	2.91	US
Low Point	912.00	ft	Headwater Elevation	912.04	ft
Discharge Coefficient (Cr)	2.91		Submergence Factor (Kt)	1.00	
Tailwater Elevation	903.50	ft			

Sta (ft)	Elev (ft)
140.00	913.35
160.00	912.00
200.00	912.00
220.00	913.35

Culvert Designer/Analyzer Report
Pipe P12, Sta 30+65 Rt, BID Spillway

Comments: Spillway is located on north bank of BID Canal and east of new Bullard Wash Channel.

The high water at the inlet exceeds the elevation of the farm road that separates Pipe 2 from Pipe 12. Therefore, both sets of of pipes are modeled together.

Pipe 12 inlets and outlets are mitered to conform to 2:1 spillway banks. Pipe 12 will discharge onto spillway to spread flows before entering the canal.

Overtopping wier is concrete, trapezoidal, 40' bottom width, and approximately 7 percent sideslopes to North Maintenance Road grade.

A 4:1 slope on shotcrete spillway into BID canal.

Tailwater elevation is BID overchute structure low chord elevation = 905.5 (Plunge flow at outlet).

Pipe 2 overtops the farm road (approximately 26 cfs). Design flow for Pipe 12 is the condition where the spillway crest is just overtopped. Check flow is 100-yr, 24-hr storm with 100% saturation in the watershed.

Analysis Component			
Storm Event	Check	Discharge	366.00 cfs

Peak Discharge Method: User-Specified			
Design Discharge	105.00 cfs	Check Discharge	366.00 cfs

Tailwater Conditions: Constant Tailwater	
Tailwater Elevation	903.50 ft

Name	Description	Discharge	HW Elev	Velocity
Culvert-1	3-24 inch Circular	93.81 cfs	913.30 ft	10.20 ft/s
Culvert-2	1-24 inch Circular	31.96 cfs	913.30 ft	13.52 ft/s
Weir	Roadway	240.41 cfs	913.30 ft	N/A
Total	----------	366.17 cfs	913.30 ft	N/A

Culvert Designer/Analyzer Report
Pipe P12, Sta 30+65 Rt, BID Spillway

Component:Culvert-1

Culvert Summary					
Computed Headwater Elevation	913.30	ft	Discharge	93.81	cfs
Inlet Control HW Elev	913.30	ft	Tailwater Elevation	903.50	ft
Outlet Control HW Elev	912.91	ft	Control Type	Inlet Control	
Headwater Depth/ Height	2.64				

Grades					
Upstream Invert	908.02	ft	Downstream Invert	907.79	ft
Length	45.00	ft	Constructed Slope	0.005111	ft/ft

Hydraulic Profile					
Profile	CompositeM2Pressure		Depth, Downstream	1.88	ft
Slope Type	Mild		Normal Depth	N/A	ft
Flow Regime	Subcritical		Critical Depth	1.88	ft
Velocity Downstream	10.20	ft/s	Critical Slope	0.016514	ft/ft

Section					
Section Shape	Circular		Mannings Coefficient	0.013	
Section Material	Concrete		Span	2.00	ft
Section Size	24 inch		Rise	2.00	ft
Number Sections	3				

Outlet Control Properties					
Outlet Control HW Elev	912.91	ft	Upstream Velocity Head	1.54	ft
Ke	0.50		Entrance Loss	0.77	ft

Inlet Control Properties					
Inlet Control HW Elev	913.30	ft	Flow Control	Submerged	
Inlet Type	End-Section Conforming to fill slope		Area Full	9.4	ft^2
K	0.00980		HDS 5 Chart	1	
M	2.00000		HDS 5 Scale	1	
C	0.03980		Equation Form	1	
Y	0.67000				

Culvert Designer/Analyzer Report
Pipe P12, Sta 30+65 Rt, BID Spillway

Component:Culvert-2

Culvert Summary			
Computed Headwater Elevation	913.30 ft	Discharge	31.96 cfs
Inlet Control HW Elev	913.30 ft	Tailwater Elevation	903.50 ft
Outlet Control HW Elev	912.28 ft	Control Type	Inlet Control
Headwater Depth/ Height	2.71		

Grades			
Upstream Invert	907.87 ft	Downstream Invert	904.50 ft
Length	112.00 ft	Constructed Slope	0.030089 ft/ft

Hydraulic Profile			
Profile	S2	Depth, Downstream	1.41 ft
Slope Type	Steep	Normal Depth	1.37 ft
Flow Regime	Supercritical	Critical Depth	1.89 ft
Velocity Downstream	13.52 ft/s	Critical Slope	0.017257 ft/ft

Section			
Section Shape	Circular	Mannings Coefficient	0.013
Section Material	Concrete	Span	2.00 ft
Section Size	24 inch	Rise	2.00 ft
Number Sections	1		

Outlet Control Properties			
Outlet Control HW Elev	912.28 ft	Upstream Velocity Head	1.68 ft
Ke	0.50	Entrance Loss	0.84 ft

Inlet Control Properties			
Inlet Control HW Elev	913.30 ft	Flow Control	Submerged
Inlet Type	Square edge w/headwall	Area Full	3.1 ft²
K	0.00980	HDS 5 Chart	1
M	2.00000	HDS 5 Scale	1
C	0.03980	Equation Form	1
Y	0.67000		

Culvert Designer/Analyzer Report
Pipe P12, Sta 30+65 Rt, BID Spillway

Component:Weir

Hydraulic Component(s): Roadway					
Discharge	240.41	cfs	Allowable HW Elevation	913.30	ft
Roadway Width	26.00	ft	Overtopping Coefficient	3.03	US
Low Point	912.00	ft	Headwater Elevation	913.30	ft
Discharge Coefficient (Cr)	3.03		Submergence Factor (Kt)	1.00	
Tailwater Elevation	903.50	ft			

Sta (ft)	Elev (ft)
140.00	913.35
160.00	912.00
200.00	912.00
220.00	913.35

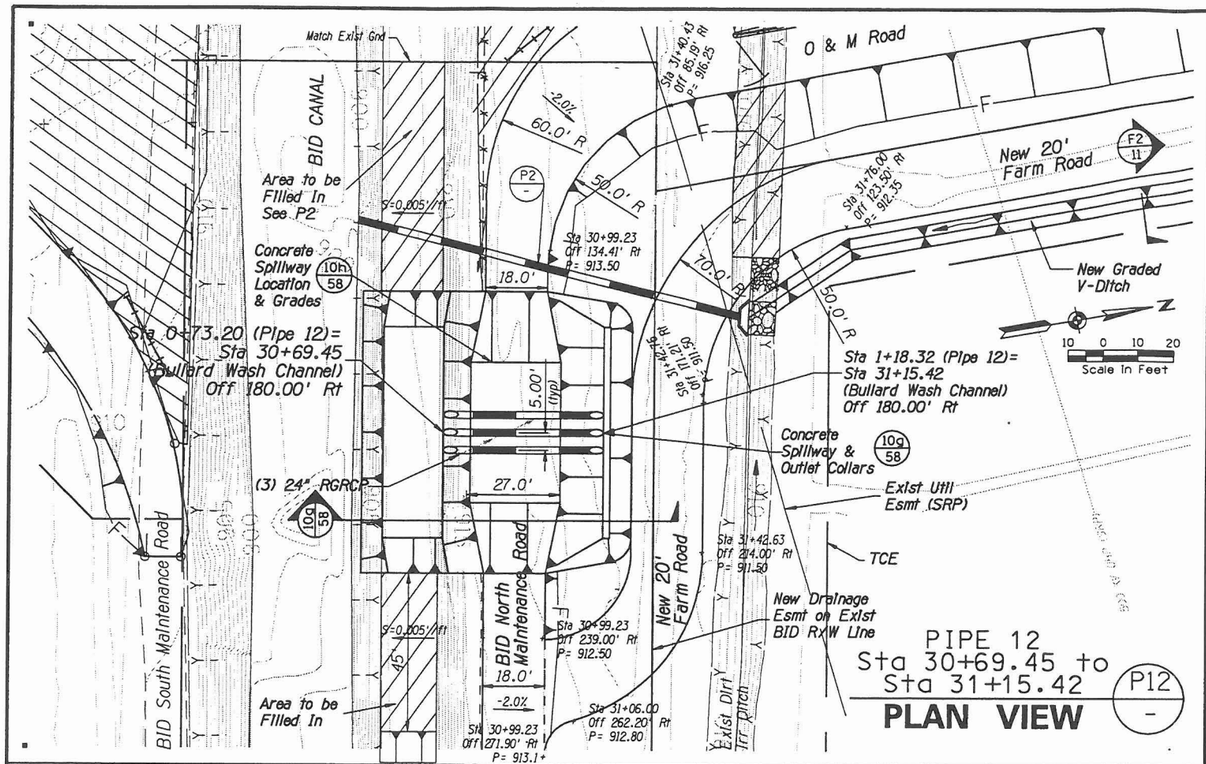

PIPE 12
Sta 30+69.45 to
Sta 31+15.42
P12
-

PLAN VIEW

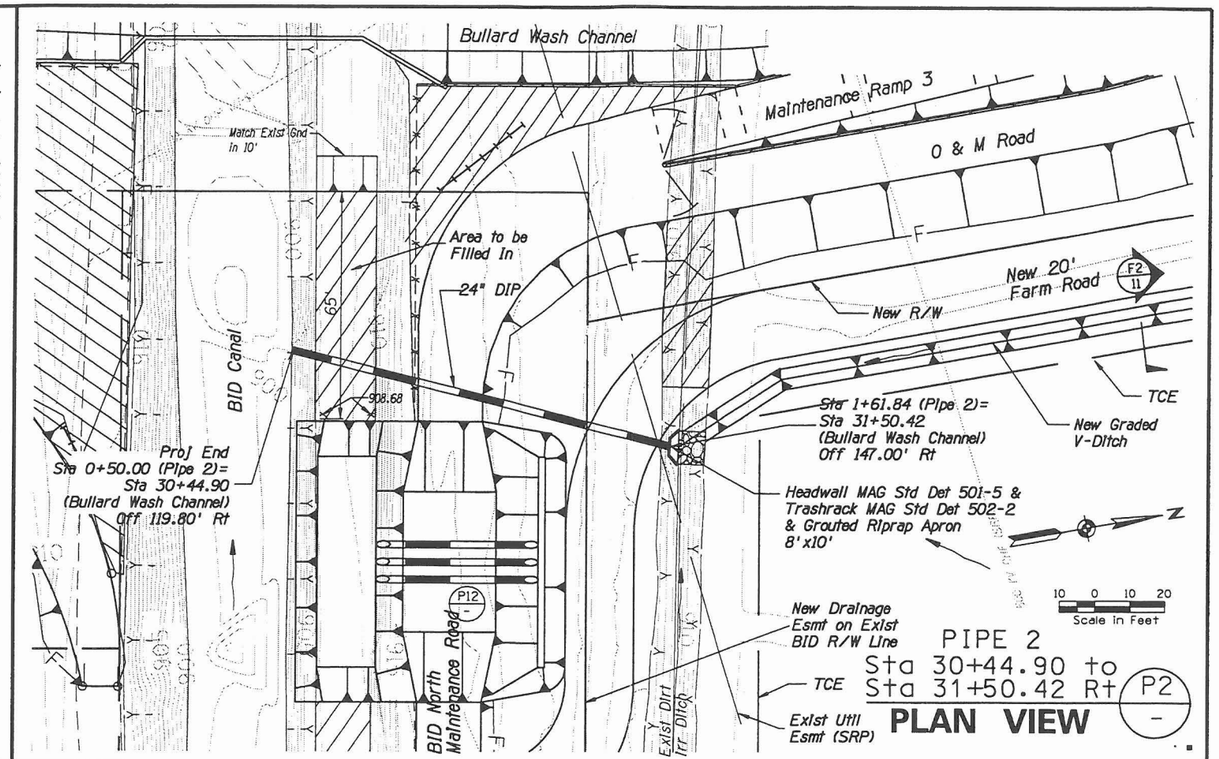

PIPE 2
Sta 30+44.90 to
Sta 31+50.42 Rt
P2
-

PLAN VIEW

Caution: Overhead Power Lines
Follow Electrical Safety Regulations

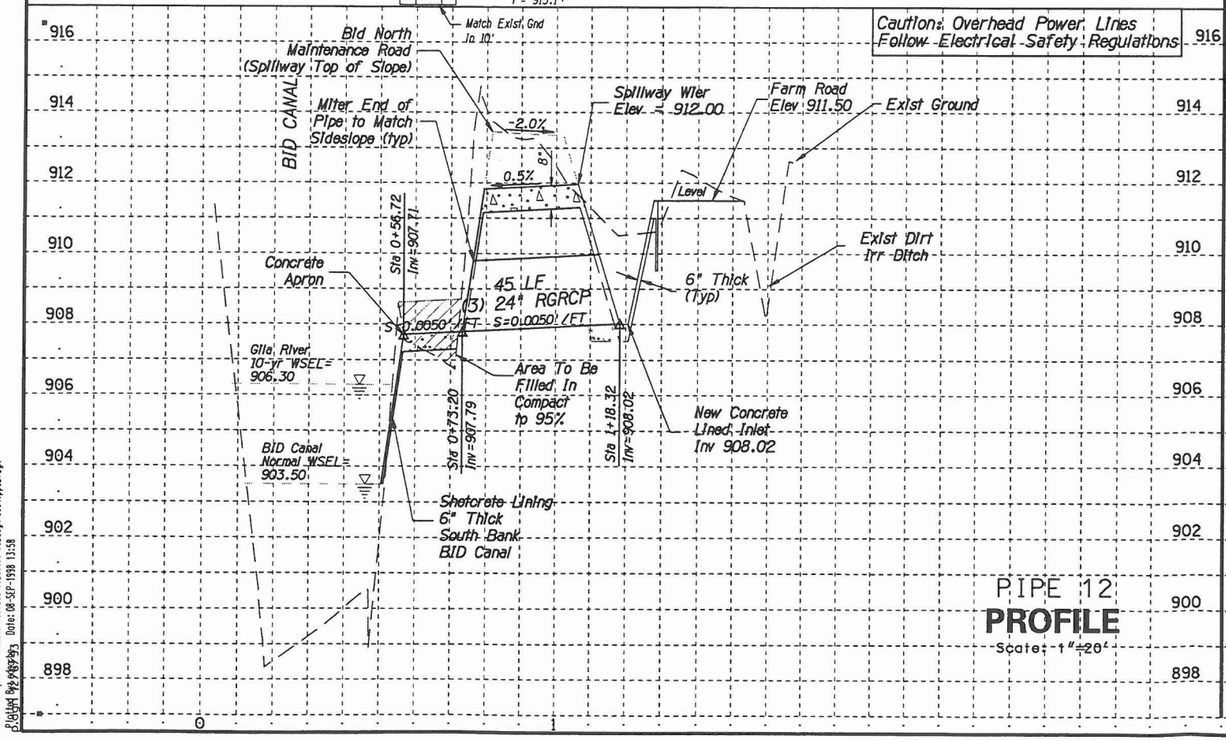

PIPE 12
PROFILE
Scale: 1"=20'

Caution: Overhead Power Lines
Follow Electrical Safety Regulations

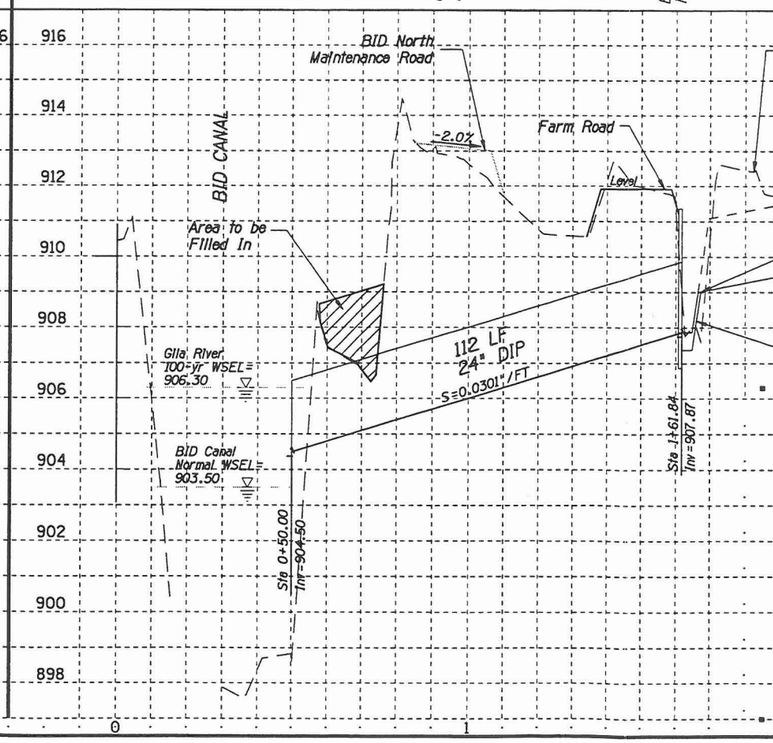

PIPE 2
PROFILE
Scale: 1"=20'

NO.	REVISION	BY	DATE
3			
2			
1			

FLOOD CONTROL DISTRICT OF MARICOPA COUNTY
ENGINEERING DIVISION

BULLARD WASH
CHANNEL IMPROVEMENTS PROJECT
PROJECT NO. 4700731

PRELIMINARY
NOT FOR
CONSTRUCTION

	BY	DATE
DESIGNED	D. STOUGH	8/25/98
DRAWN	B. EDGAR	9/08/98
CHECKED	B. OLBERT	9/08/98

Sverdrup
CORPORATION

PIPE PROFILE
PIPE 2 and PIPE 12

SHEET 39 OF 81

Filename: p:\01138\4700010\bcoa\bl102civil\bl102dgn\bl39\bl39p02.dgn
Plotted by: [illegible]
Date: 08-SEP-1998 13:58

Culvert Designer/Analyzer Report
Pipe P11, Sta 21+28 (E Trib)

Comments: A four barrel cluster of pipes constitutes Pipe P11, with the station representing the approximate centerline of the cluster.

The pipes are estimated to convey 90% of the 100-year storm flows for the Airport property to the north and east of the East Tributary channel inlet. (The remainder of runoff will flow directly into the E Trib channel inlet apron.

Pipe P10 has not been modeled along with the Pipe P11 barrels, thus the results are conservative.

The inlet is a modified drop inlet headwall (ADOT B-11.12). The outlet pipe ends are mitered to conform to the E Trib channel sideslope. The outlet inverts are set at or slightly above the channel invert. Therefore, the 100-year water surface in the channel controls the outlet headwater.

The overtopping wier is the O&M road on the north side of the E Trib channel.

Analysis Component			
Storm Event	Design	Discharge	425.00 cfs

Peak Discharge Method: User-Specified			
Design Discharge	425.00 cfs	Check Discharge	850.00 cfs

Tailwater properties: Trapezoidal Channel			
Slope	0.002000 ft/ft	Mannings Coefficient	0.019
Depth	3.48 ft	Left Side Slope	1 H : V
Right Side Slope	1 H : V	Bottom Width	15.00 ft

Tailwater conditions for Design Storm.			
Discharge	425.00 cfs	Bottom Elevation	923.77 ft
Depth	3.48 ft	Velocity	6.60 ft/s

Name	Description	Discharge	HW Elev	Velocity
Culvert-1	4-60 inch Circular	425.06 cfs	929.46 ft	7.34 ft/s
Weir	Broad Crested	0.00 cfs	929.46 ft	N/A
Total	----------	425.06 cfs	929.46 ft	N/A

Culvert Designer/Analyzer Report
Pipe P11, Sta 21+28 (E Trib)

Component:Culvert-1

Culvert Summary			
Computed Headwater Elevation	929.46 ft	Discharge	425.06 cfs
Inlet Control HW Elev	929.10 ft	Tailwater Elevation	927.25 ft
Outlet Control HW Elev	929.46 ft	Control Type	Outlet Control
Headwater Depth/ Height	0.95		

Grades			
Upstream Invert	924.69 ft	Downstream Invert	923.80 ft
Length	58.00 ft	Constructed Slope	0.015345 ft/ft

Hydraulic Profile			
Profile	CompositeS1S2	Depth, Downstream	3.45 ft
Slope Type	Steep	Normal Depth	1.98 ft
Flow Regime	N/A	Critical Depth	2.94 ft
Velocity Downstream	7.34 ft/s	Critical Slope	0.003931 ft/ft

Section			
Section Shape	Circular	Mannings Coefficient	0.013
Section Material	Concrete	Span	5.00 ft
Section Size	60 inch	Rise	5.00 ft
Number Sections	4		

Outlet Control Properties			
Outlet Control HW Elev	929.46 ft	Upstream Velocity Head	1.22 ft
Ke	0.50	Entrance Loss	0.61 ft

Inlet Control Properties			
Inlet Control HW Elev	929.10 ft	Flow Control	Unsubmerged
Inlet Type	Square edge w/headwall	Area Full	78.5 ft²
K	0.00980	HDS 5 Chart	1
M	2.00000	HDS 5 Scale	1
C	0.03980	Equation Form	1
Y	0.67000		

Culvert Designer/Analyzer Report
Pipe P11, Sta 21+28 (E Trib)

Component:Weir

Hydraulic Component(s): Broad Crested					
Discharge	0.00	cfs	Allowable HW Elevation	929.46	ft
Weir Coefficient	3.00	US	Length	100.00	ft
Crest Elevation	931.14	ft	Headwater Elevation	N/A	ft

Culvert Designer/Analyzer Report
Pipe P11, Sta 21+28 (E Trib)

Comments: A four barrel cluster of pipes constitutes Pipe P11, with the station representing the approximate centerline of the cluster.

The pipes are estimated to convey 90% of the 100-year storm flows for the Airport property to the north and east of the East Tributary channel inlet. (The remainder of runoff will flow directly into the E Trib channel inlet apron.

Pipe P10 has not been modeled along with the Pipe P11 barrels, thus the results are conservative.

The inlet is a modified drop inlet headwall (ADOT B-11.12). The outlet pipe ends are mitered to conform to the E Trib channel sideslope. The outlet inverts are set at or slightly above the channel invert. Therefore, the 100-year water surface in the channel controls the outlet headwater.

The overtopping wier is the O&M road on the north side of the E Trib channel.

Analysis Component			
Storm Event	Check	Discharge	850.00 cfs

Peak Discharge Method: User-Specified			
Design Discharge	425.00 cfs	Check Discharge	850.00 cfs

Tailwater properties: Trapezoidal Channel			
Slope	0.002000 ft/ft	Mannings Coefficient	0.019
Depth	5.19 ft	Left Side Slope	1 H : V
Right Side Slope	1 H : V	Bottom Width	15.00 ft

Tailwater conditions for Check Storm.			
Discharge	850.00 cfs	Bottom Elevation	923.77 ft
Depth	5.19 ft	Velocity	8.11 ft/s

Name	Description	Discharge	HW Elev	Velocity
Culvert-1	4-60 inch Circular	749.25 cfs	931.62 ft	14.27 ft/s
Weir	Broad Crested	100.91 cfs	931.62 ft	N/A
Total	----------	850.16 cfs	931.62 ft	N/A

Culvert Designer/Analyzer Report
Pipe P11, Sta 21+28 (E Trib)

Component:Culvert-1

Culvert Summary			
Computed Headwater Elevation	931.62 ft	Discharge	749.25 cfs
Inlet Control HW Elev	931.62 ft	Tailwater Elevation	928.96 ft
Outlet Control HW Elev	931.53 ft	Control Type	Inlet Control
Headwater Depth/ Height	1.39		

Grades			
Upstream Invert	924.69 ft	Downstream Invert	923.80 ft
Length	58.00 ft	Constructed Slope	0.015345 ft/ft

Hydraulic Profile			
Profile	CompositePressureS1	Depth, Downstream	3.17 ft
Slope Type	N/A	Normal Depth	2.74 ft
Flow Regime	Subcritical	Critical Depth	3.92 ft
Velocity Downstream	14.27 ft/s	Critical Slope	0.005651 ft/ft

Section			
Section Shape	Circular	Mannings Coefficient	0.013
Section Material	Concrete	Span	5.00 ft
Section Size	60 inch	Rise	5.00 ft
Number Sections	4		

Outlet Control Properties			
Outlet Control HW Elev	931.53 ft	Upstream Velocity Head	2.00 ft
Ke	0.50	Entrance Loss	0.87 ft

Inlet Control Properties			
Inlet Control HW Elev	931.62 ft	Flow Control	Submerged
Inlet Type	Square edge w/headwall	Area Full	78.5 ft^2
K	0.00980	HDS 5 Chart	1
M	2.00000	HDS 5 Scale	1
C	0.03980	Equation Form	1
Y	0.67000		

Culvert Designer/Analyzer Report
Pipe P11, Sta 21+28 (E Trib)

Component:Weir

Hydraulic Component(s): Broad Crested					
Discharge	100.91	cfs	Allowable HW Elevation	931.62	ft
Weir Coefficient	3.00	US	Length	100.00	ft
Crest Elevation	931.14	ft	Headwater Elevation	931.62	ft

PIPE 11
Sta 21+12.24 LT to
21+40.67 LT (First of 4)
SKEW 30° Rt

PLAN VIEW

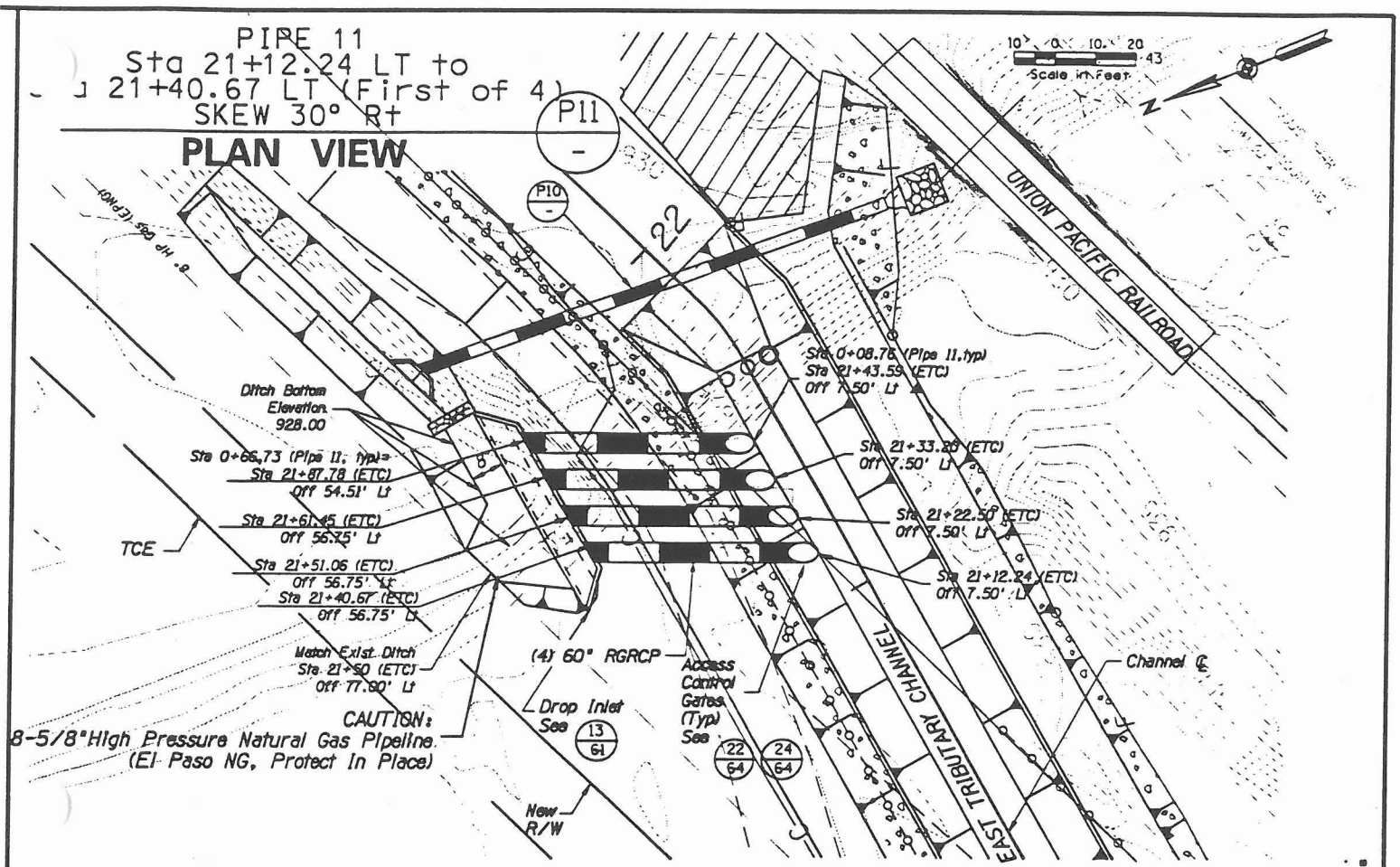

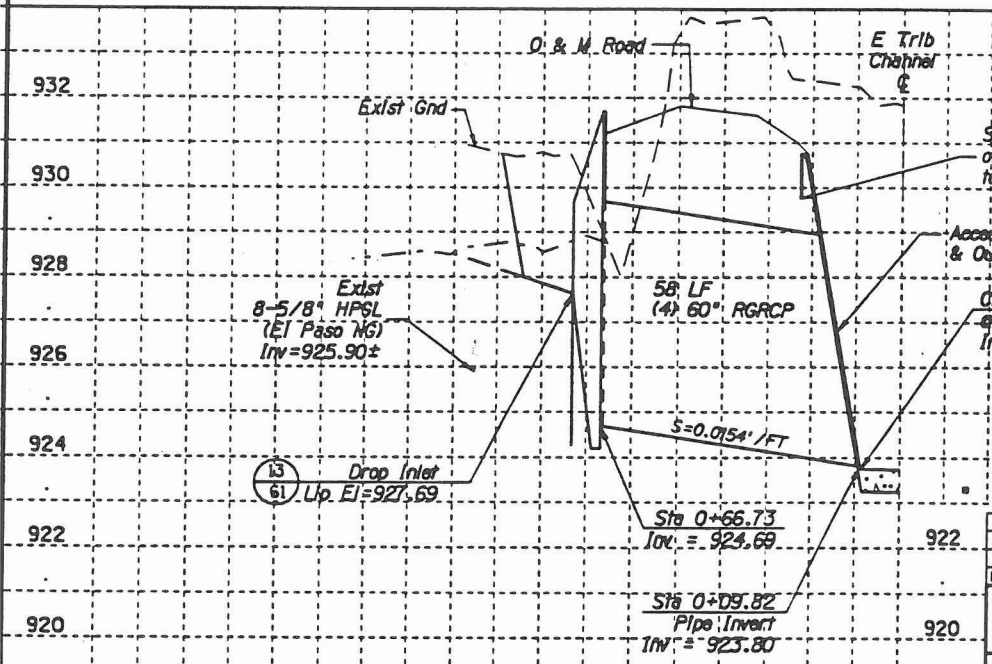

CAUTION:
8-5/8" High Pressure Natural Gas Pipeline
(El Paso NG, Protect In Place)

PIPE 11
PROFILE
Scale: 1"=20'

NO.	REVISION	BY	DATE
3			
2			
1			

FLOOD CONTROL DISTRICT OF MARICOPA COUNTY
ENGINEERING DIVISION

BULLARD WASH
CHANNEL IMPROVEMENTS PROJECT
PROJECT NO. 4700731

PRELIMINARY NOT FOR CONSTRUCTION

	BY	DATE
DESIGNED	D. STOUGH	8/25/98
DRAWN	B. EDGAR	9/08/98
CHECKED	B. OLBERT	9/08/98

Sverdrup CORPORATION

PIPE PROFILE
PIPE 10 and 11

SHEET 43 OF 81

Trapezoidal Channel Analysis & Design
Open Channel - Uniform flow

Worksheet Name: ETRIB 0+40 - 8+60

Comment: EAST TRIB CHANNEL STA 8+60 - 10+00

Solve For Depth

Given Input Data:

Bottom Width.....	15.00 ft
Left Side Slope..	1.50:1 (H:V)
Right Side Slope.	1.50:1 (H:V)
Manning's n.....	0.019
Channel Slope....	0.0020 ft/ft
Discharge.....	850.00 cfs

Computed Results:

Depth.....	4.88 ft
Velocity.....	7.81 fps
Flow Area.....	108.78 sf
Flow Top Width...	29.63 ft
Wetted Perimeter.	32.58 ft
Critical Depth...	4.03 ft
Critical Slope...	0.0040 ft/ft
Froude Number....	0.72 (flow is Subcritical)

Trapezoidal Channel Analysis & Design
Open Channel - Uniform flow

Worksheet Name: ETRIB 8+60-1000

Comment: EAST TRIB CHANNEL STA 8+60 - 10+00

Solve For Depth

Given Input Data:

Bottom Width.....	15.00 ft
Left Side Slope..	1.50:1 (H:V)
Right Side Slope.	1.50:1 (H:V)
Manning's n.....	0.019
Channel Slope....	0.0025 ft/ft
Discharge.....	850.00 cfs

Computed Results:

Depth.....	4.59 ft
Velocity.....	8.46 fps
Flow Area.....	100.44 sf
Flow Top Width...	28.77 ft
Wetted Perimeter.	31.55 ft
Critical Depth...	4.03 ft
Critical Slope...	0.0040 ft/ft
Froude Number....	0.80 (flow is Subcritical)

Open Channel Flow Module, Version 3.43 (c) 1991
Haestad Methods, Inc. * 37 Brookside Rd * Waterbury, Ct 06708

Trapezoidal Channel Analysis & Design
Open Channel - Uniform flow

Worksheet Name: BWC LO FLOW

Comment: Low Flow CLD, Bullard Wash Chl

Solve For Discharge

Given Input Data:

Bottom Width.....	4.00 ft
Left Side Slope..	2.00:1 (H:V)
Right Side Slope.	2.00:1 (H:V)
Manning's n.....	0.015
Channel Slope....	0.0012 ft/ft
Depth.....	1.50 ft

Computed Results:

Discharge.....	35.56 cfs
Velocity.....	3.39 fps
Flow Area.....	10.50 sf
Flow Top Width...	10.00 ft
Wetted Perimeter.	10.71 ft
Critical Depth...	1.11 ft
Critical Slope...	0.0038 ft/ft
Froude Number....	0.58 (flow is Subcritical)

Open Channel Flow Module, Version 3.43 (c) 1991
Haestad Methods, Inc. * 37 Brookside Rd * Waterbury, Ct 06708

SVERDRUP

JOB 013884 Bullard Wash

SHEET NO. 1 OF 7

DATE 4/27/98

COMPUTATIONS FOR Cost Comparison Toe Down for Gabion Baskets

BY BDO CHKD RM

Toe Down of Stepped Gabion Section

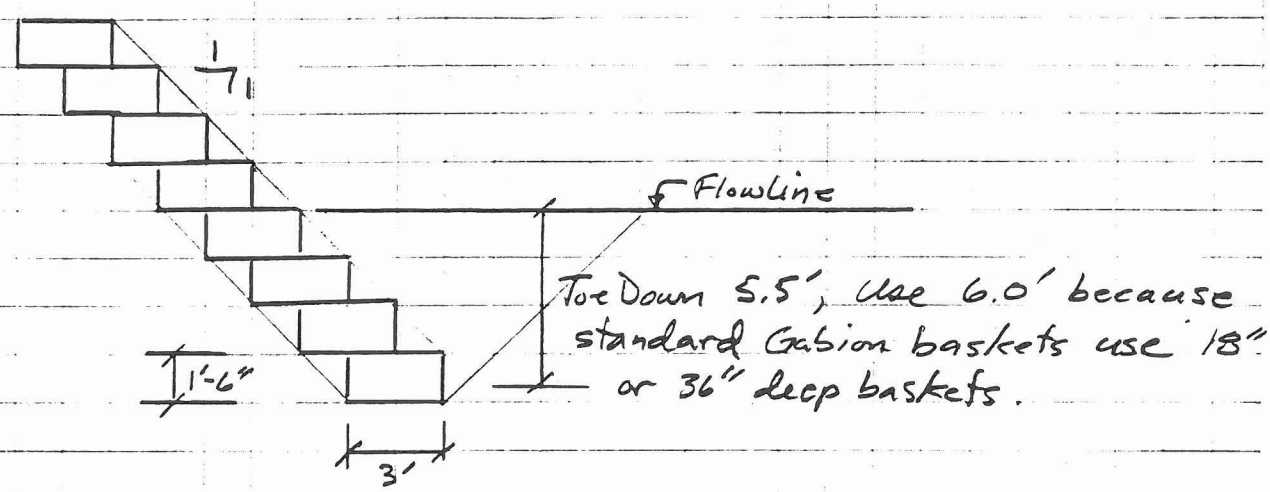

Below flowline elevation

Gabion Basket Volume required is $4 \times 1.5' \times 3.0' = 18$ CuFt/Ft

Excavation Volume required is $(6 \times 6) + (3 \times 6) = 54$ CuFt/Ft

Cost Estimate

Gabion Baskets: $18/27 \times \$30/\text{CYd} = \$53.33/\text{LF}$

Excavation : $54/27 \times \$2/\text{CYd} = \$4.00/\text{LF}$

$\$57.33/\text{LF}$

SVERDRUP

JOB 013884 Bullard Wash

SHEET NO. 2 OF 7

DATE 4/27/98

COMPUTATIONS FOR Cost Comparison

BY BDO CHKD

Toe Down for Gabion Baskets

Toe Down of stepped Gabion Section using Gabion Mattress (Reno).

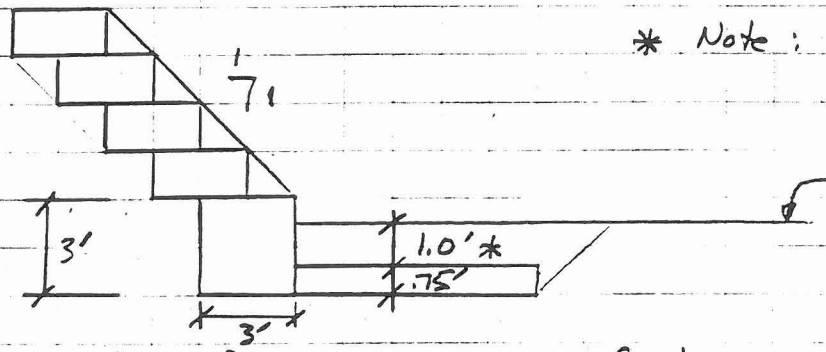

* Note: Depth of Cover over gabion mattress varies from 1.0' to 0.25' for analysis will use 1.0' (worst case)

Flowline

Per Maccaferri recommendations:
Multiply toedown requirements by 1.5 for width of gabion mattress needed.

Toe Down Requirement	5.5'
Gabion Basket depth	− 1.75
Net Toe Down Depth	3.75 x 1.5 = 5.63'

Use 6.0' standard width

Below flowline elevation

Gabion Basket Volume Req'd	1.75 x 3.0 =	5.25 CuFt/Ft
Gabion Mattress Volume Req'd	0.75 x 6.0 =	4.5 CuFt/Ft
		9.75 CuFt/Ft

Excavation Volume Req'd is 1.75 x (3+6+1.75) = 18.8 CuFt/Ft

Cost Estimate

Gabions: 9.75/27 x $80/CuYd = $ 28.89/LF

Excavation 18.8/27 x $2/CuYd = $ 1.39/LF

30.28/LF

SVERDRUP

JOB 013884 Bullard Wash

SHEET NO. 3 OF 7

DATE 4/27/98

COMPUTATIONS FOR Cost Comparison

BY BDO CHKD [illegible]

Toe Down for Gabion Baskets

Net Savings per LF using the gabion mattress in lieu of the gabion baskets

Cost per LF for Baskets $57.33
Cost per LF for Mattress $30.28
$27.05 / LF on one side

For both sides 2 x $27.05 / LF = $54.10 / LF

Net Savings for project

Gabion Areas
Sta 28+50 to 25+00 - 350 ft
73+00 to 33+30 - 3,970 ft
4,320 ft

4,320 LF x $54.10 / LF = $233,712

∴ Recommend using mattress for toe down for Gabion Basket sections (ie. Sta 73+00 to 25+00)

SVERDRUP

JOB 013884 Bullard Wash

SHEET NO. 4 OF 7

DATE 4/27/98

COMPUTATIONS FOR Cost Comparison

BY BDO CHKD RWM

Toe Down for Gabion Mattress Section

Toe Down of Gabion Mattress Section

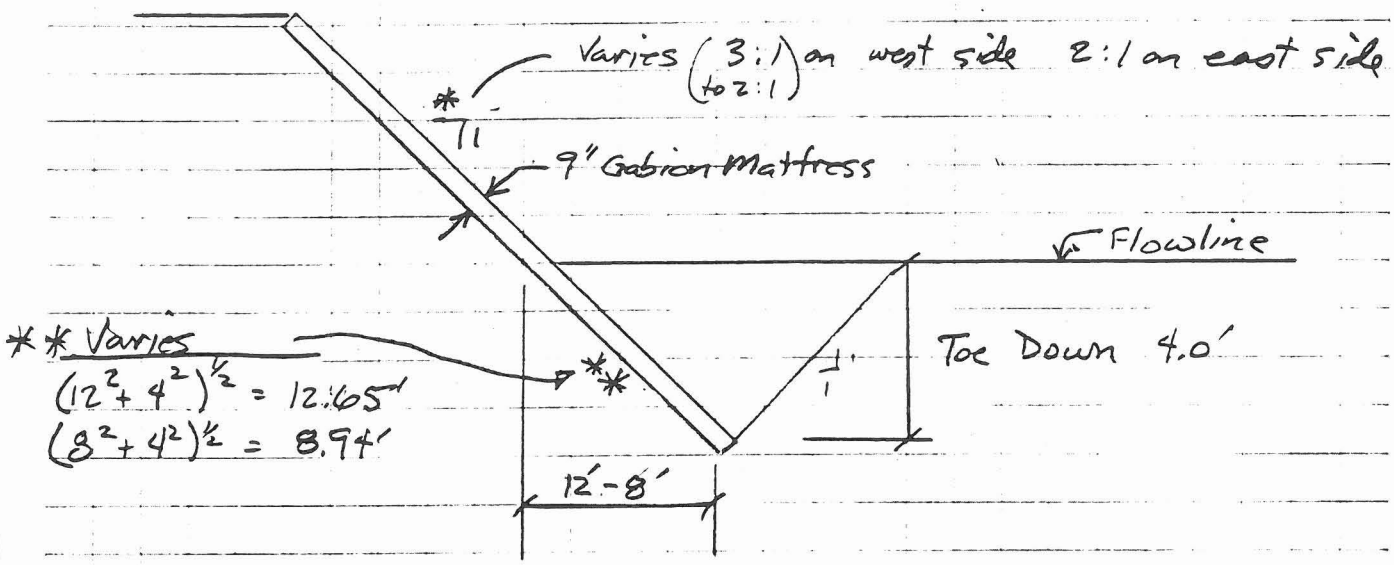

Below flowline elevation

Gabion Mattress Volume Req'd is $0.75' \times 12.65' \times 1 = 9.49$ CuFt/Ft
$0.75 \times 8.94 \times 1 = 6.71$ CuFt/Ft.

Excavation Volume Req'd is $\frac{1}{2}(12 \times 4) + \frac{1}{2}(4 \times 4) = 32$ CF/Ft
$\frac{1}{2}(8 \times 4) + \frac{1}{2}(4 \times 4) = 24$ CF/Ft

Cost Estimate

West Side Gabions = $9.49/27 \times \$80 = \$28.12$/LF
Exc. = $32/27 \times \$2 = \$2.37$/LF
$\$30.49$/LF

East Side Gabions = $6.71/27 \times \$80 = \$19.88$/LF
Exc = $24/27 \times \$2 = 1.78$/LF
$\$21.66$/LF

SVERDRUP

JOB 013884 Bullard Wash

SHEET NO. 5 OF 7

DATE 4/27/98

COMPUTATIONS FOR Cost Comparison

BY BDO CHKD RMM

Toe Down for Gabion Mattress Section

Toe Down of Gabion Mattress Section using horizontally placed gabion mattress.

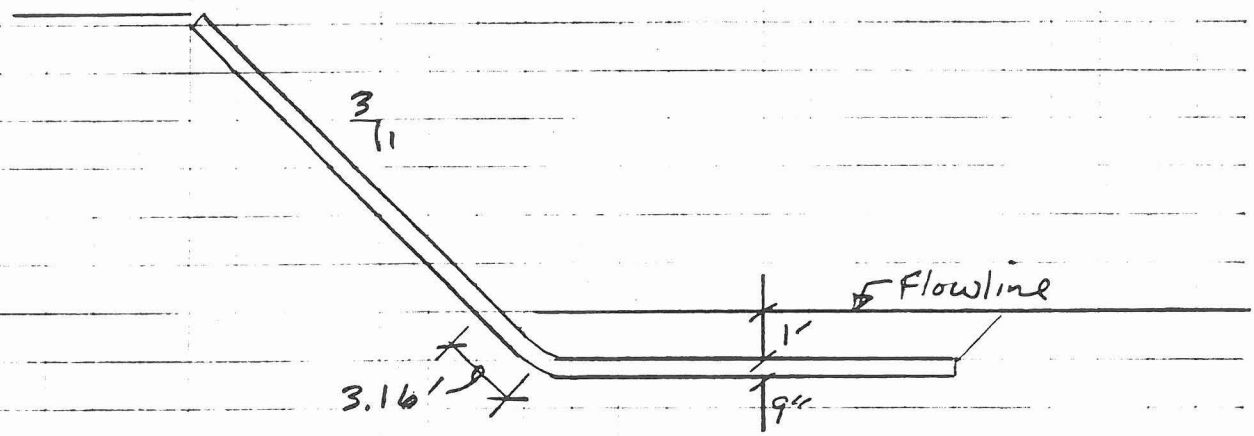

Per Maccaferri Recommendations
Multiply toedown depth by 1.5 for horiz. width

Toe Down Requirement	4.0'
Cover over Mattress	-1.0'
Net Toe Down Depth	3.0' x 1.5 = 4.5'

Below the flowline elevation

Mattress Volume Req'd $0.75 \times (3.16 + 4.5) = 5.75$ CuFt/Ft

Excavation Volume Req'd $(1.75 \times 4.5) + (3.16 \times 1.75) = 13.41$ CuFt/Ft

Cost Estimate

Mattress : $5.75/27 \times \$30/\text{CuFt} = \$17.04/\text{LF}$

Excavation : $13.41/27 \times \$2/\text{CuFt} = \$0.99/\text{LF}$

$\$18.03/\text{LF}$

SVERDRUP

JOB 013884 Bullard Wash

SHEET NO. 6 OF 7

DATE 4/27/98

COMPUTATIONS FOR Cost Comparison

BY BDO CHKD RWM

Toe Down for Gabion Mattress

Net Savings per LF using the gabion mattress set horizontally in lieu of 3:1 slope.

Cost per LF for 3:1 slope	$30.49/LF
Cost per LF for horizontal placement	$18.03/LF
	$12.46/LF

Note: the east side of channel has conc. lined channel for tailwater flows. Placement of conc. on top of gabion mat would be undesirable. Therefore, consider horiz. section for the west side only. Net savings for the upper reach is:

Sta 119+43
81+20
38+23' x $12.46/LF = $47,635

∴ Recommend using horizontal mattress for toe down for mattress section on west side only.

SVERDRUP

JOB 012884 Ballard Wash

COMPUTATIONS FOR Scour Apron Length

SHEET NO. 7 OF 7

DATE 8/20/98

BY BDO CHKD Rum

For Reach 33+30± to 72+87 (BID Canal to MC85)

Toe Down Depth = 4.8' (See Page 7 in Wood/Patel Report Sediment Transport & Scour Analysis, Dated 4/10/98, w/ S.F. = 1.3)

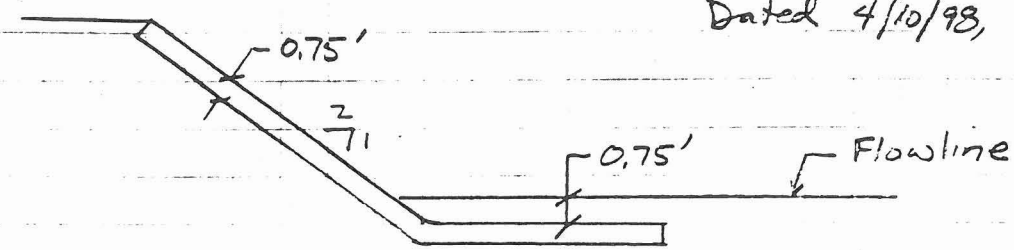

Per Maccaferri Recommendations
Multiply toedown depth by 1.5 for horizontal width

Toedown Requirement 4.8'
Cover over Mattress -0.75'
Net Toe Down Depth 4.05 x 1.5 = 6.08' (Use 6' min)

For Reach 81+01 to 119+43

Toe Down Depth = 3.4' (w/ S.F. = 1.3)

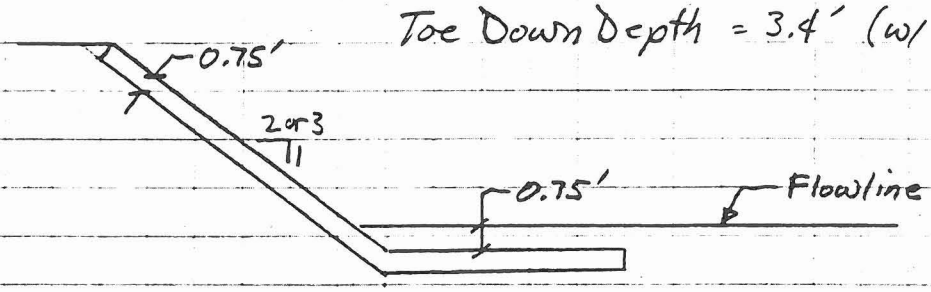

Toe Down Requirement 3.4'
Cover over Mattress -0.75'
Net Toe Down Depth 2.65 x 1.5 = 3.98' (Use 6.0' Min)

SVERDRUP

JOB BULLARD WASH CHANNEL

COMPUTATIONS FOR GABION BASKET DESIGN

SHEET NO. 1 OF

DATE 4-27-98

BY DES CHKD SDO 4/29/98

DESIGN PROCEDURE FOR GABION BASKETS

1) CALCULATE SHEAR STRESS

WHERE $\tau_b = \gamma_w * y_{100} * i$ (1) $\tau_b \equiv$ shear stress exerted on gabion structure

$\gamma_w = 62.4\ lb/ft^3$ $\gamma_w \equiv$ unit weight of water (lb/ft^3)

$y_{100} = 7.20\ ft$ (100 YR HEC RAS x SEC 24+00 worst case) $y_{100} \equiv$ 100-year water depth (ft)

$i = 0.0020\ ft/ft$ $i \equiv$ streambed gradient (ft/ft)

$\therefore \tau_b = 62.4 \frac{lb}{ft^3} * 7.20\ ft * 0.0020\ ft/ft$

$\tau_b = 0.899\ lb/ft^2$

SET SHEAR STRESS EQUAL TO CRITICAL SHEAR STRESS

$\tau_b = \tau_c = C(\gamma_s - \gamma_w) d_{50}$ (2) $\tau_c \equiv$ critical shear stress (lb/ft)

$C = 0.10$ (for gabions) $C \equiv$ Shields Coefficient

$\gamma_s = 170\ lb/ft^3$ ($SG \geq 2.6$) $\gamma_s \equiv$ unit weight, stones (lb/ft^3)

SOLVE FOR d_{50} $d_m \equiv$ median size of riprap stones (feet)

$$d_{50} = \frac{\tau_b}{C(\gamma_s - \gamma_w)} = \frac{0.899}{0.1(170 - 62.4)}$$

$d_{50} = 0.084\ ft \simeq 1.0$ inch however minimum mesh size: 2.5" open (use inches to describe rock filler)

GABION BASKETS $d_{min} = 4$ inches w/ $D_{50} = 6.0$ inches, $D_{max} = 8$ inches

RENO MATTRESS $d_{min} = 3$ inches w/ $D_{50} = 4.5$ inches, $D_{max} = 6"$

SVERDRUP

JOB BULLARD WASH CHANNEL

COMPUTATIONS FOR GABION BASKET DESIGN

SHEET NO. 2 OF

DATE 4-27-98

BY DES CHKD BDO 4/29/98

GABION BASKET SIZE IS DICTATED BY CHANNEL CROSS-SECTION REQUIREMENTS (SS = 1:1), 50% OVERLAP

∴ USE 1.5' Thick × 3.0' wide × 12.0' Long on above ground courses of stepped gabions

RENO MATTRESS (SLOPE BLANKET GABION) SIZE IS DICTATED BY 1.5 TIMES THE MAX ROCK SIZE

∴ $T_{RENO\ MAT.} = 1.5 * 6\text{ inches} = 9\text{ inches}$ (standard thickness)

NOTE: Although rock size was calculated to be 1.0 inch, the thicker gabion mattress will provide additional erosion protection for the channel banks.

VERIFY THE RANGE OF ROCK SIZES FOR GABIONS
SELECT ΔZ SUCH THAT:

$$\frac{\Delta Z}{d_{50}} \leq 2\left(\frac{t}{d_{50}} - 1\right) \quad (3)$$

WHERE ΔZ = stone diameter range
t = mattress thickness
d_{50} = median stone diameter

FOR GABION BASKETS ($d_{50} = 6''$)
Manufacturers guidelines (Table 4) show a range of 4"-8" for 18" gabions

check $\frac{(0.66' - 0.33')}{0.5'} \leq 2\left(\frac{1.5'}{0.5'} - 1\right)$

$0.66 \leq 4.0$ OK $\rightarrow d_{min} = 4''$ $d_{max} = 8''$

Similarly for 9" gabion mattress, $d_{50} = 4.5'' \rightarrow$ range is 3"-6"

check $\frac{0.5' - 0.25'}{0.38'} \leq 2\left(\frac{0.75}{0.38'} - 1\right)$

$0.66 \leq 1.95$ OK $\rightarrow d_{min} = 3''$, $d_{max} = 6''$

SVERDRUP

JOB BULLARD WASH CHANNEL

COMPUTATIONS FOR GABION BASKET DESIGN

SHEET NO. 3 OF

DATE 4-27-98

BY DES CHKD SDO 4/29/98

DETERMINE ROUGHNESS COEFFICIENT

$$n_b = \frac{D_{90}^{1/6}}{26}$$

$D_{90} \equiv$ rock diam in meters

FOR GABION BASKETS $D_{90} = 6$ inches $= 0.152$ meters

$$n_b = \frac{(0.152)^{1/6}}{26} = 0.028$$

FOR RENO MATTRESSES $D_{90} = 5$ inches $= 0.127$ meters

$$n_b = \frac{(0.127)^{1/6}}{26} = 0.027$$

FILTER FABRIC REQUIREMENT

$$V_b = \frac{1.486}{n_c} * \left(\frac{d_{50}}{2}\right)^{2/3} s^{1/2}$$

$n_c = 0.020 \equiv$ channel bed roughness

$s \equiv$ steepest slope of streambed

$$= \frac{1.486}{0.020} * \left(\frac{0.42}{2}\right)^{2/3} * (0.0020)^{1/2}$$

$V_b = 1.17$ feet/second

FOR NON-COHESIVE SOILS, CALCULATE ALLOWABLE VELOCITY

$$V_e = 1.67 * d^{1/2}$$

where $d \equiv$ soil particle size (mm) (use 0.06mm for Bullard Wash per sieve analysis)

$$= 1.67 * (0.06\,mm)^{1/2}$$

$V_e = 0.40$ feet/second

$V_b > V_e \rightarrow$ FILTER FABRIC REQUIRED (per manufacturer's guidelines)

$$\tau_c = C^*(\gamma_s - \gamma_w)d_m \quad (39)$$

2

where, C^* is the Shields coefficient (equal to 0.10);

γ_s = unit weight of the ~~soil~~ rock (lb/ft^3)

γ_w = unit weight of water (lb/ft^3)

d_m = median size of the filling rocks (feet)

set $\tau_b = \tau_c \rightarrow$ solve for $d_{50} = \frac{\gamma_w \cdot y \cdot i}{0.10(\gamma_s - \gamma_w)} = \frac{y \cdot i}{0.07}$

The check is satisfied when the hydraulic shear stress, τ_b is less than the critical shear stress, τ_c. The Shields coefficient for gabions is approximately 0.10, for rip rap it is reduced to 0.047. This means that for any given hydraulic condition the average size of the rocks needed in gabion mattresses is roughly one third of that required for rip rap (*Figure 59*).

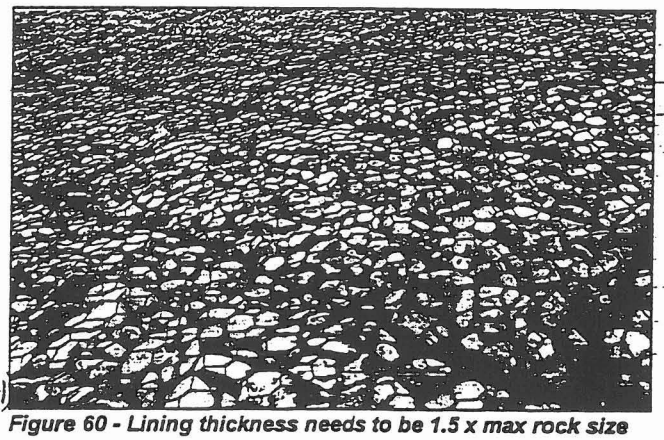

Figure 60 - Lining thickness needs to be 1.5 x max rock size

Determining The Rock Size And Lining Thickness

To match the critical shear stress to the required hydraulic shear stress, the appropriate median rock size needs to be determined. Once the required rock size has been determined, the thickness of the lining can then be evaluated. Maccaferri recommends that the thickness of the lining be 1.5 times larger than the maximum size of the rock used in filling the gabion mattress (assuming a variable range of rock size is used). For instance, if a 4-8 inch rock size is used, the minimum thickness of the basket should not be less than 12 inches.

It is also important to use a rock size that is not less than the nominal size of the gabion mesh openings. For gabions, it is recommended to use a minimum rock size of not less than four inches and for Reno mattresses a minimum rock size not less than three inches.

Critical Velocity vs. Limit Velocity

When further increases in shear stress go beyond the critical shear stress (or when the water velocity becomes supercritical), rocks within the gabion mattress begin to start moving towards the downstream end of the basket. At this point the gabion basket begins to deform until a new equilibrium is reached (*Figure 61*). This deformation however, does not significantly affect the mattresses from providing a similar degree of protection to the bedding material, as long as the deformation does not reduce the lining thickness

3 T USE L.A. abrasion >10. S.G. ≥ 2.6

Type	Thickness of Lining		Filling Stones				Critical Velocity†		Limit Velocity†	
	(mm)	(in)	Stone Size		d_{50}		(m/s)	(ft/sec)	(m/s)	(ft/sec)
			(mm)	(in)	(mm)	(in)				
Reno Mattresses	150	6	70 - 100	3 - 4	85	3.5	3.5	11.5	4.2	13.8
			70 - 150	3 - 6	110	4.5	4.2	13.8	4.5	14.8
	230	9	70 - 100	3 - 4	85	3.5	3.6	11.8	5.5	18.0
			70 - 150	3 - 6	120	4.5	4.5	14.8	6.1	20.0
Gabions or Gabion Mats	300	12	70 - 120	3 - 5	100	4	4.2	13.8	5.5	18.0
			100 - 150	4 - 6	125	5	5.0	16.4	6.4	21.0
Gabions	500	18	100 - 200	4 - 8	150	6	5.8	19.0	7.6	24.9
			120 - 250	5 - 10	190	7.5	6.4	21.0	8.0	26.2

†The values of velocity reported were obtained experimentally for Froude numbers ≤ 1; values > have to be intended as purely indicative and approximated.

Table 4 - The required lining thicknesses and median stone size required for various critical water velocities

$D_{max} \approx 2/3$ HEAD OF BIGGER D_{50} → FOR HIGHER FLOWS

1) find T
2) find D_{50} and D_{max}
3) find thickness T.

Standard Maintenance Procedures
Prepared for the Bullard Wash Channel Project

SUBJECT: Maintenance of Channels, Linings and Structures

PURPOSE: To insure the integrity of the project is preserved and will function as designed.

OWNERSHIP: The City of Goodyear, Arizona shall be responsible for the ownership, operation and maintenance of the completed project. The Interim Public Works Director, Andrew Cooper, will be the responsible person at the City.

LOCATION: Main Bullard Wash Channel, East Tributary Channel, Spillway at the BID Canal east of the Bullard Wash Channel, and the O&M Road and Berm at Lower Buckeye Road

PROCEDURE A: Channel and Inlet Pipes

1. **Vegetation** - Desert brush and grasses can be allowed to grow within the channel bottom. Desert brush must not exceed 2-3 feet in height and vegetation type must be able to break away during storm event (i.e. brittlebush) or be able to bend over and flatten (i.e. Desert Marigold). Vegetation types that must be removed include woody stemmed plants (i.e. Desert Broom, Salt Cedar, etc.). If grasses are established, maintain the height to a maximum of six inches.

2. **Sediment Deposits** – Remove deposits of loose material to obtain designed grades and cross sections. Loose deposited materials shall not be used within the channel unless tested to meet the earthfill criteria in the construction specifications. At a minimum, sediment deposits shall be removed annually, unless quarterly inspections identify a need for more frequent removal.

3. **Erosion** – Make repairs to eroded areas by replacing lost material with compacted earth, or other suitable erosion resistant material, in accordance with the original construction specifications.

4. **Debris/Trash** – During quarterly inspections and after storm events, all trash and organic debris is to be removed from the area as soon as possible. Inspect all drainage pipes that discharge into the channel. Remove all trash and organic debris from pipe inlets as soon as possible.

5. **Gabion Lining** – During quarterly inspections and after storm events, all gabion baskets or mattresses that have been damaged shall be repaired using the manufacturer procedures as soon as possible. The Polyvinyl Chloride (PVC)

coating on the gabion wire also requires inspection. Where the PVC coating has been damaged, the damaged coating shall be removed and the PVC coating reapplied per manufacturer's procedures. Yearly inspections will include excavation of buried gabions and a check of steel anchor stakes to inspect for corrosion. At a minimum, excavation locations will include one site south of the Buckeye Irrigation District (BID) South Maintenance Road, three sites between the BID Canal and the MC 85 Bridge, and three additional sites between the drop structure located north of the Union Pacific Railroad Bridge and Lower Buckeye Road. Each yearly inspection shall also stagger the excavation locations so that a comprehensive inspection is performed year-to-year.

6. **Grouted Riprap Lining** – During quarterly inspections and after storm events, riprap lining that has been damaged shall be repaired. Repairs shall include replacement of riprap material and grout, filter blankets, and the seepage/back drainage system. Inspections shall include a check of all weep holes and removal of any blockages.

7. **Concrete Lining** – During quarterly inspections and after storm events, the concrete lining shall be checked for damage and cracking. Hairline cracks are typically caused by shrinkage of the concrete, which is a normal condition. Cracks that are wide enough for a quarter to be inserted into the crack, should be repaired as soon as possible. Inspection shall include a check of the weep holes.

8. **BID Overchute / BID South Maintenance Road Box Culvert** – During quarterly inspections and after storm events, the concrete surfaces shall be checked for damage and cracking. Inspect the condition of all joints. Items requiring repair should be scheduled as soon as possible. Maintenance vehicle weights should be limited to that which is legal for operation on a highway. The box culvert has a height limitation of 10 feet.

9. **Levee** – Top of berm elevations along the earthen levee, located between the BID Canal and 450 feet south of Broadway Road, shall be surveyed annually for the first five (5) years of operation to check for settlement and/or subsidence, and then bi-annually in the following years. Areas requiring repair shall be scheduled as soon as possible.

PROCEDURE B: Rodent Control

1. Gophers can damage embankments, berms and levees by burrowing deep holes with more than one outlet. Fresh mounds of soil can identify new gopher outlets.

2. Ground squirrels can also damage structures even with insignificant numbers and must be treated.

3. A licensed pesticide applicator shall apply the appropriate pesticide and the Material Safety Data Sheets shall be with the licensed applicator.

4. After rodent activity has been controlled, holes are to be filled and compacted.

PROCEDURE C: General Vandalism and Graffiti

1. Graffiti needs to be removed as soon as possible to discourage repeated applications.

2. General vandalism to include cut or damaged fencing, damaged signs, illegal ingress, dumped trash, etc. are to be removed/repaired as soon as noted for the safety of the general public and to control other forms of vandalism from occurring.

3. All vandalized signs are to be repaired or replaced to insure public safety and awareness.

INSPECTIONS:

1. Quarterly Operational Inspections:
   a. List any discrepancies.
   b. Review for action required.
   c. Schedule necessary repairs.

2. Annual Maintenance Inspection:
   a. List all needed maintenance and repairs.
   b. Assign work orders for the noted repairs.

3 Formal Annual Inspection:
   a. Inspect project to insure all maintenance and repairs are completed satisfactorily.
   b. Complete annual inspection reports for file.

4. Major Storm Event:
   a. Inspect project during or after every major storm event.
   b. List any problems.
   c. Record flow depths.
   d. Schedule necessary repairs.

5. Citizen Complaints/Inquiries:
   a. Investigate area of complaint.
   b. Respond to citizen within 48 hours.
   c. Take action if in-house/refer to proper agency, if not.

MEMORANDUM

Sverdrup Civil, Inc.

Date: August 5, 1998

TO: **Larry Martinez and Chris Stevens**
City of Goodyear
119 North Litchfield Road
Goodyear, Arizona 85338

Don Rerick
Flood Control District of Maricopa County
2801 West Durango Street
Phoenix, Arizona 85009

FROM: **Bradford D. Olbert, P.E.**
Project Manager
Sverdrup Civil, Inc.

SUBJECT: **Contract FCD 95-39**
Flood Control District of Maricopa County
Bullard Wash Channel Improvements - Final Design
Channel Roughness Factors

The proposed Bullard Wash Channel from the Lower Buckeye Road inlet area to the Gila River is composed of several different channel sections and types of lining materials. Below is a discussion of the roughness factors used to calculate the channel hydraulic capacity/water surface profiles, and the limitations of each channel section to keep the channel operating within the design parameters.

To simplify the discussion, Bullard Wash has been divided into segments correlating to the different types of channel section used. Starting from just north of Lower Buckeye Road and proceeding south to the Gila River, the channel segments are identified by the stationing used in the construction plan set.

Station 122+00 to 119+54 (Channel Inlet Area) – Drop inlet area is designed to collect upstream flows. The inlet area will be lined with rock-filled gabion baskets and mattresses to minimize erosion to the channel. The baskets will be stair stepped to provide a cascading effect to the captured overbank flows. The rock-filled baskets have a roughness factor (n) of 0.029 (per manufacturer). For the design, an n value of 0.030 was used. This channel section is temporary and will be removed when the channel is extended to the north.

Station 119+54 to 81+02 (Composite Channel Section) – Composite channel section is designed to convey flows around the west end of the Phoenix Goodyear Airport. The composite section is composed of 2:1 and 3:1 sideslopes lined with rock-filled mattresses (to minimize erosion to the channel banks) and an earthen bottom. In addition, a narrow concrete lined ditch is located within the channel section to convey irrigation tailwater flows. The tailwater exits at the end of this channel reach. The rock-filled mattresses have a roughness factor of 0.027 (per manufacturer). For the design,

637 S. 48th Street, Suite 101 Tempe, Arizona 85281 Tel. (602) 303-9799
Fax. (602) 303-9899

an n value of 0.030 was used. The higher n value was chosen to allow for some vegetative growth (grasses and brush 1 to 2 ft high) along the sideslopes. For the channel bottom an n value of 0.032 was selected for the design. A clean soil bottom will have an n value of 0.025, however, with the City of Goodyear's desire to allow vegetative growth within the channel, for aesthetic reasons, the higher n value was used. The narrow concrete lined ditch will have an n value of 0.015 (heavy broom finish).

The vegetative growth on the channel bottom will need to be limited to grasses and short brush 1 to 3 ft in height. Some examples of brush types to use are common desert plants such as the brittle bush and desert marigold. The brittlebush is particularly good because of its brittle nature it will be easily striped away during a major storm event. One brush type to avoid is the desert broom, which has a deep taproot and can grow to 10+ ft in height. Tree plantings should be avoided within this section.

Station 81+02 to 77+00 (Grouted Riprap Channel Section) – The grouted riprap channel section is designed to provide a roughened (high n value) channel section in lieu of a drop structure at the southwest end of the Phoenix Goodyear Airport. The section is lined with grouted rock that is 22 inches thick. A narrow 15-ft wide concrete maintenance roadway is located within the channel section to provide continuous access along the channel bottom. The pathway surface will have a roughened surface (raked finish) to discourage the use of roller blades or skateboards. In addition, several tree wells using concrete pipe section have been added to enhance aesthetics. The grouted riprap has an n value of 0.042. The narrow 15-ft wide concrete maintenance roadway has an n value of 0.019. A composite n value of 0.038 was used for the design of the channel section.

Station 77+00 to 72+90 (Concrete Lined Channel Section) – The concrete lined channel section is designed to provide a hardened channel section at the end of the grouted riprap section and through the railroad and highway bridges. The section is lined with reinforced concrete that is 6 inches thick. The hardened surface is necessary to control the erosive action downstream of the grouted riprap section and eliminate local scour conditions at the bridges. The railroad bridge has a limited vertical clearance. A 15-ft wide maintenance path that is depressed one-foot under the railroad bridge will provide a 10-ft clearance for maintenance vehicles. The highway bridge provides 10+ ft of clearance. The bottom concrete surface will be roughened (raked finish) to discourage the use of roller blades or skateboards. The concrete bottom surface and the concrete sideslopes (heavy broom finish) have roughness factors of 0.019 and 0.015 respectively.

Station 72+90 to 33+30 (Composite Channel Section) – Composite channel section is designed to convey flows south of the highway to the BID canal. The composite section is composed of sideslopes lined with rock-filled mattresses (to minimize erosion to the channel banks) and an earthen bottom. The rock-filled mattresses have a roughness factor of 0.027 (per manufacturer). For the design, an n value of 0.030 was used. The higher n value was chosen to allow for some vegetative growth (grasses) along the sideslopes. For the channel bottom an n value of 0.032 was selected for the design. See earlier section concerning the City of Goodyear's desire to allow vegetative growth within the channel for aesthetic reasons.

Station 33+30 to 30+02 (Concrete Lined Channel Section) – The concrete lined channel section is designed to provide a hardened transition channel section from the PVNGS 96-inch concrete encasement to the BID overchute structure. The section is lined with reinforced concrete that is 6 inches thick. The hardened surface is necessary to transition from the 80-ft wide composite section to the 62-ft wide overchute structure. The bottom concrete surface will be roughened to discourage

the use of roller blades or skateboards. The concrete bottom surface (raked finish) and the concrete sideslopes (heavy broom finish) have roughness factors of 0.019 and 0.015 respectively.

Station 30+02 to 29+04 (Grouted Riprap Channel Section) – The grouted riprap channel section is designed to provide a roughened (high n value) channel section in lieu of a drop structure at the south end of the BID overchute structure. The section is lined with grouted rock that is 22 inches thick. A narrow 15-ft wide concrete maintenance roadway is located within the channel section to provide continuous access along the channel bottom. The roadway surface will have a roughened surface (raked finish) to discourage the use of roller blades or skateboards. The grouted riprap has a roughness factor of 0.042. A composite n value of 0.038 was used for the design of the channel section.

Station 29+04 to 28+60 (Box Culvert Section) – The box culvert is designed to convey flows under the BID South Maintenance Road. The box culvert has four barrels that are 10-ft high and 12-ft wide. The eastern most barrel will be used to provide continuous maintenance access from the Gila River to the upper sections of the channel. For the design, the bottom surface of the eastern most barrel will be roughened with a raked finish similar to the maintenance roadway (n value of 0.019). The other three barrels will have the bottom surface roughened with a heavy broom finish (n value of 0.015).

Station 28+60 to 25+00 (Composite Channel Section) – Composite channel section is designed to convey flows south of the BID canal maintenance road to the Gila River. The composite section is composed of sideslopes lined with rock-filled gabion baskets (to minimize erosion to the channel banks) and an earthen bottom. An n value of 0.030 was used for the rock-filled gabion baskets and 0.032 was selected for the channel bottom. See earlier composite channel section description concerning the City of Goodyear's desire to allow vegetative growth within the channel for aesthetic reasons. This section is located within the Gila River floodway and may experience damage when the river flows. The flexible gabion system has the highest potential of surviving a major flow on the Gila River in comparison to other lining materials.

Station 25+00 to 18+00 (Earthen Channel Section) – The earthen channel section is designed to convey low flows south of the composite channel section. The earthen channel section is located within the Gila River floodway and provides an excavated low flow pathway to the main Gila River channel. This section may be washed away when the river flows. A roughness factor of 0.032 was used for the channel sideslopes and bottom. See earlier section concerning the City of Goodyear's desire to allow vegetative growth within the channel for aesthetic reasons.

Signed: Bradford D. Olbert

Bradford D. Olbert, P.E.

Distribution: 013884-2B

MEMORANDUM

Sverdrup Civil, Inc.

Date: July 14, 1998

TO: **Tim Edwards and Larry Martinez**
City of Goodyear
119 North Litchfield Road
Goodyear, Arizona 85338

Don Rerick
Flood Control District of Maricopa County
2801 West Durango Street
Phoenix, Arizona 85009

FROM: **Bradford D. Olbert, P.E.**
Project Manager
Sverdrup Civil, Inc.

SUBJECT: **Contract FCD 95-39**
Flood Control District of Maricopa County
Bullard Wash Channel Improvements - Final Design
Gabion Basket Longevity and Maintenance

The proposed Bullard Wash Channel from the Lower Buckeye Road inlet area to the Gila River utilizes the gabion system (rock filled wire baskets) of lining material for approximately 87 percent of the channel length. Several linings were investigated to preclude meandering of the channel including concrete, soil cement, grouted riprap, riprap and gabions. The City of Goodyear chose the gabion system because it was more aesthetically pleasing than the concrete lining material that was recommended in an earlier study. Other benefits of the gabion system are it provides a bank lining that is flexible (less likely to have a total failure of the lining), it is durable, and it is easier for an individual to exit the drainage channel during a flood event (in comparison to concrete). Three drawbacks of the gabion system include a higher roughness coefficient (in comparison to concrete, 0.030 vs. 0.015), wire damage, and corrosion potential of the wire. The higher roughness coefficient results in a larger channel section, while damage and corrosion of the wire are related to how long the system will last and maintenance concerns. Below is a discussion of the wire damage and corrosion potential of the system and measures taken to reduce that potential.

The gabion system of bank protection has been widely used for many years and many locations. The first gabion system has been in use since 1894 along the Reno River banks in Italy. The gabion system has been used in Arizona for flood protection. One installation located in the City of Glendale on Skunk Creek south of Union Hills Road has been in place since 1987. The Skunk Creek installation used the standard zinc-coated steel gabion mesh. Inspection of the gabion system showed no signs of corrosion or damage to the baskets over that time period. Additional flood protection along Skunk Creek using the gabion system is proposed for the near future. ADOT has used the gabion system principally for local scour conditions at its older bridge locations. ADOT's major concern has been the longevity of the wire mesh against impacts from other rocks being transported downstream during a storm event.

637 S. 48th Street, Suite 101 Tempe, Arizona 85281 Tel. (602) 303-9799
Fax. (602) 303-9899

The Bullard Wash project is located in an area where soil corrosion has been identified as an issue. Corrosion of utilities have been reported by the City of Goodyear of its ductile iron pipes near the wastewater treatment facility, located west of Estrella Parkway and north of the Buckeye Irrigation Canal (BID). APS has performed corrosion repair work to its 96-inch reclaimed water line in several locations just north of the BID Canal. While damage to the gabion basket wires is always a concern, damage to basket wires below the channel bottom caused by large stones will not be an issue for this project because borings along the channel have indicated no large rocks and only traces of gravel. Wire damage should be limited to above ground by floating debris or vandals.

Manufacturers of gabion systems have provided improved corrosion protection coatings to minimize corrosion potential. The traditional zinc coating can be replaced with a zinc-aluminum alloy coating with a non-porous surface that reduces the rate of corrosion. Manufacturer corrosion tests indicated that the zinc-aluminum coating lasts 2-½ times longer than the traditional zinc coatings. In addition, PVC coatings help to further improve long lasting protection against corrosion. The coating completely protects the wire from corrosion. For the Bullard Wash Channel improvements, a higher level of corrosion protection is warranted based upon the corrosion history of the area. Claims of complete protection for the PVC coating may be true where the coating is fully intact for the life of the improvement. However, with time, damage will occur to the PVC coating from debris contact, vandalism, damage during construction, and from contact with maintenance vehicles. The complete protection is only as good as the PVC coverage. Nicks or scratches in the coating will provide locations where corrosion would take place. A combination of the two coatings would maximize the corrosion protection, and this combination will be used for this project.

While the coatings provide a passive protection system against corrosion, annual inspections of the channel lining to check for damage to the lining and corrosion is necessary. Spot inspections will be required on the below ground lining protection as well. Repairs to damaged wires discovered should be scheduled immediately after the inspections have been completed. This maintenance requirement will be addressed in the operation and maintenance manual being prepared for this project.

Signed: Bradford D. Olbert

Bradford D. Olbert, P.E.

Distribution: 013884-2B

637 S. 48th Street, Suite 101 Tempe, Arizona 85281 Tel. (602) 303-9799
Fax. (602) 303-9899

Sverdrup

FAX COVER SHEET

637 South 48th Street
Suite 101
Tempe, AZ 85281
(602) 303-9799

Western Operations
Phoenix Office

FAX Number: (602) 303-9899

FAX TO	COMPANY	FAX TELEPHONE NO.
Don Rerick	FCDMC	506-8561

FAX FROM: **Brad Olbert**	No. of Pages: 2 (including cover sheet)

MEMO:

Don, attached is the side slope stability calculations for the concrete lined channel. The calculations show a 2.5 or greater (depending upon the depth) factor of safety against overturning. The calculations ignore the reinforcing in the lining and use only dead loads. For a grouted riprap section, using a thicker section (18" min.) the factor of safety will be much more conservative against overturning than for the concrete lined section.

Job No. or BD No.: 013884

Date: Sept. 16, 1998

Time: 11:00 am

FAX Operator: BDO

SVERDRUP

JOB 13884 FCDMC / Bullard Wash

COMPUTATIONS FOR Channel Lining

SHEET NO. ____ OF ____

DATE June 98

BY JFF CHKD 8/20/98

Side Slope Stability

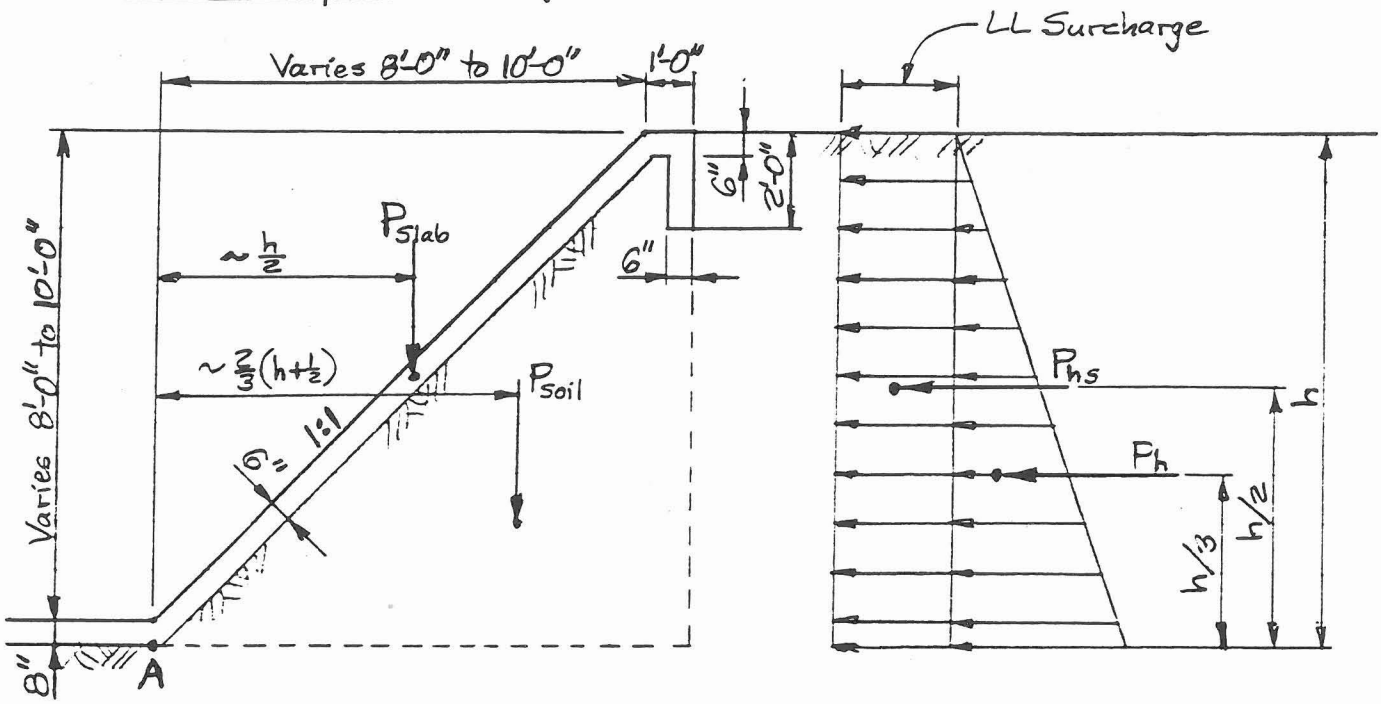

$\beta = 0°$ $\gamma = 120$ pcf $k_h = 35$ pcf LL Surcharge $h_s = 2'$ (AASHTO 3.20.3)

LL Surcharge $= h_s\gamma = 2' \times 120$ pcf $= 240$ psf/ft.

8 ft. Depth

$h = 8.67'$

$P_{hs} = 0.240^{ksf}/ft. \times 8.67' = 2.08^{k}/ft.$

$P_h = k_h h^2/2 = 0.035^{kcf} \times (8.67')^2/2 = 1.31^{k}/ft.$

$P_{slab} \approx 0.5' \times \frac{8'}{\cos 45°} \times 0.150^{kcf} = 0.849^{k}/ft.$

$P_{soil} \approx 9' \times 8.67' \times 0.120^{kcf}/2 = 4.68^{k}/ft.$

Σ Overturning Moments Abt. A:

$P_{hs} \times \frac{h}{2} = 2.08 \times 4.33' = 9.01$ 'k/ft.

$P_h \times \frac{h}{3} = 1.31 \times 2.89' = 3.79$

$\Sigma = 12.80$ 'k/ft.

Σ Resisting Moments Abt. A:

$P_{slab} \times \frac{h}{2} = 0.849 \times 4.33 = 3.68$ 'k/ft.

$P_{soil} \times \frac{2}{3}(h+\frac{1}{2}) = 4.68 \times 6.11 = 28.60$

$\Sigma = 32.28$ 'k/ft.

Factor of Safety $= 32.28/12.80 = 2.52 > 1.5$ ✓

10 ft. Depth

$h = 10.67'$

$P_{hs} = 0.240^{ksf}/ft. \times 10.67' = 2.56^{k}/ft.$

$P_h = k_h h^2/2 = 0.035^{kcf} \times (10.67')^2/2 = 1.99^{k}/ft.$

$P_{slab} \approx 0.5' \times \frac{10'}{\cos 45°} \times 0.150^{kcf} = 1.06^{k}/ft.$

$P_{soil} \approx 11' \times 10.67' \times 0.120^{kcf}/2 = 7.04^{k}/ft.$

Σ Overturning Moments Abt. A:

$P_{hs} \times \frac{h}{2} = 2.56 \times 5.33' = 13.65$ 'k/ft.

$P_h \times \frac{h}{3} = 1.99 \times 3.56' = 7.08$

$\Sigma = 20.73$ 'k/ft.

Σ Resisting Moments Abt. A:

$P_{slab} \times \frac{h}{2} = 1.06 \times 5.33 = 5.65$ 'k/ft.

$P_{soil} \times \frac{2}{3}(h+\frac{1}{2}) = 7.04 \times 7.44 = 52.41$

$\Sigma = 58.06$ 'k/ft.

Factor of Safety $= 58.06/20.73 = 2.80 > 1.5$ ✓

AVERY

AVERY

DEPARTMENT OF THE ARMY
LOS ANGELES DISTRICT, CORPS OF ENGINEERS
ARIZONA-NEVADA AREA OFFICE
3636 NORTH CENTRAL AVENUE, SUITE 760
PHOENIX, ARIZONA 85012-1936

REPLY TO
ATTENTION OF:

Office of the Chief
Regulatory Branch

January 20, 1998

JAN 21 1998

/ RBS

Maricopa County Flood Control District
ATTN: Mr. Robert B. Stevens
2801 W. Durango Street
Phoenix, Arizona 85009-6399

File Number: 984-0165-LSF

Dear Mr. Stevens:

Reference is made to your letter of January 13, 1998 in which you inquired as to whether or not a Section 404 permit is required from the U.S. Army Corps of Engineers to construct a drainage channel in the Bullard Wash irrigation ditch to capture sheet flows that threaten the Phoenix-Litchfield Municipal Airport adjacent to, but outside of, the jurisdictional boundary of Gila River at (Section 20, & 29, T1N, R1W), Goodyear, Maricopa County, Arizona.

Based on the information furnished in your letter (referenced above), review of the USGS contour maps and current aerial photographs, and your January 8, 1998 meeting with Mr. Larry Flatau of this office, we have determined that, although your proposed project area does include jurisdictional waters, your proposed project does not discharge dredged or fill material into a water of the United States or an adjacent wetland. Therefore, the project is not subject to our jurisdiction under Section 404 of the Clean Water Act, and no Section 404 permit is required from our office.

The receipt of your letter is appreciated. If you have questions, please contact Larry S. Flatau at (602) 640-5385 x 225.

Sincerely,

Cindy Lester

Cindy Lester
Chief, Arizona Section
Regulatory Branch

cc: Don Reynolds
Tom Johnson
File: Bullard Wash (1.5.7)

FLOOD CONTROL DISTRICT
of
Maricopa County

2801 West Durango Street • Phoenix, Arizona 85009-6399
Telephone (602) 506-1501
Fax (602) 506-4601
TT (602) 506-5859

RECEIVED
MAY 26 1998
ARIZONA STATE PARKS

BOARD OF DIRECTORS
Betsey Bayless
Jan Brewer
Fulton Brock
Don Stapley
Mary Rose Garrido Wilcox

May 20, 1998

Joanne Miller, Compliance Specialist/Archeologist
State Historic Preservation Office
1300 West Washington
Phoenix, Arizona 85007

RE: Bullard Wash Outfall Project
Archeological Inventory
Request for Concurrence

Dear Ms. Miller:

Enclosed, please find one copy of the report "An Archeological Inventory of the Expanded Bullard Wash Outfall Project Area of Southern Goodyear, Arizona" prepared by Scientific Archeological Services (SAS). The Flood Control District of Maricopa County reviewed the SAS report and agrees with the conclusion that the concerned project should have no effect upon any prehistoric or historic cultural resources. Prior archeological work for the proposed project was completed by SAS in January 15, 1997, and April 21, 1995, however, the project area was expanded since then. A signed concurrence letter from your office for the previous work and corresponding reports is enclosed for your review.

The District requests your concurrence that the proposed project will have no effect on any historic property, and the authorization to continue its planned development of the Bullard Wash Outfall Project in Goodyear, Arizona.

If you have any questions or comments, please call Theresa Hoff at 506-8127. Thank you for your time.

Sincerely,

Theresa M. Hoff

Theresa M. Hoff
Environmental Services Planner

Enclosures

CONCUR

Joanne Miller
for ARIZONA STATE HISTORIC PRESERVATION OFFICER
ARIZONA STATE PARKS BOARD
June 11, 1998

Memorandum

To: Don Rerick

CC: Bob Stevens

From: Theresa Hoff

Date: 12/05/97

Re: Bullard Wash Project

Don – Here is a summary of the potential Bullard Wash environmental concerns. Some of the information is similar to the memo sent to you previously, however, it contains additional information as well (e.g., a synopsis of the Phase II investigation).

Conclusions

Based on the Phase II investigation results and the verification that aluminum oxide is not a hazardous material, additional Phase II investigation is not necessary at this time to proceed with the Bullard Wash project.

Several injection wells, monitor wells, and injection pipelines are located on the PGA property, which is part of the groundwater and soil treatment system. Therefore, the channel should be routed to ensure the treatment system is avoided and not impacted.

Phase II Investigation Conducted for the Bullard Wash Project

Growth Environmental drilled twelve soil borings for the Phase II investigation. Eight of the soil borings were located south of highway 85 and the other four were located near the southwest corner and western border of PGA South. Three samples were collected from each soil boring at varying depths (i.e., 14-24", 5-7', and 10-12' bgs). The samples were analyzed for volatile organic compounds (VOCs), semi-volatile organic compounds (SVOCs), and the eight listed RCRA metals (Test numbers EPA 8260, 8270, & 6010). The sample results indicated no detectable concentrations of VOCs or SVOCs. Twenty-six of the 27 samples analyzed for the eight RCRA metals resulted in detectable concentrations for four of the eight metals, however, the concentrations were below the ADHS health based guidance levels (HBGLs). One of the 27 samples resulted in detectable concentrations of three of the RCRA metals, which were also below the HBGLs. Therefore, based on these results, no further soil sampling is recommended.

Aluminum Oxide

Aluminum oxide is not a listed RCRA hazardous waste. ADEQ does not have soil remediation clean-up levels for aluminum oxide. According to Mr. Tony Debenedetto from ADEQ hazardous waste compliance division, if there are no soil remediation clean-up levels for a substance, the substance is not listed as RCRA hazardous waste, and the substance does not exhibit any of the

RCRA hazardous waste characteristics (i.e.. reactivity, ignitablility, corrosivity, or toxicity), then the soil containing the substance is non-hazardous.

Aluminum Oxide Fines on PGA Property

According to a report by Scott Allard, & Bohannan, Inc., (SAB), the soil affected by the aluminum oxide fines on the Phoenix Goodyear Airport (PGA) was removed using hand tools and deposited back onto the IMALSCO property in April, 1993. It appears that the extent of the affected soil was determined by visual inspection. The remaining soil was not sampled to confirm that the aluminum oxide fines were completely removed. However, aluminum oxide is not a RCRA listed or characteristic hazardous waste and is sometimes used in the production of concrete. Furthermore, in May 1993, Ms. Cynthia Parker, Environmental Programs Coordinator, City of Phoenix Aviation Department, stated that the cleanup was acceptable to the City of Phoenix. Since aluminum oxide is not a hazardous material and the affected soil was removed, sampling is not recommended in this area of the PGA.

Aluminum Oxide Fines on the Railroad Property

Soil on the railroad property adjacent to PGA and IMSALCO's southern borders was also affected by the aluminum oxide fines. The SAB report did not explicitly state that the affected soil on the railroad property was cleaned up or removed, although, the site map depicting the corrective action area (assumed to be the area cleaned-up) did include the affected soil on the railroad property. Therefore, some of the soil on the railroad property may still contain aluminum oxide fines because it is not clear whether or not it was removed; however, as discussed previously, aluminum oxide is not a hazardous substance.

Additional items of potential concern of which you may already be aware:

- Groundwater in the area is reported to be approximately 40 feet bgs.

- Several wells and an injection pipeline are located in the in the area of the proposed Bullard Wash project.

- Two groundwater wells are located near the northwest corner of the IMALSCO facility. The construction plans should not compromise the integrity of the wellhead that could provide a means of access for contaminant migration into the low levels of the aquifer. If construction does impact the wells, the wells can be formally abandoned in accordance with ADWR requirements.

AVERY

STRUCTURAL DESIGN CALCULATIONS

BID CANAL OVERCHUTE

Bullard Wash Channel Improvements
and MC Highway 85 / Estrella Parkway - W.O. 68877

Flood Control District of Maricopa County
Contract FCD 95-39

Registered Professional Engineer (Civil)
CERTIFICATE NO.
13769
JOHN F.
FISCHER
Date Signed 9-18-98
ARIZONA, U.S.A.

September 1998

Sverdrup

SVERDRUP

JOB 13884 FCDMC/Bullard Wash

COMPUTATIONS FOR BID Canal Overchute

SHEET NO. 1 OF 71

DATE Sept 98

BY JFF CHKD

Table of Contents

	Sheet No.
Design Criteria	2
Channel Walls	4
Precast/Prestressed Slab Design	8
Check For HS20-44 Live Load	22
Abutment Cap Beam Design	41
Check Buoyancy Uplift	64
Channel Lining Design	65
Channel Side Slope Stability	66
Drilled Shaft Capacity	43
Elevations	67
Structure Quantities	68
Overchute Structure Cost Estimate	71

DESIGN CRITERIA

AASHTO *Standard Specifications for Highway Bridges*, 16th Edition 1996, and the 1997 Interim Specifications
MCDOT Roadway Design Manual, Section 4.8 Bridge Design

Dead Load -

Reinforced Concrete	150 pcf
Water	65 pcf (with sediment load)
Compacted Soil	120 pcf

Seismic Performance Category A (Acc.=0.03g)

Concrete -

Precast-Prestressed		f'_c = 5,000 psi
Abutments and Drilled Shafts	MAG Class "A"	f'_c = 3,000 psi, n = 9
All Other Cast-in-Place	MAG Class "AA"	f'_c = 4,000 psi, n = 8

Reinforcing Steel ASTM A 615 (AASHTO M 31) Grade 60, f_y = 60,000 psi, f_s = 24,000 psi

Prestressing Steel ASTM A 416 (AASHTO M 203) Grade 270, f'_s = 270,000 psi, $^1/_2$" ϕ, A = 0.153 in^2

Service Load Design Method (Allowable Stress Design or Working Stress Design)

Design Flow in Overchute = Q_{100} = 3,200 cfs

TABLE E5.1

HEC-RAS Output for Bullard Wash Outfall Channel Improvements
Final (99%) Hydraulic Profile (100-yr Q) for sub & supercritical flow conditions
Bullard Wash from Gila River to Lower Buckeye Road

Profile Output Table - Standard Table 1

HEC-RAS Plan: Final(9/98) River: Bullard Wash Reach: Outfall Channel — Run Date: 21-Sep-98

Reach	River Sta	Q Total (ft/sec)	Min Ch El (ft)	W.S. Elev (ft)	Crit W.S. (ft)	E.G. Elev (ft)	E.G. Slope (ft/ft)	Vel Chnl (ft/sec)	Flow Area (sq ft)	Top Width (ft)	Froude # Chl	Water Depth (ft)
Outfall Channel	2500.00	3200.00	900.69	906.58	904.30	907.20	0.002001	6.33	505.71	91.78	0.48	
Outfall Channel	2660.00	3200.00	901.02	906.90	904.63	907.52	0.002012	6.34	504.81	91.76	0.48	
Outfall Channel	2860.56	3200.00	901.42	907.30	905.03	907.92	0.002008	6.33	505.14	91.76	0.48	
Outfall Channel	2877.74	3200.00	901.45	906.45	906.38	908.87	0.003534	12.49	256.13	51.29	0.99	
Outfall Channel	2901.4	Culvert										
Outfall Channel	2901.49	3200.00	901.50	909.45	906.43	910.41	0.000565	7.85	407.69	51.34	0.49	
Outfall Channel	2911.00	3200.00	901.97	909.93	906.59	910.52	0.002140	6.19	517.19	76.95	0.42	
Outfall Channel	2995.26	3200.00	906.15	909.69	910.46	912.71	0.027319	13.96	229.30	70.12	1.36	
Outfall Channel	3002.33	3200.00	906.48	910.82	910.82	913.01	0.004132	11.87	269.55	62.12	1.00	4.34
Outfall Channel	3049.67	3200.00	906.56	911.59	910.90	913.22	0.002630	10.26	311.95	62.14	0.81	5.03
Outfall Channel	3064.67	3200.00	906.58	911.65	910.92	913.25	0.002564	10.17	314.59	62.14	0.80	
Outfall Channel	3088.94	3200.00	906.62	912.81	910.65	913.55	0.000767	6.88	464.86	82.29	0.51	
Outfall Channel	3141.00	3200.00	906.70	912.84	910.74	913.59	0.000800	6.98	458.73	82.15	0.52	
Outfall Channel	3266.00	3200.00	906.90	912.92	910.94	913.71	0.000857	7.13	448.90	81.90	0.54	
Outfall Channel	3330.00	3200.00	907.00	913.25	910.70	913.78	0.000544	5.84	547.68	98.51	0.44	
Outfall Channel	3372.00	3200.00	907.06	913.35	910.61	913.82	0.001435	5.49	582.76	105.31	0.41	
Outfall Channel	3562.61*	3200.00	907.34	913.62	910.89	914.09	0.001440	5.50	582.08	105.28	0.41	
Outfall Channel	3753.23*	3200.00	907.62	913.90	911.17	914.37	0.001444	5.50	581.51	105.26	0.41	
Outfall Channel	3943.84*	3200.00	907.89	914.17	911.45	914.64	0.001441	5.50	581.89	105.23	0.41	
Outfall Channel	4134.46*	3200.00	908.17	914.45	911.72	914.92	0.001445	5.50	581.33	105.21	0.41	
Outfall Channel	4325.07*	3200.00	908.45	914.72	912.00	915.19	0.001449	5.51	580.85	105.19	0.41	
Outfall Channel	4515.69*	3200.00	908.73	915.00	912.28	915.47	0.001452	5.51	580.45	105.18	0.41	
Outfall Channel	4706.30*	3200.00	909.00	915.28	912.56	915.75	0.001447	5.51	580.99	105.15	0.41	
Outfall Channel	4896.92*	3200.00	909.28	915.55	912.83	916.02	0.001450	5.51	580.55	105.14	0.41	
Outfall Channel	5087.53*	3200.00	909.56	915.83	913.11	916.30	0.001453	5.52	580.18	105.12	0.41	
Outfall Channel	5278.15*	3200.00	909.84	916.11	913.39	916.58	0.001456	5.52	579.87	105.11	0.41	
Outfall Channel	5468.76*	3200.00	910.11	916.38	913.67	916.85	0.001450	5.51	580.48	105.09	0.41	
Outfall Channel	5659.38*	3200.00	910.39	916.66	913.95	917.13	0.001453	5.52	580.11	105.08	0.41	
Outfall Channel	5850.00	3200.00	910.67	916.94	914.23	917.41	0.001456	5.52	579.79	105.06	0.41	
Outfall Channel	5900.00	3200.00	910.74	917.01	914.30	917.48	0.001453	5.52	580.08	105.07	0.41	
Outfall Channel	6020.00	3200.00	910.92	917.18	914.48	917.66	0.001458	5.52	579.49	105.05	0.41	
Outfall Channel	6220.00	3200.00	911.21	917.47	914.77	917.95	0.001457	5.52	579.65	105.06	0.41	
Outfall Channel	6322.00	3200.00	911.36	917.62	914.92	918.10	0.001464	5.53	578.67	105.02	0.42	
Outfall Channel	6400.00	3200.00	911.45	917.74	915.00	918.21	0.001434	5.49	582.59	105.17	0.41	

Sheet 3 of 7

SVERDRUP

JOB 13884 FCDMC / Bullard Wash

COMPUTATIONS FOR BID Canal Overchute

SHEET NO. 4 OF

DATE April 98

BY JFF CHKD CAR

Water Depth in Overchute & Reqd. Ht. of Overchute Channel Walls

From Wood, Patel & Assocs.

Max. depth of water at upstream (north) end, Sta. 30+49.67 = 911.59 − 906.56 = 5.03' } @ ℄ Channel
downstream (south) end, Sta. 30+02.33 = 910.82 − 906.48 = 4.34'

Max. depth of water at overchute channel walls = 5.03' − 0.005 (X-slope) × 31' = 4.88' Abut. #2
= 4.34 − 0.005 × 31 = 4.19' Abut. #1

Req'd. Wall Ht. = 4.88' + 1.67' freeboard (subcritical) = 6.55' } Use 6'-10"
= 4.19' + 2' freeboard (supercritical) = 6.19'

SVERDRUP

JOB 13824 FCDMC / Bullard Wash

COMPUTATIONS FOR BID Canal Overchute

SHEET NO. 5 OF

DATE April 96

BY JFF CHKD CAR

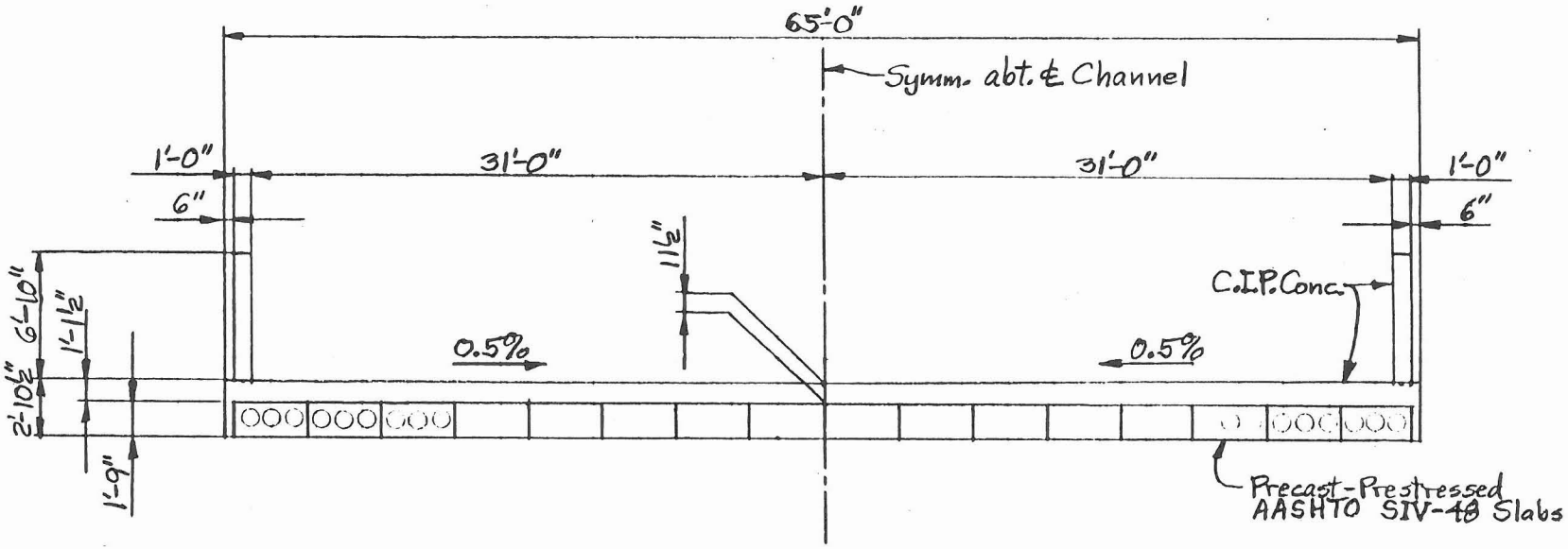

TYPICAL SECTION

Scale: 1" = 10'-0"

SVERDRUP

JOB 13884 FCDMC/Bullard Wash

COMPUTATIONS FOR BID Canal Overchute

SHEET NO. 6 OF

DATE April 98

BY JFF CHKD CAR

Overchute Channel Wall Reinf.

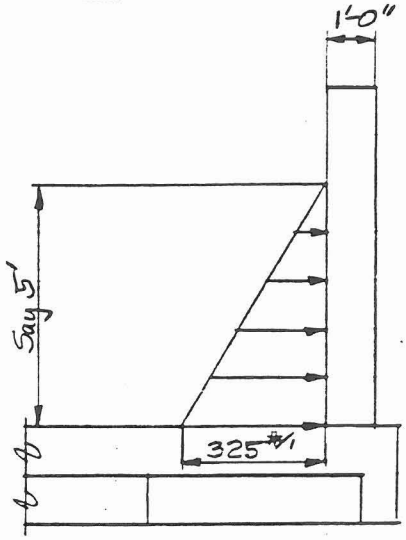

Both faces of wall to have 3/4" rustication shown below.

$Max.w = 65pcf \times 5' \times 1' = 325^{\#/'}$

$Max.M = \frac{325^{\#/'} \times 5'}{2} \times \frac{5'}{3} = 1{,}354'^{\#}$

Try #5 @ 12" spcg.

$d = 12" - 2"cover - \frac{0.625"}{2} - 2 \times 3/4" rustic. = 8.19"$

$A_s = 0.31^{\square"/'}$

From spreadsheet on following page

$f_s = 6.86^{ksi} << 24^{ksi}$, OK

Use #5 @ 12" spcg. EW/EF

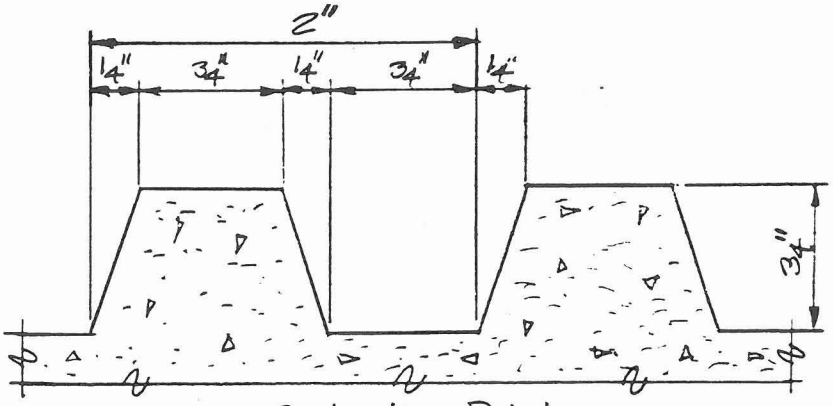

Rustication Detail

Typical both faces of overchute and approach slab walls and edge of deck slab.

2" bar cover shall be measured from deepest part of rustication.

RECTANGULAR CONCRETE BEAM INVESTIGATION

Shaded areas are input cells.

Job No. 13884 FCDMC / Bullard Wash Channel Improvements
BID Canal Overchute
Overchute Channel Walls

By JFF Chkd CAL

Input Data:

A_s =	0.31 sq.in.	f_y =	60 ksi
b =	12 in.	Allow. f_s =	24 ksi
d =	8.19 in.	f'_c =	4 ksi
n =	8	Allow. f_c=	1.6 ksi
Moment M =	1.354 ft.-kips	ϕ =	0.9
Factored M =	0 ft.-kips		

Working Stress Design:

p =	0.0031543
np =	0.025234
k =	0.2008297
kd =	1.6447952 in.
j =	0.9330568
jd =	7.6417349 in.
Actual f_s =	6.8587701 ksi
Actual f_c =	0.2154492 ksi

Ultimate Strength Design:

a =	0.4558824 in.
ϕM_n =	11.107072 ft.-kips

SVERDRUP

JOB 13884 FCDMC/Bullard Wash

COMPUTATIONS FOR BID Canal Overchute

SHEET NO. 8 OF

DATE March 98

BY JFF CHKD CAR

Precast Slab Design

Gravity Loads (Per 4' Slab Width)

NCDL – C.I.P. Topping Slab $\frac{11.5''+13.5''}{2\times 12''/'} \times 4' \times 150\,pcf = 625^{\#/'}$ *

SDL – Channel Side Walls $\frac{2\times\left(1'\times 7' + \frac{6''\times 34.5''}{144}\right)}{16-4'\text{ Slabs}} \times 150\,pcf = 158^{\#/'}$

Water – Design high water average depth in overchute = 5' at Wall.
For greater depth of water there would be an allowable overstress: $\frac{60''+62''}{2\times 12''/'} \times 4' \times 65\,pcf = 1322^{\#/'}$

Input to Computer Program P7348
Prestressed Bridge Girder Design

Allowable Final Tension in Concrete $= 6\sqrt{5000\,psi} = 424\,psi$

Initial Prestressing Steel Tension $= 0.75 f'_s = 0.75 \times 270 = 202.5\,ksi$

Monolithic or Integral Wearing Surface $= 0.5''$

Average Thickness C.I.P. Topping Slab $= \frac{11.5''+13.5''}{2} = 12.50''$

Slab Structural Thickness $= 12.50'' - 0.5'' = 12.00''$

8" Diaphragm DL @ ½ Pts. = Extra Wt. Due to Lack of Voids $= 8''\text{Thk.} \times \frac{\pi}{4} \times \frac{2\times(12''\phi)^2 + (10''\phi)^2}{1728} \times 0.150^{kcf} = 0.212^{k}$

*Is calculated by computer program P7348 using input slab thickness and girder spacing.

Sverdrup

Job 13884 FCDMC / Bullard Wash Channel Improvements
Computations for BID Canal Overchute

Sheet 9 of ____
Date 4-6-98
By J.F.Fischer Chkd. CAR

Input to SvCv Computer Program P7348
Prestressed Bridge Girder Design (cont'd.)

Moments and Shears Due to Water LL and SDL -

Water LL w = 1322 lbs./ft.
SDL w = 158 lbs./ft.
Span Length L = 46 ft.

Moment $M_x = wx(L-x)/2$
Shear $V_x = w(L/2-x)$

Point	x	Water LL		SDL	
		Moment ('k)	Shear (k)	Moment ('k)	Shear (k)
0	0	0.0	30.4	0.0	3.6
0.1L	4.6	125.9	24.3	15.0	2.9
0.2L	9.2	223.8	18.2	26.7	2.2
0.3L	13.8	293.7	12.2	35.1	1.5
0.4L	18.4	335.7	6.1	40.1	0.7
0.5L	23	349.7	0.0	41.8	0.0
0.6L	27.6	335.7	-6.1	40.1	-0.7
0.7L	32.2	293.7	-12.2	35.1	-1.5
0.8L	36.8	223.8	-18.2	26.7	-2.2
0.9L	41.4	125.9	-24.3	15.0	-2.9
1.0L	46	0.0	-30.4	0.0	-3.6

Sverdrup

Job 13884 FCDMC / Bullard Wash Channel Improvements
Computations for BID Canal Overchute

Sheet 10 of ____
Date 4-6-98
By J.F.Fischer Chkd. CAR

PRECAST-PRESTRESSED AASHTO SLAB STRAND PATTERNS

Number of Strands				Dist. From Bott./Gdr.
Bottom Row	Middle Row	Top Row	Total	to C.G. of Strands (in.)
10			10	2.0000
10	2		12	2.3333
10	4		14	2.5714
10		2	12	2.6667
10	2	2	14	2.8571
10	4	2	16	3.0000
12			12	2.0000
12	2		14	2.2857
12	4		16	2.5000
12		2	14	2.5714
12	2	2	16	2.7500
12	4	2	18	2.8889
14			14	2.0000
14	2		16	2.2500
14	4		18	2.4444
14		2	16	2.5000
14	2	2	18	2.6667
14	4	2	20	2.8000
16			16	2.0000
16	2		18	2.2222
16	4		20	2.4000
16		2	18	2.4444
16	2	2	20	2.6000
16	4	2	22	2.7273
18			18	2.0000
18	2		20	2.2000
18	4		22	2.3636
18		2	20	2.4000
18	2	2	22	2.5455
18	4	2	24	2.6667
20			20	2.0000
20	2		22	2.1818
20	4		24	2.3333
20		2	22	2.3636
20	2	2	24	2.5000
22			22	2.0000
22	2		24	2.1667
22		2	24	2.3333
24			24	2.0000

P7348 PRESTRESSED BRIDGE GIRDER DESIGN-ENGLISH UNITS

SVERDRUP AND PARCEL

FORM 1 OF ___

JOB NO.	13884 FCDMC / BULLARD WASH
PROBLEM	- BID OVERCHUTE SIV-48 SLABS
PROGRAM	P7348
BY	JFF
CHKD	

CODE (1)	CODE (2)	CODE (3)
1.	1.	3.

CODE (1) = 1.0 ENGLISH UNITS
= 2.0 METRIC UNITS
= 3.0 SI UNITS

CODE (2) = 1.0 AASHO LL
= 2.0 INDONESIAN BINA MARGA LL

CODE (3) = 1.0 AASHO GIRDERS
= 2.0 INDONESIAN METRIC GIRDERS
= 3.0 INPUT GIRDER DIMENSIONS BELOW

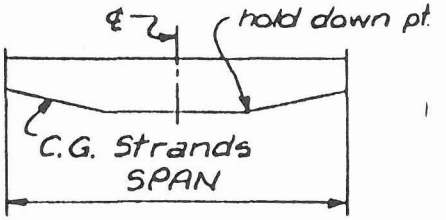

GENERAL DATA

DESIGN LL [10] 3

LL =1 -HS20-44
LL =2 -HS20-44 + INTERSTATE
LL =3 -LL+SDL MOMENTS TO BE READ IN ON FORM 2
LL =4 -INDONESIAN BINA MARGA LL

	GIRDER	DECK
UNIT WEIGHT OF CONCRETE (KCF)	.150	.150
CONCRETE STRENGTH AT 28 DAYS (KSI)	5.	4.
ALLOWABLE FINAL TENSION IN CONCRETE (PSI)	424.	
STRAND STEEL ULTIMATE STRENGTH (KSI)	270.	(250. OR 270. KSI ONLY)
INITIAL PRESTRESSING STEEL TENSION (KSI)	202.5	
ASSUMED TOTAL PRESTRESS LOSSES (KSI)	55.	
SLAB STRUCTURAL THICKNESS (IN)	12.	
MONOLITHIC WEARING SURFACE (IN)	.5	
YIELD STRESS CONVENTIONAL REINFORCEMENT (KSI)	60.	

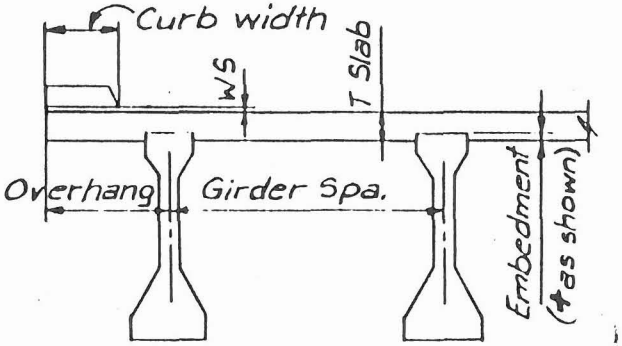

GIRDER DATA

GIRDER TYPE NO. [10] (BLANK IF CODE (3) = 3.0)

STRAND ARRANGEMENT [20] 0=BY COMPUTER 1=TO BE SPECIFIED ON FORM 3

SPAN LENGTH (FT)	46.	HOLD-DOWN PTS. (FT FROM ℄)	0.
GIRDER SPACING (FT)	4.	WIDTH OF CURB (FT)	0.
DECK OVERHANG (FT)	0.	DECK EMBEDMENT (IN)	0.

NOTE- OVERHANG AND CURB WIDTH = 0. FOR INTERIOR GIRDER

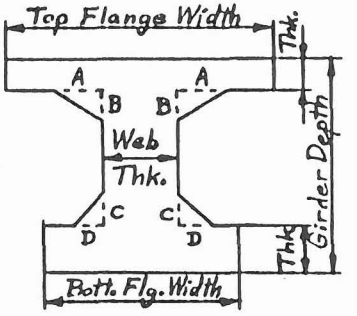

GIRDER SECTION PROPERTIES INPUT (THIS CARD REQUIRED ONLY IF CODE (3) = 3.0)

(ALL DIMENSIONS IN INCHES)

GIRDER DEPTH	TOP FLANGE WIDTH	TOP FLANGE THICKNESS	BOTTOM FLANGE WIDTH	BOTTOM FLANGE THICKNESS	WEB THICKNESS	TOP FILLET A	TOP FILLET B	BOTTOM FILLET C	BOTTOM FILLET D
21.	46.88	5.47	48.	5.47	17.85	0.	0.	0.	0.

11

P7348 PRESTRESSED BRIDGE GIRDER DESIGN-ENGLISH UNITS

SVERDRUP AND PARCEL

FORM 2 OF ___

NOTE -
THIS FORM TO BE USED ONLY WHEN A GIRDER IS TO BE DESIGNED CONTINUOUS FOR LIVE LOAD, OR WHEN SOME TYPE OF LIVE LOAD OTHER THAN THOSE PROVIDED IN THE PROGRAM IS TO BE APPLIED. READ IN LL=3 ON FORM 1. THIS ALLOWS THE LIVE LOAD(INCLUDING IMPACT), SIDEWALK LIVE LOAD, SUPERIMPOSED DEAD LOAD, CREEP, SHRINKAGE, AND TEMPERATURE MOMENTS AND SHEARS AT 10TH POINTS TO BE READ IN DIRECTLY. SUPERIMPOSED DEAD LOAD AND SIDEWALK LIVE LOAD MOMENTS AND SHEARS MUST BE READ IN HERE WHEN LL=9 RATHER THAN USING THE ADDITIONAL LOAD OPTION ON FORM 3 WHICH IS INTENDED FOR SIMPLE SPANS ONLY. SIDEWALK LIVE LOAD MAY BE READ IN SEPARATELY OR COMBINED WITH LIVE LOAD. IF CREEP, SHRINKAGE, AND TEMPERATURE MOMENTS AND SHEARS ARE READ IN AT SUPPORTS ONLY, AND ALL INTERMEDIATE POINTS ARE LEFT BLANK, THE PROGRAM WILL AUTOMATICALLY COMPUTE VALUES AT INTERMEDIATE POINTS USING LINEAR INTERPOLATION. WHEN THIS FORM IS USED, ALL 23 CARDS ARE REQUIRED.

COEFF. FOR AASHTO GROUP LOADING TO REDUCE TO NUS WHEN TEMPERATURE INCLUDED: 1.

LOAD FACTOR FOR CREEP+SHRINKAGE: 1.3

MOMENTS IN FT-KIPS
SHEARS IN KIPS

POINT	LL MOMENT	LL SHEAR	SDWK LL MOMENT	SDWK LL SHEAR	TEMP. MOMENT	TEMP. SHEAR
0 (SUPPORT)	0.	30.4	.	.	.	.
1	125.9	24.3	.	.	.	.
2	223.8	18.2	.	.	.	.
3	293.7	12.2	.	.	.	.
4	335.7	6.1	.	.	.	.
5	349.7	0.	.	.	.	.
6	335.7	-6.1	.	.	.	.
7	293.7	-12.2	.	.	.	.
8	223.8	-18.2	.	.	.	.
9	125.9	-24.3	.	.	.	.
10 (SUPPORT)	0.	-30.4	.	.	.	.

POINT	SDL MOMENT	SDL SHEAR	CREEP MOMENT	CREEP SHEAR	SHRINK. MOMENT	SHRINK. SHEAR
0 (SUPPORT)	0.	3.6	.	.	.	.
1	15.	2.9	.	.	.	.
2	26.7	2.2	.	.	.	.
3	35.1	1.5	.	.	.	.
4	40.1	.7	.	.	.	.
5	41.8	0.	.	.	.	.
6	40.1	-.7	.	.	.	.
7	35.1	-1.5	.	.	.	.
8	26.7	-2.2	.	.	.	.
9	15.	-2.9	.	.	.	.
10 (SUPPORT)	0.	-3.6	.	.	.	.

P7348 PRESTRESSED BRIDGE GIRDER DESIGN-ENGLISH UNITS

SVERDRUP AND PARCEL

FORM 3 OF ___

LOAD CARDS (3 TYPES PROVIDED FOR. NO LIMIT ON NUMBER ALLOWED.)

LOAD TYPE -1) CONCENTRATED DIAPHRAGM LOAD
2) SUPERIMPOSED UNIFORM DEAD LOAD (SDL)
3) UNIFORMLY DISTR. SIDEWALK LIVE LOAD
4) LAST CARD (ALWAYS REQUIRED)

X1 = DISTANCE FROM LEFT END OF SPAN TO CONCENTRATED LOAD.
DISTANCE FROM LEFT END OF SPAN TO BEGINNING UNIF. LOAD.

X2 = DISTANCE FROM LEFT END OF SPAN TO END UNIFORM LOAD.

TYPE (1)	W (K OR K/FT) (10-16)	X1 (FT) (17-24)	X2 (FT) (25-32)
1	.212	15.3333	.
1	.212	30.6667	.
	.	.	.
	.	.	.
	.	.	.
4			

PRESTRESSING DATA CARD (REQUIRED IF STRAND ARRANGEMENT TO BE SPECIFIED=1 IN COL.20 ON FORM 1. REQUIRED IF CODE(3)=3.0 ON FORM 1.)

NO. STRANDS (1-2)	SIZE* (5)	(7-8)	DIST. BOTT. GDR. TO C.G. STRANDS AT ℄ (IN) (9-16)	AT END (IN) (17-24)
20	1	2	2.8	2.8

TO BE LEFT JUSTIFIED

* STRAND SIZE 1/2", 7/16" AND 3/8" ONLY.

P7348 Input File BIDSLAB.48I

```
JOB NO. 13884 FCDMC / BULLARD WASH                                PROGRAM P7348
PROBLEM - BID OVERCHUTE SIV-48 SLABS                 BY JFF          CHKD CAR
    1.        1.        3.
         3
     .150      .150
    5.        4.
  424.
  270.
  202.5
   55.
   12.
     .5
   60.
                    1
   46.        0.
    4.        0.
    0.        0.
  21.     46.88    5.47   48.      5.47   17.85    0.      0.      0.      0.
    1.        1.3
       0.       30.4
     125.9      24.3
     223.8      18.2
     293.7      12.2
     335.7       6.1
     349.7       0.
     335.7      -6.1
     293.7     -12.2
     223.8     -18.2
     125.9     -24.3
       0.      -30.4
       0.        3.6
      15.        2.9
      26.7       2.2
      35.1       1.5
      40.1        .7
      41.8       0.
      40.1       -.7
      35.1      -1.5
      26.7      -2.2
      15.       -2.9
       0.       -3.6
1           .212 15.3333
1           .212 30.6667
4
20  1 2   2.8     2.8
```

```
SVERDRUP CORPORATION , INC.                    17: 5:55     APR  6, 1998

JOB NO. 13884 FCDMC / BULLARD WASH                          PROGRAM P7348

PROBLEM - BID OVERCHUTE SIV-48 SLABS              BY JFF        CHKD CAR

 DATE OF LAST REVISION -  JULY 26, 1986

 CODE(1)= 1.0 - ENGLISH UNITS
 CODE(2)= 1.0 - AASHTO LIVE LOAD SYSTEM
 CODE(3)= 3.0 - INPUT GIRDER DIMENSIONS
 ******************************************************************************
 PRESTRESSED GIRDER DESIGN
 ******************************************************************************
   GENERAL DATA                            GIRDER            DECK
      CONC. STRENGTH (KSI)                  5.00             4.00
      UNIT WEIGHT OF CONCR. (K/CFT)          .150             .150
      ALLOW FINAL TENSION (PSI)          424.00

      STRAND STEEL ULTIMATE STRENGTH (KSI)      270.00
      INITIAL PRESTRESSING STEEL TENSION (KSI) 202.50
      ASSUMED TOTAL PRESTRESS LOSSES (KSI)       55.00

      SLAB STRUCTURAL THICKNESS  = 12.00 IN.
      MONOLITHIC WEARING SURFACE =   .50 IN.

      CONVENTIONAL REINFORCEMENT FOR SHEAR AND TENSION
            YIELD STRESS (KSI) =  60.0

      DESIGN LL = 3 - MOMENTS AND SHEARS TO BE READ IN
                      FOR LL, SWLL, SDL, C, S, AND T

      GIRDER DATA
         AASHTO-PCI  TYPE  0  GIRDER       HOLD-DOWN PTS.    .00 FT FROM CL
         SPAN  LENGTH  =    46.00 FT       GIRDER   SPACING   =     4.00 FT
         DECK OVERHANG =    .0000 FT       WIDTH   OF  CURB   =    .0000 FT
         DECK EMBEDMENT=    .00   IN

      GIRDER INPUT DIMENSIONS
       GIRDER   TOP FLANGE   BOTTOM FLANGE  WEB    TOP FILLET   BOTTOM FILLET
        DEPTH  WIDTH   THK.  WIDTH   THK.   THK.    A      B      C      D
        21.00  46.88   5.47  48.00   5.47  17.85    .00    .00    .00    .00

      CALCULATED SECTION PROPERTIES
        AREA     WEIGHT  MOM.INERTIA  SM.TOP    SM.BOTT.  YT      YB
       698.56     .7277     34097.0   3226.41   3268.53  10.57   10.43

      COMPOSITE SECTION PROPERTIES
               AREA=  1213.75 IN**2            I=  121673. IN**4
             WEIGHT=   1.3527 K/FT            YT=   -15.54 IN
              DEPTH=    33.01 IN             YB=    17.46 IN
         SLAB WIDTH=    48.00 IN          SM TOP=   -7832. IN**3
             SLAB Q=    4913. IN**3    SM BOTTOM=    6967. IN**3

      ADDITIONAL LOADS
         TYPE            MAGNITUDE       LOC. FROM LEFT END
         DIAPHRAGM         .212 KIPS         15.333 FT
         DIAPHRAGM         .212 KIPS         30.667 FT
```

SVERDRUP CORPORATION , INC. 17: 5:55 APR 6, 1998

JOB NO. 13884 FCDMC / BULLARD WASH PROGRAM P7348

PROBLEM - BID OVERCHUTE SIV-48 SLABS BY JFF CHKD CAL

****

MOMENTS(FT.KIPS) AT TENTH POINTS

****

POINT	GIRDER DEAD LOAD	SLAB DEAD LOAD	DIAPHRAGM DEAD LOAD
0	.0	.0	.0
1	69.3	59.5	1.0
2	123.2	105.8	2.0
3	161.7	138.9	2.9
4	184.8	158.7	3.3
5	192.5	165.3	3.3
6	184.8	158.7	3.3
7	161.7	138.9	2.9
8	123.2	105.8	2.0
9	69.3	59.5	1.0
10	.0	.0	.0

POINT	LIVE LOAD	SIDEWALK LIVE LOAD	SUPERIMPOSED DEAD LOAD
0	.0	.0	.0
1	125.9	.0	15.0
2	223.8	.0	26.7
3	293.7	.0	35.1
4	335.7	.0	40.1
5	349.7	.0	41.8
6	335.7	.0	40.1
7	293.7	.0	35.1
8	223.8	.0	26.7
9	125.9	.0	15.0
10	.0	.0	.0

POINT	CREEP	SHRINKAGE	TEMPERATURE
0	.0	.0	.0
1	.0	.0	.0
2	.0	.0	.0
3	.0	.0	.0
4	.0	.0	.0
5	.0	.0	.0
6	.0	.0	.0
7	.0	.0	.0
8	.0	.0	.0
9	.0	.0	.0
10	.0	.0	.0

Chk. DL Moments by $\frac{wL^2}{8}$: Gdr. DL $= .7277 \times 46^2/8 = 192.5^{k}$

Slab DL $= 4 \times .15 \times 12.5 \times 46^2/(8 \times 12) = 165.3^{k}$

Diaph. DL $= Pa = PL/3 = .212 \times 46/3 = 3.3^{k}$

SVERDRUP CORPORATION , INC. 17: 5:55 APR 6, 1998

JOB NO. 13884 FCDMC / BULLARD WASH PROGRAM P7348

PROBLEM - BID OVERCHUTE SIV-48 SLABS BY JFF CHKD CAR

****
SHEARS(KIPS) AT TENTH POINTS
****

POINT	GIRDER DEAD LOAD	SLAB DEAD LOAD	DIAPHRAGM DEAD LOAD
0	16.7	14.4	.2
1	13.4	11.5	.2
2	10.0	8.6	.2
3	6.7	5.7	.2
4	3.3	2.9	.0
5	.0	.0	.0
6	-3.3	-2.9	.0
7	-6.7	-5.7	-.2
8	-10.0	-8.6	-.2
9	-13.4	-11.5	-.2
10	-16.7	-14.4	-.2

POINT	LIVE LOAD	SIDEWALK LIVE LOAD	SUPERIMPOSED DEAD LOAD
0	30.4	.0	3.6
1	24.3	.0	2.9
2	18.2	.0	2.2
3	12.2	.0	1.5
4	6.1	.0	.7
5	.0	.0	.0
6	-6.1	.0	-.7
7	-12.2	.0	-1.5
8	-18.2	.0	-2.2
9	-24.3	.0	-2.9
10	-30.4	.0	-3.6

POINT	CREEP	SHRINKAGE	TEMPERATURE
0	.0	.0	.0
1	.0	.0	.0
2	.0	.0	.0
3	.0	.0	.0
4	.0	.0	.0
5	.0	.0	.0
6	.0	.0	.0
7	.0	.0	.0
8	.0	.0	.0
9	.0	.0	.0
10	.0	.0	.0

SVERDRUP CORPORATION , INC. 17: 5:55 APR 6, 1998

JOB NO. 13884 FCDMC / BULLARD WASH PROGRAM P7348

PROBLEM - BID OVERCHUTE SIV-48 SLABS BY JFF CHKD CAR

****

PRESTRESS DESIGN

****

FACTOR FOR AASHTO GROUP LOADING WHEN TEMPERATURE IS INCLUDED= 1.0000
LOAD FACTOR FOR CREEP AND SHRINKAGE IN APPLIED ULTIMATE LOAD= 1.3000

****

** DESIGN BASED ON 20-1/2 IN.DIA.STRANDS ****
** YCL = 2.8000 IN YEND = 2.8000 IN ****
** INITIAL PRESTRESS FORCE = 578.34 KIPS ****
** FINAL PRESTRESS FORCE = 451.35 KIPS ****

** REQD FCI EXCEEDS FC' ****

** CONC. RELEASE STRENGTH REQD = 5.187 KSI ****

TENTH POINT STRESSES IN PSI

	INITIAL CONDITION		FINAL CONDITION			
PT.	INTERFACE	BOT	TOP	INTERFACE		BOT
0	540.1	-2178.3	.0	.0	421.5	-1700.0
**	.792 SQ IN NON-P.S. REINF REQD FOR INITIAL INTRFC TENSION ****					
1	282.4	-1923.9	-193.1	-43.9	-110.3	-980.8
**	.041 SQ IN NON-P.S. REINF REQD FOR INITIAL INTRFC TENSION ****					
2	82.0	-1726.1	-343.3	-78.1	-524.7	-420.7
3	-61.2	-1584.7	-450.6	-102.5	-821.8	-19.5
4	-147.1	-1499.9	-515.0	-117.2	-999.1	220.2
5	-175.7	-1471.7	-536.5	-122.1	-1057.8	299.8
6	-147.1	-1499.9	-515.0	-117.2	-999.1	220.2
7	-61.2	-1584.7	-450.6	-102.5	-821.8	-19.5
8	82.0	-1726.1	-343.3	-78.1	-524.7	-420.7
9	282.4	-1923.9	-193.1	-43.9	-110.3	-980.8
**	.041 SQ IN NON-P.S. REINF REQD FOR INITIAL INTRFC TENSION ****					
10	540.1	-2178.3	.0	.0	421.5	-1700.0
**	.792 SQ IN NON-P.S. REINF REQD FOR INITIAL INTRFC TENSION ****					

AT PT. 5 FCIR = -1298.9 FCDS = 513.2 **

NOTE - THE STRESSES FOR FINAL CONDITION AT THE SUPPORTS
SHOULD BE INVESTIGATED AS CRACKED SECTION

SVERDRUP CORPORATION , INC. 17: 5:55 APR 6, 1998

JOB NO. 13884 FCDMC / BULLARD WASH PROGRAM P7348

PROBLEM - BID OVERCHUTE SIV-48 SLABS BY JFF CHKD CAR

TENTH POINT ULTIMATE STRENGTH CHECK

PT.	APPLIED ULTIMATE MOMENT 1.3/PHI(D+5/3(L+I)) +1.3000(C+S) (FT-KIPS)	ULTIMATE MOMENT CAPACITY (FT-KIPS)
0	.00	1810.13
1	460.99	1810.13
2	819.82	1810.13
3	1076.48	1810.13
4	1230.22	1810.13
5	1281.37	1810.13
6	1230.22	1810.13
7	1076.48	1810.13
8	819.82	1810.13
9	460.99	1810.13
10	.00	1810.13

SHEAR DESIGN
** MIN. AREA OF STEEL = .36 SQ.IN./FT. ****
** MAX. STIRRUP SPACING = 22.65 IN. ****

PT.	ULT. VERT. SHEAR 1.3/PHI(D+5/3(L+I)) +1.3000(C+S) (KIPS)	AREA OF STL. (SQ IN/FT)	EXCESS HORIZ. SHEAR (K/FT)
0	123.630	.36	.000
1	98.946	.36	.000
2	74.262	.36	.000
3	49.819	.36	.000
4	24.684	.36	.000
5	.000	.36	.000
6	-24.684	.36	.000
7	-49.819	.36	.000
8	-74.262	.36	.000
9	-98.946	.36	.000
10	-123.630	.36	.000

SVERDRUP CORPORATION , INC. 17: 5:55 APR 6, 1998

JOB NO. 13884 FCDMC / BULLARD WASH PROGRAM P7348

PROBLEM - BID OVERCHUTE SIV-48 SLABS BY JFF CHKD CAL

TENTH POINT DEFLECTIONS (IN. DOWNWARD)

PT.	GDR DL	IN.PRE.	DECK	DIA.	SUPER DL	TOT DL	SIDWK LL
0	.0000	.0000	.0000	.0000	.0000	.0000	.0000
1	.1546	-.4065	.1352	.0027	.0096	-.1044	.0000
2	.2925	-.7227	.2558	.0051	.0181	-.1512	.0000
3	.4004	-.9485	.3503	.0070	.0248	-.1660	.0000
4	.4689	-1.0841	.4102	.0083	.0290	-.1677	.0000
5	.4924	-1.1292	.4308	.0087	.0305	-.1668	.0000
6	.4689	-1.0841	.4102	.0083	.0290	-.1677	.0000
7	.4004	-.9485	.3503	.0070	.0248	-.1660	.0000
8	.2925	-.7227	.2558	.0051	.0181	-.1512	.0000
9	.1546	-.4065	.1352	.0027	.0096	-.1044	.0000
10	.0000	.0000	.0000	.0000	.0000	.0000	.0000

END OF JOB

SVERDRUP

JOB 13884 FCDMC / Bullard Wash

COMPUTATIONS FOR BID Canal Overchute

SHEET NO. 22 OF

DATE April 98

BY JFF CHKD CAR

Check For HS20-44 Live Load

FCDMC maintenance vehicles driving in the channel when it is dry will need to cross the overchute structure. The investigation on the following pages checks the structure previously designed for carrying water for its ability to carry vehicle loading. The analysis using Sverdrup computer program P7300 is for the 36 ton AASHTO HS20-44 vehicle. P7300 is mainly for the design of steel plate girders, but can also be used for live load analysis only. The program can be used for a minimum of two spans, so a dummy second span is used with a hinge at the center support. The maximum live load bending moment for the HS20-44 vehicle is 251.2'k, and the maximum live load shear and end reaction is 26.3k.

The previous analysis for water live load resulted in a maximum bending moment of 349.7'k and a maximum shear and end reaction of 30.4k.

Therefore, the overchute structure can carry the HS20-44 AASHTO live load that most highway bridges are designed for.

Sverdrup

Job 13884 FCDMC / Bullard Wash Channel Improvements
Computations for BID Canal Overchute

Sheet 23 of ____
Date 4-14-98
By J.F.Fischer Chkd. CAL

Live Load Distribution Factor for AASHTO-PCI Prestressed Concrete Slab

Reference: 1996 AASHTO Article 3.23.4.3

Shaded areas are input cells.

Slab: Type	S IV - 48		Overall Width of Bridge = W =	64	ft.
Width = S = b =	48	in.	Bridge Roadway Width =	62	ft.
Depth = t =	21	in.	Span Length = L =	46	ft.
Mom. of Inertia = I =	34517	in^4	No. of Lanes (Art. 3.6) = N_L =	5	
Poisson's Ratio = μ =	0.2				

Saint-Venant Torsion Constant = J = 107335 in^4

$(I/J)^{1/2}$ = 0.567082 <5 or =5, OK

Stiffness Constant = K = 0.621207

Stiffness Parameter = C = 0.864288

D = 5.644576

Live Load Distribution Factor = DF = Load Fraction = S*/D = 0.708645 wheels per slab

*with S converted to feet

P7300 TWO TO EIGHT SPAN CONTINUOUS GIRDER, ANALYSIS AND DESIGN

SVERDRUP AND PARCEL

FORM I

FORM ___ OF ___

JOB NO. 13884 FCDMC / BULLARD WASH PROGRAM P7300

PROBLEM ~~#~~ØBID OVERCHUTE - HIS-44 LIVE LOAD BY JFF CHKD

CODE(1) (col 4–6): 1.

+1 PRINT DL MOMENT, SHEARS AND DEFLECTION

-1 SUPPRESS PRINTING

+2 Additional PRINT OF Max. & Min. LL. DEFL.

CODE(2) (col 12–16): -1.

+1 DESIGN (SERVICE LO LOAD FACTOR, SEE BELOW ×)

+2 STRESS INVESTIGATION-FORM IIA MUST FOLLOW

-1 ANALYSIS ONLY

CODE(3) (col 22–26): 1.

+1 FORM IIA TO FOLLOW

-1 FORM IIB TO FOLLOW

CODE(4) (col 32–36): -1.

+1 PRINT STIFFNESS AND CARRY-OVER FACTORS

-1 SUPPRESS PRINTING

CODE(5) (col 42–46): 1.

+1 EXPANSION HINCE IN ONE OR MORE SPANS

-1 NO EXPANSION HINCES

CODE(6) (col 52–56): -1.

+1 PLOT MOMENT AND SHEAR ENVELOPES

-1 SUPPRESS PLOT

+2 DL MOMENTS, SHEARS, AND DEFLECTIONS ONLY. (1ST RUN FOR COMPOSITE CDR. ANALYSIS)

+3 TO BE USED FOR 2ND RUN FOR COMP. CDR. ANALY.

NOTE - FOR FORM IIB ONLY. 'LL COMPUTED'=0. FOR BOTH RUNS AND RUN BACK TO BACK.

(col 62–67): 152.

SDL FOR COMPOSITE CDR. USING FORM IIA WITH VARIABLE COMPOSITE I, OTHERWISE LEAVE BLANK AND ENTER UNDER FWS. (LBS/FT)

(col 5–6): 2.

NO. OF SPANS

(col 15–16): 4.

LIVE LOAD

H-15 =1.
HS-15=2.
H-20 =3.
HS-20=4.
HS-20 (INTERSTATE)=5.
SPECIAL LOC. (USE FORM IV) =6.

(col 24–28): 1.

LL COMPUTED

0.=VARIABLE NON-COMP. I
-1.=USING CONSTANT I
+1.=USING VARIABLE COMPOSITE I (WITH FORM IIA ONLY)

(col 35–40): .7086

'LLR'

NO. OF WHEELS FROM SIMPLE BM. DISTRIBUTION OF SLAB REACTIONS TO BE USED FOR SUBSTR. DESIGN

(col 46–47): 0.

SIDEWALK LL (LBS/FT)

(col 55–57): 0.

F_{AS} (LBS/FT)

(col 65): 1.

$N=E_S/E_C$

(col 67–70): 12.

SLAB THICKNESS (INCHES)

(col 77–80): 1.

DISTANCE FROM BOTTOM OF SLAB TO TOP OF WEB (INCHES)

(col 1–6): 1.

SPAN NO. OF FIRST SPAN. A NEGATIVE NO. WILL COUNT SPAN NO. BACKWARDS.

(col 15–20): 0.

SLAB REINF. ACTIVE AT SUPPORT. IN^2/FT OF SLAB

(col 24–30): 0.

POSITION OF REINFORCING (INCHES FROM TOP OF SLAB)

(col 35–40): 1.

SHEAR D.F. DIVIDED BY D.F.

(col 37–40): 1.

FATIGUE CASE (1.0, 1.1, 2.0, OR 3.0) IF 1.0, 11 OR 12 KSI IS USED FOR CAT. C. IF 1.1, 9 OR 10 KSI IS USED FOR CAT. C

(col 44–45): 2.

ENTER
1=REDUNDANT STRUCTURE
2=NONREDUNDANT STRUCTURE
(SEE COMMENTARY FOR AASHTO ART 1.7.3.1)

(col 49–50): 2.

ENTER
1=ONE LANE BRIDGE
2=MULTILANE BRIDGE

(col 55–60): .

F'_C (KSI) ENTER ONLY IF LOAD FACTOR DESIGN IS DESIRED, OTHERWISE LEAVE BLANK.

(col 65–70): 1.

CAPACITY REDUCTION FACTOR

Ø Minnesota only - all others = 1.0

(4)

P7300 TWO TO EIGHT SPAN CONTINUOUS GIRDER, DESIGN

SVERDRUP AND PARCEL

FORM IIA

FORM OF

SPAN LENGTH(FT)	D.F.	D.L.(LBS/FT)	EFF.SLAB WIDTH(IN)	DIAPH.SPA.(FT)
46.01	.7086	637.43	48.	23.

TYPE	RANGE (FT)	A (INCH)	B (INCH)	STEEL-TYPE
1.	46.01	36.	36.	.
2.	46.01	10.	1.	1.
3.	46.01	10.	1.	1.
4.	46.01	3.	5.3849	1.

NOTE: USE 1 SHEET PER SPAN (SPANS MUST BE IN ORDER)

RANGE = DISTANCE IN FEET FROM START OF SPAN TO CHANGE.

D.F. = DISTRIBUTION FACTOR. THE FRACTION OF THE WHEEL LOAD PER AASHTO.

EFF. SLAB: FOR COMPOSITE GRDRS. ONLY - OTHERWISE LEAVE BLANK.

DIAPH. SPA = DIAPHRAGM SPACING IS USED TO FIND THE ALLOW. COMPR. STRESS. COMP. GRDRS. ARE ASSUMED LAT. SUPPORTED.

TYPE: (LIST IN ORDER)

1. WEB DEPTH
   - A = DEPTH AT BEGIN.
   - B = DEPTH AT END
   - { + STRAIGHT HAUNCH / - PARABOLIC HAUNCH
2. TOP FLANGE PLATE
   - A = WIDTH
   - B = THICKNESS
3. BOTTOM FLANGE PLATE
   - A = WIDTH
   - B = THICKNESS
4. WEB THICKNESS
   - A = FATIGUE CATEGORY
   - B = THICKNESS

{ A = 1, B = 2, C = 3, D = 4, E = 5, F = 6 } B' = 7 E' = 8

STEEL-TYPE (TO BE SPEC. FOR TYPE 2, 3 & 4)

1. A36
2. A441 (MOD.), A441 (≤ 3/4")
   A572 (≤ 1-1/2"), A588 (≤ 4")
3. A514 (< 2-1/2")

NOTE:

THE LAST RANGE VALUE FOR EACH TYPE <u>MUST</u> EQUAL THE SPAN LENGTH.

Rev. 1-89

P7300 TWO TO EIGHT SPAN CONTINUOUS GIRDER, DESIGN

SVERDRUP AND PARCEL

FORM IIA

FORM OF

SPAN LENGTH(FT)	D.F.	D.L.(LBS/FT)	EFF.SLAB WIDTH(IN)	DIAPH.SPA.(FT)
46.	.7086	637.43	48.	23.

TYPE	RANGE (FT)	A (INCH)	B (INCH)	STEEL-TYPE
1.	46.	36.	36.	.
2.	46.	10.	1.	1.
3.	46.	10.	1.	1.
4.	46.	3.	5. 3849	1.

NOTE: USE 1 SHEET PER SPAN (SPANS MUST BE IN ORDER)

RANGE = DISTANCE IN FEET FROM START OF SPAN TO CHANGE.

D.F. = DISTRIBUTION FACTOR. THE FRACTION OF THE WHEEL LOAD PER AASHTO.

EFF. SLAB: FOR COMPOSITE GRDRS. ONLY - OTHERWISE LEAVE BLANK.

DIAPH. SPA = DIAPHRAGM SPACING IS USED TO FIND THE ALLOW. COMPR. STRESS. COMP. GRDRS. ARE ASSUMED LAT. SUPPORTED.

TYPE: (LIST IN ORDER)

1. WEB DEPTH
   - A = DEPTH AT BEGIN.
   - B = DEPTH AT END

   { + STRAIGHT HAUNCH
   { - PARABOLIC HAUNCH
2. TOP FLANGE PLATE
   - A = WIDTH
   - B = THICKNESS
3. BOTTOM FLANGE PLATE
   - A = WIDTH
   - B = THICKNESS
4. WEB THICKNESS
   - A = FATIGUE CATEGORY
   - B = THICKNESS

   A = 1, B = 2, C = 3, D = 4, E = 5, F = 6

   B' = 7, E' = 8

STEEL-TYPE (TO BE SPEC. FOR TYPE 2, 3 & 4)

1. A36
2. A441 (MOD.), A441 (≤3/4")
   A572 (≤1-1/2"), A588 (≤4")
3. A514 (<2-1/2")

NOTE:

THE LAST RANGE VALUE FOR EACH TYPE <u>MUST</u> EQUAL THE SPAN LENGTH.

Rev. 1-89

P7300 TWO TO EIGHT SPAN CONTINUOUS GIRDER, ANALYSIS AND DESIGN

SVERDRUP AND PARCEL

FORM III

FORM OF

HINGE & ADDITIONAL D.L. CARDS (1 REQ'D FOR EACH SPAN)

	H1 (FT)	H2 (FT)	X1 (FT)	X2 (FT)	W1 (LBS/FT)	W2 (LBS/FT)
SPAN 1	0.	46.				
SPAN 2	0.	0.				
SPAN 3						
SPAN 4						
SPAN 5						
SPAN 6						
SPAN 7						
SPAN 8						

NOTE: IF ALL VALUES ARE ZERO, IT IS ONLY NECESSARY TO ENTER 0. IN H1.

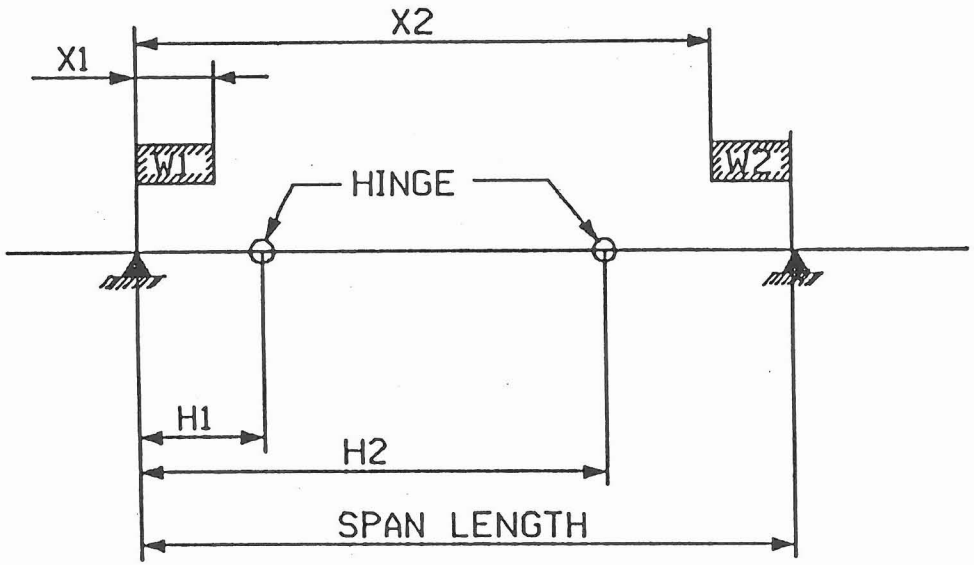

P7300 Input File BIDSLAB1.00I

```
JOB NO. 13884 FCDMC / BULLARD WASH                          PROGRAM P7300
PROBLEM - BID OVERCHUTE - HS20-44 LIVE LOAD              BY JFF     CHKD CML
    1.       -1.        1.       -1.        1.       -1.       158.
    2.        4.        1.         .7086     0.        0.       1.  12.     1.
    1.        0.        0.     1.    1.   2.    2.                1.
     46.01     .7086  637.43     48.       23.
      1.     46.01     36.       36.
      2.     46.01     10.        1.        1.
      3.     46.01     10.        1.        1.
      4.     46.01      3.        5.3849    1.
     46.       .7086  637.43     48.       23.
      1.     46.       36.       36.
      2.     46.       10.        1.        1.
      3.     46.       10.        1.        1.
      4.     46.        3.        5.3849    1.
      0.       46.
      0.        0.
```

```
P7300 TWO TO 8 SPAN CONTINUOUS STEEL GIRDER DESIGN|SVERDRUP CORPORATION PG   1
Run of MICRO P7300.EXE QA BY JOEHNK, EHREDT   4/91|JOB NO. 13884 FCDMC / BULLARD WASH
Last Modified:FEB.-94 By: G.JOEHNK, P.BOTT  2/94  |PROBLEM - BID OVERCHUTE - HS20-44 LIVE LOAD
Design Specification Reference: AASHTO 1992       |BIDSLAB1.00I
MICRO Version 1.10            16:16 AUG 25,'98    |BIDSLAB1.00O
```

****

INPUT DATA

****

CODE(1)	CODE(2)	CODE(3)	CODE(4)	CODE(5)	CODE(6)
1.0000	-1.0000	1.0000	-1.0000	1.0000	-1.0000

NO. SPANS	LIVE LOAD	L.L.C.	L.L.R.	L.L.SDWK.	FWS.+(SDL)	N=ES/EC	SLAB THCK.	DIST.SLAB TO WEB
2.0000	4.0000	1.0000	.7086	.0000	.0000	1.0000	12.0000	1.0000

WORKING LOAD DESIGN

SLAB REBARS INCL. IN COMP. DESIGN AT SUPP.= .000 IN2/FT. AT .000 INCH FROM TOP OF SLAB

RATIO SHEAR D.F./D.F.= 1.00 NONREDUNDANT STRUCTURE ASSUMED

MULTILANE BRIDGE ASSUMED

SPAN LENGTH	D.F.	DL.(SDL)	EFF.SLAB WIDTH
46.0100	.7086	637.4300	48.0000	23.0000

TYPE	RANGE	A	B	STEEL TYPE
1.0000	46.0100	36.0000	36.0000	.0000
2.0000	46.0100	10.0000	1.0000	1.0000
3.0000	46.0100	10.0000	1.0000	1.0000
4.0000	46.0100	3.0000	5.3849	1.0000

SPAN LENGTH	D.F.	DL.(SDL)	EFF.SLAB WIDTH
46.0000	.7086	637.4300	48.0000	23.0000

TYPE	RANGE	A	B	STEEL TYPE
1.0000	46.0000	36.0000	36.0000	.0000

2.0000	46.0000	10.0000	1.0000	1.0000
3.0000	46.0000	10.0000	1.0000	1.0000
4.0000	46.0000	3.0000	5.3849	1.0000

H1	H2	X1	X2	W1	W2
46.0000	.0000	.0000	.0000	.0000	.0000
.0000	.0000	.0000	.0000	.0000	.0000

```
P7300 TWO TO 8 SPAN CONTINUOUS STEEL GIRDER DESIGN|SVERDRUP CORPORATION PG   2
Run of MICRO P7300.EXE QA BY JOEHNK, EHREDT   4/91|JOB NO. 13884 FCDMC / BULLARD WASH
Last Modified:FEB.-94 By: G.JOEHNK, P.BOTT  2/94  |PROBLEM - BID OVERCHUTE - HS20-44 LIVE LOAD
Design Specification Reference: AASHTO 1992       |BIDSLAB1.00I
MICRO Version 1.10            16:16 AUG 25,'98    |BIDSLAB1.00O
==================================================================================================
NUMBER OF SPANS    2

SPAN LENGTHS      46.01      46.00

NOTE, 99999.00 INDICATES SYMMETRICAL SPANS
==================================================================================================
```

DEAD LOAD MOMENTS(FT-KIPS) AND SHEARS(KIPS) AT TENTH POINTS

POINT	MOMENT	SHEAR
SPAN 1		
0	.0	14.7
1	60.7	11.7
2	107.9	8.8
3	141.6	5.9
4	161.9	2.9
5	168.6	.0
6	161.9	-2.9
7	141.6	-5.9
8	107.9	-8.8
9	60.6	-11.7
10	-.1	-14.7
SPAN 2		
0	-.1	14.7
1	60.6	11.7
2	107.8	8.8
3	141.5	5.9
4	161.8	2.9
5	168.5	.0
6	161.8	-2.9
7	141.6	-5.9
8	107.9	-8.8
9	60.7	-11.7
10	.0	-14.7

DEAD LOAD DEFLECTIONS(INCHES) AT TENTH POINTS

POINT	DEFLECTION
SPAN 1	
0	.00
1	.03
2	.05
3	.06
4	.08
5	.08
6	.08
7	.06
8	.05
9	.02
10	.00
SPAN 2	
0	.00
1	.02
2	.05
3	.06
4	.08
5	.08
6	.08
7	.06
8	.05
9	.02
10	.00

NUMBER OF SPANS 2

SPAN LENGTHS 46.01 46.00

NOTE, 99999.00 INDICATES SYMMETRICAL SPANS

NOTE,THE FOLLOWING MOMENTS,SHEARS AND DEFLECTIONS ARE FOR SUPERIMPOSED DL ONLY. SDL= 158.0000

SUPERIMPOSED DEAD LOAD MOMENTS(FT-KIPS) AND SHEARS (KIPS) AT TENTH POINTS

POINT	MOMENT	SHEAR
SPAN 1		
0	.0	3.6
1	15.0	2.9
2	26.8	2.2
3	35.1	1.5
4	40.1	.7
5	41.8	.0
6	40.1	-.7
7	35.1	-1.5
8	26.7	-2.2
9	15.0	-2.9
10	.0	-3.6
SPAN 2		
0	.0	3.6
1	15.0	2.9
2	26.7	2.2
3	35.1	1.5
4	40.1	.7
5	41.8	.0
6	40.1	-.7
7	35.1	-1.5
8	26.7	-2.2
9	15.0	-2.9
10	.0	-3.6

SUPERIMPOSED DEAD LOAD DEFLECTIONS(INCHES) AT TENTH POINTS

POINT	DEFLECTION
SPAN 1	
0	.00
1	.00
2	.00
3	.00
4	.00
5	.00
6	.00
7	.00
8	.00
9	.00
10	.00
SPAN 2	
0	.00
1	.00
2	.00
3	.00
4	.00
5	.00
6	.00
7	.00
8	.00
9	.00
10	.00

MAXIMUM LIVE LOAD MOMENTS(FT-KIPS)AT TENTH POINTS. ASSOCIATED SHEARS(KIPS) IN PARENTHESIS.

POINT	POSITIVE SDK LL	NEGATIVE SDK LL	LANE LOAD INCL.IMP. POSITIVE	LANE LOAD INCL.IMP. NEGATIVE	TRUCK LOAD INCL.IMP. POSITIVE	TRUCK LOAD INCL.IMP. NEGATIVE	FWS.+(SDL)
SPAN 1							
0	.0	.0	.0	.0	.0	.0	.0
0	(.0)	(.0)	(6.4)	(.0)	(2.5)	(.0)	(.0)
1	.0	.0	62.0	.0	105.7	.0	.0
1	(.0)	(.0)	(12.8)	(.0)	(23.0)	(.0)	(.0)
2	.0	.0	110.3	.0	181.1	.0	.0
2	(.0)	(.0)	(10.7)	(.0)	(19.7)	(.0)	(.0)
3	.0	.0	144.7	.0	226.2	.0	.0
3	(.0)	(.0)	(8.6)	(.0)	(16.4)	(.0)	(.0)
4	.0	.0	165.4	.0	251.2	.0	.0
4	(.0)	(.0)	(6.4)	(.0)	(12.8)	(.0)	(.0)
5	.0	.0	172.3	.0	250.9	.0	.0
5	(.0)	(.0)	(-4.3)	(.0)	(-9.5)	(.0)	(.0)
6	.0	.0	165.4	.0	251.1	.0	.0
6	(.0)	(.0)	(-6.4)	(.0)	(-12.8)	(.0)	(.0)
7	.0	.0	144.7	.0	226.1	.0	.0
7	(.0)	(.0)	(-8.6)	(.0)	(-16.4)	(.0)	(.0)
8	.0	.0	110.2	.0	181.0	.0	.0
8	(.0)	(.0)	(-10.7)	(.0)	(-19.7)	(.0)	(.0)
9	.0	.0	61.9	.0	105.6	.0	.0
9	(.0)	(.0)	(-12.8)	(.0)	(-23.0)	(.0)	(.0)
10	.0	.0	.0	-.1	.0	-.2	.0
10	(.0)	(.0)	(.0)	(-14.2)	(.0)	(-23.8)	(.0)
SPAN 2							
0	.0	.0	.0	-.1	.0	-.2	.0
0	(.0)	(.0)	(9.8)	(5.7)	(18.0)	(.0)	(.0)
1	.0	.0	62.0	-.1	105.7	-.2	.0
1	(.0)	(.0)	(12.8)	(.0)	(23.0)	(.0)	(.0)
2	.0	.0	110.3	-.1	181.1	-.2	.0
2	(.0)	(.0)	(10.7)	(.0)	(19.7)	(.0)	(.0)
3	.0	.0	144.7	-.1	226.2	-.2	.0
3	(.0)	(.0)	(8.6)	(.0)	(16.4)	(.0)	(.0)
4	.0	.0	165.4	-.1	251.1	-.1	.0
4	(.0)	(.0)	(6.4)	(.0)	(12.8)	(.0)	(.0)
5	.0	.0	172.3	-.1	250.9	-.1	.0
5	(.0)	(.0)	(-4.3)	(.0)	(-9.5)	(.0)	(.0)
6	.0	.0	165.4	-.1	251.1	-.1	.0

6	(.0)	(.0)	(-6.4)	(.0)	(-12.8)	(.0)	(.0)
7	.0	.0	144.7	.0	226.2	-.1	.0
7	(.0)	(.0)	(-8.6)	(.0)	(-16.4)	(.0)	(.0)
8	.0	.0	110.3	.0	181.1	.0	.0
8	(.0)	(.0)	(-10.7)	(.0)	(-19.7)	(.0)	(.0)
9	.0	.0	62.0	.0	105.7	.0	.0
9	(.0)	(.0)	(-12.8)	(.0)	(-23.0)	(.0)	(.0)
10	.0	.0	.0	.0	.0	.0	.0
10	(.0)	(.0)	(.0)	(-14.2)	(.0)	(-23.8)	(.0)

LIVE LOAD SHEARS(KIPS) AT TENTH POINTS. ASSOCIATED MOMENTS IN (). LEFT SUPPORT REACTIONS(KIPS)

	POINT	FWS.+(SDL)	POSITIVE SIDEWALK	NEGATIVE SIDEWALK	POS.LIVE LOAD+IMP.	NEG.LIVE LOAD+IMP.	ONE FULL LANE WIDTH NO IMPACT LANE	TRUCK	GIRDER REACT. INCL.IMP.(L.L.R) LANE	TRUCK
SPAN	1						40.7	57.4	18.6	26.3
	0	.0	.0	.0	26.3	.0				
	0(	.0)(	.0)(	.0)(	.0)(	.0)				
	1	.0	.0	.0	23.0	-1.5				
	1(	.0)(	.0)(	.0)(	105.7)(	60.7)				
	2	.0	.0	.0	19.7	-2.9				
	2(	.0)(	.0)(	.0)(	181.1)(	107.9)				
	3	.0	.0	.0	16.4	-4.4				
	3(	.0)(	.0)(	.0)(	226.2)(	141.6)				
	4	.0	.0	.0	13.1	-7.3				
	4(	.0)(	.0)(	.0)(	241.5)(	200.5)				
	5	.0	.0	.0	10.2	-10.2				
	5(	.0)(	.0)(	.0)(	234.4)(	234.5)				
	6	.0	.0	.0	7.3	-13.1				
	6(	.0)(	.0)(	.0)(	200.4)(	241.5)				
	7	.0	.0	.0	4.4	-16.4				
	7(	.0)(	.0)(	.0)(	141.5)(	226.1)				
	8	.0	.0	.0	2.9	-19.7				
	8(	.0)(	.0)(	.0)(	107.8)(	181.0)				
	9	.0	.0	.0	1.5	-23.0				
	9(	.0)(	.0)(	.0)(	60.6)(	105.6)				
	10	.0	.0	.0	.0	-26.3				
	10(	.0)(	.0)(	.0)(	.0)(	-.1)				
SPAN	2						55.4	59.8	25.4	27.4
	0	.0	.0	.0	26.3	.0				
	0(	.0)(	.0)(	.0)(	.0)(	.0)				
	1	.0	.0	.0	23.0	-1.5				
	1(	.0)(	.0)(	.0)(	105.7)(	60.5)				
	2	.0	.0	.0	19.7	-2.9				
	2(	.0)(	.0)(	.0)(	181.1)(	107.7)				
	3	.0	.0	.0	16.4	-4.4				
	3(	.0)(	.0)(	.0)(	226.2)(	141.5)				
	4	.0	.0	.0	13.1	-7.3				
	4(	.0)(	.0)(	.0)(	241.5)(	200.4)				
	5	.0	.0	.0	10.2	-10.2				

	5(	.0)(	.0)(	.0)(	234.4)(	234.4)			
	6	.0	.0	.0	7.3	-13.1			
	6(	.0)(	.0)(	.0)(	200.4)(	241.5)			
	7	.0	.0	.0	4.4	-16.4			
	7(	.0)(	.0)(	.0)(	141.5)(	226.2)			
	8	.0	.0	.0	2.9	-19.7			
	8(	.0)(	.0)(	.0)(	107.8)(	181.1)			
	9	.0	.0	.0	1.5	-23.0			
	9(	.0)(	.0)(	.0)(	60.7)(	105.7)			
SPAN	2						40.7	57.4	18.6	26.3
	10	.0	.0	.0	.0	-26.3			
	10(	.0)(	.0)(	.0)(	.0)(	.0)			

END OF JOB

SVERDRUP

JOB 13884 FCDMC / Bullard Wash

COMPUTATIONS FOR BID Canal Overchute

SHEET NO. 40 OF

DATE April 98

BY JFF CHKD CAR

Hand Calc. Check Computer Program P7300

Check HS20-44 max. bending moment & shears.

From AASHTO 16th Ed. 1996, p.632, Appx. A, for 46' span, one lane w/o impact:

$M = 556.5^{'k}$ (Truck Governs) $R = V = 57.3^{k}$ (Truck Governs)

$I = \frac{50}{L+125} = \frac{50}{46+125} = 0.292$

$M = 556.5^{'k}/\text{Lane} \times 0.5^{\text{Lanes}}/\text{wheel} \times 1.292 \text{ Impact} \times 0.7086 \text{ wheels} = 254.7^{'k}$

$V = 57.3^{k}/\text{Lane} \times 0.5 \times 1.292 \times 0.7086 = 26.2^{k}$

From P7300: $M = 257.2^{'k}$ vs. $254.7^{'k}$ above, 1.37% difference, Say OK

$V = 26.3^{k}$, vs. 26.2^{k} above, 0.38% difference, Say OK

SVERDRUP

JOB 13884 FCDMC / Eullard Wash

COMPUTATIONS FOR BID Canal Overchute

SHEET NO. 41 OF

DATE April 98

BY JFF CHKD CAR

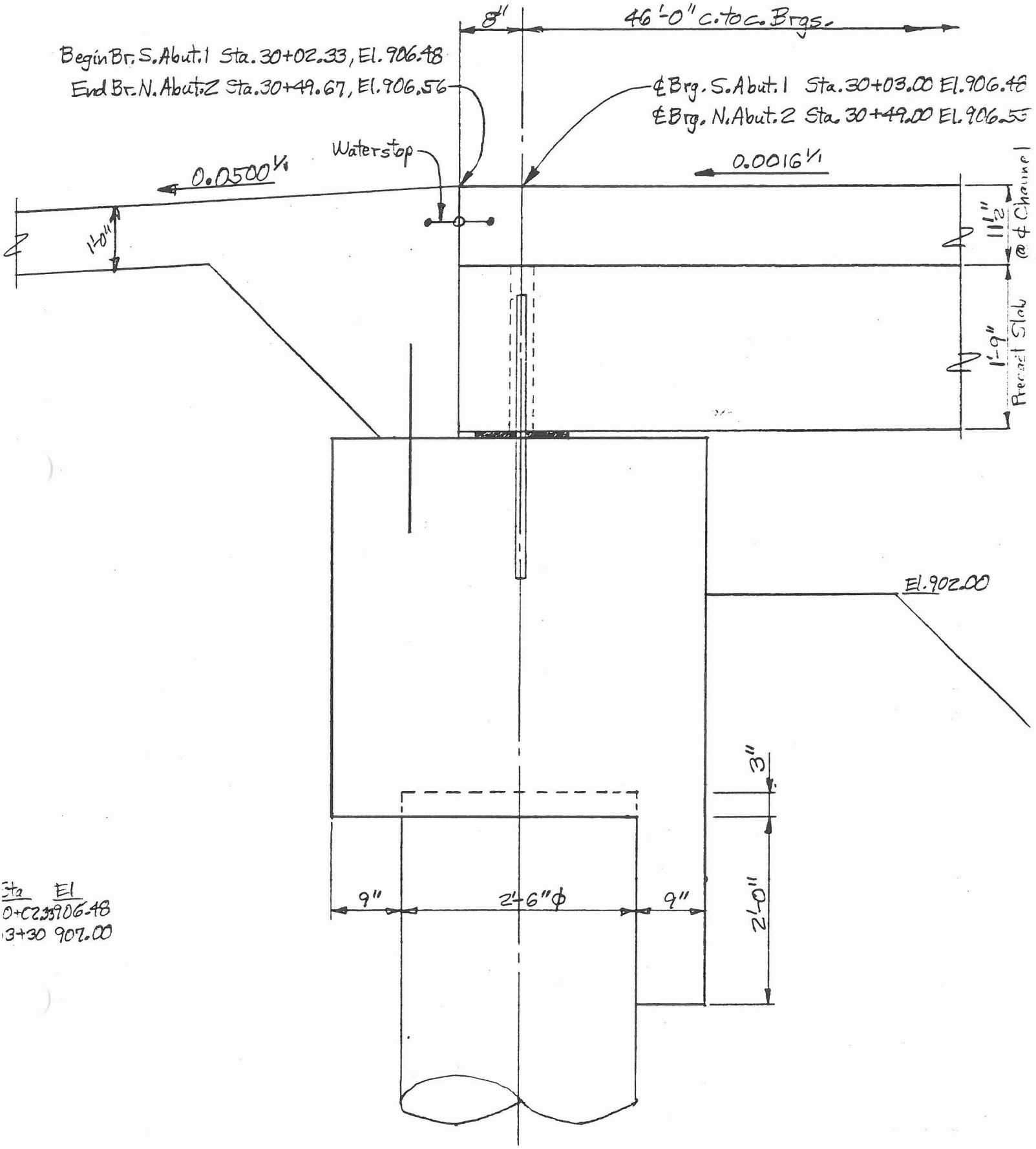

SVERDRUP

JOB 013884 FCDMC/Bullard Wash Channel Impr.

SHEET NO. 42 OF

DATE 4/98

COMPUTATIONS FOR BID Canal Overchute

BY CAR CHKD JFF

Abutment Cap Design

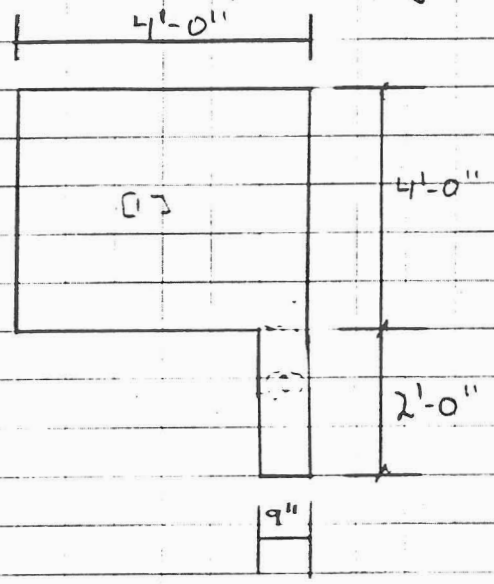

Weight Con = 150 lbs/ft³

Area of Cap = (4'*4') + (2'*9/12)

Area = 17.5 ft²

w = (.150k/ft³)(17.5 ft²)

w = 2.625 kips/ft

Total Dead Load @ Abutment Due To Abutment CAP
width = 65 ft)

$F_{DeadCAP}$ = (2.625 k/ft)(65ft)

$F_{DeadCAP}$ = 171 kips

Reactions @ Abutment From Program P7348 (Per 4' width)

Girder = 16.7 kips

Slab = 14.4 kips

Diaphragm = .2 kips

Live Load = 30.4 kips

Superimposed Dead Load = 3.6 kips

SVERDRUP

JOB 013884 FCDMC/Bullard Wash Channel Imp

COMPUTATIONS FOR BID Canal Overchute

SHEET NO. 43 OF

DATE 4/98

BY CAR CHKD JFF

Total Reaction @ Abutment

$$\text{Total} = \left(\frac{16.7}{4}\right)(65) + \frac{(14.4)}{4}(65) + \frac{(.2)}{4}(65) + \left(\frac{30.4}{4}\right)(65) + \ldots$$

$$+ \frac{(3.6)}{4}(65) + 171 \text{ kips}$$

Total = 1232 ⇒ 1235 kips

Try 5 2'-6"ø Shafts

$$\text{Load per shaft} = \frac{1235}{5} = 247 \text{ kips}$$

Length = 30' per shaft For Staad III analysis

* Length Comes From ATL Fax Dated 1/26/98
BID Overchute Bridge Pile Capacity Chart

Max Reaction from Following Staad III output = 264.26K

USE 35' Length of Shaft
Capacity = 270K

SVERDRUP

JOB 013884 FCDMC / Bullard Wash Channel Imp

SHEET NO. 44 OF

DATE 4/98

COMPUTATIONS FOR Abutment CAP

BY CHR CHKD JFF

USE This Model IN Staad III

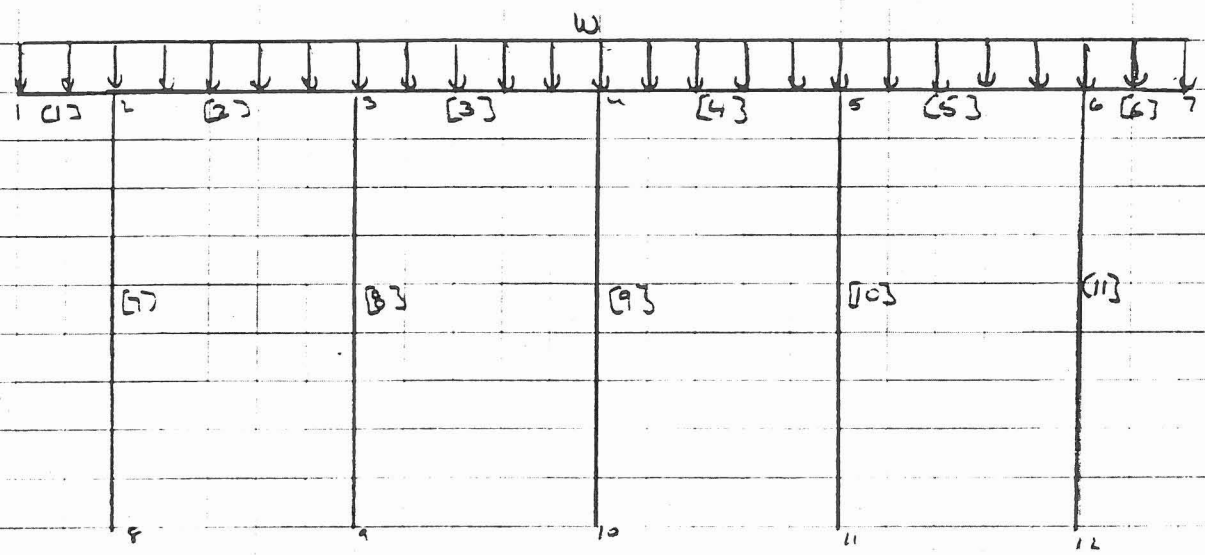

W_{cap} = 2.625 k/ft

$W_{circles}$ = 4.175 k/ft

W_{slab} = 3.6 k/ft

$W_{diaphragm}$ = .05 k/ft

$W_{Live\ Load}$ = 7.6 k/ft

W_{super} = .9 k/ft

Total = 18.95 k/ft

```
**************************************************
*                                                *
*           S T A A D - III                      *
*           Revision 22.3                        *
*           Proprietary Program of               *
*           Research Engineers, Inc.             *
*           Date=    APR 22, 1998                *
*           Time=    10:28:11                    *
*                                                *
*      USER ID: Sverdrup Corporation             *
**************************************************
```

Chkd JFF

```
 1. STAAD PLANE BID OVERCHUTE ABUTMENT CAP DESIGN
 2. INPUT WIDTH 72
 3. UNIT FEET KIP
 4. JOINT COORDINATES
 5.      1          .000          .000          .000
 6.      2         5.000          .000          .000
 7.      3        18.750          .000          .000
 8.      4        32.500          .000          .000
 9.      5        46.250          .000          .000
10.      6        60.000          .000          .000
11.      7        65.000          .000          .000
12.      8         5.000       -30.000          .000
13.      9        18.750       -30.000          .000
14.     10        32.500       -30.000          .000
15.     11        46.250       -30.000          .000
16.     12        60.000       -30.000          .000
17. MEMBER INCIDENCES
18.          1         1         2
19.          2         2         3
20.          3         3         4
21.          4         4         5
22.          5         5         6
23.          6         6         7
24.          7         2         8
25.          8         3         9
26.          9         4        10
27.         10         5        11
28.         11         6        12
29. MEMBER PROPERTY AMERICAN
30. 7 TO 11 PRI YD 2.5
31. 1 TO 6 PRI YD 4. ZD 4.
32. CONSTANT
33. E CONCRETE ALL
34. DENSITY CONCRETE ALL
35. POISSON CONCRETE ALL
36. SUPPORT
37. 8 TO 12 FIXED
38. LOAD 1 TOTAL LOAD AT ABUTMNET INCLUDING ABUTMENT CAP
39. MEMBER LOAD
```

40. 1 TO 6 UNI GY -18.95
41. PERFORM ANALYSIS

P R O B L E M S T A T I S T I C S

NUMBER OF JOINTS/MEMBER+ELEMENTS/SUPPORTS = 12/ 11/ 5
ORIGINAL/FINAL BAND-WIDTH = 6/ 3
TOTAL PRIMARY LOAD CASES = 1, TOTAL DEGREES OF FREEDOM = 21
SIZE OF STIFFNESS MATRIX = 126 DOUBLE PREC. WORDS
REQRD/AVAIL. DISK SPACE = 12.02/ 365.1 MB, EXMEM = 1961.3 MB

++ Processing Element Stiffness Matrix. 10:28:11
++ Processing Global Stiffness Matrix. 10:28:11
++ Processing Triangular Factorization. 10:28:11
++ Calculating Joint Displacements. 10:28:11
++ Calculating Member Forces. 10:28:11

42. PRINT SUPPORT REACTIONS

SUPPORT REACTIONS -UNIT KIP FEET STRUCTURE TYPE = PLANE

JOINT	LOAD	FORCE-X	FORCE-Y	FORCE-Z	MOM-X	MOM-Y	MOM Z
8	1	.40	222.87	.00	.00	.00	-3.92
9	1	.08	260.88	.00	.00	.00	-.78
10	1	.00	264.26	.00	.00	.00	.00
11	1	-.08	260.88	.00	.00	.00	.78
12	1	-.40	222.87	.00	.00	.00	3.92

********** END OF LATEST ANALYSIS RESULT **********

43. PRINT FORCE ENVELOPE NSECTION 10 LIST 1 TO 6

MEMBER FORCE ENVELOPE

ALL UNITS ARE KIP FEET

MEMB	DISTANCE		FY	LD	MZ	LD	FZ	LD	MY	LD
1	.00	MAX.	.00	1	.00	1	.00	1	.00	1
		MIN.	.00	1	.00	1	.00	1	.00	1
	.50	MAX.	-9.48	1	2.37	1	.00	1	.00	1
		MIN.	-9.48	1	2.37	1	.00	1	.00	1
	1.00	MAX.	-18.95	1	9.47	1	.00	1	.00	1
		MIN.	-18.95	1	9.47	1	.00	1	.00	1
	1.50	MAX.	-28.43	1	21.32	1	.00	1	.00	1
		MIN.	-28.43	1	21.32	1	.00	1	.00	1
	2.00	MAX.	-37.90	1	37.90	1	.00	1	.00	1
		MIN.	-37.90	1	37.90	1	.00	1	.00	1
	2.50	MAX.	-47.38	1	59.22	1	.00	1	.00	1
		MIN.	-47.38	1	59.22	1	.00	1	.00	1
	3.00	MAX.	-56.85	1	85.27	1	.00	1	.00	1
		MIN.	-56.85	1	85.27	1	.00	1	.00	1
	3.50	MAX.	-66.33	1	116.07	1	.00	1	.00	1
		MIN.	-66.33	1	116.07	1	.00	1	.00	1
	4.00	MAX.	-75.80	1	151.60	1	.00	1	.00	1
		MIN.	-75.80	1	151.60	1	.00	1	.00	1
	4.50	MAX.	-85.28	1	191.87	1	.00	1	.00	1
		MIN.	-85.28	1	191.87	1	.00	1	.00	1
	5.00	MAX.	-94.75	1	236.88	1	.00	1	.00	1
		MIN.	-94.75	1	236.88	1	.00	1	.00	1

MAX/MIN FORCES FOR MEMBER 1,AMONGST ALL SECT LOCATIONS

	FY/ FZ	DIST DIST	LD LD	MZ/ MY	DIST DIST	LD LD	FX	DIST	LD
MAX.	.00	.00	1	236.88	5.00	1			
	.00	.00	1	.00	.00	1	.00 C	.00	1
MIN.	-94.75	5.00	1	.00	.00	1			
	.00	5.00	1	.00	5.00	1	.00 C	5.00	1

2	.00	MAX.	128.12	1	244.81	1	.00	1	.00	1
		MIN.	128.12	1	244.81	1	.00	1	.00	1
	1.38	MAX.	102.06	1	86.56	1	.00	1	.00	1
		MIN.	102.06	1	86.56	1	.00	1	.00	1
	2.75	MAX.	76.01	1	-35.87	1	.00	1	.00	1
		MIN.	76.01	1	-35.87	1	.00	1	.00	1
	4.13	MAX.	49.95	1	-122.46	1	.00	1	.00	1
		MIN.	49.95	1	-122.46	1	.00	1	.00	1

5.50	MAX.	23.89	1	-173.23	1	.00	1	.00	1
	MIN.	23.89	1	-173.23	1	.00	1	.00	1
6.88	MAX.	-2.16	1	-188.17	1	.00	1	.00	1
	MIN.	-2.16	1	-188.17	1	.00	1	.00	1
8.25	MAX.	-28.22	1	-167.28	1	.00	1	.00	1
	MIN.	-28.22	1	-167.28	1	.00	1	.00	1
9.63	MAX.	-54.27	1	-110.57	1	.00	1	.00	1
	MIN.	-54.27	1	-110.57	1	.00	1	.00	1
11.00	MAX.	-80.33	1	-18.03	1	.00	1	.00	1
	MIN.	-80.33	1	-18.03	1	.00	1	.00	1
12.38	MAX.	-106.39	1	110.34	1	.00	1	.00	1
	MIN.	-106.39	1	110.34	1	.00	1	.00	1
13.75	MAX.	-132.44	1	274.54	1	.00	1	.00	1
	MIN.	-132.44	1	274.54	1	.00	1	.00	1

MAX/MIN FORCES FOR MEMBER 2,AMONGST ALL SECT LOCATIONS

	FY/ FZ	DIST DIST	LD LD	MZ/ MY	DIST DIST	LD LD	FX	DIST	LD
MAX.	128.12	.00	1	274.54	13.75	1			
	.00	.00	1	.00	.00	1	.40 C	.00	1
MIN.	-132.44	13.75	1	-188.17	6.88	1			
	.00	13.75	1	.00	13.75	1	.40 C	13.75	1

3 .00	MAX.	128.43	1	276.12	1	.00	1	.00	1
	MIN.	128.43	1	276.12	1	.00	1	.00	1
1.38	MAX.	102.38	1	117.44	1	.00	1	.00	1
	MIN.	102.38	1	117.44	1	.00	1	.00	1
2.75	MAX.	76.32	1	-5.41	1	.00	1	.00	1
	MIN.	76.32	1	-5.41	1	.00	1	.00	1
4.13	MAX.	50.26	1	-92.44	1	.00	1	.00	1
	MIN.	50.26	1	-92.44	1	.00	1	.00	1
5.50	MAX.	24.21	1	-143.64	1	.00	1	.00	1
	MIN.	24.21	1	-143.64	1	.00	1	.00	1
6.88	MAX.	-1.85	1	-159.02	1	.00	1	.00	1
	MIN.	-1.85	1	-159.02	1	.00	1	.00	1
8.25	MAX.	-27.90	1	-138.56	1	.00	1	.00	1
	MIN.	-27.90	1	-138.56	1	.00	1	.00	1
9.63	MAX.	-53.96	1	-82.28	1	.00	1	.00	1
	MIN.	-53.96	1	-82.28	1	.00	1	.00	1
11.00	MAX.	-80.02	1	9.83	1	.00	1	.00	1
	MIN.	-80.02	1	9.83	1	.00	1	.00	1
12.38	MAX.	-106.07	1	137.77	1	.00	1	.00	1
	MIN.	-106.07	1	137.77	1	.00	1	.00	1
13.75	MAX.	-132.13	1	301.53	1	.00	1	.00	1
	MIN.	-132.13	1	301.53	1	.00	1	.00	1

MAX/MIN FORCES FOR MEMBER 3,AMONGST ALL SECT LOCATIONS

	FY/ FZ	DIST DIST	LD LD	MZ/ MY	DIST DIST	LD LD	FX	DIST	LD
MAX.	128.43	.00	1	301.53	13.75	1			
	.00	.00	1	.00	.00	1	.47 C	.00	1
MIN.	-132.13	13.75	1	-159.02	6.88	1			
	.00	13.75	1	.00	13.75	1	.47 C	13.75	1

4	.00	MAX.	132.13	1	301.53	1	.00	1	.00	1
		MIN.	132.13	1	301.53	1	.00	1	.00	1
	1.38	MAX.	106.07	1	137.77	1	.00	1	.00	1
		MIN.	106.07	1	137.77	1	.00	1	.00	1
	2.75	MAX.	80.02	1	9.83	1	.00	1	.00	1
		MIN.	80.02	1	9.83	1	.00	1	.00	1
	4.13	MAX.	53.96	1	-82.28	1	.00	1	.00	1
		MIN.	53.96	1	-82.28	1	.00	1	.00	1
	5.50	MAX.	27.90	1	-138.56	1	.00	1	.00	1
		MIN.	27.90	1	-138.56	1	.00	1	.00	1
	6.88	MAX.	1.85	1	-159.02	1	.00	1	.00	1
		MIN.	1.85	1	-159.02	1	.00	1	.00	1
	8.25	MAX.	-24.21	1	-143.64	1	.00	1	.00	1
		MIN.	-24.21	1	-143.64	1	.00	1	.00	1
	9.63	MAX.	-50.26	1	-92.44	1	.00	1	.00	1
		MIN.	-50.26	1	-92.44	1	.00	1	.00	1
	11.00	MAX.	-76.32	1	-5.41	1	.00	1	.00	1
		MIN.	-76.32	1	-5.41	1	.00	1	.00	1
	12.38	MAX.	-102.38	1	117.44	1	.00	1	.00	1
		MIN.	-102.38	1	117.44	1	.00	1	.00	1
	13.75	MAX.	-128.43	1	276.12	1	.00	1	.00	1
		MIN.	-128.43	1	276.12	1	.00	1	.00	1

MAX/MIN FORCES FOR MEMBER 4,AMONGST ALL SECT LOCATIONS

	FY/ FZ	DIST DIST	LD LD	MZ/ MY	DIST DIST	LD LD	FX	DIST	LD
MAX.	132.13	.00	1	301.53	.00	1			
	.00	.00	1	.00	.00	1	.47 C	.00	1
MIN.	-128.43	13.75	1	-159.02	6.88	1			
	.00	13.75	1	.00	13.75	1	.47 C	13.75	1

5	.00	MAX.	132.44	1	274.54	1	.00	1	.00	1
		MIN.	132.44	1	274.54	1	.00	1	.00	1
	1.38	MAX.	106.39	1	110.34	1	.00	1	.00	1
		MIN.	106.39	1	110.34	1	.00	1	.00	1
	2.75	MAX.	80.33	1	-18.03	1	.00	1	.00	1
		MIN.	80.33	1	-18.03	1	.00	1	.00	1

4.13	MAX.	54.27	1	-110.57	1	.00	1	.00	1
	MIN.	54.27	1	-110.57	1	.00	1	.00	1
5.50	MAX.	23.22	1	-167.28	1	.00	1	.00	1
	MIN.	23.22	1	-167.28	1	.00	1	.00	1
6.88	MAX.	2.16	1	-188.17	1	.00	1	.00	1
	MIN.	2.16	1	-188.17	1	.00	1	.00	1
8.25	MAX.	-23.89	1	-173.23	1	.00	1	.00	1
	MIN.	-23.89	1	-173.23	1	.00	1	.00	1
9.63	MAX.	-49.95	1	-122.46	1	.00	1	.00	1
	MIN.	-49.95	1	-122.46	1	.00	1	.00	1
11.00	MAX.	-76.01	1	-35.87	1	.00	1	.00	1
	MIN.	-76.01	1	-35.87	1	.00	1	.00	1
12.38	MAX.	-102.06	1	86.56	1	.00	1	.00	1
	MIN.	-102.06	1	86.56	1	.00	1	.00	1
13.75	MAX.	-128.12	1	244.81	1	.00	1	.00	1
	MIN.	-128.12	1	244.81	1	.00	1	.00	1

MAX/MIN FORCES FOR MEMBER 5,AMONGST ALL SECT LOCATIONS

	FY/ FZ	DIST DIST	LD LD	MZ/ MY	DIST DIST	LD LD	FX	DIST	LD
MAX.	132.44	.00	1	274.54	.00	1			
	.00	.00	1	.00	.00	1	.40 C	.00	1
MIN.	-128.12	13.75	1	-188.17	6.88	1			
	.00	13.75	1	.00	13.75	1	.40 C	13.75	1

6 .00	MAX.	94.75	1	236.88	1	.00	1	.00	1
	MIN.	94.75	1	236.88	1	.00	1	.00	1
.50	MAX.	85.28	1	191.87	1	.00	1	.00	1
	MIN.	85.28	1	191.87	1	.00	1	.00	1
1.00	MAX.	75.80	1	151.60	1	.00	1	.00	1
	MIN.	75.80	1	151.60	1	.00	1	.00	1
1.50	MAX.	66.33	1	116.07	1	.00	1	.00	1
	MIN.	66.33	1	116.07	1	.00	1	.00	1
2.00	MAX.	56.85	1	85.28	1	.00	1	.00	1
	MIN.	56.85	1	85.28	1	.00	1	.00	1
2.50	MAX.	47.38	1	59.22	1	.00	1	.00	1
	MIN.	47.38	1	59.22	1	.00	1	.00	1
3.00	MAX.	37.90	1	37.90	1	.00	1	.00	1
	MIN.	37.90	1	37.90	1	.00	1	.00	1
3.50	MAX.	28.43	1	21.32	1	.00	1	.00	1
	MIN.	28.43	1	21.32	1	.00	1	.00	1
4.00	MAX.	18.95	1	9.48	1	.00	1	.00	1
	MIN.	18.95	1	9.48	1	.00	1	.00	1
4.50	MAX.	9.48	1	2.37	1	.00	1	.00	1
	MIN.	9.48	1	2.37	1	.00	1	.00	1
5.00	MAX.	.00	1	.00	1	.00	1	.00	1
	MIN.	.00	1	.00	1	.00	1	.00	1

MAX/MIN FORCES FOR MEMBER 6,AMONGST ALL SECT LOCATIONS

	FY/ FZ	DIST DIST	LD LD	MZ/ MY	DIST DIST	LD LD	FX	DIST	LD
MAX.	94.75	.00	1	236.88	.00	1			
	.00	.00	1	.00	.00	1	.00 T	.00	1
MIN.	.00	5.00	1	.00	5.00	1			
	.00	5.00	1	.00	5.00	1	.00 T	5.00	1

********** END OF FORCE ENVELOPE FROM INTERNAL STORAGE **********

44. PRINT MAXFORCE ENVELOPE NSECTION 10 LIST 1 TO 6

MEMBER FORCE ENVELOPE

ALL UNITS ARE KIP FEET

MAX AND MIN FORCE VALUES AMONGST ALL SECTION LOCATIONS

MEMB		FY/ FZ	DIST DIST	LD LD	MZ/ MY	DIST DIST	LD LD	FX	DIST	LD
1	MAX	.00	.00	1	236.88	5.00	1			
		.00	.00	1	.00	.00	1	.00 C	.00	1
	MIN	-94.75	5.00	1	.00	.00	1			
		.00	5.00	1	.00	5.00	1	.00 C	5.00	1
2	MAX	128.12	.00	1	274.54	13.75	1			
		.00	.00	1	.00	.00	1	.40 C	.00	1
	MIN	-132.44	13.75	1	-188.17	6.88	1			
		.00	13.75	1	.00	13.75	1	.40 C	13.75	1
3	MAX	128.43	.00	1	301.53	13.75	1			
		.00	.00	1	.00	.00	1	.47 C	.00	1
	MIN	-132.13	13.75	1	-159.02	6.88	1			
		.00	13.75	1	.00	13.75	1	.47 C	13.75	1
4	MAX	132.13	.00	1	301.53	.00	1			
		.00	.00	1	.00	.00	1	.47 C	.00	1
	MIN	-128.43	13.75	1	-159.02	6.88	1			
		.00	13.75	1	.00	13.75	1	.47 C	13.75	1
5	MAX	132.44	.00	1	274.54	.00	1			
		.00	.00	1	.00	.00	1	.40 C	.00	1

```
   MIN   -128.12  13.75    1    -188.17   6.88    1
            .00  13.75    1        .00  13.75    1       .40 C  13.75    1

6  MAX     94.75    .00    1     236.88    .00    1
            .00    .00    1        .00    .00    1       .00 T    .00    1
   MIN      .00   5.00    1        .00   5.00    1
            .00   5.00    1        .00   5.00    1       .00 T   5.00    1

********** END OF FORCE ENVELOPE FROM INTERNAL STORAGE **********

45. FINISH

          *************** END OF STAAD-III ***************

           **** DATE= APR 22,1998   TIME= 10:23:12 ****

      ********************************************************
      *        For questions on  STAAD-III,   contact:       *
      *              Research Engineers, Inc at              *
      *  West Coast: Ph- (714) 974-2500  Fax- (714) 921-2543  *
      *  East Coast: Ph- (508) 688-3626  Fax- (508) 685-7230  *
      ********************************************************
```

UNITS :

$ksi \equiv 1000 \cdot psi$ $\quad kNm := kN \cdot m$ $\quad degC \equiv K$ $\quad f_y := 60 \cdot ksi$

$N \equiv newton$ $\quad MPa \equiv 10^6 \cdot Pa$ $\quad degF \equiv R$ $\quad f_c := 3000 \cdot psi$

$kN \equiv 1000 \cdot newton$ $\quad kip \equiv 1000 \cdot lbf$ $\quad TOL \equiv 0.001$ $\quad E_s := 29000000 \cdot psi$

$E_c := 57000 \cdot \sqrt{f_c \cdot psi}$ $\quad n := \frac{E_s}{E_c}$ $\quad n = 9.289$ $\quad f_s := 24 \cdot ksi$

Reinforcing Steel Bar information.

$A_{b4} := .20 \cdot in^2$ $\quad d_{b4} := .56 \cdot in$

$A_{b5} := .31 \cdot in^2$ $\quad d_{b5} := .75 \cdot in$

$A_{b6} := .44 \cdot in^2$ $\quad d_{b6} := .88 \cdot in$

$A_{b7} := .60 \cdot in^2$ $\quad d_{b7} := 1.00 \cdot in$

$A_{b9} := 1.00 \cdot in^2$ $\quad d_{b9} := 1.25 \cdot in$

$A_{b11} := 1.56 \cdot in^2$ $\quad d_{b11} := 1.63 \cdot in$

$h := 4 \cdot ft$ **h is the depth of the cap.**

Maximum Moment from Staad III.
Positive Moment.

$M_{deadmaxbot} := 188 \cdot kip \cdot ft$

$M_{maxbot} := M_{deadmaxbot}$

$M_{maxbot} = 188 \cdot kip \cdot ft$

Bottom Reinforcing.

$d_{bot} := h - 6 \cdot in - \frac{d_{b7}}{2} - d_{b5}$

$d_{bot} = 40.75 \cdot in$

d_{b7} is the diameter of a #7 English Bar.
d_{b5} is the diameter of #5 bar used for the stirrups.

Assume j=.875

$j := .875$

b is the width of the cap

$b := 4 \cdot ft$

$A_{sbot} := \frac{M_{maxbot}}{f_s \cdot d_{bot} \cdot j}$

$A_{sbot} = 2.6363 \cdot in^2$

$A_{reqbot} := A_{sbot}$

$A_{reqbot} = 2.6363 \cdot in^2$

Try # 7 Bars.

$Num_{7Bars} := \left(\frac{A_{reqbot}}{A_{b7}}\right)$

$round(Num_{7Bars}) := if(Num_{7Bars} - floor(Num_{7Bars}) < .5, floor(Num_{7Bars}), ceil(Num_{7Bars}))$

$round(Num_{7Bars}) = 4$ 4 #7 Bars Required

$A_{actualbot} := round(Num_{7Bars}) \cdot A_{b7}$

$A_{actualbot} = 2.4 \cdot in^2$

$\rho_{actualbot} := \frac{A_{actualbot}}{b \cdot d_{bot}}$

$\rho_{actualbot} = 0.001227$

$k := \sqrt{2 \cdot \rho_{actualbot} \cdot n + (\rho_{actualbot} \cdot n)^2} - \rho_{actualbot} \cdot n$

$j := 1 - \frac{k}{3}$

$j = 0.953$

$k = 0.14$

$M_{capbot} := f_s \cdot j \cdot d_{bot} \cdot A_{actualbot}$

$M_{capbot} = 186 \cdot kip \cdot ft$

Since $M_{capbot} > M_{maxbot}$ 4 #7 Bars is okay. Will check stresses.

$f_{sbot} := \frac{M_{maxbot}}{A_{actualbot} \cdot j \cdot d_{bot}}$ $f_{sbot} = 24.197 \cdot ksi$ **Okay**

$f_{cbot} := \frac{k}{1-k} \cdot \frac{f_{sbot}}{n}$ $f_{cbot} = 0.424 \cdot ksi$ **Okay**

**Will use five #7 bars in the bottom reinforcing of the abutment cap.The five #7 bars will be continues throughout the entire bottom of the abutment cap.

RECTANGULAR CONCRETE BEAM INVESTIGATION

Shaded areas are input cells.

Job No. 13884 FCDMC / Bullard Wash Channel Improvements
BID Canal Overchute
Abutment Cap Beam
Bottom Reinforcement

By JFF Chkd CAK

Input Data:

A_s =	2.4	sq.in.	f_y =	60	ksi
b =	48	in.	Allow. f_s =	24	ksi
d =	40.75	in.	f'_c =	3	ksi
n =	9		Allow. f_c=	1.2	ksi
Moment M =	188	ft.-kips	ϕ =	0.9	
Factored M =	0	ft.-kips			

Working Stress Design:

p =	0.00122699	
np =	0.01104294	
k =	0.13797999	
kd =	5.62268474	in.
j =	0.95400667	
jd =	38.8757718	in.
Actual f_s =	24.1795843	ksi
Actual f_c =	0.43003628	ksi

Ultimate Strength Design:

a =	1.17647059	in.
ϕM_n =	433.747059	ft.-kips

Moments from Staad III due to Dead Load and Live Load only. Negative Moment.

$M_{deadmaxtop} := 302 \cdot kip \cdot ft$

$M_{maxtop} := M_{deadmaxtop}$

$M_{maxtop} = 302 \cdot kip \cdot ft$

$M_{maxtop} = 302 \cdot kip \cdot ft$

Top Reinforcing.

$d_{top} := h - 2.0 \cdot in - d_{b5} - \frac{d_{b7}}{2}$

$d_{top} = 44.75 \cdot in$

Assume j =.875

$j := .875$

$A_{stop} := \frac{M_{maxtop}}{f_s \cdot d_{top} \cdot j}$

$A_{stop} = 3.5395 \cdot in^2$

$A_{reqtop} := A_{stop}$

$A_{reqtop} = 3.5395 \cdot in^2$

Try # 7 Bars.

$Num_{7Bars} := \left(\frac{A_{reqtop}}{A_{b7}}\right)$

$round(Num_{7Bars}) := if(Num_{7Bars} - floor(Num_{7Bars}) < .5, floor(Num_{7Bars}), ceil(Num_{7Bars}))$

$\text{round}(\text{Num}_{7Bars}) = 6$ **6 #7 Bars Required.**

$A_{actualtop} := \text{round}(\text{Num}_{7Bars}) \cdot A_{b7}$

$\rho_{actualtop} := \frac{A_{actualtop}}{b \cdot d_{top}}$ $\rho_{actualtop} = 0.00168$

$k := \sqrt{2 \cdot \rho_{actualtop} \cdot n + (\rho_{actualtop} \cdot n)^2} - \rho_{actualtop} \cdot n$ $j := 1 - \frac{k}{3}$

$k = 0.162$

Beam Capacity M_{captop}

$M_{captop} := f_s \cdot j \cdot d_{top} \cdot A_{actualtop}$ $j = 0.946$

Since $M_{captop} < M_{maxtop}$ 6 #7 Bars is not okay.

$M_{captop} = 305 \cdot kip \cdot ft$

Try 7 #7 Bars

$n := 9$

$A_{actualtop} := 7 \cdot A_{b7}$

$\rho_{actualtop} := \frac{A_{actualtop}}{b \cdot d_{top}}$ $\rho_{actualtop} = 0.00196$

$k := \sqrt{2 \cdot \rho_{actualtop} \cdot n + (\rho_{actualtop} \cdot n)^2} - \rho_{actualtop} \cdot n$ $j := 1 - \frac{k}{3}$ $j = 0.943$ $k = 0.171$

Beam Capacity M_{captop}

$M_{captop} := f_s \cdot j \cdot d_{top} \cdot A_{actualtop}$

$M_{captop} = 354 \cdot kip \cdot ft$

$$f_{stop} := \frac{M_{maxtop}}{A_{actualtop} \cdot j \cdot d_{top}}$$ $f_{stop} = 20.446 \cdot ksi$ **Okay**

$$f_{ctop} := \frac{k}{1-k} \cdot \frac{f_{stop}}{n}$$ $f_{ctop} = 0.468 \cdot ksi$ **Okay.**

**** Will use 7 #7 Bars for positive moment over the interior columns.**

Also positive moment over exterior columns and continues reinforcing for top steel.

Moments from Staad III.
Positive Moment.

$M_{deadmaxtop} := 237 \cdot kip \cdot ft$

$M_{maxtop} := M_{deadmaxtop}$

$M_{maxtop} = 237 \cdot kip \cdot ft$

Top Reinforcing.

$$d_{top} := h - 4.0 \cdot in - d_{b5} - \frac{d_{b7}}{2}$$ $d_{top} = 42.75 \cdot in$

$$A_{stop} := \frac{M_{maxtop}}{f_s \cdot d_{top} \cdot j}$$ **Assume j =.875**

$j := .875$

$A_{stop} = 2.9393 \cdot in^2$

$A_{reqtop} := A_{stop}$ $A_{reqtop} = 2.9393 \cdot in^2$

Try # 7 Bars.

$Num_{7Bars} := \left(\frac{A_{reqtop}}{A_{b7}}\right)$

$round(Num_{7Bars}) := if(Num_{7Bars} - floor(Num_{7Bars}) < .5, floor(Num_{7Bars}), ceil(Num_{7Bars}))$

$round(Num_{7Bars}) = 5$ **5 #7 Bars Required.**

$A_{actualtop} := round(Num_{7Bars}) \cdot A_{b7}$

$\rho_{actualtop} := \frac{A_{actualtop}}{b \cdot d_{top}}$ $\rho_{actualtop} = 0.00146$

$k := \sqrt{2 \cdot \rho_{actualtop} \cdot n + (\rho_{actualtop} \cdot n)^2} - \rho_{actualtop} \cdot n$ $j := 1 - \frac{k}{3}$ $j = 0.95$

Beam Capacity M_{captop} $k = 0.15$

$M_{captop} := f_s \cdot j \cdot d_{top} \cdot A_{actualtop}$

$M_{captop} = 244 \cdot kip \cdot ft$ **Since M_{captop} > M_{maxtop} 5 #7 Bars is okay. Will check the stresses.**

$f_{stop} := \frac{M_{maxtop}}{A_{actualtop} \cdot j \cdot d_{top}}$ $f_{stop} = 23 \cdot ksi$ **Okay**

$f_{ctop} := \frac{k}{1-k} \cdot \frac{f_{stop}}{n}$ $f_{ctop} = 0.456 \cdot ksi$ **Okay.**

** Will use 7 #7 Bars continues for top reinforcing in abutment cap.

RECTANGULAR CONCRETE BEAM INVESTIGATION

Shaded areas are input cells.

Job No. 13884 FCDMC / Bullard Wash Channel Improvements
BID Canal Overchute
Abutment Cap Beam
Top Reinforcement

By JFF Chkd CAL

Input Data:

A_s =	4.2	sq.in.	f_y =	60	ksi
b =	48	in.	Allow. f_s =	24	ksi
d =	44.75	in.	f'_c =	3	ksi
n =	9		Allow. f_c=	1.2	ksi
Moment M =	302	ft.-kips	ϕ =	0.9	
Factored M =	0	ft.-kips			

Working Stress Design:

p =	0.00195531	
np =	0.01759777	
k =	0.1708305	
kd =	7.64466498	in.
j =	0.9430565	
jd =	42.2017783	in.
Actual f_s =	20.4459901	ksi
Actual f_c =	0.46804514	ksi

Ultimate Strength Design:

a =	2.05882353	in.
ϕM_n =	826.319118	ft.-kips

SVERDRUP

JOB 13884 FCDMC/Bullard Wash

SHEET NO. 64 OF

DATE 9-14-98

COMPUTATIONS FOR BID Canal Overchute

BY JFF CHKD BDO 9/14/98

Check Buoyancy Uplift on Superstructure

Superstr. DL's from precast gdr. design:

Precast slab	$= 0.7277^{k/1} \times 16$ slabs	$= 11.64^{k/1}$
C.I.P. Topping slab	$= 0.625^{k/1} \times 16$ slabs	$= 10.00$
Channel Side Walls	$= 0.158^{k/1} \times 16$ slabs	$= 2.53$
Precast Slab Diaphragms	$= 0.212^{k} \times 2 \times 16$ slabs/~~16'~~	$= .15$
		$24.32^{k/1}$ ←

Assume the worst case scenario, where the BID Canal is flowing full to the top of its banks @ Elev. 909.00± and the Bullard Wash Channel is completely empty.

℄ Bullard Wash Channel Elev. @ Abut. #1 = 906.48

@ Abut. #2 = 906.55

Depth of Superstr. = 2'-8½" @ ℄ Channel = 2.71'

Bottom of Overchute Superstr. Elev. @ Abut. #1 = 906.48 − 2.71' = 903.77

@ Abut. #2 = 906.55 − 2.71' = 903.84

Use Average Elev. = 903.80

Depth of Water on Outside of Overchute Superstr. = 909.00 − 903.80 = 5.20'

Buoyancy Uplift on Superstr. = 5.20' × 65' × 65 pcf (water with sediment load) = $21.97^{k/1}$ ←

> The Superstr. DL $24.32^{k/1}$ is greater than the Buoyancy Uplift $21.97^{k/1}$, therefore the buoyancy uplift is not great enough to cause negative bending moment in the precast beams or uplift forces on the abutments.

This analysis is conservative because the superstructure is connected to the abutment cap beams with 16-#8 dowel bars and the weights of the cap beams and drilled shafts have been neglected in this analysis. Negative bending moment stresses would be resisted by mild steel reinf. in the channel walls, slab & prestressed slabs.

SVERDRUP

JOB 13884 FCDMC/Bullard Wash

COMPUTATIONS FOR Channel Lining

SHEET NO. 65 OF

DATE Aug 98

BY JFF CHKD BDO 8/20/98

Channel Lining Reinforcing Steel

Reference: ADOT Urban Hwys. Channel Lining Design Guidelines, Feb.'89, p. 4

Channel Floor Slab – Max. water velocity in sections with concrete floor slab is 7.31 fps at Sta. 32+66. From reference above, min. slab thickness should be 6" (see footnote on p. 4). Sverdrup was instructed to use 8" by Don Rerick of FCDMC. $f'_c = 3{,}000$ psi

Longit. – Min. $p = 0.30\%$

Req'd. $A_s = 0.003 \times 8'' \times 12'' = 0.288^{\square''/'}$

Use #4@8" (A_s Furnished $= 0.300^{\square''/'}$)

Transv. – Channel Width 70 to 90 feet

Min. $p = 0.25\%$

Req'd. $A_s = 0.0025 \times 8'' \times 12'' = 0.240^{\square''/'}$

Use #5@12" (A_s Furnished $= 0.310^{\square''/'}$)

(12" spcg. matches spcg. of bars in side slopes.)

Channel Side Slopes – Use min. slab thk. = 6", $f'_c = 3{,}000$ psi

Longit. – Min. $p = 0.30\%$

Req'd. $A_s = 0.003 \times 6'' \times 12'' = 0.216^{\square''/'}$

Use #4@11" (A_s Furnished $= 0.218^{\square''/'}$)

Transv. – Min. $p = 0.25\%$

Req'd. $A_s = 0.0025 \times 6'' \times 12'' = 0.180^{\square''/'}$

Use #4@12" (A_s Furnished $= 0.200^{\square''/'}$)

Req'd Lap Splice Lengths

#4 Longit. Bars = Class C = $1.7\, l_d = 1.7 \times \underbrace{0.8}_{\text{spcg.} \geq 6''} \times \underbrace{12''}_{l_d} = 16''$

#4 & #5 Transv. Bars = #4 Bars govern = same as above = 16"

SVERDRUP

JOB 13884 FCDMC / Bullard Wash

COMPUTATIONS FOR Channel Lining

SHEET NO. 66 OF

DATE June 98

BY JFF CHKD 8/20/98

Side Slope Stability

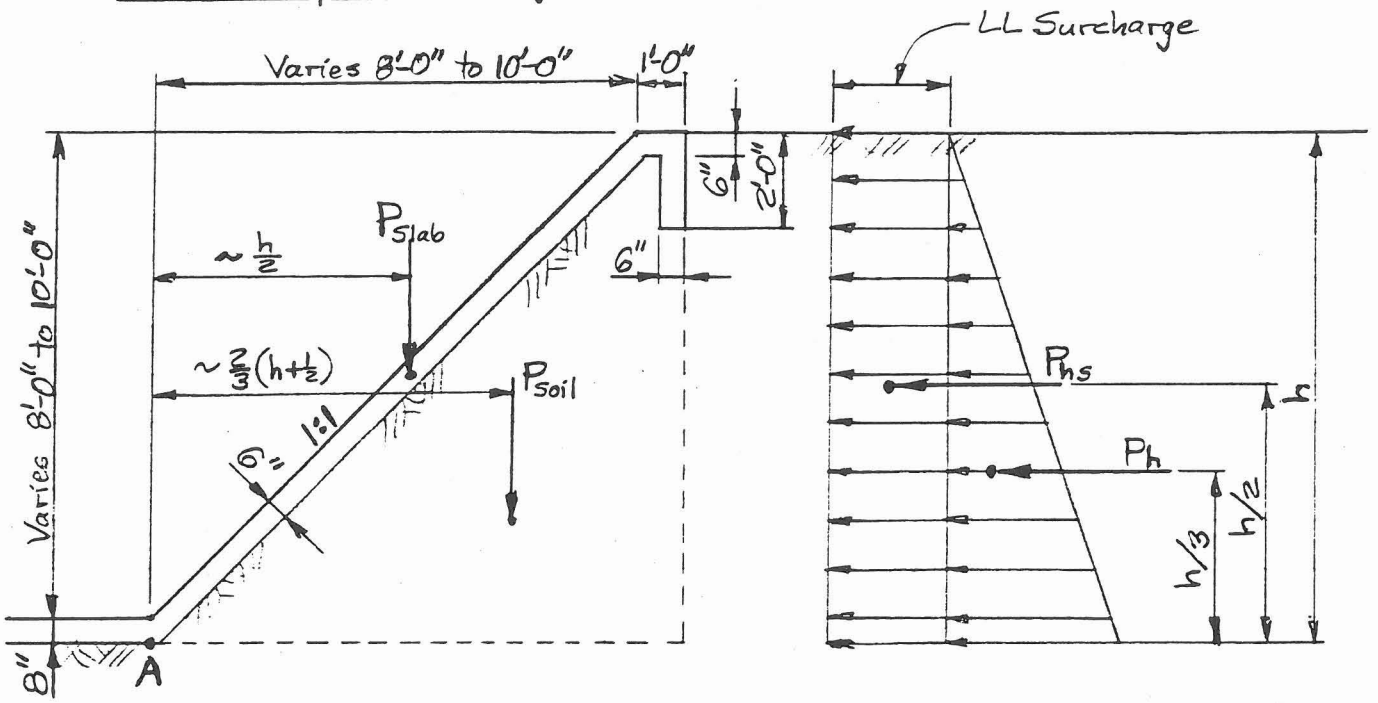

$\beta = 0°$ $\gamma = 120pcf$ $k_h = 35pcf$ LL Surcharge $h_s = 2'$ (AASHTO 3.20.3)

LL Surcharge $= h_s\gamma = 2' \times 120pcf = 240 psf/ft.$

8 ft. Depth

$h = 8.67'$

$P_{hs} = 0.240^{ksf}/ft. \times 8.67' = 2.08^{k}/ft.$

$P_h = k_h h^2/2 = 0.035^{kcf} \times (8.67')^2/2 = 1.31^{k}/ft.$

$P_{slab} \approx 0.5' \times \frac{8'}{\cos 45°} \times 0.150^{kcf} = 0.849^{k}/ft.$

$P_{soil} \approx 9' \times 8.67' \times 0.120^{kcf}/2 = 4.68^{k}/ft.$

Σ Overturning Moments Abt. A:

$P_{hs} \times \frac{h}{2} = 2.08 \times 4.33' = 9.01^{'k}/ft.$

$P_h \times \frac{h}{3} = 1.31 \times 2.89' = 3.79$

$\Sigma = 12.80^{'k}/ft.$

Σ Resisting Moments Abt. A:

$P_{slab} \times \frac{h}{2} = 0.849 \times 4.33 = 3.68^{'k}/ft.$

$P_{soil} \times \frac{2}{3}(h+\frac{1}{2}) = 4.68 \times 6.11 = 28.60$

$\Sigma = 32.28^{'k}/ft.$

Factor of Safety $= 32.28/12.80 = 2.52 > 1.5$ OK

10 ft. Depth

$h = 10.67'$

$P_{hs} = 0.240^{ksf}/ft. \times 10.67' = 2.56^{k}/ft.$

$P_h = k_h h^2/2 = 0.035^{kcf} \times (10.67')^2/2 = 1.99^{k}/ft.$

$P_{slab} \approx 0.5' \times \frac{10'}{\cos 45°} \times 0.150^{kcf} = 1.06^{k}/ft.$

$P_{soil} \approx 11' \times 10.67' \times 0.120^{kcf}/2 = 7.04^{k}/ft.$

Σ Overturning Moments Abt. A:

$P_{hs} \times \frac{h}{2} = 2.56 \times 5.33' = 13.65^{'k}/ft.$

$P_h \times \frac{h}{3} = 1.99 \times 3.56' = 7.08$

$\Sigma = 20.73^{'k}/ft.$

Σ Resisting Moments Abt. A:

$P_{slab} \times \frac{h}{2} = 1.06 \times 5.33 = 5.65^{'k}/ft.$

$P_{soil} \times \frac{2}{3}(h+\frac{1}{2}) = 7.04 \times 7.44 = 52.41$

$\Sigma = 58.06^{'k}/ft.$

Factor of Safety $= 58.06/20.73 = 2.80 > 1.5$ OK

SVERD

Sheet 67 of

Job 13884 BID Overchute

Date 9/16/98

Computations for Shaft Elevations

By RKS CHKD JFF

Location	Station along Centerline of Bridge	Elevations along Centerline of Bridge	Cross Slope	Distance from Centerline of Bridge to Center of Shaft (Ft.)	Finished Grade Elevation at Centerline	Superstructure Depth (Ft.)	Embedment	Top of Shaft/ Column Elevation	Bottom of Shaft EL.
Abutment # 1									
Shaft # 1	30+03.00	906.48	0.00%	27.50	906.48	6.75	0.25	**899.98**	**864.98**
Shaft # 2	30+03.00	906.48	0.00%	13.75	906.48	6.75	0.25	**899.98**	**864.98**
Shaft # 3 Centerline Bridge	30+03.00	906.48	0.00%	0.00	906.48	6.75	0.25	**899.98**	**864.98**
Shaft # 4	30+03.00	906.48	0.00%	13.75	906.48	6.75	0.25	**899.98**	**864.98**
Shaft # 5	30+03.00	906.48	0.00%	27.50	906.48	6.75	0.25	**899.98**	**864.98**
Abutment # 2									
Shaft # 6	30+49.00	906.55	0.00%	27.50	906.55	6.75	0.25	**900.05**	**865.05**
Shaft # 7	30+49.00	906.55	0.00%	13.75	906.55	6.75	0.25	**900.05**	**865.05**
Shaft # 8 Centerline Bridge	30+49.00	906.55	0.00%	0.00	906.55	6.75	0.25	**900.05**	**865.05**
Shaft # 9	30+49.00	906.55	0.00%	13.75	906.55	6.75	0.25	**900.05**	**865.05**
Shaft # 10	30+49.00	906.55	0.00%	27.50	906.55	6.75	0.25	**900.05**	**865.05**

SVERDRUP

JOB 013884 BID Overchute

Computations for Quantities

SHEET NO. 68 OF

DATE Sept 98

BY RKS CHKD JFF

		Width	Height	Length	Total (yd)
Abutment No. 1					
	Concrete (4'x4')	4	4	65	39
	Concrete	0.75	2	65	4
	Total =				**42**
Abutment No. 2					
	Total =				**42**
Walls		1	6.83	144.66	37
		1	7.83	56	16
	Total=				**53**
Approach Slab					
	Concrete	65	1	7.0729	17
	Concrete	65	1	39.271	95
	Triangle	7.0729	1	7.0729	2
	Triangle	14	1	24.249	13
	Concrete	130	1.8	0.67	6
		130	1.8	0.9	8
		1.5	1	76	4
	Total=				**144**
Superstructure					
	Concrete	65	1.041666	47.33	119
	Concrete	1	1.75	47.33	3
Total 4000 psi Concrete =					***318***

	Length	No. of Shafts	Total (Lin ft.)
Drilled Shaft Abutment No. 1	35	5	175
Drilled Shaft Abutment No. 2	35	5	175
		Lin ft. =	***350***

	No. of Slabs
AASHTO Precast Slab	16

	Weight of Bar	Length of Bars	No. of Bars	Total Weight
Abutment No. 1				
No.5 Straight Bars Dowel	1.043	2	65	136
No. 8 Dowel	2.67	3	16	128
No.5 Stirrups	1.043	11.83	44	543
No.5 Stirrups	1.043	11.83	44	543
No.5 Stirrups	1.043	6.416	44	294
No. 5 Straight Bars	1.043	65	10	678
No. 7 Straight Bars Cont. on Top	2.044	65	7	930
No. 7 Straight Bars Over columns	2.044	65	5	664
Total Lbs =				**3916**
ment No. 2				
Total Lbs =				**3916**
Walls				
Longitudinal Bars (Deck)	1.043	47.33	28	1382
Vertical Bars (Deck)	1.043	8.83	192	1768
Longitudinal Bars (Wingwall #1)	1.043	10	28	292
Vertical Bars (Wingwall #1)	1.043	8.83	40	368
Longitudinal Bars (Wingwall #2)	1.043	28	34	993
Vertical Bars (Wingwall #2)	1.043	9.83	112	1148
Total Lbs =				**5952**
Superstructure				
No. 5 Transverse in Top of Deck	0.668	65	48	2084
No.5 Tansverse in Bot. of Deck	0.668	65	48	2084
No. 4 Long. In top of Deck	0.668	48	65	2084
No. 4 Long. In bottom of deck	0.668	48	44	1411
Total lbs =				**7663**

	Weight of Bar	Length of Bars	No. of Bars	Total Weight
Approach Slab				
No. 4 Transverse in Top of Slab 1	0.668	72.0729	8	385
No. 8 Longit. in Bot. of Slab 1	2.67	7.0729	96	1813
No. 4 Long. In Top of Slab 1	0.668	7.07	72	340
No. 5 Tranvs. In Bot. of Slab 1	1.043	72.0729	8	601
No. 4 Stirrup at edge of Slab 1	0.668	2.54	53	90
No. 4 Stirrup at beginning of Slab 1	0.668	10	65	434
No. 4 Transverse in Top of Slab 2	0.668	65	40	1737
No. 8 Longit. in Bot. of Slab 2	2.67	39.27	87	9122
No. 4 Long. In Top of Slab 2	0.668	39.27	65	1705
No. 5 Tranvs. In Bot. of Slab 2	1.043	65	40	2712
No. 4 Stirrup at edge of Slab 2	0.668	2.54	65	110
No. 4 Stirrup at beginning of Slab 2 (triangle-2)	0.668	10	44	294
No. 4 Transverse in Top of Slab 2	0.668	14.14	24	227
No. 8 Longit. in Bot. of Slab 2	2.67	24.14	37	2385
No. 4 Long. In Top of Slab 2	0.668	24.14	28	452
No. 5 Tranvs. In Bot. of Slab 2	1.043	14.14	24	354
No. 4 Stirrup at edge of Slab 2	0.668	2.54	19	32
Total lbs =				**22793**

SVERDRUP

SHEET NO. 71 OF 71

JOB 013884 BID Overchute

DATE Sept 98

Computations for Quantities

BY RKS CHKD JFF

ITEM DESCRIPTION	UNIT	QUANTITY	UNIT PRICE	AMOUNT
Structural Concrete (Class A) (f'c = 3000psi)	Cu. Yd.	84	225.00	18,900
Structural Concrete (Class A) (f'c = 4000psi)	Cu. Yd.	320	275.00	88,000
Reinforcing Steel	Lbs	44244	0.50	22,122
2.5' Diameter Drilled Shaft	Lin Ft.	350	160.00	56,000
Precast-Prestressed Members	Lin Ft.	757	115	87055
TOTAL				$272,077

AVERY

BROOKS, HERSEY & ASSOCIATES, INC.
ENGINEERS/SURVEYORS
CONSTRUCTION ADMINISTRATORS

October 13, 1997

Brad Olbert
Sverdrup
432 North 44th Street, #250
Phoenix, Arizona 85008

Re: **Bench Marks for Estrella Parkway/Bullard Wash**

Dear Brad,

Please note the following benchmarks for the above mentioned project. These benchmarks should be easily identifiable on your plans.

BENCHMARK DESCRIPTION	ELEVATION
MCHD Brass Cap in Hand Hole @ Intersection of Bullard Avenue & Broadway Road	922.00
Aluminum Cap located on Headwall @ the Northeast corner of Bridge on MC 85	933.43
MCHD Brass Cap in Hand Hole Estrella Parkway & Broadway Road	913.18
MCHD Brass Cap in Hand Hole Estrella Parkway & Lower Buckeye Road	952.11
Brass Cap in Hand Hole at intersection of Lower Buckeye Road & 157th Avenue	949.87
½" Rebar North ¼ Corner Section 20	942.97

You may reach me at 437-3733 if you have any questions.

Sincerely,
Brooks, Hersey and Associates, Inc.

Allen C. Aerni, R.L.S.
Survey Manager

ACA/nef

4602 E. Elwood Street #16
Phoenix, Arizona 85040-1960
PH (602) 437-3733
FAX (602) 858-0204

..ROOKS, HERSEY & ASSOCIATES, INC.
ENGINEERS/SURVEYORS
CONSTRUCTION ADMINISTRATORS

September 12, 1997

Brad Olbert
Sverdrup
432 North 44th Street, #250
Phoenix, Arizona 85008

Re: **Estrella Parkway Section Corners**

Dear Brad,

Please note the following coordinates and monument description to be used for control for the above referenced project.

Township 1 North, Range 1 West

SECTION CORNER	NORTHING	EASTING	DESCRIPTION
South ¼ Corner Section 19	44,664.30	42,124.07	½" Rebar

Please call if I can be of further assistance.

Sincerely,
Brooks, Hersey & Associates, Inc.

REGISTERED LAND SURVEYOR
CERTIFICATE NO.
24513
ALLEN C.
AERNI
Date Signed 9-12-97
ARIZONA, U.S.A.

Allen C. Aerni, R.L.S.
Survey Manager

ACA/nef

C:\WPDOCS\WPACA\ESTRLA-2.LTR

4602 E. Elwood Street #16
Phoenix, Arizona 85040-1960
PH (602) 437-3733
FAX (602) 858-0204

BROOKS, HERSEY & ASSOCIATES, INC.
ENGINEERS/SURVEYORS
CONSTRUCTION ADMINISTRATORS

September 2, 1997

Brad Olbert
Sverdrup
432 North 44th Street, #250
Phoenix, Arizona 85008

Re: **Estrella Parkway Section Corners**

Dear Brad,

Please note the following coordinates and monument description to be used for control for the above referenced project.

Township 1 North, Range 1 West

SECTION CORNER	NORTHING	EASTING	DESCRIPTION
North ¼ Corner Section 19	49,935.69	42,130.89	½" Rebar
West ¼ Corner Section 17	52,607.29	44,672.28	Brasscap in Hand Hole
Northwest Corner Section 17	55,256.03	44,613.89	Stone with Drill Hole
North ¼ Corner Section 17	55,249.39	47,201.24	Cotton Picker Spindle
West ¼ Corner Section 8	57,894.44	44,615.50	Brasscap in Hand Hole
North ¼ Corner Section 18	55,258.84	42,028.61	Cotton Picker Spindle

Please call if I can be of further assistance.

Sincerely,
Brooks, Hersey & Associates, Inc.

REGISTERED LAND SURVEYOR
CERTIFICATE NO. 24513
ALLEN C. AERNI
Date Signed 9-3-97
ARIZONA, U.S.A.

Allen C. Aerni, R.L.S.
Survey Manager

ACA/nef

C:\WPDOCS\HMADA\ESTRLA.LTR

4602 E. Elwood Street #16
Phoenix, Arizona 85040-1960
PH (602) 437-3733
FAX (602) 858-0204

SVERDRUP

JOB BULLARD WASH CHANNEL IMPROVEMENTS
FINAL DESIGN

COMPUTATIONS FOR PROJECT STATIONING

SHEET NO. 1 OF 1

DATE 12 SEP 97

BY SWG CHKD

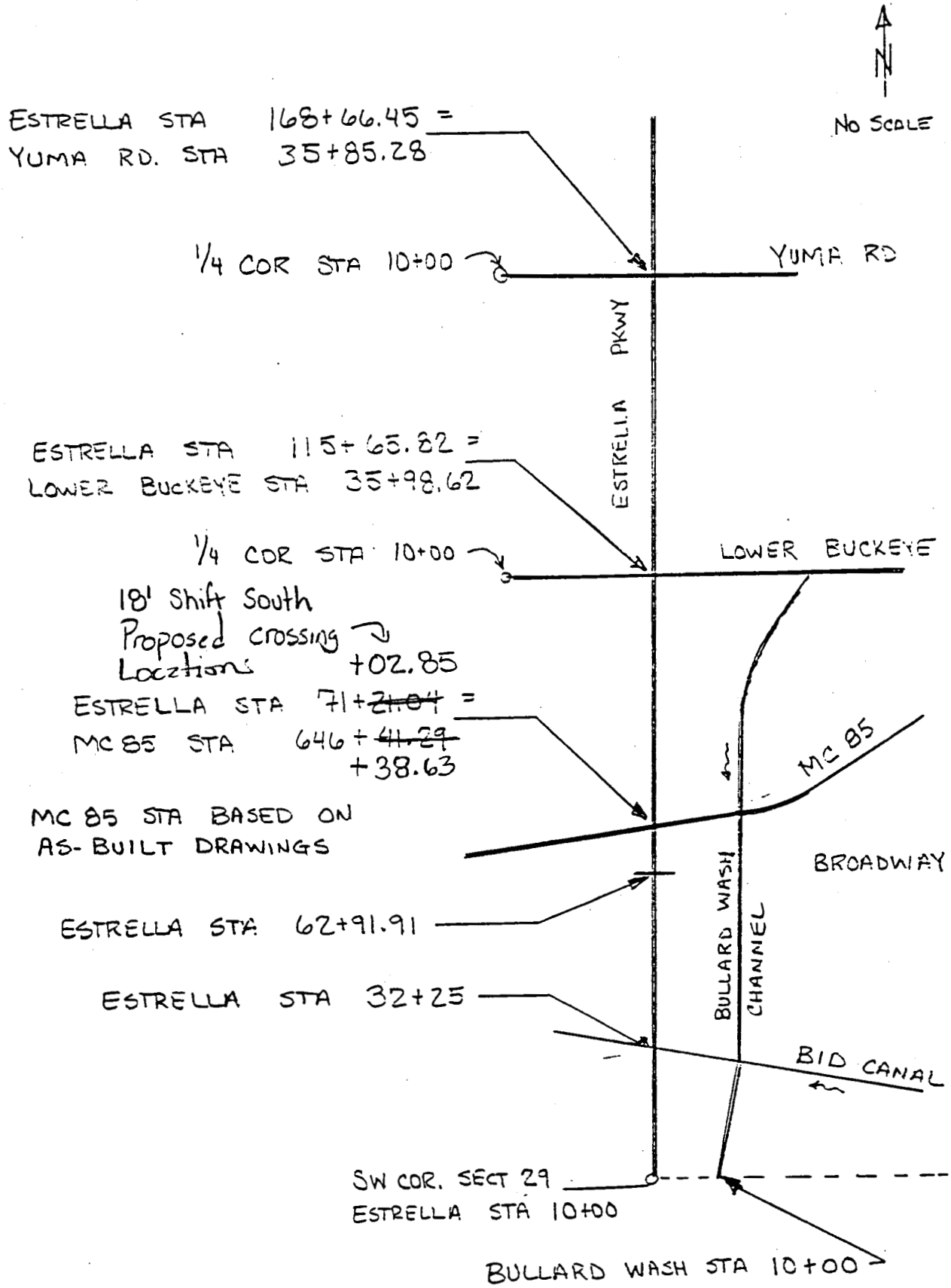

DATA COLLECTOR CODES

ROAD

R1	B.C. IN H.H.
R2	B.C. FLUSH
R3	GUTTER
RA	APRON
RB	BACK OF CURB
RC	CENTER LINE
RD	DRIVE-WAY
RE	EDGE OF PAVING
RF	FLOW LINE
RG	SIGN
RH	A/C @ FACE OF CURB
RI	EDGE OF ROAD (WHAT TYPE)
RJ	DEPRESSED CURB
RK	P.K. NAIL
RL	LIP OF GUTTER
RM	MONUMENT LINE
RN	BULL NOSE
RO	CURB OPENING
RP	PAVING
RR	RETURN
RS	SHOULD
RT	TOE
RU	RETENTION
RV	VALLEY GUTTER
RW	WALK
RX	EXTRUDED CURB
RY	MEDIAN
RZ	MISCELLANEOUS

SEWER

SC	CLEAN-OUT
SL	SEWER LINE
SM	MANHOLE
SY	TAP
SZ	MISCELLANEOUS

WATER

WF	FIRE HYDRANT
WL	WATER LINE
WM	WATER METER
WP	WATER PIPE
WT	TAIL WATER
WV	WATER VALVE
WZ	MISCELLANEOUS

APTO AIRPLANE TIE DOWN

STORM DRAIN

MC	CATCH BASIN
MD	DRY WELL
MM	MANHOLE
MP	PIPE
MS	STORM DRAIN
MZ	MISCELLANEOUS

IRRIGATION

IC	CONCRETE TOE
ID	TAIL WATER
IE	CONCRETE SHOULDER
IF	FLOW LINE
IG	GROUND
IH	HEADWALL
II	IRRIGATION BOX
IP	STANDPIPE
IS	SHOULDER
IT	TOE
IV	IRRIGATION VALVE
IW	WING WALL
IZ	MISCELLANEOUS

STRUCTURES

BA	AIR CONDITIONING
BB	BUILDING SIGN
BC	CORNER BUILDING
BD	EDGE OF SWIMMING POOL
BE	EDGE OF WALK
BF	FINISHED FLOOR
BG	GENERATOR
BH	PUMP (WHAT KIND)
BI	PATIO
BJ	CURB STOPS
BK	PARKING
BL	RAILS
BM	ANGLE POINT
BO	OVER-HANG
BP	EDGE OF PLANTER
BR	RAMP
BS	STAIRS
BT	CONDUIT
BU	COLUMN
BV	MAILBOX
BY	YARD
BZ	MISCELLANEOUS

TELEPHONE

TM	TELE. MANHOLE
TR	TELE. RISE

MISC.

PT	PALM TREE
TT	TREE
TV	CABLE TV

ELECTRIC

EB	ELECTRIC BOX
EE	ELECTRIC METER
EF	TRANSFORMER (PAD OF BOX)
EG	GUY WIRE (OR POLE)
EI	PEDESTRIAN LITE
EL	TRAFFIC LITE
EM	MANHOLE
EN	LINE
EP	POWER POLE
ER	RISE (WHAT KIND)
ES	STREET LITE
ET	TRAFFIC CONTROL BOX
EU	UTILITY POLE
EV	SERVICE POLE
EZ	MISCELLANEOUS

GAS

GB	BLUE LINE
GM	GAS MANHOLE
GL	GAS LINE
GM	GAS METER
GV	GAS VALVE
GZ	MISCELLANEOUS

WALLS OR FENCES

FA	ANGLE POINT (WHAT TYPE)
FB	BACK WALL (WHAT TYPE)
FC	FENCE CORNER (WHAT TYPE)
FF	END WALL OR FENCE (WHAT TYPE)
FL	FACE WALL (WHAT TYPE)
FL	FENCE LINE (WHAT TYPE)
FT	TOP WALL (WHAT TYPE)
FZ	MISCELLANEOUS

ALL ELSE

SVERDRUP

JOB Bullard / Estrella

COMPUTATIONS FOR Survey

SHEET NO. _____ OF _____

DATE _____

BY _____ CHKD _____

Undefined Survey Codes

FL IG -

FO

FO RG

FO / RE

RB MOC Back of Curb

TH

~~FFS~~

FL MOC

MOC

OP IG

~~STR~~ South Top of Rail

TH

TT

RP (where on pavement)

```
*BULLARD WASH (SURVEY DATA #1)
DELETE COORDINATES (1-50)
STORE   6       42058.61        44753.81        910.84  *START
STORE   16      49956.32        44730.04        952.11  *R1
STORE   18      44682.70        44739.93        913.18  *R1
STORE   40      45578.29        44771.85        917.91  *TRAV.PT.
STORE   48      41682.60        44751.59        913.30  *TRAV.PT.
STORE   49      42694.57        44803.17        909.12  *TRAV.PT.
STORE   50      43285.43        44791.35        910.57  *TRAV.PT.
STORE   51      43887.74        44804.91        912.49  *TRAV.PT.
STORE   52      44348.14        44799.30        913.43  *TRAV.PT.
STORE   53      45107.10        44677.84        914.90  *TRAV.PT.
STORE   54      46036.49        44757.90        923.91  *TRAV.PT.
STORE   55      46495.12        44705.47        927.75  *TRAV.PT.
STORE   56      47003.41        44706.19        932.48  *TRAV.PT.
STORE   57      47361.17        44693.99        934.92  *TRAV.PT.
STORE   58      47861.72        44697.80        937.15  *TRAV.PT.
STORE   59      48364.55        44701.62        939.57  *TRAV.PT.
STORE   60      48864.93        44705.43        944.55  *TRAV.PT.
STORE   61      49368.22        44697.12        947.78  *TRAV.PT.
STORE   62      49617.89        44690.04        949.57  *TRAV.PT.
STORE   63      50465.81        44682.62        952.21  *TRAV.PT.
STORE   64      50958.87        44671.78        957.31  *TRAV.PT.
STORE   65      51464.70        44661.35        959.52  *TRAV.PT.
STORE   66      51755.86        44691.25        -99999.00       *.
STORE   67      49952.38        44230.71        953.64  *TRAV.PT.
STORE   68      49948.42        43729.17        952.81  *TRAV.PT.
STORE   69      49944.46        43226.86        951.45  *TRAV.PT.
STORE   70      49941.82        42891.47        949.87  *R1
STORE   100     41586.83        44684.39        910.16  *IG
STORE   101     41584.21        44740.46        911.07  *IG
STORE   102     41583.63        44758.87        912.90  *RE
STORE   103     41581.25        44773.26        912.77  *RC
STORE   104     41578.07        44794.87        912.49  *RE
STORE   105     41575.69        44832.55        911.47  *IG
STORE   106     41573.88        44882.89        910.06  *IG
STORE   107     41649.23        44822.43        900.63  *INV.24INCONCPIPE
STORE   108     41678.02        44874.47        908.95  *IG
STORE   109     41683.63        44826.14        909.69  *IG
STORE   110     41688.36        44794.11        912.94  *RE
STORE   111     41692.04        44772.53        913.15  *RC
STORE   112     41694.23        44758.20        913.30  *RE
STORE   113     41674.77        44758.28        913.29  *RE
STORE   114     41668.79        44794.26        912.77  *RE
STORE   115     41694.50        44752.79        913.43  *IG
STORE   116     41694.00        44692.55        908.27  *IG
STORE   117     41696.36        44660.18        907.70  *IG
STORE   118     41751.32        44825.52        912.01  *IH
STORE   119     41751.30        44820.43        912.03  *IH
STORE   120     41754.38        44815.11        912.00  *IH
STORE   121     41761.23        44814.92        912.02  *IH
STORE   122     41756.25        44815.90        908.44  *INV 24IN CMP
STORE   123     41753.72        44818.04        906.33  *INV 42IN CMP
STORE   124     41730.69        44921.97        911.93  *TOP
STORE   125     41737.47        44922.72        907.01  *TOE
STORE   126     41739.61        44922.71        907.19  *TOE
STORE   127     41746.34        44924.38        911.64  *TOP
STORE   128     41749.54        44903.69        911.03  *TOP
STORE   129     41742.96        44902.56        907.22  *TOE
STORE   130     41740.87        44902.43        907.13  *TOE
STORE   131     41734.68        44901.29        911.51  *TOP
STORE   132     41737.97        44876.69        912.15  *TOP
STORE   133     41743.93        44877.32        907.05  *TOE
STORE   134     41745.86        44878.07        907.10  *TOE
STORE   135     41755.51        44879.51        911.79  *TOP
STORE   136     41759.62        44854.75        911.56  *TOP
STORE   137     41750.71        44854.46        907.07  *TOE
STORE   138     41748.73        44853.43        907.00  *TOE
STORE   139     41740.78        44851.12        913.10  *TOP
STORE   140     41860.89        44805.03        911.73  *TOP
STORE   141     41860.77        44813.60        906.90  *TOE
STORE   142     41834.80        44814.61        906.49  *TOE
STORE   143     41834.29        44806.40        912.27  *TOP
STORE   144     41808.87        44806.81        912.56  *TOP
STORE   145     41809.05        44815.67        906.58  *TOE
STORE   146     41781.74        44814.15        906.75  *TOE
STORE   147     41782.08        44806.79        912.07  *TOP
STORE   148     41781.69        44830.98        911.79  *TOP
STORE   149     41781.65        44820.90        906.65  *TOE
```

STORE	150	41808.57	44822.86	906.85	*TOE
STORE	151	41809.11	44835.69	911.83	*TOP
STORE	152	41835.81	44834.43	911.82	*TOP
STORE	153	41833.72	44819.84	906.41	*TOE
STORE	154	41860.64	44820.20	906.83	*TOE
STORE	155	41860.50	44831.33	911.28	*TOP
STORE	156	41780.54	44888.33	910.91	*IG
STORE	157	41781.99	44804.92	911.67	*IG
STORE	158	41782.95	44792.32	912.05	*RE
STORE	159	41783.01	44771.95	912.32	*RC
STORE	160	41783.15	44757.84	912.41	*RE
STORE	161	41783.30	44732.20	912.10	*IG
STORE	162	41783.08	44727.94	912.86	*IG
STORE	163	41782.01	44696.60	912.38	*IG
STORE	164	41781.96	44689.37	911.48	*IG
STORE	165	41782.08	44675.81	911.44	*IG
STORE	166	41781.32	44669.13	912.29	*IG
STORE	167	41799.65	44724.53	911.72	*IW
STORE	168	41800.40	44727.74	911.74	*IW
STORE	169	41805.00	44730.56	911.70	*IW
STORE	170	41808.59	44728.53	911.68	*IW
STORE	171	41803.00	44729.05	907.24	*INV 24IN CMP
STORE	172	41896.88	44744.97	910.57	*TOP
STORE	173	41896.86	44737.68	908.59	*TOE
STORE	174	41896.92	44734.21	908.65	*TOE
STORE	175	41896.19	44728.42	911.35	*TOP
STORE	176	41874.29	44729.65	911.19	*TOP
STORE	177	41874.64	44734.27	908.53	*TOE
STORE	178	41874.87	44738.08	908.58	*TOE
STORE	179	41874.77	44745.26	910.50	*TOP
STORE	180	41851.66	44744.69	910.87	*TOP
STORE	181	41851.46	44738.45	908.38	*TOE
STORE	182	41851.43	44735.47	908.40	*TOE
STORE	183	41851.00	44730.32	911.12	*TOP
STORE	184	41835.57	44727.14	911.12	*TOP
STORE	185	41833.03	44731.88	908.38	*TOE
STORE	186	41831.80	44734.37	908.49	*TOE
STORE	187	41829.00	44739.01	910.98	*TOP
STORE	188	41883.04	44771.42	910.91	*RC
STORE	189	41883.00	44757.33	910.99	*RE
STORE	190	41883.38	44744.88	910.61	*TOP
STORE	191	41883.71	44737.31	908.39	*TOE
STORE	192	41883.86	44734.41	908.24	*TOE
STORE	193	41883.02	44729.02	911.15	*TOP
STORE	194	41883.47	44696.03	911.21	*IG
STORE	195	41883.33	44664.59	910.98	*IG
STORE	196	41882.45	44789.28	910.74	*RE
STORE	197	41882.28	44803.18	910.70	*IG
STORE	198	41881.72	44808.54	910.99	*TOP
STORE	199	41881.75	44815.02	906.74	*TOE
STORE	200	41880.46	44820.62	906.55	*TOE
STORE	201	41880.00	44829.79	911.68	*TOP
STORE	202	41880.31	44843.19	912.18	*IG
STORE	203	41881.19	44862.00	910.40	*IG
STORE	204	41881.47	44891.95	910.30	*IG
STORE	205	41984.77	44913.38	910.46	*IG
STORE	206	41984.96	44860.42	910.60	*IG
STORE	207	41983.98	44845.91	912.49	*IG
STORE	208	41984.00	44831.51	912.13	*TOP
STORE	209	41983.74	44822.23	906.69	*TOE
STORE	210	41984.34	44817.18	906.67	*TOE
STORE	211	41984.22	44812.74	909.57	*TOP
STORE	212	41968.34	44795.45	910.55	*RG
STORE	213	41984.37	44798.87	909.50	*IG
STORE	214	41984.01	44786.58	910.23	*RE
STORE	215	41983.58	44770.78	910.60	*RC
STORE	216	41984.07	44756.60	910.72	*RE
STORE	217	41984.21	44737.71	910.09	*TOP
STORE	218	41970.38	44745.45	910.85	*RG
STORE	219	41984.46	44735.89	908.88	*TOE
STORE	220	41984.31	44733.15	908.69	*TOE
STORE	221	41983.24	44727.11	911.79	*TOP
STORE	222	41991.64	44731.05	911.35	*RG
STORE	223	41990.55	44728.92	911.53	*RG
STORE	224	41983.97	44695.63	911.88	*IG
STORE	225	41981.29	44671.05	911.84	*IG
STORE	226	41986.21	44734.57	908.69	*INV 24IN CMP
STORE	227	41916.96	44744.62	910.64	*TOP
STORE	228	41917.00	44737.58	908.80	*TOE

STORE	229	41916.55	44733.78	908.64	*TOE
STORE	230	41917.08	44728.34	911.45	*TOP
STORE	231	41938.98	44728.25	911.44	*TOP
STORE	232	41938.97	44734.00	908.68	*TOE
STORE	233	41938.94	44737.25	908.68	*TOE
STORE	234	41939.41	44744.61	910.62	*TOP
STORE	235	42016.26	44819.03	905.68	*INV 42INCONCPIPE
STORE	236	42053.37	44818.27	905.80	*INV 42INCONCPIPE
STORE	237	42060.89	44811.15	911.93	*IW
STORE	238	42052.48	44811.16	911.92	*IW
STORE	239	42052.65	44822.15	911.95	*IH
STORE	240	42059.03	44821.96	911.93	*IH
STORE	241	42054.90	44821.22	908.83	*INV 18INCONCPIPE
STORE	242	42052.02	44830.34	911.77	*GATEPOST
STORE	243	42022.03	44829.39	911.37	*GATEPOST
STORE	244	41960.40	44832.68	911.89	*TOP
STORE	245	41960.21	44824.09	906.79	*TOE
STORE	246	41936.73	44822.82	906.64	*TOE
STORE	247	41936.11	44833.07	912.24	*TOP
STORE	248	41911.98	44832.18	912.05	*TOP
STORE	249	41912.42	44822.38	906.68	*TOE
STORE	250	41993.17	44817.30	906.54	*TOE
STORE	251	41992.43	44810.73	909.84	*TOP
STORE	252	41960.92	44811.82	909.92	*TOP
STORE	253	41961.00	44818.63	906.77	*TOE
STORE	254	41936.13	44810.78	910.51	*TOP
STORE	255	41936.43	44817.55	906.57	*TOE
STORE	256	42032.27	44732.89	911.03	*RG
STORE	257	42036.37	44734.92	908.86	*INV 24IN CMP
STORE	258	42060.35	44741.23	910.38	*TOP
STORE	259	42060.65	44736.52	908.95	*IF
STORE	260	42059.61	44725.46	911.39	*TOP
STORE	261	42085.42	44724.92	911.42	*TOP
STORE	262	42084.79	44736.70	909.15	*TOE
STORE	263	42084.75	44739.25	908.98	*TOE
STORE	264	42084.46	44743.03	910.25	*TOP
STORE	265	42085.95	44656.81	910.68	*IG
STORE	266	42084.94	44685.18	910.54	*IG
STORE	267	42085.57	44715.97	910.62	*IG
STORE	268	42085.57	44719.93	911.58	*IG
STORE	269	42083.99	44756.41	910.99	*RE
STORE	270	42112.06	44751.80	910.65	*RG
STORE	271	42112.44	44748.12	910.37	*RG
STORE	272	42083.90	44770.46	910.80	*RC
STORE	273	42083.54	44784.72	910.34	*RE
STORE	274	42083.74	44812.55	909.36	*TOP
STORE	275	42083.58	44817.84	906.88	*TOE
STORE	276	42086.85	44821.27	906.70	*TOE
STORE	277	42086.83	44832.92	911.61	*TOP
STORE	278	42087.60	44848.93	911.99	*IG
STORE	279	42087.72	44851.89	911.10	*IG
STORE	280	42087.35	44885.51	910.61	*IG
STORE	281	42185.00	44886.05	910.84	*IG
STORE	282	42184.90	44850.88	911.03	*IG
STORE	283	42184.95	44845.79	912.14	*IG
STORE	284	42186.20	44829.73	912.20	*TOP
STORE	285	42186.06	44820.86	906.84	*TOE
STORE	286	42285.20	44816.98	906.83	*TOE
STORE	287	42284.70	44826.63	912.28	*TOP
STORE	288	42285.43	44842.81	912.34	*IG
STORE	289	42285.60	44848.24	911.18	*IG
STORE	290	42286.84	44885.64	911.07	*IG
STORE	291	42384.32	44815.77	907.00	*TOE
STORE	292	42383.17	44825.45	912.52	*TOP
STORE	293	42383.50	44841.58	912.52	*IG
STORE	294	42384.38	44847.66	911.30	*IG
STORE	295	42386.47	44882.03	911.22	*IG
STORE	296	42183.50	44817.61	906.93	*TOE
STORE	297	42183.65	44810.66	909.22	*TOP
STORE	298	42184.65	44798.86	909.46	*IG
STORE	299	42185.19	44792.46	910.49	*IG
STORE	300	42185.31	44783.68	910.66	*RE
STORE	301	42184.37	44769.94	911.01	*RC
STORE	302	42184.16	44756.09	911.11	*RE
STORE	303	42184.04	44738.25	909.52	*IF
STORE	304	42184.52	44719.66	911.93	*TOP
STORE	305	42184.58	44716.92	910.83	*IG
STORE	306	42181.70	44666.73	910.87	*IG
STORE	307	42286.94	44670.23	910.94	*IG

STORE	308	42285.88	44716.05	910.78	*IG
STORE	309	42284.81	44718.66	911.85	*TOP
STORE	310	42284.45	44738.41	909.54	*IF
STORE	311	42284.31	44755.62	911.34	*RE
STORE	312	42284.56	44769.76	911.18	*RC
STORE	313	42284.77	44783.10	910.82	*RE
STORE	314	42284.53	44808.82	908.93	*TOP
STORE	315	42284.98	44813.94	906.87	*TOE
STORE	316	42384.90	44813.02	906.99	*TOE
STORE	317	42384.95	44808.11	909.01	*TOP
STORE	318	42384.31	44783.07	911.08	*RE
STORE	319	42384.99	44769.33	911.42	*RC
STORE	320	42384.67	44755.37	911.52	*RE
STORE	321	42384.92	44737.43	909.55	*IF
STORE	322	42385.06	44718.43	911.85	*TOP
STORE	323	42384.74	44714.96	910.79	*IG
STORE	324	42382.81	44661.27	910.89	*IG
STORE	325	42485.96	44816.73	907.13	*TOE
STORE	326	42486.78	44825.22	912.34	*TOP
STORE	327	42486.69	44840.70	912.56	*IG
STORE	328	42486.62	44845.41	911.37	*IG
STORE	329	42483.44	44895.03	911.30	*IG
STORE	330	42586.34	44814.47	907.14	*TOE
STORE	331	42586.71	44822.91	912.75	*TOP
STORE	332	42586.15	44839.76	912.96	*IG
STORE	333	42586.05	44844.73	911.61	*IG
STORE	334	42584.94	44882.31	911.51	*IG
STORE	335	42683.20	44888.66	911.57	*IG
STORE	336	42684.52	44844.06	911.84	*IG
STORE	337	42684.75	44840.48	912.68	*IG
STORE	338	42687.72	44823.65	912.99	*TOP
STORE	339	42684.82	44814.90	907.22	*TOE
STORE	340	42786.32	44814.26	907.29	*TOE
STORE	341	42784.17	44822.46	913.12	*TOP
STORE	342	42786.36	44838.64	913.12	*IG
STORE	343	42786.36	44843.79	911.83	*IG
STORE	344	42787.11	44882.11	911.85	*IG
STORE	345	42883.85	44884.79	911.93	*IG
STORE	346	42884.87	44842.53	912.05	*IG
STORE	347	42884.82	44838.00	913.36	*IG
STORE	348	42885.69	44821.04	913.25	*TOP
STORE	349	42885.33	44812.47	907.43	*TOE
STORE	350	42986.74	44811.09	907.50	*TOE
STORE	351	42986.92	44820.35	913.77	*TOP
STORE	352	42986.18	44837.82	913.53	*IG
STORE	353	42986.49	44842.52	912.17	*IG
STORE	354	42986.36	44889.68	912.13	*IG
STORE	355	42581.15	44791.35	911.16	*WF
STORE	356	42580.85	44752.46	911.78	*WV
STORE	357	42486.24	44813.18	907.01	*TOE
STORE	358	42485.91	44808.05	909.30	*TOP
STORE	359	42485.04	44782.94	911.13	*RE
STORE	360	42485.21	44768.96	911.52	*RC
STORE	361	42485.19	44755.04	911.68	*RE
STORE	362	42485.24	44736.62	909.60	*IF
STORE	363	42485.52	44718.11	911.80	*TOP
STORE	364	42485.59	44714.44	910.68	*IG
STORE	365	42484.47	44666.32	910.85	*IG
STORE	366	42583.02	44665.98	910.87	*IG
STORE	367	42583.42	44691.22	910.88	*IG
STORE	368	42584.38	44715.12	910.96	*IG
STORE	369	42584.28	44717.46	912.02	*TOP
STORE	370	42584.98	44735.78	909.82	*IF
STORE	371	42585.13	44755.05	911.89	*RE
STORE	372	42585.12	44768.64	911.74	*RC
STORE	373	42585.39	44782.16	911.44	*RE
STORE	374	42586.56	44806.45	909.68	*TOP
STORE	375	42586.35	44810.99	907.12	*TOE
STORE	376	42684.89	44811.17	907.23	*TOE
STORE	377	42684.71	44806.39	909.52	*TOP
STORE	378	42684.82	44782.51	911.39	*RE
STORE	379	42685.01	44768.22	911.85	*RC
STORE	380	42685.23	44754.61	912.01	*RE
STORE	381	42685.37	44735.85	909.84	*IF
STORE	382	42685.58	44716.76	911.96	*TOP
STORE	383	42685.63	44713.89	910.89	*IG
STORE	384	42685.26	44687.65	910.96	*IG
STORE	385	42685.32	44662.34	910.94	*IG
STORE	386	42783.38	44662.18	910.83	*IG

STORE	387	42783.90	44688.81	910.96	*IG
STORE	388	42783.82	44713.03	910.68	*IG
STORE	389	42784.50	44716.14	911.88	*TOP
STORE	390	42785.18	44735.65	909.92	*IF
STORE	391	42785.32	44754.37	912.12	*RE
STORE	392	42785.25	44767.94	911.99	*RC
STORE	393	42786.00	44781.72	911.71	*RE
STORE	394	42786.00	44805.07	909.81	*TOP
STORE	395	42786.42	44810.24	907.40	*TOE
STORE	396	42884.84	44808.19	907.36	*TOE
STORE	397	42885.02	44803.28	909.82	*TOP
STORE	398	42885.54	44781.13	911.52	*RE
STORE	399	42885.95	44768.14	911.84	*RC
STORE	400	42885.76	44753.75	912.01	*RE
STORE	401	42828.47	44749.75	911.75	*RG
STORE	402	42829.11	44746.10	911.56	*RG
STORE	403	42885.87	44736.21	909.93	*IF
STORE	404	42885.97	44716.66	911.99	*TOP
STORE	405	42886.44	44714.06	910.96	*IG
STORE	406	42886.32	44687.91	911.02	*IG
STORE	407	42887.05	44660.31	911.00	*IG
STORE	408	42984.31	44659.94	911.01	*IG
STORE	409	42984.29	44685.97	911.19	*IG
STORE	410	42985.16	44714.52	911.03	*IG
STORE	411	42986.00	44717.43	912.15	*TOP
STORE	412	42986.06	44735.70	910.16	*IF
STORE	413	42985.78	44753.47	911.87	*RE
STORE	414	42986.12	44767.40	911.67	*RC
STORE	415	42986.22	44781.06	911.33	*RE
STORE	416	42986.65	44801.08	910.28	*TOP
STORE	417	42986.71	44807.26	907.40	*TOE
STORE	418	43051.53	44788.83	910.95	*TM
STORE	419	43051.12	44792.65	910.84	*RG
STORE	420	43072.88	44786.48	911.43	*RG
STORE	421	43074.27	44747.74	912.28	*RG
STORE	422	43085.38	44661.07	911.01	*IG
STORE	423	43086.27	44692.42	910.98	*IG
STORE	424	43085.95	44714.76	910.92	*IG
STORE	425	43086.05	44717.31	911.95	*TOP
STORE	426	43086.15	44736.66	910.23	*IF
STORE	427	43085.86	44753.11	911.75	*RE
STORE	428	43086.12	44767.57	911.59	*RC
STORE	429	43086.07	44780.51	911.16	*RE
STORE	430	43085.82	44805.08	909.64	*TOP
STORE	431	43085.90	44807.37	907.69	*TOE
STORE	432	43085.87	44811.01	907.66	*TOE
STORE	433	43085.87	44819.86	913.82	*TOP
STORE	434	43085.64	44836.04	913.85	*IG
STORE	435	43085.36	44841.18	912.40	*IG
STORE	436	43084.80	44869.02	912.22	*IG
STORE	437	43084.33	44894.87	912.24	*IG
STORE	438	43184.33	44896.92	912.40	*IG
STORE	439	43184.46	44867.39	912.52	*IG
STORE	440	43184.21	44839.86	912.75	*IG
STORE	441	43183.94	44835.70	913.90	*IG
STORE	442	43184.71	44819.20	913.87	*TOP
STORE	443	43185.69	44809.11	907.65	*TOE
STORE	444	43185.24	44805.74	907.83	*TOE
STORE	445	43184.56	44801.47	909.97	*TOP
STORE	446	43185.65	44780.38	911.04	*RE
STORE	447	43185.60	44767.04	911.38	*RC
STORE	448	43186.03	44752.88	911.52	*RE
STORE	449	43185.88	44738.54	910.36	*IF
STORE	450	43185.28	44718.78	912.29	*TOP
STORE	451	43184.75	44715.95	911.15	*IG
STORE	452	43185.30	44685.38	911.12	*IG
STORE	453	43185.48	44655.35	911.02	*IG
STORE	454	43283.15	44657.29	911.04	*IG
STORE	455	43284.31	44686.79	911.30	*IG
STORE	456	43285.05	44716.51	911.18	*IG
STORE	457	43285.53	44719.68	912.29	*TOP
STORE	458	43286.23	44737.33	910.45	*IF
STORE	459	43286.31	44752.48	911.39	*RE
STORE	460	43286.09	44766.89	911.23	*RC
STORE	461	43285.96	44780.12	910.84	*RE
STORE	462	43286.34	44805.63	907.78	*TOE
STORE	463	43286.00	44808.71	907.65	*TOE
STORE	464	43285.28	44817.42	913.90	*TOP
STORE	465	43285.20	44834.51	914.02	*IG

STORE	466	43284.98	44840.12	912.73	*IG
STORE	467	43284.47	44874.38	912.46	*IG
STORE	468	43282.79	44902.19	912.54	*IG
STORE	469	43344.49	44901.11	913.84	*TOP
STORE	470	43346.49	44901.30	911.90	*TOE
STORE	471	43347.58	44901.21	911.89	*TOE
STORE	472	43349.58	44901.57	913.78	*TOP
STORE	473	43350.15	44844.15	913.94	*IH
STORE	474	43350.20	44837.23	913.90	*IH
STORE	475	43343.75	44836.95	913.89	*IH
STORE	476	43347.37	44837.67	910.25	*INV 18INCONCPIPE
STORE	477	43349.40	44839.87	910.25	*INV 18INCONCPIPE
STORE	478	43372.64	44840.37	910.19	*INV 18INCONCPIPE
STORE	479	43377.12	44838.58	913.77	*IH
STORE	480	43371.86	44838.50	913.77	*IH
STORE	481	43371.80	44843.83	913.72	*IH
STORE	482	43347.57	44799.43	908.76	*INV 18INCONCPIPE
STORE	483	43349.18	44798.10	908.09	*INV 36IN CMP
STORE	484	43343.25	44802.10	911.73	*IH
STORE	485	43345.70	44800.22	911.82	*IH
STORE	486	43350.01	44800.26	911.83	*IH
STORE	487	43350.02	44795.62	911.87	*IH
STORE	488	43345.62	44795.66	911.85	*IH
STORE	489	43343.33	44793.81	911.83	*IH
STORE	490	43340.16	44790.39	911.52	*TOP
STORE	491	43340.38	44794.32	907.88	*TOE
STORE	492	43341.28	44802.34	908.48	*TOE
STORE	493	43341.47	44803.38	911.05	*GRADE BK IG
STORE	494	43341.01	44809.90	913.46	*TOP
STORE	495	43344.62	44810.06	913.07	*GATEPOST
STORE	496	43347.70	44734.82	911.06	*TOP
STORE	497	43347.42	44732.83	909.04	*INV 18IN CMP
STORE	498	43347.26	44727.91	912.00	*TOP
STORE	499	43347.60	44717.61	912.23	*END TOP
STORE	500	43349.74	44717.82	910.08	*END TOE
STORE	501	43351.44	44717.66	909.87	*END TOE
STORE	502	43353.93	44717.68	912.29	*END TOP
STORE	503	43353.58	44666.47	912.26	*TOP
STORE	504	43351.23	44667.00	909.87	*TOE
STORE	505	43349.66	44667.00	909.85	*TOE
STORE	506	43347.18	44667.05	912.23	*TOP
STORE	507	43383.25	44724.90	912.20	*TOP
STORE	508	43383.48	44732.10	909.30	*INV 18IN CMP
STORE	509	43383.12	44735.81	911.33	*TOP
STORE	510	43379.30	44791.91	911.71	*TOP
STORE	511	43379.52	44797.88	908.32	*INV 36IN CMP
STORE	512	43379.58	44803.03	912.30	*TOP
STORE	513	43375.01	44808.49	912.82	*GATEPOST
STORE	514	43385.64	44876.66	912.00	*IG
STORE	515	43385.37	44844.39	912.34	*IG
STORE	516	43385.70	44839.68	913.25	*IG
STORE	517	43385.87	44835.22	912.15	*IG
STORE	518	43385.50	44816.18	912.82	*IG
STORE	519	43385.82	44809.91	914.55	*TOP
STORE	520	43386.26	44798.75	908.83	*TOE
STORE	521	43385.27	44796.74	908.78	*TOE
STORE	522	43386.56	44791.48	911.27	*TOP
STORE	523	43387.10	44779.40	910.83	*RE
STORE	524	43386.95	44766.18	911.27	*RC
STORE	525	43386.71	44752.50	911.35	*RE
STORE	526	43387.54	44735.44	911.21	*TOP
STORE	527	43387.95	44732.47	910.54	*IF
STORE	528	43388.36	44724.39	912.29	*TOP
STORE	529	43388.33	44694.47	911.95	*IG
STORE	530	43389.57	44668.62	911.68	*IG
STORE	531	43489.38	44655.19	912.01	*IG
STORE	532	43487.82	44714.83	912.01	*IG
STORE	533	43487.06	44726.58	912.10	*TOP
STORE	534	43486.76	44730.41	910.71	*IF
STORE	535	43486.95	44752.02	911.60	*RE
STORE	536	43486.88	44765.93	911.51	*RC
STORE	537	43486.64	44779.53	911.10	*RE
STORE	538	43487.09	44788.09	911.24	*TOP
STORE	539	43486.91	44794.44	909.37	*TOE
STORE	540	43486.93	44797.39	909.06	*TOE
STORE	541	43486.93	44807.37	912.60	*TOP
STORE	542	43486.45	44822.53	912.34	*IG
STORE	543	43486.56	44825.93	913.50	*IG
STORE	544	43486.66	44828.95	912.34	*IG

STORE	545	43486.88	44849.81	912.19	*IG
STORE	546	43487.05	44876.64	912.14	*IG
STORE	547	43587.24	44877.89	912.30	*IG
STORE	548	43588.04	44853.44	912.40	*IG
STORE	549	43587.05	44828.77	912.46	*IG
STORE	550	43587.81	44825.48	913.51	*IG
STORE	551	43588.61	44822.38	912.38	*IG
STORE	552	43588.51	44806.14	912.77	*TOP
STORE	553	43588.55	44796.63	909.46	*TOE
STORE	554	43588.67	44793.43	909.53	*TOE
STORE	555	43588.28	44787.51	911.43	*IG
STORE	556	43587.02	44779.27	911.27	*RE
STORE	557	43605.18	44782.47	911.40	*RG
STORE	558	43587.10	44765.64	911.76	*RC
STORE	559	43586.92	44751.58	911.86	*RE
STORE	560	43587.19	44730.52	910.71	*IF
STORE	561	43587.12	44725.62	912.57	*TOP
STORE	562	43586.49	44713.94	912.30	*IG
STORE	563	43585.74	44683.77	912.20	*IG
STORE	564	43583.46	44650.74	911.89	*IG
STORE	565	43687.77	44877.37	912.48	*IG
STORE	566	43687.90	44828.35	912.50	*IG
STORE	567	43687.64	44825.02	913.46	*IG
STORE	568	43687.30	44822.37	912.57	*IG
STORE	569	43687.71	44805.32	912.67	*TOP
STORE	570	43687.86	44795.77	909.74	*TOE
STORE	571	43687.83	44792.89	909.60	*TOE
STORE	572	43687.64	44786.72	911.35	*TOP
STORE	573	43687.73	44778.84	911.43	*RE
STORE	574	43687.45	44765.01	911.82	*RC
STORE	575	43687.58	44751.44	911.93	*RE
STORE	576	43687.40	44740.00	911.37	*TOP
STORE	577	43687.36	44735.73	910.79	*TOE
STORE	578	43687.14	44729.90	910.65	*TOE
STORE	579	43687.36	44724.89	912.47	*TOP
STORE	580	43687.30	44712.52	912.43	*IG
STORE	581	43686.97	44681.94	912.28	*IG
STORE	582	43689.24	44650.94	912.21	*IG
STORE	583	43781.33	44632.05	912.21	*IG
STORE	584	43782.59	44665.19	912.42	*IG
STORE	585	43785.98	44707.94	912.07	*IG
STORE	586	43786.35	44709.88	912.84	*IG
STORE	587	43786.27	44724.67	912.53	*TOP
STORE	588	43786.08	44730.38	910.38	*IF
STORE	589	43787.67	44751.00	912.12	*RE
STORE	590	43765.61	44739.23	912.22	*RG
STORE	591	43788.09	44765.03	912.00	*RC
STORE	592	43788.91	44778.42	911.70	*RE
STORE	593	43789.56	44788.71	911.29	*TOP
STORE	594	43790.01	44792.24	909.85	*TOE
STORE	595	43789.38	44794.91	909.76	*TOE
STORE	596	43790.02	44804.87	913.00	*TOP
STORE	597	43790.47	44821.25	912.61	*IG
STORE	598	43790.02	44824.78	913.45	*IG
STORE	599	43789.72	44827.31	912.83	*IG
STORE	600	43791.20	44857.18	912.77	*IG
STORE	601	43792.80	44888.71	912.77	*IG
STORE	602	43887.21	44888.02	912.93	*IG
STORE	603	43887.52	44859.49	912.94	*IG
STORE	604	43887.98	44826.51	912.98	*IG
STORE	605	43887.81	44823.52	913.84	*IG
STORE	606	43887.94	44820.88	912.93	*IG
STORE	607	43887.99	44795.26	909.77	*TOE
STORE	608	43887.46	44791.60	909.98	*TOE
STORE	609	43887.54	44788.37	911.65	*TOP
STORE	610	43887.80	44778.33	911.86	*RE
STORE	611	43888.05	44764.62	912.22	*RC
STORE	612	43887.89	44750.66	912.32	*RE
STORE	613	43888.02	44730.28	910.42	*IF
STORE	614	43887.88	44723.92	912.94	*TOP
STORE	615	43888.13	44708.60	912.82	*IG
STORE	616	43888.21	44706.21	912.14	*IG
STORE	617	43887.05	44676.33	912.76	*IG
STORE	618	43887.63	44639.94	912.76	*IG
STORE	619	43980.68	44617.88	912.59	*IG
STORE	620	43982.35	44659.18	912.51	*IG
STORE	621	43985.54	44703.61	912.24	*IG
STORE	622	43986.08	44706.38	912.87	*IG
STORE	623	43986.82	44722.57	913.04	*TOP

STORE	624	43985.71	44728.53	910.79	*IF
STORE	625	43987.96	44750.39	912.55	*RE
STORE	626	43989.54	44764.47	912.42	*RC
STORE	627	43988.95	44777.96	912.05	*RE
STORE	628	43989.77	44788.51	911.49	*TOP
STORE	629	43990.16	44791.86	910.29	*TOE
STORE	630	43990.35	44796.16	910.21	*TOE
STORE	631	43990.57	44804.35	913.08	*TOP
STORE	632	43991.26	44820.59	913.20	*IG
STORE	633	43991.45	44823.31	914.00	*IG
STORE	634	43991.49	44826.59	913.13	*IG
STORE	635	43992.76	44852.62	913.06	*IG
STORE	636	43994.17	44880.68	913.09	*IG
STORE	637	44094.15	44883.22	913.29	*IG
STORE	638	44092.96	44854.93	913.25	*IG
STORE	639	44092.07	44825.84	913.27	*IG
STORE	640	44091.99	44823.00	914.38	*IG
STORE	641	44091.79	44819.75	913.43	*IG
STORE	642	44090.49	44805.48	913.33	*TOP
STORE	643	44090.09	44795.72	910.41	*TOE
STORE	644	44090.27	44789.95	910.53	*TOE
STORE	645	44089.86	44784.61	912.03	*TOP
STORE	646	44089.75	44777.53	912.31	*RE
STORE	647	44089.09	44763.97	912.61	*RC
STORE	648	44088.62	44750.25	912.77	*RE
STORE	649	44087.71	44728.32	910.61	*IF
STORE	650	44087.71	44721.73	913.13	*TOP
STORE	651	44086.82	44705.78	913.19	*IG
STORE	652	44087.43	44702.38	912.51	*IG
STORE	653	44086.98	44671.48	912.88	*IG
STORE	654	44083.75	44638.46	912.73	*IG
STORE	655	44166.15	44781.01	912.90	*RG
STORE	656	44167.45	44737.94	912.12	*RG
STORE	657	44185.98	44650.24	913.04	*IG
STORE	658	44187.53	44701.05	912.54	*IG
STORE	659	44187.42	44703.94	913.42	*IG
STORE	660	44187.89	44720.55	913.16	*TOP
STORE	661	44188.46	44726.51	910.79	*IF
STORE	662	44189.26	44749.04	912.82	*RE ANG. PT
STORE	663	44189.38	44763.15	913.02	*RC
STORE	664	44189.58	44776.88	912.62	*RE ANG. PT.
STORE	665	44190.08	44784.48	912.32	*TOP
STORE	666	44190.21	44790.21	910.57	*TOE
STORE	667	44190.54	44795.44	910.34	*TOE
STORE	668	44190.92	44806.38	913.34	*TOP
STORE	669	44191.33	44820.01	913.52	*IG
STORE	670	44191.43	44823.29	914.51	*IG
STORE	671	44191.66	44825.90	913.53	*IG
STORE	672	44192.78	44854.79	913.45	*IG
STORE	673	44193.49	44881.81	913.49	*IG
STORE	674	44290.20	44883.35	913.67	*IG
STORE	675	44290.95	44854.22	913.64	*IG
STORE	676	44291.29	44825.36	913.77	*IG
STORE	677	44291.28	44822.95	914.49	*IG
STORE	678	44291.37	44819.89	913.58	*IG
STORE	679	44291.01	44800.92	913.88	*TOP
STORE	680	44290.33	44790.71	910.66	*TOE
STORE	681	44290.22	44784.77	910.66	*TOE
STORE	682	44289.23	44773.45	912.93	*RE
STORE	683	44289.46	44760.86	913.20	*RE
STORE	684	44271.78	44758.63	913.31	*RC
STORE	685	44289.86	44755.09	913.28	*RE
STORE	686	44281.65	44758.87	913.35	*RG
STORE	687	44289.62	44742.80	913.03	*RE
STORE	688	44289.35	44721.84	910.90	*IF
STORE	689	44289.27	44715.28	913.74	*TOP
STORE	690	44288.73	44700.61	913.84	*IG
STORE	691	44288.78	44697.81	912.94	*IG
STORE	692	44288.41	44671.97	913.24	*IG
STORE	693	44288.84	44646.65	913.62	*IG
STORE	694	44386.49	44624.66	913.21	*IG
STORE	695	44388.91	44660.53	913.24	*IG
STORE	696	44390.11	44695.89	913.47	*IG
STORE	697	44390.12	44697.07	913.86	*IG
STORE	698	44390.41	44707.89	913.69	*TOP
STORE	699	44390.20	44714.29	911.12	*IF
STORE	700	44369.07	44728.70	912.91	*RG
STORE	701	44390.75	44736.21	913.16	*RE
STORE	702	44390.82	44748.55	913.46	*RE

STORE	703	44390.77	44752.34	913.80	*RC IG
STORE	704	44391.04	44756.70	913.61	*RE
STORE	705	44391.37	44769.51	913.11	*RE
STORE	706	44391.41	44778.38	912.79	*TOP
STORE	707	44391.57	44784.92	910.72	*TOE
STORE	708	44391.61	44788.29	910.57	*TOE
STORE	709	44392.13	44796.91	914.20	*TOP
STORE	710	44392.67	44819.83	913.82	*IG
STORE	711	44392.66	44822.23	914.68	*IG
STORE	712	44392.73	44824.84	913.90	*IG
STORE	713	44393.02	44852.38	913.81	*IG
STORE	714	44393.84	44878.78	913.82	*IG
STORE	715	44497.32	44879.82	914.09	*IG
STORE	716	44497.23	44849.73	914.01	*IG
STORE	717	44496.70	44824.45	913.98	*IG
STORE	718	44496.58	44821.45	914.89	*IG
STORE	719	44496.46	44818.55	914.07	*IG
STORE	720	44495.37	44792.06	914.03	*TOP
STORE	721	44494.56	44785.78	910.85	*TOE
STORE	722	44494.10	44780.32	911.10	*TOE
STORE	723	44493.69	44775.87	912.53	*TOP
STORE	724	44492.99	44765.90	913.34	*RE
STORE	725	44492.07	44753.21	913.60	*RE
STORE	726	44491.67	44748.14	913.77	*RC IG
STORE	727	44491.39	44742.03	913.68	*RE
STORE	728	44490.51	44730.13	913.36	*RE
STORE	729	44489.43	44707.09	911.26	*IF
STORE	730	44488.18	44700.89	914.08	*TOP
STORE	731	44487.01	44666.84	913.61	*IG
STORE	732	44484.79	44631.84	913.87	*IG
STORE	733	44591.03	44610.73	914.07	*IG
STORE	734	44590.12	44648.73	913.71	*IG
STORE	735	44591.34	44691.89	914.12	*TOP
STORE	736	44592.02	44702.00	911.32	*IF
STORE	737	44572.01	44717.17	916.12	*WF
STORE	738	44573.02	44742.35	913.91	*WV TON 912.56
STORE	739	44591.59	44723.58	913.63	*RE
STORE	740	44591.73	44736.17	913.89	*RE
STORE	741	44592.38	44742.44	914.11	*RC IG
STORE	742	44592.68	44749.57	913.90	*RE
STORE	743	44575.43	44743.26	914.07	*RG
STORE	744	44592.53	44762.67	913.50	*RE
STORE	745	44592.16	44772.50	913.00	*TOP
STORE	746	44592.08	44778.03	911.17	*TOE
STORE	747	44592.06	44782.54	911.38	*TOE
STORE	748	44592.45	44790.66	914.25	*TOP
STORE	749	44592.21	44817.24	913.95	*IG
STORE	750	44592.23	44821.35	915.00	*IG
STORE	751	44592.06	44824.92	914.11	*IG
STORE	752	44592.84	44856.89	914.09	*IG
STORE	753	44592.30	44886.97	914.31	*IG
STORE	754	44630.35	44741.66	914.03	*RG
STORE	755	44629.10	44775.32	912.62	*TOP
STORE	756	44629.39	44779.85	911.04	*TOE
STORE	757	44629.72	44785.72	911.08	*TOE
STORE	758	44630.10	44792.06	915.20	*TOP
STORE	759	44633.14	44782.82	911.04	*INV 30IN CMP
STORE	760	44632.92	44776.28	913.80	*RG
STORE	761	44654.34	44788.07	915.50	*EP
STORE	762	44654.09	44791.70	915.34	*TR
STORE	763	44652.89	44795.85	915.28	*IG
STORE	764	44648.55	44795.55	916.48	*TOP
STORE	765	44645.10	44796.27	913.93	*TOE
STORE	766	44644.61	44795.52	913.60	*INV 24INCONCPIPE
STORE	767	44644.03	44796.36	913.86	*TOE
STORE	768	44640.13	44796.33	916.37	*TOP
STORE	769	44634.95	44796.16	915.09	*IG
STORE	770	44639.92	44745.94	914.05	*RE
STORE	771	44638.75	44735.93	913.96	*RE
STORE	772	44639.10	44702.37	913.01	*TOP
STORE	773	44638.87	44699.96	911.67	*INV.18INCONCPIPE
STORE	774	44638.60	44692.65	914.47	*TOP
STORE	775	44641.59	44686.56	915.31	*TOP
STORE	776	44643.36	44686.21	913.30	*TOE
STORE	777	44644.09	44686.40	913.06	*INV.24INCONCPIPE
STORE	778	44647.03	44686.69	915.49	*TOP
STORE	779	44644.58	44685.98	913.23	*TOE
STORE	780	44683.95	44692.20	914.65	*TOP
STORE	781	44684.07	44699.65	911.82	*INV.18INCONCPIPE

STORE	782	44684.78	44706.41	913.88	*TOP
STORE	783	44681.02	44702.79	913.97	*RG
STORE	784	44672.74	44713.19	913.80	*SM
STORE	785	44672.86	44731.67	913.98	*SM
STORE	786	44675.89	44742.08	913.95	*WV
STORE	787	44680.24	44745.57	913.97	*WV
STORE	788	44679.70	44741.21	913.94	*WV
STORE	789	44686.42	44747.08	914.63	*RB
STORE	790	44686.35	44747.68	914.05	*RH
STORE	791	44684.27	44746.05	914.02	*RH
STORE	792	44686.28	44743.92	914.03	*RH
STORE	793	44686.20	44744.54	914.57	*RB
STORE	794	44688.25	44746.02	914.29	*RG
STORE	795	44686.01	44720.20	913.74	*RE
STORE	796	44686.38	44759.75	913.72	*RE
STORE	797	44691.33	44771.04	914.13	*TOP
STORE	798	44691.79	44777.72	911.69	*TOE
STORE	799	44691.86	44782.64	911.67	*TOE
STORE	800	44693.08	44785.83	915.96	*TOP
STORE	801	44688.30	44780.06	911.63	*INV. 36IN CMP
STORE	802	44686.54	44671.39	915.21	*TOP
STORE	803	44687.49	44673.86	915.16	*TOP
STORE	804	44692.30	44674.68	915.06	*TOP
STORE	805	44692.67	44669.57	915.06	*TOP
STORE	806	44691.81	44668.72	915.15	*TOP
STORE	807	44692.61	44671.57	913.16	*TOE
STORE	808	44692.73	44672.68	913.09	*TOE
STORE	809	44690.00	44668.52	913.12	*TOE
STORE	810	44688.41	44668.39	913.12	*TOE
STORE	811	44681.91	44679.03	915.28	*IG
STORE	812	44730.09	44679.75	915.13	*IG
STORE	813	44783.46	44678.45	915.08	*IG
STORE	814	44697.24	44677.94	915.15	*WM
STORE	815	44672.56	44678.68	915.05	*IG
STORE	816	44651.53	44678.28	913.96	*IG
STORE	817	44646.95	44678.31	915.41	*TOP
STORE	818	44644.40	44678.70	913.56	*TOE
STORE	819	44643.54	44678.57	913.57	*TOE
STORE	820	44641.14	44678.92	915.25	*TOP
STORE	821	44634.46	44679.36	914.08	*IG
STORE	822	44611.91	44679.10	914.70	*IG
STORE	823	44583.86	44678.64	913.74	*IG
STORE	824	44579.39	44624.56	913.69	*IG
STORE	825	44638.37	44625.44	914.71	*IG
STORE	826	44640.48	44625.82	914.82	*TOP
STORE	827	44642.94	44625.65	913.43	*TOE
STORE	828	44643.71	44625.70	913.47	*TOE
STORE	829	44646.07	44625.32	915.15	*TOP
STORE	830	44651.26	44624.83	913.88	*IG
STORE	831	44666.00	44624.80	914.09	*IG
STORE	832	44681.38	44625.17	914.97	*IG
STORE	833	44685.92	44625.18	915.29	*TOP
STORE	834	44689.49	44625.41	913.15	*TOE
STORE	835	44687.89	44625.32	913.15	*TOE
STORE	836	44691.63	44624.92	915.27	*TOP
STORE	837	44696.14	44625.28	915.48	*IG
STORE	838	44697.69	44625.27	914.31	*IG
STORE	839	44752.45	44626.45	913.69	*IG
STORE	840	44789.63	44625.62	913.76	*IG
STORE	841	44789.29	44601.72	914.70	*EP
STORE	842	44762.74	44596.35	914.37	*EP
STORE	843	44789.23	44574.47	913.79	*IG
STORE	844	44741.12	44573.99	914.08	*IG
STORE	845	44699.32	44574.05	913.83	*IG
STORE	846	44697.59	44574.41	915.03	*IG
STORE	847	44691.40	44573.64	915.29	*TOP
STORE	848	44689.25	44573.59	913.17	*TOE
STORE	849	44687.65	44573.55	913.16	*TOE
STORE	850	44685.58	44574.23	915.33	*TOP
STORE	851	44680.70	44574.30	914.78	*IG
STORE	852	44664.60	44574.26	913.89	*IG
STORE	853	44650.41	44573.94	913.91	*IG
STORE	854	44645.71	44573.79	914.92	*TOP
STORE	855	44643.82	44573.90	913.14	*TOE
STORE	856	44642.78	44574.01	913.11	*TOE
STORE	857	44640.68	44574.26	914.83	*TOP
STORE	858	44638.62	44574.19	914.76	*IG
STORE	859	44637.41	44573.98	913.93	*IG
STORE	860	44605.88	44574.26	913.99	*IG

STORE	861	44561.94	44573.87	913.61	*IG
STORE	862	44784.63	44898.97	917.01	*IG
STORE	863	44733.92	44895.97	916.67	*IG
STORE	864	44684.29	44898.92	914.84	*IG
STORE	865	44675.84	44899.48	915.04	*RI DIRT
STORE	866	44653.31	44899.16	915.04	*RI DIRT
STORE	867	44648.14	44899.47	915.93	*TOP
STORE	868	44645.93	44899.44	914.02	*TOE
STORE	869	44644.84	44899.64	914.00	*TOE
STORE	870	44642.74	44899.91	915.85	*TOP
STORE	871	44637.97	44899.28	913.67	*IG
STORE	872	44592.22	44899.89	914.18	*IG
STORE	873	44635.24	44845.97	914.68	*IG
STORE	874	44642.19	44845.55	915.91	*TOP
STORE	875	44644.42	44845.13	913.95	*TOE
STORE	876	44645.43	44845.14	913.98	*TOE
STORE	877	44647.48	44845.29	915.85	*TOP
STORE	878	44653.05	44845.60	915.13	*RI DIRT
STORE	879	44674.59	44846.68	915.11	*RI DIRT
STORE	880	44682.88	44846.37	915.03	*IG
STORE	881	44690.39	44846.57	917.77	*IG
STORE	882	44693.79	44846.41	917.07	*IG
STORE	883	44730.20	44845.67	917.39	*IG
STORE	884	44773.43	44845.90	917.13	*IG
STORE	885	44683.60	44794.57	915.84	*IG
STORE	886	44674.59	44793.85	915.29	*RI DIRT
STORE	887	44656.72	44793.62	914.98	*RI DIRT
STORE	888	44706.79	44795.17	916.91	*IG
STORE	889	44747.74	44796.87	917.22	*IG
STORE	890	44792.74	44792.89	917.16	*IG
STORE	891	44792.91	44791.02	917.59	*IG
STORE	892	44793.11	44783.21	917.38	*TOP
STORE	893	44792.62	44774.64	912.00	*TOE
STORE	894	44792.78	44772.06	912.09	*TOE
STORE	895	44793.08	44760.00	914.01	*RE
STORE	896	44793.27	44747.85	914.37	*RF
STORE	897	44793.33	44747.26	914.88	*RB
STORE	898	44793.35	44744.51	914.97	*RB
STORE	899	44793.37	44743.86	914.47	*RF
STORE	900	44793.89	44720.31	913.96	*RE
STORE	901	44818.20	44711.96	914.29	*RG
STORE	902	44792.81	44699.01	912.96	*IF
STORE	903	44793.52	44674.63	915.01	*TOP
STORE	904	44793.45	44672.65	913.01	*TOE
STORE	905	44793.96	44671.61	913.00	*TOE
STORE	906	44793.93	44669.41	914.99	*TOP
STORE	907	44794.03	44666.71	914.93	*IG
STORE	908	44794.14	44664.71	913.96	*IG
STORE	909	44878.81	44675.88	915.74	*IH
STORE	910	44883.99	44675.72	915.71	*IH
STORE	911	44881.39	44674.90	912.84	*INV.18INCONCPIPE
STORE	912	44881.33	44776.83	912.47	*INV.18INCONCPIPE
STORE	913	44884.13	44776.13	913.91	*IH
STORE	914	44879.59	44776.03	915.06	*IH
STORE	915	44879.44	44779.47	915.11	*IH
STORE	916	44895.34	44844.18	917.23	*IG
STORE	917	44893.31	44798.08	917.26	*IG
STORE	918	44893.51	44795.45	917.83	*IG
STORE	919	44893.24	44787.68	917.59	*TOP
STORE	920	44892.92	44774.31	912.38	*TOE
STORE	921	44893.40	44769.20	912.55	*TOE
STORE	922	44893.69	44760.10	914.20	*RE
STORE	923	44893.59	44747.98	914.59	*RF
STORE	924	44893.57	44747.39	915.06	*RB
STORE	925	44893.58	44744.61	915.12	*RB
STORE	926	44893.63	44744.02	914.63	*RF
STORE	927	44893.86	44720.53	914.20	*RE
STORE	928	44894.25	44699.70	913.06	*IF
STORE	929	44893.92	44676.11	915.55	*TOP DIRT
STORE	930	44893.93	44674.40	914.86	*TOP CONC
STORE	931	44894.15	44672.35	912.87	*TOE
STORE	932	44894.18	44671.38	912.86	*TOE
STORE	933	44894.46	44666.67	914.28	*IG
STORE	934	44894.65	44665.12	914.07	*IG
STORE	935	44894.51	44618.15	913.62	*IG
STORE	936	44896.66	44744.01	914.63	*RF PC
STORE	937	44896.64	44744.61	915.10	*RB PC
STORE	938	44946.57	44738.52	915.18	*RB PRC
STORE	939	44946.52	44737.95	914.72	*RF PRC

STORE	940	44997.00	44732.22	914.80	*RF PT
STORE	941	44996.96	44732.76	915.27	*RB PT
STORE	942	44997.09	44739.29	915.62	*RC IG
STORE	943	44996.72	44720.14	914.42	*RE
STORE	944	44996.31	44699.11	913.18	*IF
STORE	945	44996.17	44676.33	915.29	*TOP IG
STORE	946	44996.04	44674.38	914.72	*TOP CONC
STORE	947	44995.99	44672.51	912.83	*TOE
STORE	948	44995.91	44671.24	912.81	*TOE
STORE	949	44995.95	44669.30	914.69	*TOP CONC
STORE	950	44995.62	44666.93	914.63	*IG
STORE	951	44995.31	44665.38	913.95	*IG
STORE	952	44993.54	44633.21	913.84	*IG
STORE	953	44991.36	44602.17	914.04	*IG
STORE	954	44996.91	44747.64	915.22	*RB
STORE	955	44997.07	44748.24	914.74	*RF
STORE	956	44996.58	44760.25	914.46	*RE
STORE	957	44996.51	44768.83	912.79	*TOE
STORE	958	44996.46	44773.73	912.90	*TOE
STORE	959	44994.54	44774.84	914.12	*EG
STORE	960	45014.13	44775.03	913.09	*EP
STORE	961	44997.71	44785.81	917.65	*TOP
STORE	962	44997.83	44814.95	917.60	*IG
STORE	963	45000.19	44844.86	917.50	*IG
STORE	964	45089.66	44841.36	917.14	*IG
STORE	965	45094.45	44786.54	917.15	*TOP
STORE	966	45093.21	44775.85	912.77	*TOE
STORE	967	45093.77	44773.77	913.22	*TOE
STORE	968	45093.63	44771.81	914.31	*TOP
STORE	969	45099.09	44769.84	914.81	*RG
STORE	970	45098.90	44767.20	914.39	*RG
STORE	971	45094.07	44760.42	914.67	*RE
STORE	972	45095.15	44748.27	914.96	*RF
STORE	973	45095.11	44747.69	915.45	*RB
STORE	974	45098.58	44743.46	915.53	*RG
STORE	975	45093.66	44732.86	915.52	*RB
STORE	976	45093.63	44732.30	915.02	*RF
STORE	977	45093.65	44720.32	914.61	*RE
STORE	978	45093.81	44699.90	913.41	*IF
STORE	979	45093.20	44676.58	915.23	*TOP IG
STORE	980	45092.79	44674.68	914.63	*TOP CONC
STORE	981	45093.00	44672.77	912.78	*TOE
STORE	982	45093.01	44671.45	912.79	*TOE
STORE	983	45093.00	44669.56	914.61	*TOP CONC
STORE	984	45092.81	44667.24	914.54	*IG
STORE	985	45092.94	44665.26	913.80	*IG
STORE	986	45092.42	44633.92	914.01	*IG
STORE	987	45092.38	44602.73	914.04	*IG
STORE	988	45189.23	44601.14	913.74	*IG
STORE	989	45190.21	44632.57	913.86	*IG
STORE	990	45192.59	44666.02	913.75	*IG
STORE	991	45192.71	44667.77	915.09	*IG
STORE	992	45192.53	44669.84	914.49	*TOP CONC
STORE	993	45192.37	44671.56	912.82	*TOE
STORE	994	45192.52	44672.91	912.63	*TOE
STORE	995	45192.81	44674.87	914.54	*TOP CONC
STORE	996	45193.30	44677.33	915.43	*TOP IG
STORE	997	45194.74	44704.20	914.15	*IF
STORE	998	45194.47	44720.38	914.89	*RE
STORE	999	45194.09	44732.43	915.20	*RF
STORE	1000	45194.06	44733.02	915.70	*RB
STORE	1001	45193.51	44744.36	915.72	*RB
STORE	1002	45193.18	44745.03	915.24	*RF
STORE	1003	45192.41	44761.08	914.84	*RE
STORE	1004	45192.39	44774.96	914.11	*TOE
STORE	1005	45192.06	44783.66	916.90	*TOP
STORE	1006	45193.03	44796.33	913.81	*TOE
STORE	1007	45192.98	44800.92	913.76	*TOE
STORE	1008	45194.76	44805.34	916.45	*TOP
STORE	1009	45194.01	44812.10	915.44	*IG
STORE	1010	45194.83	44834.88	917.17	*IG
STORE	1011	45180.31	44827.54	916.75	*TT
STORE	1012	45202.20	44857.27	917.14	*TOP
STORE	1013	45212.02	44853.68	912.45	*TOE
STORE	1014	45208.60	44829.41	911.71	*TOE
STORE	1015	45196.91	44830.37	917.05	*TOP
STORE	1016	45205.88	44804.95	916.67	*IH
STORE	1017	45206.89	44804.92	916.69	*IH
STORE	1018	45206.97	44802.83	915.27	*IH

STORE	1019	45206.92	44795.25	915.27	*IH
STORE	1020	45206.93	44792.63	916.67	*IH
STORE	1021	45216.55	44792.61	916.65	*IH
STORE	1022	45216.51	44793.94	916.66	*IH
STORE	1023	45216.54	44797.73	913.35	*IH
STORE	1024	45220.16	44829.36	916.57	*TOP
STORE	1025	45213.11	44830.05	912.39	*TOE
STORE	1026	45216.38	44852.72	911.74	*TOE
STORE	1027	45221.92	44850.28	916.55	*TOP
STORE	1028	45213.34	44793.29	911.27	*INV 24INCONCPIPE
STORE	1029	45210.16	44793.27	911.32	*INV 24INCONCPIPE
STORE	1030	45132.40	44744.40	915.74	*WM
STORE	1031	45128.92	44744.47	915.45	*RG
STORE	1032	45145.93	44747.71	915.59	*RB PC
STORE	1033	45145.87	44748.25	915.11	*RF PC
STORE	1034	45186.15	44745.82	915.19	*RF PT
STORE	1035	45186.13	44745.25	915.67	*RB PT
STORE	1036	45241.23	44741.08	915.43	*RF ANG PT
STORE	1037	45241.29	44740.54	915.93	*RB ANG PT
STORE	1038	45227.86	44710.96	914.79	*BEG GUARD RAIL
STORE	1039	45239.49	44695.97	916.54	*II
STORE	1040	45239.43	44690.83	916.49	*II
STORE	1041	45247.82	44690.74	916.57	*II
STORE	1042	45247.92	44695.91	916.52	*II
STORE	1043	45241.74	44694.98	911.09	*INV.30INCONCPIPE
STORE	1044	45246.83	44693.48	910.10	*INV.36INCONCPIPE
STORE	1045	45251.93	44693.49	910.92	*INV.36INCONCPIPE
STORE	1046	45256.88	44685.00	915.53	*TOP
STORE	1047	45256.30	44686.39	914.94	*IH
STORE	1048	45256.66	44691.02	911.36	*TOE
STORE	1049	45257.60	44695.58	911.15	*TOE
STORE	1050	45257.19	44699.34	914.79	*IH
STORE	1051	45251.43	44698.45	914.97	*IH
STORE	1052	45251.14	44687.10	915.00	*IH
STORE	1053	45263.31	44710.95	915.16	*RG
STORE	1054	45293.76	44614.24	913.84	*IG
STORE	1055	45293.81	44665.40	914.03	*IG
STORE	1056	45294.18	44668.11	914.91	*IG
STORE	1057	45294.08	44669.92	914.45	*TOP
STORE	1058	45294.34	44671.69	912.71	*TOE
STORE	1059	45294.18	44673.13	912.79	*TOE
STORE	1060	45294.01	44676.99	915.94	*TOP IG
STORE	1061	45294.15	44674.99	914.51	*TOP CONC
STORE	1062	45294.26	44686.10	916.10	*TOP
STORE	1063	45294.09	44690.96	912.79	*TOE
STORE	1064	45293.83	44695.38	912.45	*TOE
STORE	1065	45294.44	44701.05	916.40	*TOP
STORE	1066	45294.46	44709.54	916.97	*TOP
STORE	1067	45293.50	44713.85	915.22	*IG
STORE	1068	45294.04	44720.33	915.27	*RE
STORE	1069	45293.25	44733.45	915.61	*RF
STORE	1070	45293.16	44734.02	916.13	*RB
STORE	1071	45293.01	44740.55	916.24	*RB
STORE	1072	45292.99	44741.18	915.76	*RF
STORE	1073	45293.04	44760.84	915.31	*RE
STORE	1074	45293.48	44775.03	914.72	*IG
STORE	1075	45293.54	44792.56	914.95	*IG
STORE	1076	45293.57	44792.88	916.64	*IH
STORE	1077	45292.90	44793.35	915.12	*IG
STORE	1078	45295.40	44835.18	915.93	*IG
STORE	1079	45638.61	44389.66	919.16	*TOP
STORE	1080	45638.06	44381.34	913.97	*TOE
STORE	1081	45636.50	44374.25	913.79	*TOE
STORE	1082	45635.01	44368.94	917.73	*TOP
STORE	1083	45635.40	44375.46	913.75	*INV. 36IN CMP
STORE	1084	45636.02	44379.54	913.27	*INV. 36IN CMP
STORE	1085	45654.82	44389.86	919.12	*TOP
STORE	1086	45659.17	44383.56	914.27	*TOE
STORE	1087	45662.15	44379.79	914.14	*TOE
STORE	1088	45666.62	44371.17	917.65	*TOP
STORE	1089	45681.68	44399.62	921.87	*TOP
STORE	1090	45671.51	44401.55	914.43	*TOE
STORE	1091	45667.43	44401.75	913.99	*TOE
STORE	1092	45659.78	44402.97	919.84	*TOP
STORE	1093	45664.26	44437.53	919.95	*TOP
STORE	1094	45672.36	44435.97	914.25	*TOE
STORE	1095	45676.53	44434.78	914.24	*TOE
STORE	1096	45685.89	44433.38	919.72	*TOP
STORE	1097	45715.85	44664.95	921.59	*TOP

STORE	1098	45706.64	44666.61	916.03	*TOE
STORE	1099	45696.74	44667.25	915.61	*TOE
STORE	1100	45693.82	44667.13	921.86	*TOP
STORE	1101	45698.69	44691.44	922.65	*TOP
STORE	1102	45700.93	44690.20	916.13	*TOE
STORE	1103	45708.76	44684.39	915.94	*TOE
STORE	1104	45716.48	44683.83	920.43	*TOP
STORE	1105	45721.16	44687.19	921.02	*TOP
STORE	1106	45720.52	44691.14	916.33	*TOE
STORE	1107	45721.22	44697.87	916.44	*TOE
STORE	1108	45721.32	44703.75	920.92	*TOP
STORE	1109	45717.74	44706.26	921.14	*TR
STORE	1110	45715.68	44717.05	920.89	*FO
STORE	1111	45776.50	44775.66	920.87	*EP
STORE	1112	45784.15	44777.39	920.90	*FA 8 FT BLOCK
STORE	1113	45790.62	44775.24	921.06	*EG
STORE	1114	45814.18	44775.47	921.61	*EP
STORE	1115	45815.59	44774.47	921.43	*TR
STORE	1116	45792.73	44777.09	920.96	*IG FL CONC BLK
STORE	1117	45792.68	44765.28	920.87	*IG
STORE	1118	45792.91	44751.07	921.83	*RE
STORE	1119	45792.29	44736.79	922.20	*RC
STORE	1120	45792.20	44722.65	921.86	*RE
STORE	1121	45779.48	44706.20	921.53	*SM
STORE	1122	45791.62	44700.96	921.04	*TOP
STORE	1123	45791.86	44693.49	917.55	*TOE
STORE	1124	45791.53	44691.23	917.67	*TOE
STORE	1125	45788.09	44681.82	921.65	*TOP
STORE	1126	45793.87	44668.26	921.77	*IG FL 8FT BLK
STORE	1127	45759.83	44668.19	921.57	*FA 8FT CONC BLK
STORE	1128	45763.32	44681.95	921.36	*EP
STORE	1129	45764.88	44688.61	920.90	*WF
STORE	1130	45768.83	44687.70	921.39	*WV
STORE	1131	45773.49	44687.42	921.34	*WV
STORE	1132	45835.33	44686.39	922.51	*TOP
STORE	1133	45834.89	44694.05	918.23	*INV. 30IN CMP
STORE	1134	45835.29	44697.17	921.49	*TOP
STORE	1135	45877.04	44700.88	923.99	*TOP
STORE	1136	45876.41	44695.79	919.91	*INV. 24IN CMP
STORE	1137	45876.24	44688.14	923.21	*TOP
STORE	1138	45876.68	44684.46	922.89	*WV
STORE	1139	45891.32	44668.35	922.37	*IG FL
STORE	1140	45893.39	44684.66	922.47	*TOE
STORE	1141	45893.53	44688.38	924.62	*TOP
STORE	1142	45893.05	44695.32	920.58	*TOE
STORE	1143	45892.91	44698.69	920.63	*TOE
STORE	1144	45892.70	44704.60	925.07	*TOP
STORE	1145	45893.40	44710.44	922.13	*TOE
STORE	1146	45892.99	44715.19	921.85	*FO
STORE	1147	45892.59	44722.78	922.94	*RE
STORE	1148	45892.39	44737.01	923.41	*RC
STORE	1149	45892.64	44750.36	923.15	*RE
STORE	1150	45892.09	44777.29	921.86	*IG FL
STORE	1151	45885.65	44773.43	922.24	*WM
STORE	1152	45848.79	44777.37	921.64	*C/L 30FT GATE
STORE	1153	45861.31	44668.39	921.48	*C/L 20FT GATE
STORE	1154	45958.25	44668.33	923.22	*FA 8FT CONC.BLK
STORE	1155	45999.53	44621.26	923.17	*IG
STORE	1156	45995.63	44666.87	923.63	*IG
STORE	1157	45995.25	44681.69	923.63	*IG
STORE	1158	45994.91	44683.15	924.57	*IG
STORE	1159	45995.41	44687.40	925.14	*TOP
STORE	1160	45995.06	44691.27	921.87	*TOE
STORE	1161	45994.66	44698.50	922.01	*TOE
STORE	1162	45993.93	44704.74	926.56	*TOP
STORE	1163	45993.51	44709.77	923.27	*TOE
STORE	1164	45993.38	44714.74	922.95	*TOE FO
STORE	1165	45993.25	44723.80	924.26	*RE
STORE	1166	45993.29	44737.23	924.61	*RC
STORE	1167	45993.11	44751.64	924.33	*RE
STORE	1168	45992.18	44762.00	923.07	*IG
STORE	1169	45991.64	44777.33	923.30	*IG FL
STORE	1170	46023.04	44761.75	923.87	*RG
STORE	1171	46022.30	44710.33	924.42	*RG
STORE	1172	46027.99	44700.54	925.58	*TOP
STORE	1173	46027.42	44696.25	923.82	*BEG TOP CONC
STORE	1174	46027.47	44691.26	923.72	*BEG TOP CONC
STORE	1175	46027.52	44693.28	921.82	*BEG IC
STORE	1176	46027.56	44694.31	921.85	*BEG IC

STORE	1177	46047.13	44777.45	926.13	*IG FL
STORE	1178	46059.08	44780.34	931.17	*FL ON CONC
STORE	1179	46046.78	44762.77	924.56	*CONC TOE
STORE	1180	46092.48	44780.60	932.35	*FL ON CONC
STORE	1181	46093.38	44762.16	925.67	*CONC TOE
STORE	1182	46093.48	44761.55	925.01	*IG
STORE	1183	46093.08	44751.90	925.66	*RE
STORE	1184	46093.95	44737.38	925.86	*RC
STORE	1185	46093.78	44724.41	925.50	*RE
STORE	1186	46093.75	44713.95	924.34	*FO
STORE	1187	46094.50	44710.09	924.20	*TOE
STORE	1188	46094.39	44699.84	926.27	*TOP
STORE	1189	46094.11	44696.27	924.14	*TOP CONC
STORE	1190	46094.47	44694.52	922.55	*IC
STORE	1191	46094.85	44693.49	922.53	*IC
STORE	1192	46094.67	44691.40	924.46	*TOP CONC
STORE	1193	46094.33	44688.82	925.60	*TOP IG
STORE	1194	46094.63	44686.91	923.80	*IG
STORE	1195	46095.36	44666.62	923.59	*IG
STORE	1196	46094.65	44620.20	923.18	*IG
STORE	1197	46198.98	44624.60	923.68	*IG
STORE	1198	46196.61	44667.84	924.82	*IG
STORE	1199	46196.54	44669.74	924.09	*IG
STORE	1200	46195.94	44687.19	924.55	*IG
STORE	1201	46195.81	44689.35	926.14	*TOP IG
STORE	1202	46195.77	44691.96	925.47	*TOP CONC
STORE	1203	46195.84	44694.13	923.50	*IC
STORE	1204	46195.80	44696.44	923.33	*IC
STORE	1205	46195.23	44701.65	927.34	*TOP IG
STORE	1206	46195.32	44709.03	925.35	*TOE
STORE	1207	46195.29	44712.78	925.44	*TOE FO
STORE	1208	46206.12	44706.25	926.51	*RG
STORE	1209	46194.66	44725.11	926.92	*RE
STORE	1210	46194.14	44737.34	927.20	*RC
STORE	1211	46194.03	44752.36	926.99	*RE
STORE	1212	46193.77	44762.44	927.34	*IC
STORE	1213	46193.93	44778.64	933.97	*FL ON CONC
STORE	1214	46128.23	44776.44	932.73	*EP
STORE	1215	46254.10	44777.07	933.49	*EP
STORE	1216	46292.72	44779.16	933.39	*FL ON CONC
STORE	1217	46293.85	44763.40	928.17	*IC
STORE	1218	46293.95	44761.22	927.71	*IG
STORE	1219	46294.41	44752.28	927.91	*RE
STORE	1220	46294.36	44737.91	928.05	*RC
STORE	1221	46294.40	44725.26	927.77	*RE
STORE	1222	46294.23	44712.99	926.40	*FO
STORE	1223	46294.68	44707.61	926.38	*TOE
STORE	1224	46294.76	44699.97	927.57	*TOP IG
STORE	1225	46294.77	44697.75	926.50	*TOP CONC
STORE	1226	46294.64	44695.74	924.50	*IC
STORE	1227	46294.80	44694.72	924.50	*IC
STORE	1228	46294.89	44692.58	926.44	*TOP CONC
STORE	1229	46295.15	44690.04	927.37	*TOP IG
STORE	1230	46295.30	44688.18	925.62	*IG
STORE	1231	46295.78	44672.02	924.88	*IG
STORE	1232	46295.86	44668.55	925.90	*IG
STORE	1233	46297.19	44619.02	925.04	*IG
STORE	1234	46332.03	44706.05	926.39	*SM
STORE	1235	46361.48	44779.57	931.12	*END CONC AT FL
STORE	1236	46361.11	44764.03	928.62	*END CONC TOE
STORE	1237	46392.08	44779.78	929.60	*FL ON IG
STORE	1238	46393.15	44763.44	928.33	*IG
STORE	1239	46394.04	44752.86	928.73	*RE
STORE	1240	46394.12	44738.28	929.03	*RC
STORE	1241	46394.35	44725.28	928.57	*RE
STORE	1242	46394.59	44713.95	927.64	*FO
STORE	1243	46394.16	44710.85	927.05	*IG
STORE	1244	46394.00	44707.74	927.08	*IG
STORE	1245	46394.27	44700.19	928.32	*TOP IG
STORE	1246	46393.94	44698.23	927.34	*TOP CONC
STORE	1247	46394.60	44696.20	925.34	*IC
STORE	1248	46394.77	44695.22	925.35	*IC
STORE	1249	46394.39	44692.94	927.36	*TOP CONC
STORE	1250	46394.62	44690.82	928.00	*TOP IG
STORE	1251	46394.83	44688.86	926.22	*IG
STORE	1252	46394.72	44671.13	925.74	*IG
STORE	1253	46394.48	44669.58	926.23	*IG
STORE	1254	46394.66	44629.76	925.80	*IG
STORE	1255	46497.44	44627.21	926.80	*IG

STORE	1256	46496.12	44668.75	927.37	*IG
STORE	1257	46496.23	44670.38	926.69	*IG
STORE	1258	46495.92	44689.43	927.18	*IG
STORE	1259	46495.54	44691.76	928.48	*TOP IG
STORE	1260	46495.32	44693.27	928.28	*TOP CONC
STORE	1261	46495.40	44695.45	926.27	*IC
STORE	1262	46495.23	44696.48	926.26	*IC
STORE	1263	46495.39	44698.59	928.30	*TOP CONC
STORE	1264	46495.24	44700.88	929.06	*TOP IG
STORE	1265	46495.04	44712.35	928.09	*FO
STORE	1266	46494.63	44725.42	929.34	*RE
STORE	1267	46494.35	44738.50	929.88	*RC
STORE	1268	46494.80	44754.32	929.66	*RE
STORE	1269	46494.41	44767.85	929.50	*RP
STORE	1270	46494.08	44781.24	930.02	*RP
STORE	1271	46488.67	44777.86	929.68	*EP
STORE	1272	46483.68	44780.36	929.56	*FL PC
STORE	1273	46490.53	44783.68	930.13	*FL MOC
STORE	1274	46491.57	44789.36	930.63	*FL PT
STORE	1275	46494.34	44806.71	931.14	*WM
STORE	1276	46491.31	44821.07	931.50	*FF CONC BLK
STORE	1277	46512.45	44806.85	931.26	*C/L RD
STORE	1278	46531.86	44807.27	931.35	*BEG FL CONC BLK
STORE	1279	46531.88	44785.30	930.55	*FL PC
STORE	1280	46535.33	44781.98	930.50	*FL MOC
STORE	1281	46539.72	44780.58	930.64	*FL PT
STORE	1282	46542.55	44705.63	928.60	*SM
STORE	1283	46594.37	44780.72	930.98	*FL IG
STORE	1284	46594.31	44767.04	930.13	*IG
STORE	1285	46595.43	44754.95	930.52	*RE
STORE	1286	46621.09	44778.44	931.50	*IV
STORE	1287	46622.49	44778.49	931.50	*IV
STORE	1288	46595.49	44738.36	930.73	*RC
STORE	1289	46595.90	44726.25	930.29	*RE
STORE	1290	46595.34	44712.26	929.04	*FO
STORE	1291	46595.90	44704.70	928.79	*IG
STORE	1292	46596.02	44700.40	929.91	*TOP IG
STORE	1293	46595.91	44698.90	929.39	*TOP CONC
STORE	1294	46596.10	44696.89	927.42	*IC
STORE	1295	46596.11	44695.87	927.41	*IC
STORE	1296	46596.22	44693.67	929.41	*TOP CONC
STORE	1297	46596.37	44691.88	929.85	*TOP IG
STORE	1298	46596.38	44689.98	928.27	*IG
STORE	1299	46597.04	44671.07	927.73	*IG
STORE	1300	46597.05	44669.44	928.22	*IG
STORE	1301	46597.31	44631.31	928.11	*IG
STORE	1302	46699.18	44633.04	929.56	*IG
STORE	1303	46699.04	44669.41	929.46	*IG
STORE	1304	46699.51	44670.94	929.00	*IG
STORE	1305	46698.46	44690.53	929.48	*IG
STORE	1306	46698.08	44692.39	931.28	*TOP IG
STORE	1307	46698.35	44694.00	930.45	*TOP CONC
STORE	1308	46698.71	44696.20	928.46	*IC
STORE	1309	46698.61	44697.21	928.46	*IC
STORE	1310	46699.17	44699.30	930.47	*TOP CONC
STORE	1311	46699.36	44701.43	931.23	*TOP IG
STORE	1312	46699.31	44708.76	929.75	*IG
STORE	1313	46698.72	44711.69	930.21	*FO
STORE	1314	46696.83	44727.54	931.46	*RE
STORE	1315	46696.70	44739.86	931.73	*RC
STORE	1316	46696.11	44755.56	931.47	*RE
STORE	1317	46695.89	44769.30	930.83	*IG
STORE	1318	46695.83	44781.08	932.15	*FL IG
STORE	1319	46753.86	44777.72	932.36	*EP
STORE	1320	46787.27	44689.48	931.81	*RG TR
STORE	1321	46800.30	44632.29	930.37	*IG
STORE	1322	46800.19	44670.72	930.74	*IG
STORE	1323	46800.11	44672.46	930.10	*IG
STORE	1324	46798.88	44688.30	930.59	*IG
STORE	1325	46798.63	44692.96	932.20	*TOP IG
STORE	1326	46798.33	44694.54	931.48	*TOP CONC
STORE	1327	46798.28	44696.79	929.44	*IC
STORE	1328	46798.12	44697.68	929.43	*IC
STORE	1329	46798.14	44699.72	931.36	*TOP CONC
STORE	1330	46798.16	44702.12	932.20	*TOP IG
STORE	1331	46797.53	44709.78	930.60	*IG
STORE	1332	46796.93	44712.52	931.26	*FO
STORE	1333	46796.81	44727.61	932.51	*RE
STORE	1334	46796.93	44740.42	932.74	*RC

STORE	1335	46796.93	44757.73	932.29	*RE
STORE	1336	46797.92	44771.98	931.56	*IG
STORE	1337	46798.74	44781.75	932.75	*FL IG
STORE	1338	46872.94	44686.12	932.32	*AIR RELIEF VALVE
STORE	1339	46884.60	44706.20	931.52	*SM
STORE	1340	46917.05	44702.25	933.13	*GL 40' West
STORE	1341	46946.80	44781.48	934.53	*GL 40' East
STORE	1342	46895.99	44782.21	933.70	*FL IG
STORE	1343	46896.95	44771.10	932.58	*IG
STORE	1344	46897.25	44758.30	933.13	*RE
STORE	1345	46897.32	44741.01	933.55	*RC
STORE	1346	46897.54	44727.47	933.22	*RE
STORE	1347	46897.82	44716.17	932.40	*IG
STORE	1348	46898.10	44714.08	931.54	*FO
STORE	1349	46898.04	44710.47	932.67	*IG
STORE	1350	46898.09	44700.27	932.32	*TOP CONC
STORE	1351	46898.44	44698.09	930.35	*IC
STORE	1352	46898.52	44697.02	930.38	*IC
STORE	1353	46898.73	44694.89	932.39	*TOP CONC
STORE	1354	46898.75	44692.73	933.25	*TOP IG
STORE	1355	46899.15	44689.44	931.51	*IG
STORE	1356	46898.85	44671.00	930.98	*IG
STORE	1357	46898.73	44669.28	931.49	*IG
STORE	1358	46901.21	44628.89	931.28	*IG
STORE	1359	47002.88	44632.28	931.48	*IG
STORE	1360	47001.80	44670.86	932.01	*IG
STORE	1361	47001.80	44672.68	931.53	*IG
STORE	1362	47000.79	44691.59	931.95	*IG
STORE	1363	47000.65	44693.31	933.46	*TOP IG
STORE	1364	47000.55	44695.25	932.84	*TOP CONC
STORE	1365	47000.21	44697.47	930.88	*IC
STORE	1366	47000.07	44698.45	930.86	*IC
STORE	1367	46999.87	44700.58	932.84	*TOP CONC
STORE	1368	46999.69	44702.57	933.58	*TOP IG
STORE	1369	46996.83	44707.70	932.86	*IG
STORE	1370	46998.10	44716.75	933.16	*FO
STORE	1371	46997.82	44727.84	933.89	*RE
STORE	1372	46997.57	44742.40	934.21	*RC
STORE	1373	46997.80	44758.92	933.79	*RE
STORE	1374	46998.06	44771.23	933.25	*IG
STORE	1375	46998.81	44782.70	934.73	*FL IG
STORE	1376	47098.10	44783.06	934.67	*FL IG
STORE	1377	47097.98	44772.67	933.62	*IG
STORE	1378	47098.43	44759.43	934.45	*RE
STORE	1379	47098.49	44743.39	934.81	*RC
STORE	1380	47098.21	44728.62	934.36	*RE
STORE	1381	47098.11	44716.56	933.27	*FO
STORE	1382	47098.21	44711.83	933.20	*IG
STORE	1383	47098.10	44703.58	934.56	*TOP IG
STORE	1384	47097.97	44701.18	932.97	*TOP CONC
STORE	1385	47099.03	44699.30	931.19	*IC
STORE	1386	47099.08	44697.98	931.18	*IC
STORE	1387	47098.72	44695.99	933.06	*TOP CONC
STORE	1388	47098.90	44694.29	933.77	*TOP IG
STORE	1389	47099.03	44692.48	932.27	*IG
STORE	1390	47098.95	44673.00	931.91	*IG
STORE	1391	47099.07	44670.88	932.20	*IG
STORE	1392	47099.18	44633.38	931.86	*IG
STORE	1393	47200.19	44633.77	931.95	*IG
STORE	1394	47200.11	44670.23	932.41	*IG
STORE	1395	47198.95	44691.66	933.02	*IG
STORE	1396	47199.25	44693.67	934.58	*TOP IG
STORE	1397	47200.44	44696.13	933.19	*TOP CONC
STORE	1398	47200.80	44698.28	931.21	*IC
STORE	1399	47200.78	44699.22	931.21	*IC
STORE	1400	47200.74	44701.27	933.19	*TOP CONC
STORE	1401	47200.59	44704.56	935.46	*TOP IG
STORE	1402	47199.61	44716.46	933.51	*IG FO
STORE	1403	47198.76	44730.30	934.81	*RE
STORE	1404	47198.49	44744.53	935.10	*RC
STORE	1405	47198.34	44759.83	934.80	*RE
STORE	1406	47197.80	44773.60	934.26	*IG
STORE	1407	47198.58	44783.41	934.66	*FL IG
STORE	1408	47231.59	44690.48	933.50	*WF
STORE	1409	47236.82	44688.45	932.93	*WV
STORE	1410	47275.75	44704.21	936.29	*IH
STORE	1411	47283.56	44703.91	936.19	*IH
STORE	1412	47283.26	44696.09	936.28	*IH
STORE	1413	47282.74	44699.50	931.82	*INV 18INCONCPIPE

STORE	1414	47281.27	44703.29	931.65	*INV 18INCONCPIPE
STORE	1415	47257.30	44731.67	934.92	*RE PC
STORE	1416	47290.64	44713.84	934.04	*C/L 6FT RV
STORE	1417	47292.89	44710.62	934.12	*BEG RX
STORE	1418	47297.81	44692.33	934.57	*RH
STORE	1419	47297.27	44692.33	935.04	*RB
STORE	1420	47293.13	44690.25	935.41	*RG
STORE	1421	47297.06	44639.87	935.65	*RB
STORE	1422	47297.67	44639.74	935.21	*RH
STORE	1423	47296.91	44593.61	935.66	*RB
STORE	1424	47297.46	44593.62	935.21	*RH
STORE	1425	47311.04	44593.93	935.01	*RC
STORE	1426	47326.21	44594.32	934.76	*RF
STORE	1427	47326.83	44594.39	935.27	*RB
STORE	1428	47327.01	44640.17	935.22	*RB
STORE	1429	47326.41	44640.18	934.72	*RF
STORE	1430	47326.76	44691.14	934.55	*RH
STORE	1431	47327.32	44691.35	934.99	*RB
STORE	1432	47333.91	44687.27	934.80	*TR
STORE	1433	47321.60	44708.12	934.34	*SM
STORE	1434	47331.19	44710.34	934.37	*BEG RX
STORE	1435	47333.36	44713.07	934.35	*C/L 6FT RV
STORE	1436	47341.00	44704.39	932.29	*WV T.O.N.
STORE	1437	47367.73	44731.84	935.14	*RE PC
STORE	1438	47311.83	44760.35	935.31	*RE
STORE	1439	47312.52	44745.48	935.36	*RC
STORE	1440	47277.02	44770.84	934.93	*IV
STORE	1441	47281.37	44777.97	935.38	*EP
STORE	1442	47283.19	44783.65	935.20	*FA
STORE	1443	47292.34	44787.69	935.21	*FA
STORE	1444	47292.90	44812.14	935.74	*END FL CONC BLK
STORE	1445	47298.79	44774.47	935.70	*TOP IG
STORE	1446	47293.78	44773.47	935.89	*IH
STORE	1447	47289.32	44773.80	935.86	*IH
STORE	1448	47292.24	44774.34	932.07	*INV.18INCONCPIPE
STORE	1449	47287.19	44773.88	935.13	*RG
STORE	1450	47303.68	44784.06	936.17	*TOP IG
STORE	1451	47303.44	44789.96	936.17	*TOP IG
STORE	1452	47303.29	44787.17	933.06	*INV 24INCONCPIPE
STORE	1453	47314.43	44782.93	936.16	*TOP IG
STORE	1454	47326.09	44783.59	935.54	*TOP IG
STORE	1455	47322.66	44793.46	935.66	*TOP IG
STORE	1456	47319.66	44793.34	933.28	*TOE
STORE	1457	47316.18	44793.90	933.17	*TOE
STORE	1458	47320.44	44787.76	933.33	*TOE
STORE	1459	47314.09	44787.04	933.03	*INV.24INCONCPIPE
STORE	1460	47313.57	44792.43	936.11	*TOP IG
STORE	1461	47312.61	44838.40	935.13	*TOP IG
STORE	1462	47314.52	44838.54	933.48	*TOE
STORE	1463	47317.52	44838.51	933.67	*TOE
STORE	1464	47322.21	44838.31	936.58	*TOP IG
STORE	1465	47324.39	44838.63	934.90	*IG
STORE	1466	47319.53	44887.84	935.48	*TOP IG
STORE	1467	47317.63	44887.90	933.88	*TOE
STORE	1468	47314.49	44888.12	933.78	*TOE
STORE	1469	47312.59	44888.37	935.64	*TOP IG
STORE	1470	47327.86	44778.10	935.92	*EP
STORE	1471	47334.65	44771.43	930.65	*WV T.O.N
STORE	1472	47353.29	44770.66	931.51	*WV T.O.N
STORE	1473	47348.05	44713.41	933.58	*INV 18IN CMP
STORE	1474	47367.58	44713.54	934.17	*INV 18IN CMP
STORE	1475	47374.40	44706.32	935.51	*IH
STORE	1476	47368.15	44705.52	935.56	*IH
STORE	1477	47368.74	44697.35	935.58	*IH
STORE	1478	47369.22	44700.86	931.86	*INV 18INCONCPIPE
STORE	1479	47398.89	44636.03	934.99	*IG
STORE	1480	47398.90	44689.06	934.08	*IG
STORE	1481	47399.01	44690.23	934.88	*IG
STORE	1482	47398.81	44691.68	934.54	*IG
STORE	1483	47399.51	44712.54	935.40	*IG
STORE	1484	47399.71	44715.48	934.72	*IG
STORE	1485	47399.49	44720.62	934.95	*FO
STORE	1486	47399.69	44732.04	935.18	*RE
STORE	1487	47399.54	44745.86	935.34	*RC
STORE	1488	47399.13	44759.25	935.37	*RE
STORE	1489	47399.37	44779.02	934.58	*IG
STORE	1490	47400.46	44847.83	935.21	*IG
STORE	1491	47501.73	44849.15	935.45	*IG
STORE	1492	47502.69	44779.05	934.72	*IG

STORE	1493	47501.83	44759.41	935.70	*RE	
STORE	1494	47500.51	44746.34	935.66	*RC	
STORE	1495	47500.52	44732.30	935.48	*RE	
STORE	1496	47500.01	44720.00	935.03	*IG	
STORE	1497	47500.06	44715.20	935.03	*IG	
STORE	1498	47499.65	44709.30	935.80	*IG	
STORE	1499	47500.43	44699.83	935.18	*IG	
STORE	1500	47500.67	44698.14	935.58	*IG	
STORE	1501	47500.74	44695.38	934.68	*IG	
STORE	1502	47500.95	44692.08	935.87	*IG	
STORE	1503	47500.65	44689.64	935.11	*IG	
STORE	1504	47500.91	44632.93	935.61	*IG	
STORE	1505	47599.87	44628.82	936.12	*IG	
STORE	1506	47599.91	44689.07	935.98	*IG	
STORE	1507	47599.97	44691.56	936.92	*IG	
STORE	1508	47600.06	44694.99	935.65	*IG	
STORE	1509	47600.33	44697.64	936.52	*IG	
STORE	1510	47600.25	44707.76	936.44	*IG	
STORE	1511	47600.77	44715.31	935.16	*IG	
STORE	1512	47600.40	44720.48	935.31	*FO	
STORE	1513	47600.51	44731.77	935.80	*RE	
STORE	1514	47600.61	44745.69	936.00	*RC	
STORE	1515	47600.00	44759.41	935.92	*RE	
STORE	1516	47600.44	44779.77	935.08	*IG	
STORE	1517	47601.13	44833.50	935.35	*IG	
STORE	1518	47647.45	44709.19	937.68	*RG	TR
STORE	1519	47700.35	44636.33	936.69	*IG	
STORE	1520	47700.10	44690.47	936.68	*IG	
STORE	1521	47699.86	44692.30	937.47	*IG	
STORE	1522	47699.77	44694.83	936.35	*IG	
STORE	1523	47699.95	44697.15	936.45	*IG	
STORE	1524	47700.02	44698.71	937.11	*IG	
STORE	1525	47700.09	44706.52	937.09	*IG	
STORE	1526	47700.36	44716.63	935.41	*IG	
STORE	1527	47700.56	44719.97	935.69	*FO	
STORE	1528	47700.74	44731.52	936.15	*RE	
STORE	1529	47700.74	44744.78	936.40	*RC	
STORE	1530	47700.81	44757.73	936.41	*RE	
STORE	1531	47700.67	44778.74	935.42	*IG	
STORE	1532	47727.11	44776.38	936.20	*EP	
STORE	1533	47701.01	44848.76	936.03	*IG	
STORE	1534	47802.52	44851.02	936.48	*IG	
STORE	1535	47801.06	44792.11	936.44	*IG	
STORE	1536	47801.09	44777.55	935.85	*IG	
STORE	1537	47801.34	44757.41	936.92	*RE	
STORE	1538	47801.44	44744.18	936.97	*RC	
STORE	1539	47801.68	44731.42	936.77	*RE	
STORE	1540	47801.42	44719.32	936.08	*FO	
STORE	1541	47800.94	44715.96	935.74	*IG	
STORE	1542	47794.28	44706.14	936.68	*SM	
STORE	1543	47802.30	44705.60	937.98	*IG	
STORE	1544	47802.05	44700.03	936.82	*IG	
STORE	1545	47802.10	44698.01	937.46	*IG	
STORE	1546	47802.11	44696.44	936.72	*IG	
STORE	1547	47802.07	44694.80	936.72	*IG	
STORE	1548	47802.20	44692.00	937.81	*IG	
STORE	1549	47802.38	44689.35	937.08	*IG	
STORE	1550	47802.46	44636.13	937.22	*IG	
STORE	1551	47901.12	44631.66	937.58	*IG	
STORE	1552	47901.32	44689.64	937.50	*IG	
STORE	1553	47901.31	44692.42	938.39	*IG	
STORE	1554	47901.48	44695.97	937.29	*IG	
STORE	1555	47901.58	44698.71	938.16	*IG	
STORE	1556	47901.46	44706.52	938.27	*IG	
STORE	1557	47901.56	44714.48	936.64	*IG	
STORE	1558	47901.78	44718.35	936.70	*FO	
STORE	1559	47902.01	44729.59	937.39	*RE	
STORE	1560	47901.96	44743.82	937.42	*RC	
STORE	1561	47902.62	44756.26	937.20	*RE	
STORE	1562	47903.68	44778.30	936.25	*IG	
STORE	1563	47903.52	44795.61	937.01	*IG	
STORE	1564	47903.07	44850.87	937.20	*IG	
STORE	1565	48002.77	44856.50	937.63	*IG	
STORE	1566	48002.99	44791.87	937.51	*IG	
STORE	1567	48002.66	44779.33	936.55	*IG	
STORE	1568	48001.75	44755.37	937.78	*RE	
STORE	1569	48001.82	44742.66	937.93	*RC	
STORE	1570	48001.78	44728.65	937.84	*RE	
STORE	1571	48001.64	44717.70	937.39	*FO	

STORE	1572	48001.55	44712.64	937.38	*IG
STORE	1573	48001.56	44707.34	938.50	*IG
STORE	1574	48001.55	44698.36	938.54	*IG
STORE	1575	48001.51	44695.93	937.76	*IG
STORE	1576	48001.38	44692.72	938.66	*IG
STORE	1577	48001.27	44689.71	938.06	*IG
STORE	1578	48000.15	44636.84	938.32	*IG
STORE	1579	48101.94	44629.94	938.70	*IG
STORE	1580	48101.48	44690.68	938.75	*IG
STORE	1581	48101.72	44693.47	939.34	*IG
STORE	1582	48102.18	44696.69	938.29	*IG
STORE	1583	48102.41	44699.27	939.13	*IG
STORE	1584	48102.52	44707.47	938.81	*IG
STORE	1585	48102.37	44712.70	937.59	*IG
STORE	1586	48102.30	44717.20	937.76	*FO
STORE	1587	48102.02	44727.27	938.42	*RE
STORE	1588	48102.22	44741.92	938.75	*RC
STORE	1589	48102.40	44754.80	938.65	*RE
STORE	1590	48102.93	44777.90	937.13	*IG
STORE	1591	48103.54	44792.84	937.93	*IG
STORE	1592	48104.00	44854.06	938.38	*IG
STORE	1593	48233.89	44703.89	939.48	*SM
STORE	1594	48202.23	44634.51	939.35	*IG
STORE	1595	48202.54	44691.86	939.14	*IG
STORE	1596	48202.70	44694.49	939.94	*IG
STORE	1597	48202.89	44697.92	938.61	*IG
STORE	1598	48203.09	44700.32	939.40	*IG
STORE	1599	48203.55	44708.18	939.25	*IG
STORE	1600	48203.16	44712.30	938.36	*IG
STORE	1601	48202.95	44717.01	938.45	*FO
STORE	1602	48202.99	44727.34	939.03	*RE
STORE	1603	48202.98	44741.34	939.53	*RC
STORE	1604	48202.74	44754.28	939.27	*RE
STORE	1605	48197.58	44774.11	938.97	*EP
STORE	1606	48203.64	44776.84	938.69	*IG
STORE	1607	48203.44	44782.13	937.89	*IG
STORE	1608	48204.49	44794.13	938.57	*IG
STORE	1609	48206.30	44846.26	938.95	*IG
STORE	1610	48304.88	44849.68	939.52	*IG
STORE	1611	48303.57	44791.83	939.27	*IG
STORE	1612	48302.41	44777.52	938.30	*IG
STORE	1613	48303.23	44753.81	940.03	*RE
STORE	1614	48302.50	44740.38	940.30	*RC
STORE	1615	48302.83	44727.56	940.03	*RE
STORE	1616	48302.72	44717.13	939.27	*FO
STORE	1617	48302.59	44710.78	939.07	*IG
STORE	1618	48302.89	44709.36	939.63	*IG
STORE	1619	48302.96	44702.30	940.06	*IG
STORE	1620	48302.75	44699.79	939.05	*IG
STORE	1621	48302.89	44695.86	940.30	*IG
STORE	1622	48302.68	44693.35	939.68	*IG
STORE	1623	48301.47	44637.74	939.91	*IG
STORE	1624	48402.45	44633.44	940.20	*IG
STORE	1625	48403.28	44692.99	940.28	*IG
STORE	1626	48402.82	44695.13	940.68	*IG
STORE	1627	48402.97	44699.05	939.64	*IG
STORE	1628	48402.73	44701.70	940.68	*IG
STORE	1629	48402.95	44709.58	940.31	*IG
STORE	1630	48403.01	44713.01	939.86	*IG
STORE	1631	48403.18	44716.52	940.15	*FO
STORE	1632	48403.04	44727.53	940.84	*RE
STORE	1633	48402.76	44740.08	940.99	*RC
STORE	1634	48403.99	44753.54	940.83	*RE
STORE	1635	48404.30	44777.08	939.09	*IG
STORE	1636	48404.43	44790.82	939.92	*IG
STORE	1637	48405.52	44848.46	940.14	*IG
STORE	1638	48505.69	44852.36	940.89	*IG
STORE	1639	48505.35	44789.93	940.63	*IG
STORE	1640	48505.43	44777.51	939.82	*IG
STORE	1641	48504.19	44753.27	941.65	*RE
STORE	1642	48503.77	44739.41	941.80	*RC
STORE	1643	48503.35	44726.01	941.54	*RE
STORE	1644	48503.94	44715.12	940.72	*FO
STORE	1645	48503.61	44711.97	940.62	*IG
STORE	1646	48503.92	44709.41	941.10	*IG
STORE	1647	48502.78	44702.11	941.16	*IG
STORE	1648	48502.93	44699.39	940.30	*IG
STORE	1649	48503.02	44695.39	941.66	*IG
STORE	1650	48503.12	44692.76	941.01	*IG

STORE	1651	48502.24	44639.17	940.77	*IG
STORE	1652	48590.34	44611.19	940.88	*IG
STORE	1653	48594.73	44611.36	943.68	*TOP CONC
STORE	1654	48596.92	44611.48	941.86	*IC
STORE	1655	48598.06	44611.41	941.82	*IC
STORE	1656	48600.11	44611.34	943.57	*TOP CONC
STORE	1657	48600.31	44651.38	943.64	*BEG TOP CONC
STORE	1658	48595.04	44651.33	943.63	*BEG TOP CONC
STORE	1659	48597.20	44651.37	941.91	*BEG IC
STORE	1660	48598.24	44651.31	941.93	*BEG IC
STORE	1661	48592.04	44651.20	940.94	*IG
STORE	1662	48603.20	44642.87	944.08	*IG
STORE	1663	48604.62	44684.44	943.94	*IG
STORE	1664	48603.68	44714.59	943.01	*FO
STORE	1665	48603.92	44724.80	942.45	*RE
STORE	1666	48599.06	44713.22	942.64	*TOP IG
STORE	1667	48599.13	44707.14	942.84	*TOP IG
STORE	1668	48599.06	44710.19	941.01	*INV 18IN CMP
STORE	1669	48619.11	44709.86	941.44	*INV 18IN CMP
STORE	1670	48619.28	44707.73	943.09	*TOP IG
STORE	1671	48619.33	44712.54	943.05	*TOP IG
STORE	1672	48651.06	44682.46	938.54	*WV T.O.N.
STORE	1673	48651.31	44678.91	939.63	*WV T.O.N.
STORE	1674	48603.55	44739.03	942.63	*RC
STORE	1675	48603.80	44751.23	942.48	*RE
STORE	1676	48603.88	44774.95	940.29	*IG
STORE	1677	48603.92	44793.67	941.23	*IG
STORE	1678	48603.88	44845.63	941.45	*IG
STORE	1679	48665.43	44772.52	943.26	*EP
STORE	1680	48679.64	44768.35	943.08	*TOP IG
STORE	1681	48679.17	44773.13	943.80	*TOP IG
STORE	1682	48679.20	44770.91	941.86	*INV 12IN CMP
STORE	1683	48719.28	44771.24	942.36	*INV 12IN CMP
STORE	1684	48719.25	44773.40	943.85	*TOP IG
STORE	1685	48718.97	44769.77	943.68	*TOP IG
STORE	1686	48703.34	44839.29	943.80	*IG
STORE	1687	48703.64	44779.84	944.76	*IG
STORE	1688	48703.62	44751.62	943.32	*RE
STORE	1689	48703.37	44738.25	943.46	*RC
STORE	1690	48703.38	44723.95	943.38	*RE
STORE	1691	48702.78	44714.01	942.71	*FO
STORE	1692	48703.05	44710.61	942.39	*IG
STORE	1693	48703.00	44708.31	943.73	*IG
STORE	1694	48702.97	44699.28	944.32	*IG
STORE	1695	48702.89	44639.13	944.39	*IG
STORE	1696	48801.21	44620.19	944.98	*IG
STORE	1697	48803.53	44700.58	944.98	*IG
STORE	1698	48803.80	44709.64	943.48	*IG
STORE	1699	48803.58	44712.99	943.43	*FO
STORE	1700	48803.96	44722.91	944.35	*RE
STORE	1701	48804.70	44737.88	944.36	*RC
STORE	1702	48803.84	44750.35	944.23	*RE
STORE	1703	48802.85	44768.27	943.66	*IG
STORE	1704	48803.81	44776.58	944.78	*IG
STORE	1705	48805.69	44850.29	944.54	*IG
STORE	1706	48905.67	44850.25	944.82	*IG
STORE	1707	48904.92	44776.39	945.01	*IG
STORE	1708	48904.89	44767.57	944.20	*IG
STORE	1709	48904.23	44749.46	945.21	*RE
STORE	1710	48904.41	44737.38	945.30	*RC
STORE	1711	48904.22	44722.10	945.19	*RE
STORE	1712	48903.27	44711.67	944.53	*FO
STORE	1713	48903.38	44709.08	943.87	*IG
STORE	1714	48903.18	44705.52	945.00	*IG
STORE	1715	48903.00	44697.15	945.78	*IG
STORE	1716	48903.24	44688.42	945.32	*IG
STORE	1717	48903.96	44641.47	945.31	*IG
STORE	1718	48840.70	44702.30	946.75	*TR
STORE	1719	48842.76	44710.98	944.72	*TH
STORE	1720	49001.76	44626.65	945.97	*IG
STORE	1721	49003.67	44688.88	946.12	*IG
STORE	1722	49004.54	44696.36	946.71	*IG
STORE	1723	49005.06	44706.85	944.87	*IG
STORE	1724	49005.12	44711.12	945.10	*FO
STORE	1725	49004.61	44721.91	945.89	*RE
STORE	1726	49005.17	44736.82	946.15	*RC
STORE	1727	49004.77	44749.38	945.99	*RE
STORE	1728	49004.24	44768.20	944.78	*IG
STORE	1729	49004.37	44775.80	945.66	*IG

STORE	1730	49003.07	44845.95	945.54	*IG
STORE	1731	49102.52	44845.33	946.06	*IG
STORE	1732	49104.56	44774.59	946.40	*IG
STORE	1733	49104.44	44766.44	946.04	*IG
STORE	1734	49135.80	44770.75	946.88	*EP
STORE	1735	49104.04	44748.57	946.72	*RE
STORE	1736	49104.42	44736.48	946.83	*RC
STORE	1737	49103.99	44721.59	946.58	*RE
STORE	1738	49103.87	44710.52	945.69	*FO
STORE	1739	49103.50	44705.28	945.40	*IG
STORE	1740	49104.45	44694.50	947.02	*IG
STORE	1741	49104.60	44681.53	946.37	*IG
STORE	1742	49103.54	44628.59	946.47	*IG
STORE	1743	49203.41	44621.54	947.05	*IG
STORE	1744	49202.92	44678.05	946.87	*IG
STORE	1745	49203.80	44697.84	947.15	*IG
STORE	1746	49203.77	44705.57	945.99	*IG
STORE	1747	49204.13	44710.26	946.39	*FO
STORE	1748	49204.33	44720.70	947.21	*RE
STORE	1749	49204.86	44735.75	947.42	*RC
STORE	1750	49204.69	44748.44	947.33	*RE
STORE	1751	49204.27	44765.69	946.41	*IG
STORE	1752	49204.27	44773.36	946.94	*IG
STORE	1753	49205.48	44860.20	946.69	*IG
STORE	1754	49304.21	44858.96	947.05	*IG
STORE	1755	49304.25	44773.69	947.42	*IG
STORE	1756	49304.83	44764.70	946.79	*IG
STORE	1757	49304.89	44747.70	947.80	*RE
STORE	1758	49304.54	44733.66	947.80	*RC
STORE	1759	49304.30	44720.75	947.66	*RE
STORE	1760	49304.38	44710.67	947.04	*FO
STORE	1761	49304.36	44705.00	946.50	*IG
STORE	1762	49304.73	44695.63	947.84	*IG
STORE	1763	49304.74	44688.70	947.40	*IG
STORE	1764	49301.42	44614.42	947.45	*IG
STORE	1765	49400.23	44602.72	948.06	*IG
STORE	1766	49403.44	44677.44	947.87	*IG
STORE	1767	49404.10	44695.82	948.47	*IG
STORE	1768	49442.64	44696.12	949.28	*RG
STORE	1769	49405.41	44705.40	947.20	*IG
STORE	1770	49405.78	44710.41	947.56	*FO
STORE	1771	49405.06	44720.64	948.19	*RE
STORE	1772	49403.91	44734.15	948.25	*RC
STORE	1773	49403.66	44746.99	948.23	*RE
STORE	1774	49449.07	44763.16	947.82	*RG
STORE	1775	49405.40	44762.41	947.44	*IG
STORE	1776	49405.03	44772.81	947.82	*IG
STORE	1777	49405.50	44850.81	947.66	*IG
STORE	1778	49502.43	44851.17	948.04	*IG
STORE	1779	49503.65	44776.05	948.18	*IG
STORE	1780	49504.22	44769.64	949.11	*IG
STORE	1781	49504.43	44762.65	948.46	*IG
STORE	1782	49504.75	44746.84	948.82	*RE
STORE	1783	49504.83	44733.24	948.97	*RC
STORE	1784	49504.80	44720.23	948.90	*RE
STORE	1785	49505.21	44711.08	948.29	*FO
STORE	1786	49505.12	44704.39	947.77	*IG
STORE	1787	49505.12	44695.65	948.92	*IG
STORE	1788	49505.32	44689.60	948.45	*IG
STORE	1789	49503.99	44619.49	948.29	*IG
STORE	1790	49554.97	44696.85	948.23	*SM
STORE	1791	49544.00	44786.31	949.96	*BEG CONC TOP
STORE	1792	49541.49	44784.32	949.91	*BEG CONC TOP
STORE	1793	49539.30	44787.00	949.78	*BEG CONC TOP
STORE	1794	49541.63	44788.76	947.74	*IC
STORE	1795	49542.42	44788.80	947.76	*IC
STORE	1796	49542.37	44845.14	947.96	*IC
STORE	1797	49543.09	44845.22	947.96	*IC
STORE	1798	49545.37	44845.00	949.94	*TOP CONC
STORE	1799	49540.03	44845.07	949.93	*TOP CONC
STORE	1800	49576.32	44769.11	950.31	*EP
STORE	1801	49582.87	44774.25	949.84	*PT
STORE	1802	49601.67	44770.27	950.02	*END LP GAS TANK
STORE	1803	49609.66	44769.93	950.13	*END LP GAS TANK
STORE	1804	49606.99	44765.80	949.85	*IG TOP
STORE	1805	49606.80	44763.32	948.86	*INV. 12IN CMP
STORE	1806	49607.04	44761.59	949.76	*TOP IG
STORE	1807	49602.86	44761.31	949.38	*RG
STORE	1808	49644.92	44760.14	950.26	*TOP IG

STORE	1809	49645.02	44763.63	950.24	*TOP IG
STORE	1810	49645.03	44762.43	949.52	*INV. 12IN CMP
STORE	1811	49610.01	44842.58	949.38	*IG
STORE	1812	49607.32	44777.03	949.65	*IG
STORE	1813	49606.23	44746.72	949.62	*RE
STORE	1814	49605.80	44733.06	949.70	*RC
STORE	1815	49605.41	44720.13	949.68	*RE
STORE	1816	49605.41	44712.17	949.03	*FO
STORE	1817	49606.02	44705.31	948.21	*IG
STORE	1818	49605.36	44693.35	949.31	*IG
STORE	1819	49605.58	44681.90	948.82	*IG
STORE	1820	49610.07	44626.92	948.71	*IG
STORE	1821	49618.08	44677.81	948.87	*IG
STORE	1822	49619.25	44680.13	950.50	*TOP IG
STORE	1823	49620.37	44682.43	948.93	*F/L
STORE	1824	49621.67	44685.00	950.28	*TOP IG
STORE	1825	49670.26	44668.15	950.81	*IG
STORE	1826	49667.25	44662.39	951.83	*TOP IG
STORE	1827	49663.52	44657.06	948.92	*F/L
STORE	1828	49660.56	44652.16	951.02	*TOP IG
STORE	1829	49658.95	44649.78	949.32	*IG
STORE	1830	49704.24	44621.61	949.76	*IG
STORE	1831	49705.22	44623.12	950.98	*TOP IG
STORE	1832	49707.32	44626.09	948.81	*TOE
STORE	1833	49709.33	44628.62	948.86	*TOE
STORE	1834	49713.24	44634.11	952.39	*TOP IG
STORE	1835	49721.92	44644.91	951.64	*IG
STORE	1836	49761.57	44610.59	952.05	*IG
STORE	1837	49755.39	44602.21	952.59	*TOP IG
STORE	1838	49752.07	44598.60	950.17	*TOE
STORE	1839	49749.93	44596.06	950.16	*TOE
STORE	1840	49748.21	44593.77	951.60	*TOP IG
STORE	1841	49747.02	44592.25	949.94	*IG
STORE	1842	49704.62	44611.02	949.42	*IG
STORE	1843	49704.20	44622.02	949.88	*IG
STORE	1844	49704.02	44623.87	951.00	*TOP IG
STORE	1845	49704.20	44627.96	949.05	*TOE
STORE	1846	49704.94	44632.07	948.95	*TOE
STORE	1847	49705.63	44689.56	950.56	*IG
STORE	1848	49706.51	44704.64	948.82	*IG
STORE	1849	49706.37	44711.73	949.90	*FO
STORE	1850	49706.10	44719.50	950.38	*RE
STORE	1851	49705.55	44733.16	950.46	*RC
STORE	1852	49705.13	44747.02	950.34	*RE
STORE	1853	49706.01	44762.11	949.71	*IG
STORE	1854	49706.56	44776.05	950.95	*IG
STORE	1855	49706.67	44809.24	950.64	*FL 4FT CL
STORE	1856	49708.66	44812.70	950.06	*BC
STORE	1857	49695.51	44808.61	950.54	*EP
STORE	1858	49687.10	44799.69	951.00	*TT
STORE	1859	49672.44	44799.18	950.37	*TT
STORE	1860	49668.23	44812.28	949.96	*BC
STORE	1861	49668.47	44809.08	950.48	*FA 4FT HI CL
STORE	1862	49661.47	44793.78	950.40	*FA 4FT HI CL
STORE	1863	49643.50	44793.40	950.59	*FA 4FT HI CL
STORE	1864	49643.07	44828.73	950.23	*FL
STORE	1865	49667.95	44838.65	950.31	*BC
STORE	1866	49726.26	44810.05	950.85	*FA
STORE	1867	49721.33	44806.92	950.57	*WATER STAND PIPE
STORE	1868	49736.83	44764.06	950.44	*TOP IG
STORE	1869	49736.82	44759.75	950.44	*TOP IG
STORE	1870	49736.80	44760.85	949.62	*INV. 12IN CMP
STORE	1871	49734.09	44759.33	949.92	*RG
STORE	1872	49816.07	44762.89	951.42	*TOP IG
STORE	1873	49816.12	44759.03	951.47	*TOP IG
STORE	1874	49816.32	44760.92	950.65	*INV. 12IN CMP
STORE	1875	49813.81	44763.45	951.53	*BV
STORE	1876	49812.47	44763.36	951.45	*BV
STORE	1877	49809.63	44763.32	951.46	*BV
STORE	1878	49811.00	44767.13	953.80	*TR
STORE	1879	49811.03	44767.95	951.02	*EP
STORE	1880	49812.02	44768.29	951.10	*FC 5FT BLK
STORE	1881	49812.93	44831.66	950.99	*FL
STORE	1882	49819.47	44833.33	952.21	*BC
STORE	1883	49810.05	44822.71	950.97	*IG
STORE	1884	49808.31	44766.63	951.06	*IG
STORE	1885	49808.09	44759.20	951.44	*IG
STORE	1886	49807.87	44745.64	951.21	*RE
STORE	1887	49806.96	44733.31	951.35	*RC

STORE	1888	49806.56	44719.34	951.10	*RE
STORE	1889	49807.14	44711.58	950.54	*FO
STORE	1890	49807.79	44705.92	949.45	*IG
STORE	1891	49807.59	44694.73	951.21	*IG
STORE	1892	49830.57	44688.24	951.73	*EP
STORE	1893	49755.18	44687.31	950.65	*EDGE TREE CLUSTR
STORE	1894	49734.59	44636.45	951.84	*EDGE TREE CLUSTR
STORE	1895	49857.66	44565.35	952.01	*EDGE TREE CLUSTR
STORE	1896	49880.28	44598.74	952.08	*EDGE TREE CLUSTR
STORE	1897	49867.41	44662.67	951.82	*TR
STORE	1898	49823.98	44765.77	951.45	*PT
STORE	1899	49867.77	44766.07	952.32	*PT
STORE	1900	49866.50	44830.51	951.17	*FC
STORE	1901	49885.05	44831.18	950.62	*FC
STORE	1902	49879.84	44832.99	950.61	*BC
STORE	1903	49899.55	44796.20	951.72	*FC 7FTHI CHAINLK
STORE	1904	49912.89	44795.98	952.39	*FC 7FTHI CHAINLK
STORE	1905	49913.44	44778.51	952.63	*FC 7FTHI CHAINLK
STORE	1906	49899.23	44779.09	952.50	*FC 7FTHI CHAINLK
STORE	1907	49904.33	44772.75	952.52	*EP
STORE	1908	49904.38	44765.47	952.39	*EP
STORE	1909	49901.82	44758.02	952.70	*REUSE AIR VALVE
STORE	1910	49897.17	44760.74	952.41	*WV
STORE	1911	49897.18	44760.74	946.88	*WV T.O.N.
STORE	1912	49897.11	44755.75	946.89	*WV T.O.N.
STORE	1913	49907.29	44756.45	946.30	*WV T.O.N.
STORE	1914	49907.13	44756.35	952.37	*WV
STORE	1915	49897.12	44755.72	952.28	*WV
STORE	1916	49890.46	44688.13	952.35	*TR
STORE	1917	49903.76	44618.35	952.29	*IG
STORE	1918	49904.86	44680.68	951.74	*TOP IG
STORE	1919	49917.77	44680.80	952.49	*TOP IG
STORE	1920	49912.11	44704.60	951.73	*TOP IG RG
STORE	1921	49898.60	44709.87	951.06	*TOP IG
STORE	1922	49900.11	44696.66	951.59	*TOP IG
STORE	1923	49901.67	44702.93	950.23	*F/L
STORE	1924	49908.85	44687.36	950.10	*F/L
STORE	1925	49915.87	44685.96	948.96	*INV. 24IN CMP
STORE	1926	49935.88	44677.79	952.91	*RE PC
STORE	1927	49932.17	44699.94	952.58	*RE MOC
STORE	1928	49906.81	44720.01	952.24	*RE PT
STORE	1929	49907.14	44731.96	952.31	*RC
STORE	1930	49907.21	44745.83	952.13	*RE
STORE	1931	49907.81	44753.72	951.70	*F/L
STORE	1932	49907.65	44754.90	952.07	*IG
STORE	1933	49907.05	44772.70	952.70	*IG
STORE	1934	49908.30	44811.16	950.77	*IG
STORE	1935	49908.49	44843.19	950.84	*IG
STORE	1936	49916.13	44843.78	952.09	*TOP CONC
STORE	1937	49918.33	44843.74	950.14	*IC
STORE	1938	49919.27	44843.81	950.14	*IC
STORE	1939	49920.84	44843.57	951.98	*TOP CONC
STORE	1940	49922.21	44805.67	952.53	*TOP CONC
STORE	1941	49926.04	44795.11	952.95	*IG
STORE	1942	49933.63	44791.56	952.82	*IG
STORE	1943	49933.91	44788.02	950.39	*INV 18INCONCPIPE
STORE	1944	49934.39	44783.60	952.58	*TOP IG
STORE	1945	49913.96	44780.68	952.88	*TOP IG
STORE	1946	49915.36	44806.94	952.43	*TOP CONC
STORE	1947	49918.16	44806.82	950.27	*IC
STORE	1948	49919.25	44806.96	950.31	*IC
STORE	1949	49917.96	44783.87	950.76	*IC
STORE	1950	49923.92	44793.27	950.66	*IC
STORE	1951	49918.62	44762.11	952.65	*TOP IG
STORE	1952	49918.45	44760.28	951.57	*INV. 12IN CMP
STORE	1953	49918.74	44759.43	952.47	*TOP IG
STORE	1954	49978.38	44761.47	952.72	*TOP IG
STORE	1955	49977.71	44759.01	951.26	*INV. 12IN CMP
STORE	1956	49977.84	44756.75	952.70	*TOP IG
STORE	1957	49967.40	44787.72	953.51	*TOP CONC
STORE	1958	49967.60	44790.01	950.23	*INV 18INCONCPIPE
STORE	1959	49967.18	44792.63	953.50	*TOP CONC
STORE	1960	50005.14	44763.34	953.00	*EP
STORE	1961	50010.30	44709.95	953.30	*RG
STORE	1962	50005.55	44717.66	953.00	*RE PC
STORE	1963	49977.82	44705.78	952.76	*RE MOC
STORE	1964	49961.13	44678.02	952.82	*RE PC
STORE	1965	49975.55	44682.35	952.47	*TOP IG
STORE	1966	49975.89	44685.73	950.18	*INV. 18IN CMP

STORE	1967	49974.59	44687.69	952.42	*TOP IG
STORE	1968	49988.67	44703.39	952.61	*TOP IG
STORE	1969	50005.68	44708.40	952.84	*TOP IG
STORE	1970	50006.23	44699.76	952.90	*TOP IG
STORE	1971	49992.43	44696.10	953.02	*TOP IG
STORE	1972	49987.94	44682.98	952.73	*TOP IG
STORE	1973	49984.04	44682.82	950.79	*TOE
STORE	1974	49978.82	44683.04	950.70	*TOE
STORE	1975	49990.40	44696.99	951.41	*TOE
STORE	1976	49989.48	44701.43	951.02	*TOE
STORE	1977	50006.15	44705.04	951.45	*TOE
STORE	1978	50006.42	44702.01	951.10	*TOE
STORE	1979	49993.92	44694.79	953.18	*SM
STORE	1980	50002.97	44674.49	949.21	*WV T.O.N.
STORE	1981	50002.79	44670.94	951.82	*WV T.O.N.
STORE	1982	50017.95	44674.98	947.96	*WV T.O.N.
STORE	1983	50023.94	44675.90	956.97	*WF
STORE	1984	50059.65	44613.95	953.27	*IG
STORE	1985	50056.71	44690.92	953.98	*IG
STORE	1986	50056.93	44700.76	952.06	*IG
STORE	1987	50056.86	44705.95	952.73	*FO
STORE	1988	50057.19	44716.45	953.30	*RE
STORE	1989	50057.65	44729.02	953.28	*RC
STORE	1990	50057.48	44743.66	953.13	*RE
STORE	1991	50056.81	44757.84	952.27	*IG
STORE	1992	50056.97	44768.35	953.92	*TOP CONC
STORE	1993	50057.09	44770.64	951.86	*IC
STORE	1994	50057.08	44771.66	951.83	*IC
STORE	1995	50057.23	44773.79	953.74	*TOP CONC
STORE	1996	50056.93	44776.80	952.80	*IG
STORE	1997	50061.38	44833.55	952.52	*IG
STORE	1998	50161.11	44838.72	952.93	*IG
STORE	1999	50159.68	44772.58	953.58	*IG
STORE	2000	50159.91	44771.04	954.42	*TOP CONC
STORE	2001	50159.99	44768.99	952.44	*IC
STORE	2002	50159.97	44768.01	952.44	*IC
STORE	2003	50160.11	44766.01	954.48	*TOP CONC
STORE	2004	50159.78	44755.31	952.66	*IG
STORE	2005	50158.11	44740.47	953.49	*RE
STORE	2006	50158.56	44726.79	953.80	*RC
STORE	2007	50158.08	44715.21	953.77	*RE
STORE	2008	50157.90	44704.09	953.45	*FO
STORE	2009	50158.42	44698.03	952.78	*IG
STORE	2010	50157.90	44688.84	954.44	*IG
STORE	2011	50157.94	44665.15	953.78	*IG
STORE	2012	50156.88	44601.90	953.71	*IG
STORE	2013	50255.72	44611.05	954.05	*IG
STORE	2014	50257.53	44687.36	954.87	*IG
STORE	2015	50257.64	44694.88	953.38	*IG
STORE	2016	50258.10	44702.38	953.84	*FO
STORE	2017	50257.94	44711.37	954.14	*RE
STORE	2018	50257.36	44724.48	954.21	*RC
STORE	2019	50258.36	44738.67	953.92	*RE
STORE	2020	50258.29	44753.10	953.67	*IG
STORE	2021	50258.53	44763.58	955.04	*TOP CONC
STORE	2022	50258.15	44765.71	953.03	*IC
STORE	2023	50258.20	44766.65	953.04	*IC
STORE	2024	50258.28	44768.84	955.05	*TOP CONC
STORE	2025	50256.85	44831.34	953.48	*IG
STORE	2026	50296.58	44760.86	955.41	*TR
STORE	2027	50354.40	44618.53	954.54	*IG
STORE	2028	50358.91	44685.55	955.21	*IG
STORE	2029	50358.02	44692.09	954.08	*IG
STORE	2030	50357.55	44701.03	954.18	*FO
STORE	2031	50358.05	44709.42	954.41	*RE
STORE	2032	50358.17	44722.17	954.31	*RC
STORE	2033	50447.56	44692.17	955.59	*RE
STORE	2034	50356.82	44749.93	954.04	*IG
STORE	2035	50356.86	44761.45	955.63	*TOP CONC
STORE	2036	50357.11	44763.57	953.61	*IC
STORE	2037	50356.93	44764.58	953.60	*IC
STORE	2038	50356.97	44766.85	955.58	*TOP CONC
STORE	2039	50358.29	44832.55	953.98	*IG
STORE	2040	50431.16	44755.76	955.83	*EP
STORE	2041	50456.66	44830.04	954.83	*IG
STORE	2042	50456.55	44769.79	955.15	*IG
STORE	2043	50457.42	44764.59	956.21	*TOP CONC
STORE	2044	50457.72	44762.52	954.21	*IC
STORE	2045	50457.68	44761.50	954.21	*IC

STORE	2046	50457.34	44759.39	956.20	*TOP CONC
STORE	2047	50457.22	44748.66	954.71	*IG
STORE	2048	50458.82	44733.96	954.82	*RE
STORE	2049	50458.90	44719.22	954.84	*RC
STORE	2050	50458.99	44707.06	954.86	*RE
STORE	2051	50459.68	44696.22	954.28	*FO
STORE	2052	50459.41	44692.43	954.42	*IG
STORE	2053	50447.57	44691.90	954.94	*RG
STORE	2054	50457.69	44683.90	955.54	*IG
STORE	2055	50453.83	44619.16	955.14	*IG
STORE	2056	50552.97	44617.12	955.50	*IG
STORE	2057	50557.62	44681.27	955.99	*IG
STORE	2058	50558.22	44688.46	954.79	*IG
STORE	2059	50558.12	44694.43	954.98	*FO
STORE	2060	50558.20	44703.89	955.33	*RE
STORE	2061	50558.28	44717.56	955.37	*RC
STORE	2062	50558.71	44731.05	955.44	*RE
STORE	2063	50558.74	44746.74	955.11	*IG
STORE	2064	50559.17	44757.18	956.82	*TOP CONC
STORE	2065	50559.43	44759.22	954.83	*IC
STORE	2066	50559.54	44760.24	954.82	*IC
STORE	2067	50560.03	44762.42	956.82	*TOP CONC
STORE	2068	50559.98	44767.45	955.75	*IG
STORE	2069	50560.41	44830.76	955.18	*IG
STORE	2070	50670.13	44833.16	955.65	*IG
STORE	2071	50663.60	44765.58	955.02	*IG
STORE	2072	50663.49	44760.36	957.08	*TOP CONC
STORE	2073	50663.59	44758.05	955.09	*IC
STORE	2074	50663.46	44757.04	955.09	*IC
STORE	2075	50663.52	44754.94	957.10	*TOP CONC
STORE	2076	50663.49	44743.81	955.58	*IG
STORE	2077	50661.77	44728.78	955.95	*RE
STORE	2078	50660.50	44715.45	956.05	*RC
STORE	2079	50659.89	44701.82	955.79	*RE
STORE	2080	50659.91	44692.75	955.35	*FO
STORE	2081	50660.81	44685.97	955.21	*IG
STORE	2082	50661.29	44679.90	956.28	*IG
STORE	2083	50679.81	44682.77	956.33	*TR
STORE	2084	50653.78	44609.00	956.09	*IG
STORE	2085	50758.60	44605.56	956.41	*IG
STORE	2086	50759.71	44674.93	956.93	*IG
STORE	2087	50759.67	44683.41	955.48	*IG
STORE	2088	50760.24	44691.96	955.87	*FO
STORE	2089	50760.28	44699.77	956.32	*RE
STORE	2090	50760.59	44712.96	956.63	*RC
STORE	2091	50760.69	44726.47	956.55	*RE
STORE	2092	50761.38	44741.26	955.79	*IG
STORE	2093	50761.84	44752.93	957.33	*TOP CONC
STORE	2094	50761.75	44755.02	955.32	*IC
STORE	2095	50761.69	44756.00	955.35	*IC
STORE	2096	50762.04	44758.16	957.34	*TOP CONC
STORE	2097	50762.11	44761.05	956.71	*IG
STORE	2098	50761.77	44823.72	955.79	*IG
STORE	2099	50851.09	44747.44	957.86	*EP
STORE	2100	50861.16	44823.02	956.47	*IG
STORE	2101	50859.84	44758.82	957.07	*IG
STORE	2102	50859.19	44756.09	957.71	*TOP CONC
STORE	2103	50859.21	44753.90	955.61	*IC
STORE	2104	50859.26	44752.95	955.62	*IC
STORE	2105	50859.11	44750.80	957.66	*TOP CONC
STORE	2106	50859.21	44738.48	956.52	*IG
STORE	2107	50859.01	44723.66	957.03	*RE
STORE	2108	50859.46	44710.79	957.14	*RC
STORE	2109	50859.51	44697.38	956.91	*RE
STORE	2110	50859.61	44689.97	956.33	*FO
STORE	2111	50858.81	44682.42	955.92	*IG
STORE	2112	50858.62	44674.92	957.25	*IG
STORE	2113	50855.86	44612.54	956.96	*IG
STORE	2114	50959.64	44610.70	957.36	*IG
STORE	2115	50959.34	44679.85	956.07	*IG
STORE	2116	50959.13	44686.52	956.70	*FO
STORE	2117	50959.56	44695.48	957.37	*RE
STORE	2118	50959.39	44708.68	957.46	*RC
STORE	2119	50959.88	44721.01	957.42	*RE
STORE	2120	50959.88	44736.12	956.83	*IG
STORE	2121	50960.48	44748.53	957.95	*TOP CONC
STORE	2122	50960.83	44750.66	955.95	*IC
STORE	2123	50960.90	44751.68	955.94	*IC
STORE	2124	50961.07	44753.90	957.95	*TOP CONC

STORE	2125	50961.35	44758.45	957.09	*IG
STORE	2126	50963.18	44821.47	956.52	*IG
STORE	2127	51062.94	44818.71	956.67	*IG
STORE	2128	51059.94	44755.14	956.52	*IG
STORE	2129	51060.66	44751.67	958.25	*TOP CONC
STORE	2130	51060.77	44749.55	956.23	*IC
STORE	2131	51060.79	44748.49	956.23	*IC
STORE	2132	51060.81	44746.33	958.19	*TOP CONC
STORE	2133	51060.65	44736.10	957.33	*IG
STORE	2134	51060.96	44719.09	957.82	*RE
STORE	2135	51060.80	44706.52	957.87	*RC
STORE	2136	51060.03	44692.46	957.60	*RE
STORE	2137	51059.81	44683.55	957.05	*FO
STORE	2138	51060.00	44677.24	956.83	*IG
STORE	2139	51060.07	44671.42	958.08	*IG
STORE	2140	51056.55	44606.14	957.83	*IG
STORE	2141	51156.62	44604.11	957.92	*IG
STORE	2142	51159.36	44669.98	958.23	*IG
STORE	2143	51159.91	44675.72	957.33	*IG
STORE	2144	51159.57	44680.62	957.37	*FO
STORE	2145	51160.46	44691.07	957.93	*RE
STORE	2146	51160.74	44704.13	958.16	*RC
STORE	2147	51161.26	44716.94	958.09	*RE
STORE	2148	51161.37	44731.72	957.69	*RE
STORE	2149	51157.28	44733.88	957.86	*RG
STORE	2150	51163.87	44743.97	958.56	*TOP CONC
STORE	2151	51163.94	44746.17	956.56	*IC
STORE	2152	51163.98	44747.17	956.57	*IC
STORE	2153	51163.97	44749.42	958.55	*TOP CONC
STORE	2154	51163.49	44752.81	958.21	*IG
STORE	2155	51162.70	44816.66	956.95	*IG
STORE	2156	51187.13	44739.77	957.98	*BV
STORE	2157	51240.61	44728.17	958.06	*RG
STORE	2158	51246.14	44725.19	958.71	*TOP IG
STORE	2159	51246.30	44727.47	958.70	*TOP IG
STORE	2160	51245.94	44726.32	957.70	*INV 12IN CMP
STORE	2161	51266.36	44726.08	957.97	*INV 12IN CMP
STORE	2162	51265.50	44725.41	958.84	*TOP IG
STORE	2163	51265.70	44727.07	958.90	*TOP IG
STORE	2164	51265.51	44734.31	956.31	*INV 24IN CMP
STORE	2165	51265.38	44738.27	959.37	*IG
STORE	2166	51247.88	44740.54	959.02	*IG
STORE	2167	51249.42	44746.55	958.97	*IG
STORE	2168	51247.59	44743.49	956.63	*INV 24IN CMP
STORE	2169	51274.80	44743.14	959.07	*FC 4FT CHAIN LK
STORE	2170	51281.59	44727.17	958.91	*EP
STORE	2171	51283.29	44726.92	958.85	*TR
STORE	2172	51260.70	44714.60	958.58	*RE
STORE	2173	51260.11	44701.57	958.32	*RC
STORE	2174	51260.39	44688.29	958.10	*RE
STORE	2175	51260.62	44679.15	957.65	*FO
STORE	2176	51261.17	44673.63	957.77	*IG
STORE	2177	51262.14	44663.94	958.79	*IG
STORE	2178	51263.83	44600.91	958.37	*IG
STORE	2179	51364.05	44595.53	958.59	*IG
STORE	2180	51363.49	44663.69	959.10	*IG
STORE	2181	51362.37	44670.94	958.12	*IG
STORE	2182	51361.68	44674.98	958.09	*FO
STORE	2183	51361.61	44684.72	958.42	*RE
STORE	2184	51362.36	44699.63	958.59	*RC
STORE	2185	51362.45	44712.36	958.64	*RE
STORE	2186	51362.92	44720.38	958.67	*IG
STORE	2187	51361.25	44726.46	959.28	*TOP CONC
STORE	2188	51361.29	44731.91	958.67	*TOP CONC
STORE	2189	51361.05	44729.51	956.85	*INV 24INCONCPIPE
STORE	2190	51364.16	44741.43	959.25	*FL
STORE	2191	51370.03	44741.50	959.22	*FC
STORE	2192	51379.81	44732.32	959.37	*TOP CONC
STORE	2193	51381.74	44730.59	957.74	*IC
STORE	2194	51382.73	44729.60	957.67	*IC
STORE	2195	51384.79	44727.73	959.29	*TOP CONC
STORE	2196	51385.41	44738.77	959.79	*TOP CONC
STORE	2197	51383.79	44740.61	957.91	*IC
STORE	2198	51382.51	44741.70	957.91	*IC
STORE	2199	51380.89	44743.37	959.75	*TOP CONC
STORE	2200	51369.97	44801.62	958.84	*FC 4FT CHLK
STORE	2201	51462.63	44821.08	958.06	*IG
STORE	2202	51463.74	44748.43	957.82	*IG
STORE	2203	51463.80	44743.13	959.97	*TOP CONC

STORE	2204	51463.65	44740.92	957.97	*IC
STORE	2205	51463.66	44739.91	957.96	*IC
STORE	2206	51464.02	44737.82	959.96	*TOP CONC
STORE	2207	51464.23	44722.53	958.95	*IG
STORE	2208	51463.42	44711.55	958.96	*RE
STORE	2209	51462.45	44697.20	959.17	*RC
STORE	2210	51462.34	44683.22	958.92	*RE
STORE	2211	51460.15	44670.26	958.28	*FO
STORE	2212	51460.66	44668.15	958.47	*IG
STORE	2213	51459.93	44661.54	959.44	*IG
STORE	2214	51458.48	44595.17	959.76	*IG
STORE	2215	50060.00	44526.20	953.45	*IG
STORE	2216	49987.01	44526.63	953.83	*IG
STORE	2217	49977.73	44527.92	952.62	*IG
STORE	2218	49960.72	44529.25	953.02	*RE
STORE	2219	49949.61	44529.93	953.07	*RC
STORE	2220	49936.48	44529.48	953.03	*RE
STORE	2221	49922.02	44530.07	952.26	*IG
STORE	2222	49918.64	44529.57	952.48	*IG
STORE	2223	49857.91	44529.82	951.91	*IG
STORE	2224	49854.03	44528.88	952.43	*TOP CONC.
STORE	2225	49846.57	44527.81	952.53	*TOP CONC.
STORE	2226	49850.02	44528.17	950.72	*IC
STORE	2227	49851.87	44528.06	950.68	*IC
STORE	2228	49843.65	44527.51	950.82	*IG
STORE	2229	49808.83	44527.84	950.24	*IG
STORE	2230	49806.66	44555.76	952.10	*TOP CONC.
STORE	2231	49809.95	44560.06	951.91	*TOP CONC.
STORE	2232	49881.63	44509.27	952.44	*TOP CONC.
STORE	2233	49878.78	44505.36	952.54	*TOP CONC.
STORE	2234	49901.06	44484.36	952.61	*TOP CONC.
STORE	2235	49905.15	44486.89	952.69	*TOP CONC.
STORE	2236	49903.55	44485.80	950.85	*IC
STORE	2237	49902.63	44485.29	950.82	*IC
STORE	2238	49877.99	44508.24	950.69	*IC
STORE	2239	49878.47	44509.07	950.66	*IC
STORE	2240	49809.52	44557.50	950.21	*IC
STORE	2241	49809.23	44556.82	950.24	*IC
STORE	2242	49877.19	44632.52	952.12	*IG
STORE	2243	49913.13	44631.51	951.93	*IG
STORE	2244	49937.14	44629.87	952.94	*RE
STORE	2245	49949.17	44630.38	952.88	*RC
STORE	2246	49960.85	44629.22	952.80	*RE
STORE	2247	49977.86	44629.56	952.12	*IG
STORE	2248	49989.45	44629.77	953.45	*IG
STORE	2249	50065.75	44628.99	953.69	*IG
STORE	2250	50070.27	44426.51	953.37	*IG
STORE	2251	49989.56	44427.58	953.87	*IG
STORE	2252	49977.69	44427.79	952.51	*IG
STORE	2253	49961.21	44428.91	953.27	*RE
STORE	2254	49949.32	44429.50	953.40	*RC
STORE	2255	49935.56	44429.88	953.44	*RE
STORE	2256	49921.44	44429.30	952.77	*IG
STORE	2257	49918.57	44429.07	953.34	*IG
STORE	2258	49916.13	44429.02	952.85	*TOP CONC.
STORE	2259	49911.22	44428.72	952.80	*TOP CONC.
STORE	2260	49913.21	44428.71	951.00	*IC
STORE	2261	49914.12	44428.73	951.02	*IC
STORE	2262	49908.89	44428.92	950.95	*IG
STORE	2263	49843.96	44438.09	950.49	*IG
STORE	2264	49838.88	44336.90	950.84	*IG
STORE	2265	49908.27	44331.97	951.59	*IG
STORE	2266	49910.72	44331.10	953.12	*TOP CONC.
STORE	2267	49915.65	44331.05	953.21	*TOP CONC.
STORE	2268	49913.62	44331.05	951.34	*IC
STORE	2269	49912.74	44331.01	951.33	*IC
STORE	2270	49922.00	44329.73	952.86	*IG
STORE	2271	49935.50	44329.91	953.45	*RE
STORE	2272	49948.89	44330.34	953.43	*RC
STORE	2273	49961.13	44329.68	953.34	*RE
STORE	2274	49976.74	44329.78	952.72	*IG
STORE	2275	49989.46	44330.33	953.97	*IG
STORE	2276	50064.67	44328.54	953.58	*IG
STORE	2277	49993.04	44390.29	953.02	*SM
STORE	2278	50073.45	44232.07	953.84	*IG
STORE	2279	49988.76	44230.35	954.39	*IG
STORE	2280	49975.60	44230.23	952.93	*IG
STORE	2281	49961.22	44230.53	953.47	*RE
STORE	2282	49933.67	44230.47	953.59	*RE

STORE	2283	49920.98	44230.31	952.92	*IG
STORE	2284	49915.42	44230.20	953.30	*TOP CONC.
STORE	2285	49910.10	44230.72	953.27	*TOP CONC.
STORE	2286	49912.14	44230.79	951.54	*IC
STORE	2287	49913.01	44230.79	951.57	*IC
STORE	2288	49906.78	44231.26	951.87	*IG
STORE	2289	49854.20	44233.33	951.27	*IG
STORE	2290	49848.97	44128.21	951.28	*IG
STORE	2291	49905.44	44129.92	952.14	*IG
STORE	2292	49909.65	44129.95	953.65	*TOP CONC.
STORE	2293	49914.43	44130.03	953.70	*TOP CONC.
STORE	2294	49912.45	44129.52	951.89	*IC
STORE	2295	49911.75	44129.40	951.86	*IC
STORE	2296	49922.87	44131.43	954.44	*IG
STORE	2297	49926.22	44130.85	954.02	*IG
STORE	2298	49933.88	44130.27	954.11	*RE
STORE	2299	49945.40	44130.42	954.07	*RC
STORE	2300	49957.14	44129.83	953.92	*RE
STORE	2301	49973.22	44128.62	953.24	*IG
STORE	2302	49988.38	44127.08	954.21	*IG
STORE	2303	50050.16	44126.15	954.68	*IG
STORE	2304	49971.11	44150.51	953.48	*RG
STORE	2305	49922.37	44158.12	953.77	*RG
STORE	2307	49990.62	44082.05	954.12	*SM
STORE	2308	50005.07	44088.09	954.86	*TOP IG
STORE	2309	50005.35	44084.34	952.97	*TOP CONC
STORE	2310	50005.96	44081.66	951.08	*IC
STORE	2311	50006.19	44080.54	951.07	*IC
STORE	2312	50006.58	44078.02	952.96	*TOP CONC
STORE	2313	50007.23	44074.76	954.07	*TOP IG
STORE	2314	50006.99	44069.18	953.81	*FL 6FT CONC BLK
STORE	2315	49984.24	44069.73	952.78	*FA
STORE	2316	49974.27	44074.83	954.50	*IH
STORE	2317	49974.21	44066.41	954.46	*IH
STORE	2318	49975.18	44070.82	949.98	*INV 30INCONCPIPE
STORE	2319	49920.33	44071.75	949.84	*INV 30INCONCPIPE
STORE	2320	49921.30	44066.79	954.42	*IH
STORE	2321	49921.61	44077.42	954.26	*IH
STORE	2322	49899.80	44068.27	954.30	*IH
STORE	2323	49899.64	44075.04	954.36	*IH
STORE	2324	49901.67	44072.11	949.68	*INV 24INCONCPIPE
STORE	2325	49881.69	44072.58	949.54	*INV 24INCONCPIPE
STORE	2326	49883.17	44077.27	953.22	*BEG TOP CONC
STORE	2327	49952.38	44230.71	1124.10	*BEG TOP CONC
STORE	2328	49877.04	44075.65	950.43	*BEG IC
STORE	2329	49880.20	44076.84	950.96	*BEG IC
STORE	2330	49830.87	44033.93	951.17	*IG
STORE	2331	49875.56	44034.43	951.78	*IG
STORE	2332	49878.60	44034.40	953.35	*TOP CONC
STORE	2333	49883.66	44034.18	953.26	*TOP CONC
STORE	2334	49881.86	44034.23	951.82	*IC
STORE	2335	49880.51	44034.69	951.80	*IC
STORE	2336	49886.85	44034.71	953.58	*TOP IG
STORE	2337	49888.77	44034.63	952.93	*TOE
STORE	2338	49900.99	44032.78	952.93	*IG
STORE	2339	49905.01	44032.43	953.93	*TOP IG
STORE	2340	49908.24	44031.51	952.58	*TOP CONC
STORE	2341	49910.90	44031.26	950.45	*IC
STORE	2342	49912.20	44031.03	950.44	*IC
STORE	2343	49914.82	44031.15	952.54	*TOP CONC
STORE	2344	49919.94	44031.27	954.88	*TOP
STORE	2345	49922.45	44030.88	953.93	*IG
STORE	2346	49932.12	44030.44	954.19	*RE
STORE	2347	49943.92	44030.02	954.18	*RC
STORE	2348	49957.53	44029.91	953.92	*RE
STORE	2349	49984.01	44030.23	953.83	*FL
STORE	2350	49983.12	43926.99	954.64	*FL IG
STORE	2351	49973.89	43927.17	952.47	*TOE
STORE	2352	49959.13	43928.44	953.04	*RE
STORE	2353	49943.52	43929.61	953.38	*RC
STORE	2354	49930.00	43930.05	953.41	*RE
STORE	2355	49918.62	43930.28	953.03	*IG
STORE	2356	49916.55	43930.49	953.58	*TOP IG
STORE	2357	49914.01	43930.07	952.44	*TOP CONC
STORE	2358	49911.32	43930.32	950.28	*IC
STORE	2359	49910.30	43930.27	950.28	*IC
STORE	2360	49907.48	43931.01	952.46	*TOP CONC
STORE	2361	49904.69	43930.90	953.16	*TOP IG
STORE	2362	49902.22	43930.95	951.84	*TOE

STORE	2363	49887.68	43930.55	951.88	*TOE
STORE	2364	49883.43	43930.65	953.33	*TOP CONC
STORE	2365	49881.72	43930.97	951.66	*IC
STORE	2366	49880.48	43930.89	951.66	*IC
STORE	2367	49878.41	43930.92	953.27	*TOP CONC
STORE	2368	49874.38	43931.10	951.55	*TOE
STORE	2369	49830.81	43933.72	951.02	*IG
STORE	2370	49830.67	43830.85	950.93	*IG
STORE	2371	49874.22	43832.70	951.33	*IG
STORE	2372	49877.79	43832.35	953.19	*TOP CONC
STORE	2373	49879.68	43832.54	951.46	*IC
STORE	2374	49881.13	43832.73	951.55	*IC
STORE	2375	49882.76	43832.84	953.20	*TOP CONC
STORE	2376	49884.80	43833.17	952.99	*TOP IG
STORE	2377	49887.81	43833.15	951.79	*TOE
STORE	2378	49902.00	43831.49	951.85	*TOE
STORE	2379	49904.46	43831.29	953.06	*TOP IG
STORE	2380	49906.66	43831.04	952.40	*TOP CONC
STORE	2381	49909.51	43830.93	950.19	*TOE
STORE	2382	49910.45	43831.14	950.20	*TOE
STORE	2383	49913.46	43831.08	952.37	*TOP CONC
STORE	2384	49916.19	43830.90	953.72	*TOP IG
STORE	2385	49917.87	43830.62	952.99	*IG
STORE	2386	49928.95	43829.54	953.11	*RE
STORE	2387	49943.19	43829.26	953.00	*RC
STORE	2388	49957.50	43828.80	952.79	*RE
STORE	2389	49972.73	43828.26	952.20	*TOE
STORE	2390	49982.21	43827.74	954.33	*FL IG
STORE	2391	49981.05	43729.53	954.56	*FL IG
STORE	2392	49969.85	43730.22	951.95	*TOE
STORE	2393	49956.25	43729.47	952.66	*RE
STORE	2394	49928.83	43729.53	952.82	*RE
STORE	2395	49916.88	43729.23	952.81	*IG
STORE	2396	49915.37	43729.70	953.51	*TOP IG
STORE	2397	49912.68	43729.98	952.28	*TOP CONC
STORE	2398	49909.92	43730.07	950.13	*IC
STORE	2399	49908.83	43730.13	950.14	*IC
STORE	2400	49905.98	43730.33	952.31	*TOP CONC
STORE	2401	49904.40	43730.40	952.99	*TOP IG
STORE	2402	49902.30	43730.45	951.75	*TOE
STORE	2403	49887.21	43731.40	951.69	*IG
STORE	2404	49883.86	43731.47	953.46	*TOP IG
STORE	2405	49882.51	43731.57	953.02	*TOP CONC
STORE	2406	49880.30	43731.66	951.46	*IC
STORE	2407	49879.04	43731.68	951.32	*IC
STORE	2408	49877.15	43731.65	953.04	*TOP CONC
STORE	2409	49872.93	43731.89	951.15	*TOE
STORE	2410	49828.61	43729.81	950.97	*IG
STORE	2411	49828.76	43629.35	950.76	*IG
STORE	2412	49872.26	43629.20	951.17	*TOE
STORE	2413	49876.28	43629.31	953.00	*TOP CONC
STORE	2414	49877.94	43629.23	951.46	*IC
STORE	2415	49879.37	43629.13	951.33	*IC
STORE	2416	49881.22	43629.19	953.04	*TOP CONC
STORE	2417	49883.53	43629.06	953.23	*TOP IG
STORE	2418	49886.57	43628.83	951.47	*TOE
STORE	2419	49900.96	43629.25	951.58	*TOE
STORE	2420	49903.33	43629.29	952.83	*TOP IG
STORE	2421	49905.39	43629.06	952.17	*TOP CONC
STORE	2422	49907.53	43628.89	949.97	*IC
STORE	2423	49909.13	43628.88	949.97	*IC
STORE	2424	49911.98	43628.94	952.13	*TOP CONC
STORE	2425	49914.25	43629.21	953.23	*TOP IG
STORE	2426	49915.54	43629.01	952.59	*IG
STORE	2427	49927.89	43628.77	952.54	*RE
STORE	2428	49942.07	43628.57	952.48	*RC
STORE	2429	49954.67	43628.26	952.39	*RE
STORE	2430	49969.17	43627.93	951.72	*TOE
STORE	2431	49980.65	43627.61	953.49	*FL 6FT CONCBLK
STORE	2432	49979.52	43526.69	953.06	*FL 6FT CONCBLK
STORE	2433	49969.52	43526.34	951.60	*TOE
STORE	2434	49955.25	43526.63	952.17	*RE
STORE	2435	49941.93	43526.86	952.15	*RC
STORE	2436	49927.83	43527.65	952.29	*RE
STORE	2437	49914.89	43527.47	952.36	*IG
STORE	2438	49914.04	43527.92	952.77	*TOP IG
STORE	2439	49911.28	43527.92	952.05	*TOP CONC
STORE	2440	49908.46	43527.80	949.87	*IC
STORE	2441	49907.49	43527.85	949.86	*IC

STORE	2442	49904.39	43528.35	952.07	*TOP CONC
STORE	2443	49902.91	43528.18	952.81	*TOP IG
STORE	2444	49900.71	43528.28	951.68	*IG
STORE	2445	49885.78	43529.25	951.62	*IG
STORE	2446	49881.97	43529.80	952.77	*TOP IG
STORE	2447	49880.72	43529.64	952.78	*TOP CONC
STORE	2448	49878.76	43530.05	951.29	*IC
STORE	2449	49877.31	43529.92	951.13	*IC
STORE	2450	49875.50	43530.16	952.71	*TOP CONC
STORE	2451	49874.49	43530.14	952.86	*TOP IG
STORE	2452	49871.44	43530.23	950.98	*IG
STORE	2453	49825.68	43529.32	950.69	*IG
STORE	2454	49979.21	43428.89	952.67	*FL IG
STORE	2455	49970.29	43429.47	951.44	*TOE
STORE	2456	49954.49	43428.53	952.20	*RE
STORE	2457	49941.51	43428.37	952.17	*RC
STORE	2458	49928.01	43427.92	952.32	*RE
STORE	2459	49914.63	43427.76	952.40	*IG
STORE	2460	49913.25	43427.65	952.90	*TOP IG
STORE	2461	49910.76	43427.37	951.91	*TOP CONC
STORE	2462	49907.70	43427.01	949.75	*IC
STORE	2463	49906.96	43426.94	949.74	*IC
STORE	2464	49903.98	43426.94	951.94	*TOP CONC
STORE	2465	49901.92	43426.69	952.60	*TOP IG
STORE	2466	49900.15	43426.48	951.53	*IG
STORE	2467	49884.68	43427.12	951.48	*IG
STORE	2468	49882.05	43427.13	952.42	*TOP IG
STORE	2469	49879.88	43427.15	952.63	*TOP CONC
STORE	2470	49877.98	43427.24	951.20	*IC
STORE	2471	49876.52	43427.29	951.19	*IC
STORE	2472	49874.91	43427.12	952.58	*TOP CONC
STORE	2473	49870.73	43427.46	950.73	*IG
STORE	2474	49825.50	43426.56	950.63	*IG
STORE	2475	49826.86	43326.92	950.50	*IG
STORE	2476	49870.70	43326.56	950.89	*IG
STORE	2477	49873.97	43326.34	952.72	*TOP CONC
STORE	2478	49875.86	43326.13	950.94	*IC
STORE	2479	49876.94	43326.26	950.90	*IC
STORE	2480	49878.99	43326.10	952.69	*TOP CONC
STORE	2481	49880.80	43326.09	952.42	*TOP IG
STORE	2482	49883.96	43325.92	951.30	*IG
STORE	2483	49899.50	43326.53	951.44	*IG
STORE	2484	49901.28	43326.80	952.28	*TOP IG
STORE	2485	49903.23	43327.12	951.88	*TOP CONC
STORE	2486	49906.17	43327.12	949.67	*IC
STORE	2487	49906.91	43327.02	949.67	*IC
STORE	2488	49909.96	43326.86	951.83	*TOP CONC
STORE	2489	49912.06	43326.85	952.40	*TOP IG
STORE	2490	49914.39	43326.89	951.90	*IG
STORE	2491	49927.49	43326.91	951.99	*RE
STORE	2492	49941.43	43326.22	951.84	*RC
STORE	2493	49954.51	43326.35	951.93	*RE
STORE	2494	49969.39	43326.37	951.05	*TOE
STORE	2495	49978.36	43326.19	952.79	*FL IG
STORE	2496	49977.20	43226.57	952.40	*FL IG
STORE	2497	49968.30	43225.86	950.60	*TOE
STORE	2498	49955.38	43226.27	951.39	*RE
STORE	2499	49928.09	43225.96	951.41	*RE
STORE	2500	49913.75	43226.20	951.64	*IG
STORE	2501	49911.00	43226.46	952.28	*TOP IG
STORE	2502	49909.27	43226.67	951.71	*TOP CONC
STORE	2503	49906.29	43226.80	949.55	*IC
STORE	2504	49905.29	43226.86	949.60	*IC
STORE	2505	49902.60	43226.77	951.77	*TOP CONC
STORE	2506	49900.84	43227.04	952.38	*TOP IG
STORE	2507	49898.56	43227.13	951.44	*IG
STORE	2508	49882.83	43228.31	951.11	*IG
STORE	2509	49878.90	43228.32	952.52	*TOP IG
STORE	2510	49878.05	43228.36	952.55	*TOP CONC
STORE	2511	49876.17	43228.22	950.86	*IC
STORE	2512	49875.00	43228.24	950.86	*IC
STORE	2513	49873.00	43228.49	952.50	*TOP CONC
STORE	2514	49869.02	43228.56	950.81	*IG
STORE	2515	49823.74	43230.56	950.35	*IG
STORE	2516	49943.65	43123.79	950.81	*RM
STORE	2517	49942.87	43024.43	950.44	*RM
STORE	2518	49942.08	42924.43	950.29	*RM
STORE	2519	49941.71	42824.65	950.12	*RM
STORE	2520	49940.83	42724.71	949.95	*RM

STORE	2521	49883.26	44830.21	950.53	*IG
STORE	2522	49909.17	44829.30	950.90	*IG
STORE	2523	49916.02	44829.25	952.15	*TOP CONC
STORE	2524	49918.28	44828.74	950.21	*IC
STORE	2525	49919.33	44828.87	950.24	*IC
STORE	2526	49921.38	44829.24	951.96	*TOP CONC
STORE	2527	49957.09	44830.27	952.25	*C/L IG
STORE	2528	49964.16	44830.63	951.78	*TOE
STORE	2529	49966.39	44830.37	952.85	*TOP IG
STORE	2530	49968.37	44830.19	951.82	*TOE
STORE	2531	50007.19	44830.82	952.24	*IG
STORE	2532	50058.33	44831.72	952.49	*IG
STORE	2533	50057.40	44930.19	952.33	*IG
STORE	2534	50009.82	44930.33	952.00	*IG
STORE	2535	49968.01	44930.38	951.84	*TOE
STORE	2536	49965.43	44930.39	953.19	*TOP IG
STORE	2537	49962.95	44930.21	951.83	*TOE
STORE	2538	49957.96	44930.03	952.01	*C/L IG
STORE	2539	49922.23	44930.40	951.83	*TOP CONC
STORE	2540	49919.86	44929.85	949.75	*IC
STORE	2541	49918.72	44929.83	949.82	*IC
STORE	2542	49916.68	44929.62	951.75	*TOP CONC
STORE	2543	49903.92	44929.33	951.27	*IG
STORE	2544	49851.30	44929.65	950.83	*IG
STORE	2545	49849.19	45032.67	949.25	*IG
STORE	2546	49914.59	45031.22	950.02	*IG
STORE	2547	49917.58	45031.66	951.45	*TOP CONC
STORE	2548	49919.73	45031.59	949.68	*IC
STORE	2549	49920.81	45031.66	949.62	*IC
STORE	2550	49922.98	45031.98	951.49	*TOP CONC
STORE	2551	49958.79	45029.71	951.53	*C/L IG
STORE	2552	49963.06	45029.91	951.42	*TOE
STORE	2553	49965.70	45030.09	952.62	*TOP IG
STORE	2554	49968.35	45029.67	951.71	*TOE
STORE	2555	50008.41	45028.60	951.85	*IG
STORE	2556	50057.37	45026.64	952.12	*IG
STORE	2557	50056.59	45129.32	951.97	*IG
STORE	2558	50008.83	45129.76	951.59	*IG
STORE	2559	49969.40	45130.50	951.47	*TOE
STORE	2560	49966.95	45130.15	952.01	*TOP IG
STORE	2561	49963.72	45129.83	951.13	*TOE
STORE	2562	49959.66	45130.06	951.20	*C/L IG
STORE	2563	49925.55	45130.08	951.86	*IG
STORE	2564	49924.01	45130.04	951.34	*TOP CONC
STORE	2565	49921.74	45130.08	949.40	*IC
STORE	2566	49920.85	45130.22	949.41	*IC
STORE	2567	49918.73	45130.15	951.39	*TOP CONC
STORE	2568	49915.35	45129.82	949.96	*IG
STORE	2569	49843.87	45130.78	949.25	*IG
STORE	2570	49839.54	45229.44	949.15	*IG
STORE	2571	49916.07	45229.86	949.75	*IG
STORE	2572	49919.52	45230.05	951.22	*TOP CONC
STORE	2573	49921.61	45230.20	949.28	*IC
STORE	2574	49922.56	45230.44	949.28	*IC
STORE	2575	49924.56	45230.55	950.78	*TOP CONC
STORE	2576	49925.72	45230.82	951.38	*IG
STORE	2577	49963.99	45230.18	950.84	*TOE
STORE	2578	49965.84	45230.24	951.96	*TOP IG
STORE	2579	49967.53	45229.81	951.12	*TOE
STORE	2580	50013.58	45229.51	951.36	*IG
STORE	2581	50069.78	45228.91	951.73	*IG
STORE	2582	50062.30	45330.29	951.74	*IG
STORE	2583	50014.06	45329.99	951.22	*IG
STORE	2584	49967.12	45330.24	951.02	*TOE
STORE	2585	49965.82	45330.44	951.72	*TOP IG
STORE	2586	49963.93	45329.97	950.78	*TOE
STORE	2587	49961.25	45330.24	950.82	*C/L IG
STORE	2588	49950.61	45330.48	950.88	*IG
STORE	2589	49938.09	45330.03	951.33	*IG
STORE	2590	49927.57	45329.70	951.31	*IG
STORE	2591	49925.39	45330.06	950.86	*TOP CONC
STORE	2592	49923.56	45329.89	949.16	*IC
STORE	2593	49922.44	45330.02	949.12	*IC
STORE	2594	49920.31	45329.98	951.34	*TOP CONC
STORE	2595	49916.41	45330.01	949.56	*IG
STORE	2596	49853.50	45329.72	949.08	*IG
STORE	2597	49845.53	45431.94	949.00	*IG
STORE	2598	49917.71	45432.65	949.48	*IG
STORE	2599	49921.36	45431.29	951.05	*TOP CONC

STORE	2600	49923.33	45431.36	949.12	*IC
STORE	2601	49924.37	45431.61	949.12	*IC
STORE	2602	49926.04	45430.97	950.68	*TOP CONC
STORE	2603	49927.68	45430.99	951.16	*IG
STORE	2604	49940.47	45430.51	951.09	*IG
STORE	2605	49950.68	45430.35	950.64	*IG
STORE	2606	49961.95	45430.23	950.48	*C/L IG
STORE	2607	49963.87	45430.43	950.40	*TOE
STORE	2608	49965.58	45430.41	951.62	*TOP IG
STORE	2609	49966.90	45430.24	950.80	*TOE
STORE	2610	50013.34	45429.50	951.04	*IG
STORE	2611	50067.09	45428.95	951.51	*IG
STORE	2612	50066.60	45529.07	951.21	*IG
STORE	2613	50014.11	45529.77	950.67	*IG
STORE	2614	49966.79	45530.52	950.61	*TOE
STORE	2615	49965.24	45530.38	951.31	*TOP IG
STORE	2616	49962.85	45530.45	950.27	*C/L IG
STORE	2617	49927.42	45529.25	950.80	*TOP CONC
STORE	2618	49922.44	45529.75	950.98	*TOP CONC
STORE	2619	49924.45	45529.17	949.06	*IC
STORE	2620	49925.56	45529.45	949.06	*IC
STORE	2621	49918.75	45529.44	949.37	*IG
STORE	2622	49854.35	45528.93	948.86	*IG
STORE	2623	49849.96	45631.25	948.72	*IG
STORE	2624	49920.42	45630.58	949.16	*IG
STORE	2625	49923.28	45630.49	950.89	*TOP CONC
STORE	2626	49928.35	45630.46	950.52	*TOP CONC
STORE	2627	49926.41	45630.78	948.96	*IC
STORE	2628	49925.29	45631.04	948.96	*IC
STORE	2629	49963.81	45630.17	950.28	*C/L IG
STORE	2630	49965.19	45630.08	951.22	*TOP IG
STORE	2631	49967.22	45629.98	950.42	*TOE
STORE	2632	50018.89	45629.43	950.58	*IG
STORE	2633	50065.86	45629.62	950.98	*IG
STORE	2634	50066.72	45734.16	950.66	*IG
STORE	2635	50016.67	45734.53	950.23	*IG
STORE	2636	49967.74	45735.63	950.21	*TOE
STORE	2637	49961.16	45735.91	950.47	*TOE
STORE	2638	49929.01	45735.88	950.48	*TOP CONC
STORE	2639	49924.22	45736.28	950.69	*TOP CONC
STORE	2640	49927.19	45736.00	948.90	*IC
STORE	2641	49926.16	45735.83	948.92	*IC
STORE	2642	49920.79	45736.01	949.11	*IG
STORE	2643	49853.99	45735.42	948.74	*IG
STORE	2644	49847.06	45835.38	948.83	*IG
STORE	2645	49921.53	45836.09	949.34	*IG
STORE	2646	49925.01	45835.95	950.72	*TOP CONC
STORE	2647	49929.98	45835.88	950.22	*TOP CONC
STORE	2648	49931.78	45835.42	950.86	*IG
STORE	2649	49963.68	45834.65	950.29	*TOE
STORE	2650	49965.34	45834.54	950.90	*C/L IG
STORE	2651	49967.69	45834.73	950.17	*TOE
STORE	2652	50018.89	45834.10	950.24	*IG
STORE	2653	50072.67	45833.58	950.42	*IG
STORE	2654	50072.02	45933.19	950.26	*IG
STORE	2655	50019.97	45934.00	950.03	*IG
STORE	2656	49966.24	45934.59	950.43	*C/L IG
STORE	2657	49931.09	45933.83	950.61	*TOP CONC
STORE	2658	49925.90	45935.29	950.65	*TOP CONC
STORE	2659	49927.86	45934.95	948.82	*IC
STORE	2660	49929.08	45934.68	948.72	*IC
STORE	2661	49921.92	45935.71	949.30	*IG
STORE	2662	49856.25	45935.84	949.35	*IG
STORE	2663	49964.61	45949.06	948.10	*INV 18INCONCPIPE
STORE	2664	49931.15	45969.68	947.94	*INV 18INCONCPIPE
STORE	2665	49929.53	45977.19	948.28	*IG
STORE	2666	49931.90	45972.56	950.75	*TOP CONC ANG PT
STORE	2667	49878.99	45977.52	947.43	*IG
STORE	2668	49879.39	45972.59	950.22	*TOP CONC
STORE	2669	49878.93	45970.55	948.26	*IC
STORE	2670	49878.70	45969.28	948.37	*IC
STORE	2671	49878.33	45967.25	950.23	*TOP CONC
STORE	2672	49926.02	45967.00	950.43	*TOP CONC ANG PT
STORE	2673	49859.67	46031.83	947.05	*IG
STORE	2674	49928.34	46034.31	947.65	*IG
STORE	2675	49966.98	46034.39	948.50	*IG
STORE	2676	50032.19	46035.39	948.91	*IG
STORE	2677	50071.87	46035.86	949.83	*IG
STORE	2678	50075.05	46131.48	947.47	*IG

STORE	2679	50023.13	46132.88	947.14	*IG
STORE	2680	49967.66	46134.57	946.84	*C/L IG
STORE	2681	49950.43	46135.60	946.92	*IG
STORE	2682	49938.75	46135.73	947.53	*IG
STORE	2683	49927.40	46135.93	947.01	*IG
STORE	2684	49894.90	46136.89	946.86	*IG
STORE	2685	49840.80	46138.30	946.60	*IG
STORE	2686	49837.58	46239.51	946.17	*IG
STORE	2687	49890.42	46238.06	946.51	*IG
STORE	2688	49927.40	46236.86	946.65	*IG
STORE	2689	49940.99	46235.53	946.91	*IG
STORE	2690	49948.44	46235.68	945.82	*IG
STORE	2691	50019.28	46234.51	946.63	*IG
STORE	2692	50069.21	46230.97	947.07	*IG
STORE	2693	49969.38	46334.74	945.59	*C/L IG
STORE	2694	49970.19	46434.44	945.23	*C/L IG
STORE	2695	49971.01	46534.73	944.95	*C/L IG
STORE	2696	49971.82	46634.33	944.44	*C/L IG
STORE	2697	49972.64	46734.79	944.30	*FFS
STORE	10031	47858.56	49961.47	939.50	*.
STORE	10032	47115.37	48875.44	931.00	*.
STORE	10033	46191.82	47674.45	932.37	*.
STORE	10034	46684.81	48209.15	932.21	*.
STORE	10035	45982.34	47309.17	927.52	*.
STORE	10036	45836.03	46952.08	924.84	*.
STORE	10037	45865.35	46506.43	924.69	*.
STORE	10038	45783.43	46011.22	922.00	*.
STORE	10039	45701.99	45518.97	919.99	*.
STORE	10040	45578.43	44772.07	917.97	*.
STORE	10041	45393.04	44194.92	915.76	*.
STORE	10042	45329.95	43725.71	914.61	*.
STORE	10043	45243.53	43208.18	913.12	*.
STORE	10044	45168.29	42676.17	912.08	*.
STORE	10045	45094.18	42152.21	911.67	*.
STORE	10046	45018.11	41614.35	908.32	*.
STORE	10120	45218.31	41607.42	910.24	*TOE
STORE	10121	45215.76	41608.74	911.05	*TOP
STORE	10122	45212.28	41609.36	911.70	*NTR
STORE	10123	45203.22	41610.06	911.02	*TOP
STORE	10124	45189.52	41612.38	908.64	*TOE
STORE	10125	45183.11	41613.45	908.43	*IG
STORE	10126	45166.41	41615.43	908.86	*IG
STORE	10127	45156.18	41616.89	908.79	*IG
STORE	10128	45151.75	41617.73	909.35	*IG
STORE	10129	45147.76	41618.74	909.00	*IG
STORE	10130	45134.01	41620.20	909.48	*IG
STORE	10131	45105.32	41625.54	907.61	*IG
STORE	10132	45076.41	41629.19	910.46	*RE
STORE	10133	45056.04	41630.31	910.87	*RC
STORE	10134	45036.70	41633.19	910.49	*RE
STORE	10135	45018.61	41635.59	908.57	*IG
STORE	10136	44982.11	41638.47	908.21	*IG
STORE	10137	44908.14	41649.01	907.83	*IG
STORE	10138	45187.80	41682.57	909.25	*EG
STORE	10139	45189.18	41691.91	909.29	*EP
STORE	10140	45231.83	41706.69	910.57	*TOE
STORE	10141	45229.49	41706.95	911.39	*TOP
STORE	10142	45226.71	41707.33	912.07	*NTR
STORE	10143	45218.05	41708.51	911.45	*TOP
STORE	10144	45215.16	41708.99	910.51	*TOE
STORE	10145	45198.72	41710.87	908.79	*IG
STORE	10146	45179.05	41713.75	909.34	*IG
STORE	10147	45168.10	41716.19	909.21	*IG
STORE	10148	45165.45	41716.39	909.61	*IG
STORE	10149	45148.16	41719.07	909.82	*IG
STORE	10150	45126.27	41721.53	908.25	*IG
STORE	10151	45116.97	41723.70	908.09	*IG
STORE	10152	45090.71	41727.60	910.88	*RE
STORE	10153	45071.02	41730.15	911.17	*RC
STORE	10154	45051.02	41732.99	910.70	*RE
STORE	10155	45033.45	41736.29	908.81	*IG
STORE	10156	44982.68	41743.48	908.44	*IG
STORE	10157	44930.77	41749.95	908.08	*IG
STORE	10158	45246.56	41804.63	911.11	*TOE
STORE	10159	45244.70	41805.47	911.78	*TOP
STORE	10160	45241.19	41805.99	912.46	*NTR
STORE	10161	45233.06	41807.57	911.83	*TOP
STORE	10162	45229.88	41808.19	910.86	*TOE
STORE	10163	45220.09	41809.66	909.60	*IG

STORE	10164	45210.30	41811.02	909.53	*IG
STORE	10165	45206.00	41811.86	909.97	*IG
STORE	10166	45212.44	41851.66	910.50	*EP
STORE	10167	45184.40	41861.20	910.37	*FO
STORE	10168	45184.79	41814.19	909.68	*IG
STORE	10169	45180.05	41816.36	910.29	*IG
STORE	10170	45176.64	41817.05	909.89	*IG
STORE	10171	45163.65	41818.38	910.60	*IG
STORE	10172	45137.85	41823.27	908.40	*IG
STORE	10173	45130.38	41822.71	908.44	*IG
STORE	10174	45105.27	41826.19	911.34	*RE
STORE	10175	45085.12	41828.69	911.66	*RC
STORE	10176	45065.19	41831.53	911.22	*RE
STORE	10177	45045.87	41835.31	908.58	*IG
STORE	10178	44991.57	41841.48	908.35	*IG
STORE	10179	44939.70	41849.74	908.25	*IG
STORE	10180	45260.94	41902.14	911.48	*TOE
STORE	10181	45258.94	41902.75	912.21	*TOP
STORE	10182	45255.50	41903.25	912.86	*NTR
STORE	10183	45247.54	41904.75	912.24	*TOP
STORE	10184	45243.90	41904.56	911.08	*TOE
STORE	10185	45235.01	41905.44	910.22	*IG
STORE	10186	45223.80	41906.89	910.08	*IG
STORE	10187	45219.38	41907.91	910.49	*IG
STORE	10188	45210.16	41910.14	910.51	*IG
STORE	10189	45198.72	41912.15	910.22	*IG
STORE	10190	45195.07	41912.94	910.79	*IG
STORE	10191	45191.74	41912.62	910.36	*IG
STORE	10192	45182.88	41914.64	910.49	*IG
STORE	10193	45175.70	41916.18	911.06	*IG
STORE	10194	45150.13	41921.36	908.74	*IG
STORE	10195	45140.57	41922.62	908.93	*IG
STORE	10196	45120.05	41925.65	911.59	*RE
STORE	10197	45099.65	41927.69	911.84	*RC
STORE	10198	45079.94	41930.61	911.58	*RE
STORE	10199	45055.44	41934.38	908.72	*IG
STORE	10200	44998.35	41945.27	908.31	*IG
STORE	10201	44939.34	41956.33	908.42	*IG
STORE	10202	45234.16	41998.99	911.00	*EP
STORE	10203	45275.30	42002.71	912.07	*TOE
STORE	10204	45274.15	42003.14	912.54	*TOP
STORE	10205	45270.20	42003.52	913.25	*NTR
STORE	10206	45261.88	42004.32	912.64	*TOP
STORE	10207	45259.19	42004.80	911.54	*TOE
STORE	10208	45248.78	42006.58	910.64	*IG
STORE	10209	45237.82	42009.05	910.80	*IG
STORE	10210	45214.91	42012.04	910.53	*IG
STORE	10211	45209.36	42012.88	911.04	*IG
STORE	10212	45203.45	42013.58	910.55	*IG
STORE	10213	45189.27	42016.00	911.44	*IG
STORE	10214	45162.02	42020.62	909.08	*IG
STORE	10215	45134.57	42024.55	912.04	*RE
STORE	10216	45114.28	42028.14	912.40	*RC
STORE	10217	45094.71	42031.17	911.94	*RE
STORE	10218	45055.79	42036.84	908.65	*IG
STORE	10219	45048.11	42045.17	908.81	*IT
STORE	10220	45048.09	42048.45	909.94	*TOP
STORE	10221	45048.10	42054.19	907.96	*IF
STORE	10222	45048.38	42058.60	910.01	*TOP
STORE	10223	44964.40	42064.25	909.34	*IT
STORE	10224	44964.43	42062.50	910.17	*TOP
STORE	10225	44964.23	42056.76	907.63	*IF
STORE	10226	44964.47	42050.21	910.30	*TOP
STORE	10227	44971.43	42047.81	908.81	*IT
STORE	10228	45053.65	42098.48	907.41	*IF 24IN CONCPIPE
STORE	10229	45057.19	42099.14	908.18	*IF 24IN CONCPIPE
STORE	10230	45072.47	42119.25	908.17	*IF 24IN CONCPIPE
STORE	10231	45067.98	42120.48	907.86	*IF 24IN CONCPIPE
STORE	10232	44986.26	42100.17	910.91	*TOP
STORE	10233	44985.92	42097.19	908.44	*IT
STORE	10234	44984.80	42092.40	908.59	*IT
STORE	10235	44985.34	42088.32	911.27	*TOP
STORE	10236	45051.66	42084.73	912.18	*TOP
STORE	10237	45049.60	42088.42	908.52	*IT
STORE	10238	45046.19	42093.63	908.75	*IT
STORE	10239	45043.59	42099.68	911.34	*TOP
STORE	10240	45051.67	42132.06	911.35	*WM
STORE	10241	45058.58	42150.98	911.21	*WV
STORE	10242	45172.88	42139.28	910.27	*SM

STORE	10243	45178.00	42152.06	911.95	*WV
STORE	10244	45202.74	42113.52	911.15	*GL
STORE	10245	45198.06	42113.96	911.25	*GL
STORE	10246	45254.34	42135.43	911.69	*EP
STORE	10247	45232.75	42184.51	912.17	*FO
STORE	10248	45290.21	42096.93	912.37	*TOE
STORE	10249	45287.46	42098.04	912.89	*TOP
STORE	10250	45284.18	42098.82	913.62	*NTR
STORE	10251	45275.91	42099.06	912.84	*TOP
STORE	10252	45271.51	42100.46	911.77	*TOE
STORE	10253	45255.74	42103.30	910.92	*IG
STORE	10254	45229.25	42109.01	911.03	*IG
STORE	10255	45220.94	42110.21	911.45	*IG
STORE	10256	45196.74	42114.83	911.02	*IG
STORE	10257	45185.64	42116.92	909.83	*IG
STORE	10258	45166.34	42120.78	910.18	*IG
STORE	10259	45148.65	42124.09	912.54	*RE
STORE	10260	45128.79	42128.03	912.82	*RC
STORE	10261	45109.71	42131.89	912.40	*RE
STORE	10262	45092.43	42134.44	911.61	*IG
STORE	10263	45080.30	42137.23	912.03	*TOP
STORE	10264	45076.32	42138.34	908.60	*IT
STORE	10265	45073.93	42139.31	908.33	*IT
STORE	10266	45068.83	42139.41	911.76	*TOP
STORE	10267	45022.30	42147.64	909.51	*IG
STORE	10268	44969.69	42158.92	909.44	*IG
STORE	10269	44988.04	42262.33	909.43	*IG
STORE	10270	45036.65	42256.67	909.53	*IG
STORE	10271	45067.10	42253.01	909.93	*IG
STORE	10272	45082.55	42246.17	911.26	*TOP
STORE	10273	45087.12	42245.28	908.74	*IT
STORE	10274	45091.32	42243.60	908.77	*IT
STORE	10275	45099.82	42241.75	912.16	*TOP
STORE	10276	45108.46	42240.03	911.87	*IG
STORE	10277	45125.12	42236.68	912.91	*RE
STORE	10278	45143.77	42229.82	913.27	*RC
STORE	10279	45163.43	42224.50	912.95	*RE
STORE	10280	45183.13	42222.21	910.00	*IG
STORE	10281	45202.06	42220.68	909.93	*IG
STORE	10282	45225.03	42218.45	911.65	*IG
STORE	10283	45263.56	42213.16	912.10	*IG
STORE	10284	45272.16	42212.54	911.13	*IG
STORE	10285	45288.50	42210.69	912.64	*TOE
STORE	10286	45291.62	42210.73	913.34	*TOP
STORE	10287	45300.50	42209.84	914.00	*NTR
STORE	10288	45303.67	42209.67	913.38	*TOP
STORE	10289	45306.17	42209.15	912.65	*TOE
STORE	10290	45277.02	42290.19	910.80	*EP
STORE	10291	45320.19	42303.22	913.01	*TOE
STORE	10292	45318.31	42303.73	913.59	*TOP
STORE	10293	45314.28	42303.90	914.36	*NTR
STORE	10294	45306.00	42305.32	913.77	*TOP
STORE	10295	45303.82	42305.70	912.91	*TOE
STORE	10296	45300.14	42306.63	912.95	*IG
STORE	10297	45292.26	42307.90	911.12	*IG
STORE	10298	45280.16	42309.82	911.17	*IG
STORE	10299	45268.35	42310.51	911.93	*IG
STORE	10300	45257.16	42312.41	911.76	*IG
STORE	10301	45253.58	42313.20	912.17	*IG
STORE	10302	45249.89	42312.98	911.61	*IG
STORE	10303	45237.20	42315.64	912.21	*IG
STORE	10304	45214.75	42318.74	910.20	*IG
STORE	10305	45202.08	42319.91	910.29	*IG
STORE	10306	45195.51	42320.98	910.37	*IG
STORE	10307	45177.61	42322.81	913.33	*RE
STORE	10308	45157.81	42326.08	913.59	*RC
STORE	10309	45138.33	42328.37	913.21	*RE
STORE	10310	45123.35	42330.95	911.84	*IG
STORE	10311	45113.09	42332.85	912.25	*TOP
STORE	10312	45106.16	42333.68	908.97	*IT
STORE	10313	45101.82	42334.57	908.96	*IT
STORE	10314	45096.77	42334.60	911.72	*TOP
STORE	10315	45070.08	42338.58	909.73	*IG
STORE	10316	45030.85	42344.87	909.62	*IG
STORE	10317	44987.99	42351.23	909.59	*IG
STORE	10318	45010.96	42446.97	909.75	*IG
STORE	10319	45048.40	42442.21	909.77	*IG
STORE	10320	45085.44	42436.91	909.98	*IG
STORE	10321	45110.75	42433.35	911.61	*TOP

STORE	10322	45115.88	42432.48	909.14	*IT
STORE	10323	45120.18	42433.97	909.13	*IT
STORE	10324	45128.05	42431.16	912.47	*TOP
STORE	10325	45137.75	42429.77	911.77	*IG
STORE	10326	45152.83	42427.72	913.19	*RE
STORE	10327	45172.27	42424.56	913.65	*RC
STORE	10328	45191.97	42421.38	913.40	*RE
STORE	10329	45210.26	42418.25	910.45	*IG
STORE	10330	45235.01	42413.85	910.54	*IG
STORE	10331	45249.68	42411.57	912.09	*IG
STORE	10332	45254.66	42444.78	912.49	*GL
STORE	10333	45246.42	42444.99	911.38	*GL
STORE	10334	45264.19	42407.98	911.46	*IG
STORE	10335	45267.07	42407.49	911.96	*IG
STORE	10336	45270.30	42407.96	911.32	*IG
STORE	10337	45291.65	42404.26	911.84	*IG
STORE	10338	45306.35	42401.42	911.37	*IG
STORE	10339	45314.24	42400.42	913.46	*IG
STORE	10340	45318.24	42399.31	913.39	*TOE
STORE	10341	45320.10	42398.80	914.12	*TOP
STORE	10342	45328.22	42398.72	914.74	*NTR
STORE	10343	45331.90	42397.77	914.11	*TOP
STORE	10344	45334.17	42397.41	913.37	*TOE
STORE	10345	45300.21	42444.72	912.16	*EP
STORE	10346	45349.51	42497.56	913.83	*TOE
STORE	10347	45346.18	42498.37	914.42	*TOP
STORE	10348	45342.87	42498.72	915.11	*NTR
STORE	10349	45335.33	42500.32	914.41	*TOP
STORE	10350	45332.27	42500.45	913.52	*TOE
STORE	10351	45324.98	42501.85	912.79	*IG
STORE	10352	45320.94	42502.19	911.45	*IG
STORE	10353	45284.11	42509.20	911.59	*IG
STORE	10354	45281.40	42508.27	911.91	*IG
STORE	10355	45278.36	42508.93	911.35	*IG
STORE	10356	45265.98	42511.82	912.15	*IG
STORE	10357	45246.91	42514.16	910.29	*IG
STORE	10358	45225.17	42518.14	910.78	*IG
STORE	10359	45206.79	42520.96	913.42	*RE
STORE	10360	45187.23	42523.90	913.75	*RC
STORE	10361	45167.19	42526.84	913.24	*RE
STORE	10362	45151.73	42528.72	911.86	*IG
STORE	10363	45139.36	42531.34	912.21	*TOP
STORE	10364	45134.70	42531.78	909.30	*IT
STORE	10365	45129.91	42532.29	909.28	*IT
STORE	10366	45125.26	42533.17	911.80	*TOP
STORE	10367	45114.94	42534.86	911.65	*IG
STORE	10368	45097.61	42537.60	910.00	*IG
STORE	10369	45042.19	42546.14	909.84	*IG
STORE	10370	45009.61	42551.63	910.00	*IG
STORE	10371	45025.51	42646.27	910.02	*IG
STORE	10372	45070.18	42640.50	910.08	*IG
STORE	10373	45112.51	42634.49	910.09	*IG
STORE	10374	45129.44	42631.95	911.61	*IG
STORE	10375	45139.32	42630.44	911.78	*TOP
STORE	10376	45144.74	42628.97	909.35	*IT
STORE	10377	45148.98	42627.51	909.27	*IT
STORE	10378	45153.61	42626.24	912.85	*TOP
STORE	10379	45166.46	42626.69	912.37	*IG
STORE	10380	45181.51	42624.41	913.46	*RE
STORE	10381	45201.12	42621.82	913.76	*RC
STORE	10382	45220.92	42619.16	913.33	*RE
STORE	10383	45239.01	42615.14	910.72	*IG
STORE	10384	45255.31	42612.94	910.38	*IG
STORE	10385	45280.74	42609.61	912.21	*IG
STORE	10386	45316.59	42601.07	910.93	*IG
STORE	10387	45319.94	42580.88	911.48	*EP
STORE	10388	45340.34	42598.14	911.77	*IG
STORE	10389	45346.35	42596.91	913.81	*TOE
STORE	10390	45349.69	42596.65	914.88	*TOP
STORE	10391	45357.24	42596.16	915.52	*NTR
STORE	10392	45360.81	42595.21	914.72	*TOP
STORE	10393	45363.48	42594.81	914.24	*TOE
STORE	10394	45379.04	42698.28	914.54	*TOE
STORE	10395	45375.26	42698.54	915.15	*TOP
STORE	10396	45372.27	42699.00	915.86	*NTR
STORE	10397	45364.36	42700.18	915.17	*TOP
STORE	10398	45361.80	42700.57	914.17	*TOE
STORE	10399	45358.65	42701.34	914.09	*IG
STORE	10400	45351.64	42703.23	911.35	*IG

STORE	10401	45342.20	42733.36	911.22	*EP
STORE	10402	45318.71	42707.12	911.04	*IG
STORE	10403	45311.52	42705.92	911.59	*IG
STORE	10404	45293.31	42710.34	911.69	*IG
STORE	10405	45272.73	42712.86	910.47	*IG
STORE	10406	45255.22	42714.99	910.67	*IG
STORE	10407	45235.47	42718.02	913.49	*RE
STORE	10408	45215.72	42720.45	913.86	*RC
STORE	10409	45196.39	42723.53	913.52	*RE
STORE	10410	45181.39	42725.90	912.37	*IG
STORE	10411	45168.81	42727.42	912.98	*TOP
STORE	10412	45162.96	42728.80	909.41	*IT
STORE	10413	45158.95	42729.74	909.42	*IT
STORE	10414	45154.95	42731.59	911.79	*TOP
STORE	10415	45139.42	42733.67	911.37	*IG
STORE	10416	45126.44	42735.15	910.19	*IG
STORE	10417	45090.81	42740.29	910.23	*IG
STORE	10418	45054.55	42745.30	910.29	*IG
STORE	10419	45067.31	42845.67	910.48	*IG
STORE	10420	45103.85	42839.95	910.38	*IG
STORE	10421	45141.33	42833.82	910.36	*IG
STORE	10422	45153.79	42832.07	911.33	*IG
STORE	10423	45168.78	42829.79	912.32	*TOP
STORE	10424	45173.69	42829.23	909.57	*IT
STORE	10425	45177.75	42827.74	909.48	*IT
STORE	10426	45183.01	42827.08	912.81	*TOP
STORE	10427	45196.08	42825.46	912.64	*IG
STORE	10428	45210.93	42822.59	913.61	*RE
STORE	10429	45202.30	42801.39	913.32	*RG
STORE	10430	45230.19	42819.69	913.92	*RC
STORE	10431	45250.17	42816.59	913.50	*RE
STORE	10432	45269.10	42814.49	910.74	*IG
STORE	10433	45306.92	42808.57	911.69	*IG
STORE	10434	45353.98	42801.16	911.44	*IG
STORE	10435	45368.46	42799.03	912.45	*TOE
STORE	10436	45378.23	42797.47	915.56	*TOP
STORE	10437	45386.63	42796.83	916.25	*NTR
STORE	10438	45390.18	42796.93	915.62	*TOP
STORE	10439	45393.80	42795.99	914.85	*TOE
STORE	10440	45406.65	42895.51	916.02	*COR RR BRIDGE
STORE	10441	45404.27	42879.02	915.85	*COR RR BRIDGE
STORE	10442	45388.54	42881.72	915.80	*COR RR BRIDGE
STORE	10443	45390.73	42898.20	915.73	*COR RR BRIDGE
STORE	10444	45389.16	42890.50	909.02	*C/L BRIDGE F/L
STORE	10445	45361.27	42864.14	909.70	*EP
STORE	10446	45328.93	42852.91	912.69	*FO
STORE	10447	45314.54	42854.49	911.75	*GL
STORE	10448	45306.54	42855.31	911.71	*GL
STORE	10449	45209.77	42850.81	913.61	*RG
STORE	10450	45213.76	42875.26	913.65	*RG
STORE	10451	45216.11	42898.78	914.03	*RG
STORE	10452	45218.72	42917.71	913.76	*RG
STORE	10453	45214.89	42917.99	911.51	*IW
STORE	10454	45217.51	42914.31	914.49	*IH
STORE	10455	45216.16	42907.82	909.67	*F/L BOX CULVERT
STORE	10456	45215.38	42900.75	914.31	*IH
STORE	10457	45212.62	42898.60	911.95	*IW
STORE	10458	45194.32	42901.60	913.03	*TOP
STORE	10459	45195.36	42908.89	910.27	*IT
STORE	10460	45195.08	42914.70	910.44	*IT
STORE	10461	45196.48	42921.58	913.25	*TOP
STORE	10462	45268.91	42909.94	911.30	*IW
STORE	10463	45265.38	42907.35	914.27	*IH
STORE	10464	45263.57	42893.81	914.29	*IH
STORE	10465	45265.75	42890.97	911.57	*IW
STORE	10466	45265.02	42901.01	909.59	*IF BOX CULVERT
STORE	10467	45310.36	42886.55	912.19	*TOE
STORE	10468	45310.44	42888.36	912.55	*TOP
STORE	10469	45310.29	42896.33	909.03	*IT
STORE	10470	45314.03	42911.58	912.39	*TOE
STORE	10471	45313.42	42909.68	913.43	*TOP
STORE	10472	45311.89	42902.24	908.85	*IT
STORE	10473	45321.49	42956.29	913.74	*GL
STORE	10474	45329.01	42954.41	911.48	*GL
STORE	10475	45342.45	42949.50	912.37	*FO
STORE	10476	45410.99	42904.14	913.93	*TOE
STORE	10477	45407.12	42904.14	915.73	*TOP
STORE	10478	45402.57	42904.46	916.48	*NTR
STORE	10479	45393.95	42905.77	915.88	*TOP

STORE	10480	45385.55	42907.05	912.98	*TOE
STORE	10481	45293.42	42913.71	912.29	*IG
STORE	10482	45264.62	42916.48	913.78	*RE
STORE	10483	45245.04	42918.93	914.11	*RC
STORE	10484	45225.29	42922.12	913.79	*RE
STORE	10485	45218.05	42923.22	913.60	*IG
STORE	10486	45212.39	42923.16	914.37	*IG
STORE	10487	45197.36	42926.98	913.07	*TOP
STORE	10488	45190.97	42928.24	909.86	*IT
STORE	10489	45185.94	42928.28	909.69	*IT
STORE	10490	45180.34	42929.26	912.84	*TOP
STORE	10491	45167.71	42931.29	912.02	*IG
STORE	10492	45153.68	42929.94	910.59	*IG
STORE	10493	45118.50	42933.88	910.52	*IG
STORE	10494	45087.44	42937.47	910.57	*IG
STORE	10495	45099.52	43033.86	910.72	*IG
STORE	10496	45133.59	43030.80	910.65	*IG
STORE	10497	45169.46	43026.74	910.84	*IG
STORE	10498	45181.57	43024.42	911.86	*IG
STORE	10499	45182.96	43024.32	912.46	*IG
STORE	10500	45194.20	43023.54	912.77	*TOP
STORE	10501	45200.06	43022.60	909.67	*IT
STORE	10502	45204.56	43023.21	909.82	*IT
STORE	10503	45212.58	43021.68	913.43	*TOP
STORE	10504	45224.00	43019.91	912.79	*IG
STORE	10505	45239.67	43017.88	913.89	*RE
STORE	10506	45259.16	43015.26	914.13	*RC
STORE	10507	45279.28	43012.11	913.59	*RE
STORE	10508	45282.88	43007.33	913.06	*RG
STORE	10509	45275.61	42958.24	913.31	*RG
STORE	10510	45296.20	43010.57	911.14	*IG
STORE	10511	45335.79	43008.56	911.56	*IG
STORE	10512	45380.81	43004.61	911.68	*IG
STORE	10513	45386.64	43003.62	912.21	*IG
STORE	10514	45400.39	43000.07	912.74	*TOE
STORE	10515	45408.59	42999.30	915.84	*TOP
STORE	10516	45416.10	42997.29	916.46	*NTR
STORE	10517	45418.87	42996.34	915.81	*TOP
STORE	10518	45422.10	42995.80	914.95	*TOE
STORE	10519	45387.63	43042.59	911.55	*EP
STORE	10520	45353.20	43046.63	912.02	*FO
STORE	10521	45437.07	43090.56	914.93	*TOE
STORE	10522	45432.99	43090.77	915.75	*TOP
STORE	10523	45429.85	43091.08	916.47	*NTR
STORE	10524	45422.04	43092.65	915.86	*TOP
STORE	10525	45411.25	43094.47	912.58	*TOE
STORE	10526	45369.29	43100.80	911.27	*IG
STORE	10527	45366.67	43101.67	911.96	*IG
STORE	10528	45363.83	43102.61	911.13	*IG
STORE	10529	45319.29	43111.23	910.97	*IG
STORE	10530	45310.43	43109.48	911.24	*IG
STORE	10531	45293.42	43111.44	913.81	*RE
STORE	10532	45273.67	43114.62	914.23	*RC
STORE	10533	45254.07	43117.42	914.03	*RE
STORE	10534	45238.86	43120.59	912.78	*IG
STORE	10535	45228.15	43123.09	913.52	*TOP
STORE	10536	45219.44	43125.04	909.84	*IT
STORE	10537	45215.16	43125.29	909.82	*IT
STORE	10538	45209.41	43126.14	913.07	*TOP
STORE	10539	45199.09	43127.59	912.95	*IG
STORE	10540	45181.47	43129.93	910.93	*IG
STORE	10541	45150.82	43134.36	910.86	*IG
STORE	10542	45119.58	43137.72	910.87	*IG
STORE	10543	45129.54	43233.37	911.05	*IG
STORE	10544	45159.82	43230.57	911.08	*IG
STORE	10545	45196.07	43225.66	911.21	*IG
STORE	10546	45209.89	43223.24	912.20	*IG
STORE	10547	45211.04	43223.14	912.91	*IG
STORE	10548	45222.65	43221.77	913.19	*TOP
STORE	10549	45227.70	43220.77	910.08	*IT
STORE	10550	45232.45	43220.45	910.13	*IT
STORE	10551	45242.46	43219.94	913.85	*TOP
STORE	10552	45253.04	43218.07	912.81	*IG
STORE	10553	45268.33	43215.55	913.92	*RE
STORE	10554	45288.04	43212.58	914.24	*RC
STORE	10555	45307.87	43210.62	913.88	*RE
STORE	10556	45325.44	43207.07	911.44	*IG
STORE	10557	45360.47	43206.79	911.44	*IG
STORE	10558	45382.94	43206.47	911.81	*IG

STORE	10559	45389.14	43206.01	911.23	*IG
STORE	10560	45409.97	43197.80	911.49	*EP
STORE	10561	45425.89	43199.15	912.15	*TOE
STORE	10562	45437.46	43196.79	916.08	*TOP
STORE	10563	45445.16	43195.67	916.52	*NTR
STORE	10564	45448.15	43195.46	916.04	*TOP
STORE	10565	45450.56	43195.95	914.96	*TOE
STORE	10566	45462.67	43290.06	915.87	*TOP
STORE	10567	45459.06	43290.68	916.61	*NTR
STORE	10568	45445.91	43292.49	915.36	*TOP
STORE	10569	45438.38	43293.68	911.83	*TOE
STORE	10570	45429.36	43331.10	913.22	*EP
STORE	10571	45400.50	43297.24	911.52	*IG
STORE	10572	45396.21	43298.31	912.10	*IG
STORE	10573	45376.83	43301.47	912.27	*IG
STORE	10574	45354.50	43307.13	911.39	*IG
STORE	10575	45340.43	43305.96	911.51	*IG
STORE	10576	45322.40	43308.24	913.95	*RE
STORE	10577	45302.23	43310.36	914.40	*RC
STORE	10578	45282.39	43313.12	914.00	*RE
STORE	10579	45266.95	43315.75	913.06	*IG
STORE	10580	45253.57	43317.51	913.29	*TOP
STORE	10581	45246.71	43317.66	910.15	*IT
STORE	10582	45242.45	43318.28	909.89	*IT
STORE	10583	45238.21	43317.08	912.54	*TOP
STORE	10584	45224.04	43319.68	912.23	*IG
STORE	10585	45210.02	43321.68	911.28	*IG
STORE	10586	45180.30	43324.14	911.13	*IG
STORE	10587	45145.86	43329.98	911.19	*IG
STORE	10588	45256.01	43378.21	909.80	*INV 36IN PIPE
STORE	10589	45257.93	43375.96	912.89	*IH
STORE	10590	45253.16	43376.71	912.67	*IH
STORE	10591	45258.00	43395.94	909.48	*INV 36IN PIPE
STORE	10592	45262.29	43395.71	912.57	*IH
STORE	10593	45255.27	43396.30	912.85	*IH
STORE	10594	45263.37	43402.96	912.33	*IH
STORE	10595	45256.25	43409.74	910.07	*INV 30IN PIPE
STORE	10596	45215.34	43409.64	912.84	*TOP OF BANK
STORE	10597	45215.32	43406.90	910.24	*IT
STORE	10598	45215.10	43405.94	910.21	*IT
STORE	10599	45214.56	43403.46	912.70	*TOP OF BANK
STORE	10600	45274.51	43406.82	913.57	*TT
STORE	10601	45281.09	43404.50	913.91	*BV
STORE	10602	45261.43	43440.49	910.46	*INV 30IN PIPE
STORE	10603	45265.94	43439.44	913.53	*IH
STORE	10604	45257.89	43440.99	913.78	*IH
STORE	10605	45273.67	43440.99	915.31	*RG
STORE	10606	45303.38	43459.92	914.25	*RE
STORE	10607	45288.66	43441.21	914.04	*RE
STORE	10608	45269.09	43431.97	913.96	*RE
STORE	10609	45268.18	43413.73	913.55	*RE
STORE	10610	45283.14	43406.97	913.81	*RE
STORE	10611	45292.82	43388.73	914.17	*RE
STORE	10612	45489.61	43385.19	915.47	*TOE
STORE	10613	45484.12	43385.22	916.17	*TOP
STORE	10614	45473.00	43386.37	916.70	*NTR
STORE	10615	45462.28	43387.79	916.00	*TOP
STORE	10616	45453.58	43389.15	912.07	*TOE
STORE	10617	45412.69	43395.93	911.90	*IG
STORE	10618	45390.96	43398.60	912.25	*IG
STORE	10619	45362.64	43402.81	911.67	*IG
STORE	10620	45355.33	43404.08	911.75	*IG
STORE	10621	45336.59	43407.30	914.36	*RE
STORE	10622	45316.69	43409.60	914.58	*RC
STORE	10623	45260.06	43418.82	913.60	*RP
STORE	10624	45201.11	43426.12	913.04	*RP
STORE	10625	45157.08	43432.71	912.98	*IG
STORE	10626	45506.16	43481.29	915.00	*TOE
STORE	10627	45502.21	43481.62	916.58	*TOP
STORE	10628	45487.42	43483.92	916.88	*NTR
STORE	10629	45477.65	43486.23	916.06	*TOP
STORE	10630	45467.40	43487.99	912.41	*TOE
STORE	10631	45459.35	43489.10	911.54	*IG
STORE	10632	45452.85	43485.98	912.46	*EP
STORE	10633	45409.91	43497.33	912.33	*IG
STORE	10634	45389.30	43500.58	911.54	*IG
STORE	10635	45370.05	43503.86	912.13	*IG
STORE	10636	45350.98	43506.65	914.54	*RE
STORE	10637	45331.65	43510.44	914.77	*RC

STORE	10638	45311.56	43512.87	914.38	*RE
STORE	10639	45299.31	43514.62	913.87	*IG
STORE	10640	45287.17	43516.57	916.36	*TOP
STORE	10641	45279.30	43517.27	911.98	*IT
STORE	10642	45274.01	43518.81	911.73	*IT
STORE	10643	45268.32	43520.12	915.36	*TOP
STORE	10644	45252.64	43521.94	914.20	*IG
STORE	10645	45240.77	43526.01	912.87	*IG
STORE	10646	45203.67	43533.89	912.74	*IG
STORE	10647	45165.02	43540.01	912.67	*IG
STORE	10648	45173.59	43636.50	912.78	*IG
STORE	10649	45210.33	43630.98	912.82	*IG
STORE	10650	45255.71	43621.75	913.06	*IG
STORE	10651	45269.09	43619.27	915.31	*IG
STORE	10652	45283.49	43617.18	915.91	*TOP
STORE	10653	45290.79	43616.36	911.80	*IT
STORE	10654	45295.17	43615.23	911.87	*IT
STORE	10655	45304.50	43613.66	916.75	*TOP
STORE	10656	45314.60	43612.25	914.45	*IG
STORE	10657	45326.42	43611.30	914.62	*RE
STORE	10658	45345.58	43607.83	914.90	*RC
STORE	10659	45365.60	43605.29	914.62	*RE
STORE	10660	45383.48	43602.61	912.36	*IG
STORE	10661	45408.53	43597.88	911.96	*IG
STORE	10662	45425.89	43595.96	912.39	*IG
STORE	10663	45444.51	43592.52	912.27	*IG
STORE	10664	45474.88	43588.15	911.66	*IG
STORE	10665	45482.32	43586.80	912.44	*TOE
STORE	10666	45491.95	43585.90	916.19	*TOP
STORE	10667	45502.27	43584.81	916.82	*NTR
STORE	10668	45509.32	43582.90	916.47	*TOP
STORE	10669	45511.62	43582.38	915.58	*TOE
STORE	10670	45475.45	43642.56	912.94	*EP
STORE	10671	45522.79	43684.28	916.07	*TOE
STORE	10672	45520.54	43684.73	916.66	*TOP
STORE	10673	45516.97	43684.98	917.11	*NTR
STORE	10674	45508.98	43685.69	916.41	*TOP
STORE	10675	45501.68	43685.57	915.38	*IG
STORE	10676	45495.94	43687.18	912.48	*TOE
STORE	10677	45485.49	43688.59	912.00	*IG
STORE	10678	45477.07	43689.99	912.68	*IG
STORE	10679	45459.02	43692.72	912.82	*IG
STORE	10680	45455.10	43693.35	913.32	*IG
STORE	10681	45430.23	43696.55	913.06	*IG
STORE	10682	45419.70	43698.15	912.11	*IG
STORE	10683	45398.29	43700.94	912.49	*IG
STORE	10684	45380.16	43703.60	914.85	*RE
STORE	10685	45360.29	43705.72	915.16	*RC
STORE	10686	45340.69	43708.73	914.88	*RE
STORE	10687	45329.99	43710.14	914.69	*IG
STORE	10688	45319.50	43710.88	916.72	*TOP
STORE	10689	45310.07	43711.96	911.49	*IT
STORE	10690	45306.37	43713.29	911.48	*IT
STORE	10691	45297.66	43713.94	915.91	*TOP
STORE	10692	45280.44	43717.58	915.46	*IG
STORE	10693	45268.74	43718.18	913.19	*IG
STORE	10694	45229.17	43723.13	912.89	*IG
STORE	10695	45187.91	43729.16	912.93	*IG
STORE	10696	45201.14	43828.30	913.01	*IG
STORE	10697	45238.15	43823.59	913.11	*IG
STORE	10698	45284.29	43818.58	913.42	*IG
STORE	10699	45294.54	43817.00	915.42	*IG
STORE	10700	45313.17	43815.33	915.80	*TOP
STORE	10701	45320.53	43814.26	911.99	*IT
STORE	10702	45325.06	43812.82	911.84	*IT
STORE	10703	45333.45	43811.77	916.81	*TOP
STORE	10704	45344.30	43810.23	914.73	*IG
STORE	10705	45355.48	43808.60	915.09	*RE
STORE	10706	45374.69	43805.92	915.36	*RC
STORE	10707	45394.71	43802.35	915.07	*RE
STORE	10708	45413.23	43799.55	912.65	*IG
STORE	10709	45420.56	43797.80	913.36	*IG
STORE	10710	45436.48	43796.58	912.64	*IG
STORE	10711	45455.35	43794.09	913.58	*IG
STORE	10712	45474.18	43790.66	913.34	*IG
STORE	10713	45485.49	43788.95	912.97	*IG
STORE	10714	45499.38	43787.45	912.52	*IG
STORE	10715	45495.12	43778.85	913.11	*EP
STORE	10716	45508.52	43785.98	913.07	*TOE

STORE	10717	45515.71	43785.58	915.72	*IG
STORE	10718	45523.61	43785.60	916.59	*TOP
STORE	10719	45531.41	43783.31	917.34	*NTR
STORE	10720	45534.44	43782.90	916.58	*TOP
STORE	10721	45536.57	43782.40	915.67	*TOE
STORE	10722	45550.46	43879.54	916.08	*TOE
STORE	10723	45547.62	43880.16	916.96	*TOP
STORE	10724	45545.71	43880.48	917.61	*NTR
STORE	10725	45538.27	43881.31	917.04	*TOP
STORE	10726	45533.54	43881.74	916.30	*IG
STORE	10727	45524.45	43882.80	913.11	*TOE
STORE	10728	45513.25	43884.71	912.76	*IG
STORE	10729	45517.58	43931.89	914.25	*EP
STORE	10730	45498.24	43886.81	913.61	*IG
STORE	10731	45471.47	43892.59	913.83	*IG
STORE	10732	45468.63	43892.65	914.18	*IG
STORE	10733	45447.65	43895.23	913.11	*IG
STORE	10734	45438.39	43896.81	913.47	*IG
STORE	10735	45427.21	43898.54	912.93	*IG
STORE	10736	45409.47	43901.64	915.35	*RE
STORE	10737	45388.90	43904.55	915.71	*RC
STORE	10738	45369.51	43907.26	915.30	*RE
STORE	10739	45358.23	43908.87	914.74	*IG
STORE	10740	45347.55	43909.96	916.79	*TOP
STORE	10741	45336.88	43911.43	911.89	*IT
STORE	10742	45332.61	43911.48	912.13	*IT
STORE	10743	45327.05	43910.78	916.30	*TOP
STORE	10744	45309.16	43915.58	915.97	*IG
STORE	10745	45294.77	43917.83	913.27	*IG
STORE	10746	45259.94	43921.07	913.11	*IG
STORE	10747	45220.21	43929.15	913.05	*IG
STORE	10748	45233.97	44028.73	913.12	*IG
STORE	10749	45270.96	44023.38	913.27	*IG
STORE	10750	45310.42	44017.93	913.19	*IG
STORE	10751	45318.25	44017.44	914.57	*IG
STORE	10752	45321.29	44017.30	915.85	*IG
STORE	10753	45342.28	44014.82	916.21	*TOP
STORE	10754	45347.00	44014.11	912.23	*IT
STORE	10755	45350.96	44013.96	912.28	*IT
STORE	10756	45361.60	44010.82	916.76	*TOP
STORE	10757	45374.85	44009.46	914.91	*IG
STORE	10758	45372.57	43999.69	915.34	*RG
STORE	10759	45384.53	44006.59	915.60	*RE
STORE	10760	45403.82	44003.43	915.91	*RC
STORE	10761	45424.06	44000.34	915.48	*RE
STORE	10762	45443.24	43998.04	913.02	*IG
STORE	10763	45444.89	43998.00	913.36	*IG
STORE	10764	45483.06	43992.25	914.65	*IG
STORE	10765	45517.30	43991.07	914.12	*IG
STORE	10766	45529.99	43985.06	913.29	*IG
STORE	10767	45537.96	43984.53	913.69	*TOE
STORE	10768	45544.62	43983.27	916.17	*IG
STORE	10769	45550.43	43983.32	916.24	*IG
STORE	10770	45553.24	43983.71	917.18	*TOP
STORE	10771	45560.87	43983.90	917.88	*NTR
STORE	10772	45564.17	43983.66	917.15	*TOP
STORE	10773	45565.56	43982.42	916.59	*TOE
STORE	10774	45251.63	44124.15	913.25	*IG
STORE	10775	45286.98	44119.20	913.34	*IG
STORE	10776	45324.68	44114.07	913.54	*IG
STORE	10777	45337.91	44112.89	916.35	*IG
STORE	10778	45356.37	44110.34	916.35	*TOP
STORE	10779	45362.69	44109.24	912.32	*IT
STORE	10780	45367.58	44108.52	912.50	*IT
STORE	10781	45376.19	44107.69	917.16	*TOP
STORE	10782	45386.63	44105.82	915.08	*IG
STORE	10783	45398.89	44104.17	915.63	*RE
STORE	10784	45418.12	44101.23	915.97	*RC
STORE	10785	45438.20	44098.63	915.70	*RE
STORE	10786	45455.97	44096.63	913.27	*IG
STORE	10787	45469.14	44094.15	913.89	*IG
STORE	10788	45488.07	44091.80	914.08	*IG
STORE	10789	45497.32	44089.66	914.82	*IG
STORE	10790	45514.18	44087.37	914.55	*IG
STORE	10791	45540.29	44085.56	914.09	*EP
STORE	10792	45544.78	44085.54	913.51	*IG
STORE	10793	45552.50	44084.41	913.91	*TOE
STORE	10794	45558.41	44083.72	916.13	*IG
STORE	10795	45564.88	44082.28	916.54	*IG

STORE	10796	45568.14	44082.28	917.58	*TOP
STORE	10797	45575.29	44081.58	918.21	*NTR
STORE	10798	45578.63	44080.77	917.52	*TOP
STORE	10799	45581.03	44080.45	916.51	*TOE
STORE	10800	45594.54	44174.90	916.98	*TOE
STORE	10801	45591.45	44175.21	917.92	*TOP
STORE	10802	45589.06	44175.49	918.50	*NTR
STORE	10803	45581.48	44176.62	917.86	*TOP
STORE	10804	45578.95	44177.12	916.93	*IG
STORE	10805	45572.59	44178.61	916.63	*IG
STORE	10806	45566.27	44179.28	914.13	*IG
STORE	10807	45555.87	44181.09	913.62	*IG
STORE	10808	45562.96	44240.47	914.07	*EP
STORE	10809	45528.46	44184.92	914.33	*IG
STORE	10810	45545.26	44186.15	913.98	*IG
STORE	10811	45492.61	44190.97	913.67	*IG
STORE	10812	45470.28	44194.99	913.67	*IG
STORE	10813	45452.57	44197.34	915.85	*RE
STORE	10814	45433.16	44200.41	916.16	*RC
STORE	10815	45413.12	44203.33	915.88	*RE
STORE	10816	45400.32	44205.64	915.36	*IG
STORE	10817	45408.30	44250.62	915.95	*RG
STORE	10818	45390.50	44206.69	917.01	*TOP
STORE	10819	45381.30	44208.50	912.63	*IT
STORE	10820	45376.99	44209.19	912.23	*IT
STORE	10821	45372.29	44210.12	916.50	*TOP
STORE	10822	45355.66	44212.35	916.73	*IG
STORE	10823	45348.35	44213.76	915.21	*IG
STORE	10824	45339.96	44214.63	913.67	*IG
STORE	10825	45300.75	44220.32	913.36	*IG
STORE	10826	45257.29	44226.16	913.40	*IG
STORE	10827	45271.28	44324.96	913.47	*IG
STORE	10828	45315.98	44317.83	913.54	*IG
STORE	10829	45354.62	44312.97	913.78	*IG
STORE	10830	45362.72	44311.65	915.52	*IG
STORE	10831	45371.23	44310.38	916.77	*IG
STORE	10832	45385.96	44308.55	916.52	*TOP
STORE	10833	45390.59	44307.74	912.79	*IT
STORE	10834	45395.55	44306.69	912.67	*IT
STORE	10835	45404.68	44306.06	917.00	*TOP
STORE	10836	45414.74	44304.58	915.49	*IG
STORE	10837	45427.72	44302.24	916.04	*RE
STORE	10838	45448.05	44299.31	916.38	*RC
STORE	10839	45467.54	44296.44	916.07	*RE
STORE	10840	45485.85	44294.49	914.22	*IG
STORE	10841	45528.86	44289.59	914.98	*IG
STORE	10842	45560.50	44285.60	915.18	*IG
STORE	10843	45570.16	44284.30	914.54	*IG
STORE	10844	45582.63	44283.08	914.81	*IG
STORE	10845	45588.64	44282.90	916.75	*IG
STORE	10846	45592.44	44281.84	917.02	*IG
STORE	10847	45596.83	44281.17	918.18	*TOP
STORE	10848	45604.36	44279.85	918.85	*NTR
STORE	10849	45607.80	44279.58	918.08	*TOP
STORE	10850	45611.35	44279.35	917.10	*TOE
STORE	10851	45635.20	44375.45	913.83	*INV 36IN CMP
STORE	10852	45635.80	44379.98	913.37	*INV 36IN CMP
STORE	10853	45595.67	44384.78	913.33	*INV 36IN CMP
STORE	10854	45595.10	44380.89	913.21	*INV 36IN CMP
STORE	10855	45582.01	44367.18	917.31	*EP
STORE	10856	45547.16	44342.62	916.51	*FO
STORE	10857	45530.96	44338.28	916.00	*GL
STORE	10858	45523.37	44338.81	915.84	*GL
STORE	10859	45483.34	44320.94	915.34	*RG
STORE	10860	45532.95	44374.98	917.05	*TOE
STORE	10861	45533.56	44378.67	917.51	*TOP
STORE	10862	45535.47	44382.37	913.43	*IT
STORE	10863	45484.92	44384.96	914.33	*IW
STORE	10864	45482.03	44386.43	916.18	*RG
STORE	10865	45482.57	44387.60	916.78	*IH
STORE	10866	45484.64	44401.20	916.80	*IH
STORE	10867	45484.29	44402.66	916.16	*RG
STORE	10868	45487.67	44402.94	914.34	*IW
STORE	10869	45539.13	44401.53	916.91	*TOE
STORE	10870	45539.82	44398.96	916.66	*TOP
STORE	10871	45539.66	44395.17	913.96	*IT
STORE	10872	45541.67	44412.59	917.37	*GL
STORE	10873	45534.10	44413.32	917.30	*GL
STORE	10874	45597.35	44395.41	917.50	*TOE

STORE	10875	45596.95	44391.61	918.07	*TOP
STORE	10876	45595.94	44386.46	913.84	*IT
STORE	10877	45594.17	44380.00	914.09	*IT
STORE	10878	45594.21	44374.66	918.71	*TOP
STORE	10879	45593.07	44364.70	917.31	*TOE
STORE	10880	45484.35	44394.28	912.28	*INV BOX CULVERT
STORE	10881	45462.81	44397.49	916.94	*RC
STORE	10882	45434.19	44392.12	914.44	*IW
STORE	10883	45437.53	44394.30	916.88	*IH
STORE	10884	45437.75	44393.12	916.21	*RG
STORE	10885	45437.51	44400.15	912.13	*INV BOX CULVERT
STORE	10886	45439.21	44407.85	916.86	*IH
STORE	10887	45439.54	44409.45	916.40	*RG
STORE	10888	45437.34	44410.13	914.81	*IW
STORE	10889	45422.10	44413.11	917.22	*TOP
STORE	10890	45415.32	44406.70	912.83	*IT
STORE	10891	45413.63	44401.68	913.11	*IT
STORE	10892	45418.30	44393.26	918.14	*TOP
STORE	10893	45428.20	44500.30	913.29	*IT
STORE	10894	45434.49	44498.97	917.56	*TOP
STORE	10895	45444.59	44497.48	916.33	*IG
STORE	10896	45456.16	44495.66	916.96	*RE
STORE	10897	45468.41	44461.94	917.72	*RC
STORE	10898	45495.81	44489.58	916.93	*RE
STORE	10899	45511.25	44487.96	915.57	*IG
STORE	10900	45519.60	44488.00	916.20	*IG
STORE	10901	45571.97	44478.42	916.24	*IG
STORE	10902	45615.93	44469.35	916.08	*TOE
STORE	10903	45623.96	44469.49	918.89	*TOP
STORE	10904	45632.08	44468.26	919.65	*NTR
STORE	10905	45635.35	44468.29	918.99	*TOP
STORE	10906	45638.01	44467.82	918.48	*TOE
STORE	10907	45614.88	44442.63	917.60	*RG
STORE	10908	45609.83	44442.74	916.96	*RG
STORE	10909	45562.95	44447.80	917.47	*FO
STORE	10910	45605.90	44528.38	915.18	*EP
STORE	10911	45405.94	44408.94	912.88	*IT
STORE	10912	45399.99	44410.52	917.48	*TOP
STORE	10913	45379.54	44411.67	915.79	*IG
STORE	10914	45371.42	44413.24	914.10	*IG
STORE	10915	45342.03	44417.78	913.66	*IG
STORE	10916	45287.09	44423.44	913.63	*IG
STORE	10917	45300.04	44520.48	913.66	*IG
STORE	10918	45355.74	44510.61	913.71	*IG
STORE	10919	45385.98	44507.67	914.05	*IG
STORE	10920	45393.90	44506.86	915.72	*IG
STORE	10921	45415.81	44502.22	916.25	*TOP
STORE	10922	45421.28	44501.68	913.44	*IT
STORE	10923	45434.21	44600.22	913.45	*TOE
STORE	10924	45429.48	44600.85	916.36	*TOP
STORE	10925	45408.97	44603.29	915.38	*IG
STORE	10926	45401.05	44604.15	913.98	*IG
STORE	10927	45374.12	44610.95	913.70	*IG
STORE	10928	45315.89	44615.53	913.80	*IG
STORE	10929	45442.40	44598.86	913.23	*IT
STORE	10930	45449.05	44596.91	917.97	*TOP
STORE	10931	45458.64	44596.05	916.76	*IG
STORE	10932	45470.68	44594.93	917.46	*RE
STORE	10933	45490.13	44592.59	917.73	*RC
STORE	10934	45510.31	44589.24	917.34	*RE
STORE	10935	45527.91	44587.67	915.36	*IG
STORE	10936	45572.46	44582.23	915.38	*IG
STORE	10937	45613.49	44576.27	915.10	*IG
STORE	10938	45626.56	44574.31	915.48	*TOE
STORE	10939	45633.58	44572.90	918.20	*IG
STORE	10940	45639.23	44571.92	919.32	*TOP
STORE	10941	45647.09	44570.94	920.03	*NTR
STORE	10942	45650.61	44571.00	919.27	*TOP
STORE	10943	45652.48	44570.39	919.05	*TOE
STORE	10944	45666.93	44668.60	919.46	*TOE
STORE	10945	45664.25	44669.06	919.91	*TOP
STORE	10946	45661.64	44669.12	920.44	*NTR
STORE	10947	45650.94	44670.67	919.56	*TOP
STORE	10948	45646.27	44671.48	917.05	*TOE
STORE	10949	45595.77	44677.23	916.23	*IG
STORE	10950	45583.42	44679.48	916.57	*IG
STORE	10951	45549.23	44679.87	915.37	*IG
STORE	10952	45538.12	44678.80	915.80	*IG
STORE	10953	45524.83	44688.45	917.80	*RE

STORE	10954	45504.85	44691.92	918.14	*RC
STORE	10955	45479.11	44695.87	917.63	*RE
STORE	10956	45448.44	44702.27	916.43	*IG
STORE	10957	45405.21	44707.35	916.60	*IG
STORE	10958	45363.94	44706.73	917.30	*IG
STORE	10959	45476.16	44678.40	917.34	*RG
STORE	10960	45555.54	44549.02	915.96	*GL
STORE	10961	45561.47	44548.32	916.15	*GL
STORE	10962	45685.07	44641.85	920.44	*IG
STORE	10963	45694.97	44695.99	921.29	*EP
STORE	10964	45691.52	44720.57	920.51	*RG
STORE	10965	45684.62	44715.31	920.53	*RG
STORE	10966	45682.53	44715.71	920.46	*RAILROAD SIGN
STORE	10967	45691.10	44722.80	920.72	*RE
STORE	10968	45691.55	44738.68	921.00	*RC
STORE	10969	45692.05	44751.08	920.85	*RE
STORE	10970	45698.05	44835.63	919.88	*IG
STORE	10971	45660.45	44775.02	919.59	*EB
STORE	10972	45655.59	44761.39	919.95	*RAILROAD SIGN
STORE	10973	45653.92	44762.07	919.88	*RG
STORE	10974	45643.95	44709.08	919.55	*EF
STORE	10975	45642.90	44701.81	919.43	*EF
STORE	10976	45628.60	44686.94	917.28	*FO
STORE	10977	45628.63	44684.80	917.26	*EP
STORE	10978	45591.14	44635.96	915.66	*IG
STORE	10979	45598.42	44713.98	916.93	*IG
STORE	10980	45593.20	44712.42	917.48	*SM
STORE	10981	45588.00	44700.14	916.13	*GL
STORE	10982	45600.09	44718.13	918.78	*IG
STORE	10983	45600.95	44728.62	918.98	*RE
STORE	10984	45601.60	44742.70	919.26	*RC
STORE	10985	45602.88	44756.30	918.76	*RE
STORE	10986	45603.27	44766.75	918.43	*IG
STORE	10987	45605.67	44783.11	916.60	*IG
STORE	10988	45617.91	44850.16	917.15	*IG
STORE	10989	45597.18	44773.30	917.49	*GL
STORE	10990	45588.05	44773.55	917.49	*GL
STORE	10991	45584.79	44769.80	918.24	*RG
STORE	10992	45575.03	44774.12	917.97	*RG
STORE	10993	45573.98	44758.59	918.26	*REPC
STORE	10994	45554.79	44769.03	917.96	*MOC
STORE	10995	45542.63	44808.04	918.20	*REPT
STORE	10996	45545.97	44784.73	917.90	*MOC
STORE	10997	45548.09	44799.42	917.65	*RG
STORE	10998	45554.10	44791.48	916.52	*RG
STORE	10999	45549.76	44787.25	917.52	*RG
STORE	11000	45553.06	44779.03	916.80	*RG
STORE	11001	45558.56	44773.49	917.47	*RG
STORE	11002	45554.66	44785.13	916.65	*IH
STORE	11003	45554.17	44780.59	916.60	*IH
STORE	11004	45558.65	44779.99	916.67	*IH
STORE	11005	45557.29	44781.03	913.77	*INV24INCONCPIPE
STORE	11006	45572.38	44729.31	918.25	*RE
STORE	11007	45553.90	44728.83	917.95	*PC
STORE	11008	45535.60	44717.79	917.49	*MOC
STORE	11009	45525.21	44694.74	917.87	*REPC
STORE	11010	45539.13	44705.02	916.97	*RG
STORE	11011	45546.34	44710.26	916.00	*IH
STORE	11012	45547.18	44715.41	915.99	*IH
STORE	11013	45550.14	44714.10	912.93	*INV24INCONCPIPE
STORE	11014	45553.98	44713.99	916.02	*IH
STORE	11015	45555.68	44717.23	917.51	*RG
STORE	11016	45552.06	44723.48	917.95	*RG
STORE	11017	45513.07	44745.97	918.36	*RP
STORE	11018	45482.28	44673.43	917.75	*REPC
STORE	11019	45478.67	44697.69	917.63	*MOC
STORE	11020	45468.28	44717.43	917.54	*MOC
STORE	11021	45450.05	44721.59	917.33	*REPT
STORE	11022	45443.63	44736.67	917.59	*RH
STORE	11023	45443.47	44741.22	917.60	*RH
STORE	11024	45452.69	44708.21	916.67	*BEG GUARD RAIL
STORE	11025	45421.67	44712.23	916.22	*GUARD RAIL
STORE	11026	45420.43	44703.03	916.14	*IH
STORE	11027	45415.53	44701.21	915.99	*IH
STORE	11028	45418.46	44701.44	913.06	*INV18INCONCPIPE
STORE	11029	45456.11	44746.53	917.64	*WV
STORE	11030	45458.66	44766.80	916.42	*RG
STORE	11031	45457.86	44773.81	915.51	*WF
STORE	11032	45465.43	44761.30	917.50	*REPC

STORE	11033	45485.06	44766.25	917.73	*MOC
STORE	11034	45498.69	44790.15	918.05	*REPT
STORE	11035	45477.16	44777.47	917.19	*RG
STORE	11036	45472.60	44774.28	916.39	*EPES
STORE	11037	45399.17	44790.39	915.24	*RG
STORE	11038	45399.72	44799.19	916.61	*FT CONC
STORE	11039	45398.06	44797.60	916.62	*FT CONC
STORE	11040	45398.07	44792.99	916.62	*FA.CONC
STORE	11041	45395.43	44793.76	913.35	*INV18INCONCPIPE
STORE	11042	45369.69	44865.32	915.88	*IG
STORE	11043	45367.86	44824.37	916.44	*IG
STORE	11044	45367.91	44816.01	915.72	*IG
STORE	11045	45367.64	44804.41	916.09	*IG
STORE	11046	45368.07	44797.40	914.41	*IG
STORE	11047	45366.68	44793.59	914.63	*IG
STORE	11048	45366.63	44793.19	916.58	*FT CONC
STORE	11049	45366.93	44792.78	915.21	*IG
STORE	11050	45365.48	44780.72	914.98	*IG
STORE	11051	45368.41	44768.83	915.70	*TM
STORE	11052	45365.09	44761.61	915.95	*RE
STORE	11053	45365.14	44741.25	916.53	*RH
STORE	11054	45365.13	44740.77	917.04	*RB
STORE	11055	45365.16	44735.64	916.92	*RB
STORE	11056	45365.27	44735.12	916.42	*RH
STORE	11057	45365.12	44720.67	916.06	*RE
STORE	11058	45364.43	44713.12	915.68	*GUARD RAIL IG
STORE	11059	45364.97	44710.76	917.10	*TOP
STORE	11060	45364.84	44704.10	917.00	*TOP
STORE	11061	45365.20	44697.48	913.36	*IT
STORE	11062	45365.15	44690.73	913.33	*IT
STORE	11063	45365.58	44685.80	916.23	*TOP
STORE	11064	45364.88	44677.42	916.12	*TOP
STORE	11065	45364.96	44673.73	912.83	*IT
STORE	11066	45365.03	44672.08	912.80	*IT
STORE	11067	45364.98	44670.02	914.52	*TOP
STORE	11068	45364.54	44664.84	914.12	*IG
STORE	11069	45358.34	44622.66	913.76	*IG
STORE	11070	45403.29	44670.31	914.63	*BEG TOP
STORE	11071	45402.98	44671.95	913.09	*BEG TOE
STORE	11072	45402.93	44673.80	913.00	*BEG TOE
STORE	11073	45404.12	44678.67	916.03	*BEG TOP
STORE	11074	45439.02	44665.95	916.96	*TOP
STORE	11075	45418.04	44684.51	916.01	*TOP
STORE	11076	45420.80	44688.75	913.32	*TOE
STORE	11077	45444.81	44668.34	913.41	*TOE
STORE	11078	45452.36	44671.83	913.34	*TOE
STORE	11079	45458.86	44673.65	917.15	*TOP
STORE	11080	45425.77	44694.98	913.16	*TOE
STORE	11081	45432.38	44701.04	917.37	*TOP
STORE	11082	45647.29	44814.10	916.35	*FO
STORE	11083	45651.42	44838.69	916.74	*EP
STORE	11084	45697.44	44869.17	919.63	*TOE
STORE	11085	45693.74	44869.91	920.45	*TOP
STORE	11086	45691.10	44870.15	921.19	*NTR
STORE	11087	45682.76	44871.47	920.48	*TOP
STORE	11088	45675.10	44872.23	919.10	*IG
STORE	11089	45668.34	44874.25	916.77	*TOE
STORE	11090	45627.80	44881.27	917.18	*IG
STORE	11091	45608.90	44884.55	917.45	*IG
STORE	11092	45604.16	44884.69	917.91	*IG
STORE	11093	45597.41	44885.16	917.49	*IG
STORE	11094	45571.44	44886.52	917.18	*IG
STORE	11095	45554.06	44889.17	918.65	*RE
STORE	11096	45534.85	44891.58	918.91	*RC
STORE	11097	45513.98	44894.92	918.56	*RE
STORE	11098	45498.80	44897.01	916.28	*IG
STORE	11099	45440.03	44901.14	915.92	*IG
STORE	11100	45415.32	44901.77	915.79	*TOP
STORE	11101	45411.57	44902.28	915.10	*TOE
STORE	11102	45423.15	45010.17	916.49	*IG
STORE	11103	45456.30	45005.35	916.13	*IG
STORE	11104	45498.56	45000.83	916.31	*IG
STORE	11105	45512.78	44998.54	916.17	*IG
STORE	11106	45528.93	44995.09	918.88	*RE
STORE	11107	45548.95	44992.03	919.30	*RC
STORE	11108	45569.05	44988.65	919.03	*RE
STORE	11109	45584.66	44986.20	917.37	*IG
STORE	11110	45601.12	44983.97	917.60	*IG
STORE	11111	45626.29	44980.16	918.27	*IG

STORE	11112	45630.73	44980.38	918.66	*IG
STORE	11113	45637.01	44980.36	918.15	*IG
STORE	11114	45670.33	44974.35	918.41	*IG
STORE	11115	45682.44	44973.54	917.94	*TOE
STORE	11116	45691.29	44970.49	921.05	*TOP
STORE	11117	45705.71	44969.77	921.62	*NTR
STORE	11118	45710.56	44969.35	920.88	*TOP
STORE	11119	45714.92	44968.82	920.54	*TOE
STORE	11120	45726.37	45062.34	921.47	*IG
STORE	11121	45722.27	45064.49	921.52	*TOP
STORE	11122	45719.64	45064.78	922.07	*NTR
STORE	11123	45711.32	45066.04	921.34	*TOP
STORE	11124	45696.90	45068.27	918.79	*TOE
STORE	11125	45646.46	45076.90	918.49	*IG
STORE	11126	45601.89	45084.39	917.34	*IG
STORE	11127	45583.45	45087.80	919.49	*RE
STORE	11128	45563.83	45091.24	919.72	*RC
STORE	11129	45543.72	45094.96	919.39	*RE
STORE	11130	45525.10	45097.14	916.78	*IG
STORE	11131	45519.88	45098.70	917.63	*IG
STORE	11132	45488.52	45105.46	916.40	*IG
STORE	11133	45464.43	45108.82	917.18	*IG
STORE	11134	45435.66	45114.81	917.74	*TOP
STORE	11135	45430.47	45115.70	916.14	*TOE
STORE	11136	45408.58	45117.59	915.80	*IG
STORE	11137	45422.70	45221.45	915.65	*IG
STORE	11138	45469.80	45211.48	916.17	*IG
STORE	11139	45508.66	45202.72	916.37	*IG
STORE	11140	45540.26	45195.86	917.22	*IG
STORE	11141	45557.95	45193.62	919.81	*RE
STORE	11142	45577.95	45189.78	920.18	*RC
STORE	11143	45597.48	45186.74	919.89	*RE
STORE	11144	45616.05	45184.34	917.72	*IG
STORE	11145	45659.63	45178.70	919.07	*IG
STORE	11146	45711.54	45162.78	919.07	*TOE
STORE	11147	45718.61	45164.70	921.39	*TOP
STORE	11148	45733.80	45161.30	922.45	*NTR
STORE	11149	45742.85	45159.69	921.76	*TOP
STORE	11150	45709.59	45242.24	919.30	*EP
STORE	11151	45617.87	45251.42	919.41	*RG
STORE	11152	45557.95	45260.17	919.40	*RG
STORE	11153	45438.50	45316.11	916.28	*IG
STORE	11154	45490.30	45306.35	916.48	*IG
STORE	11155	45536.11	45299.52	915.93	*IG
STORE	11156	45553.91	45294.49	917.23	*IG
STORE	11157	45572.64	45291.82	920.26	*RE
STORE	11158	45592.46	45289.24	920.60	*RC
STORE	11159	45612.01	45285.79	920.33	*RE
STORE	11160	45632.81	45282.83	917.80	*IG
STORE	11161	45642.08	45280.48	918.83	*IG
STORE	11162	45669.27	45277.75	919.37	*IG
STORE	11163	45719.27	45268.30	918.97	*TOE
STORE	11164	45727.34	45267.34	921.91	*TOP
STORE	11165	45748.92	45264.20	923.01	*NTR
STORE	11166	45752.58	45263.32	922.44	*TOP
STORE	11167	45757.60	45262.68	921.96	*TOE
STORE	11168	45770.22	45361.09	922.58	*TOE
STORE	11169	45766.57	45361.58	922.84	*TOP
STORE	11170	45763.32	45362.03	923.41	*NTR
STORE	11171	45750.19	45364.22	922.23	*TOP
STORE	11172	45741.62	45365.32	920.07	*TOE
STORE	11173	45725.35	45345.22	919.87	*EP
STORE	11174	45726.45	45355.91	920.37	*EG
STORE	11175	45689.45	45375.08	920.20	*IG
STORE	11176	45658.66	45379.33	918.99	*IG
STORE	11177	45644.97	45381.07	918.32	*IG
STORE	11178	45626.51	45384.33	920.66	*RE
STORE	11179	45606.66	45387.25	920.87	*RC
STORE	11180	45587.15	45390.44	920.45	*RE
STORE	11181	45567.94	45393.19	917.12	*IG
STORE	11182	45523.72	45399.19	916.77	*IG
STORE	11183	45433.65	45412.40	916.98	*IG
STORE	11184	45451.04	45517.90	917.62	*IG
STORE	11185	45514.50	45505.86	917.30	*IG
STORE	11186	45578.58	45495.22	917.16	*IG
STORE	11187	45601.62	45490.75	920.84	*RE
STORE	11188	45621.34	45487.79	921.17	*RC
STORE	11189	45641.17	45484.37	920.92	*RE
STORE	11190	45657.87	45482.32	918.30	*IG

STORE	11191	45658.61	45509.08	918.69	*RG
STORE	11192	45674.42	45478.74	918.83	*IG
STORE	11193	45702.75	45473.44	920.51	*IG
STORE	11194	45740.25	45466.27	920.86	*IG
STORE	11195	45745.54	45465.58	920.15	*IG
STORE	11196	45753.39	45464.24	920.62	*TOE
STORE	11197	45738.55	45436.63	920.50	*EP
STORE	11198	45767.36	45461.65	921.81	*IG
STORE	11199	45770.68	45460.73	923.15	*TOP
STORE	11200	45777.63	45459.82	923.85	*NTR
STORE	11201	45781.28	45458.49	923.35	*TOP
STORE	11202	45783.14	45458.06	922.77	*TOE
STORE	11203	45799.08	45562.31	923.45	*TOE
STORE	11204	45795.64	45563.29	923.72	*TOP
STORE	11205	45792.82	45563.68	924.29	*NTR
STORE	11206	45784.86	45564.45	923.61	*TOP
STORE	11207	45780.78	45565.18	922.22	*IG
STORE	11208	45769.89	45566.64	920.87	*TOE
STORE	11209	45757.33	45570.38	920.50	*EP
STORE	11210	45717.58	45576.19	919.90	*IG
STORE	11211	45676.93	45581.51	918.29	*IG
STORE	11212	45655.88	45585.22	921.26	*RE
STORE	11213	45636.02	45588.50	921.51	*RC
STORE	11214	45616.28	45591.35	921.29	*RE
STORE	11215	45584.07	45594.95	917.15	*IG
STORE	11216	45538.43	45599.13	917.29	*IG
STORE	11217	45482.60	45607.33	918.07	*IG
STORE	11218	45813.25	45662.95	923.28	*TOE
STORE	11219	45810.37	45663.65	924.13	*TOP
STORE	11220	45807.68	45664.53	924.65	*NTR
STORE	11221	45799.80	45665.83	923.94	*TOP
STORE	11222	45796.54	45668.03	922.41	*IG
STORE	11223	45782.60	45669.88	920.32	*TOE
STORE	11224	45773.90	45671.21	920.07	*IG
STORE	11225	45767.56	45672.90	920.69	*IG
STORE	11226	45732.60	45676.50	920.23	*IG
STORE	11227	45711.39	45679.15	918.18	*IG
STORE	11228	45697.56	45680.86	918.39	*IG
STORE	11229	45681.20	45691.92	920.47	*RG
STORE	11230	45677.57	45692.38	920.92	*RG
STORE	11231	45670.60	45684.67	921.60	*RE
STORE	11232	45650.60	45687.74	921.84	*RC
STORE	11233	45631.32	45690.58	921.57	*RE
STORE	11234	45606.50	45693.70	918.14	*IG
STORE	11235	45559.16	45701.30	917.46	*IG
STORE	11236	45502.48	45708.24	917.88	*IG
STORE	11237	45516.24	45808.47	917.91	*IG
STORE	11238	45568.99	45801.07	917.79	*IG
STORE	11239	45620.84	45794.07	918.56	*IG
STORE	11240	45645.84	45790.30	921.65	*RE
STORE	11241	45665.10	45787.73	921.97	*RC
STORE	11242	45684.53	45784.62	921.69	*RE
STORE	11243	45705.70	45781.13	918.99	*IG
STORE	11244	45712.57	45779.48	919.07	*IG
STORE	11245	45746.00	45773.60	921.37	*IG
STORE	11246	45783.60	45772.31	921.45	*IG
STORE	11247	45790.32	45771.07	920.53	*IG
STORE	11248	45800.86	45770.09	921.27	*TOE
STORE	11249	45811.69	45768.71	923.15	*IG
STORE	11250	45815.63	45768.59	924.36	*TOP
STORE	11251	45822.94	45768.43	925.06	*NTR
STORE	11252	45825.32	45768.14	924.37	*TOP
STORE	11253	45828.64	45767.88	923.06	*TOE
STORE	11254	45795.59	45800.49	920.69	*FO
STORE	11255	45843.75	45865.11	923.45	*TOE
STORE	11256	45840.83	45865.60	924.65	*TOP
STORE	11257	45837.35	45866.34	925.37	*NTR
STORE	11258	45829.35	45867.22	924.69	*TOP
STORE	11259	45827.26	45867.14	923.91	*IG
STORE	11260	45812.76	45868.17	921.50	*TOE
STORE	11261	45804.21	45869.06	921.01	*IG
STORE	11262	45800.65	45869.88	921.66	*IG
STORE	11263	45803.55	45878.70	921.92	*EP
STORE	11264	45769.51	45872.72	921.22	*IG
STORE	11265	45759.30	45874.85	921.92	*IG
STORE	11266	45727.58	45880.30	919.63	*IG
STORE	11267	45721.58	45880.76	919.47	*IG
STORE	11268	45699.85	45884.90	922.21	*RE
STORE	11269	45680.05	45887.67	922.35	*RC

STORE	11270	45662.54	45890.07	922.12	*RE
STORE	11271	45658.14	45923.62	922.08	*RG
STORE	11272	45647.89	45939.42	920.46	*RG
STORE	11273	45634.47	45892.92	919.45	*IG
STORE	11274	45604.98	45897.53	918.09	*IG
STORE	11275	45565.87	45901.26	917.79	*IG
STORE	11276	45551.53	45902.48	918.03	*IG
STORE	11277	45518.03	45906.37	918.34	*IG
STORE	11278	45531.35	46011.48	918.52	*IG
STORE	11279	45590.02	46003.44	918.60	*IG
STORE	11280	45593.26	46003.04	918.09	*IG
STORE	11281	45606.90	46001.04	917.98	*IG
STORE	11282	45611.04	46000.45	918.31	*IG
STORE	11283	45649.31	45993.37	918.98	*IG
STORE	11284	45675.27	45989.85	922.18	*RE
STORE	11285	45694.33	45987.07	922.54	*RC
STORE	11286	45714.69	45984.18	922.36	*RE
STORE	11287	45734.10	45981.08	919.99	*IG
STORE	11288	45774.07	45976.02	921.98	*IG
STORE	11289	45783.64	45974.43	921.33	*IG
STORE	11290	45812.19	45969.50	921.61	*IG
STORE	11291	45820.78	45968.48	921.23	*IG
STORE	11292	45828.86	45967.08	921.74	*TOE
STORE	11293	45843.29	45964.61	924.86	*TOP
STORE	11294	45851.70	45963.91	925.64	*NTR
STORE	11295	45855.16	45963.20	924.96	*TOP
STORE	11296	45858.68	45962.69	923.69	*TOE
STORE	11297	45826.08	46032.23	921.94	*EP
STORE	11298	45872.74	46064.89	924.35	*TOE
STORE	11299	45869.11	46066.18	925.34	*TOP
STORE	11300	45866.76	46066.38	925.94	*NTR
STORE	11301	45859.58	46067.19	925.35	*TOP
STORE	11302	45843.69	46068.78	922.26	*TOE
STORE	11303	45831.44	46070.54	921.50	*IG
STORE	11304	45825.48	46071.35	921.85	*IG
STORE	11305	45784.19	46075.37	921.63	*IG
STORE	11306	45790.12	46096.69	921.41	*GL
STORE	11307	45782.39	46097.73	921.14	*GL
STORE	11308	45749.03	46080.91	920.23	*IG
STORE	11309	45729.31	46083.14	922.43	*RE
STORE	11310	45709.00	46085.31	922.76	*RC
STORE	11311	45689.88	46088.63	922.48	*RE
STORE	11312	45671.13	46090.98	919.73	*IG
STORE	11313	45639.60	46095.90	918.41	*IG
STORE	11314	45625.31	46097.82	918.55	*IG
STORE	11315	45612.79	46099.03	919.06	*IG
STORE	11316	45577.31	46102.89	919.17	*IG
STORE	11317	45549.68	46108.08	918.86	*IG
STORE	11318	45579.61	46210.21	919.74	*IG
STORE	11319	45627.15	46205.56	919.58	*IG
STORE	11320	45654.90	46201.05	918.47	*IG
STORE	11321	45664.03	46199.96	918.84	*IG
STORE	11322	45685.31	46192.88	920.03	*IG
STORE	11323	45704.25	46187.91	922.49	*RE
STORE	11324	45723.53	46185.43	922.76	*RC
STORE	11325	45743.68	46182.30	922.46	*RE
STORE	11326	45762.92	46179.63	921.21	*IG
STORE	11327	45775.69	46175.70	921.76	*IG
STORE	11328	45788.95	46173.66	921.06	*IG
STORE	11329	45804.98	46172.48	921.65	*IG
STORE	11330	45825.16	46170.46	920.88	*IG
STORE	11331	45845.95	46172.40	921.62	*EP
STORE	11332	45858.18	46167.25	922.01	*TOE
STORE	11333	45873.58	46164.58	925.70	*TOP
STORE	11334	45881.11	46164.41	926.36	*NTR
STORE	11335	45883.69	46163.81	925.84	*TOP
STORE	11336	45888.96	46162.82	924.71	*TOE
STORE	11337	45901.63	46260.57	925.04	*TOE
STORE	11338	45898.12	46261.35	926.19	*TOP
STORE	11339	45895.50	46261.50	926.77	*NTR
STORE	11340	45888.10	46262.67	926.25	*TOP
STORE	11341	45870.45	46264.93	921.32	*TOE
STORE	11342	45837.26	46271.71	920.60	*IG
STORE	11343	45819.36	46273.90	921.55	*IG
STORE	11344	45814.79	46274.41	921.16	*IG
STORE	11345	45776.94	46278.93	921.27	*IG
STORE	11346	45758.15	46281.22	922.42	*RE
STORE	11347	45738.07	46284.20	922.66	*RC
STORE	11348	45718.69	46286.30	922.40	*RE

STORE	11349	45699.00	46288.88	920.15	*IG
STORE	11350	45690.59	46289.99	919.18	*IG
STORE	11351	45681.47	46291.68	918.67	*IG
STORE	11352	45658.02	46294.31	919.89	*IG
STORE	11353	45609.72	46300.90	920.55	*IG
STORE	11354	45916.07	46356.68	925.39	*TOE
STORE	11355	45912.25	46357.26	926.57	*TOP
STORE	11356	45909.59	46357.63	927.21	*NTR
STORE	11357	45901.97	46358.33	926.64	*TOP
STORE	11358	45884.29	46360.92	921.20	*TOE
STORE	11359	45869.29	46324.44	920.94	*EP
STORE	11360	45845.58	46366.32	921.34	*IG
STORE	11361	45837.87	46367.28	921.92	*IG
STORE	11362	45797.99	46375.18	922.13	*IG
STORE	11363	45789.18	46376.80	921.81	*IG
STORE	11364	45772.86	46379.90	922.48	*RE
STORE	11365	45752.63	46383.49	922.84	*RC
STORE	11366	45733.76	46386.96	922.66	*RE
STORE	11367	45708.79	46390.26	920.01	*IG
STORE	11368	45711.17	46408.38	919.90	*FD 1/2IN REBAR
STORE	11369	45689.20	46394.94	920.14	*IG
STORE	11370	45658.09	46398.26	919.92	*IG
STORE	11371	45646.37	46400.34	920.47	*IG
STORE	11372	45623.94	46402.83	920.94	*IG
STORE	11373	45625.92	46477.42	920.40	*TOP
STORE	11374	45625.65	46482.19	916.34	*IT
STORE	11375	45625.82	46486.13	916.74	*IT
STORE	11376	45626.30	46491.02	920.52	*TOP
STORE	11377	45726.10	46513.80	922.11	*TOP
STORE	11378	45727.38	46508.38	916.82	*IT
STORE	11379	45728.00	46504.89	916.84	*IT
STORE	11380	45728.80	46501.98	921.81	*TOP
STORE	11381	45739.28	46456.76	923.13	*RG
STORE	11382	45743.17	46480.06	922.86	*RG
STORE	11383	45746.69	46503.91	923.04	*RG
STORE	11384	45748.46	46511.26	923.16	*RG
STORE	11385	45746.23	46511.93	923.00	*IH
STORE	11386	45742.89	46513.16	920.87	*IW
STORE	11387	45745.30	46505.72	923.05	*IH
STORE	11388	45741.41	46505.27	920.64	*IW
STORE	11389	45745.10	46508.76	916.45	*INV BOX CULVERT
STORE	11390	45793.41	46501.31	916.50	*INV BOX CULVERT
STORE	11391	45751.24	46507.82	923.06	*RE
STORE	11392	45770.66	46504.98	922.91	*RC
STORE	11393	45789.56	46501.94	922.55	*RE
STORE	11394	45792.83	46504.85	923.29	*IH
STORE	11395	45795.86	46505.13	921.19	*IW
STORE	11396	45793.21	46508.21	922.61	*RG
STORE	11397	45792.15	46498.93	923.24	*IH
STORE	11398	45795.33	46497.56	920.77	*IW
STORE	11399	45844.18	46453.74	922.94	*GL
STORE	11400	45851.29	46453.03	922.60	*GL
STORE	11401	45860.55	46483.77	923.17	*TOP
STORE	11402	45862.61	46492.10	917.76	*IT
STORE	11403	45863.87	46497.44	916.96	*IT
STORE	11404	45886.36	46448.72	923.73	*FO
STORE	11405	45889.86	46463.18	924.36	*EP
STORE	11406	45908.82	46474.10	924.65	*TOP
STORE	11407	45910.12	46482.54	918.47	*IT
STORE	11408	45911.44	46485.84	918.47	*IT
STORE	11409	45912.70	46498.04	925.95	*TOP
STORE	11410	45918.60	46490.59	926.79	*TOP RR BRIDGE
STORE	11411	45933.45	46488.26	926.85	*TOP RR BRIDGE
STORE	11412	45931.28	46473.23	926.78	*TOP RR BRIDGE
STORE	11413	45916.43	46475.37	926.85	*TOP RR BRIDGE
STORE	11414	45927.68	46481.00	927.88	*NTR
STORE	11415	45898.18	46530.48	924.30	*FO
STORE	11416	45799.40	46535.24	922.35	*RG
STORE	11417	45804.12	46559.98	922.39	*RG
STORE	11418	45811.97	46609.04	922.38	*RG
STORE	11419	45735.51	46552.04	920.17	*TT
STORE	11420	45630.54	46594.16	920.89	*IG
STORE	11421	45750.27	46577.59	923.11	*IG
STORE	11422	45762.24	46575.74	923.42	*RE
STORE	11423	45780.98	46572.71	922.96	*RC
STORE	11424	45801.43	46569.13	922.21	*RE
STORE	11425	45818.05	46567.04	921.70	*IG
STORE	11426	45820.67	46567.06	922.11	*IG
STORE	11427	45840.18	46562.68	921.41	*IG

STORE	11428	45868.45	46557.51	922.65	*IG
STORE	11429	45917.19	46549.35	923.65	*TOE
STORE	11430	45926.98	46548.09	927.38	*TOP
STORE	11431	45937.27	46546.69	928.37	*NTR
STORE	11432	45947.51	46546.04	927.06	*TOP
STORE	11433	45956.85	46546.11	922.05	*TOE
STORE	11434	45971.48	46638.79	922.36	*TOE
STORE	11435	45956.96	46646.33	928.09	*TOP
STORE	11436	45952.26	46647.71	928.89	*NTR
STORE	11437	45941.58	46649.64	927.96	*TOP
STORE	11438	45925.45	46651.32	921.93	*TOE
STORE	11439	45914.62	46651.83	920.61	*IG
STORE	11440	45914.19	46631.73	921.31	*EP
STORE	11441	45868.17	46659.09	920.56	*IG
STORE	11442	45843.56	46664.32	920.99	*IG
STORE	11443	45832.60	46665.53	921.20	*IG
STORE	11444	45818.10	46667.69	922.20	*RE
STORE	11445	45798.55	46670.75	923.15	*RC
STORE	11446	45779.34	46674.17	923.82	*RE
STORE	11447	45757.31	46678.09	920.93	*IG
STORE	11448	45714.78	46684.50	921.00	*IG
STORE	11449	45675.11	46689.07	920.59	*IG
STORE	11450	45685.44	46791.05	920.67	*IG
STORE	11451	45728.51	46785.10	921.12	*IG
STORE	11452	45751.76	46780.76	920.95	*IG
STORE	11453	45778.89	46775.02	920.73	*IG
STORE	11454	45783.24	46774.75	923.08	*IG
STORE	11455	45799.83	46771.28	924.42	*RE
STORE	11456	45819.14	46769.12	923.43	*RC
STORE	11457	45838.96	46765.22	922.19	*RE
STORE	11458	45855.08	46762.31	921.03	*IG
STORE	11459	45866.86	46759.57	920.62	*IG
STORE	11460	45888.63	46731.13	920.77	*GL
STORE	11461	45896.67	46730.32	921.00	*GL
STORE	11462	45897.48	46751.71	920.27	*IG
STORE	11463	45900.67	46752.32	921.11	*IG
STORE	11464	45929.40	46750.33	920.94	*IG
STORE	11465	45941.91	46748.58	922.27	*TOE
STORE	11466	45935.25	46770.83	921.18	*EP
STORE	11467	45925.63	46772.08	920.87	*EG
STORE	11468	45957.74	46745.12	928.53	*TOP
STORE	11469	45967.55	46742.71	929.26	*NTR
STORE	11470	45971.54	46741.60	928.34	*TOP
STORE	11471	45985.59	46737.69	923.21	*TOE
STORE	11472	46005.37	46833.72	923.22	*TOE
STORE	11473	45996.27	46835.11	927.87	*TOP
STORE	11474	45988.83	46835.85	928.74	*IG
STORE	11475	45984.85	46835.93	929.69	*NTR
STORE	11476	45976.16	46837.55	929.31	*TOP
STORE	11477	45959.50	46840.88	922.80	*TOE
STORE	11478	45932.94	46847.51	921.10	*IG
STORE	11479	45921.90	46849.33	922.09	*IG
STORE	11480	45897.82	46854.78	920.76	*IG
STORE	11481	45879.86	46859.40	921.30	*IG
STORE	11482	45863.76	46862.21	922.56	*RE
STORE	11483	45844.83	46866.55	923.91	*RC
STORE	11484	45824.72	46870.30	925.14	*RE
STORE	11485	45809.48	46873.57	923.93	*IG
STORE	11486	45804.16	46875.89	920.84	*IG
STORE	11487	45754.32	46884.89	920.03	*IG
STORE	11488	45719.52	46895.91	921.50	*IG
STORE	11489	45739.31	47006.10	921.24	*IG
STORE	11490	45807.40	46984.79	919.69	*IG
STORE	11491	45832.80	46976.50	921.18	*IG
STORE	11492	45839.48	46974.75	924.94	*IG
STORE	11493	45855.29	46970.42	925.66	*RE
STORE	11494	45874.30	46964.04	924.61	*RC
STORE	11495	45893.06	46958.11	923.23	*RE
STORE	11496	45910.71	46952.28	921.69	*IG
STORE	11497	45951.25	46939.58	921.81	*IG
STORE	11498	45968.08	46925.91	922.36	*EP
STORE	11499	45980.98	46936.50	923.45	*TOE
STORE	11500	45996.18	46924.67	929.98	*TOP
STORE	11501	46004.12	46922.59	930.14	*NTR
STORE	11502	46007.42	46920.94	929.18	*TOP
STORE	11503	46016.30	46919.83	927.91	*IG
STORE	11504	46022.53	46917.07	923.93	*TOE
STORE	11505	46051.17	47009.94	924.39	*TOE
STORE	11506	46044.46	47012.09	928.36	*IG

STORE	11507	46036.62	47015.06	928.67	*IG
STORE	11508	46033.77	47016.31	929.66	*TOP
STORE	11509	46029.79	47016.75	930.68	*NTR
STORE	11510	46021.19	47019.32	930.52	*TOP
STORE	11511	46006.44	47024.83	923.35	*TOE
STORE	11512	45985.65	47031.74	922.19	*IG
STORE	11513	45980.08	47033.74	922.76	*IG
STORE	11514	46011.79	47076.34	924.69	*EP
STORE	11515	45974.88	47035.13	922.11	*IG
STORE	11516	45943.86	47045.77	922.21	*IG
STORE	11517	45926.01	47051.93	923.67	*RE
STORE	11518	45907.67	47058.00	925.12	*RC
STORE	11519	45888.33	47064.17	926.47	*RE
STORE	11520	45873.12	47069.63	925.74	*IG
STORE	11521	45864.98	47072.92	923.49	*IG
STORE	11522	45844.68	47079.08	921.43	*IG
STORE	11523	45805.64	47092.69	921.32	*IG
STORE	11524	45782.50	47100.09	921.22	*IG
STORE	11525	45822.16	47201.14	921.13	*IG
STORE	11526	45876.36	47181.35	921.94	*IG
STORE	11527	45901.71	47170.02	923.32	*IG
STORE	11528	45913.52	47165.72	926.06	*IG
STORE	11529	45927.22	47160.79	927.10	*RE
STORE	11530	45945.64	47152.93	925.72	*RC
STORE	11531	45963.55	47145.40	924.22	*RE
STORE	11532	45982.22	47137.76	922.75	*IG
STORE	11533	46006.74	47128.40	922.65	*IG
STORE	11534	46012.88	47126.70	923.08	*IG
STORE	11535	46019.38	47124.28	922.66	*IG
STORE	11536	46035.82	47117.31	924.00	*TOE
STORE	11537	46050.85	47110.08	930.95	*TOP
STORE	11538	46059.99	47108.00	931.17	*NTR
STORE	11539	46062.70	47107.02	930.30	*TOP
STORE	11540	46066.78	47105.58	928.41	*IG
STORE	11541	46069.58	47104.59	928.65	*IG
STORE	11542	46079.60	47101.64	924.65	*TOE
STORE	11543	45839.67	47313.12	923.35	*IG
STORE	11544	45866.34	47300.78	922.29	*IG
STORE	11545	45913.33	47279.22	922.67	*IG
STORE	11546	45937.49	47268.39	923.32	*IG
STORE	11547	45951.52	47260.87	925.04	*IG
STORE	11548	45955.58	47258.66	926.66	*IG
STORE	11549	45969.15	47253.22	927.78	*RE
STORE	11550	45987.23	47244.58	926.35	*RC
STORE	11551	46004.92	47236.40	924.69	*RE
STORE	11552	46023.29	47227.59	923.08	*IG
STORE	11553	46044.25	47217.84	923.02	*IG
STORE	11554	46052.06	47214.85	923.62	*IG
STORE	11555	46036.87	47195.88	922.89	*GL
STORE	11556	46044.57	47192.69	923.09	*GL
STORE	11557	46059.37	47227.00	923.55	*EG
STORE	11558	46068.44	47222.73	924.25	*EP
STORE	11559	46072.17	47203.50	925.23	*TOE
STORE	11560	46086.17	47198.64	931.34	*TOP
STORE	11561	46094.09	47195.13	931.62	*NTR
STORE	11562	46096.80	47194.04	930.74	*TOP
STORE	11563	46099.53	47191.67	929.48	*IG
STORE	11564	46101.89	47188.85	929.11	*IG
STORE	11565	46114.49	47199.75	925.84	*TOE
STORE	11566	46151.43	47271.58	925.39	*TOE
STORE	11567	46136.85	47280.48	931.08	*TOP
STORE	11568	46133.63	47282.24	932.01	*NTR
STORE	11569	46125.66	47285.96	931.81	*TOP
STORE	11570	46111.66	47293.29	925.41	*TOE
STORE	11571	46084.74	47307.00	923.52	*IG
STORE	11572	46067.42	47316.28	923.69	*IG
STORE	11573	46049.85	47325.48	925.62	*RE
STORE	11574	46032.35	47334.38	927.07	*RC
STORE	11575	46014.83	47344.20	928.40	*RE
STORE	11576	46000.21	47351.42	927.71	*IG
STORE	11577	45997.28	47352.89	925.85	*IG
STORE	11578	45970.87	47366.36	923.38	*IG
STORE	11579	45906.32	47399.28	922.79	*IG
STORE	11580	45955.45	47494.28	924.21	*IG
STORE	11581	45988.27	47476.83	923.54	*IG
STORE	11582	46044.13	47444.79	925.89	*IG
STORE	11583	46051.09	47441.28	928.32	*IG
STORE	11584	46064.93	47433.26	928.93	*RE
STORE	11585	46082.91	47422.93	927.80	*RC

STORE	11586	46099.25	47413.20	926.52	*RE
STORE	11587	46117.31	47405.00	924.68	*IG
STORE	11588	46126.59	47398.43	924.83	*IG
STORE	11589	46142.98	47388.69	927.00	*IG
STORE	11590	46127.55	47371.47	926.14	*EG
STORE	11591	46137.62	47366.74	927.90	*EP
STORE	11592	46159.34	47381.94	927.07	*TOE
STORE	11593	46164.79	47377.19	930.42	*IG
STORE	11594	46168.97	47375.78	930.66	*IG
STORE	11595	46170.91	47372.58	932.16	*TOP
STORE	11596	46178.46	47368.56	932.41	*NTR
STORE	11597	46181.52	47366.89	931.39	*TOP
STORE	11598	46184.22	47365.42	930.25	*IG
STORE	11599	46189.79	47361.89	929.82	*IG
STORE	11600	46201.39	47357.58	925.55	*TOE
STORE	11601	46246.11	47436.54	925.54	*TOE
STORE	11602	46237.96	47442.45	930.71	*TOP
STORE	11603	46232.36	47446.14	930.52	*IG
STORE	11604	46229.51	47449.05	931.82	*TOP
STORE	11605	46226.44	47450.65	932.74	*NTR
STORE	11606	46219.08	47456.39	932.34	*TOP
STORE	11607	46216.44	47457.67	931.18	*IG
STORE	11608	46210.86	47460.27	931.29	*IG
STORE	11609	46205.16	47462.73	927.86	*TOE
STORE	11610	46205.12	47483.38	928.02	*EP
STORE	11611	46177.42	47481.01	925.76	*IG
STORE	11612	46167.20	47487.86	925.67	*IG
STORE	11613	46151.44	47498.20	927.33	*RE
STORE	11614	46135.15	47508.38	928.27	*RC
STORE	11615	46117.43	47519.06	929.14	*RE
STORE	11616	46103.35	47528.11	928.99	*IG
STORE	11617	46098.95	47530.99	927.24	*IG
STORE	11618	46068.84	47549.13	925.54	*IG
STORE	11619	46049.18	47561.96	925.67	*IG
STORE	11620	46035.52	47570.35	924.93	*IG
STORE	11621	46010.14	47585.79	925.74	*IG
STORE	11622	46045.94	47685.80	930.52	*IG
STORE	11623	46066.71	47671.67	928.10	*IG
STORE	11624	46089.94	47656.77	927.92	*IG
STORE	11625	46121.93	47636.25	928.50	*IG
STORE	11626	46151.25	47617.36	929.07	*IG
STORE	11627	46154.32	47615.61	931.25	*IG
STORE	11628	46159.21	47612.16	928.69	*IG
STORE	11629	46172.66	47602.85	929.29	*RE
STORE	11630	46189.87	47592.49	928.93	*RC
STORE	11631	46206.11	47581.71	928.40	*RE
STORE	11632	46221.04	47571.73	927.23	*IG
STORE	11633	46231.71	47564.60	928.30	*IG
STORE	11634	46246.01	47554.95	931.18	*IG
STORE	11635	46238.81	47546.66	929.88	*GL
STORE	11636	46254.46	47552.52	931.76	*FO
STORE	11637	46268.52	47540.02	931.59	*TOE
STORE	11638	46270.90	47538.21	932.62	*TOP
STORE	11639	46278.50	47532.34	933.01	*NTR
STORE	11640	46282.58	47529.71	932.17	*TOP
STORE	11641	46285.22	47527.46	931.09	*IG
STORE	11642	46289.17	47524.89	930.78	*IG
STORE	11643	46297.74	47519.70	926.43	*TOE
STORE	11644	46273.88	47587.31	934.64	*EP
STORE	11645	46280.85	47610.76	935.67	*GL
STORE	11646	46352.05	47604.20	926.11	*TOE
STORE	11647	46344.06	47610.92	930.36	*IG
STORE	11648	46340.94	47613.29	930.84	*IG
STORE	11649	46336.91	47615.79	932.47	*TOP
STORE	11650	46335.00	47616.91	933.26	*NTR
STORE	11651	46326.81	47622.12	932.71	*TOP
STORE	11652	46322.18	47624.95	932.41	*IG
STORE	11653	46315.91	47628.42	934.30	*IG
STORE	11654	46298.46	47640.52	934.32	*IG
STORE	11655	46305.74	47666.76	930.06	*R/W
STORE	11656	46285.98	47649.84	929.25	*TOE
STORE	11657	46276.56	47655.00	928.05	*IG
STORE	11658	46261.88	47664.43	929.20	*RE
STORE	11659	46245.61	47674.95	929.56	*RC
STORE	11660	46228.34	47686.25	929.50	*RE
STORE	11661	46215.77	47694.37	928.84	*TOE
STORE	11662	46211.76	47696.38	931.05	*IG
STORE	11663	46202.70	47703.04	930.94	*IG
STORE	11664	46193.21	47709.56	929.11	*IG

STORE	11665	46126.40	47746.45	928.65	*IG
STORE	11666	46109.74	47755.72	930.32	*IG
STORE	11667	46162.24	47854.01	930.57	*IG
STORE	11668	46195.65	47831.20	928.20	*IG
STORE	11669	46220.33	47813.93	928.45	*IG
STORE	11670	46239.69	47799.18	927.47	*IG
STORE	11671	46258.89	47787.49	927.90	*IG
STORE	11672	46285.64	47770.11	929.84	*RE
STORE	11673	46302.09	47758.79	930.07	*RC
STORE	11674	46318.34	47747.53	929.76	*RE
STORE	11675	46333.65	47736.85	928.15	*IG
STORE	11676	46343.96	47730.21	928.65	*IG
STORE	11677	46354.27	47722.52	933.41	*IG
STORE	11678	46370.58	47731.04	933.41	*EP
STORE	11679	46374.38	47709.36	932.94	*IG
STORE	11680	46377.52	47707.11	932.10	*IG
STORE	11681	46381.05	47704.85	932.11	*TOE
STORE	11682	46383.43	47703.58	932.77	*TOP
STORE	11683	46390.47	47698.28	933.54	*NTR
STORE	11684	46393.27	47696.68	932.76	*TOP
STORE	11685	46396.62	47694.82	931.21	*IG
STORE	11686	46400.41	47693.38	930.72	*IG
STORE	11687	46412.61	47685.74	926.37	*TOE
STORE	11688	46466.51	47771.70	926.03	*TOE
STORE	11689	46451.46	47781.91	933.12	*TOP
STORE	11690	46448.63	47783.72	933.85	*NTR
STORE	11691	46441.08	47788.40	933.21	*TOP
STORE	11692	46438.78	47789.80	932.18	*TOE
STORE	11693	46410.41	47807.23	930.95	*IG
STORE	11694	46401.32	47813.02	929.13	*IG
STORE	11695	46396.39	47816.24	928.74	*IG
STORE	11696	46374.26	47829.89	930.21	*RE
STORE	11697	46357.35	47839.59	930.45	*RC
STORE	11698	46340.97	47851.16	930.22	*RE
STORE	11699	46325.99	47859.90	928.13	*IG
STORE	11700	46304.05	47874.27	927.55	*IG
STORE	11701	46250.82	47907.37	928.08	*IG
STORE	11702	46202.77	47935.90	929.54	*IG
STORE	11703	46264.95	48020.75	929.35	*IG
STORE	11704	46307.39	47991.92	928.32	*IG
STORE	11705	46348.62	47964.86	927.81	*IG
STORE	11706	46383.16	47943.03	928.42	*IG
STORE	11707	46398.18	47934.38	930.64	*RE
STORE	11708	46415.24	47924.29	930.91	*RC
STORE	11709	46431.16	47912.69	930.57	*RE
STORE	11710	46450.35	47900.16	928.25	*IG
STORE	11711	46465.60	47890.13	929.31	*IG
STORE	11712	46468.91	47888.45	929.20	*IG
STORE	11713	46474.56	47885.11	928.60	*IG
STORE	11714	46485.74	47876.24	929.25	*TOE
STORE	11715	46447.64	47844.27	930.28	*EP
STORE	11716	46497.28	47870.36	933.53	*TOP
STORE	11717	46504.90	47866.43	934.18	*NTR
STORE	11718	46508.25	47864.72	933.38	*TOP
STORE	11719	46524.07	47853.97	928.98	*TOE
STORE	11720	46413.87	47977.93	930.82	*GL
STORE	11721	46411.14	47981.39	929.79	*RG
STORE	11722	46433.64	47994.23	930.60	*BEG GUARD RAIL
STORE	11723	46465.14	48034.61	930.87	*GUARD RAIL
STORE	11724	46328.96	48102.93	927.90	*IG
STORE	11725	46338.95	48096.39	927.75	*IG
STORE	11726	46367.41	48076.80	925.24	*IG
STORE	11727	46390.09	48061.73	925.77	*IG
STORE	11728	46453.80	48018.46	930.88	*RE
STORE	11729	46470.82	48006.51	931.14	*RC
STORE	11730	46487.29	47995.66	930.85	*RE
STORE	11731	46508.12	47981.72	928.74	*IG
STORE	11732	46524.20	47970.53	930.13	*IG
STORE	11733	46535.99	47974.12	929.41	*EP
STORE	11734	46542.60	47957.16	929.46	*TOE
STORE	11735	46553.02	47952.39	933.77	*TOP
STORE	11736	46560.10	47947.60	934.53	*NTR
STORE	11737	46563.23	47945.58	933.71	*TOP
STORE	11738	46576.54	47937.49	929.52	*TOE
STORE	11739	46641.25	48020.95	930.69	*TOE
STORE	11740	46623.43	48031.33	934.05	*TOP
STORE	11741	46618.27	48033.02	934.88	*NTR
STORE	11742	46609.56	48039.03	934.05	*TOP
STORE	11743	46607.04	48039.68	933.30	*TOE

STORE	11744	46578.99	48056.06	931.38	*IG
STORE	11745	46564.48	48065.15	929.00	*IG
STORE	11746	46543.92	48078.42	930.93	*RE
STORE	11747	46527.06	48089.68	931.23	*RC
STORE	11748	46509.94	48100.24	931.05	*RE
STORE	11749	46472.36	48124.93	928.45	*IG
STORE	11750	46456.91	48135.13	926.33	*IG
STORE	11751	46429.60	48151.61	925.69	*IG
STORE	11752	46383.47	48179.05	927.40	*IG
STORE	11753	46434.71	48266.14	928.77	*IG
STORE	11754	46473.37	48242.64	926.77	*IG
STORE	11755	46520.23	48217.66	926.55	*IG
STORE	11756	46566.73	48183.48	930.96	*RE
STORE	11757	46583.61	48172.33	931.16	*RC
STORE	11758	46600.48	48161.60	931.02	*RE
STORE	11759	46603.20	48159.78	931.06	*IG
STORE	11760	46599.64	48151.59	931.30	*RG
STORE	11761	46578.35	48122.85	931.06	*BEG GUARD RAIL
STORE	11762	46604.06	48167.19	931.02	*GUARD RAIL
STORE	11763	46619.93	48147.98	929.46	*IG
STORE	11764	46636.79	48137.29	931.55	*IG
STORE	11765	46655.42	48125.25	931.79	*TOE
STORE	11766	46623.85	48103.77	932.11	*EP
STORE	11767	46665.37	48118.40	934.49	*TOP
STORE	11768	46672.86	48113.29	935.19	*NTR
STORE	11769	46675.98	48111.71	934.57	*TOP
STORE	11770	46679.53	48108.52	933.64	*TOE
STORE	11771	46736.72	48190.52	933.51	*TOE
STORE	11772	46732.12	48193.04	934.82	*TOP
STORE	11773	46728.94	48195.76	935.49	*NTR
STORE	11774	46721.13	48200.83	934.85	*TOP
STORE	11775	46715.83	48204.26	932.91	*TOE
STORE	11776	46699.31	48215.01	932.60	*EP
STORE	11777	46702.16	48218.90	932.47	*FO
STORE	11778	46690.41	48217.35	932.20	*GL
STORE	11779	46691.43	48221.53	931.85	*IG
STORE	11780	46674.41	48233.18	929.34	*IG
STORE	11781	46658.23	48243.79	930.66	*IG
STORE	11782	46646.31	48227.48	930.88	*BEG CONC WALL
STORE	11783	46611.89	48250.84	930.68	*BEG CONC WALL
STORE	11784	46625.59	48269.48	930.90	*RE
STORE	11785	46622.53	48269.55	930.28	*IG
STORE	11786	46658.06	48245.87	931.04	*RE
STORE	11787	46641.05	48257.44	931.07	*RC
STORE	11788	46603.73	48283.17	928.40	*IG
STORE	11789	46547.41	48318.92	927.57	*IG
STORE	11790	46470.30	48314.97	928.05	*TOP
STORE	11791	46551.53	48337.24	927.09	*TOP
STORE	11792	46647.39	48329.89	927.30	*TOP
STORE	11793	46651.71	48326.66	926.39	*GL
STORE	11794	46661.61	48325.25	926.29	*TOP
STORE	11795	46674.99	48347.55	926.86	*TOP
STORE	11796	46667.31	48333.08	922.40	*F/L
STORE	11797	46667.18	48348.83	926.30	*GL
STORE	11798	46640.24	48358.98	925.57	*TOP
STORE	11799	46634.93	48360.97	922.61	*F/L
STORE	11800	46622.97	48367.24	929.71	*TOP
STORE	11801	46548.51	48372.40	932.21	*TOP
STORE	11802	46551.79	48355.89	922.37	*TOE
STORE	11803	46462.60	48331.17	922.12	*TOE
STORE	11804	46455.43	48346.12	931.55	*TOP
STORE	11805	46464.53	48325.31	922.01	*TOE
STORE	11806	46549.69	48347.45	922.29	*TOE
STORE	11807	46682.88	48353.46	930.71	*RE
STORE	11808	46716.40	48332.33	930.97	*RE
STORE	11809	46699.10	48342.93	931.02	*RC
STORE	11810	46695.39	48373.10	930.66	*FF CONC
STORE	11811	46729.50	48350.10	930.75	*FF CONC
STORE	11812	46720.89	48333.63	930.33	*TOP
STORE	11813	46714.50	48326.81	924.66	*TOE
STORE	11814	46704.93	48312.92	922.74	*TOE
STORE	11815	46701.25	48307.16	926.06	*TOP
STORE	11816	46731.21	48216.91	934.56	*COR RR BRIDGE
STORE	11817	46743.68	48208.47	934.74	*COR RR BRIDGE
STORE	11818	46803.24	48295.71	934.86	*COR RR BRIDGE
STORE	11819	46790.24	48303.21	934.82	*COR RR BRIDGE
STORE	11820	46781.98	48292.42	929.01	*TOP
STORE	11821	46771.86	48277.18	922.44	*TOE
STORE	11822	46769.38	48272.95	922.45	*TOE

STORE	11823	46764.81	48267.09	928.72	*TOP
STORE	11824	46810.37	48296.95	932.35	*TOE
STORE	11825	46805.75	48299.60	934.80	*TOP
STORE	11826	46801.01	48301.90	935.60	*NTR
STORE	11827	46793.93	48306.45	934.95	*TOP
STORE	11828	46781.04	48313.89	930.25	*TOE
STORE	11829	46766.13	48322.00	928.56	*IG
STORE	11830	46760.77	48319.27	928.32	*GL
STORE	11831	46712.22	48361.99	931.08	*RC
STORE	11832	46690.36	48375.64	929.47	*IG
STORE	11833	46670.63	48391.13	929.61	*TOP
STORE	11834	46666.30	48396.63	925.19	*TOE
STORE	11835	46662.67	48403.15	924.96	*TOE
STORE	11836	46652.45	48401.87	930.19	*TOP
STORE	11837	46621.64	48422.46	930.54	*IG
STORE	11838	46664.40	48501.97	930.91	*IG
STORE	11839	46703.15	48467.21	929.20	*TOP
STORE	11840	46711.07	48466.60	926.10	*F/L
STORE	11841	46714.20	48463.10	930.69	*TOP
STORE	11842	46727.20	48449.30	930.36	*IG
STORE	11843	46729.30	48447.71	929.60	*IG
STORE	11844	46740.56	48436.99	930.86	*RE
STORE	11845	46754.53	48424.12	931.13	*RC
STORE	11846	46769.17	48410.81	930.88	*RE
STORE	11847	46805.29	48386.64	929.06	*IG
STORE	11848	46809.06	48376.58	929.82	*EP
STORE	11849	46814.54	48379.09	930.10	*FO
STORE	11850	46828.20	48371.36	931.30	*TOE
STORE	11851	46835.59	48365.06	934.87	*TOP
STORE	11852	46842.19	48362.35	935.56	*NTR
STORE	11853	46844.91	48360.74	934.77	*TOP
STORE	11854	46854.33	48354.21	930.71	*TOE
STORE	11855	46960.47	48521.06	933.78	*RR SPR TRV PT
STORE	11856	46922.57	48427.75	928.46	*TOE
STORE	11857	46900.64	48442.13	934.93	*TOP
STORE	11858	46897.57	48443.75	935.62	*NTR
STORE	11859	46890.84	48448.10	934.97	*TOP
STORE	11860	46881.05	48454.79	930.83	*TOE
STORE	11861	46862.79	48466.77	929.18	*IG
STORE	11862	46887.22	48490.29	930.30	*EP
STORE	11863	46850.49	48476.92	929.23	*IG
STORE	11864	46825.95	48494.29	930.99	*RE
STORE	11865	46809.39	48505.08	931.31	*RC
STORE	11866	46793.40	48516.48	930.96	*RE
STORE	11867	46744.88	48444.81	930.81	*GUARD RAIL
STORE	11868	46762.92	48477.75	930.89	*END GUARD RAIL
STORE	11869	46779.06	48525.95	929.94	*IG
STORE	11870	46767.47	48535.36	931.24	*TOP
STORE	11871	46764.85	48537.02	927.30	*TOE
STORE	11872	46759.59	48538.94	927.28	*TOE
STORE	11873	46755.13	48538.67	931.08	*TOP
STORE	11874	46702.73	48568.10	929.59	*IG
STORE	11875	46728.29	48685.13	930.11	*IG
STORE	11876	46810.55	48627.85	929.86	*IG
STORE	11877	46813.76	48625.71	931.27	*TOP
STORE	11878	46816.71	48622.98	927.46	*TOE
STORE	11879	46819.10	48621.95	927.59	*TOE
STORE	11880	46823.76	48618.20	931.27	*TOP
STORE	11881	46826.72	48616.07	930.19	*TOE
STORE	11882	46829.84	48612.55	930.86	*IG
STORE	11883	46835.34	48609.70	930.95	*IG
STORE	11884	46836.93	48608.82	930.02	*IG
STORE	11885	46849.63	48599.63	931.20	*RE
STORE	11886	46865.94	48587.62	931.56	*RC
STORE	11887	46882.58	48577.31	931.25	*RE
STORE	11888	46883.32	48576.33	931.19	*GUARD RAIL
STORE	11889	46908.32	48606.01	931.10	*END GUARD RAIL
STORE	11890	46909.02	48557.68	929.28	*IG
STORE	11891	46934.85	48539.68	930.31	*TOE
STORE	11892	46946.87	48530.81	935.08	*TOP
STORE	11893	46954.25	48527.10	935.72	*NTR
STORE	11894	46957.69	48525.39	935.03	*TOP
STORE	11895	46974.98	48514.30	928.71	*TOE
STORE	11896	46974.34	48618.91	929.86	*EP
STORE	11897	47033.32	48595.39	928.62	*TOE
STORE	11898	47014.11	48608.78	935.09	*TOP
STORE	11899	47011.79	48611.61	935.76	*NTR
STORE	11900	47004.91	48616.19	935.18	*TOP
STORE	11901	46994.08	48623.59	930.27	*TOE

STORE	11902	46968.19	48641.73	929.71	*IG
STORE	11903	46940.27	48661.20	931.33	*RE
STORE	11904	46923.46	48672.42	931.73	*RC
STORE	11905	46907.07	48683.31	931.39	*RE
STORE	11906	46897.97	48688.95	930.42	*IG
STORE	11907	46892.54	48692.23	930.68	*IG
STORE	11908	46890.04	48694.07	931.35	*IG
STORE	11909	46883.11	48699.60	930.82	*TOE
STORE	11910	46881.36	48701.32	932.13	*TOP
STORE	11911	46875.37	48703.07	928.90	*TOE
STORE	11912	46869.81	48705.09	928.08	*TOE
STORE	11913	46867.10	48706.96	931.00	*TOP
STORE	11914	46866.20	48707.38	930.01	*TOE
STORE	11915	46818.64	48735.00	930.36	*IG
STORE	11916	46772.21	48765.94	930.25	*IG
STORE	11917	46813.41	48855.86	930.41	*IG
STORE	11918	46866.19	48821.67	930.52	*IG
STORE	11919	46925.97	48795.72	930.67	*TOE
STORE	11920	46928.60	48793.88	931.99	*TOP
STORE	11921	46929.02	48793.05	929.38	*TOE
STORE	11922	46934.19	48790.93	929.60	*TOE
STORE	11923	46938.82	48786.97	932.07	*TOP
STORE	11924	46940.54	48785.10	931.02	*IG
STORE	11925	46943.20	48783.11	931.11	*IG
STORE	11926	46944.86	48781.89	931.78	*IG
STORE	11927	46947.59	48777.81	931.89	*IG
STORE	11928	46951.69	48775.39	930.95	*IG
STORE	11929	46955.37	48772.73	930.91	*IG
STORE	11930	46964.35	48767.55	931.92	*RE
STORE	11931	46980.76	48756.22	932.00	*RC
STORE	11932	46996.83	48744.41	931.65	*RE
STORE	11933	47012.07	48732.57	930.34	*IG
STORE	11934	47034.05	48716.28	930.61	*IG
STORE	11935	47040.35	48716.00	930.68	*EP
STORE	11936	47052.04	48708.39	930.72	*TOE
STORE	11937	47063.09	48701.21	935.36	*TOP
STORE	11938	47070.11	48697.32	935.91	*NTR
STORE	11939	47072.67	48695.56	935.32	*TOP
STORE	11940	47077.46	48677.84	931.02	*TOE
STORE	11941	47142.13	48767.24	930.55	*TOE
STORE	11942	47135.47	48772.11	933.98	*IG
STORE	11943	47131.67	48775.25	934.29	*IG
STORE	11944	47129.77	48779.18	935.55	*TOP
STORE	11945	47126.99	48781.15	936.23	*NTR
STORE	11946	47120.10	48786.38	935.59	*TOP
STORE	11947	47107.90	48794.87	931.03	*TOE
STORE	11948	47093.16	48805.12	931.19	*IG
STORE	11949	47117.34	48829.84	931.47	*EP
STORE	11950	47082.59	48810.91	930.42	*IG
STORE	11951	47071.65	48819.17	930.75	*IG
STORE	11952	47055.59	48830.75	932.07	*RE
STORE	11953	47038.61	48841.95	932.40	*RC
STORE	11954	47021.72	48851.90	932.11	*RE
STORE	11955	47010.11	48859.17	931.27	*IG
STORE	11956	47005.34	48862.56	932.75	*IG
STORE	11957	46999.00	48866.84	931.29	*IG
STORE	11958	46994.49	48868.36	932.66	*IG
STORE	11959	46989.73	48870.29	929.28	*TOE
STORE	11960	46985.66	48877.86	932.47	*TOP
STORE	11961	46983.58	48879.19	931.01	*IG
STORE	11962	46940.59	48907.65	930.95	*IG
STORE	11963	46897.24	48934.64	930.99	*IG
STORE	11964	46951.24	49015.55	931.55	*IG
STORE	11965	46994.74	48989.04	931.56	*IG
STORE	11966	47038.83	48962.76	932.04	*IG
STORE	11967	47041.99	48961.19	933.45	*TOP
STORE	11968	47045.07	48959.64	930.45	*TOE
STORE	11969	47047.78	48957.07	930.23	*TOE
STORE	11970	47052.43	48953.97	933.37	*TOP
STORE	11971	47054.85	48950.81	931.98	*IG
STORE	11972	47058.74	48948.16	932.78	*IG
STORE	11973	47066.76	48945.50	932.67	*IG
STORE	11974	47069.20	48943.92	931.91	*IG
STORE	11975	47080.32	48937.78	932.65	*RE
STORE	11976	47097.15	48927.92	932.94	*RC
STORE	11977	47113.61	48916.21	932.58	*RE
STORE	11978	47129.50	48906.27	931.10	*IG
STORE	11979	47142.87	48897.37	931.03	*IG
STORE	11980	47153.82	48890.13	931.55	*IG

STORE	11981	47166.87	48882.09	930.96	*TOE
STORE	11982	47180.55	48873.37	935.91	*TOP
STORE	11983	47187.28	48869.57	936.52	*NTR
STORE	11984	47190.49	48867.58	935.87	*TOP
STORE	11985	47206.24	48857.00	930.64	*TOE
STORE	11986	47261.03	48938.42	931.28	*TOE
STORE	11987	47245.37	48949.65	936.30	*TOP
STORE	11988	47243.15	48951.89	936.95	*NTR
STORE	11989	47236.61	48956.74	936.32	*TOP
STORE	11990	47225.10	48965.49	931.39	*TOE
STORE	11991	47209.58	48974.82	931.64	*IG
STORE	11992	47225.62	48988.88	931.60	*EP
STORE	11993	47205.44	48977.28	931.20	*IG
STORE	11994	47186.83	48990.29	931.68	*IG
STORE	11995	47171.01	49000.52	933.21	*RE
STORE	11996	47154.24	49011.81	933.50	*RC
STORE	11997	47138.05	49023.21	933.14	*RE
STORE	11998	47127.71	49030.27	932.59	*IG
STORE	11999	47122.56	49033.87	933.79	*IG
STORE	12000	47118.95	49037.19	933.21	*IG
STORE	12001	47117.87	49038.17	932.51	*IG
STORE	12002	47113.92	49039.91	932.49	*IG
STORE	12003	47111.77	49041.52	933.49	*TOP
STORE	12004	47107.40	49043.05	932.15	*TOE
STORE	12005	47102.77	49045.48	932.50	*TOE
STORE	12006	47101.47	49048.32	933.81	*TOP
STORE	12007	47099.26	49049.49	932.78	*IG
STORE	12008	47052.37	49082.23	932.20	*IG
STORE	12009	47307.47	49156.17	932.11	*TRV. PT
STORE	12010	47321.74	49024.02	931.71	*TOE
STORE	12011	47303.02	49034.64	936.79	*TOP
STORE	12012	47300.47	49036.17	937.50	*NTR
STORE	12013	47293.84	49040.50	936.89	*TOP
STORE	12014	47279.06	49050.45	931.24	*TOE
STORE	12015	47268.50	49059.27	931.65	*IG
STORE	12016	47244.86	49074.61	931.76	*IG
STORE	12017	47228.74	49085.63	933.89	*RE
STORE	12018	47211.49	49096.23	934.11	*RC
STORE	12019	47195.51	49107.42	933.84	*RE
STORE	12020	47186.35	49114.94	933.24	*IG
STORE	12021	47183.67	49116.69	934.25	*IG
STORE	12022	47169.08	49126.85	934.25	*TOP
STORE	12023	47166.43	49128.43	932.99	*TOE
STORE	12024	47157.81	49126.80	933.40	*TOE
STORE	12025	47154.19	49126.85	934.31	*TOP
STORE	12026	47108.10	49164.39	932.98	*IG
STORE	12027	47061.45	49196.15	933.14	*IG
STORE	12028	47122.10	49289.04	934.33	*IG
STORE	12029	47217.60	49221.30	934.41	*IG
STORE	12030	47219.34	49220.03	935.62	*TOP
STORE	12031	47222.92	49217.90	934.28	*TOE
STORE	12032	47231.16	49207.38	934.07	*TOE
STORE	12033	47235.13	49206.46	934.76	*TOP
STORE	12034	47240.42	49202.90	934.64	*IG
STORE	12035	47242.07	49201.74	933.81	*IG
STORE	12036	47254.08	49193.59	934.53	*RE
STORE	12037	47270.32	49182.39	934.87	*RC
STORE	12038	47286.84	49170.45	934.69	*RE
STORE	12039	47315.86	49120.76	931.47	*EP
STORE	12040	47339.05	49135.79	931.48	*TOE
STORE	12041	47351.39	49125.00	937.34	*TOP
STORE	12042	47357.87	49120.67	938.00	*NTR
STORE	12043	47359.80	49118.47	937.32	*TOP
STORE	12044	47374.33	49104.37	932.10	*TOE
STORE	12045	47430.62	49195.91	933.24	*TOE
STORE	12046	47419.12	49205.22	937.78	*TOP
STORE	12047	47416.54	49206.87	938.46	*NTR
STORE	12048	47410.20	49211.17	937.89	*TOP
STORE	12049	47397.94	49219.89	932.25	*TOE
STORE	12050	47375.22	49202.60	931.74	*FO
STORE	12051	47363.67	49243.78	933.00	*IG
STORE	12052	47345.13	49256.23	935.48	*RE
STORE	12053	47327.87	49267.27	935.76	*RC
STORE	12054	47312.29	49278.96	935.38	*RE
STORE	12055	47300.55	49285.97	934.86	*IG
STORE	12056	47296.69	49289.19	936.79	*IG
STORE	12057	47292.18	49292.97	936.09	*TOP
STORE	12058	47290.88	49294.00	935.06	*TOE
STORE	12059	47282.18	49302.04	935.51	*TOE

STORE	12060	47276.80	49305.82	937.13	*TOP
STORE	12061	47274.48	49306.93	936.12	*IG
STORE	12062	47226.73	49331.89	935.60	*IG
STORE	12063	47176.14	49361.93	935.48	*IG
STORE	20300	49980.45	47639.92	947.92	*FA 6FT CHAINLK
STORE	20301	49041.36	46815.31	941.34	*C/L IG
STORE	20302	49979.67	47543.98	946.72	*FL IG
STORE	20303	49979.24	47487.75	945.65	*FL IG
STORE	20304	49978.86	47434.43	945.45	*FL IG
STORE	20305	49977.37	47377.11	945.70	*TOP IG
STORE	20306	49977.84	47368.04	938.84	*TOE
STORE	20307	49977.30	47364.48	938.18	*TOE
STORE	20308	49977.90	47361.97	943.14	*FC
STORE	20309	49977.34	47354.92	945.43	*TOP
STORE	20310	49977.66	47335.45	944.90	*IG
STORE	20311	49977.59	47330.10	942.17	*IG
STORE	20312	49973.82	47270.25	942.96	*IG
STORE	20313	49836.39	47256.58	941.84	*IG
STORE	20314	49836.42	47310.65	941.42	*IG
STORE	20315	49835.70	47340.53	941.09	*IG
STORE	20316	49838.00	47360.99	942.59	*FL IG
STORE	20317	49836.97	47365.31	942.48	*TOP IG
STORE	20318	49837.32	47372.56	937.91	*TOE
STORE	20319	49837.17	47375.56	937.96	*TOE
STORE	20320	49836.38	47383.11	943.82	*TOP IG
STORE	20321	49837.72	47418.89	944.84	*C/L IG
STORE	20322	49836.94	47437.97	944.61	*IG
STORE	20323	49836.16	47441.16	944.24	*IG
STORE	20324	49833.34	47475.14	943.67	*IG
STORE	20325	49823.94	47553.30	945.46	*IG
STORE	20326	49756.62	47361.18	942.70	*FL 6FT CHAINLK
STORE	20327	49754.02	47364.49	942.37	*OP IG
STORE	20328	49753.64	47365.51	941.23	*C/L IG
STORE	20329	49748.20	47373.77	937.72	*TOE
STORE	20330	49746.95	47375.76	937.70	*TOE
STORE	20331	49741.68	47383.28	943.71	*TOP IG
STORE	20332	49712.63	47425.62	944.02	*IG
STORE	20333	49711.00	47428.71	943.59	*IG
STORE	20334	49693.60	47454.98	943.46	*IG
STORE	20335	49669.63	47490.69	942.34	*IG
STORE	20336	49655.19	47514.00	942.43	*IG
STORE	20337	49757.02	47360.09	942.68	*IG
STORE	20338	49758.10	47359.06	941.88	*IG
STORE	20339	49768.87	47342.47	940.90	*IG
STORE	20340	49798.11	47296.93	941.46	*IG
STORE	20341	49836.28	47240.67	941.91	*IG
STORE	20342	49864.72	47199.28	942.17	*IG
STORE	20343	49785.01	47182.67	942.07	*IG
STORE	20344	49746.62	47224.83	941.72	*IG
STORE	20345	49713.84	47261.43	941.45	*IG
STORE	20346	49674.51	47304.59	940.94	*C/L IG
STORE	20347	49641.22	47340.93	940.15	*IG
STORE	20348	49626.35	47358.30	941.56	*IG
STORE	20349	49624.99	47360.97	942.46	*FL IG
STORE	20350	49622.47	47362.69	942.68	*TOP IG
STORE	20351	49614.84	47370.53	937.74	*TOE
STORE	20352	49612.86	47373.39	937.90	*TOE
STORE	20353	49604.21	47380.85	942.50	*TOP IG
STORE	20354	49601.73	47386.98	943.25	*IG
STORE	20355	49570.50	47422.39	943.08	*IG
STORE	20356	49567.39	47425.51	942.90	*IG
STORE	20357	49537.79	47459.27	943.16	*IG
STORE	20358	49595.25	47243.35	941.13	*C/L IG
STORE	20359	49554.36	47291.01	940.39	*IG
STORE	20360	49518.29	47333.55	940.18	*IG
STORE	20361	49515.34	47337.36	940.39	*IG
STORE	20362	49508.09	47345.60	939.83	*IG
STORE	20363	49507.18	47347.13	940.43	*IG
STORE	20364	49497.95	47358.63	941.20	*IG
STORE	20365	49495.98	47360.45	941.26	*FL IG
STORE	20366	49493.72	47362.01	941.40	*TOP IG
STORE	20367	49485.63	47369.07	938.36	*TOE
STORE	20368	49483.35	47373.38	938.05	*TOE
STORE	20369	49475.35	47384.26	942.52	*TOP IG
STORE	20370	49627.09	47203.83	941.27	*IG
STORE	20371	49658.73	47166.78	941.67	*IG
STORE	20372	49693.63	47129.22	941.95	*IG
STORE	20373	49516.17	47182.22	941.32	*C/L IG
STORE	20374	49482.87	47221.50	940.66	*IG

STORE	20375	49453.75	47261.49	940.64	*IG
STORE	20376	49418.59	47300.25	940.23	*IG
STORE	20377	49546.27	47142.35	941.35	*IG
STORE	20378	49575.39	47103.63	941.53	*IG
STORE	20379	49604.89	47064.57	941.86	*IG
STORE	20380	49437.12	47121.12	941.15	*C/L IG
STORE	20381	49497.74	47044.41	941.46	*IG
STORE	20382	49529.26	47004.10	941.93	*IG
STORE	20383	49407.37	47158.20	940.88	*IG
STORE	20384	49376.34	47196.23	940.79	*IG
STORE	20385	49344.61	47234.40	940.48	*IG
STORE	20386	49358.16	47060.08	940.90	*C/L IG
STORE	20387	49385.94	47020.67	941.17	*IG
STORE	20388	49414.27	46982.08	941.44	*IG
STORE	20389	49442.87	46942.68	941.75	*IG
STORE	20390	49330.49	47097.95	940.78	*IG
STORE	20391	49301.31	47138.29	940.74	*IG
STORE	20392	49271.55	47178.99	940.69	*IG
STORE	20393	49278.79	46998.74	941.14	*C/L IG
STORE	20394	49305.73	46961.31	941.36	*IG
STORE	20395	49334.14	46921.94	941.46	*IG
STORE	20396	49362.19	46882.65	941.70	*IG
STORE	20397	49247.24	47041.10	940.94	*IG
STORE	20398	49217.58	47081.45	940.87	*IG
STORE	20399	49188.68	47120.86	940.65	*IG
STORE	20400	49199.73	46937.63	941.52	*C/L IG
STORE	20401	49230.55	46900.73	941.70	*IG
STORE	20402	49260.65	46864.55	941.54	*IG
STORE	20403	49292.10	46827.27	941.83	*IG
STORE	20404	49169.26	46973.56	941.02	*IG
STORE	20405	49136.37	47009.88	940.99	*IG
STORE	20406	49104.54	47047.09	940.90	*IG
STORE	20407	49120.48	46876.37	941.46	*C/L IG
STORE	20408	49152.09	46839.39	941.48	*IG
STORE	20409	49183.59	46802.81	941.76	*IG
STORE	20410	49215.29	46765.83	941.83	*IG
STORE	20411	49092.02	46911.63	941.18	*IG
STORE	20412	49059.37	46950.11	941.01	*IG
STORE	20413	49027.57	46987.56	940.82	*IG
STORE	20414	49041.31	46815.27	941.35	*C/L IG
STORE	20415	49075.49	46773.53	941.54	*IG
STORE	20416	49106.68	46735.46	941.95	*IG
STORE	20417	49138.11	46696.25	942.28	*IG
STORE	20418	49006.91	46855.08	940.97	*IG
STORE	20419	48972.21	46893.80	940.98	*IG
STORE	20420	48937.74	46932.97	940.68	*IG
STORE	20421	48993.44	46717.36	941.69	*IG
STORE	20422	49026.49	46679.84	941.89	*IG
STORE	20423	49059.80	46640.80	942.31	*IG
STORE	20424	48926.79	46795.44	940.86	*IG
STORE	20425	48892.90	46834.56	940.85	*IG
STORE	20426	48855.69	46878.15	940.67	*IG
STORE	20427	48794.24	46827.91	940.89	*IG
STORE	20428	48819.58	46788.04	940.93	*IG
STORE	20429	48846.42	46747.62	941.12	*IG
STORE	20430	48877.76	46700.36	941.13	*C/L IG
STORE	20431	48905.22	46658.58	941.60	*IG
STORE	20432	48932.05	46619.75	941.77	*IG
STORE	20433	48957.28	46581.34	942.05	*IG
STORE	20434	48851.58	46550.84	941.89	*IG
STORE	20435	48828.93	46589.20	941.55	*IG
STORE	20436	48806.37	46626.29	941.42	*IG
STORE	20437	48792.92	46647.46	941.72	*C/L IG
STORE	20438	48766.97	46689.49	941.40	*IG
STORE	20439	48740.39	46731.86	940.78	*IG
STORE	20440	48658.56	46707.49	941.47	*IG
STORE	20441	48676.68	46665.04	941.35	*IG
STORE	20442	48693.53	46626.07	940.90	*IG
STORE	20443	48706.19	46598.07	941.34	*C/L IG
STORE	20444	48726.87	46551.64	941.38	*IG
STORE	20445	48747.01	46506.94	942.03	*IG
STORE	20446	48765.29	46462.86	942.12	*IG
STORE	20447	48665.65	46409.82	941.94	*IG
STORE	20448	48652.68	46452.00	941.59	*IG
STORE	20449	48638.29	46492.91	941.36	*IG
STORE	20450	48623.53	46534.80	941.66	*IG
STORE	20451	48617.38	46551.69	941.63	*C/L IG
STORE	20452	48600.25	46599.30	941.89	*IG
STORE	20453	48584.42	46647.03	942.22	*IG

STORE	20454	48567.54	46692.02	942.63	*IG
STORE	20455	48469.02	46647.74	943.21	*IG
STORE	20456	48485.87	46607.08	943.18	*IG
STORE	20457	48505.93	46560.95	942.69	*IG
STORE	20458	48527.09	46508.91	942.26	*C/L IG
STORE	20459	48546.80	46460.90	941.90	*IG
STORE	20460	48566.05	46413.61	941.72	*IG
STORE	20461	48586.10	46363.43	941.68	*IG
STORE	20462	48435.25	46469.36	942.73	*C/L IG
STORE	20463	48451.80	46423.18	942.07	*IG
STORE	20464	48469.11	46374.04	942.15	*IG
STORE	20465	48487.61	46322.86	942.09	*IG
STORE	20466	48418.18	46516.76	943.01	*IG
STORE	20467	48401.11	46563.96	943.46	*IG
STORE	20468	48384.25	46610.84	943.67	*IG
STORE	20469	48306.49	46597.00	944.01	*IG
STORE	20470	48316.30	46552.47	943.91	*IG
STORE	20471	48326.74	46506.11	943.67	*IG
STORE	20472	48342.06	46433.59	943.34	*C/L IG
STORE	20473	48352.25	46385.02	942.73	*IG
STORE	20474	48362.75	46337.49	942.51	*IG
STORE	20475	48374.50	46287.31	942.29	*IG
STORE	20476	48287.39	46248.62	942.58	*IG
STORE	20477	48275.27	46292.54	942.94	*IG
STORE	20478	48264.94	46334.66	943.01	*IG
STORE	20479	48247.40	46401.19	943.57	*C/L IG
STORE	20480	48234.85	46449.58	943.80	*IG
STORE	20481	48223.09	46496.37	943.67	*IG
STORE	20482	48210.98	46546.38	944.29	*IG
STORE	20483	48116.84	46542.91	944.37	*IG
STORE	20484	48125.95	46499.88	944.42	*IG
STORE	20485	48135.04	46455.18	944.40	*IG
STORE	20486	48144.35	46407.98	944.13	*IG
STORE	20487	48151.66	46372.28	944.00	*C/L IG
STORE	20488	48161.08	46329.22	943.62	*IG
STORE	20489	48169.79	46284.70	943.65	*IG
STORE	20490	48178.37	46237.97	943.22	*IG
STORE	20491	48073.59	46205.85	944.60	*TOE
STORE	20492	48069.32	46205.36	946.80	*TOP CONC
STORE	20493	48067.69	46205.06	945.38	*IC
STORE	20494	48066.69	46204.86	945.38	*IC
STORE	20495	48065.16	46204.31	946.77	*TOP CONC
STORE	20496	48059.72	46203.59	944.35	*TOE
STORE	20497	48048.35	46251.69	944.83	*TOE
STORE	20498	48052.40	46252.55	946.84	*TOP CONC
STORE	20499	48056.53	46253.79	946.73	*TOP CONC
STORE	20500	48054.17	46253.19	945.20	*IC
STORE	20501	48055.16	46253.49	945.21	*IC
STORE	20502	48060.35	46254.88	944.72	*TOE
STORE	20503	48066.87	46256.30	944.53	*IG
STORE	20504	48060.71	46303.97	944.15	*IG
STORE	20505	48044.93	46298.98	944.99	*TOE
STORE	20506	48041.23	46297.81	946.64	*TOP CONC
STORE	20507	48037.00	46295.70	946.84	*TOP CONC
STORE	20508	48039.77	46296.99	945.16	*IC
STORE	20509	48038.78	46296.61	945.16	*IC
STORE	20510	48033.20	46294.18	944.63	*TOE
STORE	20511	48054.85	46347.12	944.63	*C/L IG
STORE	20512	48021.07	46339.01	945.05	*TOE
STORE	20513	48017.49	46337.31	946.61	*TOP CONC
STORE	20514	48015.51	46336.46	945.09	*C/L CONC. IRR
STORE	20515	48013.03	46335.83	946.82	*TOP CONC
STORE	20516	48008.94	46334.85	944.75	*TOE
STORE	20517	47979.79	46366.20	944.46	*TOE
STORE	20518	47982.20	46368.47	946.67	*TOP CONC
STORE	20519	47985.18	46371.76	946.67	*TOP CONC
STORE	20520	47983.53	46370.07	945.06	*IC
STORE	20521	47984.27	46370.78	945.06	*IC
STORE	20522	47988.16	46374.43	945.24	*TOE
STORE	20523	48044.87	46424.95	944.63	*IG
STORE	20524	48038.15	46470.40	944.64	*IG
STORE	20525	47955.57	46404.95	945.33	*TOE
STORE	20526	47953.13	46402.50	946.74	*TOP CONC
STORE	20527	47949.88	46399.41	946.66	*TOP CONC
STORE	20528	47951.14	46400.43	945.02	*IC
STORE	20529	47951.91	46401.18	945.04	*IC
STORE	20530	47947.64	46396.88	944.38	*TOE
STORE	20531	47989.34	46185.01	943.34	*IG
STORE	20532	47980.28	46230.18	943.49	*IG

STORE	20533	47968.35	46275.55	943.43	*IG
STORE	20534	47957.19	46325.62	943.88	*C/L IG
STORE	20535	47945.61	46373.63	943.86	*IG
STORE	20536	47938.48	46404.63	944.50	*TOE
STORE	20537	47935.20	46423.17	945.48	*TOE
STORE	20538	47923.11	46466.22	944.74	*IG
STORE	20539	47922.17	46434.14	945.47	*TOE
STORE	20540	47920.04	46432.11	946.56	*TOP CONC
STORE	20541	47916.95	46428.64	946.54	*TOP CONC
STORE	20542	47919.00	46430.62	944.96	*IC
STORE	20543	47918.19	46429.82	944.96	*IC
STORE	20544	47914.47	46425.51	944.41	*TOE
STORE	20545	47827.23	46457.09	944.58	*IG
STORE	20546	47837.96	46413.89	943.63	*IG
STORE	20547	47846.46	46367.41	943.50	*IG
STORE	20548	47858.58	46307.84	943.27	*C/L IG
STORE	20549	47868.07	46262.98	943.17	*IG
STORE	20550	47876.98	46218.38	942.95	*IG
STORE	20551	47887.08	46173.51	943.01	*IG
STORE	20552	47781.18	46158.05	942.53	*IG
STORE	20553	47774.70	46202.15	942.78	*IG
STORE	20554	47767.54	46244.79	943.26	*IG
STORE	20555	47759.99	46293.85	943.24	*C/L IG
STORE	20556	47753.42	46338.92	943.46	*IG
STORE	20557	47744.11	46384.52	944.05	*TOE
STORE	20558	47742.00	46388.29	945.89	*TOP CONC
STORE	20559	47742.40	46391.32	944.08	*IC
STORE	20560	47742.39	46392.65	944.09	*IC
STORE	20561	47742.07	46395.16	945.87	*TOP CONC
STORE	20562	47741.95	46401.30	944.91	*IG
STORE	20563	47739.61	46419.99	944.45	*IG
STORE	20564	47739.51	46422.52	945.18	*FL 6FT CHAINLK
STORE	20565	47648.97	46343.21	944.83	*FL 6FT CHAINLK
STORE	20566	47649.39	46340.71	943.97	*IG
STORE	20567	47652.78	46324.17	944.38	*IG
STORE	20568	47653.88	46318.03	945.56	*TOP CONC
STORE	20569	47654.12	46315.70	943.76	*IC
STORE	20570	47654.31	46314.29	943.76	*IC
STORE	20571	47655.25	46312.56	945.55	*TOP CONC
STORE	20572	47656.72	46306.40	943.38	*IG
STORE	20573	47660.28	46283.21	943.20	*C/L IG
STORE	20574	47669.85	46234.33	942.92	*IG
STORE	20575	47678.82	46187.99	942.63	*IG
STORE	20576	47686.21	46143.82	942.48	*IG
STORE	20577	47642.80	46371.06	944.31	*IG
STORE	20578	47635.42	46405.68	944.64	*IG
STORE	20579	47561.41	46267.09	944.45	*FL IG 6FTCHAINLK
STORE	20580	47560.39	46276.85	944.16	*C/L IG
STORE	20581	47555.92	46317.33	943.86	*IG
STORE	20582	47552.63	46341.58	943.79	*IG
STORE	20583	47552.59	46347.20	939.47	*IG
STORE	20584	47548.18	46381.69	938.52	*IG
STORE	20585	47548.12	46386.36	936.42	*TOE
STORE	20586	47449.98	46169.38	943.96	*FL IG
STORE	20587	47455.80	46219.91	943.73	*IG
STORE	20588	47462.91	46274.08	943.50	*C/L IG
STORE	20589	47461.66	46283.30	938.86	*IG
STORE	20590	47466.32	46320.33	937.69	*IG
STORE	20591	47466.81	46323.64	935.87	*TOE
STORE	20592	47372.63	46141.62	943.18	*IG
STORE	20593	47365.29	46224.65	944.02	*IG
STORE	20594	47365.33	46229.14	942.32	*IG
STORE	20595	47362.67	46252.96	940.35	*IG
STORE	20596	47362.21	46261.01	935.95	*TOE
STORE	20597	47362.43	46274.14	935.28	*TOE
STORE	20598	47360.67	46277.07	937.63	*IG
STORE	20599	47358.12	46297.80	938.21	*IG
STORE	20600	47357.58	46310.95	943.44	*IG
STORE	20601	47355.58	46372.08	943.90	*IG
STORE	20602	47355.27	46390.78	944.47	*IG
STORE	20603	47357.37	46445.85	944.36	*IG
STORE	20604	47464.09	46339.44	936.44	*TOE
STORE	20605	47469.52	46357.31	943.83	*IG
STORE	20606	47472.97	46389.61	944.65	*IG
STORE	20607	47477.45	46439.66	944.82	*IG
STORE	20608	47481.72	46469.19	945.41	*IG
STORE	20609	47547.71	46406.33	936.51	*TOE
STORE	20610	47546.30	46420.62	944.09	*IG
STORE	20611	47542.94	46436.58	944.78	*IG

STORE	20612	47543.61	46462.46	945.45	*IG
STORE	20613	47538.35	46492.16	945.41	*IG
STORE	20614	47561.53	46264.23	943.57	*IG
STORE	20615	47563.57	46247.42	943.96	*IG
STORE	20616	47563.99	46239.97	945.22	*TOP CONC
STORE	20617	47563.73	46237.05	943.37	*IC
STORE	20618	47563.55	46235.50	943.38	*IC
STORE	20619	47564.49	46233.67	945.19	*TOP CONC
STORE	20620	47565.28	46229.25	943.23	*IG
STORE	20621	47569.74	46174.84	942.59	*IG
STORE	20622	47450.66	46166.61	943.07	*IG
STORE	20623	47448.15	46146.06	943.44	*IG
STORE	20624	47447.33	46138.72	944.70	*TOP CONC
STORE	20625	47446.33	46131.26	944.62	*TOP CONC
STORE	20626	47446.84	46134.22	942.86	*IC
STORE	20627	47446.48	46135.37	942.84	*IC
STORE	20628	47445.92	46125.87	942.93	*IG
STORE	20629	47243.60	46426.75	943.36	*IG
STORE	20630	47240.36	46455.09	943.54	*IG
STORE	20631	47248.00	46385.45	943.20	*IG
STORE	20632	47250.32	46365.36	942.66	*IG
STORE	20633	47252.44	46344.05	942.69	*IG
STORE	20634	47254.04	46327.37	942.80	*IG
STORE	20635	47257.38	46303.48	942.29	*IG
STORE	20636	47258.82	46293.44	941.32	*IG
STORE	20637	47259.44	46282.05	937.63	*IG
STORE	20638	47260.58	46273.64	937.27	*C/L IG
STORE	20639	47262.98	46252.91	937.15	*IG
STORE	20640	47263.18	46247.60	935.07	*TOE
STORE	20641	47267.26	46239.01	935.36	*TOE
STORE	20642	47266.26	46226.20	943.79	*IG
STORE	20643	47269.79	46197.73	942.38	*IG
STORE	20644	47275.90	46150.80	942.14	*IG
STORE	20645	47226.49	46240.04	936.16	*IH
STORE	20646	47226.34	46241.43	936.17	*IH
STORE	20647	47221.56	46241.88	936.13	*IH
STORE	20648	47219.02	46235.58	937.84	*IH
STORE	20649	47217.98	46232.68	937.86	*IH
STORE	20650	47214.52	46230.69	937.79	*IH
STORE	20651	47216.48	46227.07	937.91	*IH
STORE	20652	47219.95	46229.13	937.93	*IH
STORE	20653	47222.78	46228.35	938.05	*IH
STORE	20654	47216.23	46229.02	932.76	*INV 24INCONCPIPE
STORE	20655	47163.64	46197.91	932.40	*INV 24INCONCPIPE
STORE	20656	47160.84	46200.22	934.44	*IH
STORE	20657	47163.50	46199.42	936.47	*IH
STORE	20658	47164.92	46196.66	936.47	*IH
STORE	20659	47164.34	46194.11	934.64	*IH
STORE	20660	47172.82	46183.59	941.83	*IG
STORE	20661	47173.45	46202.10	941.24	*IG
STORE	20662	47156.98	46209.17	941.52	*IG
STORE	20663	47223.10	46216.74	941.48	*IG
STORE	20664	47208.33	46241.61	938.74	*IG
STORE	20665	47217.84	46049.35	941.26	*GL
STORE	20666	47224.80	46079.81	940.86	*GL
STORE	20667	47112.18	46136.76	941.10	*IG
STORE	20668	47112.39	46110.12	941.67	*IG
STORE	20669	47111.63	46151.24	933.76	*TOE
STORE	20670	47118.48	46166.67	933.94	*TOE
STORE	20671	47113.55	46178.32	941.37	*IG
STORE	20672	47113.73	46267.73	940.68	*IG
STORE	20673	47113.72	46276.01	937.36	*IG
STORE	20674	47113.94	46298.14	936.64	*IG
STORE	20675	47113.53	46304.73	935.57	*IG
STORE	20676	47113.90	46316.38	936.83	*IG
STORE	20677	47113.57	46340.79	937.29	*IG
STORE	20678	47114.21	46373.08	938.85	*IG
STORE	20679	47114.52	46393.57	939.51	*IG
STORE	20680	47113.42	46433.61	939.33	*IG
STORE	20681	47010.23	46433.32	935.91	*IG
STORE	20682	47011.10	46404.32	936.00	*IG
STORE	20683	47011.16	46401.69	936.58	*IG
STORE	20684	47011.70	46383.91	936.62	*IG
STORE	20685	47011.92	46381.66	936.03	*IG
STORE	20686	46974.89	46403.73	934.80	*INV. 12IN PVC
STORE	20687	47004.64	46377.16	934.86	*INV. 12IN PVC
STORE	20688	47012.43	46369.88	935.13	*IG
STORE	20689	47012.33	46358.98	936.20	*IG
STORE	20690	47013.02	46323.61	936.14	*IG

STORE	20691	47014.41	46245.33	940.13	*IG
STORE	20692	47015.59	46202.23	940.90	*IG
STORE	20693	47015.87	46158.84	941.03	*IG
STORE	20694	47016.44	46141.35	941.77	*IG
STORE	20695	47017.16	46114.48	941.84	*IG
STORE	20696	46963.78	46113.23	941.79	*IG
STORE	20697	46962.98	46148.07	941.59	*IG
STORE	20698	46963.16	46161.96	940.69	*IG
STORE	20699	46962.45	46232.76	940.25	*IG
STORE	20700	46959.92	46272.71	938.78	*C/L IG
STORE	20701	46959.87	46347.16	936.17	*IG
STORE	20702	46958.69	46374.81	935.85	*IG
STORE	20703	46958.91	46381.93	936.41	*IG
STORE	20704	46959.15	46401.13	936.11	*IG
STORE	20705	46958.82	46403.07	935.54	*IG
STORE	20706	46958.78	46418.56	935.09	*IG
STORE	20707	46958.02	46429.15	935.88	*IG
STORE	20708	46858.41	46426.36	935.87	*IG
STORE	20709	46859.03	46385.53	936.19	*IG
STORE	20710	46859.39	46330.71	937.29	*IG
STORE	20711	46860.55	46272.95	938.56	*C/L IG
STORE	20712	46861.87	46221.19	939.62	*IG
STORE	20713	46863.41	46167.75	940.44	*IG
STORE	20714	46863.93	46144.94	941.37	*IG
STORE	20715	46864.77	46118.02	941.26	*IG
STORE	20716	46762.68	46115.87	939.71	*IG
STORE	20717	46762.25	46156.25	939.56	*IG
STORE	20718	46761.50	46200.32	938.59	*IG
STORE	20719	46760.75	46238.26	938.64	*IG
STORE	20720	46760.32	46272.79	938.91	*C/L IG
STORE	20721	46759.63	46323.62	938.14	*IG
STORE	20722	46758.82	46374.38	937.32	*IG
STORE	20723	46757.99	46425.19	936.80	*IG
STORE	20724	46662.06	46433.90	937.33	*IG
STORE	20725	46661.86	46381.87	937.93	*IG
STORE	20726	46661.19	46327.53	938.69	*IG
STORE	20727	46660.72	46272.79	938.39	*C/L IG
STORE	20728	46672.06	46266.06	938.44	*GL
STORE	20729	46660.20	46213.25	937.01	*IG
STORE	20730	46659.85	46168.11	938.32	*IG
STORE	20731	46659.67	46120.17	938.83	*IG
STORE	20732	46560.86	46123.59	938.33	*IG
STORE	20733	46560.83	46155.97	938.21	*IG
STORE	20734	46560.73	46187.68	936.74	*IG
STORE	20735	46560.41	46229.49	936.29	*IG
STORE	20736	46560.50	46272.54	937.28	*C/L IG
STORE	20737	46560.52	46325.24	937.53	*IG
STORE	20738	46561.04	46376.05	937.67	*IG
STORE	20739	46560.94	46427.13	938.23	*IG
STORE	20740	46459.86	46439.27	935.52	*IG
STORE	20741	46454.55	46440.63	935.75	*IG
STORE	20742	46448.58	46442.78	938.50	*IG
STORE	20743	46459.68	46386.44	935.16	*IG
STORE	20744	46460.17	46319.78	935.87	*IG
STORE	20745	46460.48	46272.20	935.08	*C/L IG
STORE	20746	46461.03	46213.66	934.98	*IG
STORE	20747	46461.57	46156.19	937.50	*IG
STORE	20748	46461.91	46117.58	937.50	*IG
STORE	20749	46382.39	46272.26	933.47	*IG
STORE	20750	46364.15	46271.89	937.94	*IG
STORE	20751	46360.67	46421.70	938.78	*IG
STORE	20752	46361.33	46370.41	938.48	*IG
STORE	20753	46360.69	46309.10	937.90	*IG
STORE	20754	46360.79	46268.97	938.18	*IG
STORE	20755	46360.31	46252.15	933.19	*IG
STORE	20756	46360.88	46194.62	933.71	*IG
STORE	20757	46358.34	46148.14	935.21	*IG
STORE	20758	46359.06	46113.22	935.20	*IG
STORE	20759	46255.77	46112.57	931.86	*IG
STORE	20760	46256.73	46146.40	931.68	*IG
STORE	20761	46257.76	46177.79	930.43	*IG
STORE	20762	46258.16	46191.40	934.90	*IG
STORE	20763	46259.26	46231.16	936.85	*IG
STORE	20764	46260.34	46259.37	936.56	*IG
STORE	20765	46260.62	46271.99	936.88	*C/L IG
STORE	20766	46261.22	46322.80	937.77	*IG
STORE	20767	46262.04	46375.74	938.12	*IG
STORE	20768	46263.10	46429.68	937.94	*IG
STORE	20769	46162.08	46422.43	936.43	*IG

STORE	20770	46161.76	46371.01	936.64	*IG
STORE	20771	46160.82	46300.31	937.18	*IG
STORE	20772	46160.59	46271.84	936.65	*C/L IG
STORE	20773	46160.38	46259.47	936.53	*IG
STORE	20774	46159.92	46228.09	935.06	*IG
STORE	20775	46160.12	46185.82	936.20	*IG
STORE	20776	46160.50	46170.89	927.84	*IG
STORE	20777	46159.71	46120.53	928.27	*IG
STORE	20778	46138.60	46160.80	927.39	*TOE
STORE	20779	46108.84	46193.07	927.64	*TOE
STORE	20780	46104.75	46272.02	927.76	*TOE
STORE	20781	46106.32	46325.16	928.26	*TOE
STORE	20782	46105.12	46378.23	928.17	*TOE
STORE	20783	46100.67	46427.75	927.44	*TOE
STORE	20784	46123.37	46426.03	936.27	*TOP IG
STORE	20785	46123.17	46376.35	936.31	*TOP IG
STORE	20786	46120.56	46323.75	936.09	*TOP IG
STORE	20787	46120.19	46271.90	935.77	*TOP IG
STORE	20788	46120.72	46229.09	934.65	*TOP IG
STORE	20789	46124.56	46194.57	934.50	*TOP IG
STORE	20790	46044.37	46180.51	926.09	*TOP IG
STORE	20791	46039.42	46185.44	923.04	*TOE
STORE	20792	46055.22	46271.69	925.85	*TOP IG
STORE	20793	46050.90	46273.65	922.68	*TOE
STORE	20794	46062.72	46321.99	925.91	*TOP IG
STORE	20795	46057.73	46322.47	922.04	*TOE
STORE	20796	46070.61	46377.81	926.15	*TOP IG
STORE	20797	46064.40	46378.68	922.53	*TOE
STORE	20798	46074.12	46425.32	925.46	*TOP IG
STORE	20799	46068.89	46424.78	922.71	*TOE
STORE	20800	46023.40	46183.44	924.82	*TOP IG
STORE	20801	46028.45	46183.51	922.86	*TOE
STORE	20802	46037.43	46271.62	924.64	*TOP IG
STORE	20803	46041.66	46270.91	922.61	*TOE
STORE	20804	46049.17	46323.48	922.61	*TOE
STORE	20805	46046.28	46323.94	924.58	*TOP IG
STORE	20806	46052.14	46380.23	924.38	*TOP IG
STORE	20807	46055.84	46379.39	922.32	*TOE
STORE	20808	46058.21	46425.23	922.50	*TOE
STORE	20809	46054.34	46425.16	924.15	*TOP IG
STORE	20810	46028.52	46435.23	923.69	*FL IG
STORE	20811	46021.39	46387.41	924.01	*FL IG 5FTCHAINLK
STORE	20812	46013.18	46333.45	924.14	*FL IG 5FTCHAINLK
STORE	20813	46004.34	46271.99	924.25	*FL IG 5FTCHAINLK
STORE	20814	45997.76	46227.79	924.55	*FL IG 5FTCHAINLK
STORE	20815	45990.39	46177.50	924.28	*FL IG 5FTCHAINLK
STORE	20816	45982.78	46126.13	924.70	*FL IG 5FTCHAINLK
STORE	20817	45971.39	46047.22	924.97	*FC IG
STORE	20818	46047.41	46047.07	926.29	*FL IG
STORE	20819	46042.29	46441.81	924.20	*TOP IG
STORE	20820	46046.27	46445.51	922.46	*TOE
STORE	20821	46025.86	46459.20	924.58	*TOP IG
STORE	20822	46026.81	46464.98	921.78	*TOE
STORE	20823	45997.25	46466.13	923.17	*TOP IG
STORE	20824	45998.39	46471.41	921.97	*TOE
STORE	20825	46027.11	46475.82	924.03	*TOP IG
STORE	20826	46025.05	46472.30	921.94	*TOE
STORE	20827	46057.29	46454.23	924.11	*TOP IG
STORE	20828	46054.10	46452.41	922.56	*TOE
STORE	20829	45970.99	46271.82	920.02	*C/L IG
STORE	20830	45960.44	46271.27	919.54	*C/L IG
STORE	20831	45960.79	46242.68	920.49	*IG
STORE	20832	45957.57	46183.78	923.14	*IG
STORE	20833	45957.87	46205.40	921.34	*IG
STORE	20834	45962.72	46109.12	923.23	*IG
STORE	20835	45945.41	46113.07	921.30	*IG
STORE	20836	45923.01	46114.31	920.85	*IG
STORE	20837	45924.82	46164.97	920.39	*IG
STORE	20838	45930.70	46214.23	919.96	*IG
STORE	20839	45941.14	46271.93	919.61	*C/L IG
STORE	20840	45960.34	46321.49	919.12	*IG
STORE	20841	45953.79	46322.73	919.18	*IG
STORE	20842	45972.78	46322.67	919.43	*IG
STORE	20843	45985.47	46324.30	921.46	*IG
STORE	20844	45956.57	46360.43	919.26	*IG
STORE	20845	45981.36	46361.45	919.08	*IG
STORE	20846	45969.32	46401.09	919.20	*IG
STORE	20847	46004.81	46387.10	922.36	*IG
STORE	20848	45912.58	46114.72	926.01	*TOP IG

STORE	20849	45908.83	46165.75	926.02	*TOP IG
STORE	20850	45914.55	46215.84	926.25	*TOP IG
STORE	20851	45919.93	46269.60	926.55	*TOP IG
STORE	20852	45928.25	46312.10	926.38	*TOP IG
STORE	20853	45936.40	46364.31	926.71	*TOP IG
STORE	20854	45865.28	46506.23	924.53	*PT. 37
STORE	20855	45783.38	46011.00	921.83	*PT. 38
STORE	20856	45944.07	46416.22	926.89	*TOP IG
STORE	20857	45938.09	46464.75	925.69	*TOP IG
STORE	20858	45944.21	46489.27	924.32	*TOP IG
STORE	20859	45917.19	46498.57	926.10	*TOP IG
STORE	20860	45915.67	46484.41	918.60	*TOE
STORE	20861	45915.47	46481.55	918.36	*TOE
STORE	20862	45911.48	46471.67	925.06	*TOP IG
STORE	20863	45889.18	46477.25	924.00	*TOP IG
STORE	20864	45890.69	46482.63	917.72	*TOE
STORE	20865	45863.00	46482.59	923.01	*TOP IG
STORE	20866	45863.96	46492.10	917.51	*TOE
STORE	20867	45864.17	46496.93	916.96	*TOE
STORE	20868	45835.70	46486.91	922.89	*TOP IG
STORE	20869	45835.71	46494.25	916.96	*TOE
STORE	20870	45804.38	46490.05	922.20	*TOP IG
STORE	20871	45804.91	46494.82	916.93	*TOE
STORE	20872	45804.96	46498.45	916.86	*TOE
STORE	20873	45806.51	46506.57	922.95	*TOP IG
STORE	20874	45836.37	46505.43	924.08	*TOP IG
STORE	20875	45835.16	46498.35	916.99	*TOE
STORE	20876	45720.17	46512.41	921.76	*TOP IG
STORE	20877	45721.81	46506.50	916.68	*TOE
STORE	20878	45698.99	46497.60	916.68	*TOE
STORE	20879	45697.31	46502.09	921.30	*TOP IG
STORE	20880	45672.65	46494.42	921.51	*TOP IG
STORE	20881	45673.85	46488.70	916.63	*TOE
STORE	20882	45647.78	46485.51	916.40	*TOE
STORE	20883	45648.33	46492.04	921.17	*TOP IG
STORE	20884	45723.54	46500.46	921.66	*TOP IG
STORE	20885	45722.53	46503.58	916.46	*TOE
STORE	20886	45699.30	46494.16	916.36	*TOE
STORE	20887	45700.58	46491.08	920.82	*TOP IG
STORE	20888	45673.71	46481.64	920.07	*TOP IG
STORE	20889	45673.91	46485.51	916.10	*TOE
STORE	20890	45649.02	46482.87	915.97	*TOE
STORE	20891	45649.19	46479.61	920.58	*TOP IG
STORE	20892	45934.53	46417.62	926.74	*TOP IG
STORE	20893	45929.09	46417.85	925.70	*TOE
STORE	20894	45925.70	46418.54	925.62	*TOE
STORE	20895	45921.20	46419.07	926.80	*TOP
STORE	20896	45918.60	46419.37	927.36	*NTR
STORE	20897	45913.80	46420.59	927.37	*STR
STORE	20898	45910.03	46420.83	926.78	*TOP
STORE	20899	45897.27	46422.32	925.10	*IG
STORE	20900	45888.80	46423.74	922.60	*TOE
STORE	20901	45883.79	46370.39	920.83	*TOE
STORE	20902	45898.49	46370.11	925.14	*IG
STORE	20903	45903.57	46368.51	926.52	*TOP
STORE	20904	45906.11	46368.30	927.09	*STR
STORE	20905	45910.97	46367.39	927.06	*NTR
STORE	20906	45913.58	46366.88	926.53	*TOP
STORE	20907	45917.98	46366.58	925.29	*TOE
STORE	20908	45922.56	46366.12	925.44	*TOE
STORE	20909	45928.99	46365.10	926.46	*TOP IG
STORE	20910	45918.43	46315.10	927.14	*TOP IG
STORE	20911	45913.43	46315.72	925.44	*TOE
STORE	20912	45909.23	46316.28	925.22	*TOE
STORE	20913	45906.04	46316.28	926.27	*TOP
STORE	20914	45903.58	46316.84	926.81	*NTR
STORE	20915	45898.63	46317.55	926.80	*STR
STORE	20916	45896.13	46317.80	926.27	*TOP
STORE	20917	45879.49	46320.51	921.33	*TOE
STORE	20918	45871.05	46271.67	921.14	*TOE
STORE	20919	45874.84	46271.92	922.98	*IG
STORE	20920	45889.28	46271.98	925.97	*TOP
STORE	20921	45891.89	46271.74	926.60	*STR
STORE	20922	45896.87	46271.59	926.64	*NTR
STORE	20923	45899.43	46271.40	926.07	*TOP
STORE	20924	45903.03	46271.38	925.13	*TOE
STORE	20925	45906.18	46271.59	925.21	*TOE
STORE	20926	45911.66	46271.75	926.42	*TOP IG
STORE	20927	45904.01	46217.13	926.39	*TOP IG

STORE	20928	45899.55	46218.34	924.97	*TOE
STORE	20929	45896.22	46218.27	924.70	*TOE
STORE	20930	45891.61	46219.25	925.91	*TOP
STORE	20931	45889.16	46219.33	926.43	*NTR
STORE	20932	45884.35	46220.25	926.45	*STR
STORE	20933	45881.84	46220.51	925.92	*TOP
STORE	20934	45871.23	46221.50	923.50	*IG
STORE	20935	45865.86	46222.06	921.09	*TOE
STORE	20936	45858.27	46172.76	921.64	*TOE
STORE	20937	45874.43	46170.42	925.57	*TOP
STORE	20938	45876.97	46170.18	926.18	*STR
STORE	20939	45881.85	46169.52	926.22	*NTR
STORE	20940	45884.65	46168.86	925.75	*TOP
STORE	20941	45889.26	46168.35	924.59	*TOE
STORE	20942	45892.44	46167.96	924.70	*TOE
STORE	20943	45896.05	46167.75	925.61	*TOP IG
STORE	20944	45889.65	46165.45	924.55	*RR RG
STORE	20945	45897.94	46116.66	925.71	*TOP IG
STORE	20946	45891.32	46117.44	924.05	*TOE
STORE	20947	45881.76	46118.78	924.25	*TOE
STORE	20948	45877.04	46119.77	925.52	*TOP
STORE	20949	45874.68	46120.21	926.08	*NTR
STORE	20950	45869.75	46120.72	926.04	*STR
STORE	20951	45867.15	46121.43	925.50	*TOP
STORE	20952	45850.28	46123.40	922.27	*TOE
STORE	20953	45868.04	46424.85	921.85	*IG
STORE	20954	45843.65	46427.84	921.66	*IG
STORE	20955	45809.86	46431.69	922.28	*IG
STORE	20956	45798.48	46433.02	922.24	*IG
STORE	20957	45796.63	46433.13	921.77	*IG
STORE	20958	45780.85	46434.91	922.34	*RE
STORE	20959	45772.96	46379.97	922.28	*RE
STORE	20960	45789.06	46376.54	921.68	*IG
STORE	20961	45790.92	46375.06	922.11	*IG
STORE	20962	45810.26	46372.53	921.52	*IG
STORE	20963	45836.99	46371.67	921.66	*IG
STORE	20964	45840.78	46371.33	921.65	*IG
STORE	20965	45862.80	46371.15	921.06	*IG
STORE	20966	45857.23	46322.05	920.79	*IG
STORE	20967	45844.39	46322.57	920.42	*IG
STORE	20968	45838.17	46322.77	920.85	*IG
STORE	20969	45810.35	46324.21	921.21	*IG
STORE	20970	45791.08	46325.15	921.99	*IG
STORE	20971	45785.10	46325.85	921.96	*IG
STORE	20972	45784.00	46325.90	921.53	*IG
STORE	20973	45764.73	46325.90	922.36	*RE
STORE	20974	45756.77	46271.08	922.21	*RE
STORE	20975	45774.60	46271.55	921.12	*IG
STORE	20976	45776.97	46271.63	921.49	*IG
STORE	20977	45785.71	46271.59	921.32	*IG
STORE	20978	45810.59	46271.95	920.95	*IG
STORE	20979	45819.58	46272.35	921.38	*IG
STORE	20980	45835.15	46272.44	920.50	*IG
STORE	20981	45832.23	46222.40	920.76	*IG
STORE	20982	45812.00	46222.25	921.46	*IG
STORE	20983	45802.87	46222.32	920.53	*IG
STORE	20984	45777.28	46222.65	921.57	*IG
STORE	20985	45770.05	46222.68	921.36	*IG
STORE	20986	45767.46	46222.53	921.04	*IG
STORE	20987	45749.48	46222.91	922.30	*RE
STORE	20988	45742.24	46173.07	922.27	*RE
STORE	20989	45761.75	46173.53	921.02	*IG
STORE	20990	45774.67	46172.06	921.52	*IG
STORE	20991	45789.61	46172.83	920.88	*IG
STORE	20992	45803.91	46172.41	921.39	*IG
STORE	20993	45810.58	46172.48	920.96	*IG
STORE	20994	45830.64	46172.28	920.95	*IG
STORE	20995	45828.62	46122.34	920.90	*IG
STORE	20996	45810.56	46123.00	920.92	*IG
STORE	20997	45783.07	46122.60	920.90	*IG
STORE	20998	45755.67	46122.87	921.30	*IG
STORE	20999	45754.27	46122.98	920.68	*IG
STORE	21000	45734.86	46122.62	922.31	*RE
STORE	21001	45695.44	46123.33	922.33	*RE
STORE	21002	45714.63	46122.55	922.60	*RC
STORE	21003	45722.08	46173.00	922.57	*RC
STORE	21004	45702.15	46173.04	922.32	*RE
STORE	21005	45709.68	46222.67	922.29	*RE
STORE	21006	45729.18	46222.56	922.55	*RC

STORE	21007	45736.17	46270.89	922.48	*RC
STORE	21008	45716.40	46270.81	922.20	*RE
STORE	21009	45725.22	46327.39	922.35	*RE
STORE	21010	45744.43	46326.61	922.55	*RC
STORE	21011	45751.31	46374.02	922.65	*RC
STORE	21012	45732.01	46374.67	922.48	*RE
STORE	21013	45741.26	46438.99	922.70	*RE
STORE	21014	45760.42	46436.66	922.72	*RC
STORE	21015	45713.27	46420.81	919.90	*IG
STORE	21016	45699.34	46420.58	919.99	*IG
STORE	21017	45680.27	46420.76	920.13	*IG
STORE	21018	45668.84	46420.20	919.80	*IG
STORE	21019	45658.97	46420.24	920.19	*IG
STORE	21020	45635.90	46420.18	920.35	*IG
STORE	21021	45611.80	46420.05	920.82	*IG
STORE	21022	45586.16	46419.62	921.26	*IG
STORE	21023	45560.97	46419.20	922.30	*IG
STORE	21024	45535.50	46418.54	922.74	*IG
STORE	21025	45523.66	46418.51	922.23	*TOP IG
STORE	21026	45512.07	46418.63	915.37	*TOE
STORE	21027	45484.84	46370.01	915.65	*TOE
STORE	21028	45505.12	46369.67	921.95	*TOP IG
STORE	21029	45535.92	46369.70	923.26	*IG
STORE	21030	45561.13	46369.73	922.13	*IG
STORE	21031	45585.79	46369.60	921.01	*IG
STORE	21032	45611.56	46370.09	920.79	*IG
STORE	21033	45636.19	46369.83	920.46	*IG
STORE	21034	45659.43	46370.25	920.22	*IG
STORE	21035	45661.10	46370.08	919.75	*IG
STORE	21036	45675.49	46370.33	918.97	*IG
STORE	21037	45703.54	46370.71	919.79	*IG
STORE	21038	45707.05	46320.61	920.16	*IG
STORE	21039	45694.01	46320.57	919.55	*IG
STORE	21040	45691.96	46321.02	918.76	*IG
STORE	21041	45683.16	46321.56	918.63	*IG
STORE	21042	45666.78	46321.00	919.75	*IG
STORE	21043	45660.17	46320.58	919.84	*IG
STORE	21044	45635.79	46320.21	920.26	*IG
STORE	21045	45611.21	46320.24	920.64	*IG
STORE	21046	45585.87	46319.94	920.73	*IG
STORE	21047	45560.73	46319.43	920.64	*IG
STORE	21048	45535.58	46319.18	921.22	*IG
STORE	21049	45518.68	46318.58	922.79	*IG
STORE	21050	45488.07	46318.21	921.87	*TOP IG
STORE	21051	45470.42	46319.24	915.14	*TOE
STORE	21052	45457.34	46271.48	915.25	*TOE
STORE	21053	45473.06	46271.12	921.96	*TOP IG
STORE	21054	45500.63	46270.88	922.54	*IG
STORE	21055	45535.58	46270.91	920.26	*IG
STORE	21056	45560.67	46270.84	920.15	*IG
STORE	21057	45585.69	46271.43	919.83	*IG
STORE	21058	45610.71	46271.25	920.00	*IG
STORE	21059	45635.78	46271.25	919.77	*IG
STORE	21060	45660.84	46271.16	919.26	*IG
STORE	21061	45679.98	46270.61	918.27	*IG
STORE	21062	45685.97	46270.82	918.87	*IG
STORE	21063	45687.68	46270.87	919.49	*IG
STORE	21064	45710.63	46270.74	921.30	*IG
STORE	21065	45688.51	46220.10	919.68	*IG
STORE	21066	45675.10	46220.71	919.24	*IG
STORE	21067	45667.20	46220.49	918.24	*IG
STORE	21068	45660.14	46220.69	918.18	*IG
STORE	21069	45635.47	46221.34	919.39	*IG
STORE	21070	45610.46	46221.75	919.59	*IG
STORE	21071	45585.32	46221.49	919.68	*IG
STORE	21072	45560.68	46222.34	919.36	*IG
STORE	21073	45535.88	46222.80	919.56	*IG
STORE	21074	45513.52	46223.00	920.18	*IG
STORE	21075	45485.26	46223.61	922.29	*IG
STORE	21076	45456.89	46223.87	921.71	*TOP IG
STORE	21077	45440.23	46223.67	915.06	*TOE
STORE	21078	45424.52	46189.42	915.36	*TOE
STORE	21079	45444.83	46187.42	922.10	*TOP IG
STORE	21080	45470.08	46185.91	922.24	*IG
STORE	21081	45500.37	46182.78	919.70	*IG
STORE	21082	45535.93	46180.06	919.14	*IG
STORE	21083	45560.82	46177.49	919.21	*IG
STORE	21084	45609.88	46173.32	919.27	*IG
STORE	21085	45635.36	46171.36	918.73	*IG

STORE	21086	45659.95	46169.17	918.55	*IG
STORE	21087	45681.38	46167.32	919.64	*IG
STORE	21088	45674.08	46119.79	919.51	*IG
STORE	21089	45660.39	46120.71	919.04	*IG
STORE	21090	45649.59	46121.12	918.39	*IG
STORE	21091	45635.04	46121.46	918.26	*IG
STORE	21092	45609.83	46122.15	918.97	*IG
STORE	21093	45585.13	46122.70	919.31	*IG
STORE	21094	45560.50	46122.91	918.87	*IG
STORE	21095	45536.12	46123.77	918.91	*IG
STORE	21096	45504.71	46125.38	918.75	*IG
STORE	21097	45443.20	46126.34	921.75	*IG
STORE	21098	45422.34	46128.24	921.15	*IG
STORE	21099	45413.92	46270.89	921.59	*TRV PT. 241
STORE	21100	46105.22	46108.60	926.86	*TOP IG
STORE	21101	46105.03	46100.96	922.86	*INV 60INSTEELPIP
STORE	21102	46104.69	46090.70	927.09	*TOP IG
STORE	21103	46103.99	46047.70	927.48	*FL IG
STORE	21104	46145.63	46047.14	928.99	*FL IG
STORE	21105	46145.85	46089.94	927.76	*TOP IG
STORE	21106	46147.41	46110.79	928.16	*TOP IG
STORE	21107	46146.41	46098.72	922.68	*INV 60INSTEELPIP
STORE	21108	46159.51	46774.06	936.09	*TOP IG
STORE	21109	46139.05	46778.40	925.84	*TOE
STORE	21110	46089.17	46789.88	924.33	*IG
STORE	21111	46085.69	46790.54	924.91	*FL IG
STORE	21112	46064.52	46680.79	924.50	*FL IG
STORE	21113	46108.80	46672.25	924.49	*IG
STORE	21114	46113.17	46672.09	925.71	*IG
STORE	21115	46119.24	46671.37	926.21	*TOE
STORE	21116	46140.24	46667.96	935.92	*TOP IG
STORE	21117	46129.26	46565.17	935.97	*TOP IG
STORE	21118	46104.84	46568.29	926.02	*TOE
STORE	21119	46096.51	46569.17	924.95	*IG
STORE	21120	46051.53	46575.04	923.85	*IG
STORE	21121	46049.06	46575.63	924.37	*FL IG
STORE	21122	46046.45	46575.81	924.22	*IG
STORE	21123	46040.12	46577.80	921.50	*IG
STORE	21124	46027.39	46575.25	921.14	*IG
STORE	21125	46008.92	46585.35	928.24	*IG
STORE	21126	46000.20	46583.60	928.16	*IG
STORE	21127	45987.23	46584.72	922.52	*IG
STORE	21128	45968.41	46589.04	921.70	*TOE IG
STORE	21129	45952.97	46592.76	927.03	*TOP IG
STORE	21130	45961.48	46685.19	928.10	*TOP
STORE	21131	45980.40	46680.61	922.31	*TOE
STORE	21132	46008.02	46685.43	923.41	*TOE
STORE	21133	46016.92	46683.53	928.08	*TOP IG
STORE	21134	46025.94	46682.91	928.14	*TOP IG
STORE	21135	46039.74	46681.53	922.22	*TOE
STORE	21136	46057.60	46681.29	922.10	*TOE
STORE	21137	46076.69	46791.88	921.61	*TOE
STORE	21138	46067.47	46794.09	921.26	*TOE
STORE	21139	46046.48	46795.90	928.45	*TOP IG
STORE	21140	46036.72	46798.06	928.27	*TOP IG
STORE	21141	46023.26	46801.02	923.50	*TOE
STORE	21142	45999.69	46804.73	922.95	*TOE
STORE	21143	45990.36	46806.60	927.97	*TOP IG
STORE	21144	44710.39	46107.39	920.00	*IG
STORE	21145	44705.35	46107.77	921.26	*IG
STORE	21146	44693.23	46108.44	918.84	*IG
STORE	21147	44659.51	46107.92	918.61	*IG
STORE	21148	44655.67	46107.44	919.13	*TOP CONC
STORE	21149	44650.72	46107.54	918.96	*TOP CONC
STORE	21150	44652.66	46107.16	917.27	*IC
STORE	21151	44653.65	46107.14	917.31	*IC
STORE	21152	44645.34	46107.18	917.53	*IG
STORE	21153	44681.44	46043.75	919.44	*SM
STORE	21154	44646.37	46164.88	917.58	*IG
STORE	21155	44650.99	46164.03	919.16	*TOP CONC
STORE	21156	44655.77	46164.26	919.39	*TOP CONC
STORE	21157	44653.98	46164.48	917.46	*IC
STORE	21158	44652.98	46164.41	917.43	*IC
STORE	21159	44664.81	46163.55	918.38	*IG
STORE	21160	44664.73	46176.95	919.07	*EP
STORE	21161	44664.28	46201.60	918.96	*EG
STORE	21162	44696.43	46164.33	919.05	*IG
STORE	21163	44706.16	46164.45	921.44	*IG
STORE	21164	44711.25	46164.66	919.97	*IG

STORE	21165	44712.05	46216.77	919.92	*IG
STORE	21166	44706.53	46216.32	921.34	*IG
STORE	21167	44697.84	46216.69	918.91	*IG
STORE	21168	44661.90	46216.61	918.71	*IG
STORE	21169	44660.45	46216.32	919.23	*IG
STORE	21170	44656.07	46216.21	919.59	*TOP CONC
STORE	21171	44651.26	46216.03	919.19	*TOP CONC
STORE	21172	44654.21	46215.93	917.61	*IC
STORE	21173	44653.30	46215.74	917.53	*IC
STORE	21174	44647.06	46215.87	918.14	*IG
STORE	21175	44647.74	46269.87	918.00	*IG
STORE	21176	44651.94	46269.52	919.45	*TOP CONC
STORE	21177	44656.83	46269.52	919.41	*TOP CONC
STORE	21178	44653.88	46269.56	917.64	*IC
STORE	21179	44654.85	46269.68	917.62	*IC
STORE	21180	44660.62	46269.69	918.57	*IG
STORE	21181	44706.65	46269.49	921.49	*IG
STORE	21182	44712.72	46269.08	920.04	*IG
STORE	21183	44684.65	46484.26	919.03	*SM
STORE	21184	44713.45	46427.16	920.10	*IG
STORE	21185	44708.03	46427.08	921.46	*IG
STORE	21186	44698.81	46427.07	919.06	*IG
STORE	21187	44661.08	46427.54	919.03	*IG
STORE	21188	44657.93	46428.08	919.91	*TOP CONC
STORE	21189	44653.11	46429.29	919.88	*TOP CONC
STORE	21190	44654.93	46429.06	918.12	*IC
STORE	21191	44655.97	46429.08	918.12	*IC
STORE	21192	44648.60	46429.31	919.09	*IG
STORE	21193	44648.46	46374.67	918.47	*IG
STORE	21194	44652.73	46374.62	919.78	*TOP CONC
STORE	21195	44657.55	46374.80	919.82	*TOP CONC
STORE	21196	44654.71	46375.24	918.04	*IC
STORE	21197	44655.64	46375.25	918.04	*IC
STORE	21198	44660.21	46375.71	919.14	*IG
STORE	21199	44698.01	46375.92	918.60	*IG
STORE	21200	44707.93	46375.66	921.43	*IG
STORE	21201	44713.68	46375.68	919.96	*IG
STORE	21202	44713.73	46322.83	920.07	*IG
STORE	21203	44707.49	46323.12	921.43	*IG
STORE	21204	44696.42	46322.56	918.81	*IG
STORE	21205	44659.08	46322.89	918.81	*IG
STORE	21206	44657.30	46323.32	919.67	*TOP CONC
STORE	21207	44652.30	46323.54	919.68	*TOP CONC
STORE	21208	44654.22	46323.76	917.93	*IC
STORE	21209	44655.27	46323.91	917.89	*IC
STORE	21210	44648.51	46324.26	918.72	*IG
STORE	21211	44552.55	46117.30	917.60	*IG
STORE	21212	44554.81	46169.03	917.76	*IG
STORE	21213	44557.93	46224.73	918.00	*IG
STORE	21214	44560.47	46270.16	918.05	*C/L IG
STORE	21215	44564.10	46326.72	918.45	*IG
STORE	21216	44567.72	46379.04	918.49	*IG
STORE	21217	44563.74	46428.44	918.69	*IG
STORE	21218	44459.88	46428.42	918.38	*IG
STORE	21219	44460.92	46354.17	918.20	*IG
STORE	21220	44460.32	46270.56	917.81	*C/L IG
STORE	21221	44458.37	46192.77	917.42	*IG
STORE	21222	44458.29	46118.70	917.41	*IG
STORE	21223	44355.82	46120.23	917.27	*IG
STORE	21224	44357.33	46193.33	917.21	*IG
STORE	21225	44360.56	46270.99	917.37	*C/L IG
STORE	21226	44362.15	46344.50	917.83	*IG
STORE	21227	44363.19	46421.97	918.22	*IG
STORE	21228	44263.89	46424.03	917.92	*IG
STORE	21229	44262.50	46349.34	917.61	*IG
STORE	21230	44260.07	46271.66	917.24	*C/L IG
STORE	21231	44258.19	46195.74	917.00	*IG
STORE	21232	44255.69	46121.64	916.98	*IG
STORE	21233	44157.05	46123.75	916.78	*IG
STORE	21234	44157.47	46197.79	916.66	*IG
STORE	21235	44160.39	46272.31	916.99	*C/L IG
STORE	21236	44161.59	46343.19	917.32	*IG
STORE	21237	44163.80	46418.18	917.58	*IG
STORE	21238	45383.13	46128.11	922.46	*TOP IG
STORE	21239	45359.98	46127.79	921.71	*IG
STORE	21240	45353.10	46127.62	919.96	*IG
STORE	21241	45405.08	46191.91	922.66	*TOP IG
STORE	21242	45382.83	46193.91	921.94	*IG
STORE	21243	45375.62	46193.96	919.82	*IG

STORE	21244	45418.04	46224.38	922.77	*TOP IG
STORE	21245	45394.00	46225.24	921.72	*IG
STORE	21246	45386.70	46226.15	920.16	*IG
STORE	21247	45436.35	46271.06	922.75	*TOP IG
STORE	21248	45405.39	46270.46	920.27	*IG
STORE	21249	45451.89	46318.61	923.52	*TOP IG
STORE	21250	45429.42	46318.58	922.45	*IG
STORE	21251	45420.66	46319.13	920.02	*IG
STORE	21252	45466.50	46369.97	923.48	*TOP IG
STORE	21253	45447.11	46369.09	922.86	*IG
STORE	21254	45436.91	46368.72	920.17	*IG
STORE	21255	45451.41	46417.28	920.00	*IG
STORE	21256	45464.94	46417.06	923.46	*IG
STORE	21257	45482.83	46417.86	923.51	*TOP IG
STORE	21258	45054.08	46419.55	919.90	*IG
STORE	21259	45056.39	46370.51	919.90	*IG
STORE	21260	45058.54	46320.26	919.96	*IG
STORE	21261	45060.69	46270.05	919.96	*C/L IG
STORE	21262	45063.20	46217.74	919.87	*IG
STORE	21263	45065.97	46165.40	919.93	*IG
STORE	21264	45067.97	46109.80	919.85	*IG
STORE	21265	45164.82	46109.16	919.81	*IG
STORE	21266	45162.86	46184.23	919.88	*IG
STORE	21267	45160.35	46270.30	919.89	*C/L IG
STORE	21268	45158.88	46342.45	919.89	*IG
STORE	21269	45157.40	46415.06	919.84	*IG
STORE	21270	45253.11	46414.07	919.92	*IG
STORE	21271	45257.17	46343.56	919.98	*IG
STORE	21272	45260.24	46270.39	919.96	*C/L IG
STORE	21273	45264.32	46199.15	919.88	*IG
STORE	21274	45267.88	46127.19	919.84	*IG
STORE	21275	45268.67	46098.91	919.87	*IG
STORE	21276	45362.84	46204.45	919.95	*IG
STORE	21277	45360.39	46270.59	919.84	*C/L IG
STORE	21278	45358.78	46346.09	919.95	*IG
STORE	21279	45356.28	46419.71	919.88	*IG
STORE	21280	44962.12	46119.48	919.83	*IG
STORE	21281	44963.47	46194.55	919.86	*IG
STORE	21282	44962.89	46270.05	919.96	*C/L IG
STORE	21283	44963.68	46343.88	919.86	*IG
STORE	21284	44965.07	46420.36	919.84	*IG
STORE	21285	44862.66	46423.60	919.94	*IG
STORE	21286	44861.95	46348.72	919.99	*IG
STORE	21287	44860.51	46269.64	919.92	*C/L IG
STORE	21288	44860.75	46217.80	919.89	*IG
STORE	21289	44861.11	46123.91	919.72	*IG
STORE	21290	44758.95	46120.28	920.01	*IG
STORE	21291	44759.61	46194.31	919.91	*IG
STORE	21292	44760.16	46269.52	919.90	*C/L IG
STORE	21293	44760.86	46338.47	919.91	*IG
STORE	21294	44759.94	46420.98	919.99	*IG
STORE	21295	44061.31	46130.30	916.46	*IG
STORE	21296	44059.99	46200.56	916.41	*IG
STORE	21297	44059.98	46272.07	916.75	*C/L IG
STORE	21298	44059.91	46343.49	917.08	*IG
STORE	21299	44064.58	46428.20	917.33	*IG
STORE	21300	43966.90	46414.64	916.89	*IG
STORE	21301	43964.13	46342.58	916.86	*IG
STORE	21302	43960.51	46272.65	916.56	*C/L IG
STORE	21303	43956.70	46199.02	916.27	*IG
STORE	21304	43953.96	46126.80	916.15	*IG
STORE	21305	43856.38	46127.24	916.00	*IG
STORE	21306	43857.93	46196.90	916.09	*IG
STORE	21307	43859.57	46273.06	916.31	*C/L IG
STORE	21308	43861.62	46346.03	916.58	*IG
STORE	21309	43863.86	46417.38	916.60	*IG
STORE	21310	43767.50	46418.82	916.29	*IG
STORE	21311	43763.88	46346.18	916.29	*IG
STORE	21312	43760.51	46273.83	916.04	*C/L IG
STORE	21313	43756.87	46201.98	915.76	*IG
STORE	21314	43753.91	46132.21	915.74	*IG
STORE	21315	43754.09	46110.27	915.56	*IG
STORE	21316	43657.97	46110.03	915.22	*IG
STORE	21317	43658.93	46181.75	915.47	*IG
STORE	21318	43659.80	46274.18	915.82	*C/L IG
STORE	21319	43660.26	46346.62	916.02	*IG
STORE	21320	43660.36	46426.30	916.18	*IG
STORE	21321	43562.86	46428.68	915.90	*IG
STORE	21322	43562.07	46357.90	915.69	*IG

STORE	21323	43560.57	46274.40	915.56	*C/L IG
STORE	21324	43559.90	46200.42	915.28	*IG
STORE	21325	43559.08	46127.51	915.12	*IG
STORE	21326	43459.57	46126.44	914.96	*IG
STORE	21327	43459.44	46197.42	915.04	*IG
STORE	21328	43459.61	46274.89	915.20	*C/L IG
STORE	21329	43459.71	46348.40	915.43	*IG
STORE	21330	43459.53	46422.36	915.67	*IG
STORE	21331	43430.18	46124.00	914.91	*IG
STORE	21332	43421.65	46124.33	916.39	*IG
STORE	21333	43409.77	46124.91	915.18	*IG
STORE	21334	43382.32	46125.43	914.89	*IG
STORE	21335	43359.53	46125.88	915.27	*IG
STORE	21336	43354.20	46125.64	916.19	*TOP CONC
STORE	21337	43349.20	46125.26	916.15	*TOP CONC
STORE	21338	43352.26	46125.23	914.23	*IC
STORE	21339	43351.30	46125.00	914.21	*IC
STORE	21340	43344.65	46124.51	914.45	*IG
STORE	21341	43344.81	46201.66	914.38	*IG
STORE	21342	43349.52	46202.45	916.27	*TOP CONC
STORE	21343	43354.61	46202.38	916.28	*TOP CONC
STORE	21344	43352.42	46202.64	914.36	*IC
STORE	21345	43351.58	46202.59	914.34	*IC
STORE	21346	43358.66	46202.72	915.58	*IG
STORE	21347	43374.38	46202.69	914.89	*IG
STORE	21348	43408.28	46201.77	914.76	*IG
STORE	21349	43410.76	46201.80	915.69	*IG
STORE	21350	43422.60	46201.61	916.13	*IG
STORE	21351	43428.17	46201.41	915.35	*IG
STORE	21352	43429.95	46275.52	915.57	*IG
STORE	21353	43423.65	46275.47	916.54	*IG
STORE	21354	43412.29	46275.74	915.66	*IG
STORE	21355	43363.43	46275.89	914.95	*IG
STORE	21356	43354.96	46276.43	916.48	*TOP CONC
STORE	21357	43349.94	46275.82	916.33	*TOP CONC
STORE	21358	43346.02	46275.59	914.69	*IG
STORE	21359	43351.96	46276.05	914.46	*IC
STORE	21360	43352.95	46276.02	914.51	*IC
STORE	21361	43431.85	46425.14	915.67	*IG
STORE	21362	43425.81	46425.80	916.68	*IG
STORE	21363	43414.41	46426.02	916.15	*IG
STORE	21364	43408.19	46425.75	915.11	*IG
STORE	21365	43379.85	46425.54	914.73	*IG
STORE	21366	43360.72	46426.28	915.67	*IG
STORE	21367	43355.31	46426.30	916.88	*TOP CONC
STORE	21368	43350.11	46426.49	916.85	*TOP CONC
STORE	21369	43352.26	46426.90	914.92	*IC
STORE	21370	43353.21	46426.87	914.93	*IC
STORE	21371	43345.97	46426.20	914.95	*IG
STORE	21372	43346.17	46350.55	914.85	*IG
STORE	21373	43349.91	46351.16	916.64	*TOP CONC
STORE	21374	43355.08	46351.85	916.66	*TOP CONC
STORE	21375	43359.36	46350.47	915.46	*IG
STORE	21376	43352.04	46353.04	914.71	*IC
STORE	21377	43353.08	46353.03	914.72	*IC
STORE	21378	43408.63	46348.77	914.90	*IG
STORE	21379	43415.25	46348.68	916.19	*IG
STORE	21380	43425.06	46348.53	916.62	*IG
STORE	21381	43431.67	46348.54	915.51	*IG
STORE	21382	42863.51	46129.64	913.50	*IG
STORE	21383	42863.53	46112.25	913.43	*IG
STORE	21384	42862.50	46186.97	913.64	*IG
STORE	21385	42860.40	46278.03	913.79	*C/L IG
STORE	21386	42858.77	46353.25	913.97	*IG
STORE	21387	42858.28	46427.17	913.85	*IG
STORE	21388	42957.29	46427.35	914.15	*IG
STORE	21389	42959.17	46350.35	914.22	*IG
STORE	21390	42960.44	46277.43	913.98	*C/L IG
STORE	21391	42961.53	46203.81	913.86	*IG
STORE	21392	42961.48	46121.13	913.58	*IG
STORE	21393	43057.58	46119.65	913.84	*IG
STORE	21394	43059.15	46201.36	914.08	*IG
STORE	21395	43061.21	46277.14	914.16	*C/L IG
STORE	21396	43062.64	46351.67	914.24	*IG
STORE	21397	43063.41	46424.32	914.37	*IG
STORE	21398	43158.30	46422.18	914.62	*IG
STORE	21399	43162.90	46350.02	914.52	*IG
STORE	21400	43161.11	46276.68	914.35	*C/L IG
STORE	21401	43157.92	46202.92	914.15	*IG

STORE	21402	43155.16	46122.79	913.97	*IG
STORE	21403	43252.06	46119.64	914.11	*IG
STORE	21404	43256.22	46194.73	914.58	*IG
STORE	21405	43260.04	46276.11	914.58	*C/L IG
STORE	21406	43260.70	46351.36	914.86	*IG
STORE	21407	43260.44	46422.37	914.81	*IG
STORE	21408	42757.23	46128.77	913.21	*IG
STORE	21409	42757.08	46112.33	913.22	*IG
STORE	21410	42758.61	46189.85	913.48	*IG
STORE	21411	42759.41	46278.78	913.59	*C/L IG
STORE	21412	42760.89	46356.87	913.78	*IG
STORE	21413	42763.51	46433.15	913.81	*IG
STORE	21414	42662.66	46423.45	913.64	*IG
STORE	21415	42661.48	46354.64	913.55	*IG
STORE	21416	42660.37	46279.04	913.37	*C/L IG
STORE	21417	42658.57	46204.73	913.19	*IG
STORE	21418	42657.74	46109.92	913.22	*IG
STORE	21419	42557.26	46122.01	912.84	*IG
STORE	21420	42558.55	46194.82	912.97	*IG
STORE	21421	42560.77	46279.35	913.19	*C/L IG
STORE	21422	42562.99	46356.94	913.40	*IG
STORE	21423	42565.16	46420.47	913.36	*IG
STORE	21424	42465.83	46418.41	913.20	*IG
STORE	21425	42463.01	46346.21	912.99	*IG
STORE	21426	42460.44	46279.90	912.98	*C/L IG
STORE	21427	42458.96	46205.20	912.81	*IG
STORE	21428	42456.10	46123.14	912.68	*IG
STORE	21429	42355.47	46123.41	912.54	*IG
STORE	21430	42358.30	46199.08	912.52	*IG
STORE	21431	42360.83	46280.49	912.79	*C/L IG
STORE	21432	42359.94	46359.03	912.84	*IG
STORE	21433	42361.06	46432.11	912.95	*IG
STORE	21434	42264.81	46432.77	912.78	*IG
STORE	21435	42262.75	46350.65	912.51	*IG
STORE	21436	42260.44	46280.79	912.54	*C/L IG
STORE	21437	42258.99	46203.13	912.29	*IG
STORE	21438	42257.73	46128.64	912.41	*IG
STORE	21439	42159.60	46128.96	912.16	*IG
STORE	21440	42160.29	46202.98	912.12	*IG
STORE	21441	42160.76	46281.22	912.42	*C/L IG
STORE	21442	42160.77	46354.49	912.41	*IG
STORE	21443	42160.58	46427.57	912.57	*IG
STORE	21444	42068.98	46430.00	912.33	*IG
STORE	21445	42063.70	46430.94	913.66	*IG
STORE	21446	42060.26	46431.10	911.95	*IG
STORE	21447	42056.51	46431.83	911.94	*IG
STORE	21448	42052.92	46431.66	913.37	*IG
STORE	21449	42050.61	46432.09	912.81	*IG
STORE	21450	42032.25	46432.33	912.74	*IG
STORE	21451	42029.03	46432.72	913.33	*TOP CONC
STORE	21452	42023.40	46432.58	913.26	*TOP CONC
STORE	21453	42018.45	46433.34	911.93	*IG
STORE	21454	42025.82	46432.74	911.12	*IC
STORE	21455	42026.72	46432.78	911.16	*IC
STORE	21456	42068.52	46359.09	912.11	*IG
STORE	21457	42063.07	46359.16	913.75	*IG
STORE	21458	42058.71	46359.42	911.78	*IG
STORE	21459	42055.59	46359.62	911.80	*IG
STORE	21460	42052.24	46359.54	913.36	*IG
STORE	21461	42049.50	46359.58	912.73	*IG
STORE	21462	42032.15	46358.88	912.69	*IG
STORE	21463	42028.61	46358.82	913.30	*TOP CONC
STORE	21464	42023.06	46358.82	913.30	*TOP CONC
STORE	21465	42018.83	46358.83	911.93	*IG
STORE	21466	42025.38	46358.48	911.17	*IC
STORE	21467	42026.35	46358.58	911.16	*IC
STORE	21468	42017.97	46281.29	911.67	*IG
STORE	21469	42022.81	46281.87	913.26	*TOP CONC
STORE	21470	42028.46	46281.60	913.27	*TOP CONC
STORE	21471	42025.07	46281.37	911.10	*IC
STORE	21472	42026.12	46281.38	911.09	*IC
STORE	21473	42031.54	46281.69	912.76	*IG
STORE	21474	42051.31	46281.76	912.88	*IG
STORE	21475	42052.06	46281.87	913.47	*IG
STORE	21476	42056.31	46281.47	911.52	*IG
STORE	21477	42057.80	46282.04	911.55	*IG
STORE	21478	42062.78	46281.74	913.62	*IG
STORE	21479	42068.00	46281.80	912.09	*IG
STORE	21480	42066.50	46132.28	912.12	*IG

STORE	21481	42063.07	46131.46	913.21	*IG
STORE	21482	42058.21	46130.79	911.22	*IG
STORE	21483	42056.81	46130.76	911.19	*IG
STORE	21484	42052.27	46130.94	913.34	*IG
STORE	21485	42048.54	46130.76	912.78	*IG
STORE	21486	42031.91	46130.08	912.66	*IG
STORE	21487	42028.02	46129.99	913.09	*TOP CONC
STORE	21488	42022.29	46130.26	913.08	*TOP CONC
STORE	21489	42016.14	46130.37	911.96	*IG
STORE	21490	42024.62	46130.12	910.97	*IC
STORE	21491	42025.66	46130.10	910.99	*IC
STORE	21492	42017.59	46208.31	911.66	*IG
STORE	21493	42022.59	46208.21	913.18	*TOP CONC
STORE	21494	42028.11	46208.45	913.26	*TOP CONC
STORE	21495	42025.90	46208.35	911.07	*IC
STORE	21496	42024.92	46208.26	911.06	*IC
STORE	21497	42032.19	46208.54	912.70	*IG
STORE	21498	42049.67	46208.85	912.66	*IG
STORE	21499	42051.90	46208.92	913.24	*IG
STORE	21500	42056.65	46209.05	911.39	*IG
STORE	21501	42057.99	46209.10	911.38	*IG
STORE	21502	42062.66	46209.29	913.58	*IG
STORE	21503	42067.40	46209.60	912.12	*IG
STORE	21504	41954.13	46431.28	911.67	*IG
STORE	21505	41957.26	46355.84	911.68	*IG
STORE	21506	41960.46	46281.93	911.63	*C/L IG
STORE	21507	41962.78	46207.87	911.66	*IG
STORE	21508	41965.00	46133.99	911.60	*IG
STORE	21509	41871.46	46121.38	911.73	*IG
STORE	21510	41866.49	46191.37	911.59	*IG
STORE	21511	41860.65	46282.42	911.70	*C/L IG
STORE	21512	41857.83	46354.99	911.73	*IG
STORE	21513	41854.10	46422.53	911.64	*IG
STORE	21514	41753.78	46419.11	911.80	*IG
STORE	21515	41757.17	46347.18	911.74	*IG
STORE	21516	41760.73	46282.45	911.64	*C/L IG
STORE	21517	41764.36	46207.79	911.64	*IG
STORE	21518	41768.70	46114.66	911.75	*IG
STORE	21519	41773.02	46138.92	912.69	*TOWER
STORE	21520	41775.58	46161.02	912.69	*TOWER
STORE	21521	41804.33	46157.42	912.66	*TOWER
STORE	21522	41801.55	46135.56	912.65	*TOWER
STORE	21523	41698.00	46185.38	914.10	*C/L 9FT MH
STORE	21524	41690.25	46180.70	912.89	*SERVICE PANEL
STORE	21525	41651.11	46436.28	911.72	*IG
STORE	21526	41655.56	46360.37	911.70	*IG
STORE	21527	41660.14	46282.43	911.72	*C/L IG
STORE	21528	41663.93	46206.80	911.75	*IG
STORE	21529	41667.23	46139.00	911.62	*IG
STORE	21530	41590.61	46108.42	912.00	*IG
STORE	21531	41577.74	46186.04	911.61	*IG
STORE	21532	41560.67	46281.62	911.61	*C/L IG
STORE	21533	41556.12	46356.59	911.70	*IG
STORE	21534	41542.40	46427.84	911.66	*IG
STORE	21535	41511.23	46430.39	911.80	*IG
STORE	21536	41508.26	46429.87	912.40	*IG
STORE	21537	41498.09	46427.39	912.13	*TOP IG
STORE	21538	41494.08	46426.74	907.61	*TOE
STORE	21539	41510.45	46351.75	907.91	*TOE
STORE	21540	41515.77	46353.01	912.92	*TOP IG
STORE	21541	41523.89	46354.93	912.40	*IG
STORE	21542	41525.97	46355.16	911.75	*IG
STORE	21543	41541.03	46283.55	911.75	*IG
STORE	21544	41537.32	46282.33	912.55	*IG
STORE	21545	41528.19	46281.38	911.62	*TOP IG
STORE	21546	41525.56	46280.96	908.22	*TOE
STORE	21547	41538.27	46209.83	908.22	*TOE
STORE	21548	41541.27	46210.11	911.49	*TOP IG
STORE	21549	41545.03	46210.61	912.97	*IG
STORE	21550	41555.82	46211.89	911.84	*IG
STORE	21551	41569.24	46136.89	911.71	*IG
STORE	21552	41558.26	46136.96	913.38	*IG
STORE	21553	41530.98	46282.28	912.74	*IG
STORE	21554	41541.51	46132.57	913.64	*TOP IG
STORE	21555	41528.40	46129.93	914.05	*TOP IG
STORE	21556	41523.51	46129.19	911.94	*IG
STORE	21557	41534.47	46209.12	908.18	*TOE
STORE	21558	41528.75	46208.51	912.62	*TOP IG
STORE	21559	41513.30	46205.46	913.04	*IG

STORE	21560	41521.15	46281.16	907.66	*TOE
STORE	21561	41516.97	46280.39	912.10	*TOP IG
STORE	21562	41500.85	46279.77	912.95	*IG
STORE	21563	41494.96	46278.90	910.30	*IG
STORE	21564	41480.71	46345.78	910.56	*IG
STORE	21565	41484.74	46346.70	912.46	*TOP IG
STORE	21566	41502.38	46350.27	911.89	*TOP IG
STORE	21567	41505.67	46351.25	907.81	*TOE
STORE	21568	41489.87	46425.39	907.76	*TOE
STORE	21569	41485.42	46425.01	911.77	*TOP IG
STORE	21570	41468.66	46421.80	912.50	*IG
STORE	21571	41465.01	46421.25	910.77	*IG
STORE	21572	41508.97	46205.00	910.61	*IG
STORE	21573	41548.12	46134.94	908.33	*TOE
STORE	21574	41551.41	46137.41	908.29	*TOE
STORE	21575	41127.81	46372.67	907.95	*IG
STORE	21576	41097.65	46366.30	907.01	*IG
STORE	21577	41161.35	46375.69	904.90	*IG
STORE	21578	41189.08	46376.87	903.40	*IG
STORE	21579	41201.33	46384.49	903.39	*IG
STORE	21580	41236.87	46387.55	914.25	*IG
STORE	21581	41254.64	46388.51	910.75	*IG
STORE	21582	41298.75	46210.83	907.75	*IG
STORE	21583	41298.11	46205.48	906.33	*IG
STORE	21584	41298.56	46192.80	905.87	*IG
STORE	21585	41301.77	46179.80	908.50	*IG
STORE	21586	41270.88	46167.03	912.82	*IG
STORE	21587	41268.93	46189.04	905.35	*IG
STORE	21588	41269.06	46204.42	905.99	*IG
STORE	21589	41269.65	46208.06	909.99	*IG
STORE	21590	41264.60	46235.80	911.50	*C/L IG
STORE	21591	41272.83	46237.44	909.42	*IG
STORE	21592	41251.16	46232.97	913.41	*IG
STORE	21593	41220.87	46205.49	904.51	*IG
STORE	21594	41209.79	46208.05	904.56	*IG
STORE	21595	41175.81	46165.24	911.37	*IG
STORE	21596	41171.47	46186.93	907.57	*IG
STORE	21597	41170.67	46198.47	908.02	*IG
STORE	21598	41165.72	46223.63	911.90	*IG
STORE	21599	41177.01	46220.90	910.80	*IG
STORE	21600	41117.93	46210.24	910.55	*IG
STORE	21601	41117.99	46201.33	906.16	*IG
STORE	21602	41117.38	46192.37	906.40	*IG
STORE	21603	41068.43	46201.82	905.64	*C/L IG
STORE	21604	40969.30	46184.63	910.34	*IG
STORE	21605	40901.53	46172.67	909.38	*IG
STORE	21606	40905.22	46016.80	909.43	*IG
STORE	21607	40975.53	46025.04	909.64	*IG
STORE	21608	40988.93	46021.55	909.44	*IG
STORE	21609	41473.01	46273.86	910.52	*EG
STORE	21610	41459.01	46278.87	911.46	*EP
STORE	21611	41275.21	46347.13	911.09	*EP
STORE	21612	41248.06	46356.62	912.40	*EG
STORE	21613	41102.68	45979.82	913.92	*TRAV. PT.
STORE	21614	40877.06	46014.32	899.60	*IG
STORE	21615	40905.30	46013.50	909.32	*IG
STORE	21616	41086.25	46051.00	909.81	*IG
STORE	21617	41145.55	46055.99	912.86	*IG
STORE	21618	41173.71	46067.14	909.59	*IG
STORE	21619	41190.70	46068.58	903.92	*IG
STORE	21620	41215.59	46075.35	903.95	*IG
STORE	21621	41229.02	46070.45	909.68	*IG
STORE	21622	41248.27	46076.01	912.26	*IG
STORE	21623	41262.39	46080.93	909.27	*IG
STORE	21624	41157.34	46317.08	907.57	*IG
STORE	21625	41161.46	46284.92	912.77	*IG
STORE	21626	41165.72	46248.49	908.08	*IG
STORE	21627	41017.25	46347.29	910.63	*IG
STORE	21628	40934.51	46334.97	910.16	*IG
STORE	21629	40880.63	46323.10	908.45	*IG
STORE	21630	40843.21	46324.01	900.15	*IG
STORE	21631	40714.92	46289.32	902.87	*IG
STORE	21632	40773.43	46148.81	901.95	*IG
STORE	21633	40746.52	45977.86	903.26	*IG
STORE	21634	40763.55	45976.56	896.74	*IG
STORE	21635	40777.86	45956.08	896.47	*IG
STORE	21636	40790.10	45955.21	900.15	*IG
STORE	21637	40828.20	45945.07	900.45	*IG
STORE	21638	40850.43	45949.88	897.77	*IG

STORE	21639	40900.97	46171.02	909.03	*IG
STORE	21640	40866.02	46165.83	898.48	*IG
STORE	21641	40825.08	46161.50	900.31	*IG
STORE	21642	40787.47	46164.94	896.24	*IG
STORE	21643	40774.24	46170.06	901.78	*IG
STORE	21644	40652.46	46287.16	903.48	*IG
STORE	21645	40662.46	46214.81	903.33	*IG
STORE	21646	40667.30	46173.96	903.64	*IG
STORE	21647	40673.52	46132.56	902.04	*C/L IG
STORE	21648	40673.79	46116.44	902.24	*IG
STORE	21649	40674.30	46107.19	903.05	*IG
STORE	21650	40677.01	46062.01	901.94	*IG
STORE	21651	40682.08	45999.19	900.78	*IG
STORE	21652	40546.56	46255.30	904.79	*IG
STORE	21653	40555.21	46212.36	904.13	*IG
STORE	21654	40563.45	46168.93	903.03	*IG
STORE	21655	40575.38	46116.09	903.36	*C/L IG
STORE	21656	40599.13	46052.23	902.29	*IG
STORE	21657	40608.84	46003.79	902.74	*IG
STORE	21658	40614.25	45980.50	902.54	*IG
STORE	21659	40445.52	46226.23	903.72	*IG
STORE	21660	40461.26	46165.81	902.84	*IG
STORE	21661	40475.93	46098.86	901.73	*C/L IG
STORE	21662	40479.44	46084.36	901.78	*IG
STORE	21663	40492.62	46063.26	902.37	*IG
STORE	21664	40513.30	46020.23	900.89	*IG
STORE	21665	40530.93	45982.78	901.06	*IG
STORE	21666	40541.12	45951.91	901.27	*IG
STORE	21667	40403.59	45936.21	902.44	*IG
STORE	21668	40390.22	46008.62	902.77	*IG
STORE	21669	40377.96	46081.73	902.75	*C/L IG
STORE	21670	40373.51	46105.08	901.98	*IG
STORE	21671	40368.85	46131.07	902.48	*IG
STORE	21672	40362.33	46179.64	903.30	*IG
STORE	21673	40351.94	46236.66	902.40	*IG
STORE	21674	40255.80	46215.95	903.36	*IG
STORE	21675	40261.32	46155.70	903.17	*IG
STORE	21676	40277.39	46088.03	902.54	*IG
STORE	21677	40279.13	46065.10	902.94	*C/L IG
STORE	21678	40282.72	46035.57	902.94	*IG
STORE	21679	40283.21	46024.04	901.67	*IG
STORE	21680	40285.82	45978.98	901.47	*IG
STORE	21681	40289.69	45959.31	903.39	*IG
STORE	21682	40293.43	45930.80	904.28	*IG
STORE	21683	40199.23	46052.46	901.78	*IG
STORE	21684	40181.34	46048.38	897.12	*C/L IG
STORE	21685	40194.21	45986.81	896.62	*IG
STORE	21686	40204.41	45931.02	896.62	*IG
STORE	21687	40162.57	46143.14	898.31	*IG
STORE	21688	40162.34	46150.39	899.34	*IG
STORE	21689	40154.60	46180.48	899.37	*IG
STORE	21690	40077.03	46169.62	902.77	*IG
STORE	21691	40067.88	46166.98	897.99	*IG
STORE	21692	40075.48	46108.06	901.16	*IG
STORE	21693	40079.58	46064.19	901.00	*IG
STORE	21694	40081.77	46030.81	899.61	*C/L IG
STORE	21695	40100.37	46030.19	900.17	*IG
STORE	21696	40127.57	46034.75	902.64	*IG
STORE	21697	40158.10	46041.49	897.66	*IG
STORE	21698	40094.42	45964.36	899.70	*IG
STORE	21699	40105.70	45889.25	899.08	*IG
STORE	21700	40008.61	45873.91	898.66	*IG
STORE	21701	39997.76	45941.30	897.41	*IG
STORE	21702	39983.62	46014.21	898.24	*IG
STORE	21703	39972.40	46078.62	898.01	*IG
STORE	21704	39960.20	46143.12	897.46	*IG
STORE	21705	39407.31	45769.69	897.58	*IG
STORE	21706	39401.06	45838.08	898.01	*IG
STORE	21707	39392.97	45911.31	898.89	*C/L IG
STORE	21708	39386.83	45976.64	898.41	*IG
STORE	21709	39378.76	46053.78	898.25	*IG
STORE	21710	39470.34	46075.38	898.49	*IG
STORE	21711	39478.69	46017.69	899.96	*IG
STORE	21712	39484.91	45971.12	900.02	*IG
STORE	21713	39488.03	45949.30	899.22	*IG
STORE	21714	39491.36	45928.21	899.19	*C/L IG
STORE	21715	39500.71	45865.12	898.76	*IG
STORE	21716	39507.58	45820.86	899.17	*IG
STORE	21717	39513.29	45782.89	899.94	*IG

STORE	21718	39614.27	45802.06	900.68	*IG
STORE	21719	39610.54	45831.85	900.68	*IG
STORE	21720	39600.98	45879.54	901.66	*IG
STORE	21721	39589.99	45945.64	900.44	*C/L IG
STORE	21722	39577.72	46017.37	898.25	*IG
STORE	21723	39564.02	46096.73	899.36	*IG
STORE	21724	39663.52	46112.81	901.31	*IG
STORE	21725	39674.18	46049.62	901.20	*IG
STORE	21726	39681.89	46000.51	900.97	*IG
STORE	21727	39688.13	45962.58	900.61	*C/L IG
STORE	21728	39698.84	45901.05	900.74	*IG
STORE	21729	39711.83	45824.78	899.83	*IG
STORE	21730	39816.19	45838.50	900.20	*IG
STORE	21731	39807.73	45878.78	901.04	*IG
STORE	21732	39798.80	45926.54	900.59	*IG
STORE	21733	39791.32	45957.63	899.73	*IG
STORE	21734	39786.98	45979.77	900.26	*C/L IG
STORE	21735	39771.81	46046.61	901.01	*IG
STORE	21736	39753.98	46129.35	901.44	*IG
STORE	21737	40739.42	46346.01	901.72	*IG
STORE	21738	40785.70	46353.39	900.30	*IG
STORE	21739	40797.16	46346.82	896.52	*IG
STORE	21740	40826.76	46342.38	898.63	*IG
STORE	22300	41476.80	45869.01	908.32	*TOP
STORE	22301	41478.80	45869.02	907.44	*IG
STORE	22302	41489.31	45869.19	906.93	*IG
STORE	22303	41492.49	45869.38	906.27	*TOE
STORE	22304	41494.60	45869.45	910.36	*IG
STORE	22305	41500.24	45870.01	915.60	*TOP
STORE	22306	41502.69	45870.47	914.56	*IG
STORE	22307	41521.68	45873.44	914.23	*IG
STORE	22308	41538.28	45875.65	913.78	*IG
STORE	22309	41556.27	45878.80	912.20	*IG
STORE	22310	41460.61	45968.37	908.42	*TOP
STORE	22311	41462.12	45968.68	907.42	*IG
STORE	22312	41473.16	45970.92	906.66	*IG
STORE	22313	41476.33	45971.90	906.44	*TOE
STORE	22314	41478.73	45972.98	910.42	*IG
STORE	22315	41484.36	45972.78	915.00	*TOP
STORE	22316	41486.59	45972.41	914.34	*IG
STORE	22317	41504.15	45975.94	914.21	*IG
STORE	22318	41540.43	45985.18	912.66	*IG
STORE	22319	41444.60	46072.84	908.71	*TOP
STORE	22320	41446.00	46072.89	907.88	*IG
STORE	22321	41455.96	46073.65	907.50	*IG
STORE	22322	41460.29	46073.69	907.31	*TOE
STORE	22323	41461.02	46074.12	911.44	*IG
STORE	22324	41467.25	46075.02	915.73	*TOP
STORE	22325	41470.26	46075.76	914.56	*IG
STORE	22326	41485.54	46078.29	914.23	*IG
STORE	22327	41493.20	46080.22	913.31	*IG
STORE	22328	41523.10	46084.89	912.56	*IG
STORE	22329	41426.79	46174.81	908.75	*TOP
STORE	22330	41428.06	46175.00	907.94	*IG
STORE	22331	41438.90	46175.26	907.43	*IG
STORE	22332	41443.13	46176.09	906.82	*TOE
STORE	22333	41444.20	46176.45	910.51	*IG
STORE	22334	41450.29	46177.80	914.45	*TOP
STORE	22335	41453.48	46177.88	913.42	*IG
STORE	22336	41469.05	46180.39	913.05	*IG
STORE	22337	41475.41	46181.91	911.96	*IG
STORE	22338	41507.69	46185.88	910.67	*IG
STORE	22339	41411.47	46275.55	908.69	*TOP
STORE	22340	41412.93	46275.70	907.52	*IG
STORE	22341	41424.11	46277.90	906.63	*IG
STORE	22342	41428.62	46279.03	906.00	*TOE
STORE	22343	41430.54	46277.97	907.93	*IG
STORE	22344	41438.25	46280.72	913.50	*TOP
STORE	22345	41454.27	46284.08	912.12	*IG
STORE	22346	41465.53	46285.42	910.94	*IG
STORE	22347	41492.87	46287.22	910.63	*IG
STORE	22348	41395.52	46369.27	908.77	*TOP
STORE	22349	41397.40	46369.35	907.59	*IG
STORE	22350	41407.69	46370.71	906.99	*IG
STORE	22351	41411.85	46371.86	906.63	*TOE
STORE	22352	41412.26	46371.93	909.94	*IG
STORE	22353	41418.56	46372.61	914.29	*TOP
STORE	22354	41420.38	46373.21	913.43	*IG
STORE	22355	41437.80	46376.63	912.65	*IG

STORE	22356	41445.98	46378.21	911.26	*IG
STORE	22357	41459.08	46379.97	910.65	*IG
STORE	22358	41472.50	46383.31	910.83	*IG
STORE	22359	41379.83	46463.95	908.53	*TOP
STORE	22360	41381.29	46464.20	907.93	*IG
STORE	22361	41390.81	46466.74	907.45	*IG
STORE	22362	41395.11	46468.13	906.78	*TOE
STORE	22363	41395.99	46468.22	910.85	*IG
STORE	22364	41402.06	46468.74	914.89	*TOP
STORE	22365	41404.25	46469.16	913.84	*IG
STORE	22366	41425.31	46472.83	913.03	*IG
STORE	22367	41445.76	46474.46	910.59	*IG
STORE	22368	41454.93	46475.17	910.88	*IG
STORE	22369	41363.64	46560.28	909.44	*TOP
STORE	22370	41365.62	46560.45	908.30	*IG
STORE	22371	41375.69	46561.94	907.60	*IG
STORE	22372	41379.82	46562.54	907.27	*TOE
STORE	22373	41380.63	46562.84	910.41	*IG
STORE	22374	41387.35	46564.07	915.38	*TOP
STORE	22375	41389.52	46564.42	914.31	*IG
STORE	22376	41409.94	46568.41	913.36	*IG
STORE	22377	41433.65	46572.18	911.16	*IG
STORE	22378	41347.87	46656.89	908.74	*TOP
STORE	22379	41349.35	46656.72	907.84	*IG
STORE	22380	41360.86	46657.60	907.06	*IG
STORE	22381	41364.87	46658.42	906.92	*TOE
STORE	22382	41367.40	46659.37	912.41	*IG
STORE	22383	41371.99	46660.19	913.72	*TOP
STORE	22384	41374.01	46660.23	913.20	*IG
STORE	22385	41398.88	46663.73	912.85	*IG
STORE	22386	41401.82	46663.58	912.01	*IG
STORE	22387	41410.70	46664.52	911.96	*IG
STORE	22388	41426.56	46667.77	912.13	*IG
STORE	22389	41436.47	45860.26	908.18	*TOP
STORE	22390	41434.97	45859.92	907.44	*IG
STORE	22391	41422.21	45857.40	906.75	*IG
STORE	22392	41418.99	45856.85	906.41	*TOE
STORE	22393	41410.06	45855.74	913.76	*TOP
STORE	22394	41396.82	45853.95	913.85	*IG
STORE	22395	41372.23	45852.48	911.09	*IG
STORE	22396	41357.64	45851.71	910.58	*IG
STORE	22397	41418.03	45961.86	909.15	*TOP
STORE	22398	41416.34	45961.49	908.56	*IG
STORE	22399	41403.81	45960.30	907.99	*IG
STORE	22400	41400.72	45959.65	907.62	*TOE
STORE	22401	41394.12	45958.57	913.16	*TOP
STORE	22402	41374.21	45956.06	913.43	*IG
STORE	22403	41366.34	45953.07	911.15	*IG
STORE	22404	41347.66	45952.70	909.92	*IG
STORE	22405	41334.70	45950.42	909.47	*IG
STORE	22406	41399.39	46061.33	909.85	*TOP
STORE	22407	41397.81	46060.92	909.23	*IG
STORE	22408	41386.46	46058.55	908.94	*IG
STORE	22409	41381.60	46057.13	908.35	*TOE
STORE	22410	41374.63	46055.86	911.89	*TOP
STORE	22411	41360.96	46054.01	911.67	*IG
STORE	22412	41335.90	46051.13	909.72	*IG
STORE	22413	41322.91	46049.59	909.43	*IG
STORE	22414	41380.80	46163.25	909.40	*TOP
STORE	22415	41379.32	46162.95	908.90	*IG
STORE	22416	41366.97	46160.20	908.45	*IG
STORE	22417	41361.16	46158.56	907.45	*TOE
STORE	22418	41355.03	46157.40	909.74	*TOP
STORE	22419	41341.68	46155.44	910.05	*IG
STORE	22420	41334.16	46153.88	908.97	*IG
STORE	22421	41308.08	46149.15	909.15	*IG
STORE	22422	41358.82	46271.83	908.77	*TOP
STORE	22423	41345.57	46270.11	908.32	*IG
STORE	22424	41338.82	46268.35	907.15	*IG
STORE	22425	41328.44	46265.93	909.00	*IG
STORE	22426	41289.39	46262.24	909.87	*IG
STORE	22427	41344.04	46364.46	911.11	*TOP
STORE	22428	41329.87	46362.35	910.11	*IG
STORE	22429	41322.14	46361.72	908.58	*TOE
STORE	22430	41308.63	46359.18	911.18	*TOP
STORE	22431	41284.17	46356.33	910.28	*IG
STORE	22432	41272.36	46354.54	910.86	*IG
STORE	22433	41325.02	46458.64	912.05	*TOP
STORE	22434	41312.32	46456.87	911.52	*IG

STORE	22435	41305.25	46457.04	910.37	*TOE
STORE	22436	41298.40	46455.86	912.17	*TOP
STORE	22437	41289.55	46454.88	912.55	*IG
STORE	22438	41286.97	46454.74	911.68	*IG
STORE	22439	41257.21	46449.10	911.53	*IG
STORE	22440	41310.98	46551.42	913.03	*TOP
STORE	22441	41297.00	46549.69	912.19	*IG
STORE	22442	41290.12	46549.14	911.12	*TOE
STORE	22443	41286.02	46548.41	912.07	*TOP
STORE	22444	41276.01	46547.51	912.48	*IG
STORE	22445	41273.28	46547.78	911.56	*IG
STORE	22446	41237.63	46543.33	911.19	*IG
STORE	22447	41224.58	46631.35	911.19	*IG
STORE	22448	41242.43	46637.62	910.71	*IG
STORE	22449	41263.13	46639.81	911.46	*IG
STORE	22450	41273.10	46642.72	911.30	*TOP
STORE	22451	41275.03	46643.21	910.93	*TOE
STORE	22452	41281.87	46645.07	911.93	*IG
STORE	22453	41296.61	46647.82	912.52	*TOP
STORE	22454	41386.84	46166.35	906.36	*IG
STORE	22455	41388.85	46166.73	899.29	*TOE
STORE	22456	41403.10	46167.97	896.11	*IG
STORE	22457	41416.97	46170.86	898.29	*TOE
STORE	22458	41422.43	46171.82	904.90	*IG
STORE	22459	41442.09	46072.69	906.41	*IG
STORE	22460	41435.29	46071.31	898.16	*TOE
STORE	22461	41421.59	46065.91	896.49	*IG
STORE	22462	41407.25	46066.74	898.60	*TOE
STORE	22463	41404.16	46066.96	904.63	*IG
STORE	22464	41456.70	45965.94	904.59	*IG
STORE	22465	41452.45	45965.53	898.76	*TOE
STORE	22466	41437.21	45960.44	896.40	*IG
STORE	22467	41426.82	45960.65	898.94	*TOE
STORE	22468	41422.61	45959.97	904.80	*IG
STORE	22469	41438.27	45863.46	906.45	*IG
STORE	22470	41442.74	45862.05	898.48	*TOE
STORE	22471	41453.40	45862.46	896.08	*IG
STORE	22472	41468.56	45864.82	897.89	*TOE
STORE	22473	41474.00	45865.61	904.31	*IG
STORE	22474	41393.19	46370.07	906.15	*IG
STORE	22475	41388.77	46369.57	898.48	*TOE
STORE	22476	41371.00	46365.83	896.46	*IG
STORE	22477	41355.75	46364.51	898.54	*TOE
STORE	22478	41351.80	46363.94	904.50	*IG
STORE	22479	41336.60	46455.21	902.94	*IG
STORE	22480	41343.68	46459.90	898.27	*TOE
STORE	22481	41354.77	46458.96	895.70	*IG
STORE	22482	41371.35	46462.68	899.09	*TOE
STORE	22483	41374.67	46464.51	903.44	*IG
STORE	22484	41359.78	46559.51	905.76	*IG
STORE	22485	41355.90	46558.15	899.65	*TOE
STORE	22486	41336.70	46557.69	896.42	*IG
STORE	22487	41325.52	46557.58	899.16	*TOE
STORE	22488	41314.82	46556.71	910.76	*IG
STORE	22489	41343.74	46655.74	904.82	*IG
STORE	22490	41338.65	46654.88	898.52	*TOE
STORE	22491	41324.12	46650.49	896.26	*IG
STORE	22492	41310.92	46652.97	898.70	*TOE
STORE	22493	41301.18	46651.70	909.69	*IG
STORE	22494	41366.34	46272.43	906.30	*IG
STORE	22495	41370.54	46273.11	898.39	*TOE
STORE	22496	41385.34	46272.83	896.20	*IG
STORE	22497	41402.22	46276.12	898.20	*TOE
STORE	22498	41407.49	46278.95	904.92	*IG

*BULLARD WASH (SURVEY DATA #2)

STORE	30066	51755.86	44691.26	959.71	*	R1
STORE	30075	52253.49	44645.92	961.51	*	TRAV.PT.
STORE	30077	52753.20	44634.17	962.64	*	TRAV.PT.
STORE	30078	53254.44	44622.39	964.22	*	TRAV.PT.
STORE	30079	53753.05	44610.67	965.58	*	TRAV.PT.
STORE	30080	54252.79	44598.92	967.93	*	TRAV.PT.
STORE	30081	54753.95	44587.13	969.84	*	TRAV.PT.
STORE	30082	55256.13	44614.57	971.82	*	R1
STORE	30083	55750.17	44639.98	972.86	*	TRAV.PT.
STORE	30084	56350.29	44640.72	975.16	*	TRAV.PT.
STORE	30085	56951.05	44641.47	977.05	*	TRAV.PT.
STORE	30086	57550.19	44642.21	979.19	*	TRAV.PT.
STORE	30087	57894.50	44616.18	0.00	*	R1
STORE	30125	52254.24	44654.86	961.43	*	PT.75 ELVCK
STORE	30126	51464.64	44661.35	959.47	*	CKPT 65
STORE	30127	51561.40	44577.42	961.32	*	IG
STORE	30128	51562.19	44632.56	960.03	*	FO
STORE	30129	51562.98	44660.18	960.08	*	TOP
STORE	30130	51563.74	44665.78	958.70	*	IG
STORE	30131	51563.15	44681.02	959.38	*	RE
STORE	30132	51563.40	44695.34	959.64	*	RC
STORE	30133	51564.06	44707.22	959.50	*	RE
STORE	30134	51564.34	44718.12	959.06	*	IG
STORE	30135	51564.10	44735.73	960.09	*	TOP CONC DITCH
STORE	30136	51563.88	44740.76	960.08	*	TOP CONC DITCH
STORE	30137	51563.97	44737.73	958.10	*	TOE CONC DITCH
STORE	30138	51563.63	44738.76	958.10	*	TOE CONC DITCH
STORE	30139	51564.25	44742.73	959.80	*	IG
STORE	30140	51564.79	44743.89	959.51	*	IG
STORE	30141	51566.01	44796.58	958.58	*	IG
STORE	30142	51634.69	44679.48	959.88	*	RE ANG.PT.
STORE	30143	51665.30	44576.30	961.01	*	IG
STORE	30144	51664.34	44630.68	961.07	*	FO
STORE	30145	51664.73	44656.19	960.98	*	IG
STORE	30146	51658.51	44656.18	960.68	*	TR
STORE	30147	51664.79	44663.54	958.90	*	IG
STORE	30148	51664.10	44675.06	960.07	*	RE
STORE	30149	51664.33	44692.53	960.37	*	RC
STORE	30150	51664.97	44705.33	960.10	*	RE
STORE	30151	51665.82	44719.24	959.66	*	IG
STORE	30152	51665.98	44733.49	960.34	*	TOP CONC DITCH
STORE	30153	51666.98	44738.47	960.39	*	TOP CONC DITCH
STORE	30154	51671.56	44736.39	958.39	*	TOE CONC DITCH
STORE	30155	51671.56	44735.34	958.39	*	TOE CONC DITCH
STORE	30156	51664.73	44742.83	958.24	*	IG
STORE	30157	51663.07	44801.22	958.66	*	IG
STORE	30158	51680.43	44723.67	960.24	*	WZ AIR RELEASE
STORE	30159	51697.02	44731.66	960.75	*	IH
STORE	30160	51698.76	44733.21	960.76	*	IH
STORE	30161	51702.03	44733.08	960.72	*	IH
STORE	30162	51702.18	44737.11	960.80	*	IH
STORE	30163	51698.89	44737.29	960.82	*	IH
STORE	30164	51697.32	44738.97	960.80	*	IH
STORE	30165	51701.56	44735.06	955.50	*	24IN. CONC INV
STORE	30166	51704.99	44724.72	959.73	*	WV RIM
STORE	30167	51705.20	44724.61	957.72	*	WV TOP
STORE	30168	51699.23	44705.03	960.28	*	RE/FACE CURB
STORE	30169	51699.21	44705.62	960.53	*	RB PC
STORE	30170	51713.23	44709.37	960.36	*	RB MOC
STORE	30171	51713.82	44709.08	959.89	*	R3
STORE	30172	51721.00	44720.29	959.80	*	RB PC END
STORE	30173	51711.01	44713.67	960.20	*	EP
STORE	30174	51722.96	44768.29	960.55	*	RB BEGIN
STORE	30175	51723.65	44768.20	960.06	*	R3 BEGIN
STORE	30176	51721.20	44768.76	960.48	*	RG
STORE	30177	51749.49	44769.12	960.44	*	R3 PC
STORE	30178	51750.06	44769.06	960.94	*	RB PC
STORE	30179	51752.86	44768.99	960.93	*	RB PC
STORE	30180	51753.36	44768.93	960.43	*	R3
STORE	30181	51751.47	44767.28	960.90	*	RB MOC

STORE	30182	51750.63	44722.01	959.79	*	RP
STORE	30183	51791.54	44766.26	960.09	*	R3 BEGIN
STORE	30184	51792.09	44766.06	960.58	*	RB BEGIN
STORE	30185	51793.85	44845.70	960.46	*	RB
STORE	30186	51793.28	44845.67	960.01	*	R3
STORE	30187	51755.09	44846.85	960.54	*	R3
STORE	30188	51754.55	44846.90	961.03	*	RB
STORE	30189	51751.76	44846.70	960.98	*	RB
STORE	30190	51751.22	44846.80	960.50	*	R3
STORE	30191	51725.19	44847.81	960.00	*	R3
STORE	30192	51724.64	44847.97	960.47	*	RB
STORE	30193	51702.61	44848.21	961.48	*	IG
STORE	30194	51693.13	44848.36	961.18	*	IG
STORE	30195	51680.05	44848.00	958.79	*	IG
STORE	30196	51679.38	44848.80	958.03	*	IG
STORE	30197	51674.33	44849.47	958.00	*	IG
STORE	30198	51672.37	44849.70	959.68	*	IG
STORE	30199	51670.48	44849.79	958.75	*	IG
STORE	30200	51811.94	44844.67	960.69	*	IG
STORE	30201	51819.81	44844.86	959.50	*	IG
STORE	30202	51811.29	44765.57	960.27	*	IG
STORE	30203	51795.15	44766.00	960.32	*	IG
STORE	30204	51717.48	44768.22	960.42	*	IG
STORE	30205	51703.06	44768.84	961.30	*	IG
STORE	30206	51691.86	44768.87	960.93	*	IG
STORE	30207	51686.89	44769.13	960.43	*	IG
STORE	30208	51679.65	44769.27	957.75	*	IG
STORE	30209	51677.64	44769.53	957.76	*	IG
STORE	30210	51673.83	44769.97	959.85	*	IG
STORE	30211	51670.98	44769.83	958.95	*	IG
STORE	30212	51700.42	44666.23	959.84	*	RE
STORE	30213	51711.95	44660.30	959.61	*	RE
STORE	30214	51719.60	44647.52	959.72	*	RE
STORE	30215	51711.96	44649.04	960.37	*	RG STOP
STORE	30216	51728.50	44656.36	959.70	*	SM
STORE	30217	51761.54	44657.72	959.77	*	RP
STORE	30218	51713.84	44626.19	960.38	*	ES
STORE	30219	51712.14	44625.79	960.58	*	EB 1FT*2FTN/S
STORE	30220	51697.47	44616.66	961.31	*	IG
STORE	30221	51714.69	44615.91	960.58	*	RW BEGIN
STORE	30222	51719.70	44615.66	960.52	*	RB BEGIN
STORE	30223	51720.29	44615.59	960.02	*	R3 BEGIN
STORE	30224	51758.25	44613.16	960.63	*	R3
STORE	30225	51758.75	44613.12	961.14	*	RB PC
STORE	30226	51761.72	44612.98	961.04	*	RB PC
STORE	30227	51762.22	44613.06	960.52	*	R3
STORE	30228	51760.36	44615.11	960.58	*	R3
STORE	30229	51760.18	44614.68	961.09	*	RB MOC
STORE	30230	51769.31	44633.56	960.27	*	WV RIM
STORE	30231	51769.43	44633.46	954.33	*	WV TOP
STORE	30232	51772.81	44633.11	960.25	*	WV RIM
STORE	30233	51772.74	44633.13	956.01	*	WV TOP
STORE	30234	51772.82	44636.99	960.20	*	WV RIM
STORE	30235	51772.90	44636.80	956.02	*	WV TOP
STORE	30236	51788.29	44614.81	960.89	*	R3 BEGIN
STORE	30237	51788.84	44614.85	961.42	*	RB BEGIN
STORE	30238	51793.85	44614.88	961.49	*	RW BEGIN
STORE	30239	51808.29	44614.70	962.23	*	IG
STORE	30240	51810.55	44546.74	962.48	*	IG
STORE	30241	51792.38	44547.48	961.59	*	RW
STORE	30242	51787.41	44547.67	960.62	*	RB
STORE	30243	51786.80	44547.67	960.14	*	R3
STORE	30244	51760.33	44548.62	960.62	*	R3
STORE	30245	51759.82	44548.77	961.12	*	RB
STORE	30246	51756.87	44548.61	961.26	*	RB
STORE	30247	51756.33	44548.63	960.77	*	R3
STORE	30248	51718.84	44548.91	960.14	*	R3
STORE	30249	51718.27	44548.95	960.61	*	RB
STORE	30250	51713.26	44548.84	960.66	*	RW
STORE	30251	51696.99	44544.78	961.53	*	IG
STORE	30252	51790.11	44641.54	959.92	*	RE

STORE	30253	51803.65	44660.41	959.89	*	RE
STORE	30254	51836.30	44672.71	960.34	*	RE
STORE	30255	51832.02	44636.58	961.37	*	WF
STORE	30256	51825.59	44634.99	961.74	*	WV RIM
STORE	30257	51825.55	44635.01	956.56	*	WV TOP
STORE	30258	51814.96	44637.44	962.70	*	CATV BOX
STORE	30259	51815.74	44728.92	961.32	*	IH
STORE	30260	51814.15	44730.49	961.29	*	IH
STORE	30261	51810.80	44730.59	961.26	*	IH
STORE	30262	51810.89	44734.59	961.27	*	IH
STORE	30263	51814.15	44734.53	961.29	*	IH
STORE	30264	51815.62	44736.22	961.30	*	IH
STORE	30265	51811.42	44732.72	956.73	*	24IN. CONC INV
STORE	30266	51819.35	44708.27	960.37	*	RE
STORE	30267	51796.95	44721.01	959.70	*	RE
STORE	30268	51790.79	44737.26	959.91	*	RE
STORE	30269	51871.09	44571.75	961.24	*	IG
STORE	30270	51871.00	44624.84	961.03	*	IG
STORE	30271	51871.86	44651.51	961.15	*	GB
STORE	30272	51871.64	44655.63	960.89	*	IG
STORE	30273	51871.70	44659.14	960.43	*	FO
STORE	30274	51872.39	44662.73	960.02	*	IG
STORE	30275	51872.79	44672.25	960.50	*	RE
STORE	30276	51872.74	44687.79	960.94	*	RC
STORE	30277	51873.20	44705.15	960.44	*	RE
STORE	30278	51873.42	44708.80	960.30	*	IG
STORE	30279	51873.25	44726.54	961.32	*	IG
STORE	30280	51873.67	44728.96	960.80	*	TOP CONC DITCH
STORE	30281	51874.32	44733.94	961.20	*	TOP CONC DITCH
STORE	30282	51874.01	44731.99	958.85	*	TOE CONC DITCH
STORE	30283	51873.91	44730.98	958.85	*	TOE CONC DITCH
STORE	30284	51874.47	44735.68	960.96	*	IG
STORE	30285	51874.48	44737.59	959.52	*	IG
STORE	30286	51875.04	44793.49	958.99	*	IG
STORE	30287	51929.48	44699.76	960.67	*	RE ANG. PT.
STORE	30288	51976.04	44565.73	961.21	*	IG
STORE	30289	51976.39	44649.28	961.20	*	GB
STORE	30290	51976.92	44656.75	960.77	*	FO
STORE	30291	51977.20	44661.95	960.23	*	IG
STORE	30292	51977.28	44670.38	960.59	*	RE
STORE	30293	51976.82	44684.71	961.03	*	RC
STORE	30294	51976.85	44698.74	960.69	*	RE
STORE	30295	51977.17	44706.22	960.36	*	IG
STORE	30296	51977.55	44723.98	961.78	*	IG
STORE	30297	51977.39	44726.79	961.04	*	TOP CONC DITCH
STORE	30298	51977.70	44732.22	961.06	*	TOP CONC DITCH
STORE	30299	51977.71	44729.92	959.06	*	TOE CONC DITCH
STORE	30300	51978.02	44728.88	959.05	*	TOE CONC DITCH
STORE	30301	51978.75	44734.04	961.04	*	IG
STORE	30302	51978.82	44735.70	959.76	*	IG
STORE	30303	51980.44	44785.35	959.42	*	IG
STORE	30304	52753.20	44634.17	962.62	*	TRAV PT 77EL CK
STORE	30305	52015.79	44653.13	961.65	*	RG
STORE	30306	52079.20	44682.41	961.19	*	RC
STORE	30307	52079.35	44696.27	960.87	*	RE
STORE	30308	52079.20	44708.67	960.64	*	IG
STORE	30309	52079.61	44722.87	961.89	*	IG
STORE	30310	52079.38	44724.67	961.35	*	CONC TOP
STORE	30311	52079.40	44729.74	961.32	*	CONC TOP
STORE	30312	52079.56	44726.71	959.36	*	IC
STORE	30313	52079.68	44727.73	959.34	*	IC
STORE	30314	52079.88	44732.04	961.24	*	IG
STORE	30315	52081.02	44733.77	959.72	*	IG
STORE	30316	52081.02	44785.73	959.41	*	IG
STORE	30317	52078.67	44668.14	960.89	*	RE
STORE	30318	52078.19	44657.08	960.48	*	IG
STORE	30319	52079.63	44654.53	961.16	*	FO
STORE	30320	52079.51	44646.88	961.37	*	GB
STORE	30321	52077.60	44585.55	961.56	*	IG
STORE	30322	52151.57	44701.58	960.98	*	EP
STORE	30323	52177.48	44574.03	961.80	*	IG

STORE	30324	52177.70	44644.89	961.62	*	GB
STORE	30325	52177.53	44652.85	961.44	*	FO
STORE	30326	52177.42	44654.09	960.85	*	IG
STORE	30327	52178.73	44665.90	961.22	*	RE
STORE	30328	52178.86	44680.50	961.40	*	RC
STORE	30329	52178.84	44694.10	961.05	*	RE
STORE	30330	52178.69	44704.87	960.66	*	IG
STORE	30331	52178.75	44721.69	961.85	*	IG
STORE	30332	52178.77	44722.56	961.62	*	CONC TOP
STORE	30333	52179.15	44727.56	961.62	*	CONC TOP
STORE	30334	52178.86	44724.52	959.64	*	IC
STORE	30335	52178.94	44725.54	959.62	*	IC
STORE	30336	52179.45	44729.51	961.13	*	IG
STORE	30337	52180.19	44730.87	960.17	*	IG
STORE	30338	52180.60	44789.20	959.82	*	IG
STORE	30339	52284.17	44559.68	962.18	*	IG
STORE	30340	52283.35	44642.13	961.93	*	GB
STORE	30341	52284.49	44650.41	961.54	*	FO
STORE	30342	52284.33	44652.52	961.02	*	IG
STORE	30343	52284.66	44663.36	961.44	*	RE
STORE	30344	52284.04	44677.64	961.61	*	RC
STORE	30345	52284.45	44691.46	961.17	*	RE
STORE	30346	52284.86	44703.15	961.10	*	IG
STORE	30347	52285.67	44718.55	962.60	*	IG
STORE	30348	52285.52	44720.28	961.91	*	CONC TOP
STORE	30349	52286.08	44725.40	961.89	*	CONC TOP
STORE	30350	52285.82	44723.29	959.90	*	IC
STORE	30351	52285.81	44722.31	959.91	*	IC
STORE	30352	52286.07	44727.63	961.41	*	IG
STORE	30353	52285.59	44728.25	960.54	*	IG
STORE	30354	52287.82	44785.81	960.15	*	IG
STORE	30355	52386.66	44784.22	960.40	*	IG
STORE	30356	52388.60	44726.93	960.78	*	IG
STORE	30357	52388.54	44724.57	962.23	*	IG
STORE	30358	52388.49	44723.13	962.21	*	CONC TOP
STORE	30359	52388.91	44718.02	962.15	*	CONC TOP
STORE	30360	52388.78	44721.05	960.17	*	IC
STORE	30361	52388.67	44720.06	960.18	*	IC
STORE	30362	52389.49	44716.80	962.27	*	IG
STORE	30363	52388.89	44698.54	960.98	*	IG
STORE	30364	52388.23	44689.01	961.41	*	RE
STORE	30365	52387.90	44675.13	961.93	*	RC
STORE	30366	52387.58	44660.88	961.77	*	RE
STORE	30367	52387.92	44650.13	961.19	*	IG
STORE	30368	52388.18	44648.82	961.59	*	FO
STORE	30369	52387.85	44641.41	961.91	*	GB
STORE	30370	52387.40	44583.95	962.17	*	IG
STORE	30371	52405.10	44648.50	961.97	*	RG
STORE	30372	52487.91	44575.30	962.69	*	IG
STORE	30373	52488.51	44600.00	963.09	*	IG
STORE	30374	52489.88	44638.39	962.18	*	GB
STORE	30375	52490.18	44645.89	962.04	*	FO
STORE	30376	52489.65	44648.27	961.35	*	IG
STORE	30377	52489.93	44658.43	962.07	*	RE
STORE	30378	52490.34	44672.83	962.28	*	RC
STORE	30379	52490.95	44686.64	961.69	*	RE
STORE	30380	52491.60	44694.16	961.17	*	IG
STORE	30381	52491.93	44714.43	962.79	*	IG
STORE	30382	52492.28	44715.82	962.46	*	CONC TOP
STORE	30383	52492.14	44720.94	962.48	*	CONC TOP
STORE	30384	52492.31	44718.83	960.48	*	IC
STORE	30385	52492.12	44717.89	960.46	*	IC
STORE	30386	52492.66	44722.55	962.41	*	IG
STORE	30387	52492.86	44724.39	961.11	*	IG
STORE	30388	52491.85	44776.62	960.82	*	IG
STORE	30389	52553.55	44643.27	962.42	*	EG
STORE	30390	52587.93	44642.69	962.81	*	EP
STORE	30391	52590.39	44689.59	962.83	*	EP
STORE	30392	52590.33	44690.85	963.06	*	EP SUPPORT
STORE	30393	52575.15	44691.11	962.84	*	IH
STORE	30394	52577.83	44694.28	962.82	*	IH

STORE	30395	52582.72	44694.10	962.89	*	IH
STORE	30396	52584.80	44691.90	962.99	*	IH
STORE	30397	52577.76	44696.44	961.58	*	INV 12IN CMP
STORE	30398	52634.17	44694.31	961.93	*	INV 12IN CMP
STORE	30399	52540.66	44714.69	962.75	*	TOP CONC ANG PT
STORE	30400	52540.85	44719.71	962.60	*	TOP CONC ANG PT
STORE	30401	52565.49	44700.82	962.37	*	WV RIM
STORE	30402	52565.44	44700.82	960.17	*	WV NUT
STORE	30403	52575.90	44707.62	963.01	*	IH
STORE	30404	52578.27	44710.40	963.03	*	IH
STORE	30405	52582.59	44709.94	963.01	*	IH
STORE	30406	52584.38	44708.10	963.08	*	IH
STORE	30407	52586.87	44704.54	963.47	*	TOP OF BANK
STORE	30408	52593.95	44704.88	963.72	*	TOP OF BANK
STORE	30409	52596.98	44708.35	963.34	*	TOP OF BANK
STORE	30410	52597.01	44712.18	963.46	*	TOP OF BANK
STORE	30411	52592.13	44715.55	963.07	*	IH
STORE	30412	52590.21	44717.51	963.06	*	IH
STORE	30413	52590.22	44722.40	963.04	*	IH
STORE	30414	52593.04	44724.58	963.03	*	IH
STORE	30415	52596.23	44728.14	962.78	*	TOP OF BANK
STORE	30416	52593.62	44734.02	962.73	*	TOP OF BANK
STORE	30417	52592.66	44751.43	962.61	*	TOP OF BANK
STORE	30418	52590.59	44751.79	961.33	*	TOP CONC
STORE	30419	52585.26	44751.68	961.24	*	TOP CONC
STORE	30420	52587.95	44751.42	959.58	*	INV 24INCONCPIPE
STORE	30421	52582.98	44751.88	962.45	*	TOP OF BANK
STORE	30422	52587.67	44736.15	959.20	*	INV 24INCONCPIPE
STORE	30423	52582.92	44724.91	962.99	*	IH
STORE	30424	52585.65	44722.44	962.97	*	IH
STORE	30425	52585.62	44717.46	962.99	*	IH
STORE	30426	52582.67	44714.77	963.02	*	IH
STORE	30427	52578.30	44715.02	963.02	*	IH
STORE	30428	52576.14	44717.66	962.94	*	IH
STORE	30429	52595.37	44709.95	960.44	*	INV 24INCONCPIPE
STORE	30430	52610.84	44709.80	960.28	*	INV 24INCONCPIPE
STORE	30431	52593.42	44774.56	962.00	*	IG
STORE	30432	52592.61	44684.31	962.37	*	RE
STORE	30433	52592.88	44670.79	962.66	*	RC
STORE	30434	52592.41	44656.21	962.25	*	RE
STORE	30435	52592.16	44648.86	961.92	*	IG
STORE	30436	52592.62	44647.20	961.32	*	INV 12IN CMP
STORE	30437	52592.57	44645.73	962.05	*	FO
STORE	30438	52592.19	44641.11	962.95	*	IG
STORE	30439	52591.60	44635.78	962.38	*	GB
STORE	30440	52591.11	44583.64	962.16	*	IG
STORE	30441	52612.55	44646.74	962.27	*	IG
STORE	30442	52612.54	44649.28	962.30	*	RG
STORE	30443	52612.74	44647.61	961.41	*	INV 12IN CMP
STORE	30444	52617.05	44643.00	962.81	*	IH
STORE	30445	52616.96	44647.00	962.80	*	IH
STORE	30446	52620.84	44647.09	962.81	*	IH
STORE	30447	52620.88	44643.04	962.84	*	IH
STORE	30448	52619.01	44646.34	959.17	*	INV 30INCONCPIPE
STORE	30449	52630.80	44689.34	962.59	*	EP SUPPORT
STORE	30450	52650.44	44689.03	962.71	*	EG
STORE	30451	52643.12	44638.87	962.82	*	TR W/RG
STORE	30452	52613.25	44705.90	963.67	*	TOP CONC
STORE	30453	52610.20	44706.90	963.61	*	TOP CONC
STORE	30454	52609.98	44712.89	963.65	*	TOP CONC
STORE	30455	52613.24	44712.92	963.64	*	TOP CONC
STORE	30456	52614.45	44774.04	961.24	*	IG
STORE	30457	52590.89	44774.19	961.16	*	TOP CONC
STORE	30458	52588.75	44774.73	959.13	*	IC
STORE	30459	52587.52	44772.57	959.33	*	IC
STORE	30460	52585.38	44771.87	960.88	*	TOP CONC
STORE	30461	52583.40	44771.11	962.37	*	IG
STORE	30462	52580.06	44771.83	962.49	*	IG
STORE	30463	52578.86	44771.93	961.61	*	IG
STORE	30464	52696.13	44558.75	962.84	*	IG
STORE	30465	52696.50	44632.10	962.63	*	GB

STORE	30466	52695.95	44639.18	962.34	*	FO
STORE	30467	52696.97	44643.53	962.02	*	IG
STORE	30468	52697.93	44653.80	962.45	*	RE
STORE	30469	52697.61	44667.84	962.92	*	RC
STORE	30470	52697.35	44682.18	962.61	*	RE
STORE	30471	52697.82	44689.99	962.41	*	IG
STORE	30472	52698.45	44704.71	963.34	*	TOP CONC
STORE	30473	52698.25	44707.15	961.39	*	IC
STORE	30474	52698.10	44708.17	961.37	*	IC
STORE	30475	52698.37	44710.78	963.42	*	TOP CONC
STORE	30476	52698.30	44713.58	963.40	*	IG
STORE	30477	52698.48	44716.14	962.00	*	IG
STORE	30478	52698.46	44766.77	961.88	*	IG
STORE	30479	52805.78	44768.13	962.24	*	IG
STORE	30480	52803.23	44713.33	962.30	*	IG
STORE	30481	52803.23	44708.52	963.53	*	TOP CONC
STORE	30482	52803.56	44705.95	961.53	*	IC
STORE	30483	52803.00	44704.92	961.51	*	IC
STORE	30484	52802.99	44702.40	963.49	*	TOP CONC
STORE	30485	52803.05	44687.83	962.45	*	IG
STORE	30486	52802.61	44680.02	962.88	*	RE
STORE	30487	52802.20	44665.60	963.21	*	RC
STORE	30488	52802.41	44651.70	962.79	*	RE
STORE	30489	52802.06	44639.19	962.27	*	IG
STORE	30490	52802.33	44635.99	962.85	*	FO
STORE	30491	52802.80	44630.12	963.02	*	GB
STORE	30492	52802.66	44556.81	963.03	*	IG
STORE	30493	52902.69	44554.69	963.50	*	IG
STORE	30494	52903.36	44625.94	963.74	*	IG
STORE	30495	52903.40	44628.08	963.48	*	GB
STORE	30496	52903.81	44637.15	962.55	*	FO
STORE	30497	52904.03	44649.55	963.17	*	RE
STORE	30498	52951.28	44633.74	963.62	*	EP
STORE	30499	52903.28	44663.85	963.50	*	RC
STORE	30500	52903.46	44677.60	963.09	*	RE
STORE	30501	52904.19	44687.55	962.95	*	IG
STORE	30502	52904.62	44700.01	963.68	*	TOP CONC
STORE	30503	52904.79	44702.55	961.64	*	IC
STORE	30504	52905.02	44703.47	961.63	*	IC
STORE	30505	52905.18	44706.08	963.60	*	TOP CONC
STORE	30506	52905.51	44708.95	963.63	*	IG
STORE	30507	52905.75	44711.06	962.69	*	IG
STORE	30508	52907.13	44764.93	962.47	*	IG
STORE	30509	53009.83	44759.77	962.91	*	IG
STORE	30510	53009.33	44708.90	963.03	*	IG
STORE	30511	53009.55	44706.74	964.07	*	IG
STORE	30512	53010.12	44703.60	963.67	*	TOP CONC
STORE	30513	53010.01	44701.15	961.69	*	IC
STORE	30514	53009.90	44700.24	961.68	*	IC
STORE	30515	53009.75	44697.65	963.71	*	TOP CONC
STORE	30516	53009.41	44681.09	963.00	*	IG
STORE	30517	53009.49	44675.28	963.36	*	RE
STORE	30518	53009.42	44661.27	963.71	*	RC
STORE	30519	53008.89	44647.42	963.38	*	RE
STORE	30520	53009.00	44635.34	962.80	*	FO
STORE	30521	53008.74	44626.44	963.76	*	GB
STORE	30522	53006.10	44547.69	963.83	*	IG
STORE	30523	53104.79	44545.71	964.10	*	IG
STORE	30524	53106.08	44621.49	964.02	*	IG
STORE	30525	53105.77	44623.44	963.86	*	GB
STORE	30526	53105.80	44632.88	963.07	*	FO
STORE	30527	53106.76	44644.54	963.55	*	RE
STORE	30528	53107.02	44658.82	963.92	*	RC
STORE	30529	53107.30	44672.51	963.58	*	RE
STORE	30530	53107.79	44681.74	963.31	*	IG
STORE	30531	53107.29	44692.95	963.83	*	IG
STORE	30532	53107.21	44695.52	963.87	*	TOP CONC
STORE	30533	53106.93	44701.57	963.81	*	TOP CONC
STORE	30534	53105.91	44698.11	961.82	*	IC
STORE	30535	53106.48	44699.08	961.83	*	IC
STORE	30536	53106.68	44705.40	964.28	*	IG

STORE	30537	53106.49	44707.17	963.35	*	IG
STORE	30538	53107.57	44755.64	963.15	*	IG
STORE	30539	53211.86	44758.70	963.38	*	IG
STORE	30540	53209.80	44705.62	963.48	*	IG
STORE	30541	53209.31	44703.49	964.72	*	IG
STORE	30542	53208.37	44699.28	963.89	*	TOP CONC
STORE	30543	53208.08	44696.78	961.97	*	IC
STORE	30544	53207.74	44695.84	961.96	*	IC
STORE	30545	53207.98	44693.16	964.03	*	TOP CONC
STORE	30546	53207.36	44690.88	964.70	*	IG
STORE	30547	53207.20	44679.56	963.58	*	IG
STORE	30548	53207.25	44669.85	963.97	*	RE
STORE	30549	53206.99	44656.51	964.26	*	RC
STORE	30550	53206.81	44641.90	963.79	*	RE
STORE	30551	53206.33	44630.79	963.30	*	FO
STORE	30552	53205.25	44620.52	964.30	*	GB
STORE	30553	53204.14	44616.65	964.38	*	IG
STORE	30554	53200.92	44546.96	964.33	*	IG
STORE	30555	53309.66	44543.24	964.60	*	IG
STORE	30556	53309.88	44616.60	964.58	*	IG
STORE	30557	53310.07	44618.80	964.40	*	GB
STORE	30558	53310.34	44628.29	963.70	*	IG
STORE	30559	53310.82	44629.51	963.65	*	FO
STORE	30560	53281.93	44626.63	964.40	*	EP
STORE	30561	53310.37	44639.36	964.01	*	RE
STORE	30562	53310.96	44653.62	964.49	*	RC
STORE	30563	53311.33	44667.39	964.18	*	RE
STORE	30564	53311.68	44674.18	963.75	*	IG
STORE	30565	53312.01	44687.37	964.52	*	IG
STORE	30566	53312.40	44689.20	964.95	*	IG
STORE	30567	53312.40	44690.79	964.28	*	TOP CONC
STORE	30568	53312.68	44693.43	962.21	*	IC
STORE	30569	53312.00	44694.37	962.19	*	IC
STORE	30570	53312.15	44697.05	964.05	*	TUP CONC
STORE	30571	53312.20	44700.65	964.72	*	IG
STORE	30572	53312.36	44702.33	963.92	*	IG
STORE	30573	53313.55	44752.21	963.75	*	IG
STORE	30574	53412.00	44754.59	963.96	*	IG
STORE	30575	53409.90	44701.85	964.09	*	IG
STORE	30576	53410.82	44699.21	964.91	*	IG
STORE	30577	53411.05	44694.79	964.15	*	TOP CONC
STORE	30578	53411.16	44691.94	962.38	*	IC
STORE	30579	53410.83	44691.35	962.40	*	IC
STORE	30580	53411.10	44688.53	964.60	*	TOP CONC
STORE	30581	53410.87	44687.23	965.09	*	IG
STORE	30582	53410.87	44673.56	964.06	*	IG
STORE	30583	53410.93	44665.25	964.48	*	RE
STORE	30584	53410.52	44651.79	964.71	*	RC
STORE	30585	53410.16	44637.32	964.37	*	RE
STORE	30586	53409.56	44626.60	963.96	*	FO
STORE	30587	53409.43	44616.32	964.97	*	GB
STORE	30588	53404.09	44539.80	964.93	*	IG
STORE	30589	53426.85	44582.81	965.13	*	TR COR
STORE	30590	53430.65	44582.61	965.08	*	TR COR
STORE	30591	53430.58	44587.44	965.05	*	TR COR
STORE	30592	53426.78	44587.42	965.15	*	TR COR
STORE	30593	53417.45	44601.67	964.66	*	WF
STORE	30594	53424.90	44600.57	965.58	*	WV RIM
STORE	30595	53425.02	44600.55	959.95	*	WV NUT
STORE	30596	53438.95	44597.24	965.45	*	WV RIM
STORE	30597	53439.09	44597.23	960.07	*	WV NUT
STORE	30598	53439.79	44603.66	965.00	*	TR
STORE	30599	53508.95	44540.84	965.30	*	IG
STORE	30600	53509.07	44600.11	965.10	*	IG
STORE	30601	53509.71	44614.34	965.05	*	GB
STORE	30602	53509.80	44624.74	964.39	*	FO
STORE	30603	53509.27	44635.27	964.69	*	RE
STORE	30604	53509.68	44649.85	965.04	*	RC
STORE	30605	53509.98	44663.45	964.75	*	RE
STORE	30606	53510.24	44671.55	964.73	*	IG
STORE	30607	53510.91	44681.92	965.06	*	IG

STORE	30608	53511.12	44684.30	965.88	*	IG
STORE	30609	53511.50	44686.28	964.52	*	TOP CONC
STORE	30610	53511.68	44689.06	962.58	*	IC
STORE	30611	53511.50	44689.95	962.59	*	IC
STORE	30612	53511.65	44692.71	964.54	*	TOP CONC
STORE	30613	53511.77	44696.95	964.94	*	IG
STORE	30614	53510.65	44698.92	964.25	*	IG
STORE	30615	53511.76	44749.05	964.26	*	IG
STORE	30616	53604.38	44541.15	965.44	*	IG
STORE	30617	53603.77	44583.63	964.96	*	IG
STORE	30618	53605.52	44606.67	965.51	*	IG
STORE	30619	53628.43	44599.43	965.47	*	TR
STORE	30620	53605.50	44612.48	965.14	*	GB
STORE	30621	53603.40	44619.49	965.45	*	EP
STORE	30622	53605.64	44622.19	964.50	*	FO
STORE	30623	53606.16	44633.50	965.03	*	RE
STORE	30624	53605.64	44647.79	965.39	*	RC
STORE	30625	53606.18	44661.37	965.06	*	RE
STORE	30626	53606.66	44668.17	964.64	*	IG
STORE	30627	53606.92	44680.91	965.54	*	IG
STORE	30628	53606.99	44682.43	965.93	*	IG
STORE	30629	53606.83	44684.33	965.17	*	TOP CONC
STORE	30630	53607.45	44686.95	963.19	*	IC
STORE	30631	53607.06	44687.81	963.19	*	IC
STORE	30632	53607.09	44690.42	965.26	*	TOP CONC
STORE	30633	53607.79	44694.33	965.65	*	IG
STORE	30634	53607.87	44696.46	964.66	*	IG
STORE	30635	53606.67	44747.50	964.49	*	IG
STORE	30636	53706.01	44748.52	964.79	*	IG
STORE	30637	53706.31	44694.33	964.73	*	IG
STORE	30638	53705.27	44659.49	965.24	*	RE
STORE	30639	53705.74	44645.49	965.71	*	RC
STORE	30640	53704.92	44631.50	965.38	*	RE
STORE	30641	53704.13	44619.52	964.80	*	FO
STORE	30642	53703.89	44617.71	965.32	*	IG
STORE	30643	53703.99	44610.26	965.71	*	GB
STORE	30644	53703.29	44580.62	965.27	*	IG
STORE	30645	53701.21	44517.73	965.93	*	IG
STORE	30646	53797.53	44514.53	966.11	*	IG
STORE	30647	53798.91	44579.50	965.56	*	IG
STORE	30648	53799.31	44604.14	966.42	*	IG
STORE	30649	53799.35	44607.09	966.22	*	GB
STORE	30650	53799.82	44616.47	965.16	*	FO
STORE	30651	53826.41	44611.59	966.11	*	TR W/RG
STORE	30652	53800.09	44629.25	965.69	*	RE
STORE	30653	53800.55	44643.64	965.96	*	RC
STORE	30654	53800.54	44657.15	965.47	*	RE
STORE	30655	53800.51	44666.00	965.15	*	IG
STORE	30656	53799.92	44676.12	965.90	*	IG
STORE	30657	53799.86	44677.42	966.53	*	IG
STORE	30658	53800.23	44679.81	965.73	*	TOP CONC
STORE	30659	53799.83	44682.39	963.76	*	IC
STORE	30660	53799.86	44683.39	963.79	*	IC
STORE	30661	53800.33	44685.90	965.82	*	TOP CONC
STORE	30662	53800.18	44689.99	966.11	*	IG
STORE	30663	53800.33	44692.60	965.25	*	IG
STORE	30664	53801.51	44742.78	965.11	*	IG
STORE	30665	53900.64	44749.52	965.26	*	IG
STORE	30667	53898.78	44701.07	965.63	*	IG
STORE	30668	53899.69	44694.21	967.09	*	IG
STORE	30669	53901.02	44673.69	966.85	*	IG
STORE	30670	53901.40	44661.40	965.90	*	IG
STORE	30671	53901.52	44655.19	966.21	*	RE
STORE	30672	53900.51	44641.58	966.50	*	RC
STORE	30673	53900.38	44627.28	966.05	*	RE
STORE	30674	53900.49	44615.19	965.64	*	FO
STORE	30675	53900.54	44605.52	966.60	*	GB
STORE	30676	53899.46	44577.09	966.01	*	IG
STORE	30677	53896.81	44526.71	966.42	*	IG
STORE	30678	53921.47	44612.20	966.69	*	EP
STORE	30679	53884.92	44681.24	963.79	*	INV 24INCONCPIPE

STORE	30680	53907.72	44680.80	964.14	*	INV 24INCONCPIPE
STORE	30681	53932.52	44680.10	964.40	*	INV 24INCONCPIPE
STORE	30682	53948.07	44679.74	964.59	*	INV 24INCONCPIPE
STORE	30683	53919.59	44674.68	967.96	*	EP
STORE	30684	53920.57	44683.97	967.66	*	FC 6FTHI CHLK
STORE	30685	53920.00	44703.44	966.76	*	FC 6FTHI CHLK
STORE	30686	53903.16	44698.63	966.90	*	FC 6FTHI CHLK
STORE	30687	53902.39	44684.43	967.22	*	FC 6FTHI CHLK
STORE	30688	53885.80	44684.10	967.04	*	TOP CONC
STORE	30689	53885.51	44678.50	966.40	*	TOP CONC
STORE	30690	53906.52	44682.75	968.18	*	TOP CONC
STORE	30691	53906.87	44677.80	968.13	*	TOP CONC
STORE	30692	53933.14	44676.77	967.66	*	TOP CONC
STORE	30693	53933.31	44684.11	967.83	*	TOP CONC
STORE	30694	53928.96	44685.64	967.47	*	TOP CONC
STORE	30695	53922.68	44685.47	967.56	*	TOP CONC
STORE	30696	53927.62	44685.58	965.23	*	IC
STORE	30697	53925.29	44685.70	965.14	*	IC
STORE	30698	53936.58	44752.19	966.82	*	IG
STORE	30699	53933.51	44752.17	967.27	*	IG
STORE	30700	53931.07	44752.11	966.55	*	TOP CONC
STORE	30701	53928.59	44751.99	965.12	*	IC
STORE	30702	53926.36	44751.85	965.05	*	IC
STORE	30703	53924.28	44751.52	966.50	*	TOP CONC
STORE	30704	53922.06	44751.69	967.10	*	IG
STORE	30705	53917.70	44751.38	965.78	*	IG
STORE	30706	54004.52	44653.03	966.68	*	RE
STORE	30707	54004.60	44660.43	966.39	*	IG
STORE	30708	54005.03	44670.20	966.55	*	IG
STORE	30709	54005.24	44675.78	967.56	*	TOP CONC
STORE	30710	54005.45	44678.39	965.64	*	IC
STORE	30711	54005.17	44679.24	965.66	*	IC
STORE	30712	54005.08	44681.79	967.72	*	TOP CONC
STORE	30713	54005.55	44684.05	968.83	*	IG
STORE	30714	54005.55	44686.08	967.44	*	IG
STORE	30715	54008.15	44740.00	966.61	*	IG
STORE	30716	54004.16	44639.43	966.95	*	RC
STORE	30717	54003.93	44625.35	966.51	*	RE
STORE	30718	54003.80	44614.41	966.17	*	IG
STORE	30719	54003.92	44611.70	966.50	*	FO
STORE	30720	54003.67	44604.49	966.71	*	GB
STORE	30721	54004.27	44573.33	966.37	*	IG
STORE	30722	54004.28	44534.05	966.75	*	IG
STORE	30723	54022.99	44584.27	966.74	*	WV RIM
STORE	30724	54022.77	44584.33	961.25	*	WV NUT
STORE	30725	54026.98	44587.90	967.40	*	WV RIM
STORE	30726	54027.04	44587.73	962.06	*	WV NUT
STORE	30727	54027.66	44600.93	966.90	*	WF
STORE	30728	54050.98	44586.64	967.76	*	WV RIM
STORE	30729	54051.04	44586.72	966.39	*	WV NUT
STORE	30730	54050.73	44583.60	967.83	*	WV RIM
STORE	30731	54050.74	44583.81	965.40	*	WV NUT
STORE	30732	54099.98	44524.78	967.23	*	IG
STORE	30733	54101.24	44572.99	966.84	*	IG
STORE	30734	54102.62	44598.86	967.49	*	IG
STORE	30735	54102.33	44602.14	967.35	*	GB
STORE	30736	54102.22	44609.87	966.57	*	FO
STORE	30737	54102.76	44623.21	967.20	*	RE
STORE	30738	54103.05	44637.12	967.56	*	RC
STORE	30739	54103.47	44651.06	967.17	*	RE
STORE	30740	54103.05	44668.18	966.98	*	IG
STORE	30741	54102.88	44671.92	968.27	*	IG
STORE	30742	54102.86	44673.42	967.66	*	TOP CONC
STORE	30743	54103.26	44676.10	965.70	*	IC
STORE	30744	54103.25	44676.99	965.71	*	IC
STORE	30745	54103.44	44679.53	967.75	*	TOP CONC
STORE	30746	54103.86	44682.22	969.11	*	IG
STORE	30747	54103.82	44685.35	967.30	*	IG
STORE	30748	54104.28	44741.38	966.73	*	IG
STORE	30749	54202.47	44744.28	966.80	*	IG
STORE	30750	54203.15	44683.82	967.62	*	IG

STORE	30751	54202.77	44679.82	969.37	*	IG
STORE	30752	54202.38	44677.37	967.94	*	TOP CONC
STORE	30753	54202.86	44674.69	965.88	*	IC
STORE	30754	54202.60	44673.97	965.87	*	IC
STORE	30755	54203.07	44671.17	967.84	*	TOP CONC
STORE	30756	54202.79	44669.42	968.49	*	IG
STORE	30757	54203.70	44666.66	967.66	*	IG
STORE	30758	54203.61	44648.69	967.87	*	RE
STORE	30759	54202.49	44635.20	968.08	*	RC
STORE	30760	54202.38	44620.85	967.64	*	RE
STORE	30761	54202.16	44608.48	966.89	*	FO
STORE	30762	54202.14	44599.92	967.70	*	GB
STORE	30763	54202.22	44596.57	968.01	*	IG
STORE	30764	54201.18	44569.68	967.17	*	IG
STORE	30765	54199.88	44517.55	967.56	*	IG
STORE	30766	54304.12	44515.69	967.97	*	IG
STORE	30767	54304.06	44568.34	967.65	*	IG
STORE	30768	54329.44	44584.52	968.27	*	TR
STORE	30769	54304.94	44594.87	968.78	*	IG
STORE	30770	54304.37	44597.17	968.58	*	GB
STORE	30771	54283.86	44604.25	968.41	*	EP
STORE	30772	54304.12	44606.81	967.42	*	FO
STORE	30773	54304.34	44619.01	968.23	*	RE
STORE	30774	54337.99	44618.03	968.33	*	RE ANG PT
STORE	30775	54304.50	44633.20	968.63	*	RC
STORE	30776	54305.00	44646.78	968.42	*	RE
STORE	30777	54305.61	44660.09	968.09	*	IG
STORE	30778	54305.83	44666.85	969.05	*	IG
STORE	30779	54306.09	44668.91	967.95	*	TOP CONC
STORE	30780	54306.27	44671.64	965.97	*	IC
STORE	30781	54306.12	44672.35	965.98	*	IC
STORE	30782	54306.31	44675.02	968.04	*	IG
STORE	30783	54305.82	44677.73	969.66	*	IG
STORE	30784	54305.78	44681.39	967.88	*	IG
STORE	30785	54307.60	44745.21	967.55	*	IG
STORE	30786	54406.92	44740.86	967.92	*	IG
STORE	30787	54405.67	44680.04	968.27	*	IG
STORE	30788	54405.88	44676.13	970.10	*	IG
STORE	30789	54405.43	44672.92	968.10	*	TOP CONC
STORE	30790	54405.23	44670.23	966.03	*	IC
STORE	30791	54405.23	44669.39	966.02	*	IC
STORE	30792	54404.91	44666.75	967.98	*	TOP CONC
STORE	30793	54404.78	44663.86	969.56	*	IG
STORE	30794	54404.84	44660.48	968.37	*	IG
STORE	30795	54405.33	44644.39	968.55	*	RE
STORE	30796	54405.07	44630.69	968.88	*	RC
STORE	30797	54405.80	44615.03	968.42	*	RE
STORE	30798	54406.09	44604.62	967.88	*	FO
STORE	30799	54406.30	44595.30	968.96	*	GB
STORE	30800	54406.70	44592.30	969.17	*	IG
STORE	30801	54406.45	44565.66	968.06	*	IG
STORE	30802	54404.57	44500.88	968.32	*	IG
STORE	30803	54507.32	44498.84	968.61	*	IG
STORE	30804	54507.90	44564.61	968.35	*	IG
STORE	30805	54507.51	44589.24	969.46	*	IG
STORE	30806	54507.50	44591.86	969.29	*	GB
STORE	30807	54508.01	44601.85	968.44	*	FO
STORE	30808	54508.08	44611.24	968.92	*	RE
STORE	30809	54467.05	44599.84	969.11	*	RG
STORE	30810	54509.43	44628.40	969.12	*	RC
STORE	30811	54509.05	44642.25	968.86	*	RE
STORE	30812	54509.03	44657.85	968.56	*	IG
STORE	30813	54509.21	44661.33	969.71	*	IG
STORE	30814	54509.33	44664.58	968.11	*	TOP CONC
STORE	30815	54509.18	44667.20	966.13	*	IC
STORE	30816	54509.17	44668.09	966.17	*	IC
STORE	30817	54509.27	44670.69	968.22	*	TOP CONC
STORE	30818	54508.89	44674.23	970.41	*	IG
STORE	30819	54509.47	44678.15	968.70	*	IG
STORE	30820	54509.85	44737.95	968.37	*	IG
STORE	30821	54609.93	44519.11	968.98	*	IG

STORE	30822	54608.35	44562.61	968.67	*	IG
STORE	30823	54609.16	44588.98	969.59	*	GB
STORE	30824	54635.90	44570.34	970.22	*	WV RIM
STORE	30825	54635.98	44570.51	965.15	*	WV NUT
STORE	30826	54635.61	44574.27	970.25	*	WV RIM
STORE	30827	54635.75	44574.26	965.52	*	WV NUT
STORE	30828	54633.15	44570.78	969.21	*	RG
STORE	30829	54647.29	44596.28	970.07	*	EP
STORE	30830	54608.63	44598.70	968.84	*	FO
STORE	30831	54609.85	44606.87	969.18	*	RE
STORE	30832	54609.99	44625.76	969.34	*	RC
STORE	30833	54609.69	44639.87	968.93	*	RE
STORE	30834	54609.27	44645.77	968.47	*	IG
STORE	30835	54609.79	44656.31	968.57	*	IG
STORE	30836	54609.83	44659.37	969.68	*	IG
STORE	30837	54609.73	44662.33	968.28	*	TOP CONC
STORE	30838	54610.27	44668.42	968.37	*	TOP CONC
STORE	30839	54609.70	44664.83	966.32	*	IC
STORE	30840	54610.06	44665.82	966.32	*	IC
STORE	30841	54609.98	44672.10	970.65	*	IG
STORE	30842	54609.63	44675.45	969.15	*	IG
STORE	30843	54606.44	44731.14	968.62	*	IG
STORE	30844	54709.41	44730.55	968.84	*	IG
STORE	30845	54708.26	44675.31	969.34	*	IG
STORE	30846	54708.17	44670.37	971.21	*	IG
STORE	30847	54708.05	44666.32	968.42	*	TOP CONC
STORE	30848	54707.84	44660.23	968.35	*	TOP CONC
STORE	30849	54708.29	44662.76	966.39	*	IC
STORE	30850	54707.86	44663.74	966.37	*	IC
STORE	30851	54707.68	44656.31	970.24	*	IG
STORE	30852	54707.30	44653.67	969.16	*	IG
STORE	30853	54712.00	44646.84	968.90	*	RG
STORE	30854	54708.24	44643.48	968.75	*	IG
STORE	30855	54708.18	44637.97	969.26	*	RE
STORE	30856	54707.72	44623.78	969.61	*	RC
STORE	30857	54707.85	44603.20	969.48	*	RE
STORE	30858	54707.60	44598.46	969.25	*	FO
STORE	30859	54707.39	44595.91	969.26	*	IG
STORE	30860	54707.62	44589.22	969.77	*	GB
STORE	30861	54707.24	44586.68	969.87	*	IG
STORE	30862	54715.47	44585.21	969.76	*	WF
STORE	30863	54708.93	44553.69	968.86	*	IG
STORE	30864	54706.95	44504.78	969.23	*	IG
STORE	30865	54755.42	44592.00	969.86	*	RG
STORE	30866	54808.90	44514.08	969.56	*	IG
STORE	30867	54808.60	44549.85	969.09	*	IG
STORE	30868	54808.52	44582.64	970.27	*	IG
STORE	30869	54808.75	44586.05	969.99	*	GB
STORE	30870	54808.85	44592.70	969.49	*	IG
STORE	30871	54808.55	44595.68	969.51	*	FO
STORE	30872	54808.90	44601.02	969.70	*	RE
STORE	30873	54809.05	44622.41	970.04	*	RC
STORE	30874	54809.40	44635.91	969.80	*	RE
STORE	30875	54809.77	44651.56	969.48	*	IG
STORE	30876	54809.88	44655.17	969.90	*	IG
STORE	30877	54810.09	44657.85	968.43	*	TOP CONC
STORE	30878	54810.11	44663.98	968.46	*	TOP CONC
STORE	30879	54810.12	44661.40	966.42	*	IC
STORE	30880	54809.96	44660.56	966.40	*	IC
STORE	30881	54811.23	44669.33	971.65	*	IG
STORE	30882	54810.30	44673.13	969.88	*	IG
STORE	30883	54810.30	44724.30	969.35	*	IG
STORE	30884	54911.25	44728.44	969.67	*	IG
STORE	30885	54909.10	44671.87	970.02	*	IG
STORE	30886	54908.93	44667.00	971.93	*	IG
STORE	30887	54908.53	44661.82	968.66	*	TOP CONC
STORE	30888	54908.06	44655.76	968.55	*	TOP CONC
STORE	30889	54908.32	44659.23	966.58	*	IC
STORE	30890	54908.28	44658.42	966.57	*	IC
STORE	30891	54908.17	44651.94	970.46	*	IG
STORE	30892	54908.06	44649.88	969.73	*	IG

STORE	30893	54902.64	44647.13	969.77	*	RG
STORE	30894	54903.12	44644.16	969.80	*	RG
STORE	30895	54907.41	44633.92	970.07	*	RE
STORE	30896	54907.22	44618.82	970.46	*	RC
STORE	30897	54906.62	44595.49	970.10	*	RE
STORE	30898	54907.36	44593.58	969.97	*	FO
STORE	30899	54907.32	44589.35	969.89	*	IG
STORE	30900	54907.67	44583.32	970.23	*	GB
STORE	30901	54906.91	44557.32	969.43	*	IG
STORE	30902	54904.52	44499.07	969.78	*	IG
STORE	30903	55013.51	44587.78	970.52	*	EP
STORE	30904	55029.39	44582.71	971.07	*	RG
STORE	30905	55029.22	44578.93	971.05	*	RG
STORE	30906	55005.61	44500.57	970.01	*	IG
STORE	30907	55005.57	44555.92	969.78	*	IG
STORE	30908	55004.99	44577.27	970.84	*	IG
STORE	30909	55005.26	44581.23	970.62	*	GB
STORE	30910	55005.27	44587.58	970.53	*	IG
STORE	30911	55005.10	44591.63	970.43	*	FO/RE
STORE	30912	55005.53	44617.20	970.79	*	RC
STORE	30913	55006.26	44631.92	970.38	*	RE
STORE	30914	55006.49	44648.06	969.99	*	IG
STORE	30915	55006.20	44649.95	970.40	*	IG
STORE	30916	55006.35	44653.62	968.73	*	TOP CONC
STORE	30917	55006.91	44659.66	968.81	*	TOP CONC
STORE	30918	55007.17	44657.14	966.75	*	IC
STORE	30919	55007.09	44656.24	966.74	*	IC
STORE	30920	55006.62	44665.14	971.93	*	IG
STORE	30921	55007.05	44669.79	970.13	*	IG
STORE	30922	55007.19	44727.52	970.03	*	IG
STORE	30923	55067.50	44676.04	970.30	*	RG
STORE	30924	55067.24	44682.59	970.51	*	RG
STORE	30925	55101.40	44723.57	969.96	*	IG
STORE	30926	55102.83	44666.94	970.60	*	IG
STORE	30927	55102.79	44662.90	972.15	*	IG
STORE	30928	55102.65	44657.40	968.90	*	TOP CONC
STORE	30929	55102.32	44651.48	968.88	*	TOP CONC
STORE	30930	55102.34	44655.03	966.93	*	IC
STORE	30931	55102.31	44654.04	966.87	*	IC
STORE	30932	55102.59	44647.90	970.69	*	IG
STORE	30933	55109.10	44636.25	971.09	*	WM
STORE	30934	55102.69	44629.95	970.96	*	RE
STORE	30935	55102.12	44614.79	971.35	*	RC
STORE	30936	55101.18	44589.76	971.09	*	RE
STORE	30937	55110.56	44585.23	971.16	*	TR
STORE	30938	55101.83	44580.98	970.92	*	GB
STORE	30939	55100.90	44571.91	971.09	*	IG
STORE	30940	55100.28	44546.91	970.03	*	IG
STORE	30941	55099.77	44486.05	970.28	*	IG
STORE	30942	55135.95	44579.42	971.73	*	GV
STORE	30943	55356.25	44519.24	972.36	*	IG
STORE	30944	55358.26	44564.34	972.89	*	IG
STORE	30945	55358.14	44567.51	971.42	*	IG TOE
STORE	30946	55356.30	44570.50	971.42	*	IG TOE
STORE	30947	55356.37	44573.40	973.29	*	IG
STORE	30948	55355.68	44581.38	972.20	*	IG
STORE	30949	55355.49	44589.36	972.48	*	RE
STORE	30950	55356.94	44614.98	972.78	*	RC
STORE	30951	55357.32	44629.55	972.57	*	RE
STORE	30952	55358.03	44642.56	971.80	*	IG
STORE	30953	55350.82	44652.20	973.62	*	TR
STORE	30954	55358.37	44651.67	973.93	*	IG
STORE	30955	55358.40	44658.51	969.50	*	IG TOE
STORE	30956	55358.21	44661.70	969.21	*	IG TOE
STORE	30957	55358.05	44667.50	973.38	*	IG
STORE	30958	55358.26	44732.09	971.74	*	IG
STORE	30959	55454.34	44735.53	971.92	*	IG
STORE	30960	55451.91	44668.07	973.39	*	IG
STORE	30961	55451.96	44666.70	974.30	*	IG
STORE	30962	55450.69	44659.74	969.26	*	IG TOE
STORE	30963	55450.46	44657.86	969.21	*	IG TOE

STORE	30964	55451.11	44650.16	974.36	*	IG
STORE	30965	55451.19	44641.34	972.01	*	IG
STORE	30966	55451.75	44629.46	972.81	*	RE
STORE	30967	55451.41	44611.15	973.18	*	RC
STORE	30968	55452.03	44589.61	972.78	*	RE
STORE	30969	55452.41	44579.52	972.35	*	IG
STORE	30970	55452.30	44572.12	973.78	*	IG
STORE	30971	55451.80	44567.42	971.50	*	IG TOE
STORE	30972	55451.97	44566.16	971.62	*	IG TOE
STORE	30973	55452.27	44561.82	973.81	*	IG
STORE	30974	55452.17	44553.77	973.08	*	IG
STORE	30975	55453.87	44517.81	972.78	*	IG
STORE	30976	55552.40	44520.94	972.29	*	IG
STORE	30977	55552.07	44562.58	974.36	*	IG
STORE	30978	55551.86	44566.53	971.84	*	IG TOE
STORE	30979	55551.94	44567.68	971.79	*	IG TOE
STORE	30980	55551.87	44572.33	974.63	*	IG
STORE	30981	55552.33	44582.22	972.69	*	IG
STORE	30982	55545.01	44581.24	972.98	*	RG
STORE	30983	55545.35	44578.21	973.11	*	RG
STORE	30984	55549.71	44590.96	973.36	*	RE
STORE	30985	55548.72	44610.23	973.64	*	RC
STORE	30986	55548.77	44629.26	973.39	*	RE
STORE	30987	55549.12	44641.18	972.27	*	IG
STORE	30988	55549.06	44650.84	974.48	*	IG
STORE	30989	55439.22	44649.50	973.89	*	TR
STORE	30990	55548.79	44657.06	969.77	*	IG TOE
STORE	30991	55549.10	44661.42	969.77	*	IG TOE
STORE	30992	55548.70	44667.59	974.66	*	IG
STORE	30993	55548.96	44669.53	973.78	*	IG
STORE	30994	55549.79	44729.68	972.58	*	IG
STORE	30995	55649.22	44728.57	972.77	*	IG
STORE	30996	55649.59	44669.17	973.88	*	IG
STORE	30997	55649.68	44666.15	974.82	*	IG
STORE	30998	55649.65	44662.76	971.35	*	IG TOE
STORE	30999	55667.54	44662.44	973.66	*	IH
STORE	31000	55296.78	44661.89	974.05	*	IH
STORE	31001	55295.32	44660.09	974.07	*	IH
STORE	31002	55291.13	44659.82	974.06	*	IH
STORE	31003	55291.47	44655.27	974.05	*	IH
STORE	31004	55295.71	44655.58	974.03	*	IH
STORE	31005	55297.55	44654.05	974.02	*	IH
STORE	31006	55302.89	44571.94	973.83	*	IH
STORE	31007	55301.38	44570.16	973.87	*	IH
STORE	31008	55297.59	44569.93	973.85	*	IH
STORE	31009	55297.84	44565.35	973.85	*	IH
STORE	31010	55301.47	44565.57	973.86	*	IH
STORE	31011	55303.28	44563.97	973.85	*	IH
STORE	31012	55215.10	44571.94	974.46	*	IH
STORE	31013	55213.43	44573.62	974.45	*	IH
STORE	31014	55213.50	44578.69	974.48	*	IH
STORE	31015	55207.63	44578.83	974.49	*	IH
STORE	31016	55207.51	44573.75	974.46	*	IH
STORE	31017	55205.76	44572.03	974.45	*	IH
STORE	31018	55216.01	44633.07	972.95	*	IH
STORE	31019	55208.67	44633.01	972.95	*	IH
STORE	31020	55206.21	44635.61	972.88	*	IH
STORE	31021	55206.22	44637.62	972.93	*	IH
STORE	31022	55202.06	44637.61	972.86	*	IH
STORE	31023	55199.35	44635.02	972.75	*	IH
STORE	31024	55199.43	44644.98	972.86	*	IH
STORE	31025	55202.01	44642.31	972.94	*	IH
STORE	31026	55206.11	44642.22	972.99	*	IH
STORE	31027	55206.21	44644.17	973.00	*	IH
STORE	31028	55208.74	44646.52	973.00	*	IH
STORE	31029	55210.64	44646.46	972.96	*	IH
STORE	31030	55210.77	44650.61	972.97	*	IH
STORE	31031	55208.31	44653.20	972.99	*	IH
STORE	31032	55218.15	44653.01	972.98	*	IH
STORE	31033	55215.45	44650.38	972.94	*	IH
STORE	31034	55215.39	44646.33	972.94	*	IH

STORE	31035	55217.34	44646.28	972.92	*	IH
STORE	31036	55292.57	44657.51	969.05	*	INV. 18IN. RCP
STORE	31037	55293.58	44656.73	968.62	*	INV. 24IN. RCP
STORE	31038	55299.69	44568.90	969.08	*	INV. 24IN. RCP
STORE	31039	55210.37	44577.69	968.06	*	INV. 36IN. RCP
STORE	31040	55213.15	44634.02	967.44	*	INV. 36IN. RCP
STORE	31041	55183.31	44655.41	966.47	*	INV. 18IN.PCP
STORE	31042	55216.27	44630.50	971.62	*	RE
STORE	31043	55230.63	44636.68	971.90	*	RE
STORE	31044	55235.01	44648.49	972.04	*	RE
STORE	31045	55275.83	44650.54	972.23	*	RE
STORE	31046	55280.77	44636.34	972.03	*	RE
STORE	31047	55289.96	44629.32	972.16	*	RE
STORE	31048	55293.35	44588.95	972.22	*	RE
STORE	31049	55279.69	44581.62	972.31	*	RE
STORE	31050	55276.23	44568.62	972.49	*	RE
STORE	31051	55234.53	44567.88	972.11	*	RE
STORE	31052	55227.32	44582.64	971.87	*	RE
STORE	31053	55212.60	44589.37	971.90	*	RE
STORE	31054	55216.37	44609.74	972.14	*	RP
STORE	31055	55255.51	44608.76	972.69	*	RP
STORE	31056	55297.06	44609.56	972.45	*	RP
STORE	31057	55255.55	44566.82	972.79	*	RP
STORE	31058	55255.39	44649.38	972.57	*	RP
STORE	31059	55290.51	44636.29	972.14	*	TR
STORE	31060	55279.77	44649.34	972.00	*	RG STOP
STORE	31061	55216.37	44631.59	971.39	*	RG STOP
STORE	31062	55195.28	44633.63	971.47	*	RG
STORE	31063	55163.81	44570.84	971.25	*	GV SOUTH END
STORE	31064	55169.33	44570.84	971.24	*	GV NORTH END
STORE	31065	55160.61	44568.62	971.40	*	4FT. GUARD POST
STORE	31066	55160.51	44571.35	971.28	*	4FT. GUARD POST
STORE	31067	55160.68	44574.20	971.59	*	4FT. GUARD POST
STORE	31068	55163.52	44574.19	971.31	*	4FT. GUARD POST
STORE	31069	55166.39	44574.22	971.27	*	4FT. GUARD POST
STORE	31070	55169.39	44574.25	971.32	*	4FT. GUARD POST
STORE	31071	55172.31	44574.19	971.40	*	4FT. GUARD POST
STORE	31072	55172.35	44571.49	971.32	*	4FT. GUARD POST
STORE	31073	55172.39	44568.46	971.33	*	4FT. GUARD POST
STORE	31074	55186.43	44564.47	971.57	*	TR
STORE	31075	55186.61	44566.08	971.74	*	TR
STORE	31076	55189.15	44565.86	971.63	*	TR
STORE	31077	55189.07	44564.33	971.57	*	TR
STORE	31078	55219.93	44584.53	972.12	*	RG
STORE	31079	55229.18	44566.87	972.24	*	RG STOP
STORE	31080	55218.04	44584.18	972.25	*	EG
STORE	31081	55205.77	44583.24	972.62	*	EP
STORE	31082	55177.78	44576.02	971.66	*	WF
STORE	31083	55208.42	44564.73	973.02	*	TOP OF LINING
STORE	31084	55214.94	44564.48	973.11	*	TOP OF LINING
STORE	31085	55212.17	44564.37	970.88	*	TOE OF LINING
STORE	31086	55211.27	44564.58	970.86	*	TOE OF LINING
STORE	31087	55181.47	44651.81	967.17	*	TOE OF LINING
STORE	31088	55199.83	44638.22	968.71	*	TOE OF LINING
STORE	31089	55198.98	44642.70	968.55	*	TOE OF LINING
STORE	31090	55184.39	44653.74	966.85	*	TOE OF LINING
STORE	31091	55185.95	44655.82	970.31	*	TOP OF LINING
STORE	31092	55198.41	44645.74	971.24	*	TOP OF LINING
STORE	31093	55197.44	44635.16	971.58	*	TOP OF LINING
STORE	31094	55178.90	44649.56	969.32	*	TOP OF LINING
STORE	31095	55178.73	44645.22	971.24	*	IG
STORE	31096	55184.01	44661.46	971.89	*	IG
STORE	31097	55183.96	44699.83	970.79	*	IG
STORE	31098	55209.83	44705.74	971.91	*	TOP OF LINING
STORE	31099	55212.05	44706.09	969.97	*	TOE OF LINING
STORE	31100	55213.47	44706.23	969.98	*	TOE OF LINING
STORE	31101	55215.54	44706.17	971.84	*	TOP OF LINING
STORE	31102	55219.56	44706.33	972.27	*	IG
STORE	31103	55224.50	44706.25	970.65	*	IG
STORE	31104	55234.90	44707.00	971.97	*	RE
STORE	31105	55255.73	44706.95	972.39	*	RE

STORE	31106	55275.42	44707.57	972.22	*	RE
STORE	31107	55285.34	44707.72	971.53	*	IG
STORE	31108	55299.29	44707.87	973.02	*	IG
STORE	31109	55295.16	44581.91	972.35	*	RG
STORE	31110	55307.84	44543.36	973.47	*	TR
STORE	31111	55304.49	44618.71	967.62	*	WV TOP NUT
STORE	31112	55232.83	44620.39	966.68	*	WV TOP NUT
STORE	31113	55228.06	44625.03	966.56	*	WV TOP NUT
STORE	31114	55301.73	44562.17	968.85	*	WV TOP NUT
STORE	31115	55297.38	44555.27	968.79	*	WV TOP NUT
STORE	31116	55237.09	44568.18	972.18	*	GV
STORE	31117	55135.83	44579.44	971.74	*	GV
STORE	31118	55135.43	44518.66	970.22	*	IG
STORE	31119	55135.25	44562.25	971.01	*	IG
STORE	31120	55135.92	44588.71	971.34	*	RE
STORE	31121	55136.05	44614.07	971.68	*	RP
STORE	31122	55134.94	44629.91	971.27	*	RE
STORE	31123	55135.06	44647.75	970.87	*	IG
STORE	31124	55135.27	44650.69	968.89	*	TOP OF LINING
STORE	31125	55134.72	44653.18	966.94	*	TOE OF LINING
STORE	31126	55132.77	44654.36	966.94	*	TOE OF LINING
STORE	31127	55133.47	44656.93	968.97	*	TOP OF LINING
STORE	31128	55133.43	44662.73	972.22	*	IG
STORE	31129	55133.11	44666.86	970.50	*	IG
STORE	31130	55131.37	44722.66	970.11	*	IG
STORE	31131	55190.11	44547.47	972.59	*	TOP OF LINING
STORE	31132	55186.15	44552.87	972.56	*	TOP OF LINING
STORE	31133	55182.31	44545.60	972.49	*	TOP OF LINING
STORE	31134	55185.14	44545.96	971.05	*	TOE OF LINING
STORE	31135	55187.64	44545.40	971.15	*	TOE OF LINING
STORE	31136	55308.19	44481.21	972.22	*	WF
STORE	31137	55304.56	44481.17	969.36	*	WV NUT
STORE	31138	55288.33	44494.33	973.06	*	EP
STORE	31139	55402.83	44472.08	972.06	*	IG
STORE	31140	55343.15	44476.13	972.29	*	IG
STORE	31141	55310.45	44477.38	972.89	*	IG
STORE	31142	55291.19	44478.62	972.88	*	IG
STORE	31143	55275.69	44480.35	972.83	*	RE
STORE	31144	55254.96	44480.06	973.16	*	RP
STORE	31145	55235.87	44480.19	972.63	*	RE
STORE	31146	55226.64	44480.42	972.35	*	IG
STORE	31147	55217.61	44480.25	973.62	*	IG
STORE	31148	55215.89	44480.23	973.22	*	TOP OF LINING
STORE	31149	55212.97	44480.34	971.02	*	TOE OF LINING
STORE	31150	55212.03	44480.25	971.01	*	TOE OF LINING
STORE	31151	55208.97	44480.04	973.14	*	TOP OF LINING
STORE	31152	55201.60	44479.75	971.90	*	IG
STORE	31153	55193.14	44479.73	971.95	*	IG
STORE	31154	55190.79	44479.80	972.76	*	IG
STORE	31155	55189.37	44480.39	972.37	*	TOP OF LINING
STORE	31156	55187.27	44480.37	971.10	*	TOE OF LINING
STORE	31157	55185.60	44480.11	971.09	*	TOE OF LINING
STORE	31158	55183.07	44480.03	972.60	*	TOP OF LINING
STORE	31159	55182.37	44479.80	972.51	*	IG
STORE	31160	55178.95	44479.87	970.12	*	IG
STORE	31161	55148.16	44480.13	970.43	*	IG
STORE	31162	55133.22	44479.60	970.22	*	IG
STORE	31163	55130.09	44376.61	970.60	*	IG
STORE	31164	55181.03	44379.79	970.73	*	IG
STORE	31165	55184.09	44380.30	972.77	*	IG
STORE	31166	55184.54	44380.23	972.90	*	TOP OF LINING
STORE	31167	55187.05	44380.33	971.54	*	TOE OF LINING
STORE	31168	55188.23	44380.34	971.54	*	TOE OF LINING
STORE	31169	55190.14	44380.40	972.41	*	TOP OF LINING
STORE	31170	55191.86	44380.37	973.14	*	IG
STORE	31171	55193.92	44380.38	972.14	*	IG
STORE	31172	55205.59	44380.39	972.15	*	IG
STORE	31173	55209.18	44380.45	973.31	*	IG
STORE	31174	55210.11	44380.29	973.27	*	TOP OF LINING
STORE	31175	55213.12	44380.18	971.12	*	TOE OF LINING
STORE	31176	55214.06	44380.23	971.16	*	TOE OF LINING

STORE	31177	55216.85	44380.10	973.36	*	TOP OF LINING
STORE	31178	55218.75	44379.81	973.88	*	IG
STORE	31179	55225.50	44379.88	972.71	*	IG
STORE	31180	55235.69	44379.02	972.97	*	RE
STORE	31181	55255.39	44378.43	973.42	*	RP
STORE	31182	55275.72	44377.80	973.21	*	RE
STORE	31183	55280.60	44377.45	972.65	*	IG
STORE	31184	55292.70	44377.37	973.10	*	IG
STORE	31185	55334.26	44375.52	972.23	*	IG
STORE	31186	55381.39	44373.11	972.31	*	IG
STORE	31187	55390.04	44289.06	974.66	*	FL 9FT. BLOCK
STORE	31188	55355.34	44289.03	974.66	*	FF 9FT. BLOCK
STORE	31189	55346.12	44281.79	974.62	*	FF 9FT. BLOCK
STORE	31190	55346.06	44268.53	974.69	*	FL 9FT. BLOCK
STORE	31191	55343.52	44268.19	974.93	*	IG
STORE	31192	55321.68	44269.56	973.80	*	IG
STORE	31193	55289.34	44268.14	972.98	*	IG
STORE	31194	55283.74	44268.25	972.62	*	IG
STORE	31195	55273.47	44267.73	973.62	*	RE
STORE	31196	55255.24	44266.69	973.82	*	RP
STORE	31197	55237.88	44266.67	973.37	*	RE
STORE	31198	55226.82	44266.73	972.72	*	IG
STORE	31199	55219.73	44266.49	974.04	*	IG
STORE	31200	55218.07	44266.37	973.46	*	TOP OF LINING
STORE	31201	55215.19	44266.24	971.21	*	TOE OF LINING
STORE	31202	55214.39	44266.27	971.21	*	TOE OF LINING
STORE	31203	55211.42	44266.07	973.39	*	TOP OF LINING
STORE	31204	55210.00	44266.01	973.62	*	IG
STORE	31205	55205.18	44265.82	972.92	*	IG
STORE	31206	55195.51	44266.03	972.84	*	IG
STORE	31207	55193.04	44266.57	973.32	*	IG
STORE	31208	55192.53	44266.60	973.37	*	TOP OF LINING
STORE	31209	55189.64	44266.88	971.79	*	TOE OF LINING
STORE	31210	55187.74	44267.25	971.78	*	TOE OF LINING
STORE	31211	55185.55	44267.19	973.16	*	TOP OF LINING
STORE	31212	55184.74	44267.07	973.22	*	IG
STORE	31213	55181.44	44266.91	971.08	*	IG
STORE	31214	55152.00	44265.60	971.14	*	IG
STORE	31215	55224.87	44278.60	973.35	*	FO
STORE	31216	55226.35	44504.43	972.27	*	FO
STORE	31217	55226.23	44586.95	971.91	*	TM
STORE	31218	55293.76	44334.53	973.19	*	FO WARNING SIGN
STORE	31219	55302.49	44155.56	973.39	*	WM
STORE	31220	55345.91	44168.45	976.91	*	FL 7FT. BLOCK
STORE	31221	55337.22	44166.71	976.80	*	IG
STORE	31222	55291.33	44165.04	973.02	*	IG
STORE	31223	55280.26	44164.94	973.27	*	IG
STORE	31224	55271.53	44164.47	973.96	*	RE
STORE	31225	55256.00	44163.52	974.19	*	RP
STORE	31226	55239.98	44163.04	973.93	*	RE
STORE	31227	55231.40	44162.59	973.14	*	IG
STORE	31228	55226.81	44162.89	973.75	*	IG
STORE	31229	55221.21	44163.06	974.34	*	IG
STORE	31230	55219.17	44162.92	973.56	*	TOP OF LINING
STORE	31231	55216.34	44163.34	971.36	*	BOTTOM OF LINING
STORE	31232	55215.23	44163.56	971.48	*	TOE OF LINING
STORE	31233	55212.49	44163.74	973.51	*	TOP OF LINING
STORE	31234	55210.93	44163.58	973.72	*	IG
STORE	31235	55193.65	44163.71	973.41	*	IG
STORE	31236	55192.24	44163.46	973.32	*	TOP OF LINING
STORE	31237	55189.78	44163.66	971.91	*	TOE OF LINING
STORE	31238	55188.60	44163.65	971.82	*	TOE OF LINING
STORE	31239	55185.81	44163.98	973.34	*	TOP OF LINING
STORE	31240	55184.93	44163.83	973.42	*	IG
STORE	31241	55182.96	44164.01	971.52	*	IG
STORE	31242	55131.19	44164.85	971.30	*	IG
STORE	31243	55131.74	44064.14	971.32	*	IG
STORE	31244	55181.33	44064.23	971.50	*	IG
STORE	31245	55185.36	44064.20	973.72	*	IG
STORE	31246	55186.17	44064.29	973.65	*	TOP OF LINING
STORE	31247	55189.00	44064.48	972.00	*	TOE OF LINING

STORE	31248	55191.28	44064.80	972.05	*	TOE OF LINING
STORE	31249	55194.03	44064.88	973.69	*	TOP OF LINING
STORE	31250	55195.42	44064.90	973.70	*	IG
STORE	31251	55211.53	44065.34	974.15	*	IG
STORE	31252	55213.51	44065.24	973.63	*	IG
STORE	31253	55216.41	44064.98	971.48	*	TOE OF LINING
STORE	31254	55217.26	44064.69	971.50	*	TOE OF LINING
STORE	31255	55220.11	44064.68	973.71	*	TOP OF LINING
STORE	31256	55222.22	44064.87	974.38	*	IG
STORE	31257	55230.98	44065.09	973.80	*	IG
STORE	31258	55241.75	44065.17	974.38	*	RE
STORE	31259	55256.15	44064.52	974.67	*	RP
STORE	31260	55270.40	44063.93	974.59	*	RE
STORE	31261	55280.58	44063.53	973.78	*	IG
STORE	31262	55334.23	44061.72	977.19	*	IG
STORE	31263	55346.26	44061.31	977.60	*	FL 6FT. BLOCK
STORE	31264	55306.05	44082.07	974.34	*	WF
STORE	31265	55301.10	44082.63	972.57	*	WV NUT
STORE	31266	55298.18	44077.27	972.28	*	WV NUT
STORE	31267	55224.72	44035.87	975.32	*	TR
STORE	31268	55227.38	44043.43	975.12	*	FO
STORE	31269	55221.14	44025.40	974.95	*	IH
STORE	31270	55218.88	44025.44	974.98	*	IH
STORE	31271	55215.37	44025.16	974.95	*	IH
STORE	31272	55212.24	44024.98	974.90	*	IH
STORE	31273	55212.51	44022.49	974.88	*	IH
STORE	31274	55212.36	44019.07	974.78	*	IH
STORE	31275	55212.25	44016.83	974.88	*	IH
STORE	31276	55208.50	44003.86	974.80	*	IH
STORE	31277	55213.42	44004.39	974.84	*	IH
STORE	31278	55213.19	44001.88	974.86	*	IH
STORE	31279	55208.50	43996.85	974.82	*	IH
STORE	31280	55212.31	43996.70	974.82	*	IH
STORE	31281	55212.25	43994.31	974.52	*	IH
STORE	31282	55214.98	43994.31	974.83	*	IH
STORE	31283	55218.46	43994.29	974.83	*	IH
STORE	31284	55220.81	43994.28	974.74	*	IH
STORE	31285	55220.19	44048.74	973.60	*	TOP OF LINING
STORE	31286	55217.28	44048.62	971.45	*	TOE OF LINING
STORE	31287	55216.35	44048.61	971.47	*	TOE OF LINING
STORE	31288	55213.45	44048.88	973.63	*	TOP OF LINING
STORE	31289	55221.05	44016.76	974.79	*	TOP OF LINING
STORE	31290	55221.37	44005.11	974.98	*	TOP OF LINING
STORE	31291	55223.31	44004.31	974.78	*	TOP OF LINING
STORE	31292	55225.40	44007.75	975.52	*	TOP OF LINING
STORE	31293	55229.57	44007.95	975.25	*	TOP OF LINING
STORE	31294	55233.62	44007.00	975.29	*	TOP OF LINING
STORE	31295	55235.50	44004.27	975.02	*	TOP OF LINING
STORE	31296	55235.54	44000.90	974.95	*	TOP OF LINING
STORE	31297	55234.53	43996.72	975.00	*	TOP OF LINING
STORE	31298	55232.04	43995.14	975.14	*	TOP OF LINING
STORE	31299	55225.40	43995.91	974.99	*	TOP OF LINING
STORE	31300	55220.09	43996.60	974.57	*	TOP OF LINING
STORE	31301	55219.94	43983.64	974.76	*	TOP OF LINING
STORE	31302	55221.12	43954.06	974.25	*	TOP OF LINING
STORE	31303	55219.42	43951.64	974.24	*	TOP OF LINING
STORE	31304	55215.13	43952.26	974.57	*	TOP OF LINING
STORE	31305	55213.27	43959.97	974.22	*	TOP OF LINING
STORE	31306	55201.46	43959.97	974.15	*	TOP OF LINING
STORE	31307	55191.11	43961.34	974.28	*	TOP OF LINING
STORE	31308	55191.10	43964.42	974.30	*	TOP OF LINING
STORE	31309	55199.93	43965.57	974.37	*	TOP OF LINING
STORE	31310	55212.34	43965.75	974.03	*	TOP OF LINING
STORE	31311	55211.87	43983.75	974.43	*	TOP OF LINING
STORE	31312	55205.59	43997.37	973.55	*	TOP OF LINING
STORE	31313	55202.72	43995.04	973.61	*	TOP OF LINING
STORE	31314	55198.16	43995.23	972.07	*	TOP OF LINING
STORE	31315	55185.19	43986.10	971.85	*	TOP OF LINING
STORE	31316	55157.03	43964.48	972.28	*	TOP OF LINING
STORE	31317	55150.75	43961.12	972.20	*	TOP OF LINING
STORE	31318	55142.62	43960.97	972.14	*	TOP OF LINING

STORE	31319	55132.10	43961.33	971.92	*	TOP OF LINING
STORE	31320	55132.77	43965.06	969.41	*	CL 2FT. BOTTOM
STORE	31321	55132.66	43968.81	971.89	*	TOP OF LINING
STORE	31322	55144.20	43969.06	972.02	*	TOP OF LINING
STORE	31323	55149.37	43969.41	972.11	*	TOP OF LINING
STORE	31324	55153.69	43972.34	972.36	*	TOP OF LINING
STORE	31325	55151.81	43965.63	969.71	*	CL 2FT. BOTT.
STORE	31326	55182.35	43988.26	969.68	*	CL 2FT. BOTT.
STORE	31327	55179.99	43991.47	971.89	*	TOP OF LINING
STORE	31328	55201.88	44006.54	972.66	*	TOP OF LINING
STORE	31329	55204.79	44003.59	973.21	*	TOP OF LINING
STORE	31330	55213.16	44010.72	974.90	*	TOP OF LINING
STORE	31331	55208.01	44016.68	974.14	*	TOP OF LINING
STORE	31332	55198.84	44021.12	973.42	*	TOP OF LINING
STORE	31333	55189.87	44029.42	973.78	*	TOP OF LINING
STORE	31334	55180.16	44012.31	973.77	*	TOP OF LINING
STORE	31335	55164.23	43991.35	973.79	*	TOP OF LINING
STORE	31336	55158.46	43990.69	973.98	*	TOP OF LINING
STORE	31337	55158.16	43994.99	974.03	*	TOP OF LINING
STORE	31338	55173.76	44016.37	973.56	*	TOP OF LINING
STORE	31339	55183.70	44043.41	973.72	*	TOP OF LINING
STORE	31340	55189.35	44038.73	972.95	*	TOP OF LINING
STORE	31341	55199.66	44029.04	973.21	*	TOP OF LINING
STORE	31342	55207.98	44025.02	974.29	*	TOP OF LINING
STORE	31343	55186.76	44035.78	971.67	*	CL 2FT. BOTT.
STORE	31344	55161.90	43994.82	972.00	*	CL 2FT. BOTT.
STORE	31345	55172.74	43999.61	972.04	*	FL 18IN. RCP
STORE	31346	55197.58	43964.12	972.33	*	FL 18IN. RCP
STORE	31347	55187.06	43974.31	973.68	*	EV
STORE	31348	55187.20	43968.41	973.60	*	EV
STORE	31349	55185.12	43963.00	974.12	*	WELL
STORE	31350	55217.64	43930.13	970.81	*	FL 18IN. RCP
STORE	31351	55217.24	43953.54	971.15	*	FL 18IN. RCP
STORE	31352	55220.75	43927.41	973.61	*	TOP OF LINING
STORE	31353	55217.96	43931.52	973.59	*	TOP OF LINING
STORE	31354	55214.33	43925.87	973.59	*	TOP OF LINING
STORE	31355	55236.27	43993.37	975.11	*	RG
STORE	31356	55232.26	44001.29	973.56	*	TOP 36IN. RCP
STORE	31357	55280.23	44000.95	973.73	*	TOP 36IN. RCP
STORE	31358	55329.52	44004.57	975.28	*	TOP OF LINING
STORE	31359	55328.53	44000.74	972.71	*	CL 2FT. BOTT.
STORE	31360	55329.11	43997.05	975.19	*	TOP OF LINING
STORE	31361	55291.30	43997.20	975.07	*	TOP OF LINING
STORE	31362	55291.86	44000.65	972.60	*	CL 2FT. BOTT.
STORE	31363	55287.41	43996.61	975.15	*	TOP OF LINING
STORE	31364	55283.61	43994.55	975.18	*	TOP OF LINING
STORE	31365	55277.01	43994.86	975.39	*	TOP OF LINING
STORE	31366	55276.81	44005.88	975.45	*	TOP OF LINING
STORE	31367	55291.49	44005.17	975.28	*	TOP OF LINING
STORE	31368	55277.43	44007.15	975.38	*	RG
STORE	31369	55345.59	44225.52	975.04	*	FC 7FT. BLOCK
STORE	31370	55343.65	44225.46	974.77	*	FC 7FT. BLOCK
STORE	31371	55343.53	44219.58	974.80	*	FC 7FT. BLOCK
STORE	31372	55345.76	44219.79	974.91	*	FC 7FT. BLOCK
STORE	31373	55346.00	44120.15	977.55	*	FC 7FT. BLOCK
STORE	31374	55343.93	44120.34	977.55	*	FC 7FT. BLOCK
STORE	31375	55343.88	44114.67	977.68	*	FC 7FT. BLOCK
STORE	31376	55346.07	44114.70	977.61	*	FC 7FT. BLOCK
STORE	31377	55346.38	44016.15	977.49	*	FC 7FT. BLOCK
STORE	31378	55342.93	44012.79	975.52	*	FC 7FT. BLOCK
STORE	31379	55341.70	44014.25	975.47	*	FC 7FT. BLOCK
STORE	31380	55337.43	44010.33	975.46	*	FC 7FT. BLOCK
STORE	31381	55339.11	44008.77	975.43	*	FC 7FT. BLOCK
STORE	31382	55336.59	44006.15	975.40	*	FC 7FT. BLOCK
STORE	31383	55288.53	43994.64	975.30	*	EP
STORE	31384	55286.89	43994.71	975.47	*	TR
STORE	31385	55336.46	43949.68	974.79	*	FF 6FT. BLOCK
STORE	31386	55337.42	43939.26	974.63	*	IG
STORE	31387	55301.95	43940.17	974.38	*	IG
STORE	31388	55270.39	43941.39	974.61	*	RE
STORE	31389	55255.92	43940.91	974.76	*	RP

STORE	31390	55242.76	43941.14	974.53	*	RE
STORE	31391	55218.28	43942.29	973.52	*	IG
STORE	31392	55189.00	43942.62	972.77	*	IG
STORE	31393	55132.11	43945.20	972.15	*	IG
STORE	31394	55238.83	43924.75	974.29	*	GB
STORE	31395	55239.40	44007.42	974.72	*	GB
STORE	31396	55239.37	44095.48	974.13	*	GB
STORE	31397	55226.63	44081.69	974.04	*	FO
STORE	31398	55227.28	44043.29	975.10	*	FO
STORE	31399	55336.43	43924.94	974.08	*	BEG 5FT BLK WALL
STORE	31400	55214.43	43887.01	973.63	*	TR
STORE	31401	55336.47	43813.97	974.05	*	IG FL6FT BLKWALL
STORE	31402	55296.88	43816.68	974.56	*	IG
STORE	31403	55283.37	43816.70	973.79	*	IG
STORE	31404	55274.59	43816.25	974.10	*	GB
STORE	31405	55270.10	43816.22	974.15	*	RE
STORE	31406	55256.66	43816.86	974.34	*	RC
STORE	31407	55243.82	43816.59	974.15	*	RE
STORE	31408	55239.88	43816.97	973.95	*	GB
STORE	31409	55225.78	43816.81	973.16	*	IG
STORE	31410	55222.27	43817.14	974.08	*	IG
STORE	31411	55221.26	43817.04	973.62	*	TOP CONC
STORE	31412	55215.64	43817.01	973.52	*	TOP CONC
STORE	31413	55217.37	43817.06	971.90	*	IC
STORE	31414	55219.16	43817.45	971.78	*	IC
STORE	31415	55213.05	43816.97	971.64	*	IG
STORE	31416	55146.97	43816.54	971.43	*	IG
STORE	31417	55150.04	43720.07	971.43	*	IG
STORE	31418	55213.44	43722.01	971.60	*	IG
STORE	31419	55215.07	43722.40	973.38	*	IG
STORE	31420	55216.37	43722.46	973.44	*	TOP CONC
STORE	31421	55218.50	43722.70	971.31	*	IC
STORE	31422	55219.49	43722.43	971.34	*	IC
STORE	31423	55221.85	43722.35	973.54	*	TOP CONC
STORE	31424	55223.80	43722.52	974.24	*	IG
STORE	31425	55227.03	43722.85	973.35	*	IG
STORE	31426	55239.80	43722.35	973.75	*	GB
STORE	31427	55242.80	43722.62	974.04	*	RE
STORE	31428	55256.16	43722.71	974.28	*	RC
STORE	31429	55269.73	43723.79	974.18	*	RE
STORE	31430	55274.63	43723.72	973.99	*	GB
STORE	31431	55284.52	43723.76	973.84	*	IG
STORE	31432	55292.38	43723.52	974.41	*	IG
STORE	31433	55325.61	43723.63	974.15	*	IG
STORE	31434	55336.69	43723.91	972.72	*	IG FL
STORE	31435	55294.28	43765.01	974.48	*	TH
STORE	31436	55336.78	43626.82	973.24	*	FL IG
STORE	31437	55327.58	43627.65	974.23	*	IG
STORE	31438	55292.19	43627.15	974.05	*	IG
STORE	31439	55285.77	43626.33	973.58	*	IG
STORE	31440	55275.10	43625.65	974.06	*	GB
STORE	31441	55270.35	43625.95	974.31	*	RE
STORE	31442	55255.98	43626.05	974.27	*	RC
STORE	31443	55242.98	43626.06	974.03	*	RE
STORE	31444	55230.70	43636.49	972.93	*	RG
STORE	31445	55239.46	43626.29	973.75	*	GB
STORE	31446	55227.68	43625.02	973.22	*	IG
STORE	31447	55225.26	43625.33	974.11	*	IG
STORE	31448	55222.30	43625.28	973.54	*	TOP CONC
STORE	31449	55217.12	43625.15	973.48	*	TOP CONC
STORE	31450	55218.90	43625.22	971.63	*	IC
STORE	31451	55220.20	43625.17	971.55	*	IC
STORE	31452	55215.38	43625.83	973.36	*	IG
STORE	31453	55214.45	43625.92	971.99	*	IG
STORE	31454	55154.35	43623.89	971.53	*	IG
STORE	31455	55147.29	43530.30	971.61	*	IG
STORE	31456	55214.78	43528.47	971.89	*	IG
STORE	31457	55216.21	43527.93	973.31	*	IG
STORE	31458	55217.34	43528.14	973.54	*	TOP CONC
STORE	31459	55219.62	43527.77	971.51	*	IC
STORE	31460	55220.93	43527.88	971.65	*	IC

STORE	31461	55222.94	43527.49	973.59	*	TOP CONC
STORE	31462	55224.85	43503.86	974.01	*	TR
STORE	31463	55240.55	43527.82	973.91	*	GB
STORE	31464	55243.58	43527.81	974.21	*	RE
STORE	31465	55256.88	43527.96	974.35	*	RC
STORE	31466	55270.90	43527.87	974.34	*	RE
STORE	31467	55275.22	43527.93	974.05	*	GB
STORE	31468	55285.89	43527.79	973.63	*	IG
STORE	31469	55293.10	43527.79	974.26	*	IG
STORE	31470	55289.00	43563.06	974.11	*	EP
STORE	31471	55329.71	43529.18	973.86	*	IG
STORE	31472	55337.02	43528.64	973.31	*	IG FL
STORE	31473	55336.96	43428.39	973.87	*	IG FL
STORE	31474	55288.70	43429.07	973.92	*	IG
STORE	31475	55286.33	43428.76	973.54	*	IG
STORE	31476	55276.05	43428.71	973.96	*	GB
STORE	31477	55270.80	43428.44	974.19	*	RE
STORE	31478	55256.83	43428.02	974.25	*	RC
STORE	31479	55244.17	43428.16	974.06	*	RE
STORE	31480	55240.30	43428.13	973.70	*	GB
STORE	31481	55227.40	43428.27	973.15	*	IG
STORE	31482	55225.43	43428.34	973.95	*	IG
STORE	31483	55223.67	43428.34	973.53	*	TOP CONC
STORE	31484	55217.99	43428.42	973.51	*	TOP CONC
STORE	31485	55221.44	43428.28	971.57	*	IC
STORE	31486	55220.13	43428.35	971.60	*	IC
STORE	31487	55214.56	43428.18	971.53	*	IG
STORE	31488	55148.28	43429.08	971.51	*	IG
STORE	31489	55143.89	43331.01	971.54	*	IG
STORE	31490	55215.67	43330.31	972.01	*	IG
STORE	31491	55218.59	43331.00	973.37	*	TOP CONC
STORE	31492	55224.05	43330.69	973.42	*	TOP CONC
STORE	31493	55222.21	43330.94	971.55	*	IC
STORE	31494	55220.59	43330.97	971.54	*	IC
STORE	31495	55225.90	43330.96	974.20	*	IG
STORE	31496	55228.79	43330.39	973.13	*	IG
STORE	31497	55240.16	43330.66	973.71	*	GB
STORE	31498	55243.51	43330.33	974.05	*	RE
STORE	31499	55257.26	43330.60	974.26	*	RC
STORE	31500	55270.97	43331.48	974.22	*	RE
STORE	31501	55275.47	43331.21	973.95	*	GB
STORE	31502	55286.60	43330.84	973.49	*	IG
STORE	31503	55288.85	43330.72	973.88	*	IG
STORE	31504	55336.14	43332.42	974.05	*	FL IG
STORE	31505	55336.92	43326.26	973.73	*	FA 6FT HIBLKWALL
STORE	31506	55288.74	43313.04	974.10	*	FO RG
STORE	31507	55344.80	43234.54	973.67	*	IG
STORE	31508	55311.86	43234.01	973.40	*	IG
STORE	31509	55304.30	43233.97	974.33	*	IG
STORE	31510	55285.80	43234.00	973.61	*	IG
STORE	31511	55271.89	43233.89	974.17	*	RE
STORE	31512	55257.31	43233.80	974.41	*	RC
STORE	31513	55244.48	43233.96	974.19	*	RE
STORE	31514	55240.94	43233.69	973.81	*	GB
STORE	31515	55228.34	43233.44	973.10	*	IG
STORE	31516	55226.69	43233.54	973.97	*	IG
STORE	31517	55224.87	43233.36	973.42	*	TOP CONC
STORE	31518	55219.40	43233.29	973.42	*	TOP CONC
STORE	31519	55222.78	43233.33	971.42	*	IC
STORE	31520	55221.34	43233.26	971.48	*	IC
STORE	31521	55218.02	43233.03	973.46	*	IG
STORE	31522	55216.50	43233.51	972.30	*	IG
STORE	31523	55156.20	43234.98	971.92	*	IG
STORE	31524	55289.67	43147.41	973.78	*	EP
STORE	31525	55225.30	43152.45	973.28	*	TOP CONC PC
STORE	31526	55220.00	43152.18	973.42	*	TOP CONC PC
STORE	31527	55216.14	43149.04	973.36	*	TOP CONC PC
STORE	31528	55216.88	43143.43	973.43	*	TOP CONC PC
STORE	31529	55223.33	43144.93	973.40	*	TOP CONC MOC
STORE	31530	55219.33	43150.38	973.41	*	TOP CONC MOC
STORE	31531	55220.68	43148.49	971.27	*	IC MOC

STORE	31532	55221.63	43147.49	971.27	*	IC MOC
STORE	31533	55165.89	43136.44	972.77	*	IG
STORE	31534	55165.95	43139.93	973.04	*	IG
STORE	31535	55166.24	43142.04	973.85	*	IG
STORE	31536	55166.12	43143.64	973.35	*	TOP CONC
STORE	31537	55166.17	43149.16	973.34	*	TOP CONC
STORE	31538	55166.18	43146.91	971.18	*	IC
STORE	31539	55166.05	43145.85	971.30	*	IC
STORE	31540	55166.33	43150.56	973.21	*	IG
STORE	31541	55166.38	43151.26	972.34	*	IG
STORE	31542	55233.89	43135.20	973.18	*	IG
STORE	31543	55240.28	43135.83	973.70	*	GB
STORE	31544	55245.21	43135.56	974.09	*	RE
STORE	31545	55257.63	43135.36	974.39	*	RC
STORE	31546	55271.59	43135.59	974.29	*	RE
STORE	31547	55286.85	43135.80	973.71	*	IG
STORE	31548	55288.00	43135.86	974.11	*	IG
STORE	31549	55307.39	43136.15	974.25	*	IG
STORE	31550	55313.05	43136.04	973.57	*	IG
STORE	31551	55350.78	43135.62	973.51	*	IG
STORE	31552	55307.01	43083.17	974.27	*	WF
STORE	31553	55298.87	43082.57	973.77	*	WV RIM
STORE	31554	55298.73	43082.70	969.57	*	WV NUT
STORE	31555	55295.80	43077.14	973.81	*	WV RIM
STORE	31556	55295.75	43077.08	969.24	*	WV NUT
STORE	31557	55355.29	43037.46	973.60	*	IG
STORE	31558	55311.27	43038.83	973.51	*	IG
STORE	31559	55306.21	43038.91	974.23	*	IG
STORE	31560	55286.54	43038.23	973.52	*	IG
STORE	31561	55271.85	43038.22	974.27	*	RE
STORE	31562	55257.90	43038.12	974.36	*	RC
STORE	31563	55244.98	43038.23	974.04	*	RE
STORE	31564	55219.51	43038.61	972.47	*	IG
STORE	31565	55239.67	43038.33	973.78	*	GB
STORE	31566	55163.56	43038.05	972.39	*	IG
STORE	31567	55224.08	42958.17	973.04	*	TR
STORE	31568	55163.63	42927.49	972.29	*	IG
STORE	31569	55223.82	42927.14	972.84	*	IG
STORE	31570	55245.42	42927.05	974.14	*	RE
STORE	31571	55241.66	42927.83	973.80	*	GB
STORE	31572	55257.56	42927.37	974.40	*	RC
STORE	31573	55272.21	42927.43	974.33	*	RE
STORE	31574	55288.68	42927.53	973.53	*	IG
STORE	31575	55305.56	42927.13	973.97	*	IG
STORE	31576	55312.02	42927.14	973.32	*	IG
STORE	31577	55353.30	42927.17	973.56	*	IG
STORE	31578	55341.38	42826.82	973.26	*	IG
STORE	31579	55310.41	42828.46	973.24	*	IG
STORE	31580	55305.42	42828.58	973.87	*	IG
STORE	31581	55289.60	42828.51	973.96	*	IG
STORE	31582	55286.08	42828.38	973.46	*	IG
STORE	31583	55271.90	42828.22	974.25	*	RE
STORE	31584	55288.34	42788.65	973.73	*	TH
STORE	31585	55258.41	42828.62	974.35	*	RC
STORE	31586	55245.94	42828.54	974.12	*	RE
STORE	31587	55226.49	42849.19	973.50	*	TH
STORE	31588	55222.80	42847.48	973.38	*	TR
STORE	31589	55233.00	42828.22	973.27	*	IG
STORE	31590	55223.31	42828.48	973.94	*	IG
STORE	31591	55240.72	42828.34	973.71	*	GB
STORE	31592	55177.82	42833.41	972.53	*	IG
STORE	31593	55176.14	42729.54	972.04	*	IG
STORE	31594	55224.03	42730.58	972.64	*	IG
STORE	31595	55233.33	42730.23	973.25	*	IG
STORE	31596	55240.22	42730.20	973.65	*	GB
STORE	31597	55244.97	42730.24	974.09	*	RE
STORE	31598	55258.13	42730.06	974.35	*	RC
STORE	31599	55272.13	42729.95	974.26	*	RE
STORE	31600	55287.28	42730.28	973.53	*	IG
STORE	31601	55288.46	42730.11	973.97	*	IG
STORE	31602	55290.69	42733.34	973.74	*	EP

STORE	31603	55305.21	42729.64	973.86	*	IG
STORE	31604	55309.84	42730.14	973.03	*	IG
STORE	31605	55350.08	42730.20	973.15	*	IG
STORE	31606	55287.76	42686.55	973.91	*	TR
STORE	31607	55343.97	42627.92	973.08	*	IG
STORE	31608	55308.74	42629.38	972.98	*	IG
STORE	31609	55303.29	42629.33	973.66	*	IG
STORE	31610	55285.32	42629.58	973.28	*	IG
STORE	31611	55271.43	42630.19	974.20	*	RE
STORE	31612	55258.30	42630.13	974.36	*	RC
STORE	31613	55244.58	42630.04	974.07	*	RE
STORE	31614	55240.51	42630.17	973.77	*	GB
STORE	31615	55212.52	42630.63	972.21	*	IG
STORE	31616	55175.79	42633.10	971.98	*	IG
STORE	31617	55176.83	42532.05	972.42	*	IG
STORE	31618	55227.99	42531.68	972.79	*	IG
STORE	31619	55240.98	42531.99	973.65	*	GB
STORE	31620	55245.22	42531.66	974.03	*	RE
STORE	31621	55258.78	42531.28	974.40	*	RC
STORE	31622	55273.51	42531.35	974.18	*	RE
STORE	31623	55286.28	42530.81	972.85	*	IG
STORE	31624	55307.16	42531.95	973.36	*	IG
STORE	31625	55312.15	42531.90	972.66	*	IG
STORE	31626	55355.15	42529.71	972.85	*	IG
STORE	31627	55350.84	42431.87	972.88	*	IG
STORE	31628	55312.92	42430.43	972.13	*	IG
STORE	31629	55308.21	42430.47	973.57	*	IG
STORE	31630	55285.12	42430.15	973.97	*	IG
STORE	31631	55283.80	42398.09	973.76	*	RG
STORE	31632	55273.72	42430.05	974.13	*	RE
STORE	31633	55258.72	42430.29	974.38	*	RC
STORE	31634	55245.68	42430.40	974.19	*	RE
STORE	31635	55241.00	42430.14	974.26	*	GB
STORE	31636	55231.92	42430.91	974.33	*	IG
STORE	31637	55227.89	42430.89	974.80	*	IG
STORE	31638	55137.25	42329.89	971.01	*	IG
STORE	31639	55197.87	42328.56	971.29	*	IG
STORE	31640	55200.56	42328.45	973.09	*	TOP CONC
STORE	31641	55206.07	42328.21	973.12	*	TOP CONC
STORE	31642	55202.76	42328.10	970.97	*	IC
STORE	31643	55203.79	42328.15	970.96	*	IC
STORE	31644	55207.75	42328.00	973.76	*	IG
STORE	31645	55210.66	42328.19	972.58	*	IG
STORE	31646	55241.24	42326.81	973.68	*	GB
STORE	31647	55246.44	42326.83	974.13	*	RE
STORE	31648	55258.42	42326.94	974.26	*	RC
STORE	31649	55274.80	42327.09	973.88	*	RE
STORE	31650	55291.61	42327.35	973.00	*	IG
STORE	31651	55291.12	42318.39	973.08	*	FO RG
STORE	31652	55308.92	42329.21	973.48	*	IG
STORE	31653	55315.60	42328.99	972.55	*	IG
STORE	31654	55360.13	42328.35	972.90	*	IG
STORE	31655	55308.77	42445.73	973.38	*	IG TOP
STORE	31656	55308.79	42447.02	971.99	*	IG TOE
STORE	31657	55308.66	42450.74	971.90	*	IG TOE
STORE	31658	55308.57	42451.82	973.23	*	IG TOP
STORE	31659	55284.44	42464.24	974.53	*	RG
STORE	31660	55283.81	42452.29	973.74	*	IH
STORE	31661	55283.86	42445.81	973.75	*	IH
STORE	31662	55284.18	42449.30	971.03	*	INV 24INCONCPIPE
STORE	31663	55230.83	42456.23	973.90	*	TR
STORE	31664	55235.61	42450.50	974.12	*	IH
STORE	31665	55235.94	42442.64	974.41	*	IH
STORE	31666	55234.72	42446.89	971.52	*	INV 24INCONCPIPE
STORE	31667	55236.14	42442.02	974.68	*	RG
STORE	31668	55195.75	42438.30	973.15	*	TOP CONC
STORE	31669	55198.57	42433.68	973.29	*	TOP CONC
STORE	31670	55180.04	42453.65	973.04	*	TOP CONC
STORE	31671	55177.00	42449.24	973.25	*	TOP CONC
STORE	31672	55191.80	42432.43	973.15	*	TOP CONC
STORE	31673	55200.30	42402.63	973.00	*	TOP CONC

STORE	31674	55205.89	42402.38	973.25	*	TOP CONC
STORE	31675	55202.48	42401.97	971.04	*	IC
STORE	31676	55203.56	42401.95	971.08	*	IC
STORE	31677	55193.79	42433.75	970.98	*	IC
STORE	31678	55197.32	42435.68	971.15	*	IC
STORE	31679	55196.83	42436.64	971.08	*	IC
STORE	32000	55667.04	44655.43	973.55	*	IH
STORE	32001	55715.96	44661.44	973.97	*	IH
STORE	32002	55715.85	44655.22	973.92	*	IH
STORE	32003	55716.38	44659.12	971.96	*	INV 18INCONCPIPE
STORE	32004	55739.54	44649.98	975.01	*	TR
STORE	32005	55750.11	44728.06	973.23	*	IG
STORE	32006	55749.60	44695.35	973.67	*	IG
STORE	32007	55750.24	44668.15	974.65	*	IG
STORE	32008	55750.09	44665.90	975.71	*	IG
STORE	32009	55750.11	44660.55	972.29	*	IG TOE
STORE	32010	55750.28	44656.51	972.10	*	IG TOE
STORE	32011	55749.91	44650.77	975.27	*	IG
STORE	32012	55750.49	44629.24	974.22	*	RE
STORE	32013	55750.91	44613.86	974.50	*	RC
STORE	32014	55750.94	44594.93	974.12	*	RE
STORE	32015	55751.02	44585.09	973.42	*	IG
STORE	32016	55751.72	44583.73	974.34	*	RG
STORE	32017	55751.19	44573.07	975.55	*	IG
STORE	32018	55751.26	44568.51	972.60	*	IG TOE
STORE	32019	55751.33	44567.27	972.67	*	IG TOE
STORE	32020	55751.07	44562.92	975.58	*	IG
STORE	32021	55751.12	44560.37	974.95	*	IG
STORE	32022	55752.46	44507.06	974.56	*	IG
STORE	32023	55850.28	44504.66	975.12	*	IG
STORE	32024	55849.97	44559.96	975.47	*	IG
STORE	32025	55849.92	44563.02	976.23	*	IG
STORE	32026	55850.33	44567.33	972.85	*	IG TOE
STORE	32027	55850.13	44567.95	972.83	*	IG TOE
STORE	32028	55850.87	44572.77	975.97	*	IG
STORE	32029	55850.46	44576.29	976.31	*	IG
STORE	32030	55850.08	44586.01	974.08	*	IG
STORE	32031	55849.90	44596.82	974.73	*	RE
STORE	32032	55849.28	44615.08	974.81	*	RC
STORE	32033	55849.75	44629.28	974.55	*	RE
STORE	32034	55849.69	44640.99	973.30	*	IG
STORE	32035	55850.31	44650.37	976.04	*	IG
STORE	32036	55850.19	44655.22	972.43	*	IG TOE
STORE	32037	55850.43	44659.67	972.36	*	IG TOE
STORE	32038	55850.38	44665.44	975.92	*	IG
STORE	32039	55850.52	44667.41	974.96	*	IG
STORE	32040	55850.77	44717.98	973.62	*	IG
STORE	32041	55948.42	44721.94	973.89	*	IG
STORE	32042	55948.20	44667.62	975.45	*	IG
STORE	32043	55947.55	44666.36	976.13	*	IG
STORE	32044	55947.97	44661.06	972.46	*	IG TOE
STORE	32045	55948.21	44656.36	972.43	*	IG TOE
STORE	32046	55947.99	44650.05	976.57	*	IG
STORE	32047	55948.13	44639.84	973.75	*	IG
STORE	32048	55947.88	44629.24	974.85	*	RE
STORE	32049	55948.26	44614.33	975.22	*	RC
STORE	32050	55947.66	44597.96	975.06	*	RE
STORE	32051	55947.76	44586.84	974.48	*	IG
STORE	32052	55948.12	44575.69	976.95	*	IG
STORE	32053	55948.56	44568.97	973.31	*	IG TOE
STORE	32054	55948.72	44568.02	973.36	*	IG TOE
STORE	32055	55948.41	44563.62	976.38	*	IG
STORE	32056	55947.94	44560.46	975.77	*	IG
STORE	32057	55948.05	44517.14	975.56	*	IG
STORE	32058	55970.92	44517.63	976.63	*	SM
STORE	32059	56047.49	44512.27	976.15	*	IG
STORE	32060	56047.01	44561.11	975.97	*	IG
STORE	32061	56046.91	44564.01	976.60	*	IG
STORE	32062	56046.47	44568.16	973.68	*	IG TOE
STORE	32063	56046.62	44568.94	973.73	*	IG TOE
STORE	32064	56046.89	44576.33	977.30	*	IG

STORE	32065	56046.08	44589.91	974.78	*	IG
STORE	32066	56045.80	44600.39	975.48	*	RE
STORE	32067	56074.53	44601.14	975.52	*	RE ANG PT
STORE	32068	56045.26	44614.88	975.56	*	RC
STORE	32069	56044.93	44629.18	975.03	*	RE
STORE	32070	56044.75	44640.51	973.98	*	IG
STORE	32071	56044.80	44650.06	976.73	*	IG
STORE	32072	56044.35	44656.07	972.57	*	IG TOE
STORE	32073	56044.71	44661.11	972.78	*	IG TOE
STORE	32074	56044.25	44665.50	976.35	*	IG
STORE	32075	56044.25	44667.38	975.57	*	IG
STORE	32076	56045.59	44722.23	974.15	*	IG
STORE	32077	56145.75	44728.41	974.82	*	IG
STORE	32078	56144.12	44666.36	975.94	*	IG
STORE	32079	56144.27	44662.98	977.21	*	IG
STORE	32080	56144.21	44658.42	972.74	*	IG TOE
STORE	32081	56144.29	44654.68	972.82	*	IG TOE
STORE	32082	56144.12	44649.11	977.21	*	IG
STORE	32083	56144.07	44640.22	974.61	*	IG
STORE	32084	56144.76	44629.27	975.39	*	RE
STORE	32085	56145.55	44615.21	975.90	*	RC
STORE	32086	56145.62	44600.93	975.80	*	RE
STORE	32087	56145.43	44589.34	975.14	*	IG
STORE	32088	56145.44	44575.36	977.81	*	IG
STORE	32089	56145.80	44569.00	974.16	*	IG TOE
STORE	32090	56145.90	44568.07	974.18	*	IG TOE
STORE	32091	56146.12	44563.80	977.22	*	IG
STORE	32092	56145.96	44559.94	976.50	*	IG
STORE	32093	56145.71	44509.40	976.36	*	IG
STORE	32094	56174.00	44652.55	975.05	*	IH
STORE	32095	56174.13	44658.71	975.10	*	IH
STORE	32096	56173.93	44655.36	973.47	*	INV 18INCONCPIPE
STORE	32097	56172.87	44653.90	971.94	*	IG TOE END
STORE	32098	56172.22	44658.01	972.24	*	IG TOE END
STORE	32099	56192.16	44655.42	973.73	*	INV 18INCONCPIPE
STORE	32100	56205.10	44645.17	975.73	*	RG
STORE	32101	56248.77	44721.65	974.96	*	IG
STORE	32102	56244.61	44645.88	976.08	*	IG
STORE	32103	56245.21	44639.54	974.96	*	IG
STORE	32104	56245.15	44629.63	975.58	*	RE
STORE	32105	56245.56	44615.11	976.22	*	RC
STORE	32106	56245.53	44601.16	976.14	*	RE
STORE	32107	56245.63	44589.92	975.60	*	IG
STORE	32108	56245.01	44573.50	977.76	*	IG
STORE	32109	56245.32	44569.08	974.53	*	IG.TOE
STORE	32110	56245.38	44568.12	974.51	*	IG TOE
STORE	32111	56245.36	44563.57	977.49	*	IG
STORE	32112	56246.09	44560.18	976.86	*	IG
STORE	32113	56245.40	44507.33	977.06	*	IG
STORE	32114	56351.27	44499.76	977.54	*	IG
STORE	32115	56351.36	44562.45	977.41	*	IG
STORE	32116	56351.42	44564.99	978.22	*	IG
STORE	32117	56351.16	44569.68	974.94	*	IG TOE
STORE	32118	56351.22	44570.38	975.04	*	IG TOE
STORE	32119	56351.08	44575.15	978.06	*	IG
STORE	32120	56350.81	44589.44	975.90	*	IG
STORE	32121	56351.03	44601.08	976.52	*	RE
STORE	32122	56350.44	44614.91	976.55	*	RC
STORE	32123	56350.89	44628.83	976.06	*	RE
STORE	32124	56350.23	44647.44	976.21	*	IG
STORE	32125	56350.11	44709.60	975.26	*	IG
STORE	32126	56451.11	44507.55	978.07	*	IG
STORE	32127	56451.58	44559.19	977.75	*	IG
STORE	32128	56451.48	44563.47	978.57	*	IG
STORE	32129	56451.57	44567.56	975.45	*	IG TOE
STORE	32130	56451.36	44568.87	975.57	*	IG TOE
STORE	32131	56451.71	44575.27	978.77	*	IG
STORE	32132	56498.06	44576.49	979.03	*	IG ANG PT
STORE	32133	56498.05	44569.89	975.62	*	IG TOE ANG PT
STORE	32134	56497.94	44568.86	975.57	*	IG TOE ANG PT
STORE	32135	56497.69	44564.47	978.67	*	IG ANG PT

STORE	32136	56452.22	44589.84	976.13	*	IG
STORE	32137	56451.74	44601.42	976.79	*	RE
STORE	32138	56451.62	44615.09	976.82	*	RC
STORE	32139	56451.70	44629.69	976.36	*	RE
STORE	32140	56452.04	44639.88	975.50	*	IG
STORE	32141	56451.63	44647.48	976.44	*	IG
STORE	32142	56454.03	44717.53	975.89	*	IG
STORE	32143	56548.54	44717.72	976.29	*	IG
STORE	32144	56551.37	44647.36	976.81	*	IG
STORE	32145	56551.42	44639.90	975.77	*	IG
STORE	32146	56551.07	44629.40	976.72	*	RE
STORE	32147	56551.36	44615.38	977.23	*	RC
STORE	32148	56551.71	44601.33	977.08	*	RE
STORE	32149	56551.63	44591.04	976.54	*	IG
STORE	32150	56550.73	44581.21	978.75	*	IG
STORE	32151	56550.22	44576.36	975.84	*	IG TOE
STORE	32152	56550.37	44575.08	975.90	*	IG TOE
STORE	32153	56550.80	44571.13	978.18	*	IG
STORE	32154	56550.34	44515.94	977.41	*	IG
STORE	32155	56572.33	44572.14	978.47	*	IG
STORE	32156	56572.40	44580.71	978.48	*	IG
STORE	32157	56572.43	44575.68	975.85	*	INV 18INCONCPIPE
STORE	32158	56586.18	44575.22	975.94	*	INV 18INCONCPIPE
STORE	32159	56586.20	44571.53	978.29	*	IG
STORE	32160	56586.07	44580.39	978.56	*	IG
STORE	32161	56587.65	44586.36	978.13	*	IG
STORE	32162	56587.88	44592.58	977.22	*	IG
STORE	32163	56588.21	44589.61	976.51	*	INV 12IN CMP
STORE	32164	56568.22	44589.70	976.43	*	INV 12IN CMP
STORE	32165	56568.60	44585.48	978.50	*	IG
STORE	32166	56568.52	44593.30	977.43	*	IG
STORE	32167	56654.39	44505.87	977.75	*	IG
STORE	32168	56651.94	44572.71	978.18	*	IG
STORE	32169	56651.58	44575.91	976.70	*	IG TOE
STORE	32170	56651.61	44577.50	976.54	*	IG TOE
STORE	32171	56652.21	44581.43	979.16	*	IG
STORE	32172	56652.20	44590.77	977.00	*	IG
STORE	32173	56651.84	44601.26	977.43	*	RE
STORE	32174	56651.56	44615.89	977.54	*	RC
STORE	32175	56651.71	44629.48	977.13	*	RE
STORE	32176	56651.55	44639.90	976.21	*	IG
STORE	32177	56651.55	44647.70	977.09	*	IG
STORE	32178	56649.63	44716.79	976.71	*	IG
STORE	32179	56751.88	44716.80	977.14	*	IG
STORE	32180	56751.39	44647.61	977.53	*	IG
STORE	32181	56751.63	44640.41	976.45	*	IG
STORE	32182	56751.37	44629.37	977.51	*	RE
STORE	32183	56751.68	44615.71	977.85	*	RC
STORE	32184	56751.52	44601.22	977.77	*	RE
STORE	32185	56751.66	44590.46	977.12	*	IG
STORE	32186	56751.36	44582.03	979.39	*	IG
STORE	32187	56751.81	44577.99	976.80	*	IG TOE
STORE	32188	56751.96	44576.98	976.81	*	IG TOE
STORE	32189	56751.58	44573.24	978.65	*	IG
STORE	32190	56752.75	44502.56	978.33	*	IG
STORE	32191	56857.34	44502.50	978.74	*	IG
STORE	32192	56851.39	44573.68	978.94	*	IG
STORE	32193	56851.00	44576.78	977.15	*	IG TOE
STORE	32194	56850.84	44577.81	977.07	*	IG TOE
STORE	32195	56850.78	44581.85	979.85	*	IG
STORE	32196	56851.01	44590.38	977.47	*	IG
STORE	32197	56851.33	44601.37	978.12	*	RE
STORE	32198	56851.31	44615.80	978.27	*	RC
STORE	32199	56851.19	44629.42	977.92	*	RE
STORE	32200	56851.31	44640.77	976.90	*	IG
STORE	32201	56851.00	44647.71	978.09	*	IG
STORE	32202	56851.96	44720.14	977.82	*	IG
STORE	32203	56950.92	44720.17	978.23	*	IG
STORE	32204	56950.98	44647.27	978.05	*	IG
STORE	32205	56951.22	44629.60	978.34	*	RE
STORE	32206	56952.04	44615.62	978.70	*	RC

STORE	32207	56951.44	44601.43	978.63	*	RE
STORE	32208	56951.55	44590.34	977.67	*	IG
STORE	32209	56951.68	44581.36	980.03	*	IG
STORE	32210	56951.81	44577.66	977.60	*	IG TOE
STORE	32211	56951.93	44576.22	977.45	*	IG TOE
STORE	32212	56951.52	44572.24	979.57	*	IG
STORE	32213	56951.74	44502.54	979.10	*	IG
STORE	32214	57049.72	44502.38	979.46	*	IG
STORE	32215	57052.37	44572.78	979.64	*	IG
STORE	32216	57052.29	44575.97	977.78	*	IG TOE
STORE	32217	57052.06	44577.22	977.80	*	IG TOE
STORE	32218	57052.61	44581.18	980.42	*	IG
STORE	32219	57052.74	44590.78	978.05	*	IG
STORE	32220	57052.34	44601.30	979.01	*	RE
STORE	32221	57052.07	44616.19	979.13	*	RC
STORE	32222	57051.95	44629.45	978.70	*	RE
STORE	32223	57051.65	44641.35	977.41	*	IG
STORE	32224	57051.98	44646.58	978.16	*	IG
STORE	32225	57051.12	44720.53	978.43	*	IG
STORE	32226	57152.58	44720.64	978.94	*	IG
STORE	32227	57152.30	44646.91	978.61	*	IG
STORE	32228	57152.35	44641.35	977.76	*	IG
STORE	32229	57152.13	44629.68	979.07	*	RE
STORE	32230	57152.22	44616.12	979.52	*	RC
STORE	32231	57152.17	44601.48	979.35	*	RE
STORE	32232	57152.12	44590.61	978.42	*	IG
STORE	32233	57151.92	44580.90	980.76	*	IG
STORE	32234	57152.13	44576.53	978.05	*	IG TOE
STORE	32235	57152.11	44575.47	978.06	*	IG TOE
STORE	32236	57152.91	44571.83	980.15	*	IG
STORE	32237	57153.71	44501.93	979.71	*	IG
STORE	32238	57250.45	44501.95	979.99	*	IG
STORE	32239	57252.29	44572.29	980.43	*	IG
STORE	32240	57251.86	44575.89	978.35	*	IG TOE
STORE	32241	57251.84	44577.20	978.35	*	IG TOE
STORE	32242	57252.22	44581.34	981.04	*	IG
STORE	32243	57252.09	44590.42	978.77	*	IG
STORE	32244	57251.94	44601.53	979.79	*	RE
STORE	32245	57251.76	44616.26	980.00	*	RC
STORE	32246	57251.95	44629.76	979.47	*	RE
STORE	32247	57252.37	44641.24	978.16	*	IG
STORE	32248	57252.34	44647.39	978.99	*	IG
STORE	32249	57252.64	44718.21	979.06	*	IG
STORE	32250	57348.84	44717.13	979.46	*	IG
STORE	32251	57352.63	44648.69	979.56	*	IG
STORE	32252	57352.85	44641.93	978.63	*	IG
STORE	32253	57352.84	44629.91	979.94	*	RE
STORE	32254	57353.21	44615.88	980.50	*	RC
STORE	32255	57353.16	44601.72	980.21	*	RE
STORE	32256	57353.59	44591.26	979.16	*	IG
STORE	32257	57353.12	44580.41	981.52	*	IG
STORE	32258	57352.84	44576.40	978.72	*	IG TOE
STORE	32259	57352.85	44575.15	978.56	*	IG TOE
STORE	32260	57352.81	44570.82	981.09	*	IG
STORE	32261	57351.81	44506.26	980.18	*	IG
STORE	32262	57452.07	44507.31	980.44	*	IG
STORE	32263	57452.32	44570.76	981.46	*	IG
STORE	32264	57452.50	44574.90	978.96	*	IG TOE
STORE	32265	57452.38	44576.00	979.02	*	IG TOE
STORE	32266	57452.35	44580.05	981.97	*	IG
STORE	32267	57453.25	44589.78	979.66	*	IG
STORE	32268	57453.08	44601.88	980.54	*	RE
STORE	32269	57452.17	44616.40	980.89	*	RC
STORE	32270	57452.73	44630.19	980.36	*	RE
STORE	32271	57452.55	44642.71	978.95	*	IG
STORE	32272	57452.82	44648.92	979.98	*	IG
STORE	32273	57452.14	44717.29	979.91	*	IG
STORE	32274	57548.77	44717.98	980.29	*	IG
STORE	32275	57550.10	44648.78	980.28	*	IG
STORE	32276	57550.36	44630.31	980.81	*	RE
STORE	32277	57550.72	44616.12	981.31	*	RC

STORE	32278	57550.93	44602.07	981.07	*	RE
STORE	32279	57551.10	44590.02	980.09	*	IG
STORE	32280	57551.38	44580.22	982.13	*	IG
STORE	32281	57551.73	44575.92	979.39	*	IG TOE
STORE	32282	57551.67	44574.72	979.43	*	IG TOE
STORE	32283	57551.52	44570.79	981.65	*	IG
STORE	32284	57553.51	44505.47	980.87	*	IG
STORE	32285	55362.66	44816.29	971.55	*	IG
STORE	32286	55304.62	44817.08	971.82	*	IG
STORE	32287	55288.44	44816.37	972.13	*	IG
STORE	32288	55283.75	44816.29	971.14	*	IG
STORE	32289	55275.26	44816.02	971.99	*	RE
STORE	32290	55292.78	44737.86	972.61	*	TH
STORE	32291	55221.73	44777.21	971.78	*	RG
STORE	32292	55256.00	44815.98	972.10	*	RC
STORE	32293	55235.10	44815.86	971.89	*	RE
STORE	32294	55223.51	44815.69	970.78	*	IG
STORE	32295	55222.64	44815.75	971.67	*	IG
STORE	32296	55218.32	44815.30	972.25	*	IG
STORE	32297	55215.35	44815.42	971.65	*	TOP CONC
STORE	32298	55209.66	44815.20	971.72	*	TOP CONC
STORE	32299	55213.24	44815.44	969.65	*	IC
STORE	32300	55212.07	44815.41	969.60	*	IC
STORE	32301	55206.44	44815.50	970.90	*	IG
STORE	32302	55147.67	44811.04	970.12	*	IG
STORE	32303	55123.45	44906.19	970.07	*	IG
STORE	32304	55206.20	44909.61	970.72	*	IG
STORE	32305	55209.84	44909.60	971.68	*	TOP CONC
STORE	32306	55215.22	44909.77	971.60	*	TOP CONC
STORE	32307	55213.11	44909.63	969.54	*	IC
STORE	32308	55212.03	44909.44	969.49	*	IC
STORE	32309	55217.20	44909.25	972.35	*	IG
STORE	32310	55223.11	44909.59	971.59	*	IG
STORE	32311	55224.72	44909.67	970.76	*	IG
STORE	32312	55236.25	44909.49	971.43	*	RE
STORE	32313	55255.38	44909.19	971.86	*	RC
STORE	32314	55273.46	44909.61	971.70	*	RE
STORE	32315	55284.21	44909.09	970.97	*	IG
STORE	32316	55287.42	44909.13	972.17	*	IG
STORE	32317	55297.77	44908.80	972.62	*	IG
STORE	32318	55303.64	44908.53	971.84	*	IG
STORE	32319	55361.10	44913.72	971.79	*	IG
STORE	32320	55287.94	44964.65	972.68	*	EP
STORE	32321	55359.97	45005.46	971.51	*	IG
STORE	32322	55300.86	45005.58	971.64	*	IG
STORE	32323	55296.43	45005.19	971.87	*	IG
STORE	32324	55285.48	45004.98	971.46	*	IG
STORE	32325	55280.38	45004.69	970.68	*	IG
STORE	32326	55271.83	45004.46	971.57	*	RE
STORE	32327	55254.77	45004.03	971.83	*	RC
STORE	32328	55238.22	45003.74	971.49	*	RE
STORE	32329	55225.96	45003.81	970.50	*	IG
STORE	32330	55224.34	45003.83	971.43	*	IG
STORE	32331	55223.15	45009.79	971.38	*	RG
STORE	32332	55218.30	45003.47	972.20	*	IG
STORE	32333	55215.19	45003.64	971.67	*	TOP CONC
STORE	32334	55209.77	45003.58	971.63	*	TOP CONC
STORE	32335	55213.00	45003.72	969.48	*	IC
STORE	32336	55211.96	45003.64	969.52	*	IC
STORE	32337	55207.42	45003.80	970.55	*	IG
STORE	32338	55142.92	44999.97	970.00	*	IG
STORE	32339	55128.33	45102.59	969.63	*	IG
STORE	32340	55206.38	45098.69	970.46	*	IG
STORE	32341	55209.73	45098.56	971.50	*	TOP CONC
STORE	32342	55215.21	45098.45	971.53	*	TOP CONC
STORE	32343	55212.97	45098.75	969.38	*	IC
STORE	32344	55212.04	45098.61	969.39	*	IC
STORE	32345	55219.05	45098.44	972.29	*	IG
STORE	32346	55226.83	45098.56	970.17	*	IG
STORE	32347	55239.57	45098.51	971.38	*	RE
STORE	32348	55255.39	45098.74	971.65	*	RC

STORE	32349	55269.44	45099.16	971.43	*	RE
STORE	32350	55268.62	45148.05	971.29	*	RE ANG PT
STORE	32351	55240.96	45147.48	971.25	*	RE ANG PT
STORE	32352	55280.44	45100.04	970.78	*	IG
STORE	32353	55284.23	45100.58	971.65	*	IG
STORE	32354	55299.77	45100.93	971.50	*	IG
STORE	32355	55362.38	45103.55	971.70	*	IG
STORE	32356	55362.43	45201.28	971.52	*	IG
STORE	32357	55301.04	45197.35	971.41	*	IG
STORE	32358	55295.92	45197.65	971.68	*	IG
STORE	32359	55283.97	45198.21	971.44	*	IG
STORE	32360	55280.41	45198.53	970.87	*	IG
STORE	32361	55268.40	45198.67	971.25	*	RE
STORE	32362	55255.40	45198.02	971.37	*	RC
STORE	32363	55241.43	45197.95	971.20	*	RE
STORE	32364	55227.54	45197.43	970.42	*	IG
STORE	32365	55225.11	45197.30	971.34	*	IG
STORE	32366	55219.01	45197.22	972.00	*	IG
STORE	32367	55215.15	45197.86	971.51	*	TOP CONC
STORE	32368	55209.68	45198.30	971.51	*	TOP CONC
STORE	32369	55211.87	45198.31	969.39	*	IC
STORE	32370	55212.89	45198.53	969.36	*	IC
STORE	32371	55207.25	45198.91	970.32	*	IG
STORE	32372	55147.28	45198.09	969.84	*	IG
STORE	32373	55144.10	45293.29	969.98	*	IG
STORE	32374	55194.27	45295.51	969.89	*	IG
STORE	32375	55197.53	45295.42	971.17	*	WV RIM
STORE	32376	55197.52	45295.48	965.52	*	WV NUT
STORE	32377	55197.11	45291.17	970.72	*	WV RIM
STORE	32378	55197.12	45291.13	966.58	*	WV NUT
STORE	32379	55200.40	45291.48	971.51	*	WV RIM
STORE	32380	55200.41	45291.39	966.72	*	WV NUT
STORE	32381	55207.94	45308.07	970.72	*	WF
STORE	32382	55209.53	45295.50	971.39	*	TOP CONC
STORE	32383	55215.06	45296.36	971.41	*	TOP CONC
STORE	32384	55211.92	45296.52	969.25	*	IC
STORE	32385	55212.85	45296.61	969.25	*	IC
STORE	32386	55219.44	45297.01	972.03	*	IG
STORE	32387	55224.53	45297.50	971.38	*	IG
STORE	32388	55226.90	45297.47	970.46	*	IG
STORE	32389	55241.42	45296.91	971.22	*	RE
STORE	32390	55255.12	45296.56	971.38	*	RC
STORE	32391	55268.16	45296.56	971.25	*	RE
STORE	32392	55280.16	45298.12	970.94	*	IG
STORE	32393	55284.33	45298.95	971.63	*	IG
STORE	32394	55299.39	45298.87	971.73	*	IG
STORE	32395	55301.01	45298.91	971.33	*	IG
STORE	32396	55357.63	45300.31	971.62	*	IG
STORE	32397	55290.62	45375.68	971.64	*	TH
STORE	32398	55287.42	45433.54	972.02	*	EP
STORE	32399	55356.30	45397.36	971.75	*	IG
STORE	32400	55303.17	45396.91	971.27	*	IG
STORE	32401	55299.51	45397.13	971.71	*	IG
STORE	32402	55287.48	45397.02	971.56	*	IG
STORE	32403	55282.35	45396.56	970.53	*	IG
STORE	32404	55267.87	45395.86	971.41	*	RE
STORE	32405	55254.89	45395.45	971.47	*	RC
STORE	32406	55241.24	45395.50	971.30	*	RE
STORE	32407	55226.56	45394.85	970.53	*	IG
STORE	32408	55217.97	45394.02	971.96	*	IG
STORE	32409	55214.79	45394.41	971.39	*	TOP CONC
STORE	32410	55209.37	45395.48	971.49	*	TOP CONC
STORE	32411	55212.49	45395.97	969.27	*	IC
STORE	32412	55211.55	45396.02	969.29	*	IC
STORE	32413	55206.34	45396.29	970.61	*	IG
STORE	32414	55153.48	45393.57	969.90	*	IG
STORE	32415	55281.38	45595.81	971.96	*	TH
STORE	32416	55294.40	45576.62	971.85	*	TR
STORE	32417	55286.23	45559.94	971.59	*	RG
STORE	32418	55367.36	45491.55	971.61	*	IG
STORE	32419	55302.64	45493.06	971.22	*	IG

STORE	32420	55287.16	45493.61	971.47	*	IG
STORE	32421	55282.24	45494.03	970.62	*	IG
STORE	32422	55268.07	45493.89	971.63	*	RE
STORE	32423	55255.08	45493.61	971.72	*	RC
STORE	32424	55240.83	45493.93	971.49	*	RE
STORE	32425	55224.35	45493.75	970.29	*	IG
STORE	32426	55218.07	45493.85	971.81	*	IG
STORE	32427	55214.60	45493.82	971.42	*	TOP CONC
STORE	32428	55209.08	45493.62	971.48	*	TOP CONC
STORE	32429	55212.25	45493.62	969.28	*	IC
STORE	32430	55211.44	45493.53	969.30	*	IC
STORE	32431	55206.53	45493.59	970.46	*	IG
STORE	32432	55142.70	45495.40	969.89	*	IG
STORE	32433	55144.87	45595.93	969.77	*	IG
STORE	32434	55207.04	45593.93	970.66	*	IG
STORE	32435	55209.11	45593.22	971.56	*	TOP CONC
STORE	32436	55214.53	45592.98	971.44	*	TOP CONC
STORE	32437	55212.15	45592.76	969.36	*	IC
STORE	32438	55211.39	45592.98	969.37	*	IC
STORE	32439	55216.67	45592.60	971.76	*	IG
STORE	32440	55221.85	45592.68	971.55	*	IG
STORE	32441	55223.55	45592.72	970.18	*	IG
STORE	32442	55240.61	45592.80	971.60	*	RE
STORE	32443	55255.27	45593.12	972.05	*	RC
STORE	32444	55267.90	45592.86	971.99	*	RE
STORE	32445	55287.96	45593.28	970.69	*	IG
STORE	32446	55291.65	45593.10	971.55	*	IG
STORE	32447	55301.45	45593.32	971.37	*	IG
STORE	32448	55357.47	45593.17	971.42	*	IG
STORE	32449	55358.38	45696.32	971.39	*	IG
STORE	32450	55298.32	45697.51	970.97	*	IG
STORE	32451	55285.54	45697.93	971.20	*	IG
STORE	32452	55281.65	45697.88	970.93	*	IG
STORE	32453	55280.53	45734.96	971.17	*	RG
STORE	32454	55268.44	45698.38	972.03	*	RE
STORE	32455	55254.33	45698.26	972.08	*	RC
STORE	32456	55241.13	45698.74	971.72	*	RE
STORE	32457	55214.65	45699.65	971.48	*	TOP CONC
STORE	32458	55208.69	45700.89	971.56	*	TOP CONC
STORE	32459	55207.23	45699.60	971.64	*	TOP CONC
STORE	32460	55207.25	45693.55	971.62	*	TOP CONC
STORE	32461	55208.76	45692.51	971.37	*	TOP CONC
STORE	32462	55214.26	45692.03	971.35	*	TOP CONC
STORE	32463	55212.19	45692.27	969.39	*	IC
STORE	32464	55211.09	45692.40	969.23	*	IC
STORE	32465	55207.11	45695.92	969.09	*	IC
STORE	32466	55207.16	45697.27	969.16	*	IC
STORE	32467	55210.65	45700.60	969.39	*	IC
STORE	32468	55212.11	45700.57	969.34	*	IC
STORE	32469	55139.25	45707.16	970.16	*	IG
STORE	32470	55138.87	45700.90	970.74	*	TOP CONC
STORE	32471	55138.40	45695.58	970.82	*	TOP CONC
STORE	32472	55138.53	45692.46	970.12	*	IG
STORE	32473	55137.99	45697.70	968.90	*	IC
STORE	32474	55137.96	45698.76	968.93	*	IC
STORE	32475	55356.45	45799.06	971.12	*	IG
STORE	32476	55296.60	45798.48	970.81	*	IG
STORE	32477	55283.02	45799.26	970.91	*	IG
STORE	32478	55268.16	45799.29	971.72	*	RE
STORE	32479	55254.64	45798.99	971.86	*	RC
STORE	32480	55240.78	45798.97	971.46	*	RE
STORE	32481	55222.67	45798.63	970.16	*	IG
STORE	32482	55221.32	45798.49	971.06	*	IG
STORE	32483	55214.10	45798.62	971.32	*	TOP CONC
STORE	32484	55208.56	45798.66	971.38	*	TOP CONC
STORE	32485	55210.52	45798.68	969.47	*	IC
STORE	32486	55211.61	45798.98	969.34	*	IC
STORE	32487	55203.91	45798.92	970.64	*	IG
STORE	32488	55198.65	45790.01	970.62	*	PT
STORE	32489	55141.01	45802.69	970.28	*	IG
STORE	32490	55208.92	45888.03	971.06	*	TOP CONC END

STORE	32491	55210.93	45888.22	969.01	*	IC END
STORE	32492	55212.30	45888.22	968.98	*	IC END
STORE	32493	55213.96	45888.14	971.14	*	TOP CONC END
STORE	32494	55184.27	45885.41	970.74	*	PT
STORE	32495	55188.64	45911.42	970.36	*	PT
STORE	32496	55166.23	45928.64	970.18	*	PT
STORE	32497	55166.69	45940.82	970.02	*	PT
STORE	32498	55125.87	45904.88	970.09	*	IG
STORE	32499	55225.48	45900.89	970.66	*	IG
STORE	32500	55240.53	45899.49	971.15	*	RE
STORE	32501	55254.21	45899.43	971.60	*	RC
STORE	32502	55268.21	45899.37	971.52	*	RE
STORE	32503	55284.58	45899.52	970.68	*	IG
STORE	32504	55286.91	45899.73	970.96	*	IG
STORE	32505	55286.95	45889.64	971.44	*	EP
STORE	32506	55298.27	45899.19	970.52	*	IG
STORE	32507	55353.40	45900.68	971.28	*	IG
STORE	32508	55357.38	45998.15	970.93	*	IG
STORE	32509	55297.32	46001.34	970.06	*	IG
STORE	32510	55268.37	45999.63	971.16	*	RE
STORE	32511	55254.39	45999.97	971.24	*	RC
STORE	32512	55241.24	46000.15	970.88	*	RE
STORE	32513	55227.53	46000.05	970.29	*	IG
STORE	32514	55219.94	46000.21	970.68	*	IG
STORE	32515	55226.50	46018.24	971.06	*	GL RG
STORE	32516	55225.09	46039.60	970.78	*	GL RG
STORE	32517	55150.69	46010.11	969.55	*	IG
STORE	32518	55197.85	45985.95	971.01	*	WV RIM
STORE	32519	55197.89	45985.90	966.68	*	WV NUT
STORE	32520	55199.60	45980.10	969.81	*	WF
STORE	32521	55193.86	45962.83	970.63	*	WV RIM
STORE	32522	55193.79	45962.84	965.36	*	WV NUT
STORE	32523	55193.62	45959.75	970.68	*	WV RIM
STORE	32524	55193.66	45959.77	966.50	*	WV NUT
STORE	32525	55197.01	45959.51	970.71	*	WV RIM
STORE	32526	55196.97	45959.42	966.35	*	WV NUT
STORE	32527	55218.67	45862.69	971.36	*	GL RG
STORE	32528	55115.47	46102.48	969.17	*	IG
STORE	32529	55202.33	46102.92	969.71	*	IG
STORE	32530	55201.47	46143.61	969.29	*	FO RG
STORE	32531	55212.44	46107.90	970.11	*	BEG TOP CONC
STORE	32532	55218.99	46107.91	969.95	*	BEG TOP CONC
STORE	32533	55215.54	46107.95	968.84	*	C/L IRRI DITCH
STORE	32534	55222.21	46101.37	970.30	*	IG
STORE	32535	55225.71	46101.65	970.33	*	IG
STORE	32536	55227.33	46101.79	969.86	*	IG
STORE	32537	55242.00	46101.63	970.75	*	RE
STORE	32538	55254.44	46101.84	971.10	*	RC
STORE	32539	55268.42	46102.14	970.95	*	RE
STORE	32540	55294.82	46102.11	969.90	*	IG
STORE	32541	55355.91	46099.91	970.66	*	IG
STORE	32542	55355.60	46194.70	970.27	*	IG
STORE	32543	55291.70	46197.68	969.74	*	IG
STORE	32544	55268.45	46199.03	970.72	*	RE
STORE	32545	55254.51	46199.25	970.91	*	RC
STORE	32546	55242.56	46199.32	970.62	*	RE
STORE	32547	55224.94	46199.02	969.44	*	IG
STORE	32548	55220.34	46199.39	970.05	*	IG
STORE	32549	55217.70	46199.33	970.06	*	TOP CONC
STORE	32550	55212.31	46198.97	970.02	*	TOP CONC
STORE	32551	55215.83	46199.39	968.85	*	IC
STORE	32552	55214.22	46199.27	968.92	*	IC
STORE	32553	55209.60	46199.52	969.20	*	IG
STORE	32554	55142.76	46196.01	968.29	*	IG
STORE	32555	55144.67	46298.24	967.68	*	IG
STORE	32556	55186.49	46347.04	968.57	*	TH
STORE	32557	55209.12	46298.75	968.66	*	IG
STORE	32558	55212.87	46298.77	970.01	*	TOP CONC
STORE	32559	55217.84	46299.02	969.84	*	TOP CONC
STORE	32560	55214.54	46299.05	968.85	*	IC
STORE	32561	55216.33	46299.04	968.88	*	IC

STORE	32562	55216.31	46299.14	970.77	*	IG
STORE	32563	55241.61	46299.07	970.52	*	RE
STORE	32564	55254.03	46299.82	970.81	*	RC
STORE	32565	55268.18	46299.47	970.65	*	RE
STORE	32566	55282.94	46300.53	969.67	*	IG
STORE	32567	55295.53	46299.51	969.30	*	IG
STORE	32568	55355.78	46299.49	970.02	*	IG
STORE	32569	55355.43	46398.75	969.66	*	IG
STORE	32570	55295.81	46398.01	968.72	*	IG
STORE	32571	55286.29	46390.63	970.00	*	EP
STORE	32572	55268.27	46396.90	970.47	*	RE
STORE	32573	55254.26	46396.41	970.71	*	RC
STORE	32574	55241.51	46395.93	970.42	*	RE
STORE	32575	55225.16	46396.50	969.66	*	IG
STORE	32576	55223.64	46396.29	970.36	*	IG
STORE	32577	55220.75	46396.53	970.59	*	IG
STORE	32578	55217.74	46396.39	969.86	*	TOP CONC
STORE	32579	55212.45	46396.14	969.76	*	TOP CONC
STORE	32580	55214.38	46396.30	968.69	*	IC
STORE	32581	55215.98	46396.34	968.71	*	IC
STORE	32582	55209.25	46396.76	968.98	*	IG
STORE	32583	55149.74	46394.26	968.33	*	IG
STORE	32584	55143.83	46493.17	967.81	*	IG
STORE	32585	55209.42	46494.21	968.62	*	IG
STORE	32586	55212.35	46494.02	969.94	*	TOP CONC
STORE	32587	55217.55	46493.89	969.79	*	TOP CONC
STORE	32588	55214.33	46493.98	968.61	*	IC
STORE	32589	55215.71	46494.24	968.59	*	IC
STORE	32590	55221.24	46494.26	970.45	*	IG
STORE	32591	55224.14	46494.33	969.56	*	IG
STORE	32592	55241.36	46494.25	970.29	*	RE
STORE	32593	55254.43	46494.23	970.63	*	RC
STORE	32594	55268.37	46494.69	970.32	*	RE
STORE	32595	55280.00	46495.34	969.70	*	IG
STORE	32596	55285.68	46495.40	968.97	*	IG
STORE	32597	55354.72	46496.35	969.34	*	IG
STORE	32598	55361.42	46596.36	968.85	*	IG
STORE	32599	55293.03	46594.42	968.09	*	IG
STORE	32600	55284.46	46594.12	968.63	*	IG
STORE	32601	55276.94	46593.85	969.94	*	IG
STORE	32602	55268.04	46594.06	970.31	*	RE
STORE	32603	55253.94	46594.34	970.39	*	RC
STORE	32604	55240.66	46594.42	970.09	*	RE
STORE	32605	55222.24	46593.83	969.07	*	IG
STORE	32606	55220.01	46593.36	970.16	*	IG
STORE	32607	55217.48	46593.51	969.53	*	TOP CONC
STORE	32608	55211.64	46594.04	969.72	*	TOP CONC
STORE	32609	55213.79	46594.24	968.41	*	IC
STORE	32610	55215.63	46594.52	968.40	*	IC
STORE	32611	55208.02	46594.76	968.38	*	IG
STORE	32612	55152.10	46592.41	967.96	*	IG
STORE	32613	55146.43	46695.28	967.56	*	IG
STORE	32614	55207.90	46694.81	968.38	*	IG
STORE	32615	55211.79	46694.58	969.19	*	TOP CONC
STORE	32616	55213.58	46694.59	968.12	*	IC
STORE	32617	55215.47	46694.80	968.04	*	IC
STORE	32618	55217.24	46694.42	969.11	*	TOP CONC
STORE	32619	55220.00	46694.18	969.85	*	IG
STORE	32620	55222.33	46694.16	968.70	*	IG
STORE	32621	55240.20	46694.28	969.77	*	RE
STORE	32622	55254.60	46694.11	970.07	*	RC
STORE	32623	55267.97	46694.88	969.96	*	RE
STORE	32624	55277.66	46694.64	969.37	*	IG
STORE	32625	55283.99	46694.70	968.33	*	IG
STORE	32626	55294.32	46694.29	967.53	*	IG
STORE	32627	55352.56	46694.74	968.47	*	IG
STORE	32628	55354.79	46788.63	967.99	*	IG
STORE	32629	55293.69	46794.51	967.14	*	IG
STORE	32630	55283.43	46794.07	967.78	*	IG
STORE	32631	55277.53	46793.95	968.95	*	IG
STORE	32632	55267.31	46793.96	969.59	*	RE

STORE	32633	55253.86	46793.64	969.70	*	RC
STORE	32634	55241.41	46793.61	969.42	*	RE
STORE	32635	55222.69	46792.78	968.01	*	IG
STORE	32636	55221.43	46792.67	968.73	*	IG
STORE	32637	55216.76	46792.59	968.79	*	TOP CONC
STORE	32638	55211.10	46792.05	968.89	*	TOP CONC
STORE	32639	55213.23	46791.93	967.82	*	IC
STORE	32640	55214.84	46791.89	967.84	*	IC
STORE	32641	55206.87	46791.73	967.75	*	IG
STORE	32642	55146.44	46792.82	967.35	*	IG
STORE	32643	55199.01	46834.54	967.69	*	FO RG
STORE	32644	55114.78	46909.92	966.80	*	IG
STORE	32645	55208.13	46900.69	967.40	*	IG
STORE	32646	55210.85	46900.56	968.61	*	TOP CONC
STORE	32647	55216.85	46900.17	968.59	*	TOP CONC
STORE	32648	55212.84	46900.38	967.42	*	IC
STORE	32649	55214.65	46900.42	967.44	*	IC
STORE	32650	55218.71	46899.88	968.57	*	IG
STORE	32651	55221.56	46899.75	967.41	*	IG
STORE	32652	55240.77	46900.11	968.94	*	RE
STORE	32653	55253.93	46899.74	969.20	*	RC
STORE	32654	55267.31	46900.54	968.98	*	RE
STORE	32655	55279.60	46901.56	968.44	*	IG
STORE	32656	55286.29	46886.50	967.79	*	EP
STORE	32657	55290.12	46901.84	966.91	*	IG
STORE	32658	55296.21	46902.14	966.42	*	IG
STORE	32659	55351.48	46900.87	967.13	*	IG

*BULLARD WASH (SURVEY DATA #3) received 9/23/97
DELETE COORDINATES (1-50000)

STORE	33004	43406.52	46275.73	914.77	*ELEV CK
STORE	33005	41456.40	45365.46	912.68	*GL
STORE	33006	41351.75	45888.58	910.47	*EP WOOD
STORE	33007	41354.29	46090.20	912.28	*GL
STORE	33008	41342.05	46149.82	910.98	*GL
STORE	33009	41274.58	46348.15	910.93	*EP WOOD
STORE	33010	41228.14	46809.60	911.61	*GL
STORE	33011	41794.15	45539.23	904.68	*WL C/L 96IN
STORE	33012	41777.00	45654.24	904.90	*WL C/L 96IN
STORE	33013	41501.59	46035.66	915.40	*TOP TOWER BASE
STORE	33014	41506.13	46076.46	915.36	*TOP TOWER BASE
STORE	33015	41547.06	46071.97	915.36	*TOP TOWER BASE
STORE	33016	41542.55	46031.31	915.33	*TOP TOWER BASE
STORE	33017	41459.07	46279.07	911.87	*EP WOOD
STORE	33018	41761.93	46973.65	906.13	*WL C/L 96IN
STORE	33019	41767.30	47018.87	906.20	*WL C/L 96IN
STORE	33020	41919.60	47323.51	913.26	*TOP TOWER BASE
STORE	33021	41922.84	47349.26	913.21	*TOP TOWER BASE
STORE	33022	41958.57	47344.23	913.23	*TOP TOWER BASE
STORE	33023	41954.81	47319.04	913.23	*TOP TOWER BASE
STORE	33024	41702.69	47324.75	913.18	*TOP TOWER BASE
STORE	33025	41669.38	47328.95	913.15	*TOP TOWER BASE
STORE	33026	41673.50	47362.18	913.12	*TOP TOWER BASE
STORE	33027	41707.02	47357.99	913.14	*TOP TOWER BASE
STORE	33028	42022.55	45844.57	913.44	*TOP TOWER BASE
STORE	33029	42025.42	45868.34	913.43	*TOP TOWER BASE
STORE	33030	42049.42	45865.39	913.43	*TOP TOWER BASE
STORE	33031	42046.20	45841.35	913.41	*TOP TOWER BASE
STORE	33032	42128.64	46687.08	914.49	*TOP TOWER BASE
STORE	33033	42131.79	46712.37	914.48	*TOP TOWER BASE
STORE	33034	42156.89	46709.53	914.51	*TOP TOWER BASE
STORE	33035	42153.85	46683.99	914.50	*TOP TOWER BASE
STORE	33038	41694.23	44758.13	913.29	*BRIDGE APPROSLAB
STORE	33039	41688.36	44794.07	912.94	*BRIDGE APPROSLAB
STORE	33040	41577.82	44794.88	912.48	*BRIDGE APPROSLAB
STORE	33041	41583.52	44758.83	912.89	*BRIDGE APPROSLAB
STORE	33042	41603.52	44758.78	913.08	*FACE BARRIER
STORE	33043	41603.79	44757.11	913.12	*EDGE BRIDGEATBAR
STORE	33044	41596.66	44801.24	912.53	*EDGE BRIDGE
STORE	33045	41597.77	44794.72	912.62	*FACE BARRIER
STORE	33046	41668.60	44794.23	912.77	*FACE BARRIER
STORE	33047	41667.71	44800.69	912.68	*EDGE BRIDGE
STORE	33050	44761.25	45552.44	918.66	*EZ HIVOLTMETLPOL
STORE	33051	44662.19	45822.89	917.12	*EP WOOD
STORE	33052	44664.70	46176.97	918.91	*EP WOOD
STORE	33053	44664.26	46201.51	918.89	*EG
STORE	33054	44666.52	46206.02	918.34	*FO
STORE	33055	44665.09	46269.25	918.43	*FO
STORE	33056	44665.63	46355.18	918.70	*FO
STORE	33057	44667.25	46489.00	919.42	*EP WOOD
STORE	33058	44747.34	46510.79	921.65	*EZ HIVOLTMETLPOL
STORE	33061	45813.33	46252.21	921.10	*GL
STORE	33062	45807.12	46253.79	920.69	*GL
STORE	33063	45809.93	46270.97	920.93	*GL
STORE	33064	45816.26	46270.09	920.97	*GL
STORE	33065	45821.22	46305.71	920.85	*GL
STORE	33066	45815.85	46308.02	921.02	*GL
STORE	33069	46182.32	47514.14	926.30	*GL
STORE	33070	46183.33	47547.30	928.01	*GL
STORE	33071	46181.99	47561.70	928.46	*GL
STORE	33072	46170.44	47599.27	929.30	*GL
STORE	33073	46183.31	47641.52	928.98	*GL
STORE	33076	45342.67	44918.14	916.16	*FO
STORE	33077	45344.72	44854.17	915.74	*FO
STORE	33078	45339.37	44782.53	915.12	*FO
STORE	33079	45341.44	44776.12	915.03	*FO
STORE	33080	45347.79	44775.98	915.08	*FO
STORE	33081	45467.03	44781.22	915.58	*FO
STORE	33082	45497.46	44787.76	917.99	*FO

*BULLARD WASH (SURVEY DATA #3) received 9/23/97
* Sorted by description and point number
DELETE COORDINATES (1-50000)

STORE	33038	41694.23	44758.13	913.29	*BRIDGE APPROSLAB
STORE	33039	41688.36	44794.07	912.94	*BRIDGE APPROSLAB
STORE	33040	41577.82	44794.88	912.48	*BRIDGE APPROSLAB
STORE	33041	41583.52	44758.83	912.89	*BRIDGE APPROSLAB
STORE	33134	55074.71	44568.16	969.94	*CATV
STORE	33139	55292.90	44562.80	972.04	*CATV
STORE	33140	55293.03	44556.53	972.15	*CATV
STORE	33146	55302.24	44555.95	972.49	*CATV
STORE	33123	51614.15	44630.95	960.20	*CATV BLUSTK
STORE	33124	51719.11	44633.08	959.79	*CATV BLUSTK
STORE	33125	51813.10	44627.61	961.63	*CATV BLUSTK
STORE	33126	51812.38	44569.68	961.53	*CATV BLUSTK
STORE	33127	51819.06	44640.54	961.90	*CATV BLUSTK
STORE	33128	52027.12	44633.89	961.32	*CATV BLUSTK
STORE	33122	51814.97	44637.56	962.74	*CATV BOX
STORE	33044	41596.66	44801.24	912.53	*EDGE BRIDGE
STORE	33047	41667.71	44800.69	912.68	*EDGE BRIDGE
STORE	33043	41603.79	44757.11	913.12	*EDGE BRIDGEATBAR
STORE	33053	44664.26	46201.51	918.89	*EG
STORE	33004	43406.52	46275.73	914.77	*ELEV CK
STORE	33006	41351.75	45888.58	910.47	*EP WOOD
STORE	33009	41274.58	46348.15	910.93	*EP WOOD
STORE	33017	41459.07	46279.07	911.87	*EP WOOD
STORE	33051	44662.19	45822.89	917.12	*EP WOOD
STORE	33052	44664.70	46176.97	918.91	*EP WOOD
STORE	33057	44667.25	46489.00	919.42	*EP WOOD
STORE	33050	44761.25	45552.44	918.66	*EZ HIVOLTMETLPOL
STORE	33058	44747.34	46510.79	921.65	*EZ HIVOLTMETLPOL
STORE	33042	41603.52	44758.78	913.08	*FACE BARRIER
STORE	33045	41597.77	44794.72	912.62	*FACE BARRIER
STORE	33046	41668.60	44794.23	912.77	*FACE BARRIER
STORE	33054	44666.52	46206.02	918.34	*FO
STORE	33055	44665.09	46269.25	918.43	*FO
STORE	33056	44665.63	46355.18	918.70	*FO
STORE	33076	45342.67	44918.14	916.16	*FO
STORE	33077	45344.72	44854.17	915.74	*FO
STORE	33078	45339.37	44782.53	915.12	*FO
STORE	33079	45341.44	44776.12	915.03	*FO
STORE	33080	45347.79	44775.98	915.08	*FO
STORE	33081	45467.03	44781.22	915.58	*FO
STORE	33082	45497.46	44787.76	917.99	*FO
STORE	33083	45544.90	44788.84	917.87	*FO
STORE	33084	45647.48	44783.46	916.93	*FO
STORE	33085	45661.35	44877.18	916.85	*FO
STORE	33086	45642.05	44752.33	920.10	*FO
STORE	33087	45640.05	44727.68	920.03	*FO
STORE	33088	45619.82	44617.14	915.52	*FO
STORE	33089	45587.99	44514.89	915.41	*FO
STORE	33090	45565.83	44441.75	917.12	*FO
STORE	33091	45558.63	44399.73	917.27	*FO
STORE	33092	45685.09	44781.04	920.09	*FO
STORE	33093	45709.30	44779.24	920.26	*FO
STORE	33094	45715.55	44774.43	920.34	*FO
STORE	33095	45719.15	44769.34	920.60	*FO
STORE	33096	45717.42	44749.56	921.18	*FO
STORE	33097	45714.22	44721.85	921.15	*FO
STORE	33098	45715.30	44717.91	920.97	*FO
STORE	33099	45722.21	44716.48	921.00	*FO
STORE	33100	45798.07	44711.32	921.49	*FO
STORE	33005	41456.40	45365.46	912.68	*GL
STORE	33007	41354.29	46090.20	912.28	*GL
STORE	33008	41342.05	46149.82	910.98	*GL
STORE	33010	41228.14	46809.60	911.61	*GL
STORE	33061	45813.33	46252.21	921.10	*GL
STORE	33062	45807.12	46253.79	920.69	*GL
STORE	33063	45809.93	46270.97	920.93	*GL
STORE	33064	45816.26	46270.09	920.97	*GL
STORE	33065	45821.22	46305.71	920.85	*GL

STORE	33066	45815.85	46308.02	921.02	*GL
STORE	33069	46182.32	47514.14	926.30	*GL
STORE	33070	46183.33	47547.30	928.01	*GL
STORE	33071	46181.99	47561.70	928.46	*GL
STORE	33072	46170.44	47599.27	929.30	*GL
STORE	33073	46183.31	47641.52	928.98	*GL
STORE	33103	45587.82	44701.57	916.01	*GL
STORE	33104	45579.85	44715.78	917.05	*GL
STORE	33105	45584.16	44743.25	918.75	*GL
STORE	33106	45593.60	44743.08	919.02	*GL
STORE	33107	45597.25	44773.10	917.49	*GL
STORE	33108	45588.19	44773.34	917.48	*GL
STORE	33116	51709.86	44641.60	960.19	*GL
STORE	33117	51704.24	44640.57	960.94	*GL
STORE	33118	51708.61	44582.12	960.57	*GL
STORE	33119	51798.27	44641.41	960.48	*GL
STORE	33120	51816.05	44654.38	960.78	*GL
STORE	33121	51897.03	44651.05	961.13	*GL
STORE	33133	55187.71	44565.12	973.06	*TELCO BOX
STORE	33141	55307.04	44544.06	972.65	*TELCO RISER
STORE	33145	55290.65	44636.35	971.67	*TELCO RISER
STORE	33013	41501.59	46035.66	915.40	*TOP TOWER BASE
STORE	33014	41506.13	46076.46	915.36	*TOP TOWER BASE
STORE	33015	41547.06	46071.97	915.36	*TOP TOWER BASE
STORE	33016	41542.55	46031.31	915.33	*TOP TOWER BASE
STORE	33020	41919.60	47323.51	913.26	*TOP TOWER BASE
STORE	33021	41922.84	47349.26	913.21	*TOP TOWER BASE
STORE	33022	41958.57	47344.23	913.23	*TOP TOWER BASE
STORE	33023	41954.81	47319.04	913.23	*TOP TOWER BASE
STORE	33024	41702.69	47324.75	913.18	*TOP TOWER BASE
STORE	33025	41669.38	47328.95	913.15	*TOP TOWER BASE
STORE	33026	41673.50	47362.18	913.12	*TOP TOWER BASE
STORE	33027	41707.02	47357.99	913.14	*TOP TOWER BASE
STORE	33028	42022.55	45844.57	913.44	*TOP TOWER BASE
STORE	33029	42025.42	45868.34	913.43	*TOP TOWER BASE
STORE	33030	42049.42	45865.39	913.43	*TOP TOWER BASE
STORE	33031	42046.20	45841.35	913.41	*TOP TOWER BASE
STORE	33032	42128.64	46687.08	914.49	*TOP TOWER BASE
STORE	33033	42131.79	46712.37	914.48	*TOP TOWER BASE
STORE	33034	42156.89	46709.53	914.51	*TOP TOWER BASE
STORE	33035	42153.85	46683.99	914.50	*TOP TOWER BASE
STORE	33131	55177.81	44575.94	971.07	*WF
STORE	33144	55308.15	44479.29	972.17	*WF
STORE	33101	45678.45	44660.71	920.35	*WL
STORE	33102	45626.94	44663.45	916.39	*WL
STORE	33115	51720.56	44637.64	959.88	*WL BLUESTK
STORE	33135	55200.93	44562.07	971.51	*WL BLUSTK
STORE	33136	55200.39	44630.68	970.87	*WL BLUSTK
STORE	33011	41794.15	45539.23	904.68	*WL C/L 96IN
STORE	33012	41777.00	45654.24	904.90	*WL C/L 96IN POTHOLES
STORE	33018	41761.93	46973.65	906.13	*WL C/L 96IN
STORE	33019	41767.30	47018.87	906.20	*WL C/L 96IN
STORE	33111	51777.48	44790.21	960.30	*WL END ?
STORE	33112	51772.76	44637.04	960.20	*WV
STORE	33113	51772.73	44632.92	960.24	*WV
STORE	33114	51769.33	44633.56	960.27	*WV
STORE	33132	55177.86	44561.83	970.78	*WV
STORE	33137	55301.89	44562.15	972.52	*WV
STORE	33138	55297.33	44555.39	972.46	*WV
STORE	33142	55304.50	44618.70	971.93	*WV
STORE	33143	55232.93	44620.38	971.72	*WV

STORE	33083	45544.90	44788.84	917.87	*FO
STORE	33084	45647.48	44783.46	916.93	*FO
STORE	33085	45661.35	44877.18	916.85	*FO
STORE	33086	45642.05	44752.33	920.10	*FO
STORE	33087	45640.05	44727.68	920.03	*FO
STORE	33088	45619.82	44617.14	915.52	*FO
STORE	33089	45587.99	44514.89	915.41	*FO
STORE	33090	45565.83	44441.75	917.12	*FO
STORE	33091	45558.63	44399.73	917.27	*FO
STORE	33092	45685.09	44781.04	920.09	*FO
STORE	33093	45709.30	44779.24	920.26	*FO
STORE	33094	45715.55	44774.43	920.34	*FO
STORE	33095	45719.15	44769.34	920.60	*FO
STORE	33096	45717.42	44749.56	921.18	*FO
STORE	33097	45714.22	44721.85	921.15	*FO
STORE	33098	45715.30	44717.91	920.97	*FO
STORE	33099	45722.21	44716.48	921.00	*FO
STORE	33100	45798.07	44711.32	921.49	*FO
STORE	33101	45678.45	44660.71	920.35	*WL
STORE	33102	45626.94	44663.45	916.39	*WL
STORE	33103	45587.82	44701.57	916.01	*GL
STORE	33104	45579.85	44715.78	917.05	*GL
STORE	33105	45584.16	44743.25	918.75	*GL
STORE	33106	45593.60	44743.08	919.02	*GL
STORE	33107	45597.25	44773.10	917.49	*GL
STORE	33108	45588.19	44773.34	917.48	*GL
STORE	33111	51777.48	44790.21	960.30	*WL END
STORE	33112	51772.76	44637.04	960.20	*WV
STORE	33113	51772.73	44632.92	960.24	*WV
STORE	33114	51769.33	44633.56	960.27	*WV
STORE	33115	51720.56	44637.64	959.88	*WL BLUESTK
STORE	33116	51709.86	44641.60	960.19	*GL
STORE	33117	51704.24	44640.57	960.94	*GL
STORE	33118	51708.61	44582.12	960.57	*GL
STORE	33119	51798.27	44641.41	960.48	*GL
STORE	33120	51816.05	44654.38	960.78	*GL
STORE	33121	51897.03	44651.05	961.13	*GL
STORE	33122	51814.97	44637.56	962.74	*CATV BOX
STORE	33123	51614.15	44630.95	960.20	*CATV BLUSTK
STORE	33124	51719.11	44633.08	959.79	*CATV BLUSTK
STORE	33125	51813.10	44627.61	961.63	*CATV BLUSTK
STORE	33126	51812.38	44569.68	961.53	*CATV BLUSTK
STORE	33127	51819.06	44640.54	961.90	*CATV BLUSTK
STORE	33128	52027.12	44633.89	961.32	*CATV BLUSTK
STORE	33131	55177.81	44575.94	971.07	*WF
STORE	33132	55177.86	44561.83	970.78	*WV
STORE	33133	55187.71	44565.12	973.06	*TELCO BOX
STORE	33134	55074.71	44568.16	969.94	*CATV
STORE	33135	55200.93	44562.07	971.51	*WL BLUSTK
STORE	33136	55200.39	44630.68	970.87	*WL BLUSTK
STORE	33137	55301.89	44562.15	972.52	*WV
STORE	33138	55297.33	44555.39	972.46	*WV
STORE	33139	55292.90	44562.80	972.04	*CATV
STORE	33140	55293.03	44556.53	972.15	*CATV
STORE	33141	55307.04	44544.06	972.65	*TELCO RISER
STORE	33142	55304.50	44618.70	971.93	*WV
STORE	33143	55232.93	44620.38	971.72	*WV
STORE	33144	55308.15	44479.29	972.17	*WF
STORE	33145	55290.65	44636.35	971.67	*TELCO RISER
STORE	33146	55302.24	44555.95	972.49	*CATV

*BULLARD WASH (SURVEY DATA #3) received 9/23/97
* Sorted by description and point number
DELETE COORDINATES (1-50000)

STORE	33038	41694.23	44758.13	913.29	*BRIDGE APPROSLAB
STORE	33039	41688.36	44794.07	912.94	*BRIDGE APPROSLAB
STORE	33040	41577.82	44794.88	912.48	*BRIDGE APPROSLAB
STORE	33041	41583.52	44758.83	912.89	*BRIDGE APPROSLAB
STORE	33134	55074.71	44568.16	969.94	*CATV
STORE	33139	55292.90	44562.80	972.04	*CATV
STORE	33140	55293.03	44556.53	972.15	*CATV
STORE	33146	55302.24	44555.95	972.49	*CATV
STORE	33123	51614.15	44630.95	960.20	*CATV BLUSTK
STORE	33124	51719.11	44633.08	959.79	*CATV BLUSTK
STORE	33125	51813.10	44627.61	961.63	*CATV BLUSTK
STORE	33126	51812.38	44569.68	961.53	*CATV BLUSTK
STORE	33127	51819.06	44640.54	961.90	*CATV BLUSTK
STORE	33128	52027.12	44633.89	961.32	*CATV BLUSTK
STORE	33122	51814.97	44637.56	962.74	*CATV BOX
STORE	33044	41596.66	44801.24	912.53	*EDGE BRIDGE
STORE	33047	41667.71	44800.69	912.68	*EDGE BRIDGE
STORE	33043	41603.79	44757.11	913.12	*EDGE BRIDGEATBAR
STORE	33053	44664.26	46201.51	918.89	*EG
STORE	33004	43406.52	46275.73	914.77	*ELEV CK
STORE	33006	41351.75	45888.58	910.47	*EP WOOD
STORE	33009	41274.58	46348.15	910.93	*EP WOOD
STORE	33017	41459.07	46279.07	911.87	*EP WOOD
STORE	33051	44662.19	45822.89	917.12	*EP WOOD
STORE	33052	44664.70	46176.97	918.91	*EP WOOD
STORE	33057	44667.25	46489.00	919.42	*EP WOOD
STORE	33050	44761.25	45552.44	918.66	*EZ HIVOLTMETLPOL
STORE	33058	44747.34	46510.79	921.65	*EZ HIVOLTMETLPOL
STORE	33042	41603.52	44758.78	913.08	*FACE BARRIER
STORE	33045	41597.77	44794.72	912.62	*FACE BARRIER
STORE	33046	41668.60	44794.23	912.77	*FACE BARRIER
STORE	33054	44666.52	46206.02	918.34	*FO
STORE	33055	44665.09	46269.25	918.43	*FO
STORE	33056	44665.63	46355.18	918.70	*FO
STORE	33076	45342.67	44918.14	916.16	*FO
STORE	33077	45344.72	44854.17	915.74	*FO
STORE	33078	45339.37	44782.53	915.12	*FO
STORE	33079	45341.44	44776.12	915.03	*FO
STORE	33080	45347.79	44775.98	915.08	*FO
STORE	33081	45467.03	44781.22	915.58	*FO
STORE	33082	45497.46	44787.76	917.99	*FO
STORE	33083	45544.90	44788.84	917.87	*FO
STORE	33084	45647.48	44783.46	916.93	*FO
STORE	33085	45661.35	44877.18	916.85	*FO
STORE	33086	45642.05	44752.33	920.10	*FO
STORE	33087	45640.05	44727.68	920.03	*FO
STORE	33088	45619.82	44617.14	915.52	*FO
STORE	33089	45587.99	44514.89	915.41	*FO
STORE	33090	45565.83	44441.75	917.12	*FO
STORE	33091	45558.63	44399.73	917.27	*FO
STORE	33092	45685.09	44781.04	920.09	*FO
STORE	33093	45709.30	44779.24	920.26	*FO
STORE	33094	45715.55	44774.43	920.34	*FO
STORE	33095	45719.15	44769.34	920.60	*FO
STORE	33096	45717.42	44749.56	921.18	*FO
STORE	33097	45714.22	44721.85	921.15	*FO
STORE	33098	45715.30	44717.91	920.97	*FO
STORE	33099	45722.21	44716.48	921.00	*FO
STORE	33100	45798.07	44711.32	921.49	*FO
STORE	33005	41456.40	45365.46	912.68	*GL
STORE	33007	41354.29	46090.20	912.28	*GL
STORE	33008	41342.05	46149.82	910.98	*GL
STORE	33010	41228.14	46809.60	911.61	*GL
STORE	33061	45813.33	46252.21	921.10	*GL
STORE	33062	45807.12	46253.79	920.69	*GL
STORE	33063	45809.93	46270.97	920.93	*GL
STORE	33064	45816.26	46270.09	920.97	*GL
STORE	33065	45821.22	46305.71	920.85	*GL

STORE	33066	45815.85	46308.02	921.02	*GL
STORE	33069	46182.32	47514.14	926.30	*GL
STORE	33070	46183.33	47547.30	928.01	*GL
STORE	33071	46181.99	47561.70	928.46	*GL
STORE	33072	46170.44	47599.27	929.30	*GL
STORE	33073	46183.31	47641.52	928.98	*GL
STORE	33103	45587.82	44701.57	916.01	*GL
STORE	33104	45579.85	44715.78	917.05	*GL
STORE	33105	45584.16	44743.25	918.75	*GL
STORE	33106	45593.60	44743.08	919.02	*GL
STORE	33107	45597.25	44773.10	917.49	*GL
STORE	33108	45588.19	44773.34	917.48	*GL
STORE	33116	51709.86	44641.60	960.19	*GL
STORE	33117	51704.24	44640.57	960.94	*GL
STORE	33118	51708.61	44582.12	960.57	*GL
STORE	33119	51798.27	44641.41	960.48	*GL
STORE	33120	51816.05	44654.38	960.78	*GL
STORE	33121	51897.03	44651.05	961.13	*GL
STORE	33133	55187.71	44565.12	973.06	*TELCO BOX
STORE	33141	55307.04	44544.06	972.65	*TELCO RISER
STORE	33145	55290.65	44636.35	971.67	*TELCO RISER
STORE	33013	41501.59	46035.66	915.40	*TOP TOWER BASE
STORE	33014	41506.13	46076.46	915.36	*TOP TOWER BASE
STORE	33015	41547.06	46071.97	915.36	*TOP TOWER BASE
STORE	33016	41542.55	46031.31	915.33	*TOP TOWER BASE
STORE	33020	41919.60	47323.51	913.26	*TOP TOWER BASE
STORE	33021	41922.84	47349.26	913.21	*TOP TOWER BASE
STORE	33022	41958.57	47344.23	913.23	*TOP TOWER BASE
STORE	33023	41954.81	47319.04	913.23	*TOP TOWER BASE
STORE	33024	41702.69	47324.75	913.18	*TOP TOWER BASE
STORE	33025	41669.38	47328.95	913.15	*TOP TOWER BASE
STORE	33026	41673.50	47362.18	913.12	*TOP TOWER BASE
STORE	33027	41707.02	47357.99	913.14	*TOP TOWER BASE
STORE	33028	42022.55	45844.57	913.44	*TOP TOWER BASE
STORE	33029	42025.42	45868.34	913.43	*TOP TOWER BASE
STORE	33030	42049.42	45865.39	913.43	*TOP TOWER BASE
STORE	33031	42046.20	45841.35	913.41	*TOP TOWER BASE
STORE	33032	42128.64	46687.08	914.49	*TOP TOWER BASE
STORE	33033	42131.79	46712.37	914.48	*TOP TOWER BASE
STORE	33034	42156.89	46709.53	914.51	*TOP TOWER BASE
STORE	33035	42153.85	46683.99	914.50	*TOP TOWER BASE
STORE	33131	55177.81	44575.94	971.07	*WF
STORE	33144	55308.15	44479.29	972.17	*WF
STORE	33101	45678.45	44660.71	920.35	*WL
STORE	33102	45626.94	44663.45	916.39	*WL
STORE	33115	51720.56	44637.64	959.88	*WL BLUESTK
STORE	33135	55200.93	44562.07	971.51	*WL BLUSTK
STORE	33136	55200.39	44630.68	970.87	*WL BLUSTK
STORE	33011	41794.15	45539.23	904.68	*WL C/L 96IN
STORE	33012	41777.00	45654.24	904.90	*WL C/L 96IN
STORE	33018	41761.93	46973.65	906.13	*WL C/L 96IN
STORE	33019	41767.30	47018.87	906.20	*WL C/L 96IN
STORE	33111	51777.48	44790.21	960.30	*WL END
STORE	33112	51772.76	44637.04	960.20	*WV
STORE	33113	51772.73	44632.92	960.24	*WV
STORE	33114	51769.33	44633.56	960.27	*WV
STORE	33132	55177.86	44561.83	970.78	*WV
STORE	33137	55301.89	44562.15	972.52	*WV
STORE	33138	55297.33	44555.39	972.46	*WV
STORE	33142	55304.50	44618.70	971.93	*WV
STORE	33143	55232.93	44620.38	971.72	*WV

DELETE COORDINATES (40000-50000)

STORE	40100	41527.30	44798.88	911.91	*END GUARDRAIL
STORE	40101	41563.29	44754.77	912.59	*END GUARDRAIL
STORE	40102	41750.84	44749.99	913.03	*END GUARDRAIL
STORE	40103	41709.41	44801.69	912.07	*END GUARDRAIL
STORE	40104	41723.27	44791.11	912.65	*RE
STORE	40105	41724.15	44804.83	912.36	*ANG PT RE
STORE	40106	41705.88	44837.73	911.04	*RE
STORE	40107	41722.68	44845.38	910.72	*RE
STORE	40108	41740.15	44809.34	912.18	*RE
STORE	40109	41749.80	44793.36	912.40	*ANG PT RE
STORE	40110	41763.21	44757.82	912.59	*ANG PT RE
STORE	40111	41771.14	44743.03	912.48	*C/L RD16FT RP
STORE	40112	41760.53	44704.46	911.34	*C/L RD16FT RP
STORE	40113	41745.13	44663.18	909.91	*C/L RD16FT RP
STORE	40114	42010.48	44756.38	910.74	*RE C/L40WWTPDIRT
STORE	40115	42010.67	44729.77	910.96	*C/L RD40WWTPDIRT
STORE	40116	42009.54	44701.19	911.32	*C/L RD40WWTPDIRT
STORE	40117	42053.09	44785.07	910.24	*ANG PT RE
STORE	40118	42049.79	44792.52	910.03	*ANG PT RE
STORE	40119	42029.20	44792.33	910.14	*ANG PT RE
STORE	40120	42022.77	44785.51	910.29	*ANG PT RE
STORE	40121	42037.34	44801.41	909.74	*C/L 22RD DIRT
STORE	40122	42037.06	44827.86	911.03	*C/L 22RD DIRT
STORE	40123	42058.61	44753.31	911.16	*WV
STORE	40124	41910.03	44758.10	910.87	*WZBLSK 96INWL
STORE	40125	41905.74	44787.32	910.59	*WZBLSK 96INWL
STORE	40126	43346.04	44779.39	910.80	*ANG PT RE
STORE	40127	43352.02	44789.10	911.49	*ANG PT RE
STORE	40128	43367.93	44789.82	911.44	*ANG PT RE
STORE	40129	43374.92	44779.43	910.79	*ANG PT RE
STORE	40130	43380.02	44752.27	911.33	*ANG PT RE
STORE	40131	43376.47	44743.69	911.58	*ANG PT RE
STORE	40132	43356.85	44743.19	911.51	*ANG PT RE
STORE	40133	43350.12	44752.13	911.26	*ANG PT RE
STORE	40134	43366.76	44713.80	912.57	*C/L 15FTDIRTROAD
STORE	40135	43390.07	44748.81	911.26	*WV
STORE	40136	43360.35	44808.96	912.76	*C/L 30FT RD IG
STORE	40137	44684.83	44720.19	913.76	*ANG PT RE
STORE	40138	44678.71	44712.39	913.78	*ANG PT RE
STORE	40139	44656.59	44714.27	913.74	*ANG PT RE
STORE	40140	44648.06	44720.34	913.61	*ANG PT RE
STORE	40141	44644.35	44761.00	913.69	*ANG PT RE
STORE	40142	44651.58	44768.12	914.10	*ANG PT RE
STORE	40143	44676.41	44768.79	914.26	*ANG PT RE
STORE	40144	44682.12	44759.99	913.76	*ANG PT RE
STORE	40145	44681.17	44780.06	914.94	*RD EDGE IG
STORE	40146	44685.91	44788.59	915.55	*RD EDGE IG
STORE	40147	44696.06	44790.26	916.33	*RD EDGE IG
STORE	40148	44710.55	44791.01	917.01	*RD EDGE IG
STORE	40149	44707.18	44834.01	917.47	*RD EDGE IG
STORE	40150	44688.27	44825.11	916.57	*RD EDGE IG
STORE	40151	44674.88	44818.83	915.29	*RD EDGE IG
STORE	40152	44659.26	44809.69	915.04	*RD EDGE IG
STORE	40153	44658.31	44780.23	914.64	*RD EDGE IG
STORE	40154	45081.82	44715.60	914.93	*SMINV.N.S.907.39
STORE	40155	45013.76	44773.77	912.72	*EP
STORE	40156	45013.34	44844.41	917.88	*EP
STORE	40157	45037.09	44929.62	918.16	*EP
STORE	40158	45057.87	45005.46	918.52	*BC
STORE	40159	45058.18	44954.97	918.94	*BC
STORE	40160	45098.92	44955.05	918.29	*BC
STORE	40161	45058.14	44988.93	919.29	*BF
STORE	40162	45074.31	44907.28	917.97	*EV
STORE	40163	46470.68	44755.24	929.24	*ANG PT RE
STORE	40164	46479.42	44767.65	929.06	*RE
STORE	40165	46476.17	44766.81	929.22	*IV

STORE	40166	46487.20	44774.19	929.34	*RE
STORE	40167	46491.81	44776.98	929.72	*RE
STORE	40168	46492.09	44783.22	930.19	*RE PC
STORE	40169	46491.56	44789.16	930.54	*FL PC
STORE	40170	46488.67	44777.88	929.65	*EP
STORE	40171	46486.53	44780.77	929.80	*PLANTER EDGE
STORE	40172	46474.13	44765.25	929.58	*PLANTER EDGE
STORE	40173	46462.53	44765.65	929.56	*PLANTER EDGE
STORE	40174	46463.06	44780.25	929.98	*PLANTER EDGE
STORE	40175	46466.77	44772.70	929.34	*PV 4 IN.
STORE	40176	46460.60	44776.66	929.25	*PV 4 IN.
STORE	40177	46456.94	44771.64	929.22	*MESQ 4 IN.
STORE	40178	46428.76	44771.24	928.86	*MESQ 4 IN.
STORE	40179	46408.77	44772.49	929.11	*MESQ 2 IN.
STORE	40180	46400.25	44777.10	929.29	*MESQ 2 IN.
STORE	40181	46386.33	44771.72	929.15	*MESQ 2 IN.
STORE	40182	46483.72	44780.44	929.67	*FL PC
STORE	40183	46492.30	44826.88	931.38	*BC
STORE	40184	46492.43	44868.75	931.51	*BC
STORE	40185	46531.72	44807.23	931.39	*FF BLOCK 8 FT
STORE	40186	46531.71	44786.12	930.62	*FL PC
STORE	40187	46532.00	44783.47	930.83	*PLANTER EDGE
STORE	40188	46535.45	44776.32	930.57	*PLANTER EDGE
STORE	40189	46543.62	44767.34	930.49	*PLANTER EDGE
STORE	40190	46540.62	44780.66	930.68	*FL PC
STORE	40191	46546.42	44775.43	930.20	*MESQ 6 IN.
STORE	40192	46561.78	44766.71	930.66	*PLANTER EDGE
STORE	40193	46561.86	44780.71	931.10	*PLANTER EDGE
STORE	40194	45793.29	44783.18	920.96	*IG
STORE	40195	45796.20	44802.40	921.23	*IG
STORE	40196	45910.55	44779.09	922.36	*IG
STORE	40197	45909.95	44794.41	925.19	*IG TOP
STORE	40198	46006.41	44780.03	925.36	*IG
STORE	40199	46006.00	44790.40	928.27	*IG TOP
STORE	40200	46059.05	44781.04	934.07	*IG
STORE	40201	46060.29	44798.18	932.70	*CONC
STORE	40202	46056.33	44782.61	936.07	*TOP CONC WALL
STORE	40203	46061.76	44783.29	932.57	*CONC SLAB
STORE	40204	46169.01	44779.13	934.16	*IG
STORE	40205	46169.10	44782.80	934.54	*IG
STORE	40206	46169.09	44783.57	937.40	*TOP CONC WALL
STORE	40207	46170.42	44794.12	933.79	*CONC
STORE	40208	46237.89	44805.72	934.24	*CONC
STORE	40209	46238.18	44784.95	934.12	*CONC
STORE	40210	46238.25	44784.02	937.78	*TOP CONC WALL
STORE	40211	46238.03	44783.43	934.49	*IG
STORE	40212	46237.98	44779.47	934.01	*IG
STORE	40213	46326.34	44823.75	933.55	*CONC
STORE	40214	46332.26	44783.95	937.70	*TOP CONC WALLEND
STORE	40215	46332.24	44783.18	933.82	*IG
STORE	40216	46332.43	44780.09	933.16	*IG
STORE	40217	46418.26	44780.55	931.08	*IG
STORE	40218	46418.44	44801.20	931.33	*IG
STORE	40219	46486.24	44785.24	930.77	*CONC
STORE	40220	46487.19	44804.16	930.98	*CONC
STORE	40221	46782.53	44782.49	933.11	*IG
STORE	40222	46783.41	44799.81	933.40	*IG
STORE	40223	46800.18	44801.75	935.20	*IG
STORE	40224	46800.68	44786.03	935.39	*IG
STORE	40225	46904.52	44785.85	935.90	*IG
STORE	40226	46904.23	44797.95	936.01	*IG
STORE	40227	47003.10	44787.26	935.05	*IG
STORE	40228	47004.43	44801.82	935.26	*IG
STORE	40229	47118.69	44788.64	934.61	*IG
STORE	40230	47117.53	44805.11	934.74	*IG
STORE	40231	47287.62	44790.14	935.62	*IG
STORE	40232	47291.62	44815.72	935.99	*IG

STORE	40233	46703.67	44784.55	933.00	*IG
STORE	40234	46704.17	44790.85	932.96	*IG
STORE	40235	46586.66	44782.12	931.10	*IG
STORE	40236	46587.59	44791.63	931.21	*IG
STORE	40237	46531.73	44776.79	930.09	*RE MOC
STORE	40238	46553.83	44754.52	930.16	*RE
STORE	40239	46508.22	44754.52	929.82	*RE
STORE	40240	46510.93	44768.76	929.79	*RP
STORE	40241	46512.17	44811.25	931.36	*RP
STORE	40242	45795.51	44768.87	922.12	*MESQ 4 IN.
STORE	40243	45803.46	44770.53	924.85	*MESQ 4 IN.
STORE	40244	45826.32	44770.66	922.77	*PV 4 IN.
STORE	40245	45916.00	44769.74	924.96	*MESQ 4 IN.
STORE	40246	46038.92	44772.05	927.91	*PV 2 IN.
STORE	40247	47266.74	44776.01	934.82	*MESQ 6 IN.
STORE	40248	47250.80	44779.56	933.78	*PV 4 IN.
STORE	40249	47179.72	44776.19	935.70	*MESQ 2 IN.
STORE	40250	47119.72	44776.93	931.32	*PV 5 IN.
STORE	40251	47087.95	44776.02	930.79	*MESQ 4 IN.
STORE	40252	47051.66	44775.48	933.81	*MESQ 2 IN.
STORE	40253	46964.07	44773.79	930.79	*MESQ 2 IN.
STORE	40254	46927.05	44778.30	930.64	*PV 4 IN.
STORE	40255	46887.88	44778.27	928.80	*PV 4 IN.
STORE	40256	46874.03	44774.02	930.39	*MESQ 3 IN.
STORE	40257	46859.78	44778.23	929.97	*PV 3 IN.
STORE	40258	46779.36	44777.82	928.93	*MESQ 3 IN.
STORE	40259	46722.19	44773.83	927.36	*PV 4 IN.
STORE	40260	46703.35	44775.92	929.14	*MESQ 6 IN.
STORE	40261	46627.06	44773.37	929.04	*PV 5 IN.
STORE	40262	41782.30	44843.26	911.64	*RC IG 14FT WIDE
STORE	40263	41878.18	44843.72	912.04	*RC IG 14FT WIDE
STORE	40264	41988.10	44841.54	912.52	*RC IG 14FT WIDE
STORE	40265	42013.34	44841.86	912.06	*RC IG 14FT WIDE
STORE	40266	42034.34	44841.40	910.99	*RC IG 14FT WIDE
STORE	40267	42085.71	44839.72	911.66	*RC IG 14FT WIDE
STORE	40268	42185.61	44837.54	911.99	*RC IG 14FT WIDE
STORE	40269	42286.59	44834.60	912.21	*RC IG 14FT WIDE
STORE	40270	42384.61	44832.72	912.48	*RC IG 14FT WIDE
STORE	40271	42510.59	44831.52	912.58	*RC IG 14FT WIDE
STORE	40272	42637.01	44831.65	912.87	*RC IG 14FT WIDE
STORE	40273	42785.15	44830.80	913.11	*RC IG 14FT WIDE
STORE	40274	42885.39	44830.64	913.28	*RC IG 14FT WIDE
STORE	40275	42984.29	44828.85	913.40	*RC IG 14FT WIDE
STORE	40276	43087.11	44828.78	913.63	*RC IG 14FT WIDE
STORE	40277	43183.39	44827.26	913.77	*RC IG 14FT WIDE
STORE	40278	43286.15	44826.06	913.88	*RC IG 14FT WIDE
STORE	40279	43334.93	44824.38	913.63	*RC IG 14FT WIDE
STORE	40280	43360.42	44825.08	912.69	*RC IG 14FT WIDE
STORE	40281	43398.73	44823.33	912.50	*RC IG 14FT WIDE
STORE	40282	43440.62	44817.10	912.59	*RC IG 16FT+/-WD
STORE	40283	43484.14	44816.77	912.53	*RC IG 16FT+/-WD
STORE	40284	43585.69	44815.97	912.59	*RC IG 16FT+/-WD
STORE	40285	43686.22	44815.14	912.76	*RC IG 16FT+/-WD
STORE	40286	43785.15	44814.27	913.00	*RC IG 16FT+/-WD
STORE	40287	43887.47	44814.49	912.97	*RC IG 16FT+/-WD
STORE	40288	43985.27	44814.17	913.30	*RC IG 16FT+/-WD
STORE	40289	44088.58	44813.28	913.49	*RC IG 16FT+/-WD
STORE	40290	44187.12	44812.87	913.67	*RC IG 16FT+/-WD
STORE	40291	44290.97	44811.51	913.95	*RC IG 16FT+/-WD
STORE	40292	44393.87	44809.44	914.13	*RC IG 16FT+/-WD
STORE	40293	44494.33	44808.74	914.35	*RC IG 16FT+/-WD
STORE	40294	44594.93	44808.78	914.10	*RC IG 16FT+/-WD
STORE	40295	44634.58	44807.41	914.31	*END RC IG
STORE	40296	45707.07	44749.87	921.07	*RE
STORE	40297	45735.60	44766.56	920.46	*RI DIRT
STORE	40298	45750.70	44785.23	920.45	*RI DIRT
STORE	40299	45771.16	44780.41	920.30	*RI DIRT

STORE	40300	45775.69	44764.21	920.75	*RI DIRT
STORE	40301	45784.12	44751.71	921.76	*RE
STORE	40302	45787.54	44861.06	919.22	*RI DIRT
STORE	40303	45772.70	44859.68	919.20	*RI DIRT
STORE	40304	45791.88	44977.11	918.95	*RI DIRT
STORE	40305	45809.16	44982.69	919.51	*RI DIRT
STORE	40306	45824.86	45100.34	920.84	*RI DIRT
STORE	40307	45809.03	45101.62	920.40	*RI DIRT
STORE	40308	45804.97	45171.25	920.85	*RI DIRT
STORE	40309	45831.06	45169.05	920.76	*RI DIRT
STORE	40310	45826.73	45254.95	921.54	*RI DIRT
STORE	40311	45807.16	45257.18	921.68	*RI DIRT
STORE	40312	45823.96	45303.18	924.02	*RI DIRT
STORE	40313	45840.55	45294.47	923.08	*RI DIRT
STORE	40314	45863.86	45335.43	924.99	*RI DIRT
STORE	40315	45853.60	45354.09	925.12	*RI DIRT
STORE	40316	45872.50	45366.57	925.83	*RI DIRT
STORE	40317	45883.06	45352.64	925.86	*RI DIRT
STORE	40318	45878.72	45359.76	925.79	*C/L RR TRACK
STORE	40319	45857.98	45343.90	925.30	*C/L RR TRACK
STORE	40320	45839.09	45327.62	924.85	*C/L RR TRACK
STORE	40321	45817.89	45305.01	924.07	*C/L RR TRACK
STORE	40322	45797.89	45280.06	923.67	*C/L RR TRACK
STORE	40323	45779.16	45251.91	922.94	*C/L RR TRACK
STORE	40324	45764.24	45225.98	922.44	*C/L RR TRACK
STORE	40325	45751.13	45197.80	921.97	*C/L RR TRACK
STORE	40326	45740.38	45166.72	921.67	*C/L RR TRACK
STORE	40327	45733.29	45138.70	921.66	*C/L RR TRACK
STORE	40328	47334.84	44760.54	935.21	*RE
STORE	40329	47322.02	44773.92	935.57	*RI DIRT
STORE	40330	47314.75	44789.77	936.38	*RI DIRT
STORE	40331	47307.55	44821.39	935.37	*RI DIRT
STORE	40332	47308.42	44849.19	934.71	*RI DIRT
STORE	40333	47309.79	44885.64	935.14	*RI DIRT
STORE	40334	47295.55	44885.90	934.89	*RI DIRT
STORE	40335	47296.44	44857.53	935.10	*RI DIRT
STORE	40336	47296.86	44838.68	935.02	*RI DIRT
STORE	40337	47298.97	44809.43	936.04	*RI DIRT
STORE	40338	47303.70	44783.20	936.01	*RI DIRT
STORE	40339	47304.00	44776.61	935.79	*RI DIRT
STORE	40340	47289.62	44759.49	935.24	*RE
STORE	40341	48626.74	44724.81	942.75	*RE
STORE	40342	48616.89	44709.80	943.06	*RI DIRT
STORE	40343	48617.09	44675.77	944.10	*RI DIRT
STORE	40344	48617.17	44639.76	944.27	*RI DIRT
STORE	40345	48605.55	44639.12	944.22	*RI DIRT
STORE	40346	48605.13	44674.31	944.34	*RI DIRT
STORE	40347	48603.69	44695.00	943.43	*RI DIRT
STORE	40348	48602.94	44714.66	942.98	*RI DIRT
STORE	40349	48596.92	44724.94	942.38	*RE
STORE	40350	48693.18	44751.36	943.25	*RE
STORE	40351	48692.46	44765.62	943.44	*RI DIRT
STORE	40352	48692.46	44780.26	944.20	*RI DIRT
STORE	40353	48695.90	44800.38	944.27	*RI DIRT
STORE	40354	48694.78	44849.52	943.62	*RI DIRT
STORE	40355	48705.83	44849.73	943.80	*RI DIRT
STORE	40356	48707.18	44804.66	944.04	*RI DIRT
STORE	40357	48713.13	44777.80	944.91	*RI DIRT
STORE	40358	48715.71	44765.09	943.56	*RI DIRT
STORE	40359	48718.56	44751.37	943.49	*RE
STORE	40360	49610.47	44746.76	949.59	*RE
STORE	40361	49611.30	44761.16	950.07	*RI DIRT
STORE	40362	49611.37	44790.59	949.77	*RI DIRT
STORE	40363	49643.41	44788.55	950.10	*RI DIRT
STORE	40364	49642.93	44762.64	950.48	*RI DIRT
STORE	40365	49642.54	44746.69	949.88	*RE
STORE	40366	49667.74	44836.94	951.14	*BF

STORE	40367	49779.58	44747.70	950.86	*RE
STORE	40368	49779.51	44764.19	950.74	*COR AC RD
STORE	40369	49779.61	44809.91	950.75	*RE
STORE	40370	49780.60	44854.14	950.83	*ANG PT AC
STORE	40371	49791.37	44854.02	950.93	*ANG PT AC
STORE	40372	49791.91	44873.97	950.65	*COR AC RD
STORE	40373	49802.22	44874.11	950.61	*COR AC RD
STORE	40374	49801.80	44827.54	950.99	*RE
STORE	40375	49803.63	44765.65	950.80	*COR AC RD
STORE	40376	49804.20	44760.70	951.46	*TOP 12 IN.CULPIP
STORE	40377	49803.68	44746.92	951.11	*RE
STORE	40378	49924.04	44700.26	952.59	*RG STOP SIGN
STORE	40379	49819.48	44833.26	952.15	*BF
STORE	40380	49983.68	44745.91	952.83	*RE
STORE	40381	49964.74	44764.47	952.95	*RI DIRT
STORE	40382	49961.66	44794.04	953.08	*RI DIRT
STORE	40383	49961.09	44849.17	951.88	*RI DIRT
STORE	40384	49940.02	44849.19	952.15	*RI DIRT
STORE	40385	49938.50	44813.35	952.33	*RI DIRT
STORE	40386	49936.64	44783.49	952.77	*RI DIRT
STORE	40387	49928.98	44763.81	952.82	*RI DIRT
STORE	40388	49911.99	44745.92	952.19	*RE
STORE	40389	49906.62	44789.67	952.97	*C/L IRRI PUMP
STORE	40390	49902.94	44781.81	955.56	*COR POWER PANEL
STORE	40391	49909.18	44781.44	955.60	*COR POWER PANEL
STORE	40392	50005.31	44763.18	952.90	*EP
STORE	40393	50431.30	44755.68	955.51	*EP
STORE	40394	50849.95	44746.74	958.04	*EP
STORE	40395	51280.49	44726.52	959.06	*EP
STORE	40396	51267.61	44713.49	958.47	*RE
STORE	40397	51263.97	44729.53	959.13	*RI DIRT
STORE	40398	51264.07	44749.18	959.09	*RI DIRT
STORE	40399	51264.88	44766.97	959.11	*RI DIRT
STORE	40400	51252.61	44766.90	958.78	*RI DIRT
STORE	40401	51250.08	44739.49	958.88	*RI DIRT
STORE	40402	51246.95	44725.94	958.74	*RI DIRT
STORE	40403	51238.95	44714.50	958.35	*RE
STORE	40404	51294.74	44772.86	958.87	*BF
STORE	40405	51294.03	44786.03	962.78	*BC
STORE	40406	51293.18	44759.47	958.50	*BC
STORE	40407	51333.30	44758.56	958.36	*BC
STORE	40408	51338.10	44738.61	960.29	*TT 24IN DIA
STORE	40409	51365.24	44742.77	959.79	*TT 48IN DIA

File estr5-s.ics
Date 3/6/98
Survey 5
DELETE COORDINATES (50000-60000)

STORE	50015	49944.31	47642.83	947.22	*
STORE	50321	55210.70	44658.21	972.79	*12IN DIP LINE
STORE	50694	46671.83	44855.63	935.39	*AC UNIT
STORE	50695	46671.87	44850.13	935.31	*AC UNIT
STORE	50176	49813.73	44877.35	950.96	*BC
STORE	50177	49789.61	44877.52	950.54	*BC
STORE	50178	49789.88	44897.84	950.97	*BC
STORE	50179	49671.84	44926.68	950.25	*BC
STORE	50180	49671.54	44884.98	950.11	*BC
STORE	50181	49686.82	44882.77	950.09	*BC
STORE	50182	49686.58	44857.65	950.21	*BC
STORE	50183	49643.25	44839.55	950.29	*BC
STORE	50184	49633.11	44839.94	950.04	*BC
STORE	50185	49632.31	44831.88	949.99	*BC
STORE	50186	49711.76	44857.80	950.77	*BC
STORE	50187	49712.06	44882.00	950.55	*BC
STORE	50188	49712.10	44884.69	950.58	*BC
STORE	50189	49712.34	44926.32	950.64	*BC
STORE	50190	49814.22	44897.57	951.11	*BC
STORE	50647	46465.41	44868.63	931.18	*BC
STORE	50648	46465.08	44827.00	931.24	*BC
STORE	50664	46621.59	44862.83	932.99	*BC
STORE	50668	46621.63	44830.30	932.62	*BC
STORE	50674	46670.02	44830.45	933.09	*BC
STORE	50676	46492.17	44868.80	931.46	*BC
STORE	50683	46669.72	44862.97	933.02	*BC
STORE	50672	46643.86	44830.37	933.04	*BF
STORE	50650	46482.33	44826.74	931.21	*BN
STORE	50651	46482.41	44820.89	931.18	*BN
STORE	50652	46490.80	44820.91	933.14	*BN+
STORE	50599	46145.35	44783.02	937.01	*C/L COR CONC BIN
STORE	50601	46144.83	44807.60	939.27	*C/L COR CONC BIN
STORE	50597	46057.83	44808.66	932.81	*CONC SLAB
STORE	50600	46146.66	44784.47	933.54	*CONC SLAB
STORE	50602	46146.22	44806.85	933.56	*CONC SLAB
STORE	50604	46170.98	44807.84	933.79	*CONC SLAB
STORE	50608	46144.69	44853.42	934.09	*CONC SLAB
STORE	50611	46237.57	44786.02	934.13	*CONC SLAB
STORE	50615	46266.35	44806.75	934.17	*CONC SLAB
STORE	50620	46238.59	44858.45	933.88	*CONC SLAB
STORE	50622	46283.43	44858.88	933.56	*CONC SLAB
STORE	50624	46328.74	44856.71	933.31	*CONC SLAB
STORE	50626	46327.88	44787.30	934.04	*CONC SLAB
STORE	50630	46365.84	44846.43	931.81	*CONC SLAB
STORE	50634	46337.15	44854.86	931.98	*CONC SLAB
STORE	50635	46334.55	44803.31	932.13	*CONC SLAB
STORE	50636	46362.31	44806.41	932.03	*CONC SLAB
STORE	50631	46364.50	44840.42	933.65	*COR CONC BASE
STORE	50632	46364.81	44826.54	933.68	*COR CONC BASE
STORE	50633	46350.97	44826.31	933.60	*COR CONC BASE
STORE	50643	46437.14	44828.08	933.65	*COR CONC BASE
STORE	50644	46423.32	44827.78	933.64	*COR CONC BASE
STORE	50645	46423.00	44841.62	933.62	*COR CONC BASE
STORE	50646	46436.78	44841.96	933.59	*COR CONC BASE
STORE	50595	46056.13	44782.21	936.12	*COR CONC BIN
STORE	50596	46055.78	44808.09	935.46	*COR CONC BIN
STORE	50603	46169.84	44807.75	939.31	*COR CONC BIN
STORE	50605	46144.49	44830.89	939.44	*COR CONC BIN
STORE	50606	46173.27	44831.14	939.12	*COR CONC BIN
STORE	50607	46144.71	44853.61	939.54	*COR CONC BIN
STORE	50610	46239.28	44783.59	937.91	*COR CONC BIN
STORE	50612	46238.98	44807.01	939.66	*COR CONC BIN
STORE	50616	46238.81	44830.39	939.53	*COR CONC BIN
STORE	50625	46332.28	44783.90	937.72	*COR CONC BIN
STORE	50627	46331.97	44798.48	937.72	*COR CONC BIN
STORE	50628	46368.88	44800.01	937.50	*COR CONC BIN

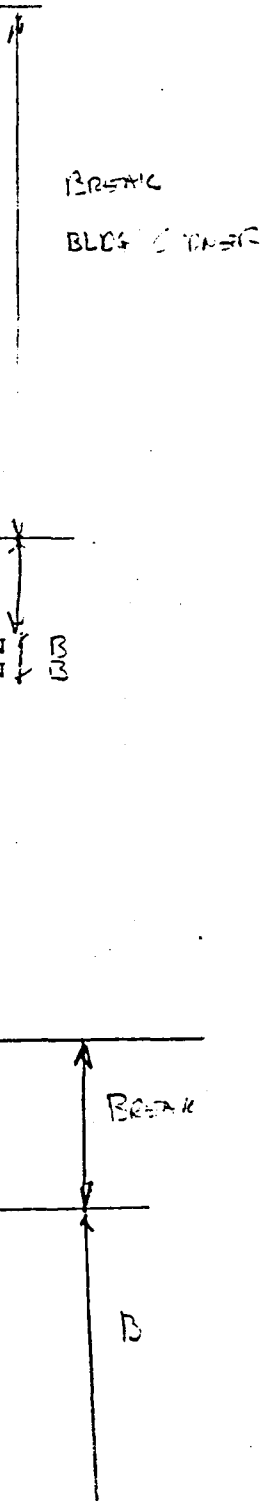

STORE	50638	46391.50	44801.02	937.43	*COR CONC BIN
STORE	50639	46418.17	44802.13	937.38	*COR CONC BIN
STORE	50641	46444.28	44802.69	937.27	*COR CONC BIN
STORE	50314	53904.81	44689.02	967.08	*COR PUMP PAD
STORE	50315	53905.01	44692.72	967.03	*COR PUMP PAD
STORE	50316	53908.79	44692.64	967.11	*COR PUMP PAD
STORE	50317	53908.58	44688.69	966.89	*COR PUMP PAD
STORE	50318	53918.10	44692.45	967.01	*EAST END ELETPAN
STORE	50432	55290.03	43988.19	975.38	*EB 1FTX1.5FT
STORE	50613	46213.63	44807.66	939.58	*END CONC BIN
STORE	50614	46264.74	44807.96	939.54	*END CONC BIN
STORE	50617	46213.19	44831.04	939.41	*END CONC BIN
STORE	50618	46264.51	44830.99	939.43	*END CONC BIN
STORE	50619	46238.72	44855.89	939.41	*END CONC BIN
STORE	50623	46330.62	44856.67	937.78	*END CONC BIN
STORE	50629	46368.01	44846.39	937.52	*END CONC BIN
STORE	50637	46391.05	44828.65	937.28	*END CONC BIN
STORE	50640	46417.34	44830.29	937.38	*END CONC BIN
STORE	50642	46443.05	44838.88	937.19	*END CONC BIN
STORE	50446	55288.98	43994.65	975.52	*EP W/1 TRANS
STORE	50445	55288.28	43776.49	974.59	*EP W/3TRANS
STORE	50598	46128.33	44776.25	936.34	*EP+
STORE	50609	46140.17	44851.49	935.74	*EP+
STORE	50621	46159.04	44928.15	941.52	*EP+
STORE	50511	56571.12	44289.72	978.46	*FA 7FT BLK
STORE	50684	46784.01	44863.73	932.98	*FC COR PARK LOT
STORE	50092	55258.80	42028.61	0.00	*FD.C.P.S.
STORE	50097	55249.33	47201.88	0.00	*FD.C.P.S.
STORE	50688	46782.17	44782.29	933.02	*FF CHLK
STORE	50649	46471.17	44826.97	931.40	*FIN FLOOR
STORE	50563	45957.22	44365.27	920.84	*FL IG
STORE	50658	46536.09	44846.69	931.38	*FLAGPOLE
STORE	50594	45886.63	44779.20	922.05	*GAS RISER
STORE	50693	46670.04	44832.30	933.17	*GL
STORE	50838	47333.24	46034.92	941.60	*IC
STORE	50839	47332.60	46035.75	941.61	*IC
STORE	50845	47465.41	46150.28	943.04	*IC
STORE	50846	47464.79	46151.07	943.05	*IC
STORE	50853	48055.14	46253.46	945.21	*IC
STORE	50854	48054.19	46253.24	945.21	*IC
STORE	50861	48084.02	46132.30	945.39	*IC
STORE	50862	48083.13	46131.78	945.19	*IC
STORE	50110	47368.78	44658.47	933.86	*IG
STORE	50111	47391.32	44658.32	934.84	*IG
STORE	50112	47365.22	44558.21	934.86	*IG
STORE	50113	47348.75	44557.38	935.14	*IG
STORE	50129	47363.38	44452.83	934.92	*IG
STORE	50130	47361.65	44354.83	935.56	*IG
STORE	50143	41973.49	44580.76	911.91	*IG
STORE	50144	41923.71	44580.95	910.87	*IG
STORE	50149	41711.19	44578.00	907.44	*IG
STORE	50156	41951.19	44481.29	911.62	*IG
STORE	50157	41969.95	44480.91	912.38	*IG
STORE	50166	41931.72	44382.39	911.22	*IG
STORE	50192	51831.15	45083.73	959.41	*IG
STORE	50201	51730.57	45095.81	958.57	*IG
STORE	50202	51716.61	45098.67	960.09	*IG
STORE	50203	51707.42	45098.31	960.11	*IG
STORE	50204	51690.54	45100.93	957.80	*IG
STORE	50205	51683.69	44996.18	958.72	*IG
STORE	50206	51703.86	44996.54	960.81	*IG
STORE	50216	51816.56	44992.25	959.95	*IG
STORE	50217	51827.59	44991.59	960.34	*IG
STORE	50220	51816.75	44895.15	960.44	*IG
STORE	50221	51805.87	44895.39	960.41	*IG
STORE	50230	51698.39	44897.24	961.49	*IG
STORE	50231	51681.03	44898.12	958.41	*IG
STORE	50232	51680.55	44799.64	958.50	*IG
STORE	50233	51700.99	44798.53	961.27	*IG
STORE	50242	51805.37	44795.51	960.81	*IG

B

B

Concrete Tie

wash

STORE	50243	51817.51	44794.87	959.57	*IG
STORE	50244	51809.51	44300.72	961.95	*IG
STORE	50245	51797.87	44301.99	962.01	*IG
STORE	50256	51693.87	44306.48	961.71	*IG
STORE	50259	51695.87	44395.23	961.79	*IG
STORE	50271	51811.27	44397.19	961.93	*IG
STORE	50272	51802.57	44492.96	961.67	*IG
STORE	50283	51700.12	44495.43	961.62	*IG
STORE	50284	51697.47	44593.30	961.50	*IG
STORE	50295	51809.75	44591.87	961.67	*IG
STORE	50553	46001.61	44580.16	922.93	*IG
STORE	50556	46107.92	44583.49	923.09	*IG
STORE	50557	46001.67	44469.52	922.30	*IG
STORE	50558	46211.95	44585.68	924.10	*IG
STORE	50559	46211.60	44468.42	923.78	*IG
STORE	50560	46108.60	44467.39	922.98	*IG
STORE	50561	46001.51	44365.49	921.99	*IG
STORE	50562	46107.93	44366.41	922.67	*IG
STORE	50564	46211.22	44367.79	923.60	*IG
STORE	50565	46001.74	44264.13	922.04	*IG
STORE	50566	46206.83	44267.57	923.73	*IG
STORE	50567	46101.76	44264.97	922.56	*IG
STORE	50568	46002.37	44159.48	921.57	*IG
STORE	50569	46101.55	44161.93	922.36	*IG
STORE	50570	46205.49	44165.58	923.27	*IG
STORE	50575	50416.38	44435.11	954.41	*IG
STORE	50576	50419.81	44540.80	954.74	*IG
STORE	50577	50516.84	44431.96	955.06	*IG
STORE	50578	50520.50	44538.34	955.33	*IG
STORE	50579	50619.57	44428.52	955.56	*IG
STORE	50580	50621.53	44534.52	955.74	*IG
STORE	50581	50720.62	44425.49	956.09	*IG
STORE	50582	50720.45	44532.49	956.21	*IG
STORE	50583	50821.25	44422.09	956.59	*IG
STORE	50584	50821.29	44529.64	956.75	*IG
STORE	50585	50922.43	44418.91	957.09	*IG
STORE	50586	50923.42	44529.33	957.29	*IG
STORE	50587	51023.58	44415.13	957.68	*IG
STORE	50588	51024.66	44527.81	957.72	*IG
STORE	50590	45849.51	44788.78	922.22	*IG
STORE	50591	45848.82	44796.79	924.33	*IG
STORE	50592	45849.46	44803.70	924.41	*IG
STORE	50593	45852.79	44813.68	932.93	*IG
STORE	50696	55622.55	44448.26	972.72	*IG
STORE	50697	55621.01	44353.71	972.93	*IG
STORE	50698	55620.53	44302.03	975.42	*IG
STORE	50699	55620.07	44293.71	979.75	*IG
STORE	50700	55718.32	44291.69	979.80	*IG
STORE	50701	55718.45	44303.22	975.48	*IG
STORE	50702	55717.76	44353.96	974.74	*IG
STORE	50703	55716.33	44449.97	974.39	*IG
STORE	50704	55817.51	44451.79	974.95	*IG
STORE	50705	55818.75	44354.60	975.45	*IG
STORE	50706	55820.79	44303.48	976.06	*IG
STORE	50707	55820.96	44292.45	979.71	*IG
STORE	50708	55922.61	44294.91	979.51	*IG
STORE	50709	55922.31	44303.36	976.42	*IG
STORE	50710	55922.23	44355.25	975.93	*IG
STORE	50711	55920.81	44453.96	975.46	*IG
STORE	50712	56020.46	44455.77	976.20	*IG
STORE	50713	56021.83	44354.71	976.52	*IG
STORE	50714	56023.41	44303.52	976.98	*IG
STORE	50715	56023.48	44294.56	979.52	*IG
STORE	50716	56120.42	44294.78	979.87	*IG
STORE	50717	56120.31	44301.85	977.68	*IG
STORE	50718	56121.16	44356.92	976.75	*IG
STORE	50719	56122.26	44456.33	976.77	*IG
STORE	50720	56223.34	44458.02	977.35	*IG
STORE	50721	56217.73	44354.72	977.44	*IG
STORE	50722	56215.75	44301.52	977.79	*IG

STORE	50723	56215.46	44294.89	979.60	*IG
STORE	50749	50564.66	47511.38	946.82	*IG
STORE	50750	50567.18	47610.18	947.69	*IG
STORE	50761	50554.91	47277.46	945.66	*IG
STORE	50762	50552.06	47181.91	945.26	*IG
STORE	50763	50785.47	47178.91	946.24	*IG
STORE	50764	50786.58	47251.05	945.87	*IG
STORE	50781	50794.22	47501.81	947.12	*IG
STORE	50782	50804.65	47601.11	948.02	*IG
STORE	50783	51011.74	47601.37	948.50	*IG
STORE	50784	51008.09	47499.77	947.66	*IG
STORE	50801	50999.06	47250.73	946.44	*IG
STORE	50802	50995.67	47156.20	947.12	*IG
STORE	50803	51204.45	47591.46	948.69	*IG
STORE	50804	51204.19	47488.54	947.95	*IG
STORE	50820	51197.61	47236.36	946.82	*IG
STORE	50821	51195.79	47150.20	947.64	*IG
STORE	50822	51406.23	47177.78	948.28	*IG
STORE	50823	51408.06	47251.66	947.74	*IG
STORE	50824	51410.35	47285.33	948.12	*IG
STORE	50831	51411.78	47376.64	948.28	*IG
STORE	50832	51415.37	47477.68	948.62	*IG
STORE	50833	51416.64	47591.36	949.10	*IG
STORE	50589	45849.08	44778.01	921.77	*IG AT FL 8FT BLK
STORE	50744	50561.21	47400.03	940.38	*IG C/L
STORE	50775	50790.17	47395.23	939.38	*IG C/L
STORE	50789	51001.05	47388.78	939.25	*IG C/L
STORE	50809	51196.76	47381.55	940.36	*IG C/L
STORE	50554	45958.35	44578.59	921.95	*IG FL 6FT CLK
STORE	50555	45958.58	44472.45	921.64	*IG FL 6FT CLK
STORE	50777	50791.02	47419.03	941.93	*IG GB
STORE	50100	47241.21	44658.66	932.74	*IG TOE
STORE	50107	47335.02	44659.24	934.23	*IG TOE
STORE	50108	47345.07	44658.22	934.23	*IG TOE
STORE	50119	47247.46	44556.61	932.27	*IG TOE
STORE	50120	47240.34	44455.94	931.91	*IG TOE
STORE	50126	47333.45	44454.37	934.40	*IG TOE
STORE	50127	47336.60	44454.27	934.42	*IG TOE
STORE	50132	47338.45	44354.71	935.28	*IG TOE
STORE	50138	47244.29	44355.32	931.96	*IG TOE
STORE	50139	42042.25	44580.11	910.45	*IG TOE
STORE	50142	42017.43	44580.52	911.99	*IG TOE
STORE	50145	41798.69	44581.28	910.54	*IG TOE
STORE	50148	41745.80	44581.26	909.70	*IG TOE
STORE	50150	41729.04	44479.27	907.24	*IG TOE
STORE	50153	41814.01	44482.70	910.65	*IG TOE
STORE	50154	41890.03	44481.74	910.67	*IG TOE
STORE	50158	42018.34	44481.14	912.54	*IG TOE
STORE	50161	42040.39	44479.58	911.01	*IG TOE
STORE	50162	42038.50	44381.80	911.06	*IG TOE
STORE	50165	42016.51	44382.79	912.48	*IG TOE
STORE	50167	41822.23	44383.61	910.91	*IG TOE
STORE	50170	41743.37	44379.91	905.69	*IG TOE
STORE	50171	41758.03	44662.12	910.17	*IG TOE
STORE	50172	41773.83	44673.46	911.43	*IG TOE
STORE	50173	41785.51	44660.55	911.13	*IG TOE
STORE	50534	56313.82	44819.32	973.21	*IG TOE
STORE	50535	56312.20	44820.72	973.18	*IG TOE
STORE	50536	56306.87	44825.28	975.15	*IG TOE
STORE	50537	56280.11	44782.92	973.12	*IG TOE
STORE	50538	56278.62	44784.19	973.18	*IG TOE
STORE	50539	56273.37	44789.40	974.87	*IG TOE
STORE	50544	56247.48	44747.15	973.18	*IG TOE
STORE	50545	56246.07	44748.42	973.18	*IG TOE
STORE	50546	56240.75	44753.60	974.99	*IG TOE
STORE	50547	56211.70	44711.86	973.48	*IG TOE
STORE	50548	56213.67	44710.43	973.27	*IG TOE
STORE	50549	56206.53	44716.05	975.16	*IG TOE
STORE	50745	50561.51	47415.85	940.69	*IG TOE
STORE	50748	50563.68	47456.54	947.29	*IG TOE

Wash

B

B

P

STORE	50751	50562.38	47383.48	940.68	*IG TOE
STORE	50754	50560.84	47342.01	943.20	*IG TOE
STORE	50755	50560.22	47338.05	942.84	*IG TOE
STORE	50758	50558.75	47329.87	947.59	*IG TOE
STORE	50760	50558.44	47309.06	945.29	*IG TOE
STORE	50765	50787.65	47301.05	945.90	*IG TOE
STORE	50767	50787.03	47322.19	947.82	*IG TOE
STORE	50769	50787.36	47329.62	942.94	*IG TOE
STORE	50770	50787.04	47333.85	942.84	*IG TOE
STORE	50772	50787.44	47342.87	949.26	*IG TOE
STORE	50774	50789.08	47371.68	940.49	*IG TOE
STORE	50776	50791.05	47412.22	940.36	*IG TOE
STORE	50780	50792.63	47448.89	947.72	*IG TOE
STORE	50785	51002.83	47442.91	948.22	*IG TOE
STORE	50786	51002.61	47440.31	950.62	*IG TOE
STORE	50788	51001.91	47405.39	940.22	*IG TOE
STORE	50790	50998.23	47368.08	940.14	*IG TOE
STORE	50792	51002.52	47348.88	949.04	*IG TOE
STORE	50793	51002.31	47336.25	949.30	*IG TOE
STORE	50795	51001.24	47327.56	943.21	*IG TOE
STORE	50796	50999.96	47322.72	943.21	*IG TOE
STORE	50798	51000.68	47315.26	948.20	*IG TOE
STORE	50800	51000.20	47295.72	946.69	*IG TOE
STORE	50805	51204.22	47436.68	948.63	*IG TOE
STORE	50808	51202.98	47401.37	941.11	*IG TOE
STORE	50810	51196.98	47362.17	940.95	*IG TOE
STORE	50814	51199.39	47321.28	943.10	*IG TOE
STORE	50815	51197.69	47315.47	943.12	*IG TOE
STORE	50817	51197.62	47308.46	948.63	*IG TOE
STORE	50819	51197.29	47288.85	947.08	*IG TOE
STORE	50825	51409.88	47303.07	948.55	*IG TOE
STORE	50827	51409.68	47309.14	943.52	*IG TOE
STORE	50828	51406.11	47314.84	943.37	*IG TOE
STORE	50830	51408.63	47322.18	949.19	*IG TOE
STORE	50835	47330.71	46038.71	942.99	*IG TOE
STORE	50841	47337.35	46031.15	941.04	*IG TOE
STORE	50842	47460.06	46156.40	943.59	*IG TOE
STORE	50848	47469.47	46145.65	942.55	*IG TOE
STORE	50849	48047.48	46250.91	944.42	*IG TOE
STORE	50856	48061.95	46255.67	944.76	*IG TOE
STORE	50857	48076.73	46130.33	943.78	*IG TOE
STORE	50864	48089.02	46133.22	945.05	*IG TOE
STORE	50101	47269.78	44659.38	934.56	*IG TOP
STORE	50106	47329.55	44659.70	935.20	*IG TOP
STORE	50109	47355.18	44658.02	935.00	*IG TOP
STORE	50118	47269.93	44556.68	935.19	*IG TOP
STORE	50121	47268.06	44455.23	935.25	*IG TOP
STORE	50128	47340.52	44453.90	935.13	*IG TOP
STORE	50131	47341.80	44354.96	935.76	*IG TOP
STORE	50137	47265.14	44354.89	935.03	*IG TOP
STORE	50140	42033.45	44580.53	912.92	*IG TOP
STORE	50141	42023.68	44580.48	912.91	*IG TOP
STORE	50146	41783.09	44579.30	913.28	*IG TOP
STORE	50147	41753.97	44581.30	913.08	*IG TOP
STORE	50151	41742.15	44482.81	913.18	*IG TOP
STORE	50152	41799.64	44482.64	912.69	*IG TOP
STORE	50155	41912.01	44482.04	911.69	*IG TOP
STORE	50159	42024.53	44480.95	913.07	*IG TOP
STORE	50160	42032.85	44480.37	912.82	*IG TOP
STORE	50163	42031.46	44382.31	912.94	*IG TOP
STORE	50164	42020.54	44382.97	912.93	*IG TOP
STORE	50168	41783.73	44383.54	913.31	*IG TOP
STORE	50169	41759.57	44382.65	913.28	*IG TOP
STORE	50174	41773.61	44661.44	912.61	*IG TOP
STORE	50175	41766.25	44662.29	912.53	*IG TOP
STORE	50532	56317.73	44813.48	976.79	*IG TOP
STORE	50533	56308.62	44822.51	975.98	*IG TOP
STORE	50540	56275.84	44786.62	976.12	*IG TOP
STORE	50541	56284.61	44778.68	976.53	*IG TOP
STORE	50542	56243.05	44750.82	976.14	*IG TOP

STORE	50543	56252.46	44742.95	976.50	*IG TOP
STORE	50550	56208.85	44714.22	976.29	*IG TOP
STORE	50551	56216.76	44707.49	976.37	*IG TOP
STORE	50552	56206.08	44704.29	975.95	*IG TOP
STORE	50746	50562.61	47439.37	949.93	*IG TOP
STORE	50747	50563.96	47453.77	949.76	*IG TOP
STORE	50752	50561.05	47364.26	948.42	*IG TOP
STORE	50753	50561.40	47347.64	949.42	*IG TOP
STORE	50756	50558.70	47333.29	948.41	*IG TOP
STORE	50757	50558.21	47331.55	948.47	*IG TOP
STORE	50759	50558.55	47311.99	946.55	*IG TOP
STORE	50766	50787.05	47304.42	947.19	*IG TOP
STORE	50768	50786.52	47324.30	948.66	*IG TOP
STORE	50771	50787.26	47341.17	949.93	*IG TOP
STORE	50773	50788.99	47356.80	948.76	*IG TOP
STORE	50778	50791.58	47431.47	949.99	*IG TOP
STORE	50779	50792.54	47446.31	950.07	*IG TOP
STORE	50787	51002.38	47424.39	950.46	*IG TOP
STORE	50791	51003.07	47350.46	949.55	*IG TOP
STORE	50794	51002.27	47334.11	950.15	*IG TOP
STORE	50797	51000.40	47316.80	948.90	*IG TOP
STORE	50799	51000.19	47297.23	947.54	*IG TOP
STORE	50806	51203.82	47433.02	951.42	*IG TOP
STORE	50807	51203.44	47418.77	951.09	*IG TOP
STORE	50811	51200.87	47342.41	949.49	*IG TOP
STORE	50812	51199.84	47328.80	949.41	*IG TOP
STORE	50813	51200.22	47327.24	950.18	*IG TOP
STORE	50816	51197.88	47310.19	949.41	*IG TOP
STORE	50818	51197.23	47290.33	947.83	*IG TOP
STORE	50826	51409.82	47304.59	949.05	*IG TOP
STORE	50829	51408.47	47319.74	950.24	*IG TOP
STORE	50847	47467.66	46147.64	944.36	*IG TOP
STORE	50850	48050.78	46252.34	946.68	*IG TOP
STORE	50855	48057.89	46254.32	946.47	*IG TOP
STORE	50858	48079.88	46131.43	947.02	*IG TOP
STORE	50863	48087.07	46132.78	946.86	*IG TOP
STORE	50840	47335.97	46032.88	943.36	*IG TOP
STORE	50320	53913.01	44681.89	967.24	*INV 12IN OUTFALL
STORE	50724	46863.66	48219.59	928.23	*INV 5FTSTEELPIPE
STORE	50725	46867.07	48225.21	927.89	*INV 5FTSTEELPIPE
STORE	50726	46871.17	48230.75	927.74	*INV 5FTSTEELPIPE
STORE	50727	46875.77	48235.35	925.55	*INV 5FTSTEELPIPE
STORE	50728	46888.28	48207.42	928.68	*INV 5FTSTEELPIPE
STORE	50729	46890.72	48212.83	928.64	*INV 5FTSTEELPIPE
STORE	50730	46893.08	48218.20	928.60	*INV 5FTSTEELPIPE
STORE	50731	46901.31	48229.72	925.78	*INV 5FTSTEELPIPE
STORE	50732	46903.86	48234.44	926.32	*INV 5FTSTEELPIPE
STORE	50733	46870.84	48241.64	924.93	*INV 5FTSTEELPIPE
STORE	50669	46599.43	44859.01	931.46	*PAVEMENT
STORE	50670	46599.77	44822.29	931.74	*PAVEMENT
STORE	50296	51806.48	44605.27	961.39	*PT
STORE	50298	51806.07	44581.01	961.54	*PT
STORE	50300	51806.38	44554.83	961.50	*PT
STORE	50305	51805.07	44503.91	961.26	*PT
STORE	50306	51699.36	44505.92	961.50	*PT
STORE	50308	51699.25	44531.17	961.47	*PT
STORE	50309	51699.92	44556.53	961.24	*PT
STORE	50311	51700.67	44582.01	961.07	*PT
STORE	50313	51701.97	44606.54	960.90	*PT
STORE	50422	55706.79	44520.82	974.32	*PT 18 FT HIGH
STORE	50423	55649.17	44521.10	973.99	*PT 18 FT HIGH
STORE	50424	55586.32	44519.86	972.82	*PT 18 FT HIGH
STORE	50425	55528.07	44520.03	972.39	*PT 18 FT HIGH
STORE	50426	55466.82	44519.36	972.25	*PT 18 FT HIGH
STORE	50427	55407.04	44519.98	972.43	*PT 18 FT HIGH
STORE	50428	55347.74	44475.54	973.16	*PT 18 FT HIGH
STORE	50429	55346.52	44414.55	972.76	*PT 18 FT HIGH
STORE	50430	55346.08	44354.80	972.78	*PT 18 FT HIGH
STORE	50416	56005.74	44533.31	975.78	*PT 18FT HIGH
STORE	50417	55944.12	44533.10	975.86	*PT 18FT HIGH

WASH

STORE	50418	55885.02	44532.65	975.32	*PT 18FT HIGH
STORE	50419	55827.18	44522.03	975.18	*PT 18FT HIGH
STORE	50420	55767.46	44521.68	974.73	*PT 18FT HIGH
STORE	50512	56479.55	44534.85	978.34	*PT 18FT HIGH
STORE	50513	56423.01	44535.65	978.26	*PT 18FT HIGH
STORE	50514	56362.69	44534.66	977.77	*PT 18FT HIGH
STORE	50515	56302.49	44534.17	977.44	*PT 18FT HIGH
STORE	50516	56244.70	44534.47	976.92	*PT 18FT HIGH
STORE	50517	56185.28	44534.04	976.74	*PT 18FT HIGH
STORE	50518	56124.88	44534.48	976.51	*PT 18FT HIGH
STORE	50519	56063.47	44533.54	976.01	*PT 18FT HIGH
STORE	50332	55356.95	44308.24	973.69	*PT 7FT HI
STORE	50333	55356.98	44317.42	973.66	*PT 7FT HI
STORE	50334	55356.87	44326.79	973.63	*PT 7FT HI
STORE	50335	55357.28	44335.54	973.34	*PT 7FT HI
STORE	50336	55357.40	44345.71	973.23	*PT 7FT HI
STORE	50337	55356.93	44353.13	973.12	*PT 7FT HI
STORE	50338	55357.12	44364.17	973.16	*PT 7FT HI
STORE	50339	55356.81	44371.28	973.12	*PT 7FT HI
STORE	50340	55356.77	44380.92	973.24	*PT 7FT HI
STORE	50341	55356.60	44389.04	973.12	*PT 7FT HI
STORE	50342	55356.83	44399.70	973.42	*PT 7FT HI
STORE	50343	55356.43	44408.37	973.24	*PT 7FT HI
STORE	50344	55356.99	44419.50	973.48	*PT 7FT HI
STORE	50345	55356.80	44427.09	973.38	*PT 7FT HI
STORE	50346	55356.84	44436.70	973.41	*PT 7FT HI
STORE	50347	55357.65	44446.33	973.32	*PT 7FT HI
STORE	50348	55357.05	44456.31	973.46	*PT 7FT HI
STORE	50349	55357.12	44473.86	973.37	*PT 7FT HI
STORE	50350	55406.52	44507.86	972.18	*PT 7FT HI
STORE	50351	55415.27	44507.87	972.04	*PT 7FT HI
STORE	50352	55423.96	44508.57	972.34	*PT 7FT HI
STORE	50353	55433.66	44508.11	972.09	*PT 7FT HI
STORE	50354	55442.05	44508.80	972.32	*PT 7FT HI
STORE	50355	55452.05	44508.90	972.45	*PT 7FT HI
STORE	50356	55460.32	44508.48	972.51	*PT 7FT HI
STORE	50357	55468.88	44508.78	972.31	*PT 7FT HI
STORE	50358	55477.90	44507.86	972.62	*PT 7FT HI
STORE	50359	55486.57	44508.44	972.41	*PT 7FT HI
STORE	50360	55495.29	44508.55	972.57	*PT 7FT HI
STORE	50361	55504.73	44508.97	972.45	*PT 7FT HI
STORE	50362	55513.04	44509.13	972.53	*PT 7FT HI
STORE	50363	55522.07	44508.53	972.63	*PT 7FT HI
STORE	50364	55530.63	44508.71	972.85	*PT 7FT HI
STORE	50365	55541.27	44508.57	972.60	*PT 7FT HI
STORE	50366	55549.63	44508.73	972.82	*PT 7FT HI
STORE	50367	55558.86	44508.72	972.76	*PT 7FT HI
STORE	50368	55567.92	44508.61	972.71	*PT 7FT HI
STORE	50369	55576.90	44509.63	972.48	*PT 7FT HI
STORE	50370	55586.32	44509.16	972.81	*PT 7FT HI
STORE	50371	55595.38	44509.31	972.80	*PT 7FT HI
STORE	50372	55604.76	44509.20	972.90	*PT 7FT HI
STORE	50373	55613.21	44509.89	972.65	*PT 7FT HI
STORE	50374	55623.66	44510.41	972.88	*PT 7FT HI
STORE	50375	55632.74	44510.19	972.90	*PT 7FT HI
STORE	50376	55641.70	44509.97	973.27	*PT 7FT HI
STORE	50377	55650.00	44510.04	973.62	*PT 7FT HI
STORE	50378	55659.06	44509.90	973.99	*PT 7FT HI
STORE	50379	55668.24	44510.66	973.98	*PT 7FT HI
STORE	50380	55676.87	44510.15	974.35	*PT 7FT HI
STORE	50381	55685.80	44510.45	974.29	*PT 7FT HI
STORE	50382	55697.32	44510.50	974.45	*PT 7FT HI
STORE	50383	55704.86	44510.65	974.47	*PT 7FT HI
STORE	50384	55713.24	44510.08	974.49	*PT 7FT HI
STORE	50385	55722.31	44511.22	974.14	*PT 7FT HI
STORE	50386	55731.83	44510.74	974.37	*PT 7FT HI
STORE	50387	55740.49	44511.02	974.20	*PT 7FT HI
STORE	50388	55749.93	44511.20	974.47	*PT 7FT HI
STORE	50389	55767.02	44510.90	974.84	*PT 7FT HI
STORE	50390	55774.21	44511.68	974.83	*PT 7FT HI

STORE	50391	55785.11	44511.62	974.96	*PT 7FT HI
STORE	50392	55795.42	44511.75	975.00	*PT 7FT HI
STORE	50393	55804.43	44511.51	975.03	*PT 7FT HI
STORE	50394	55812.70	44512.23	974.98	*PT 7FT HI
STORE	50395	55822.51	44512.52	975.15	*PT 7FT HI
STORE	50396	55830.57	44512.14	975.02	*PT 7FT HI
STORE	50397	55840.05	44511.77	975.03	*PT 7FT HI
STORE	50398	55848.60	44511.87	975.06	*PT 7FT HI
STORE	50399	55860.54	44520.42	975.10	*PT 7FT HI
STORE	50400	55869.19	44521.36	975.27	*PT 7FT HI
STORE	50401	55877.97	44521.28	975.40	*PT 7FT HI
STORE	50402	55886.88	44522.07	975.36	*PT 7FT HI
STORE	50403	55895.84	44521.84	975.50	*PT 7FT HI
STORE	50404	55905.26	44521.28	975.38	*PT 7FT HI
STORE	50405	55915.15	44521.21	975.41	*PT 7FT HI
STORE	50406	55924.06	44521.38	975.60	*PT 7FT HI
STORE	50407	55933.08	44520.88	975.64	*PT 7FT HI
STORE	50408	55941.63	44520.70	975.67	*PT 7FT HI
STORE	50409	55949.90	44521.36	975.70	*PT 7FT HI
STORE	50410	55958.67	44522.12	975.85	*PT 7FT HI
STORE	50411	55968.45	44522.86	976.11	*PT 7FT HI
STORE	50412	55977.17	44522.43	976.05	*PT 7FT HI
STORE	50413	55986.92	44521.41	975.76	*PT 7FT HI
STORE	50414	55995.57	44522.93	975.93	*PT 7FT HI
STORE	50415	56005.14	44522.03	975.59	*PT 7FT HI
STORE	50453	56013.35	44521.86	975.65	*PT 7FT HIGH
STORE	50454	56031.76	44521.27	975.61	*PT 7FT HIGH
STORE	50455	56040.42	44521.84	975.56	*PT 7FT HIGH
STORE	50456	56049.07	44521.94	975.92	*PT 7FT HIGH
STORE	50457	56058.28	44522.34	976.09	*PT 7FT HIGH
STORE	50458	56066.98	44522.47	976.06	*PT 7FT HIGH
STORE	50459	56076.55	44521.95	976.15	*PT 7FT HIGH
STORE	50460	56085.15	44521.53	976.10	*PT 7FT HIGH
STORE	50461	56093.61	44521.79	976.33	*PT 7FT HIGH
STORE	50462	56103.16	44521.95	976.09	*PT 7FT HIGH
STORE	50463	56112.41	44522.38	976.16	*PT 7FT HIGH
STORE	50464	56120.93	44522.58	976.19	*PT 7FT HIGH
STORE	50465	56130.47	44522.50	976.30	*PT 7FT HIGH
STORE	50466	56139.42	44522.82	976.35	*PT 7FT HIGH
STORE	50467	56148.72	44522.68	976.43	*PT 7FT HIGH
STORE	50468	56157.76	44522.56	976.58	*PT 7FT HIGH
STORE	50469	56165.59	44523.06	976.65	*PT 7FT HIGH
STORE	50470	56175.08	44523.71	976.59	*PT 7FT HIGH
STORE	50471	56183.69	44523.18	976.75	*PT 7FT HIGH
STORE	50472	56192.52	44523.27	976.69	*PT 7FT HIGH
STORE	50473	56202.98	44522.80	976.77	*PT 7FT HIGH
STORE	50474	56212.04	44523.13	976.82	*PT 7FT HIGH
STORE	50475	56222.02	44523.31	976.76	*PT 7FT HIGH
STORE	50476	56230.74	44523.41	976.79	*PT 7FT HIGH
STORE	50477	56240.27	44522.77	976.70	*PT 7FT HIGH
STORE	50478	56248.19	44523.45	976.79	*PT 7FT HIGH
STORE	50479	56257.24	44523.21	976.78	*PT 7FT HIGH
STORE	50480	56265.69	44523.09	976.56	*PT 7FT HIGH
STORE	50481	56276.44	44523.68	976.74	*PT 7FT HIGH
STORE	50482	56286.21	44523.50	976.97	*PT 7FT HIGH
STORE	50483	56298.53	44523.67	977.30	*PT 7FT HIGH
STORE	50484	56309.10	44524.09	977.40	*PT 7FT HIGH
STORE	50485	56320.47	44523.57	977.42	*PT 7FT HIGH
STORE	50486	56330.61	44523.38	977.61	*PT 7FT HIGH
STORE	50487	56341.28	44523.89	977.76	*PT 7FT HIGH
STORE	50488	56353.07	44523.87	977.76	*PT 7FT HIGH
STORE	50489	56364.90	44523.65	977.84	*PT 7FT HIGH
STORE	50490	56375.59	44524.46	977.82	*PT 7FT HIGH
STORE	50491	56384.54	44524.27	977.85	*PT 7FT HIGH
STORE	50492	56392.98	44523.36	977.80	*PT 7FT HIGH
STORE	50493	56402.47	44524.41	978.10	*PT 7FT HIGH
STORE	50494	56411.64	44524.43	978.07	*PT 7FT HIGH
STORE	50495	56423.75	44523.80	978.06	*PT 7FT HIGH
STORE	50496	56431.43	44524.58	978.23	*PT 7FT HIGH
STORE	50497	56441.22	44523.84	978.05	*PT 7FT HIGH

STORE	50498	56450.49	44524.06	978.08	*PT 7FT HIGH
STORE	50499	56457.29	44524.48	978.09	*PT 7FT HIGH
STORE	50500	56467.69	44524.09	978.18	*PT 7FT HIGH
STORE	50501	56476.40	44524.07	978.15	*PT 7FT HIGH
STORE	50502	56487.79	44523.80	978.09	*PT 7FT HIGH
STORE	50503	56497.16	44523.06	978.16	*PT 7FT HIGH
STORE	50504	56506.68	44523.93	978.17	*PT 7FT HIGH
STORE	50452	55221.01	46167.58	972.04	*PT STUMP
STORE	50301	51802.13	44540.18	968.99	*PT+
STORE	50302	51806.02	44528.20	970.16	*PT+
STORE	50070	49941.82	42891.47	949.87	*R1
~~STORE~~	~~50087~~	~~57894.50~~	~~44616.18~~	~~0.00~~	~~*R1~~
STORE	50104	47326.55	44659.84	934.72	*R3
STORE	50115	47326.06	44557.85	934.81	*R3
STORE	50124	47325.69	44454.54	934.91	*R3
STORE	50134	47325.21	44354.31	935.02	*R3
STORE	50194	51809.31	45086.55	957.76	*R3
STORE	50195	51783.58	45090.31	958.36	*R3
STORE	50198	51767.52	45091.66	958.36	*R3
STORE	50199	51741.93	45096.38	957.87	*R3
STORE	50208	51730.06	44996.25	958.73	*R3
STORE	50209	51755.81	44995.40	959.27	*R3
STORE	50213	51770.62	44993.75	959.25	*R3
STORE	50214	51797.83	44992.55	958.76	*R3
STORE	50223	51794.21	44895.73	959.63	*R3
STORE	50224	51756.20	44897.12	960.23	*R3
STORE	50227	51752.29	44896.83	960.21	*R3
STORE	50228	51726.24	44897.15	959.56	*R3
STORE	50235	51724.12	44797.88	960.12	*R3
STORE	50236	51750.19	44797.11	960.72	*R3
STORE	50239	51754.12	44797.07	960.74	*R3
STORE	50240	51792.19	44796.34	960.15	*R3
STORE	50248	51781.53	44301.49	960.63	*R3
STORE	50249	51754.63	44303.10	961.09	*R3
STORE	50252	51739.64	44303.90	961.08	*R3
STORE	50253	51713.58	44304.04	960.61	*R3
STORE	50262	51715.66	44397.37	960.44	*R3
STORE	50263	51751.61	44398.42	961.12	*R3
STORE	50267	51756.28	44397.93	960.90	*R3
STORE	50268	51783.53	44397.75	960.43	*R3
STORE	50275	51785.64	44493.11	960.27	*R3
STORE	50276	51758.77	44494.18	960.73	*R3
STORE	50279	51754.80	44494.33	960.85	*R3
STORE	50280	51717.74	44494.68	960.25	*R3
STORE	50287	51719.81	44591.67	960.04	*R3
STORE	50288	51757.62	44592.08	960.67	*R3
STORE	50291	51761.88	44592.05	960.57	*R3
STORE	50292	51787.86	44592.30	960.06	*R3
~~STORE~~	~~50741~~	~~50584.94~~	~~47441.12~~	~~949.58~~	~~*RANDOM PT 741~~
STORE	50742	51003.18	47438.18	950.36	*RANDOM PT 742 Wash
~~STORE~~	~~50743~~	~~51413.74~~	~~47419.04~~	~~948.36~~	~~*RANDOM PT~~ 743
STORE	50102	47297.18	44659.37	935.60	*RB
STORE	50105	47327.18	44659.81	935.20	*RB
STORE	50114	47326.66	44557.84	935.31	*RB
STORE	50117	47296.74	44557.33	935.63	*RB
STORE	50122	47296.36	44455.14	935.82	*RB
STORE	50125	47326.30	44454.48	935.42	*RB
STORE	50133	47325.77	44354.25	935.50	*RB
STORE	50136	47295.78	44354.74	935.98	*RB
STORE	50193	51809.91	45086.62	958.24	*RB
STORE	50196	51782.97	45090.45	958.84	*RB
STORE	50197	51768.10	45091.54	958.87	*RB
STORE	50200	51741.44	45096.54	958.30	*RB
STORE	50207	51729.48	44996.19	959.20	*RB
STORE	50210	51756.41	44995.38	959.76	*RB
STORE	50212	51770.11	44994.08	959.76	*RB
STORE	50215	51798.31	44992.65	959.20	*RB
STORE	50222	51794.87	44895.77	960.07	*RB
STORE	50225	51755.66	44897.04	960.72	*RB
STORE	50226	51752.91	44896.96	960.69	*RB

B Gutter

B Back of curb

STORE	50229	51725.70	44897.29	960.06	*RB
STORE	50234	51723.59	44797.85	960.60	*RB
STORE	50237	51750.69	44797.05	961.19	*RB
STORE	50238	51753.42	44796.99	961.20	*RB
STORE	50241	51792.79	44796.31	960.62	*RB
STORE	50247	51782.09	44301.48	961.08	*RB
STORE	50250	51754.01	44302.99	961.60	*RB
STORE	50251	51740.12	44304.04	961.57	*RB
STORE	50254	51713.00	44303.92	961.03	*RB
STORE	50261	51714.97	44397.24	960.87	*RB
STORE	50264	51752.20	44398.32	961.58	*RB
STORE	50266	51755.68	44397.99	961.40	*RB
STORE	50269	51784.09	44397.63	960.90	*RB
STORE	50274	51786.22	44493.02	960.72	*RB
STORE	50277	51758.19	44494.33	961.21	*RB
STORE	50278	51755.31	44494.33	961.35	*RB
STORE	50281	51717.11	44494.76	960.71	*RB
STORE	50286	51719.20	44591.59	960.52	*RB
STORE	50289	51758.27	44592.04	961.18	*RB
STORE	50290	51761.12	44592.02	961.09	*RB
STORE	50293	51788.45	44592.22	960.50	*RB
STORE	50211	51772.55	45011.64	959.57	*RB PC
STORE	50257	51740.44	44322.85	961.58	*RB PC
STORE	50218	51759.09	44944.58	960.17	*RB PRC
STORE	50258	51747.74	44371.24	961.59	*RB PRC
STORE	50219	51756.19	44921.28	960.50	*RB PT
STORE	50265	51753.00	44414.43	961.41	*RB PT
STORE	50437	55316.94	43950.25	974.41	*RE
STORE	50440	55317.72	43924.92	974.35	*RE
STORE	50438	55336.40	43949.60	974.94	*RE AT F/L
STORE	50439	55336.47	43924.84	974.78	*RE AT F/L
STORE	50433	55270.04	43960.02	974.84	*RE PC
STORE	50435	55282.94	43949.91	974.22	*RE PC
STORE	50442	55282.08	43924.76	974.32	*RE PC
STORE	50444	55270.49	43914.52	974.38	*RE PC
STORE	50434	55276.45	43951.89	974.35	*RE POC
STORE	50443	55275.29	43923.74	974.30	*RE POC
STORE	50303	51792.92	44515.15	960.81	*RG
STORE	50322	55202.09	44571.36	972.25	*RG
STORE	50323	55202.31	44564.68	972.30	*RG
STORE	50324	55307.19	44555.74	972.96	*RG
STORE	50325	55307.06	44563.82	972.20	*RG
STORE	50421	55751.79	44583.91	974.05	*RG STOP AHEAD
STORE	50103	47297.74	44659.21	935.16	*RH
STORE	50116	47297.28	44557.48	935.19	*RH
STORE	50123	47296.86	44455.11	935.37	*RH
STORE	50135	47296.32	44354.77	935.53	*RH
STORE	50653	46531.78	44863.50	931.12	*RH
STORE	50656	46540.05	44863.05	931.14	*RH
STORE	50659	46531.88	44807.15	931.32	*RH
STORE	50661	46539.78	44806.15	931.26	*RH
STORE	50671	46598.30	44792.94	931.66	*RH
STORE	50677	46644.17	44793.17	932.45	*RH
STORE	50678	46645.60	44826.38	932.73	*RH
STORE	50686	46781.43	44824.83	933.11	*RH
STORE	50690	46725.75	44793.40	933.22	*RH
STORE	50687	46780.50	44793.87	933.58	*RH ANG PT
STORE	50665	46616.40	44862.63	932.41	*RH BEG
STORE	50685	46782.40	44862.61	932.97	*RH BEG
STORE	50657	46536.21	44844.68	931.17	*RH MOC
STORE	50662	46535.98	44810.60	931.35	*RH MOC
STORE	50654	46531.82	44849.39	931.13	*RH PC
STORE	50655	46539.94	44849.37	931.18	*RH PC
STORE	50666	46616.52	44828.90	932.29	*RH PC
STORE	50667	46619.26	44826.37	932.31	*RH PC
STORE	50673	46667.50	44826.65	933.04	*RH PC
STORE	50660	46539.88	44792.63	930.89	*RH RO
STORE	50520	56169.00	44639.93	974.83	*RI DIRT
STORE	50521	56190.30	44640.68	975.39	*RI DIRT
STORE	50522	56183.03	44668.13	975.50	*RI DIRT

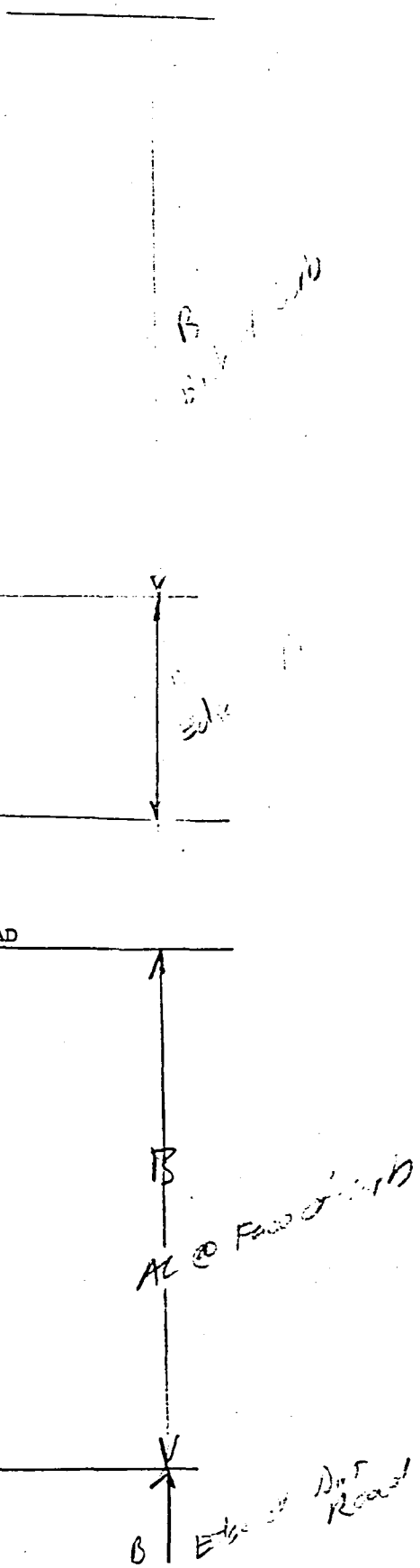

STORE	50523	56191.88	44658.37	975.61	*RI DIRT
STORE	50524	56217.85	44705.19	975.45	*RI DIRT
STORE	50525	56226.79	44695.96	974.99	*RI DIRT
STORE	50526	56263.53	44732.50	975.01	*RI DIRT
STORE	50527	56253.96	44741.34	975.37	*RI DIRT
STORE	50528	56297.49	44767.14	975.09	*RI DIRT
STORE	50529	56287.13	44776.44	975.55	*RI DIRT
STORE	50530	56329.90	44802.54	975.09	*RI DIRT
STORE	50531	56319.97	44811.76	975.53	*RI DIRT
STORE	50663	46540.04	44828.75	931.19	*RP
STORE	50691	46725.21	44820.71	932.90	*RP
STORE	50692	46725.32	44863.14	932.53	*RP AT FL CHLK
STORE	50436	55296.87	43949.52	973.97	*RV END 4FT CONC
STORE	50441	55296.81	43924.77	974.16	*RV END 4FT CONC
STORE	50246	51787.06	44302.23	961.18	*RW
STORE	50255	51708.00	44303.97	961.14	*RW
STORE	50260	51710.00	44396.76	961.00	*RW
STORE	50270	51789.13	44397.42	960.96	*RW
STORE	50273	51791.19	44492.96	960.81	*RW
STORE	50282	51712.12	44494.86	960.81	*RW
STORE	50285	51714.26	44592.34	960.59	*RW
STORE	50294	51793.42	44592.21	960.65	*RW
STORE	50675	46651.13	44824.51	932.78	*SC
STORE	50734	46793.06	48284.55	926.07	*STEEL PILE
STORE	50735	46784.43	48271.64	920.44	*STEEL PILE
STORE	50736	46775.28	48259.02	929.71	*STEEL PILE
STORE	50447	55226.05	44033.96	975.43	*TELCO PAD
STORE	50448	55226.25	44030.74	975.44	*TELCO PAD
STORE	50449	55223.88	44030.47	975.44	*TELCO PAD
STORE	50450	55223.63	44033.69	975.41	*TELCO PAD
STORE	50836	47332.13	46038.01	943.53	*TOP CONC
STORE	50837	47335.08	46033.97	943.47	*TOP CONC
STORE	50843	47463.53	46152.38	944.88	*TOP CONC
STORE	50844	47466.94	46148.81	944.78	*TOP CONC
STORE	50851	48052.18	46253.12	946.89	*TOP CONC
STORE	50852	48056.62	46254.20	946.75	*TOP CONC
STORE	50859	48081.58	46131.90	946.86	*TOP CONC
STORE	50860	48085.56	46132.80	946.97	*TOP CONC
STORE	50431	55287.44	43993.67	975.56	*TR
STORE	50451	55224.24	44035.65	975.07	*TR
STORE	50063	50465.81	44682.62	955.21	*TRAV
STORE	50064	50958.87	44671.78	957.31	*TRAV
STORE	50006	42058.61	44753.81	910.84	*TRAV PT
STORE	50053	45107.10	44677.84	914.90	*TRAV PT
STORE	50054	46036.49	44757.90	923.91	*TRAV PT
STORE	50055	46495.12	44705.47	927.75	*TRAV PT
STORE	50056	47003.41	44706.19	932.48	*TRAV PT
STORE	50057	47361.17	44693.99	934.92	*TRAV PT
STORE	50191	49816.74	44756.15	951.46	*TRAV PT
STORE	50571	46532.56	44811.95	931.36	*TRAV PT
STORE	50572	46671.28	44824.65	933.01	*TRAV PT
STORE	50573	46367.40	44789.45	934.31	*TRAV PT
STORE	50574	46083.92	44786.85	936.48	*TRAV PT
STORE	50834	47824.03	46493.20	946.06	*TRAV PT 202
STORE	50016	49956.32	44730.04	952.11	*TRAV.PT.
STORE	50033	46191.82	47674.45	932.37	*TRAV.PT.
STORE	50034	46684.81	48209.15	932.21	*TRAV.PT.
STORE	50040	45578.29	44771.85	917.91	*TRAV.PT.
STORE	50048	41682.60	44751.59	913.30	*TRAV.PT.
STORE	50062	49617.89	44690.04	949.57	*TRAV.PT.
STORE	50065	51464.70	44661.35	959.52	*TRAV.PT.
STORE	50066	51755.86	44691.26	959.71	*TRAV.PT.
STORE	50067	49952.38	44230.72	953.64	*TRAV.PT.
STORE	50068	49948.42	43729.17	952.81	*TRAV.PT.
STORE	50069	49944.46	43226.86	951.45	*TRAV.PT.
STORE	50071	49960.39	45230.16	950.97	*TRAV.PT.
STORE	50075	52253.49	44645.92	961.51	*TRAV.PT.
STORE	50078	53254.44	44622.39	964.23	*TRAV.PT.
STORE	50079	53753.05	44610.67	965.58	*TRAV.PT.
STORE	50080	54252.79	44598.92	967.93	*TRAV.PT.

STORE	50081	54753.95	44587.14	969.84	*TRAV.PT.
STORE	50082	55256.14	44614.57	971.82	*TRAV.PT.
STORE	50083	55750.17	44639.98	972.86	*TRAV.PT.
STORE	50084	56350.30	44640.72	975.16	*TRAV.PT.
STORE	50085	56951.05	44641.47	977.05	*TRAV.PT.
STORE	50086	57550.19	44642.21	979.19	*TRAV.PT.
STORE	50088	55224.58	44127.65	973.99	*TRAV.PT.
STORE	50089	55227.52	43527.84	973.10	*TRAV.PT.
STORE	50090	55230.47	42926.98	973.02	*TRAV.PT.
STORE	50091	55233.41	42327.01	972.74	*TRAV.PT.
STORE	50093	55222.49	45098.49	971.06	*TRAV.PT.
STORE	50094	55224.00	45699.29	970.20	*TRAV.PT.
STORE	50095	55225.52	46298.97	969.44	*TRAV.PT.
STORE	50096	55227.03	46899.81	967.68	*TRAV.PT.
STORE	50297	51806.57	44592.07	961.47	*TT
STORE	50299	51806.89	44567.61	961.11	*TT
STORE	50304	51805.23	44517.98	960.94	*TT
STORE	50307	51699.33	44517.25	961.16	*TT
STORE	50310	51700.13	44568.16	961.03	*TT
STORE	50312	51700.61	44593.19	960.94	*TT
STORE	50679	46640.43	44784.01	931.98	*TT
STORE	50680	46596.09	44784.10	931.16	*TT
STORE	50681	46582.15	44784.45	931.03	*TT DEAD
STORE	50682	46566.28	44784.15	930.69	*TT DEAD
STORE	50689	46728.46	44785.10	933.01	*TT DEAD
STORE	50326	55380.22	44516.44	972.82	*TTD1H12C5MESQ
STORE	50327	55364.79	44516.60	973.25	*TTD1H12C5MESQ
STORE	50328	55349.69	44516.80	973.28	*TTD1H12C5MESQ
STORE	50329	55366.43	44504.04	973.83	*TTD1H12C5MESQ
STORE	50330	55349.41	44501.56	973.31	*TTD1H12C5MESQ
STORE	50331	55347.27	44486.36	973.16	*TTD1H12C5MESQ
STORE	50505	56539.00	44538.55	978.00	*TTD1INH12C3MESQ
STORE	50506	56556.23	44536.54	977.77	*TTD1INH12C3MESQ
STORE	50507	56571.67	44536.95	977.66	*TTD1INH12C3MESQ
STORE	50508	56572.82	44520.35	977.47	*TTD1INH12C3MESQ
STORE	50509	56573.10	44503.27	977.23	*TTD1INH12C3MESQ
STORE	50510	56557.36	44521.79	977.76	*TTD1INH12C3MESQ
STORE	50319	53918.52	44684.00	967.95	*WEST END ELECT
STORE	50737	46768.40	48246.53	929.62	*WOOD PILE
STORE	50738	46758.89	48233.68	931.19	*WOOD PILE
STORE	50739	46751.36	48221.34	931.54	*WOOD PILE
STORE	50740	46799.43	48293.97	932.95	*WOOD PILE

BROOKS HERSEY & ASSOCIATES, INC.
4602 East Elwood Street #16
PHOENIX, AZ 85040-1960
(602) 437-3733

JOB

SHEET NO. OF

CALCULATED BY M. HOLLY DATE 9-18-97

CHECKED BY DATE

SCALE

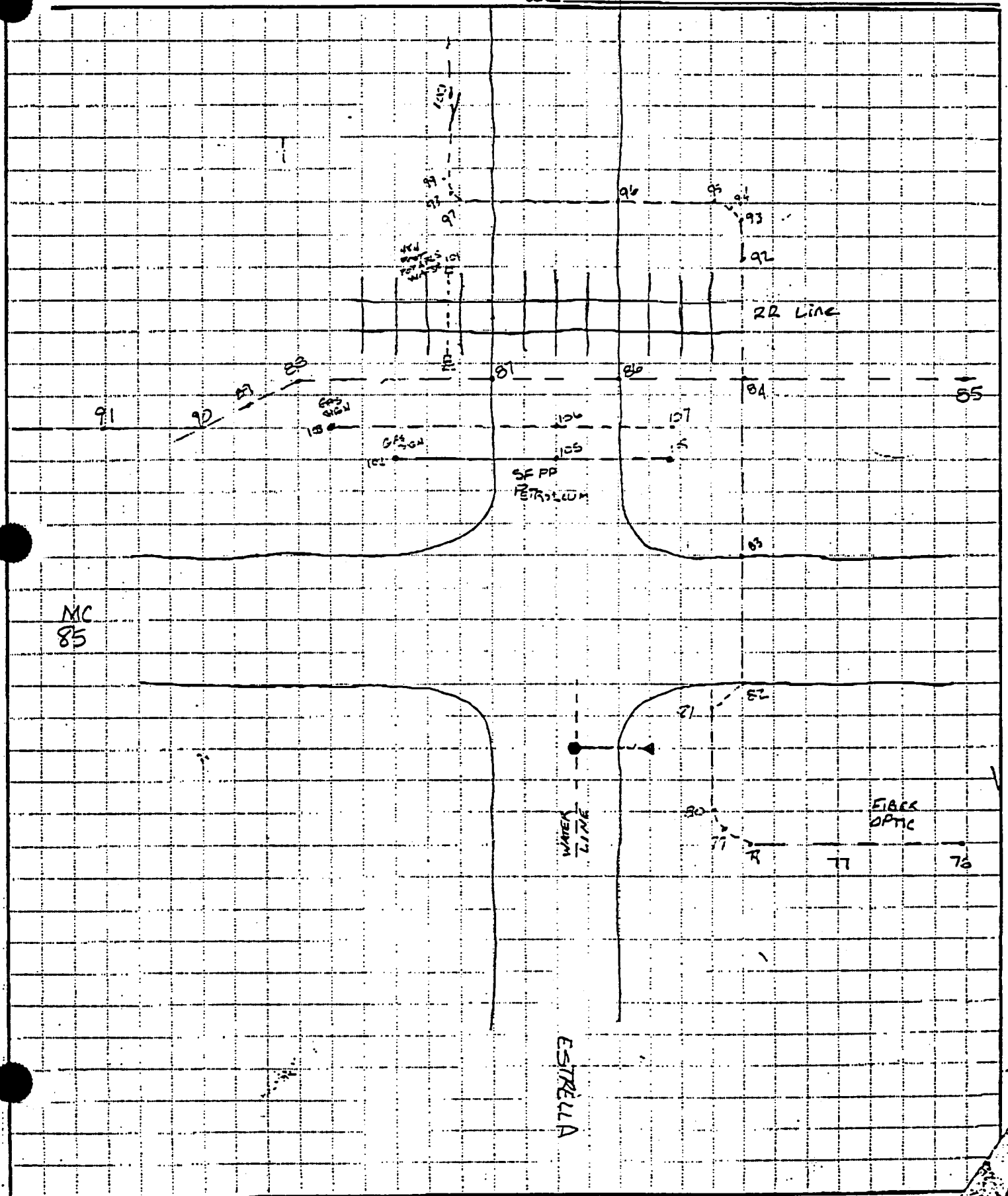

PRODUCT 204-1 (Single Sheets) 205-1 (Padded) ACCO Inc. Lincoln, Nebr. 68501. To Order PHONE TOLL FREE 1-800 225-6380

BROOKS HERSEY & ASSOCIATES, INC.
4602 East Elwood Street #16
PHOENIX, AZ 85040-1960
(602) 437-3733

JOB [illegible]
SHEET NO. _____ OF _____
CALCULATED BY M. Holly DATE 9/18/97
CHECKED BY _____ DATE _____
SCALE _____

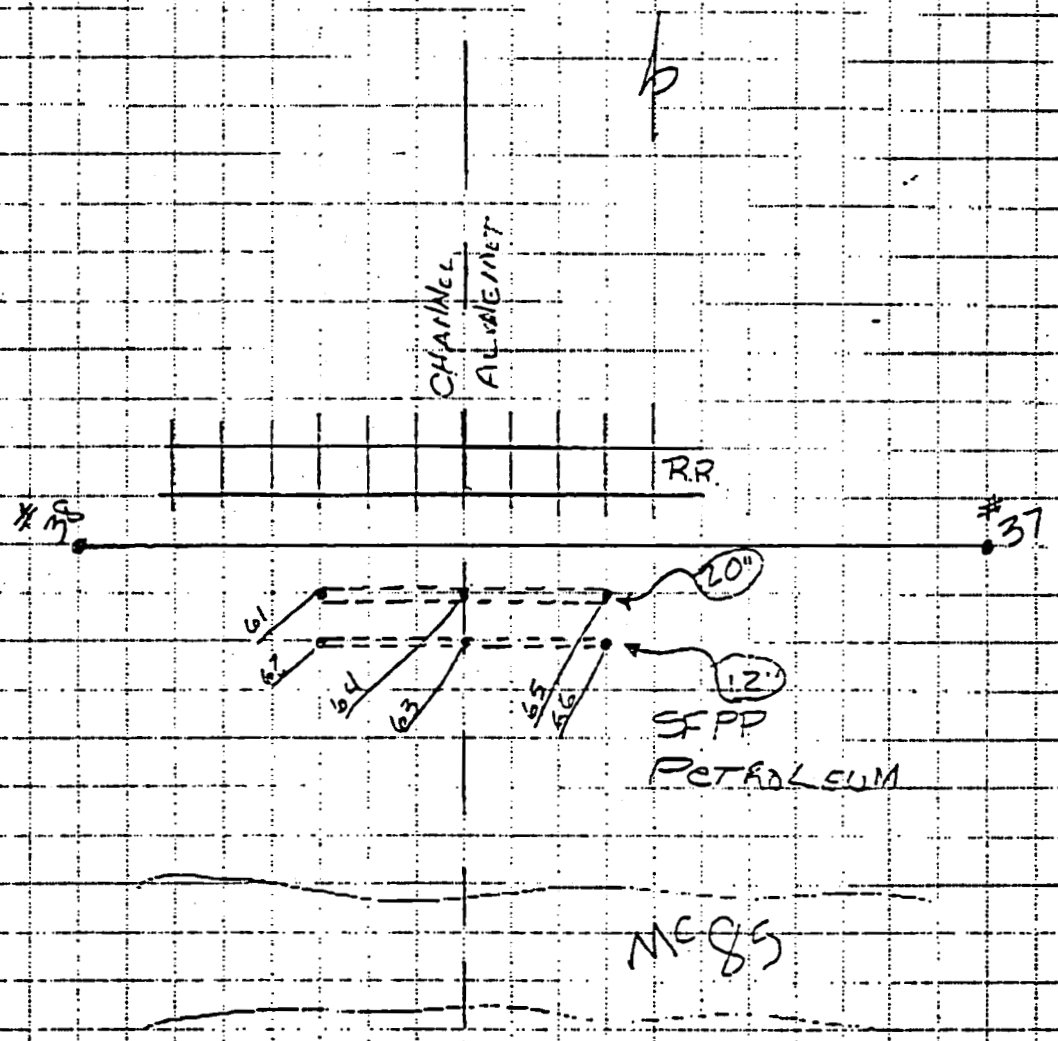

BROOKS HERSEY & ASSOCIATES, INC.
4602 East Elwood Street #16
PHOENIX, AZ 85040-1960
(602) 437-3733

SHEET NO. _____ OF _____
CALCULATED BY M. HOLLY DATE 9/18/97
CHECKED BY _____ DATE _____
SCALE _____

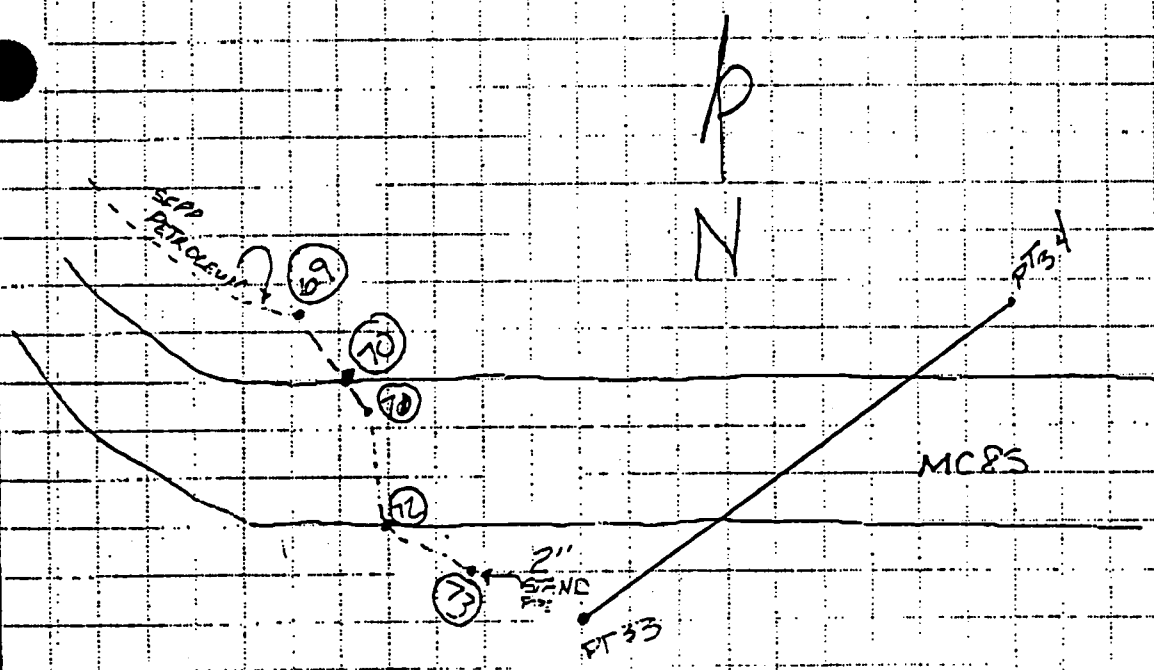

(Single Sheets) 225-1 (Pastel) NEBS Inc. Groton, Mass. 01471. To Order PHONE TOLL FREE 1-800-225-6380

BROOKS HERSEY & ASSOCIATES, INC.
4602 East Elwood Street #16
PHOENIX, AZ 85040-1960
(602) 437-3733

SHEET NO. _____ OF _____
CALCULATED BY M. HOLLY DATE 9/18/97
CHECKED BY _____ DATE _____
SCALE _____

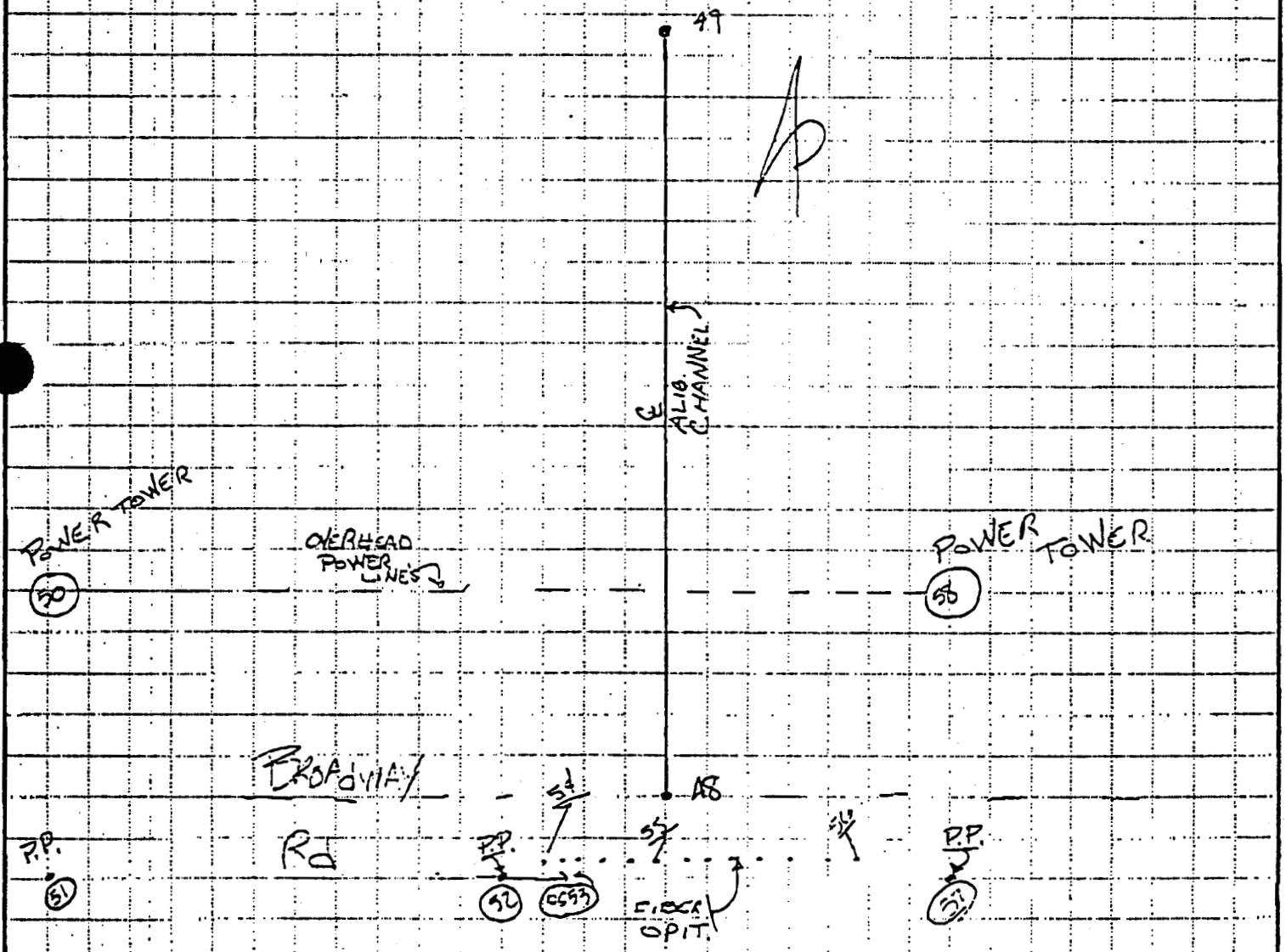

PRODUCT 204-1 (Single Sheets) 200-1 (Padded) NEBS Inc. Groton, Mass. 01471. To Order PHONE TOLL FREE 1-800-225-6380

BROOKS HERSEY & ASSOCIATES, INC.
4602 East Elwood Street #16
PHOENIX, AZ 85040-1960
(602) 437-3733

SHEET NO. _____ OF _____
CALCULATED BY M. Holly DATE 9/18/97
CHECKED BY _____ DATE _____
SCALE _____

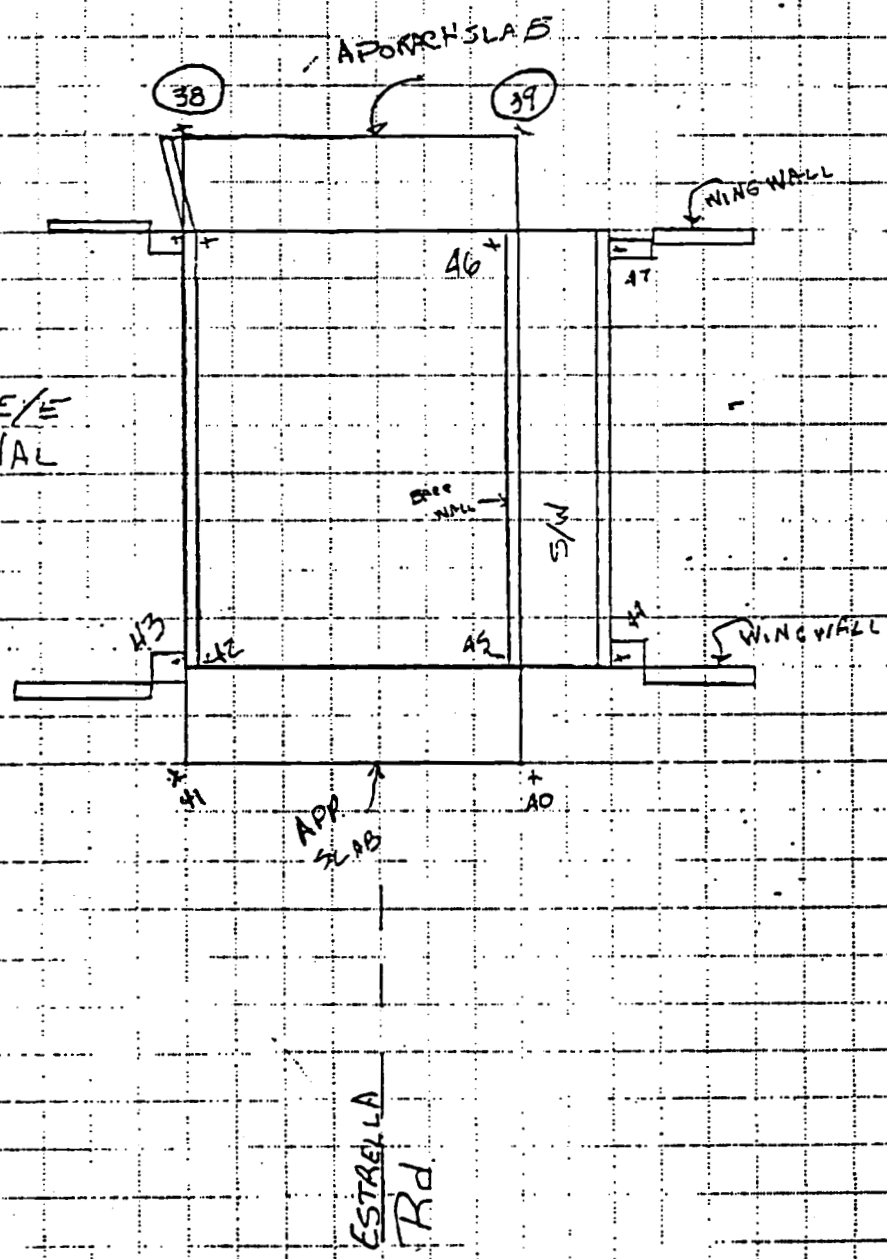

BROOKS HERSEY & ASSOCIATES, INC.
4602 East Elwood Street #16
PHOENIX, AZ 85040-1960
(602) 437-3733

SHEET NO. _____ OF _____
CALCULATED BY M. Holly DATE 9/18/97
CHECKED BY _____ DATE _____
SCALE _____

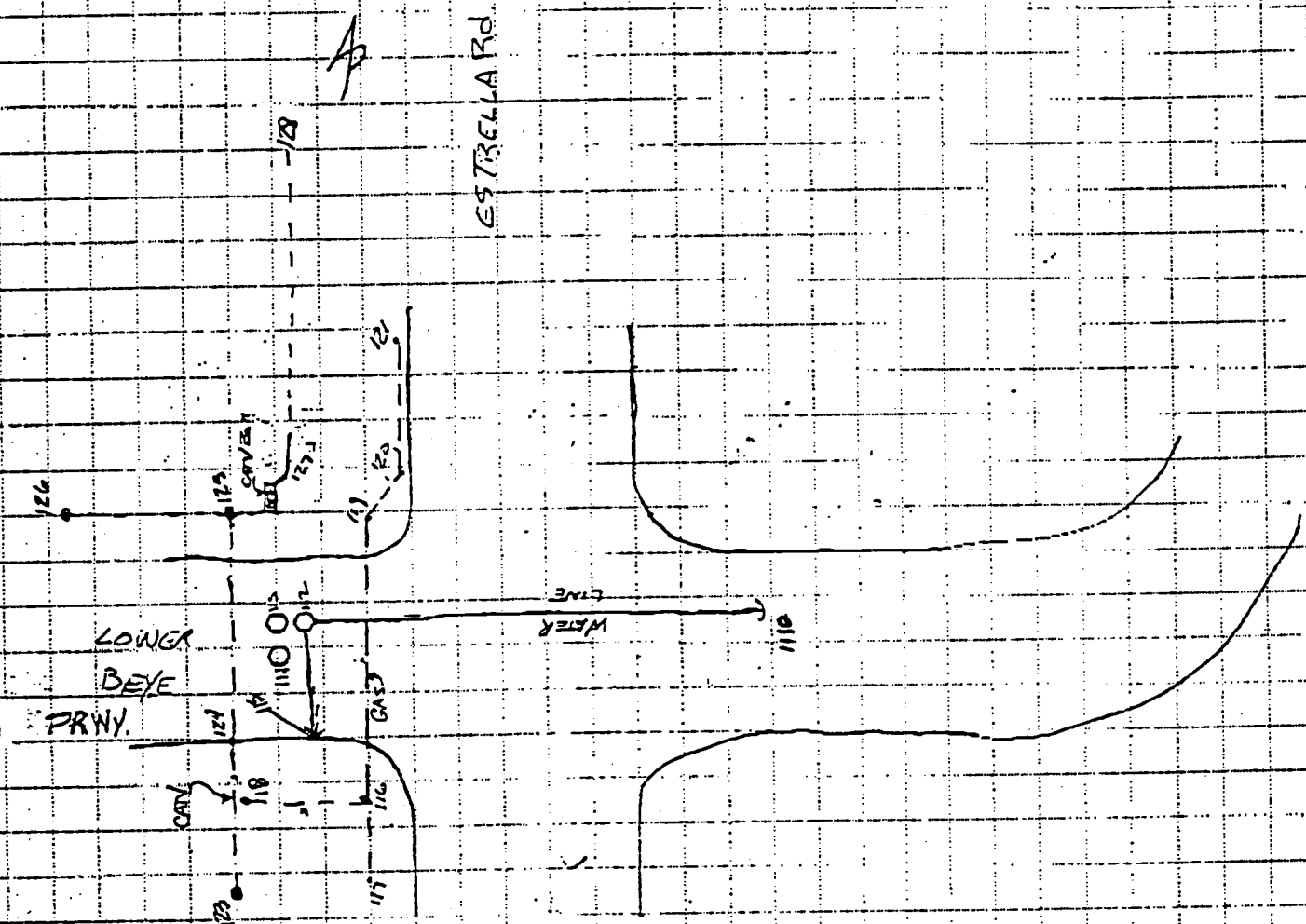

BROOKS HERSEY & ASSOCIATES, INC.
4602 East Elwood Street #16
PHOENIX, AZ 85040-1960
(602) 437-3733

JOB [illegible]
SHEET NO. _____ OF _____
CALCULATED BY M. Holly DATE 9/18/97
CHECKED BY _____ DATE _____
SCALE _____

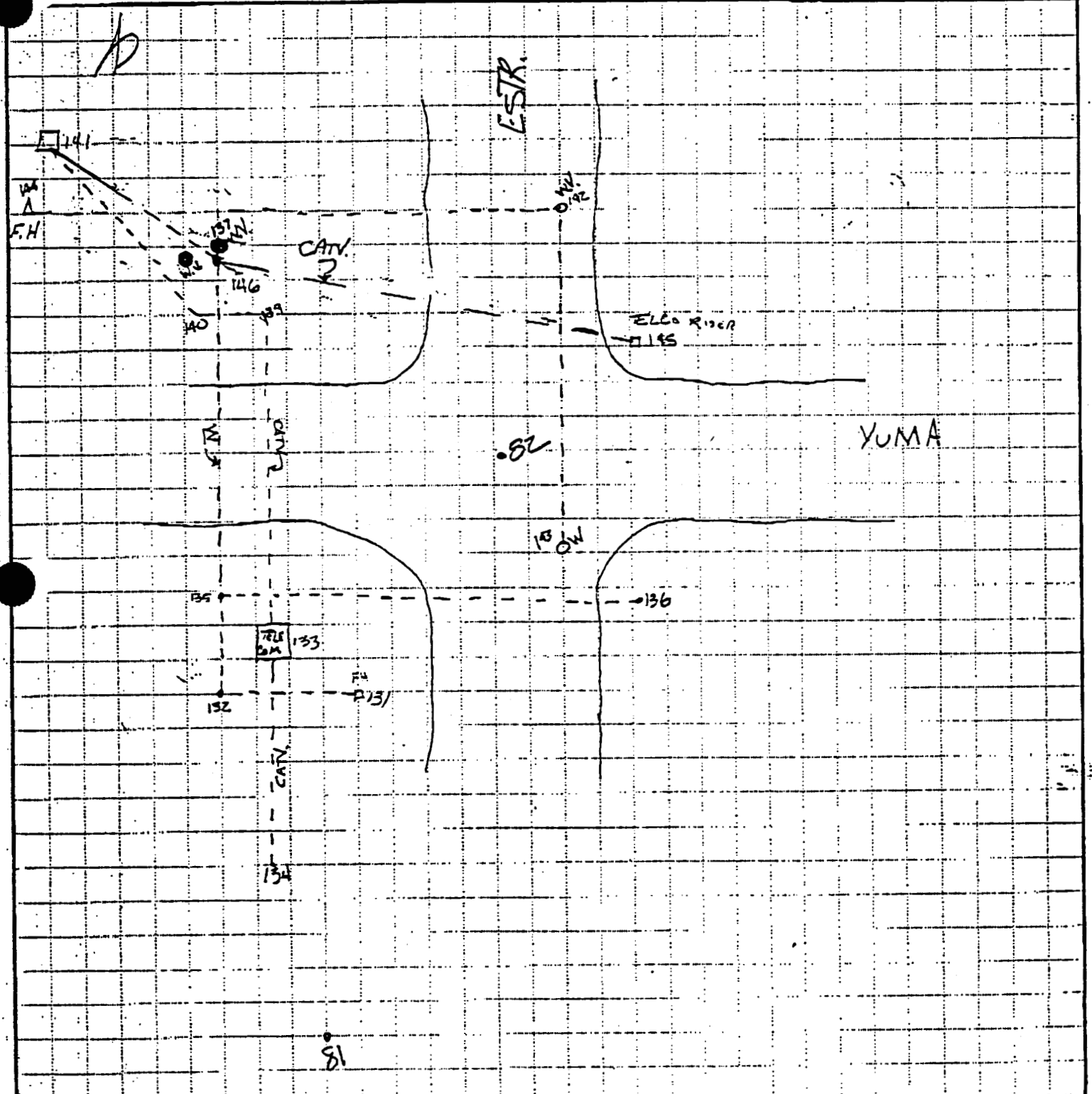

BROOKS HERSEY & ASSOCIATES, INC.
4602 East Elwood Street #16
PHOENIX, AZ 85040-1960
(602) 437-3733

SHEET NO. _____ OF _____
CALCULATED BY M. Holly DATE 9/18/97
CHECKED BY _____ DATE _____
SCALE _____

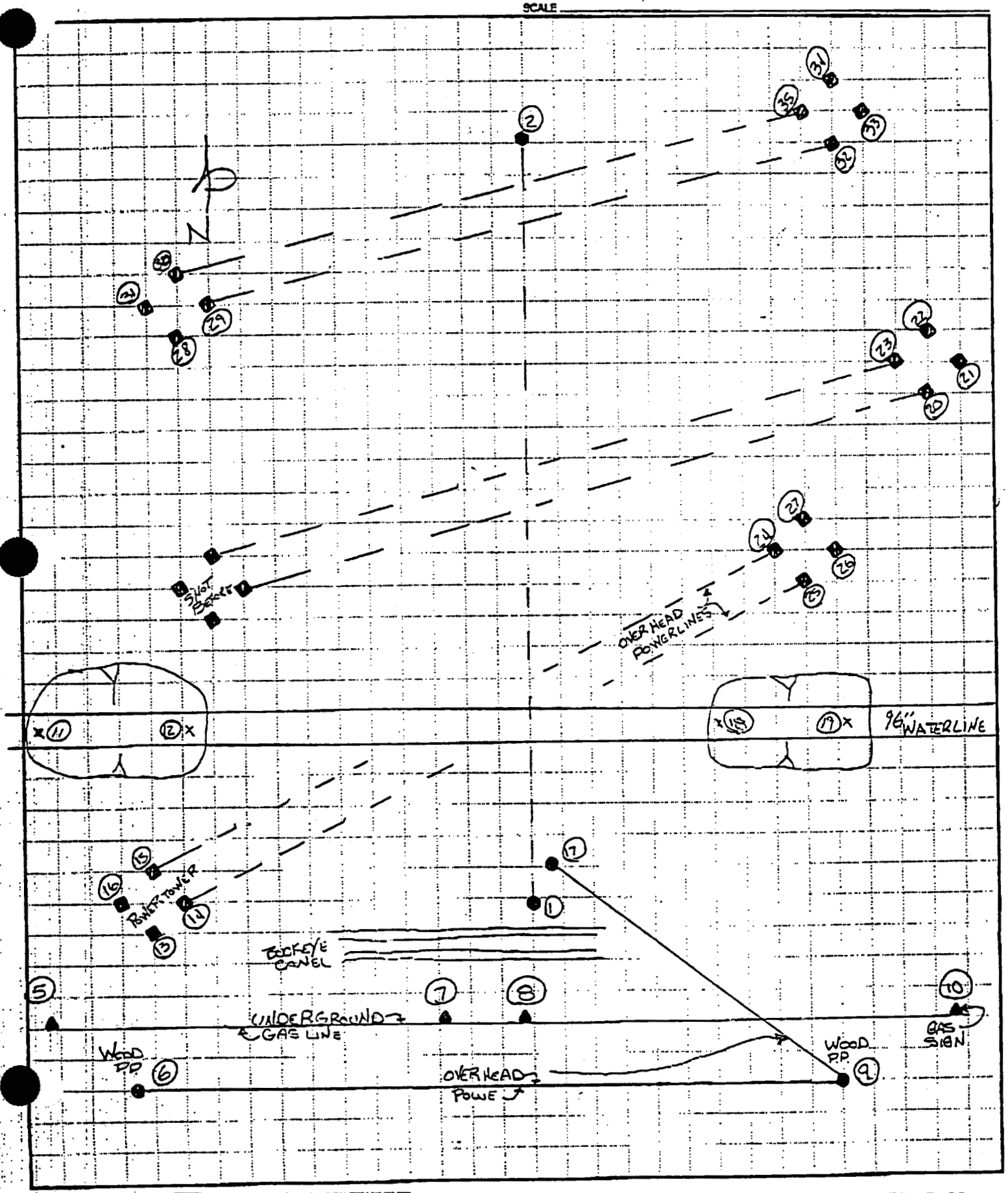

SOKKIA™

MADE IN U.S.A.

SOKKIA™ 319

MCDOT

ENGINEER'S FIELD BOOK

No. 8152-30

M.C. 85

2/18/97

M. Hollin

T. Greenhead

PT. #	DESC.
31	SET ½ REBAR APPOX. INT. MC 85 & BOLLARD AVE. 25± NORTH OF EPVMT & 10± WEST OF INTER
32	SET ½ REBAR
33	
34	
35	
36	
37	
38	
39	
~~3~~ 40	
41	
42	
43	
44	
45	
46	
47	SET TEXAS SPIKE
~~48~~	
49	
	EXISTING TRAV. PT.'s SEE BK 298 & BK 2283
6	CHISEL CROSS ON EDGE OF RIM OF W.V.
12	SET PK. ON PVMT. & STRIPE BOLLARD AVE
13	Fd MCHD BC/H EAST ¼ SEC. 20
18	Fd BC/H INS MAIN W.V. H.H.

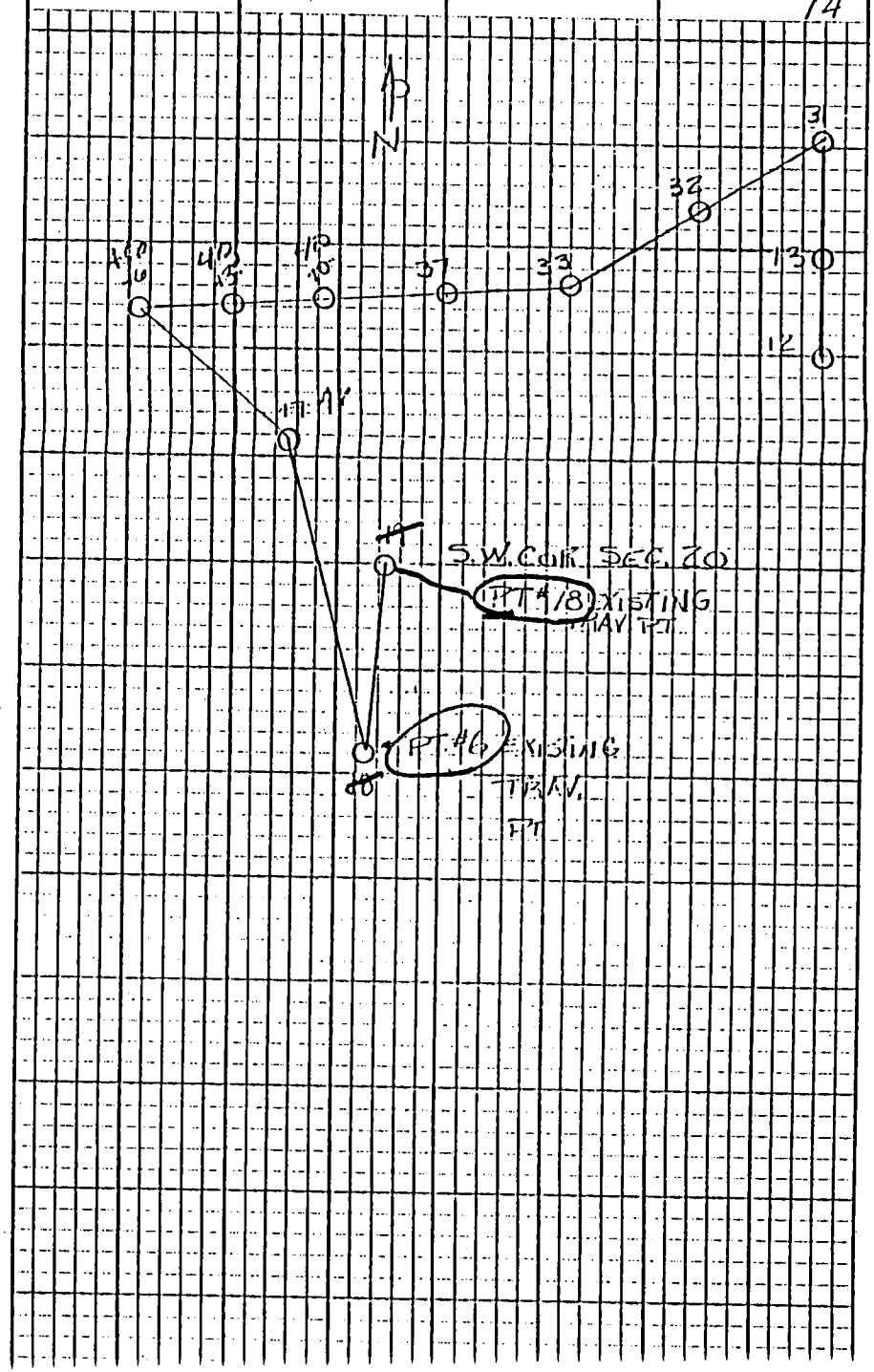

TC 3 P.S 12

SRT PT#31

I	00.00.49	I	180.00.40
D	178.39.19	D	358.39.16
ϑ	178.38.30	ϑ	178.38.36
I	00.00.47	I	180.00.40
D	178.39.08	D	358.39.16
ϑ	178.38.28	ϑ	178.38.36
M.ϑ	178.38.32.5		
ZD	90.23.22		
Z.R	269.36.38		
SUM	359.59.51		
MZ	90.23.26		
S.D.	499.58		
S.M	152.272		

TC31	BS	13	
∡ RT	FT32		
I	00.01.18	I	180.01.54
D	57.16.17	R	237.16.14
∡	57.14.29	∡	57.14.20
I	00.01.54	I	180.01.51
D	57.16.15	R	237.16.16
∡	57.14.21	∡	57.14.25
M∡	57.14.2375		
ZD	90.22.31		
ZR	269.37.29		
SUM	360.00.06		
MZ	90.22.28		
SD	131608		
SM	401.141		

⊼@32 B.S.31		
∡RT	PT33	
I	00.00.12	I 180.00.44
D	176.50.21	R 356.50.16
∡	176.49.59	∡ 176.49.32
I	00.00.37	I 180.00.45
D	176.50.14	R 356.50.15
∡	176.49.37	∡ 176.49.30
M∡	176.49.34.50	
Z.D	89.58.13	
Z.R	270.01.41	
SUM	359.59.56	
MZ	89.58.16	
S.D	1515.02	
S.M.	461.78	

TC33 B.S32

STA	PT34	SIDESHOT	
T	00.01.18	T	180.01.05
D	354.54.19	R	174.54.12
∡	354.53.01	∡	354.53.07
T	00.01.14	T	180.01.08
D	354.54.17	R	174.54.15
∡	354.53.03	∡	354.57.07
M∡	354.53.04.50		
ZD	90.02.44		
ZM	269.57.10		
SUM	359.59.54		
MZ	90.02.47		
SD	727.28		
SM	221.615		

TR33 P.S.32

TRT	PT#3	CIRC SHOT
T.	00.00.49	T 180.00.49
D	187.44.22	F 07.44.23
T	187.43.33	T 187.43.34
T	00.00.51	T 180.00.51
D	187.44.23	F 7.44.27
T	7.43.32	T 187.43.36
AT	187.43.3375	
ZD	90.42.58	
ZF	269.16.59	
ZM	359.59.57	
MZ	90.43.00	
SD	421.12	
S.M	128.358	

T@35 B.S.32
X RT PT35 SIDESHOT

I	00.01.07	I	180.01.07
D	191.21.21	R	11.21.28
$	191.20.17	$	191.20.21
I	00.01.07	I	180.01.09
D	191.21.21	R	11.21.28
$	191.20.14	$	191.20.20
M$	191.20.18		
ΣD	90.34.02		
ΣR	269.25.48		
SUM	359.59.50		
JAZ	90.34.07		
S.D	805.28		
S.M	245.450		

K@35	5532		
∡ FT	FT	137	
			I 180.01.42
I	00.01.42		R 21.58.24
D	201.58.20		∡ 201.56.42
∡	201.56.38		
I	0001.46		I 180.01.51
D	201.58.26		R 21.58.31
∡	201.56.40		∡ 201.56.40
M∡	201.56.40		
ZO	90.21.02		
ZR	269.38.00		
SUM	360.00.02		
MZ	90.21.01		
S.E.	112.21		
SM	369.54		

TC37	BS32		
∡RT	40		
I	00.01.04	I 180.01.17	
D	186.14.32	R 06.14.37	
∡	186.13.28	∡ 186.13.20	
I	00.01.07	I 180.01.11	
D	186.14.30	R 06.14.40	
∡	186.13.23	∡ 186.13.29	
M∡	186.13.25		
ZD	90.14.09		
ZR	269.45.48		
SUM	359.59.57		
MZ	90.14.11		
SD	1757.91		
SM	535.972		
	PT#38	PT#39	
PT#38		PT#39	
ZD	90.23.55	90.17.18	
ZR	269.36.19	269.40.54	
MZ	90.23.43	90.17.12	
SD	501.95	1000.90	

[illegible]40	B.S.37				
℄RT	PT. 41	SIDE	5461		
I	00.01.03		I 180.01.02		
D	171.36.07		R 351.36.08		
S	171.35.01		S 171.35.06		
I	00.00.55		I 180.01.03		
D	171.36.06		R 351.36.09		
S	171.35.11		S 171.35.06		
MS	171.35.062				
ID	90.15.11				
IR	269.44.52				
SUM	359.59.42				
MS	90.14.19				
SD	[illegible]				
SM	184.770				

TCO E 031

*RT 42 SIDE SHOT

I	00.01.37	I 180.01.46
D	176.03.44	R 356.03.50
∢	176.02.07	∢ 176.02.04
I	00.01.42	I 180.01.43
D	176.03.46	R 356.03.44
∢	176.02.04	∢ 176.02.01
M∢	176.02.04	
ZD	90.12.19	
ZR	269.47.22	
SUM	359.59.41	
MZ	90.12.29	
S.D.	1075.47	
SM	327.804	

7(8C) E:031
TRT PT43

I	00.00.45	I 180.00.11
L	177.19.04	L 357.19.06
J	177.18.27	J 177.18.17
I	00.00.45	I 180.00.55
L	177.19.12	L 357.19.21
J	177.18.27	J 177.18.26
MS	177.18.22.5	
ID	90.00.16	
ZR	269.59.02	
SUM	360.00.00	
MZ	90.00.14	
S.A.	190.45	
S.M	487.44	

TC43 B5 40
S H PT 46

T	00.00.41	T	180.00.11
D	184.02.47	R	04.02.51
S	184.02.13	S	184.02.10
T	00.00.33	T	180.00.33
D	184.02.44	R	04.02.45
S	184.02.11	S	184.02.10
MT	184.02.11		
D	90.09.46		
R	269.50.09		
SUM	359.59.55		
MZ	90.09.49		
S.D	609.35		
S.M	490.530		
	PT#5	[illegible]	
PT#41		PT#4[illegible]	
D	90.12.41	90.07.29	
R	269.47.47	269.52.23	
MZ	90.12.37	90.07.33	
S.D	527.[illegible]	1066.43	
	[illegible]	[illegible]	

☆RT.	47		
I	00.01.17	I	180.01.10
D	21.19.31	R	201.19.29
☆	21.18.14	☆	21.18.19
I	00.01.16	I	180.01.15
D	21.19.33	R	201.19.29
☆	21.18.17	☆	21.18.14
M☆	21.18.16		
ZD	89.52.10		
ZR	270.07.56		
SUM	360.00.06		
MZ	89.52.07		
S.D	1851.21		
SM	564.251		

TC4, B.S. 46

℄ RT PT ~~#48~~ (PT#6 SEE BK 278 PG 22)

I	00.00.43	I	180.00.40
D	228.56.19	R	48.56.22
℄	228.55.36	℄	228.55.42
I	00.00.43	I	180.00.47
D	228.56.19	R	48.56.24
℄	228.55.36	℄	228.55.37
M℄	228.55.37.75		
ID	90.03.33		
IR	269.56.38		
SUM	360.00.11		
MZ	90.03.28		
S.P.	286628		
S.M	873.646		

TC ~~18~~ 16 B547

PRT ~~18~~ (PT#18 SEE BK 298 PG. 23)

I	00.00.34	I 180.00.35
D	27.31.10	R 207 31.13
∡	27.30.36	∡ 27.30.38
I	00.00.31	I 180.00.31
D	27.31.12	R 207 31.11
∡	27.30.41	∡ 27.30.40
M∡	27.30.38 75	

BENCH LOOP

M.C.S.

FOR CONTROL 2/29/97

FILE MARK KEVIN

TOM GREENWALD

STA	+	HI	−	ELEV	ADJ.
				922.00	
	6.21	928.21			
			1.33	926.88	
	6.19	933.07			
			1.45	931.62	
	7.87	941.49			
			2.03	939.46	
	8.18	947.64			
			4.64	943.00	
	5.98	948.98			
			5.57	943.41	
	4.65	948.06			
			8.59	939.47	939.50
	4.88	944.35			
			8.13	936.22	
	3.59	939.81			
			8.06	931.75	
	5.78	937.53			
			6.60	930.93	931.00
	5.03	935.96			
			2.61	933.35	933.43
	2.29	935.64			
			3.51	932.13	932.21
	3.27	935.40			
			6.82	928.58	
	6.79	935.37			

DESC

MCHD BRASS CAP IN H.H. BOLLARD AVE & BROADWAY RD. RM #270

TP#1 FIRE HYDRANT CONNECTION

TP2 F/C BOLLARD AVE EAST SIDE CHISELED H LA ESTRELLA

TP3 F/C

TP4 F/C

TP5 F/C

PT#31 1/2" REBAR

TP#7 ROCK

TP#8 ROCK

PT#32 1/2" REBAR ?

TP#10 ALUM CAP 1/4 WAY OF ZINC MCFD NORTH SIDE EAST END OF BRIDGE

PT#34 1/2" REBAR

TP#11 ROCK

STA	+	HI	−	ELEV	ADJ	DESC
		93537				
			3.10	93227	93237	PT# 33 1/2 REBAR
	1.74	93401				
			6.60	92741	92752	PT# 35 1/2 REBAR
	3.89	93130				
			6.58	92472	92484	PT# 36 1/2 REBAR
	3.73	92845				
			3.86	92457	92469	PT# 37 1/2 REBAR
	2.30	92687				
			5.00	92187	92200	PT# 38 1/2 REBAR
	4.63	92650				
			6.65	91985	91999	PT# 39 1/2 REBAR
	4.76	92161				
			6.79	91782	91797	PT# 40 1/2 REBAR
	3.81	92163				
			6.02	91561	91576	PT# 41 1/2 REBAR
	5.11	92072				
			6.27	91445	91461	PT# 42 1/2 REBAR
	4.78	91923				
			6.28	91295	91312	PT# 43 1/2 REBAR
	5.80	91875				
			6.85	91190	91208	PT# 44 1/2 REBAR
	5.44	91734				
			5.85	91149	91167	PT# 45 1/2 REBAR
	2.92	91441				
			6.19	91813	90837	PT# 46 1/2 REBAR

STA	+	HI	−	ELEV	ADJ.	DESC.
				x 908.13		
	1.616	914.29				
			2.81	911.48		TP
	5.99	917.47				
			5.59	911.88		TP
	6.70	918.58				
			5.65	912.93		TP
	6.32	919.25				
			4.82	914.43		TP
	6.06	920.49				
			4.90	915.59		TP
	6.41	922.00				
			4.50	917.50		TP E/P
	1.50	919.00				
			6.05	912.95		RM #269 B.C. IN N.H. ESTRELLA PK. WAY (HELMS RD) & BROADWAY RD. EL = 913.15

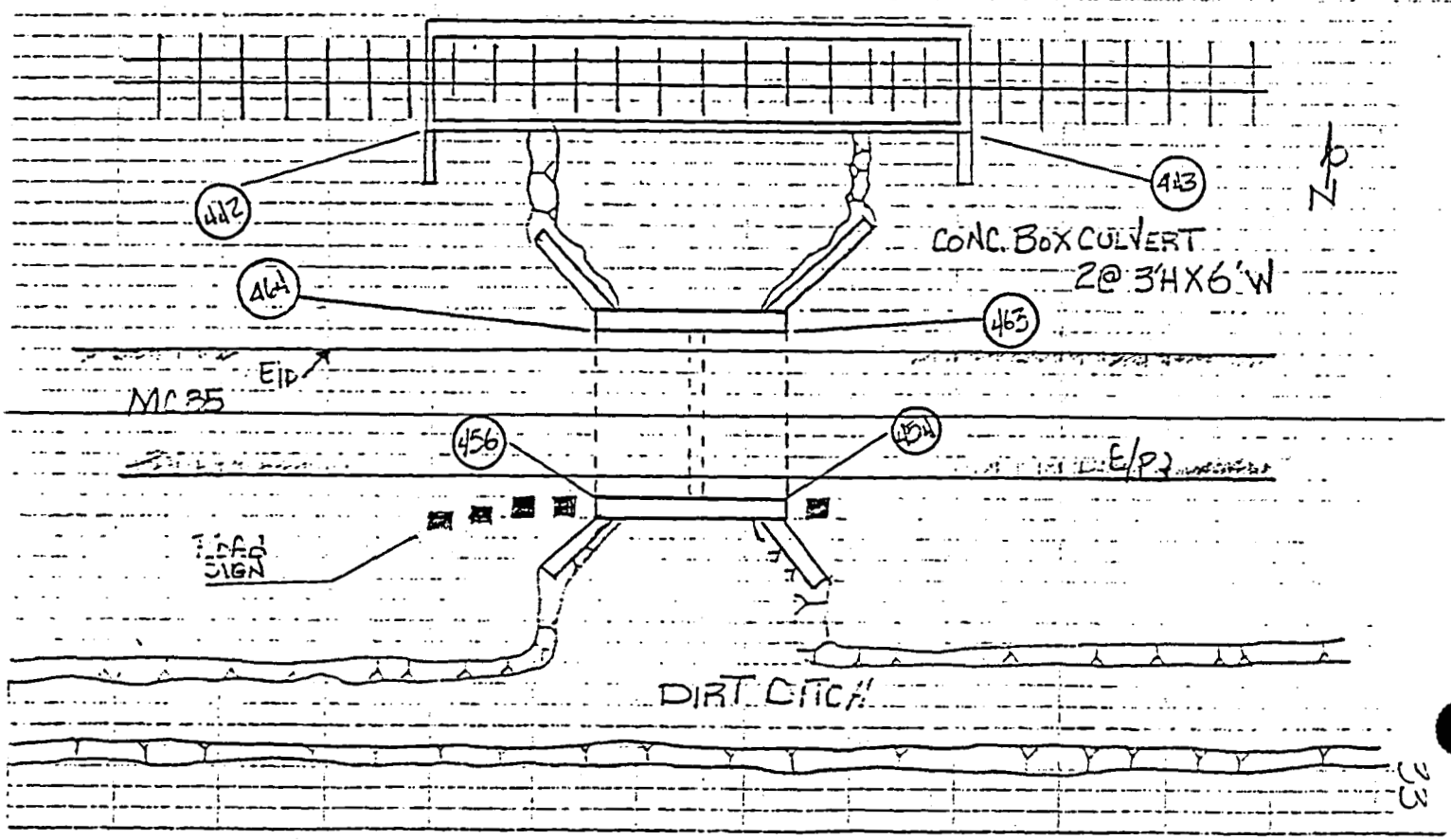
442
443
464
463
CONC. BOX CULVERT
2@ 3'H X 6'W
N
E/P
MC 35
456
454
E/P
INFO SIGN
DIRT DITCH

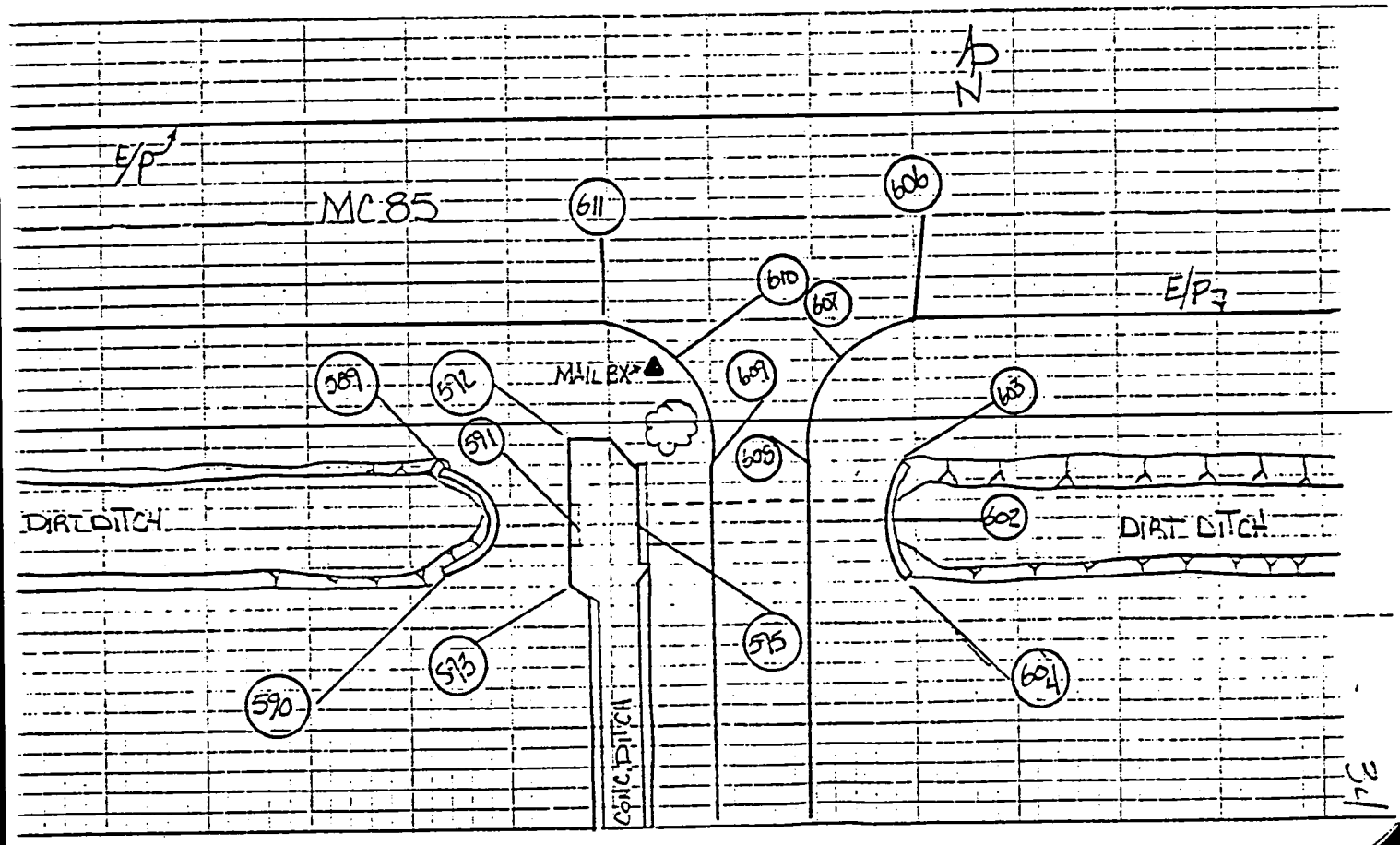
N
E/P
MC 85
611
606
610
607
E/P
589
592
MAILBOX
609
605
591
608
DIRT DITCH
602
DIRT DITCH
595
593
604
590
CONC. DITCH

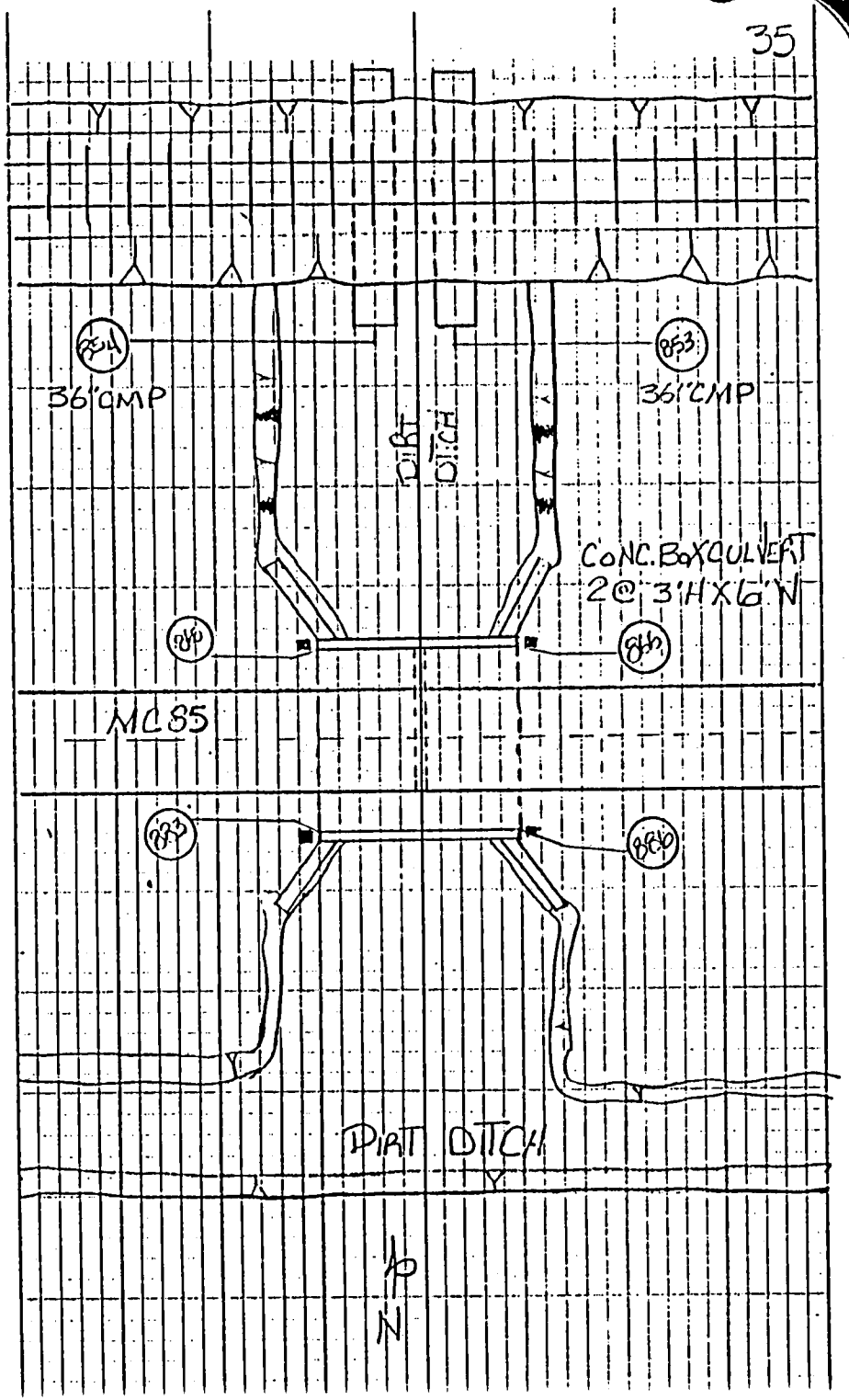
854
36" CMP
853
36" CMP
DIRT DITCH
CONC. BOX CULVERT
2@ 3'H X 6'W
848
846
MC 85
843
849
DIRT DITCH
N

CONC. DITCH
DIRT DITCH
GUARD RAIL
ESTRELLA
E/P
MT. 85
N

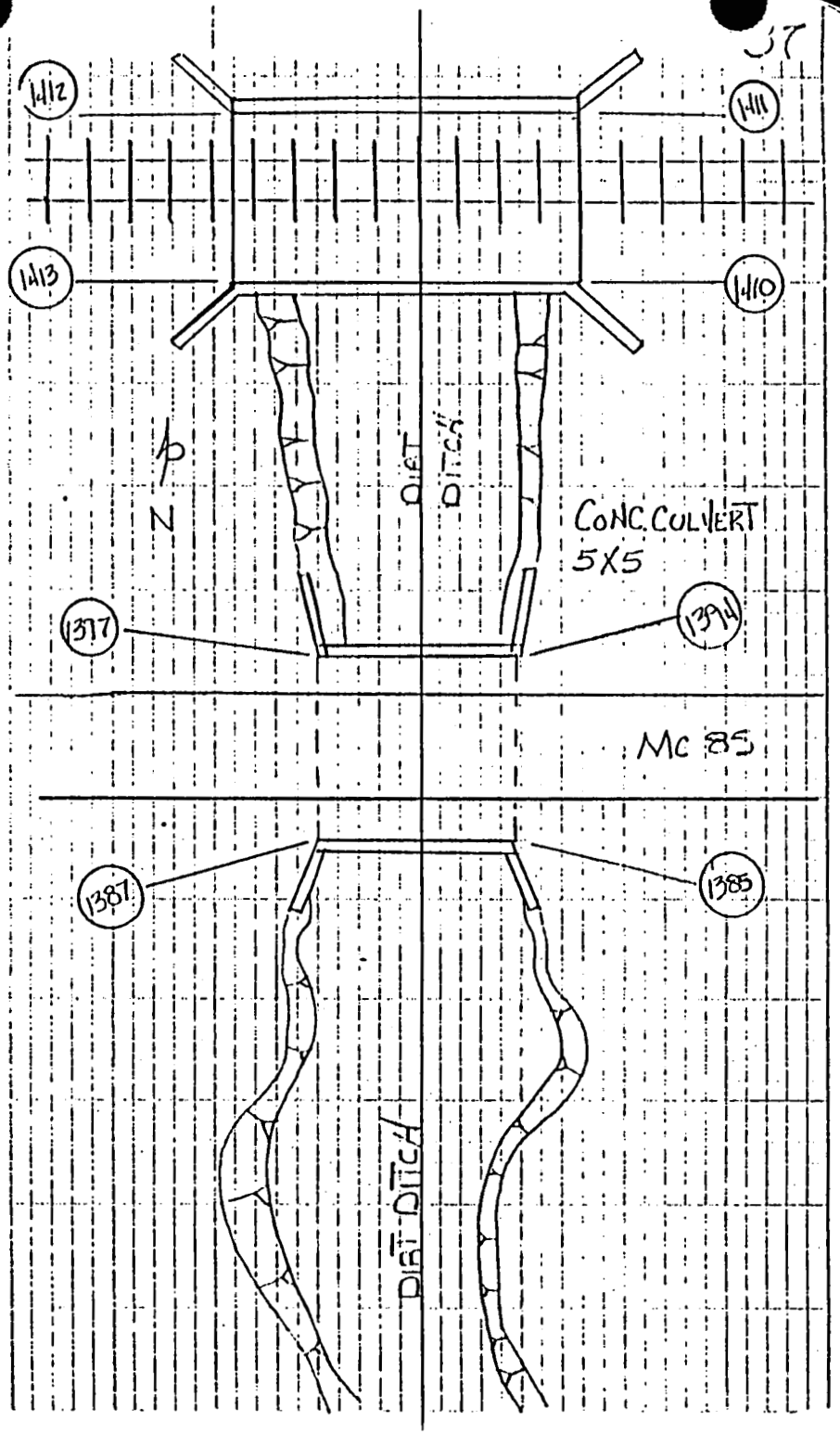
1412
1411
1413
1410
N
OUT DITCH
CONC. CULVERT
5X5
1377
1394
MC 85
1387
1385
DIRT DITCH

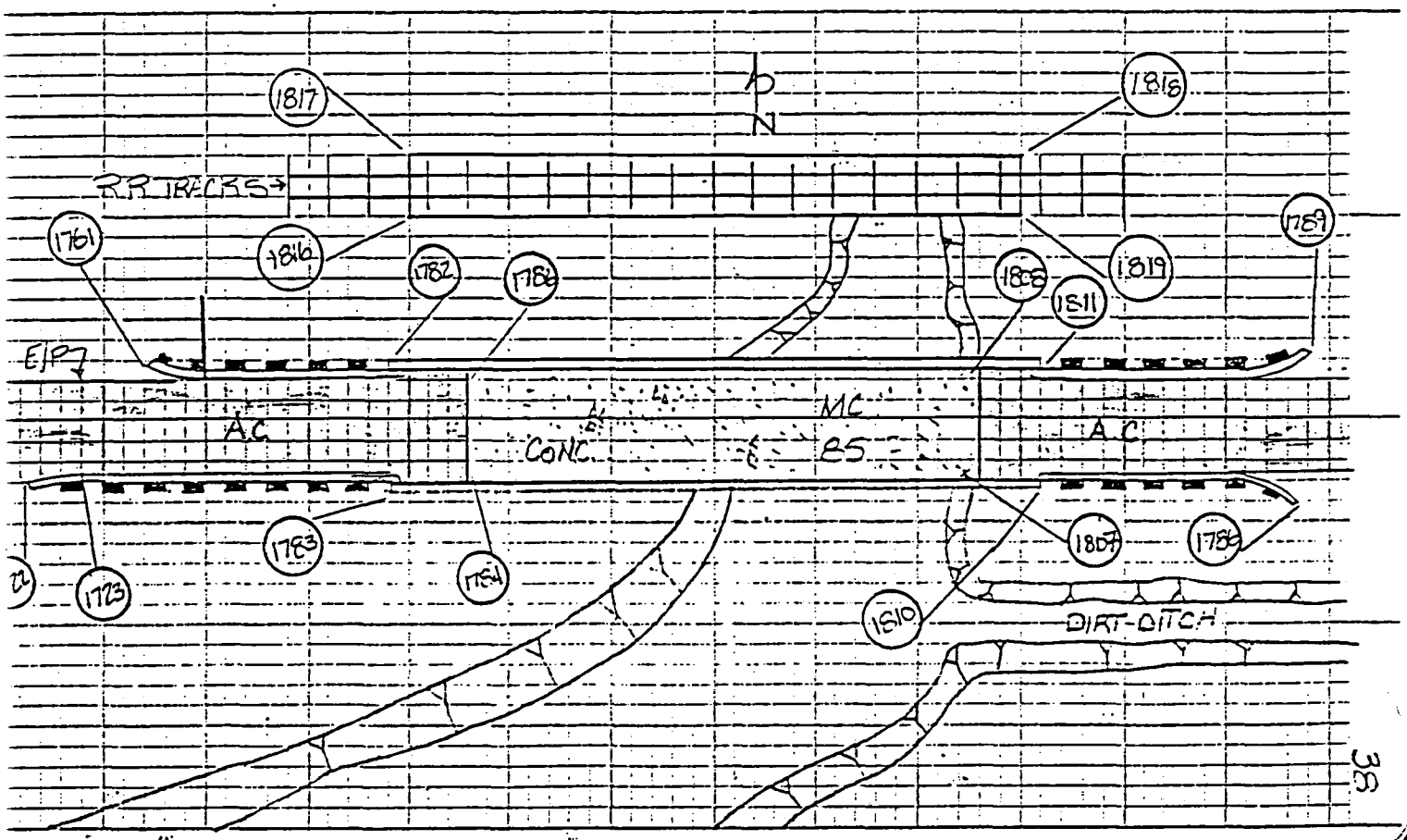
N
RR TRACKS
1817
1818
1761
1816
1782
1782
1808
1811
1819
1789
EIP7
AC
CONC
MC
BS
AC
1783
1784
1807
1786
1723
1810
DIRT-DITCH

BENCH
LOOP
FOR
ESTIMATE
PO
CROSS
SECTIONS

STA	+	HI	−	ELEV.	ADJ.	DESC.
				913.18		PIN #269 B.C. IN H.H. EST. ELLA PKWY (PROJECT) & BROADWAY Rd
	5.21	918.39				
			6.62	911.77		TP E/P
	5.96	917.73				
			5.24	912.49		PT #51 1/2 REBAR
	4.68	917.17				
			6.61	910.56		PT #50 1/2 REBAR
	6.61	917.17				
			8.06	909.11		PT #49 1/2 REBAR
	7.70	916.81				HT #6 CHISLED CROSS ON EAST SIDE OF RIM OF
			5.97	910.84		WATER VALVE WEST SIDE OF ESTRELLA PKWY NEAR
	5.35	916.19				W¼ COR SEC. 29
			2.89	913.30		PT #48 1/2 REBAR
	2.72	916.02				
			5.17	910.85		TP E/P
	5.44	916.29				
			7.17	909.12		TP #49
	7.49	916.61				
			6.04	910.57		TP #50
	6.33	916.70				
			4.40	912.50		
	3.84	916.34				
			2.91	913.43		PT #52 1/2 REBAR
	4.01	917.44				
			4.25	913.19	E/C +.01	BM #267

STA	+	HI	−	EL	ADJ	DESC.
				913.18		BM #269
	5.68	918.86				
			3.94	914.92	914.90	PT #53 1/2 REBAR
	6.21	921.13				
			3.08	918.05		T.P.
	9.58	927.63				
			3.65	923.98	923.91	PT #54 1/2 REBAR
	8.13	932.11				
			4.27	927.84	927.75	PT #55 1/2 REBAR
	8.85	936.69				
			4.09	932.60	932.48	PT #56 1/2 REBAR
	6.23	938.83				
			3.77	935.06	934.92	PT #57 1/2 REBAR
	5.94	941.00				
			3.69	937.31	937.15	PT #58 1/2 REBAR
	5.97	943.28				
			3.52	939.76	939.57	PT #59 1/2 REBAR
	7.87	947.63				
			2.87	944.76	944.55	PT #60 1/2 REBAR
	6.99	951.75				
			3.74	948.01	947.79	PT #61 1/2 REBAR
	6.15	954.16				
		954.16	4.33	949.83	949.57	PT #62 1/2 REBAR SIDESHOT
		954.16	1.77	952.39	Elev. 952.11	BM 250 M.C.H.O. BRASSCAP IN H.H. ESTRELLA PKWY & LOWER BUCKEYE RD EL=952.11

STA	+	HI	-	EL	ADJ
				952.11	
	6.81	958.92			
			3.71	955.21	
	5.51	960.72			
			3.41	957.31	
	5.78	963.09			
			3.57	959.52	
	3.38	962.90			
			5.60	957.30	
	3.92	961.22			
			6.03	955.19	
	3.98	959.17			
			7.08	952.09	E/C.02-
		958.56		952.11	
	6.45	~~945.66~~		953.64	
		958.78	4.92	~~940.74~~	
	5.14	~~945.88~~		952.81	
		957.63	5.97	~~939.91~~	
	4.82	~~944.73~~		951.45	
		955.87	6.18	~~938.55~~	
	4.42	~~942.97~~		949.87	
		956.02	6.00	~~936.97~~	
	6.15	~~943.12~~		951.45	
			4.57	~~938.55~~	

	DESC	42
RM#250 MCHO BRASSCAP IN H.H. ESTERLA PKWY & LOWER BUCKEYE Rd EL.= 952.11		
PT.# 63	1/2 REBAR	
PT.# 64	1/2 REBAR	
PT.# 65	1/2 REBAR	
T.P.		
T.P.		
RM# 250 EL.952.11		
RM# 250 EL.= 953.11		
PT.# 67	PK NAIL	
PT.# 68	PK NAIL	
PT.# 69	PK NAIL	
PT.# 70 B.C. IN H.H. LOWER BUCKEYE Rd & 157th AVE.		
T.P.		

STA	+	HT	-	EL	Adj	DESC
		~~938.55~~ 951.45				
	6.28	~~944.83~~	957.73	952.81		
			4.92	~~939.91~~		T.P
	6.16	~~946.07~~ 958.97		953.65		
		958.44	5.32	~~940.75~~		T.P
	4.79	~~945.54~~				
			6.33	952.11		RM#250 EL = 952.11
				952.11		RM#250
	5.18	957.29				
			6.32	950.97		PT# 71 1/2 REBAR
	4.98	955.95				
			5.71	950.24		PT# 72 1/2 REBAR
	5.69	955.93				
			10.55	945.38		PT# 73 1/2 REBAR
	8.73	954.11				
			3.86	950.25		T.P
	5.72	955.97				
			4.99	950.98		T.P
	6.23	957.21				
			5.09	952.12	El. +.02	RM#250 EL = 952.11

ESTRELLA RD
TRAVERSE
CONTROL
FOR CROSS SECTIONS

3/5/97

M. HOTH
T. GREENWALD

PT.#	DESC.
47	TEXAS SPIKE
6	CHISLED CROSS ON EASTSIDE OF RIM OF W.V. COVER
50	SET 1/2" REBAR
18	B.C. IN H.H. BROADWAY & ESTRELLA PKWY S.W. COR. SEC 20
54	SET 1/2" REBAR
57	SET 1/2 REBAR
9	Fd. MCHD B.C. IN H.H. WEST 1/4 SEC 20
60	SET 1/2 REBAR
16	Fd. MCHD B.C. IN H.H. ESTRELLA PKWY & LOWER BUCKEYE Rd. N.W. COR SEC. 20
15	Fd. TEXAS SPIKE
70	Fd B.C. IN H.H. LOWER BUCKEYE & 157th AVE
74	Fd 1/2 REBAR NO CAP

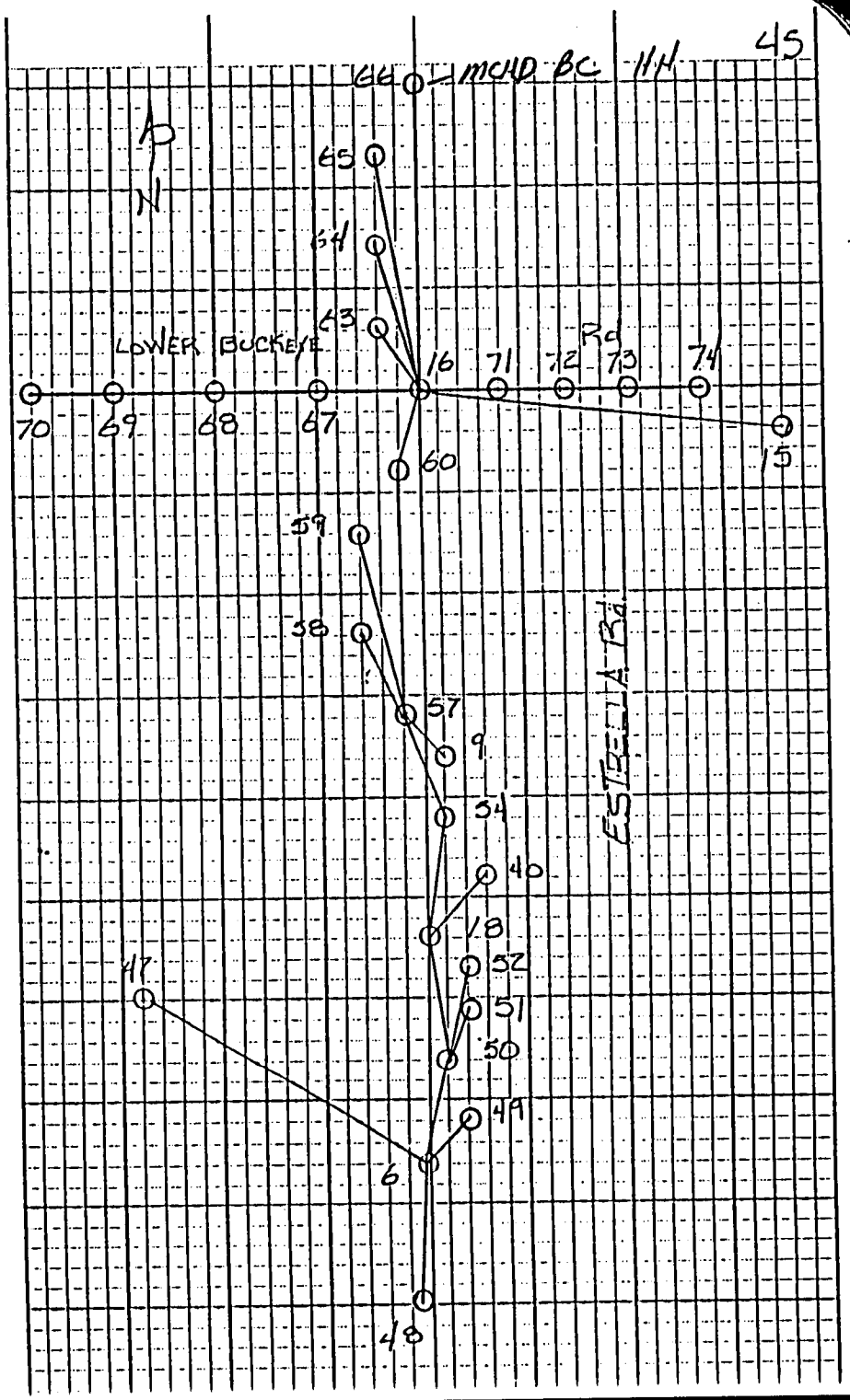

TC PT#6 BS. 47
FS PT#48 SIDESHOT

I	00.00.28	I 180.00.37
D	208.09.51	R 28.10.00
∡	208.09.23	∡ 208.09.23
I	00.00.33	I 180.00.37
D	208.09.55	R 28.10.03
∡	208.09.22	∡ 208.09.26
M∡	208.09.23.50	
ZD	89.40.30	
ZR	270.19.33	
SUM	360.00.03	
MZ	89.40.28	
S.D.	376.02	
SM	114.61'	

AC PT#6 B.S. PT.#47
F.S. PT.#49 SIDESHOT

I	00.00.43	I	180.00.45
D	32.16.02	R	212.16.03
$	32.15.19	$	32.15.18
I	00.00.41	I	180.00.45
D	32.16.03	R	212.16.01
$	32.15.22	$	32.15.16
M$	32.15.195		
ZD	90.07.07		
ZR	269.52.46		
SUM	359.59.53		
MZ	90.07.11		
S.D.	637.87		
S.M.	194.423		

TC PT#6 BS PT. #47
F.S. PT#50

I	00.00.27	I 180 00.26
D	29.34.37	R 209.34.37
∡	29.34.10	∡ 29.34.11
I	00.00.19	I 180.00.23
D	29.34.36	R 209.34.37
∡	29.34.17	∡ 29.34.14
M∡	29.34.13	
ZD	89.59.33	
ZR	270.00.25	
SUM	359.59.58	
MZ	89.59.34	
S.D.	122.739	
S.M.	374.109	

T@ 50 B.S. 6
FS 51 SIDE SHOT

I	00.00.54	I 180.01.00
D	179.33.08	R 359.33.13
∡	179.32.14	∡ 179.32.14
I	00.01.00	I 180.01.00
D	179.33.11	R 359.33.17
∡	179.32.11	∡ 179.32.17
M∡	179.32.14	
ZD	89.51.07	
ZR	270.08.45	
SUM	359.59.52	
MZ	89.51.11	
S.D.	602.47	
S.M	183.634	

T@50 BS 6
F.S. 52 SIDESHOT

I	00.00.55	I	180.00.55
D	178.41.28	R	358.41.29
∡	178.40.33	∡	178.40.34
I	00.00.54	I	180.00.55
D	178.41.27	R	358.41.32
∡	178.40.33	∡	178.40.37
M∡	178.40.34		
ZD	89.51.59		
ZR	270.08.03		
SUM	360.00.02		
MZ	89.51.53		
SD	1062.75		
SM	323.926		

T@ 50 B.S. 6

F.S. 18

T	00.01.21	T	180.01.28
D	176.09.45	R	356.09.53
$	176.08.24	$	176.08.25
T	00.01.31	T	180.01.32
D	176.09.54	R	356.09.57
$	176.08.23	$	176.08.25
M$	176.08.24.25		
ZD	87.53.30		
ZR	270.06.25		
SUM	359.59.55		
MZ	89.58.33		
S.D.	1398.22		
S.M	426.175		

T@18 B.S 50

F.S. 53 SIDESHOT

I	00.00.49	I	180.00.48
D	173.47.48	R	353.47.54
∡	173.46.59	∡	173.47.06
I	00.00.48	I	180.00.45
D	173.47.45	R	353.47.46
∡	173.46.57	∡	173.47.01
M∡	173.47.01		
Z.D.	89.51.07		
Z.R.	270.09.02		
SUM	360.00.09		
MZ	59.51.02		
S.D.	428.92		
S.M.	130.735		

TP 18 BS.50
F.S. 40 SIDE SHOT

I	00.00.52	I	180.00.56
D	184.09.42	R	4.09.52
∡	184.08.50	∡	184.08.56
I	00.00.51	I	180.00.52
D	184.09.42	R	4.09.45
∡	184.08.51	∡	184.08.53

M∡ 184.08.53

ZD 89.45.21
ZR 270.14.38
SUM 359.59.59
MZ 89.45.21

S.D. 896.17
SM 273.153

TC 18 BS 50
FS 54

		I	180.01.15
I	00.01.11	R	2.53.15
D	182.53.14	∢	182.52.00
∢	182.52.03		
I	00.01.11	I	180.01.15
D	182.53.16	R	2.53.19
∢	182.52.05	∢	182.52.04
M∢	182.52.03		
ZD	89.39.09		
ZR	270.21.50		
SUM	360.00.09		
MZ	89.39.04		
S.D.	1353.94		
S.M	412.686		

T@S4 BS 18

FS 55 SIDESHOT

I	00.01.01	I 180.01.07
D	172.44.10	R 352.44.18
∡	172.43.09	∡ 172.43.11
I	00.01.05	I 180.01.11
D	172.44.11	R 352.44.16
∡	172.43.06	∡ 172.43.05
M∡	172.43.07.5	
ZD	89.31.04	
ZR	270.29.07	
SUM	360.00.11	
MZ	89.30.58	
S.D.	461.63	
S.M.	140.704	

T@ 54 B.S.18
FS 56 SIDESHOT

I	00.01.08	I	180.01.19
P	176.11.56	R	356.12.06
$	176.10.48	$	176.10.47
I	00.01.15	I	180.01.22
P	176.12.00	R	356.12.04
$	176.10.45	$	176.10.42
M$	176.10.43.50		
ZD	89.28.30		
ZR	270.31.31		
SUM	360.00.01		
MZ	89.28.30		
S.D.	968.34		
S.M.	295.150		

TE 54 BS 18
BS 57

I	00.01.03	I	180.01.07
D	176.29.45	R	356.29.45
∂	176.28.42	∂	176.28.38
I	00.01.00	I	180.01.06
D	176.29.45	R	356.29.45
∂	176.28.45	∂	176.28.39
M∂	176.28.41		
ZD	89.30.51		
ZR	270.29.17		
SUM	360.00.08		
MZ	89.30.47		
S.D.	1326.26		
SM	404.243		

TC:	BS 54		
F.S	9 SIDE SHOT		
I	00.00.45	I	180.00.45
D	326.00.04	R	146.00.06
∡	325.59.19	∡	325.59.21
I	00.00.45	I	180.00.44
D	326.00.06	R	146.00.09
∡	325.59.21	∡	325.59.25
M∡	325.59.21 50		
ZD	91.02.36		
ZR	268.57.22		
SUM	359.59.58		
MZ	91.02.37		
S.D.	82.72		
S.M	25.213		

AC	7 B.S. 54			
FS	60			
I	00.01.17		I 180.01.25	
D	183.13.10		R 3.13.15	
∡	183.11.53		∡ 180.11.50	
I	00.01.19		I 180.01.27	
D	183.13.11		R 3.13.17	
∡	183.11.52		∡ 183.11.50	
MZ	183.11.51 25			
ZD	89.38.06			
ZR	270.21.44			
SUM	359.59.50			
MZ	89.38.11			
S.D.	1503.84			
S.M	458.31			
PT'S	ON WITH PT #60			
PT #58	H.D.	500.57		
PT #59	H.D.	1003.41		

TP 60 BS 57
FS 61 SIDE SHOT

I	00.01.18	I 180.01.22
D	178.38.24	R 358.38.26
∡	178.37.06	∡ 178.37.04
I	00.01.15	I 180.01.20
D	178.38.20	R 358.38.21
∡	178.37.05	∡ 178.37.01
MZ	178.37.04	
ZD	89.39.12	
ZR	270.20.12	
SUM	359.59.54	
MZ	89.39.45	
SD	503.37	
SM	153.426	

TC 00 13 57
FS 62 SIDESHOT

I	00.00.48	I	180.00.55
D	178.24.26	R	358.24.32
∡	178.23.38	∡	178.23.37
I	00.00.48	I	180.00.54
D	178.24.23	R	358.24.30
∡	178.23.35	∡	178.23.36
M∡	178.23.36 20		
ZD	89.38.09		
ZR	270.21.41		
SUM	359.59.50		
MZ	89.38.14		
SD	753.13		
SM	229.553		

TC	60 B5 57		
FS	16		
I	00.01.09	I	180.01.09
D	180.52.30	R	00 52.31
☆	180.51.21	☆	180 51.22
I	00.01.08	I	180.0108
D	180.52.28	R	00.52.27
☆	180.51.24	☆	180 51.19
MZ	180.51.21 50		
ZD	89.36.23		
ZR	270.23.40		
SUM	360.00.03		
MZ	89.36 22		
S.D.	1091.69		
S.M	332.749		

TQ 16 BS 60
FS 63 SIDESHOT

I	00.01.25	I	180.01.34
D	173.24.55	R	353.25.00
∡	173.23.30	∡	173.23.26
I	00.01.24	I	180.01.29
D	173.24.49	R	353.24.55
∡	173.23.25	∡	173.23.26
MZ	173.23.26½		
ZD	89.41.59		
ZR	270.18.04		
SUM	360.00.03		
MZ	89.41.57		
S.D.	511.70		
SM	155.967		

T@16 B:560

FS 64 SIDE SHOT

I	00.01.28	I	180.01.33
D	175.24.27	R	355.24.28
∡	175.22.59	∡	175.22.56
I	00.01.30	I	180.01.36
D	175.24.25	R	355.24.32
∡	175.22.55	∡	175.22.56
M∡	175.22.56.25		
ZD	89.35.42		
ZR	270.24.24		
SUM	360.00.06		
MZ	89.35.39		
S.D	1004.27		
SM	306.102		

TE/6 B560
FS 65 SIDESHOT

I	00.02.00	I	180.02.13
D	176.08.08	R	356.08.11
∡	176.06.08	∡	176.05.58
=	00.02.06	I	180.02.13
D	176.08.11	R	356.08.14
∡	176.06.05	∡	176.06.01
MZ	176.06.03		
ZD	89.45.20		
ZR	270.14.50		
SUM	360.00.10		
MZ	89.45.15		
S.D.	1504.46		
S.M	460.238		

TP	6	BS60	
FS	66	SIDESHOT	
I	00.02.07	I	180.02.10
D	177.30.29	R	357.30.38
∡	177.28.22	∡	177.28.28
I	00.02.02	I	180.02.13
D	177.30.30	R	357.30.36
∡	177.28.28	∡	177.28.23
MZ	177.28.25 25		
ZD	2941.72		
ZR	270.18.40		
SUM	360.00.02		
MZ	29.41.71		
S.D.	1799.99		
SUM.	548.638		

T@16	BS 60		
F.S.	70		
I	00.02.40	I	180 02.41
D	88.18.02	R	268.18.08
∡	88.15.22	∡	88.15.27
I	00.02.40	I	180 02.46
D	88.18.01	R	268.18.08
∡	88.15.21	∡	88.15.22
M∡	88.15.23		
ZD	90.05.32		
ZR	269.54.19		
SUM	359.59.51		
MZ	90.05.37		
S.D.	1838.63		
S.M.	560.417		
	PT'S ON LINE WITH PT#70		
#67	H.D	499.34	
#68	H.D.	1000.90	
#69	H.D.	1503.23	

T@16 BS 60
F.S. 5

I	00.01.34	I	180.01.36
D	Z68.59.09	R	88.59.14
∡	Z68.57.35	∡	Z68.57.38
I	00.01.35	I	180.01.43
D	Z68.59.09	R	88.59.13
∡	Z68.57.34	∡	Z68.57.30

M∡ Z68.57.34 25

ZD 90.07.28
ZR Z69.52.31
SUM 359.59.59
MZ 90.07.28

S.D. Z913.23
SM 887.955

TC 16 BS 60
FS 74 Fd 1/2 REAR NO CAP

I	00.01.46	I 180.01.53
D	268.16.19	D 88.16.24
∡	268.14.33	∡ 268.14.31
I	00.01.17	I 180.01.25
D	268.15.48	R 88.15.53
∡	268.14.31	∡ 268.14.28
MZ	268.14.30½	
ZD	90.08.11	
ZR	269.51.50	
SUM	360.00.01	
MZ	90.08.11	
S.D.	2630.06	
S.M	801.644	

PT'S ON LINE WITH PT #74

#71	H.D.	500.14
#72	H.D.	1005.65
#73	H.D.	1504.72

BULLARD
WASH
TRAVERSE

R. LLEWELLYN
P. BOYCHUK

PT#	DESC.
14	NE COR. SEC. 20 Fd. 1" SQUARE IRON BAR
15	Fd TEXAS SPIKE
201	SET TEXAS SPIKE = PT.# 116 PER. PT. SHEET
202	" " "
200	" " "
203	
110	Fd TEXAS SPIKE
205	SET TEXAS SPIKE
204	SET TEXAS SPIKE = PT.# 115 PER PT. SHEET
8	Fd TEXAS SPIKE

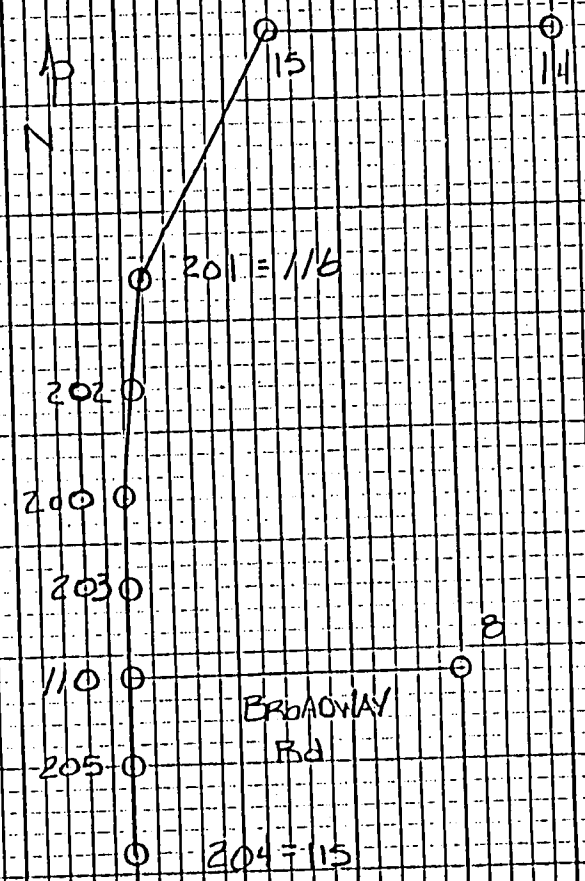

T@	PT# 15	B.S. PT.# 14		
F.S.	PT# 2.01			
I	00.01.56			
1	133.58.35			
2	267.55.01			
4	174.48.04			
M$	133.56.31			
Z.D	90.20.57			
Z.R	269.10.10			
MZ	90.20.24			
	PT.+0PT	S.D.FT	S.D.M.	
	15-201	1205.315	367.590	

T @ PT.#201 B.S. PT.#15
F.S. PT.#200 THOR. PT.#202

I	00.03.01
1	152.32.15
2	205.12.59
4	250.22.55
M9	152.24.58

T@ PT.# 200 B.S. PT# 201
F.S. PT.# 203

I	00.02.[illegible]
1	164.5.[illegible]
2	[illegible]4.13
M$	164.[illegible]

PT. TO PT.	S.D.F.T.	S.D.A	Z.D.	Z.R.	Z.A.
200-201	211677	645.200	89.45.57	—	—
200-203	882.140	266.871	90.41.52	282.46.05	90.14.[illegible]
200-202	837515	255.[illegible]	87.34.10	210.26.42	87.33.44

TEH 1.7.203 B.3.7200
F.S. 110

I	00.05.15
1	180.0[illegible]
2	0.05.03
MX	180.00.215
ZD	90.43.52
ZR	2.50.16.47
ZM	90.43.32.5
S.D.AT	143.05
S.D.MET	138.62.5

TO PT# 110 FROM PT# 2
TO PT# 204

I	00.03.00
I	20.14.12
P	190.25.46
MS	90.11.35.50

PI TO PT.
110-204

ZD	90.08.51
ZR	267.52.07
ZM	90.08.20
SDFT	2660.10

TL	7.13.40
TR	269.47.45
ZM	90.12.57.50
SDFT	1286.20

BULLARD
WASH
LEVEL
LOOP

4/7/97
M.HOLLY
T.GREENWALD

STA	+	HI	-	EL.	ADJ.	DESC.
				945.38		PT.#73 SEE PG. 43
	6.05	951.43				
			6.72	944.71		T.P 60D NAIL
	4.74	949.45				
			6.48	942.97		1/2" Rebar N.1/4 COR. SEC. 20
	4.84	947.81				
			3.51	944.30		PT.# 118 TEXAS SPIKE
	2.37	946.67				
			5.87	940.80		T.P. 60D NAIL
	5.66	946.46				
			5.02	941.44		PT.# 201 TRAV. PT.# PT#116
	5.38	946.82				
			[illegible]	943.17		T.P. 60D NAIL
	6.42	949.59				
			3.53	946.06		TRAV. PT.# 202
	3.69	947.75				
			6.38	943.17		T.P. 60D NAIL
	3.61	946.78				
			5.34	941.44		T.P. 60D NAIL
	5.10	946.54				
			5.74	940.80		T.P. 60D NAIL
	6.22	947.02				
			2.13	944.89		" " "
	4.25	949.14				
			4.39	944.75		" " "
	6.65	951.40				

STA	+	HI	-	EL	ADJ	DESC.
		21.10				
			6.00	45.40	E/C.02+	PT#73

Stc	+	Hi	-	Elev	Adj
#202	4.58			946.06	
		50.64			
			7.71		
TP-1	7.75			942.93	
		50.68			
			4.62		
#202				46.06	EL 0.00
TP-1	4.04			942.93	
		46.97			
			8.19		
#200	5.05			38.78	
		43.83			
			6.48		
TP-2	6.13			37.35	
		43.48			
			7.58		
#203	7.64			35.90	
		43.54			
			6.19		
TP-3	5.37			37.35	
		42.72			
			4.58		
TP-4	8.83	46.97		38.14	
TP-1			4.04	42.93	

4-8-97

Remc

Trav Pt #202 Set PS 76 This Book

60 D Nail

TP-1 See Above

Trav. #200 Bridge Spike

60 D Nail

Trav Pt #203 Bridge Spike

60 D Nail

60 D Nail

TP-1

Sta	+	Hi	—	Elev	Adj
RM 269	7.26			913.18	
		920.44			
			3.81		
TP-5	6.08			916.63	
		922.71			
			4.88		
TP-6	5.32			917.83	
		923.15			
			4.32		
# 110	5.29			918.83	
		924.12			
			5.98		
TP-7	3.63			918.14	
		921.77			
			4.89		
TP-8	3.95			916.88	
		920.73			
			5.97		
# 205	5.37			914.76	
		920.13			
			5.41		
TP-9	4.08			914.72	
		918.80			
			5.41		
TP-10	4.84			913.39	
		918.23			

Desc

RM #269 BC 44 Sr 18 40
This book

GOD Nail

GOD Nail

Trav Pt #110 (4) Bridge Spike
(Firewalkers Rd)

Hub

Hub

Hub

Trav Pt # 205 Bridge Spike

Hub

Hub

Sta	+	Hi	−	Elev	Adj	Desc.
		918.23				
			5.62			
A 114	5.00			912.61		Traverse PK #114 (A) Bridge Spike
		917.61				(#204)
			4.64			
#206	6.81			912.97		Traverse PK #206 Bridge Spike
		919.78				
			4.59			
TP-11	4.30			915.19		60 D Nail
		919.49				
			7.43			
TP-12	5.57			912.06		60 D Nail/Hub
		917.63				
			5.80			
TP-13	3.14			911.83		Hub
		914.97				
			4.08			
#6				910.89	910.84	1 on Water Valve Box Rim (See pg 40 This Bk.
					EC. +0.05	

SOKKIA™

SOKKIA™ 322

ENGINEER'S FIELD BOOK

5/29/97

M. HOLM
J. GREENWALD
E. BROCKIE

M.C. 85
E STRELLA PKWY
INVERT, M.H.'S & WATER VALVES

#	FLOW DIRECT	SIZE	DOWN	DESC.
1183				RUSTED SHUT
1182	E.TOW	12"	10.38	BULLARD WASH AL. INLET SANSEWER
6	—	—	0.96	WATER VALVE TOP OF NUT
356	—	—	3.58	WATER VALVE T.O.N.
784	E.TOW.	12"	7.49	SAN.SEWER M.H. (ESTRELLA RD)
785				RUSTED SHUT
786	—	—	3.70	W.V. T.O.N.
788	—	—	2.40	W.V. T.O.N.
787	—	—	2.09	W.V. T.O.N.
242	N.TO.S	12"	7.27	SAN.SEWER (M.C. 85)
1121	N.TO.S	12"	12.88	" " (ESTRELLA)
980	N.TO.S.	12"	9.15	" " " "
1130	—	—	0.90	W.V. T.O.N.
1131	—	—	4.40	" " "
1234	N.TO.S.	12"	13.59	SAN. SEWER (ESTRELLA)
1282	N.TO.S	12"	14.30	" " "
1282	EAST	8"	14.10	" " "
1282	WEST	8"	7.00	" " "
1339	N.TO.S.	12"	14.86	" " "
1433	N.TO.S	12"	14.18	" " "
1433	N.INV.	12"	11.30	" " "
1433	W.INV.	12"	13.72	" " "
1433	E.INV.	12"	13.92	" " "
1542	N.TO.S	12"	9.83	SAN SEWER M.H. (ESTRELLA)
1542	E.INV.	8"	7.65	" " " "
1542	W.INV	8"	9.79	" " " "

#	FLOW DIRECT.	SIZE	DOWN.	DESC.
1593	N.TO S.	12"	11.18	SAN. SEWER (ESTRELLA)
1593	E. INV.	8"	10.91	" " "
1593	W. INV.	8"	10.90	" " "
1672	—	—	4.5	W.W. T.O.N.
1673	—	—	4.5	" " "
1715				SPRINT TELE M.H. (LOCKED CANTOPEN)
1743	N.TO S.	12"	15.60	SAN. SEWER M.H.
1743	WEST.INV	8.	15.43	" " "
1790	N.TO S.	12"	15.76	" " "
1790.	W.INV.	8"	15.62	" " "
1979	E.TO S	12"	19.42	" " "
2277	W.TO E.	12"	18.50	" " "
2277	N.INV.	8"	18.28	" " "
2307	W.TO E	12"	18.90	" " "
216	N.S.&E	12	23.65	SAN. SEWER ESTR. & LOWER BUCKEYE PKWY
2256	—	—	13.90	U.S. WEST FIBER OPTIC
2415	—	—	10.55	BELL SYSTEM
2397	—	—	19.65	U.S. WEST FIBER OPTIC
2290	—	—	16.67	" " " "
1453	—	—	11.61	BELL SYSTEM M.H.
1587	—	—	9.10	U.S. SPRINT FIBER OPTICS
1584	—	—	13.15	U.S. WEST FIBER OPTICS
2058	—	—	1.57	MONITORING WELL

SOKKIA™

SOKKIA™ 322

ENGINEER'S FIELD BOOK

5/29/97

M. HONY
T. GREENWALD
B. BROCKIE

M.C.85
#
ESTRELLA PKWY
INVEST. M.H.'S & VALVES

#	FLOW DIRECT	SIZE	DOWN	DESC.
1183				RUSTED SHUT
1183	E.TO.W.	12"	10.38	BULLARD WASH AL. INLET SANSEWER
6	—	—	0.96	WATER VALVE TOP OF NUT
356	—	—	3.58	WATER VALVE T.O.N.
784	E.TO.W.	12"	7.49	SAN. SEWER M.H. (ESTRELLA RD)
785				RUSTED SHUT
786	—	—	3.70	W.V. T.O.N.
788	—	—	2.40	W.V. T.O.N.
787	—	—	2.09	W.V. T.O.N.
242	N.TO.S.	12"	7.27	SAN. SEWER (M.C. 85)
1121	N.TO.S.	12"	12.88	" " (ESTRELLA)
980	N.TO.S.	12"	9.15	" " " "
1130	—	—	0.90	W.V. T.O.N.
1131	—	—	4.40	" " "
1234	N.TO.S.	12"	13.59	SAN. SEWER (ESTRELLA)
1282	N.TO.S.	12"	14.30	" " "
1282	EAST	8"	14.10	" " "
1282	WEST	8"	7.00	" " "
1339	N.TO.S.	12"	14.86	" " "
1433	N.TO.S.	12"	14.18	" " "
1433	N.INV.	12"	11.30	" " "
1433	W.INV.	12"	13.72	" " "
1433	E.INV.	12"	13.92	" " "
1542	N.TO.S.	12"	9.83	SAN. SEWER M.H. (ESTRELLA)
1542	E.INV.	8"	9.65	" " " "
1542	W.INV.	8"	9.79	" " " "

#	FLOW DIRECT.	SIZE	DOWN	DESC.
1593	N.TO S.	12"	11.18	SAN. SEWER (ESTRELLA)
1593	E. INV.	8"	10.91	" " "
1593	W. INV.	8"	10.90	" " "
1672	—	—	4.5	W.V. T.O.W.
1673	—	—	4.5	" " "
1715				SPRINT TELE MH (LOCKED CANTOPEN)
1743	N.TO S.	12"	15.60	SAN. SEWER M.H.
1743	WEST INV	8	15.43	" " "
1790	N.TO S.	12"	15.76	" " "
1790	W. INV.	8"	15.62	" " "
1979	E.TO.S	12"	19.42	" " "
2277	W.TO.E	12"	18.50	" " "
2277	N. INV.	8"	18.28	" " "
2307	W.TO.E	12"	18.90	" " "
216	N.S.&E	12	23.65	SAN. SEWER ESTR. & LOWER BUCKEYE PKWY

ESTRELLA RD.
TRAVERSE
LINES
FOR
CROSS
SECTIONS

3/17/97

M. HOLLY

P. BROOKIE

PT.#	DESC.			
16	Fd MCHD B.C. IN H.H.			
66	Fd MCHD B.C. IN H.H			
75	SET ½" REAR TRAV. PT.			
76	Fd MCHD B.C. IN H.H			
77	SET ½" REAR TRAV. PT.			
78	"	"	"	
79	"	"	"	
80	"	"	"	
81	"	"	"	
82	Fd STM OF BROKEN [illegible]			
83	SET ½" REAR TRAV. PT.			
84	"	"	"	"
85	"	"	"	"
86	"	"	"	"
87	Fd MCHD [illegible] IN H.H.			
88	SET ½" REAR TRAV. PT.			
89	"	"	"	"
90	"	"	"	"
91	"	"	"	"
"	Fd. COTTON PICKER SPINDLE			
93	SET ½" REAR TRAV. PT.			
94	"	"	"	"
95	"	"	"	"
96	"	"	"	"
97	Fd. COTTON PICKER SPINDLE			

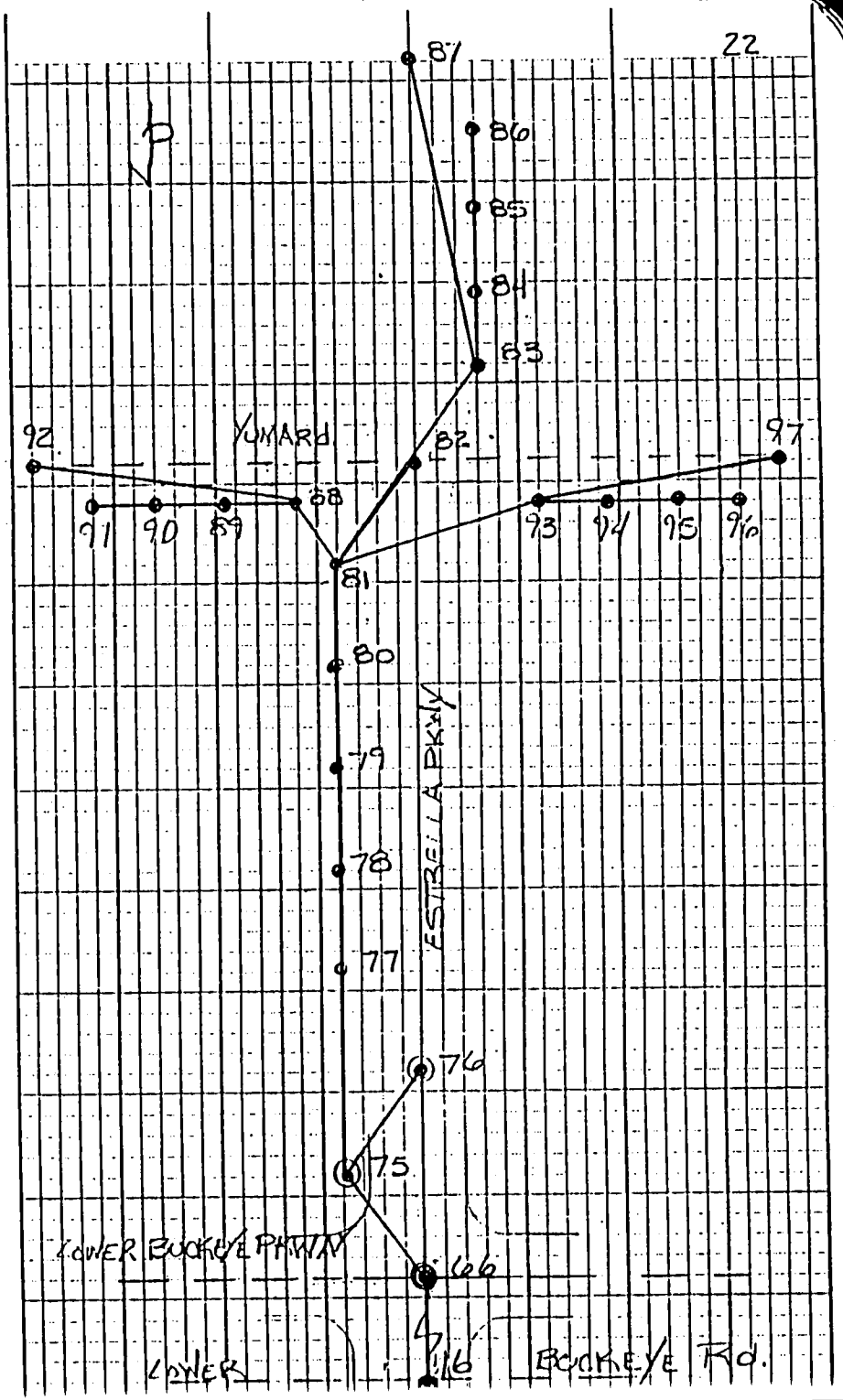

TO	PT.#66 & RT.	BS.#16	ES.	PT.#75
INDEX	00.05.26			
1	176.07.10			
2	352.08.57			
4	344.12.30			
MX	176.01.46			
ZD	87.54.04			
ZR	270.05.54			
SUM	357.59.58			
MZ	87.54.05			
S.D.E.	499.69			
SDM	153.305			

TC	75	B.S.66	F.S.76
	$ RT.		
INDEX	00.06.59		
1	189.41.35		
2	19.16.14		
4	38.25.32		
M$	189.34.38		
ZD	89.52.29		
ZR	270.07.45		
SUM	360.00.14		
MZ	87.52.22		
S.D.FT	354.40		
S.D.M	103.020		

AT 75 B.S. 66 AS 81

9 PT

INDEX 00.07.08

1 [illegible]

2 7.30.17

4 15.35.06

M$ 183.51.30

PT.577 THUR. 00 ON LINE

PT. TO PT.	75-77	75-78	75-79	75-80	75-81
ZD	—	—	—	—	89.49.48
ZR	—	—	—	—	270.10.18
SUM	—	—	—	—	360.00.36
MZ	—	—	—	—	89.49.30
S.D.FT.	—	—	—	—	2501.16
S.D.M.	—	—	—	—	762.355
H.D.FT.	499.85	1001.22	1499.97	1999.85	

TC 81 B.S. 75 F.S. 82 SIDE SHOT

	¼ RT.
INDEX	00.03.17
1	184.31.57
2	9.00.25
4	17.57.06
M¢	184.28.27
ZO	89.43.24
ZR	270.17.11
SUM	360.00.35
M¢	89.43.06
S.D.F.T.	502.94
S.D.M	153.295

TO 81 BS 15 FS 85

	∢RT				
INDEX	00.03.46				
1	184.26.47				
2	8.49.48				
4	17.35.46				
MX	184.23.00				
ZD	89.50.16				1
ZR	270.09.59				
SUM	360.00.15				
MZ	89.50.09				
S.RET	997.67				
SAM	304.074				

TC	83	B.S. 81	F.S. 87
	X FT.		
INDEX	00:06:18		
1	176:25:53		
2	352:45:40		
4	345:24:54		
MI	176:19:39		
ZD	89:46:15		
ZR	270:14:12		
SUM	360:00:27		
MZ	89:46:01		
SDFT	2144.48		
SDM	653.637		

	T283	83 84	FS	86
	℄ RT.			
INDEX	000.03.01			
1	177.07.19			
2	351.09.20			
4	348.13.17			
M ℄	177.02.04			
ZO	89.49.54			
ZR	270.10.22			
SUM	360.00.22			
MR	89.49.43			
SDFT	1800.03			
SDM	548.647			
	PT.S 84 & 85 ON LINE			
PT. TO PT	83-84	83-85		
H.D.FT	600.13	1200.27		

TC@ 81	B.S. 75	F.S.	F.S. 88
	∡RT.		
INDEX	00.04.05		
1	137.05.56		
2	274.07.56		
4	188.11.56		
M∡	137.01.58		
ZO	89.38.43		
ZR	270.21.18		
SUM	360.00.01		
M∡Z	89.38.43		
SDET	657.75		
SOM	200.432		

TC 81	B.S 75	F.S. 93			
	☆R7				
INDEX	00.04.55				
1	228.55.39				
2	97.46.42				
4	195.28.38				
M☆	228.50.56				
ZD	89.53.51				
ZR	270.05.47				
SUM	359.59.38				
MKZ	[illegible]				
SDFT	693.55				
SDM	211.395				

TC 88 B.S. 81 F.S. 92

	∡ RT.			
INDEX	00.07.56			
1	135.22.32			
2	270.37.40			
4	181.07.26			
M∡	135.14.53			

TC 88 B.S. 81

∡ RT # 91

I	00.09.40			
1	134.45.25			
2	269.21.09			
4	178.37.30			
M∡	134.35.43			

PT'S 89 & 90 ON LINE

PT. TO PT.	88-92	88-91	88-90	88-89
ZD	90.00.01	90.02.12	—	—
ZR	269.57.46	269.57.24	—	—
SUM	359.39.47	359.59.36	—	—
MZ	90.00.08	90.02.24	—	—
SDFT	2087.31	1800.66	—	—
SDM.	639.267	548.842	—	—
H.D.FT.			1200.68	599.81

T@	93	BS 81	F.S.	97
	☆RT			
I	00·00·55			
1	221·53·03			
2	83·39·07			
4	167·10·53			
M☆	221·46·00			

T@	93	B.S. 81	F.S.	96
	☆RT.			
I	00·04·20			
1	222·25·42			
2	84·46·54			
4	169·29·08			
M☆	222·21·12			

PT. TO PT.	93-97	93-96	93-95	93-94
Z.D	90·06·52	90·07·01	—	—
ZR	269·53·15	269·52·50	—	—
SUM	360·00·07	359·59·51	—	—
MZ☆	90·06·47	90·07·10	—	—
SDFT	2103.57	1201.33	—	—
SDM	641.172	549.042	—	—
H.D.FT			1200.48	600.80

LEVEL LOOP 6/18/97
ESTRELLA M. HOLLY
FT. N/ P. BROCKIE
EXT.

STA	+	HI	−	EL.	DESC.
				959.52	1/2" REBAR TRAV PT #65 SEE BK #319 PG. 42
	6.87	966.41			
			4.92	961.49	60D NAIL
	5.76	967.25			
			5.74	961.51	TRAV PT #75 1/2" REBAR
	5.89	967.40			
			4.76	962.64	TRAV. PT #77 1/2" REBAR
	6.11	968.75			
			4.53	964.22	TRAV. PT. #78 1/2" REBAR
	6.14	970.36			
			4.78	965.58	TRAV. PT #77 1/2" REBAR
	6.49	972.07			
			4.14	967.93	TRAV. PT. #80 1/2" REBAR
	6.42	974.35			
			4.51	967.84	TRAV. PT. #81 1/2" REBAR
	6.23	976.07			
			4.25	971.82	TRAV. PT. #82 M.C.H.D. 3.0. IN HH
	4.13	975.95			
			6.11	969.84	T.P. #81
	4.10	974.54			
			6.61	967.93	T.P. #80
	3.82	971.75			
			6.17	965.58	T.P. #79
	4.07	969.65			
			5.42	964.23	T.P. #78
	4.18	968.41			

STA	+	HI	−	EL		DESC
		968.41				
			5.78	962.63		T.P. 77
	4.72	967.41				
			5.92	961.49		T.P. #76
	4.72	966.41				
			6.70	959.71		T.P. #66 M.C. H.D. B.C. IN. H.H
	6.23	965.94				
			6.43	959.51	E.C.-0.01	TRAY PT. #[illegible] EL= 959.52
				971.82		TRAY. PT. #82
	6.85	978.67				
			4.68	973.99		TRAY PT. #83 1/2" REBAR
	4.83	978.82				
			5.72	973.10		TRAY PT. #89 1/2" REBAR
	5.13	978.23				
			5.21	973.02		TRAY PT. #90 1/2" REBAR
	5.45	978.47				
			5.73	972.74		TRAY. PT. 91 1/2" Rebar
	6.02	978.76				
			5.73	973.03		T.P. #90
	5.71	978.74				
			5.63	973.11		T.P. #89
	6.10	979.21				
			5.22	973.99		T.P. #82
	3.95	977.94				

STA	+	HI	-	EL		DESC.
		977.94				
			6.10	971.84	E.C. +0.02	TRAV. PT# 82 EL = 971.82
				971.82		TRAV. PT# 82
	6.08	977.90				
			5.04	972.86		TRAV. PT. # 83 1/2 REBAR
	6.99	979.85				
			4.69	975.16		TRAV. PT# 84 1/2" REBAR
	6.55	981.71				
			4.66	977.05		TRAV. PT. #85 1/2" REBAR
	6.87	983.92				
			4.73	979.19		TRAV. PT. #86 1/2 REBAR
	4.87	984.06				
			7.01	977.05		T.P. # 85
	4.87	981.92				
			6.76	975.16		T.P. # 84
	4.55	979.71				
			6.85	972.86		T.P. # 83
	4.77	977.63				
			5.82	971.81	E.C. -0.01	TRAV. PT # 82 EL = 971.82

STA	+	HI	−	EL	DESC
				971.82	TRAV PT. #82
	5.02	976.84			
			5.78	971.06	TRAV. PT #93 1/2" REBAR
	5.31	976.37			
			6.17	970.20	TRAV. PT. #94 1/2 REBAR
	5.79	975.99			
			6.55	969.44	TRAV. PT. #95 1/2" REBAR
	5.68	975.12			
			7.44	967.68	TRAV. PT. #96 1/2" REBAR
	7.56	975.24			
			5.80	969.44	T.P. #95
	6.18	975.62			
			5.42	970.20	T.P. #94
	5.73	975.93			
			4.87	971.06	T.P. #93
	5.37	976.43			
			4.63	971.80	E.G.002 TRAV. PT. #82

N
BARGE CANAL
CONC
SIDEWALK
ESTIMATED
20' 19'
GARAGE
101
102
103
104
105
106
107
108

N
ESTRELLA PKWY
SPINAY
DIRT DITCH
36" CMP
BROADWAY
CLUB DRIVE

N
112" CMP
6" VERT CURB
CONC PIPE
CONC DITCH
ESTRELLA PKWY
DIRT RD

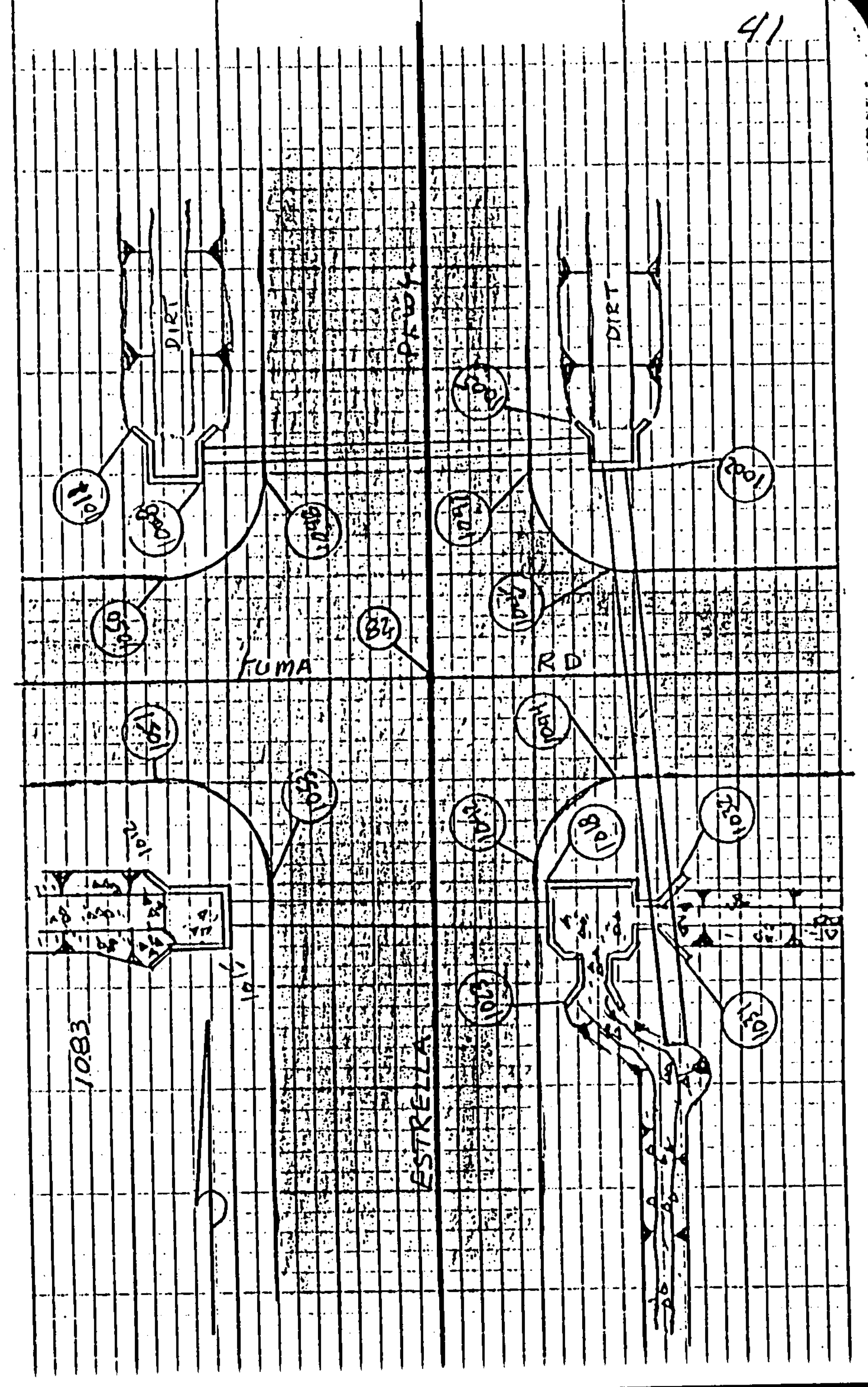
YUMA
RD
ESTRELLA
DIRT
DIRT
1083

RD
HOLDA
WELL
8" Pipe
18" Rcp
18" Rcp

N
LOWER BUCKEYE RD.
30" CONC. PIPE
CONC. PIPE

AZ
CAS
ESTRELLA PKWY
TRUCK
24" CMP
DIRT PARKING
HOUSE
2H2
2H3
2H4
2H5
2H6
2H7
2H8
2H9

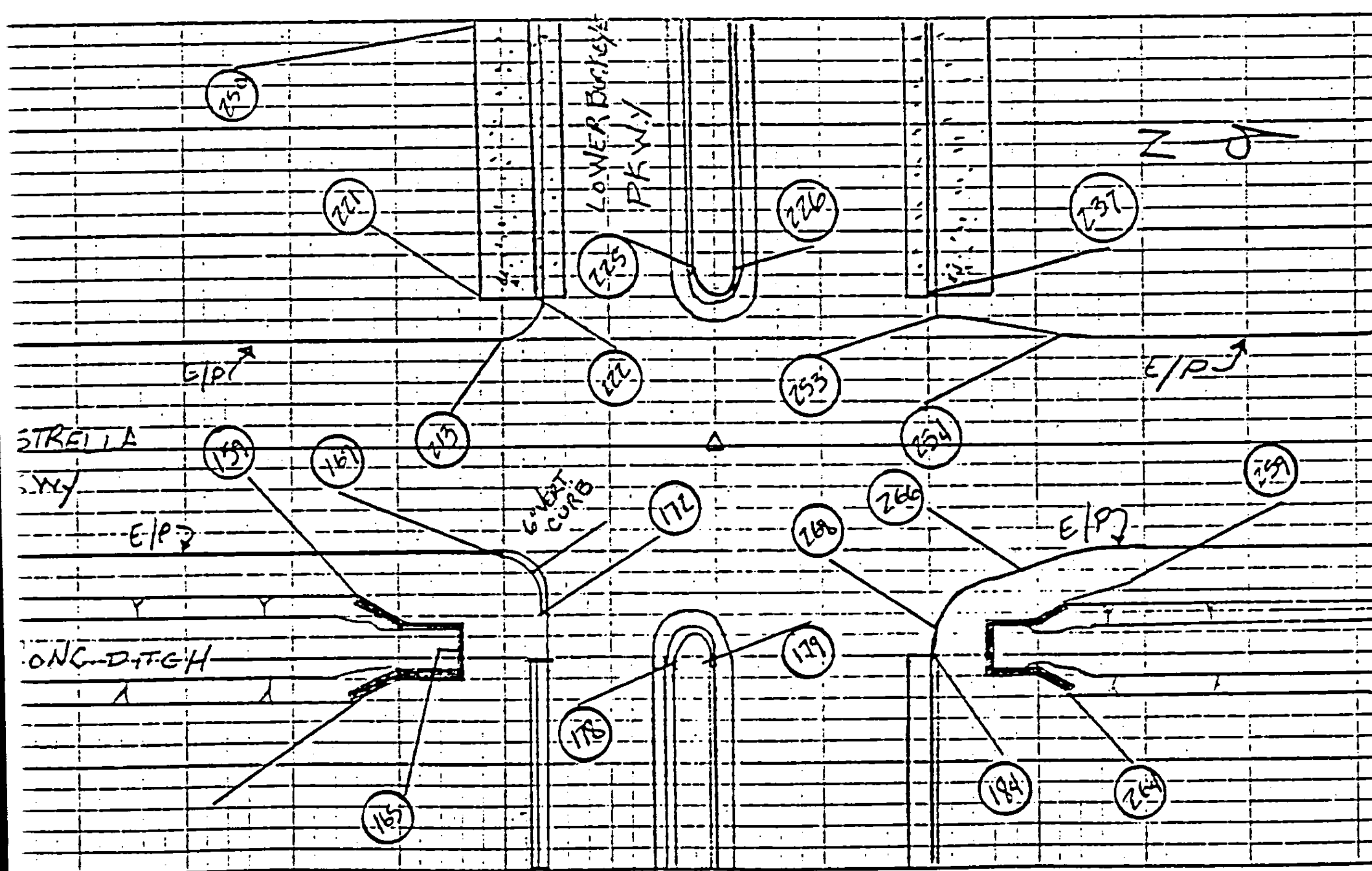
LOWER BUCKEYE PKWY
E/P
STRELLA
ONG DITCH
6" VERT. CURB
N
222
226
225
237
253
254
266
268
259
172
178
179
184
264
159
167
213
250
165

N
STRELLA PKWY
LONG DITCH
DIRT RD
CR 12
CR 13
CR 14
CR 15
CR 16
CR 17
CR 18
CR 19
CR 20
CR 21
CR 22
CR 23
CR 24
CR 25
CR 26
CR 27
CR 28
CR 29
CR 30
CR 31
CR 32
CR 33
CR 34
CR 35

N
CONC. DITCH
ESTRELLA
PKWY
PUMP
687
688
689
690
691
692
693
694
695
696
697
698
699

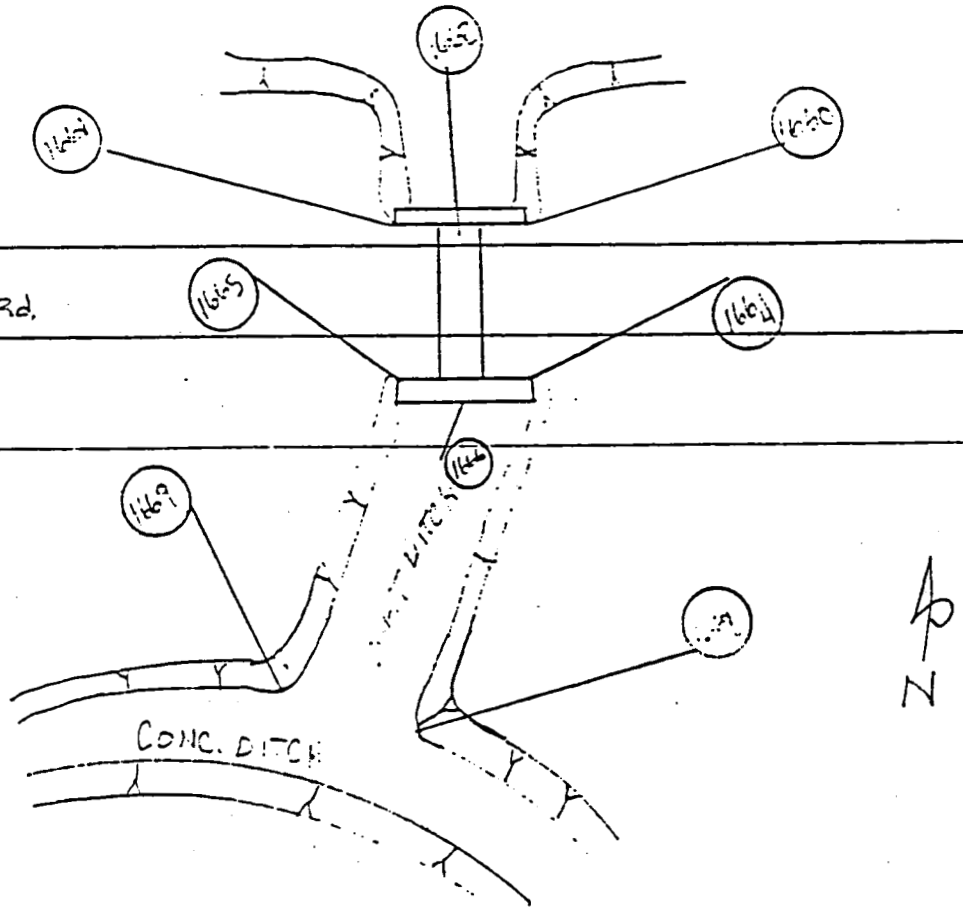
YUMA Rd.
CONC. DITCH
N

BROOKS HERSEY & ASSOCIATES, INC.
4602 East Elwood Street #16
PHOENIX, AZ 85040-1960
(602) 437-3733

JOB: ALUMINUM PLANT
SHEET NO. 1 OF 3
CALCULATED BY ______ DATE 7/98
CHECKED BY ______ DATE ______
SCALE N/A

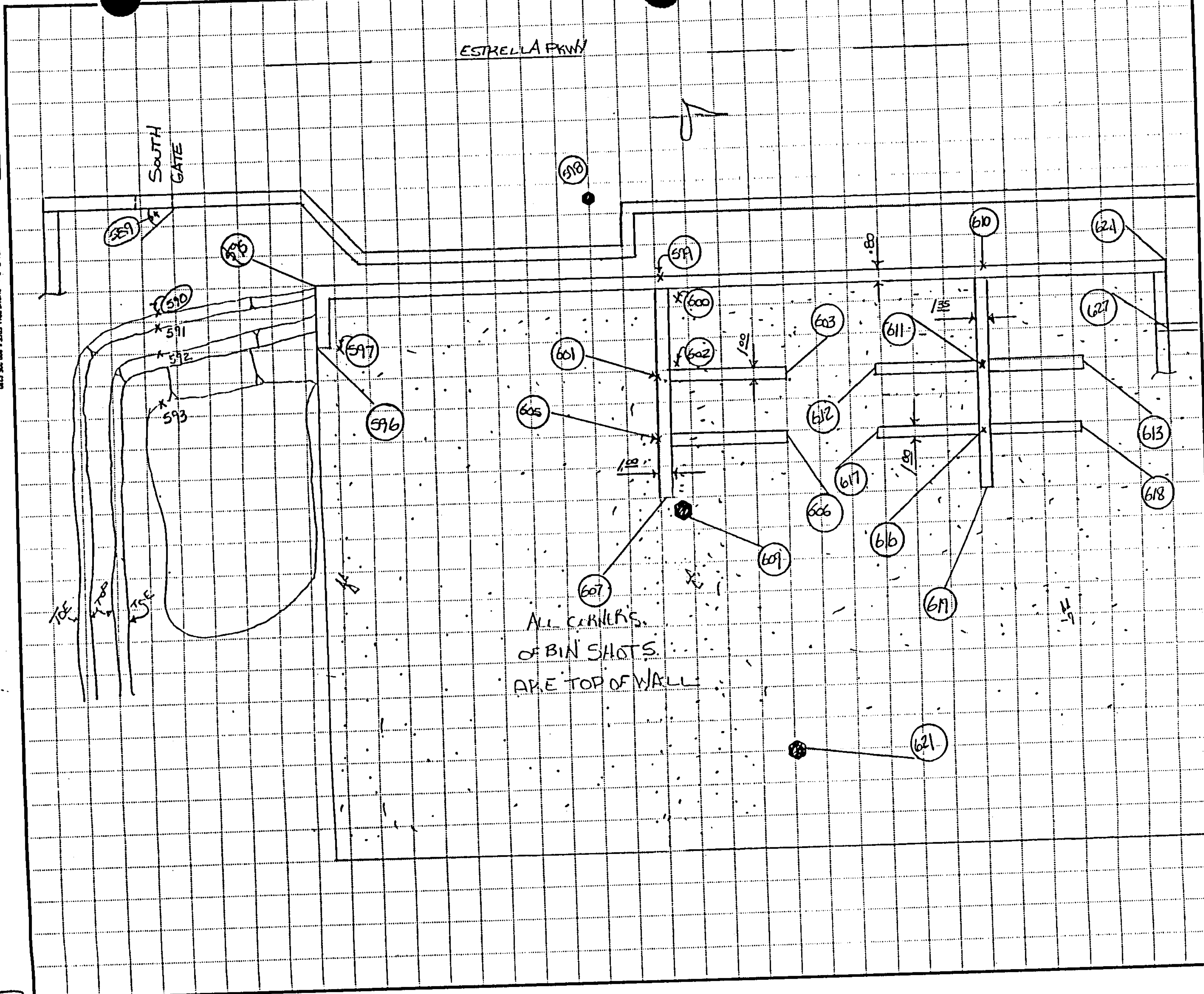

PRODUCT 204-1 (Single Sheets) 205-1 (Padded) NEBS Inc., Groton, Mass. 01471. To Order PHONE TOLL FREE 1-800-225-6380

BROOKS HERSEY & ASSOCIATES, INC.
4602 East Elwood Street #16
PHOENIX, AZ 85040-1960
(602) 437-3733

JOB: ALUMINUM PLANT
SHEET NO. 2 OF 3
CALCULATED BY: DATE 2/98
CHECKED BY: DATE
SCALE: N/A

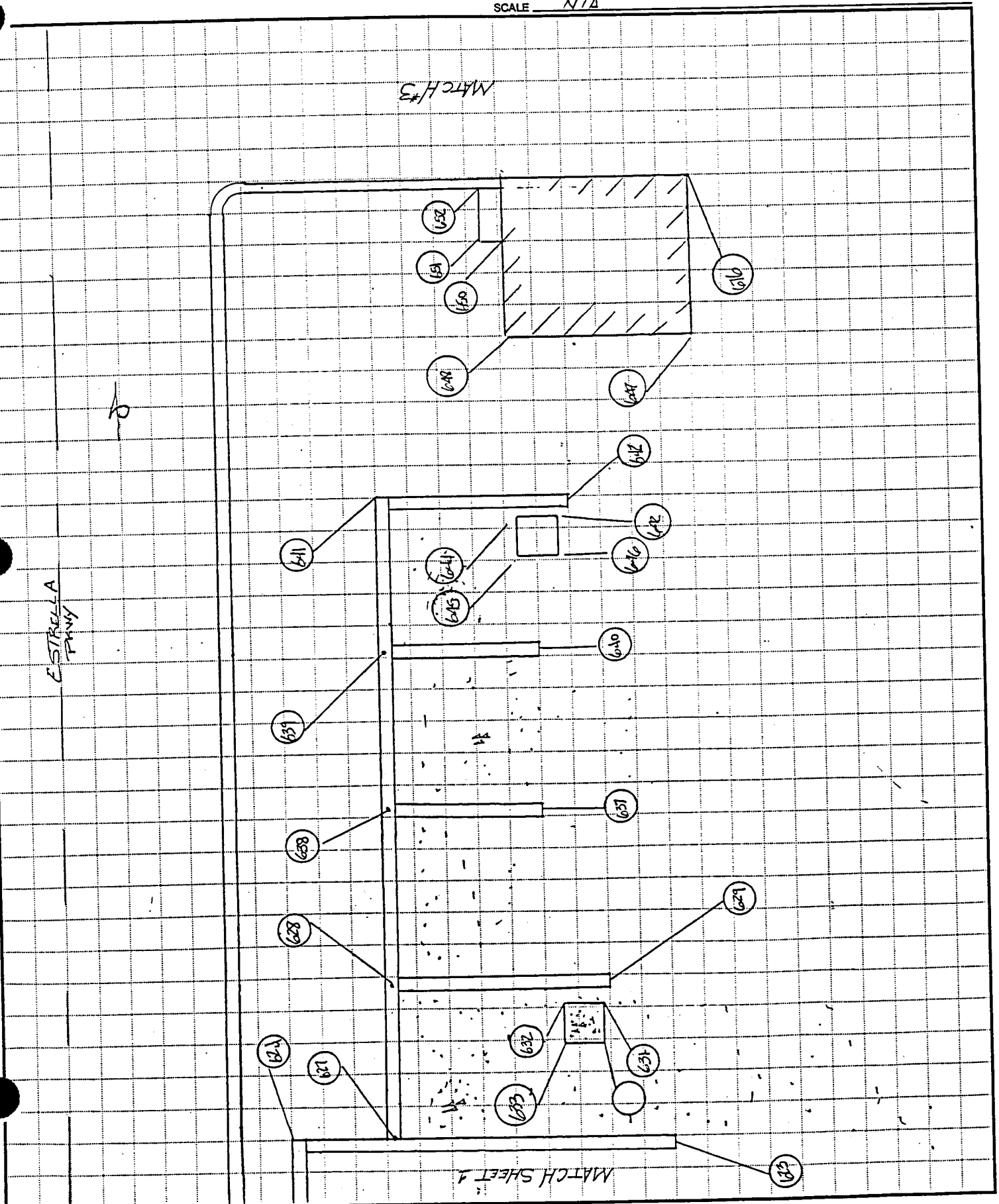

PRODUCT 204-1 (Single Sheets) 205-1 (Padded) NEBS Inc., Groton, Mass. 01471. To Order PHONE TOLL FREE 1-800-225-6380

BROOKS HERSEY & ASSOCIATES, INC.
4602 East Elwood Street #16
PHOENIX, AZ 85040-1960
(602) 437-3733

JOB: ALUMINIUM PLANT
SHEET NO. 3 OF 3
CALCULATED BY: DATE: 2/98
CHECKED BY: DATE:
SCALE: N/A

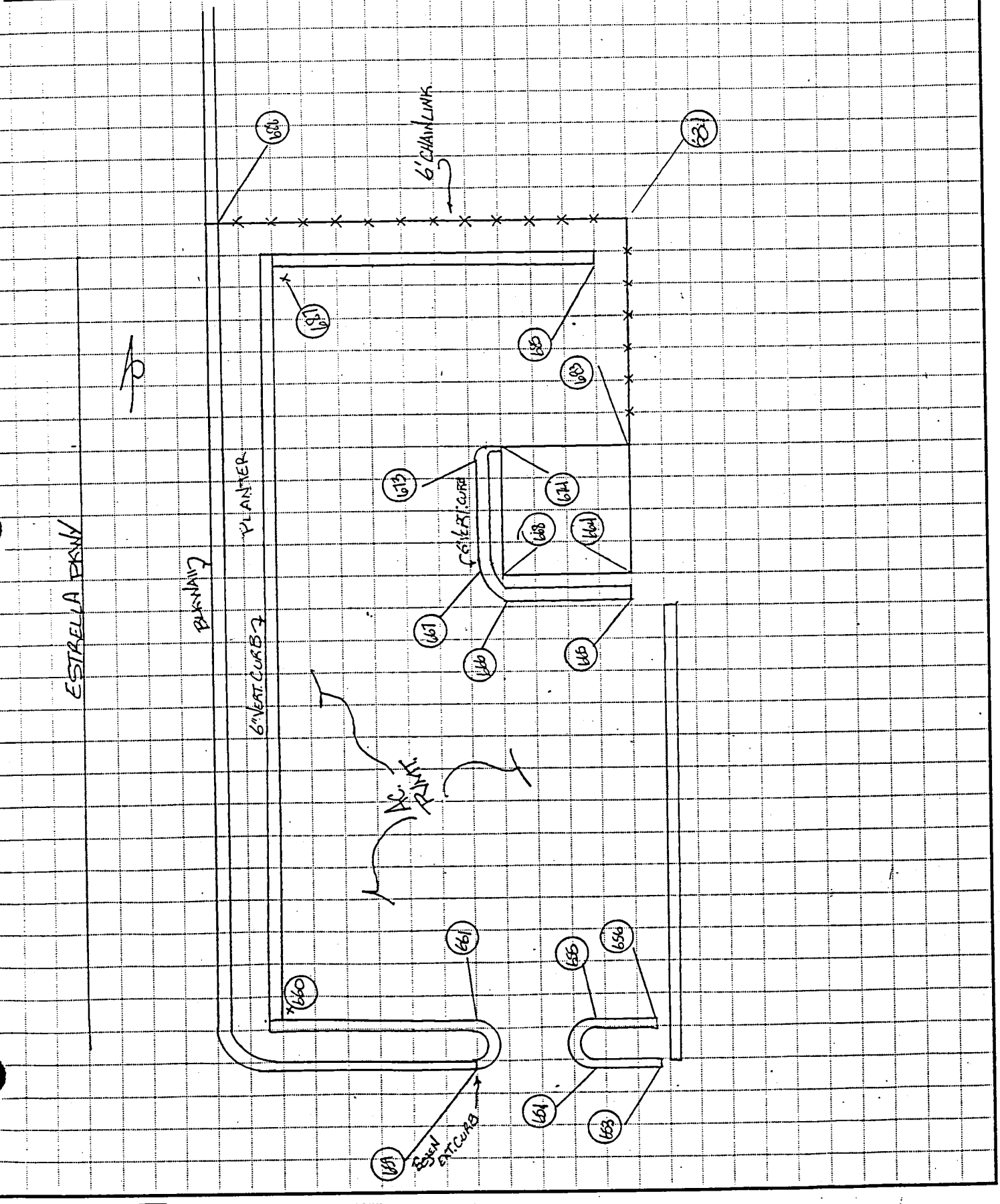

MATCH 2

BROOKS HERSEY & ASSOCIATES, INC.
4602 East Elwood Street #16
PHOENIX, AZ 85040-1960
(602) 437-3733

JOB BULLARD WASH 96'W Conc. Cap

SHEET NO. _____ OF _____

CALCULATED BY _____ DATE _____

CHECKED BY _____ DATE _____

SCALE _____

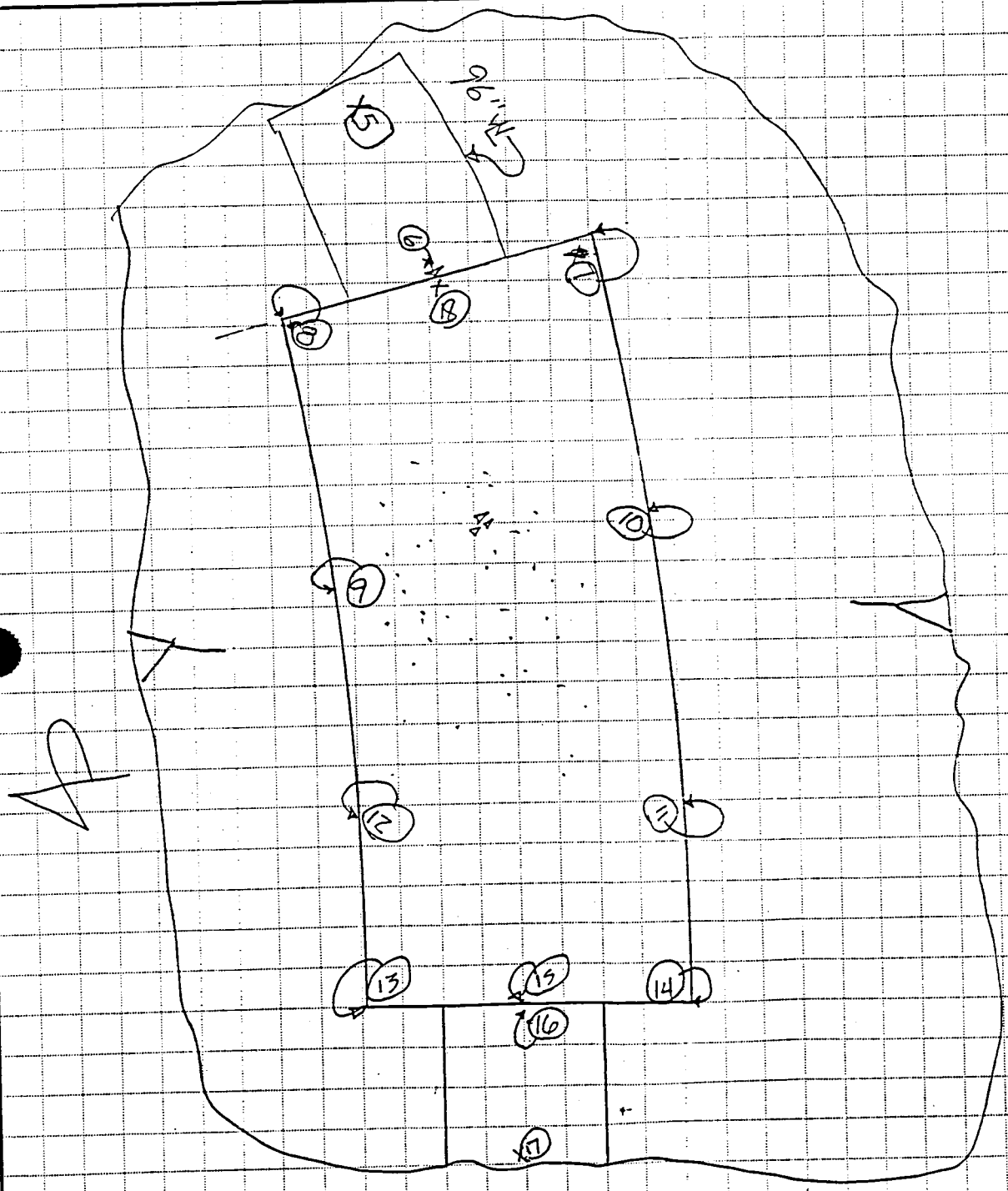

PRODUCT 204-1 (Single Sheets) 205-1 (Padded) NEBS Inc., Groton, Mass. 01471. To Order PHONE TOLL FREE 1-800-225-6380

96IN.CR5 03/09/98 11:09:57

Point	Northing	Easting	Elevation	Description
1	42,021.2704	46,115.2016	912.69	TRAV.PT.
2	41,682.6031	44,751.5885	913.30	TRAV PT 48
3	42,058.6105	44,753.8121	910.84	TRAV PT 6
4	41,697.9716	46,185.4312	914.08	PT 4 APS MH
5	41,695.1394	46,202.9419	905.57	C/L TOP 96 IN.
6	41,693.0923	46,216.2645	905.68	C/L TOP 96 IN.
7	41,699.0797	46,217.6286	906.95	COR TOP CONC
8	41,687.1239	46,216.0057	906.99	COR TOP CONC
9	41,680.2675	46,262.8796	906.99	EDGE TOP CONC
10	41,692.3682	46,264.0946	906.99	EDGE TOP CONC
11	41,688.9139	46,315.1071	906.97	EDGE TOP CONC
12	41,676.8062	46,315.4750	906.97	EDGE TOP CONC
13	41,679.1619	46,358.6712	906.99	COR TOP CONC
14	41,691.1743	46,357.6032	906.98	COR TOP CONC
15	41,685.0766	46,358.1268	906.97	C/L EDGE TOPCONC
16	41,685.5517	46,361.1461	905.56	C/L TOP 96 IN.
17	41,686.3678	46,367.8359	905.60	C/L TOP 96 IN.
18	41,693.0309	46,216.8572	906.97	C/L EDGE TOPCONC

Project: estrella

Mon Aug 25 14:31:13 1997

Current Coordinate Listing by Point Range

Point	Northing	Easting	Elevation	Description
71	39539.1543	45302.8714	899.36	PT 71 HOR/VERT
72	39747.3441	46583.1562	898.25	PT 72 HOR/VERT
73	42041.8587	45738.8805	911.59	HV 73 TX.SPIKE
74	43365.9531	46872.2633	916.25	HV 74 TX.SPIKE
75	44699.6767	46891.6464	919.72	HV 75 TX.SPIKE
76	44677.8661	45621.0194	917.82	HV 76 TX.SPIKE
77	46086.4278	46719.2400	924.20	PT 77 HOR/VERT
78	46626.7356	49172.7087	928.86	PT 78 HOR/VERT
79	47657.0172	48497.8131	932.73	PT 79 HOR/VERT
80	48099.0178	46908.9465	944.08	PT 80 HOR/VERT
81	48004.3336	45889.6459	942.79	PT 81 HOR/VERT
82	46890.7860	45790.7688	966.01	PT 82 HOR/VERT
83	46603.7328	46246.4881	937.40	PT 83 HOR/VERT
84	45420.7751	46292.5047	922.29	HV 84 TX.SPIKE
85	50653.8756	46451.3581	948.50	PT 85 HOR/VERT
86	50696.6653	47889.6153	952.36	PT 86 HOR/VERT
87	44126.2036	46289.4669	917.00	V 87 TX.SPIKE
88	41090.5856	46396.4015	910.37	PT 88 VERT
89	47465.1575	46296.6497	938.48	PT 89 VERT
90	48437.5931	46469.1263	942.76	PT 90 VERT
91	49069.4282	46968.1063	940.86	PT 91 VERT
92	50009.8024	47378.4325	948.18	PT 92 VERT
93	46812.7178	48221.1870	931.20	PT 93 VERT
94	46186.3760	47466.6780	926.65	PT 94 VERT

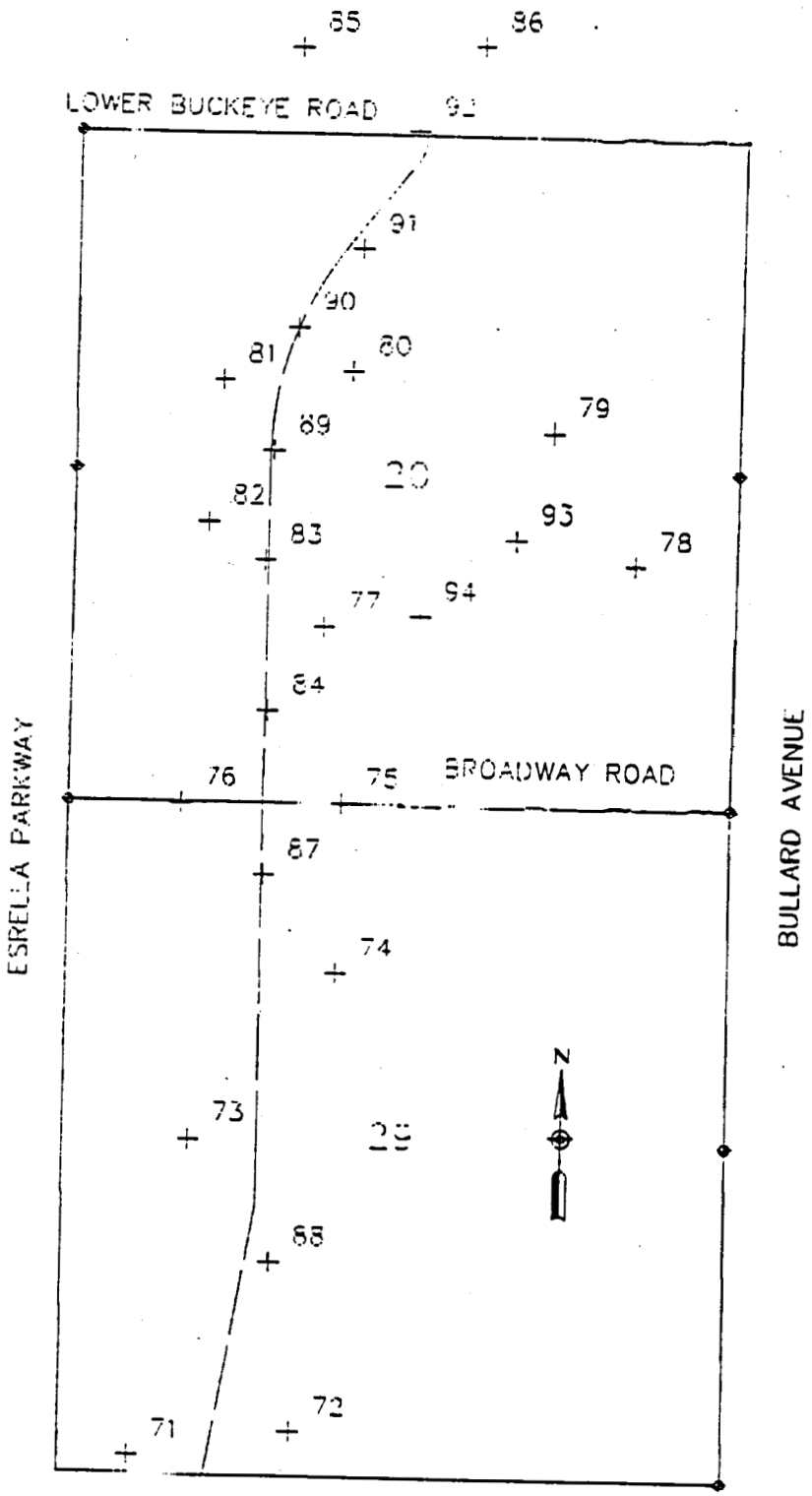

BROOKS, HERSEY & ASSOCIATES, INC.
ENGINEERS/SURVEYORS
4602 E. ELWOOD STREET, 16
Phoenix, Arizona 85040
Phone (602) 437-3733
Fax (602) 858-0204

3/25/97
FILE: \MCDOT\PROJECT\BUCKEYE WASH