Final Drainage Report

SR 51-Squaw Peak Highway

Contract No. 95-01
TRACS No. 051 MA 009 H 2059 01 C
RAM 600-2-514
Shea Boulevard to Thunderbird Road

August 7, 1995

REGISTERED PROFESSIONAL ENGINEER (CIVIL)
CERTIFICATE NO. 23663
DAVID J. SCHAUB
Date Signed 8/7/95
ARIZONA, U.S.A.

Prepared For

ARIZONA DEPARTMENT OF TRANSPORTATION

Property of
Flood Control District of MC Library
Please Return to
2801 W. Durango
Phoenix, AZ 85009

Prepared By

BRW

BRW, INC.

Table of Contents

REGISTERED PROFESSIONAL ENGINEER (CIVIL)
CERTIFICATE NO. 23663
DAVID J. SCHAUB
Date Signed 8-7-95
ARIZONA, U.S.A.

CHAPTER **PAGE**

1.0 INTRODUCTION 1
- 1.1 Purpose of Report 1

2.0 SITE DESCRIPTION 2
- 2.1 Project Location and Description 2
- 2.2 Topographic Features and Existing Drainage Features 4
- 2.3 Present Development 4
- 2.4 Future Development 4

3.0 DRAINAGE DESIGN DEVELOPMENT 5
- 3.1 Discussion 5
- 3.2 Drainage Design Developed by Michael Baker, Jr., Inc. 5
- 3.3 Drainage Design Developed by BRW, Inc. 5
- 3.4 Coordination with the City of Phoenix 6
- 3.5 Coordination with Adjacent Design Sections 6

4.0 ON-SITE DRAINAGE 8
- 4.1 Discussion 8
- 4.2 Facility Selection 8
- 4.3 Pavement and Embankment Drainage 9
- 4.4 Inlet/Catch Basin Spacing Design 9
- 4.5 Storm Sewer Design 10
- 4.6 Bridge Drainage 11
- 4.7 Cactus Road Pump Station 11

5.0 OFF-SITE DRAINAGE 12
- 5.1 Discussion 12
- 5.2 Hydrology 12
- 5.3 Linear Detention Channel 12
- 5.4 Indian Bend Wash 13
- 5.5 Thunderbird Detention Basin 14
- 5.6 Indian Bend Wash 36" Nuisance Flow Pipe 15
- 5.7 Sweetwater Channel 15
- 5.8 Emile Zola Channel 16
- 5.9 Existing Storm Drains, City of Phoenix 16

Table of Contents

CHAPTER		PAGE
6.0	REFERENCES	17

List of Figures

FIGURES		PAGE
1	Project Location Map	3

Appendix

A - Roadway and Linear Detention Channel Drainage System Plan
B - Roadway and Linear Detention Channel Typical Sections
C - Indian Bend Wash Drainage System Plan
D - Indian Bend Wash Typical Sections
E - On-Site Areas and Time of Concentration
F - Storm Sewer Inlet Calculations
G - Storm Sewer Hydraulic Calculations
H - Cactus Road Pump Station Hydrographs
I - HEC-2 Computer Model (100-Year), Indian Bend Wash
J - HEC-2 Computer Model (100-year), Sweetwater Channel
K - Emilie Zola Box Culvert Hydraulics
L - Hydraulic Charts
M - Rainfall Intensity Calculations

1.0 Introduction

1.1 PURPOSE OF REPORT

This final drainage report has been prepared as part of the final design for the Squaw Peak Highway, SR 51, Segment 4. The intent of this report is to document the assumptions and methodologies used to develop both the off-site and on-site hydrology and to design the hydraulic appurtenances for the project. Design criteria and data presented in this report have been established for use in the development of the final drainage system design.

2.0 Site Description

2.1 PROJECT LOCATION AND DESCRIPTION

The Squaw Peak Highway, SR 51, is located in Maricopa County, in the City of Phoenix as shown in Figure 1. This project will result in the construction of two miles of SR 51 from the nearly completed Section 3 just south of Shea Boulevard north to Thunderbird Road.

Completion of Section 3 will result in the south termini for this project as follows:

- SR 51 mainline paved to Station 206+00, approximately 1000 feet south of Shea Boulevard.
- Shea Boulevard Ramps A and B paved, but one catch basin missing on Ramp B, Station 7+67.
- Shea Boulevard Ramps C and D paved for approximately 275 feet north of the ramp termini.
- Shea Boulevard paved and the Shea Boulevard bridge completed.
- Shea Boulevard 78" storm drain from the west reconstructed to discharge through a 7'x5' concrete box culvert into the proposed linear detention channel along the west side of SR 51.

This segment of the Squaw Peak Highway will consist of six travel lanes, three in each direction, ten-foot outside shoulders, eight-foot median shoulders and a 46-foot median separating the two directions of travel. The future installation of HOV lanes will be designed into this project by using a 46-foot wide median and by constructing the bridges on the highway to handle four travel lanes in each direction. In a south to north direction, the highway profile will transition from a depressed to an elevated roadway between Cactus Road and Sweetwater Avenue. Bridges will be constructed over the highway at Cholla and Cactus, and highway bridges will be constructed over Sweetwater, Thunderbird Ramp B and Thunderbird Road. For drainage purposes, the shoulder slope will be 0.04'/ft within the depressed section and 0.02'/ft within the elevated section, and a 6-inch curb height will be maintained on the low side. The shoulder slope will transition to 0.02'/ft through the ramp tapers. Depictions of the roadway typical sections are contained in Appendix B.

Bridges and street approaches will be constructed to accommodate existing local street improvements. At the Cactus Road interchange, the street will consist of three travel lanes and two left turn lanes in each direction, and at the Thunderbird Road interchange, the street will consist of two travel lanes in each direction and two westbound left turn lanes. Cholla and Sweetwater will accommodate two-way traffic, one travel lane and a parking lane in each direction. Furthermore, outside bike lanes will be marked on both Sweetwater Avenue and Thunderbird Road.

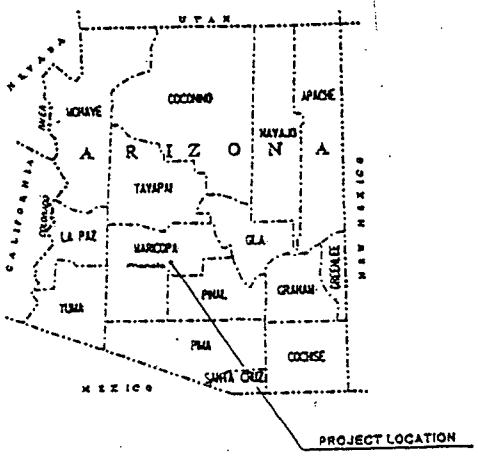

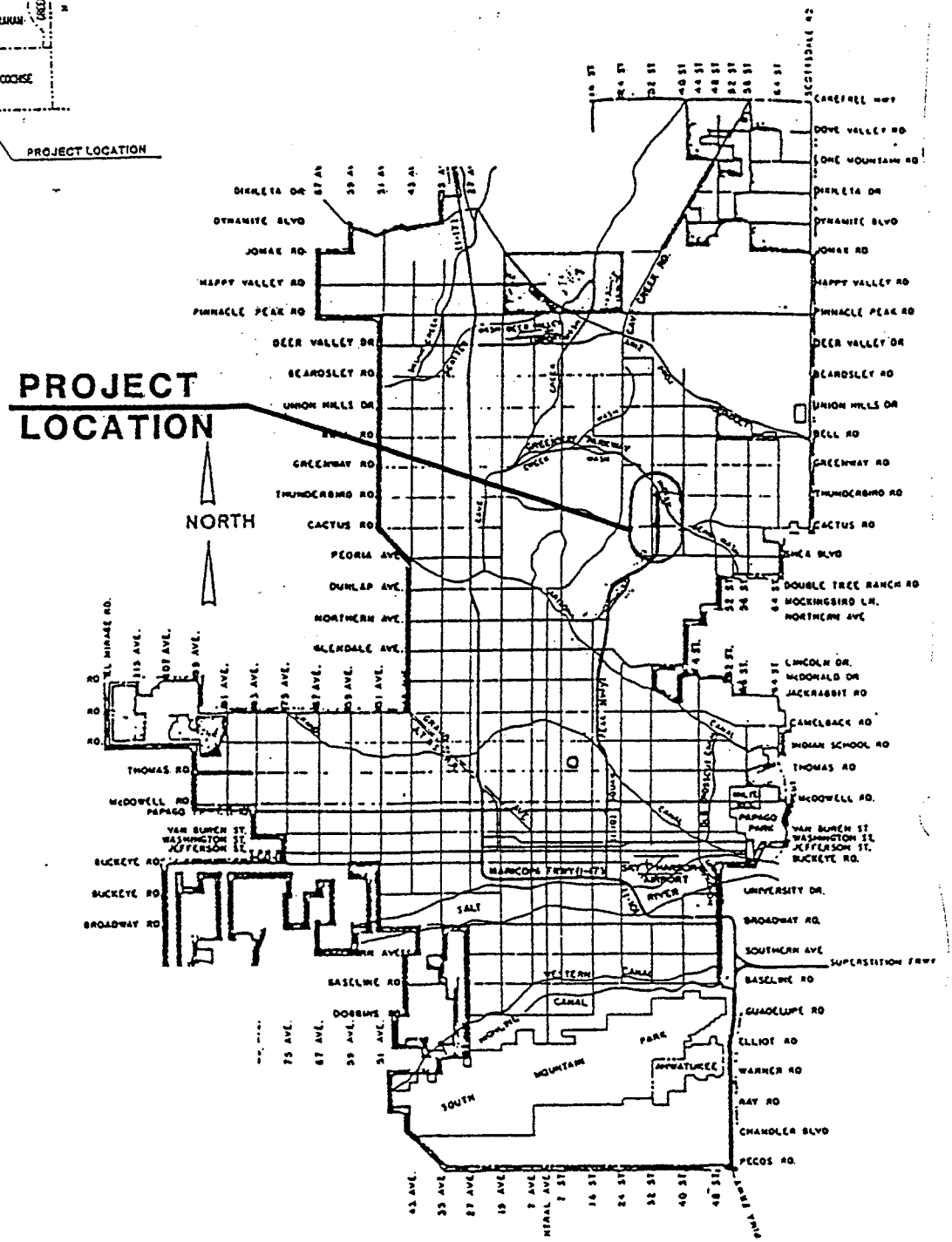

SR 51 - Squaw Peak Highway

Project Location

Figure 1

2.2 TOPOGRAPHIC FEATURES AND EXISTING DRAINAGE FEATURES

The proposed project crosses the Indian Bend Watershed near its western divide, which is located within the mountains at an approximate distance of two miles to the west. Off-site runoff currently flows within east-west streets, City of Phoenix storm drains, and as overland flow easterly across the proposed Squaw Peak Highway alignment and into the Indian Bend Wash. Indian Bend Wash flows southeasterly across the Squaw Peak Highway at Thunderbird Road towards the City of Scottsdale and eventually discharges into the Salt River.

The land slopes across the highway alignment in a northeasterly to easterly direction at a rate of 0.0067 feet per foot. Along the highway alignment in a south to north direction the land drops from about 1420 feet MSL to 1405 feet MSL.

City of Phoenix major storm drains currently flow easterly across the highway alignment within Shea Boulevard, Cactus Road, Sweetwater Avenue, and Thunderbird Road. Both Shea Boulevard and Cactus Road have 78-inch storm drains, and both Sweetwater Avenue and Thunderbird Road have 60-inch storm drains.

2.3 PRESENT DEVELOPMENT

Except for the steeper slopes on the mountains to the west and scattered small vacant land parcels, the majority of the watershed affecting this project has been developed with residential housing. Strip commercial development has occurred along some of the major streets, such as 32nd Street.

2.4 FUTURE DEVELOPMENT

The remaining small vacant land parcels will be developed in the near future, but they should not significantly affect the existing runoff characteristics.

3.0 Drainage Design Development

3.1 DISCUSSION

Development of the drainage design for this project required the review and evaluation of preliminary drainage designs performed by Michael Baker, Jr., Inc. for the Squaw Peak Highway. In addition, the drainage designs developed by Entranco Engineers Inc. for the Section 3 project to the south were evaluated for coordination with this project. Further discussions on the drainage design for this project are contained in this Section under the headings of Drainage Design Developed by Michael Baker, Jr., Inc.; Drainage Design Developed by BRW, Inc.; Coordination with the City of Phoenix; and Coordination with Adjacent Design Sections.

3.2 DRAINAGE DESIGN DEVELOPED BY MICHAEL BAKER, JR., INC

Michael Baker, Jr., Inc. has developed the off-site hydrology and completed preliminary designs for both the off-site drainage system and the on-site storm drainage system. Drainage designs completed by Michael Baker, Jr., Inc. are contained in documents as follows:

- Preliminary Plans: Squaw Peak Highway, Shea Boulevard to Thunderbird Road, RAM-600-2-514, 051 1 MA 009, February 1994.
- Off-Site Hydrology Report: "Final Hydrology Report, Squaw Peak Highway," Contract 87-40, November 1988.
- Drainage Study: "Section 4 Drainage Study, Squaw Peak Highway," Contract 87-40, January 1991.
- Drainage Report: "Concept Drainage Report, Squaw Peak Highway Section 4," April 5, 1993.

The major off-site hydrology contained in these reports was used for the design of the off-site drainage facilities.

3.3 DRAINAGE DESIGN DEVELOPED BY BRW, INC.

The general overall preliminary drainage concept will be maintained in the BRW final drainage design for construction documents. Based on the layout of existing streets and the flow paths, BRW has determined locations for the off-site inlet facilities along the west side of the highway. BRW still needs to perform the local hydrology necessary to determine the size of these off-site inlet facilities.

BRW performed the on-site hydrology necessary to determine the location and size of inlet facilities for the roadway runoff. Drainage systems designed include the SR 51 storm drain system, the Cactus Road Pump Station, the linear detention channel along the west side of SR 51, the Sweetwater Avenue drainage channel, the Emile Zola drainage channel, and the Indian Bend Wash channel including box culverts from Thunderbird Road southeasterly to 40th Street.

3.4 COORDINATION WITH THE CITY OF PHOENIX

Coordination with the City of Phoenix is occurring on the following facilities:

- Linear Detention Channel, Shea Boulevard to Sweetwater Avenue.
- Sweetwater Avenue Channel including box culverts.
- 84-inch storm drain siphon at Cactus Road (existing storm drain is 78-inches).
- Indian Bend Wash, 40th Street to Thunderbird Road.
- 36-inch nuisance flow pipe within Indian Bend Wash, Sweetwater Avenue to Thunderbird Road
- Emile Zola concrete box culvert.

3.5 COORDINATION WITH ADJACENT DESIGN SECTIONS

Drainage design for Section 4 of the Squaw Peak Highway will require coordination with the consultants on two adjacent design segments. These consultants and their respective design sections are:

Consultant	Design Section	Description
Entranco Engineers, Inc.	3	SR51, Northern Avenue to Shea Boulevard
HDR, Inc.	5	SR 51, Thunderbird Road to Bell Road

Section 3 - Entranco Engineers, Inc.: SR 51 south of Shea Boulevard including Shea Ramps A and B are currently under construction and will be completed in the near future. Shea Boulevard and the Shea Bridge has recently been let to contract and is now under construction. Coordination has already begun with Entranco regarding interface requirements at Shea Boulevard. Drainage facilities that interface with the Section 4 project are:

- SR 51 on-site runoff drains north through a 48-inch storm drain into a temporary retention basin located just south of Shea Boulevard within the future SR 51 roadway. The Section 4 project will extend this storm drain north to the Cactus Road Pump Station.

- A Ramp B catch basin and some SR 51 catch basins will need to be installed south of Shea Boulevard with the Section 4 project.

- Shea Boulevard 78" storm drain from the west reconstructed to discharge through a 7'x5' concrete box culvert into a temporary detention facility located just north of Shea Boulevard within the future SR 51 roadway. Temporary drainage of the detention facility consists of a 36"/48" outfall pipe to the Shea Boulevard existing 78" storm drain east of SR 51. Runoffs exceeding the capacity of the outfall pipe

will discharge to the north through a concrete lined spillway. The Section 4 project will remove the temporary facilities and drain the 7'x5' box culvert outflow into a linear detention channel, which will be constructed along the west side of SR 51 from Shea Boulevard to Sweetwater Avenue.

Section 5 - HDR, Inc.: Indian Bend Wash crosses Thunderbird Road and SR 51 at the interface between the Section 4 and Section 5 projects. BRW proposes a long box culvert under both Thunderbird Road and SR 51. North of Thunderbird Road, the box culvert will split into two separate boxes, a four barrel box will cross under SR 51 to capture runoff within Indian Bend Wash and a one barrel box will remain on the east side for extension to the north with the Section 5 project. Coordination on the design and placement of this facility has begun with HDR. HDR is currently restudying the HEC-1 hydrologic model for the drainage basins north of Thunderbird Road. It is anticipated that the modelled peak runoffs at Thunderbird will decrease resulting in smaller culvert sizes at Thunderbird Road as well as downstream within Indian Bend Wash at Sweetwater Avenue and at 36th Street.

4.0 On-Site Drainage

4.1 DISCUSSION

The on-site drainage system shown on the drainage plans contained in Appendix A will drain all areas within the highway right-of-way to the appropriate off-site drainage facility. This system is comprised of pavement catch basins that will maintain storm water encroachment on the roadway below acceptable limits. The majority of the on-site drainage will be drained by a storm drain system to the Cactus Road Pump Station, which will pump the runoff into an off-site linear detention channel located parallel and west of SR 51. Where SR 51 is in a fill section, embankment down-drains will be installed to drain directly into off-site drainage channels.

SR 51 will be Initially constructed with a 46-foot depressed median, which will be drained with median drains at intervals of approximately 1000 feet. The future construction of HOV lanes will result in completely paving the median area. The additional inside paved area will slope toward the outside of the roadway increasing the drainage area and the peak runoffs to the outside catch basins. Therefore, the outside catch basins were sized to capture the future runoff peaks that will be produced by an impervious median.

4.2 FACILITY SELECTION

Preliminary evaluations reveal that runoff from the pavements of SR 51, the Shea Boulevard Ramps, the Cactus Road Ramps, and a portion of the Thunderbird Road Ramps as well as runoff from the cut slopes for SR 51 will flow to a SR 51 low point near Cactus Road. Near that point a pump station will pump the water to an off-site drainage channel called the "Linear Detention Channel". Storm water interception for this storm drain system will be accomplished with freeway type catch basins, such as grate and slotted drain combination for both rolled curb and gutter and half barrier sections, and with grate catch basins in the median and other locations as necessary. Slotted drain lengths will be selected in 2-foot increments. Curb-opening catch basins will not be allowed to drain to the pump station.

The selected catch basins are:

- ADOT Catch Basin Type 4, Drawing C-15.30
- ADOT Catch Basin Type 4, Drawing C-15.80
- ADOT Catch Basin Type 4, Drawing C-15.91
- ADOT Catch Basin Type 4, Drawing C-15.92

Along city streets, grate catch basins will be used for storm drains that connect to the SR 51 storm drain and curb-opening catch basins will be used for connections to local storm drains. Every effort has been made to keep the local street drainage out of the SR 51 storm drain system.

The selected catch basins are:

- ADOT Catch Basin Type 3, Drawing C-15.20
- ADOT Catch Basin Type 4, Drawing C-15.30

4.3 PAVEMENT AND EMBANKMENT DRAINAGE

The rational method was employed to determine the peak runoffs from pavement and embankment areas. Parameters used were:

Design storm	-	10 years and 50 years
Time of concentration	-	10 minutes
Rainfall intensity (10 yr.)	-	4.56 inches/hr. max.
Rainfall intensity (50 yr.)	-	6.18 inches/hr. max.
Runoff Coefficients	-	Paved areas = 0.95, unpaved area = 0.70

4.4 INLET/CATCH BASIN SPACING DESIGN

Catch basin spacing and pavement spread calculations were determined by employing the Hydraulic Engineering Circular No. 12, *Drainage of Highway Pavements,* FHWA, March 1984. The actual calculations were completed by a computer program obtained from McTrans Center for Microcomputers in Transportation, University of Florida, Gainesville, Florida. Design parameters used to design and locate the catch basins are:

- Allowable Pavement Flooding

  Allowable ponding depth should not exceed the height of the curb for the 10-year runoff.

  10-Year Runoff: One-half of the right travel lane encroachment and no left travel lane encroachment for roadways with more than one lane in each direction. No lane encroachment for one-lane roadways.

  50-Year Runoff: One full right travel lane encroachment and no left travel lane encroachment for roadways with more than one lane in each direction. No lane encroachment for one-lane roadways.

  Local Roadways: Replace the existing drainage system in kind using the local government design criteria except that in a sump situation, the above design runoff and allowable spread criteria should control. If bypass flow would drain into the depressed SR 51, then the a local street system shall be sized to capture the 50-year runoff event.

  A depressed roadway is any roadway whose ultimate ponded depth (assuming no outflow at the sag) is 29 inches or more.

- Catch Basin Capture Ratios

Type	Inlet Capture Ratio	
	Sump	On-Grade
Curb-opening	80	80
Grate inlets	50	50
Slotted drain	50	67
Slotted drain/Grate inlets	50/50	50/67

- Grates

  Catch basin grates on local streets, cross roads and ramp termini will be bicycle and motorcycle safe.

- Curb-Opening Catch Basins

  Curb-opening catch basins will not be drained to the Cactus Road Pump Station.

The selected locations for the new catch basins were based on roadway profiles, catch basin spacing required to maintain water spread on the pavement below maximum allowable, near superelevation crossover points to minimize sheet flow across the pavement, at gore ends to prevent storm water runoff from flowing out and across the main line or ramp pavements, and at the low point in sag areas.

Catch basin sizes were based on a 10-year storm event for non-depressed roadways and the 50-year storm event for depressed roadways. SR 51 catch basins on both the elevated and depressed sections were sized to capture the 50-year runoff event. Since bypass flow within the elevated section would drain into the depressed section, its drainage system also needed to be sized for the 50-year runoff event.

4.5 STORM SEWER DESIGN

Storm sewer pipe sizes and the hydraulic grade line were determined with a computer program. STORMCAD FOR WINDOWS is a computer program that designs and analyzes any new and existing storm sewer system for non-uniform flow, and the hydraulic grade line (HGL). STORMCAD FOR WINDOWS is a registered trademark of Haestad Methods, Inc., 37 Brookside Road, Waterbury, Connecticut, 06708. The storm sewer design was based on the criteria contained in ADOT's Draft Roadway Design Guidelines Manual dated May 11, 1994. These are:

- Minimum Velocity

  Desirable - 3 fps flowing full
  Absolute - 2 fps flowing full

- Minimum Pipe Size

  Trunk Lines - 24 inches
  Laterals - 24 inches, except 18" where conflicts preclude the use of 24 inch pipe

- Pipe Material and Roughness

  Pipe material was selected based on the requirements of Section 607.5, ADOT'S Draft Roadway Design Guidelines Manual, May 11, 1994. Manning's "n" values used for the selected pipe materials are:

Pipe Material	Manning's "n"
Concrete Pipe	0.012
Cast-in-Place Concrete	0.014
Plastic Pipe, Smooth	0.012
Plastic Pipe, Corrugated	0.022

- Pipe Size Design

  Pipe size selection will be based on full flow with a 10-year storm event for non-depressed roadways and full flow with the 50-year storm event for depressed roadways. The hydraulic grade line will be set 1-foot below the top of grate for the selected design storm frequency.

4.6 BRIDGE DRAINAGE

Catch basins will not be installed in the bridge decks to reduce roadway maintenance problems. Instead, catch basins will be installed in the roadway just off the bridge ends. Since the mainline roadway will have curb and gutter and some of the bridges were rather short, it was not necessary to install catch basins at the very end of all bridges.

4.7 CACTUS ROAD PUMP STATION

From 2000 feet south of 32nd Street to 1000 feet north of Cactus Road, a storm drain trunk will capture on-site runoff and convey it to a pump station to be located 1100 feet south of Cactus Road. Approximately 11,000 linear feet of the highway on-site drainage will be pumped by the Cactus Road Pump Station into the linear detention channel along the west side of the highway.

The pumps will be sized to handle the 50-year, 24-hour runoff event. The runoff hydrograph for the Cactus Road Pump Station, developed using the HEC-1 model, has a peak flow rate of 284.6 cfs and an approximate runoff volume of 18 acre-feet. Hydrographs for the 2-year, 24-hour and 50-year, 24-hour runoff events are contained in Appendix H.

The design of the pump station is contained in a separate design document prepared by Aztec Engineering entitled, "Engineering Design Memorandum, Cactus Road Storm Water Pump Station, SR 51-Squaw Peak Highway," and dated August 7, 1995.

5.0 Off-Site Drainage

5.1 DISCUSSION

Designing the off-site drainage facilities will require coordination with HDR, Inc., who has the Squaw Peak Section 5 to the north of this project, and with the City of Phoenix for changes to their existing drainage facilities that will be severed by the alignment. Off-site runoff from the west will be collected along the west side of SR 51 by a linear detention channel located between Shea Boulevard and Sweetwater Avenue and by a smaller drainage channel located between Sweetwater Avenue and Thunderbird Road.

Off-site runoff will be conveyed across the highway at five locations; an 84-inch siphon in Cactus Road, a box culvert along the north side of Sweetwater Avenue, a box culvert along the Emile Zola alignment, an existing 60-inch storm drain in Thunderbird Road, and a box culvert under both Thunderbird Road and SR 51 to the north of Thunderbird Road. All of these crossings, except the 84-inch Cactus Road Siphon, will be constructed to directly discharge into Indian Bend Wash. The existing 78-inch pipe within Cactus Road, energy losses require an 84-inch siphon, already discharges into Indian Bend Wash just south of 40th Street. In order to daylight these discharge points, the Indian Bend Wash gradient will need to be lowered from Thunderbird Road downstream to the 40th Street low flow crossing.

5.2 HYDROLOGY

The off-site hydrology for both Indian Bend Wash and the linear detention channel were developed and published by Michael Baker, Jr., Inc. in a drainage report entitled "Concept Drainage Report, Squaw Peak Highway Section 4," April 5, 1993. The 100-year runoff peaks are listed with the Hec-2 Model in Appendix I for the Indian Bend Wash channel and the discharge of the linear detention channel is listed with the HEC-2 Model in Appendix J for the Sweetwater Channel.

5.3 LINEAR DETENTION CHANNEL

The linear detention channel, to be located along the west side of the Squaw Peak Highway between Shea Boulevard and Sweetwater Avenue, will consist of five storage basins created by four check dams and the Sweetwater Avenue box culvert. These storage basins and check dams are designed to mitigate the off-site peak runoffs before they reach Indian Bend Wash. To allow maintenance vehicles access to the channel as well as unimpeded travel along the channel, all check dams and drops were designed with 10:1 maximum slopes along the channel alignment.

The design of the linear detention channel was developed with a HEC-1 model. Since BRW changed the configuration of the linear detention channel while maintaining the same or greater storage volume, the original preliminary design will still function. In fact initial HEC-1 model runs with revised stage-storage curves show little to no change in peak discharges. Due to possible further changes in the linear detention channel system, the HEC-1 model has not been finalized for this report. Preliminary investigations indicate that it may be possible to lower the dike located just south of the Larkspur Drive. This would allow installing smaller low flow pipes, which in turn would allow installing a gravity

flow sanitary sewer through the dike instead of a siphon. The modified HEC-1 model will be included in an addendum to this drainage report.

The linear detention channel including check dams and box culverts is shown on the plans contained in Appendix A. Check dams consisting of spillway structures and low flow pipes will be located south of the Desert Cove Avenue Alignment, south of Cholla Street, south of Cactus Road, and south of Larkspur Drive alignment. Check dams will be 14-foot high with two 24-inch outlet pipes south of Desert Cove, 10-foot high with two 24-inch outlet pipes south of Cholla Street, 9-foot high with four 36-inch outlet pipes south of Cactus Road, and 9.5-foot high with eight 48-inch outlet pipes south of Larkspur Drive.

5.4 INDIAN BEND WASH

As previously stated, five culverts under SR 51 will discharge off-site flows into Indian Bend Wash. The required discharge profiles for these culvert make it necessary to reconstruct Indian Bend Wash to a lower profile from 40th Street north to the crossing at Thunderbird Road. These proposed channel changes will result in containing the 100-year floodplain within the Indian Bend Wash open space corridor.

The drainage system recommended by the "Concept Drainage Report, Squaw Peak Highway-Section 4" has been slightly modified. Instead of splitting the off-site wash flow north of Thunderbird into 1/3 for a box along the west side of SR 51 and 2/3's for a box along the east side of SR 51, the west box has been eliminated and all flow will be conveyed by a larger box along the east side. This reduces the need for a large channel along the west side of SR 51 and it also reduces the required box culvert size along the Emile Zola alignment. From 40th Street to north of Thunderbird Road, proposed Indian Bend Wash improvements are as follows:

- 40th Street to 36th Street: Install a naturally grassed channel that consists of a low-flow trapezoidal channel and a high-flow "bench" excavation along the north side of the wash corridor. The low-flow channel will have a bottom width of 40 feet, 4:1 side slopes and a minimum depth of 3 feet. A variable bottom width and 8:1 side slope will comprise the bench excavation. As the channel approaches the 36th Street crossing, the low flow channel bottom will widen to 78 feet in order to match the proposed box culvert opening.
- 36th Street Crossing: The current low flow crossing will be replaced with a 6 barrel 12'x8'x66' concrete box culvert in order to lower the Indian bend Wash channel profile.
- 35th Street Crossing: The street will be closed to the public and reconstructed as a driveway for access from Sweetwater Avenue to the City of Phoenix Water Maintenance office located north of the wash. It will be reconstructed as a low flow crossing with a paved surface. This driveway is necessary to eliminate the need for daily access from the north, which would result in maintenance vehicles driving through residential neighborhoods.

4253

4253 • 36th Street to Sweetwater Avenue: A trapezoidal flow channel without an overbank bench area will be constructed with a bottom width that varies from 78 feet at the upstream face of the 36th Street box culvert to 166 feet at the confluence with the Sweetwater Avenue Channel to 54 feet at the downstream face of the existing Sweetwater Avenue box culvert. Because of the high velocities within this area, it is recommended that the channel be concrete lined or hardened with 1-foot thick soil cement

4648 • Sweetwater Avenue Crossing: The existing 4 barrel 10'x8'x72' concrete box culvert is half filled with soil to provide cover for the existing 36" nuisance flow storm drain that passes through one of its barrels and to match the existing channel grade. To increase the capacity of this box, it will be cleaned out, the channel flow line will be excavated to the box culvert flow line and the 36" pipe will be relocated. Furthermore, a 10'x8' barrel will be added to the west side of the existing box to eliminate the need for the Thunderbird Road detention basin.

• Sweetwater Avenue to the Emile Zola Channel Confluence: Install a naturally grassed channel that consists of a trapezoidal channel with a bottom width of 50 feet, 4:1 side slopes and a slightly raised embankment on both sides of the channel to minimize flooding risk to properties along both the east and west side of Indian Bend Wash. This embankment needs to be a minimum of 1-foot above the 100-year water surface elevation, which will result in the construction of a berm just upstream of the Sweetwater box culvert. The top of berm will have an elevation of 1397.8, which is approximately 1.3 feet above the centerline elevation of Sweetwater Avenue. The berm will tie into the concrete box parapet, which has an elevation of 1398.8.

The embankments need to be of sufficient height to prevent the flows proceeding along Indian Bend Wash from leaving the channel upstream of Sweetwater Avenue.

6200 • Emile Zola Channel Confluence to Thunderbird Road: Install a naturally grassed channel that consists of a trapezoidal channel with a bottom width of 50 feet and side slopes of 4:1.

7546 • Thunderbird Road/SR 51 Crossing: Install a 5 barrel concrete box culvert under Thunderbird with four barrels crossing under SR 51 to the west side of SR 51 and one barrel continuing up the east side of SR 51. The four western barrels will be 12'x6' and the single eastern barrel will be 10'x6'. The Thunderbird box culvert including the single 10'x6' will be completely constructed under Thunderbird Road with this project. Then the Section 5 design consultant will extend the single 10'x6' box culvert north within their project without disrupting Thunderbird Road traffic.

5.5 THUNDERBIRD DETENTION BASIN

The Initial Drainage Report stated that a detention basin with 10.3 acre-feet of storage would be installed just south of Thunderbird Road and east of the Indian Bend Wash channel. Subsequent evaluations discussed at a 26 June 1995 ADOT/COP coordination meeting resulted in the decision to eliminate the proposed detention basin. The meeting results are summarized as follows:

- The proposed detention basin would cost $550,000 while an additional barrel at the Sweetwater culvert would cost $50,000 and produce lower upstream water surface elevations. Therefore, it was concluded that the detention basin would be eliminated and a barrel added to the Sweetwater culvert.

- The proposed detention basin would lower the 100-year peak runoff from 2794 cfs to 2414 cfs, a 13.6 percent decrease, which would result in an approximate 0.5 feet drop in water surface elevation between Sweetwater Avenue and Thunderbird Road.

- Adding a 10'x8' barrel to the existing 4-10'x8' barrel Sweetwater Avenue box culvert would result in changes in the water surface of minus 1.05 feet upstream of Sweetwater Avenue, minus 0.83 feet upstream of 35th Street, minus 0.49 feet downstream and minus 0.33 feet upstream of the Emile Zola alignment, minus 0.23 feet at the Presidio Road alignment, and minus 0.04 feet downstream of Thunderbird Road. Just upstream of Sweetwater Avenue where a berm is required to contain the floodwaters, the additional barrel would produce lower water surface elevations than the proposed detention basin.

- Peak 100-year discharges previously accepted for the Indian Bend Wash channel did not included the effects of a Thunderbird Detention Basin. Therefore, it was concluded that eliminating the detention basin would not change any previously published and accepted hydrology.

5.6 INDIAN BEND WASH 36" NUISANCE FLOW PIPE

To minimize the need to mow the grass within the Indian Bend Wash low flow channel, the City of Phoenix installed a 36" CIPP in order to carry the more frequent nuisance flows underground. Except for slight deviations near 40th Street and 36th Street, this pipe generally follows the Indian Bend Wash right-of-way centerline. Due to conflicts with the new channel profile and the need to remove this pipe from one barrel of the existing Sweetwater Avenue box culvert, this pipe will need to be replaced at a lower elevation and on an alignment within the east embankment of the new channel. Replacement of 3680 feet of 36 inch pipe will be required from approximately 350 feet south of Sweetwater Avenue to a point approximately 150 feet north of Thunderbird Road.

5.7 SWEETWATER CHANNEL

Off-site runoff will be discharged from the linear detention channel into Indian Bend Wash through the Sweetwater channel located along the north side of Sweetwater Avenue. Based on a March 20, 1995 Memorandum, an alignment along the north side of Sweetwater Avenue is the most economical of four alternatives studied. It is $398,595 less than the next most economical alternative, which is an alignment along the south side of Sweetwater Avenue.

The selected alternative will consist of a triple 12'x8' concrete box culvert, a 600 feet long trapezoidal channel with a 38-foot bottom, and a triple 12'x8' concrete box culvert. To minimize erosion and maintenance problems, 1-foot thick soil cement will be place in the channel bottom and sideslopes up to a depth of 4 feet. Because of constricted right-of-

way, the channel side slopes will be constructed at a 3:1 slope. As a safety precaution, chain link fence will be installed along the top of the slopes.

5.8 EMILE ZOLA CHANNEL

Off-site flows reach the west side of SR 51 via Emile Zola and via minor streets between Emile Zola and Thunderbird Road to the north. These flows will concentrate at Emile Zola and be conveyed across SR 51 into Indian Bend Wash through a single 10'x6' concrete box culvert and a 280-foot long channel. The trapezoidal channel will have a 20-foot wide bottom with 3:1 side slopes.

5.9 EXISTING STORM DRAINS, CITY OF PHOENIX

As previously stated, four City of Phoenix major storm drains currently flow easterly across the SR 51 alignment between Shea Boulevard and Thunderbird Road. Construction of SR 51 will result in the following changes to these systems:

- Shea Boulevard 78" Storm Drain: This storm drain has been severed and connected to the beginning of the linear detention channel located along the west side of SR 51. Under the Shea Boulevard bridge project, a 7'x5' concrete box culvert has been constructed at the beginning of the linear detention channel.
- Cactus Road 78" Storm Drain: This storm drain will be continued along Cactus Road by installing a siphon across SR 51 from a point 350 feet west of, to a point 380 feet east of the SR 51 centerline. In order to miss the Cactus Road bridge, the siphon pipe will be constructed around the south side of the bridge site with four curves.
- Sweetwater Avenue 60" Storm Drain: This storm drain will be connected to the new triple 12'X8' concrete box culvert on the Sweetwater Channel west of SR 51.
- Thunderbird Road 60" Storm Drain: This storm drain will be discharge into Indian Bend Wash at the outlet of the new box culvert under Thunderbird Road.

6.0 References

1. Prepared for the Arizona Department of Transportation by Michael Baker, Jr., Inc. "Final Hydrology Report, Squaw Peak Highway," Contract 87-40, November 1988.
2. Prepared for the Arizona Department of Transportation by Michael Baker, Jr., Inc. "Section 4 Drainage Study, Squaw Peak Highway," Contract 87-40, January 1991.
3. Prepared for the Arizona Department of Transportation by Michael Baker, Jr., Inc. "Concept Drainage Report, Squaw Peak Highway Section 4," April 5, 1993.
4. Prepared for the Arizona Department of Transportation by Michael Baker, Jr., Inc. "Squaw Peak Highway, Preliminary Plans, Shea Boulevard to Thunderbird Road," RAM-600-2-514, 051 1 MA 009, February 1994.
5. Prepared for the Arizona Department of Transportation by Entranco Engineers, Inc., "Final Drainage Report (Revised for Contract Modification No. 7), Squaw Peak Highway - SR 51, Section 3," Maricopa County, Project No. RAM-600-2-506, TRACS No. H 2058 01C, Contract No. 88-64, May 1992.
6. Arizona Department of Transportation, Highways Division, Draft Roadway Design Guidelines, Chapter 600-Highway Drainage Design, May 11, 1994.
7. Arizona Department of Transportation, Highway Drainage Design Manual, Hydrology, March 1993.
8. Arizona Department of Transportation, Highways Division, Urban Highways Section, Design Procedures Manual, March 1988 and Revisions.
9. Arizona Department of Transportation, Highways Division, Channel Lining Design Guidelines, February 1989.
10. Arizona Highway Department, Bridge Division, Hydrologic Design for Highway Drainage in Arizona, revised March 1969.
11. Arizona Highway Department, Structures Section, Hydraulics Division, Hydrologic and Hydraulic Training Session Manual, October 16-18, 1972, revised December 1973.
12. Arizona Department of Transportation, Highways Division, Construction Standard Drawings, July 1994.
13. Arizona Department of Transportation, Highways Division, Structures Section, Standard Drawings, June 1992.
14. U.S. Department of Transportation, Federal Highway Administration, Hydraulic Design of Highway Culverts, Hydraulic Design Series No. 5, September 1982.
15. U.S. Department of Transportation, Federal Highway Administration, Drainage of Highway Pavements, Hydraulic Engineering Circular No. 12, March 1984.

Appendix A

Roadway and Linear Detention Channel Drainage System Plan

F.H.W.A. REGION	STATE	PROJECT NO.	SHEET NO.	TOTAL SHEETS	AS BUILT
9	ARIZ.	600-2-514			
		051 MA 009			

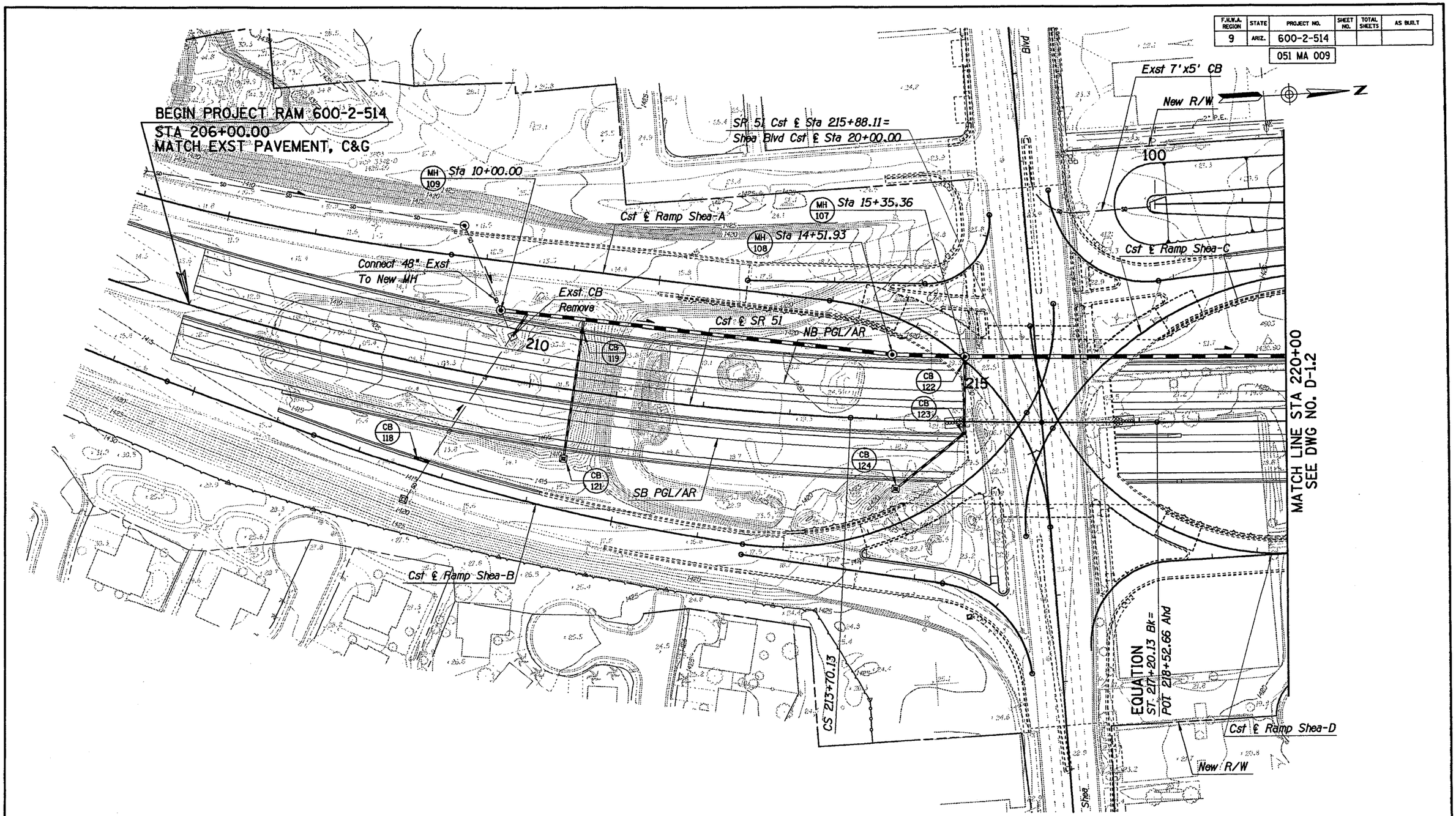

	NAME	DATE
DESIGN	DJS	3/95
DRAWN	RGH	4/95
CHECKED	GAG	4/95

BRW 2100 N. Central Ave. Suite 1000 Phoenix, Arizona 85004 (602) 234-1591

ARIZONA DEPARTMENT OF TRANSPORTATION
HIGHWAYS DIVISION

SR 51
DRAINAGE PLAN
STA 206+00 to 220+00

ROUTE: SR51
LOCATION: SHEA BLVD - THUNDERBIRD RD

NOT FOR CONSTRUCTION DATE

DWG NO. D-1.1

TRACS NO. H 2059 01C | 600-2-514 | ___ OF ___

SPDDR01.DGN
ooooooSYSTIMEoooooo

VIEW NAME:

CORRECT NO.	FINISHED DATE	REVISIONS	LOCATION	DATE

F.H.W.A. REGION	STATE	PROJECT NO.	SHEET NO.	TOTAL SHEETS	AS BUILT
9	ARIZ.	600-2-514			

051 MA 009

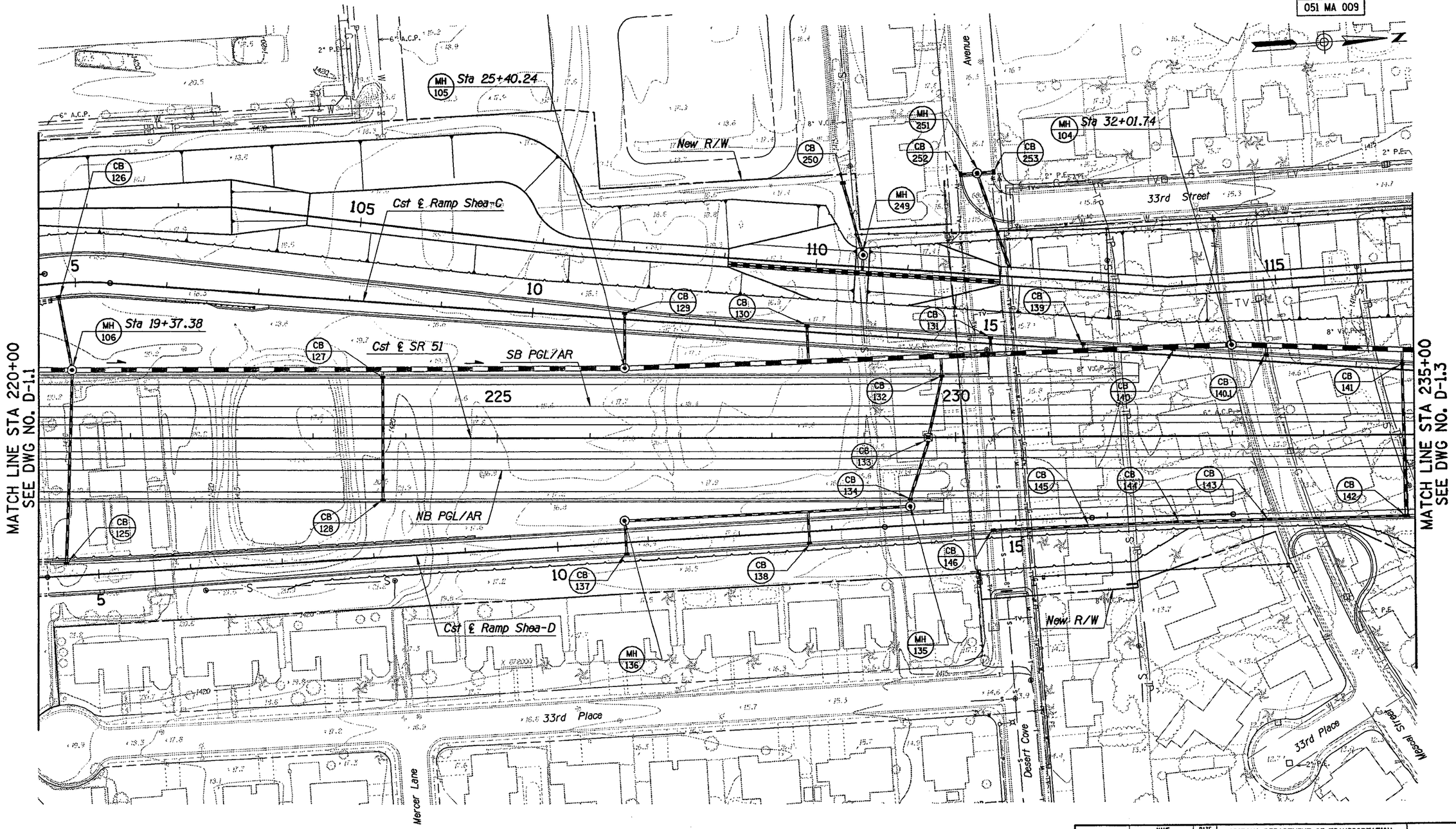

	NAME	DATE
DESIGN	DJS	3/95
DRAWN	RGH	4/95
CHECKED	GAG	4/95

BRW — 2700 N. Central Ave. Suite 1000 Phoenix, Arizona 85004 (602) 234-1591

ARIZONA DEPARTMENT OF TRANSPORTATION
HIGHWAYS DIVISION

SR 51
DRAINAGE PLAN
STA 220+00 to 235+00

NOT FOR CONSTRUCTION DATE

ROUTE: SR51 | LOCATION: SHEA BLVD - THUNDERBIRD RD

DWG NO. D-1.2

TRACS NO. H 2059 01C | 600-2-514 | ___ OF ___

SURVEY NO. | FINISHED PLOTS | DESIGNER | MONTH | DATE

SPDDR02.DGN
ooooSYSTIMEoooo

VIEW NAME:

F.H.W.A. REGION	STATE	PROJECT NO.	SHEET NO.	TOTAL SHEETS	AS BUILT
9	ARIZ.	600-2-514			
		051 MA 009			

	NAME	DATE
DESIGN	DJS	3/95
DRAWN	RGH	4/95
CHECKED	GAG	4/95

BRW 2700 N. Central Ave. Suite 1000 Phoenix, Arizona 85004 (602) 234-1591

ARIZONA DEPARTMENT OF TRANSPORTATION
HIGHWAYS DIVISION

SR 51
DRAINAGE PLAN
STA 235+00 to 250+00

NOT FOR CONSTRUCTION
DATE

ROUTE: SR51
LOCATION: SHEA BLVD - THUNDERBIRD RD
DWG NO. D-1.3

TRACS NO. H 2059 01C | 600-2-514 | ___ OF ___

SPDDR03.DGN
ooooSYSTIMEoooooo
VIEW NAME:

SURVEY NO.	FINISHED PLAN	DRAWN	CHECKED	DATE

F.H.W.A. REGION	STATE	PROJECT NO.	SHEET NO.	TOTAL SHEETS	AS BUILT
9	ARIZ.	600-2-514			
		051 MA 009			

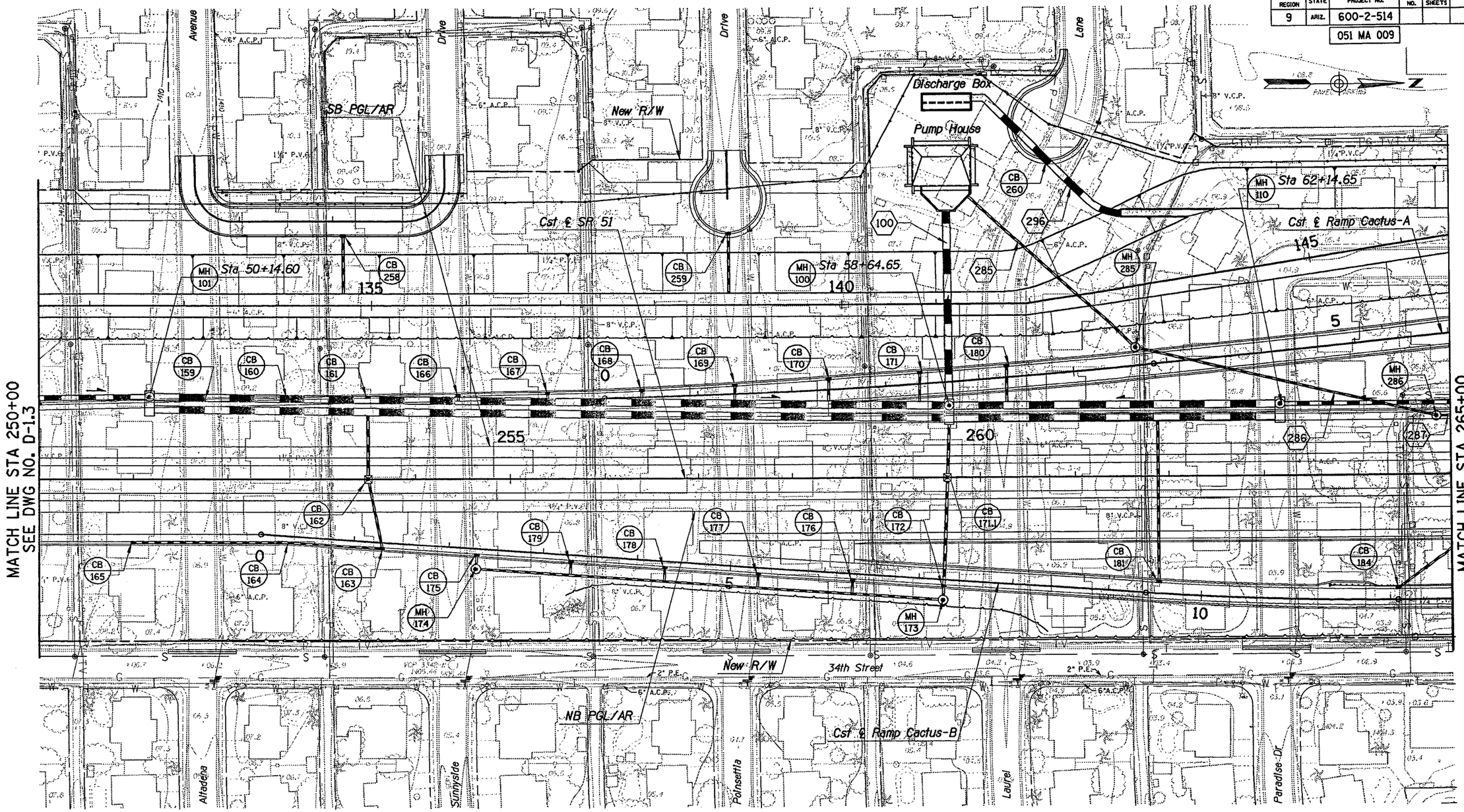

	NAME	DATE
DESIGN	DJS	3/95
DRAWN	RGH	4/95
CHECKED	GAG	4/95

BRW
2700 N. Central Ave.
Suite 1000
Phoenix, Arizona 85004
(602) 234-1591

ARIZONA DEPARTMENT OF TRANSPORTATION
HIGHWAYS DIVISION

SR 51
DRAINAGE PLAN
STA 250+00 to 265+00

NOT FOR CONSTRUCTION
DATE

ROUTE: SR51
LOCATION: SHEA BLVD - THUNDERBIRD RD

DWG NO. D-1.4

TRACS NO. H 2059 01C | 600-2-514 | ___ OF ___

SPDBB04.DGN
ooooSYSTIMEoooooo
VIEW NAME:

F.H.W.A. REGION	STATE	PROJECT NO.	SHEET NO.	TOTAL SHEETS	AS BUILT
9	ARIZ.	600-2-514			
		051 MA 009			

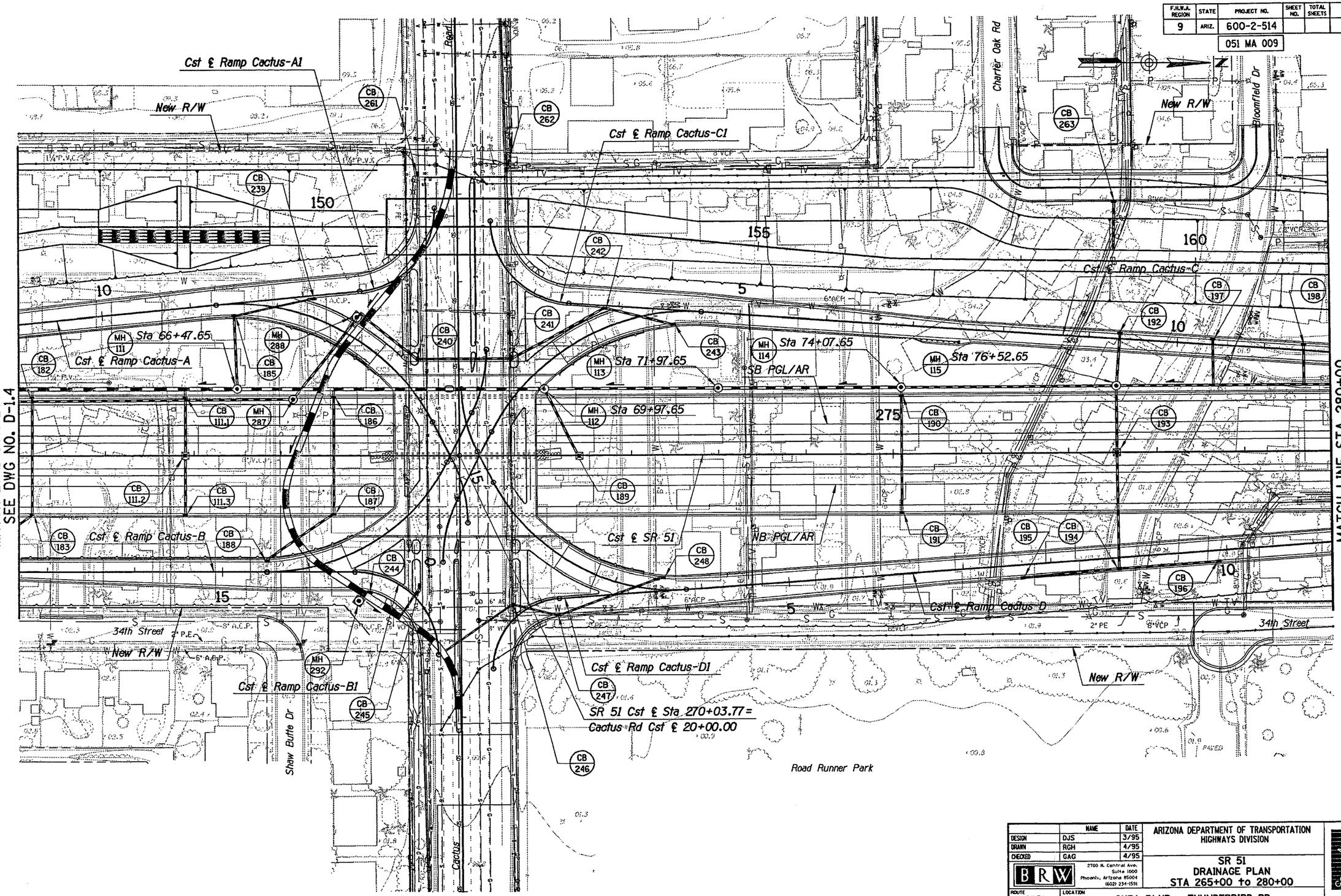

	NAME	DATE
DESIGN	DJS	3/95
DRAWN	RGH	4/95
CHECKED	GAG	4/95

BRW — 2700 N. Central Ave. Suite 1000 Phoenix, Arizona 85004 (602) 234-1591

ARIZONA DEPARTMENT OF TRANSPORTATION
HIGHWAYS DIVISION

SR 51
DRAINAGE PLAN
STA 265+00 to 280+00

NOT FOR CONSTRUCTION DATE

ROUTE: SR51 | LOCATION: SHEA BLVD - THUNDERBIRD RD | DWG NO. D-1.5

TRACS NO. H 2059 01C | 600-2-514 | ___ OF ___

SPDDR05.DGN
ooooSYSTIMEoooooo

VIEW NAME:

F.H.W.A. REGION	STATE	PROJECT NO.	SHEET NO.	TOTAL SHEETS	AS BUILT
9	ARIZ.	600-2-514			

051 MA 009

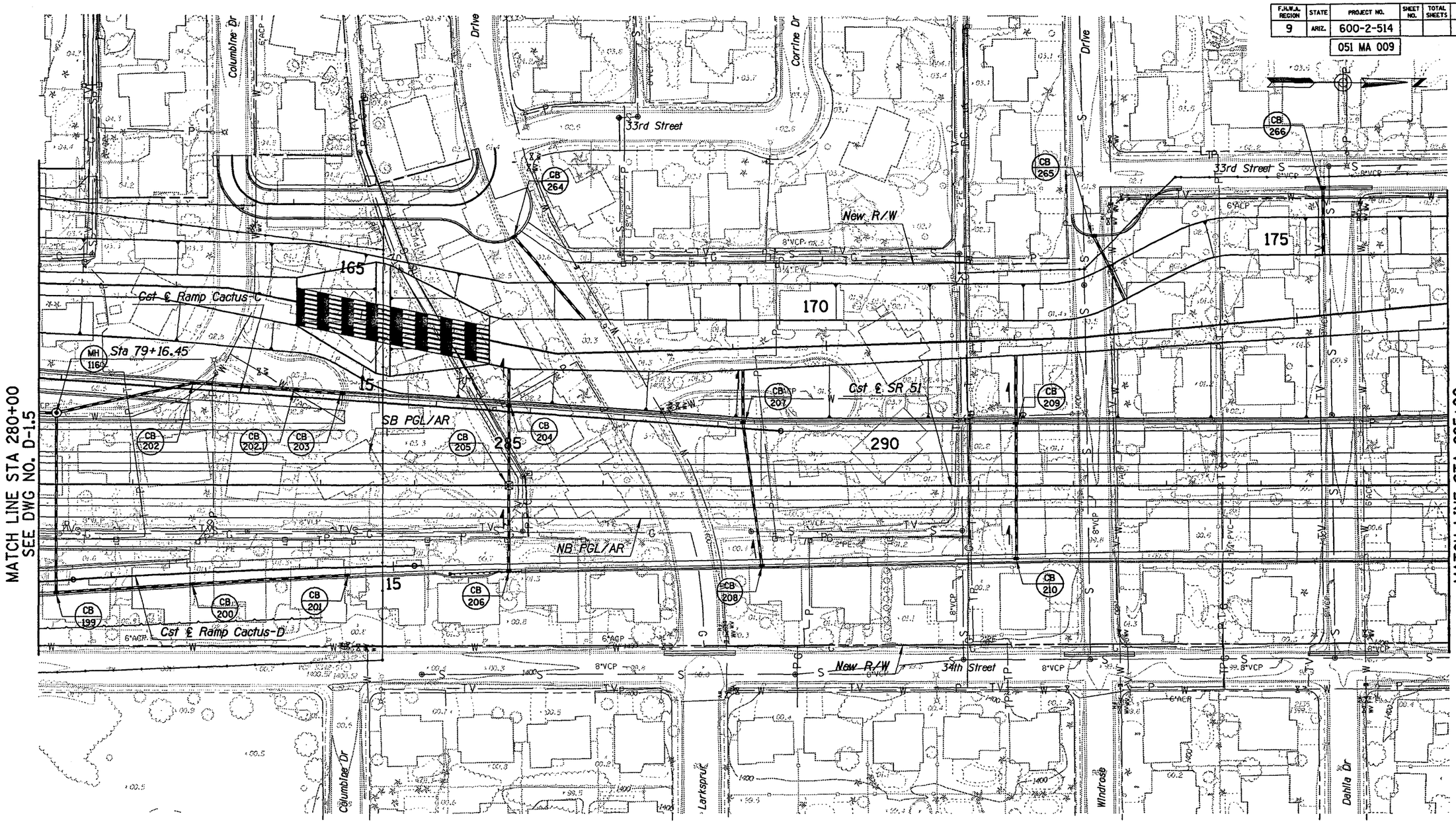

	NAME	DATE
DESIGN	DJS	3/95
DRAWN	RGH	4/95
CHECKED	GAG	4/95

BRW
2100 N. Central Ave.
Suite 1000
Phoenix, Arizona 85004
(602) 234-1591

ARIZONA DEPARTMENT OF TRANSPORTATION
HIGHWAYS DIVISION

SR 51
DRAINAGE PLAN
STA 280+00 to 295+00

NOT FOR CONSTRUCTION
DATE

ROUTE: SR51
LOCATION: SHEA BLVD - THUNDERBIRD RD

DWG NO. D-1.6

TRACS NO. H 2059 01C | 600-2-514 | ___ OF ___

SPDDR06.DGN
ooooSYSTIMEooooo

VIEW NAME:

F.H.W.A. REGION	STATE	PROJECT NO.	SHEET NO.	TOTAL SHEETS	AS BUILT
9	ARIZ.	600-2-514			

051 MA 009

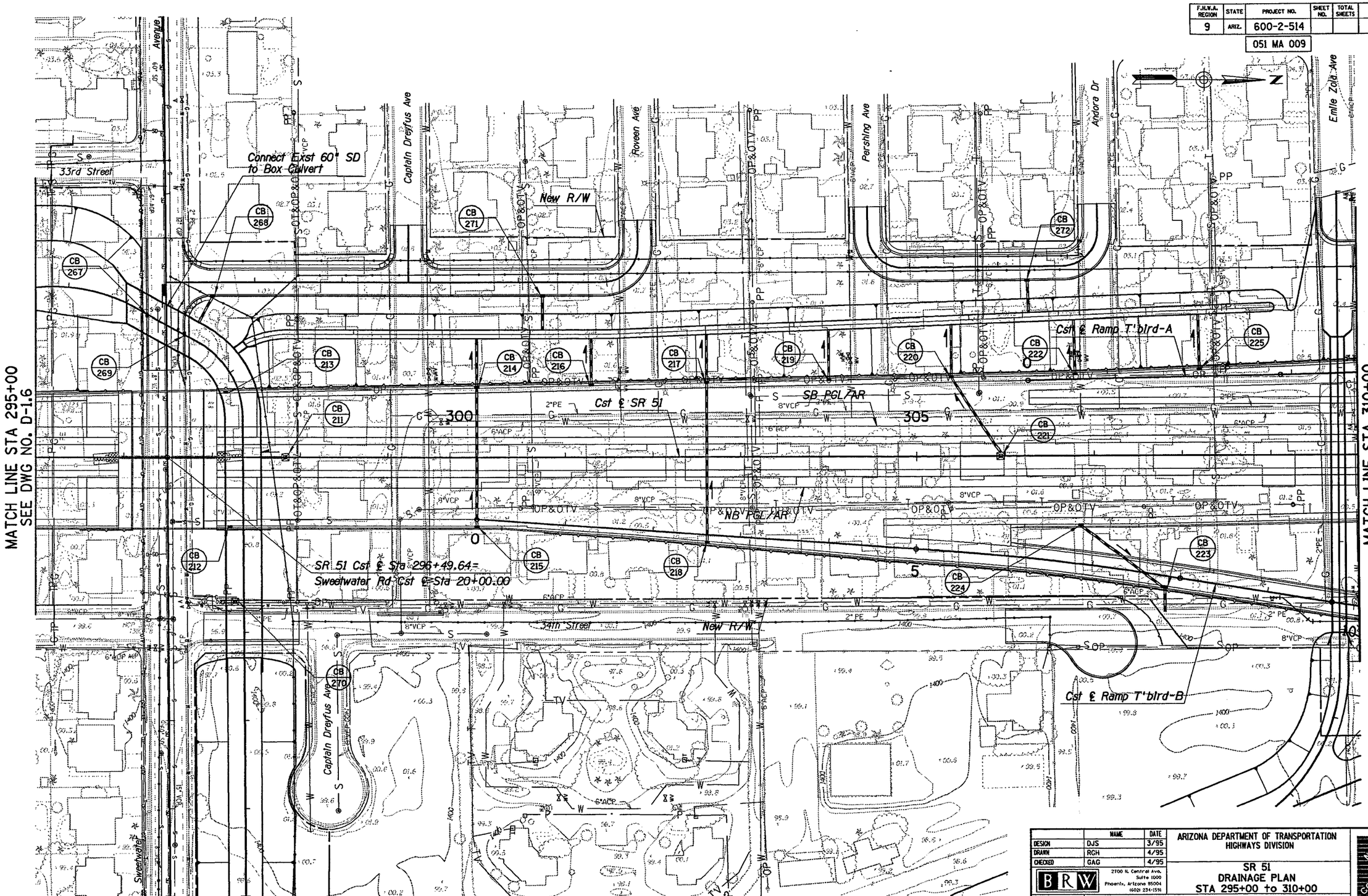

	NAME	DATE
DESIGN	DJS	3/95
DRAWN	RGH	4/95
CHECKED	GAG	4/95

BRW
2700 N. Central Ave.
Suite 1000
Phoenix, Arizona 85004
(602) 234-1591

ARIZONA DEPARTMENT OF TRANSPORTATION
HIGHWAYS DIVISION

SR 51
DRAINAGE PLAN
STA 295+00 to 310+00

NOT FOR CONSTRUCTION
DATE

ROUTE: SR51
LOCATION: SHEA BLVD - THUNDERBIRD RD

DWG NO. D-1.7

SPDDR07.DGN
ooooSYSTIMEoooooo

VIEW NAME:

TRACS NO. H 2059 01C | 600-2-514 | ___ OF ___

F.H.W.A. REGION	STATE	PROJECT NO.	SHEET NO.	TOTAL SHEETS	AS BUILT
9	ARIZ.	600-2-514			
		051 MA 009			

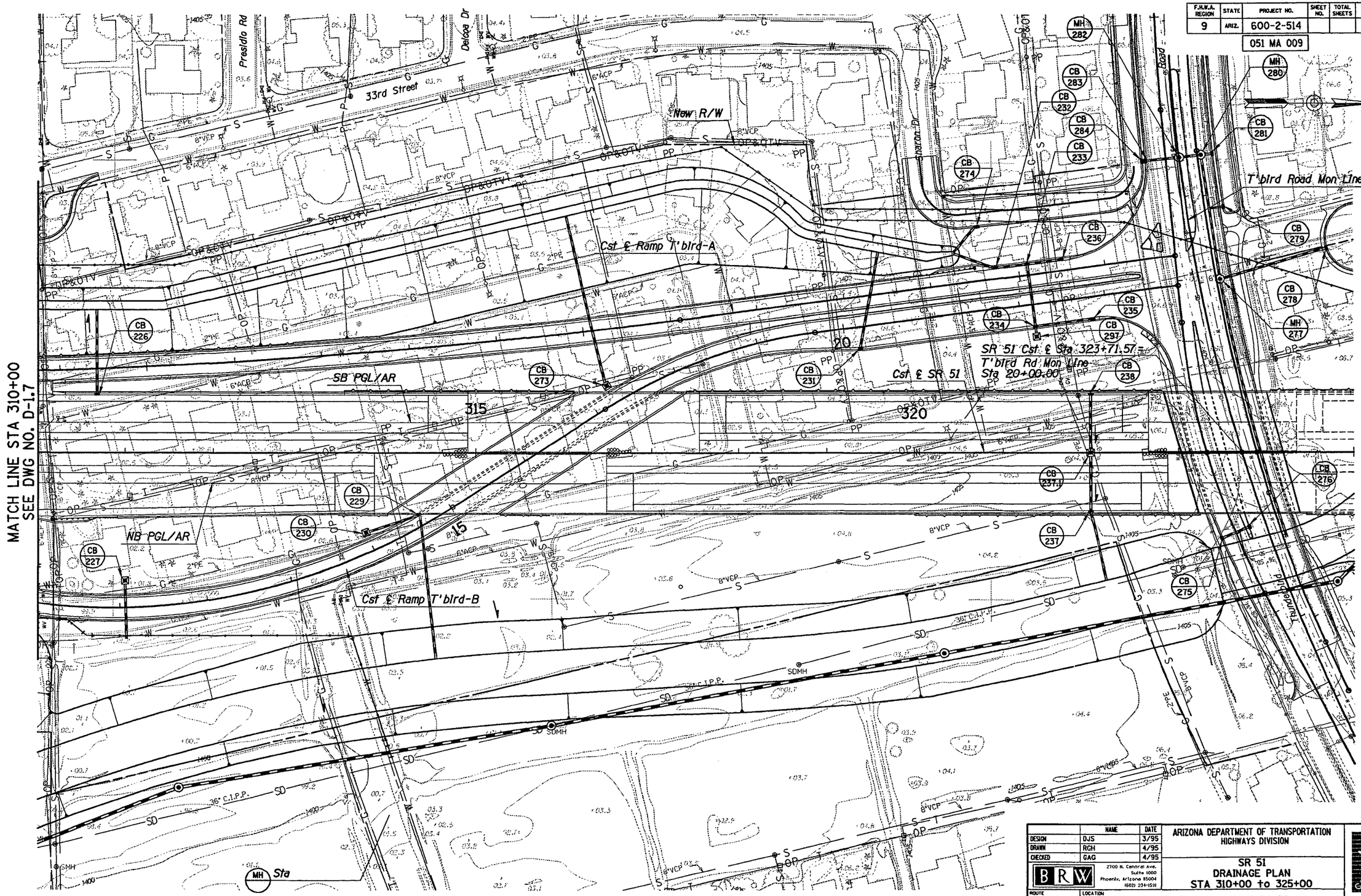

	NAME	DATE
DESIGN	DJS	3/95
DRAWN	RGH	4/95
CHECKED	GAG	4/95

BRW
2700 N. Central Ave.
Suite 1000
Phoenix, Arizona 85004
(602) 234-1591

ARIZONA DEPARTMENT OF TRANSPORTATION
HIGHWAYS DIVISION

SR 51
DRAINAGE PLAN
STA 310+00 to 325+00

NOT FOR CONSTRUCTION
DATE

ROUTE: SR51
LOCATION: SHEA BLVD - THUNDERBIRD RD

DWG NO. D-1.8

TRACS NO. H 2059 01C | 600-2-514 | ___ OF ___

SPDDR08.DGN
cccccSYSTIMEccccc
VIEW NAME:

F.H.W.A. REGION	STATE	PROJECT NO.	SHEET NO.	TOTAL SHEETS	AS BUILT
9	ARIZ.	600-2-514			
		051 MA 009			

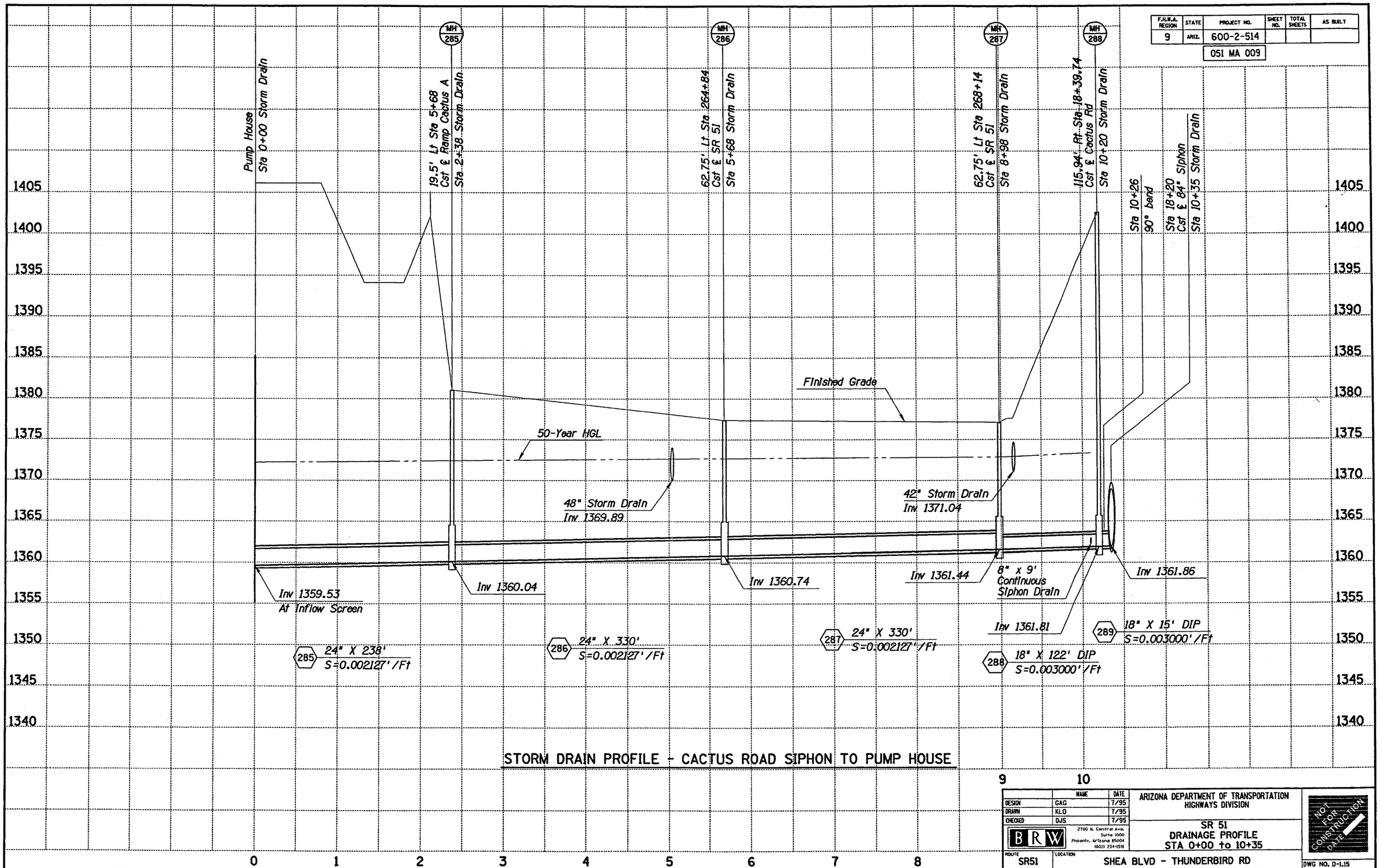

STORM DRAIN PROFILE - CACTUS ROAD SIPHON TO PUMP HOUSE

	NAME	DATE
DESIGN	GAG	7/95
DRAWN	KLO	7/95
CHECKED	DJS	7/95

BRW 2700 N. Central Ave. Suite 1000 Phoenix, Arizona 85004 (602) 234-1591

ARIZONA DEPARTMENT OF TRANSPORTATION
HIGHWAYS DIVISION

SR 51
DRAINAGE PROFILE
STA 0+00 to 10+35

NOT FOR CONSTRUCTION DATE

ROUTE: SR51 | LOCATION: SHEA BLVD - THUNDERBIRD RD

DWG NO. D-1.15

TRACS NO. H 2059 01C | 600-2-514 | ___ OF ___

SURVEY NO. | FINISHED PLANS | REVISIONS | FOLDING | INIT.

SPDSID1.DGN
cccccSYSTIMEcccccc

VIEW NAME:

F.H.W.A. REGION	STATE	PROJECT NO.	SHEET NO.	TOTAL SHEETS	AS BUILT
9	ARIZ.	600-2-514			
		051 MA 009			

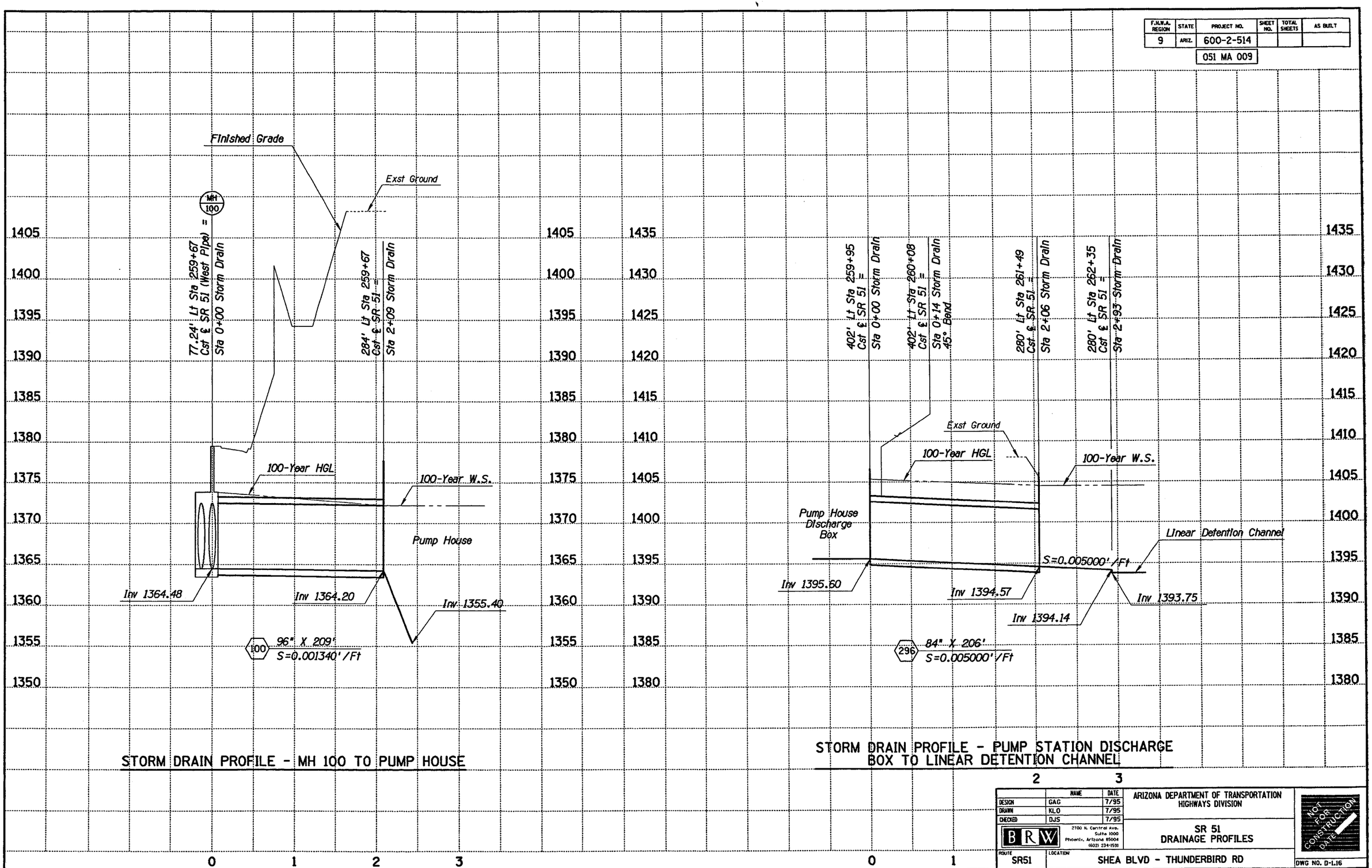

STORM DRAIN PROFILE - MH 100 TO PUMP HOUSE

STORM DRAIN PROFILE - PUMP STATION DISCHARGE BOX TO LINEAR DETENTION CHANNEL

	NAME	DATE
DESIGN	GAG	7/95
DRAWN	KLO	7/95
CHECKED	DJS	7/95

BRW 2100 N. Central Ave. Suite 1000 Phoenix, Arizona 85004 (602) 234-1591

ARIZONA DEPARTMENT OF TRANSPORTATION
HIGHWAYS DIVISION

SR 51
DRAINAGE PROFILES

NOT FOR CONSTRUCTION DATE

ROUTE: SR51 | LOCATION: SHEA BLVD - THUNDERBIRD RD

DWG NO. D-1.16

TRACS NO. H 2059 01C | 600-2-514 | ___ OF ___

SPDPHD1.DGN
cccccSYSTIMEccccc

VIEW NAME:

SURVEY NO. | FINISHED PLANS | ENVIRONMENTAL | LOCATION | DATE

F.H.W.A. REGION	STATE	PROJECT NO.	SHEET NO.	TOTAL SHEETS	AS BUILT
9	ARIZ.	600-2-514			

051 MA 009

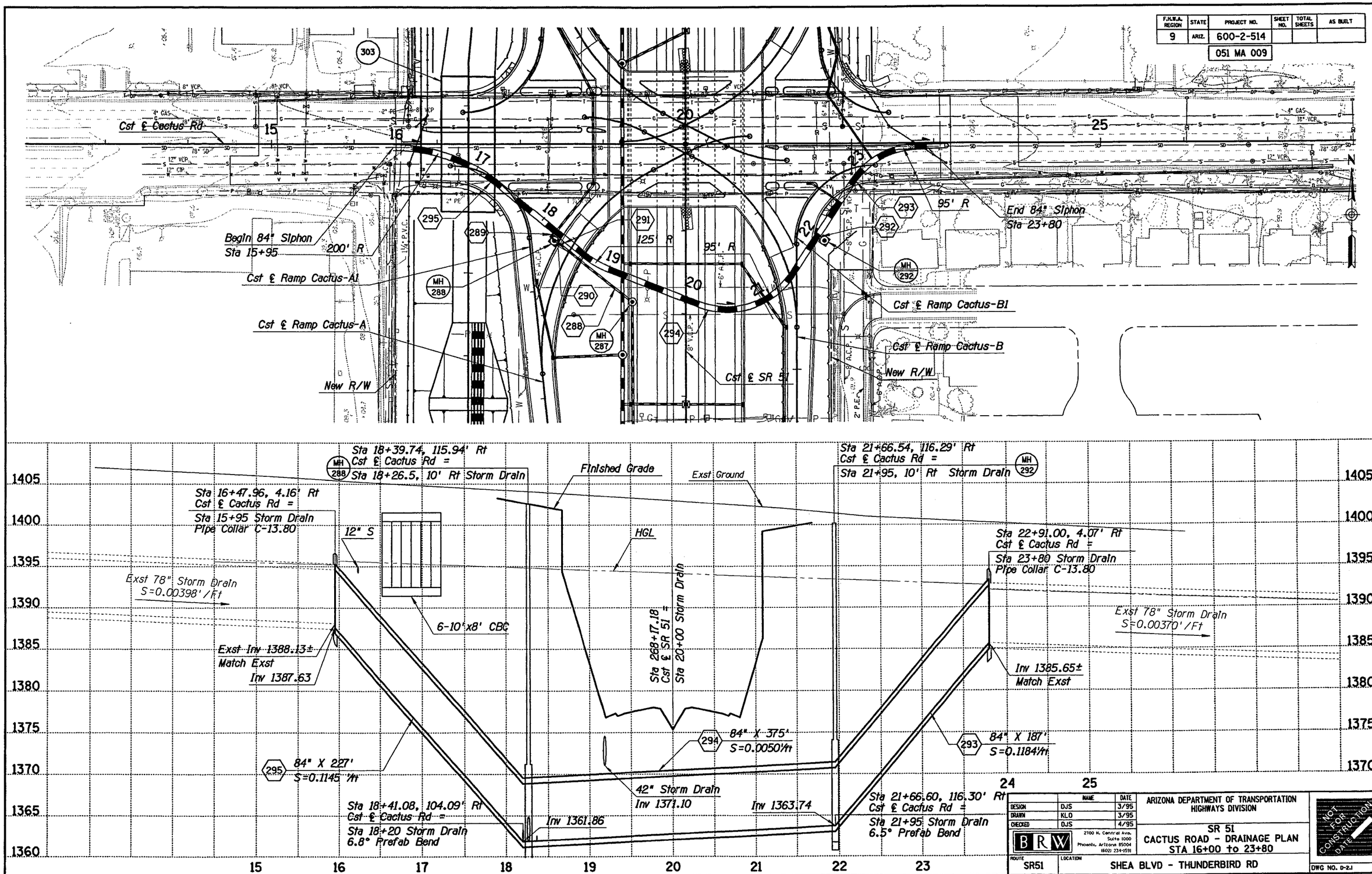

	NAME	DATE
DESIGN	DJS	3/95
DRAWN	KLO	3/95
CHECKED	DJS	4/95

BRW
2700 N. Central Ave.
Suite 1000
Phoenix, Arizona 85004
(602) 234-1591

ARIZONA DEPARTMENT OF TRANSPORTATION
HIGHWAYS DIVISION

SR 51
CACTUS ROAD - DRAINAGE PLAN
STA 16+00 to 23+80

ROUTE: SR51
LOCATION: SHEA BLVD - THUNDERBIRD RD

NOT FOR CONSTRUCTION
DATE

DWG NO. D-2.1

SPDOPSY1.DGN
cccccSYSTIMEcccccc

VIEW NAME:

TRACS NO. H 2059 01C | 600-2-514 | ___ OF ___

F.H.W.A. REGION	STATE	PROJECT NO.	SHEET NO.	TOTAL SHEETS	AS BUILT
9	ARIZ.	600-2-514			
		051 MA 009			

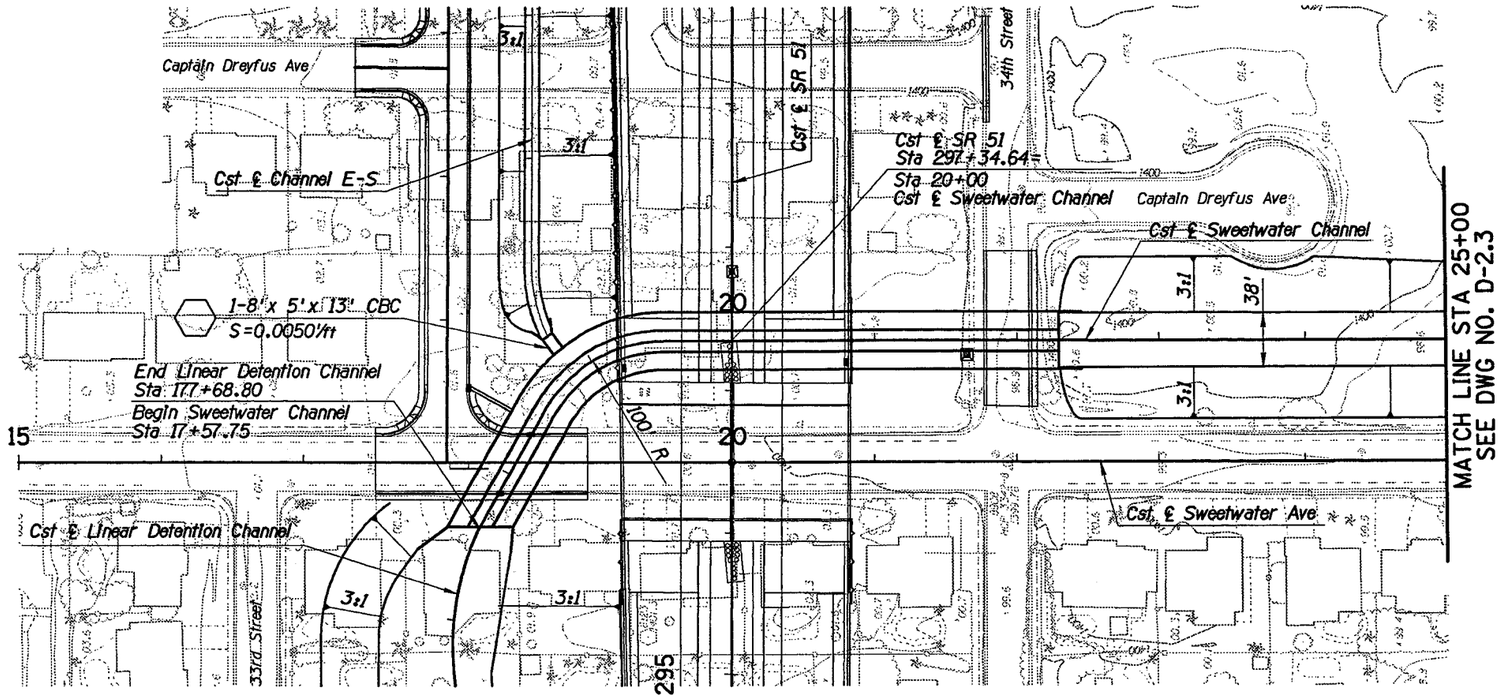

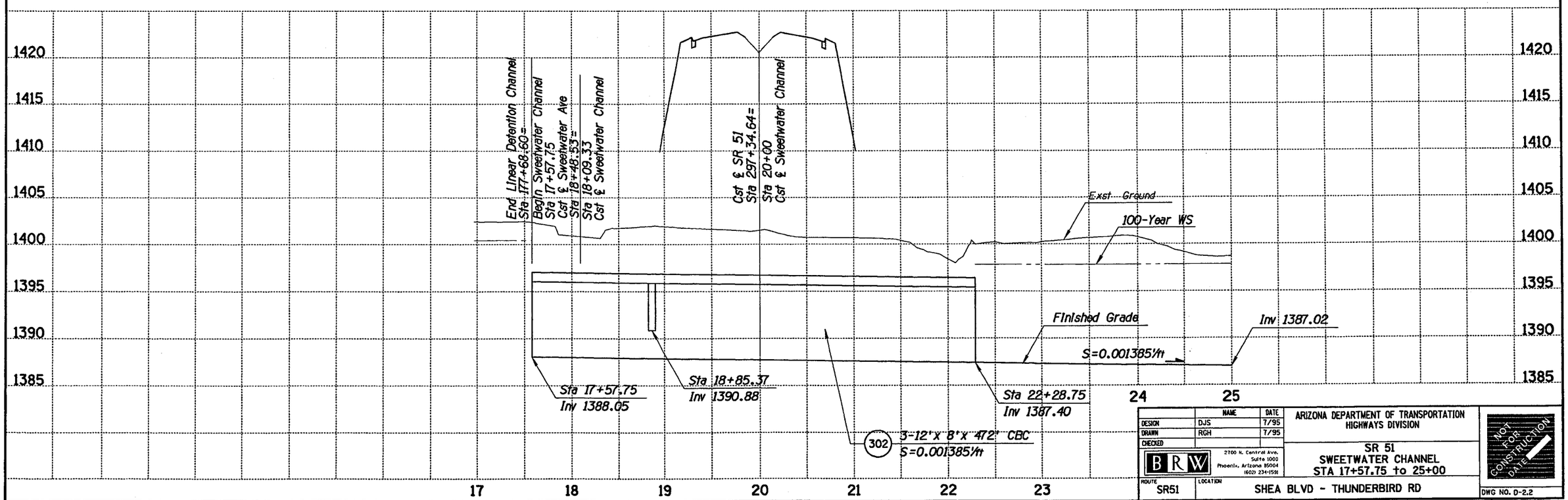

	NAME	DATE
DESIGN	DJS	7/95
DRAWN	RGH	7/95
CHECKED		

BRW 2700 N. Central Ave. Suite 1000 Phoenix, Arizona 85004 (602) 234-1591

ARIZONA DEPARTMENT OF TRANSPORTATION
HIGHWAYS DIVISION

SR 51
SWEETWATER CHANNEL
STA 17+57.75 to 25+00

ROUTE SR51 | LOCATION SHEA BLVD - THUNDERBIRD RD

NOT FOR CONSTRUCTION DATE

DWG NO. D-2.2

SPDDPSW1.DGN
ooooooSYSTIMEoooooo

VIEW NAME:

TRACS NO. H 2059 01C | 600-2-514 | ___ OF ___

DATE	LOCATION	REVISIONS	FINISHED PLANS	SURVEY NO.

F.H.W.A. REGION	STATE	PROJECT NO.	SHEET NO.	TOTAL SHEETS	AS BUILT
9	ARIZ.	600-2-514			
		051 MA 009			

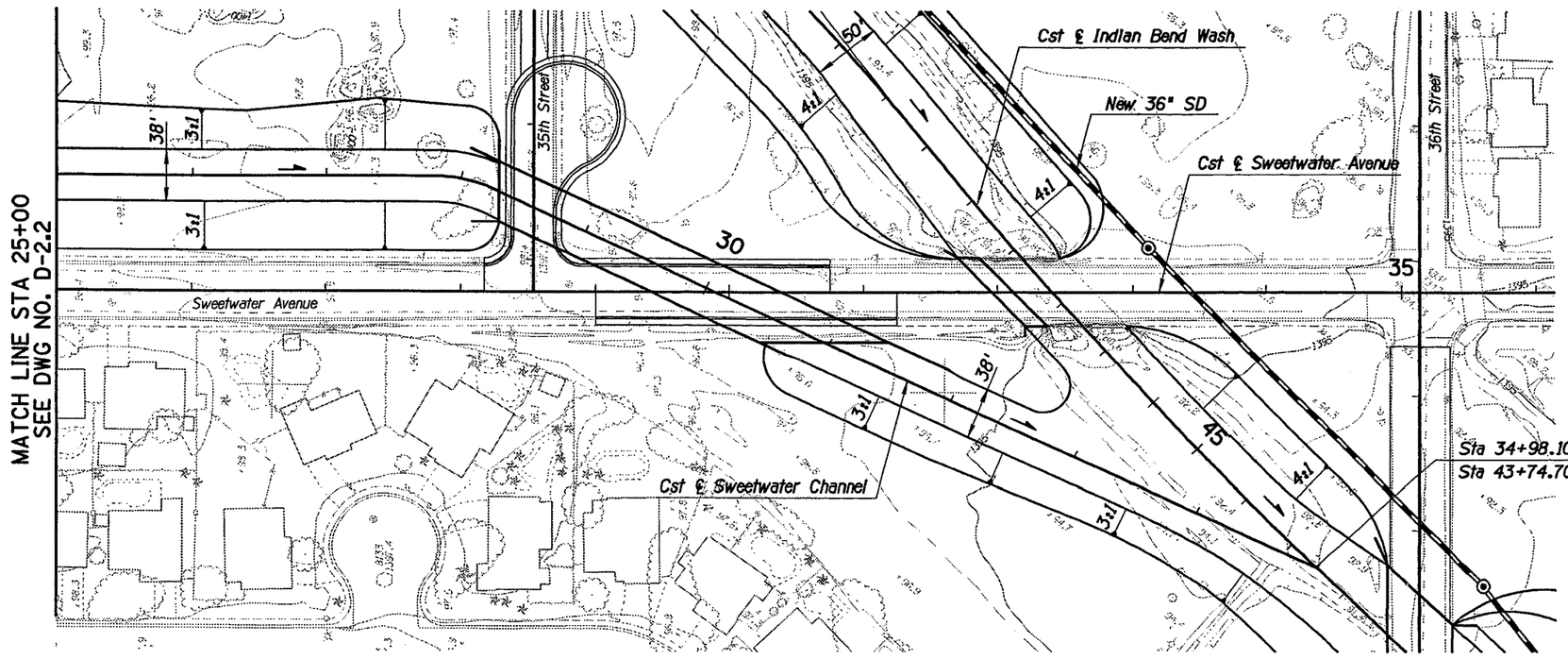

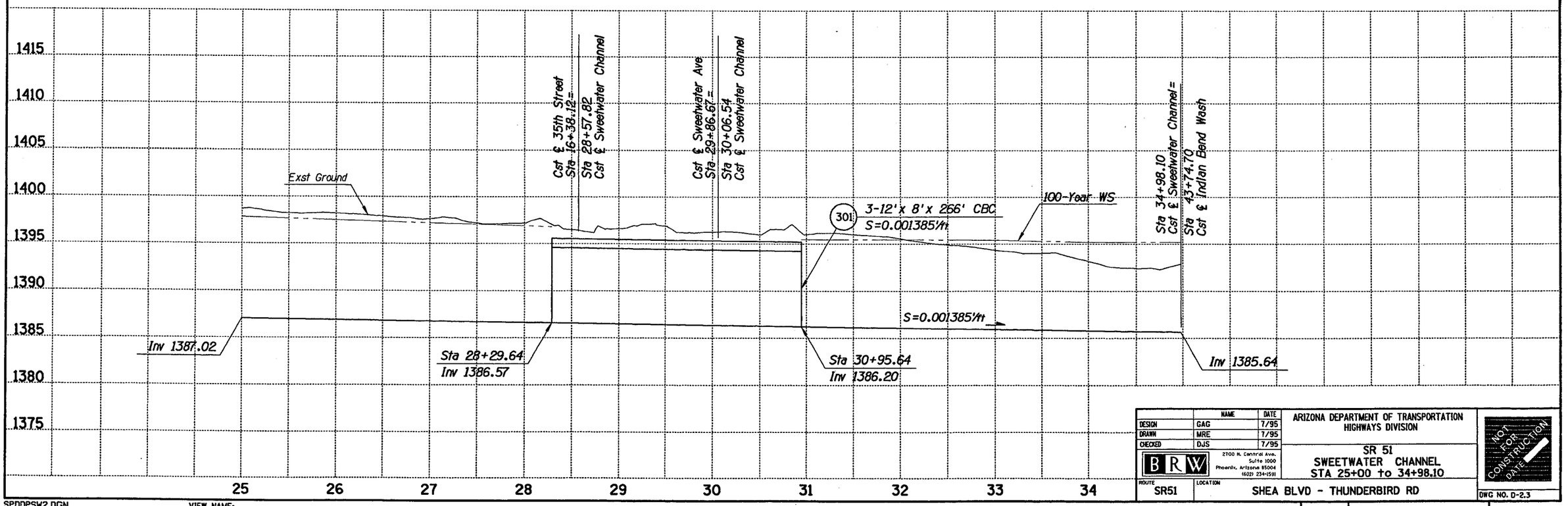

	NAME	DATE
DESIGN	GAG	7/95
DRAWN	MRE	7/95
CHECKED	DJS	7/95

BRW
2700 N. Central Ave.
Suite 1000
Phoenix, Arizona 85004
(602) 234-1591

ARIZONA DEPARTMENT OF TRANSPORTATION
HIGHWAYS DIVISION

SR 51
SWEETWATER CHANNEL
STA 25+00 to 34+98.10

NOT FOR CONSTRUCTION
DATE

ROUTE: SR51
LOCATION: SHEA BLVD - THUNDERBIRD RD

DWG NO. D-2.3

TRACS NO. H 2059 01C | 600-2-514 | ___ OF ___

SURVEY NO. | FINISHED PLANS | REVISIONS | LOCATION | DATE

SPDDPSW2.DGN
ooooSYSTIMEoooooo
VIEW NAME:

F.H.W.A. REGION	STATE	PROJECT NO.	SHEET NO.	TOTAL SHEETS	AS BUILT
9	ARIZ.	600-2-514			
		051 MA 009			

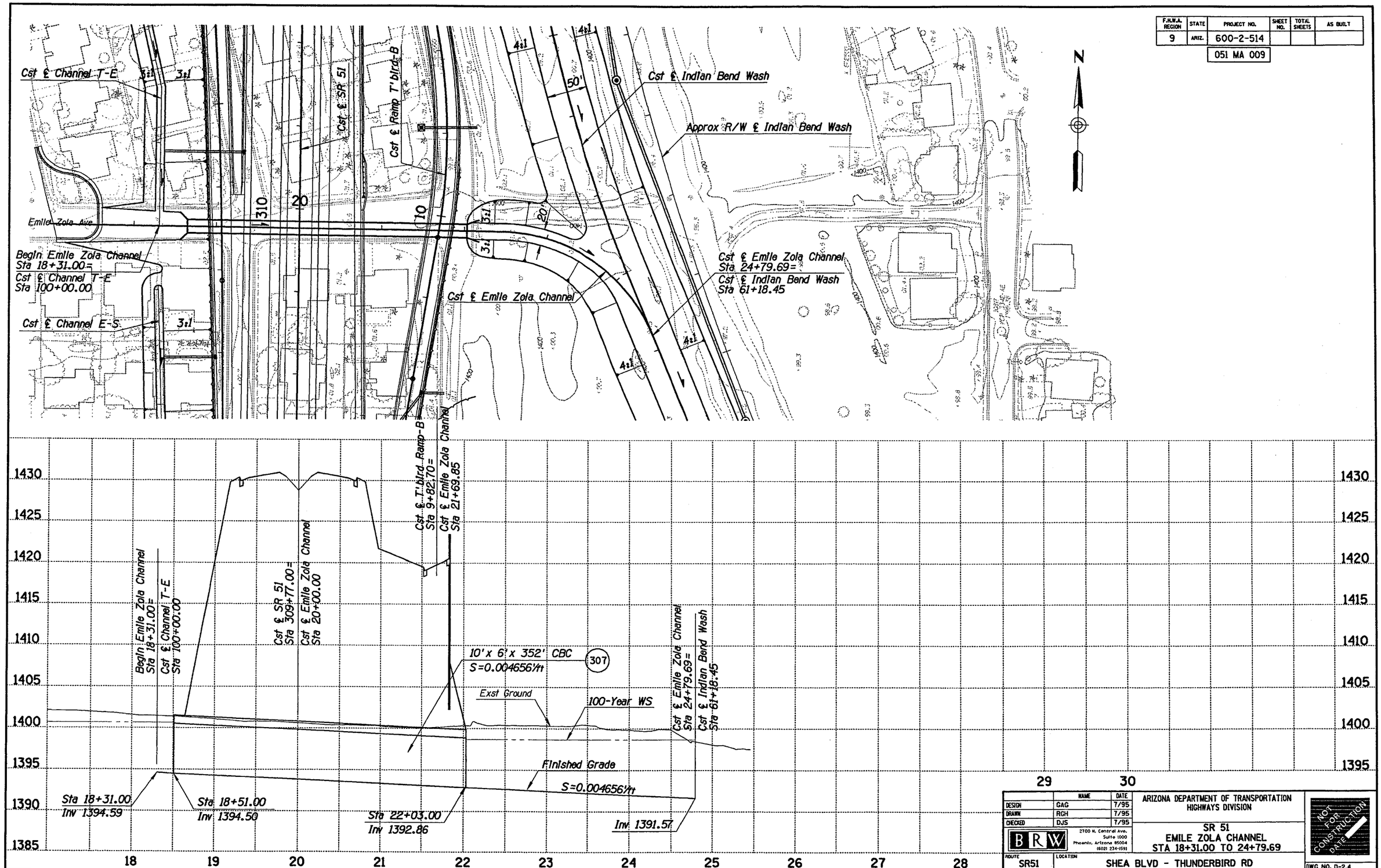

	NAME	DATE
DESIGN	GAG	7/95
DRAWN	RGH	7/95
CHECKED	DJS	7/95

BRW
2700 N. Central Ave.
Suite 1000
Phoenix, Arizona 85004
(602) 234-1591

ARIZONA DEPARTMENT OF TRANSPORTATION
HIGHWAYS DIVISION

SR 51
EMILE ZOLA CHANNEL
STA 18+31.00 TO 24+79.69

NOT FOR CONSTRUCTION
DATE

ROUTE: SR51
LOCATION: SHEA BLVD - THUNDERBIRD RD

DWG NO. D-2.4

SPDDPEZ1.DGN
ooooSYSTIMEoooo
VIEW NAME:

TRACS NO. H 2059 01C | 600-2-514 | ___ OF ___

F.H.W.A. REGION	STATE	PROJECT NO.	SHEET NO.	TOTAL SHEETS	AS BUILT
9	ARIZ.	600-2-514			
		051 MA 009			

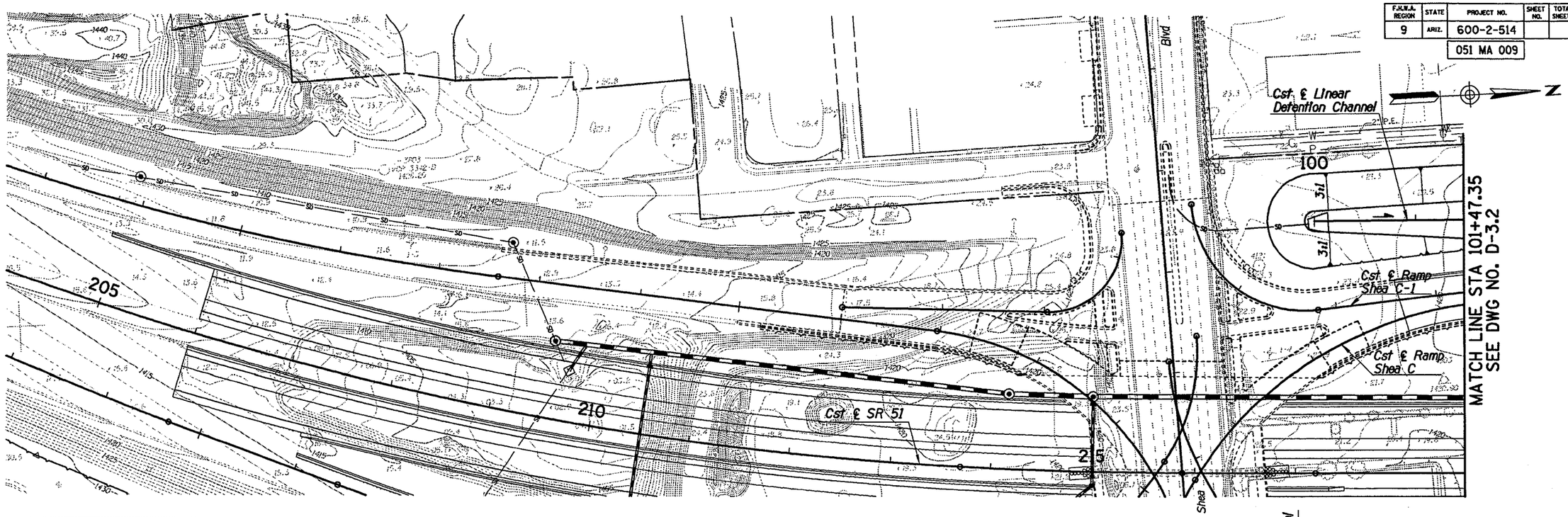

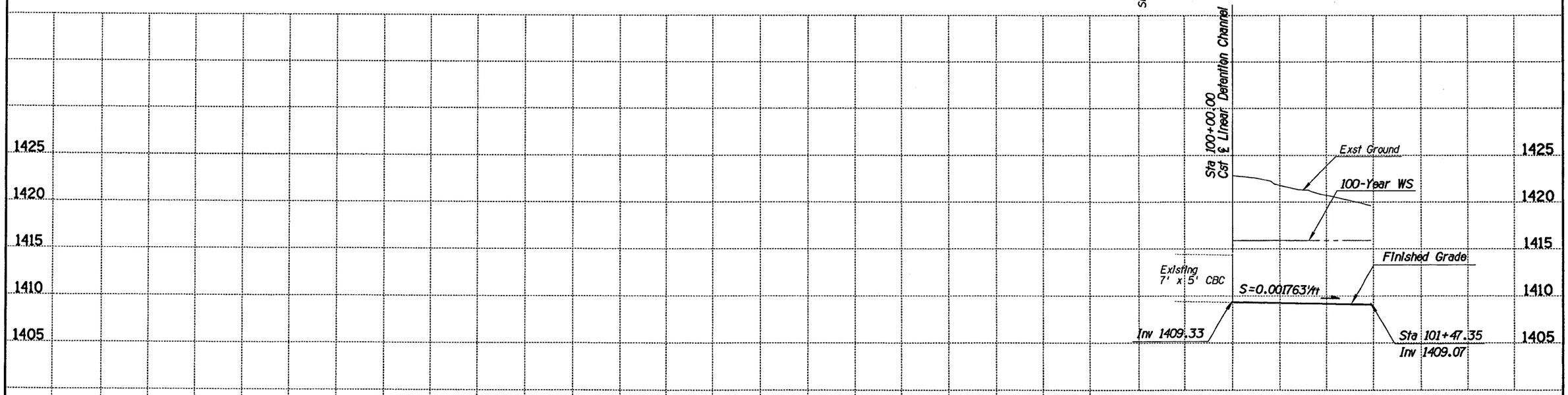

	NAME	DATE
DESIGN	GAG	7/95
DRAWN	RGH	7/95
CHECKED	DJS	7/95

BRW 2100 N. Central Ave. Suite 1000 Phoenix, Arizona 85004 (602) 234-1591

ARIZONA DEPARTMENT OF TRANSPORTATION
HIGHWAYS DIVISION

SR 51
LINEAR DETENTION CHANNEL
STA 100+00.00 to 101+47.35

NOT FOR CONSTRUCTION DATE

ROUTE SR51 | LOCATION SHEET BLVD - THUNDERBIRD RD | DWG NO. D-3.1

SPDDPL01.DGN
ooooSYSTIMEoooo

VIEW NAME:

TRACS NO. H 2059 01C | 600-2-514 | ___ OF ___

F.H.W.A. REGION	STATE	PROJECT NO.	SHEET NO.	TOTAL SHEETS	AS BUILT
9	ARIZ.	600-2-514			
		051 MA 009			

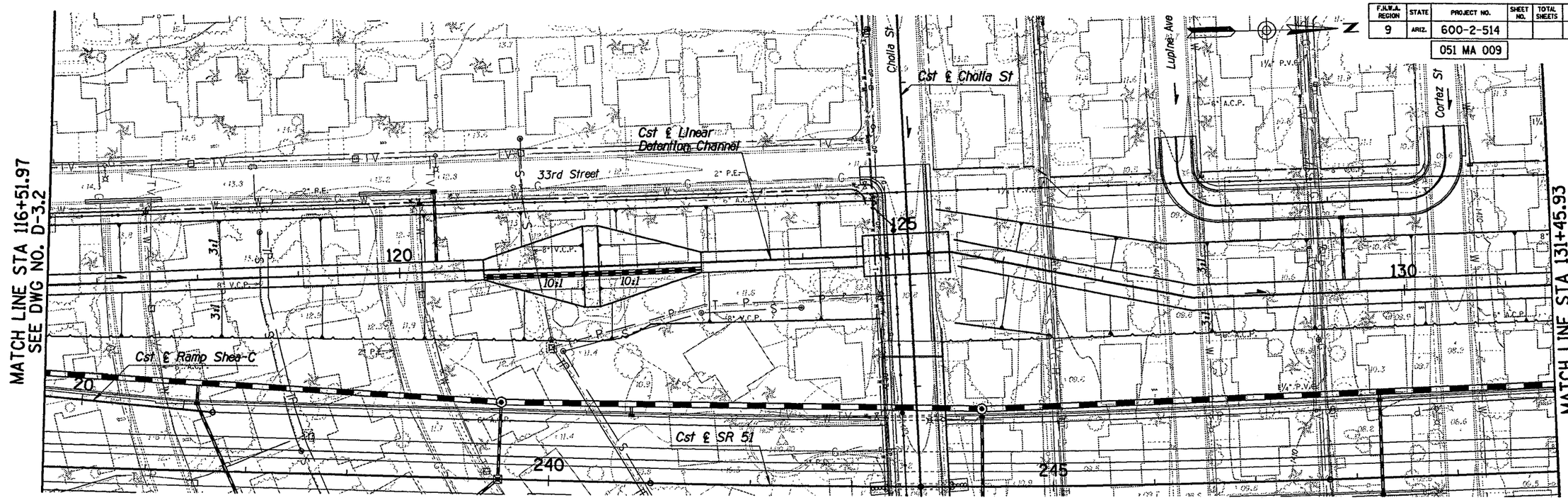

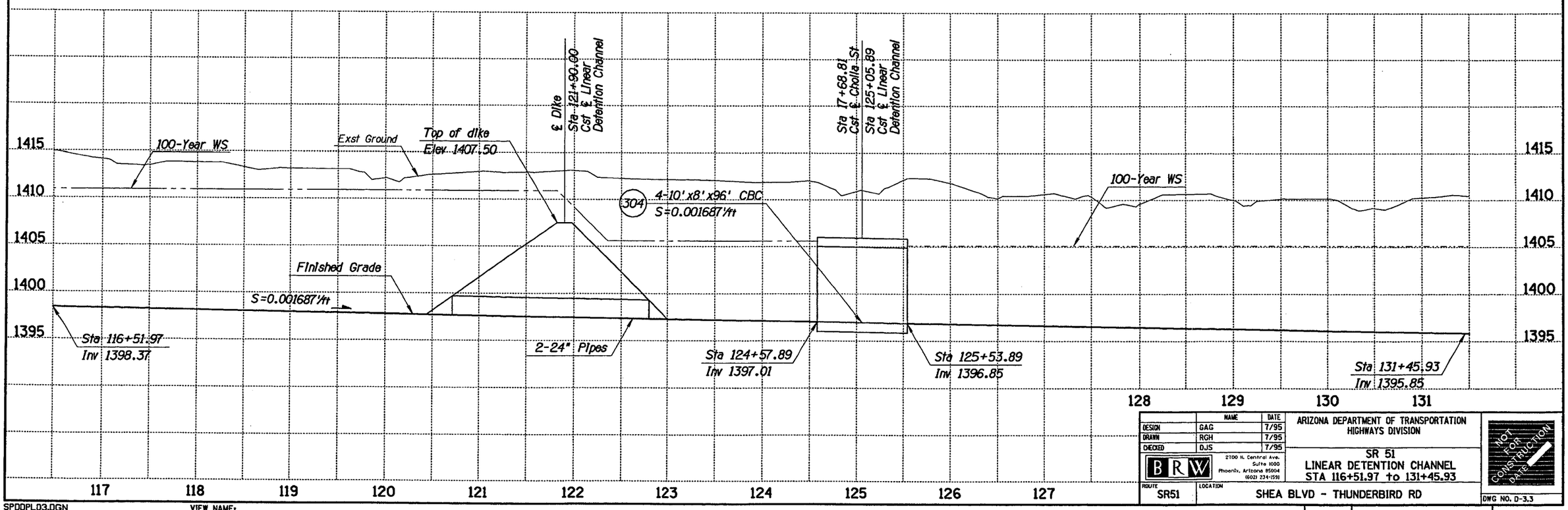

	NAME	DATE
DESIGN	GAG	7/95
DRAWN	RGH	7/95
CHECKED	DJS	7/95

BRW — 2700 N. Central Ave. Suite 1000, Phoenix, Arizona 85004 (602) 234-1591

ARIZONA DEPARTMENT OF TRANSPORTATION
HIGHWAYS DIVISION

SR 51
LINEAR DETENTION CHANNEL
STA 116+51.97 to 131+45.93

ROUTE: SR51 | LOCATION: SHEA BLVD - THUNDERBIRD RD

NOT FOR CONSTRUCTION DATE

DWG NO. D-3.3

TRACS NO. H 2059 01C | 600-2-514 | ___ OF ___

SPDDPL03.DGN
cccccSYSTIMEccccc
VIEW NAME:

SURVEY NO. | FINISHED PLANS | REVISIONS | EQ'D/DWN | R.C.

F.H.W.A. REGION	STATE	PROJECT NO.	SHEET NO.	TOTAL SHEETS	AS BUILT
9	ARIZ.	600-2-514			
		051 MA 009			

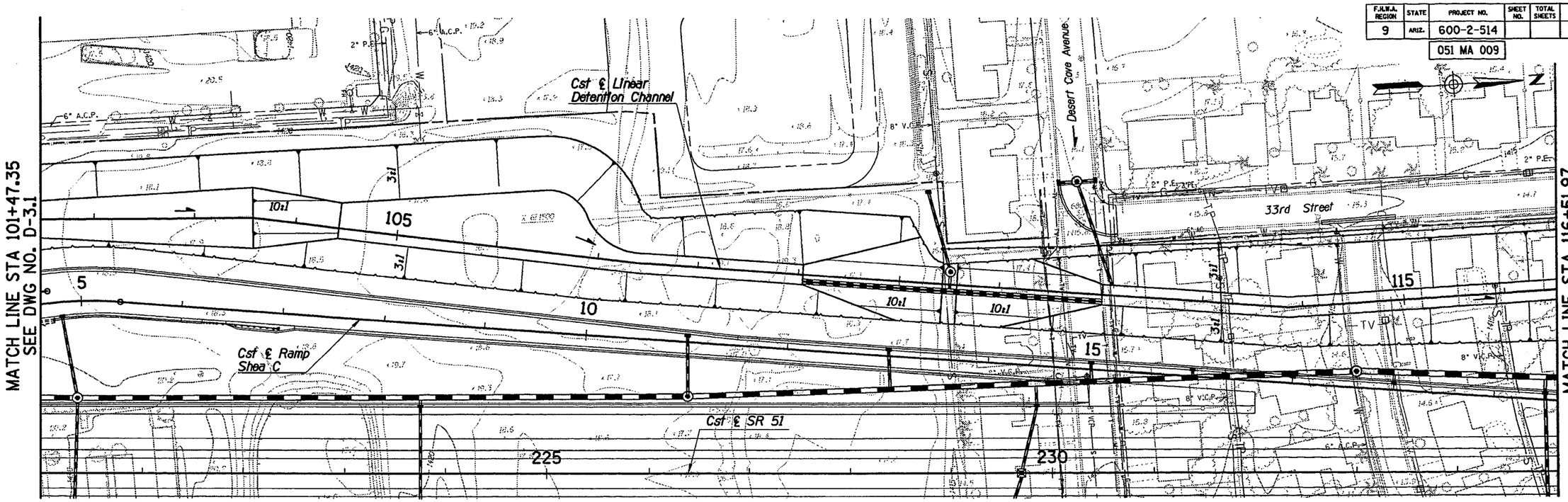

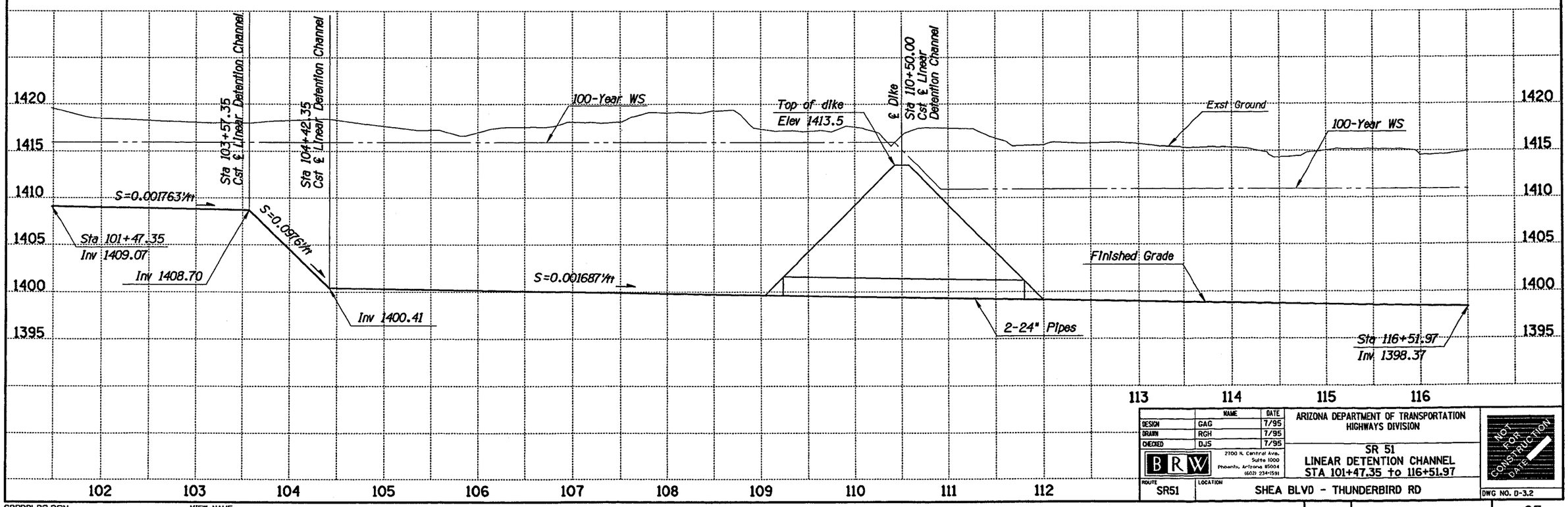

	NAME	DATE
DESIGN	GAG	7/95
DRAWN	RGH	7/95
CHECKED	DJS	7/95

BRW — 2700 N. Central Ave. Suite 1000 Phoenix, Arizona 85004 (602) 234-1591

ARIZONA DEPARTMENT OF TRANSPORTATION
HIGHWAYS DIVISION

SR 51
LINEAR DETENTION CHANNEL
STA 101+47.35 to 116+51.97

NOT FOR CONSTRUCTION DATE

ROUTE: SR51 — LOCATION: SHEA BLVD - THUNDERBIRD RD

DWG NO. D-3.2

SPDDPLD2.DGN
ooooooSYSTIMEoooooo

VIEW NAME:

TRACS NO. H 2059 01C | 600-2-514 | ___ OF ___

SURVEY NO. | FINISHED PLANS | REVISIONS | LOCATION | DATE

F.H.W.A. REGION	STATE	PROJECT NO.	SHEET NO.	TOTAL SHEETS	AS BUILT
9	ARIZ.	600-2-514			

051 MA 009

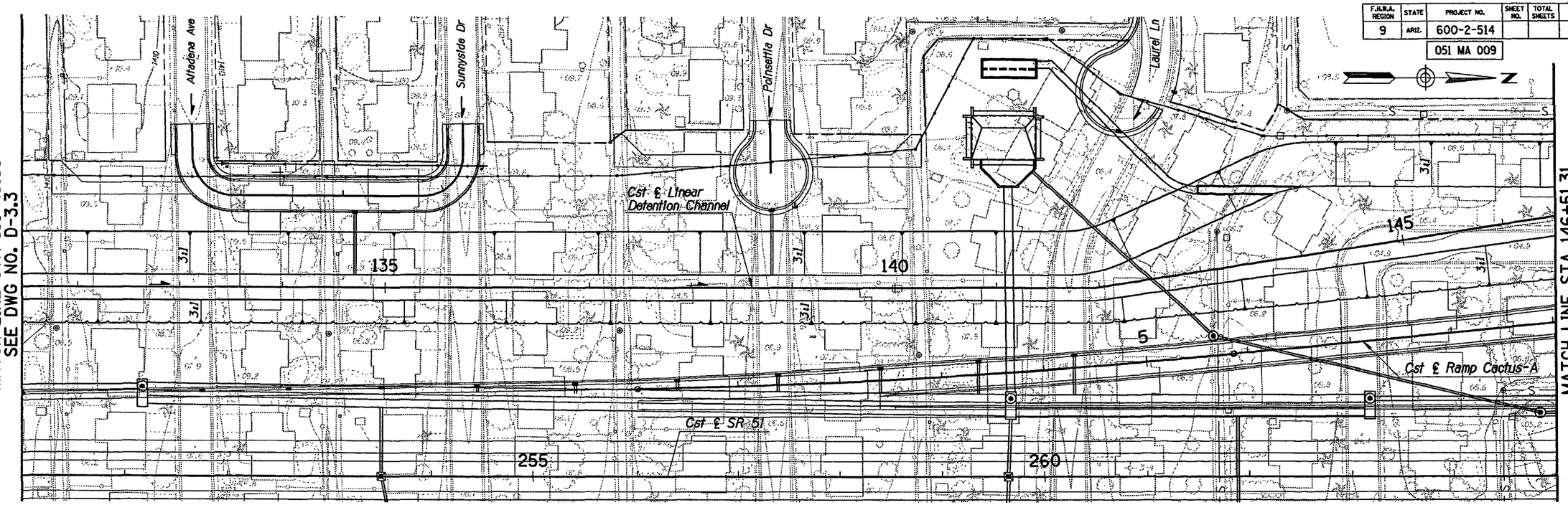

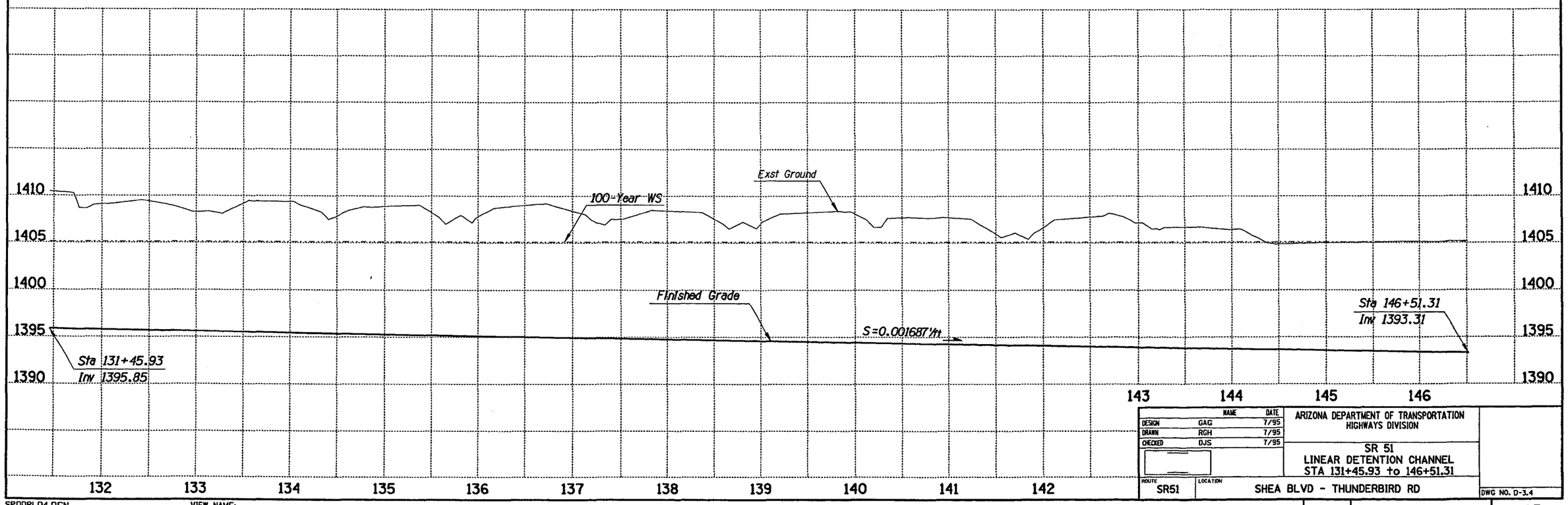

	NAME	DATE
DESIGN	GAG	7/95
DRAWN	RGH	7/95
CHECKED	DJS	7/95

ARIZONA DEPARTMENT OF TRANSPORTATION
HIGHWAYS DIVISION

SR 51
LINEAR DETENTION CHANNEL
STA 131+45.93 to 146+51.31

ROUTE: SR51 | LOCATION: SHEA BLVD - THUNDERBIRD RD

DWG NO. D-3.4

TRACS NO. H 2059 01C | 600-2-514 | ___ OF ___

SPDDPLD4.DGN
ooooooSYSTIMEoooooo

VIEW NAME:

F.H.W.A. REGION	STATE	PROJECT NO.	SHEET NO.	TOTAL SHEETS	AS BUILT
9	ARIZ.	600-2-514			
		051 MA 009			

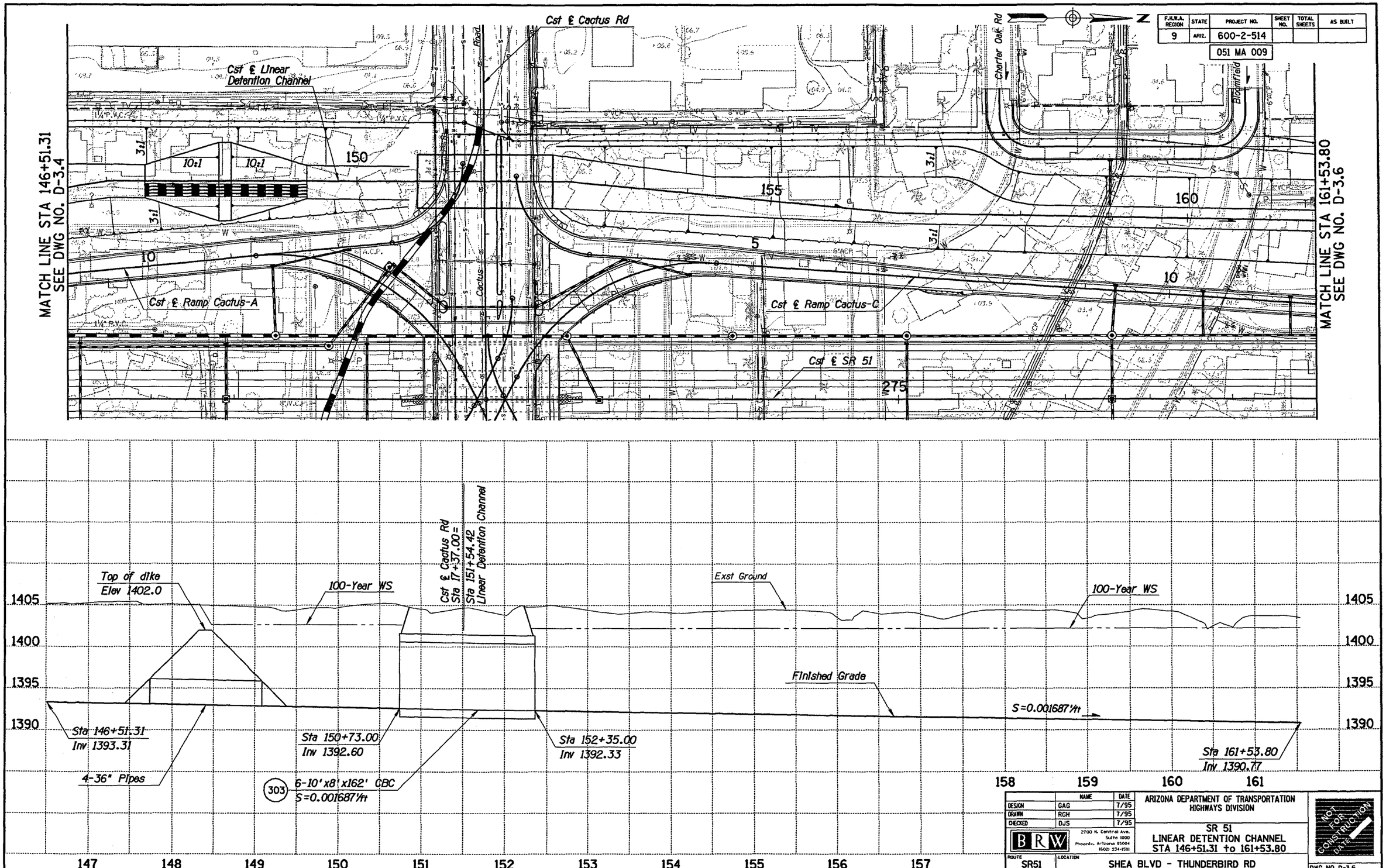

	NAME	DATE
DESIGN	GAG	7/95
DRAWN	RGH	7/95
CHECKED	DJS	7/95

BRW
2700 N. Central Ave.
Suite 1000
Phoenix, Arizona 85004
(602) 234-1591

ARIZONA DEPARTMENT OF TRANSPORTATION
HIGHWAYS DIVISION

SR 51
LINEAR DETENTION CHANNEL
STA 146+51.31 to 161+53.80

NOT FOR CONSTRUCTION
DATE

ROUTE: SR51
LOCATION: SHEA BLVD - THUNDERBIRD RD

DWG NO. D-3.5

SPDDPLD5.DGN
VIEW NAME:
ooooSYSTIMEoooo

TRACS NO. H 2059 01C | 600-2-514 | ___ OF ___

F.H.W.A. REGION	STATE	PROJECT NO.	SHEET NO.	TOTAL SHEETS	AS BUILT
9	ARIZ.	600-2-514			
		051 MA 009			

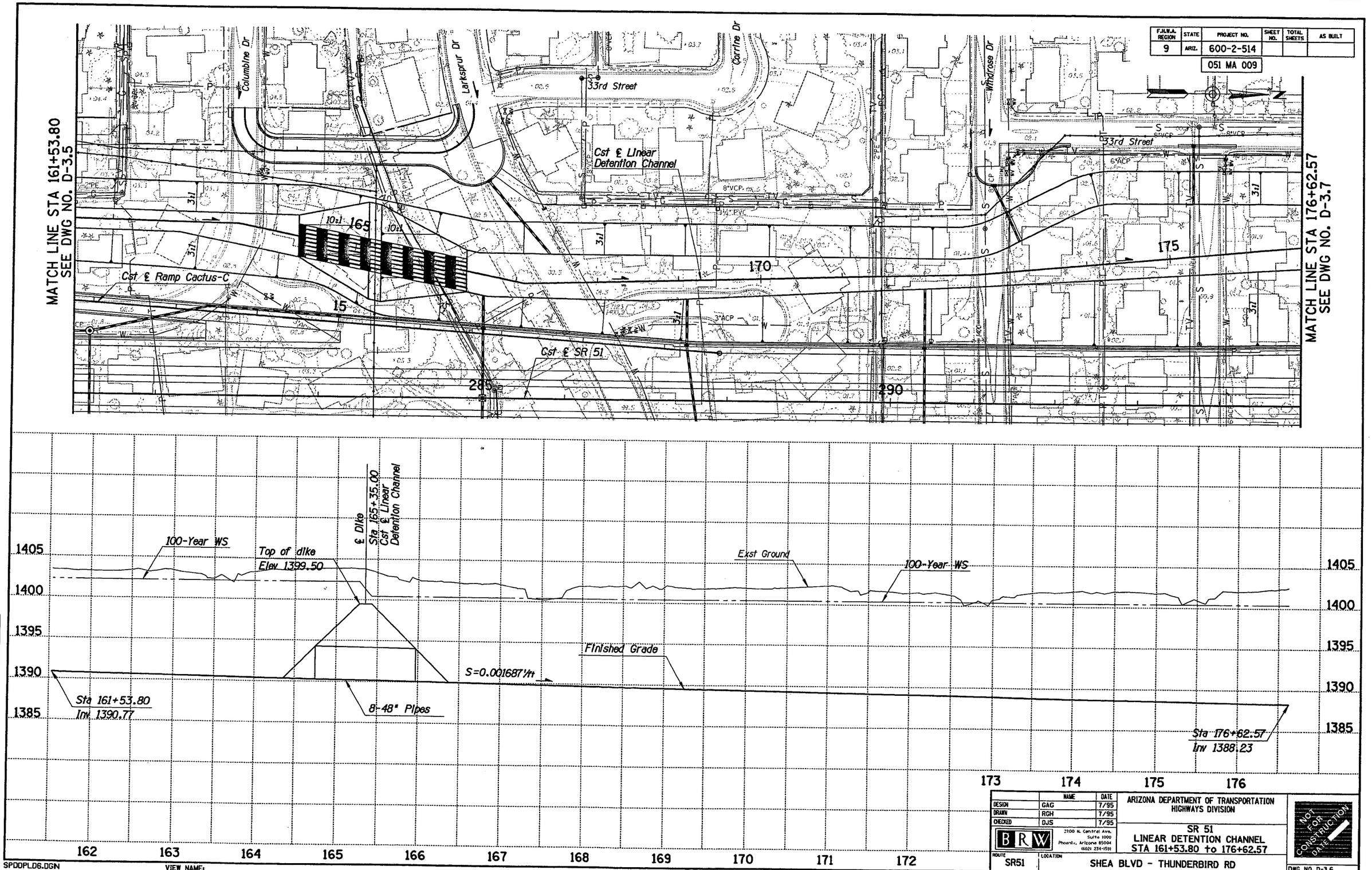

	NAME	DATE
DESIGN	GAG	7/95
DRAWN	RGH	7/95
CHECKED	DJS	7/95

BRW
2100 N. Central Ave.
Suite 1000
Phoenix, Arizona 85004
(602) 234-1591

ARIZONA DEPARTMENT OF TRANSPORTATION
HIGHWAYS DIVISION

SR 51
LINEAR DETENTION CHANNEL
STA 161+53.80 to 176+62.57

NOT FOR CONSTRUCTION
DATE

ROUTE: SR51
LOCATION: SHEA BLVD - THUNDERBIRD RD

DWG NO. D-3.6

TRACS NO. H 2059 01C | 600-2-514 | ___ OF ___

SPDDPLD6.DGN
ooooSYSTIMEoooooo
VIEW NAME:

F.H.W.A. REGION	STATE	PROJECT NO.	SHEET NO.	TOTAL SHEETS	AS BUILT
9	ARIZ.	600-2-514			
		051 MA 009			

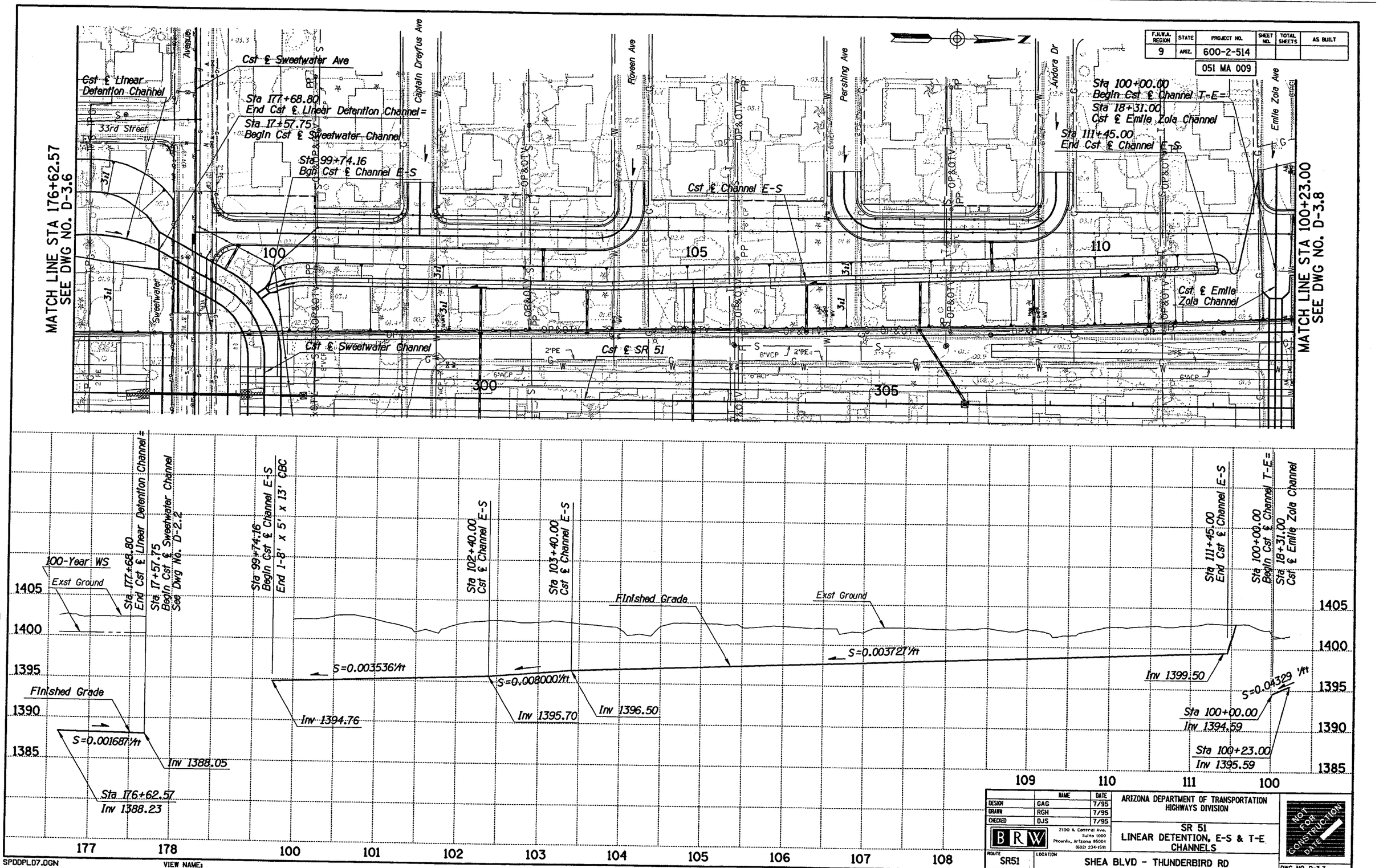

	NAME	DATE
DESIGN	GAG	7/95
DRAWN	RGH	7/95
CHECKED	DJS	7/95

BRW 2100 N. Central Ave. Suite 1000 Phoenix, Arizona 85004 (602) 234-1591

ARIZONA DEPARTMENT OF TRANSPORTATION
HIGHWAYS DIVISION

SR 51
LINEAR DETENTION, E-S & T-E CHANNELS

ROUTE: SR51
LOCATION: SHEA BLVD - THUNDERBIRD RD

NOT FOR CONSTRUCTION
DATE

DWG NO. D-3.7

SPDDPLD7.DGN
oooooSYSTIMEooooo
VIEW NAME:

TRACS NO. H 2059 01C | 600-2-514 | ___ OF ___

F.H.W.A. REGION	STATE	PROJECT NO.	SHEET NO.	TOTAL SHEETS	AS BUILT
9	ARIZ.	600-2-514			
		051 MA 009			

MATCH LINE STA 100+23.00
SEE DWG NO. D-3.7

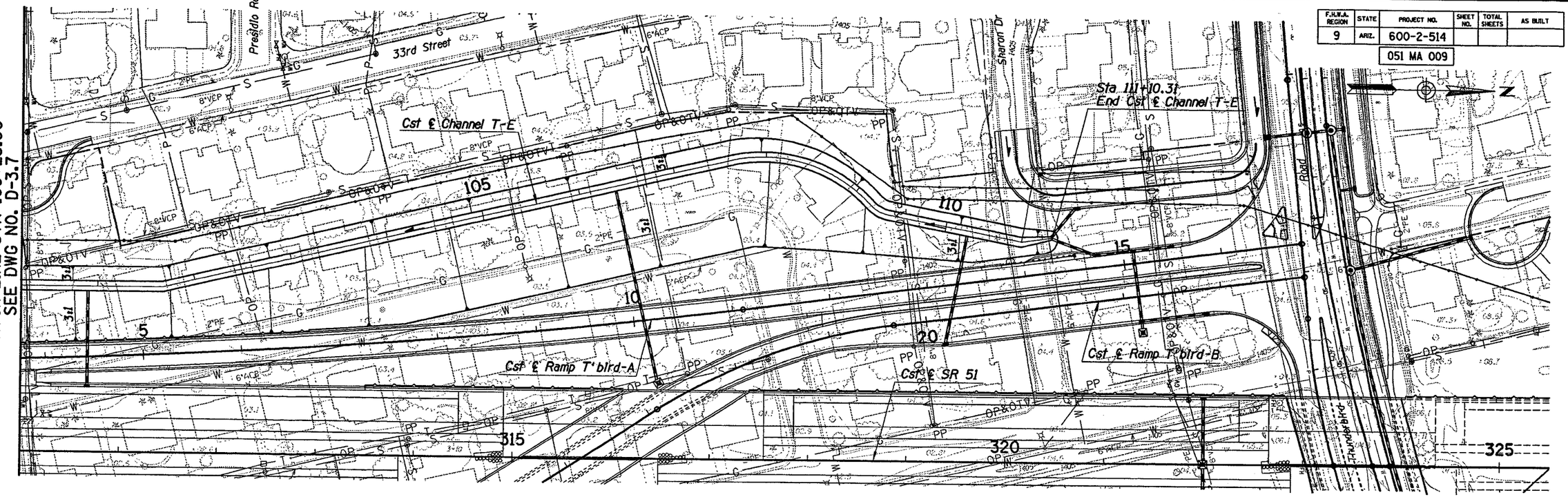

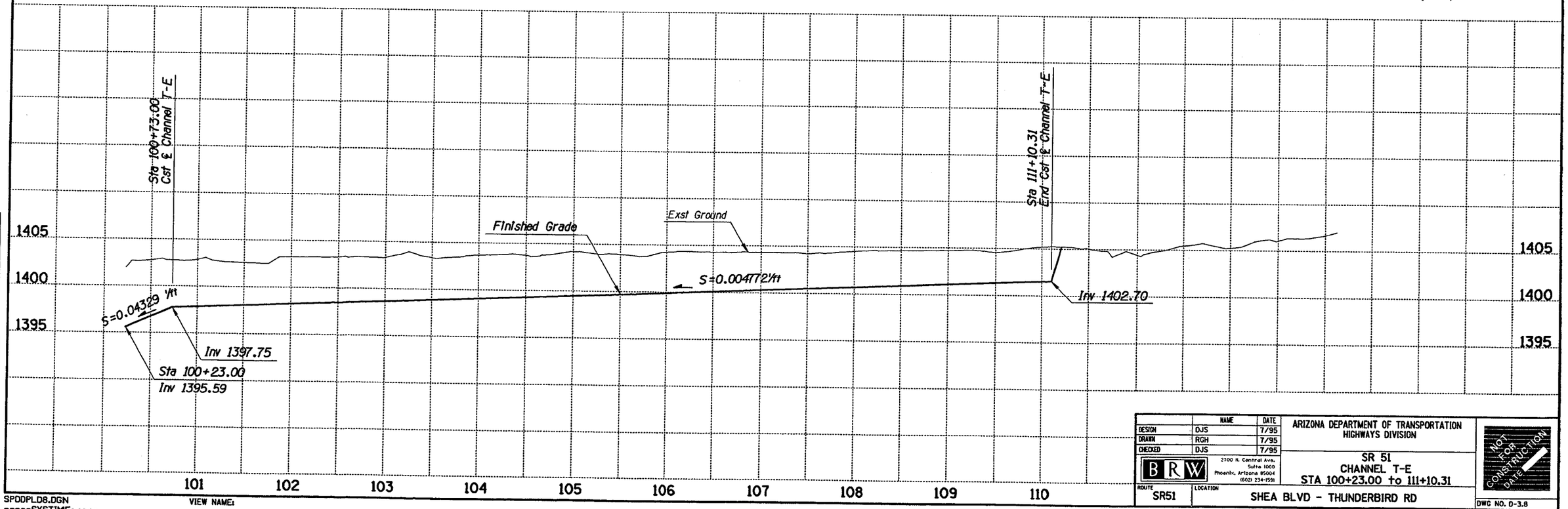

	NAME	DATE
DESIGN	DJS	7/95
DRAWN	RGH	7/95
CHECKED	DJS	7/95

BRW
2100 N. Central Ave.
Suite 1000
Phoenix, Arizona 85004
(602) 234-1591

ARIZONA DEPARTMENT OF TRANSPORTATION
HIGHWAYS DIVISION

SR 51
CHANNEL T-E
STA 100+23.00 to 111+10.31

NOT FOR CONSTRUCTION
DATE

ROUTE: SR51
LOCATION: SHEA BLVD - THUNDERBIRD RD

DWG NO. D-3.8

TRACS NO. H 2059 01C | 600-2-514 | ___ OF ___

SPDDPLD8.DGN
ooooSYSTIMEoooooo

VIEW NAME:

FINISHED

SURVEY N

Appendix B

Roadway and Linear Detention Channel Typical Sections

F.H.W.A. REGION	STATE	PROJECT NO.	SHEET NO.	TOTAL SHEETS	AS BUILT
9	ARIZ.	600-2-514			
		051 MA 009			

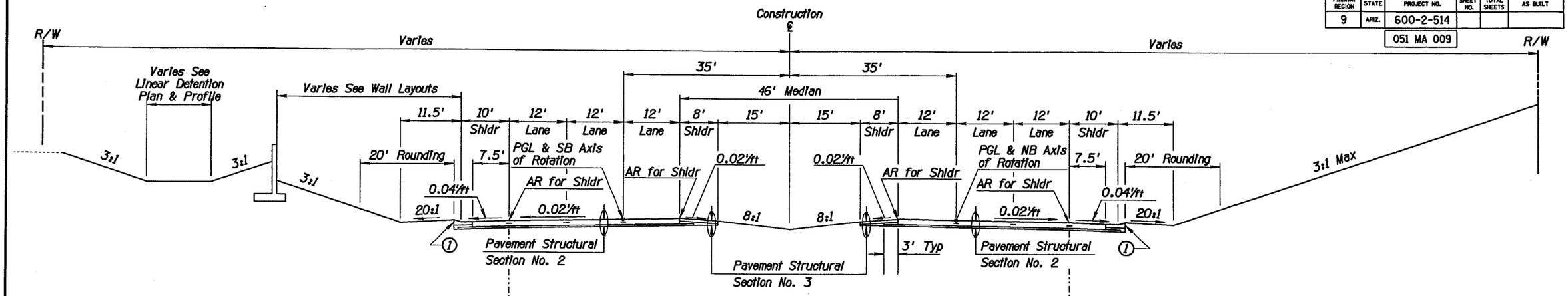

TYPICAL SECTION - SR 51

Southbound
Sta 215+70.00 to 230+36.10
Sta 236+37.53 to 238+45.00
Sta 258+38.83 to 281+60.64

Northbound
Sta 220+00.00 to 229+86.21
Sta 250+25.00 to 252+63.83
Sta 258+64.86 to 281+61.17

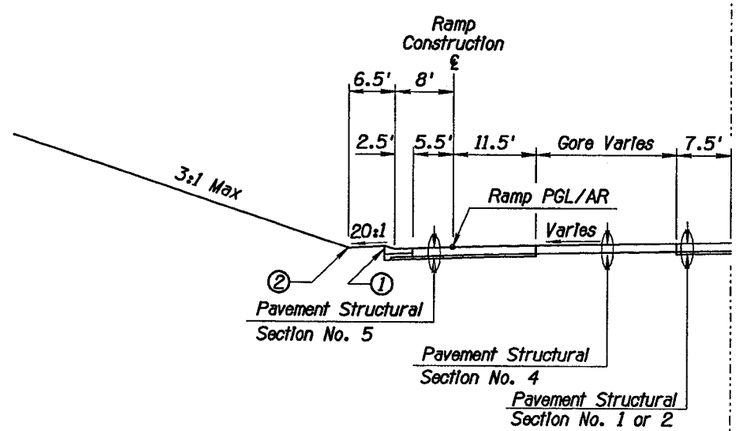

Southbound
Sta 230+36.10 to 232+00.40
Sta 256+00.00 to 258+38.83
Sta 281+60.64 to 283+25.09
Sta 306+25.00 to 310+15.71

Northbound
Sta 229+86.21 to 233+00.00
Sta 257+00.40 to 258+64.86
Sta 281+61.17 to 284+00.00
Sta 304+65.26 to 306+05.14

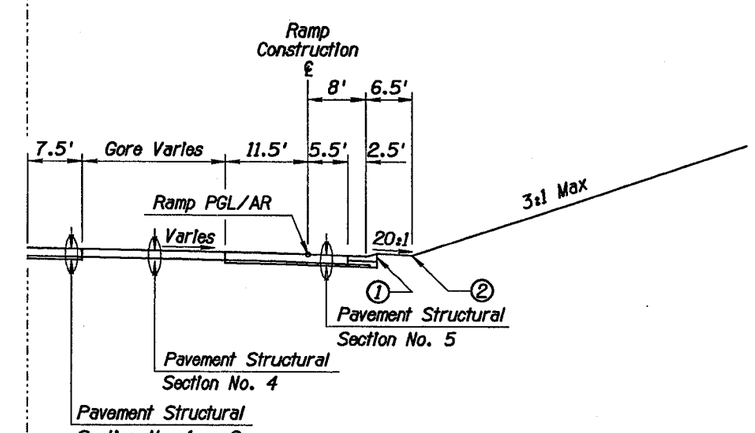

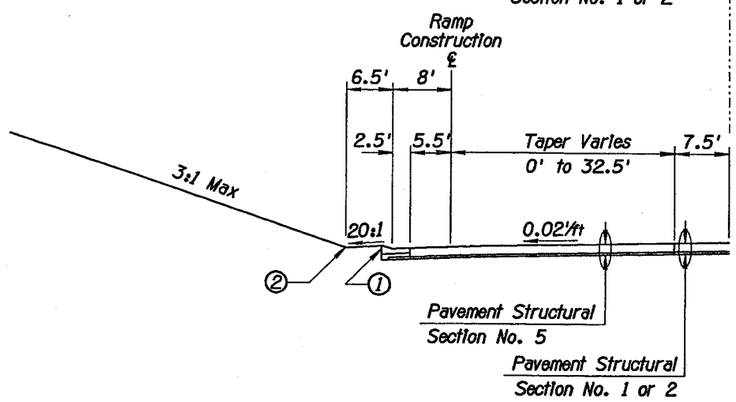

Southbound
Sta 232+00.40 to 236+37.53
Sta 243+25.00 to 256+00.00
Sta 283+25.09 to 287+58.78
Sta 293+50.00 to 306+25.00

Northbound
Sta 233+00.00 to 245+75.00
Sta 252+63.83 to 257+00.40
Sta 284+00.00 to 290+75.00
Sta 300+28.81 to 304+65.26

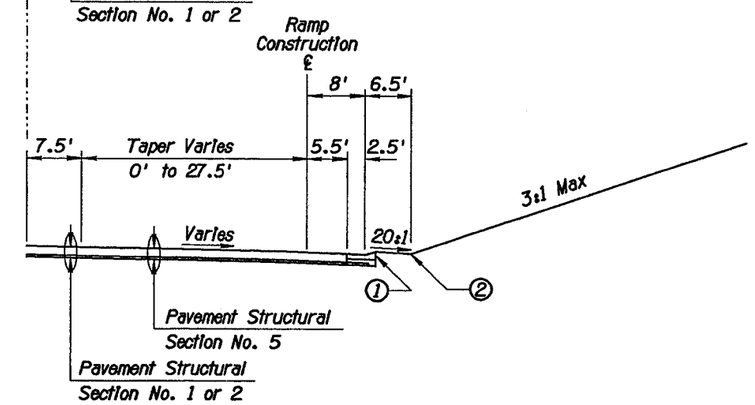

NOTES:

1. See Curb and Gutter Summary, Dwg No. G-8.1 and Barrier Summary, Dwg No. G-7.1 for type and stationing of curb and gutter or barrier.
2. 10' Slope Rounding except as noted.

	NAME	DATE
DESIGN	MDS	7/95
DRAWN	RGH	7/95
CHECKED		

BRW 2700 N. Central Ave. Suite 1000 Phoenix, Arizona 85004 (602) 234-1591

ARIZONA DEPARTMENT OF TRANSPORTATION
HIGHWAYS DIVISION

SR 51
TYPICAL SECTIONS

NOT FOR CONSTRUCTION DATE

ROUTE: SR51
LOCATION: SHEA BLVD - THUNDERBIRD RD

DWG NO. G-3.1

TRACS NO. H 2059 01C | 600-2-514 | ___ OF ___

SPTYP01.DGN
VIEW NAME:

F.H.W.A. REGION	STATE	PROJECT NO.	SHEET NO.	TOTAL SHEETS	AS BUILT
9	ARIZ.	600-2-514			
		051 MA 009			

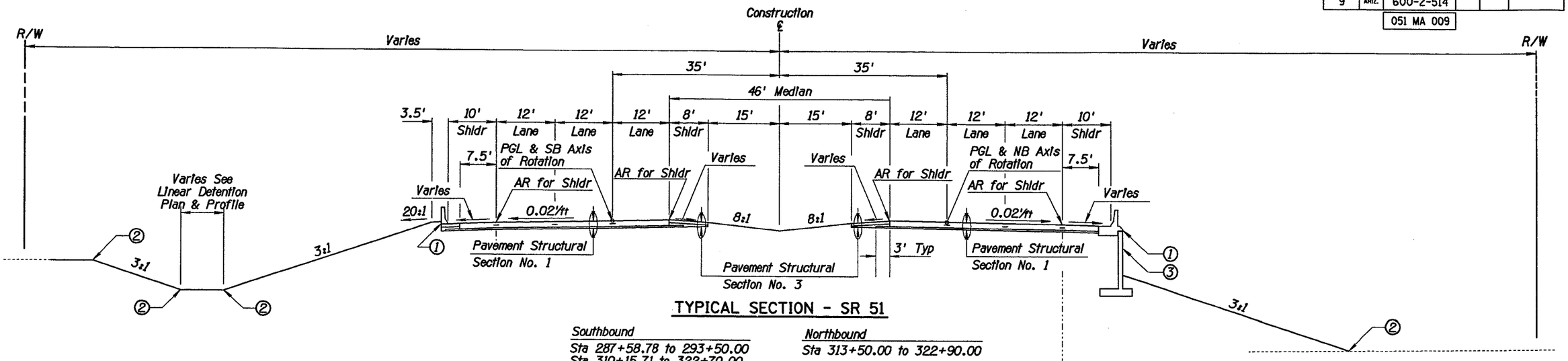

TYPICAL SECTION - SR 51

Southbound
Sta 287+58.78 to 293+50.00
Sta 310+15.71 to 322+70.00

Northbound
Sta 313+50.00 to 322+90.00

Notes:

1. See Curb and Gutter Summary, Dwg No.G-8.1 and Barrier Summary, Dwg No. 7.1 for type and stationing of curb and gutter or barrier.
2. 10' Slope Rounding except as noted.
3. See Retaining Wall Layout.

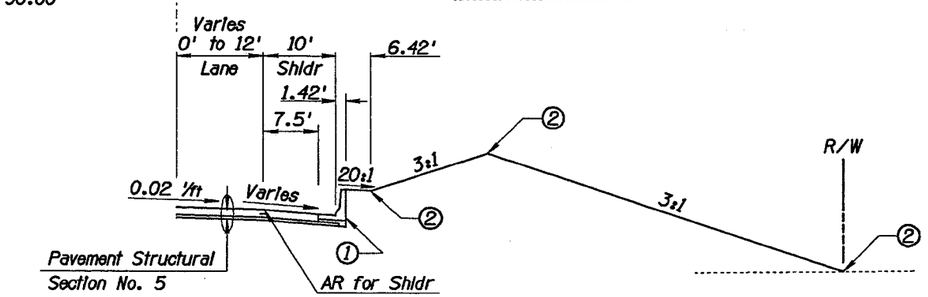

Northbound
Sta 290+75.00 to 300+28.81
Sta 306+05.14 to 313+50.00

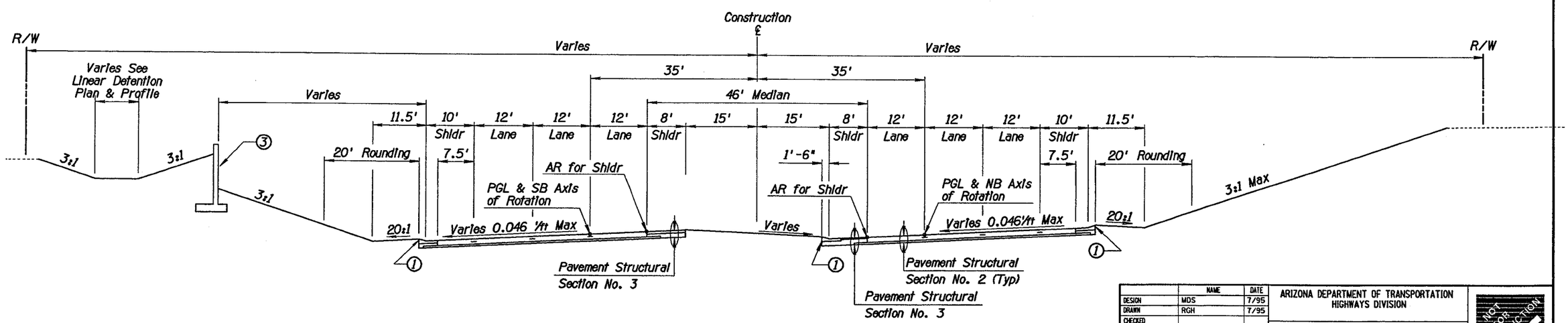

Southbound
Sta 206+00.00 to 215+70.00
Sta 238+45.00 to 243+25.00

Northbound
Sta 205+96.84 to 220+00.00
Sta 245+75.00 to 250+25.00

	NAME	DATE
DESIGN	MDS	7/95
DRAWN	RGH	7/95
CHECKED		

BRW — 2700 N. Central Ave. Suite 1000 Phoenix, Arizona 85004 (602) 234-1591

ARIZONA DEPARTMENT OF TRANSPORTATION
HIGHWAYS DIVISION

SR 51
TYPICAL SECTIONS

ROUTE: SR51 — LOCATION: SHEA BLVD - THUNDERBIRD RD

NOT FOR CONSTRUCTION DATE

DWG NO. G-3.2

SPTYP02.DGN — VIEW NAME:

TRACS NO. H 2059 01C | 600-2-514 | ___ OF ___

F.H.W.A. REGION	STATE	PROJECT NO.	SHEET NO.	TOTAL SHEETS	AS BUILT
9	ARIZ.	600-2-514			
		051 MA 009			

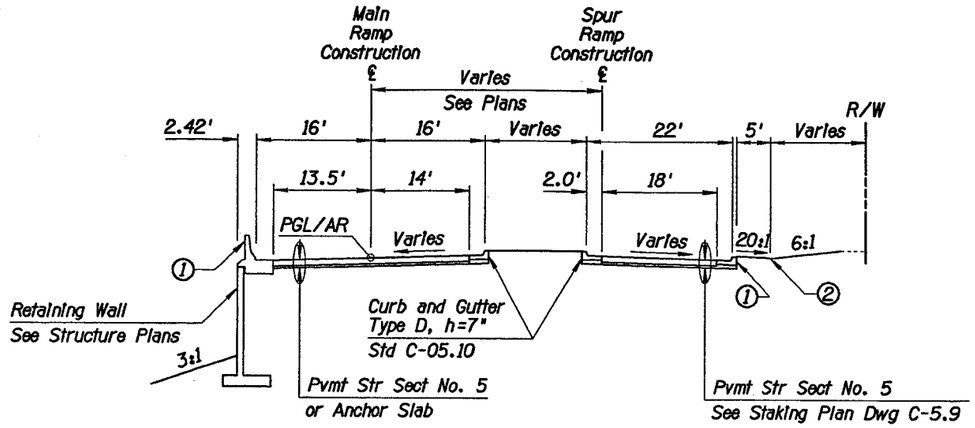

TYPICAL SECTION - RAMPS

Ramp Cactus-A Sta 12+32.11 to 13+28.35
Ramp Cactus-B Sta 16+48.64 to 16+88.77
Ramp Cactus-C Sta 2+83.22 to 3+53.65
Ramp Cactus-D Sta 2+31.66 to 2+85.04

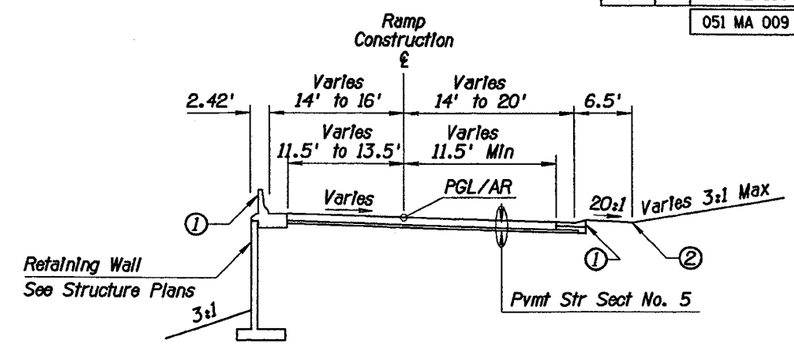

TYPICAL SECTION - RAMPS

Ramp Shea-C Sta 4+00.00 to 11+50.00
Ramp Shea-D Sta 4+45.00 to 8+00.00
Ramp Cactus-A Sta 8+30.00 to 11+30.11
Ramp Cactus-B Sta 12+51.08 to 15+51.08
Ramp Cactus-C Sta 4+55.56 to 7+55.56
Ramp Cactus-D Sta 3+82.65 to 6+82.65

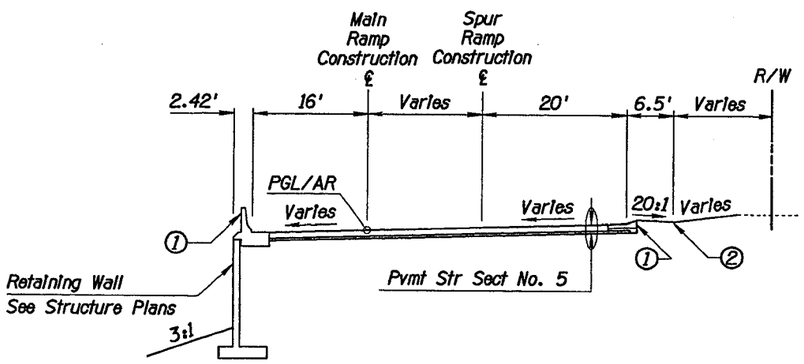

TYPICAL SECTION - RAMPS

Ramp Cactus-A Sta 11+30.11 to 12+32.11
Ramp Cactus-B Sta 15+51.08 to 16+48.64
Ramp Cactus-C Sta 3+53.65 to 4+55.56
Ramp Cactus-D Sta 2+85.04 to 3+87.65

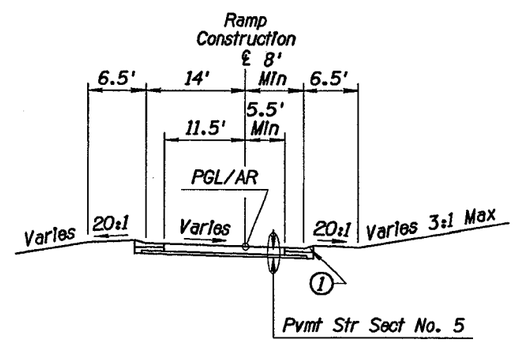

TYPICAL SECTION - RAMPS

Ramp Shea-C Sta 11+50.00 to 14+99.46
Ramp Shea-D Sta 8+00.00 to 14+22.62
Ramp Cactus-A Sta 2+38.19 to 8+30.00
Ramp Cactus-B Sta 6+30.19 to 12+51.08
Ramp Cactus-C Sta 7+55.56 to 13+38.24
Ramp Cactus-D Sta 6+82.65 to 12+84.11

NOTES:

1. See Curb and Gutter Summary, Dwg No. G-8.1 thru G-8.5 and Barrier Summary, Dwg No. G-7.1 or G-7.2 for type and stationing of curb and gutter or barrier.
2. 10' Slope Rounding except as noted.
3. All typicals looking in direction of traffic.

	NAME	DATE
DESIGN	MDS	7/95
DRAWN	RGH	7/95
CHECKED		

BRW 2100 N. Central Ave. Suite 1000 Phoenix, Arizona 85004 (602) 234-1591

ARIZONA DEPARTMENT OF TRANSPORTATION
HIGHWAYS DIVISION

SR 51
TYPICAL SECTIONS
SHEA & CACTUS RAMPS

NOT FOR CONSTRUCTION DATE

ROUTE: SR51 | LOCATION: SHEA BLVD - THUNDERBIRD RD

DWG NO. G-3.3

TRACS NO. H 2059 01C | 600-2-514 | ___ OF ___

SPTYP03.DGN VIEW NAME:

F.H.W.A. REGION	STATE	PROJECT NO.	SHEET NO.	TOTAL SHEETS	AS BUILT
9	ARIZ.	600-2-514			
		051 MA 009			

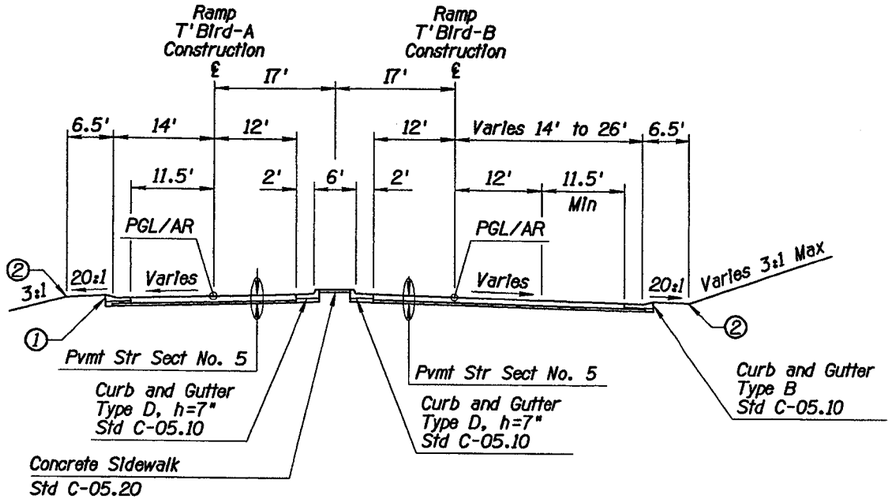

TYPICAL SECTION

RAMP T-BIRD A
Sta 11+90.00 to 16+40.64

RAMP T-BIRD B
Sta 19+00.00 to 23+45.60

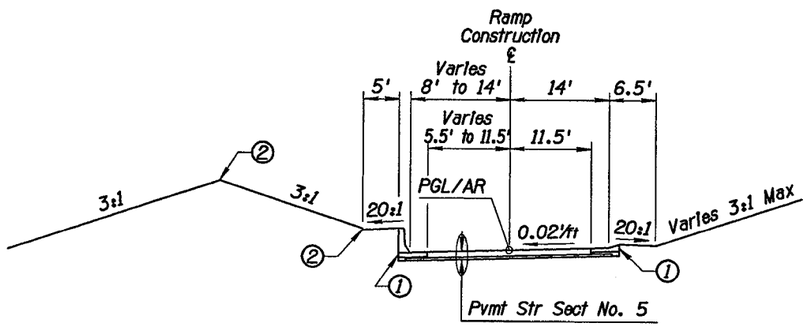

TYPICAL SECTION - RAMP T-BIRD A

Sta 3+90.53 to 11+90.00

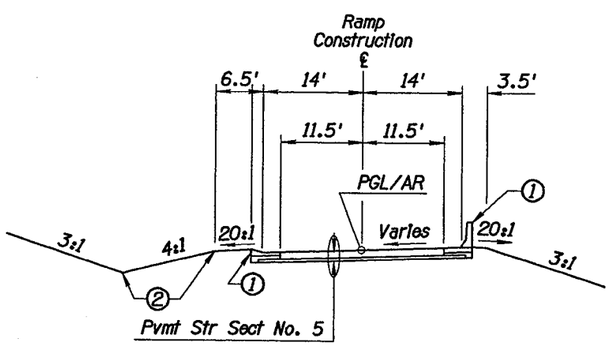

TYPICAL SECTION - RAMP T-BIRD B

Sta 6+05.33 to 19+00.00

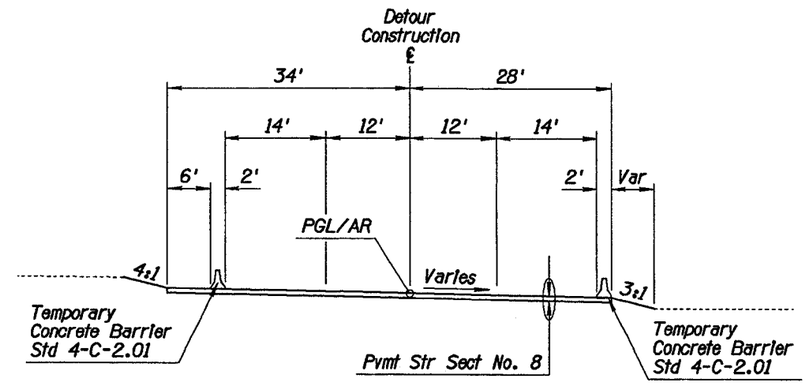

TYPICAL SECTION - CACTUS DETOUR

Sta 16+65.96 to 22+96.57

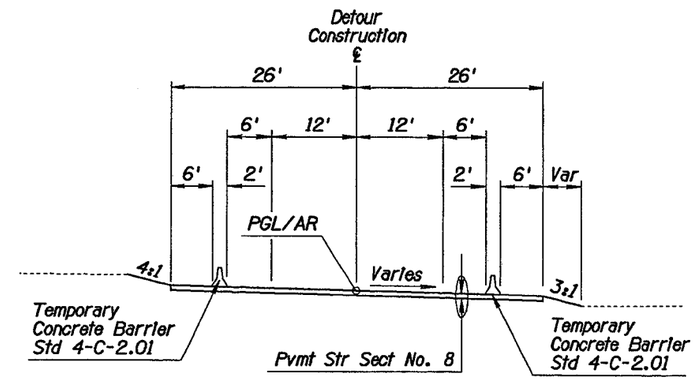

TYPICAL SECTION - THUNDERBIRD DETOUR

Sta 16+65.96 to 22+96.57

NOTES:

① See Curb and Gutter Summary, Dwg No. G-8.2 thru G-8.6 and Barrier Summary, Dwg No. G-7.1 or G-7.2 for type and stationing of curb and gutter or barrier.

② 10' Slope Rounding except as noted.

	NAME	DATE
DESIGN	MDS	7/95
DRAWN	RGH	7/95
CHECKED		

BRW — 2100 N. Central Ave. Suite 1000, Phoenix, Arizona 85004, (602) 234-1551

ARIZONA DEPARTMENT OF TRANSPORTATION
HIGHWAYS DIVISION

SR 51
TYPICAL SECTIONS
DETOURS, THUNDERBIRD RAMPS

NOT FOR CONSTRUCTION DATE

ROUTE: SR51 | LOCATION: SHEA BLVD - THUNDERBIRD RD

DWG NO. G-3.4

TRACS NO. H 2059 01C | 600-2-514 | ___ OF ___

SPTYP04.DGN VIEW NAME:

SURVEY | FINISHED

F.H.W.A. REGION	STATE	PROJECT NO.	SHEET NO.	TOTAL SHEETS	AS BUILT
9	ARIZ.	600-2-514			
		051 MA 009			

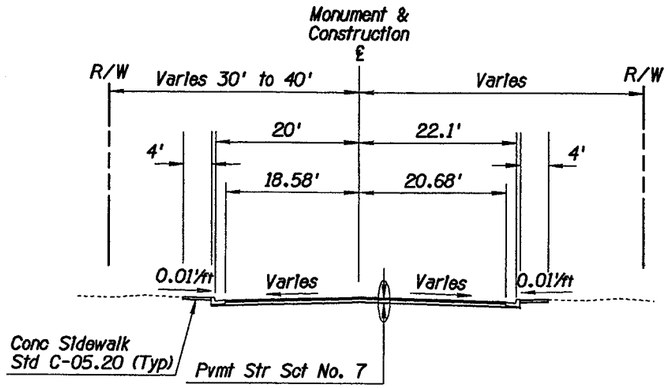

TYPICAL SECTION - SWEETWATER AVE

Sta 17+50.00 to Sta 19+00.00
Sta 28+17.41 to Sta 31+25.00

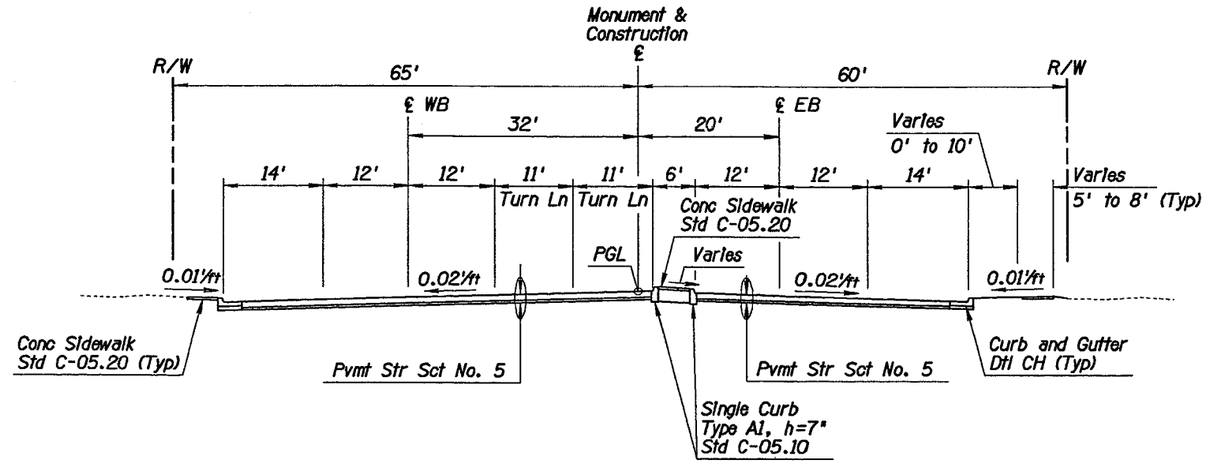

TYPICAL SECTION - CACTUS ROAD

Sta 16+80.00 to Sta 18+90.25 (Similar)
Sta 21+09.75 to Sta 22+50.00 (Shown)

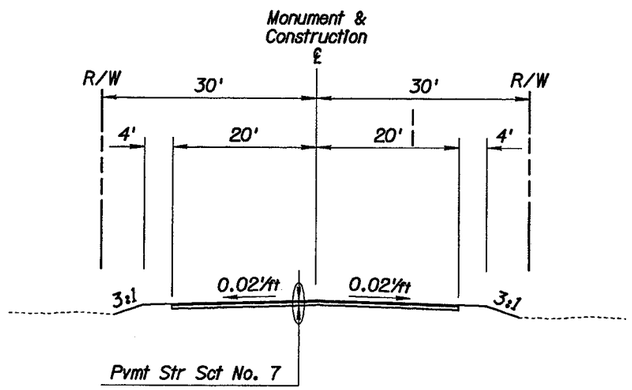

TYPICAL SECTION - 36TH STREET

Sta 17+40.00 to Sta 22+37.00

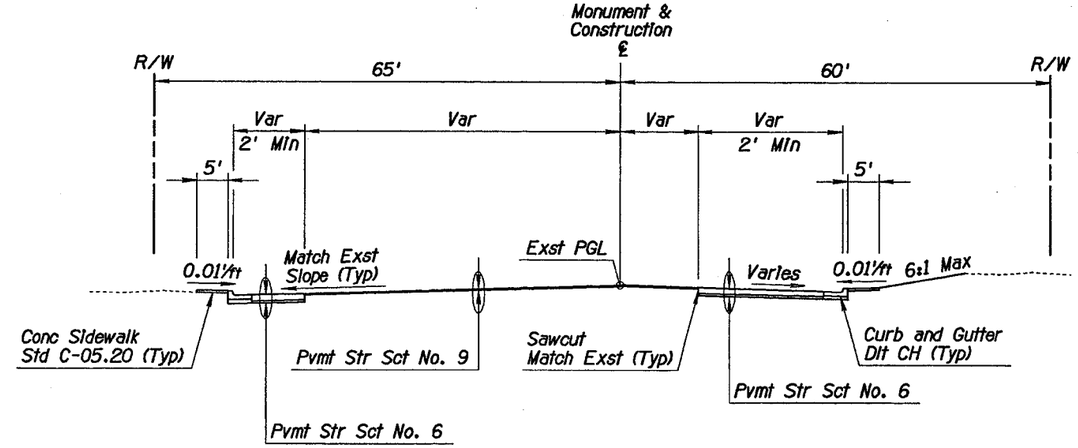

TYPICAL SECTION - CACTUS ROAD

Left

Sta 14+84.39 to Sta 16+80.00
Sta 21+09.75 to Sta 23+20.00

Right

Sta 14+50.00 to Sta 16+80.00
Sta 21+09.75 to Sta 27+77.88

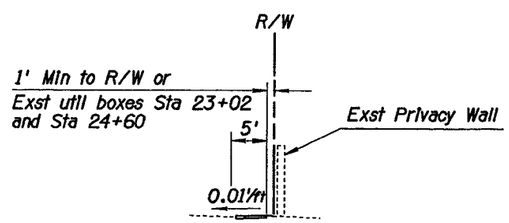

OFFSET SIDEWALK

Rt of Cactus Rd Sta 21+98 to Sta 28+25

NOTES:

1. See Curb and Gutter Summary, Dwg No. G-8.4 for type and stationing of curb and gutter.

	NAME	DATE
DESIGN	MDS	7/95
DRAWN	RGH	7/95
CHECKED		

BRW — 2100 N. Central Ave. Suite 1000 Phoenix, Arizona 85004 (602) 234-1591

ARIZONA DEPARTMENT OF TRANSPORTATION
HIGHWAYS DIVISION

SR 51
TYPICAL SECTIONS
CACTUS RD, SWEETWATER, 36TH ST

ROUTE: SR51
LOCATION: SHEA BLVD - THUNDERBIRD RD

NOT FOR CONSTRUCTION DATE

DWG NO. G-3.5

TRACS NO. H 2059 01C | 600-2-514 | ___ OF ___

SPTYP05.DGN VIEW NAME:

F.H.W.A. REGION	STATE	PROJECT NO.	SHEET NO.	TOTAL SHEETS	AS BUILT
9	ARIZ.	600-2-514			
		051 MA 009			

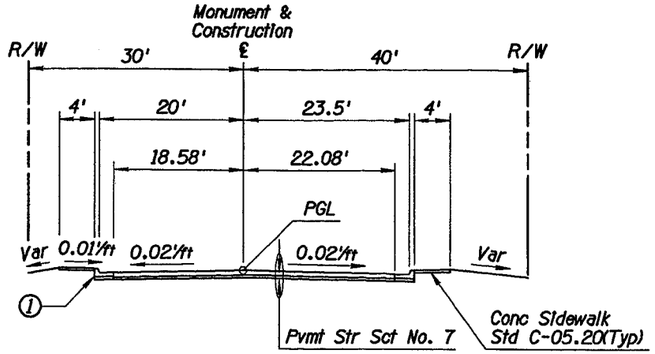

TYPICAL SECTION - CHOLLA ST

Sta 16+81.36 to 18+54.25
Sta 21+40.75 to 22+04.83

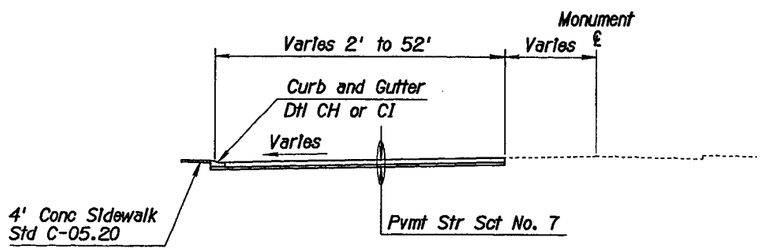

TYPICAL SECTION - STREET TERMINATIONS

Left		Right	
Poinsettia Dr	Lt of Sta 257+00	Mescal St	Rt of Sta 234+00
Laurel Ln	Lt of Sta 261+00	Shangrl La Rd	Rt of Sta 238+00
Windrose Dr	Lt of Sta 291+00	Yucca St	Rt of Sta 241+00
34th St	Lt of Sta 307+00	34th St/Park Ent	Rt of Sta 279+00

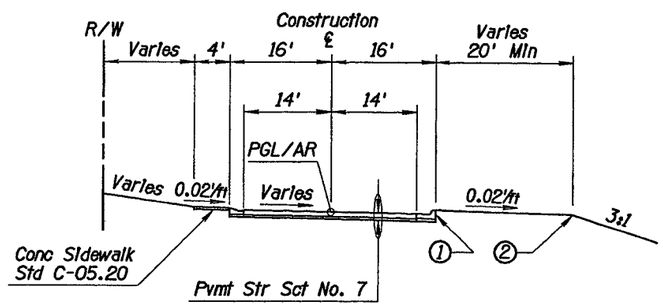

TYPICAL SECTION - LOCAL ST CONNECTORS

Connector A Sta 1+00 to 4+72.01
Connector B Sta 1+00 to 4+71.50
Connector C Sta 1+00 to 5+02.26
Connector D Sta 1+00 to 4+16.29
Connector E Sta 0+00 to 5+88.22
Connector F Sta 1+00 to 4+65.18
Connector G Sta 1+00 to 4+13.64
34th St North of Sweetwater

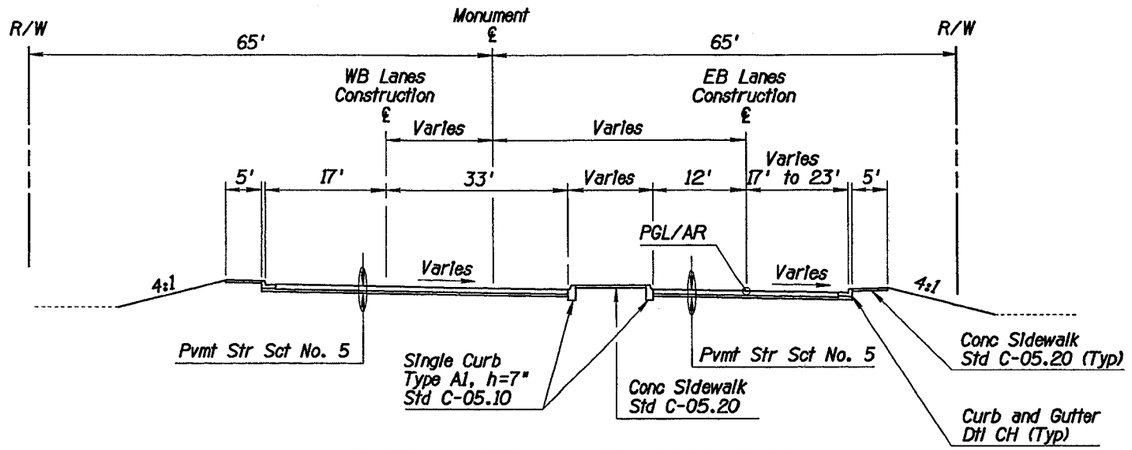

TYPICAL SECTION - THUNDERBIRD RD

EB Sta 15+57.50 to 21+92.00
WB Sta 15+52.00 to 21+67.00

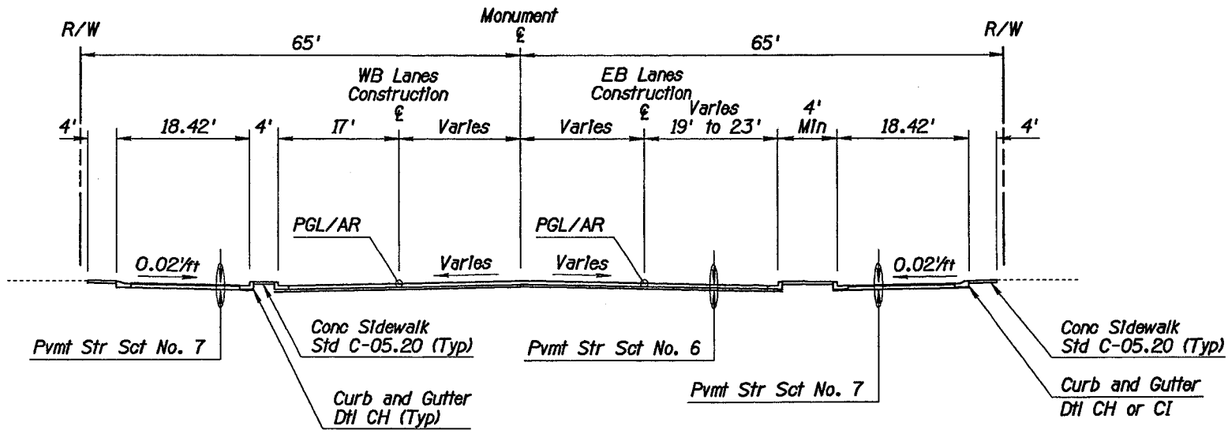

TYPICAL SECTION - THUNDERBIRD RD

EB Sta 14+13.41 to 15+57.50
EB Sta 21+92.00 to 22+98.68
WB Sta 14+10.28 to 15+52.00
WB Sta 21+67.00 to 22+36.46

NOTES:

1. See Curb and Gutter Summary, Dwg No. G-8.3 thru G-8.6 for type and stationing of curb and gutter.
2. 10' Slope Rounding except as noted.

	NAME	DATE
DESIGN	MDS	7/95
DRAWN	RGH	7/95
CHECKED		

BRW
2100 N. Central Ave.
Suite 1000
Phoenix, Arizona 85004
(602) 234-1591

ARIZONA DEPARTMENT OF TRANSPORTATION
HIGHWAYS DIVISION

SR 51
TYPICAL SETIONS
THUNDERBIRD, CHOLLA, LOCAL CONN'S

NOT FOR CONSTRUCTION
DATE

ROUTE: SR51
LOCATION: SHEA BLVD - THUNDERBIRD RD

DWG NO. G-3.6

TRACS NO. H 2059 01C | 600-2-514 | ___ OF ___

SPTYP06.DGN
VIEW NAME:

F.H.W.A. REGION	STATE	PROJECT NO.	SHEET NO.	TOTAL SHEETS	AS BUILT
9	ARIZ.	600-2-514			
		051 MA 009			

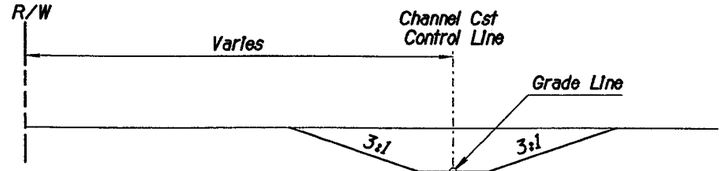

① Sta 117+50 to 124+67, 20'
Sta 125+64 to 127+00, 27'
Sta 144+75 to 148+00, varies, 40' to 66'
Sta 160+25 to 162+80, 25'
Sta 162+80 to 177+00, varies, 25' to 93'

TYPICAL SECTION - LINEAR DETENTION CHANNEL

Sta 117+50 to 127+00
Sta 144+75 to 148+00
Sta 160+25 to 177+00

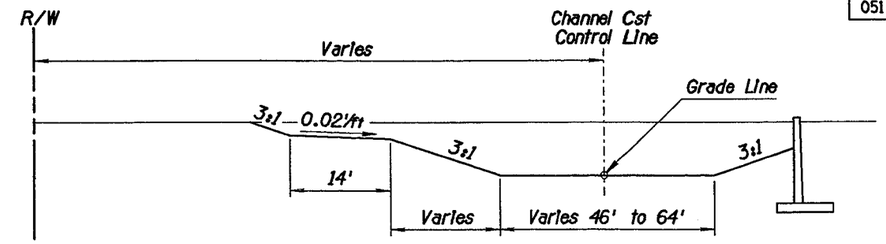

TYPICAL SECTION - LINEAR DETENTION CHANNEL

Sta 152+50 to 155+50

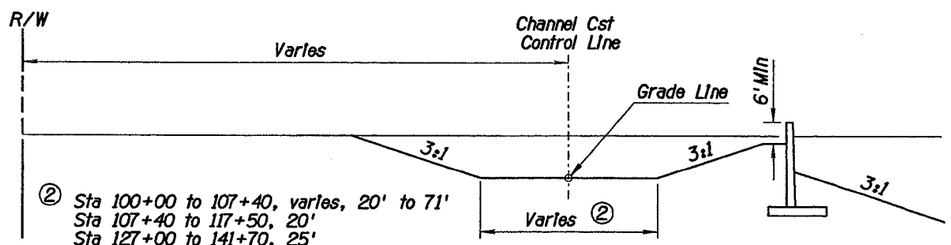

② Sta 100+00 to 107+40, varies, 20' to 71'
Sta 107+40 to 117+50, 20'
Sta 127+00 to 141+70, 25'
Sta 141+70 to 144+75, varies, 25' to 66'
Sta 148+00 to 152+50, varies, 25' to 64'
Sta 155+50 to 158+25, varies, 25' to 51'
Sta 158+25 to 160+25, 25'

TYPICAL SECTION - LINEAR DETENTION CHANNEL

Sta 100+00 to 117+50
Sta 127+00 to 144+75
Sta 148+00 to 152+50
Sta 155+50 to 160+25

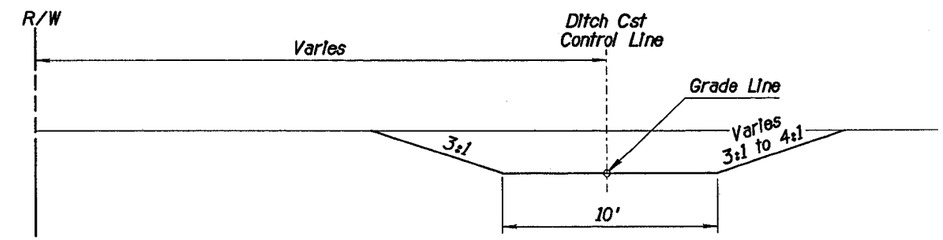

TYPICAL ROADWAY DITCH SECTION

Sta 297+50 SR 51 to Sta 2+80 Ramp T-bird A
Sta 3+70 to 14+00 Ramp T-bird A

	NAME	DATE
DESIGN	GAG	4/95
DRAWN	MRE	4/95
CHECKED	DJS	4/95

BRW 2700 N. Central Ave. Suite 1000 Phoenix, Arizona 85004 (602) 234-1591

ARIZONA DEPARTMENT OF TRANSPORTATION
HIGHWAYS DIVISION

SR 51
TYPICAL SECTIONS
LINEAR DETENTION CHANNEL

NOT FOR CONSTRUCTION DATE

ROUTE: SR51
LOCATION: SHEA BLVD - THUNDERBIRD RD

DWG NO. D-5.2

TRACS NO. H 2059 01C | 600-2-514 | ___ OF ___

SPDTYIB1.DGN
ooooooSYSTIMEoooooo

VIEW NAME:

FINISHED

SURVEY NO.

Appendix C
Indian Bend Wash Drainage System Plan

F.H.W.A. REGION	STATE	PROJECT NO.	SHEET NO.	TOTAL SHEETS	AS BUILT
9	ARIZ.	600-2-514			
		051 MA 009			

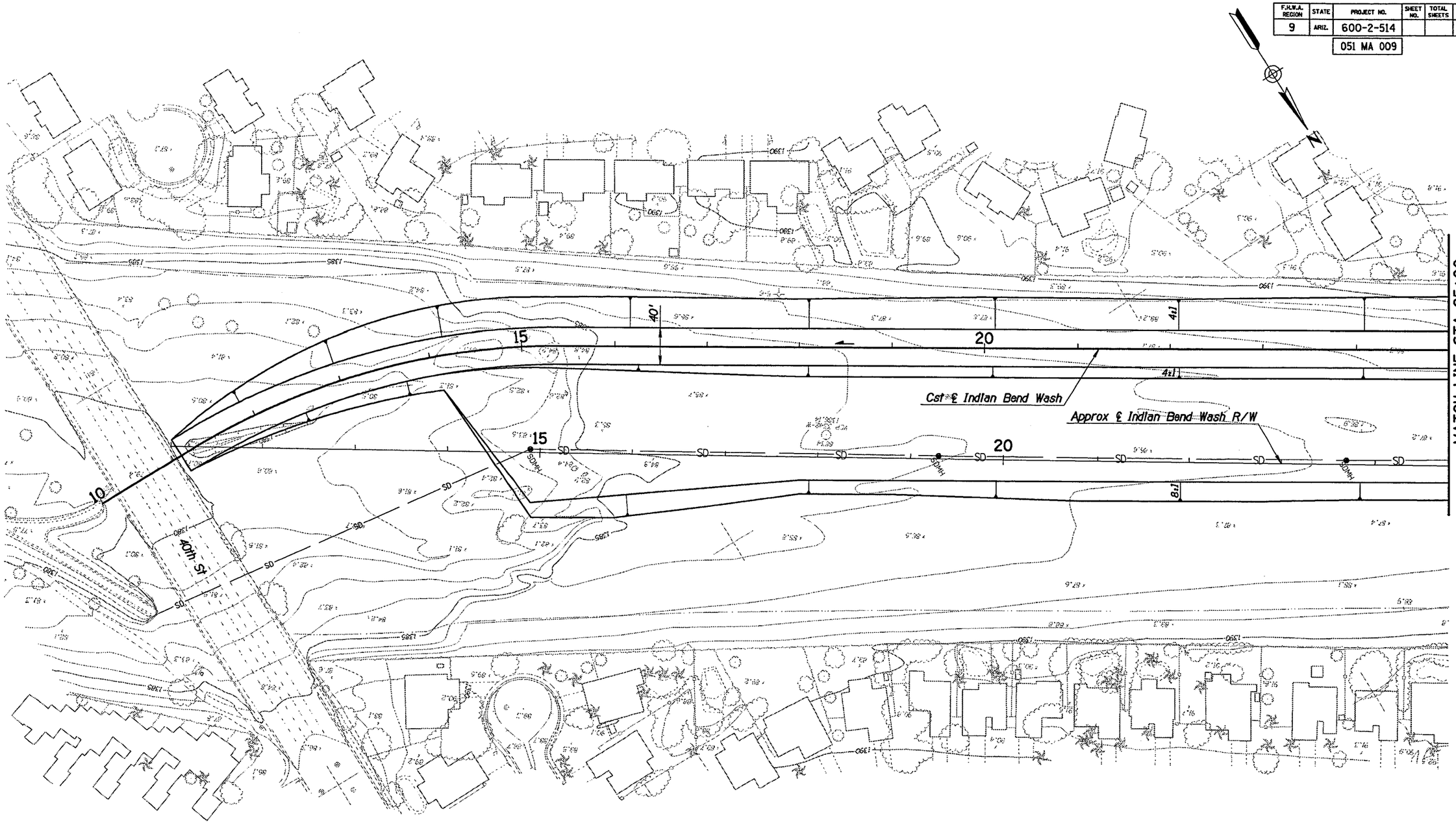

	NAME	DATE
DESIGN	DJS	4/95
DRAWN	MGC	4/95
CHECKED	GAG	4/95

BRW 2700 N. Central Ave. Suite 1000 Phoenix, Arizona 85004 (602) 234-1591

ARIZONA DEPARTMENT OF TRANSPORTATION
HIGHWAYS DIVISION

SR 51
INDIAN BEND WASH
STA 10+00 TO 25+00

NOT FOR CONSTRUCTION DATE

ROUTE: SR51
LOCATION: SHEA BLVD - THUNDERBIRD RD

DWG NO. D-4.1

TRACS NO. H 2059 01C | 600-2-514 | ___ OF ___

SPDDRIB1.DGN
ooooSYSTIMEooooo

VIEW NAME:

SHEET NO.	REVISED PLAN	DATE

F.H.W.A. REGION	STATE	PROJECT NO.	SHEET NO.	TOTAL SHEETS	AS BUILT
9	ARIZ.	600-2-514			

051 MA 009

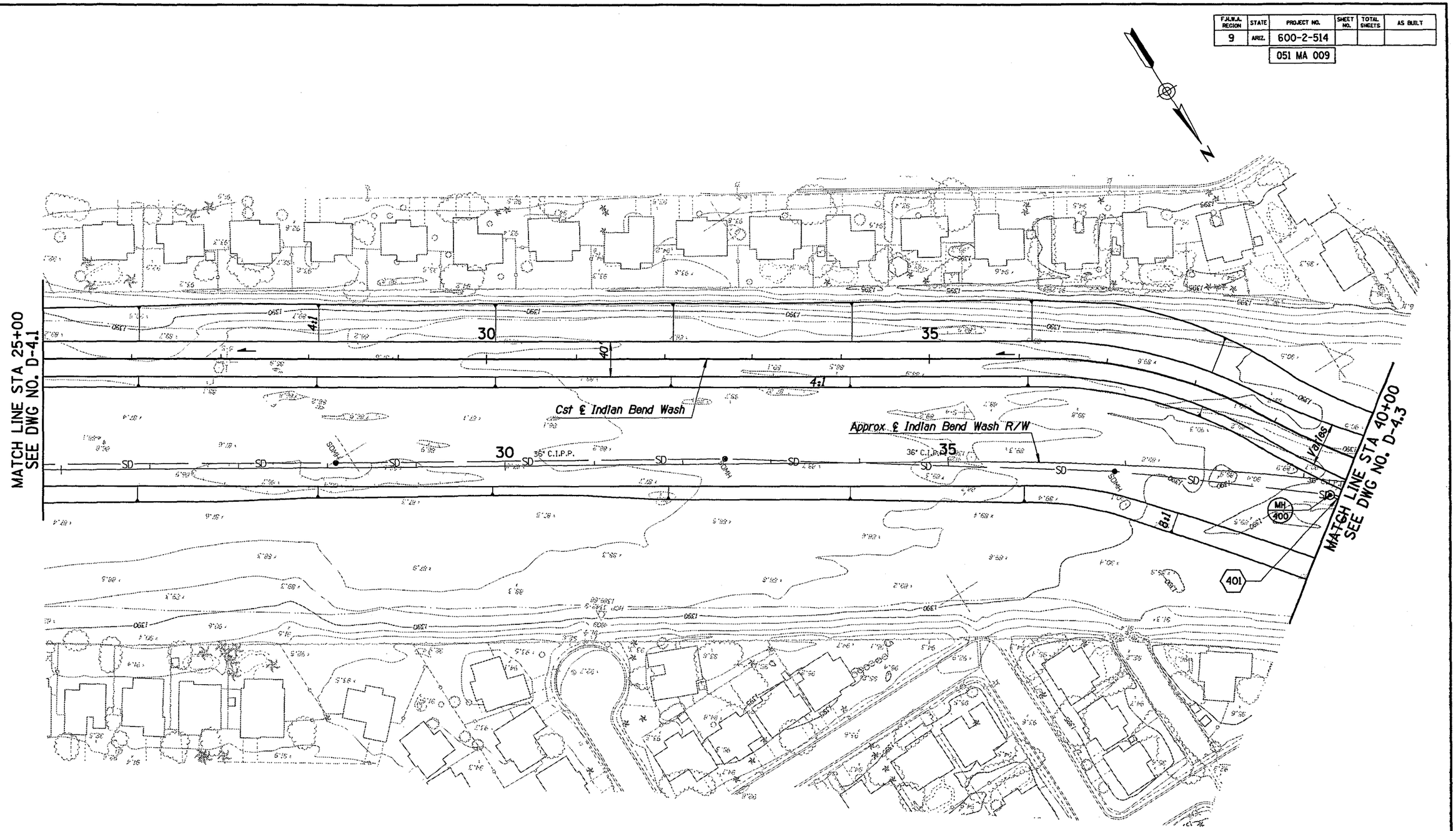

	NAME	DATE
DESIGN	DJS	4/95
DRAWN	RGH	4/95
CHECKED	GAG	4/95

BRW
2700 N. Central Ave.
Suite 1000
Phoenix, Arizona 85004
(602) 234-1591

ARIZONA DEPARTMENT OF TRANSPORTATION
HIGHWAYS DIVISION

SR 51
INDIAN BEND WASH
STA 25+00 to 40+00

NOT FOR CONSTRUCTION
DATE

ROUTE: SR51
LOCATION: SHEA BLVD - THUNDERBIRD RD

DWG NO. D-4.2

TRACS NO. H 2059 01C | 600-2-514 | ___ OF ___

SPDDRIB2.DGN
ccccccSYSTIMEcccccc

VIEW NAME:

SURVEY NO.	PROJECTED ALIGN.	REVISIONS	SCALE	DATE

F.H.W.A. REGION	STATE	PROJECT NO.	SHEET NO.	TOTAL SHEETS	AS BUILT
9	ARIZ.	600-2-514			
		051 MA 009			

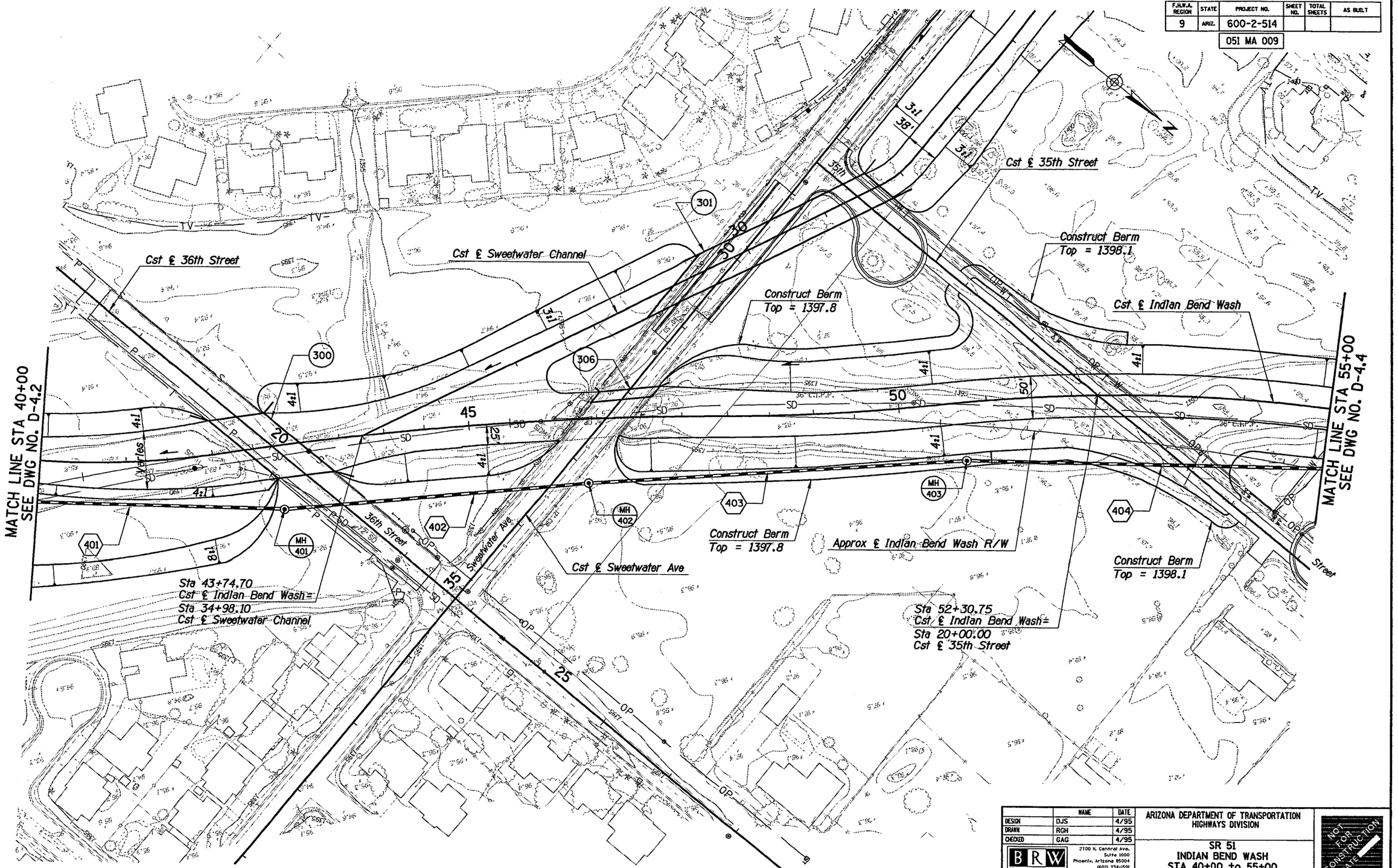

	NAME	DATE
DESIGN	DJS	4/95
DRAWN	RGH	4/95
CHECKED	GAG	4/95

BRW 2700 N. Central Ave. Suite 1000 Phoenix, Arizona 85004 (602) 234-1591

ARIZONA DEPARTMENT OF TRANSPORTATION
HIGHWAYS DIVISION

SR 51
INDIAN BEND WASH
STA 40+00 to 55+00

NOT FOR CONSTRUCTION DATE

ROUTE: SR51 | LOCATION: SHEA BLVD - THUNDERBIRD RD

DWG NO. D-4.3

TRACS NO. H 2059 01C | 600-2-514 | ___ OF ___

SURVEY NO. | FINISHED ? INC. | RECHECKING | REVISIONS | DATE

SPDDRIB3.DGN
cccccSYSTIMEccccc

VIEW NAME:

F.H.W.A. REGION	STATE	PROJECT NO.	SHEET NO.	TOTAL SHEETS	AS BUILT
9	ARIZ.	600-2-514			
		051 MA 009			

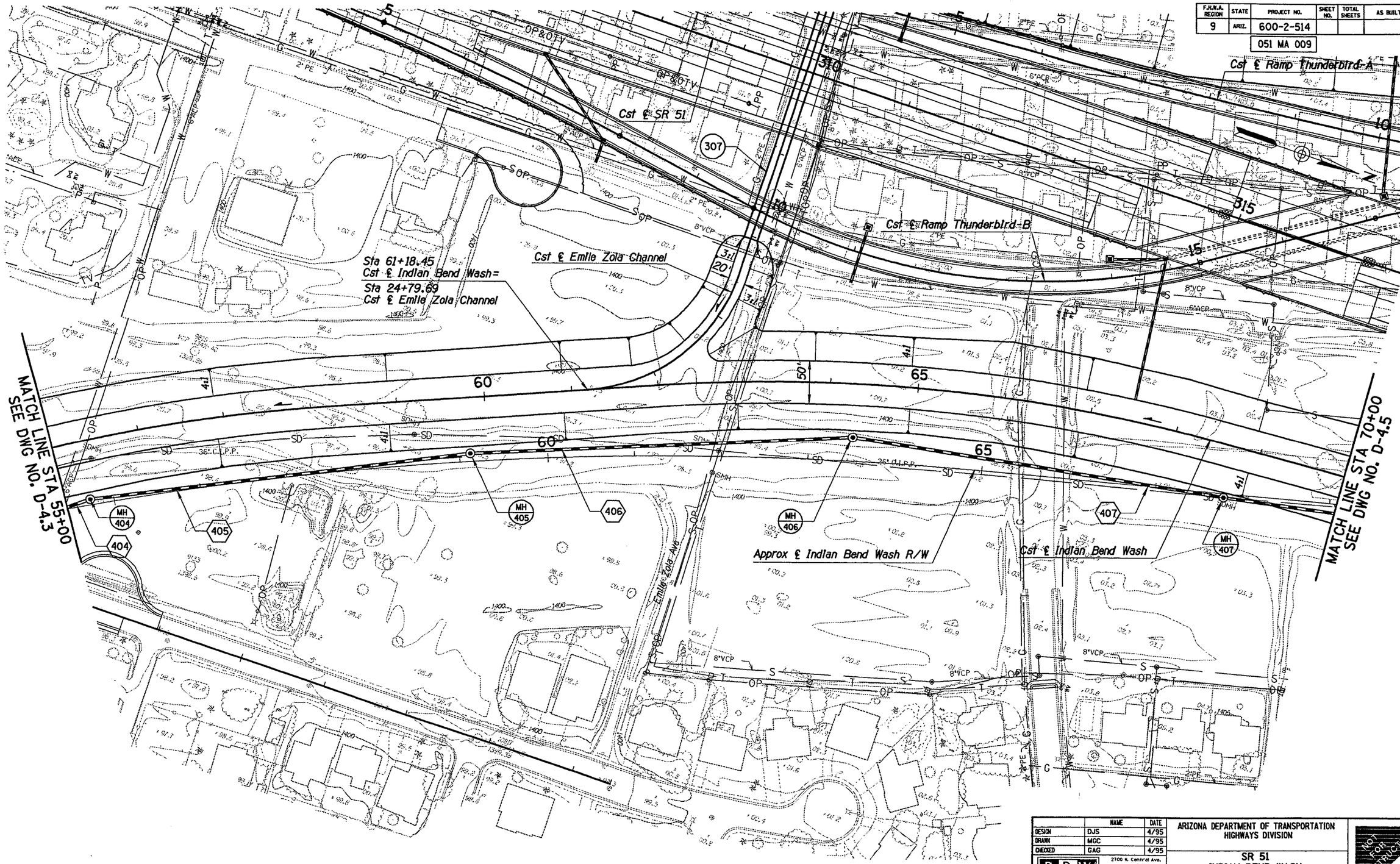

	NAME	DATE
DESIGN	DJS	4/95
DRAWN	MGC	4/95
CHECKED	GAG	4/95

BRW 2700 N. Central Ave. Suite 1000 Phoenix, Arizona 85004 (602) 234-1591

ARIZONA DEPARTMENT OF TRANSPORTATION
HIGHWAYS DIVISION

SR 51
INDIAN BEND WASH
STA 55+00 to 70+00

NOT FOR CONSTRUCTION DATE

ROUTE: SR51 | LOCATION: SHEA BLVD - THUNDERBIRD RD

DWG NO. D-4.4

TRACS NO. H 2059 01C | 600-2-514 | ___ OF ___

SPDDRIB4.DGN
ccccccSYSTIMEcccccc

VIEW NAME:

SURVEY NO.	FINISHED	Revisions	Date

F.H.W.A. REGION	STATE	PROJECT NO.	SHEET NO.	TOTAL SHEETS	AS BUILT
9	ARIZ.	600-2-514			

051 MA 009

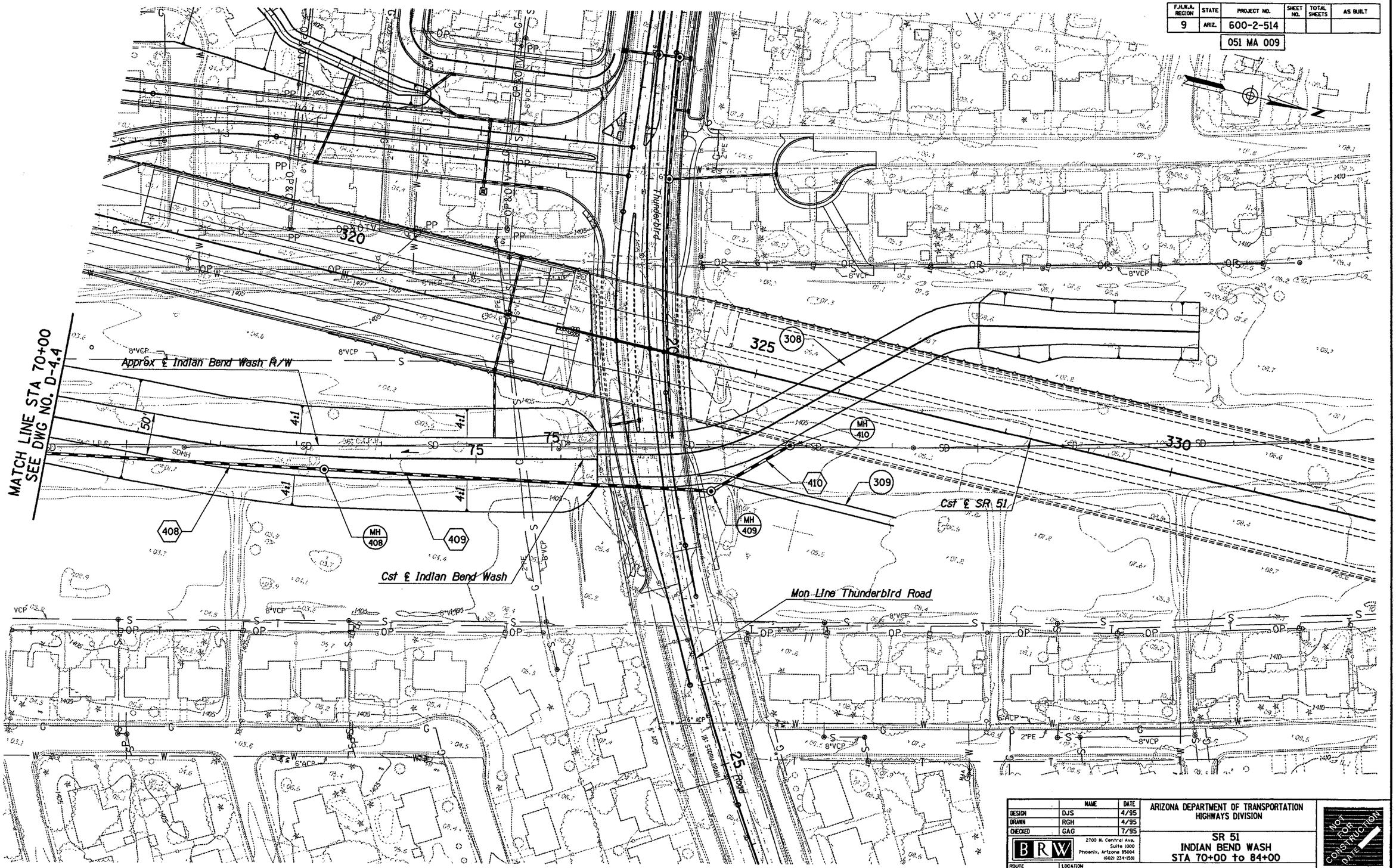

	NAME	DATE
DESIGN	DJS	4/95
DRAWN	RGH	4/95
CHECKED	GAG	7/95

BRW — 2700 N. Central Ave. Suite 1000 Phoenix, Arizona 85004 (602) 234-1559

ARIZONA DEPARTMENT OF TRANSPORTATION
HIGHWAYS DIVISION

SR 51
INDIAN BEND WASH
STA 70+00 to 84+00

NOT FOR CONSTRUCTION DATE

ROUTE: SR51 | LOCATION: SHEA BLVD - THUNDERBIRD RD

DWG NO. D-4.5

TRACS NO. H 2059 01C | 600-2-514 | ___ OF ___

SPDDRI85.DGN
ooooooSYSTIMEoooooo

VIEW NAME:

SURVEY NO. | FINISHED

Appendix D
Indian Bend Wash Typical Sections

F.H.W.A. REGION	STATE	PROJECT NO.	SHEET NO.	TOTAL SHEETS	AS BUILT
9	ARIZ.	600-2-514			
		051 MA 009			

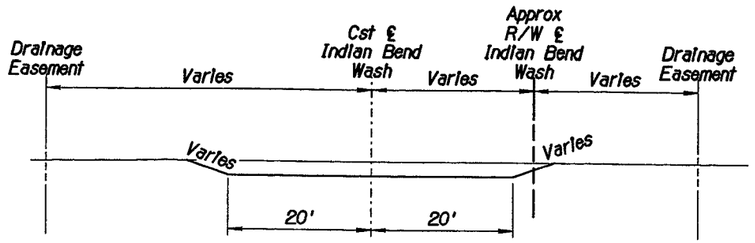

TYPICAL SECTION - INDIAN BEND WASH

Sta 11+50 to 14+00

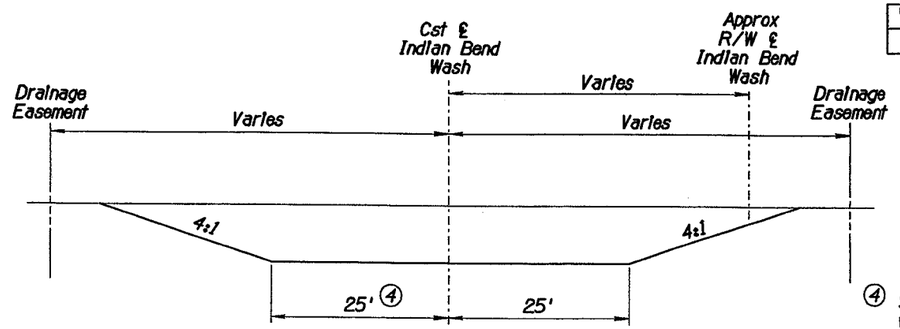

④ Sta 43+00 to Sta 46+00, varies, 25' to 88'

TYPICAL SECTION - INDIAN BEND WASH

Sta 43+00 to 46+00
Sta 59+00 to 76+00 Lt
Sta 72+00 to 76+00 Rt

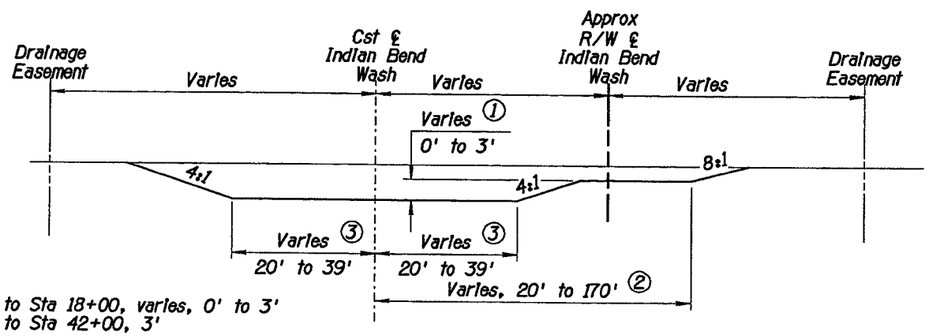

① Sta 14+00 to Sta 18+00, varies, 0' to 3'
Sta 18+00 to Sta 42+00, 3'

② Sta 14+00 to Sta 15+00, varies, 20' to 170'
Sta 15+00 to Sta 18+00, varies, 170' to 145'
Sta 18+00 to Sta 38+00, 145'
Sta 38+00 to Sta 42+00, varies 145' to 100'

③ Sta 14+00 to Sta 39+00, 20'
Sta 39+00 to Sta 42+00, varies 20' to 39'

TYPICAL SECTION - INDIAN BEND WASH

Sta 14+00 to 42+00

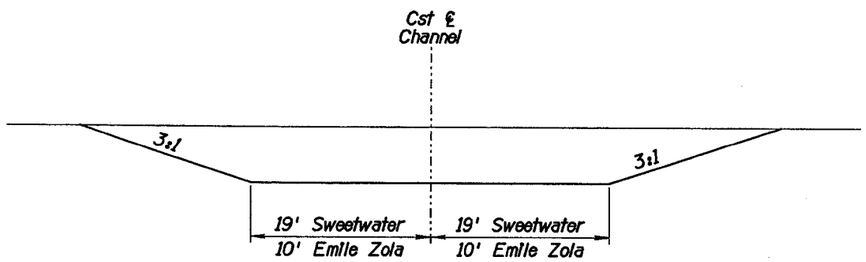

TYPICAL SECTION

SWEETWATER CHANNEL & EMILE ZOLA CHANNEL

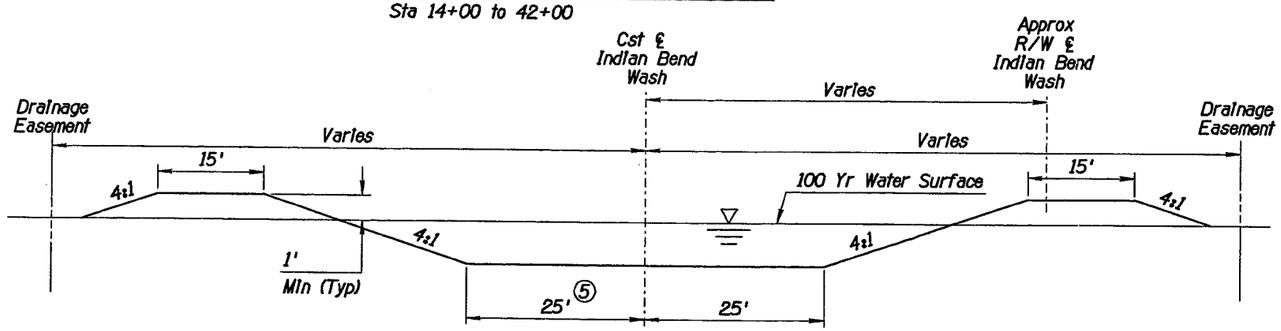

TYPICAL SECTION - INDIAN BEND WASH

Sta 47+00 to 59+00 Lt
Sta 47+00 to 72+00 Rt

⑤ Sta 47+00 to Sta 49+00 Lt, varies 36' to 25'

	NAME	DATE
DESIGN	GAG	4/95
DRAWN	MRE	4/95
CHECKED	DJS	7/95

BRW 2700 N. Central Ave. Suite 1000 Phoenix, Arizona 85004 (602) 234-1591

ARIZONA DEPARTMENT OF TRANSPORTATION
HIGHWAYS DIVISION

SR 51
TYPICAL SECTIONS
INDIAN BEND WASH

ROUTE: SR51
LOCATION: SHEA BLVD - THUNDERBIRD RD

NOT FOR CONSTRUCTION DATE

DWG NO. D-5.3

TRACS NO. H 2059 01C | 600-2-514 | ___ OF ___

SPDTYIB2.DGN
ccccccSYSTIMEcccccc
VIEW NAME:

SURVEY NO. FINISHED

Appendix E
On-Site Areas and Time of Concentration

APPENDIX E CONTENTS

- 10-YEAR RUNOFFS
  - SR 51 RUNOFF CALCULATIONS
  - SHEA BOULEVARD T.I. RUNOFF CALCULATIONS
  - CACTUS ROAD T.I. RUNOFF CALCULATIONS
  - THUNDERBIRD ROAD T.I. RUNOFF CALCULATIONS
- 50-YEAR RUNOFFS
  - SR 51
  - SHEA BOULEVARD T.I.
  - CACTUS ROAD T.I.
  - THUNDERBIRD ROAD T.I.
- PUMP STATION DRAINAGE AREAS AND TIME OF CONCENTRATION

BRW

JOB SR 51, Section 4 SHEET NO. 1/1
MADE BY D. Schaub DATE August 1995 JOB NO.
CHECKED BY DATE SEC. SHT. NO.
CALCULATIONS FOR On-site Areas & Tc

ARIZONA DEPARTMENT OF TRANSPORTATION

STORM SEWER RUNOFF CALCULATION RECORD

LOCATION DATA

Highway SR 51

Location Mainline

Project No.

DESIGN DATA

Frequency 10 years

P_6= 2.01 in. P_{24}= 2.37 in. P_1= 1.59 in.

RUNOFF CALCULATIONS

Drainage Area			Pav't.			Comm.			Resid.			Landscaped							Tc	I	Q
No.	Station-Station	Acre	C	A	CA	C	A	CA	C	A	CA	C	A	CA	C	A	CA	Σ CA	min.	in./hr.	cfs
119	203+23 - 210+50 SB	1.559	.95	1.177	1.118							.70	.381	.267				1.385	10	4.56	6.32
122	210+50 - 215+00 SB	1.128	"	.721	.685							"	.407	.285				0.970	"	"	4.42
121	207+25 - 210+50 NB	0.272	"									"	.272	.190				.190	"	"	0.87
123	205+93 - 215+00 NB	1.951	"	1.389	1.320							"	.562	.393				1.713	"	"	7.81
124	210+50 - 214+25 NB	.547	"									"	.547	.383				.383	"	"	1.75
127	215+00 - 223+75 SB	1.783	"	.927	.881							"	.856	.599				1.480	"	"	6.75
128	215+00 - 223+75 NB	1.590	"	.920	.874							"	.670	.469				1.343	"	"	6.12
132	223+75 - 229+85 SB	1.543	"	.987	.938							"	.556	.389				1.327	"	"	6.05
133	217+00 - 229+70 ℄	1.201	"	.418	.397							"	.783	.548				.945	"	"	4.31
134	223+75 - 229+50 NB	1.268	"	.931	.884							"	.337	.236				1.120	"	"	5.11
143	16+75 Shea-D - 233+40 NB	.240	"	.227	.216							"	.013	.009				.225	"	"	1.03
142	233+40 - 234+90 NB	.357	"	.324	.308							"	.033	.023				.331	"	"	1.51
147	19+50 Shea-C - 236+50 SB	.491	"	.283	.269							"	.208	.146				.415	"	"	1.89
149	234+90 - 236+10 NB	.430	"	.256	.243							"	.174	.122				.365	"	"	1.66
148	236+10 - 237+20 NB	.418	"	.222	.211							"	.196	.137				.348	"	"	1.59
151	237+20 - 238+52 NB	1.033	"	.537	.510							"	.496	.347				.857	"	"	3.91

Computed by: Goetz Checked by: Date: 8/8/95

1/6

ARIZONA DEPARTMENT OF TRANSPORTATION

STORM SEWER RUNOFF CALCULATION RECORD

LOCATION DATA

Highway SR 51

Location Mainline

Project No.

DESIGN DATA

Frequency 10 years

P_6= 2.01 in. P_{24}= 2.37 in. P_1= 1.59 in.

RUNOFF CALCULATIONS

Drainage Area			Pav't.			Comm.			Resid.			Landscape							Tc	I	Q
No.	Station-Station	Acre	C	A	CA	C	A	CA	C	A	CA	C	A	CA	C	A	CA	Σ CA	min.	in./hr.	cfs
150	229+70 - 239+50 ℄	1.035	.95	.360	.342							.70	.675	.473				.815	10	4.56	3.72
102.1	236+50 - 240+80 SB	1.352	"	.696	.661							"	.656	.459				1.120	"	"	5.11
152	240+80 - 244+30 SB	1.075	"	.469	.446							"	.606	.424				.870	"	"	3.97
153	239+80 - 244+30 NB	.791	"	.559	.531							"	.232	.162				.693	"	"	3.16
154	239+95 - 244+30 NB	.674	"									"	.674	.472				.472	"	"	2.15
155	244+30 - 248+25 SB	1.370	"	.694	.659							"	.676	.473				1.132	"	"	5.17
156	244+30 - 248+25 NB	.767	"	.522	.496							"	.245	.171				.667	"	"	3.04
157	244+30 - 248+25 NB	.929	"									"	.929	.650				.650	"	"	2.96
158	248+25 - 250+00 SB	.604	"	.331	.314							"	.273	.191				.505	"	"	2.31
159	250+00 - 251+75 SB	.605	"	.346	.329							"	.259	.181				.510	"	"	2.33
160	251+75 - 252+60 SB	.293	"	.174	.165							"	.119	.083				.248	"	"	1.13
161	252+60 - 253+50 SB	.603	"	.358	.340							"	.245	.172				.512	"	"	2.33
165	248+25 - 251+00 NB	1.089	"	.445	.423							"	.644	.451				.874	"	"	3.99
164	251+00 - 252+55 NB	.616	"	.251	.238							"	.365	.256				.494	"	"	2.25
162	248+25 - 253+50 ℄	.555	"	.193	.183							"	.362	.253				.436	"	"	1.99
166	253+50 - 254+45 SB	.329	"	.201	.191							"	.128	.090				.281	"	"	1.28

Computed by: Goetz Checked by: Date: 8/8/95

9/12

1 20-0404 12-74

ARIZONA DEPARTMENT OF TRANSPORTATION

STORM SEWER RUNOFF CALCULATION RECORD

LOCATION DATA

Highway SR 51

Location Mainline

Project No.

DESIGN DATA

Frequency 10 years

P_6= 2.01 in. P_{24}= 2.37 in. P_1= 1.59 in.

RUNOFF CALCULATIONS

Drainage Area			Pav't.			Comm.			Resid.			Landscape							Tc	I	Q
No.	Station-Station	Acre	C	A	CA	C	A	CA	C	A	CA	C	A	CA	C	A	CA	ΣCA	min.	in./hr.	cfs
167	254+45 - 255+40 SB	.328	.95	.205	.195							.70	.123	.086				.281	10	4.56	1.28
171.1	253+50 - 259+65 ℄	.650	"	.226	.215							"	.424	.297				.512	"	"	2.33
182	258+39 - 265+15 SB	1.594	"	1.094	1.039							"	.500	.350				1.389	"	"	6.33
183	258+65 - 265+15 NB	1.496	"	1.052	.999							"	.444	.311				1.310	"	"	5.97
111.1	265+15 - 268+60 SB	1.176	"	.558	.530							"	.618	.433				.963	"	"	4.39
111.2	259+65 - 271+40 ℄	1.241	"	.432	.410							"	.809	.566				.976	"	"	4.45
111.3	265+15 - 268+60 NB	.920	"	.558	.530							"	.362	.253				.783	"	"	3.58
186	268+60 - 275+10 SB	1.461	"	.790	.750							"	.671	.470				1.220	"	"	5.56
187	268+60 - 275+10 NB	1.346	"	.790	.751							"	.556	.389				1.140	"	"	5.20
189	271+40 - 277+50 ℄	.644	"	.224	.213							"	.420	.294				.507	"	"	2.31
190	275+10 - 281+60 SB	1.618	"	1.046	.994							"	.572	.400				1.394	"	"	6.36
191	275+10 - 281+60 NB	1.452	"	1.045	.994							"	.407	.285				1.278	"	"	5.83
193	277+50 - 285+00 ℄	.792	"	.275	.261							"	.517	.362				.623	"	"	2.84
204	285+00 - 287+50 SB	.696	"	.461	.438							"						.438	"	"	2.00
205	285+00 - 297+83 ℄	1.355	"	.471	.447							"	.884	.619				1.066	"	"	4.86
206	285+00 - 287+70 NB	1.108	"	.568	.540							"						.540	"	"	2.46

Computed by: Goetz Checked by: Date: 8/8/95

3/16

ARIZONA DEPARTMENT OF TRANSPORTATION

STORM SEWER RUNOFF CALCULATION RECORD

LOCATION DATA

Highway SR 51

Location Mainline

Project No.

DESIGN DATA

Frequency 10 years

P_6= 2.01 in. P_{24}= 2.37 in. P_1= 1.59 in.

RUNOFF CALCULATIONS

Drainage Area			Pav't.			Comm.			Resid.			Landscape							Tc	I	Q
No.	Station-Station	Acre	C	A	CA	C	A	CA	C	A	CA	C	A	CA	C	A	CA	Σ CA	min.	in./hr.	cfs
207	287+50-290+40 SB	.470	.95	.470	.447							.70						.447	10	4.56	2.04
208	287+70-290+40 NB	.530	"	.530	.504							"						.504	"	"	2.30
209	290+40-297+20 SB	1.128	"	1.128	1.072							"						1.072	"	"	4.89
210	290+40-297+20 NB	1.289	"	1.289	1.225							"						1.225	"	"	5.59
213	297+20-300+00 SB	.528	"	.528	.502							"						.502	"	"	2.29
212	297+20-300+00 NB	.539	"	.539	.512							"						.512	"	"	2.33
211	297+83-306+00 ℄	.863	"	.300	.285							"	.563	.394				.679	"	"	3.10
214	300+00-301+30 SB	.255	"	.255	.242							"						.242	"	"	1.10
215	300+00-302+62 NB	.554	"	.554	.526							"						.526	"	"	2.40
216	301+30-302+62 SB	.266	"	.266	.253							"						.253	"	"	1.15
217	302+62-304+00 SB	.289	"	.289	.275							"						.275	"	"	1.25
218	302+62-5+52 T-Bird B	.754	"	.754	.716							"						.716	"	"	3.26
219	304+00-305+40 SB	.300	"	.300	.285							"						.285	"	"	1.30
220	305+40-0+55 T-Bird A	.321	"	.321	.305							"						.305	"	"	1.34
221	306+00-315+83 ℄	1.038	"	.361	.343							"	.677	.474				.817	"	"	3.73
226	310+67-315+83 SB	.829	"	.829	.787							"						.787	"	"	3.59

Computed by: Goetz Checked by: Date: 8/8/95

1 20-0404 12-74

9/16

ARIZONA DEPARTMENT OF TRANSPORTATION

STORM SEWER RUNOFF CALCULATION RECORD

LOCATION DATA

Highway SR 51

Location Mainline

Project No.

DESIGN DATA

Frequency 10 years

P_6= 2.01 in. P_{24}= 2.37 in. P_1= 1.59 in.

RUNOFF CALCULATIONS

Drainage Area			Pav't.			Comm.			Resid.			Landscape							Tc	I	Q
No.	Station-Station	Acre	C	A	CA	C	A	CA	C	A	CA	C	A	CA	C	A	CA	Σ CA	min.	in./hr.	cfs
237	315+83 - 322+00 NB	.977	.95	.977	.928							.70						.928	10	4.56	4.23
237.1	315+83-322+00 ℄	.652	"	.227	.216							"	.425	.298				.514	"	"	2.34
238	315+83 - 322+00 SB	.992	"	.992	.942							"						.942	"	"	4.30
224	306+85 - 315+83 NB	1.351	"	1.351	1.284							"						1.284	"	"	5.86

Computed by: Goetz Checked by: Date: 8/8/95

5/10

1 20-0404 12-74

ARIZONA DEPARTMENT OF TRANSPORTATION

STORM SEWER RUNOFF CALCULATION RECORD

LOCATION DATA

Highway SR 51

Location Ramp Shea B

Project No.

DESIGN DATA

Frequency 10 years

P_6= 2.01 in. P_{24}= 2.37 in. P_1= 1.59 in.

RUNOFF CALCULATIONS

Drainage Area			Pav't.			Comm.			Resid.			Landscape							Tc	I	Q
No.	Station-Station	Acre	C	A	CA	C	A	CA	C	A	CA	C	A	CA	C	A	CA	Σ CA	min.	in./hr.	cfs
118	5+90 - 12+25	.829	.95	.638	.606							.70	.191	.134				.740	10	4.56	3.37

Computed by: Goetz Checked by: Date: 8/8/95

1 20-0404 12-74

ARIZONA DEPARTMENT OF TRANSPORTATION

STORM SEWER RUNOFF CALCULATION RECORD

LOCATION DATA

Highway SR 51

Location Ramp Shea - C

Project No.

DESIGN DATA

Frequency 10 years

P_6= 2.01 in. P_{24}= 2.37 in. P_1= 1.59 in.

RUNOFF CALCULATIONS

Drainage Area			Pav't.			Comm.			Resid.			Landscape							Tc	I	Q
No.	Station-Station	Acre	C	A	CA	C	A	CA	C	A	CA	C	A	CA	C	A	CA	Σ CA	min.	in./hr.	cfs
126	3+75 - 4+80	.237	.95	.166	.158							.70	.071	.050				.208	10	4.56	0.94
129	4+80 - 11+00	.771	"	.500	.475							"	.271	.190				.665	"	"	3.03
130	11+00 - 13+00	.234	"	.116	.110							"	.118	.083				.193	"	"	0.88
131	13+00 - 15+00	.288	"	.115	.109							"	.173	.121				.230	"	"	1.05
139	15+00 - 16+00	.400	"	.340	.323							"	.060	.042				.365	"	"	1.66
140	16+00 - 17+00	.294	"	.234	.222							"	.060	.042				.264	"	"	1.20
140.1	17+00 - 18+00	.289	"	.218	.207							"	.071	.050				.257	"	"	1.17
141	18+00 - 19+50	.441	"	.296	.281							"	.145	.102				.383	"	"	1.75

Computed by: Goetz Checked by: Date: 8/8/95

9/16

1 20-0404 12-74

ARIZONA DEPARTMENT OF TRANSPORTATION

STORM SEWER RUNOFF CALCULATION RECORD

LOCATION DATA

Highway SR 51

Location Ramp Shea D

Project No.

DESIGN DATA

Frequency 10 years

P_6= 2.01 in. P_{24}= 2.37 in. P_1= 1.59 in.

RUNOFF CALCULATIONS

Drainage Area			Pav't.			Comm.			Resid.			Landscape							Tc	I	Q
No.	Station-Station	Acre	C	A	CA	C	A	CA	C	A	CA	C	A	CA	C	A	CA	ΣCA	min.	in./hr.	cfs
125	3+75 - 4+65	.165	.95	.089	.085							.70	.076	.053				.138	10	4.56	0.63
137	4+65 - 10+75	.994	"	.461	.438							"	.533	.373				.811	"	"	3.70
138	10+75 - 12+75	.328	"	.142	.135							"	.186	.130				.265	"	"	1.21
146	12+75 - 14+75	.517	"	.292	.277							"	.225	.158				.435	"	"	1.98
145	14+75 - 15+75	.328	"	.240	.228							"	.088	.062				.290	"	"	1.32
144	15+75 - 16+75	.304	"	.230	.218							"	.074	.052				.270	"	"	1.23

Computed by: Goetz Checked by: Date: 8/8/95

8/16

ARIZONA DEPARTMENT OF TRANSPORTATION

STORM SEWER RUNOFF CALCULATION RECORD

LOCATION DATA

Highway SR 51

Location Ramp Cactus - A, A1

Project No.

DESIGN DATA

Frequency 10 years

P_6= 2.01 in. P_{24}= 2.37 in. P_1= 1.59 in.

RUNOFF CALCULATIONS

Drainage Area			Pav't.			Comm.			Resid.			Landscape							Tc	I	Q
No.	Station-Station	Acre	C	A	CA	C	A	CA	C	A	CA	C	A	CA	C	A	CA	Σ CA	min.	in./hr.	cfs
168	255+40 SB - 0+40	.344	.95	.220	.209							.70	.124	.087				.296	10	4.56	1.35
169	0+40 - 1+40	.344	"	.230	.218							"	.114	.080				.298	"	"	1.36
170	1+40 - 2+40	.344	"	.243	.231							"	.101	.071				.302	"	"	1.38
171	2+40 - 4+30	.323	"	.135	.128							"	.188	.132				.260	"	"	1.19
180	4+30 - 11+55	1.020	"	.614	.583							"	.406	.284				.867	"	"	3.96
185	11+55 - Cactus Rd	.382	"	.263	.250							"	.119	.083				.333	"	"	1.52
	Ramp Cactus - A1																				
239	1+12 - Cactus Rd	.173	"	.154	.146							"	.019	.013				.159	"	"	0.73

Computed by: Goetz Checked by: Date: 8/8/95

9/16

20-0404 12-74

ARIZONA DEPARTMENT OF TRANSPORTATION

STORM SEWER RUNOFF CALCULATION RECORD

LOCATION DATA

Highway SR 51

Location Ramp Cactus-B, B1

Project No.

DESIGN DATA

Frequency 10 years

P_6= 2.01 in. P_{24}= 2.37 in. P_1= 1.59 in.

RUNOFF CALCULATIONS

Drainage Area			Pav't.			Comm.			Resid.			Landscape							Tc	I	Q
No.	Station-Station	Acre	C	A	CA	C	A	CA	C	A	CA	C	A	CA	C	A	CA	Σ CA	min.	in./hr.	cfs
163	252+55 NB - 1+30	.429	.95	.187	.178							.70	.242	.169				.347	10	4.56	1.58
175	1+30 - 2+30	.397	"	.187	.178							"	.210	.147				.325	"	"	1.48
179	2+30 - 3+30	.398	"	.203	.193							"	.195	.136				.329	"	"	1.50
178	3+30 - 4+30	.396	"	.218	.207							"	.178	.125				.332	"	"	1.51
177	4+30 - 5+30	.397	"	.251	.238							"	.146	.102				.340	"	"	1.55
176	5+30 - 6+30	.395	"	.250	.238							"	.145	.101				.339	"	"	1.55
172	6+30 - 9+55	.649	"	.187	.178							"	.462	.323				.501	"	"	2.28
181	9+55 - 12+10	.337	"	.150	.143							"	.187	.131				.274	"	"	1.24
184	12+10 - 15+51	.428	"	.243	.231							"	.185	.129				.360	"	"	1.64
188	15+51 - Cactus Road	.525	"	.463	.440							"	.062	.043				.483	"	"	2.20
	Ramp B1																				
244	1+22 - Cactus Road	.172	"	.118	.112							"	.054	.038				.150	"	"	0.68

Computed by: Goetz Checked by: Date: 8/8/95

1 20-0404 12-74

91/01

ARIZONA DEPARTMENT OF TRANSPORTATION

STORM SEWER RUNOFF CALCULATION RECORD

LOCATION DATA

Highway: SR 51

Location: Cactus Road

Project No.:

DESIGN DATA

Frequency: 10 years

P_6= 2.01 in. P_{24}= 2.37 in. P_1= 1.59 in.

RUNOFF CALCULATIONS

Drainage Area			Pav't.			Comm.			Resid.										Tc	I	Q
No.	Station-Station	Acre	C	A	CA	C	A	CA	C	A	CA	C	A	CA	C	A	CA	Σ CA	min.	in./hr.	cfs
261	Cactus Rd West - 16+75		Design			in		Progress											10	4.56	
262	Cactus Rd West - 16+75		Design			in		Progress											"	"	
240	17+75 - 18+85	.107	.95	.107	.102													.102	"	"	0.47
241	17+92 - 18+88	.090	"	.090	.086													.086	"	"	0.39
245	20+87 - 21+49	.055	"	.055	.052													.052	"	"	0.24
246	20+84 - 21+72	.101	"	.101	.096													.096	"	"	0.44

Computed by: Goetz Checked by: Date: 8/8/95

01/10

20-0404 12/74

ARIZONA DEPARTMENT OF TRANSPORTATION

STORM SEWER RUNOFF CALCULATION RECORD

LOCATION DATA

Highway SR 51

Location Ramp Cactus - C, C1

Project No.

DESIGN DATA

Frequency 10 years

P_6= 2.01 in. P_{24}= 2.37 in. P_1= 1.59 in.

RUNOFF CALCULATIONS

Drainage Area			Pav't.			Comm.			Resid.			Landscape							Tc	I	Q
No.	Station-Station	Acre	C	A	CA	C	A	CA	C	A	CA	C	A	CA	C	A	CA	ΣCA	min.	in./hr.	cfs
243	Cactus Road - 4+25	.418	.95	.346	.329							.70	.072	.050				.379	10	4.56	1.73
192	4+25 - 9+35	.616	"	.349	.332							"	.267	.187				.519	"	"	2.36
197	9+35 - 11+46	.290	"	.121	.115							"	.169	.118				.233	"	"	1.06
198	11+46 - 13+40	.334	"	.121	.115							"	.213	.149				.264	"	"	1.20
202	13+40 - 14+50	.530	"	.390	.371							"	.140	.098				.469	"	"	2.14
202.1	14+50 - 15+00	.538	"	.385	.366							"	.153	.107				.473	"	"	2.16
203	15+00 - 285+00 SB	.404	"	.384	.365							"	.020	.014				.379	"	"	1.73
	Ramp C1																				
242	Cactus Road - 1+84	.183	"	.165	.157							"	.018	.013				.170	"	"	0.77

Computed by: Goetz Checked by: Date: 8/8/95

1 20-0404 12-74

12/16

ARIZONA DEPARTMENT OF TRANSPORTATION

STORM SEWER RUNOFF CALCULATION RECORD

LOCATION DATA

Highway SR 51

Location Ramp Cactus-D, D1

Project No.

DESIGN DATA

Frequency 10 years

P_6= 2.01 in. P_{24}= 2.37 in. P_1= 1.59 in.

RUNOFF CALCULATIONS

Drainage Area			Pav't.			Comm.			Resid.			Landscape							Tc	I	Q
No.	Station-Station	Acre	C	A	CA	C	A	CA	C	A	CA	C	A	CA	C	A	CA	Σ CA	min.	in./hr.	cfs
248	Cactus Road - 3+55	.367	.95	.287	.273							.70	.080	.056				.329	10	4.56	1.50
195	3+55 - 7+65	.648	"	.314	.298							"	.334	.234				.532	"	"	2.43
194	7+65 - 9+90	.361	"	.160	.152							"	.201	.141				.293	"	"	1.34
196	9+90 - 11+40	.231	"	.107	.102							"	.124	.087				.189	"	"	0.86
199	11+40 - 12+85	.271	"	.103	.098							"	.168	.118				.216	"	"	0.98
200	12+85 - 14+50	.556	"	.406	.386							"	.150	.105				.491	"	"	2.24
201	14+50 - 285+00 NB	.542	"	.385	.366							"	.157	.110				.476	"	"	2.17
	Ramp D1																				
247	Cactus Road - 1+17	.164	"	.123	.117							"	.041	.029				.146	"	"	0.67

Computed by: Goetz Checked by: Date: 8/8/95

13/16

1 20-0404 12-74

ARIZONA DEPARTMENT OF TRANSPORTATION

STORM SEWER RUNOFF CALCULATION RECORD

LOCATION DATA

Highway SR 51

Location Ramp T-bird A

Project No.

DESIGN DATA

Frequency 10 years

P_6= 2.01 in. P_{24}= 2.37 in. P_1= 1.59 in.

RUNOFF CALCULATIONS

Drainage Area			Pav't.			Comm.			Resid.			Landscape							Tc	I	Q
No.	Station-Station	Acre	C	A	CA	C	A	CA	C	A	CA	C	A	CA	C	A	CA	Σ CA	min.	in./hr.	cfs
222	0+55 – 1+95	.321	.95	.321	.305							.70						.305	10	4.56	1.39
225	1+95 – 3+03	.261	"	.261	.248							"						.248	"	"	1.13
232	3+03 – 14+75	1.200	"	1.069	1.016							"	.131	.092				1.108	"	"	5.05
233	14+75 – 15+50	.052	"	.052	.049							"						.049	"	"	0.22
236	15+50 – T-Bird Road	.255	"	.255	.242							"						.242	"	"	1.10

Computed by: Goetz Checked by: Date: 8/8/95

19/16

1 20-0404 12-74

ARIZONA DEPARTMENT OF TRANSPORTATION

STORM SEWER RUNOFF CALCULATION RECORD

LOCATION DATA

Highway SR 51

Location Ramp T-bird B

Project No.

DESIGN DATA

Frequency 10 years

P_6= 2.01 in. P_{24}= 2.37 in. P_1= 1.59 in.

RUNOFF CALCULATIONS

Drainage Area			Pav't.			Comm.			Resid.			Landscape							Tc	I	Q
No.	Station-Station	Acre	C	A	CA	C	A	CA	C	A	CA	C	A	CA	C	A	CA	Σ CA	min.	in./hr.	cfs
223	5+52 to 7+85	.436	.95	.436	.414							.70						.414	10	4.56	1.89
227	6+05 to 11+07	.603	"									"	.603	.422				.422	"	"	1.92
230	11+07 to 14+00	.444	"									"	.444	.311				.311	"	"	1.42
229	7+85 to 14+65	.504	"	.504	.479							"						.479	"	"	2.18
273	7+25 Ramp A – 18+80 Ramp B	.386	"									"	.386	.270				.270	"	"	1.23
231	14+65 – 20+85	.316	"	.288	.274							"	.028	.020				.294	"	"	1.34
234	20+85 – 22+82	.213	"	.190	.181							"	.023	.016				.197	"	"	0.90
235	22+82 – T-Bird Road	.190	"	.183	.174							"	.007	.005				.179	"	"	0.82
297	17+75 – T-Bird Road	.696	"									"	.696	.487				.487	"	"	2.22

Computed by: Goetz Checked by: Date: 8/8/95

91/51

1 20-0404 12-74

ARIZONA DEPARTMENT OF TRANSPORTATION

STORM SEWER RUNOFF CALCULATION RECORD

LOCATION DATA

Highway SR 51

Location Thunderbird Road

Project No.

DESIGN DATA

Frequency 10 years

P_6= 2.01 in. P_{24}= 2.37 in. P_1= 1.59 in.

RUNOFF CALCULATIONS

Drainage Area			Pav't.			Comm.			Resid.											Tc	I	Q
No.	Station-Station	Acre	C	A	CA	C	A	CA	C	A	CA	C	A	CA	C	A	CA	Σ CA	min.	in./hr.	cfs
281	west T-bird to 16+55 Lt			Design		in			Progress												
284	west T-bird to 16+55 Rt			Design		in			Progress												
276	16+55 to 20+84 Lt			Design		in			Progress												
275	16+55 to 20+86 Rt			Design		in			Progress												

Computed by: Goetz Checked by: Date: 8/8/95

16/16

T 20-0404 12-74

ARIZONA DEPARTMENT OF TRANSPORTATION

STORM SEWER RUNOFF CALCULATION RECORD

LOCATION DATA

Highway SR 51

Location Mainline

Project No.

DESIGN DATA

Frequency 50 years

P_6= 2.80 in. P_{24}= 3.33 in. P_1= 1.77 in.

RUNOFF CALCULATIONS

Drainage Area			Pav't.			Comm.			Resid.			Landscaped							Tc	I	Q
No.	Station-Station	Acre	C	A	CA	C	A	CA	C	A	CA	C	A	CA	C	A	CA	Σ CA	min.	in./hr.	cfs
119	203+23 - 210+50 SB	1.559	.95	1.177	1.118							.70	.381	.267				1.385	10	6.18	8.56
122	210+50 - 215+00 SB	1.128	"	.721	.685							"	.407	.285				0.970	"	"	5.99
121	207+25 - 210+50 NB	0.272	"									"	.272	.190				.190	"	"	1.17
123	205+93 - 215+00 NB	1.951	"	1.389	1.320							"	.562	.393				1.713	"	"	10.59
124	210+50 - 214+25 NB	.547	"									"	.547	.383				.383	"	"	2.37
127	215+00 - 223+75 SB	1.783	"	.927	.881							"	.856	.599				1.480	"	"	9.15
128	215+00 - 223+75 NB	1.590	"	.920	.874							"	.670	.469				1.343	"	"	8.30
132	223+75 - 229+85 SB	1.543	"	.987	.938							"	.556	.389				1.327	"	"	8.20
133	217+00 - 229+70 ℄	1.201	"	.418	.397							"	.783	.548				.945	"	"	5.84
134	223+75 - 229+50 NB	1.268	"	.931	.884							"	.337	.236				1.120	"	"	6.92
143	16+75 Shea-D - 233+40 NB	.240	"	.227	.216							"	.013	.009				.225	"	"	1.39
142	233+40 - 234+90 NB	.357	"	.324	.308							"	.033	.023				.331	"	"	2.05
147	19+50 Shea-C - 236+50 SB	.491	"	.283	.269							"	.208	.146				.415	"	"	2.56
149	234+90 - 236+10 NB	.430	"	.256	.243							"	.174	.122				.365	"	"	2.26
148	236+10 - 237+20 NB	.418	"	.222	.211							"	.196	.137				.348	"	"	2.15
151	237+20 - 238+52 NB	1.033	"	.537	.510							"	.496	.347				.857	"	"	5.30

Computed by: Goetz Checked by: Date: 8/8/95

1/16

1 20-0404 12-74

ARIZONA DEPARTMENT OF TRANSPORTATION

STORM SEWER RUNOFF CALCULATION RECORD

LOCATION DATA

Highway SR 51

Location Mainline

Project No.

DESIGN DATA

Frequency 50 years

P_6= 2.80 in. P_{24}= 3.33 in. P_1= 1.77 in.

RUNOFF CALCULATIONS

Drainage Area			Pav't.			Comm.			Resid.			Landscape							Tc	I	Q
No.	Station-Station	Acre	C	A	CA	C	A	CA	C	A	CA	C	A	CA	C	A	CA	Σ CA	min.	in./hr.	cfs
150	229+70 - 239+50 ℄	1.035	.95	.360	.342							.70	.675	.473				.815	10	6.18	5.04
102.1	236+50 - 240+80 SB	1.352	"	.696	.661							"	.656	.459				1.120	"	"	6.92
152	240+80 - 244+30 SB	1.075	"	.469	.446							"	.606	.424				.870	"	"	5.38
153	239+80 - 244+30 NB	.791	"	.559	.531							"	.232	.162				.693	"	"	4.28
154	239+95 - 244+30 NB	.674	"									"	.674	.472				.472	"	"	2.92
155	244+30 - 248+25 SB	1.370	"	.694	.659							"	.676	.473				1.132	"	"	7.00
156	244+30 - 248+25 NB	.767	"	.522	.496							"	.245	.171				.667	"	"	4.12
157	244+30 - 248+25 NB	.929	"									"	.929	.650				.650	"	"	4.02
158	248+25 - 250+00 SB	.604	"	.331	.314							"	.273	.191				.505	"	"	3.13
159	250+00 - 251+75 SB	.605	"	.346	.329							"	.259	.181				.510	"	"	3.15
160	251+75 - 252+60 SB	.293	"	.174	.165							"	.119	.083				.248	"	"	1.53
161	252+60 - 253+50 SB	.603	"	.358	.340							"	.245	.172				.512	"	"	3.16
165	248+25 - 251+00 NB	1.089	"	.445	.423							"	.644	.451				.874	"	"	5.40
164	251+00 - 252+55 NB	.616	"	.251	.238							"	.365	.256				.494	"	"	3.05
162	248+25 - 253+50 ℄	.555	"	.193	.183							"	.362	.253				.436	"	"	2.69
166	253+50 - 254+45 SB	.329	"	.201	.191							"	.128	.090				.281	"	"	1.74

Computed by: Goetz Checked by: Date: 8/8/95

2/16

1 20-0404 12-74

ARIZONA DEPARTMENT OF TRANSPORTATION

STORM SEWER RUNOFF CALCULATION RECORD

LOCATION DATA

[redacted]

Location Mainline

Project No.

DESIGN DATA

[redacted] 50

P_6= 2.80 in. P_{24}= 3.33 in. P_1= 1.77 in.

RUNOFF CALCULATIONS

Drainage Area			Pav't.			Comm.			Resid.			Landscape							Tc	I	Q
No.	Station-Station	Acre	C	A	CA	C	A	CA	C	A	CA	C	A	CA	C	A	CA	Σ CA	min.	in./hr.	cfs
167	254+45 - 255+40 SB	.328	.95	.205	.195							.70	.123	.086				.281	10	6.18	1.74
171.1	253+50 - 259+65 ℄	.650	"	.226	.215							"	.424	.297				.512	"	"	3.16
182	258+39 - 265+15 SB	1.594	"	1.094	1.039							"	.500	.350				1.389	"	"	8.58
183	258+65 - 265+15 NB	1.496	"	1.052	.999							"	.444	.311				1.310	"	"	8.10
111.1	265+15 - 268+60 SB	1.176	"	.558	.530							"	.618	.433				.963	"	"	5.95
111.2	259+65 - 271+40 ℄	1.241	"	.432	.410							"	.809	.566				.976	"	"	6.03
111.3	265+15 - 268+60 NB	.920	"	.558	.530							"	.362	.253				.783	"	"	4.85
186	268+60 - 275+10 SB	1.461	"	.790	.750							"	.671	.470				1.220	"	"	7.54
187	268+60 - 275+10 NB	1.346	"	.790	.751							"	.556	.389				1.140	"	"	7.05
189	271+40 - 277+50 ℄	.644	"	.224	.213							"	.420	.294				.507	"	"	3.13
190	275+10 - 281+60 SB	1.618	"	1.046	.994							"	.572	.400				1.394	"	"	8.61
191	275+10 - 281+60 NB	1.452	"	1.045	.994							"	.407	.285				1.278	"	"	7.90
193	277+50 - 285+00 ℄	.792	"	.275	.261							"	.517	.362				.623	"	"	3.85
204	285+00 - 287+50 SB	.696	"	.461	.438							"						.438	"	"	2.71
205	285+00 - 297+83 ℄	1.355	"	.471	.447							"	.884	.619				1.066	"	"	6.59
206	285+00 - 287+70 NB	1.108	"	.568	.540							"						.540	"	"	3.34

3/16

Computed by: Goetz Checked by: Date: 8/8/95

1 20-0404 12/74

ARIZONA DEPARTMENT OF TRANSPORTATION

STORM SEWER RUNOFF CALCULATION RECORD

LOCATION DATA

Highway SR 51

Location Mainline

Project No.

DESIGN DATA

Frequency 50 years

P_6= 2.80 in. P_{24}= 3.33 in. P_1= 1.77 in.

RUNOFF CALCULATIONS

Drainage Area			Pav't.			Comm.			Resid.			Landscape							Tc	I	Q
No.	Station-Station	Acre	C	A	CA	C	A	CA	C	A	CA	C	A	CA	C	A	CA	Σ CA	min.	in./hr.	cfs
207	287+50-290+40 SB	.470	.95	.470	.447							.70						.447	10	6.18	2.76
208	287+70-290+40 NB	.530	"	.530	.504							"						.504	"	"	3.11
209	290+40-297+20 SB	1.128	"	1.128	1.072							"						1.072	"	"	6.62
210	290+40-297+20 NB	1.289	"	1.289	1.225							"						1.225	"	"	7.57
213	297+20-300+00 SB	.528	"	.528	.502							"						.502	"	"	3.10
212	297+20-300+00 NB	.539	"	.539	.512							"						.512	"	"	3.16
211	297+83-306+00 ℄	.863	"	.300	.285							"	.563	.394				.679	"	"	4.20
214	300+00-301+30 SB	.255	"	.255	.242							"						.242	"	"	1.50
215	300+00-302+62 NB	.554	"	.554	.526							"						.526	"	"	3.25
216	301+30-302+62 SB	.266	"	.266	.253							"						.253	"	"	1.56
217	302+62-304+00 SB	.289	"	.289	.275							"						.275	"	"	1.70
218	302+62-5+52 T-Bird B	.754	"	.754	.716							"						.716	"	"	4.47
219	304+00-305+40 SB	.300	"	.300	.285							"						.285	"	"	1.76
220	305+40-0+55 T-Bird A	.321	"	.321	.305							"						.305	"	"	1.81
221	306+00-315+83 ℄	1.038	"	.361	.343							"	.677	.474				.817	"	"	5.05
226	310+67-315+83 SB	.829	"	.829	.787							"						.787	"	"	4.86

Computed by: Goetz Checked by: Date: 8/8/95

9/16

1 (28) 20-0404 12-74

ARIZONA DEPARTMENT OF TRANSPORTATION

STORM SEWER RUNOFF CALCULATION RECORD

LOCATION DATA

Highway SR 51

Location Mainline

Project No.

DESIGN DATA

Frequency 50 years

P_6= 2.80 in. P_{24}= 3.33 in. P_1= 1.77 in.

RUNOFF CALCULATIONS

Drainage Area			Pav't.			Comm.			Resid.			Landscape							Tc	I	Q
No.	Station-Station	Acre	C	A	CA	C	A	CA	C	A	CA	C	A	CA	C	A	CA	Σ CA	min.	in./hr.	cfs
237	315+83 - 322+00 NB	.977	.95	.977	.928							.70						.928	10	6.18	5.74
237.1	315+83 - 322+00 ℄	.652	"	.227	.216							"	.425	.298				.514	"	"	3.18
238	315+83 - 322+00 SB	.992	"	.992	.942							"						.942	"	"	5.82
224	306+85 - 315+83 NB	1.351	"	1.351	1.284							"						1.284	"	"	7.94

Computed by: Goetz Checked by: Date: 8/8/95

9/19

1 20-0404 12/74

ARIZONA DEPARTMENT OF TRANSPORTATION

STORM SEWER RUNOFF CALCULATION RECORD

LOCATION DATA

Highway SR 51

Location Ramp Sheet B

Project No.

DESIGN DATA

Frequency 50 years

P_8 = 2.80 in. P_{24} = 3.33 in. P_1 = 1.77 in.

RUNOFF CALCULATIONS

Drainage Area			Pav't.			Comm.			Resid.			Landscape							Tc	I	Q
No.	Station-Station	Acre	C	A	CA	C	A	CA	C	A	CA	C	A	CA	C	A	CA	Σ CA	min.	in./hr.	cfs
118	5+90 - 12+25	.829	.95	.638	.606							.70	.191	.134				.740	10	6.18	4.57

Computed by: Goetz Checked by: Date: 8/8/95

6/16

1 20-0404 12/74

ARIZONA DEPARTMENT OF TRANSPORTATION

STORM SEWER RUNOFF CALCULATION RECORD

LOCATION DATA

Highway SR 51

Location Ramp Shea - C

Project No.

DESIGN DATA

Frequency 50 years

P_6= 2.80 in. P_{24}= 3.33 in. P_1= 1.77 in.

RUNOFF CALCULATIONS

Drainage Area			Pav't.			Comm.			Resid.			Landscape							Tc	I	Q
No.	Station-Station	Acre	C	A	CA	C	A	CA	C	A	CA	C	A	CA	C	A	CA	Σ CA	min.	in./hr.	cfs
126	3+75 - 4+80	.237	.95	.166	.158							.70	.071	.050				.208	10	6.18	1.28
129	4+80 - 11+00	.771	"	.500	.475							"	.271	.190				.665	"	"	4.11
130	11+00 - 13+00	.234	"	.116	.110							"	.118	.083				.193	"	"	1.19
131	13+00 - 15+00	.288	"	.115	.109							"	.173	.121				.230	"	"	1.42
139	15+00 - 16+00	.400	"	.340	.323							"	.060	.042				.365	"	"	2.26
140	16+00 - 17+00	.294	"	.234	.222							"	.060	.042				.264	"	"	1.63
140.1	17+00 - 18+00	.289	"	.218	.207							"	.071	.050				.257	"	"	1.59
141	18+00 - 19+50	.441	"	.296	.281							"	.145	.102				.383	"	"	2.37

Computed by: Goetz Checked by: Date: 8/8/95

9/16

1 20-0404 12-74

ARIZONA DEPARTMENT OF TRANSPORTATION

STORM SEWER RUNOFF CALCULATION RECORD

LOCATION DATA

Highway SR 51

Location Ramp Shea D

Project No.

DESIGN DATA

Frequency 50 years

P_6= 2.80 in. P_{24}= 3.33 in. P_1= 1.77 in.

RUNOFF CALCULATIONS

Drainage Area			Pav't.			Comm.			Resid.			Landscape							Tc	I	Q
No.	Station-Station	Acre	C	A	CA	C	A	CA	C	A	CA	C	A	CA	C	A	CA	Σ CA	min.	in./hr.	cfs
125	3+75 - 4+65	.165	.95	.089	.085							.70	.076	.053				.138	10	6.18	0.85
137	4+65 - 10+75	.994	"	.461	.438							"	.533	.373				.811	"	"	5.01
138	10+75 - 12+75	.328	"	.142	.135							"	.186	.130				.265	"	"	1.64
146	12+75 - 14+75	.517	"	.292	.277							"	.225	.158				.435	"	"	2.69
145	14+75 - 15+75	.328	"	.240	.228							"	.088	.062				.290	"	"	1.79
144	15+75 - 16+75	.304	"	.230	.218							"	.074	.052				.270	"	"	1.67

Computed by: Goetz Checked by: Date: 8/8/95

8/16

ARIZONA DEPARTMENT OF TRANSPORTATION

STORM SEWER RUNOFF CALCULATION RECORD

LOCATION DATA

Highway SR 51

Location Cactus Road

Project No.

DESIGN DATA

Frequency 50 years

P_6= 2.80 in. P_{24}= 3.33 in. P_1= 1.77 in.

RUNOFF CALCULATIONS

Drainage Area			Pav't.			Comm.			Resid.										Tc	I	Q
No.	Station-Station	Acre	C	A	CA	C	A	CA	C	A	CA	C	A	CA	C	A	CA	Σ CA	min.	in./hr.	cfs
261	Cactus Rd West - 16+75		Design			in		Progress											10	6.18	
262	Cactus Rd West - 16+75		Design			in		Progress											"	"	
240	17+75 - 18+85	.107	.95	.107	.102													.102	"	"	0.63
241	17+92 - 18+88	.090	"	.090	.086													.086			0.53
245	20+87 - 21+49	.055	"	.055	.052													.052			0.32
246	20+84 - 21+72	.101	"	.101	.096													.096			0.59

Computed by: Goetz Checked by: Date: 8/8/95

9/1/16

ARIZONA DEPARTMENT OF TRANSPORTATION

STORM SEWER RUNOFF CALCULATION RECORD

LOCATION DATA

Highway SR 51

Location Ramp Cactus - C, C1

Project No.

DESIGN DATA

Frequency 50 years

P_6= 2.80 in. P_{24}= 3.33 in. P_1= 1.77 in.

RUNOFF CALCULATIONS

Drainage Area			Pav't.			Comm.			Resid.			Landscape							Tc	I	Q
No.	Station-Station	Acre	C	A	CA	C	A	CA	C	A	CA	C	A	CA	C	A	CA	Σ CA	min.	in./hr.	cfs
243	Cactus Road - 4+25	.418	.95	.346	.329							.70	.072	.050				.379	10	6.18	2.34
192	4+25 - 9+35	.616	"	.349	.332							"	.267	.187				.519	"	"	3.20
197	9+35 - 11+46	.290	"	.121	.115							"	.169	.118				.233	"	"	1.44
198	11+46 - 13+40	.334	"	.121	.115							"	.213	.149				.264	"	"	1.63
202	13+40 - 14+50	.530	"	.390	.371							"	.140	.098				.469	"	"	2.90
202.1	14+50 - 15+00	.538	"	.385	.366							"	.153	.107				.473	"	"	2.92
203	15+00 - 285+00 SB	.404	"	.384	.365							"	.020	.014				.379	"	"	2.34
	Ramp C1																				
242	Cactus Road - 1+84	.183	"	.165	.157							"	.018	.013				.170	"	"	1.04

Computed by: Goetz Checked by: Date: 8/8/95

12/16

1 20-0404 12-74

ARIZONA DEPARTMENT OF TRANSPORTATION

STORM SEWER RUNOFF CALCULATION RECORD

LOCATION DATA

Highway SR 51

Location Ramp Cactus-D, D1

Project No.

DESIGN DATA

Frequency 50 years

P_6= 2.80 in. P_{24}= 3.33 in. P_1= 1.77 in.

RUNOFF CALCULATIONS

Drainage Area			Pav't.			Comm.			Resid.			Landscape							Tc	I	Q
No.	Station-Station	Acre	C	A	CA	C	A	CA	C	A	CA	C	A	CA	C	A	CA	ΣCA	min.	in./hr.	cfs
248	Cactus Road - 3+55	.367	.95	.287	.273							.70	.080	.056				.329	10	6.18	2.03
195	3+55 - 7+65	.648	"	.314	.298							"	.334	.234				.532	"	"	3.29
194	7+65 - 9+90	.361	"	.160	.152							"	.201	.141				.293	"	"	1.81
196	9+90 - 11+40	.231	"	.107	.102							"	.124	.087				.189	"	"	1.16
199	11+40 - 12+85	.271	"	.103	.098							"	.168	.118				.216	"	"	1.33
200	12+85 - 14+50	.556	"	.406	.386							"	.150	.105				.491	"	"	3.03
201	14+50 - 285+00 NB	.542	"	.385	.366							"	.157	.110				.476	"	"	2.94
	Ramp D1																				
247	Cactus Road - 1+17	.164	"	.123	.117							"	.041	.029				.146	"	"	0.90

Computed by: Goetz Checked by: Date: 8/8/95

13/16

1 20-0404 12-74

ARIZONA DEPARTMENT OF TRANSPORTATION

STORM SEWER RUNOFF CALCULATION RECORD

LOCATION DATA

Highway SR 51

Location Ramp T-bird A

Project No.

DESIGN DATA

Frequency 50 years

P_6= 2.80 in. P_{24}= 3.33 in. P_1= 1.77 in.

RUNOFF CALCULATIONS

Drainage Area			Pav't.			Comm.			Resid.			Landscape							Tc	I	Q
No.	Station-Station	Acre	C	A	CA	C	A	CA	C	A	CA	C	A	CA	C	A	CA	Σ CA	min.	in./hr.	cfs
222	0+55 – 1+95	.321	.95	.321	.305							.70						.305	10	6.18	1.88
225	1+95 - 3+03	.261	"	.261	.248							"	.1					.248	"	"	1.53
232	3+03 - 14+75	1.200	"	1.069	1.016							"	.131	.092				1.108	"	"	6.84
233	14+75 - 15+50	.052	"	.052	.049							"						.049	"	"	0.30
236	15+50 - T-Bird Road	.255	"	.255	.242							"						.242	"	"	1.50

Computed by: Goetz Checked by: Date: 8/8/95

14/16

1 20-0404 12-74

ARIZONA DEPARTMENT OF TRANSPORTATION

STORM SEWER RUNOFF CALCULATION RECORD

LOCATION DATA

Highway SR 51

Location Ramp T-bird B

Project No.

DESIGN DATA

Frequency 50 years

P_6= 2.80 in. P_{24}= 3.33 in. P_1= 1.77 in.

RUNOFF CALCULATIONS

Drainage Area			Pav't.			Comm.			Resid.			Landscape							Tc	I	Q
No.	Station-Station	Acre	C	A	CA	C	A	CA	C	A	CA	C	A	CA	C	A	CA	ΣCA	min.	in./hr.	cfs
223	5+52 to 7+85	.436	.95	.436	.414							.70						.414	10	6.18	2.56
227	6+05 to 11+07	.603	"									"	.603	.422				.422	"	"	2.61
230	11+07 to 14+00	.444	"									"	.444	.311				.311	"	"	1.92
229	7+85 to 14+65	.504	"	.504	.479							"						.479	"	"	2.96
273	Ramp A 7+25 – Ramp B 18+80	.386	"									"	.386	.270				.270	"	"	1.67
231	14+65 – 20+85	.316	"	.288	.274							"	.028	.020				.294	"	"	1.81
234	20+85 – 22+82	.213	"	.190	.181							"	.023	.016				.197	"	"	1.22
235	22+82 – T-Bird Road	.190	"	.183	.174							"	.007	.005				.179	"	"	1.11
297	17+75 – T-Bird Road	.696	"									"	.696	.487				.487	"	"	3.01

Computed by: Goetz Checked by: Date: 8/8/95

15/16

1 20-0404 12-74

ARIZONA DEPARTMENT OF TRANSPORTATION

STORM SEWER RUNOFF CALCULATION RECORD

LOCATION DATA

Highway SR 51

Location Thunderbird Road

Project No.

DESIGN DATA

Frequency 50 years

P_6= 2.80 in. P_{24}= 3.33 in. P_1= 1.77 in.

RUNOFF CALCULATIONS

Drainage Area			Pav't.			Comm.			Resid.										Tc	I	Q
No.	Station-Station	Acre	C	A	CA	C	A	CA	C	A	CA	C	A	CA	C	A	CA	Σ CA	min.	in./hr.	cfs
281	west T-bird to 16+55 Lt			Design		in			Progress												
284	west T-bird to 16+55 Rt			Design		in			Progress												
276	16+55 to 20+84 Lt			Design		in			Progress												
275	16+55 to 20+86 Rt			Design		in			Progress												

Computed by: Goetz Checked by: Date: 8/8/95

9/1/91

1 20-0404 12-74

PROBLEM STATEMENT: DETERMINE THE CONTRIBUTING DRAINAGE AREA AND THE TIME OF CONCENTRATION FOR THE EXISTING STORM DRAIN OUTFALL AT CB 600A, STA 209+70, which discharges the 50-year on-site runoff for the previous project south of Shea Boulevard. This storm drain will be extended north within this project and discharged into a new pump station to be located at Sta 259+75 Lt. near Cactus Road.

See sheet 4 for discussion on summaries.

SOLUTION: Obtain the drainage areas and time of concentration from the previous project's drainage report referenced as follows

FINAL DRAINAGE REPORT (Revised for Contract modification NO. 7)
SQUAW PEAK HIGHWAY - SR51, SECTION 3
RAM-600-2-506 051MA 006
29th Street - Shea Boulevard
Contract NO. 88-64
TRACS NO. 88-64
MAY 1992

BRW

JOB SR51, Section 4 SHEET NO. 1/24
MADE BY D. Schous DATE August 1995 JOB NO.
CHECKED BY DATE SEC. SHT. NO.
CALCULATIONS FOR Drainage Areas TO Pump & Tc & Tc

INFORMATION IS CONTAINED IN APPENDIX 5 FOR DRAINAGE SYSTEM II A.

Copies of the appropriate Calculation sheets are attached to these Calculations. The the contributing runoff areas have been transferred to ADOT's STORM SEWER SYSTEM DESIGN, RUNOFF CALCULATION SHEETS. TWO SETS OF THESE CALCULATION SHEETS HAVE BEEN PREPARED; one SET lists THE AREAS AND RUNOFF COEFFICIENTS AS LISTED IN THE PREVIOUS REPORT AND THE OTHER SET LISTS THE AREAS AND RUNOFF COEFFICIENTS ASSUMING THAT THE MEDIAN HAS BEEN FILLED IN WITH PAVEMENT FOR THE FUTURE HOV LANE.

BRW

JOB SR 51, Section 4 SHEET NO. 2/24
MADE BY D. Schavl DATE AUG 1995 JOB NO.
CHECKED BY DATE SEC. SHT. NO.
CALCULATIONS FOR Drainage Areas to Pump Etc

• SPECIAL NOTES ON AREA DETERMINATIONS FROM ENTRANCO'S DRAINAGE REPORT

Branch NO. 5

TOT. CA = 2.46, SEWER CALC SHEET FROM RUNOFF CALC. SHEET;

HWY SLOPE

A = 0.63 → CA = 0.44

PAVIT

A = 0.96 → CA = 0.91

TOT. CA = 1.35

The two sheets show a difference in the CA's of 1.11 Acres. Assume that the higher number is correct and add the additional 1.11 Acres as pavement. Therefore,

PAVIT

A = 2.13 → CA = 2.02

HWY SLOPE

A = 0.63 → CA = 0.44

BRW

JOB SR51, Section 4 SHEET NO. 3/24

MADE BY D. Schaub DATE AUG 1995 JOB NO.

CHECKED BY DATE SEC. SHT. NO.

CALCULATIONS FOR Drainage Areas To Pump St.

Branch NO. 23(a) & 24(a)

TOT. $\Sigma CA = 0.38$, as shown on sewer Calculation Sheet

However, contract modification No. 7 states that the drainage areas should be as used by CB #628 as follows: Pavit, $A = 0.37 \Rightarrow CA = 0.35$

HWY slope, $A = 0.21 \Rightarrow CA = 0.15$

SUMMARIES

See Pages 6, 14 & 24

NOTE THE AREA SUMMARIES SHOWN ON sheets 14 and 24 were computed to determine the hydrograph for the Cactus Road pump station. The final catch basin calculations show a slight decrease in the ΣCA, but not enough to require changing the station Hydrographs

BRW

JOB SR 51, Section 4 SHEET NO. 4/24

MADE BY D. Schaub DATE AUG 1995 JOB NO.

CHECKED BY DATE SEC. SHT. NO.

CALCULATIONS FOR Drainage Areas to Pump Sta

ARIZONA HIGHWAY DEPARTMENT
STRUCTURES SECTION
HYDRAULICS BRANCH

STORM SEWER SYSTEM DESIGN: RUNOFF CALCULATION SHEET

LOCATION DATA
Highway SR 51, Section 3
Location
Project No.

DESIGN DATA
Frequency _____ years
P_6= _____ in. P_{24}= _____ in. P_1= _____ in.

RUNOFF CALCULATIONS NOTE: DRAINAGE AREAS FROM SECTION 3, SOUTH OF

Drainage Area NO. *			Pav't.			Comm.			Resid.			HWY SLOPE									
Branch * No.	~~Station Station~~	Acre	C	A	CA	C	A	CA	C	A	CA	C	A	CA	C	A	CA	ΣCA	Tc min.	I in./hr.	Q cfs
8	611	.69	.95	.39	.37							.70	.30	.21					SHEA	BLVD	
9	682	.71		.58	.55								.13	.09							
10	681A, 681, 680	1.65		.79	.75								.86	.60							
11	673 thru 677	3.98		3.30	3.14								.68	.48							
12	670, 671, 672, 672A	2.32		.78	.74								1.54	1.08							
13	661, 662	1.25		.55	.52								.70	.49							
14	660	0.90		.70	.67								.20	.14							
15	650, 651, 656, 657	2.76 (1)		2.13	2.02								.63	.44							
16	646, 647, 648	0.90		0.90	0.86								.00	0							
17	643	1.25		0.66	.63								.59	.41							
18	640, 647	1.34		.48	.46								.86	.60							
19	638	1.08		.63	.60								.45	.32							
20	635	0.56		.40	.38								.16	.11							
21	630 thru 633	2.36		.99	.94								1.37	.96							
22	628	0.58		.39	.35								.21	.15							
23	624, 625	1.03	.95	.40	.38							.70	.63	.44							

(1) See Special notes.

Computed by: D. Schaub Checked by: _____ Date: AUG 1995

* Sewer Branch No's and Drainage Area No's from Section 3 drainage report.

F 4.3

5/24

ARIZONA HIGHWAY DEPARTMENT
STRUCTURES SECTION
HYDRAULICS BRANCH

(2) Drainage Area recommended to be 2.20 acres instead of 1.98 acres as shown in the Section 3 Drainage Report

STORM SEWER SYSTEM DESIGN: RUNOFF CALCULATION SHEET

LOCATION DATA
Highway SR 51, Section 3
Location
Project No.

DESIGN DATA
Frequency _____ years
P_6= _____ in. P_{24}= _____ in. P_1= _____ in.

RUNOFF CALCULATIONS NOTE: DRAINAGE AREAS FROM SECTION 3, SO. of SHEA

Branch	Drainage Area No.*			Pav't.			Comm.			Resid.			HWY SHOULDER							Tc	I	Q
	No.*	Station - Station	Acre	C	A	CA	C	A	CA	C	A	CA	C	A	CA	C	A	CA	ΣCA	min.	in./hr.	cfs
	23(a)	623	0.58 (1)	.95	.37	.35							.70	.21	.15							
	24	621, 622	0.98	↑	.38	.36							↑	.60	.42							
	24(a)	618	0.58 (1)		.37	.35								.21	.15							
F-43	25	615, 616	0.84		.45	.42								.39	.27							
	25(a)	612 (2)	2.20	↓	1.19	1.13							↓	1.01	.71							
	26	613	0.52	.95	0.0	.00							.70	.52	.36							
		WITH UNPAVED 30' MEDIAN																				
		TOTAL	29.06		16.81	15.97								12.25	8.58				24.55			
(1)		WITH PAVED 30' MEDIAN (FUTURE MEDIAN HOV LANES)																				
		STA 192+20 TO 205+90, AREA = 30' x 3370/43560 = 2.32 Acres																				
					+2.32									-2.32								
			29.06	.95	19.13	18.17							.70	9.93	6.95				25.12			
															TOT. CA =				.03925 S.M.			

(1) Design Storm Drain and Pump WITH FUTURE HOV LANE.

Computed by: D. Schaub Checked by: _____ Date: AUG 1995

* Sewer Branch No.'s and Drainage Area No.'s from Section 3 Drainage Report

6/24

ARIZONA HIGHWAY DEPARTMENT
STRUCTURES SECTION
HYDRAULICS BRANCH

SYSTEM II A

CONNECTOR PIPE CAPACITIES

STORM SEWER SYSTEM DESIGN: SEWER CALCULATION SHEET

SHEET 6

LOCATION DATA
Highway SQUAW PEAK PKWY
Location 29 TH ST TO SHEA BLVD
Project No. RAM - 600 - 2 - 504

DESIGN DATA
Frequency 10 years
P_6= in. P_{24}= in. P_1= in.
Outlet TW Elev. =
Pipe n = 0.012

SEWER CALCULATIONS

BASE ELEV = 1400.00 FT

Location		Drainage Area			Time of Flow, Min.			I	Q	Sewer Profile				Sewer Design			Hydraulic Grade Line			
										Crown Elevation *		Length	Slope	Diam.	Q full	V	S_f	h_L	Elevation	
BRANCH No.	From - To	No.	Increm. CA	Σ CA	Inlet	Sewer	Design	in./hr	cfs	Inlet	Outlet	ft.	ft./ft.	In.	cfs	f.p.s.	ft./ft.	ft.	Inlet	Outlet
8	C.B. 611 - M.H. 610	611	0.58	0.58	10.0	0.0	10.0	4.37	2.53	36.89	36.82	7	.0100	24	24.5	5.0	.0001			
						0.0	10.0													
9	C.B. 682 - M.H. 609	682	0.64	0.64	10.0	0.0	10.0	4.37	2.80	35.56	35.40	8	.0200	24	34.7	6.6	.0001			
						0.0	10.0													
10	C.B. 681A - C.B. 681	681A	0.51	0.51	10.0	0.0	10.0	4.37	2.23	33.91	33.46	45	.0100	24	24.5	4.8	.0001			
	C.B. 681 - C.B. 680	681	0.27	0.78	10.0	0.1	10.1	4.35	3.39	33.46	32.58	88	.0100	24	24.5	5.5	.0002			
	C.B. 680 - M.H. 608	680	0.57	1.35	10.0	0.3	10.4	4.31	5.82	32.58	32.50	8	.0100	24	24.5	6.4	.0006			
						0.0	10.4													
11	C.B. 677 - C.B. 676	677	0.68	0.68	10.0	0.0	10.0	4.37	2.97	37.20	34.77	245	.0099	24	24.4	5.3	.0001			
	C.B. 676 - C.B. 675	676	0.65	1.33	10.0	0.8	10.8	4.25	5.65	34.77	29.70	235	.0216	24	36.0	8.4	.0005			
	C.B. 675 - C.B. 674	675	0.73	2.06	10.0	0.5	11.3	4.15	8.55	29.70	25.83	300	.0129	24	27.8	7.8	.0012			
	C.B. 674 - C.B. 673	674	1.03	3.09	10.0	0.6	11.9	4.08	12.6	25.83	25.31	52	.0100	24	24.5	7.9	.0026			
	C.B. 673 - M.H. 607	673	0.52	3.61	10.0	0.1	12.0	4.06	14.7	25.31	24.45	86	.0100	24	24.5	8.2	.0036			
						0.2	12.2													
12	C.B. 672A - C.B. 672	672A	0.76	0.76	10.0	0.0	10.0	4.37	3.32	35.26	32.38	72	.0400	24	49.0	8.9	.0002			
	C.B. 672 - C.B. 671	672	0.29	1.05	10.0	0.1	10.1	4.35	4.57	32.38	30.54	46	.0400	24	49.0	9.8	.0003			
	C.B. 671 - C.B. 670	671	0.18	1.23	10.0	0.1	10.2	4.34	5.34	30.54	27.42	78	.0400	24	49.0	10.2	.0005			
	C.B. 670 - M.H. 607	670	0.58	1.81	10.0	0.1	10.3	4.33	7.84	27.42	27.26	8	.0200	24	34.7	8.9	.0010			
						0.0	10.3													
13	C.B. 662 - C.B. 661	662	0.33	0.33	10.0	0.0	10.0	4.37	1.44	24.58	21.24	78	.0428	24	50.7	7.1	.0001			
	C.B. 661 - M.H. 606	661	0.68	1.01	10.0	0.2	10.2	4.34	4.38	21.24	21.16	8	.0100	24	24.5	5.9	.0003			
						0.0	10.2													
14	C.B. 660 - P. 606	660	0.81	0.81	10.0	0.0	10.0	4.37	3.54	19.07	18.94	88	.0015	24	9.5	2.8	.0002			
						0.5	10.5													

Computed by: W.I. Checked by: WSIC Date: 4/92

SOURCE: SQUAW PEAK HIGHWAY - SR51, SECTION 3, FINAL DRAINAGE REPORT (Contract mod 7)
Page 1 of 7

42/U 7/24

ARIZONA HIGHWAY DEPARTMENT
STRUCTURES SECTION
HYDRAULICS BRANCH

CONNECTOR PIPE CAPACITIES

SYSTEM II A

STORM SEWER SYSTEM DESIGN: SEWER CALCULATION SHEET

LOCATION DATA
Highway SQUAW PEAK PKWY SYSTEM II
Location 29TH ST. TO SHEA BLVD.
Project No. RAM-600-2-504

DESIGN DATA
Frequency 50 years
P_6= in. P_{24}= in. P_1= in.
Outlet TW Elev. =
Pipe n = 0.012

SEWER CALCULATIONS

Location		Drainage Area			Time of Flow, Min.			I	Q	Sewer Profile				Sewer Design			Hydraulic Grade Line			
Line No.	From - To	No.	Increm.		Inlet	Sewer	Design	in./hr	cfs	Crown Elevation		Length	Slope	Diam.	Q full	V/Vn	S_f	h_L	Elevation	
BRANCH			CA	Σ CA						Inlet	Outlet	ft.	ft./ft.	in.	cfs	f.p.s.	ft./ft.	ft.	Inlet	Outlet
15	C.B.655 - C.B.654	657	0.2+1.11*	1.31	10.0	0.0	10.0	6.0	7.9	42.50	42.30	40.0	0126	24	27.4/29.5	7.5/9.74	.001	—		
	CB 654 - MH 653	656	0.2	1.51	10.0	0.1	10.1	6.0	9.1	42.30	. .	48	.4176	24	—	27.4/.33	.0014	—		
	MH 653 - CB 652	—	0	1.51		.03	10.1	6.0	9.1			134	.010	24	—	7.2/.84	—	—		
	CB 652 - MH 651	651	0.29	1.80	10.0	.31	10.4	5.9	10.6			45	.010	24	—	7.5/.92	—	—		
	MH 651 - CB 650	—	0	1.80		.1	10.5	5.9	10.6		16.26	105	0372	24	—	12.1/.64	—	—		
	CB 650 - MH 605	650	0.66	2.46	10.0	.14	10.6	5.8	14.3	16.26	16.10	8	0391	24	—	13.4/.74	.0034	.03		1419.20
16	CB 648 - MH 645	648	0.07	0.07	10.0	0.0	10.0	6.0	0.4	37.00	35.96	52	.0200	24	—	3.7/0.15			1435.15	1434.11
	CB 647 - CB 646	647	0.47	0.47	10.0	0.2	10.2	5.8	2.7	35.00	32.25	110	.0250	24		2.7/0.36			1433.36	1430.61
	CB 646 - MH 645	646	0.31	0.78	10.0	0.7	10.9	5.7	4.4	32.25	32.00	20	.0125	24		6.4/0.54			1430.79	1430.54
	CB 645 - MH 604	—	0.0	0.85	10.0	0.1	11.0	5.6	4.8	32.00	18.00	118	.1186	24		14.6/0.32			1430.32	1418.46
							11.1													
17	CB 643 - P 604	643	1.04	1.04	10.0	0.0	10.0	6.0	6.2	14.27	14.17	8	0.0125	24	27.4	7.1/0.65	.0007	.01	1416.68	1416.67
						0.0	10.0													
18	CB 641 - CB 640	641	0.47	0.47	10.0	0.0	10.0	6.0	2.8	18.47	15.10	78	0.0432	24	50.9	8.7/0.32	.0001	.01	1416.79	1415.99
	CB 640 - P 604	640	0.58	1.05	10.0	0.1	10.1	5.8	6.1	15.10	13.33	98	.0181	24	33.0	8.0	.0006	.06	1415.99	1415.93
						0.2	10.3													
19	CB 638 - P 603	638	0.92	0.92	10.0	0.0	10.0	6.0	5.3	12.49	12.39	8	.0125	24	27.4	6.9	.0005	0	1414.92	1414.92
						0.0	10.0													
20	CB 635 - P 603	635	0.49	0.49	10.0	0.0	10.0	6.0	2.94	14.22	11.42	123	.0228	24	37.0	7.1	.0002	.02	1414.58	1414.56
						0.3	10.3													
21	CB 633 - CB 632	633	0.42	0.42	10.0	0.0	10.0	6.0	2.5	17.56	14.56	150	.0200	24	35.5	6.4/0.36	.0001	.02	(1415.92)	1413.52
	CB 632 - CB 631	632	0.17	0.59	10.0	0.4	10.4	5.8	3.4	14.56	12.92	78	.0310	24		8.2/0.38	.0002	.02	1413.52	1413.50
	CB 631 - CB 630	631	0.49	1.08	10.0	0.2	10.6	5.7	6.2	12.92	9.92	120	.0350	24	2.0		.0006	.07	1413.50	1413.43

Computed by: AD Checked by: WEK Date: 8/72

VP - VELOCITY UNDER PRESSURE FLOW

SOURCE: SQUAW PEAK HIGHWAY - SR51, SECTION 3, FINAL DRAINAGE REPORT (Construct mod 7)
Page 2 of 7

8/24

CONNECTOR PIPE CAPACITIES

SYSTEM II A

ARIZONA HIGHWAY DEPARTMENT
STRUCTURES SECTION
HYDRAULICS BRANCH

STORM SEWER SYSTEM DESIGN: SEWER CALCULATION SHEET

LOCATION DATA
Highway SQUAW PEAK PKWY SYSTEM II
Location 29TH ST. TO SHEA BLVD
Project No. RAM - 600 - 2 - 504

DESIGN DATA
Frequency 50 years
P_6= in. P_{24}= in. P_1= in.
Outlet TW Elev. =
Pipe n = 0.012

SEWER CALCULATIONS

Location Line No. BRANCH	From - To	Drainage Area No.	Increm. CA	Σ CA	Time of Flow Min. Inlet	Sewer	Design	I in./hr	Q cfs	Sewer Profile Crown Elevation Inlet	Outlet	Length ft.	Slope ft./ft.	Sewer Design Diam. In.	Q full cfs / Q/Qfull	V / d/D f.p.s.	Hydraulic Grade Line S_f ft./ft.	h_L ft.	Elevation Inlet	Outlet
21 CONT.	CB 630 - MH 602	630	0.81	1.89	10.0	1.0	11.6	5.5	10.4	9.92	9.64	8	.0350	24	3.3	16.6	.0025	.02	1413.43	1413.41
						0	11.6													
22	CB 628 - P 602	628	0.50	0.50	10.0	0	10.0	6.0	3.0	9.80	9.62	8	.0225	24	41.7	7.8	.0002	.00	1412.80	1412.80
23	CB 625 - CB 624	625	0.32	0.32	10.0	0.0	10.0	6.0	1.9	15.92	12.33	78	.0460	24	52.6	7.1 / 0.26	.0196		(1414.18)	1412.65
	CB 624 - P 602	624	0.50	0.82	10.0	0.2	10.2	5.8	4.8	12.33	9.03	133	.0249	24	38.7		.0004	.05	1412.65	1412.60
			0.50																	
23(a)	CB 623 - P 602	(1)	~~0.38~~	0.38	10.0	0.0	10.0	6.0	2.3			8		24			.0001	.0	1411.99	1411.99
24	CB 622 - CB 621	622	0.30	0.30	10.0	0.0	10.0	6.0	1.8	14.80	10.52	93	.046	24	52.6	7.8 / 0.25	.0001	.01	(1413.05)	1411.80
	CB 621 - P 602	621	0.49	0.79	10.0	0.2	10.2	5.8	4.6	10.52	6.80	140	.0266	24	40.0		.0004	.06	1411.74	1411.68
			0.50			0.3	10.5													
24(a)	CB 618 - P 602	(1)	~~0.38~~	0.38	10.0	0.0	10.0	6.0	2.3			8		24			.0001	0	1411.24	1411.24
25	CB 616 - CB 615	616	0.21	0.21	10.0	0.0	10.0	6.0	1.3	13.29	8.14	112	.046	24		0.2	0	0	(1411.49)	1410.37
	CB 615 - P 601	615	0.49	0.70	10.0	4.7	14.7	4.9	3.4	8.14	3.91	92	.046	24	1.1	1.1	.0002	0.02	1410.37	1410.35
25(a)	CB 612 - P 601	612 ~~614~~	1.63	1.63	10.0	0.0	10.0	6.0	9.8			8		24		3.1	0.0016	.01	1409.22	1409.21
26	CB 613 - MH 599	613	0.36	0.36	10.0	0.0	10.0	6.0	2.2	06.47	1399.26	240	.0225	24	38.6	0.7	.0001	.02	1408.42	1408.40

Computed by: LD Checked by: WSK Date: 4/92

VP - VELOCITY UNDER PRESSURE

SOURCE: SQUAW PEAK HIGHWAY-SR51, SECTION 3, FINAL DRAINAGE REPORT (CONTRACT MOD 7)
Page 3 of 7

① Use same area as used for CB628, A = 0.58, CA = 0.50, per contract mod 7.

9/24

ENTRANCO ENGINEERS, INC. SHEET NO.: 1

PROJECT: SQUAW PEAK PKWY PROJ. NO.: 89048

SUBJECT: RUNOFF COMPUTATION

MADE BY: VA DATE: NOV 1990 CHECKED BY: WSK DATE: NOV 1990

FREQUENCY	INTENSITY
10 YEAR	4.37 IN/HR
50 YEAR	6.24 IN/HR
100 YEAR	6.67 IN/HR

DRAINAGE AREA			PAVEMENT			SLOPE				RUNOFF, Q (CFS)		
NO.	STATION TO STATION	A (ACRE)	A1 (ACRE)	C1	CA1 (ACRE)	A2 (ACRE)	C2	CA2 (ACRE)	ΣCA (ACRE)	10 YR FREQ.	50 YR FREQ.	100YR FREQ.
503	SEE OFF SITE DRAINAGE									—	—	—
512	SEE OFF SITE DRAINAGE									64.2	91.3	98.0
513	161+50 – 165+00 RT	0.80	0.63	0.95	0.60	0.17	0.70	0.12	0.72	3.15	4.49	4.80
514	161+50 - 163+50 LT	0.54	0.41	0.95	0.39	0.13	0.70	0.09	0.48	2.10	3.00	3.20
515	161+50 - 164+80 LT	0.17				0.17	0.70	0.12	0.12	0.52	0.75	0.80
516	163+50 - 165+10 LT	0.48	0.41	0.95	0.39	0.07	0.70	0.05	0.44	1.92	2.75	2.93
520	165+10 - 170+00 RT	1.05	0.82	0.95	0.78	0.23	0.70	0.16	0.94	4.11	5.87	6.27
521	165+10 - 167+30 ℄	0.35	0.20	0.95	0.19	0.15	0.70	0.11	0.30	1.31	1.87	2.00
522	166+00 - 168+00 LT	0.38	0.27	0.95	0.25	0.11	0.70	0.08	0.33	1.44	2.06	2.20
523	28+40 – 33+10 (NORTHERN)	0.44	0.34	0.95	0.32	0.10	0.70	0.07	0.39	1.71	2.44	2.60
539*	SEE OFF SITE DRAINAGE									24.9	35.6	38.0
525	167+30 - 172+50 ℄	0.85	0.49	0.95	0.46	0.36	0.70	0.25	0.71	3.10	4.43	4.74
526	168+00 - 172+20 LT	0.80	0.57	0.95	0.54	0.23	0.70	0.16	0.70	3.06	4.37	4.67
531	SEE OFF SITE DRAINAGE									6.60	9.40	10.0
532	SEE OFF SITE DRAINAGE									19.2	27.5	29.3
533	SEE OFF SITE DRAINAGE									19.2	27.5	29.3
534	170+00 - 173+50 RT	0.72	0.57	0.95	0.55	0.15	0.70	0.11	0.66	2.88	4.12	4.40
536	173+30 - 175+70 RT	0.63	0.36	0.95	0.34	0.27	0.70	0.19	0.53	2.32	3.31	3.54

*539 TIME OF CONCENTRATION, Tc = 10 MIN UNLESS NOTED OTHERWISE.

10/24

Page 4 of 7

ENTRANCO ENGINEERS, INC.

SHEET NO.: 2
PROJECT: SQUAW PEAK PKWY
PROJ. NO.: 89048
SUBJECT: RUNOFF COMPUTATION
MADE BY: VA DATE: NOV 1990 CHECKED BY: WSK DATE: NOV 1990

FREQUENCY	INTENSITY
10 YEAR	4.37 IN/HR
50 YEAR	6.24 IN/HR
100 YEAR	6.67 IN/HR

BR. NO.	DRAINAGE AREA NO.	STATION TO STATION	A (ACRE)	PAVEMENT A1 (ACRE)	C1	CA1 (ACRE)	SLOPE A2 (ACRE)	C2	CA2 (ACRE)	ΣCA (ACRE)	RUNOFF, Q (CFS) 10 YR FREQ.	50 YR FREQ.	100YR FREQ.
8	611	172+50-176+80 ℄	0.69	0.39	0.95	0.37	0.30	0.70	0.21	0.58	2.53	3.62	3.87
26	613	4+20-7+67 RT (SHEA-B)	0.52				0.52	0.70	0.36	0.36	1.57	2.25	2.40
	614	SEE OFF SITE DRAINAGE									7.40	10.6	11.3
25	615	203+75-205+90 RT	0.54	0.45	0.95	0.43	0.09	0.70	0.06	0.49	2.14	3.06	3.27
25	616	203+75-205+50 RT	0.30				0.30	0.70	0.21	0.21	0.92	1.31	1.40
	617	SEE OFF SITE DRAINAGE									12.7	18.1	19.3
24	621	201+50-203+75 RT	0.56	0.38	0.95	0.36	0.18	0.70	0.13	0.49	2.14	3.06	3.27
24	622	201+50-203+75 RT	0.42				0.42	0.70	0.30	0.30	1.31	1.87	2.00
23	624	199+00-201+50 RT	0.57	0.40	0.95	0.38	0.17	0.70	0.12	0.50	2.19	3.12	3.34
23	625	199+00-201+50 RT	0.46				0.46	0.70	0.32	0.32	1.40	2.00	2.13
	626	SEE OFF SITE DRAINAGE									11.4	16.2	17.3
	627	SEE OFF SITE DRAINAGE									11.4	16.2	17.3
22	628	199+00-200+90 LT	0.58	0.37	0.95	0.35	0.21	0.70	0.15	0.50	2.19	3.12	3.34
21	630	195+90-199+00 LT	0.95	0.59	0.95	0.56	0.36	0.70	0.25	0.81	3.54	5.05	5.40
21	631	196+50-199+00 RT	0.56	0.40	0.95	0.38	0.16	0.70	0.11	0.49	2.14	3.06	3.27
21	632	197+50-199+00 RT	0.25				0.25	0.70	0.17	0.17	0.74	1.06	1.13
21	633	194+00-197+50 RT	0.60				0.60	0.70	0.42	0.42	1.84	2.62	2.80
	634	SEE OFF SITE DRAINAGE									22.3	31.8	34.0

TIME OF CONCENTRATION, Tc = 10 MIN UNLESS NOTED OTHERWISE.

11/24

ENTRANCO ENGINEERS, INC. SHEET NO.: 3

PROJECT: SQUAW PEAK PKWY PROJ. NO.: 89048

SUBJECT: RUNOFF COMPUTATION

MADE BY: VA DATE: NOV 1990 CHECKED BY: WSK DATE: NOV 1990

FREQUENCY	INTENSITY
10 YEAR	4.37 IN/HR
50 YEAR	6.24 IN/HR
100 YEAR	6.67 IN/HR

BK. NO.	DRAINAGE AREA NO.	STATION TO STATION	A (ACRE)	PAVEMENT A1 (ACRE)	C1	CA1 (ACRE)	SLOPE A2 (ACRE)	C2	CA2 (ACRE)	ΣCA (ACRE)	RUNOFF, Q (CFS) 10 YR FREQ.	50 YR FREQ.	100YR FREQ.
20	635	194+00 - 196+50 RT	0.56	0.40	0.95	0.38	0.16	0.70	0.11	0.49	2.14	3.06	3.27
19	638	192+50 - 195+90 LT	1.08	0.63	0.95	0.60	0.45	0.70	0.32	0.92	4.02	5.74	6.14
18	640	190+90 - 194+00 RT	0.67	0.48	0.95	0.45	0.19	0.70	0.13	0.58	2.53	3.62	3.87
18	641	190+10 - 194+00 RT	0.67				0.67	0.70	0.47	0.47	2.05	2.93	3.13
17	643	188+50 - 192+50 LT	1.25	0.66	0.95	0.63	0.59	0.70	0.41	1.04	4.54	6.49	6.94
16	646	18+10 - 22+15 RT (32ND ST)	0.33	0.33	0.95	0.31				0.31	1.35	1.93	2.07
16	647	17+30 - 22+15 LT (32ND ST)	0.50	0.50	0.95	0.47				0.47	2.05	2.93	3.13
16	648	4+70 - 5+90 LT (RAMP-32-A1)	0.07	0.07	0.95	0.07				0.07	0.31	0.44	0.47
15	650	187+50 - 190+90 RT	0.76	0.54	0.95	0.51	0.22	0.70	0.15	0.66	2.88	4.12	4.40
15	651	187+50 - 190+10 RT	0.41				0.41	0.70	0.29	0.29	1.27	1.81	1.93
	653	SEE OFF SITE DRAINAGE									31.4	43.9	47.7
	654	SEE OFFSITE DRAINAGE									21.1	29.6	32.1
	655	BETWEEN BIKE PATH, RAMP 32-B AND 32ND ST	0.64				0.64	0.70	0.45	0.47	1.97	2.93	3.13
15	656	11+50 - 14+80 RT (RAMP 32-B)	0.21	0.21	0.95	0.20			0.20	0.20	0.87	1.25	1.33
15	657	11+70 - 14+80 LT (RAMP 32-B)	0.21	0.21	0.95	0.20			0.20	0.20	0.87	1.25	1.33
	658	24+25 - 25+55 RT (32ND ST)	0.10	0.10	0.95	0.09				0.09	0.39	0.56	0.60
	659	22+15 - 25+70 LT (32ND ST)	0.37	0.37	0.95	0.35				0.35	1.53	2.18	2.33
	659A	22+80 - 24+45 RT (32ND ST)	0.02	0.02	0.95	0.02				0.02	0.09	0.12	0.13

12/21

Page 6 of 9

TIME OF CONCENTRATION, Tc = 10 MIN UNLESS NOTED OTHERWISE.

ENTRANCO ENGINEERS, INC. SHEET NO.: 4

PROJECT: SQUAW PEAK PKWY PROJ. NO.: 89048

SUBJECT: RUNOFF COMPUTATION

MADE BY: VA DATE: NOV 1990 CHECKED BY: WSK DATE: NOV 1990

FREQUENCY	INTENSITY
10 YEAR	4.37 IN/HR
50 YEAR	6.24 IN/HR
100 YEAR	6.67 IN/HR

BK. NO.	DRAINAGE AREA NO.	STATION TO STATION	A (ACRE)	PAVEMENT A1 (ACRE)	C1	CA1 (ACRE)	SLOPE A2 (ACRE)	C2	A2 (ACRE)	ΣCA (ACRE)	RUNOFF, Q (CFS) 10 YR FREQ.	50 YR FREQ.	100YR FREQ.
14	660	184+00 - 188+50 LT	0.90	0.70	0.95	0.67	0.20	0.70	0.14	0.81	3.54	5.05	5.40
13	661	184+00 - 187+50 RT	0.78	0.55	0.95	0.52	0.23	0.70	0.16	0.68	2.97	4.24	4.54
13	662	184+00 - 186+50 RT	0.47				0.47	0.70	0.33	0.33	1.44	2.06	2.20
12	670	181+00 - 184+00 RT	0.67	0.48	0.95	0.45	0.19	0.70	0.13	0.58	2.53	3.62	3.87
12	671	181+00 - 184+00 RT	0.26				0.26	0.70	0.18	0.18	0.79	1.12	1.20
12	672	8+30 - 11+50 (RAMP 32-B)	0.30	0.30	0.95	0.29				0.29	1.27	1.81	1.93
12	672A	37+30 - 46+80 RT (BIKE PATH)	1.09				1.09	0.70	0.76	0.76	3.32	4.74	5.07
11	673	181+00 - 184+00 LT	0.58	0.46	0.95	0.44	0.12	0.70	0.08	0.52	2.27	3.24	3.47
11	674	4+30 - 15+09 (RAMP 32-A)	1.11	1.02	0.95	0.97	0.09	0.70	0.06	1.03	4.50	6.43	6.87
11	675	2+00 - 4+30 (RAMP 32-A)	0.80	0.67	0.95	0.64	0.13	0.70	0.09	0.73	3.19	4.56	4.87
11	676	176+00 - 178+50 LT	0.72	0.58	0.95	0.55	0.14	0.70	0.10	0.65	2.84	4.06	4.34
11	677	172+20 - 176+00 LT	0.77	0.57	0.95	0.54	0.20	0.70	0.14	0.68	2.97	4.24	4.54
10	680	179+00 - 181+00 RT	0.64	0.51	0.95	0.48	0.13	0.70	0.09	0.57	2.49	3.56	3.80
10	681	5+10 - 8+30 (RAMP-32-B)	0.28	0.28	0.95	0.27				0.27	1.18	1.68	1.80
10	681A	2+00 - 11+50 RT (RAMP 32-B)	0.73				0.73	0.70	0.51	0.51	2.23	3.18	3.40
9	682	176+00 - 179+00 RT	0.71	0.58	0.95	0.55	0.13	0.70	0.09	0.64	2.80	3.99	4.27

12/91

TIME OF CONCENTRATION, Tc = 10 MIN UNLESS NOTED OTHERWISE.

BRW

JOB SR 51, Squaw Peak SHEET NO. 1/10
MADE BY D.J.S. DATE 6/12/95 JOB NO.
CHECKED BY DATE SEC. SHT. NO.
CALCULATIONS FOR Drainage Area To Pump & To

DRAINAGE AREA SUMMARY

- Drainage Area from South of Pump, STA 259+75

Segment	Area No.	PERVIOUS AREA (Acre)	IMPERVIOUS AREA (Acre)
section 3, So of Shea	None	9.93'	19.13'
Remainder So of Shea	None	1.81'	3.76'
Shea To Pump, 259+75	1,2,3,4, Part 5	13.48'	16.52

TOTAL = 25.22' 39.41 = 64.63
x C = x .70 x .95
17.65' 37.44 = 55.09

TOT. Area = 64.63 Acres = 0.10098 S.m.

TOT. CA = 55.09 Acres = 0.08608 S.m.

- Drainage Area From North of Pump, Sta 259+75

SEGMENT	AREA NO.	PERVIOUS AREA (Acre)	IMPERVIOUS AREA (Acre)
Pump, Sta. 259+75, To 285+00	Part 5, 6, 7	7.18'	10.70'

TOTAL = 7.18' 10.70' = 17.88'
x C x .70 x .95
CA = 5.03' 10.17' = 15.20'

TOT. AREA = 17.88' Acres = 0.02794' S.m.

TOT. CA = 15.20' Acres = 0.02375' S.m.

NOTE: AREA CALCS ARE ATTACHED 14/24

BRW 3/89m-65

JOB SR51 SHEET NO. 2/10

MADE BY DJS DATE 6/16/95 JOB NO.

CHECKED BY DATE SEC. SHT. NO.

CALCULATIONS FOR Drainage Area TO Ramp & T_c

CALCULATIONS

- Drainage Area South of Shea Boulevard

- Areas included in Section 3 Comp.'s

AREA 612 (Entranco's No.) has been modified and the new drainage areas are:

~~EXIT~~ Entrance Ramp A (DIRT, Outside)	= 43825	S.F. =	1.01 Ac
~~EXIT~~ Entrance Ramp A (Pavit)	= 51925	S.F. =	1.19 Ac
TOTAL	= 95750	S.F.	2.20 Ac.

- AREAS NOT INCLUDED IN SECTION 3 Comps.

EXIT Ramp B (Dirt outside)	= 8,150. SF	=	0.19 Ac
EXIT Ramp B (Gore, Dirt)	= 36,025. SF	=	0.83 Ac
EXIT Ramp B (Pavit)	= 35,592. SF	=	0.82 Ac
mainline (Pavit)	= 128,117. S.F.	=	2.94 Ac
EXIT Ramp A (Gore, Dirt)	= 34,700. S.F.	=	0.80 Ac
TOTAL	= 242,584. SF	=	5.58 Ac

SUBTOT. Pavit	= 163,709. SF	=	3.76 Ac
SUBTOT. Pervious	= 78,875. SF	=	1.81 Ac
TOTAL	= 242,584. SF	=	5.57 Ac

15/124

BRW 3/89m-65

BRW

JOB SR51 SHEET NO. 3/10

MADE BY LTM DATE 6-13-95 JOB NO.

CHECKED BY DATE SEC. SHT. NO.

CALCULATIONS FOR Drainage Areas to Pump Sta. & T_c

AREA 1

256757
256687
256982
256809 ft² (TOTAL)
+ 7490 + 7200 = 271,499

11852
11839
11813
11835 ft² (Outside Exit Ramp Dirt)
+ 2295 = 14,130

21711
21621
21649
21660 ft² (Exit Ramp Paved)
+5195 = 26,855

47778
47668
47715
47720 ft² (Gore Exit Ramp Dirt)

104348
104582
104278
104403 ft² (Mainline Paved)

35802
35992
35875
35889 ft² (Gore Ent Ramp Dirt)

17904
17860
17797
17854 ft² (Ent Ramp Paved)
+3950 = 21,804

18847
18698
18753
18766 ft² (Outside Ent. Ramp Dirt)
+ 100(32.5) = 22,016

Summary Imp = 153,062 S.F. = 3.51 Acres
Perv. = 119,755 S.F. = 2.75 Acres
6.26
16/24

BRW 3/89m-65

JOB SR 51 SHEET NO. 4/10

MADE BY LTM DATE 6-13-95 JOB NO.

CHECKED BY DATE SEC. SHT. NO.

CALCULATIONS FOR Drainage Areas to Pump Sta & T_c

AREA 2

298117
297820
298024 } 297987 ft² (TOTAL)

33704
33664
33622 } 33663 ft² (Outside Exit Ramp Dirt)

17397
17429
17421 } 17416 ft² (Gore Exit Ramp Dirt)

200882
200826
200901 } 200870 ft² (Mainline & Ramps Paved)

10156
10189
10206 } 10184 ft² (Gore Ent. Ramp Dirt)

35828
35927
36066 } 35940 ft² (Outside Ent Ramp Dirt)

Summary Imp = 200,870 S.F. = 4.61 Acres
Per = 99,203 S.F. = 2.23 Acres } 6.84 Ac

10/24

BRW 3/89m-65

BRW

JOB SR 51 SHEET NO. 5/10

MADE BY LTM DATE 6-13-95 JOB NO.

CHECKED BY DATE SEC. SHT. NO.

CALCULATIONS FOR Drainage Areas to Pump Sta & t_c

AREA 3

230193
~~230072~~
230193 } 230193 ft² (TOTAL)

55097
55163
55203 } 55154 ft² (Lt side Dirt)

114359
114297
114501 } 114386 ft² (Mainline Paved)

60460
60581
60802 } 60614 ft² (Rt Side Dirt)

Summary Imp = 114,386 SF = 2.63 Acres
Per = 115,768 SF = 2.66 Acres } 5.29 acres

18/24

BRW 3/89m-65

BRW

JOB SR 51 SHEET NO. 6/10

MADE BY LTM DATE 6-13-95 JOB NO.

CHECKED BY DATE SEC. SHT. NO.

CALCULATIONS FOR Drainage AREAS to Pump Sta

& T_c

AREA 4

254224
254221
254189 } 254211 ft² (TOTAL)

57642
57655
57773 } 57690 ft² (Lt Side Dirt)

116387
116329
116349 } 116355 ft² (Mainline Paved)

80166
80272
80297 } 80245 ft² (Rt Side Dirt)

SUMMARY IMP = 116,355 SF = 2.67 Acres
PER = 137,935 SF = 3.17 Acres } 5.84 Ac

19/24

BRW 3/89m-65

BRW

JOB SR151 SHEET NO. 17/10

MADE BY LTM DATE 6-13-95 JOB NO.

CHECKED BY DATE SEC. SHT. NO.

CALCULATIONS FOR Drainage Areas to Pump Sta & t_c

AREA 5

289167
289243
289399 } 289270 ft² (TOTAL)

44809
44689
44902 } 44800 ft² (Outside Ent. Ramp Dirt)

165480
165243
165317 } 165347 ft² (Mainline & Ramps Paved)

3907
3948
3931 } 3929 ft² (Gore Ent. Ramp Dirt)

5073
5080
5039 } 5064 ft² (Gore Exit Ramp Dirt)

70683
70834
70753 } 70757 ft² (Outside Exit Ramp Dirt)

SUMMARY IMP = 165347.5 SF = 3.80 AC
PER = 124550 SF = 2.86 AC } 6.66 AC

20/24

BRW 3/89m-65

BRW

Job SR 51 Sheet No. 8/10

Made By gag Date 6/17/95 Job No.

Checked by Date Sec. Sht. No.

Calculations for Drainage North of Pump Station

Split Area 5 - area contributing to Drainage north of the pump station

Impervious Area

(230' + 204)(70.5') = 30,597 ft²

Pervious Area

West Side SR 51

230 x 15.5' = 3565 ft²

East Side SR 51

204 x 24 = 4896 ft²

} 8461 ft²

SUMMARY: North of STA 259+75

Imp = 30597 S.F. = 0.70 Acres
Per = 8461 SF = 0.19 Acres } .89 Ac.

SUMMARY: SOUTH of STA. 259+75

Imp = 3.80 - .70 = 3.10 Acres
Per. = 2.86 - .19 = 2.67 Acres } 5.77 Ac

©BRW m-178

BRW

JOB SR 51 SHEET NO. 9/10

MADE BY LTM DATE 6-13-95 JOB NO.

CHECKED BY DATE SEC. SHT. NO.

CALCULATIONS FOR Drainage Areas to Pump Sta & t_c

Area 6

287451, 287672, 287349 — 287490 ft^2 Average (TOTAL)

19398, 19263, 19416 — 19359 ft^2 Average (Exit Ramp Paved)

21518, 21565, 21591 — 21558 ft^2 Average (Entrance Ramp Paved)

17264, 17257, 17228 — 17250 ft^2 Average (Outside Ent. Ramp Dirt)

51098, 50862, 50926 — 50962 ft^2 Average (Gore Ent. Ramp Dirt)

120542, 120392, 120419 — 120451 ft^2 Average (Mainline Paved)

36313, 36411, 36352 — 36359 ft^2 Average (Gore Exit Ramp Dirt)

23387, 23419, 23480 — 23429 ft^2 Average (Out Exit Ramp Dirt)

SUMMARY: Imp = 161,368' SF = 3.70 Acres
PER = 128,000' SF = 2.94 Acres
} 6.64 Ac.

22/24

BRW 3/89m-65

BRW

JOB SR 51 SHEET NO. 10/10

MADE BY gag DATE 6/16/95 JOB NO.

CHECKED BY DATE SEC. SHT. NO.

CALCULATIONS FOR Drainage Areas to Pump Station & T_c

Area 7

Compute Drainage Area North of Cactus Road contributing to the Pump Station

Total Area

450,821
451,465
450,859 } 450,850

Pervious Area (West to East)

33,298 (Planimeter)
33,121 (Scaled) } 33,298 ft^2

52,571 (Planimeter)
52,721 (Scaled) } 52,721 ft^2

42,446 (Planimeter)
42,829 (Scaled) } 42,829 ft^2

47,194 (Planimeter)
47,675 (Scaled) } 47,675 ft^2

Impervious Area (West to East)

35,910 (Planimeter)
35,545 (Scaled) } 35,910 ft^2

SR 51 (28500 - 27090)(141) = 198,810 ft^2

39,637 (Planimeter)
39,725 (Scaled) } 39,725 ft^2

Σ = 450,968 ft^2

SUMMARY: Imp = 274,445 SF = 6.30 Ac
PER = 176,523 SF = 4.05 Ac
} 10.35 Ac

23/24

BRW 3/89m-65

SUMMARY OF RUNOFF AREAS
(ASSUME HOV LANES IN MEDIAN)

TOT. TO PUMP

$\Sigma CA = 70.29$ Acres
$= 0.10983$ s.m.

$\Sigma CA = 29.97$ Acres

SECTION 3
SOUTH OF
SHEA BLVD

$\Sigma CA = 25.12 + 29.97$
$= 55.09$ Acres
$= .08608$ s.m.

SECTION 4
SHEA BLVD TO NORTH OF
CACTUS ROAD

$\Sigma CA = 15.20$ Acres
$= 0.02375$ sm

$T_C = 17.7$ min ①
USE $T_C = 12.7$ min

$T_T = 7.96$ min ②

$T_C = 10$ minutes (min)

T_C (SOUTH) $= 12.7 + 7.96$
$= 20.66$ minutes

① inlet time should be 5 min for Pavit Runoff, not 10 min as used by Entranco

② FROM Preliminary Storm Drain Design, Appendix

BRW

Job SR 51, Section 4 Sheet No. 24/24
Made By D. Schaub Date AUG 1995 Job No.
Checked By Date Sec. Sht. No.
Calculations For Drainage AREAS & T_C

Appendix F
Storm Sewer Inlet Calculations

BRW

JOB SR 51, Squaw Peak SHEET NO. 1/6
MADE BY D. Schaub DATE 8/10/95 JOB NO.
CHECKED BY DATE SEC. SHT. NO.
CALCULATIONS FOR Storm Sewer Inlet Calculations

APPENDIX F TABLE OF CONTENTS

- Catch Basins
- 10-YEAR SPREAD CALCULATIONS
  - SR 51, Northbound
  - SR 51, Southbound
  - Shea Boulevard T.I. Ramps
  - Cactus Road T.I. Ramps
  - Thunderbird Road T.I. Ramp
- 50-YEAR CAPACITY CALCULATIONS
  - SR 51, Northbound
  - SR 51, Southbound
  - Shea Boulevard T.I. Ramps
  - Cactus Road T.I. Ramps
  - Thunderbird Road T.I. Ramps

BRW

JOB SR 51, Squaw Peak SHEET NO. 2/6
MADE BY D. Schaub DATE 8/10/95 JOB NO.
CHECKED BY DATE SEC. SHT. NO.
CALCULATIONS FOR Storm Sewer Inlet Calculations

Spacing of the catch was based on the 10-year storm event and the size of the catch basin (slotted drain length) was based on the 50-year storm event. An initial evaluation of the two storm events revealed that the most critical spread criteria is for the 10-year storm event. This is especially true in the roadway segments where the shoulder slope is 0.04 ft/ft and the allowable ponding depth can not exceed the curb height. In these roadway segments, the water depth reaches the 0.5' curb height before the allowable spread width is reached.

The size of the catch basins was based on the 50-year storm

BRW

JOB SR 51, Squaw Peak SHEET NO. 3/6
MADE BY D. Schaub DATE 8/10/95 JOB NO.
CHECKED BY DATE SEC. SHT. NO.
CALCULATIONS FOR Storm Sewer, Inlet Calculation

event, because the major portion of SR 51 including the Shea Boulevard T.I. and the Cactus Road T.I. drain into the depressed SR 51. Criteria requires sized the catch basins and the Cactus Road pump station to handle the 50-year storm event.

	DESCRIPTION OF REVISIONS	REVISED BY	DATE
1	MODIFIED TABLE	PMB	7/94
2			
3			
4			
5			

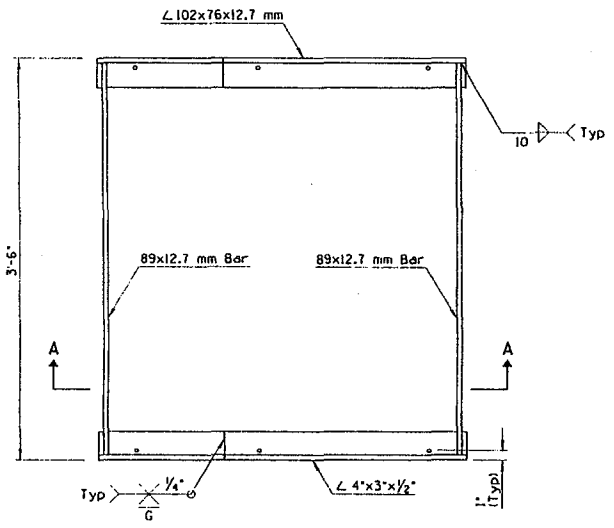

PLAN VIEW
FRAME

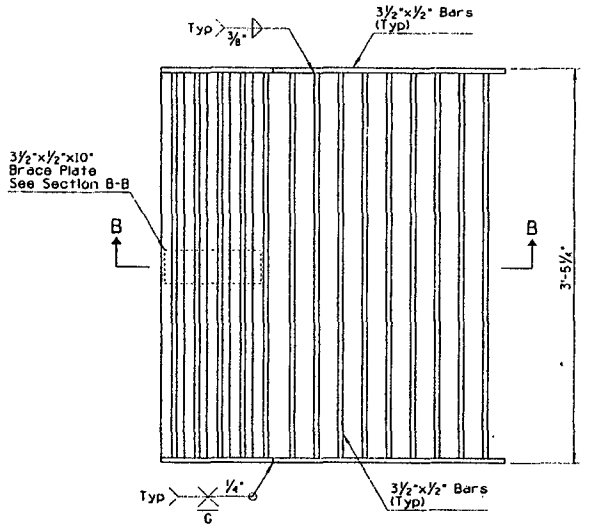

PLAN VIEW
GRATE

GENERAL NOTES

1. All structural steel shall be in accordance with ASTM Spec's A-36.
2. All reinforcement steel shall conform to 1003-1, 1003-2, Grade 40.
3. All welding shall be in accordance with ADOT specifications.
4. The completed grate assembly (frame & grate) shall be given two shop coats of No. 1 paint.
5. The installation and inspection of steel studs welded to steel acting as connection devices to the concrete shall conform to the American Welding Society's Structural Welding Code (AWS D1.1), Specifications 4.21-4.27.

① GRATE AND FRAME DIMENSIONS						
			Catch Basin Frame		Catch Basin Grate	
Type	Curb Height	Gutter Width	A	∢	C	∢
B	6"	2'-6"	13 5/16"	26°-57'-40"	12 1/16"	26°-57'-40"
C	3"	2'-6"	13 5/16"	18°-14'-22"	11 7/8"	18°-14'-22"

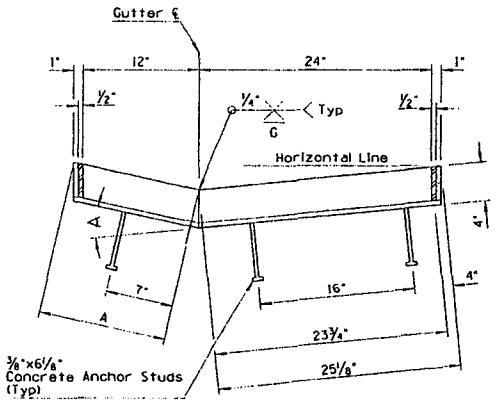

SECTION A-A

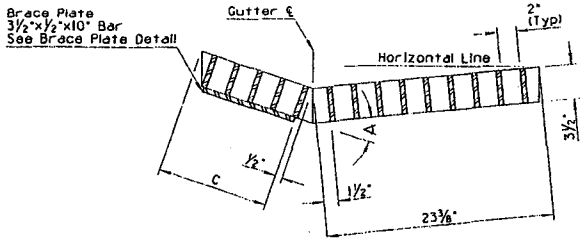

SECTION B-B

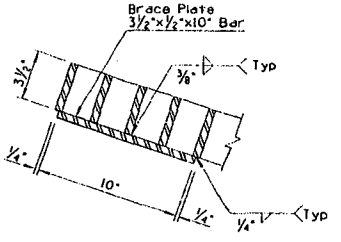

BRACE PLATE DETAIL

$$AREA = [3.5 - 2(.25)] \times 3' - 14 \times (3.5 - 2 \times .25) \times \frac{.50}{12} = 7.25 \text{ S.F.}$$

$$P = 2 \times 3' + 2 \times 3' = 12'$$

DESIGN APPROVED: Henry H. Otterness	STATE OF ARIZONA DEPARTMENT OF TRANSPORTATION DIVISION OF HIGHWAYS STANDARD DRAWINGS	REV. 7/94
APPROVED FOR DISTRIBUTION: Kenneth Allen	FREEWAY CATCH BASIN DETAILS	DRAWING NO. C-15.91 Sheet 2 of 2

4/6

	DESCRIPTION OF REVISIONS	MADE BY	DATE
1	REARRANGED STD.	PHB	7/94
2	NOTED DETAIL	PHB	7/94
3			
4			

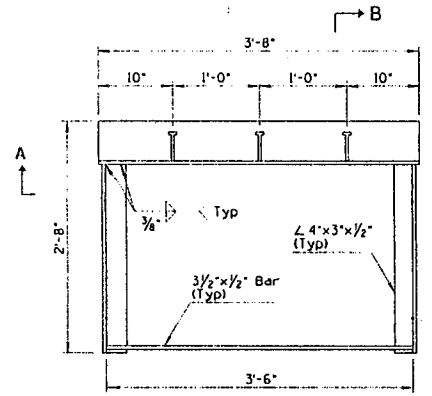

PLAN

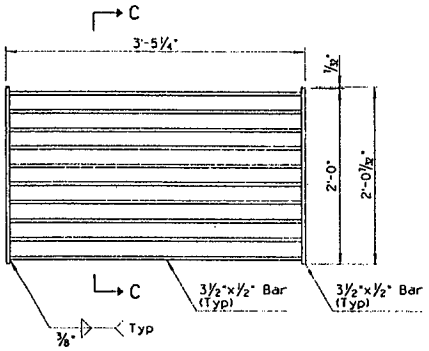

PLAN

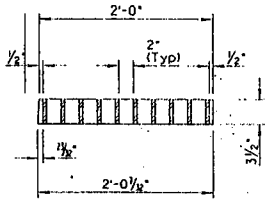

SECTION C-C

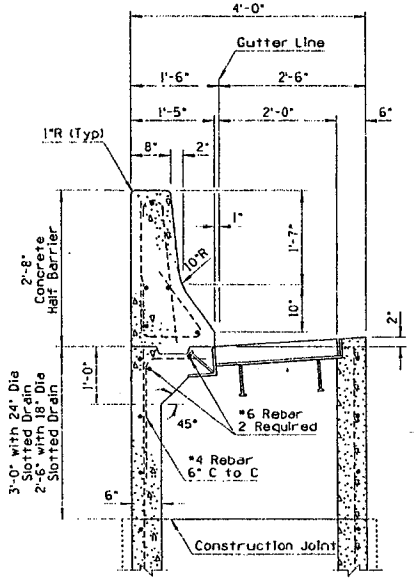

CATCH BASIN WITH HALF BARRIER

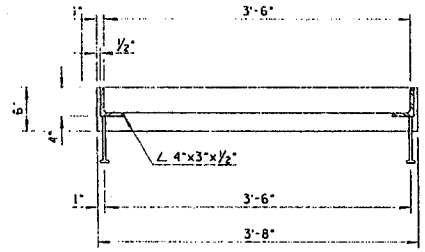

SECTION A-A

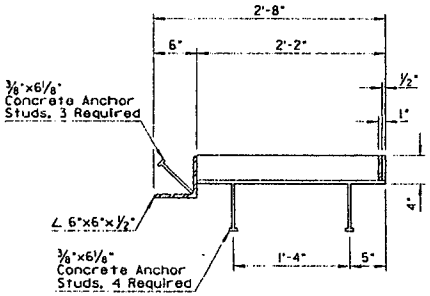

SECTION B-B

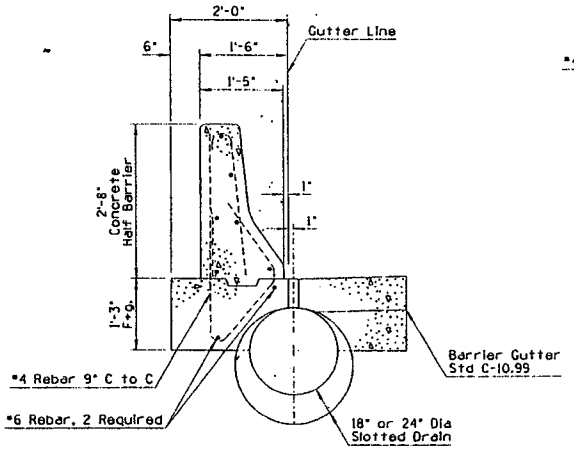

HALF BARRIER INSTALLATION
AT SLOTTED DRAIN LOCATIONS

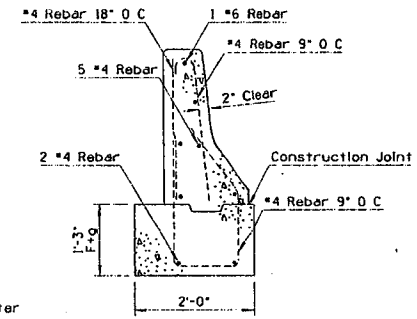

② REINFORCING DETAIL

GENERAL NOTES

1. See Std C-15.91 for dimensions, sizes and details not shown for installation of catch basin and half barrier.
2. See Std C-13.60 for dimensions, sizes and details not shown for installation of slotted drain.
3. Unless otherwise noted, reinforcement steel in half barrier for installation with catch basin and slotted drain, shall conform to sizes and number specified.
4. The installation and inspection of steel studs welded to steel acting as a connection device to the concrete shall conform to AWS D1.1 and specifications 4.21 - 4.27.
5. Where applicable, see Std C-10.09 for weep hole placement.
6. See Std C-10.99 for additional general notes.
7. Grate design is not suitable for locations subject to bicycle traffic. See Std C-10.99.

DESIGN APPROVED	STATE OF ARIZONA DEPARTMENT OF TRANSPORTATION DIVISION OF HIGHWAYS STANDARD DRAWINGS	REV. 7/94
APPROVED FOR DISTRIBUTION	① CATCH BASIN WITH HALF BARRIER	DRAWING NO. C-15.92

5/6

NO.	DESCRIPTION OF REVISIONS	MADE BY	DATE
1	REVISED PERSPECTIVE	PNB	7/94
2	REVISED SLOPE	PNB	7/94
3	ADDED NOTE	PNB	7/94
4	ADDED DETAIL	PNB	7/94

NO.	DESCRIPTION OF REVISIONS	MADE BY	DATE
5	REVISED DIMENSION	PNB	7/94
6	ADDED DIMENSION	PNB	7/94
7			
8			

GENERAL NOTES

1. Apron shall be AC or portland cement concrete as specified on plans.
2. All concrete shall be Class B.
3. Grating shall be fabricated of structural steel.
4. Structural steel shall be in accordance with ASTM A36.
5. Welding shall be in accordance with Standard Welding Specifications.
6. Grating assembly shall be given one shop coat of No. 1 paint.
7. 'H' Indicated on plans.

* 8" When Wall Height Exceeds 8'

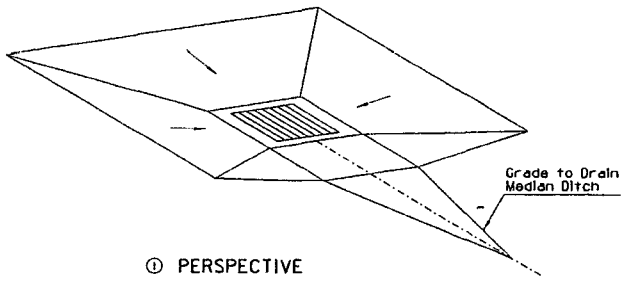

① PERSPECTIVE

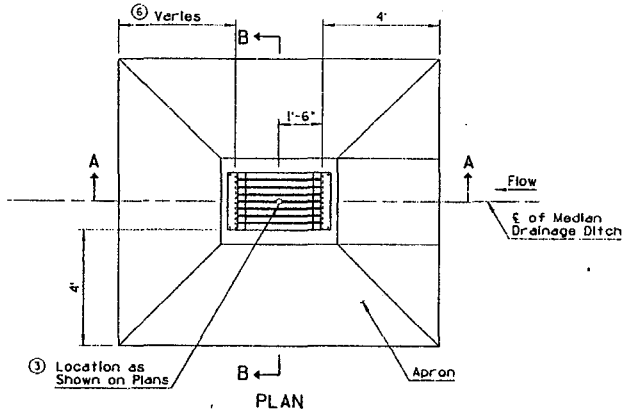

PLAN

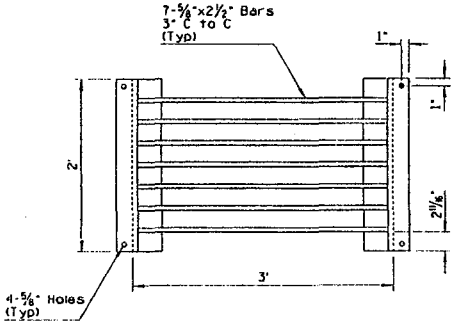

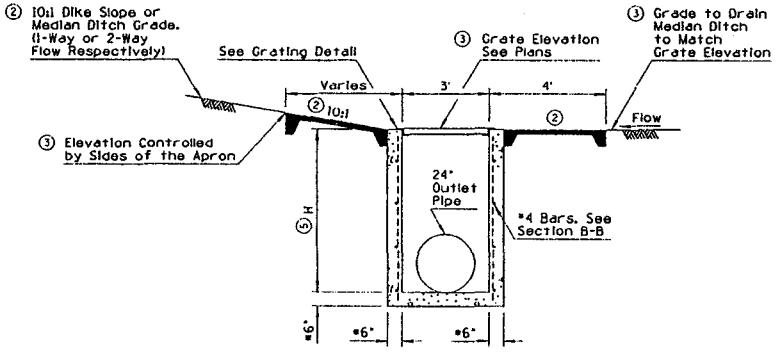

SECTION A-A

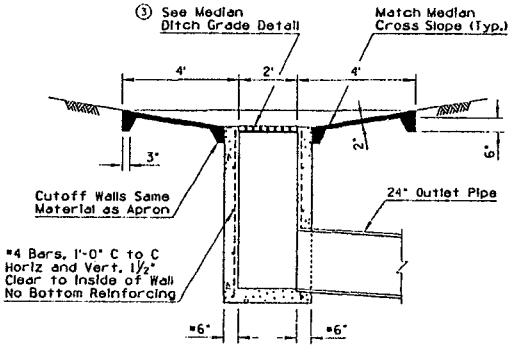

SECTION B-B

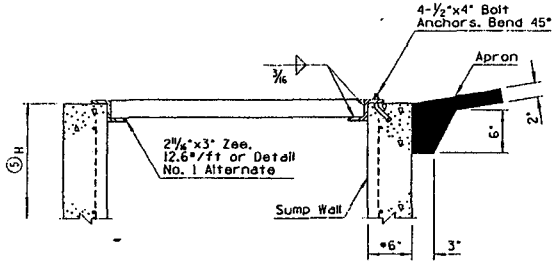

GRATING DETAIL

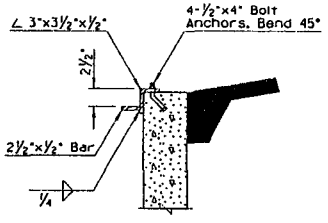

DETAIL NO. 1

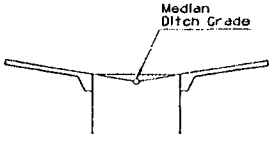

④ MEDIAN DITCH GRADE DETAIL

DESIGN APPROVED	STATE OF ARIZONA DEPARTMENT OF TRANSPORTATION DIVISION OF HIGHWAYS STANDARD DRAWINGS	REV. 7/94
APPROVED FOR DISTRIBUTION	CATCH BASIN, MEDIAN FLUSH	DRAWING NO. C-15.80

6/6

total [AREA = [(3 - 0.5) x 2 - 7 x (3-0.5) x 5/96] = 4.09 S.F.
WP = 2x2 + 2x2.5 = 9.0'

Assume 50% capture
A = 2.05
W.P = 2x2 + 2(1.25) = 6.5

ARIZONA DEPARTMENT OF TRANSPORTATION

STORM SEWER INLET CALCULATION RECORD

LOCATION DATA

Highway: SR 51, SQUAW PEAK HIGHWAY

Location: NORTH BOUND

Project No.:

DESIGN DATA

Frequency: 50 years

P_6= 2.80 in. P_{24}= 3.33 in. P_1= 1.77 in.

T_{all} 22.0 / 10' shld ; 20.0' / 8' shld

n 0.016

INLET CALCULATIONS

Inlet No	Inlet Station	DA No	Shld	Inlet Type	Q cfs	Q_c cfs	Q_T cfs	So %	APPR. ① Gutter S_x '/'	APPR. ① Gutter z/n	SHOULDER Pavement S_x '/'	SHOULDER Pavement z/n	APPR. ① D ft.	T ft.	a in.	Inlet Act.	Inlet Corr.	Q_i/Q	Q_i cfs	Q_c cfs
121	210+50			C-15.80 median	1.17								0.16							
124	214+25			C-15.80 median	2.39								0.24							
123	215+00 ③		8'	C-15.91 w/ Slotted Drn	10.59 ④			.50	.067		.0389 / "		.54	15.25	1.13	22	14.74	1	10.59	0
123	215+00		8'	" "	9.81 ⑤															
129	223+95		10'	C-15.91 w/ Slotted Drn	8.30			.3835	.067		.040 / .020		.54	13.42	0.80	18	12.06	1	8.30	0
134	229+50		10'	C-15.91 w/ Slotted Drn	6.92			.3835	.067		.0393 / .02		.50	12.36	0.88	16	10.72	1	6.92	0
143	233+40		8'	C-15.91 w/ Slotted Drn	1.39			.3435	.067		.020 / "		.29	8.38	1.40	4	2.68	1	1.39	0
142	234+90		8'	C-15.91 w/ Slotted Drn	2.05			.343	.067		.020 / "		.32	10.16	1.40	6	4.02	1	2.04	.01

① Depress 1" @ CL to obtain 3" gutter drop, S_x = 0.100 '/' and add 1" to a.

Computed by: D. Schaub Checked by: Date: 8/7/95

20-0405 12/74

③ median shoulder ④ interim ⑤ ultimate, median paved w/ HOV lanes

1/29

ARIZONA DEPARTMENT OF TRANSPORTATION

STORM SEWER INLET CALCULATION RECORD

LOCATION DATA

Highway SR 51, SQUAW PEAK HWY

Location NORTHBOUND

Project No.

DESIGN DATA

Frequency 50 years

P_6= 2.80 in. P_{24}= 3.33 in. P_1= 1.97 in.

T_{all} 22.0/10' shld; 20.0'/8' shld

n .016

INLET CALCULATIONS

Inlet No	Inlet Station	DA No	Shld	Inlet Type	Q cfs	Q_c cfs	Q_T cfs	So %	Gutter (APP. ①) S_x 1/1	Gutter z/n	Pavement (SHOULDER) S_x 1/1	Pavement z/n	D ft.	T ft.	a in.	Inlet Act.	Inlet Corr.	Q_i/Q	Q_i cfs	Q_c cfs
149	236+10		8'	C-15.91 w/ Sloped Drn	2.26			.3435	.067		.020/"		.33	11.64	1.40	6	4.02	1	2.26	0
148	237+20		8'	C-15.91 w/ Sloped Drn	2.15			.3435	.067		.020/"		.32	10.39	1.40	6	4.02	1	2.15	0
151	238+52		8'	C-15.91 w/ Sloped Drn	5.30			sump	.067		.020/"		0.35	11.79	1.40					
153	244+30 ②		8'	C-15.91 w/ Sloped Drn	4.28 ④			.3835	.067		.020/"		.39	13.64	1.40	16	10.72	.99	4.24	.04
"	244+30 ②		"	" "	4.02 ⑤			"	"		.020/"				"					
154	244+30			C-15.90 median	2.92								0.28							
156	248+25 ②		8'	C-15.91 w/ Sloped Drn	4.12 ④			.1502	.067		.020/.006		0.45	16.48	1.40	10	6.70	.98	4.04	.08
"	248+25 ②		"	" "	3.78 ⑤			"	"		.020/.066				"					

① Depress 1" @ CB to obtain 3" Gutter drop, S_x = 0.100 1/1, and add 1" to a.

Computed by: D. Schaub 8/7/95 Checked by: Date:

20-0405 12/74

② median shoulder ④ interim ⑤ ultimate, median paved w/ HOV lanes

2/28

ARIZONA DEPARTMENT OF TRANSPORTATION

STORM SEWER INLET CALCULATION RECORD

LOCATION DATA

Highway SR 51, SQUAW PEAK HWY

Location NORTH BOUND

Project No.

DESIGN DATA

Frequency 50 years

P_6= 2.80 in. P_{24}= 3.33 in. P_1= 1.77 in.

T_{all} 22.0'/10' Shld; 20.0'/8' Shld

n 0.016

INLET CALCULATIONS

Inlet No	Inlet Station	DA No	Shld	Inlet Type	Q cfs	Q_c cfs	Q_T cfs	So %	APPR. ① Gutter S_x 1/1	APPR. ① Gutter z/n	SHOULDER/ Pavement S_x 1/1	SHOULDER/ Pavement z/n	APPR. ① D ft.	T ft.	a in.	Inlet Act.	Inlet Corr.	Q_i/Q	Q_i cfs	Q_c cfs
157	248+25			C-15.80 median	4.02								0.35							
165	251+00		10'	C-15.91 w/ slotted Drn	5.40			.3835	.067		.02/.11		.42	15.19	1.40	14	9.38	.99	5.37	.03
164	252+55		8'	C-15.91 w/ slotted Drn	3.05			.3835	.067		.02/.11		.35	13.79	1.40	10	6.70	1	3.04	.01
183	265+15		10'	C-15.91 w/ slotted Drn	8.10			.3532	.067		.04/.02		0.54	13.54	0.80	16	10.72	.99	8.05	.05
111.3	266+90		10'	C-15.91 w/ slotted Drn	4.85			sump	.067		.04/.02		0.32	6.33	0.80					
187	268+60		10'	C-15.91 w/ slotted Drn	7.05			.3442	.067		.04/.02		0.52	12.67	0.80	16	10.72	1	7.05	0
191	275+10		10'	C-15.91 w/ slotted Drn	7.90			1.6581	.067		.04/.02		0.42	8.71	0.80	16	10.72	.99	7.80	.10

① Depress 1" @ CB to obtain 3" Gutter drop, Sx= 0.100 1/1 and add 1" to a.

Computed by: D. Schuh Checked by: Date: 8/7/95

20-0405 12/74

3/29

ARIZONA DEPARTMENT OF TRANSPORTATION

STORM SEWER INLET CALCULATION RECORD

LOCATION DATA

Highway SR 51, SQUAW PEAK HWY

Location NORTH BOUND

Project No.

DESIGN DATA

Frequency 50 years

P_6= 2.90 in. P_{24}= 3.33 in. P_1= 1.77 in.

T_{all} 22.0'/10.0' Shld; 20.0'/8' Shld

n 0.016

INLET CALCULATIONS

Inlet No	Inlet Station	DA No	Shld	Inlet Type	Q cfs	Q_c cfs	Q_T cfs	So %	Gutter (APPR. ①) S_x 1/1	Gutter z/n	Pavement (SHOULDER) S_x 1/1	Pavement z/n	D ft. (APPR. ①)	T ft.	a in.	Inlet Act.	Inlet Corr.	Q_i/Q	Q_i cfs	Q_c cfs
206	285+00		8'	C-15.91 w/ SLOTTED DRAIN	3.34			1.84	.067		.02/11		0.29	8.53	1.40	6	4.02	.99	3.32	.02
208	287+70		8'	C-15.92 w/ SLOTTED DRN	3.11			1.84	②.067		.02/11		0.29	8.47	②1.40	14	9.38	.99	3.07	.04
210	290+40		8'	C-15.92 w/ SLOTTED DRN	7.57			1.84	②.067		.02/11		0.37	12.83	②1.40	32	21.44	1	7.56	.01
212	297+20		10'	C-15.92 w/ SLOTTED DRN	3.16			.9596	②.067		.02/11		0.32	10.00	②1.40	12	8.04	.97	3.06	.10
215	300+00		10'	C-15.92 w/ SLOTTED DRN	3.25			.5620	②.067		.02/11		0.35	11.44	②1.40	12	8.04	.97	3.15	.10
218	302+62		8'	C-15.92 w/ SLOTTED DRN	4.42			.4200	②.067		.02/11		0.40	13.97	②1.40	16	10.72	.99	4.38	.04
224	306+85		10'	C-15.91 w/ SLOTTED DRN	7.94			.4200	.067		.02/11		0.47	17.46	1.40	18	12.06	.99	7.84	.10

① Depress 1" @ CB. TO OBTAIN 3" Gutter drop, Sx = 0.100 ", and add 1" to a.

② No additional depression at CB with half barrier

Computed by: D. Schaub Checked by: Date: 8/7/95

20-0405 12/74

11/29

ARIZONA DEPARTMENT OF TRANSPORTATION

STORM SEWER INLET CALCULATION RECORD

LOCATION DATA

Highway SR51, SQUAW PEAK HWY

Location NORTHBOUND

Project No.

DESIGN DATA

Frequency 50 years

P_6= 2.80 in. P_{24}= 3.33 in. P_1= 1.77 in.

T_{all} 22'/10' shld; 20'/8' shld

n 0.016

INLET CALCULATIONS

Inlet No	Inlet Station	DA No	24/45	Inlet Type	Q cfs	Q_c cfs	Q_T cfs	So %	Gutter S_x '/' (APPR. ①)	Gutter z/n (APPR. ①)	Pavement S_x '/' (SHOULDER)	Pavement z/n (SHOULDER)	D ft. (APPR. ①)	T ft. (APPR. ①)	a in. (APPR. ①)	Inlet Act.	Inlet Corr.	Q_i/Q	Q_i cfs	Q_c cfs
237	322+00		10'	C-15.92 w/ Slotted Drk	5.74			0.50	② .067		.02 '/'		15.02	0.42	① 1.40	22	14.74	.99	5.70	.04

① Depress 1" @ CB TO OBTAIN 3" Gutter drop, Sx = 0.100 '/' and add 1" to a.

② No additional depression at CB w/ half barrier

Computed by: D. Schaub Checked by: Date: 8/7/95

20-0405 12/74

5/29

****
***** ROADWAY DRAINAGE DESIGN *****
****

DESIGNER: Nasir Raza

DATE: 07-16-1995

PROJECT: SR 51

PROJECT NO.: Squaw Pe

INLET NO.: 123

STATION: 215+00

DRAINAGE AREA: Acres

DESIGN FREQUENCY: 50 Years

ROADWAY & DISCHARGE DATA

Cross-Slope	S (ft/ft)	Sx (ft/ft)	n	Q (cfs)	T (ft)
Composite	0.005	0.029	0.016	10.65	14.90

GUTTER FLOW

W (ft)	Sw (ft/ft)	a (in)	Eo	d (ft)	V (fps)
3.00	0.083	1.96	0.533	0.59	3.08

INLET INTERCEPTION

Inlet Type	LT or W (ft)	L (ft)	E	Qi (cfs)	Qb (cfs)
Slotted Drain	21.83	15.00	0.870	9.33	1.31
P-1-7/8	3.00	1.40	0.970	1.27	0.04
Combination			0.996	10.61	0.04

6/29

REQ'D LENGTH OF SLOTTED DRAIN = 1.49 X 15 = 22 FT

****
***** ROADWAY DRAINAGE DESIGN *****
****

DESIGNER: Nasir Raza

DATE: 07-16-1995

PROJECT: SR 51

PROJECT NO.: Squaw Pe

INLET NO.: 128

STATION: 223+75

DRAINAGE AREA: Acres

DESIGN FREQUENCY: 50 Years

ROADWAY & DISCHARGE DATA

Cross-Slope	S (ft/ft)	Sx (ft/ft)	n	Q (cfs)	T (ft)
Composite	0.004	0.040	0.016	8.34	11.72

GUTTER FLOW

W (ft)	Sw (ft/ft)	a (in)	Eo	d (ft)	V (fps)
3.00	0.083	1.56	0.607	0.60	2.83

INLET INTERCEPTION

Inlet Type	LT or W (ft)	L (ft)	E	Qi (cfs)	Qb (cfs)
Slotted Drain	16.77	12.00	0.890	7.47	0.87
P-1-7/8	3.00	1.40	0.990	0.86	0.01
Combination			0.999	8.33	0.01

REQ'D LENGTH OF SLOTTED DRAIN = 1.49 x 12 = 18 FT.

7/29

****
***** ROADWAY DRAINAGE DESIGN *****
****

DESIGNER: Nasir Raza

DATE: 07-16-1995

PROJECT: SR 51

PROJECT NO.: Squaw Pe

INLET NO.: 134

STATION: 229+50

DRAINAGE AREA: Acres

DESIGN FREQUENCY: 50 Years

ROADWAY & DISCHARGE DATA

Cross-Slope	S (ft/ft)	Sx (ft/ft)	n	Q (cfs)	T (ft)
Composite	0.004	0.037	0.016	6.97	11.32

GUTTER FLOW

W (ft)	Sw (ft/ft)	a (in)	Eo	d (ft)	V (fps)
3.00	0.083	1.66	0.631	0.56	2.68

INLET INTERCEPTION

Inlet Type	LT or W (ft)	L (ft)	E	Qi (cfs)	Qb (cfs)
Slotted Drain	15.55	10.00	0.840	5.87	1.09
P-1-7/8	3.00	1.40	0.980	1.07	0.02
Combination			0.997	6.95	0.02

8/29

REQ'D LENGTH OF SLOTTED DRAIN = 1.49 x 10 = 16 FT

****
***** ROADWAY DRAINAGE DESIGN *****
****

DESIGNER: Nasir Raza

DATE: 07-16-1995

PROJECT: SR 51

PROJECT NO.: Squaw Pe

INLET NO.: 143

STATION: 233+40

DRAINAGE AREA: Acres

DESIGN FREQUENCY: 50 Years

ROADWAY & DISCHARGE DATA

Cross-Slope	S (ft/ft)	Sx (ft/ft)	n	Q (cfs)	T (ft)
Composite	0.003	0.020	0.016	1.39	7.08

GUTTER FLOW

W (ft)	Sw (ft/ft)	a (in)	Eo	d (ft)	V (fps)
3.00	0.083	2.28	0.907	0.33	1.77

INLET INTERCEPTION

Inlet Type	LT or W (ft)	L (ft)	E	Qi (cfs)	Qb (cfs)
Slotted Drain	6.96	2.00	0.450	0.63	0.76
P-1-7/8	3.00	1.40	0.990	0.75	0.00
Combination			1.000	1.39	0.00

REQ'D LENGTH OF SLOTTED DRAIN = 1.99 x 2 ≃ 4 FT

9/29

****
***** ROADWAY DRAINAGE DESIGN *****
****

DESIGNER: Nasir Raza

DATE: 07-16-1995

PROJECT: SR 51

PROJECT NO.: Squaw Pe

INLET NO.: 142

STATION: 234+90

DRAINAGE AREA: Acres

DESIGN FREQUENCY: 50 Years

ROADWAY & DISCHARGE DATA

Cross-Slope	S (ft/ft)	Sx (ft/ft)	n	Q (cfs)	T (ft)
Composite	0.003	0.020	0.016	2.05	9.10

GUTTER FLOW

W (ft)	Sw (ft/ft)	a (in)	Eo	d (ft)	V (fps)
3.00	0.083	2.28	0.815	0.37	1.83

INLET INTERCEPTION

Inlet Type	LT or W (ft)	L (ft)	E	Qi (cfs)	Qb (cfs)
Slotted Drain	8.59	3.00	0.530	1.10	0.94
P-1-7/8	3.00	1.40	0.970	0.92	0.01
Combination			0.995	2.04	0.01

REQ'D LENGTH OF SLOTTED DRAIN
= 1.99 x 3 ≅ 6 FT.

10/20

```
****************************************
*****    ROADWAY DRAINAGE DESIGN    *****
****************************************
```

DESIGNER: Dave Schaub

DATE: 07-16-1995

PROJECT: SR 51

PROJECT NO.: SQUAW PE

INLET NO.: XX 149

STATION: 236+10

DRAINAGE AREA: XX Acres

DESIGN FREQUENCY: 50 Years

ROADWAY & DISCHARGE DATA

Cross-Slope	S (ft/ft)	Sx (ft/ft)	n	Q (cfs)	T (ft)
Composite	0.003	0.020	0.016	2.26	9.64

GUTTER FLOW

W (ft)	Sw (ft/ft)	a (in)	Eo	d (ft)	V (fps)
3.00	0.083	2.28	0.791	0.38	1.86

INLET INTERCEPTION

Inlet Type	LT or W (ft)	L (ft)	E	Qi (cfs)	Qb (cfs)
Slotted Drain	9.07	4.00	0.640	1.46	0.79
P-1-7/8	3.00	1.40	0.990	0.78	0.00
Combination			1.000	2.26	0.00

REQ'D SLOTTED DRAIN LENGTH = 1.49 X 4 = 6

11/29

****
***** ROADWAY DRAINAGE DESIGN *****
****

DESIGNER: Dave Schaub

DATE: 07-16-1995

PROJECT: SR 51

PROJECT NO.: SQUAW PE

INLET NO.: XX 148

STATION: 237+20

DRAINAGE AREA: X Acres

DESIGN FREQUENCY: 50 Years

ROADWAY & DISCHARGE DATA

Cross-Slope	S (ft/ft)	Sx (ft/ft)	n	Q (cfs)	T (ft)
Composite	0.003	0.020	0.016	2.15	9.37

GUTTER FLOW

W (ft)	Sw (ft/ft)	a (in)	Eo	d (ft)	V (fps)
3.00	0.083	2.28	0.803	0.38	1.84

INLET INTERCEPTION

Inlet Type	LT or W (ft)	L (ft)	E	Qi (cfs)	Qb (cfs)
Slotted Drain	8.82	4.00	0.660	1.42	0.73
P-1-7/8	3.00	1.40	0.990	0.72	0.00
Combination			1.000	2.15	0.00

REQ'D SLOTTED DRAIN LENGTH = 1.49 X 4 = 6 FT

12/29

****
***** ROADWAY DRAINAGE DESIGN *****
****

DESIGNER: Nasir Raza

DATE: 07-16-1995

PROJECT: SR 51

PROJECT NO.: Squaw Pe

INLET NO.: 153

STATION: 244+30

DRAINAGE AREA: Acres

DESIGN FREQUENCY: 50 Years

ROADWAY & DISCHARGE DATA

Cross-Slope	S (ft/ft)	Sx (ft/ft)	n	Q (cfs)	T (ft)
Composite	0.004	0.020	0.016	4.28	13.09

GUTTER FLOW

W (ft)	Sw (ft/ft)	a (in)	Eo	d (ft)	V (fps)
3.00	0.083	2.28	0.645	0.45	2.14

INLET INTERCEPTION

Inlet Type	LT or W (ft)	L (ft)	E	Qi (cfs)	Qb (cfs)
Slotted Drain	13.34	7.00	0.730	3.15	1.13
P-1-7/8	3.00	1.40	0.960	1.09	0.04
Combination			0.991	4.24	0.04

REQ'D SLOTTED DRAIN LENGTH= 1.49 x 7= 16 FT

****
***** ROADWAY DRAINAGE DESIGN *****
****

DESIGNER: Nasir Raza

DATE: 07-16-1995

PROJECT: SR 51

PROJECT NO.: Squaw Pe

INLET NO.: 156

STATION: 248+25

DRAINAGE AREA: Acres

DESIGN FREQUENCY: 50 Years

ROADWAY & DISCHARGE DATA

Cross-Slope	S (ft/ft)	Sx (ft/ft)	n	Q (cfs)	T (ft)
Composite	0.002	0.020	0.016	4.11	15.99

GUTTER FLOW

W (ft)	Sw (ft/ft)	a (in)	Eo	d (ft)	V (fps)
3.00	0.083	2.28	0.547	0.51	1.44

INLET INTERCEPTION

Inlet Type	LT or W (ft)	L (ft)	E	Qi (cfs)	Qb (cfs)
Slotted Drain	10.56	6.00	0.770	3.20	0.91
P-1-7/8	3.00	1.40	0.920	0.84	0.07
Combination			0.983	4.04	0.07

REQ'D SLOTTED DRAIN LENGTH= 6 x 1.49 = 10 FT

14/29

****
***** ROADWAY DRAINAGE DESIGN *****
****

DESIGNER: Nasir Raza

DATE: 07-16-1995

PROJECT: SR 51

PROJECT NO.: Squaw Pe

INLET NO.: 165

STATION: 251+00

DRAINAGE AREA: Acres

DESIGN FREQUENCY: 50 Years

ROADWAY & DISCHARGE DATA

Cross-Slope	S (ft/ft)	Sx (ft/ft)	n	Q (cfs)	T (ft)
Composite	0.004	0.020	0.016	5.40	14.61

GUTTER FLOW

W (ft)	Sw (ft/ft)	a (in)	Eo	d (ft)	V (fps)
3.00	0.083	2.28	0.590	0.48	2.23

INLET INTERCEPTION

Inlet Type	LT or W (ft)	L (ft)	E	Qi (cfs)	Qb (cfs)
Slotted Drain	15.24	9.00	0.790	4.31	1.09
P-1-7/8	3.00	1.40	0.960	1.06	0.03
Combination			0.994	5.37	0.03

REQ'D SLOTTED DRAIN LENGTH = 1.49 x 9 = 14 FT

****
***** ROADWAY DRAINAGE DESIGN *****
****

DESIGNER: Nasir Raza

DATE: 07-16-1995

PROJECT: SR 51

PROJECT NO.: Squaw Pe

INLET NO.: 164

STATION: 252+55

DRAINAGE AREA: Acres

DESIGN FREQUENCY: 50 Years

ROADWAY & DISCHARGE DATA

Cross-Slope	S (ft/ft)	Sx (ft/ft)	n	Q (cfs)	T (ft)
Composite	0.004	0.020	0.016	3.05	11.03

GUTTER FLOW

W (ft)	Sw (ft/ft)	a (in)	Eo	d (ft)	V (fps)
3.00	0.083	2.28	0.729	0.41	2.03

INLET INTERCEPTION

Inlet Type	LT or W (ft)	L (ft)	E	Qi (cfs)	Qb (cfs)
Slotted Drain	11.01	6.00	0.750	2.31	0.74
P-1-7/8	3.00	1.40	0.990	0.73	0.01
Combination			0.997	3.04	0.01

REQ'D SLOTTED DRAIN LENGTH = 1.49 x 6 = 10 FT

16/20

****
***** ROADWAY DRAINAGE DESIGN *****
****

DESIGNER: Nasir Raza

DATE: 07-16-1995

PROJECT: SR 51

PROJECT NO.: Squaw Pe

INLET NO.: 183

STATION: 265+15

DRAINAGE AREA: Acres

DESIGN FREQUENCY: 50 Years

ROADWAY & DISCHARGE DATA

Cross-Slope	S (ft/ft)	Sx (ft/ft)	n	Q (cfs)	T (ft)
Composite	0.004	0.040	0.016	8.13	11.81

GUTTER FLOW

W (ft)	Sw (ft/ft)	a (in)	Eo	d (ft)	V (fps)
3.00	0.083	1.56	0.603	0.60	2.72

INLET INTERCEPTION

Inlet Type	LT or W (ft)	L (ft)	E	Qi (cfs)	Qb (cfs)
Slotted Drain	16.21	10.00	0.820	6.68	1.45
P-1-7/8	3.00	1.40	0.950	1.37	0.08
Combination			0.990	8.05	0.08

REQ'D SLOTTED DRAIN LENGTH = 1.49 x 10.05 = 16 FT

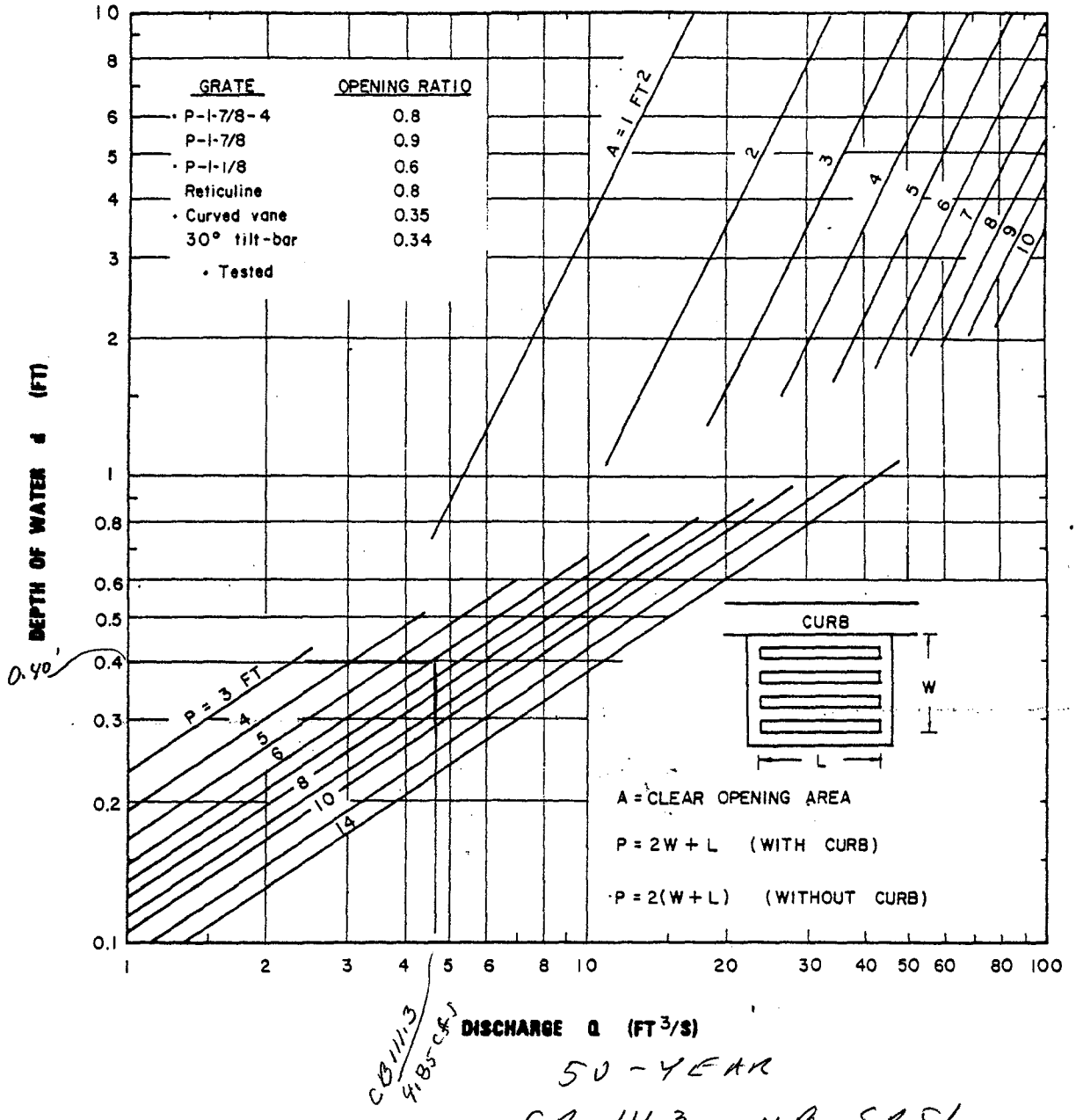

50-YEAR

CB 111.3 NB 5251

CHART 11. Grate inlet capacity in sump conditions.

19/29

****
***** ROADWAY DRAINAGE DESIGN *****
****

DESIGNER: Nasir Raza

DATE: 07-16-1995

PROJECT: SR 51

PROJECT NO.: Squaw Pe

INLET NO.: 187

STATION: ~~266+90~~ 268+60

DRAINAGE AREA: Acres

DESIGN FREQUENCY: 50 Years

ROADWAY & DISCHARGE DATA

Cross-Slope	S (ft/ft)	Sx (ft/ft)	n	Q (cfs)	T (ft)
Composite	0.003	0.040	0.016	7.09	11.20

GUTTER FLOW

W (ft)	Sw (ft/ft)	a (in)	Eo	d (ft)	V (fps)
3.00	0.083	1.56	0.628	0.58	2.61

INLET INTERCEPTION

Inlet Type	LT or W (ft)	L (ft)	E	Qi (cfs)	Qb (cfs)
Slotted Drain	15.04	10.00	0.850	6.09	1.00
P-1-7/8	3.00	1.40	0.980	0.98	0.02
Combination			0.997	7.07	0.02

REQ'D SLOTTED DRAIN LENGTH = 1.99 x 10 = 16 FT

****
***** ROADWAY DRAINAGE DESIGN *****
****

DESIGNER: Nasir Raza\ DATE: 07-16-1995

PROJECT: SR 51 PROJECT NO.: Squaw Pe

INLET NO.: 191 STATION: 275+10

DRAINAGE AREA: Acres DESIGN FREQUENCY: 50 Years

ROADWAY & DISCHARGE DATA

Cross-Slope	S (ft/ft)	Sx (ft/ft)	n	Q (cfs)	T (ft)
Composite	0.017	0.040	0.016	7.89	8.33

GUTTER FLOW

W (ft)	Sw (ft/ft)	a (in)	Eo	d (ft)	V (fps)
3.00	0.083	1.56	0.768	0.46	4.98

INLET INTERCEPTION

Inlet Type	LT or W (ft)	L (ft)	E	Qi (cfs)	Qb (cfs)
Slotted Drain	23.95	11.00	0.660	5.28	2.60
P-1-7/8	3.00	1.40	0.960	2.51	0.09
Combination			0.989	7.80	0.09

REQ'D SLOTTED DRAIN LENGTH = 1.49 x 11 ≈ 16 FT

****
***** ROADWAY DRAINAGE DESIGN *****
****

DESIGNER: Nasir Raza\ DATE: 07-16-1995

PROJECT: SR 51 PROJECT NO.: Squaw Pe

INLET NO.: 206 STATION: 285+00

DRAINAGE AREA: Acres DESIGN FREQUENCY: 50 Years

ROADWAY & DISCHARGE DATA

Cross-Slope	S (ft/ft)	Sx (ft/ft)	n	Q (cfs)	T (ft)
Composite	0.018	0.020	0.016	3.35	7.27

GUTTER FLOW

W (ft)	Sw (ft/ft)	a (in)	Eo	d (ft)	V (fps)
3.00	0.083	2.28	0.899	0.34	4.11

INLET INTERCEPTION

Inlet Type	LT or W (ft)	L (ft)	E	Qi (cfs)	Qb (cfs)
Slotted Drain	16.74	4.00	0.380	1.30	2.05
P-1-7/8	3.00	1.40	0.980	2.01	0.03
Combination			0.991	3.32	0.03

21/29

REQ'D SLOTTED DRAIN LENGTH = 1.49 x 4 = 6 FT

****
***** ROADWAY DRAINAGE DESIGN *****
****

DESIGNER: Nasir Raza\ DATE: 07-16-1995

PROJECT: SR 51 PROJECT NO.: Squaw Pe

INLET NO.: 208 STATION: 287+70

DRAINAGE AREA: Acres DESIGN FREQUENCY: 50 Years

ROADWAY & DISCHARGE DATA

Cross-Slope	S (ft/ft)	Sx (ft/ft)	n	Q (cfs)	T (ft)
Composite	0.018	0.020	0.016	3.11	8.47

GUTTER FLOW

W (ft)	Sw (ft/ft)	a (in)	Eo	d (ft)	V (fps)
2.50	0.066	1.40	0.735	0.29	3.59

INLET INTERCEPTION

Inlet Type	LT or W (ft)	L (ft)	E	Qi (cfs)	Qb (cfs)
Slotted Drain	20.00	9.00	0.650	2.04	1.06
P-1-7/8	2.50	1.40	0.960	1.02	0.04
Combination			0.987	3.07	0.04

REQ'D SLOTTED DRAIN LENGTH = 1.49 x 9 = 14 FT

22/2

****
***** ROADWAY DRAINAGE DESIGN *****
****

DESIGNER: Nasir Raza

DATE: 07-16-1995

PROJECT: SR 51

PROJECT NO.: Squaw Pe

INLET NO.: 210

STATION: 290+40

DRAINAGE AREA: Acres

DESIGN FREQUENCY: 50 Years

ROADWAY & DISCHARGE DATA

Cross-Slope	S (ft/ft)	Sx (ft/ft)	n	Q (cfs)	T (ft)
Composite	0.018	0.020	0.016	7.63	12.83

GUTTER FLOW

W (ft)	Sw (ft/ft)	a (in)	Eo	d (ft)	V (fps)
2.50	0.066	1.40	0.535	0.37	4.25

INLET INTERCEPTION

Inlet Type	LT or W (ft)	L (ft)	E	Qi (cfs)	Qb (cfs)
Slotted Drain	32.66	21.00	0.840	6.43	1.20
P-1-7/8	2.50	1.40	0.940	1.13	0.07
Combination			0.991	7.56	0.07

REQ'D SLOTTED DRAIN LENGTH = 21 x 1.49 = 32 FT

****
***** ROADWAY DRAINAGE DESIGN *****
****

DESIGNER: Nasir Raza

DATE: 07-16-1995

PROJECT: SR 51

PROJECT NO.: Squaw Pe

INLET NO.: 212

STATION: 297+20

DRAINAGE AREA: Acres

DESIGN FREQUENCY: 50 Years

ROADWAY & DISCHARGE DATA

Cross-Slope	S (ft/ft)	Sx (ft/ft)	n	Q (cfs)	T (ft)
Composite	0.010	0.020	0.016	3.15	10.00

GUTTER FLOW

W (ft)	Sw (ft/ft)	a (in)	Eo	d (ft)	V (fps)
2.50	0.066	1.40	0.655	0.32	2.75

INLET INTERCEPTION

Inlet Type	LT or W (ft)	L (ft)	E	Qi (cfs)	Qb (cfs)
Slotted Drain	17.26	8.00	0.670	2.12	1.03
P-1-7/8	2.50	1.40	0.910	0.94	0.09
Combination			0.971	3.06	0.09

REQ'D SLOTTED DRAIN LENGTH = 1.99 x 8 = 12 FT

24/24

****
***** ROADWAY DRAINAGE DESIGN *****
****

DESIGNER: Nasir Raza

DATE: 07-16-1995

PROJECT: SR 51

PROJECT NO.: Squaw Pe

INLET NO.: 215

STATION: 300+00

DRAINAGE AREA: Acres

DESIGN FREQUENCY: 50 Years

ROADWAY & DISCHARGE DATA

Cross-Slope	S (ft/ft)	Sx (ft/ft)	n	Q (cfs)	T (ft)
Composite	0.006	0.020	0.016	3.24	11.44

GUTTER FLOW

W (ft)	Sw (ft/ft)	a (in)	Eo	d (ft)	V (fps)
2.50	0.066	1.40	0.589	0.35	2.23

INLET INTERCEPTION

Inlet Type	LT or W (ft)	L (ft)	E	Qi (cfs)	Qb (cfs)
Slotted Drain	15.45	8.00	0.730	2.36	0.88
P-1-7/8	2.50	1.40	0.900	0.79	0.09
Combination			0.972	3.15	0.09

REQ'D SLOTTED DRAIN LENGTH = 1.49 x 8 = 12 FT

****
***** ROADWAY DRAINAGE DESIGN *****
****

DESIGNER: Nasir Raza

DATE: 07-16-1995

PROJECT: SR 51

PROJECT NO.: Squaw Pe

INLET NO.: 2/8

STATION: 302+62

DRAINAGE AREA: Acres

DESIGN FREQUENCY: 50 Years

ROADWAY & DISCHARGE DATA

Cross-Slope	S (ft/ft)	Sx (ft/ft)	n	Q (cfs)	T (ft)
Composite	0.004	0.020	0.016	4.44	13.97

GUTTER FLOW

W (ft)	Sw (ft/ft)	a (in)	Eo	d (ft)	V (fps)
2.50	0.066	1.40	0.496	0.40	2.10

INLET INTERCEPTION

Inlet Type	LT or W (ft)	L (ft)	E	Qi (cfs)	Qb (cfs)
Slotted Drain	17.12	11.00	0.840	3.74	0.70
P-1-7/8	2.50	1.40	0.910	0.64	0.06
Combination			0.986	4.38	0.06

REQ'D SLOTTED DRAIN LENGTH = 1.99 x 11 = 16 FT

26/2

****
***** ROADWAY DRAINAGE DESIGN *****
****

DESIGNER: Nasir Raza

DATE: 07-16-1995

PROJECT: SR 51

PROJECT NO.: Squaw Pe

INLET NO.: 224

STATION: 306+85

DRAINAGE AREA: Acres

DESIGN FREQUENCY: 50 Years

ROADWAY & DISCHARGE DATA

Cross-Slope	S (ft/ft)	Sx (ft/ft)	n	Q (cfs)	T (ft)
Composite	0.004	0.020	0.016	7.93	17.03

GUTTER FLOW

W (ft)	Sw (ft/ft)	a (in)	Eo	d (ft)	V (fps)
3.00	0.083	2.28	0.517	0.53	2.49

INLET INTERCEPTION

Inlet Type	LT or W (ft)	L (ft)	E	Qi (cfs)	Qb (cfs)
Slotted Drain	19.36	12.00	0.820	6.53	1.39
P-1-7/8	3.00	1.40	0.930	1.30	0.09
Combination			0.989	7.84	0.09

REQ'D SLOTTED DRAIN LENGTH = 1.49 x 12 = 18 FT

29/29

****
***** ROADWAY DRAINAGE DESIGN *****
****

DESIGNER: Nasir Raza

DATE: 07-16-1995

PROJECT: SR 51

PROJECT NO.: Squaw Pe

INLET NO.: 237

STATION: 322+00

DRAINAGE AREA: Acres

DESIGN FREQUENCY: 50 Years

ROADWAY & DISCHARGE DATA

Cross-Slope	S (ft/ft)	Sx (ft/ft)	n	Q (cfs)	T (ft)
Composite	0.005	0.020	0.016	5.76	15.02

GUTTER FLOW

W (ft)	Sw (ft/ft)	a (in)	Eo	d (ft)	V (fps)
2.50	0.066	1.40	0.464	0.42	2.39

INLET INTERCEPTION

Inlet Type	LT or W (ft)	L (ft)	E	Qi (cfs)	Qb (cfs)
Slotted Drain	20.55	14.00	0.870	5.02	0.74
P-1-7/8	2.50	1.40	0.920	0.68	0.06
Combination			0.990	5.70	0.06

REQ'D SLOTTED DRAIN LENGTH= 1.49 x 14 = 22 FT

28/07

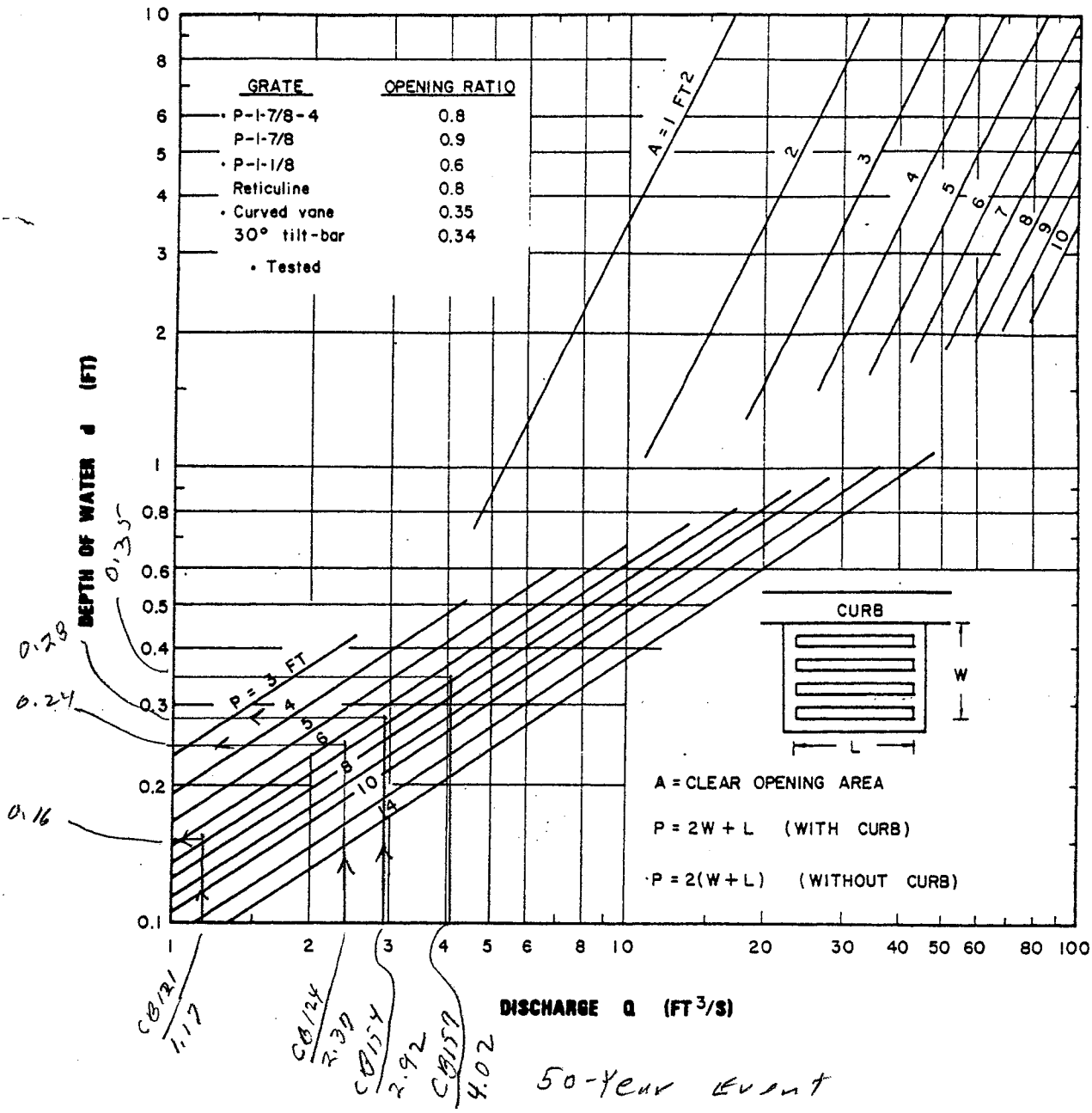

50-year event

CHART 11. Grate inlet capacity in sump conditions.

CB 121, 124, 154, 159

29/29

ARIZONA DEPARTMENT OF TRANSPORTATION

STORM SEWER INLET CALCULATION RECORD

LOCATION DATA

Highway SR 51, SQUAW PEAK HWY

Location SOUTHBOUND

Project No.

DESIGN DATA

Frequency 50 years

P_6= 2.30 in. P_{24}= 3.33 in. P_1= 1.77 in.

T_{all} 22.0/10' SHLD ; 20.0/8.0' SHLD

n 0.0160

INLET CALCULATIONS

Inlet No	Inlet Station	DA No	SHLD	Inlet Type	Q cfs	Q_c cfs	Q_T cfs	So %	Gutter S_x 1/1 (APPR ①)	Gutter z/n	Pavement S_x 1/1 (SHLD)	Pavement z/n	D ft. (APPR ①)	T ft.	a in.	Inlet Act.	Inlet Corr.	Q_i/Q	Q_i cfs	Q_c cfs
119	210+50		10'	C-15.91 w/ sloped drn	8.56			2.1933	.067		.040 / "		0.41	7.82	0.62	15	10.05	1	8.53	.03
122	215+00		10'	C-15.91 w/ sloped drn	5.99			.8553	.067		.04 / .0293		0.42	8.91	0.80	12	8.04	.98	5.90	.09
127	223+75		10'	C-15.91 w/ sloped drn	9.15			.3835	.067		.04 / .02		0.56	14.50	0.80	18	12.06	1	9.15	0
132	229+85		10'	C-15.91 w/ sloped drn	8.20			.3835	.067		.0267 / .02		0.50	16.63	1.20	18	12.06	1	8.20	0
147	236+50		10'	C-15.91 w/ sloped drn	2.56			.3835	.067		.025 / .02		0.34	9.63	1.25	8	5.36	1	2.56	0
102.1	240+80		10'	C-15.91 w/ sloped drn	6.92			.3835	.067		.04 / .02		0.51	12.14	0.80	15	10.05	1	6.92	0
152	244+30		8'	C-15.91 w/ sloped drn	5.38			.3835	.067		.02 / .02		0.41	15.14	1.40	14	9.38	.99	5.35	.03

① Depress 1" @ CB to obtain 3" gutter depression, Sx = 0.100'/FT and add 1" to a

Computed by: D. Schaus Checked by: Date:

20-0405 12/74 8/7/95

126

ARIZONA DEPARTMENT OF TRANSPORTATION

STORM SEWER INLET CALCULATION RECORD

LOCATION DATA

Highway SR51, SQUAW PEAK HWY

Location SOUTH BOUND

Project No.

DESIGN DATA

Frequency 50 years

P_6= 2.80 in. P_{24}= 3.33 in. P_1= 1.77 in.

T_{all} 22.0/10' SHLD; 20.0/8.0' SHLD

n 0.016

INLET CALCULATIONS

Inlet No	Inlet Station	DA No	SHLD	Inlet Type	Q cfs	Q_C cfs	Q_T cfs	So %	APPR ① Gutter S_x	APPR ① Gutter z/n	SHLD/ Pavement S_x	SHLD/ Pavement z/n	APPR. ① D ft.	T ft.	a in.	Inlet Act.	Inlet Corr.	Q_i/Q	Q_i cfs	Q_C cfs
155	248+25		8'	C-15.91 w/ slotted drn	7.00			.3835	.067		.02/.11		0.45	16.57	1.40	16	10.72	.99	6.93	.07
158	250+00		8'	C-15.91 w/ slotted drn	3.13			.4235	.067		.02/.11		0.35	11.66	1.40	8	5.36	.99	3.09	.04
159	251+75		8'	C-15.91 w/ slotted drn	3.15			.4235	.067		.02/.11		0.35	11.70	1.40	8	5.36	.98	3.09	.06
160	252+60		8'	C-15.91 w/ slotted drn	1.53			.4235	.067		.02/.11		0.28	8.34	1.40	5	3.35	1	1.53	0
161	253+50		8'	C-15.91 w/ slotted drn	1.63			.4235	.067		.02/.11		0.29	8.60	1.40	5	3.35	1	1.63	0
166	254+45		8'	C-15.91 w/ slotted Drn	1.74			.4235	.067		.02/.11		0.30	8.98	1.40	5	3.35	.99	1.73	.01
167	255+40		8'	C-15.91 w/ slotted Drn	1.74			.4235	.067		.02/.11		0.30	8.98	1.40	5	3.35	.99	1.73	.01
182	265+15		10'	C-15.91 w/ slotted Drn	8.58			.3532	.067		.04/.02		0.55	13.99	0.80	16	10.72	1	8.56	.02

① Depress 1" @ CB to obtain 3" gutter depression, S_x = 0.100 '/FT and add 1" to a

Computed by: D. Schaub Checked by: Date: 8/7/95

20-0405 12/74

2/25

ARIZONA DEPARTMENT OF TRANSPORTATION

STORM SEWER INLET CALCULATION RECORD

LOCATION DATA

Highway SR 51, SQUAW PEAK HWY

Location SOUTH BOUND

Project No.

DESIGN DATA

Frequency 50 years

P_6= 2.30 in. P_{24}= 3.33 in. P_1= 1.77 in.

T_{all} 22.0/10' shld ; 20.0'/8' shld

n 0.016

INLET CALCULATIONS

Inlet No	Inlet Station	DA No	Shld	Inlet Type	Q cfs	Q_c cfs	Q_T cfs	So %	Gutter (APPR ①) S_x	Gutter z/n	Pavement (SHLD) S_x	Pavement z/n	D ft. (APPR ①)	T ft.	a in.	Inlet Act.	Inlet Corr.	Q_i/Q	Q_i cfs	Q_c cfs
111.1	266+90		10'	C-15.91 w/ slotted Drn	5.95			sump	.067		.04/.02		0.40	8.25	0.80					
186	268+60		10'	C-15.91 w/ slotted Drn	7.54			.3442	.067		.04/.02		0.53	13.10	0.80	15	10.05	1	7.53	.01
190	275+10		10'	C-15.91 w/ slotted Drn	8.61			1.6581	.067		.04/.02		0.43	9.03	0.80	18	12.06	.99	8.51	.10
204	285+00		8'	C-15.92 w/ slotted Drn	2.71			1.9005	②.067		.02/"		0.28	8.06	②1.40	10	6.70	.98	2.65	.06
207	287+50		8'	C-15.92 w/ slotted Drn	2.76			1.9005	②.067		.02/"		0.28	8.06	②1.40	10	6.70	.96	2.65	.11
209	290+40		10'	C-15.92 w/ slotted Drn	6.62			1.8400	②.067		.02/"		0.36	12.06	②1.40	28	18.76	.98	6.52	.10
213	297+20		8'	C-15.92 w/ slotted Drn	3.10			.9196	②.067		.02/"		0.32	10.01	②1.40	12	8.04	.97	3.01	.09

① Depress 1" @ CB to obtain 3" gutter depression Sx = 0.100'/FT and add 1" to a

Computed by: D. Schaub Checked by: Date: 8/7/95

T● 20-0405 12/74

② no additional depression at CB w/ halt barrier

7/29

ARIZONA DEPARTMENT OF TRANSPORTATION

STORM SEWER INLET CALCULATION RECORD

LOCATION DATA

Highway SR51, SQUAW PEAK HWY

Location SOUTHBOUND

Project No.

DESIGN DATA

Frequency 50 years

P_6= 2.80 in. P_{24}= 3.33 in. P_1= 1.77 in.

T_{all} 22.0/10' shld ; 20.0'/8' shld

n 0.016

INLET CALCULATIONS

Inlet No	Inlet Station	DA No	SHLD	Inlet Type	Q cfs	Q_c cfs	Q_T cfs	So %	Gutter APPR (1) S_x	Gutter z/n	Pavement SHLD1 S_x	Pavement z/n	D ft.	T ft.	a in. (APPR (1))	Inlet Act.	Inlet Corr.	Q_i/Q	Q_i cfs	Q_c cfs
214	300+00		8'	C-15.92 w/ slotted drn	1.50			.5220	(2) .067		.02/11		0.28	8.06	(2) 1.40	5	3.35	.95	1.43	.07
216	301+30		8'	C-15.92 w/ slotted drn	1.56			.38	(2) .067		.02/11		0.29	8.89	(2) 1.40	5	3.35	.94	1.47	.09
217	302+62		8'	C-15.92 w/ slotted Drn	1.70			.38	(2) .067		.02/11		0.30	9.28	(2) 1.40	8	5.36	.99	1.68	.02
219	304+00		8'	C-15.92 w/ slotted Drn	1.76			.38	(2) .067		.02/11		0.30	9.28	(2) 1.40	8	5.36	.95	1.68	.08
220	305+40		8'	C-15.92 w/ slotted Drn	1.81			.38	(2) .067		.02/11		0.30	9.20	(2) 1.40	8	5.36	.93	1.68	.13
222	306+80		8	C-15.92 w/ slotted Drn	1.88			.4616	(2) .067		.02/11		0.30	9.29	(2) 1.40	8	5.36	.98	1.84	.04
226	310+69		10'	C-15.91 w/ slotted Drn	4.86			.40	.067		.02/11		0.40	14.34	1.40	12	8.04	.99	4.82	.04

(1) Depress 1" @ CB to obtain 3" gutter depression, S_x = 0.100'/FT and add 1" to a.

Computed by: D. Schaub Checked by: Date: 8/7/95

20-0405 12/74

(2) NO additional depression at CB w/ halt barrier.

4/29

ARIZONA DEPARTMENT OF TRANSPORTATION

STORM SEWER INLET CALCULATION RECORD

LOCATION DATA

Highway SR 51, SQUAW PEAK HWY

Location SOUTHBOUND

Project No.

DESIGN DATA

Frequency 50 years

P_6= 2.80 in. P_{24}= 3.33 in. P_1= 1.77 in.

T_{all} 22.0/10' shld ; 20.0/8' shld

n 0.016

INLET CALCULATIONS

Inlet No	Inlet Station	DA No	Shld.	Inlet Type	Q cfs	Q_c cfs	Q_T cfs	So %	Gutter S_x (APPR ①)	Gutter z/n	Pavement S_x (SHLD/)	Pavement z/n	D ft. (APPR ①)	T ft.	a in.	Inlet Act.	Inlet Corr.	Q_i/Q	Q_i cfs	Q_c cfs
238	322+00		10'	C-15.92 W/ SLOPED OKN	5.82			.45	② .069		.02/11		0.43	15.44	1.40 ②	22	14.74	.99	5.78	.04

① Depress 1" @ CB to obtain 3" gutter depression, S_x = 0.100'/FT and add 1" to a

Computed by: D. Schaub 8/7/95 Checked by: Date:

20-0405 12/74

② no additional depression at CB w/ half barrier.

5/29

****
***** ROADWAY DRAINAGE DESIGN *****
****

DESIGNER: Nasir Raza

DATE: 07-16-1995

PROJECT: SR 51

PROJECT NO.: Squaw Pe

INLET NO.: x 119

STATION: 210+50 SB

DRAINAGE AREA: x Acres

DESIGN FREQUENCY: 50 Years

ROADWAY & DISCHARGE DATA

Cross-Slope	S (ft/ft)	Sx (ft/ft)	n	Q (cfs)	T (ft)
Composite	0.002	0.046	0.016	8.57	12.27

GUTTER FLOW

W (ft)	Sw (ft/ft)	a (in)	Eo	d (ft)	V (fps)
3.00	0.083	1.34	0.571	0.68	2.34

INLET INTERCEPTION

Inlet Type	LT or W (ft)	L (ft)	E	Qi (cfs)	Qb (cfs)
Slotted Drain	14.23	10.00	0.880	7.60	0.96
P-1-7/8	3.00	1.40	0.970	0.93	0.03
Combination			0.996	8.54	0.03

USE 10 X 1.49 ≃ 15 FT SLOTTED DRAIN

6/29

****
***** ROADWAY DRAINAGE DESIGN *****
****

DESIGNER: Nasir Raza

DATE: 07-16-1995

PROJECT: SR 51

PROJECT NO.: Squaw Pe

INLET NO.: x 122

STATION: 215+00

DRAINAGE AREA: x Acres

DESIGN FREQUENCY: 50 Years

ROADWAY & DISCHARGE DATA

Cross-Slope	S (ft/ft)	Sx (ft/ft)	n	Q (cfs)	T (ft)
Composite	0.009	0.040	0.016	5.98	8.53

GUTTER FLOW

W (ft)	Sw (ft/ft)	a (in)	Eo	d (ft)	V (fps)
3.00	0.083	1.56	0.757	0.47	3.62

INLET INTERCEPTION

Inlet Type	LT or W (ft)	L (ft)	E	Qi (cfs)	Qb (cfs)
Slotted Drain	17.54	8.00	0.660	3.98	2.00
P-1-7/8	3.00	1.40	0.960	1.92	0.08
Combination			0.987	5.90	0.08

USE 8 x 1.49 = 12 FT SLOTTED DRAIN

7/29

****
***** ROADWAY DRAINAGE DESIGN *****
****

DESIGNER: Nasir Raza

DATE: 07-16-1995

PROJECT: SR 51

PROJECT NO.: Squaw Pe

INLET NO.: x 127

STATION: 223+75

DRAINAGE AREA: x Acres

DESIGN FREQUENCY: 50 Years

ROADWAY & DISCHARGE DATA

Cross-Slope	S (ft/ft)	Sx (ft/ft)	n	Q (cfs)	T (ft)
Composite	0.004	0.040	0.016	9.18	12.21

GUTTER FLOW

W (ft)	Sw (ft/ft)	a (in)	Eo	d (ft)	V (fps)
3.00	0.083	1.56	0.588	0.62	2.89

INLET INTERCEPTION

Inlet Type	LT or W (ft)	L (ft)	E	Qi (cfs)	Qb (cfs)
Slotted Drain	17.60	12.00	0.870	8.01	1.17
P-1-7/8	3.00	1.40	0.970	1.14	0.03
Combination			0.997	9.15	0.03

REQ'D SLOTTED DRAIN LENGTH = 12 x 1.49 = 18'

8/29

****
***** ROADWAY DRAINAGE DESIGN *****
****

DESIGNER: Nasir Raza

DATE: 07-16-1995

PROJECT: SR 51

PROJECT NO.: Sqauw Pe

INLET NO.: x 132

STATION: 229+85

DRAINAGE AREA: x Acres

DESIGN FREQUENCY: 50 Years

ROADWAY & DISCHARGE DATA

Cross-Slope	S (ft/ft)	Sx (ft/ft)	n	Q (cfs)	T (ft)
Composite	0.004	0.027	0.016	8.26	14.84

GUTTER FLOW

W (ft)	Sw (ft/ft)	a (in)	Eo	d (ft)	V (fps)
3.00	0.083	2.04	0.544	0.57	2.58

INLET INTERCEPTION

Inlet Type	LT or W (ft)	L (ft)	E	Qi (cfs)	Qb (cfs)
Slotted Drain	18.20	12.00	0.850	7.07	1.19
P-1-7/8	3.00	1.40	0.960	1.15	0.04
Combination			0.995	8.22	0.04

Req'd Slotted Drain Len = 12 x 1.49 = 18'

9/29

****
***** ROADWAY DRAINAGE DESIGN *****
****

DESIGNER: Nasir Raza

DATE: 07-16-1995

PROJECT: SR 51

PROJECT NO.: Squaw Pe

INLET NO.: x 147

STATION: 236+50

DRAINAGE AREA: x Acres

DESIGN FREQUENCY: 50 Years

ROADWAY & DISCHARGE DATA

Cross-Slope	S (ft/ft)	Sx (ft/ft)	n	Q (cfs)	T (ft)
Composite	0.004	0.025	0.016	2.56	8.84

GUTTER FLOW

W (ft)	Sw (ft/ft)	a (in)	Eo	d (ft)	V (fps)
3.00	0.083	2.10	0.799	0.40	2.06

INLET INTERCEPTION

Inlet Type	LT or W (ft)	L (ft)	E	Qi (cfs)	Qb (cfs)
Slotted Drain	9.75	5.00	0.720	1.85	0.70
P-1-7/8	3.00	1.40	0.990	0.69	0.00
Combination			1.000	2.56	0.00

REQ'D SLOTTED DRAIN LENGTH = 5 x 1.49 ≈ 8 FT

10/29

****
***** ROADWAY DRAINAGE DESIGN *****
****

DESIGNER: Nasir Raza

DATE: 07-16-1995

PROJECT: SR 51

PROJECT NO.: Squaw Pe

INLET NO.: x 102.1

STATION: 240+80

DRAINAGE AREA: x Acres

DESIGN FREQUENCY: 50 Years

ROADWAY & DISCHARGE DATA

Cross-Slope	S (ft/ft)	Sx (ft/ft)	n	Q (cfs)	T (ft)
Composite	0.004	0.040	0.016	6.96	10.87

GUTTER FLOW

W (ft)	Sw (ft/ft)	a (in)	Eo	d (ft)	V (fps)
3.00	0.083	1.56	0.642	0.56	2.72

INLET INTERCEPTION

Inlet Type	LT or W (ft)	L (ft)	E	Qi (cfs)	Qb (cfs)
Slotted Drain	15.34	10.00	0.850	5.91	1.05
P-1-7/8	3.00	1.40	0.980	1.03	0.02
Combination			0.997	6.94	0.02

REQ'D SLOTTED DRAIN LENGTH = 10 × 1.49 = 15 FT

11/29

****
***** ROADWAY DRAINAGE DESIGN *****
****

DESIGNER: Nasir Raza

DATE: 07-16-1995

PROJECT: SR 51

PROJECT NO.: Squaw Pe

INLET NO.: x 152

STATION: 244+30

DRAINAGE AREA: x Acres

DESIGN FREQUENCY: 50 Years

ROADWAY & DISCHARGE DATA

Cross-Slope	S (ft/ft)	Sx (ft/ft)	n	Q (cfs)	T (ft)
Composite	0.004	0.020	0.016	5.38	14.58

GUTTER FLOW

W (ft)	Sw (ft/ft)	a (in)	Eo	d (ft)	V (fps)
3.00	0.083	2.28	0.591	0.48	2.22

INLET INTERCEPTION

Inlet Type	LT or W (ft)	L (ft)	E	Qi (cfs)	Qb (cfs)
Slotted Drain	15.21	9.00	0.800	4.30	1.07
P-1-7/8	3.00	1.40	0.960	1.04	0.03
Combination			0.994	5.35	0.03

12/29

REQ'D SLOTTED DRAIN LENGTH = 9 x 1.5 ≈ 14 FT

```
****************************************
*****    ROADWAY DRAINAGE DESIGN    *****
****************************************
```

DESIGNER: Nasir Raza

DATE: 07-16-1995

PROJECT: SR 51

PROJECT NO.: Squaw Pe

INLET NO.: x 155

STATION: 248+25

DRAINAGE AREA: Acres

DESIGN FREQUENCY: 50 Years

ROADWAY & DISCHARGE DATA

Cross-Slope	S (ft/ft)	Sx (ft/ft)	n	Q (cfs)	T (ft)
Composite	0.004	0.020	0.016	6.99	16.44

GUTTER FLOW

W (ft)	Sw (ft/ft)	a (in)	Eo	d (ft)	V (fps)
3.00	0.083	2.28	0.533	0.52	2.33

INLET INTERCEPTION

Inlet Type	LT or W (ft)	L (ft)	E	Qi (cfs)	Qb (cfs)
Slotted Drain	17.66	11.00	0.820	5.77	1.21
P-1-7/8	3.00	1.40	0.950	1.15	0.06
Combination			0.991	6.93	0.06

REQ'D SLOTTED DRAIN LENGTH = 11 x 1.49 ≈ 16 FT

B/2

****
***** ROADWAY DRAINAGE DESIGN *****
****

DESIGNER: Nasir Raza

DATE: 07-16-1995

PROJECT: SR 51

PROJECT NO.: Squaw Pe

INLET NO.: 158; 159

STATION: 250+00, 251+75

DRAINAGE AREA: Acres

DESIGN FREQUENCY: 50 Years

ROADWAY & DISCHARGE DATA

Cross-Slope	S (ft/ft)	Sx (ft/ft)	n	Q (cfs)	T (ft)
Composite	0.004	0.020	0.016	3.13 @ 250+00 3.15 @ 251+75	10.89

GUTTER FLOW

W (ft)	Sw (ft/ft)	a (in)	Eo	d (ft)	V (fps)
3.00	0.083	2.28	0.735	0.41	2.11

INLET INTERCEPTION

Inlet Type	LT or W (ft)	L (ft)	E	Qi (cfs)	Qb (cfs)
Slotted Drain	11.42	5.00	0.640	2.01	1.12
P-1-7/8	3.00	1.40	0.960	1.09	0.04
Combination			0.987	3.09	0.04

REQ'D SLOTTED DRAIN LENGTH = 5 X 1.49 = 8 FT
@ 250+00, 251+75

****
***** ROADWAY DRAINAGE DESIGN *****
****

DESIGNER: Dave Schaub

DATE: 07-16-1995

PROJECT: SR 51

PROJECT NO.: Squaw Pe

INLET NO.: xx 252+60 (160) 253+50 (161)

STATION: 253+50 & 252+60

DRAINAGE AREA: xx Acres

DESIGN FREQUENCY: 50 Years

ROADWAY & DISCHARGE DATA

Cross-Slope	S (ft/ft)	Sx (ft/ft)	n	Q (cfs)	T (ft)
Composite	0.004	0.020	0.016	1.63 253+50 1.53 252+60	7.36

GUTTER FLOW

W (ft)	Sw (ft/ft)	a (in)	Eo	d (ft)	V (fps)
3.00	0.083	2.28	0.895	0.34	1.97

INLET INTERCEPTION

Inlet Type	LT or W (ft)	L (ft)	E	Qi (cfs)	Qb (cfs)
Slotted Drain	7.98	3.00	0.570	0.93	0.70
P-1-7/8	3.00	1.40	0.990	0.70	0.00
Combination			1.000	1.63	0.00

REQ'D SLOTTED DRAIN Length = 3.0 x 1.49 = 5.0'

15/20

****
***** ROADWAY DRAINAGE DESIGN *****
****

DESIGNER: Nasir Raza

DATE: 07-16-1995

PROJECT: SR 51

PROJECT NO.: Squaw Pe

INLET NO.: 166; 167

STATION: 254+45 & 255~~4~~ +40

DRAINAGE AREA: Acres

DESIGN FREQUENCY: 50 Years

ROADWAY & DISCHARGE DATA

Cross-Slope	S (ft/ft)	Sx (ft/ft)	n	Q (cfs)	T (ft)
Composite	0.004	0.020	0.016	1.74	7.69

GUTTER FLOW

W (ft)	Sw (ft/ft)	a (in)	Eo	d (ft)	V (fps)
3.00	0.083	2.28	0.881	0.34	1.98

INLET INTERCEPTION

Inlet Type	LT or W (ft)	L (ft)	E	Qi (cfs)	Qb (cfs)
Slotted Drain	8.25	3.00	0.550	0.96	0.78
P-1-7/8	3.00	1.40	0.990	0.77	0.01
Combination			0.994	1.73	0.01

REQ'D SLOTTED DRAIN LENGTH = 3 X 1.5 ≃ 5 FT.

****
***** ROADWAY DRAINAGE DESIGN *****
****

DESIGNER: Nasir Raza

DATE: 07-16-1995

PROJECT: SR 51

PROJECT NO.: Squaw Pe

INLET NO.: 182

STATION: 265+15

DRAINAGE AREA: Acres

DESIGN FREQUENCY: 50 Years

ROADWAY & DISCHARGE DATA

Cross-Slope	S (ft/ft)	Sx (ft/ft)	n	Q (cfs)	T (ft)
Composite	0.004	0.040	0.016	8.60	12.09

GUTTER FLOW

W (ft)	Sw (ft/ft)	a (in)	Eo	d (ft)	V (fps)
3.00	0.083	1.56	0.592	0.61	2.76

INLET INTERCEPTION

Inlet Type	LT or W (ft)	L (ft)	E	Qi (cfs)	Qb (cfs)
Slotted Drain	16.68	11.00	0.850	7.36	1.24
P-1-7/8	3.00	1.40	0.960	1.20	0.04
Combination			0.995	8.56	0.04

REQ'D SLOTTED DRAIN LENGTH = 11 X 1.49 = 16 FT

17/29

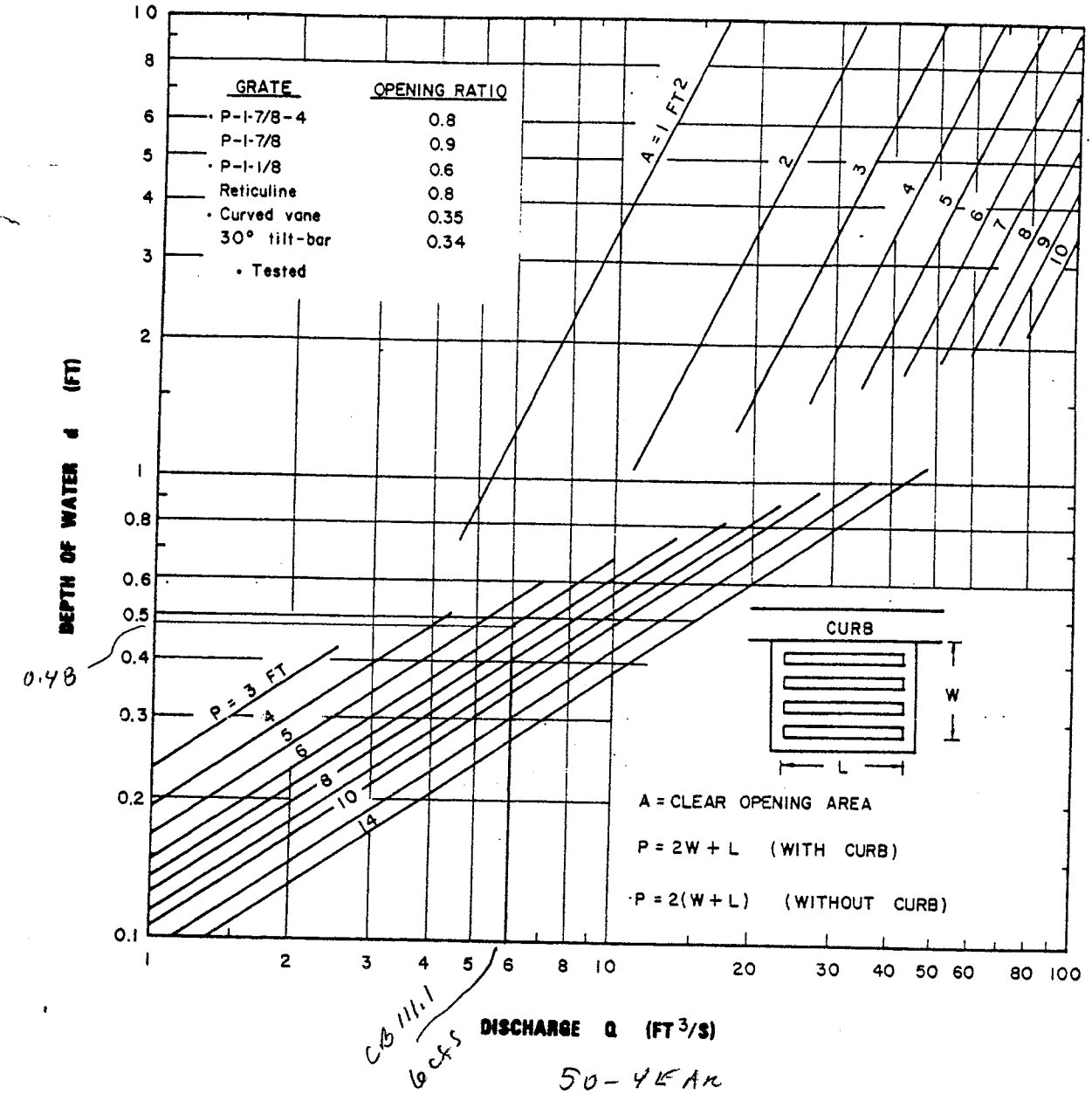

50-YEAR

CB 111.1 SRSI SB

CHART 11. Grate inlet capacity in sump conditions.

18/29

****
***** ROADWAY DRAINAGE DESIGN *****
****

DESIGNER: Nasir Raza

DATE: 07-16-1995

PROJECT: SR 51

PROJECT NO.: Squaw Pe

INLET NO.: 186

STATION: 268+60

DRAINAGE AREA: Acres

DESIGN FREQUENCY: 50 Years

ROADWAY & DISCHARGE DATA

Cross-Slope	S (ft/ft)	Sx (ft/ft)	n	Q (cfs)	T (ft)
Composite	0.003	0.040	0.016	7.57	11.52

GUTTER FLOW

W (ft)	Sw (ft/ft)	a (in)	Eo	d (ft)	V (fps)
3.00	0.083	1.56	0.615	0.59	2.65

INLET INTERCEPTION

Inlet Type	LT or W (ft)	L (ft)	E	Qi (cfs)	Qb (cfs)
Slotted Drain	15.54	10.00	0.840	6.38	1.19
P-1-7/8	3.00	1.40	0.970	1.15	0.04
Combination			0.995	7.53	0.04

REQ'D SLOTTED DRAIN LENGTH = 10 x 1.49 ≃ 15 FT

19/21

****
***** ROADWAY DRAINAGE DESIGN *****
****

DESIGNER: Nasir Raza

DATE: 07-16-1995

PROJECT: SR 51

PROJECT NO.: Squaw Pe

INLET NO.: 190

STATION: 275+10

DRAINAGE AREA: Acres

DESIGN FREQUENCY: 50 Years

ROADWAY & DISCHARGE DATA

Cross-Slope	S (ft/ft)	Sx (ft/ft)	n	Q (cfs)	T (ft)
Composite	0.017	0.040	0.016	8.60	8.66

GUTTER FLOW

W (ft)	Sw (ft/ft)	a (in)	Eo	d (ft)	V (fps)
3.00	0.083	1.56	0.750	0.48	5.07

INLET INTERCEPTION

Inlet Type	LT or W (ft)	L (ft)	E	Qi (cfs)	Qb (cfs)
Slotted Drain	24.99	12.00	0.690	5.95	2.65
P-1-7/8	3.00	1.40	0.960	2.56	0.09
Combination			0.990	8.51	0.09

REQ'D SLOTTED DRAIN LENGTH = 12 x 1.49 = 18 FT

****
***** ROADWAY DRAINAGE DESIGN *****
****

DESIGNER: Nasir Raza

DATE: 07-16-1995

PROJECT: SR 51

PROJECT NO.: Squaw Pe

INLET NO.: 204 & 207

STATION: 285+00 & 287+50

DRAINAGE AREA: Acres

DESIGN FREQUENCY: 50 Years

ROADWAY & DISCHARGE DATA

Cross-Slope	S (ft/ft)	Sx (ft/ft)	n	Q (cfs)	T (ft)
Composite	0.017	0.020	0.016	2.71	8.06
				2.76 @ 287+50	

GUTTER FLOW

W (ft)	Sw (ft/ft)	a (in)	Eo	d (ft)	V (fps)
2.50	0.066	1.40	0.758	0.28	3.40

INLET INTERCEPTION

Inlet Type	LT or W (ft)	L (ft)	E	Qi (cfs)	Qb (cfs)
Slotted Drain	18.21	7.00	0.580	1.57	1.14
P-1-7/8	2.50	1.40	0.940	1.08	0.06
Combination			0.978	2.65	0.06

REQ'D SLOTTED DRAIN LENGTH = 7 x 1.49 ≃ 10 FT.
@ 285+00 & 287+50

21/2

****
***** ROADWAY DRAINAGE DESIGN *****
****

DESIGNER: Nasir Raza

DATE: 07-16-1995

PROJECT: SR 51

PROJECT NO.: Squaw Pe

INLET NO.: 209

STATION: 290+40

DRAINAGE AREA: Acres

DESIGN FREQUENCY: 50 Years

ROADWAY & DISCHARGE DATA

Cross-Slope	S (ft/ft)	Sx (ft/ft)	n	Q (cfs)	T (ft)
Composite	0.018	0.020	0.016	6.61	12.06

GUTTER FLOW

W (ft)	Sw (ft/ft)	a (in)	Eo	d (ft)	V (fps)
2.50	0.066	1.40	0.564	0.36	4.13

INLET INTERCEPTION

Inlet Type	LT or W (ft)	L (ft)	E	Qi (cfs)	Qb (cfs)
Slotted Drain	30.20	18.00	0.800	5.31	1.30
P-1-7/8	2.50	1.40	0.930	1.21	0.09
Combination			0.986	6.52	0.09

REQ'D SLOTTED DRAIN LENGTH = 18 x 1.49 ≈ 28 FT

22/29

****
***** ROADWAY DRAINAGE DESIGN *****
****

DESIGNER: Nasir Raza

DATE: 07-16-1995

PROJECT: SR 51

PROJECT NO.: Squaw Pe

INLET NO.: 2/3

STATION: 297+20

DRAINAGE AREA: Acres

DESIGN FREQUENCY: 50 Years

ROADWAY & DISCHARGE DATA

Cross-Slope	S (ft/ft)	Sx (ft/ft)	n	Q (cfs)	T (ft)
Composite	0.009	0.020	0.016	3.09	10.01

GUTTER FLOW

W (ft)	Sw (ft/ft)	a (in)	Eo	d (ft)	V (fps)
2.50	0.066	1.40	0.654	0.32	2.69

INLET INTERCEPTION

Inlet Type	LT or W (ft)	L (ft)	E	Qi (cfs)	Qb (cfs)
Slotted Drain	16.92	8.00	0.680	2.11	0.98
P-1-7/8	2.50	1.40	0.920	0.90	0.08
Combination			0.974	3.01	0.08

REQ'D SLOTTED DRAIN LENGTH= 8 x 1.49 ≃ 12 FT

23/26

****
***** ROADWAY DRAINAGE DESIGN *****
****

DESIGNER: Nasir Raza

DATE: 07-16-1995

PROJECT: SR 51

PROJECT NO.: Squaw Pe

INLET NO.: 214

STATION: 300+00

DRAINAGE AREA: Acres

DESIGN FREQUENCY: 50 Years

ROADWAY & DISCHARGE DATA

Cross-Slope	S (ft/ft)	Sx (ft/ft)	n	Q (cfs)	T (ft)
Composite	0.005	0.020	0.016	1.50	8.06

GUTTER FLOW

W (ft)	Sw (ft/ft)	a (in)	Eo	d (ft)	V (fps)
2.50	0.066	1.40	0.758	0.28	1.88

INLET INTERCEPTION

Inlet Type	LT or W (ft)	L (ft)	E	Qi (cfs)	Qb (cfs)
Slotted Drain	9.97	3.00	0.470	0.71	0.79
P-1-7/8	2.50	1.40	0.910	0.72	0.07
Combination			0.953	1.43	0.07

REQ'D SLOTTED DRAIN LENGTH 3X1.49 ≈ 5 FT

****
***** ROADWAY DRAINAGE DESIGN *****
****

DESIGNER: Nasir Raza

DATE: 07-16-1995

PROJECT: SR 51

PROJECT NO.: Squaw Pe

INLET NO.: 216

STATION: 301+30

DRAINAGE AREA: Acres

DESIGN FREQUENCY: 50 Years

ROADWAY & DISCHARGE DATA

Cross-Slope	S (ft/ft)	Sx (ft/ft)	n	Q (cfs)	T (ft)
Composite	0.004	0.020	0.016	1.56	8.89

GUTTER FLOW

W (ft)	Sw (ft/ft)	a (in)	Eo	d (ft)	V (fps)
2.50	0.066	1.40	0.711	0.29	1.66

INLET INTERCEPTION

Inlet Type	LT or W (ft)	L (ft)	E	Qi (cfs)	Qb (cfs)
Slotted Drain	9.43	3.00	0.490	0.77	0.79
P-1-7/8	2.50	1.40	0.880	0.70	0.09
Combination			0.942	1.47	0.09

REQ'D SLOTTED DRAIN LENGTH = 1.49x3 ≈ 5 FT.

25/2

****
***** ROADWAY DRAINAGE DESIGN *****
****

DESIGNER: Nasir Raza

DATE: 07-16-1995

PROJECT: SR 51

PROJECT NO.: Squaw Pe

INLET NO.: 217, 219, 220

STATION: 302+62, 304+00, 305+40

DRAINAGE AREA: Acres

DESIGN FREQUENCY: 50 Years

ROADWAY & DISCHARGE DATA

Cross-Slope	S (ft/ft)	Sx (ft/ft)	n	Q (cfs)	T (ft)
Composite	0.004	0.020	0.016	1.70	9.28
				1.76 @ 304+00	
				1.81 @ 305+40	

GUTTER FLOW

W (ft)	Sw (ft/ft)	a (in)	Eo	d (ft)	V (fps)
2.50	0.066	1.40	0.691	0.30	1.68

INLET INTERCEPTION

Inlet Type	LT or W (ft)	L (ft)	E	Qi (cfs)	Qb (cfs)
Slotted Drain	9.89	5.00	0.710	1.22	0.48
P-1-7/8	2.50	1.40	0.960	0.46	0.02
Combination			0.988	1.68	0.02

REQ'D SLOTTED DRAIN LENGTH = 1.49 x 5 = 8 FT.

****
***** ROADWAY DRAINAGE DESIGN *****
****

DESIGNER: Nasir Raza

DATE: 07-16-1995

PROJECT: SR 51

PROJECT NO.: Squaw Pe

INLET NO.: 222

STATION: 306+80

DRAINAGE AREA: Acres

DESIGN FREQUENCY: 50 Years

ROADWAY & DISCHARGE DATA

Cross-Slope	S (ft/ft)	Sx (ft/ft)	n	Q (cfs)	T (ft)
Composite	0.005	0.020	0.016	1.88	9.29

GUTTER FLOW

W (ft)	Sw (ft/ft)	a (in)	Eo	d (ft)	V (fps)
2.50	0.066	1.40	0.690	0.30	1.86

INLET INTERCEPTION

Inlet Type	LT or W (ft)	L (ft)	E	Qi (cfs)	Qb (cfs)
Slotted Drain	10.95	5.00	0.660	1.25	0.63
P-1-7/8	2.50	1.40	0.940	0.59	0.04
Combination			0.979	1.84	0.04

REQ'D SLOTTED DRAIN LENGTH = 1.49 x 5 = 8 FT

****
***** ROADWAY DRAINAGE DESIGN *****
****

DESIGNER: Nasir Raza

DATE: 07-16-1995

PROJECT: SR 51

PROJECT NO.: Squaw Pe

INLET NO.: 226

STATION: 310+67

DRAINAGE AREA: Acres

DESIGN FREQUENCY: 50 Years

ROADWAY & DISCHARGE DATA

Cross-Slope	S (ft/ft)	Sx (ft/ft)	n	Q (cfs)	T (ft)
Composite	0.004	0.020	0.016	4.86	13.77

GUTTER FLOW

W (ft)	Sw (ft/ft)	a (in)	Eo	d (ft)	V (fps)
3.00	0.083	2.28	0.620	0.47	2.22

INLET INTERCEPTION

Inlet Type	LT or W (ft)	L (ft)	E	Qi (cfs)	Qb (cfs)
Slotted Drain	14.48	8.00	0.760	3.71	1.15
P-1-7/8	3.00	1.40	0.960	1.11	0.04
Combination			0.992	4.82	0.04

REQ'D SLOTTED DRAIN LENGTH= 1.49x8= 12 FT

****
***** ROADWAY DRAINAGE DESIGN *****
****

DESIGNER: Nasir Raza

DATE: 07-16-1995

PROJECT: SR 51

PROJECT NO.: Squaw Pe

INLET NO.: 238

STATION: 322+00

DRAINAGE AREA: Acres

DESIGN FREQUENCY: 50 Years

ROADWAY & DISCHARGE DATA

Cross-Slope	S (ft/ft)	Sx (ft/ft)	n	Q (cfs)	T (ft)
Composite	0.005	0.020	0.016	5.84	15.44

GUTTER FLOW

W (ft)	Sw (ft/ft)	a (in)	Eo	d (ft)	V (fps)
2.50	0.066	1.40	0.453	0.43	2.30

INLET INTERCEPTION

Inlet Type	LT or W (ft)	L (ft)	E	Qi (cfs)	Qb (cfs)
Slotted Drain	20.18	14.00	0.880	5.14	0.70
P-1-7/8	2.50	1.40	0.920	0.64	0.06
Combination			0.990	5.78	0.06

REQ'D SLOTTED DRAIN LENGTH= 1.49 x 14 ≈ 22 FT

ARIZONA DEPARTMENT OF TRANSPORTATION

STORM SEWER INLET CALCULATION RECORD

LOCATION DATA

Highway SR 51, SQUAW PEAK HWY

Location RAMP SHEA 'B'

Project No.

DESIGN DATA

Frequency 50 years

P_6= 2.80 in. P_{24}= 3.33 in. P_1= 1.77 in.

T_{all} 7.25' CURB HEIGHT CONTROLS SPREAD

n 0.016

INLET CALCULATIONS

Inlet No	Inlet Station	DA No		Inlet Type	Q cfs	Q_c cfs	Q_T cfs	So %	Appr. ① Gutter S_x	Appr. ① Gutter z/n	Shoulder Pavement S_x	Shoulder Pavement z/n	D ft.	T ft.	a in.	Inlet Act.	Inlet Corr.	Q_i/Q	Q_i cfs	Q_c cfs
118	7+67		8'	C-15.91 w/ Slotted Drain	4.57			SUMP			~~.046~~ "		0.32	5.76	0.62			1	4.57	4.57

① Depress 1" @ CB to obtain 3" gutter drop, S_x = 0.100'/ft and add 1" to a

Computed by: D. Schwab Checked by: Date: 8/7/95

20-0405 12/74

91.1

ARIZONA DEPARTMENT OF TRANSPORTATION

STORM SEWER INLET CALCULATION RECORD

LOCATION DATA

Highway SR51, SQUAW PEAK HWY

Location RAMP SHEA 'C'

Project No.

DESIGN DATA

Frequency 50 years

P_6= ~~1.01~~ 2.80 in. P_{24}= ~~2.37~~ 3.33 in. P_1= ~~1.59~~ 1.77 in.

$T_{all} = T_{10} = T_{50} = 8'$

n 0.016

INLET CALCULATIONS

Inlet No	Inlet Station	DA No	SHLD	Inlet Type	Q cfs	Q_c cfs	Q_T cfs	So %	Approach (1) Gutter S_x (2)	Approach (1) Gutter z/n	Shoulder Pavement S_x	Shoulder Pavement z/n	Approach (1) D ft.	T ft.	a in.	Inlet Act.	Inlet Corr.	Q_i/Q	Q_i cfs	Q_c cfs
126	4+80			C-15.92 w/ Slo Hed Drn	1.28			2.8304	.067		.016/"		0.20	4.73	1.52	—	—	1	1.28	0
130	13+00		8'	C-15.91 W/ SLOTTED DRAIN	1.19			1.2996	.067		.02/"		0.25	3.00	1.40	5	3.35	1	1.19	0
131	15+00		8'	"	1.42			.3995	"		.02/"		.33	6.80	1.40	5	3.35	1	1.42	0
139	16+00		8'	"	2.26			.3995	"		.02/"		.37	9.22	1.40	5	3.35	.98	2.22	.04
140	17+00		8'	"	1.63			.2440	"		.02/"		.37	8.79	1.40	5	3.35	.99	1.62	.01
140.1	18+00		8'	"	1.59			.2440	"		.02/"		.36	8.66	1.40	5	3.35	.99	1.58	.01
141	19+50		8'	"	2.37			.2440	"		.02/"		.41	10.87	1.40	5	3.35	.97	2.29	.08
129	11+00		8'	"	4.11			2.500	"		.02/"		.30	9.02	1.40	10	6.70	1	4.11	0

(1) DEPRESS 1" @ CB TO OBTAIN 3" GUTTER DEPRESSION, SX = 0.100'/FT & ADD 1" TO 'a'

(2) No additional depression at CB w/ half barrier (C-15.92)

Computed by: D. Schaub Checked by: Date: 8/7/95

20-0405 12/74

7/16

ARIZONA DEPARTMENT OF TRANSPORTATION

STORM SEWER INLET CALCULATION RECORD

LOCATION DATA

Highway SR51, SQUAW PEAK HWY

Location RAMP SHEA 'D'

Project No.

DESIGN DATA

Frequency 50 years

P_6= 2.80 in. P_{24}= 3.33 in. P_1= ~~1.59~~ 1.77 in.

T_{all} = T_{10} = T_{50} = 8'

n 0.016

INLET CALCULATIONS

Inlet No	Inlet Station	DA No	SHLD	Inlet Type	Q cfs	Q_c cfs	Q_T cfs	So %	Appr. ① Gutter S_x	Appr. ① Gutter z/n	Shoulder Pavement S_x	Shoulder Pavement z/n	Approach ① D ft.	Approach ① T ft.	Approach ① a in.	Inlet Act.	Inlet Corr.	Q_i/Q	Q_i cfs	Q_c cfs
125	4+65		8'	C-15.91 W/ SLOTTED DRAIN	0.85			2.3100	.067		.018 / "		.20	2.41	1.46	—	—	1	.85	0
137	10+75		8'	"	5.01			2.8079	.067		.02 / "		.36	8.27	1.40	10	6.70	.99	4.96	.05
133	12+75		8'	"	1.64			1.4682	.067		.02 / "		.28	4.26	1.40	—	—	.98	1.61	.03
146	14+75		8'	"	2.69			0.2610	.067		.02 / "		.42	11.42	1.40	6	4.02	.98	2.64	.05
145	15+75		8'	"	1.79			0.2610	.067		.02 / "		.37	9.12	1.40	4	2.68	.97	1.74	.05
144	16+75		8'	"	1.67			0.2610	.067		.02 / "		.36	8.74	1.40	4	2.68	.98	1.64	.03

① DEPRESS 1" @ CB TO OBTAIN 3" GUTTER DEPRESSION, Sx = 0.100 '/FT & ADD 1" TO 'a'

Computed by: D. Schaub Checked by: Date:

8/7/95

20-0405 12/74

91-16

****
***** ROADWAY DRAINAGE DESIGN *****
****

DESIGNER: GAG

DATE: 08-07-1995

PROJECT: Squaw Peak

PROJECT NO.:

INLET NO.: 126

STATION: 4+80 Shea-C

DRAINAGE AREA: Acres

DESIGN FREQUENCY: 50 Years

ROADWAY & DISCHARGE DATA

Cross-Slope	S (ft/ft)	Sx (ft/ft)	n	Q (cfs)	T (ft)
Composite	0.028	0.016	0.016	1.28	2.66

GUTTER FLOW

W (ft)	Sw (ft/ft)	a (in)	Eo	d (ft)	V (fps)
3.00	0.083	2.44	1.000	0.22	3.41

INLET INTERCEPTION

Inlet Type	L (ft)	W (ft)	E	Qi (cfs)	Qb (cfs)
P-1-7/8	1.40	3.00	1.000	1.28	0.00

No Slotted Drain Req'd.

```
****************************************
*****    ROADWAY DRAINAGE DESIGN    *****
****************************************
```

DESIGNER: GAG

DATE: 08-07-1995

PROJECT: Squaw Peak

PROJECT NO.:

INLET NO.: 129

STATION: Shea-C 11+00

DRAINAGE AREA: Acres

DESIGN FREQUENCY: 50 Years

ROADWAY & DISCHARGE DATA

Cross-Slope	S (ft/ft)	Sx (ft/ft)	n	Q (cfs)	T (ft)
Composite	0.025	0.020	0.016	4.12	7.55

GUTTER FLOW

W (ft)	Sw (ft/ft)	a (in)	Eo	d (ft)	V (fps)
3.00	0.083	2.28	0.887	0.34	4.82

INLET INTERCEPTION

Inlet Type	LT or W (ft)	L (ft)	E	Qi (cfs)	Qb (cfs)
Slotted Drain	20.14	7.00	0.530	2.20	1.91
P-1-7/8	3.00	1.40	0.990	1.90	0.01
Combination			0.998	4.11	0.01

Req'd Slotted Drain Length = 1.49 x 7 = 10 LF

```
****************************************
*****    ROADWAY DRAINAGE DESIGN    *****
****************************************
```

DESIGNER: Nasir Raza

DATE: 07-20-1995

PROJECT: SR 51

PROJECT NO.: Squaw Pe

INLET NO.: Ramp Shea 'C' #130

STATION: 13+00

DRAINAGE AREA: Acres

DESIGN FREQUENCY: 50 Years

ROADWAY & DISCHARGE DATA

Cross-Slope	S (ft/ft)	Sx (ft/ft)	n	Q (cfs)	T (ft)
Composite	0.013	0.020	0.016	1.19	3.00

GUTTER FLOW

W (ft)	Sw (ft/ft)	a (in)	Eo	d (ft)	V (fps)
3.00	0.083	2.28	1.000	0.25	3.16

INLET INTERCEPTION

Inlet Type	LT or W (ft)	L (ft)	E	Qi (cfs)	Qb (cfs)
Slotted Drain	9.31	3.00	0.500	0.59	0.60
P-1-7/8	3.00	1.40	1.000	0.59	0.00
Combination			1.000	1.19	0.00

REQ'D SLOTTED DRAIN LENGTH = 1.49 x 3 ≈ 5 FT

6/16

****
***** ROADWAY DRAINAGE DESIGN *****
****

DESIGNER: Nasir Raza

DATE: 07-20-1995

PROJECT: SR 51

PROJECT NO.: Squaw Pe

INLET NO.: R-Shea C /3/

STATION: 15+00

DRAINAGE AREA: Acres

DESIGN FREQUENCY: 50 Years

ROADWAY & DISCHARGE DATA

Cross-Slope	S (ft/ft)	Sx (ft/ft)	n	Q (cfs)	T (ft)
Composite	0.004	0.020	0.016	1.42	6.80

GUTTER FLOW

W (ft)	Sw (ft/ft)	a (in)	Eo	d (ft)	V (fps)
3.00	0.083	2.28	0.919	0.33	1.90

INLET INTERCEPTION

Inlet Type	LT or W (ft)	L (ft)	E	Qi (cfs)	Qb (cfs)
Slotted Drain	7.31	3.00	0.610	0.87	0.54
P-1-7/8	3.00	1.40	1.000	0.53	0.00
Combination			1.000	1.42	0.00

REQ'D SLOTTED DRAIN LENGTH = 5'
(1.49 x 3')

****
***** ROADWAY DRAINAGE DESIGN *****
****

DESIGNER: Nasir Raza

DATE: 07-20-1995

PROJECT: SR 51

PROJECT NO.: Squaw Pe

INLET NO.: R-SHEA C # 139

STATION: 16+00

DRAINAGE AREA: Acres

DESIGN FREQUENCY: 50 Years

ROADWAY & DISCHARGE DATA

Cross-Slope	S (ft/ft)	Sx (ft/ft)	n	Q (cfs)	T (ft)
Composite	0.004	0.020	0.016	2.26	9.22

GUTTER FLOW

W (ft)	Sw (ft/ft)	a (in)	Eo	d (ft)	V (fps)
3.00	0.083	2.28	0.810	0.37	1.98

INLET INTERCEPTION

Inlet Type	LT or W (ft)	L (ft)	E	Qi (cfs)	Qb (cfs)
Slotted Drain	9.39	3.00	0.490	1.12	1.14
P-1-7/8	3.00	1.40	0.960	1.10	0.04
Combination			0.982	2.22	0.04

REQ'D SLOTTED DRAIN LENGTH = 1.49 x 3 ≃ 5 FT

8/16

```
*****************************************
*****    ROADWAY DRAINAGE DESIGN    *****
*****************************************
```

DESIGNER: Nasir Raza

DATE: 07-20-1995

PROJECT: SR 51

PROJECT NO.: Squaw Pe

INLET NO.: R-SHEA C #140

STATION: 17+00

DRAINAGE AREA: Acres

DESIGN FREQUENCY: 50 Years

ROADWAY & DISCHARGE DATA

Cross-Slope	S (ft/ft)	Sx (ft/ft)	n	Q (cfs)	T (ft)
Composite	0.002	0.020	0.016	1.63	8.79

GUTTER FLOW

W (ft)	Sw (ft/ft)	a (in)	Eo	d (ft)	V (fps)
3.00	0.083	2.28	0.830	0.37	1.54

INLET INTERCEPTION

Inlet Type	LT or W (ft)	L (ft)	E	Qi (cfs)	Qb (cfs)
Slotted Drain	6.99	3.00	0.630	1.03	0.60
P-1-7/8	3.00	1.40	0.990	0.59	0.01
Combination			0.994	1.62	0.01

REQ'D SLOTTED DRAIN LENGTH = 1.49 x 3 = 5 FT

****
***** ROADWAY DRAINAGE DESIGN *****
****

DESIGNER: Nasir Raza

DATE: 07-20-1995

PROJECT: SR 51

PROJECT NO.: Squaw Pe

INLET NO.: R-SHEA C #140.1

STATION: 18+00

DRAINAGE AREA: Acres

DESIGN FREQUENCY: 50 Years

ROADWAY & DISCHARGE DATA

Cross-Slope	S (ft/ft)	Sx (ft/ft)	n	Q (cfs)	T (ft)
Composite	0.002	0.020	0.016	1.59	8.66

GUTTER FLOW

W (ft)	Sw (ft/ft)	a (in)	Eo	d (ft)	V (fps)
3.00	0.083	2.28	0.836	0.36	1.53

INLET INTERCEPTION

Inlet Type	LT or W (ft)	L (ft)	E	Qi (cfs)	Qb (cfs)
Slotted Drain	6.89	3.00	0.640	1.02	0.57
P-1-7/8	3.00	1.40	0.990	0.56	0.01
Combination			0.994	1.58	0.01

REQ'D SLOTTED DRAIN LENGTH = 1.49 x 3 ≃ 5 FT

10/16

****
***** ROADWAY DRAINAGE DESIGN *****
****

DESIGNER: Nasir Raza

DATE: 07-20-1995

PROJECT: SR 51

PROJECT NO.: Squaw Pe

INLET NO.: R-SHEA C #141

STATION: 19+50

DRAINAGE AREA: Acres

DESIGN FREQUENCY: 50 Years

ROADWAY & DISCHARGE DATA

Cross-Slope	S (ft/ft)	Sx (ft/ft)	n	Q (cfs)	T (ft)
Composite	0.002	0.020	0.016	2.36	10.87

GUTTER FLOW

W (ft)	Sw (ft/ft)	a (in)	Eo	d (ft)	V (fps)
3.00	0.083	2.28	0.735	0.41	1.61

INLET INTERCEPTION

Inlet Type	LT or W (ft)	L (ft)	E	Qi (cfs)	Qb (cfs)
Slotted Drain	8.60	3.00	0.530	1.27	1.09
P-1-7/8	3.00	1.40	0.930	1.02	0.07
Combination			0.970	2.29	0.07

REQ'D SLOTTED DRAIN LENGTH = 1.49 x 3 ≈ 5 FT

****
***** ROADWAY DRAINAGE DESIGN *****
****

DESIGNER: Nasir Raza

DATE: 07-20-1995

PROJECT: SR 51

PROJECT NO.: Squaw Pe

INLET NO.: R-SHEA ~~[illegible]~~ 'D' #125

STATION: 4+65

DRAINAGE AREA: Acres

DESIGN FREQUENCY: 50 Years

ROADWAY & DISCHARGE DATA

Cross-Slope	S (ft/ft)	Sx (ft/ft)	n	Q (cfs)	T (ft)
Composite	0.023	0.018	0.016	0.84	2.41

GUTTER FLOW

W (ft)	Sw (ft/ft)	a (in)	Eo	d (ft)	V (fps)
3.00	0.081	2.28	1.000	0.20	2.32

INLET INTERCEPTION

Inlet Type	L (ft)	W (ft)	E	Qi (cfs)	Qb (cfs)
P-1-7/8	1.40	3.00	1.000	0.84	0.00

NO SLOTTED DRAIN REQ'D

****
***** ROADWAY DRAINAGE DESIGN *****
****

DESIGNER: Nasir Raza

DATE: 07-20-1995

PROJECT: SR 51

PROJECT NO.: Squaw Pe

INLET NO.: R-SHEA D #137

STATION: 10+75

DRAINAGE AREA: Acres

DESIGN FREQUENCY: 50 Years

ROADWAY & DISCHARGE DATA

Cross-Slope	S (ft/ft)	Sx (ft/ft)	n	Q (cfs)	T (ft)
Composite	0.028	0.020	0.016	5.01	8.27

GUTTER FLOW

W (ft)	Sw (ft/ft)	a (in)	Eo	d (ft)	V (fps)
3.00	0.083	2.28	0.854	0.36	5.17

INLET INTERCEPTION

Inlet Type	LT or W (ft)	L (ft)	E	Qi (cfs)	Qb (cfs)
Slotted Drain	23.02	7.00	0.470	2.40	2.61
P-1-7/8	3.00	1.40	0.980	2.55	0.05
Combination			0.990	4.96	0.05

REQ'D SLOTTED DRAIN LENGTH = 1.49 x 7 ≈ 10 FT

****
***** ROADWAY DRAINAGE DESIGN *****
****

DESIGNER: Nasir Raza

DATE: 07-20-1995

PROJECT: SR 51

PROJECT NO.: Squaw Pe

INLET NO.: R-SHEA D #138

STATION: 12+75

DRAINAGE AREA: Acres

DESIGN FREQUENCY: 50 Years

ROADWAY & DISCHARGE DATA

Cross-Slope	S (ft/ft)	Sx (ft/ft)	n	Q (cfs)	T (ft)
Composite	0.015	0.020	0.016	1.63	4.26

GUTTER FLOW

W (ft)	Sw (ft/ft)	a (in)	Eo	d (ft)	V (fps)
3.00	0.083	2.28	0.992	0.28	3.51

INLET INTERCEPTION

Inlet Type	L (ft)	W (ft)	E	Qi (cfs)	Qb (cfs)
P-1-7/8	1.40	3.00	0.990	1.61	0.01

SLOTTED DRAIN NOT REQ'D.

```
****************************************
*****    ROADWAY DRAINAGE DESIGN    *****
****************************************
```

DESIGNER: Nasir Raza

DATE: 07-20-1995

PROJECT: SR 51

PROJECT NO.: Squaw Pe

INLET NO.: R-SHEA D # 146

STATION: 1~~5~~4+75

DRAINAGE AREA: Acres

DESIGN FREQUENCY: 50 Years

ROADWAY & DISCHARGE DATA

Cross-Slope	S (ft/ft)	Sx (ft/ft)	n	Q (cfs)	T (ft)
Composite	0.003	0.020	0.016	2.69	11.42

GUTTER FLOW

W (ft)	Sw (ft/ft)	a (in)	Eo	d (ft)	V (fps)
3.00	0.083	2.28	0.712	0.42	1.69

INLET INTERCEPTION

Inlet Type	LT or W (ft)	L (ft)	E	Qi (cfs)	Qb (cfs)
Slotted Drain	9.39	4.00	0.630	1.69	1.00
P-1-7/8	3.00	1.40	0.950	0.95	0.05
Combination			0.981	2.64	0.05

Req'd slotted drain length = 1.49 x 4 = 6 Ft.

****
***** ROADWAY DRAINAGE DESIGN *****
****

DESIGNER: Nasir Raza

DATE: 07-20-1995

PROJECT: SR 51

PROJECT NO.: Squaw Pe

INLET NO.: R-SHEA D #145

STATION: 15+75

DRAINAGE AREA: Acres

DESIGN FREQUENCY: 50 Years

ROADWAY & DISCHARGE DATA

Cross-Slope	S (ft/ft)	Sx (ft/ft)	n	Q (cfs)	T (ft)
Composite	0.003	0.020	0.016	1.79	9.12

GUTTER FLOW

W (ft)	Sw (ft/ft)	a (in)	Eo	d (ft)	V (fps)
3.00	0.083	2.28	0.815	0.37	1.60

INLET INTERCEPTION

Inlet Type	LT or W (ft)	L (ft)	E	Qi (cfs)	Qb (cfs)
Slotted Drain	7.47	2.00	0.420	0.76	1.03
P-1-7/8	3.00	1.40	0.940	0.98	0.05
Combination			0.972	1.74	0.05

REQ'D SLOTTED DRAIN LENGTH = 1.49×2 ≃ 4 FT

16/16

****
***** ROADWAY DRAINAGE DESIGN *****
****

DESIGNER: Nasir Raza

DATE: 07-20-1995

PROJECT: SR 51

PROJECT NO.: Squaw Pe

INLET NO.: R-SHEA D # 144

STATION: 16+75

DRAINAGE AREA: Acres

DESIGN FREQUENCY: 50 Years

ROADWAY & DISCHARGE DATA

Cross-Slope	S (ft/ft)	Sx (ft/ft)	n	Q (cfs)	T (ft)
Composite	0.003	0.020	0.016	1.67	8.74

GUTTER FLOW

W (ft)	Sw (ft/ft)	a (in)	Eo	d (ft)	V (fps)
3.00	0.083	2.28	0.832	0.36	1.59

INLET INTERCEPTION

Inlet Type	LT or W (ft)	L (ft)	E	Qi (cfs)	Qb (cfs)
Slotted Drain	7.19	2.00	0.440	0.74	0.92
P-1-7/8	3.00	1.40	0.960	0.89	0.03
Combination			0.982	1.64	0.03

REQ'D SLOTTED DRAIN LENGTH = 1.49 x 2 ≃ 4 FT

ARIZONA DEPARTMENT OF TRANSPORTATION

STORM SEWER INLET CALCULATION RECORD

LOCATION DATA

Highway SR51, SQUAW PEAK HWY

Location CACTUS RD.

Project No.

DESIGN DATA

Frequency 50 years

P_6= 2.80 in. P_{24}= 3.33 in. P_1= ~~1.59~~ 1.77 in.

T_{all}

n 0.016

INLET CALCULATIONS

Inlet No	Inlet Station	DA No	SHLD	Inlet Type	Q cfs	Q_c cfs	Q_T cfs	So %	Gutter S_x	Gutter z/n	Pavement S_x	Pavement z/n	D ft.	T ft.	a in.	Inlet Act.	Inlet Corr.	Q_i/Q	Q_i cfs	Q_c cfs
240	18+85 RT			C15.20 TYPE 3 C.B. w/3' wing	0.63			.5882	.083 ~~.067~~		.02 "		.22	4.79	1.52	6.08		1	.63	0
241	18+88 LT.			" w/3' wing	0.53			.6250	.083 ~~.067~~		.02 "		.21	4.11	1.52	6.08		1	.53	0
245	21+49 RT			" w/3' wing	0.32			.6250	.083 ~~.067~~		.02 "		.18	2.43	1.52	6.08		1	.32	0
246	21+72 LT			" w/3' wing	0.59			.5385	.083 ~~.067~~		.02 "		.22	4.71	1.52	6.08		1	.59	0

① DEPRESS 1" @ CB TO OBTAIN 3" GUTTER DEPRESSION, SX = ~~0.100~~ 0.125 '/FT & ADD 1" TO 'a'

Computed by: D. Schaub Checked by: Date:

20-0406 12/74 8/7/95

1/25

ARIZONA DEPARTMENT OF TRANSPORTATION

STORM SEWER INLET CALCULATION RECORD

LOCATION DATA

Highway SR51, SQUAW PEAK HWY

Location RAMP CACTUS 'A'

Project No.

DESIGN DATA

Frequency 50 years

P_6= 2.80 in. P_{24}= 3.33 in. P_1= ~~1.59~~ 1.77 in.

$T_{all.}$ = T_{10} = T_{50} = 8'

n 0.016

INLET CALCULATIONS

Inlet No	Inlet Station	DA No	SHLD	Inlet Type	Q cfs	Q_c cfs	Q_T cfs	So %	Appr ① Gutter S_x	Appr ① Gutter z/n	Shoulder Pavement S_x	Shoulder Pavement z/n	Approach ① D ft.	T ft.	a in.	Inlet Act.	Inlet Corr.	Q_i/Q	Q_i cfs	Q_c cfs
168	0+40		8'	C-15.91 W/ SLOTTED DRAIN	1.83			.4979	.067		.02/"		.34	7.53	1.40	4	2.68	.99	1.81	.02
169	1+40		8'	"	1.84			.4979	.067		.02/"		.34	7.64	1.40	4	2.68	.99	1.82	.02
170	2+40		8'	"	1.87			.4979	.067		.02/"		.34	7.64	1.40	4	2.68	.98	1.83	.04
171	3+37		8'	"	1.61			.54MP	.067		.02/"		0.14	2.03	1.40			1.00	1.61	0.00
180	4+30		8'	"	5.36			.6242	.067		.02/"		.45	12.97	1.40	14	9.38	.99	5.31	.05
185	11+55		8	"	2.06			2.9191	.067		.02/"		.26	3.69	1.40	—	—	1	2.05	.01

① DEPRESS 1" @ CB TO OBTAIN 3" GUTTER DEPRESSION, SX = 0.100'/FT & ADD 1" TO 'a'

Computed by: D. Schaub Checked by: Date:

20-0405 12/74 8/7/95

Sh 12

ARIZONA DEPARTMENT OF TRANSPORTATION

STORM SEWER INLET CALCULATION RECORD

LOCATION DATA

Highway SR51, SQUAW PEAK HWY

Location RAMP CACTUS A-1

Project No.

DESIGN DATA

Frequency 50 years

P_6= 2.80 in. P_{24}= 3.33 in. P_1= 1.77 in.

T_{all} 8'

n 0.016

INLET CALCULATIONS

Inlet No	Inlet Station	DA No	SHLD	Inlet Type	Q cfs	Q_c cfs	Q_T cfs	So %	Approach ① Gutter S_x	Approach ① Gutter z/n	Shoulder Pavement S_x	Shoulder Pavement z/n	Approach ① D ft.	T ft.	a in.	Inlet Act.	Inlet Corr.	Q_i/Q	Q_i cfs	Q_c cfs
239	1+12		8	C-15.20 TYPE 3 w/ 10' wing	0.99			2.500	.083 ~~.067~~		.01/11		.20	5.48	1.76	13.08		1	.99	0

① DEPRESS 1" @ CB TO OBTAIN 3" GUTTER DEPRESSION, SX = ~~0.100~~ 0.125'/FT & ADD 1" TO 'a'

Computed by: D. Schaub Checked by: Date:

8/7/95

20-0405 12/74

9/95

ARIZONA DEPARTMENT OF TRANSPORTATION

STORM SEWER INLET CALCULATION RECORD

LOCATION DATA

Highway SR51, SQUAW PEAK HWY

Location RAMP CACTUS 'B'

Project No.

DESIGN DATA

Frequency 50 years

P_6= 2.80 in. P_{24}= 3.33 in. P_1= ~~1.59~~ 1.77 in.

T_{all} = T_{10} = T_{50} = 8'

n 0.016

INLET CALCULATIONS

Inlet No	Inlet Station	DA No	SHLD	Inlet Type	Q cfs	Q_c cfs	Q_T cfs	So %	Appr ① Gutter S_x	Appr ① Gutter z/n	Shoulder Pavement S_x	Shoulder Pavement z/n	Approach ① D ft.	Approach ① T ft.	Approach ① a in.	Inlet Act.	Inlet Corr.	Q_i/Q	Q_i cfs	Q_c cfs
163	1+30		8'	C-15.91 W/ SLOTTED DRAIN	2.14			.5230	.067		.02/"		.35	8.22	1.40	4	2.68	.97	2.07	.07
175	2+30		8'	"	2.01			.5230	"		.02/"		.35	7.89	1.40	4	2.68	1	2.01	0
179	3+30		8'	"	2.03			.5230	"		.02/"		.35	7.94	1.40	4	2.68	1	2.03	0
178	4+30		8'	"	2.05			.5230	"		.02/"		.35	7.99	1.40	4	2.68	1	2.05	0
177	5+30		8'	"	2.11			.5252	"		.02/"		.35	8.13	1.40	4	2.68	.97	2.04	.07
176	6+30		8'	"	2.10			.5252	"		.02/"		.35	8.10	1.40	4	2.68	.97	2.04	.06
172	7+27		8'	"	2.28			SUMP	"		.02/"		.17	2.5'	1.40			1.0	2.28	0.00

① DEPRESS 1" @ CB TO OBTAIN 3" GUTTER DEPRESSION, SX = 0.100'/FT & ADD 1" TO 'a'

Computed by: D. Schaub Checked by: Date: 8/7/95

t 20-0405 12/74

SH/4

ARIZONA DEPARTMENT OF TRANSPORTATION

STORM SEWER INLET CALCULATION RECORD

LOCATION DATA

Highway: SR51, SQUAW PEAK HWY

Location: RAMP CACTUS 'B'

Project No.:

DESIGN DATA

Frequency: 50 years

P_6 = 2.80 in. P_{24} = ~~2.33~~ 3.33 in. P_1 = ~~1.59~~ 1.77 in.

$T_{all} = T_{10} = T_{50} = 8'$

n = 0.016

INLET CALCULATIONS

Inlet No	Inlet Station	DA No	SHLD	Inlet Type	Q cfs	Q_c cfs	Q_T cfs	So %	Appr ① Gutter S_x ②	Appr ① Gutter z/n	Shoulder Pavement S_x	Shoulder Pavement z/n	Approach ① D ft.	Approach ① T ft.	Approach ① a in.	Inlet Act.	Inlet Corr.	Q_i/Q	Q_i cfs	Q_c cfs
181	9+55		8'	C-15.91 w/ SLOTTED DRAIN	1.69			1.5285	.067		.0178 / "		.28	4.46	1.47	–	–	.99	1.67	.02
184	12+10		8'	"	2.22			3.3446	"		.02 / "		.26	3.73	2.83	–	–	1	2.21	.01
188	15+51		8	C-15.92 w/ slotted Drain	2.98			2.7778	.067		.01923 / "		.26	9.61	6.41	2	1.34	.99	2.94	.04

① DEPRESS 1" @ CB TO OBTAIN 3" GUTTER DEPRESSION, SX = 0.100 '/FT & ADD 1" TO 'a'

② No additional depression @ CB w/ half barrier (C-15.92)

Computed by: D. Schaub Checked by: Date: 8/7/95

20-0405 12/74

SH/4

ARIZONA DEPARTMENT OF TRANSPORTATION

STORM SEWER INLET CALCULATION RECORD

LOCATION DATA

Highway SR51, SQUAW PEAK HWY

Location RAMP CACTUS B-1

Project No.

DESIGN DATA

Frequency 50 years

P_6= 2.80 in. P_{24}= 3.33 in. P_1= 1.~~59~~ 77 in.

T_{all} 8'

n 0.016

INLET CALCULATIONS

Inlet No	Inlet Station	DA No	SHLD	Inlet Type	Q cfs	Q_c cfs	Q_T cfs	So %	Approach ① Gutter S_x	Approach ① Gutter z/n	Shoulder Pavement S_x	Shoulder Pavement z/n	D ft.	T ft.	a in.	Inlet Act.	Inlet Corr.	Q_i/Q	Q_i cfs	Q_c cfs
244	1+22 RT.		8	C-15.90 TYPE 3 C.B. w/6' wing	0.93			1:2500	.083 ~~.067~~		.010 / "		.22	7.14	1.76	9.08		1	.93	0

① DEPRESS 1" @ CB TO OBTAIN 3" GUTTER DEPRESSION, SX = ~~0.100~~ 0.125 '/FT & ADD 1" TO 'a'

Computed by: D. Schaub Checked by: Date:

t 20-0405 12/74 8/7/95

6/95

ARIZONA DEPARTMENT OF TRANSPORTATION

STORM SEWER INLET CALCULATION RECORD

LOCATION DATA

Highway SR51, SQUAW PEAK HWY

Location RAMP CACTUS 'C'

Project No.

DESIGN DATA

Frequency 50 years

P_6= 2.80 in. P_{24}= 3.33 in. P_1= 1.~~59~~ 77 in.

T_{all}

n 0.016

INLET CALCULATIONS

Inlet No	Inlet Station	DA No	SHLD	Inlet Type	Q cfs	Q_c cfs	Q_T cfs	So %	Gutter S_x	Gutter z/n	Pavement S_x	Pavement z/n	D ft.	T ft.	a in.	Inlet Act.	Inlet Corr.	Q_i/Q	Q_i cfs	Q_c cfs
243	4+25		8'	C-15.91 W/ SLOTTED DRAIN	2.34			1.4122	.067		~~.0185~~ "		.27	7.92	1.45	4	2.68	.99	2.31	.03

① DEPRESS 1" @ CB TO OBTAIN 3" GUTTER DEPRESSION, SX = 0.100'/FT & ADD 1" TO 'a'

Computed by: D. Schous Checked by: Date:

t 20-0405 12/74 8/7/95

SHL

ARIZONA DEPARTMENT OF TRANSPORTATION

STORM SEWER INLET CALCULATION RECORD

LOCATION DATA

Highway: SR51, SQUAW PEAK HWY

Location: RAMP CACTUS 'C'

Project No.:

DESIGN DATA

Frequency: 50 years

P_6 = 2.80 in. P_{24} = 3.33 in. P_1 = ~~1.59~~ 1.77 in.

T_{all} = T_{10} = T_{50} = 8'

n = 0.016

INLET CALCULATIONS

Inlet No	Inlet Station	DA No	SHLD	Inlet Type	Q cfs	Q_c cfs	Q_T cfs	So %	Appr ① Gutter S_x	Appr ① Gutter z/n	Shoulder Pavement S_x	Shoulder Pavement z/n	Approach ① D ft.	T ft.	a in.	Inlet Act.	Inlet Corr.	Q_i/Q	Q_i cfs	Q_c cfs
192	9+35		8'	C-15.91 W/ SLOTTED DRAIN	3.20			.6468	.067		.02/"		.39	9.81	1.40	8	5.36	.99	3.17	.03
197	10+40		8'	"	1.44			SUMP	"		.02/"		.13	1.88	1.40			1.0	1.44	0.00
198	11+46		8'	"	1.63			.5494	"		.02/"		.32	6.70	1.40	2	1.34	.97	1.58	.05
202	13+40		8'	"	2.90			1.6493	"		.02/"		.33	6.83	1.40	5	3.35	.99	2.88	.02
202.1	14+50		8'	"	2.92			1.9895	"		.02/"		.32	6.40	1.40	5	3.35	1	2.91	.01
203	15+00		8'	"	3.12			1.9795	"		.02/"		.32	6.74	1.40	5	3.35	.99	3.09	.03

① DEPRESS 1" @ CB TO OBTAIN 3" GUTTER DEPRESSION, SX = 0.100'/FT & ADD 1" TO 'a'

Computed by: D. Schuus Checked by: Date:

8/7/95

20-0405 12/74

8/7/95

ARIZONA DEPARTMENT OF TRANSPORTATION

STORM SEWER INLET CALCULATION RECORD

LOCATION DATA

Highway SR51, SQUAW PEAK HWY

Location RAMP CACTUS C-1

Project No.

DESIGN DATA

Frequency 50 years

P_6= 2.80 in. P_{24}= 3.33 in. P_1= ~~1.59~~ 1.77 in.

T_{all}

n 0.016

INLET CALCULATIONS

Inlet No	Inlet Station	DA No	SHLD	Inlet Type	Q cfs	Q_c cfs	Q_T cfs	So %	Approach ① Gutter S_x	Approach ① Gutter z/n	Shoulder Pavement S_x	Shoulder Pavement z/n	Approach ① D ft.	Approach ① T ft.	Approach ① a in.	Inlet Act.	Inlet Corr.	Q_i/Q	Q_i cfs	Q_c cfs
242	1+84		8'	C-15.20 TYPE 3 w/6' wing	1.04			1.82	.083		~~.008~~ "		.21	7.67	1.81	9.08		.98	1.02	.02

① DEPRESS 1" @ CB TO OBTAIN 3" GUTTER DEPRESSION, SX = ~~0.100~~ 0.125 '/FT & ADD 1" TO 'a'

Computed by: D. Schaub Checked by: Date: 8/7/95

20-0405 12/74

9/95

ARIZONA DEPARTMENT OF TRANSPORTATION

STORM SEWER INLET CALCULATION RECORD

LOCATION DATA

Highway SR51, SQUAW PEAK HWY

Location RAMP CACTUS 'D'

Project No.

DESIGN DATA

Frequency 50 years

P_6= 2.80 in. P_{24}= 3.33 in. P_1= ~~1.59~~ 1.77 in.

T_{all} = T_{10} = T_{50} = 8'

n 0.016

INLET CALCULATIONS

Inlet No	Inlet Station	DA No	SHLD	Inlet Type	Q cfs	Q_c cfs	Q_T cfs	So %	Appr ① Gutter S_x	Appr ① Gutter z/n	Shoulder Pavement S_x	Shoulder Pavement z/n	Approach ① D ft.	Approach ① T ft.	Approach ① a in.	Inlet Act.	Inlet Corr.	Q_i/Q	Q_i cfs	Q_c cfs
195	7+65		8'	C-15.91 W/ SLOTTED DRAIN	3.29			.6195	.067		.02/"		.39	10.09	1.40	8	5.36	.98	3.24	.05
194	8+77		8'	"	1.81			SUMP	"		.02/"		.16	2.50	1.40			1.00	1.81	0.00
196	9+90		8'	"	1.16			.5088	"		.02/"		.29	5.16	1.40	—	—	.97	1.12	.04
199	11+40		8'	"	1.33			1.2610	"		.02/"		.26	3.61	1.40	—	—	.99	1.32	.01
200	12+85		8'	"	3.03			1.923	"		.02/"		.32	6.67	1.40	5	3.35	.99	3.01	.02
201	14+50		8'	"	2.94			1.963	"		.02/"		.32	6.46	1.40	5	3.35	1	2.93	.01

① DEPRESS 1" @ CB TO OBTAIN 3" GUTTER DEPRESSION, SX = 0.100 '/FT & ADD 1" TO 'a'

Computed by: D. Schaub Checked by: Date: 8/7/95

20-0405 12/74

54/01

ARIZONA DEPARTMENT OF TRANSPORTATION

STORM SEWER INLET CALCULATION RECORD

LOCATION DATA

Highway SR51, SQUAW PEAK HWY

Location RAMP CACTUS 'D'

Project No.

DESIGN DATA

Frequency 50 years

P_6= 2.80 in. P_{24}= 3.33 in. P_1= 1.~~59~~ 77 in.

T_{all}

n 0.016

INLET CALCULATIONS

Inlet No	Inlet Station	DA No	SHLD	Inlet Type	Q cfs	Q_c cfs	Q_T cfs	So %	Gutter S_x	Gutter z/n	Pavement S_x	Pavement z/n	D ft.	T ft.	a in.	Inlet Act.	Inlet Corr.	Q_i/Q	Q_i cfs	Q_c cfs
248	3+55		8'	C-15.91 W/ SLOTTED DRAIN	2.03			2.0486	.067		.0185 "		.28	4.60	1.45	—	—	.98	1.99	.04

① DEPRESS 1" @ CB TO OBTAIN 3" GUTTER DEPRESSION, SX = 0.100 '/FT & ADD 1" TO 'a'

Computed by: D. Schmus 8/7/95 Checked by: Date:

20-0405 12/74

SH 1/1

ARIZONA DEPARTMENT OF TRANSPORTATION

STORM SEWER INLET CALCULATION RECORD

LOCATION DATA

Highway SR51, SQUAW PEAK HWY

Location RAMP CACTUS D-1

Project No.

DESIGN DATA

Frequency 50 years

P_6= 2.80 in. P_{24}= 3.33 in. P_1= ~~1.59~~ 1.77 in.

T_{all}

n 0.016

INLET CALCULATIONS

Inlet No	Inlet Station	DA No	SHLD	Inlet Type	Q cfs	Q_c cfs	Q_T cfs	So %	Gutter S_x	Gutter z/n	Pavement S_x	Pavement z/n	D ft.	T ft.	a in.	Inlet Act.	Inlet Corr.	Q_i/Q	Q_i cfs	Q_c cfs
247	1+~~58~~ 17		8	C-15.91 W/ SLOTTED DRAIN	0.90			1.40	.067		.008 / "		0.22	2.66	1.76	6	4.02	1	.90	0

① DEPRESS 1" @ CB TO OBTAIN 3" GUTTER DEPRESSION, SX = 0.100'/FT & ADD 1" TO 'a'

Computed by: D. Schaub Checked by: Date:

20-0405 12/74 8/17/95

1/2/95

****
***** ROADWAY DRAINAGE DESIGN *****
****

DESIGNER: GAG

DATE: 08-11-1995

PROJECT: Squaw Peak

PROJECT NO.: SR 51

INLET NO.: 244

STATION: 1+22 Cactus-B1

DRAINAGE AREA: Acres

DESIGN FREQUENCY: 50 Years

ROADWAY & DISCHARGE DATA

Cross-Slope	S (ft/ft)	Sx (ft/ft)	n	Q (cfs)	T (ft)
Composite	0.013	0.010	0.016	0.93	3.68

GUTTER FLOW

W (ft)	Sw (ft/ft)	a (in)	Eo	d (ft)	V (fps)
2.00	0.125	2.76	0.992	0.27	3.12

INLET INTERCEPTION

Inlet Type	LT (ft)	W (ft)	E	Qi (cfs)	Qb (cfs)
Curb-Opening	6.53	6.00	0.980	0.91	0.01

Req'd C-15.20 Curb Opening Inlet w/ 6' wing

6.53 x 1.25 = 8.16' < 9.08 OK.

****
***** ROADWAY DRAINAGE DESIGN *****
****

DESIGNER: GAG

DATE: 08-11-1995

PROJECT: Squaw Peak

PROJECT NO.: SR 51

INLET NO.: 240

STATION: 18+85 Cactus Rd

DRAINAGE AREA: Acres

DESIGN FREQUENCY: 50 Years

ROADWAY & DISCHARGE DATA

Cross-Slope	S (ft/ft)	Sx (ft/ft)	n	Q (cfs)	T (ft)
Composite	0.006	0.020	0.016	0.63	2.79

GUTTER FLOW

W (ft)	Sw (ft/ft)	a (in)	Eo	d (ft)	V (fps)
2.00	0.125	2.52	0.996	0.27	2.18

INLET INTERCEPTION

Inlet Type	LT (ft)	W (ft)	E	Qi (cfs)	Qb (cfs)
Curb-Opening	4.41	4.00	0.980	0.62	0.00

Req'd C-15.20 Type 3 Curb Opening
w/ 3' wing
4.41 x 1.25 = 5.5' < 6.08'

****
***** ROADWAY DRAINAGE DESIGN *****
****

DESIGNER: GAG

DATE: 08-11-1995

PROJECT: Squaw Peak

PROJECT NO.: SR 51

INLET NO.: 241

STATION: 18+88 Cactus Rd

DRAINAGE AREA: Acres

DESIGN FREQUENCY: 50 Years

ROADWAY & DISCHARGE DATA

Cross-Slope	S (ft/ft)	Sx (ft/ft)	n	Q (cfs)	T (ft)
Composite	0.006	0.020	0.016	0.55	2.00

GUTTER FLOW

W (ft)	Sw (ft/ft)	a (in)	Eo	d (ft)	V (fps)
2.00	0.125	2.52	1.000	0.25	2.19

INLET INTERCEPTION

Inlet Type	LT (ft)	W (ft)	E	Qi (cfs)	Qb (cfs)
Curb-Opening	4.23	4.00	0.990	0.54	0.00

Req'd C-15.20 Type 3 Curb Opening
w/ 3' wing

4.23 x 1.25 = 5.29 < 6.08' OK.

****
***** ROADWAY DRAINAGE DESIGN *****
****

DESIGNER: GAG

DATE: 08-11-1995

PROJECT: Squaw Peak

PROJECT NO.: SR 51

INLET NO.: 245

STATION: 21+49 Cactus Rd

DRAINAGE AREA: Acres

DESIGN FREQUENCY: 50 Years

ROADWAY & DISCHARGE DATA

Cross-Slope	S (ft/ft)	Sx (ft/ft)	n	Q (cfs)	T (ft)
Composite	0.006	0.020	0.016	0.31	1.63

GUTTER FLOW

W (ft)	Sw (ft/ft)	a (in)	Eo	d (ft)	V (fps)
2.00	0.125	2.52	1.000	0.20	1.27

INLET INTERCEPTION

Inlet Type	LT (ft)	W (ft)	E	Qi (cfs)	Qb (cfs)
Curb-Opening	3.33	3.00	0.980	0.30	0.00

3.33 x 1.25 = 4.16 < 6.08 OK.

Req'd C-15.20 Type 3 Curb Opening Inlet w/ 3' wing

****
***** ROADWAY DRAINAGE DESIGN *****
****

DESIGNER: GAG

DATE: 08-11-1995

PROJECT: Squaw Peak

PROJECT NO.: SR 51

INLET NO.: 246

STATION: 21+72 Cactus Rd

DRAINAGE AREA: Acres

DESIGN FREQUENCY: 50 Years

ROADWAY & DISCHARGE DATA

Cross-Slope	S (ft/ft)	Sx (ft/ft)	n	Q (cfs)	T (ft)
Composite	0.005	0.020	0.016	0.58	2.69

GUTTER FLOW

W (ft)	Sw (ft/ft)	a (in)	Eo	d (ft)	V (fps)
2.00	0.125	2.52	0.997	0.26	2.08

INLET INTERCEPTION

Inlet Type	LT (ft)	W (ft)	E	Qi (cfs)	Qb (cfs)
Curb-Opening	4.15	4.00	0.990	0.57	0.00

4.15 x 1.25 = 5.19 < 6.08 OK

Req'd C-15.20 Type 3 Curb Opening w/ 3' wing

17/4:

****
***** ROADWAY DRAINAGE DESIGN *****
****

DESIGNER: Nasir Raza

DATE: 07-21-1995

PROJECT: SR 51

PROJECT NO.: Squaw Pe

INLET NO.: R-CACTUS C #243

STATION: 4+25

DRAINAGE AREA: Acres

DESIGN FREQUENCY: 50 Years

ROADWAY & DISCHARGE DATA

Cross-Slope	S (ft/ft)	Sx (ft/ft)	n	Q (cfs)	T (ft)
Composite	0.014	0.019	0.016	2.33	6.38

GUTTER FLOW

W (ft)	Sw (ft/ft)	a (in)	Eo	d (ft)	V (fps)
3.00	0.083	2.33	0.940	0.31	3.52

INLET INTERCEPTION

Inlet Type	LT or W (ft)	L (ft)	E	Qi (cfs)	Qb (cfs)
Slotted Drain	13.05	2.00	0.250	0.60	1.73
P-1-7/8	3.00	1.40	0.980	1.70	0.02
Combination			0.991	2.31	0.02

REQ'D SLOTTED DRAIN LENGTH = 1.49 x 2 ≈ 4 FT

****
***** ROADWAY DRAINAGE DESIGN *****
****

DESIGNER: GAG

DATE: 08-11-1995

PROJECT: Squaw Peak

PROJECT NO.: SR 51

INLET NO.: 242

STATION: 1+84

DRAINAGE AREA: Acres

DESIGN FREQUENCY: 50 Years

ROADWAY & DISCHARGE DATA

Cross-Slope	S (ft/ft)	Sx (ft/ft)	n	Q (cfs)	T (ft)
Composite	0.018	0.008	0.016	1.04	3.23

GUTTER FLOW

W (ft)	Sw (ft/ft)	a (in)	Eo	d (ft)	V (fps)
2.00	0.125	2.81	0.997	0.26	3.77

INLET INTERCEPTION

Inlet Type	LT (ft)	W (ft)	E	Qi (cfs)	Qb (cfs)
Curb-Opening	7.64	7.00	0.980	1.02	0.01

7.64 x 1.25 = 9.55 > 9.08 Bypass Minimal
Use 6' wing C-15.20 Inlet

19/42

****
***** ROADWAY DRAINAGE DESIGN *****
****

DESIGNER: Nasir Raza

DATE: 07-21-1995

PROJECT: SR 51

PROJECT NO.: Squaw Pe

INLET NO.: R-CACTUS DI # 247

STATION: 1+~~38~~ 17

DRAINAGE AREA: Acres

DESIGN FREQUENCY: 50 Years

ROADWAY & DISCHARGE DATA

Cross-Slope	S (ft/ft)	Sx (ft/ft)	n	Q (cfs)	T (ft)
Composite	0.014	0.008	0.016	0.89	2.66

GUTTER FLOW

W (ft)	Sw (ft/ft)	a (in)	Eo	d (ft)	V (fps)
3.00	0.083	2.71	1.000	0.22	2.39

INLET INTERCEPTION

Inlet Type	L (ft)	W (ft)	E	Qi (cfs)	Qb (cfs)
P-1-7/8	1.40	3.00	1.000	0.89	0.00

~~OK~~
SLOTTED DRAIN NOT REQ'D
HOWEVER, DUE TO FLAT X-SLOPE
PROVIDE 6 FT OF SLOTTED DRAIN

****
***** ROADWAY DRAINAGE DESIGN *****
****

DESIGNER: Nasir Raza

DATE: 07-21-1995

PROJECT: SR 51

PROJECT NO.: Squaw Pe

INLET NO.: R-CACTUS D #248

STATION: 3+55

DRAINAGE AREA: Acres

DESIGN FREQUENCY: 50 Years

ROADWAY & DISCHARGE DATA

Cross-Slope	S (ft/ft)	Sx (ft/ft)	n	Q (cfs)	T (ft)
Composite	0.020	0.019	0.016	2.02	4.60

GUTTER FLOW

W (ft)	Sw (ft/ft)	a (in)	Eo	d (ft)	V (fps)
3.00	0.083	2.33	0.988	0.28	4.15

INLET INTERCEPTION

Inlet Type	L (ft)	W (ft)	E	Qi (cfs)	Qb (cfs)
P-1-7/8	1.40	3.00	0.980	1.99	0.02

Slotted Drain Not Req'd.

21/5

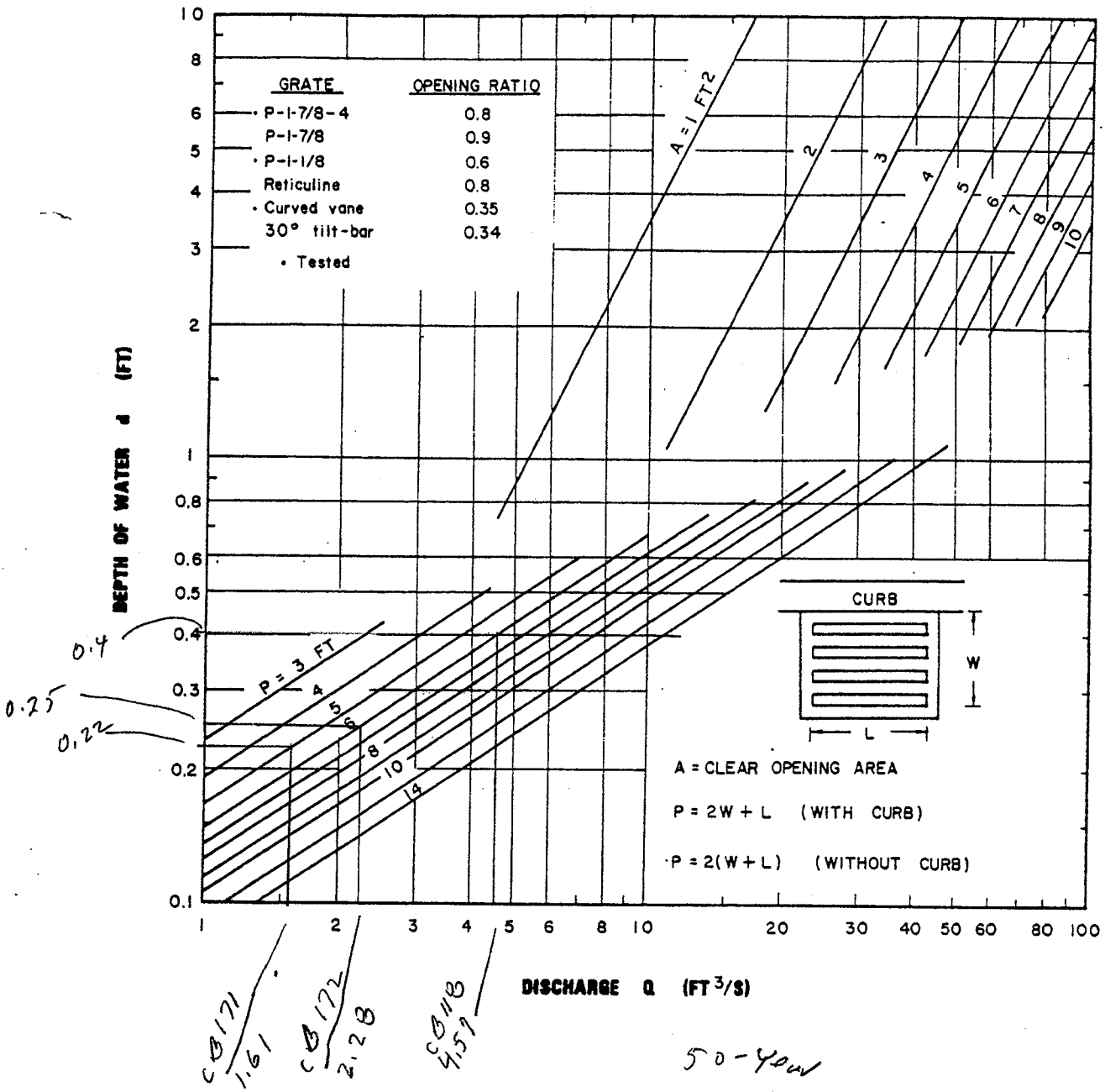

50-year

CHART 11. Grate inlet capacity in sump conditions.

CB 118, CB 171 CB 172

22/45

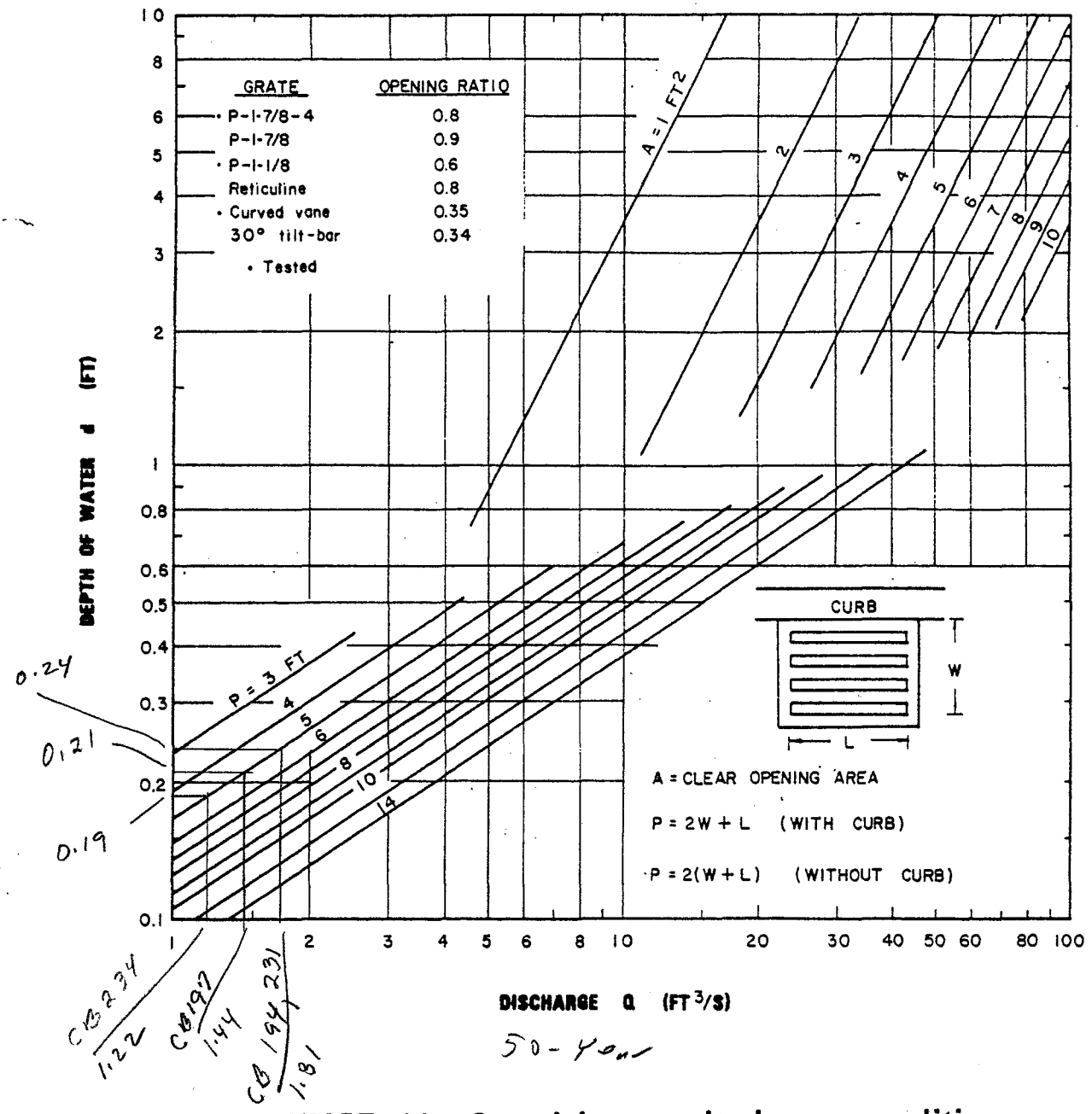

CHART 11. Grate inlet capacity in sump conditions.

CB 197, 194, 231, & 234

23/41

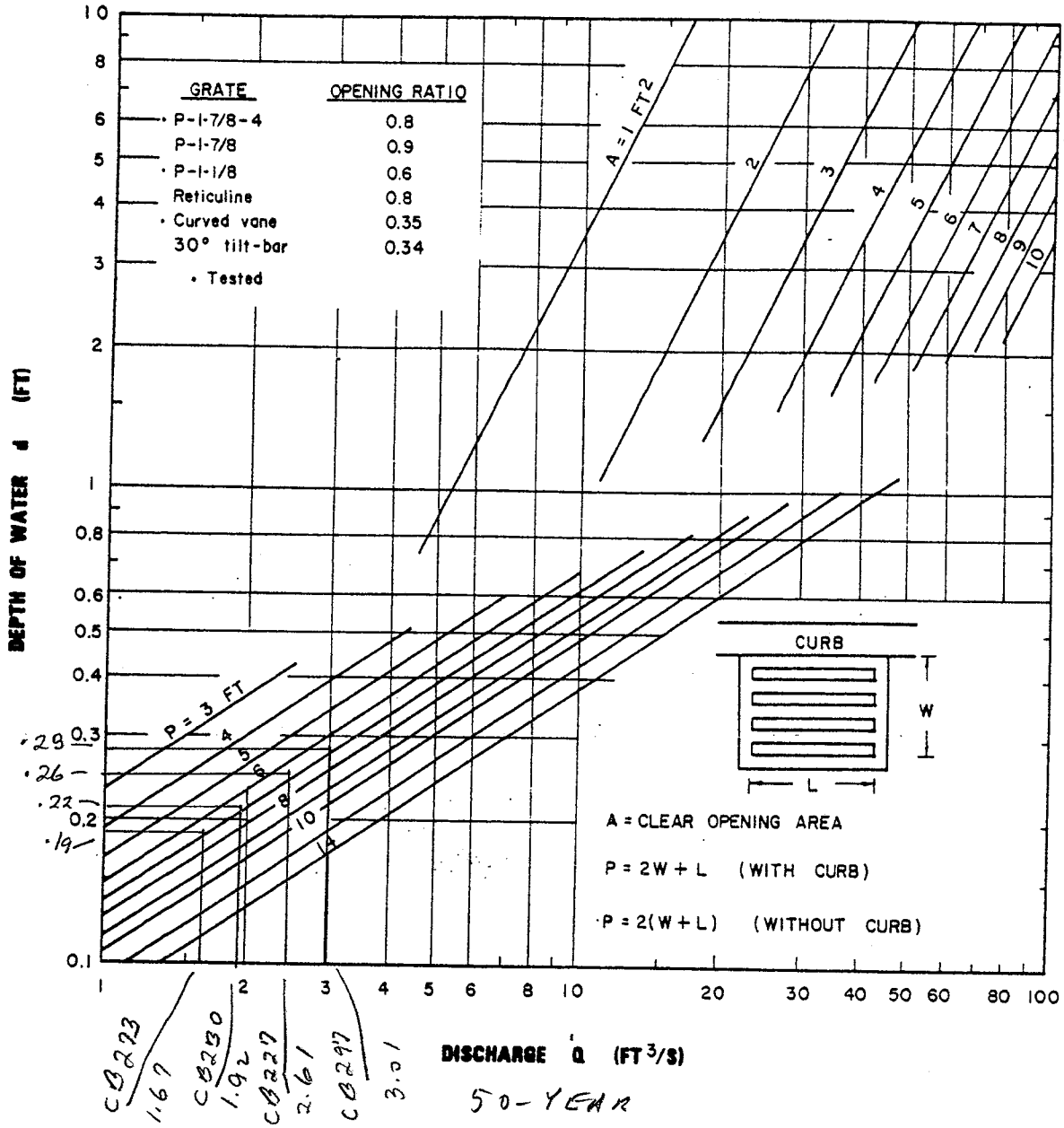

CHART 11. Grate inlet capacity in sump conditions.

CB 293, 230, 227 & 297

24/45

****
***** ROADWAY DRAINAGE DESIGN *****
****

DESIGNER: Nasir Raza

DATE: 07-20-1995

PROJECT: SR 51

PROJECT NO.: Squaw Pe

INLET NO.: R-CACTUS A #168

STATION: 0+40

DRAINAGE AREA: Acres

DESIGN FREQUENCY: 50 Years

ROADWAY & DISCHARGE DATA

Cross-Slope	S (ft/ft)	Sx (ft/ft)	n	Q (cfs)	T (ft)
Composite	0.005	0.020	0.016	1.83	7.53

GUTTER FLOW

W (ft)	Sw (ft/ft)	a (in)	Eo	d (ft)	V (fps)
3.00	0.083	2.28	0.888	0.34	2.15

INLET INTERCEPTION

Inlet Type	LT or W (ft)	L (ft)	E	Qi (cfs)	Qb (cfs)
Slotted Drain	8.82	2.00	0.370	0.67	1.16
P-1-7/8	3.00	1.40	0.970	1.13	0.02
Combination			0.989	1.81	0.02

REQ'D SLOTTED DRAIN LENGTH = 1.44 x 2 ≈ 4 FT

25/4

****
***** ROADWAY DRAINAGE DESIGN *****
****

DESIGNER: Nasir Raza

DATE: 07-20-1995

PROJECT: SR 51

PROJECT NO.: Squaw Pe

INLET NO.: R-CACTUS A #169

STATION: 1+40

DRAINAGE AREA: Acres

DESIGN FREQUENCY: 50 Years

ROADWAY & DISCHARGE DATA

Cross-Slope	S (ft/ft)	Sx (ft/ft)	n	Q (cfs)	T (ft)
Composite	0.005	0.020	0.016	1.84	7.56

GUTTER FLOW

W (ft)	Sw (ft/ft)	a (in)	Eo	d (ft)	V (fps)
3.00	0.083	2.28	0.886	0.34	2.15

INLET INTERCEPTION

Inlet Type	LT or W (ft)	L (ft)	E	Qi (cfs)	Qb (cfs)
Slotted Drain	8.85	2.00	0.360	0.67	1.17
P-1-7/8	3.00	1.40	0.970	1.14	0.02
Combination			0.989	1.82	0.02

REQ'D SLOTTED DRAIN LENGTH = 1.49 x 2 = 4 FT

****
***** ROADWAY DRAINAGE DESIGN *****
****

DESIGNER: Nasir Raza DATE: 07-20-1995

PROJECT: SR 51 PROJECT NO.: Squaw Pe

INLET NO.: R-CACTUS A #170 STATION: 2+40

DRAINAGE AREA: Acres DESIGN FREQUENCY: 50 Years

ROADWAY & DISCHARGE DATA

Cross-Slope	S (ft/ft)	Sx (ft/ft)	n	Q (cfs)	T (ft)
Composite	0.005	0.020	0.016	1.87	7.64

GUTTER FLOW

W (ft)	Sw (ft/ft)	a (in)	Eo	d (ft)	V (fps)
3.00	0.083	2.28	0.883	0.34	2.15

INLET INTERCEPTION

Inlet Type	LT or W (ft)	L (ft)	E	Qi (cfs)	Qb (cfs)
Slotted Drain	8.92	2.00	0.360	0.68	1.19
P-1-7/8	3.00	1.40	0.970	1.16	0.04
Combination			0.979	1.83	0.04

27/4

REQ'D SLOTTED DRAIN LENGTH = 1.49x2 = 4 FT

****
***** ROADWAY DRAINAGE DESIGN *****
****

DESIGNER: Nasir Raza DATE: 07-20-1995

PROJECT: SR 51 PROJECT NO.: Squaw Pe

INLET NO.: R-CACTUS A #180 STATION: 4+30

DRAINAGE AREA: Acres DESIGN FREQUENCY: 50 Years

ROADWAY & DISCHARGE DATA

Cross-Slope	S (ft/ft)	Sx (ft/ft)	n	Q (cfs)	T (ft)
Composite	0.006	0.020	0.016	5.36	12.97

GUTTER FLOW

W (ft)	Sw (ft/ft)	a (in)	Eo	d (ft)	V (fps)
3.00	0.083	2.28	0.649	0.45	2.72

INLET INTERCEPTION

Inlet Type	LT or W (ft)	L (ft)	E	Qi (cfs)	Qb (cfs)
Slotted Drain	16.93	9.00	0.740	3.98	1.38
P-1-7/8	3.00	1.40	0.960	1.34	0.05
Combination			0.991	5.31	0.05

REQ'D SLOTTED DRAIN LENGTH = 1.49 x 9 = 14 FT

****
***** ROADWAY DRAINAGE DESIGN *****
****

DESIGNER: Nasir Raza

DATE: 07-20-1995

PROJECT: SR 51

PROJECT NO.: Squaw Pe

INLET NO.: R-CACTUS A #185

STATION: 11+55

DRAINAGE AREA: Acres

DESIGN FREQUENCY: 50 Years

ROADWAY & DISCHARGE DATA

Cross-Slope	S (ft/ft)	Sx (ft/ft)	n	Q (cfs)	T (ft)
Composite	0.029	0.020	0.016	2.06	3.69

GUTTER FLOW

W (ft)	Sw (ft/ft)	a (in)	Eo	d (ft)	V (fps)
3.00	0.083	2.28	0.998	0.26	4.88

INLET INTERCEPTION

Inlet Type	L (ft)	W (ft)	E	Qi (cfs)	Qb (cfs)
P-1-7/8	1.40	3.00	0.990	2.05	0.00

NO SLOTTED DRAIN REQ'D

29/5

****
***** ROADWAY DRAINAGE DESIGN *****
****

DESIGNER: Nasir Raza

DATE: 07-20-1995

PROJECT: SR 51

PROJECT NO.: Squaw Pe

INLET NO.: R-CACTUS B
#'s 163, 175, 179, 178

STATION: 1+30, 2+30, 3+30, 4+30

DRAINAGE AREA: Acres

DESIGN FREQUENCY: 50 Years

ROADWAY & DISCHARGE DATA

Cross-Slope	S (ft/ft)	Sx (ft/ft)	n	Q (cfs)	T (ft)
Composite	0.005	0.020	0.016	2.14	8.22

GUTTER FLOW

W (ft)	Sw (ft/ft)	a (in)	Eo	d (ft)	V (fps)
3.00	0.083	2.28	0.857	0.35	2.23

INLET INTERCEPTION

Inlet Type	LT or W (ft)	L (ft)	E	Qi (cfs)	Qb (cfs)
Slotted Drain	9.71	2.00	0.330	0.72	1.42
P-1-7/8	3.00	1.40	0.940	1.35	0.07
Combination			0.967	2.07	0.07

REQ'D SLOTTED DRAIN LENGTH = 1.49 x 2 ≈ 4 FT

****
***** ROADWAY DRAINAGE DESIGN *****
****

DESIGNER: Nasir Raza

DATE: 07-20-1995

PROJECT: SR 51

PROJECT NO.: Squaw Pe

INLET NO.: R-CACTUS B
#'s 177, 176

STATION: 5+30 , 6+30

DRAINAGE AREA: Acres

DESIGN FREQUENCY: 50 Years

ROADWAY & DISCHARGE DATA

Cross-Slope	S (ft/ft)	Sx (ft/ft)	n	Q (cfs)	T (ft)
Composite	0.005	0.020	0.016	2.10	8.13

GUTTER FLOW

W (ft)	Sw (ft/ft)	a (in)	Eo	d (ft)	V (fps)
3.00	0.083	2.28	0.861	0.35	2.23

INLET INTERCEPTION

Inlet Type	LT or W (ft)	L (ft)	E	Qi (cfs)	Qb (cfs)
Slotted Drain	9.64	2.00	0.340	0.72	1.38
P-1-7/8	3.00	1.40	0.950	1.32	0.06
Combination			0.971	2.04	0.06

REQ'D SLOTTED DRAIN LENGTH = 1.49 x 2 ≃ 4 FT.

****
***** ROADWAY DRAINAGE DESIGN *****
****

DESIGNER: Nasir Raza

DATE: 07-20-1995

PROJECT: SR 51

PROJECT NO.: Squaw Pe

INLET NO.: R-CACTUS B #181

STATION: 9+55

DRAINAGE AREA: Acres

DESIGN FREQUENCY: 50 Years

ROADWAY & DISCHARGE DATA

Cross-Slope	S (ft/ft)	Sx (ft/ft)	n	Q (cfs)	T (ft)
Composite	0.015	0.018	0.016	1.69	4.46

GUTTER FLOW

W (ft)	Sw (ft/ft)	a (in)	Eo	d (ft)	V (fps)
3.00	0.083	2.36	0.991	0.28	3.57

INLET INTERCEPTION

Inlet Type	L (ft)	W (ft)	E	Qi (cfs)	Qb (cfs)
P-1-7/8	1.40	3.00	0.990	1.67	0.02

REQ'D SLOTTED DRAIN NOT REQ'D ~~LENGTH~~ 1.40

****
***** ROADWAY DRAINAGE DESIGN *****
****

DESIGNER: Nasir Raza

DATE: 07-20-1995

PROJECT: SR 51

PROJECT NO.: Squaw Pe

INLET NO.: R-CACTUS B #184

STATION: 12+10

DRAINAGE AREA: Acres

DESIGN FREQUENCY: 50 Years

ROADWAY & DISCHARGE DATA

Cross-Slope	S (ft/ft)	Sx (ft/ft)	n	Q (cfs)	T (ft)
Composite	0.033	0.020	0.016	2.22	3.73

GUTTER FLOW

W (ft)	Sw (ft/ft)	a (in)	Eo	d (ft)	V (fps)
3.00	0.083	2.28	0.998	0.26	5.23

INLET INTERCEPTION

Inlet Type	L (ft)	W (ft)	E	Qi (cfs)	Qb (cfs)
P-1-7/8	1.40	3.00	0.990	2.21	0.00

SLOTTED DRAIN NOT REQ'D

****
***** ROADWAY DRAINAGE DESIGN *****
****

DESIGNER: Nasir Raza

DATE: 07-20-1995

PROJECT: SR 51

PROJECT NO.: Squaw Pe

INLET NO.: R-CACTUS B # 188

STATION: 15+51

DRAINAGE AREA: Acres

DESIGN FREQUENCY: 50 Years

ROADWAY & DISCHARGE DATA

Cross-Slope	S (ft/ft)	Sx (ft/ft)	n	Q (cfs)	T (ft)
Composite	0.028	0.019	0.016	3.00	5.78

GUTTER FLOW

W (ft)	Sw (ft/ft)	a (in)	Eo	d (ft)	V (fps)
3.00	0.083	2.31	0.959	0.30	4.92

INLET INTERCEPTION

Inlet Type	LT or W (ft)	L (ft)	E	Qi (cfs)	Qb (cfs)
Slotted Drain	17.58	1.00	0.100	0.30	2.70
P-1-7/8	3.00	1.40	0.970	2.63	0.06
Combination			0.980	2.94	0.06

REQ'D SLOTTED DRAIN LENGTH = 1.49 x 1 ≈ 2 FT

****
***** ROADWAY DRAINAGE DESIGN *****
****

DESIGNER: Nasir Raza

DATE: 07-20-1995

PROJECT: SR 51

PROJECT NO.: Squaw Pe

INLET NO.: R-CACTUS C #192

STATION: 9+35

DRAINAGE AREA: Acres

DESIGN FREQUENCY: 50 Years

ROADWAY & DISCHARGE DATA

Cross-Slope	S (ft/ft)	Sx (ft/ft)	n	Q (cfs)	T (ft)
Composite	0.006	0.020	0.016	3.20	9.81

GUTTER FLOW

W (ft)	Sw (ft/ft)	a (in)	Eo	d (ft)	V (fps)
3.00	0.083	2.28	0.783	0.39	2.56

INLET INTERCEPTION

Inlet Type	LT or W (ft)	L (ft)	E	Qi (cfs)	Qb (cfs)
Slotted Drain	12.75	5.00	0.590	1.89	1.31
P-1-7/8	3.00	1.40	0.970	1.27	0.03
Combination			0.991	3.17	0.03

REQ'D SLOTTED DRAIN LENGTH = 1.49 x 5 = 8 FT

35/4

****
***** ROADWAY DRAINAGE DESIGN *****
****

DESIGNER: Nasir Raza

DATE: 07-20-1995

PROJECT: SR 51

PROJECT NO.: Squaw Pe

INLET NO.: R-CACTUS C #198

STATION: 11+46

DRAINAGE AREA: Acres

DESIGN FREQUENCY: 50 Years

ROADWAY & DISCHARGE DATA

Cross-Slope	S (ft/ft)	Sx (ft/ft)	n	Q (cfs)	T (ft)
Composite	0.005	0.020	0.016	1.63	6.70

GUTTER FLOW

W (ft)	Sw (ft/ft)	a (in)	Eo	d (ft)	V (fps)
3.00	0.083	2.28	0.923	0.32	2.23

INLET INTERCEPTION

Inlet Type	LT or W (ft)	L (ft)	E	Qi (cfs)	Qb (cfs)
Slotted Drain	8.51	1.00	0.200	0.32	1.31
P-1-7/8	3.00	1.40	0.960	1.27	0.05
Combination			0.969	1.58	0.05

REQ'D SLOTTED DRAIN LENGTH = 1.49 x 1 ≃ 2 FT

```
****************************************
*****    ROADWAY DRAINAGE DESIGN    *****
****************************************
```

DESIGNER: Nasir Raza

DATE: 07-20-1995

PROJECT: SR 51

PROJECT NO.: Squaw Pe

INLET NO.: R-CACTUS C #202

STATION: 13+40

DRAINAGE AREA: Acres

DESIGN FREQUENCY: 50 Years

ROADWAY & DISCHARGE DATA

Cross-Slope	S (ft/ft)	Sx (ft/ft)	n	Q (cfs)	T (ft)
Composite	0.016	0.020	0.016	2.91	6.83

GUTTER FLOW

W (ft)	Sw (ft/ft)	a (in)	Eo	d (ft)	V (fps)
3.00	0.083	2.28	0.918	0.33	3.87

INLET INTERCEPTION

Inlet Type	LT or W (ft)	L (ft)	E	Qi (cfs)	Qb (cfs)
Slotted Drain	15.13	3.00	0.320	0.95	1.96
P-1-7/8	3.00	1.40	0.980	1.92	0.03
Combination			0.990	2.88	0.03

REQ'D SLOTTED DRAIN LENGTH = 1.49 x 3 = 5 FT

37/45

****
***** ROADWAY DRAINAGE DESIGN *****
****

DESIGNER: Nasir Raza DATE: 07-20-1995

PROJECT: SR 51 PROJECT NO.: Squaw Pe

INLET NO.: R-CACTUS C # 202.1 STATION: 14+50

DRAINAGE AREA: Acres DESIGN FREQUENCY: 50 Years

ROADWAY & DISCHARGE DATA

Cross-Slope	S (ft/ft)	Sx (ft/ft)	n	Q (cfs)	T (ft)
Composite	0.020	0.020	0.016	2.93	6.40

GUTTER FLOW

W (ft)	Sw (ft/ft)	a (in)	Eo	d (ft)	V (fps)
3.00	0.083	2.28	0.935	0.32	4.21

INLET INTERCEPTION

Inlet Type	LT or W (ft)	L (ft)	E	Qi (cfs)	Qb (cfs)
Slotted Drain	15.92	3.00	0.310	0.91	2.02
P-1-7/8	3.00	1.40	0.980	1.99	0.02
Combination			0.993	2.91	0.02

REQ'D SLOTTED DRAIN LENGTH = 1.49 ~~x~~ 3 = 5 FT

****
***** ROADWAY DRAINAGE DESIGN *****
****

DESIGNER: Nasir Raza

DATE: 07-20-1995

PROJECT: SR 51

PROJECT NO.: Squaw Pe

INLET NO.: R-CACTUS C #203

STATION: 15+00

DRAINAGE AREA: Acres

DESIGN FREQUENCY: 50 Years

ROADWAY & DISCHARGE DATA

Cross-Slope	S (ft/ft)	Sx (ft/ft)	n	Q (cfs)	T (ft)
Composite	0.020	0.020	0.016	3.13	6.74

GUTTER FLOW

W (ft)	Sw (ft/ft)	a (in)	Eo	d (ft)	V (fps)
3.00	0.083	2.28	0.921	0.32	4.23

INLET INTERCEPTION

Inlet Type	LT or W (ft)	L (ft)	E	Qi (cfs)	Qb (cfs)
Slotted Drain	16.45	3.00	0.300	0.95	2.18
P-1-7/8	3.00	1.40	0.980	2.13	0.04
Combination			0.987	3.09	0.04

REQ'D SLOTTED DRAIN LENGTH = 1.49 x 3 = 5 FT

39/15

****
***** ROADWAY DRAINAGE DESIGN *****
****

DESIGNER: Nasir Raza DATE: 07-20-1995

PROJECT: SR 51 PROJECT NO.: Squaw Pe

INLET NO.: R-CACTUS D #195 STATION: 7+65

DRAINAGE AREA: Acres DESIGN FREQUENCY: 50 Years

ROADWAY & DISCHARGE DATA

Cross-Slope	S (ft/ft)	Sx (ft/ft)	n	Q (cfs)	T (ft)
Composite	0.006	0.020	0.016	3.29	10.09

GUTTER FLOW

W (ft)	Sw (ft/ft)	a (in)	Eo	d (ft)	V (fps)
3.00	0.083	2.28	0.770	0.39	2.52

INLET INTERCEPTION

Inlet Type	LT or W (ft)	L (ft)	E	Qi (cfs)	Qb (cfs)
Slotted Drain	12.82	5.00	0.580	1.93	1.36
P-1-7/8	3.00	1.40	0.960	1.32	0.05
Combination			0.985	3.24	0.05

REQ'D SLOTTED DRAIN LENGTH = 1.49 x 5 = 8 FT

****
***** ROADWAY DRAINAGE DESIGN *****
****

DESIGNER: Nasir Raza

DATE: 07-20-1995

PROJECT: SR 51

PROJECT NO.: Squaw Pe

INLET NO.: R-CACTUS D #196

STATION: ~~11+40~~ 9+90

DRAINAGE AREA: Acres

DESIGN FREQUENCY: 50 Years

ROADWAY & DISCHARGE DATA

Cross-Slope	S (ft/ft)	Sx (ft/ft)	n	Q (cfs)	T (ft)
Composite	0.005	0.020	0.016	1.15	5.16

GUTTER FLOW

W (ft)	Sw (ft/ft)	a (in)	Eo	d (ft)	V (fps)
3.00	0.083	2.28	0.975	0.29	2.09

INLET INTERCEPTION

Inlet Type	L (ft)	W (ft)	E	Qi (cfs)	Qb (cfs)
P-1-7/8	1.40	3.00	0.970	1.12	0.02

SLOTTED DRAIN NOT REQ'D

41/45

****
***** ROADWAY DRAINAGE DESIGN *****
****

DESIGNER: Nasir Raza

DATE: 07-20-1995

PROJECT: SR 51

PROJECT NO.: Squaw Pe

INLET NO.: R-CACTUS D #199

STATION: 11+40

DRAINAGE AREA: Acres

DESIGN FREQUENCY: 50 Years

ROADWAY & DISCHARGE DATA

Cross-Slope	S (ft/ft)	Sx (ft/ft)	n	Q (cfs)	T (ft)
Composite	0.013	0.020	0.016	1.33	3.61

GUTTER FLOW

W (ft)	Sw (ft/ft)	a (in)	Eo	d (ft)	V (fps)
3.00	0.083	2.28	0.998	0.26	3.20

INLET INTERCEPTION

Inlet Type	L (ft)	W (ft)	E	Qi (cfs)	Qb (cfs)
P-1-7/8	1.40	3.00	0.990	1.32	0.00

SLOTTED DRAIN NOT REQ'D

****
***** ROADWAY DRAINAGE DESIGN *****
****

DESIGNER: Nasir Raza

DATE: 07-20-1995

PROJECT: SR 51

PROJECT NO.: Squaw Pe

INLET NO.: R-CACTUS D #200

STATION: 12+85

DRAINAGE AREA: Acres

DESIGN FREQUENCY: 50 Years

ROADWAY & DISCHARGE DATA

Cross-Slope	S (ft/ft)	Sx (ft/ft)	n	Q (cfs)	T (ft)
Composite	0.019	0.020	0.016	3.04	6.67

GUTTER FLOW

W (ft)	Sw (ft/ft)	a (in)	Eo	d (ft)	V (fps)
3.00	0.083	2.28	0.924	0.32	4.17

INLET INTERCEPTION

Inlet Type	LT or W (ft)	L (ft)	E	Qi (cfs)	Qb (cfs)
Slotted Drain	16.09	3.00	0.310	0.94	2.09
P-1-7/8	3.00	1.40	0.980	2.05	0.03
Combination			0.990	3.01	0.03

REQ'D SLOTTED DRAIN LENGTH = 1.49 x 3 ≈ 5 FT

****
***** ROADWAY DRAINAGE DESIGN *****
****

DESIGNER: Nasir Raza

DATE: 07-20-1995

PROJECT: SR 51

PROJECT NO.: Squaw Pe

INLET NO.: R-CACTUS D #201

STATION: 14+50

DRAINAGE AREA: Acres

DESIGN FREQUENCY: 50 Years

ROADWAY & DISCHARGE DATA

Cross-Slope	S (ft/ft)	Sx (ft/ft)	n	Q (cfs)	T (ft)
Composite	0.020	0.020	0.016	2.95	6.46

GUTTER FLOW

W (ft)	Sw (ft/ft)	a (in)	Eo	d (ft)	V (fps)
3.00	0.083	2.28	0.932	0.32	4.19

INLET INTERCEPTION

Inlet Type	LT or W (ft)	L (ft)	E	Qi (cfs)	Qb (cfs)
Slotted Drain	15.93	3.00	0.310	0.92	2.03
P-1-7/8	3.00	1.40	0.980	2.00	0.02
Combination			0.993	2.93	0.02

REQ'D SLOTTED DRAIN LENGTH = 1.4 x 3 = 5 FT

****
***** ROADWAY DRAINAGE DESIGN *****
****

DESIGNER: GAG

DATE: 08-11-1995

PROJECT: Squaw Peak

PROJECT NO.: SR 51

INLET NO.: 239

STATION: 1+12 Cactus-A1

DRAINAGE AREA: Acres

DESIGN FREQUENCY: 50 Years

ROADWAY & DISCHARGE DATA

Cross-Slope	S (ft/ft)	Sx (ft/ft)	n	Q (cfs)	T (ft)
Composite	0.025	0.010	0.016	0.99	1.92

GUTTER FLOW

W (ft)	Sw (ft/ft)	a (in)	Eo	d (ft)	V (fps)
2.00	0.125	2.76	1.000	0.24	3.97

INLET INTERCEPTION

Inlet Type	LT (ft)	W (ft)	E	Qi (cfs)	Qb (cfs)
Curb-Opening	8.22	8.00	0.990	0.98	0.00

Req'd C-15.20 Type 3 Curb Opening Inlet w/ 10' wing to account for 1.25 safety factor.

45/45

ARIZONA DEPARTMENT OF TRANSPORTATION

STORM SEWER INLET CALCULATION RECORD

LOCATION DATA

Highway SR51, SQUAW PEAK HWY

Location RAMP T-BIRD "A"

Project No.

DESIGN DATA

Frequency 50 years

P_6= 2.80 in. P_{24}= 3.38 in. P_1= ~~1.59~~ 1.77 in.

T_{all} = T_{10} = T_{50} = 8'

n 0.016

INLET CALCULATIONS

Inlet No	Inlet Station	DA No	SHLD	Inlet Type	Q cfs	Q_c cfs	Q_T cfs	So %	Appr ① Gutter S_x	Appr ① Gutter z/n	Shoulder Pavement S_x	Shoulder Pavement z/n	Approach ① D ft.	Approach ① T ft.	Approach ① a in.	Inlet Act.	Inlet Corr.	Q_i/Q	Q_i cfs	Q_c cfs
225	1+95		8'	C-15.97R W/ SLOTTED DRAIN	1.53			.4833	.067		.02/"		.28	8.30	1.40	6	4.02	.97	1.50	.03
232	14+75		8'	C-15.91 W/ SLT " DKN	6.84			.2092	"		.02/"		.56	18.64	1.40	16	10.72	1	6.82	.02
233	15+10		8'	"	0.30			SUMP	"		.02/"		<.1	<2.5	1.40			1	0.30	0.00
236	15+50		8'	"	1.50			.2215	"		.0193/"		.36	8.78	1.42	2	1.34	.94	1.41	.09

① DEPRESS 1" @ CB TO OBTAIN 3" GUTTER DEPRESSION, SX = 0.100'/FT & ADD 1" TO 'a'

Computed by: D. Schaub Checked by: Date:

8/7/95

20-0405 12/74

1/3

ARIZONA DEPARTMENT OF TRANSPORTATION

STORM SEWER INLET CALCULATION RECORD

LOCATION DATA

Highway SR51, SQUAW PEAK HWY

Location RAMP T-BIRD 'B'

Project No.

DESIGN DATA

Frequency 50 years

P_6= 2.80 in. P_{24}= 3.33 in. P_1= ~~1.59~~ 1.77 in.

$T_{all} = T_{10} = T_{50} = 8'$

n 0.016

INLET CALCULATIONS

Inlet No	Inlet Station	DA No	SHLD	Inlet Type	Q cfs	Q_c cfs	Q_T cfs	So %	Appr ① Gutter S_x	Appr ① Gutter z/n	Shoulder Pavement S_x	Shoulder Pavement z/n	Approach ① D ft.	T ft.	a in.	Inlet Act.	Inlet Corr.	Q_i/Q	Q_i cfs	Q_c cfs
223	7+85		8'	C-15.91 W/ SLOTTED DRAIN	2.56			1.3656	.067		~~.0167~~ "		.32	7.33	1.50	5	3.35	1	2.55	.01
227	11+07 Lt			C-15.80 median	2.61								.26							
229	14+65		8'	"	2.96			1.1053	"		~~.0651~~ "		.36	4.71	0.05	4	2.68	.99	2.93	.03
231	20+20		8'	"	1.81			SUMP	"		~~.047~~ "		.16	2.5	0.59			1.0	1.81	0.00
234	22+15		8'	"	1.22			SUMP	"		~~.02~~ "		0.11	<2.5	1.40			1.0	1.22	0.00
235	22+82		8'	"	1.11			.4128	"		~~.02~~ "		.30	~~5~~ 5.51	1.40	—	—	.97	1.08	.03
230	14+00 Lt			C-15.80 median	1.92								.26							
273	17+25 Lt			"	1.67								.19							
297	22+15 Rt			"	3.01								.29							

① DEPRESS 1" @ CB TO OBTAIN 3" GUTTER DEPRESSION, SX = 0.100'/FT & ADD 1" TO 'a'

Computed by: D. Schaub Checked by: Date: 8/7/95

20-0405 12/74

2/3

****
***** ROADWAY DRAINAGE DESIGN *****
****

DESIGNER: Dave Schaub

DATE: 08-10-1995

PROJECT: Squaw Peak

PROJECT NO.: SR51

INLET NO.: 225

STATION: 1+95 T-BIRD-

DRAINAGE AREA: X Acres

DESIGN FREQUENCY: 50 Years

ROADWAY & DISCHARGE DATA

Cross-Slope	S (ft/ft)	Sx (ft/ft)	n	Q (cfs)	T (ft)
Composite	0.005	0.020	0.016	1.53	8.30

GUTTER FLOW

W (ft)	Sw (ft/ft)	a (in)	Eo	d (ft)	V (fps)
2.50	0.066	1.40	0.745	0.28	1.83

INLET INTERCEPTION

Inlet Type	LT or W (ft)	L (ft)	E	Qi (cfs)	Qb (cfs)
Slotted Drain	9.89	4.00	0.600	0.92	0.60
P-1-7/8	2.50	1.40	0.950	0.57	0.03
Combination			0.980	1.50	0.03

Req'd Lon = 1.49 x 4 = 5.96 Say 6'

3/8

****
***** ROADWAY DRAINAGE DESIGN *****
****

DESIGNER: Nasir Raza

DATE: 07-20-1995

PROJECT: SR 51

PROJECT NO.: Squaw Pe

INLET NO.: R-TBIRD A # 232

STATION: 14+75+

DRAINAGE AREA: Acres

DESIGN FREQUENCY: 50 Years

ROADWAY & DISCHARGE DATA

Cross-Slope	S (ft/ft)	Sx (ft/ft)	n	Q (cfs)	T (ft)
Composite	0.002	0.020	0.016	6.89	18.64

GUTTER FLOW

W (ft)	Sw (ft/ft)	a (in)	Eo	d (ft)	V (fps)
3.00	0.083	2.28	0.476	0.56	1.83

INLET INTERCEPTION

Inlet Type	LT or W (ft)	L (ft)	E	Qi (cfs)	Qb (cfs)
Slotted Drain	15.26	10.00	0.850	5.87	1.02
P-1-7/8	3.00	1.40	0.930	0.95	0.07
Combination			0.990	6.82	0.07

REQ'D SLOTTED DRAIN LENGTH = 1.49 x 10 = 16 FT

4/8

****
***** ROADWAY DRAINAGE DESIGN *****
****

DESIGNER: Nasir Raza DATE: 07-20-1995

PROJECT: SR 51 PROJECT NO.: Squaw Pe

INLET NO.: R-TBIRD A # 236 STATION: 15+50

DRAINAGE AREA: Acres DESIGN FREQUENCY: 50 Years

ROADWAY & DISCHARGE DATA

Cross-Slope	S (ft/ft)	Sx (ft/ft)	n	Q (cfs)	T (ft)
Composite	0.002	0.019	0.016	1.50	8.78

GUTTER FLOW

W (ft)	Sw (ft/ft)	a (in)	Eo	d (ft)	V (fps)
3.00	0.083	2.31	0.835	0.36	1.45

INLET INTERCEPTION

Inlet Type	LT or W (ft)	L (ft)	E	Qi (cfs)	Qb (cfs)
Slotted Drain	6.54	1.00	0.250	0.38	1.12
P-1-7/8	3.00	1.40	0.910	1.03	0.09
Combination			0.940	1.41	0.09

REQ'D SLOTTED DRAIN LENGTH = 1.49 x 1 = 2 FT

```
****************************************
*****    ROADWAY DRAINAGE DESIGN    *****
****************************************
```

DESIGNER: Nasir Raza

DATE: 07-20-1995

PROJECT: SR 51

PROJECT NO.: Squaw Pe

INLET NO.: R-TBIRD B #223

STATION: 7+85

DRAINAGE AREA: Acres

DESIGN FREQUENCY: 50 Years

ROADWAY & DISCHARGE DATA

Cross-Slope	S (ft/ft)	Sx (ft/ft)	n	Q (cfs)	T (ft)
Composite	0.014	0.017	0.016	2.57	7.33

GUTTER FLOW

W (ft)	Sw (ft/ft)	a (in)	Eo	d (ft)	V (fps)
3.00	0.083	2.40	0.913	0.32	3.43

INLET INTERCEPTION

Inlet Type	LT or W (ft)	L (ft)	E	Qi (cfs)	Qb (cfs)
Slotted Drain	13.63	3.00	0.360	0.92	1.64
P-1-7/8	3.00	1.40	0.980	1.62	0.02
Combination			0.992	2.55	0.02

REQ'D SLOTTED DRAIN LENGTH = 1.49 x 3 = 5 FT

****
***** ROADWAY DRAINAGE DESIGN *****
****

DESIGNER: Nasir Raza DATE: 07-20-1995

PROJECT: SR 51 PROJECT NO.: Squaw Pe

INLET NO.: R-TBIRD B # 229 STATION: 14+65

DRAINAGE AREA: Acres DESIGN FREQUENCY: 50 Years

ROADWAY & DISCHARGE DATA

Cross-Slope	S (ft/ft)	Sx (ft/ft)	n	Q (cfs)	T (ft)
Composite	0.011	0.065	0.016	2.98	4.71

GUTTER FLOW

W (ft)	Sw (ft/ft)	a (in)	Eo	d (ft)	V (fps)
3.00	0.083	0.66	0.944	0.36	3.68

INLET INTERCEPTION

Inlet Type	LT or W (ft)	L (ft)	E	Qi (cfs)	Qb (cfs)
Slotted Drain	13.14	2.00	0.250	0.76	2.22
P-1-7/8	3.00	1.40	0.970	2.16	0.05
Combination			0.983	2.93	0.05

REQ'D SLOTTED DRAIN LENGTH = 1.49 x 2 = 4 FT

****
***** ROADWAY DRAINAGE DESIGN *****
****

DESIGNER: Nasir Raza

DATE: 07-20-1995

PROJECT: SR 51

PROJECT NO.: Squaw Pe

INLET NO.: R-TBIRD B #235

STATION: 22+82

DRAINAGE AREA: Acres

DESIGN FREQUENCY: 50 Years

ROADWAY & DISCHARGE DATA

Cross-Slope	S (ft/ft)	Sx (ft/ft)	n	Q (cfs)	T (ft)
Composite	0.004	0.020	0.016	1.12	5.51

GUTTER FLOW

W (ft)	Sw (ft/ft)	a (in)	Eo	d (ft)	V (fps)
3.00	0.083	2.28	0.965	0.30	1.90

INLET INTERCEPTION

Inlet Type	L (ft)	W (ft)	E	Qi (cfs)	Qb (cfs)
P-1-7/8	1.40	3.00	0.960	1.08	0.03

SLOTTED DRAIN NOT REQ'D

8/9

ARIZONA DEPARTMENT OF TRANSPORTATION

STORM SEWER INLET CALCULATION RECORD

LOCATION DATA

Highway SR 51, SQUAW PEAK HIGHWAY

Location NORTH BOUND

Project No.

DESIGN DATA

Frequency 10 years

P_6= 2.01 in. P_{24}= 2.32 in. P_1= 1.59 in.

(6) T_{all} 16.0, D ≤ 0.50 (7) T_{all} = 14.0

n 0.016 (8) T_{all} = 8.0

INLET CALCULATIONS

Inlet No	Inlet Station	DA No	Shld	Inlet Type	Q cfs	Q_c cfs	Q_T cfs	So %	APPR. (1) Gutter S_x 1/1	APPR. (1) Gutter z/n	SHOULDER Pavement S_x 1/1	SHOULDER Pavement z/n	APPR. (1) D ft.	T ft.	a in.	Inlet Act.	Inlet Corr.	Q_i/Q	Q_i cfs	Q_c cfs
121	210+50			C-15.80 median	0.87								<0.1							
124	214+25			C-15.80 median	1.75								0.21							
123	215+00 (3)		8'	C-15.91 w/ slotted Drn	7.81 (4)			.50	.067		.0389 / "	(7)→	.48	13.31	1.13					
123	215+00 (3)		8'	C-15.91 w/ slotted Drn	9.24 (5)			"	"		" / "		—	—	"					
128	223+95		10'	C-15.91 w/ slotted Drn	6.12			.3835	.067		.040 / .020	(6)→	.49	11.09	0.80					
134	229+50		10'	C-15.91 w/ slotted Drn	5.11			.3835	.067		.0373 / .02	(6)→	.46	10.45	0.88					
143	233+40		8'	C-15.91 w/ slotted Drn	1.03			.3435	.067		.020 / "	(8)→	.26	7.16	1.40					
142	234+90		8'	C-15.91 w/ slotted Drn	1.51			.343	.067		.020 / "	(8)→	.29	8.72	1.40					

(1) Depress 1" @ CL to obtain 3" gutter drop, S_x = 0.100 1/1 and add 1" to a.

Computed by: D. Schaub 8/7/95 Checked by: Date:

20-0405 12/74

(3) median shoulder

(4) ultimate, median paved w/ HOV lanes

(5) interim (Design for ultimate Peak)

6/7

ARIZONA DEPARTMENT OF TRANSPORTATION

STORM SEWER INLET CALCULATION RECORD

LOCATION DATA

Highway SR51, SQUAW PEAK HWY

Location NORTHBOUND

Project No.

DESIGN DATA

Frequency 10- years

P_6= 2.01 in. P_{24}= 2.37 in. P_1= 1.59 in.

T_{all}

n .016

INLET CALCULATIONS

Inlet No	Inlet Station	DA No	Sl/B	Inlet Type	Q cfs	Q_c cfs	Q_T cfs	So %	APP. ① Gutter S_x 1/1	APP. ① Gutter z/n	SHOULDER Pavement S_x 1/1	SHOULDER Pavement z/n	APPR. ① D ft.	T ft.	a in.	Inlet Act.	Inlet Corr.	Q_i/Q	Q_i cfs	Q_c cfs
149	236+10		8	C-15.91 w/ Slotted Drn	1.66			.3435	.067		.020/"	③→	.21	4.76	1.40					
148	237+20		8'	C-15.91 w/ Slotted Drn	1.59			.3435	.067		.020/"	③→	.21	4.60	1.40					
151	238+52		8'	C-15.91 w/ Slotted Drn	3.91			sump	.067		.020/"	①→	0.28	8.17	1.40					
153	244+30②		8'	C-15.91 w/ Slotted Drn	3.16④			.3835	.067		.020/"	①→	.36	11.97	1.40					
"	244+30②		"	" "	2.96⑤			"	"		.020/"		—	—	"					
154	244+30			C-15.90 median	2.15								.24							
156	248+25②		8'	C-15.91 w/ Slotted Drn	3.04④			.1502	.067		.020/.006	①→	0.41	14.50	1.40					
"	248+25②		"	" "	2.79⑤			"	"		.020/.006				"					

① Depress 1" @ CB To obtain 3" Gutter drop, S_x = 0.100 1/1, and add 1" to a.

Computed by: D. Schaub 8/7/95 Checked by: Date:

20-0405 12/74

② median shoulder ③ interim ④ ultimate, median paved w/ HOV lanes

⑤ interim (Design for ultimate flow)

6/7

ARIZONA DEPARTMENT OF TRANSPORTATION

STORM SEWER INLET CALCULATION RECORD

LOCATION DATA

Highway SR 51, SQUAW PEAK HWY

Location NORTH BOUND

Project No.

DESIGN DATA

Frequency 10 - years

P_6= 2.01 in. P_{24}= 2.32 in. P_1= 1.59 in.

T_{all}

n 0.016

INLET CALCULATIONS

Inlet No	Inlet Station	DA No	S/L	Inlet Type	Q cfs	Q_c cfs	Q_T cfs	So %	APPR. ① Gutter S_x 1/1	APPR. ① Gutter z/n	SHOULDER/ Pavement S_x 1/1	SHOULDER/ Pavement z/n	D ft.	T ft.	a in.	Inlet Act.	Inlet Corr.	Q_i/Q	Q_i cfs	Q_c cfs
157	248+25			C-15.80 median	2.96								0.28							
165	251+00		10'	C-15.91 w/ slotted Drn	3.99			.3835	.067		.02/.11	⑥→	.38	13.31	1.40					
164	252+55		8'	C-15.91 w/ slotted Drn	2.25			.3835	.067		.02/.11	⑦→	.32	12.34	1.40					
183	265+15		10'	C-15.91 w/ slotted Drn	5.97			.3532	.067		.04/.02	⑥→	.49	11.22	0.80					
111.3	266+90		10'	C-15.91 w/ slotted Drn	3.58			sump	.067		.04/.02	⑦→	.09	4.75	0.80					
187	268+60		10'	C-15.91 w/ slotted Drn	5.20			.3442	.067		.04/.02	⑥→	.49	10.25	0.80					
191	275+10		10'	C-15.91 w/ slotted Drn	5.83			1.6581	.067		.04/.02	⑥→	.37	7.64	0.80					

① Depress 1" @ CB to obtain 3" Gutter drop, Sx= 0.100 1/1 and add 1" to a.

Computed by: D. Schaub Checked by: Date: 8/7/95

20-0405 12/74

3/7

ARIZONA DEPARTMENT OF TRANSPORTATION

STORM SEWER INLET CALCULATION RECORD

LOCATION DATA

Highway SR 51, SQUAW PEAK HWY

Location NORTHBOUND

Project No.

DESIGN DATA

Frequency 10 years

P_6= 2.01 in. P_{24}= 2.37 in. P_1= 1.59 in.

T_{all}

n 0.016

INLET CALCULATIONS

Inlet No	Inlet Station	DA No	Sl/L	Inlet Type	Q cfs	Q_c cfs	Q_T cfs	So %	Gutter (APPR. ①) S_x 1/1	Gutter z/n	Pavement (SHOULDER/) S_x 1/1	Pavement z/n	D ft.	T ft.	a in.	Inlet Act.	Inlet Corr.	Q_i/Q	Q_i cfs	Q_c cfs
206	285+00		8'	C-15.91 w/ SLOTTED DRAIN	2.46			1.84	.067		.02/11	(8)→	0.26	7.28	1.40					
208	287+70		8'	C-15.92 w/ SLOTTED DRN	2.30			1.84	(2) .067		.02/11	(8)→	0.26	7.23	(2) 1.40					
210	290+40		8'	C-15.92 w/ SLOTTED DRN	5.59			1.84	(2) .067		.02/11	(7)→	0.34	11.19	(2) 1.40					
212	297+20		10'	C-15.92 w/ SLOTTED DRN	2.33			.9596	(2) .067		.02/11	(6)→	0.29	8.62	(2) 1.40					
215	300+00		10'	C-15.92 w/ SLOTTED DRN	2.40			.5620	.067 (2)		.02/11	(6)→	0.32	9.96	1.40 (2)					
218	302+62		8'	C-15.92 w/ SLOTTED DRN	3.26			.4200	.067 (2)		.02/11	(7)→	0.36	12.27	1.40 (2)					
224	306+85		10'	C-15.91 w/ SLOTTED DRN.	5.86			.4200	.067		.02/11	(6)	0.43	15.42	1.40					

① Depress 1" @ CB. TO OBTAIN 3" Gutter drop, Sx = 0.100 ", and add 1" to a.

② NO additional depression at CB with half barrier

Computed by: D. Schaub Checked by: Date: 8/7/95

20-0405 12/74

6/9

ARIZONA DEPARTMENT OF TRANSPORTATION

STORM SEWER INLET CALCULATION RECORD

LOCATION DATA

Highway SR51, SQUAW PEAK HWY

Location NORTHBOUND

Project No.

DESIGN DATA

Frequency 10 years

P_6= 2.01 in. P_{24}= 2.37 in. P_1= 1.59 in.

T_{all}

n 0.016

INLET CALCULATIONS

Inlet No	Inlet Station	DA No	24	Inlet Type	Q cfs	Q_c cfs	Q_T cfs	So %	APPR. ① Gutter S_x '/'	APPR. ① Gutter z/n	SHOULDER Pavement S_x '/'	SHOULDER Pavement z/n	APPR. ① D ft.	T ft.	a in.	Inlet Act.	Inlet Corr.	Q_i/Q	Q_i cfs	Q_c cfs
237	322+00		10'	C-15.92 w/ Slotted Drn	4.23			0.50	② .067		.02 '/'	⑥ →	0.28	13.22	② 1.40					

① Depress 1" @ CB TO OBTAIN 3" Gutter drop, Sr = 0.100 '/' and add 1" to a.

② NO additional depression at CB w/ half barrier

Computed by: Checked by: Date:

20-0405 12/74 D. Schaub 8/7/95

6/5

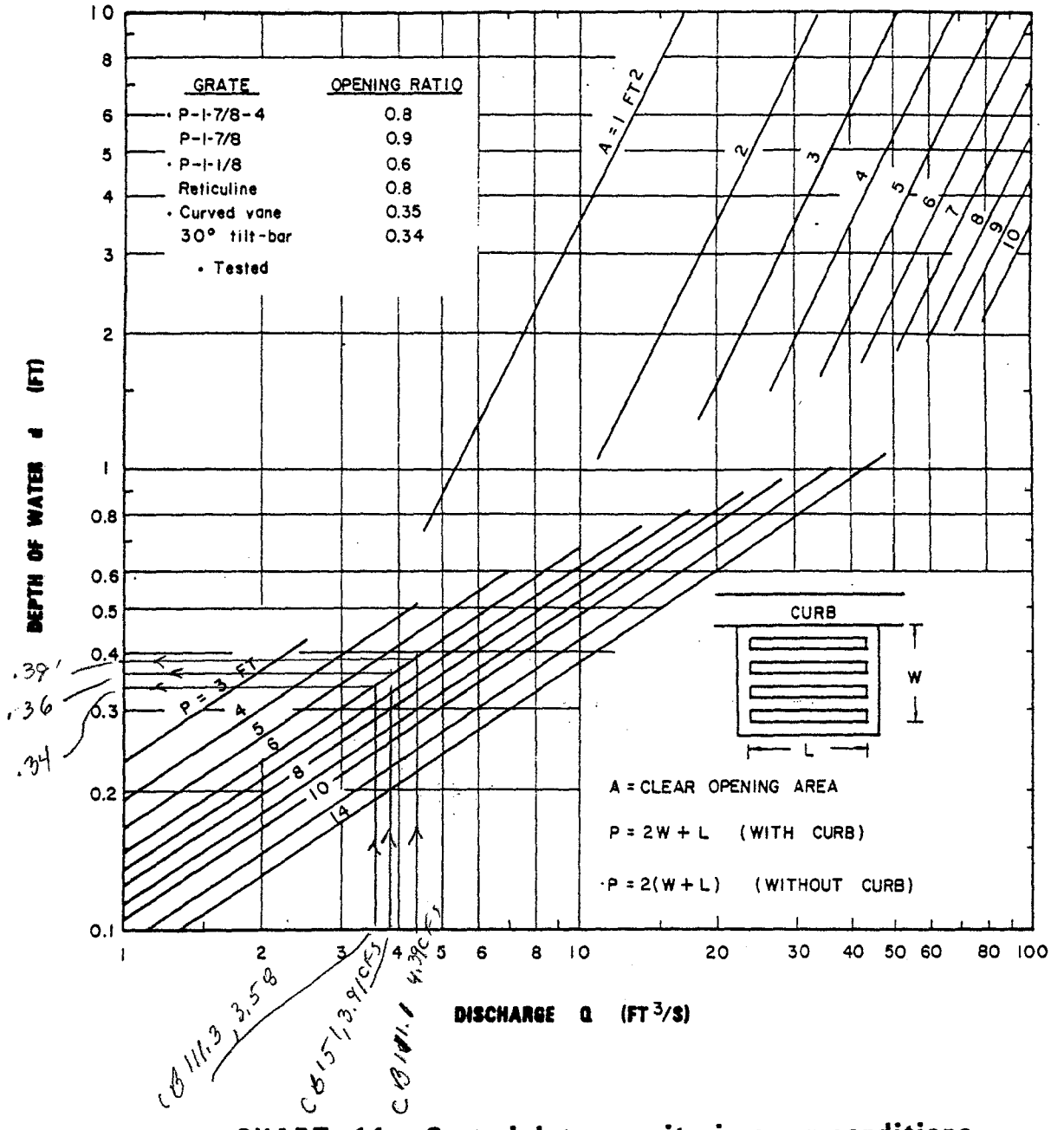

CHART 11. Grate inlet capacity in sump conditions.

10-Year Flows

CB's 111.1, 111.3, 151 (N.B. & SB SR51)

C - 15.91 (EFF P = 12 x 50% = 6)

71 (EFF AREA = 7.25 x 50% = 3.62 □'

6/7

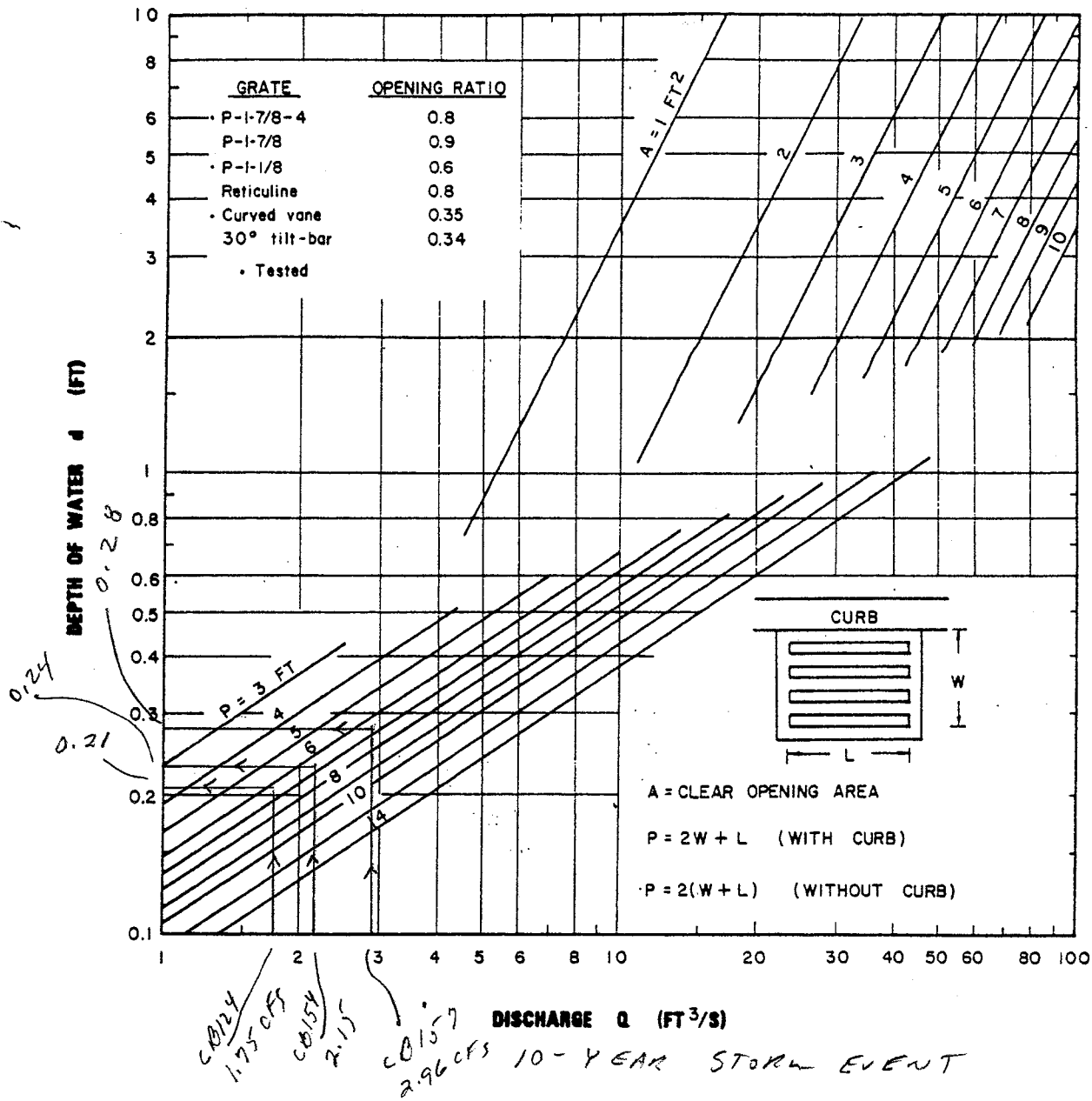

CHART 11. Grate inlet capacity in sump conditions.

CB 124, 154, 157

N B Land

7/7

ARIZONA DEPARTMENT OF TRANSPORTATION

STORM SEWER INLET CALCULATION RECORD

LOCATION DATA

Highway SR51, SQUAW PEAK HWY

Location SOUTHBOUND

Project No.

DESIGN DATA

Frequency 10 years

P_6= 2.01 in. P_{24}= 2.39 in. P_1= 1.59 in.

(6) T_{all} 16.0 max or $D \leq 0.50$ (7) T_{all} = 14.0

n 0.016 (8) T_{all} = 8.0

INLET CALCULATIONS

Inlet No	Inlet Station	DA No	Shld	Inlet Type	Q cfs	Q_c cfs	Q_T cfs	So %	Gutter S_x 1/1 (APPR (1))	Gutter z/n	Pavement S_x 1/1 (SHLD/)	Pavement z/n (APPR (1))	D ft.	T ft.	a in.	Inlet Act.	Inlet Corr.	Q_i/Q	Q_i cfs	Q_c cfs
119	210+50		10'	C-15.91 w/ slotted drn	6.32			2.1933	.067		.046 / 11	(6)→	0.37	6.91	0.62					
122	215+00		10'	C-15.91 w/ slotted drn	4.42			.8553	.067		.04 / .0293	(6)→	0.38	7.84	0.80					
127	223+75		10'	C-15.91 w/ slotted drn	6.75			.3835	.067		.04 / .02	(6)→	0.51	11.94	0.80					
132	229+85		10'	C-15.91 w/ slotted drn	6.05			.3835	.067		.0267 / .02	(6)→	0.46	14.40	1.20					
147	236+50		10'	C-15.91 w/ slotted drn	1.89			.3835	.067		.025 / .02	(7)→	0.31	8.35	1.25					
102.1	240+80		10'	C-15.91 w/ slotted drn	5.11			.3835	.067		.04 / .02	(6)→	0.46	9.86	0.80					
152	244+30		8'	C-15.91 w/ slotted drn	3.97			.3835	.067		.02 / .02	(7)→	0.38	13.25	1.40					

(1) Depress .1" @ CB to obtain 3" gutter depression, S_x = 0.100'/FT and add 1" to a

Computed by: D. Schaub Checked by: Date: 8/7/95

20-0405 12/74

1/5

ARIZONA DEPARTMENT OF TRANSPORTATION

STORM SEWER INLET CALCULATION RECORD

LOCATION DATA

Highway SR51, SQUAW PEAK HWY

Location SOUTH BOUND

Project No.

DESIGN DATA

Frequency 10 years

P_6= 2.01 in. P_{24}= 2.37 in. P_1= 1.59 in.

T_{all}

n 0.016

INLET CALCULATIONS

Inlet No	Inlet Station	DA No	Shld	Inlet Type	Q cfs	Q_c cfs	Q_T cfs	So %	Gutter S_x (APPR ①)	Gutter z/n	Pavement S_x (SHLD/)	Pavement ~~z/n~~ (APPR. ①)	D ft.	T ft.	a in.	Inlet Act.	Inlet Corr.	Q_i/Q	Q_i cfs	Q_c cfs
155	248+25		8'	C-15.91 w/ slotted drn	5.17			.3835	.067		.02/11	①→	0.41	14.38	1.40					
158	250+00		8'	C-15.91 w/ slotted drn	2.31			.4235	.067		.02/11	①→	0.32	11.66	1.40					
159	251+75		8'	C-15.91 w/ slotted drn	2.33			.4235	.067		.02/11	①→	0.32	10.27	1.40					
160	252+60		8'	C-15.91 w/ slotted drn	1.13			.4235	.067		.02/11	⑧→	0.18	3.10	1.40					
161	253+50		8'	C-15.91 w/ slotted drn	1.20			.4235	.067		.02/11	⑧→	0.18	3.28	1.40					
166	254+45		8'	C-15.91 w/ slotted Drn	1.28			.4235	.067		.02/11	⑧→	0.26	7.12	1.40					
167	255+40		8'	C-15.91 w/ slotted Drn	1.28			.4235	.067		.02/11	⑧→	0.26	7.12	1.40					
182	265+15		10'	C-15.91 w/ slotted Drn	6.33			.3532	.067		.04/.02	⑥→	0.50	11.69	0.80					

① Depress 1" @ CB to obtain 3" gutter depression, S_x = 0.100 1/FT and add 1" to a

Computed by: D. Schaub Checked by: Date: 8/7/95

20-0405 12/74

5/2

ARIZONA DEPARTMENT OF TRANSPORTATION

STORM SEWER INLET CALCULATION RECORD

LOCATION DATA

Highway: SR 51, SQUAW PEAK HWY

Location: SOUTH BOUND

Project No.:

DESIGN DATA

Frequency: 10 years

P_6 = 2.01 in. P_{24} = 2.37 in. P_1 = 1.57 in.

T_{all}:

n: 0.016

INLET CALCULATIONS

Inlet No	Inlet Station	DA No	SHLD	Inlet Type	Q cfs	Q_c cfs	Q_T cfs	So %	APPR ① Gutter S_x	APPR ① Gutter z/n	SHLD Pavement S_x	SHLD Pavement ~~z/n~~	APPR ① D ft.	APPR ① T ft.	APPR ① a in.	Inlet Act.	Inlet Corr.	Q_i/Q	Q_i cfs	Q_c cfs
101.1	266+90		10'	C-15.91 w/ sloped drn	4.39			sump	.067		.04/.02	⑥→	0.31	6.08	0.80					
186	268+60		10'	C-15.91 w/ sloped drn	5.56			.3442	.067		.04/.02	⑥→	0.48	10.76	0.80					
190	275+10		10'	C-15.91 w/ sloped drn	6.36			1.6581	.067		.04/.02	⑥→	0.39	7.96	0.80					
204	285+00		8'	C-15.92 w/ sloped drn	2.00			1.7005	②.067		.02/"	⑧→	0.25	6.84	②1.40					
207	287+50		8'	C-15.92 w/ sloped drn	2.04			1.7005	②.067		.02/"	⑧→	0.26	6.92	②1.40					
209	290+40		10'	C-15.92 w/ sloped drn	4.89			1.8400	②.067		.02/"	⑥→	0.33	10.53	②1.40					
213	297+20		8'	C-15.92 w/ sloped drn	2.29			.9196	②.067		.02/"	⑦→	0.29	8.64	②1.40					

① Depress 1" @ CB to obtain 3" gutter depression Sx = 0.100'/FT and add 1" to a

Computed by: D. Schaub 8/7/95 Checked by: Date:

20-0405 12/74

② no additional depression at CB w/ halt barrier

ARIZONA DEPARTMENT OF TRANSPORTATION

STORM SEWER INLET CALCULATION RECORD

LOCATION DATA

Highway SR51, SQUAW PEAK HWY

Location SOUTHBOUND

Project No.

DESIGN DATA

Frequency 10 years

P_6= 2.01 in. P_{24}= 2.39 in. P_1= 1.59 in.

T_{all}

n 0.016

INLET CALCULATIONS

Inlet No	Inlet Station	DA No	SKIP	Inlet Type	Q cfs	Q_c cfs	Q_T cfs	So %	APPR (1) Gutter S_x	APPR (1) Gutter z/n	SHLD1 Pavement S_x	SHLD1 Pavement ~~z/n~~	APPR (1) D ft.	APPR (1) T ft.	APPR (1) a in.	Inlet Act.	Inlet Corr.	Q_i/Q	Q_i cfs	Q_c cfs
214	300+00		8'	C-15.92 w/ slotted drn	1.10			.52 20	(2) .067		.02/11	(1)→	.25	6.81	(2) 1.40					
216	301+30		8'	C-15.92 w/ slotted drn	1.15			.38	(2) .067		.02/11	(8)→	.27	7.62	(2) 1.40					
217	302+62		8'	C-15.92 w/ slotted Drn	1.25			.38	(2) .067		.02/11	(8)→	.28	7.96	(2) 1.40					
219	304+00		8'	C-15.92 w/ slotted Drn	1.30			.38	(2) .067		.02/11	(8)→	.28	8.12	(2) 1.40					
220	305+40		8'	C-15.92 w/ slotted Drn	1.34			.38	(2) .067		.02/11	(8)→	.28	8.25	(2) 1.40					
222	306+80		8	C-15.92 w/ slotted Drn	1.39			.46 16	(2) .067		.02/11	(8)→	0.28	7.99	(2) 1.40					
226	310+67		10'	C-15.91 w/ slotted Drn	3.59			.40	.067		.02/11	(6)→	.37	12.67	1.40					

(1) Depress 1" @ CB to obtain 3" gutter depression, S_x = 0.100'/FT and add 1" to a.

Computed by: D. Schaub Checked by: Date: 8/7/95

20-0405 12/74

5/4 (2) NO additional depression at CB w/ halt barrier.

ARIZONA DEPARTMENT OF TRANSPORTATION

STORM SEWER INLET CALCULATION RECORD

LOCATION DATA

Highway: SR 51, SQUAW PEAK HWY

Location: SOUTH BOUND

Project No.:

DESIGN DATA

Frequency: 10 years

P_6= 2.01 in. P_{24}= 2.37 in. P_1= 1.59 in.

T_{all}:

n: 0.016

INLET CALCULATIONS

Inlet No	Inlet Station	DA No	Sh/L.	Inlet Type	Q cfs	Q_c cfs	Q_T cfs	So %	Gutter S_x (APPR ①)	Gutter z/n	Pavement S_x (SHLD)	Pavement z/n	D ft. (APPR ①)	T ft.	a in.	Inlet Act.	Inlet Corr.	Q_i/Q	Q_i cfs	Q_c cfs
238	322+00		10'	C-15.92 W/ SLOHED DRN	4.30			.45	② .069		.02 / "	⑥→	0.39	13.61	1.40 ②					

① Depress 1" @ CB to obtain 3" gutter depression, S_x = 0.100'/FT and add 1" to a

Computed by: D. Schaub 8/7/95 Checked by: Date:

20-0405 12/74

5/5 ② no additional depression at CB w/ half barrier.

ARIZONA DEPARTMENT OF TRANSPORTATION

STORM SEWER INLET CALCULATION RECORD

LOCATION DATA

Highway SR51, SQUAW PEAK HWY

Location RAMP SHEA 'B'

Project No.

DESIGN DATA

Frequency 10 years

P_6= 2.01 in. P_{24}= 2.37 in. P_1= 1.59 in.

T_{all} 7.25' CURB HEIGHT CONTROLS SPREAD

n 0.016

INLET CALCULATIONS

Inlet No	Inlet Station	DA No	Shld.	Inlet Type	Q cfs	Q_c cfs	Q_T cfs	So %	Appr ① Gutter S_x	Appr ① Gutter z/n	Shoulder Pavement S_x	Shoulder Pavement z/n	Approach ① D ft.	Approach ① T ft.	Approach ① a in.	Inlet Act.	Inlet Corr.	Q_i/Q	Q_i cfs	Q_c cfs
118	7+67		B	C-15.91 W/ SLOTTED DRAIN	3.37			SUMP	.067		~~.0146~~ "		0.26	4.53	0.62					

① Depress 1" at CB to obtain 3" Gutter drop, S_x = 0.100'/ft and add 1" to a.

Computed by: D. Schaub Checked by: 8/7/95 Date:

20-0405 12/74

1/1

ARIZONA DEPARTMENT OF TRANSPORTATION

STORM SEWER INLET CALCULATION RECORD

LOCATION DATA

Highway: SR51, SQUAW PEAK HWY

Location: RAMP SHEA 'C'

Project No.:

DESIGN DATA

Frequency: 10 years

P_6 = 2.01 in. P_{24} = 2.37 in. P_1 = 1.59 in.

$T_{all} = T_{10} = T_{50} = 8'$

n = 0.016

INLET CALCULATIONS

Inlet No	Inlet Station	DA No	SHLD	Inlet Type	Q cfs	Q_c cfs	Q_T cfs	So %	Appr. ① Gutter S_x ②	Appr. ① Gutter z/n	Shoulder Pavement S_x	Shoulder Pavement z/n	Approach ① D ft.	Approach ① T ft.	Approach ① a in.	Inlet Act.	Inlet Corr.	Q_i/Q	Q_i cfs	Q_c cfs
126	4+80		8'	C-15.92 w/ slotted DRN	0.94			2.830	.067		.016/"		.18	3.44	1.52					
130	13+00		8'	C-15.91 w/ SLOTTED DRAIN	0.88			1.2996	.067		.02/"		.22	2.68	1.40					
131	15+00		8'	"	1.05			0.3995	"		.02/"		.30	5.27	1.40					
139	16+00		8'	"	1.66			0.3995	"		.02/"		.34	7.60	1.40					
140	17+00		8'	"	1.20			0.2440	"		.02/"		.33	7.20	1.40					
140.1	18+00		8'	"	1.17			0.2440	"		.02/"		.33	7.07	1.40					
141	19+50		8'	"	1.75			0.2440	"		.02/"		.37	9.18	1.40					
129	11+00		8'	"	3.03			2.500	"		.02/"		.27	7.73	1.40					

① DEPRESS 1" @ CB TO OBTAIN 3" GUTTER DEPRESSION, SX = 0.100'/FT & ADD 1" TO 'a'

② No additional depression at CB w/half barrier (C-15.92)

Computed by: D. Schuck Checked by: Date: 8/7/95

t● 20-0405 12/74

2/4

ARIZONA DEPARTMENT OF TRANSPORTATION

STORM SEWER INLET CALCULATION RECORD

LOCATION DATA

Highway SR51, SQUAW PEAK HWY

Location RAMP SHEA 'D'

Project No.

DESIGN DATA

Frequency 10 years

P_6= 2.01 in. P_{24}= 2.37 in. P_1= 1.59 in.

$T_{all} = T_{10} = T_{50} = 8'$

n 0.016

INLET CALCULATIONS

	Inlet No	Inlet Station	DA No	SHLD	Inlet Type	Q cfs	Q_c cfs	Q_T cfs	So %	Appr. (1) Gutter S_x	Appr. (1) Gutter z/n	Shoulder Pavement S_x	Shoulder Pavement z/n	Approach (1) D ft.	T ft.	a in.	Inlet Act.	Inlet Corr.	Q_i/Q	Q_i cfs	Q_c cfs
15.97	125	4+65		8'	C-15.91 W/ SLOTTED DRAIN	.63			2.3100	.067		.018 / "		.18	2.16	1.46					
	137	10+75		8'	"	3.70			2.8079	.067		.02 / "		.32	6.72	1.40					
	139	12+75		8'	"	1.21			1.4682	.067		.02 / "		.25	2.95	1.40					
	146	14+75		8'	"	1.98			0.2610	.067		.02 / "		.38	9.67	1.40					
	145	15+75		8'	"	1.32			0.2610	.067		.02 / "		.34	7.51	1.40					
	144	16+75		8'	"	1.23			0.2610	.067		.02 / "		.33	7.15	1.40					

(1) DEPRESS 1" @ CB TO OBTAIN 3" GUTTER DEPRESSION, SX = 0.100'/FT & ADD 1" TO 'a'

Computed by: D. Schaub Checked by: 8/7/95 Date:

20-0405 12/74

4/6

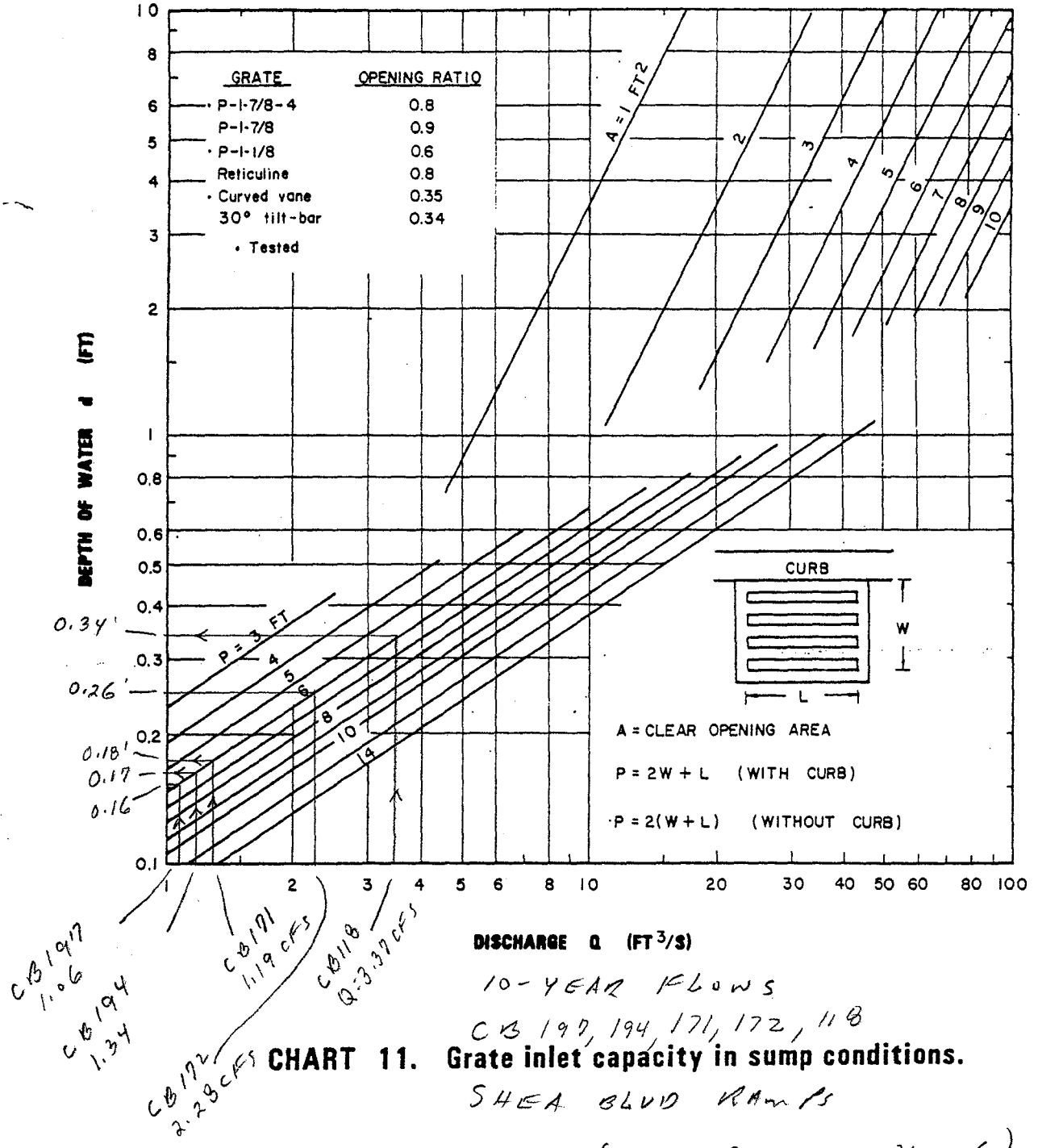

10-YEAR FLOWS

CB 197, 194, 171, 172, 118

CHART 11. Grate inlet capacity in sump conditions.

SHEA BLVD RAMPS

C-15.91 (EFF P = 12 x 50% = 6)

(EFF AREA = 7.25 x 50% = 3.62 a'

4/4

ARIZONA DEPARTMENT OF TRANSPORTATION

STORM SEWER INLET CALCULATION RECORD

LOCATION DATA

Highway SR51, SQUAW PEAK HWY

Location CACTUS RD.

Project No.

DESIGN DATA

Frequency 10 years

P_6= 2.01 in. P_{24}= 2.37 in. P_1= 1.59 in.

T_{all} 8'

n 0.016

INLET CALCULATIONS

APPR. ① SHOULDER APPROACH ①

Inlet No	Inlet Station	DA No	SHLD	Inlet Type	Q cfs	Q_c cfs	Q_T cfs	So %	Gutter S_x	Gutter z/n	Pavement S_x	Pavement z/n	D ft.	T ft.	a in.	Inlet Act.	Inlet Corr.	Q_i/Q	Q_i cfs	Q_c cfs
240	18+85 RT			C15.20 TYPE 3 C.B.	0.47			.5882	.083		.02/"		.15	5.38	1.52					
241	18+88 LT.			"	0.39			.6250	.083		.02/"		.14	4.86	1.52					
245	21+49 RT			"	0.24			.6250	.083		.02/"		.12	3.81	1.52					
246	21+72 LT			"	0.44			.5385	.083		.02/"		.15	5.33	1.52					

① DEPRESS 1" @ CB TO OBTAIN 3" GUTTER DEPRESSION, Sx = ~~0.100~~ 0.125 '/FT & ADD 1" TO 'a'

Computed by: D. Schaub Checked by: 3/7/95 Date:

20-0405 12/74

ARIZONA DEPARTMENT OF TRANSPORTATION

STORM SEWER INLET CALCULATION RECORD

LOCATION DATA

Highway SR51, SQUAW PEAK HWY

Location RAMP CACTUS 'A'

Project No.

DESIGN DATA

Frequency 10 years

P_6= 2.01 in. P_{24}= 2.37 in. P_1= 1.59 in.

$T_{all} = T_{10} = T_{50} = 8'$

n 0.016

INLET CALCULATIONS

Inlet No	Inlet Station	DA No	SHLD	Inlet Type	Q cfs	Q_c cfs	Q_T cfs	So %	Appr ① Gutter S_x	Appr ① Gutter z/n	Shoulder Pavement S_x	Shoulder Pavement z/n	Approach ① D ft.	Approach ① T ft.	Approach ① a in.	Inlet Act.	Inlet Corr.	Q_i/Q	Q_i cfs	Q_c cfs
168	0+40		8'	C-15.91 W/ SLOTTED DRAIN	1.35			.4979	.067		.02/"		.31	6.01	1.40					
169	1+40		8'	"	1.36			.4979	.067		.02/"		.31	6.04	1.40					
170	2+40		8'	"	1.38			.4979	.067		.02/"		.31	6.11	1.40					
171	3+37		8'	"	1.19			SUMP	.067		.02/"		.10	1.49'	1.40					
180	4+30		8'	"	3.96			.6242	.067		.02/"		.4	*1.13	1.40					
185	11+55		8'	"	1.52			2.9191	.067		.02/"		.21	4.85	1.40					

① DEPRESS 1" @ CB TO OBTAIN 3" GUTTER DEPRESSION, SX = 0.100'/FT & ADD 1" TO 'a'

Computed by: D. Schaub Checked by: 8/2/95 Date:

20-0405 12/74 * TWO-lane on-Ramp

2/2

ARIZONA DEPARTMENT OF TRANSPORTATION

STORM SEWER INLET CALCULATION RECORD

LOCATION DATA

Highway SR51, SQUAW PEAK HWY

Location RAMP CACTUS A-1

Project No.

DESIGN DATA

Frequency 10 years

P_6= 2.01 in. P_{24}= 2.37 in. P_1= 1.59 in.

T_{all} 8'

n 0.016

INLET CALCULATIONS

APPR. ① SHOULDER APPROACH ①

Inlet No	Inlet Station	DA No	SHLD	Inlet Type	Q cfs	Q_c cfs	Q_T cfs	So %	Gutter S_x	Gutter z/n	Pavement S_x	Pavement z/n	D ft.	T ft.	a in.	Inlet Act.	Inlet Corr.	Q_i/Q	Q_i cfs	Q_c cfs
239	1+12		8	C-15.20 TYPE 3	0.73			2.500	.083		.01 / 11		.18	2.21	1.76					

① DEPRESS 1" @ CB TO OBTAIN 3" GUTTER DEPRESSION, SX = ~~0.100~~ 0.125 '/FT & ADD 1" TO 'a'

Computed by: D. Schaub Checked by: 8/7/95 Date:

20-0405 12/74

ARIZONA DEPARTMENT OF TRANSPORTATION

STORM SEWER INLET CALCULATION RECORD

LOCATION DATA

Highway SR51, SQUAW PEAK HWY

Location RAMP CACTUS 'B'

Project No.

DESIGN DATA

Frequency 10 years

P_6= 2.01 in. P_{24}= 2.37 in. P_1= 1.59 in.

$T_{all} = T_{10} = T_{50} = 8'$

n 0.016

INLET CALCULATIONS

Inlet No	Inlet Station	DA No	SHLD	Inlet Type	Q cfs	Q_c cfs	Q_T cfs	So %	Appr. ① Gutter S_x	Appr. ① Gutter z/n	Shoulder Pavement S_x	Shoulder Pavement z/n	Approach ① D ft.	T ft.	a in.	Inlet Act.	Inlet Corr.	Q_i/Q	Q_i cfs	Q_c cfs
163	1+30		8'	C-15.91 W/ SLOTTED DRAIN	1.58			.5230	.067		.02/"		.32	6.67	1.40					
175	2+30		8'	"	1.48			.5230	"		.02/"		.32	6.34	1.40					
179	3+30		8'	"	1.50			.5230	"		.02/"		.32	6.41	1.40					
178	4+30		8'	"	1.51			.5230	"		.02/"		.32	6.44	1.40					
177	5+30		8'	"	1.55			.5252	"		.02/"		.32	6.56	1.40					
176	6+30		8'	"	1.55			.5252	"		.02/"		.32	6.56	1.40					
172	7+27		8'	"	2.28			Sump	"		.02/"		.18	3.17	1.40					

① DEPRESS 1" @ CB TO OBTAIN 3" GUTTER DEPRESSION, SX = 0.100'/FT & ADD 1" TO 'a'

Computed by: D. Schaub Checked by: 8/2/95 Date:

20-0405 12/74

4/4

ARIZONA DEPARTMENT OF TRANSPORTATION

STORM SEWER INLET CALCULATION RECORD

LOCATION DATA

Highway SR51, SQUAW PEAK HWY

Location RAMP CACTUS 'B'

Project No.

DESIGN DATA

Frequency 10 years

P_6= 2.01 in. P_{24}= 2.37 in. P_1= 1.59 in.

$T_{all} = T_{10} = T_{50} = 8'$

n 0.016

INLET CALCULATIONS

Inlet No	Inlet Station	DA No	SHLD	Inlet Type	Q cfs	Q_c cfs	Q_T cfs	So %	Appr. ① Gutter S_x ②	Appr. ① Gutter z/n	Shoulder Pavement S_x	Shoulder Pavement z/n	Approach ① D ft.	T ft.	a in.	Inlet Act.	Inlet Corr.	Q_i/Q	Q_i cfs	Q_c cfs
181	9+55		8'	C-15.91 w/ SLOTTED DRAIN	1.24			1.5285	.067		.0178 / "		.25	2.95	1.49					
184	12+10		8'	"	1.64			3.3446	"		.02 / "		.24	2.83	1.40					
188	15+51		8'	C-15.92 w/ Slotted Drain	2.20			2.7778	"		.01923 / "		.24	6.41	1.43					

① DEPRESS 1" @ CB TO OBTAIN 3" GUTTER DEPRESSION, SX = 0.100'/FT & ADD 1" TO 'a'

② No additional depression at CB w/ half barrier (C-15.92)

Computed by: D. Schaus Checked by: Date: 8/9/95

20-0405 12/74

21/5

ARIZONA DEPARTMENT OF TRANSPORTATION

STORM SEWER INLET CALCULATION RECORD

LOCATION DATA

Highway SR51, SQUAW PEAK HWY

Location RAMP CACTUS B-1

Project No.

DESIGN DATA

Frequency 10 years

P_6= 2.01 in. P_{24}= 2.37 in. P_1= 1.59 in.

T_{all} 8'

n 0.016

INLET CALCULATIONS

APPR① SHOULDER APPROACH①

Inlet No	Inlet Station	DA No	SHLD	Inlet Type	Q cfs	Q_c cfs	Q_T cfs	So %	Gutter S_x	Gutter z/n	Pavement S_x	Pavement z/n	D ft.	T ft.	a in.	Inlet Act.	Inlet Corr.	Q_i/Q	Q_i cfs	Q_c cfs
144	1+22 RT.		8	C-15.90 TYPE 3 C.B.	0.68			1.2500	.083		.010 / "		0.22	2.61	1.76					
		NOTE:		SPREAD COMPUTED FOR					0.8	CFS										

① DEPRESS 1" @ CB TO OBTAIN 3" GUTTER DEPRESSION, SX = ~~0.100~~ 0.125 '/FT & ADD 1" TO 'a'

Computed by: D. Schaub Checked by: 8/7/95 Date:

20-0405 12/74

2/9

ARIZONA DEPARTMENT OF TRANSPORTATION

STORM SEWER INLET CALCULATION RECORD

LOCATION DATA

Highway SR51, SQUAW PEAK HWY

Location RAMP CACTUS 'C'

Project No.

DESIGN DATA

Frequency 10 years

P_6= 2.01 in. P_{24}= 2.37 in. P_1= 1.59 in.

$T_{all} = T_{10} = T_{50} = 8'$

n 0.016

INLET CALCULATIONS

Inlet No	Inlet Station	DA No	SHLD	Inlet Type	Q cfs	Q_c cfs	Q_T cfs	So %	Appr ① Gutter S_x	Appr ① Gutter z/n	Shoulder Pavement S_x	Shoulder Pavement z/n	Approach ① D ft.	T ft.	a in.	Inlet Act.	Inlet Corr.	Q_i/Q	Q_i cfs	Q_c cfs
192	9+35		8'	C-15.91 W/ SLOTTED DRAIN	2.36			.6468	.067		.02/"		.035	8.17	1.40					
197	10+40		8'	"	1.06			SUMP	"		.02/"		.08	11.19	1.40					
198	11+46		8'	"	1.20			.5494	"		.02/"		.29	5.14	1.40					
202	13+40		8'	"	2.14			1.6493	"		.02/"		.30	5.28	1.40					
202.1	14+50		8'	"	2.16			1.9895	"		.02/"		.29	4.86	1.40					
203	15+00		8'	"	2.30			1.9795	"		.02/"		.29	5.19	1.40					

① DEPRESS 1" @ CB TO OBTAIN 3" GUTTER DEPRESSION, SX = 0.100'/FT & ADD 1" TO 'a'

Computed by: D. Schnub Checked by: 8/7/95 Date:

20-0405 12/74

2/2

ARIZONA DEPARTMENT OF TRANSPORTATION

STORM SEWER INLET CALCULATION RECORD

LOCATION DATA

Highway SR51, SQUAW PEAK HWY

Location RAMP CACTUS 'C'

Project No.

DESIGN DATA

Frequency 10 years

P_6= 2.01 in. P_{24}= 2.37 in. P_1= 1.59 in.

T_{all}

n ① 0.016

ARRO SHOULDER APPROACH ①

INLET CALCULATIONS

Inlet No	Inlet Station	DA No	SHLD	Inlet Type	Q cfs	Q_c cfs	Q_T cfs	So %	Gutter S_x	Gutter z/n	Pavement S_x	Pavement z/n	D ft.	T ft.	a in.	Inlet Act.	Inlet Corr.	Q_i/Q	Q_i cfs	Q_c cfs
243	4+25		8'	C-15.91 W/ SLOTTED DRAIN	1.73			1.4122	.067		.0185 "		.28	4.73	1.45					

① DEPRESS 1" @ CB TO OBTAIN 3" GUTTER DEPRESSION, SX = 0.100'/FT & ADD 1" TO 'a'

Computed by: D. Schuub Checked by: 8/7/95 Date:

20-0405 12/74

21/00

ARIZONA DEPARTMENT OF TRANSPORTATION

STORM SEWER INLET CALCULATION RECORD

LOCATION DATA

Highway SR51, SQUAW PEAK HWY

Location RAMP CACTUS C-1

Project No.

DESIGN DATA

Frequency 10 years

P_6= 2.01 in. P_{24}= 2.37 in. P_1= 1.59 in.

T_{all} 8'

n 0.016

INLET CALCULATIONS

APPRO ① SHOULDER APPROACH ①

Inlet No	Inlet Station	DA No	SHLD	Inlet Type	Q cfs	Q_c cfs	Q_T cfs	So %	Gutter S_x	Gutter z/n	Pavement S_x	Pavement z/n	D ft.	T ft.	a in.	Inlet Act.	Inlet Corr.	Q_i/Q	Q_i cfs	Q_c cfs
242	1+84		8'	C-15.20 TYPE 3	0.77			1.82	.083 ~~.087~~		.008 "		0.11	9.07	1.76					

① DEPRESS 1" @ CB TO OBTAIN 3" GUTTER DEPRESSION, SX = ~~0.100~~ 0.125'/FT & ADD 1" TO 'a'

Computed by: D. Schaub Checked by: 8/7/95 Date:

20-0405 12/74

9/6

ARIZONA DEPARTMENT OF TRANSPORTATION

STORM SEWER INLET CALCULATION RECORD

LOCATION DATA

Highway SR51, SQUAW PEAK HWY

Location RAMP CACTUS 'D'

Project No.

DESIGN DATA

Frequency 10 years

P_6= 2.01 in. P_{24}= 2.37 in. P_1= 1.59 in.

$T_{all} = T_{10} = T_{50} = 8'$

n 0.016

INLET CALCULATIONS

Inlet No	Inlet Station	DA No	SHLD	Inlet Type	Q cfs	Q_c cfs	Q_T cfs	So %	Appr. ① Gutter S_x	Appr. ① Gutter z/n	Shoulder Pavement S_x	Shoulder Pavement z/n	Approach ① D ft.	Approach ① T ft.	Approach ① a in.	Inlet Act.	Inlet Corr.	Q_i/Q	Q_i cfs	Q_c cfs
195	7+65		8'	C-15.91 W/ SLOTTED DRAIN	2.43			.6195	.083		.02/"		.36	8.43	1.40					
194	8+77		8'	"	1.34			SUMP	"		.02/"		.09	1.34	1.40					
196	9+90		8'	"	0.86			.5088	"		.02/"		.31	5.92	1.40					
199	11+40		8'	"	0.98			1.2610	"		.02/"		.23	2.80	1.40					
200	12+85		8'	"	2.24			1.923	"		.02/"		.29	5.13	1.40					
201	14+50		8'	"	2.17			1.963	"		.02/"		.29	4.92	1.40					

① DEPRESS 1" @ CB TO OBTAIN 3" GUTTER DEPRESSION, SX = ~~0.100~~ 0.125 '/FT & ADD 1" TO 'a'

Computed by: D. Schoub Checked by: Date: 8/7/95

†● 20-0405 12/74

10/12

ARIZONA DEPARTMENT OF TRANSPORTATION

STORM SEWER INLET CALCULATION RECORD

LOCATION DATA

Highway SR51, SQUAW PEAK HWY

Location RAMP CACTUS 'D'

Project No.

DESIGN DATA

Frequency 10 years

P_6= 2.01 in. P_{24}= 2.37 in. P_1= 1.59 in.

T_{all} 8'

n 0.016

INLET CALCULATIONS

APPR ① SHOULDER APPROACH ①

Inlet No	Inlet Station	DA No	SHLD	Inlet Type	Q cfs	Q_c cfs	Q_T cfs	So %	Gutter S_x	Gutter z/n	Pavement S_x	Pavement z/n	D ft.	T ft.	a in.	Inlet Act.	Inlet Corr.	Q_i/Q	Q_i cfs	Q_c cfs
248	3+55		8'	C-15.91 W/ SLOTTED DRAIN	1.50			2.048%	.067		.0185 / "		.25	3.03	1.45					

① DEPRESS 1" @ CB TO OBTAIN 3" GUTTER DEPRESSION, SX = 0.100'/FT & ADD 1" TO 'a'

Computed by: D. Schaub Checked by: 8/7/95 Date:

20-0405 12/74

21/11

ARIZONA DEPARTMENT OF TRANSPORTATION

STORM SEWER INLET CALCULATION RECORD

LOCATION DATA

Highway SR51, SQUAW PEAK HWY

Location RAMP CACTUS D-1

Project No.

DESIGN DATA

Frequency 10 years

P_6= 2.01 in. P_{24}= 2.37 in. P_1= 1.59 in.

T_{all} 8'

n 0.016

INLET CALCULATIONS

APPR.① SHOULDER APPROACH①

Inlet No	Inlet Station	DA No	SHLD	Inlet Type	Q cfs	Q_c cfs	Q_T cfs	So %	Gutter S_x	Gutter z/n	Pavement S_x	Pavement z/n	D ft.	T ft.	a in.	Inlet Act.	Inlet Corr.	Q_i/Q	Q_i cfs	Q_c cfs
247	1+38		8'	C-15.91 W/ SLOTTED DRAIN	0.67			1.40	.067		.008 / "		0.20	2.38	1.76					

① DEPRESS 1" @ CB TO OBTAIN 3" GUTTER DEPRESSION, SX = 0.100'/FT & ADD 1" TO 'a'

Computed by: D. Schaub Checked by: 8/7/95 Date:

20-0405 12/74

21/21

ARIZONA DEPARTMENT OF TRANSPORTATION

STORM SEWER INLET CALCULATION RECORD

LOCATION DATA

Highway SR51, SQUAW PEAK HWY

Location RAMP T-BIRD "A"

Project No.

DESIGN DATA

Frequency 10 years

P_6= 2.01 in. P_{24}= 2.37 in. P_1= 1.59 in.

$T_{all} = T_{10} = T_{50} = 8'$

n 0.016

INLET CALCULATIONS

Inlet No	Inlet Station	DA No	SHLD	Inlet Type	Q cfs	Q_c cfs	Q_T cfs	So %	Appr ① Gutter S_x	Appr ① Gutter z/n	Shoulder Pavement S_x	Shoulder Pavement z/n	Approach ① D ft.	Approach ① T ft.	Approach ① a in.	Inlet Act.	Inlet Corr.	Q_i/Q	Q_i cfs	Q_c cfs
225	1+95		8'	C-15.92W1 SLOTTED DRAIN	1.13			.4833	.067		.02/"		.26	7.07	1.40					
232	14+75		8'	C-15.91 W1 6/0 Hed DRN	5.05			.2092	"		.02/"		.52	16.27	1.40					
233	15+10		8'	"	0.22			SUMP	"		.02/"		<.1	<1.5'	1.40					
236	15+50		8'	"	1.10			.2215	"		.0193/"		.33	7.13	1.42					

① DEPRESS 1" @ CB TO OBTAIN 3" GUTTER DEPRESSION, SX = 0.100'/FT & ADD 1" TO 'a'

Computed by: D. Schuub Checked by: Date: 8/7/95

20-0405 12/74

1/1

ARIZONA DEPARTMENT OF TRANSPORTATION

STORM SEWER INLET CALCULATION RECORD

LOCATION DATA

Highway SR51, SQUAW PEAK HWY

Location RAMP T-BIRD 'B'

Project No.

DESIGN DATA

Frequency 10 years

P_6= 2.01 in. P_{24}= 2.37 in. P_1= 1.59 in.

$T_{all} = T_{10} = T_{50}$ = 8'

n 0.016

INLET CALCULATIONS

Inlet No	Inlet Station	DA No	SHLD	Inlet Type	Q cfs	Q_c cfs	Q_T cfs	So %	Appr. ① Gutter S_x	Appr. ① Gutter z/n	Shoulder Pavement S_x	Shoulder Pavement z/n	Approach ① D ft.	T ft.	a in.	Inlet Act.	Inlet Corr.	Q_i/Q	Q_i cfs	Q_c cfs
223	7+85		8'	C-15.91 W/ SLOTTED DRAIN	1.89			1.3656	.067		.0167 / "		.29	5.53	1.50					
227	11+07			C-15.80 median	1.91								.21							
229	14+65		8'	"	2.18			1.1053	"		.0651 / "		.32	4.12	0.05					
231	20+20		8'	"	1.34			SUMP	"		.047 / "		.11	1.64	0.59					
234	22+15		8'	"	0.90			SUMP	"		.02 / "		<.1	<1.5	1.40					
235	22+82		8'	"	0.82			.4128	"		.02 / "		.27	3.97	1.40					
230	14+00			C-15.80 median	1.42						/		.17							
273	17+25			"	1.23								.16							
297	22+15			"	2.22						/		.24							

① DEPRESS 1" @ CB TO OBTAIN 3" GUTTER DEPRESSION, SX = 0.100'/FT & ADD 1" TO 'a'

Computed by: D. Schaub Checked by: Date: 8/7/95

20-0405 12/74

2/4

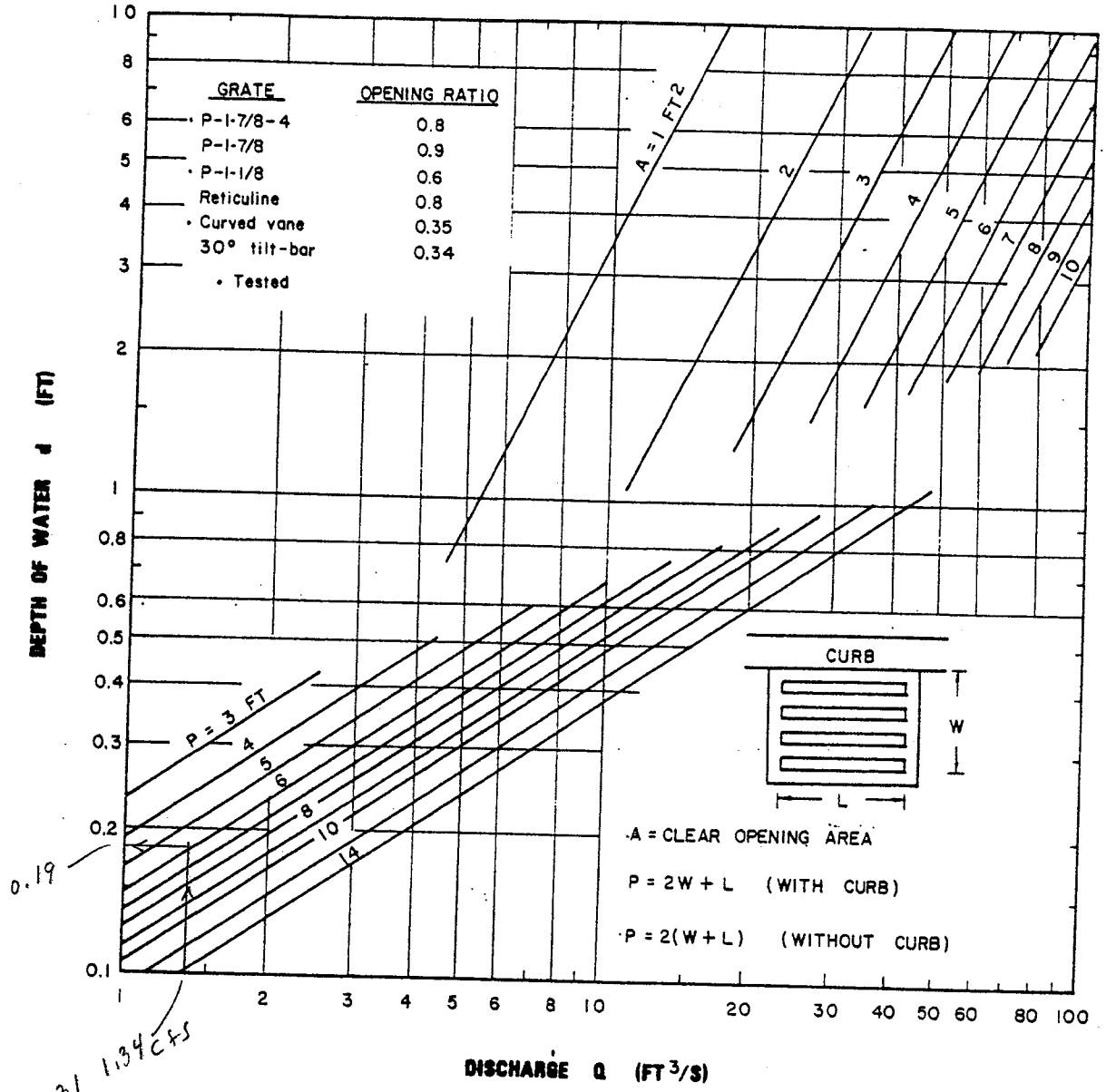

CB 231

10-YEAR FLOWS

CB 231

CHART 11. Grate inlet capacity in sump conditions.

T-Bird Ramps

C - 15.91 (EFF P = 12 x 50% = 6)

(EFF AREA = 7.25 x 50% = 3.62 SF

3/4

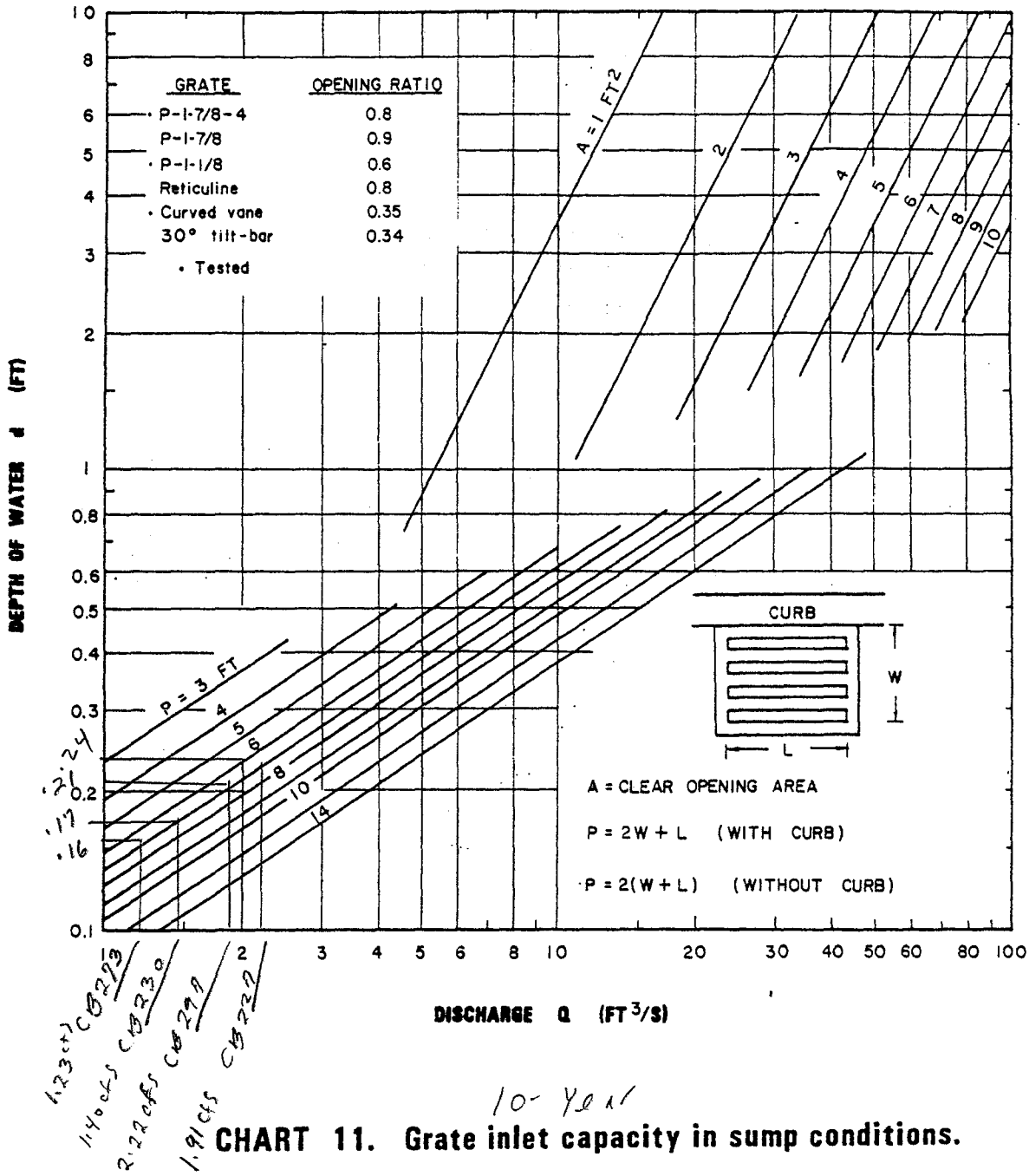

10-Year

CHART 11. Grate inlet capacity in sump conditions.

4/4

Appendix G
Storm Sewer Hydraulic Calculations

SR 51 MAIN S.D. SOUTH OF PUMP

WORK SHEET FOR STORM SEWER DESIGN

SURCHARGED FLOW

PROJECT _____ ROAD SR 51 COUNTY Maricopa DESIGN FREQUENCY 50- YR

COMPUTED BY D.J. Schaub DATE 7/29/95 CHECKED BY _____ DATE _____

Location		Pipe Data			Velocity Head				Pipe Head Losses				Structure Head Losses		Gradeline Elev. at Structure (2)		Vertical Control		
Station of Structure	Structure Type & No.	(1) Discharge	Pipe Size	Pipe Length	Mean Pipe Velocity	Pipe Velocity Head	Mean Channel Velocity	Channel Velocity Head	Coeff. K Bend Loss	Bend Energy Loss	Friction Slope	Friction Head Loss	Coeff. K Structure	Structure Energy Losses	E.G.L. Down-stream / Up-stream	H.G.L. Down-stream / Up-stream*	Invert Elev. Down-stream / Up-stream	Top of Struc. Elev.	Free-board
		Q			V_1	$V_1^2/2g$	V_2	$V_2^2/2g$	K_b		S_o		K						
		cfs	in.	ft.	fps	ft.	fps	ft.		ft.	ft/ft	ft.		ft.	ft.	ft.	ft.	ft.	ft.
1	2	3	4	5	6	7	8	9	10	11	12	13	14	15	16	17	18	19	20
mH 106	107	30.50 / 167	54"	404	10.50	1.71					.0059	2.38	(6) 1°.02	0.11	90.59 / 90.70	89.25 (5) / 89.99	84.22 / 84.72		
mH 107	108	27.43 / 151	54"	83	9.50	1.40					.0047	0.39	.05	0.09	93.08 / 93.17	91.68 / 91.77	87.10 / "		
mH 108	109	27.43 / 154	48"	453	12.23 / 16.65	2.32 / 4.30					.0096	4.35	(7) 6°.04	0.24	93.56 / 93.80	92.16 / 91.49	87.59 / 88.09		
mH 109	600	25.12 / 142	48"	120	11.27	1.97					.0084	1.01	60° .64	1.26	102.26 / 103.52	97.96 (8) / 101.55	95.20 / 96.20		
** mH 600	601	142	48"	375	11.27	1.97					.0094	3.15	57° .59	1.16	104.53 / 105.69	102.56 / 103.72	99.70 / "		
** mH 601															108.81	106.87	101.56		

* water surface elevation in structure. (2) Final HGL on attached Haestad method

** Existing manholes, Project to South.

(1) Preliminary Discharges shown ≈ Final Discharges (Attached Haestad method

Date July 2, 1979

FIGURE 2

2 of 15

BRW

JOB S.R. 51 SHEET NO.
MADE BY D. Schuck DATE 7/29/95 JOB NO.
CHECKED BY DATE SEC. SHT. NO.
CALCULATIONS FOR SR51 main storm drain
SOUTH OF PUMP

• MANHOLE AND JUNCTION LOSSES

NOTES:

① h = EXPANSION loss + Bend loss

$$h = 0.2\left[V_1^2/2g - V_2^2/2g\right] + 0.02\ V_2^2/2g$$

1°∡

$$h = 0.2\left[1.41 - .09\right] + .02 \times .09 = 0.27$$

② HGL = Comp. EGL − $V_1^2/2g$ or Invert + d_n

HGL 1374.17 − 1.41 = 1372.76

Q = 226 cfs

d_n (S = 0.00503) = 0.75 × 5.5 = 4.13 (66" pipe)

HGL 1368.26 (invert) + 4.13 = 1372.39

Use HGL = 1372.16

③ HGL = Comp EGL − $V_2^2/2g$ or Invert + d_n

HGL = (1374.17 + 2.39) − 1.41 = 1375.15

HGL = 1371.71 + 4.13 = 75.84 ⇐ USE

A (d_n = 4.14, 66" pipe) = .632 (5.5²) = 19.12

V = 226/19.12 = 11.82 fps ⇒ 2.17

EGL = 75.84 + 2.17 = 78.01

JOB SR 51 SHEET NO.

MADE BY D. Schaub DATE 7/29/95 JOB NO.

CHECKED BY DATE SEC. SHT. NO.

CALCULATIONS FOR SR 51, Main Storm Drain
SOUTH OF PUMP

NOTES:

(4) HGL = Comp EGL − $V_2^2/2g$ or Invert + d_n

HGL = (1378.01 + 0.10) − 1.78 = 1376.33

Q = 210 cfs

d_n (S = 0.00502 ft/ft, 60" Pipe) = 0.90 or Full

Assume Full Flow

HGL = 1372.21 + 5.0 = 1377.21 ⇐ use

(5) HGL = Comp EGL − $V_2^2/2g$ or Invert + d_n

HGL = (1388.25 + 2.34) − 1.31 = 1389.28 ← use

Q = 180 cfs

d_n (S = 0.00502 ft/ft, 60" Pipe) = 0.76

HGL = 1384.22 + 0.76 × 5 = 1388.02

(6) h = EXPANSION + BEND LOSS

$$h_L = 0.2\left[V_1^2/2g - V_2^2/2g\right] + .02\,\frac{V_2^2}{2g}$$

$$h_L = 0.2\left[1.71 - 1.31\right] + 0.02 \times 1.31 = 0.11$$

BRW

JOB SR 51 SHEET NO.
MADE BY D. Schaul DATE 7/29/95 JOB NO.
CHECKED BY DATE SEC. SHT. NO.
CALCULATIONS FOR SR 51, Main Storm Drain
SOUTH OF PUMP

NOTES:

(7) h = EXPANSION LOSS + BEND LOSS

$h_L = 0.2\,[2.32 - 1.40] + 0.04 \times 1.40 = 0.24$ ← 6° Bend

(8) HGL = COMP EGL − $V_2^2/2g$ or Invert + d_n

HGL = (93.80 + 4.35) − 2.32 = 95.83

Q = 154 CFS

d_n/D (S = .01570, 48") = 0.69

HGL = 1395.20 + .69 × 4 = 1397.96 ← use

A (d_n/D = 0.69, 48" pipe) = 0.578 (4)² = 9.25 S.F

V = 154/9.25 = 16.65 fps ⇒ 4.30

EGL = 1397.96 + 4.30 = 1402.26 ← USE

(9) Assume full flow for energy loss at manhole

$h_L = 0.64 \frac{V^2}{2g} = 0.64 \frac{(11.27)^2}{2g} = 1.26$

U.S. HGL = 1396.20 + 4.0 + 1.26 = 101.46

model 1 (Final Calculations)

Note: Two models required for S.D. South of Pump Station

SR 51, Squaw Peak Highway
Main Storm Drain, South of Pump Station
Schematic Diagram
Manholes 601, 600, 103 thru 109

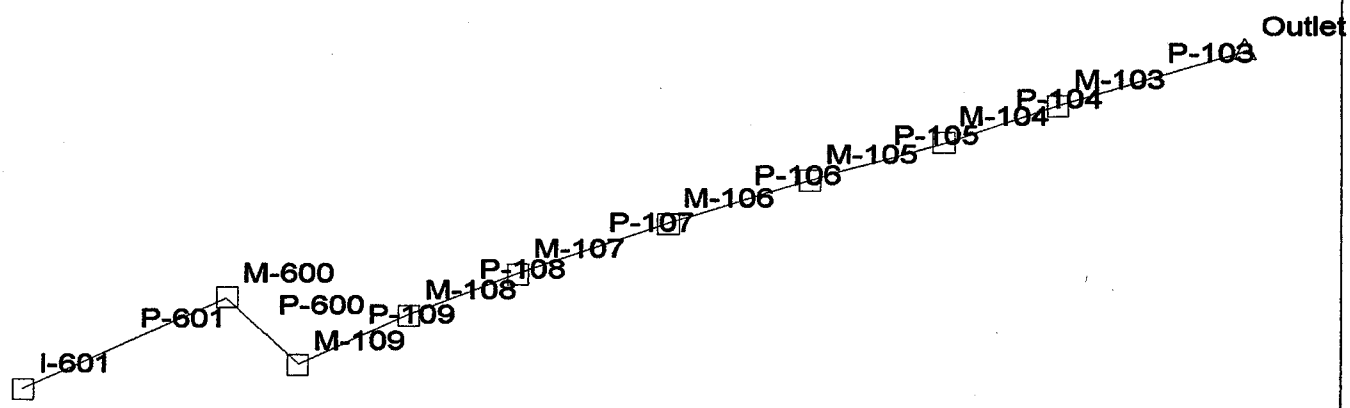

Combined Pipe/Node Report

Pipe	Upstream Node	Downstream Node	Length (ft)	Inlet Area (acres)	Inlet C	Inlet CA (acres)	Total CA (acres)	Inlet Discharge (cfs)	Section Size	Capacity (cfs)	Average Velocity (ft/s)	Upstream Invert Elevation (ft)	Downstream Invert Elevation (ft)
P-601	I-601	M-600	375.00	25.12	1.00	25.12	25.12	146.25	48 inch	109.59	11.64	1,401.56	1,399.70
P-600	M-600	M-109	120.00	0.00	0.00	0.00	25.12	0.00	48 inch	265.75	11.82	1,399.70	1,396.20
P-109	M-109	M-108	453.00	2.31	1.00	2.31	27.43	14.39	48 inch	194.94	13.41	1,395.20	1,388.09
P-108	M-108	M-107	83.00	0.00	0.00	0.00	27.43	0.00	54 inch	163.68	10.75	1,387.59	1,387.10
P-107	M-107	M-106	402.00	3.07	1.00	3.07	30.50	19.12	54 inch	163.91	11.78	1,387.10	1,384.72
P-106	M-106	M-105	603.00	3.17	1.00	3.17	33.67	19.75	60 inch	199.99	10.68	1,384.22	1,381.19
P-105	M-105	M-104	662.00	4.87	1.00	4.87	38.54	30.34	60 inch	199.50	11.04	1,381.19	1,377.88
P-104	M-104	M-103	652.00	2.96	1.00	2.96	41.50	18.44	60 inch	200.11	11.28	1,377.88	1,374.60
P-103	M-103	Outlet	476.00	0.86	1.00	0.86	42.36	5.36	60 inch	199.92	11.83	1,374.60	1,372.21

DOT Report

Pipe	-Node- Upstream Downstream	Inlet Area (acres)	Inlet CA (acres)	Total CA (acres)	-Ground- Upstream Downstream (ft)	-HGL- Upstream Downstream (ft)	-Slope- Energy Constructed (ft/ft)	-Section- Discharge Capacity (cfs)	-Section- Shape Size	Length (ft)	Average Velocity (ft/s)	Description
P-601	I-601	25.12	25.12	25.12	1,412.41	1,407.92	0.008834	146.25	Circular	375.00	11.64	
	M-600				1,411.30	1,404.61	0.004960	109.59	48 inch			
P-600	M-600	0.00	0.00	25.12	1,411.30	1,403.24	0.025057	143.69	Circular	120.00	11.82	
	M-109				1,406.19	1,400.52	0.029167	265.75	48 inch			
P-109	M-109	2.31	2.31	27.43	1,406.19	1,398.84	0.015539	156.03	Circular	453.00	13.41	
	M-108				1,397.87	1,391.46	0.015695	194.94	48 inch			
P-108	M-108	0.00	0.00	27.43	1,397.87	1,391.22	0.005218	153.10	Circular	83.00	10.75	
	M-107				1,397.04	1,391.05	0.005904	163.68	54 inch			
P-107	M-107	3.07	3.07	30.50	1,397.04	1,390.94	0.005924	169.49	Circular	402.00	11.78	
	M-106				1,394.33	1,388.51	0.005920	163.91	54 inch			
P-106	M-106	3.17	3.17	33.67	1,394.33	1,388.10	0.004856	183.48	Circular	603.00	10.68	
	M-105				1,391.94	1,385.54	0.005025	199.99	60 inch			
P-105	M-105	4.87	4.87	38.54	1,391.94	1,385.39	0.004679	203.31	Circular	662.00	11.04	
	M-104				1,389.09	1,382.64	0.005000	199.50	60 inch			
P-104	M-104	2.96	2.96	41.50	1,389.09	1,382.50	0.005010	214.19	Circular	652.00	11.28	
	M-103				1,386.93	1,379.25	0.005031	200.11	60 inch			
P-103	M-103	0.86	0.86	42.36	1,386.93	1,379.10	0.005148	213.96	Circular	476.00	11.83	
	Outlet				1,385.30	1,376.40	0.005021	199.92	60 inch			

Node Report

Node	Inlet Area (acres)	Inlet C	Inlet CA (acres)	External CA (acres)	Total CA (acres)	Inlet TC (min)	External TC (min)	Upstream Flow Time (min)	System Flow Time (min)	System Intensity (in/hr)	Total Watershed (CIA) (cfs)	Additional Flow (cfs)	Carryover (cfs)	Known Flow (cfs)
I-601	25.12	1.00	25.12	0.00	25.12	12.15	0.00	0.00	12.15	5.78	146.25	0.00	0.00	0.00
M-600	0.00	0.00	0.00	0.00	25.12	10.00	0.00	12.69	12.69	5.67	143.69	0.00	0.00	0.00
M-109	2.31	1.00	2.31	0.00	27.43	10.00	0.00	12.86	12.86	5.64	156.03	0.00	0.00	0.00
M-108	0.00	0.00	0.00	0.00	27.43	0.00	0.00	13.42	13.42	5.54	153.10	0.00	0.00	0.00
M-107	3.07	1.00	3.07	0.00	30.50	10.00	0.00	13.55	13.55	5.51	169.49	0.00	0.00	0.00
M-106	3.17	1.00	3.17	0.00	33.67	10.00	0.00	14.12	14.12	5.41	183.48	0.00	0.00	0.00
M-105	4.87	1.00	4.87	0.00	38.54	10.00	0.00	15.06	15.06	5.23	203.31	0.00	0.00	0.00
M-104	2.96	1.00	2.96	0.00	41.50	10.00	0.00	16.06	16.06	5.12	214.19	0.00	0.00	0.00
M-103	0.86	1.00	0.86	0.00	42.36	10.00	0.00	17.02	17.02	5.01	213.96	0.00	0.00	0.00
Outlet	N/A	N/A	N/A	N/A	42.36	N/A	0.00	17.69	17.69	4.93	210.72	N/A	N/A	0.00

Pipe Report

Pipe	Upstream Node	Downstream Node	Inlet Area (acres)	Inlet C	Inlet CA (acres)	Total CA (acres)	System Intensity (in/hr)	Discharge (cfs)	Length (ft)	Constructed Slope (ft/ft)	Section Size	Roughness	Capacity (cfs)
P-601	I-601	M-600	25.12	1.00	25.12	25.12	5.78	146.25	375.00	0.004960	48 inch	0.012	109.59
P-600	M-600	M-109	0.00	0.00	0.00	25.12	5.67	143.69	120.00	0.029167	48 inch	0.012	265.75
P-109	M-109	M-108	2.31	1.00	2.31	27.43	5.64	156.03	453.00	0.015695	48 inch	0.012	194.94
P-108	M-108	M-107	0.00	0.00	0.00	27.43	5.54	153.10	83.00	0.005904	54 inch	0.012	163.68
P-107	M-107	M-106	3.07	1.00	3.07	30.50	5.51	169.49	402.00	0.005920	54 inch	0.012	163.91
P-106	M-106	M-105	3.17	1.00	3.17	33.67	5.41	183.48	603.00	0.005025	60 inch	0.012	199.99
P-105	M-105	M-104	4.87	1.00	4.87	38.54	5.23	203.31	662.00	0.005000	60 inch	0.012	199.50
P-104	M-104	M-103	2.96	1.00	2.96	41.50	5.12	214.19	652.00	0.005031	60 inch	0.012	200.11
P-103	M-103	Outlet	0.86	1.00	0.86	42.36	5.01	213.96	476.00	0.005021	60 inch	0.012	199.92

model 2 (FINAL CALCULATIONS)

Note: Two models Required for S.D. South of Pump Station

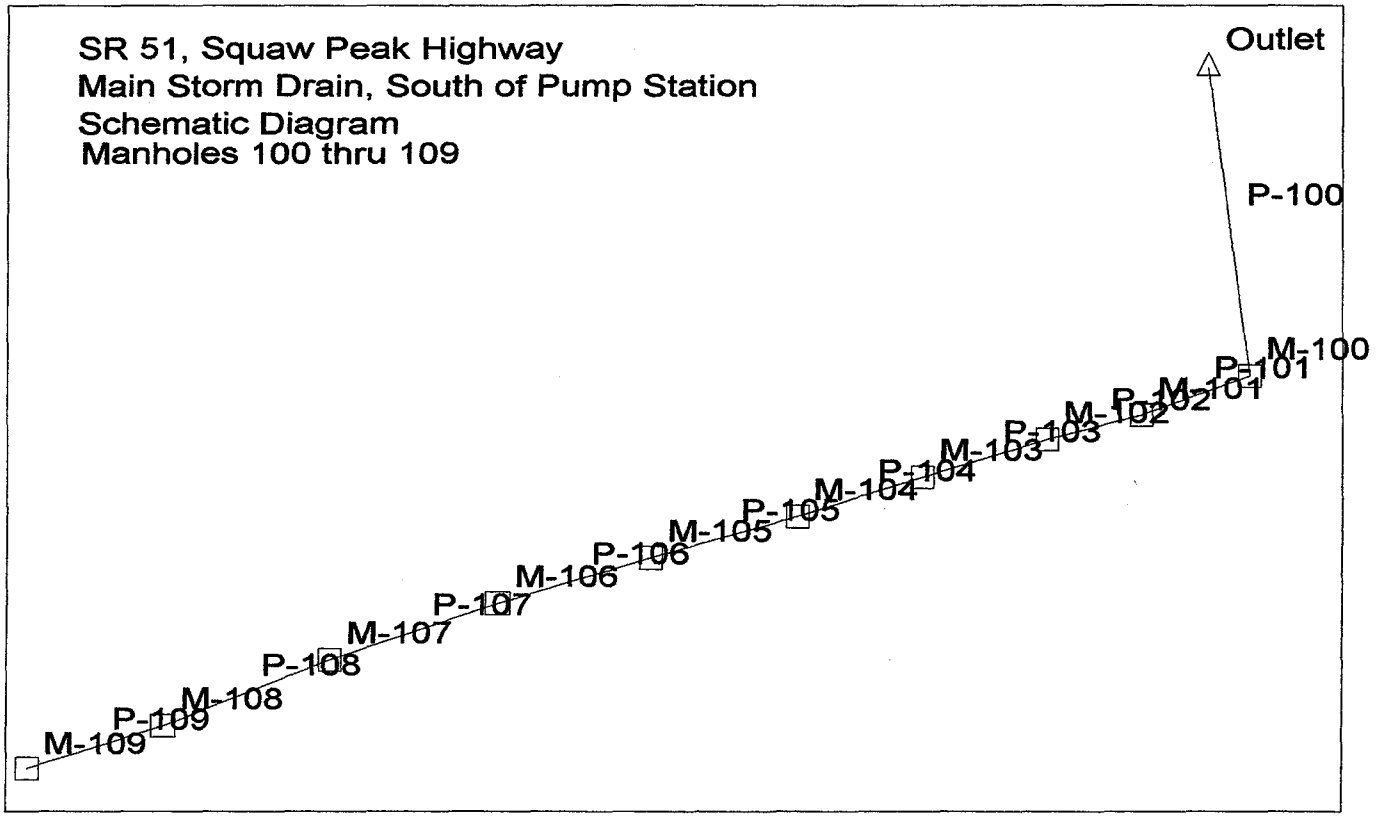

Combined Pipe/Node Report

Pipe	Upstream Node	Downstream Node	Length (ft)	Inlet Area (acres)	Inlet C	Inlet CA (acres)	Total CA (acres)	Inlet Discharge (cfs)	Section Size	Capacity (cfs)	Average Velocity (ft/s)	Upstream Invert Elevation (ft)	Downstream Invert Elevation (ft)
P-109	M-109	M-108	453.00	27.43	1.00	27.43	27.43	156.01	48 inch	194.94	13.41	1,395.20	1,388.09
P-108	M-108	M-107	83.00	0.00	0.00	0.00	27.43	0.00	54 inch	163.68	10.75	1,387.59	1,387.10
P-107	M-107	M-106	402.00	3.07	1.00	3.07	30.50	19.12	54 inch	163.91	11.78	1,387.10	1,384.72
P-106	M-106	M-105	603.00	3.17	1.00	3.17	33.67	19.75	60 inch	199.99	10.68	1,384.22	1,381.19
P-105	M-105	M-104	662.00	4.87	1.00	4.87	38.54	30.34	60 inch	199.50	11.04	1,381.19	1,377.88
P-104	M-104	M-103	652.00	2.96	1.00	2.96	41.50	18.44	60 inch	200.11	11.28	1,377.88	1,374.60
P-103	M-103	M-102	476.00	0.86	1.00	0.86	42.36	5.36	60 inch	199.92	11.83	1,374.60	1,372.21
P-102	M-102	M-101	685.00	4.38	1.00	4.38	46.74	27.28	66 inch	258.16	10.41	1,371.71	1,368.26
P-101	M-101	M-100	850.00	4.45	1.00	4.45	51.19	27.72	96 inch	383.41	4.94	1,365.76	1,364.48
P-100	M-100	Outlet	207.00	18.49	1.00	18.49	69.68	115.18	96 inch	363.38	6.27	1,364.48	1,364.20

DOT Report

Pipe	-Node- Upstream Downstream	Inlet Area (acres)	Inlet CA (acres)	Total CA (acres)	-Ground- Upstream Downstream (ft)	-HGL- Upstream Downstream (ft)	-Slope- Energy Constructed (ft/ft)	-Section- Discharge Capacity (cfs)	-Section- Shape Size	Length (ft)	Average Velocity (ft/s)	Description
P-109	M-109	27.43	27.43	27.43	1,406.19	1,398.84	0.015539	156.01	Circular	453.00	13.41	
	M-108				1,397.87	1,391.46	0.015695	194.94	48 inch			
P-108	M-108	0.00	0.00	27.43	1,397.87	1,391.22	0.005220	153.08	Circular	83.00	10.75	
	M-107				1,397.04	1,391.05	0.005904	163.68	54 inch			
P-107	M-107	3.07	3.07	30.50	1,397.04	1,390.94	0.005924	169.47	Circular	402.00	11.78	
	M-106				1,394.33	1,388.51	0.005920	163.91	54 inch			
P-106	M-106	3.17	3.17	33.67	1,394.33	1,388.10	0.004857	183.45	Circular	603.00	10.68	
	M-105				1,391.94	1,385.53	0.005025	199.99	60 inch			
P-105	M-105	4.87	4.87	38.54	1,391.94	1,385.39	0.004679	203.29	Circular	662.00	11.04	
	M-104				1,389.09	1,382.64	0.005000	199.50	60 inch			
P-104	M-104	2.96	2.96	41.50	1,389.09	1,382.50	0.005010	214.17	Circular	652.00	11.28	
	M-103				1,386.93	1,379.25	0.005031	200.11	60 inch			
P-103	M-103	0.86	0.86	42.36	1,386.93	1,379.10	0.005148	213.95	Circular	476.00	11.83	
	M-102				1,385.26	1,376.40	0.005021	199.92	60 inch			
P-102	M-102	4.38	4.38	46.74	1,385.26	1,376.27	0.003873	232.49	Circular	685.00	10.41	
	M-101				1,382.36	1,374.02	0.005036	258.16	66 inch			
P-101	M-101	4.45	4.45	51.19	1,382.36	1,373.75	0.000630	248.21	Circular	850.00	4.94	
	M-100				1,379.50	1,373.22	0.001506	383.41	96 inch			
P-100	M-100	18.49	18.49	69.68	1,379.50	1,372.40	0.000965	315.03	Circular	207.00	6.27	
	Outlet				1,380.00	1,372.20	0.001353	363.38	96 inch			

Node Report

Node	Inlet Area (acres)	Inlet C	Inlet CA (acres)	External CA (acres)	Total CA (acres)	Inlet TC (min)	External TC (min)	Upstream Flow Time (min)	System Flow Time (min)	System Intensity (in/hr)	Total Watershed (CIA) (cfs)	Additional Flow (cfs)	Carryover (cfs)	Known Flow (cfs)
M-109	27.43	1.00	27.43	0.00	27.43	12.86	0.00	0.00	12.86	5.64	156.01	0.00	0.00	0.00
M-108	0.00	0.00	0.00	0.00	27.43	0.00	0.00	13.42	13.42	5.54	153.08	0.00	0.00	0.00
M-107	3.07	1.00	3.07	0.00	30.50	10.00	0.00	13.55	13.55	5.51	169.47	0.00	0.00	0.00
M-106	3.17	1.00	3.17	0.00	33.67	10.00	0.00	14.12	14.12	5.41	183.45	0.00	0.00	0.00
M-105	4.87	1.00	4.87	0.00	38.54	10.00	0.00	15.06	15.06	5.23	203.29	0.00	0.00	0.00
M-104	2.96	1.00	2.96	0.00	41.50	10.00	0.00	16.06	16.06	5.12	214.17	0.00	0.00	0.00
M-103	0.86	1.00	0.86	0.00	42.36	10.00	0.00	17.02	17.02	5.01	213.95	0.00	0.00	0.00
M-102	4.38	1.00	4.38	0.00	46.74	10.00	0.00	17.69	17.69	4.93	232.49	0.00	0.00	0.00
M-101	4.45	1.00	4.45	0.00	51.19	10.00	0.00	18.79	18.79	4.81	248.21	0.00	0.00	0.00
M-100	18.49	1.00	18.49	0.00	69.68	10.00	0.00	21.66	21.66	4.49	315.03	0.00	0.00	0.00
Outlet	N/A	N/A	N/A	N/A	69.68	N/A	0.00	22.21	22.21	4.42	310.65	N/A	N/A	0.00

Pipe Report

Pipe	Upstream Node	Downstream Node	Inlet Area (acres)	Inlet C	Inlet CA (acres)	Total CA (acres)	System Intensity (in/hr)	Discharge (cfs)	Length (ft)	Constructed Slope (ft/ft)	Section Size	Roughness	Capacity (cfs)
P-109	M-109	M-108	27.43	1.00	27.43	27.43	5.64	156.01	453.00	0.015695	48 inch	0.012	194.94
P-108	M-108	M-107	0.00	0.00	0.00	27.43	5.54	153.08	83.00	0.005904	54 inch	0.012	163.68
P-107	M-107	M-106	3.07	1.00	3.07	30.50	5.51	169.47	402.00	0.005920	54 inch	0.012	163.91
P-106	M-106	M-105	3.17	1.00	3.17	33.67	5.41	183.45	603.00	0.005025	60 inch	0.012	199.99
P-105	M-105	M-104	4.87	1.00	4.87	38.54	5.23	203.29	662.00	0.005000	60 inch	0.012	199.50
P-104	M-104	M-103	2.96	1.00	2.96	41.50	5.12	214.17	652.00	0.005031	60 inch	0.012	200.11
P-103	M-103	M-102	0.86	1.00	0.86	42.36	5.01	213.95	476.00	0.005021	60 inch	0.012	199.92
P-102	M-102	M-101	4.38	1.00	4.38	46.74	4.93	232.49	685.00	0.005036	66 inch	0.012	258.16
P-101	M-101	M-100	4.45	1.00	4.45	51.19	4.81	248.21	850.00	0.001506	96 inch	0.012	383.41
P-100	M-100	Outlet	18.49	1.00	18.49	69.68	4.49	315.03	207.00	0.001353	96 inch	0.012	363.38

SR51 main S.D., North of Pump

WORK SHEET FOR STORM SEWER DESIGN

SURCHARGED FLOW

PROJECT _____ ROAD SR51 COUNTY Marion DESIGN FREQUENCY 50 - YR

COMPUTED BY D.J. Schaus DATE 7/29/95 CHECKED BY _____ DATE _____

Location		Pipe Data			Velocity Head				Pipe Head Losses				Structure Head Losses		Gradeline Elev. at Structure (2)		Vertical Control		
Station of Structure	Structure Type & No.	(1) Discharge	Pipe Size	Pipe Length	Mean Pipe Velocity	Pipe Velocity Head	Mean Channel Velocity	Channel Velocity Head	Coeff. K Bend Loss	Bend Energy Loss	Friction Slope	Friction Head Loss	Coeff. K Structure	Structure Energy Losses	E.G.L. Down-stream / Up-stream	H.G.L. Down-stream / Up-* stream	Invert Elev. Down-stream / Up-stream	Top of Struc. Elev.	Free-board
		Q			V_1	$V_1^2/2g$	V_2	$V_2^2/2g$	K_b		S_o		K						
		cfs	in.	ft.	fps	ft.	fps	ft.		ft.	ft/ft	ft.		ft.	ft.	ft.	ft.	ft.	ft.
1	2	3	4	5	6	7	8	9	10	11	12	13	14	15	16	17	18	19	20
Disch To Pump															1372.20	1372.20	64.20		
	100	67.98 / 30	96"	207	5.97	0.55					.00115	0.24			1372.75	"	"		
mH 100													90°∡		72.99	72.44	64.48		
	110	16.43 / 108	2-96"	350	2.39	0.09					.0002	0.07	1.34	0.94	73.73	73.64	"		
mH 110													(1)	0.19	73.80	73.71			
	111	15.29 / 104	48"	433	8.27	1.06					.0049	2.12			73.99	72.93			
mH 111													.05	0.05	76.11	75.05			
	112	10.48 / 71	42"	350	7.38	0.84					.0043	1.50			76.16	75.32			
mH 112													.05	0.04	77.66	76.82			
	113	7.33 / 52	36"	200	7.50	0.87					.0056	1.12			77.70	76.83			
mH 113													.05	0.04	78.82	77.95			
	114	7.33 / 53	36"	210	7.50	0.87					.0056	1.13			78.86	77.99			
mH 114													(3)	0.21	80.04	79.16 (4)			
	115	4.66 / 35	24	245	11.14	1.93					.022	5.39			80.25	78.32			
mH 115													(4)	0.10	85.64	83.71			
															85.74	84.76			

* water surface elevation in structure.

(1) Preliminary Discharges Shown ≃ Final Discharges (Attached Haestad method)

(2) FINAL HGL on attached Haestad method

Date July 2, 1979

FIGURE 2

1 of 1

1 of 9

SR 51 MAIN S.D., NORTH OF PUMP

WORK SHEET FOR STORM SEWER DESIGN

SURCHARGED FLOW

PROJECT _____ ROAD SR 51 COUNTY Maricopa DESIGN FREQUENCY 50- YR

COMPUTED BY D.J. Schaub DATE 7/29/95 CHECKED BY _____ DATE _____

Location		Pipe Data			Velocity Head				Pipe Head Losses				Structure Head Losses		Gradeline Elev. at Structure (2)		Vertical Control		
Station of Structure	Structure Type & No.	Discharge (1)	Pipe Size	Pipe Length	Mean Pipe Velocity	Pipe Velocity Head	Mean Channel Velocity	Channel Velocity Head	Coeff. K Bend Loss	Bend Energy Loss	Friction Slope	Friction Head Loss	Coeff. K Structure	Structure Energy Losses	E.G.L. Down-stream / Up-stream	H.G.L. Down-stream / Up-stream*	Invert Elev. Down-stream / Up-stream	Top of Struc. Elev.	Free-board
		Q			V_1	$V_1^2/2g$	V_2	$V_2^2/2g$	K_b		S_o		K						
		cfs	in.	ft.	fps	ft.	fps	ft.		ft.	ft/ft	ft.		ft.	ft.	ft.	ft.	ft.	ft.
1	2	3	4	5	6	7	8	9	10	11	12	13	14	15	16	17	18	19	20
MH 115													(4)	0.10	85.64	83.71			
	116	3.13/25	24	264	7.96	0.98					0.01	2.64	Inlet		85.74	84.76			
MH 116													1.25	1.23	88.38	87.40 (5)			
															89.61	89.61			

* water surface elevation in structure.

(1) Preliminary Discharges Shown = Final Discharges (Attached Haested Method)

(2) [illegible]

2 of 9

Date July 2, 1979

FIGURE 2

1 of 1

BRW

JOB SR 51 SHEET NO.
MADE BY D. Schaub DATE 7/29/95 JOB NO.
CHECKED BY DATE SEC. SHT. NO.
CALCULATIONS FOR SR 51 Main S.D.
NORTH OF PUMP

• Manhole and Junction Losses

NOTES:

① h = EXPANSION LOSS

$$h = 0.2\left[V_1^2/2g - V_2^2/2g\right]$$

$$h = 0.2\left[1.06 - 0.09\right] = 0.19$$

② HGL = COMP EGL − $V_2^2/2g$ or Invert + d_n

HGL = (78.86 + 1.18) − 0.87 = 79.16 ← use

Q = 53 CFS

d_n (S = 0.01181 ft/ft, 36" pipe) = 0.55 × 3 = 1.65

HGL = 1376.11 + 1.65 = 1377.76

③ h = Expansion Loss

$$h = 0.2\left[V_1^2/2g - \frac{V_2^2}{2g}\right]$$

$$h = 0.2\left[1.93 - 0.87\right] = 0.21$$

④ h = Contraction Loss

3 of 9

$$h = 0.1\left[V_2^2/2g - V_1^2/2g\right] = 0.1\left[1.93 - 0.98\right] = 0.10$$

BRW

JOB SR 51 SHEET NO.

MADE BY D. Schaub DATE 7/29/95 JOB NO.

CHECKED BY DATE SEC. SHT. NO.

CALCULATIONS FOR SR 51 MAIN SD
NORTH OF PUMP

(5) HGL = COMP EGL - $V_2^2/2g$ or Invert + d_n

HGL = (85.74 + 2.64) - 0.98 = 87.40 ← use

Q = 25 CFS

d_n (S = 0.02161'/FT, 24" pipe) = 0.60 × 2' = 1.20

HGL = 85.70 + 1.20 = 86.90

model 3 (Final Calculations)

SR 51, Squaw Peak Highway
Main Storm Drain, North of Pump Station
Schematic Diagram
Manholes 100, 110 thru 116

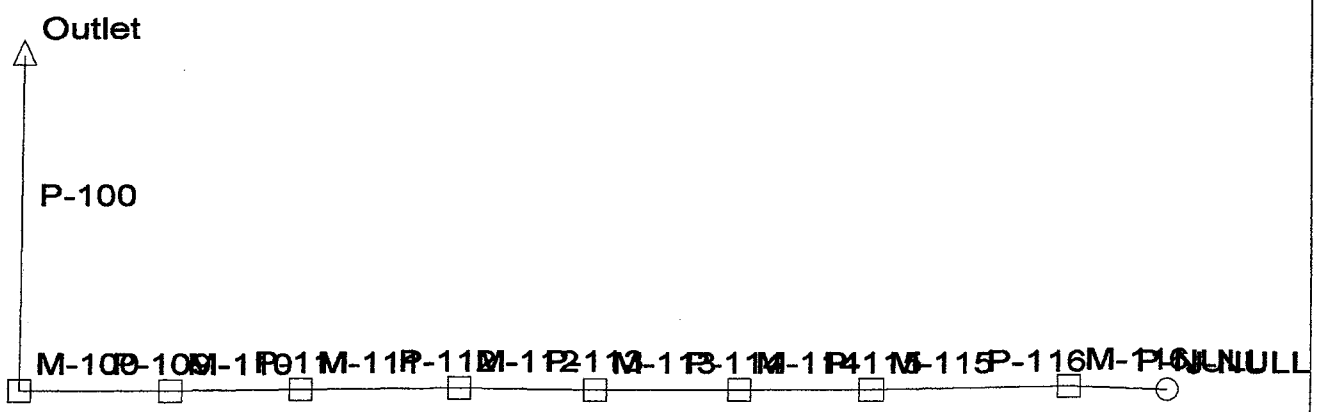

Combined Pipe/Node Report

Pipe	Upstream Node	Downstream Node	Length (ft)	Inlet Area (acres)	Inlet C	Inlet CA (acres)	Total CA (acres)	Inlet Discharge (cfs)	Section Size	Capacity (cfs)	Average Velocity (ft/s)	Upstream Invert Elevation (ft)	Downstream Invert Elevation (ft)
P-NULL	J-NULL	M-116	1.00	N/A	N/A	N/A	0.00	N/A	24 inch	0.00	0.00	1,385.70	1,385.70
P-116	M-116	M-115	264.00	3.13	1.00	3.13	3.13	25.37	24 inch	36.01	8.35	1,385.70	1,380.00
P-115	M-115	M-114	245.00	1.53	1.00	1.53	4.66	12.40	30 inch	48.26	8.02	1,380.00	1,377.11
P-114	M-114	M-113	210.00	2.67	1.00	2.67	7.33	21.64	36 inch	78.52	7.99	1,376.11	1,373.63
P-113	M-113	M-112	200.00	0.00	0.00	0.00	7.33	0.00	36 inch	57.58	7.82	1,373.63	1,372.36
P-112	M-112	M-111	350.00	2.84	1.00	2.84	10.17	23.02	42 inch	59.70	7.80	1,371.86	1,370.81
P-111	M-111	M-110	433.00	5.14	1.00	5.14	15.31	41.66	48 inch	85.26	8.65	1,370.31	1,369.01
P-109	M-110	M-100	350.00	1.14	1.00	1.14	16.45	9.24	96 inch	384.48	2.22	1,365.01	1,364.48
P-100	M-100	Outlet	207.00	53.23	1.00	53.23	69.68	240.66	96 inch	363.38	6.27	1,364.48	1,364.20

DOT Report

Pipe	-Node- Upstream Downstream	Inlet Area (acres)	Inlet CA (acres)	Total CA (acres)	-Ground- Upstream Downstream (ft)	-HGL- Upstream Downstream (ft)	-Slope- Energy Constructed (ft/ft)	-Section- Discharge Capacity (cfs)	-Section- Shape Size	Length (ft)	Average Velocity (ft/s)
P-NULL	J-NULL	N/A	N/A	0.00	1,392.60	1,385.70	-3.191833	0.00	Circular	1.00	0.00
	M-116				1,392.86	1,388.89	0.000000	0.00	24 inch		
P-116	M-116	3.13	3.13	3.13	1,392.86	1,387.47	0.020669	25.37	Circular	264.00	8.35
	M-115				1,387.60	1,382.16	0.021591	36.01	24 inch		
P-115	M-115	1.53	1.53	4.66	1,387.60	1,382.06	0.009269	36.85	Circular	245.00	8.02
	M-114				1,383.50	1,380.04	0.011796	48.26	30 inch		
P-114	M-114	2.67	2.67	7.33	1,383.50	1,379.83	0.006108	56.47	Circular	210.00	7.99
	M-113				1,380.50	1,378.55	0.011810	78.52	36 inch		
P-113	M-113	0.00	0.00	7.33	1,380.50	1,378.50	0.005850	55.26	Circular	200.00	7.82
	M-112				1,378.00	1,377.33	0.006350	57.58	36 inch		
P-112	M-112	2.84	2.84	10.17	1,378.00	1,377.28	0.004741	75.05	Circular	350.00	7.80
	M-111				1,376.50	1,375.62	0.003000	59.70	42 inch		
P-111	M-111	5.14	5.14	15.31	1,376.50	1,375.57	0.004878	108.68	Circular	433.00	8.65
	M-110				1,377.70	1,373.45	0.003002	85.26	48 inch		
P-109	M-110	1.14	1.14	16.45	1,377.70	1,373.26	0.000128	111.63	Circular	350.00	2.22
	M-100				1,379.50	1,373.22	0.001514	384.48	96 inch		
P-100	M-100	53.23	53.23	69.68	1,379.50	1,372.40	0.000965	315.03	Circular	207.00	6.27
	Outlet				1,380.00	1,372.20	0.001353	363.38	96 inch		

Node Report

Node	Inlet Area (acres)	Inlet C	Inlet CA (acres)	External CA (acres)	Total CA (acres)	Inlet TC (min)	External TC (min)	Upstream Flow Time (min)	System Flow Time (min)	System Intensity (in/hr)	Total Watershed (CIA) (cfs)	Additional Flow (cfs)	Carryover (cfs)	Known Flow (cfs)
J-NULL	N/A	N/A	N/A	N/A	0.00	N/A	0.00	0.00	0.00	9.90	0.00	N/A	N/A	0.00
M-116	3.13	1.00	3.13	0.00	3.13	5.00	0.00	0.00	5.00	8.04	25.37	0.00	0.00	0.00
M-115	1.53	1.00	1.53	0.00	4.66	5.00	0.00	5.53	5.53	7.84	36.85	0.00	0.00	0.00
M-114	2.67	1.00	2.67	0.00	7.33	5.00	0.00	6.04	6.07	7.64	56.47	0.00	0.00	0.00
M-113	0.00	0.00	0.00	0.00	7.33	5.00	0.00	6.51	6.51	7.48	55.26	0.00	0.00	0.00
M-112	2.84	1.00	2.84	0.00	10.17	5.00	0.00	6.93	6.93	7.32	75.05	0.00	0.00	0.00
M-111	5.14	1.00	5.14	0.00	15.31	5.00	0.00	7.68	7.68	7.04	108.68	0.00	0.00	0.00
M-110	1.14	1.00	1.14	0.00	16.45	5.00	0.00	8.52	8.52	6.73	111.63	0.00	0.00	0.00
M-100	53.23	1.00	53.23	0.00	69.68	21.66	0.00	11.14	21.66	4.49	315.03	0.00	0.00	0.00
Outlet	N/A	N/A	N/A	N/A	69.68	N/A	0.00	22.21	22.21	4.42	310.65	N/A	N/A	0.00

Pipe Report

Pipe	Upstream Node	Downstream Node	Inlet Area (acres)	Inlet C	Inlet CA (acres)	Total CA (acres)	System Intensity (in/hr)	Discharge (cfs)	Length (ft)	Constructed Slope (ft/ft)	Section Size	Roughness	Capacity (cfs)
P-NULL	J-NULL	M-116	N/A	N/A	N/A	0.00	9.90	0.00	1.00	0.000000	24 inch	0.012	0.00
P-116	M-116	M-115	3.13	1.00	3.13	3.13	8.04	25.37	264.00	0.021591	24 inch	0.012	36.01
P-115	M-115	M-114	1.53	1.00	1.53	4.66	7.84	36.85	245.00	0.011796	30 inch	0.012	48.26
P-114	M-114	M-113	2.67	1.00	2.67	7.33	7.64	56.47	210.00	0.011810	36 inch	0.012	78.52
P-113	M-113	M-112	0.00	0.00	0.00	7.33	7.48	55.26	200.00	0.006350	36 inch	0.012	57.58
P-112	M-112	M-111	2.84	1.00	2.84	10.17	7.32	75.05	350.00	0.003000	42 inch	0.012	59.70
P-111	M-111	M-110	5.14	1.00	5.14	15.31	7.04	108.68	433.00	0.003002	48 inch	0.012	85.26
P-109	M-110	M-100	1.14	1.00	1.14	16.45	6.73	111.63	350.00	0.001514	96 inch	0.012	384.48
P-100	M-100	Outlet	53.23	1.00	53.23	69.68	4.49	315.03	207.00	0.001353	96 inch	0.012	363.38

CACTUS ROAD SIPHON
WORK SHEET FOR STORM SEWER DESIGN
SURCHARGED FLOW

PROJECT Squaw Peak ROAD SR 51 COUNTY Maricopa DESIGN FREQUENCY Assume 2 YR (COP)

COMPUTED BY D. Schuab DATE 7/31/95 CHECKED BY _____ DATE _____

(5) Q = 350 cfs based full flow for slope = .0037 FT

Location: Station of Structure	Location: Structure Type & No.	Pipe Data: Discharge	Pipe Data: Pipe Size	Pipe Data: Pipe Length	Velocity Head: Mean Pipe Velocity	Velocity Head: Pipe Velocity Head	Velocity Head: Mean Channel Velocity	Velocity Head: Channel Velocity Head	Pipe Head Losses: Coeff. K ~~Bend~~ Loss (K_{bd})	Pipe Head Losses: Bend Energy Loss	Pipe Head Losses: Friction Slope	Pipe Head Losses: Friction Head Loss	Structure Head Losses: Coeff. K Structure	Structure Head Losses: Structure Energy Losses	Gradeline Elev. at Structure: E.G.L. Downstream / Upstream	Gradeline Elev. at Structure: H.G.L. Downstream / Up-* stream	Vertical Control: Invert Elev. Downstream / Upstream	Vertical Control: Top of Struc. Elev.	Vertical Control: Free-board
		Q			V1	$V_1^2/2g$	V_2	$V_2^2/2g$	K_b		S_o		K						
		cfs	in.	ft.	fps	ft.	fps	ft.		ft.	ft/ft	ft.		ft.	ft.	ft.	ft.	ft.	ft.
1	2	3	4	5	6	7	8	9	10	11	12	13	14	15	16	17	18	19	20
25+00															1393.44	1391.71	85.21		
23+80	6.9° ⊄	(5) 350	78	120	10.55	1.73					.0037	.44	.024	.04	93.88	92.15	85.65		
									95° R	.15 (1)					93.92	92.69	85.65		
21+95	6.6° ⊄	350	84	185	9.09	1.28			55° ∡	.26	.0025	.46	.024 (2)	.04	94.64		63.74		
									95° R	.17+.06 (1)				.09	94.97	93.49	63.74		
18+20	6.9° ⊄	350	"	375	"	"			95° ∡ 22°	.40	"	.94	.024 (3)	.04	96.11		61.86		
									200° R	.12 (1)				.05	96.20	94.92	61.86		
15+95	6.4° ⊄	350	"	225	"	"			42° ∡	.21	"	.56	—	—	96.99	95.69	87.63		
															"	95.24	88.13		
15+00		350	78	95	10.55	1.73			—	—	.0037	0.35			97.32	95.59	88.53		

* water surface elevation in structure.

(1) Bend loss coeff

(2) Expansion Loss, $H = 0.2\left(V_1^2/2g - V_2^2/2g\right) = 0.2(1.73-1.28) = .09$

(3) Contraction Loss, $H = 0.1\left(V_2^2/2g - V_1^2/2g\right) = 0.1(1.73-1.28) = .05$

(4) EXST HGL (STA 15+00) = 88.53 + 6.5 = 95.03

CONCLUSION: Siphon raises HGL by 6' 5.5 95.

1 of 1

FIGURE 2

Date July 2, 1979

1 of 1

BRW

JOB SR51, Squaw Peak SHEET NO.
MADE BY D.J. Schaub DATE 7/31/95 JOB NO.
CHECKED BY DATE SEC. SHT. NO. 11
CALCULATIONS FOR H&L, Siphon Bleedoff Pipe

- Determine the maximum discharge for a 6" & 8" orifice to drain the low point on the 84" siphon pipe.

84" Siphon Inlet F.L. Elev. = 1387.63 ±
+ 7.00

84" Siphon Inlet Crown Elev. = 1394.63

84" Siphon Low Point F.L. Elev. = 1361.86
1/2 Pipe Dia = 3.50
1365.36

CONCLUSION: A head of 29.27' will produce a discharge of approximately 9.4 cfs

- ORIFICE SOLUTION

Head on Orifice = 1394.63 - 1365.36 = 29.27'

- 8" PIPE

$Q = CA\sqrt{2gH}$

$A = \pi r^2 = \pi\left(\frac{4}{12}\right)^2 = 0.349$

$C = 0.6$ Sharp Crest orfice

$Q = 0.6(0.349)\sqrt{2g(29.27)}$

$Q = 9.1$ cfs

- 6" PIPE

$Q = CA\sqrt{2gH}$

$A = \pi r^2 = \pi\left(\frac{3}{12}\right)^2 = 0.196$

$Q = 0.6(0.196)\sqrt{2g(29.27)} = 5.1$ cfs

1 of 9

SIPHON BLEED-OFF PIPE (TRY 7.4 CFS)

WORK SHEET FOR STORM SEWER DESIGN

SURCHARGED FLOW

PROJECT _____ ROAD SR 51 COUNTY Maricopa DESIGN FREQUENCY _____ YR

COMPUTED BY D. Schaub DATE 7/31/95 CHECKED BY _____ DATE _____

Location		Pipe Data			Velocity Head				Pipe Head Losses				Structure Head Losses		Gradeline Elev. at Structure		Vertical Control		
Station of Structure	Structure Type & No.	Discharge	Pipe Size	Pipe Length	Mean Pipe Velocity	Pipe Velocity Head	Mean Channel Velocity	Channel Velocity Head	Coeff. K Bend Loss	Bend Energy Loss	Friction Slope	Friction Head Loss	Coeff. K Structure	Structure Energy Losses	E.G.L. Down-stream / Up-stream	H.G.L. Down-stream / Up-* stream	Invert Elev. Down-stream / Up-stream	Top of Struc. Elev.	Free-board
		Q			V1	$V_1^2/2g$	V_2	$V_2^2/2g$	K_b		S_o		K						
		cfs	in.	ft.	fps	ft.	fps	ft.		ft.	ft/ft	ft.		ft.	ft.	ft.	ft.	ft.	ft.
1	2	3	4	5	6	7	8	9	10	11	12	13	14	15	16	17	18	19	20
Disch @ pump screen															1372.20	1372.20			
															1372.29	"			
mH 285		7.4	24" RCP	238	2.36	0.09					.0009	0.21	mH .05	0.00	72.50				
															"	72.41			
mH 286		"	24" RCP	330	"	"					"	0.30	mH .05	0.00	72.80				
															"	72.71			
mH 287		"	24" RCP	330	"	"					"	0.30	(1)	0.04	73.10				
															73.14	72.86			
Orifice @ 18" DIP		"	18" DIP	110	4.19	0.28					.0044	0.49	(3)	3.90	73.62	73.34			
															77.52	70.55			
Orifice @ 78" Siphon		"	8"	9	21.19	6.97					(2) .800	7.20	1.5	10.46	84.72				
															95.18	95.18			

* water surface elevation in structure.

** Controlling Calculation **

2 of 9

SIPHON BLEED OFF PIPE (TRY 5.0 CFS)

WORK SHEET FOR STORM SEWER DESIGN

SURCHARGED FLOW

PROJECT _____ ROAD SR 51 COUNTY Maricopa DESIGN FREQUENCY _____ — YR

COMPUTED BY D. Schaub DATE 7/31/95 CHECKED BY _____ DATE _____

Location		Pipe Data			Velocity Head				Pipe Head Losses				Structure Head Losses		Gradeline Elev. at Structure		Vertical Control		
Station of Structure	Structure Type & No.	Discharge	Pipe Size	Pipe Length	Mean Pipe Velocity	Pipe Velocity Head	Mean Channel Velocity	Channel Velocity Head	Coeff. K Bend Loss	Bend Energy Loss	Friction Slope	Friction Head Loss	Coeff. K Structure	Structure Energy Losses	E.G.L. Down-stream / Up-stream	H.G.L. Down-stream / Up-* stream	Invert Elev. Down-stream / Up-stream	Top of Struc. Elev.	Free-board
		Q			V_1	$V_1^2/2g$	V_2	$V_2^2/2g$	K_b		S_o		K						
		cfs	in.	ft.	fps	ft.	fps	ft.		ft.	ft/ft	ft.		ft.	ft.	ft.	ft.	ft.	ft.
1	2	3	4	5	6	7	8	9	10	11	12	13	14	15	16	17	18	19	20
Disch @ Pump Screen															1372.2	1372.2			
															72.24	"			
mH 285		5.0	24" RCP	238	1.59	0.04					.0005	0.12	mH .05	.00	72.36				
															"				
mH 286		"	24" RCP	330	"	"					"	0.17	mH .05	.00	72.53				
															"				
mH 287		"	24" RCP	330	"	"					"	0.17	(1)	.02	72.70				
															72.72				
Orifice @ 18" DIP		"	18" DIP	110	2.82	0.12					.002	0.22	(3)	1.97	72.94				
															74.91				
Orifice @ 78" Siphon		"	8" DIP	9	14.32	3.18					(2) 0.364	3.28	1.5	4.77	78.19				
															82.96				

* water surface elevation in structure.

** CALC #1 **

3 of 9

Date July 2, 1979

FIGURE 2

1 of 1

FACILITIES DEVELOPMENT MANUAL

Procedure 13-25-45

SIPHON BLEED-OFF PIPE (TRY 7.0 cfs)

WORK SHEET FOR STORM SEWER DESIGN

SURCHARGED FLOW

PROJECT _____ ROAD SR 51 COUNTY Maricopa DESIGN FREQUENCY _____ YR

COMPUTED BY D. Schaub DATE 7/31/95 CHECKED BY _____ DATE _____

Location		Pipe Data			Velocity Head				Pipe Head Losses				Structure Head Losses		Gradeline Elev. at Structure		Vertical Control		
Station of Structure	Structure Type & No.	Discharge	Pipe Size	Pipe Length	Mean Pipe Velocity	Pipe Velocity Head	Mean Channel Velocity	Channel Velocity Head	Coeff. K Bend Loss	Bend Energy Loss	Friction Slope	Friction Head Loss	Coeff. K Structure	Structure Energy Losses	E.G.L. Down-stream / Up-stream	H.G.L. Down-stream / Up-* stream	Invert Elev. Down-stream / Up-stream	Top of Struc. Elev.	Free-board
		Q			V_1	$V_1^2/2g$	V_2	$V_2^2/2g$	K_b		S_o		K						
		cfs	in.	ft.	fps	ft.	fps	ft.		ft.	ft/ft	ft.		ft.	ft.	ft.	ft.	ft.	ft.
1	2	3	4	5	6	7	8	9	10	11	12	13	14	15	16	17	18	19	20
Disch @ Pump Screen															1372.20	1372.20			
															1372.28	"			
mH 285		7.0	24" RCP	238	2.23	0.08					.00084	0.200	mH .05	0.00	72.48				
mH 286		"	24" RCP	330	"	"					"	0.28	mH .05	0.00	"				
mH 287		"	24" RCP	330	"	"					"	0.28	①	0.03	72.76				
orifice @ 18" DIP		"	18" DIP	110	3.96	0.24					.0039	0.43	③	3.50	73.04				
orifice @ 78" Siphon		"	8" DIP	9	20.05	6.24					② 0.716	6.44	1.5	9.36	73.07				
															73.50				
															77.00				
															83.44				
															92.80	92.80			

* water surface elevation in structure.

* Calc #2 **

FACILITIES DEVELOPMENT MANUAL

Procedure 13-25-45

Date July 2, 1979

FIGURE 2

4 of 9

SIPHON BLEED-OFF PIPE (TRY 9 cfs)

WORK SHEET FOR STORM SEWER DESIGN

SURCHARGED FLOW

PROJECT _____ ROAD SR 51 COUNTY Maricopa DESIGN FREQUENCY _____ YR

COMPUTED BY D. Schaub DATE 7/31/95 CHECKED BY _____ DATE _____

Location		Pipe Data			Velocity Head				Pipe Head Losses				Structure Head Losses		Gradeline Elev. at Structure		Vertical Control		
Station of Structure	Structure Type & No.	Discharge	Pipe Size	Pipe Length	Mean Pipe Velocity	Pipe Velocity Head	Mean Channel Velocity	Channel Velocity Head	Coeff. K Bend Loss	Bend Energy Loss	Friction Slope	Friction Head Loss	Coeff. K Structure	Structure Energy Losses	E.G.L. Down-stream / Up-stream	H.G.L. Down-stream / Up-* stream	Invert Elev. Down-stream / Up-stream	Top of Struc. Elev.	Free-board
		Q			V_1	$V_1^2/2g$	V_2	$V_2^2/2g$	K_b		S_o		K						
		cfs	in.	ft.	fps	ft.	fps	ft.		ft.	ft/ft	ft.		ft.	ft.	ft.	ft.	ft.	ft.
1	2	3	4	5	6	7	8	9	10	11	12	13	14	15	16	17	18	19	20
Disch @ Pump Screen															1372.2	1372.2			
															72.33	1372.2			
mH 285		9.1	24" RCP	238	2.90	0.13					.00125	0.30	mH .05	.01	72.63				
															72.64				
mH 286		"	24" RCP	330	"	"					.00125	0.41	mH .05	.01	73.05				
															73.06				
mH 287		"	24" RCP	330	"	"					.00125	0.41			73.47				
													(1)	.05	73.52				
Orifice @ 18" DIP		"	18" DIP	110	5.10	0.40					.0063	0.69			74.21				
													(3)	6.34	80.55				
Orifice @ 78" Siphon		"	8" DIP	9	26.07	10.55					(2) 1.210	10.89			91.44				
													1.5	15.83	107.27				

* water surface elevation in structure.

** CALC #3 **

FACILITIES DEVELOPMENT MANUAL

Procedure 13-25-45

FIGURE 2

Date July 2, 1979

1 of 1

5 of 9

BRW

JOB Squaw Peak, SR 51 SHEET NO.
MADE BY D. Schaub DATE 7/31/95 JOB NO.
CHECKED BY DATE SEC. SHT. NO.
CALCULATIONS FOR HGL, Siphon Bleed-off Pipe

- PIPE FLOW SOLUTION

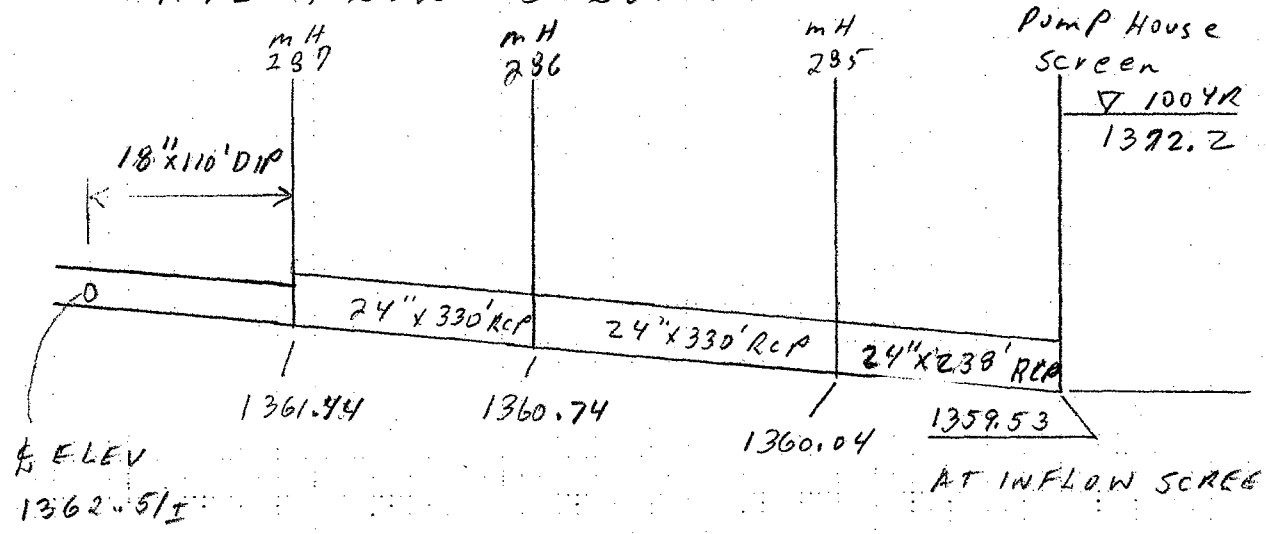

NOTES

① EXPANSION LOSS

$$H_e = 0.2\left(\frac{V_1^2}{2g} - \frac{V_2^2}{2g}\right) = 0.2(0.40 - 0.13)$$

$$= 0.05$$

② FRICTION LOSS (8" Pipe) $n = 0.012$

$$S_f = \frac{29n^2}{R^{1.33}}\frac{V^2}{2g} = \frac{29(.012)^2}{(0.08333)^{1.33}}\left(\frac{V^2}{2g}\right)$$

$S_f = 0.0017815\ V^2$; $S_f = 0.800$ (7.4 cfs, 21.19 fps)

$S_f = 1.210$ '/FT (9.1 cfs, 26.1 fps)

$S_f = 0.364$ '/FT (5.0 cfs, 14.3 fps)

$S_f = 0.716$ (7.0 cfs, 20.05 fps)

BRW

JOB SR 51, Squaw Peak SHEET NO.
MADE BY D.J. Schaub DATE 7/31/95 JOB NO.
CHECKED BY DATE SEC. SHT. NO.
CALCULATIONS FOR HGL, Siphon Bleedoff Pipe

③ ABRUPT EXPANSION & RIGHT ANGLE TURN

$$\frac{d_2}{d_1} = \frac{18''}{8''} = 2.25$$

$V_1 = 26.1$

$$K_2 = \left(\frac{.61 + .49}{2}\right) = 0.55$$

$$H_L = K_2 \left(V_1^2/2g\right) = 0.55 \left(\frac{26.07^2}{2g}\right)$$

$$= 5.80$$

90° Bend

$$H_L = 1.34\ V^2/2g = 1.34\ \frac{(5.10)^2}{2g} = 0.54$$

TOT. $H_L = 5.80 + 0.54 = 6.34'$

$V_1 = 14.3$ fps

$$K_2 = (.51 + .63)/2 = 0.57$$

$$H_L = K_2 \left(V_1^2/2g\right) = 0.57 \left(\frac{14.3^2}{2g}\right) = 1.81$$

90° Bend

$$H_L = 1.34\ V^2/2g = 1.34\ \frac{(2.32)^2}{2g} = 0.16$$

TOT. $H_L = 1.81 + 0.16 = 1.97$

BRW

JOB SR 51, Squaw Peak SHEET NO.
MADE BY D.J. Schaus DATE 7/31/95 JOB NO.
CHECKED BY DATE SEC. SHT. NO.
CALCULATIONS FOR H&L, Siphon Bleed off Pipe

(3) Cont'd.

$V_1 = 20.05$ fps

$K_2 = (0.50 + 0.62)/2 = 0.56$

$H_L = K_2 \frac{V_1^2}{2g} = 0.56\left(\frac{20.05^2}{2g}\right) = 3.50$

$V_1 = 21.19$ fps

$K_2 = 0.56$

$H_L = K_2 V_1^2/2g = 0.56\left(\frac{21.19^2}{2g}\right) = 3.90$

ystem at the inlet until it dis-
draulic structures such as
nsitions, which will cause
led "minor losses". This is
s important as those arising
n a general form derived

re
of hydraulic structures
arily based on experiments.

inetic energy at the two

ansition loss coefficient

V_1

V_2

ight-through flow may be

2

of incoming and outgoing

MODERN SEWER DESIGN

Expansion:

$$H_t = K\left[\frac{(V_1 - V_2)^2}{2g}\right]$$

K = 1.0 for sudden expansion
K = 0.2 for well designed transition

The above K values are for estimating purposes. If a more detailed analysis of the transition losses is required, then the tables in conjunction with the energy losses equation in the form below should be used for pressure flow.

$$H_t = K\left(\frac{V^2}{2g}\right)$$

Table 3-14 Values of K_2 for Determining Loss of Head Due to Sudden Enlargement in Pipes, from the Formula $H_2 = K_2(V_1{}^2/2g)$ (15)

d_2/d_1 = ratio of larger pipe to smaller pipe V_1 = velocity in smaller pipe

d_2/d_1	Velocity, V_1, in feet per second												
	2	3	4	5	6	7	8	10	12	15	20	30	40
1.2	.11	.10	.10	.10	.10	.10	.10	.09	.09	.09	.09	.09	.08
1.4	.26	.26	.25	.24	.24	.24	.24	.23	.23	.22	.22	.21	.20
1.6	.40	.39	.38	.37	.37	.36	.36	.35	.35	.34	.33	.32	.32
1.8	.51	.49	.48	.47	.47	.46	.46	.45	.44	.43	.42	.41	.40
2.0	.60	.58	.56	.55	.55	.54	.53	.52	.52	.51	.50	.48	.47
2.5	.74	.72	.70	.69	.68	.67	.66	.65	.64	.63	.62	.60	.58
3.0	.83	.80	.78	.77	.76	.75	.74	.73	.72	.70	.69	.67	.65
4.0	.92	.89	.87	.85	.84	.83	.82	.80	.79	.78	.76	.74	.72
5.0	.96	.93	.91	.89	.88	.87	.86	.84	.83	.82	.80	.77	.75
10.0	1.00	.99	.96	.95	.93	.92	.91	.89	.88	.86	.84	.82	.80
∞	1.00	1.00	.98	.96	.95	.94	.93	.91	.90	.88	.86	.83	.81

Table 3-15 Values of K_2 for Determining Loss of Head Due to Gradual Enlargement in Pipes from the Formula $H_2 = K_2(V_1{}^2/2g)$ (15)

d_2/d_1 = ratio of diameter of larger pipe to diameter of smaller pipe. Angle of cone is twice the angle between the axis of the cone and its side.

d_2/d_1	Angle of cone													
	2°	4°	6°	8°	10°	15°	20°	25°	30°	35°	40°	45°	50°	60°
1.1	.01	.01	.01	.02	.03	.05	.10	.13	.16	.18	.19	.20	.21	.23
1.2	.02	.02	.02	.03	.04	.09	.16	.21	.25	.29	.31	.33	.35	.37
1.4	.02	.03	.03	.04	.06	.12	.23	.30	.36	.41	.44	.47	.50	.53
1.6	.03	.03	.04	.05	.07	.14	.26	.35	.42	.47	.51	.54	.57	.61
1.8	.03	.04	.04	.05	.07	.15	.28	.37	.44	.50	.54	.58	.61	.65
2.0	.03	.04	.04	.05	.07	.16	.29	.38	.46	.52	.56	.60	.63	.68
2.5	.03	.04	.04	.05	.08	.16	.30	.39	.48	.54	.58	.62	.65	.70
3.0	.03	.04	.04	.05	.08	.16	.31	.40	.48	.55	.59	.63	.66	.71
∞	.03	.04	.05	.06	.08	.16	.31	.40	.49	.56	.60	.64	.67	.72

ARIZONA DEPARTMENT OF TRANSPORTATION

CULVERT COMPUTATION RECORD

PROJECT: SR51, SQUAW PEAK HWY

STATION: CACTUS PUMP STATION

DESIGNER: D. J. Schnuck

DATE: 7/9/95

HYDROLOGIC AND CHANNEL INFORMATION

DRAINAGE AREA _____

max. Q_1 = 220.0 cfs (1)

50YR Q_2 = 200 cfs

TW_1 = 1404.49 (2)

TW_2 = 1404.49

(1) max PUMP STATION DISCHARGE

(2) TW from linear Detention channel (Q50 = 1593 cfs)

(Q_1 = DESIGN DISCHARGE, SAY Q_{25})

(Q_2 = CHECK DISCHARGE, SAY Q_{50})

SKETCH

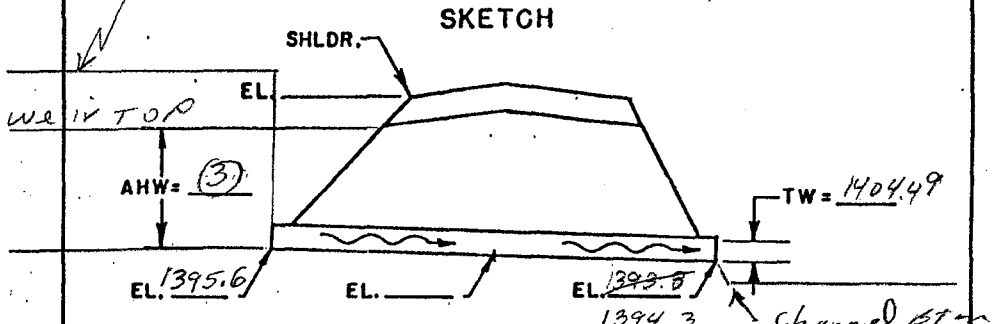

S_0 = 0.005 ft/ft L = 260.0 L/100 S_0 = _____

MEAN STREAM VELOCITY = _____

CULVERT DESCRIPTION		Q	CAP. CHART HW	HEADWATER COMPUTATION										CONTROL HW	OUTLET VELOCITY	COST	DHW ELEV.	COMMENTS
				INLET CONT.		OUTLET CONTROL $HW = H + h_o - LS_o$												
SIZE	ENTR. TYPE			$\frac{HW}{D}$	HW	K_e	H	d_c	$\frac{d_c + D}{2}$	TW	h_o	LS_o	HW					
84"		220			5.55	0.2								9.76	5.72		1405.36	← USE
96		220			5.24	0.2								9.33	4.38		1404.98	

SUMMARY & RECOMMENDATIONS (3) AHW = ACTUAL HW + 0.5'

= 9.76 + 0.5 = 10.26'

Recommendation: weir top = 1405.86, Disch Fl. 84" = 1395.6

1/1

20-4403 12/74

CURRENT DATE: 07-09-1995
CURRENT TIME: 17:57:02

FILE DATE: 07-08-1995
FILE NAME: PMPDISCH

FHWA CULVERT ANALYSIS
HY-8, VERSION 4.1

CULV	SITE DATA			CULVERT SHAPE, MATERIAL, INLET				
	INLET ELEV. (FT)	OUTLET ELEV. (FT)	CULVERT LENGTH (FT)	BARRELS SHAPE MATERIAL	SPAN (FT)	RISE (FT)	MANNING n	INLET TYPE
1	1395.60	1394.30	260.00	1 RCP	7.00	7.00	.012	CONVENTIONAL
2								
3								
4								
5								
6								

SUMMARY OF CULVERT FLOWS (CFS) FILE: PMPDISCH DATE: 07-08-1995

ELEV (FT)	TOTAL	1	2	3	4	5	6	ROADWAY	ITR
1404.49	0	0	0	0	0	0	0	0	1
1404.50	22	22	0	0	0	0	0	0	1
1404.52	44	44	0	0	0	0	0	0	1
1404.57	66	66	0	0	0	0	0	0	1
1404.63	88	88	0	0	0	0	0	0	1
1404.71	110	110	0	0	0	0	0	0	1
1404.80	132	132	0	0	0	0	0	0	1
1404.92	154	154	0	0	0	0	0	0	1
1405.05	176	176	0	0	0	0	0	0	1
1405.19	198	198	0	0	0	0	0	0	1
1405.36	220	220	0	0	0	0	0	0	1
1500.00	1693	1693	0	0	0	0	0	OVERTOPPING	

SUMMARY OF ITERATIVE SOLUTION ERRORS FILE: PMPDISCH DATE: 07-08-1995

HEAD ELEV(FT)	HEAD ERROR(FT)	TOTAL FLOW(CFS)	FLOW ERROR(CFS)	% FLOW ERROR
1404.49	0.00	0	0	0.00
1404.50	0.00	22	0	0.00
1404.52	0.00	44	0	0.00
1404.57	0.00	66	0	0.00
1404.63	0.00	88	0	0.00
1404.71	0.00	110	0	0.00
1404.80	0.00	132	0	0.00
1404.92	0.00	154	0	0.00
1405.05	0.00	176	0	0.00
1405.19	0.00	198	0	0.00
1405.36	0.00	220	0	0.00

<1> TOLERANCE (FT) = 0.010 <2> TOLERANCE (%) = 1.000

CURRENT DATE: 07-09-1995
CURRENT TIME: 17:57:02

FILE DATE: 07-08-1995
FILE NAME: PMPDISCH

PERFORMANCE CURVE FOR CULVERT # 1 - 1 (7 BY 7) RCP

DIS-CHARGE FLOW (cfs)	HEAD-WATER ELEV. (ft)	INLET CONTROL DEPTH (ft)	OUTLET CONTROL DEPTH (ft)	FLOW TYPE <F4>	NORMAL DEPTH (ft)	CRITICAL DEPTH (ft)	OUTLET VEL. (fps)	OUTLET DEPTH (ft)	TAILWATER VEL. (fps)	TAILWATER DEPTH (ft)
0	1404.49	0.00	8.89	0-NF	0.00	0.00	0.00	0.00	0.00	10.19
22	1404.50	1.51	8.90	4-FFt	0.95	1.13	0.57	7.00	0.00	10.19
44	1404.52	2.16	8.92	4-FFt	1.41	1.65	1.14	7.00	0.00	10.19
66	1404.57	2.74	8.97	4-FFt	1.70	2.07	1.71	7.00	0.00	10.19
88	1404.63	3.26	9.03	4-FFt	1.99	2.38	2.29	7.00	0.00	10.19
110	1404.71	3.72	9.11	4-FFt	2.24	2.69	2.86	7.00	0.00	10.19
132	1404.80	4.14	9.20	4-FFt	2.46	2.95	3.43	7.00	0.00	10.19
154	1404.92	4.53	9.32	4-FFt	2.69	3.20	4.00	7.00	0.00	10.19
176	1405.05	4.89	9.45	4-FFt	2.89	3.44	4.57	7.00	0.00	10.19
198	1405.19	5.22	9.59	4-FFt	3.09	3.66	5.14	7.00	0.00	10.19
220	1405.36	5.55	9.76	4-FFt	3.28	3.86	5.72	7.00	0.00	10.19

El. inlet face invert 1395.60 ft El. outlet invert 1394.30 ft
El. inlet throat invert 0.00 ft El. inlet crest 0.00 ft

```
***** SITE DATA ***** CULVERT INVERT **************
      INLET STATION (FT)                        0.00
      INLET ELEVATION (FT)                   1395.60
      OUTLET STATION (FT)                     260.00
      OUTLET ELEVATION (FT)                  1394.30
      NUMBER OF BARRELS                         1
      SLOPE (V-FT/H-FT)                         0.0050
      CULVERT LENGTH ALONG SLOPE (FT)         260.00

***** CULVERT DATA SUMMARY ************************
      BARREL SHAPE          CIRCULAR
      BARREL DIAMETER         7.00 FT
      BARREL MATERIAL       CONCRETE
      BARREL MANNING'S N    0.012
      INLET TYPE            CONVENTIONAL
      INLET EDGE AND WALL   GROOVED END IN HEADWALL
      INLET DEPRESSION      NONE
```

CURRENT DATE: 07-09-1995
CURRENT TIME: 17:57:02

FILE DATE: 07-08-1995
FILE NAME: PMPDISCH

TAILWATER

CONSTANT WATER SURFACE ELEVATION
1404.49

ROADWAY OVERTOPPING DATA

ROADWAY SURFACE	PAVED
EMBANKMENT TOP WIDTH (FT)	15.00
CREST LENGTH (FT)	100.00
OVERTOPPING CREST ELEVATION (FT)	1500.00

Appendix H
Cactus Road Pump Station Hydrographs

ATTACHED ARE DATA FOR THE 2-YR, 24-HOUR AND 50-YR, 24-HOUR STORM EVENT HYDROGRAPHS FOR THE CACTUS ROAD PUMP STATION. RUNOFF AREAS AND TIME OF CONCENTRATION CALCULATIONS ARE CONTAINED IN APPENDIX E.

PLEASE NOTE THAT AREAS WERE LOADED AS "CA" FROM THE RATIONAL METHOD TO PRODUCE 100% RUNOFF WITH A CURVE NUMBER OF 100.

Q50 = 284.6 CFS, V = 18 A-F
Q 2 = 112.2 CFS, V = 7 A-F

BRW

Job SR 51, SECTION 4 Sheet No. 1 of 58
Made By D. Schaub Date 8/7/95 Job No.
Checked By Date Sec. Sht. No.
Calculations For PUMP STATION HYDROGRAPHS, 2-YR AND 50-YR

Transmittal

B R W INC.

Planning
Transportation
Engineering
Urban Design

2700 No. Central Avenue
Suite 1000
Phoenix,
AZ 85004
602/234-1591
Fax 602/230-9189

Phoenix
Minneapolis
Denver
Orlando
San Diego
Seattle

Donald W. Ringrose
Richard P. Wolsfeld
Peter E. Jarvis
Thomas F. Carroll
Craig A. Amundsen
Donald E. Hunt
John B. McNamara
Richard D. Pilgrim
Dale N. Beckmann
Jeffrey L. Benson
Ralph C. Blum
Gary J. Erickson
John C. Lynch
Paul N. Bay

Date: 19 June 1995

To: Mr. Hemant Patel
Aztec Engineering
4515 North 16th Street, Suite 202
Phoenix, Arizona 85016-5363

From: Curt Slagell
BRW, Inc.

Re: SR 51 Squaw Peak Highway
Contract No. 95-01
TRACS No. 051 MA 009 H 2059 01D
RAM 600-2-314

Item(s):	Date:	Description:
1	06/95	Final Inflow Hydrographs (2 and 50 years) for Pump Station, paper copy of ASCII format
1		HEC-1 Computer Output (2 and 50 years) for Pump Station, paper copy
1		Final Inflow Hydrographs in ASCII format and HEC-1 files on 3½" disk

Purpose:

- [x] as you requested
- [ ] for your information
- [ ] for your approval
- [ ] reply to sender
- [ ] review and return
- [ ] return for corrections
- [ ] approved as submitted
- [ ] approved as noted
- [ ] other (see remarks)

Remarks:

Attached are the final inflow hydrographs for the pump station in ASCII format. Each hydrograph event is being provided with two different files; one with eight discharges per line and one with one discharge per line. These flows do not consider storage at the inflow to the pump station, and therefore, the required storage volume (2400' of 96" pipe?) and number of pumps should be determined with your pump station hydraulic model. Design should be based on the 50-year hydrograph with some operational modifications for lesser flow events. The original HEC-1 files are also included with this submittal.

Copy to:

2/53

50-YEAR
RUNOFF EVENT

18JUN81 13:41:25

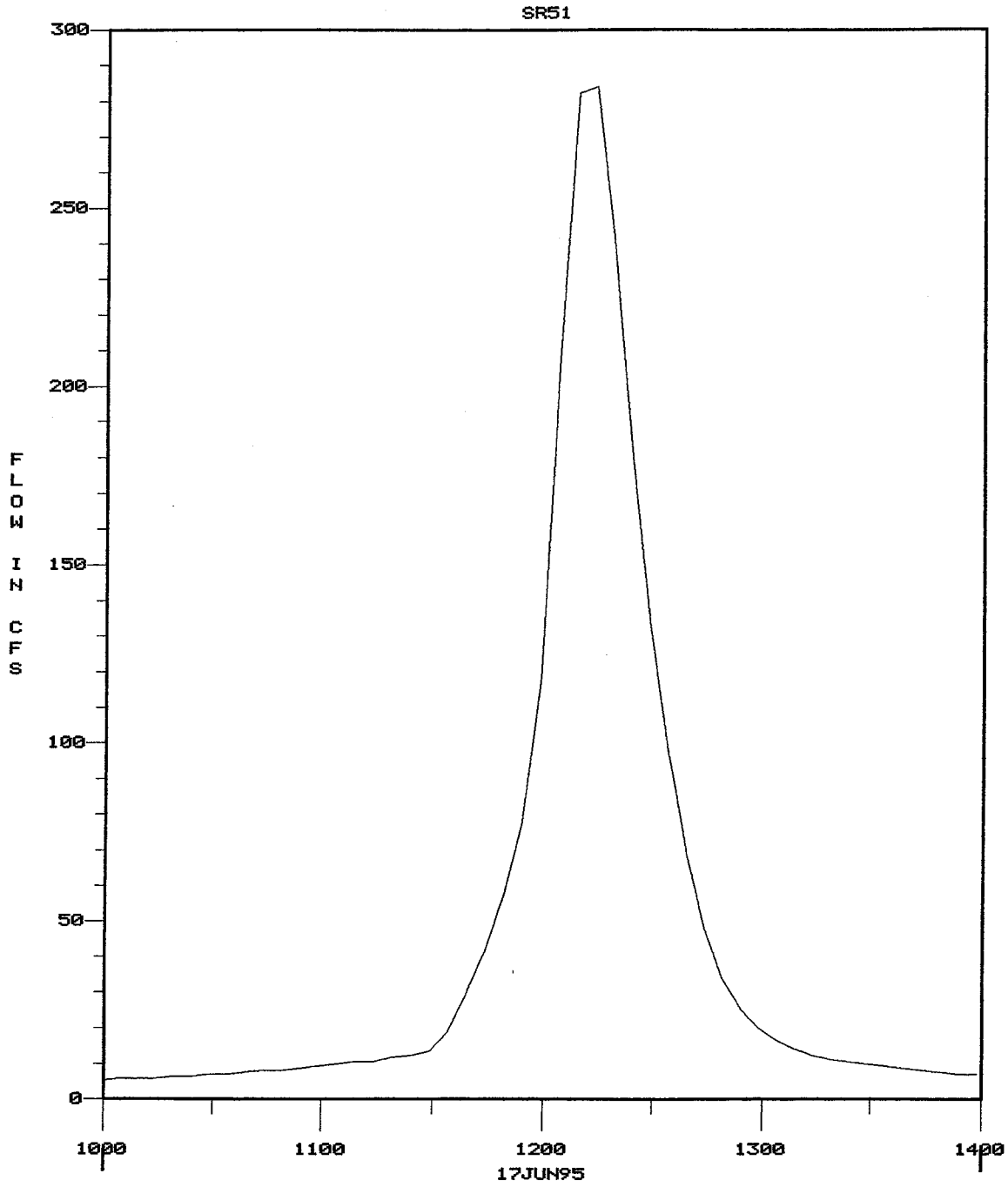

PUMPINFLOW 50YR FLOW

4/58

50-YEAR RUNOFF EVENT

/SR51/PUMPINFLOW/FLOW/16JUN1995/5MIN/50YR/
RTS Ver: 2 Prog:HEC1 LW:18JUN81 11:44:09 Tag:T1
Start: 16JUN1995 at 2400 hours; End: 16JUN1995 at 2400 hours;
Number: 1
Units: CFS Type: INST-VAL

.00
END DATA
/SR51/PUMPINFLOW/FLOW/17JUN1995/5MIN/50YR/
RTS Ver: 2 Prog:HEC1 LW:18JUN81 11:44:09 Tag:T2
Start: 17JUN1995 at 0005 hours; End: 17JUN1995 at 2400 hours;
Number: 288
Units: CFS Type: INST-VAL

.13	.42	.71	.93	1.06	1.13	1.18	1.21
1.23	1.24	1.26	1.27	1.28	1.29	1.29	1.30
1.31	1.32	1.33	1.34	1.35	1.36	1.37	1.38
1.39	1.40	1.41	1.42	1.43	1.44	1.45	1.46
1.47	1.48	1.49	1.51	1.52	1.53	1.54	1.56
1.57	1.58	1.59	1.61	1.62	1.64	1.65	1.66
1.68	1.69	1.71	1.73	1.74	1.76	1.78	1.79
1.81	1.83	1.85	1.86	1.88	1.90	1.92	1.94
1.96	1.98	2.01	2.03	2.05	2.08	2.10	2.12
2.16	2.21	2.27	2.31	2.35	2.39	2.42	2.46
2.49	2.53	2.56	2.60	2.63	2.67	2.71	2.75
2.79	2.83	2.88	2.92	2.97	3.02	3.07	3.12
3.17	3.23	3.29	3.35	3.41	3.48	3.55	3.62
3.69	3.77	3.85	3.94	4.05	4.21	4.36	4.51
4.65	4.78	4.92	5.06	5.21	5.36	5.53	5.71
5.89	6.10	6.32	6.55	6.81	7.09	7.43	7.83
8.27	8.74	9.24	9.79	10.27	10.66	11.15	11.82
12.75	13.95	19.12	29.76	41.96	57.13	77.46	118.29
205.60	282.53	284.64	239.48	179.15	132.96	98.36	69.83
48.69	34.38	25.57	20.03	16.50	14.19	12.61	11.59
10.79	10.12	9.50	8.93	8.43	7.99	7.61	7.27
6.97	6.69	6.44	6.21	6.00	5.80	5.62	5.45
5.29	5.14	4.99	4.86	4.71	4.54	4.37	4.23
4.11	4.00	3.91	3.82	3.74	3.66	3.58	3.51
3.45	3.38	3.32	3.26	3.20	3.15	3.09	3.04
2.99	2.94	2.90	2.85	2.81	2.77	2.73	2.69
2.65	2.61	2.58	2.54	2.51	2.48	2.44	2.41
2.37	2.32	2.26	2.21	2.18	2.14	2.12	2.09
2.06	2.04	2.02	2.00	1.97	1.95	1.93	1.91
1.89	1.87	1.85	1.84	1.82	1.80	1.78	1.77
1.75	1.73	1.72	1.70	1.69	1.67	1.66	1.64
1.63	1.61	1.60	1.59	1.57	1.56	1.55	1.54
1.52	1.51	1.50	1.49	1.48	1.47	1.45	1.44
1.43	1.42	1.41	1.40	1.39	1.38	1.37	1.36
1.35	1.34	1.33	1.32	1.32	1.31	1.30	1.29
1.28	1.27	1.26	1.26	1.25	1.24	1.23	1.22

END DATA
/SR51/PUMPINFLOW/FLOW/18JUN1995/5MIN/50YR/
RTS Ver: 2 Prog:HEC1 LW:18JUN81 11:44:09 Tag:T3

Start: 18JUN1995 at 0005 hours; End: 18JUN1995 at 0055 hours;
Number: 11
Units: CFS Type: INST-VAL

1.09	.79	.50	.28	.16	.09	.05	.03
.02	.01	.00					

END FILE

2-50YR
6/58

50-YEAR
RUNOFF EVENT

/SR51/PUMPINFLOW/FLOW/16JUN1995/5MIN/50YR/
RTS Ver: 2 Prog:HEC1 LW:18JUN81 11:44:09 Tag:T1
Start: 16JUN1995 at 2400 hours; End: 16JUN1995 at 2400 hours;
Number: 1
Units: CFS Type: INST-VAL

.00
END DATA
/SR51/PUMPINFLOW/FLOW/17JUN1995/5MIN/50YR/
RTS Ver: 2 Prog:HEC1 LW:18JUN81 11:44:09 Tag:T2
Start: 17JUN1995 at 0005 hours; End: 17JUN1995 at 2400 hours;
Number: 288
Units: CFS Type: INST-VAL

.13
.42
.71
.93
1.06
1.13
1.18
1.21
1.23
1.24
1.26
1.27
1.28
1.29
1.29
1.30
1.31
1.32
1.33
1.34
1.35
1.36
1.37
1.38
1.39
1.40
1.41
1.42
1.43
1.44
1.45
1.46
1.47
1.48
1.49
1.51
1.52
1.53
1.54
1.56

1.57
1.58
1.59
1.61
1.62
1.64
1.65
1.66
1.68
1.69
1.71
1.73
1.74
1.76
1.78
1.79
1.81
1.83
1.85
1.86
1.88
1.90
1.92
1.94
1.96
1.98
2.01
2.03
2.05
2.08
2.10
2.12
2.16
2.21
2.27
2.31
2.35
2.39
2.42
2.46
2.49
2.53
2.56
2.60
2.63
2.67
2.71
2.75
2.79
2.83
2.88
2.92
2.97
3.02

2-50 YR
8/59

3.07
3.12
3.17
3.23
3.29
3.35
3.41
3.48
3.55
3.62
3.69
3.77
3.85
3.94
4.05
4.21
4.36
4.51
4.65
4.78
4.92
5.06
5.21
5.36
5.53
5.71
5.89
6.10
6.32
6.55
6.81
7.09
7.43
7.83
8.27
8.74
9.24
9.79
10.27
10.66
11.15
11.82
12.75
13.95
19.12
29.76
41.96
57.13
77.46
118.29
205.60
282.53
284.64
239.48

3-50 YR
9/53

179.15
132.96
98.36
69.83
48.69
34.38
25.57
20.03
16.50
14.19
12.61
11.59
10.79
10.12
9.50
8.93
8.43
7.99
7.61
7.27
6.97
6.69
6.44
6.21
6.00
5.80
5.62
5.45
5.29
5.14
4.99
4.86
4.71
4.54
4.37
4.23
4.11
4.00
3.91
3.82
3.74
3.66
3.58
3.51
3.45
3.38
3.32
3.26
3.20
3.15
3.09
3.04
2.99
2.94

4-50 YR
10/59

2.90
2.85
2.81
2.77
2.73
2.69
2.65
2.61
2.58
2.54
2.51
2.48
2.44
2.41
2.37
2.32
2.26
2.21
2.18
2.14
2.12
2.09
2.06
2.04
2.02
2.00
1.97
1.95
1.93
1.91
1.89
1.87
1.85
1.84
1.82
1.80
1.78
1.77
1.75
1.73
1.72
1.70
1.69
1.67
1.66
1.64
1.63
1.61
1.60
1.59
1.57
1.56
1.55
1.54

5-50YR
11/53

```
     1.52
     1.51
     1.50
     1.49
     1.48
     1.47
     1.45
     1.44
     1.43
     1.42
     1.41
     1.40
     1.39
     1.38
     1.37
     1.36
     1.35
     1.34
     1.33
     1.32
     1.32
     1.31
     1.30
     1.29
     1.28
     1.27
     1.26
     1.26
     1.25
     1.24
     1.23
     1.22
END DATA
/SR51/PUMPINFLOW/FLOW/18JUN1995/5MIN/50YR/
RTS  Ver:  2   Prog:HEC1    LW:18JUN81  11:44:09   Tag:T3
Start: 18JUN1995 at 0005 hours;   End: 18JUN1995 at 0055 hours;
Number:   11
Units: CFS         Type: INST-VAL

    1.09
     .79
     .50
     .28
     .16
     .09
     .05
     .03
     .02
     .01
     .00
END FILE
```

6-50 YR
12/59

```
****************************************
*                                      *
*   FLOOD HYDROGRAPH PACKAGE  (HEC-1)  *
*           SEPTEMBER 1990             *
*            VERSION 4.0               *
*                                      *
* RUN DATE  06/18/2081  TIME  11:44:09 *
*                                      *
****************************************
```

```
****************************************
*                                      *
*    U.S. ARMY CORPS OF ENGINEERS      *
*    HYDROLOGIC ENGINEERING CENTER     *
*          609 SECOND STREET           *
*       DAVIS, CALIFORNIA 95616        *
*           (916) 756-1104             *
*                                      *
****************************************
```

50-YEAR EVENT

```
X     X  XXXXXXX   XXXXX          X
X     X  X       X     X        XX
X     X  X       X              X
XXXXXXX  XXXX    X       XXXXX  X
X     X  X       X              X
X     X  X       X     X        X
X     X  XXXXXXX   XXXXX        XXX
```

THIS PROGRAM REPLACES ALL PREVIOUS VERSIONS OF HEC-1 KNOWN AS HEC1 (JAN 73), HEC1GS, HEC1DB, AND HEC1KW.

THE DEFINITIONS OF VARIABLES -RTIMP- AND -RTIOR- HAVE CHANGED FROM THOSE USED WITH THE 1973-STYLE INPUT STRUCTURE.
THE DEFINITION OF -AMSKK- ON RM-CARD WAS CHANGED WITH REVISIONS DATED 28 SEP 81. THIS IS THE FORTRAN77 VERSION
NEW OPTIONS: DAMBREAK OUTFLOW SUBMERGENCE , SINGLE EVENT DAMAGE CALCULATION, DSS:WRITE STAGE FREQUENCY,
DSS:READ TIME SERIES AT DESIRED CALCULATION INTERVAL LOSS RATE:GREEN AND AMPT INFILTRATION
KINEMATIC WAVE: NEW FINITE DIFFERENCE ALGORITHM

```
LINE          ID.......1.......2.......3.......4.......5.......6.......7.......8.......9......10

  1           ID                    -----------SQUAW PEAK HIGHWAY-----------
  2           ID                                  SR 51
  3           ID                        SHEA BOULEVARD TO THUNDERBIRD ROAD
  4           ID
  5           ID                                 BRW, INC.
  6           ID                               17 JUNE 1995
  7           ID                             FINAL HYDROGRAPHS
  8           ID
  9           ID     ON-SITE DRAINAGE/STORAGE ANALYSIS 50-YEAR, 24-HOUR STORM EVENT
 10           ID     WITHOUT PIPE ROUTING STORAGE
 11           ID     CA FROM RATIONAL METHOD IS ENTERED AS THE CONTRIBUTING AREA WITH
 12           ID     100 PERCENT RUNOFF (CN = 100)
 13           ID     ASSUME THAT THE FUTURE HOV LANES HAVE BEEN INSTALLED IN THE MEDIAN AND
 14           ID     THE MEDIAN IS COMPLETELY IMPERVIOUS
 15           ID     Q50 = IxCA = 4.39x70.39 = 308 CFS BY THE RATIONAL METHOD
 16           ID     TOTAL RUNOFF AREA = 82.51 ACRES
 17           ID
 18           ID     FILE NAME: PMP50YR.DAT
              *DIAGRAM
 19           IT      5. 17JUN95      0.    300.
 20           IO      3.      0.
 21           IN     30. 17JUN95      0.

 22           KK    SUB1
 23           KM        RUNOFF FROM SUB-BASIN 1
 24           KM        AREA FROM SOUTH OF PUMP HOUSE
 25           KM        TIME OF CONCENTRATION INCLUDING 5 MINUTE INLET TIME IS 20.66 MINUTES
 26           KM        CONTRIBUTING AREA = 64.63 ACRES & CA = 55.09 ACRES
 27           BA  .08608
              *       HYPOTHETICAL STORM DISTRIBUTION
 28           PH          .1289    0.67    1.31    2.21    2.41    2.55    2.80    3.06    3.33
 29           LS      0.    100.
 30           UD   .2066

 31           KK    SUB2
 32           KM        RUNOFF FROM SUB-BASIN 2
 33           KM        AREA FROM NORTH OF PUMP HOUSE
 34           KM        TIME OF CONCENTRATION INCLUDING INLET TIME IS 10 MINUTES
 35           KM        CONTRIBUTING AREA = 17.88 ACRES & CA = 15.20 ACRES
 36           BA  .02375
 37           LS      0.    100.
 38           UD  .10000

 39           KK     CP1  COMBINE SUB1 AND SUB2 HYDROGRAPHS
 40           KO       2       2
 41           ZW   A=SR51 B=PUMPINFLOW C=FLOW D=17JUN1995 E=5MIN F=50YR
 42           HC       2

 43           KK    PUMP  96" STORAGE RCP's
 44           KM          L = 2400
 45           KM        PUMP CARDS ARE INCLUDED ONLY FOR INFORMATIONAL PURPOSES.  ACTUAL
 46           KM        SIZING OF PUMP STATION STORAGE AND PUMP SIZES WILL BE DETERMINED
 47           KM        BY A SEPARATE SPREAD SHEET PROGRAM THAT TAKES INTO ACCOUNT THE ACTUAL
 48           KM        PUMP RATING CURVES.
 49           RS       1    ELEV    1000       0
```

```
LINE          ID.......1.......2.......3.......4.......5.......6.......7.......8.......9......10

  50          SV        0      .54     1.39     2.23     2.77
  51          SE     1000     1002     1003     1006     1008
  52          SQ      .01       .1       .2       .3       .4
  53          WP                                PUMP
  54          WP     1001       40     1000     PUMP
  55          WP   1001.5       40   1001.0     PUMP
  56          WP   1001.5       40   1001.0     PUMP
  57          WP   1002.5       40   1002.0     PUMP
  58          WP   1002.5       40   1002.0     PUMP
  59          KO        1        2
  60          ZZ
```

SCHEMATIC DIAGRAM OF STREAM NETWORK

```
INPUT
 LINE      (V) ROUTING          (--->) DIVERSION OR PUMP FLOW

  NO.      (.) CONNECTOR        (<---) RETURN OF DIVERTED OR PUMPED FLOW

   22       SUB1
              .
              .
   31         .        SUB2
              .          .
              .          .
   39       CP1............
              V
              V
   53         .------->    PUMP
   43       PUMP
```

(***) RUNOFF ALSO COMPUTED AT THIS LOCATION

```
****************************************
*                                      *
*   FLOOD HYDROGRAPH PACKAGE  (HEC-1)  *
*           SEPTEMBER 1990             *
*            VERSION 4.0               *
*                                      *
* RUN DATE  06/18/2081  TIME  11:44:09 *
*                                      *
****************************************
```

```
****************************************
*                                      *
*   U.S. ARMY CORPS OF ENGINEERS       *
*   HYDROLOGIC ENGINEERING CENTER      *
*         609 SECOND STREET            *
*       DAVIS, CALIFORNIA 95616        *
*          (916) 756-1104              *
*                                      *
****************************************
```

----------SQUAW PEAK HIGHWAY----------
SR 51
SHEA BOULEVARD TO THUNDERBIRD ROAD

BRW, INC.
17 JUNE 1995
FINAL HYDROGRAPHS

ON-SITE DRAINAGE/STORAGE ANALYSIS 50-YEAR, 24-HOUR STORM EVENT
WITHOUT PIPE ROUTING STORAGE
CA FROM RATIONAL METHOD IS ENTERED AS THE CONTRIBUTING AREA WITH
100 PERCENT RUNOFF (CN = 100)
ASSUME THAT THE FUTURE HOV LANES HAVE BEEN INSTALLED IN THE MEDIAN AND
THE MEDIAN IS COMPLETELY IMPERVIOUS
Q50 = IxCA = 4.39x70.39 = 308 CFS BY THE RATIONAL METHOD
TOTAL RUNOFF AREA = 82.51 ACRES

FILE NAME: PMP50YR.DAT

```
20 IO        OUTPUT CONTROL VARIABLES
                 IPRNT          3  PRINT CONTROL
                 IPLOT          0  PLOT CONTROL
                 QSCAL         0.  HYDROGRAPH PLOT SCALE

   IT        HYDROGRAPH TIME DATA
                  NMIN          5  MINUTES IN COMPUTATION INTERVAL
                 IDATE     17JUN95  STARTING DATE
                 ITIME        0000  STARTING TIME
                    NQ         300  NUMBER OF HYDROGRAPH ORDINATES
                NDDATE     18JUN95  ENDING DATE
                NDTIME        0055  ENDING TIME
                 ICENT          19  CENTURY MARK

            COMPUTATION INTERVAL     .08 HOURS
                 TOTAL TIME BASE   24.92 HOURS

      ENGLISH UNITS
          DRAINAGE AREA          SQUARE MILES
          PRECIPITATION DEPTH    INCHES
          LENGTH, ELEVATION      FEET
          FLOW                   CUBIC FEET PER SECOND
          STORAGE VOLUME         ACRE-FEET
          SURFACE AREA           ACRES
          TEMPERATURE            DEGREES FAHRENHEIT
```

*** ***

```
          **************
          *            *
 22 KK    *     SUB1   *
          *            *
          **************
```

RUNOFF FROM SUB-BASIN 1
AREA FROM SOUTH OF PUMP HOUSE
TIME OF CONCENTRATION INCLUDING 5 MINUTE INLET TIME IS 20.66 MINUTES
CONTRIBUTING AREA = 64.63 ACRES & CA = 55.09 ACRES

SUBBASIN RUNOFF DATA

27 BA SUBBASIN CHARACTERISTICS

TAREA	.09	SUBBASIN AREA

PRECIPITATION DATA

28 PH DEPTHS FOR 0-PERCENT HYPOTHETICAL STORM

..... HYDRO-35			..... TP-40					..... TP-49			
5-MIN	15-MIN	60-MIN	2-HR	3-HR	6-HR	12-HR	24-HR	2-DAY	4-DAY	7-DAY	10-DAY
.67	1.31	2.21	2.41	2.55	2.80	3.06	3.33	.00	.00	.00	.00

STORM AREA = .13

29 LS SCS LOSS RATE

STRTL	.00	INITIAL ABSTRACTION
CRVNBR	100.00	CURVE NUMBER
RTIMP	.00	PERCENT IMPERVIOUS AREA

30 UD SCS DIMENSIONLESS UNITGRAPH

TLAG	.21	LAG

***

UNIT HYDROGRAPH
14 END-OF-PERIOD ORDINATES

39.	130.	168.	139.	81.	46.	27.	16.	9.	5.
3.	2.	1.	1.						

*** *** *** *** ***

HYDROGRAPH AT STATION SUB1

TOTAL RAINFALL = 3.33, TOTAL LOSS = .00, TOTAL EXCESS = 3.33

PEAK FLOW (CFS)	TIME (HR)		MAXIMUM AVERAGE FLOW 6-HR	24-HR	72-HR	24.92-HR
228.	12.25	(CFS)	26.	8.	7.	7.
		(INCHES)	2.798	3.327	3.329	3.329
		(AC-FT)	13.	15.	15.	15.

CUMULATIVE AREA = .09 SQ MI

*** ***

```
          **************
          *            *
 31 KK    *     SUB2   *
          *            *
          **************
```

RUNOFF FROM SUB-BASIN 2
AREA FROM NORTH OF PUMP HOUSE
TIME OF CONCENTRATION INCLUDING INLET TIME IS 10 MINUTES
CONTRIBUTING AREA = 17.88 ACRES & CA = 15.20 ACRES

SUBBASIN RUNOFF DATA

36 BA SUBBASIN CHARACTERISTICS

TAREA .02 SUBBASIN AREA

PRECIPITATION DATA

28 PH DEPTHS FOR 0-PERCENT HYPOTHETICAL STORM

..... HYDRO-35			..... TP-40					..... TP-49			
5-MIN	15-MIN	60-MIN	2-HR	3-HR	6-HR	12-HR	24-HR	2-DAY	4-DAY	7-DAY	10-DAY
.67	1.31	2.21	2.41	2.55	2.80	3.06	3.33	.00	.00	.00	.00

STORM AREA = .13

37 LS SCS LOSS RATE

STRTL .00 INITIAL ABSTRACTION
CRVNBR 100.00 CURVE NUMBER
RTIMP .00 PERCENT IMPERVIOUS AREA

38 UD SCS DIMENSIONLESS UNITGRAPH

TLAG .10 LAG

***

UNIT HYDROGRAPH
8 END-OF-PERIOD ORDINATES

52. 77. 34. 13. 5. 2. 1. 0.

*** *** *** *** ***

HYDROGRAPH AT STATION SUB2

TOTAL RAINFALL = 3.33, TOTAL LOSS = .00, TOTAL EXCESS = 3.33

PEAK FLOW (CFS)	TIME (HR)		MAXIMUM AVERAGE FLOW 6-HR	24-HR	72-HR	24.92-HR
81.	12.17	(CFS)	7.	2.	2.	2.
		(INCHES)	2.799	3.328	3.329	3.329
		(AC-FT)	4.	4.	4.	4.

CUMULATIVE AREA = .02 SQ MI

*** ***

```
          **************
          *            *
39 KK     *      CP1   *      COMBINE SUB1 AND SUB2 HYDROGRAPHS
          *            *
          **************

40 KO          OUTPUT CONTROL VARIABLES
                    IPRNT          2  PRINT CONTROL
                    IPLOT          2  PLOT CONTROL
                    QSCAL         0.  HYDROGRAPH PLOT SCALE

42 HC          HYDROGRAPH COMBINATION
                    ICOMP          2  NUMBER OF HYDROGRAPHS TO COMBINE

                                                    ***
```

****

HYDROGRAPH AT STATION CP1
SUM OF 2 HYDROGRAPHS

****

DA MON HRMN	ORD	FLOW	*	DA MON HRMN	ORD	FLOW	*	DA MON HRMN	ORD	FLOW	*	DA MON HRMN	ORD	FLOW
17 JUN 0000	1	0.	*	17 JUN 0615	76	2.	*	17 JUN 1230	151	133.	*	17 JUN 1845	226	2.
17 JUN 0005	2	0.	*	17 JUN 0620	77	2.	*	17 JUN 1235	152	98.	*	17 JUN 1850	227	2.
17 JUN 0010	3	0.	*	17 JUN 0625	78	2.	*	17 JUN 1240	153	70.	*	17 JUN 1855	228	2.
17 JUN 0015	4	1.	*	17 JUN 0630	79	2.	*	17 JUN 1245	154	49.	*	17 JUN 1900	229	2.
17 JUN 0020	5	1.	*	17 JUN 0635	80	2.	*	17 JUN 1250	155	34.	*	17 JUN 1905	230	2.
17 JUN 0025	6	1.	*	17 JUN 0640	81	2.	*	17 JUN 1255	156	26.	*	17 JUN 1910	231	2.
17 JUN 0030	7	1.	*	17 JUN 0645	82	2.	*	17 JUN 1300	157	20.	*	17 JUN 1915	232	2.
17 JUN 0035	8	1.	*	17 JUN 0650	83	3.	*	17 JUN 1305	158	17.	*	17 JUN 1920	233	2.
17 JUN 0040	9	1.	*	17 JUN 0655	84	3.	*	17 JUN 1310	159	14.	*	17 JUN 1925	234	2.
17 JUN 0045	10	1.	*	17 JUN 0700	85	3.	*	17 JUN 1315	160	13.	*	17 JUN 1930	235	2.
17 JUN 0050	11	1.	*	17 JUN 0705	86	3.	*	17 JUN 1320	161	12.	*	17 JUN 1935	236	2.
17 JUN 0055	12	1.	*	17 JUN 0710	87	3.	*	17 JUN 1325	162	11.	*	17 JUN 1940	237	2.
17 JUN 0100	13	1.	*	17 JUN 0715	88	3.	*	17 JUN 1330	163	10.	*	17 JUN 1945	238	2.
17 JUN 0105	14	1.	*	17 JUN 0720	89	3.	*	17 JUN 1335	164	10.	*	17 JUN 1950	239	2.
17 JUN 0110	15	1.	*	17 JUN 0725	90	3.	*	17 JUN 1340	165	9.	*	17 JUN 1955	240	2.
17 JUN 0115	16	1.	*	17 JUN 0730	91	3.	*	17 JUN 1345	166	8.	*	17 JUN 2000	241	2.
17 JUN 0120	17	1.	*	17 JUN 0735	92	3.	*	17 JUN 1350	167	8.	*	17 JUN 2005	242	2.
17 JUN 0125	18	1.	*	17 JUN 0740	93	3.	*	17 JUN 1355	168	8.	*	17 JUN 2010	243	2.
17 JUN 0130	19	1.	*	17 JUN 0745	94	3.	*	17 JUN 1400	169	7.	*	17 JUN 2015	244	2.
17 JUN 0135	20	1.	*	17 JUN 0750	95	3.	*	17 JUN 1405	170	7.	*	17 JUN 2020	245	2.
17 JUN 0140	21	1.	*	17 JUN 0755	96	3.	*	17 JUN 1410	171	7.	*	17 JUN 2025	246	2.
17 JUN 0145	22	1.	*	17 JUN 0800	97	3.	*	17 JUN 1415	172	6.	*	17 JUN 2030	247	2.
17 JUN 0150	23	1.	*	17 JUN 0805	98	3.	*	17 JUN 1420	173	6.	*	17 JUN 2035	248	2.
17 JUN 0155	24	1.	*	17 JUN 0810	99	3.	*	17 JUN 1425	174	6.	*	17 JUN 2040	249	2.
17 JUN 0200	25	1.	*	17 JUN 0815	100	3.	*	17 JUN 1430	175	6.	*	17 JUN 2045	250	2.
17 JUN 0205	26	1.	*	17 JUN 0820	101	3.	*	17 JUN 1435	176	6.	*	17 JUN 2050	251	2.
17 JUN 0210	27	1.	*	17 JUN 0825	102	3.	*	17 JUN 1440	177	5.	*	17 JUN 2055	252	2.
17 JUN 0215	28	1.	*	17 JUN 0830	103	3.	*	17 JUN 1445	178	5.	*	17 JUN 2100	253	2.
17 JUN 0220	29	1.	*	17 JUN 0835	104	4.	*	17 JUN 1450	179	5.	*	17 JUN 2105	254	2.
17 JUN 0225	30	1.	*	17 JUN 0840	105	4.	*	17 JUN 1455	180	5.	*	17 JUN 2110	255	2.
17 JUN 0230	31	1.	*	17 JUN 0845	106	4.	*	17 JUN 1500	181	5.	*	17 JUN 2115	256	2.
17 JUN 0235	32	1.	*	17 JUN 0850	107	4.	*	17 JUN 1505	182	5.	*	17 JUN 2120	257	2.
17 JUN 0240	33	1.	*	17 JUN 0855	108	4.	*	17 JUN 1510	183	5.	*	17 JUN 2125	258	2.
17 JUN 0245	34	1.	*	17 JUN 0900	109	4.	*	17 JUN 1515	184	4.	*	17 JUN 2130	259	2.

17 JUN 0250	35	1.	*	17 JUN 0905	110	4.	*	17 JUN 1520	185	4.	*	17 JUN 2135	260	1.
17 JUN 0255	36	1.	*	17 JUN 0910	111	4.	*	17 JUN 1525	186	4.	*	17 JUN 2140	261	1.
17 JUN 0300	37	2.	*	17 JUN 0915	112	4.	*	17 JUN 1530	187	4.	*	17 JUN 2145	262	1.
17 JUN 0305	38	2.	*	17 JUN 0920	113	5.	*	17 JUN 1535	188	4.	*	17 JUN 2150	263	1.
17 JUN 0310	39	2.	*	17 JUN 0925	114	5.	*	17 JUN 1540	189	4.	*	17 JUN 2155	264	1.
17 JUN 0315	40	2.	*	17 JUN 0930	115	5.	*	17 JUN 1545	190	4.	*	17 JUN 2200	265	1.
17 JUN 0320	41	2.	*	17 JUN 0935	116	5.	*	17 JUN 1550	191	4.	*	17 JUN 2205	266	1.
17 JUN 0325	42	2.	*	17 JUN 0940	117	5.	*	17 JUN 1555	192	4.	*	17 JUN 2210	267	1.
17 JUN 0330	43	2.	*	17 JUN 0945	118	5.	*	17 JUN 1600	193	4.	*	17 JUN 2215	268	1.
17 JUN 0335	44	2.	*	17 JUN 0950	119	5.	*	17 JUN 1605	194	3.	*	17 JUN 2220	269	1.
17 JUN 0340	45	2.	*	17 JUN 0955	120	6.	*	17 JUN 1610	195	3.	*	17 JUN 2225	270	1.
17 JUN 0345	46	2.	*	17 JUN 1000	121	6.	*	17 JUN 1615	196	3.	*	17 JUN 2230	271	1.
17 JUN 0350	47	2.	*	17 JUN 1005	122	6.	*	17 JUN 1620	197	3.	*	17 JUN 2235	272	1.
17 JUN 0355	48	2.	*	17 JUN 1010	123	6.	*	17 JUN 1625	198	3.	*	17 JUN 2240	273	1.
17 JUN 0400	49	2.	*	17 JUN 1015	124	6.	*	17 JUN 1630	199	3.	*	17 JUN 2245	274	1.
17 JUN 0405	50	2.	*	17 JUN 1020	125	7.	*	17 JUN 1635	200	3.	*	17 JUN 2250	275	1.
17 JUN 0410	51	2.	*	17 JUN 1025	126	7.	*	17 JUN 1640	201	3.	*	17 JUN 2255	276	1.
17 JUN 0415	52	2.	*	17 JUN 1030	127	7.	*	17 JUN 1645	202	3.	*	17 JUN 2300	277	1.
17 JUN 0420	53	2.	*	17 JUN 1035	128	7.	*	17 JUN 1650	203	3.	*	17 JUN 2305	278	1.
17 JUN 0425	54	2.	*	17 JUN 1040	129	8.	*	17 JUN 1655	204	3.	*	17 JUN 2310	279	1.
17 JUN 0430	55	2.	*	17 JUN 1045	130	8.	*	17 JUN 1700	205	3.	*	17 JUN 2315	280	1.
17 JUN 0435	56	2.	*	17 JUN 1050	131	9.	*	17 JUN 1705	206	3.	*	17 JUN 2320	281	1.
17 JUN 0440	57	2.	*	17 JUN 1055	132	9.	*	17 JUN 1710	207	3.	*	17 JUN 2325	282	1.
17 JUN 0445	58	2.	*	17 JUN 1100	133	10.	*	17 JUN 1715	208	3.	*	17 JUN 2330	283	1.
17 JUN 0450	59	2.	*	17 JUN 1105	134	10.	*	17 JUN 1720	209	3.	*	17 JUN 2335	284	1.
17 JUN 0455	60	2.	*	17 JUN 1110	135	11.	*	17 JUN 1725	210	3.	*	17 JUN 2340	285	1.
17 JUN 0500	61	2.	*	17 JUN 1115	136	11.	*	17 JUN 1730	211	3.	*	17 JUN 2345	286	1.
17 JUN 0505	62	2.	*	17 JUN 1120	137	12.	*	17 JUN 1735	212	3.	*	17 JUN 2350	287	1.
17 JUN 0510	63	2.	*	17 JUN 1125	138	13.	*	17 JUN 1740	213	3.	*	17 JUN 2355	288	1.
17 JUN 0515	64	2.	*	17 JUN 1130	139	14.	*	17 JUN 1745	214	3.	*	18 JUN 0000	289	1.
17 JUN 0520	65	2.	*	17 JUN 1135	140	19.	*	17 JUN 1750	215	2.	*	18 JUN 0005	290	1.
17 JUN 0525	66	2.	*	17 JUN 1140	141	30.	*	17 JUN 1755	216	2.	*	18 JUN 0010	291	1.
17 JUN 0530	67	2.	*	17 JUN 1145	142	42.	*	17 JUN 1800	217	2.	*	18 JUN 0015	292	1.
17 JUN 0535	68	2.	*	17 JUN 1150	143	57.	*	17 JUN 1805	218	2.	*	18 JUN 0020	293	0.
17 JUN 0540	69	2.	*	17 JUN 1155	144	77.	*	17 JUN 1810	219	2.	*	18 JUN 0025	294	0.
17 JUN 0545	70	2.	*	17 JUN 1200	145	118.	*	17 JUN 1815	220	2.	*	18 JUN 0030	295	0.
17 JUN 0550	71	2.	*	17 JUN 1205	146	206.	*	17 JUN 1820	221	2.	*	18 JUN 0035	296	0.
17 JUN 0555	72	2.	*	17 JUN 1210	147	283.	*	17 JUN 1825	222	2.	*	18 JUN 0040	297	0.
17 JUN 0600	73	2.	*	17 JUN 1215	148	285.	*	17 JUN 1830	223	2.	*	18 JUN 0045	298	0.
17 JUN 0605	74	2.	*	17 JUN 1220	149	239.	*	17 JUN 1835	224	2.	*	18 JUN 0050	299	0.
17 JUN 0610	75	2.	*	17 JUN 1225	150	179.	*	17 JUN 1840	225	2.	*	18 JUN 0055	300	0.
			*				*				*			

****

PEAK FLOW (CFS)	TIME (HR)		MAXIMUM AVERAGE FLOW 6-HR	24-HR	72-HR	24.92-HR
285.	12.25	(CFS)	33.	10.	9.	9.
		(INCHES)	2.798	3.327	3.329	3.329
		(AC-FT)	16.	19.	20.	20.

CUMULATIVE AREA = .11 SQ MI

```
-----DSS---ZOPEN:  Version: 6-EA;  Existing File Opened
                   Unit:  71,  File: PMP50YR.DSS
-----DSS---ZWRITE Unit  71; Vers.    2:  /SR51/PUMPINFLOW/FLOW/16JUN1995/5MIN/50YR/
-----DSS---ZWRITE Unit  71; Vers.    2:  /SR51/PUMPINFLOW/FLOW/17JUN1995/5MIN/50YR/
-----DSS---ZWRITE Unit  71; Vers.    2:  /SR51/PUMPINFLOW/FLOW/18JUN1995/5MIN/50YR/
```

STATION CP1

(O) OUTFLOW

DAHRMN	PER	0.	40.	80.	120.	160.	200.	240.	280.	320.	0.	0.	0.	0.
170000	10	.	.	.	.	.	.	.	.	.	.	.	.	.
170005	20	.	.	.	.	.	.	.	.	.	.	.	.	.
170010	30	.	.	.	.	.	.	.	.	.	.	.	.	.
170015	40	.	.	.	.	.	.	.	.	.	.	.	.	.
170020	50	.	.	.	.	.	.	.	.	.	.	.	.	.
170025	60	.	.	.	.	.	.	.	.	.	.	.	.	.
170030	70	.	.	.	.	.	.	.	.	.	.	.	.	.
170035	80	.	.	.	.	.	.	.	.	.	.	.	.	.
170040	90	.	.	.	.	.	.	.	.	.	.	.	.	.
170045	100	.	.	.	.	.	.	.	.	.	.	.	.	.
170050	110	.	.	.	.	.	.	.	.	.	.	.	.	.
170055	120	.	.	.	.	.	.	.	.	.	.	.	.	.
170100	130	.	.	.	.	.	.	.	.	.	.	.	.	.
170105	140	.	.	.	.	.	.	.	.	.	.	.	.	.
170110	150	.	.	.	.	.	.	.	.	.	.	.	.	.
170115	160	.	.	.	.	.	.	.	.	.	.	.	.	.
170120	170	.	.	.	.	.	.	.	.	.	.	.	.	.
170125	180	.	.	.	.	.	.	.	.	.	.	.	.	.
170130	190	.	.	.	.	.	.	.	.	.	.	.	.	.
170135	200	.	.	.	.	.	.	.	.	.	.	.	.	.
170140	210	.	.	.	.	.	.	.	.	.	.	.	.	.
170145	220	.	.	.	.	.	.	.	.	.	.	.	.	.
170150	230	.	.	.	.	.	.	.	.	.	.	.	.	.
170155	240	.	.	.	.	.	.	.	.	.	.	.	.	.
170200	250	.	.	.	.	.	.	.	.	.	.	.	.	.
170205	260	.	.	.	.	.	.	.	.	.	.	.	.	.
170210	270	.	.	.	.	.	.	.	.	.	.	.	.	.
170215	280	.	.	.	.	.	.	.	.	.	.	.	.	.
170220	290	.	.	.	.	.	.	.	.	.	.	.	.	.
170225	300	.	.	.	.	.	.	.	.	.	.	.	.	.
170230	310	.	.	.	.	.	.	.	.	.	.	.	.	.
170235	320	.	.	.	.	.	.	.	.	.	.	.	.	.
170240	330	.	.	.	.	.	.	.	.	.	.	.	.	.
170245	340	.	.	.	.	.	.	.	.	.	.	.	.	.
170250	350	.	.	.	.	.	.	.	.	.	.	.	.	.
170255	360	.	.	.	.	.	.	.	.	.	.	.	.	.
170300	370	.	.	.	.	.	.	.	.	.	.	.	.	.
170305	380	.	.	.	.	.	.	.	.	.	.	.	.	.
170310	390	.	.	.	.	.	.	.	.	.	.	.	.	.
170315	400	.	.	.	.	.	.	.	.	.	.	.	.	.
170320	410	.	.	.	.	.	.	.	.	.	.	.	.	.
170325	420	.	.	.	.	.	.	.	.	.	.	.	.	.
170330	430	.	.	.	.	.	.	.	.	.	.	.	.	.
170335	440	.	.	.	.	.	.	.	.	.	.	.	.	.
170340	450	.	.	.	.	.	.	.	.	.	.	.	.	.
170345	460	.	.	.	.	.	.	.	.	.	.	.	.	.
170350	470	.	.	.	.	.	.	.	.	.	.	.	.	.
170355	480	.	.	.	.	.	.	.	.	.	.	.	.	.
170400	490	.	.	.	.	.	.	.	.	.	.	.	.	.
170405	500	.	.	.	.	.	.	.	.	.	.	.	.	.
170410	510	.	.	.	.	.	.	.	.	.	.	.	.	.
170415	520	.	.	.	.	.	.	.	.	.	.	.	.	.
170420	530	.	.	.	.	.	.	.	.	.	.	.	.	.
170425	540	.	.	.	.	.	.	.	.	.	.	.	.	.
170430	550	.	.	.	.	.	.	.	.	.	.	.	.	.

170435	560
170440	570
170445	580
170450	590
170455	600
170500	610
170505	620
170510	630
170515	640
170520	650
170525	660
170530	670
170535	68.0
170540	69.0
170545	70.0
170550	71.0
170555	72.0
170600	73.0
170605	74.0
170610	75.0
170615	76.0
170620	77.0
170625	78.0
170630	79.0
170635	80.0
170640	81.0
170645	82.0
170650	83.0
170655	84.0
170700	85.0
170705	86.0
170710	87.0
170715	88.0
170720	89.0
170725	90.0
170730	91.0
170735	92.0
170740	93.0
170745	94.0
170750	95.0
170755	96.0
170800	97.0
170805	98.0
170810	99.0
170815	100.0
170820	101.0
170825	102.0
170830	103.0
170835	104.0
170840	105.0
170845	106.0
170850	107.0
170855	108.0
170900	109.0
170905	110.0
170910	111.0
170915	112.0
170920	113.0
170925	114.0
170930	115.0

```
170935 116.0
170940 117.0
170945 118.0
170950 119.0
170955 120.0
171000 121.0
171005 122.0
171010 123. 0
171015 124. 0
171020 125. 0
171025 126. 0
171030 127. 0
171035 128. 0
171040 129. 0
171045 130. 0
171050 131. 0
171055 132. 0
171100 133. 0
171105 134.  0
171110 135.  0
171115 136.  0
171120 137.  0
171125 138.  0
171130 139.  0
171135 140.   0
171140 141.  .0
171145 142.      0
171150 143.      . 0
171155 144.      .    0.
171200 145.      .      0
171205 146.      .      .      .0
171210 147.      .      .      .      .      .0
171215 148.      .      .      .      .      .0
171220 149.      .      .      .      .      .      0
171225 150.      .      .      .      .  0   .      .
171230 151.                   .0
171235 152.      .      .  0   .      .      .      .      .      .      .      .      .
171240 153.      .    0 .      .      .      .      .      .      .      .      .      .
171245 154.      . 0    .      .      .      .      .      .      .      .      .      .
171250 155.     0.      .      .      .      .      .      .      .      .      .      .
171255 156.   0 .      .      .      .      .      .      .      .      .      .      .
171300 157.  0  .      .      .      .      .      .      .      .      .      .      .
171305 158.  0  .      .      .      .      .      .      .      .      .      .      .
171310 159.  0  .      .      .      .      .      .      .      .      .      .      .
171315 160.  0  .      .      .      .      .      .      .      .      .      .      .
171320 161. .0
171325 162.  0  .      .      .      .      .      .      .      .      .      .      .
171330 163.  0  .      .      .      .      .      .      .      .      .      .      .
171335 164. 0   .      .      .      .      .      .      .      .      .      .      .
171340 165. 0   .      .      .      .      .      .      .      .      .      .      .
171345 166. 0   .      .      .      .      .      .      .      .      .      .      .
171350 167. 0   .      .      .      .      .      .      .      .      .      .      .
171355 168. 0   .      .      .      .      .      .      .      .      .      .      .
171400 169. 0   .      .      .      .      .      .      .      .      .      .      .
171405 170. 0   .      .      .      .      .      .      .      .      .      .      .
171410 171. 0
171415 172. 0   .      .      .      .      .      .      .      .      .      .      .
171420 173. 0   .      .      .      .      .      .      .      .      .      .      .
171425 174.0    .      .      .      .      .      .      .      .      .      .      .
171430 175.0    .      .      .      .      .      .      .      .      .      .      .
```

*** ***

```
          **************
          *            *
 43 KK    *     PUMP   *      96" STORAGE RCP's
          *            *
          **************
                              L = 2400
                          PUMP CARDS ARE INCLUDED ONLY FOR INFORMATIONAL PURPOSES.  ACTUAL
                          SIZING OF PUMP STATION STORAGE AND PUMP SIZES WILL BE DETERMINED
                          BY A SEPARATE SPREAD SHEET PROGRAM THAT TAKES INTO ACCOUNT THE ACTUAL
                          PUMP RATING CURVES.

 59 KO        OUTPUT CONTROL VARIABLES
                   IPRNT          1  PRINT CONTROL
                   IPLOT          2  PLOT CONTROL
                   QSCAL         0.  HYDROGRAPH PLOT SCALE

            HYDROGRAPH ROUTING DATA

 49 RS        STORAGE ROUTING
                   NSTPS          1  NUMBER OF SUBREACHES
                    ITYP       ELEV  TYPE OF INITIAL CONDITION
                  RSVRIC    1000.00  INITIAL CONDITION
                       X        .00 WORKING R AND D COEFFICIENT

 50 SV          STORAGE        .0       .5      1.4      2.2      2.8

 51 SE        ELEVATION    1000.00  1002.00  1003.00  1006.00  1008.00

 52 SQ        DISCHARGE        0.       0.       0.       0.       0.

 54 WP        PUMPING DATA

                PUMP ON    PUMPING    PUMP OFF
               ELEVATION     RATE    ELEVATION

                 1001.0      40.      1000.0
                 1001.5      40.      1001.0
                 1001.5      40.      1001.0
                 1002.5      40.      1002.0
                 1002.5      40.      1002.0

                  ISTAD       PUMP  PUMP FLOW HYDROGRAPH IDENTIFICATION

                                                   ***
```

****

HYDROGRAPH AT STATION PUMP

****

```
                                                   *
     DA MON HRMN  ORD   PUMP Q  OUTFLOW  STORAGE   STAGE      *       DA MON HRMN  ORD   PUMP Q  OUTFLOW  STORAGE   STAGE
                                                   *
```

17 JUN 0000	1	0.	0.	.0	1000.0	*
17 JUN 0005	2	0.	0.	.0	1000.0	*
17 JUN 0010	3	0.	0.	.0	1000.0	*
17 JUN 0015	4	0.	0.	.0	1000.0	*
17 JUN 0020	5	0.	0.	.0	1000.0	*
17 JUN 0025	6	0.	0.	.0	1000.1	*
17 JUN 0030	7	0.	0.	.0	1000.1	*
17 JUN 0035	8	0.	0.	.0	1000.1	*
17 JUN 0040	9	0.	0.	.0	1000.2	*
17 JUN 0045	10	0.	0.	.0	1000.2	*
17 JUN 0050	11	0.	0.	.1	1000.2	*
17 JUN 0055	12	0.	0.	.1	1000.2	*
17 JUN 0100	13	0.	0.	.1	1000.3	*
17 JUN 0105	14	0.	0.	.1	1000.3	*
17 JUN 0110	15	0.	0.	.1	1000.3	*
17 JUN 0115	16	0.	0.	.1	1000.4	*
17 JUN 0120	17	0.	0.	.1	1000.4	*
17 JUN 0125	18	0.	0.	.1	1000.4	*
17 JUN 0130	19	0.	0.	.1	1000.5	*
17 JUN 0135	20	0.	0.	.1	1000.5	*
17 JUN 0140	21	0.	0.	.1	1000.5	*
17 JUN 0145	22	0.	0.	.2	1000.6	*
17 JUN 0150	23	0.	0.	.2	1000.6	*
17 JUN 0155	24	0.	0.	.2	1000.6	*
17 JUN 0200	25	0.	0.	.2	1000.7	*
17 JUN 0205	26	0.	0.	.2	1000.7	*
17 JUN 0210	27	0.	0.	.2	1000.7	*
17 JUN 0215	28	0.	0.	.2	1000.8	*
17 JUN 0220	29	0.	0.	.2	1000.8	*
17 JUN 0225	30	0.	0.	.2	1000.8	*
17 JUN 0230	31	0.	0.	.2	1000.9	*
17 JUN 0235	32	0.	0.	.2	1000.9	*
17 JUN 0240	33	0.	0.	.3	1001.0	*
17 JUN 0245	34	0.	0.	.3	1001.0	*
17 JUN 0250	35	0.	0.	.3	1001.0	*
17 JUN 0255	36	40.	0.	.0	1000.0	*
17 JUN 0300	37	0.	0.	.0	1000.0	*
17 JUN 0305	38	0.	0.	.0	1000.0	*
17 JUN 0310	39	0.	0.	.0	1000.1	*
17 JUN 0315	40	0.	0.	.0	1000.1	*
17 JUN 0320	41	0.	0.	.0	1000.2	*
17 JUN 0325	42	0.	0.	.1	1000.2	*
17 JUN 0330	43	0.	0.	.1	1000.2	*
17 JUN 0335	44	0.	0.	.1	1000.3	*
17 JUN 0340	45	0.	0.	.1	1000.3	*
17 JUN 0345	46	0.	0.	.1	1000.4	*
17 JUN 0350	47	0.	0.	.1	1000.4	*
17 JUN 0355	48	0.	0.	.1	1000.4	*
17 JUN 0400	49	0.	0.	.1	1000.5	*
17 JUN 0405	50	0.	0.	.1	1000.5	*
17 JUN 0410	51	0.	0.	.2	1000.6	*
17 JUN 0415	52	0.	0.	.2	1000.6	*
17 JUN 0420	53	0.	0.	.2	1000.6	*
17 JUN 0425	54	0.	0.	.2	1000.7	*
17 JUN 0430	55	0.	0.	.2	1000.7	*
17 JUN 0435	56	0.	0.	.2	1000.8	*
17 JUN 0440	57	0.	0.	.2	1000.8	*
17 JUN 0445	58	0.	0.	.2	1000.9	*
17 JUN 0450	59	0.	0.	.2	1000.9	*
17 JUN 0455	60	0.	0.	.3	1001.0	*

17 JUN 1230	151	200.	0.	2.3	1006.1
17 JUN 1235	152	200.	0.	1.7	1004.0
17 JUN 1240	153	200.	0.	.9	1002.4
17 JUN 1245	154	200.	0.	.0	1000.0
17 JUN 1250	155	0.	0.	.0	1000.0
17 JUN 1255	156	0.	0.	.2	1000.8
17 JUN 1300	157	0.	0.	.4	1001.3
17 JUN 1305	158	40.	0.	.2	1000.8
17 JUN 1310	159	40.	0.	.0	1000.2
17 JUN 1315	160	0.	0.	.0	1000.0
17 JUN 1320	161	0.	0.	.1	1000.3
17 JUN 1325	162	0.	0.	.2	1000.6
17 JUN 1330	163	0.	0.	.2	1000.9
17 JUN 1335	164	0.	0.	.3	1001.1
17 JUN 1340	165	40.	0.	.1	1000.3
17 JUN 1345	166	40.	0.	.0	1000.0
17 JUN 1350	167	0.	0.	.0	1000.0
17 JUN 1355	168	0.	0.	.1	1000.2
17 JUN 1400	169	0.	0.	.1	1000.4
17 JUN 1405	170	0.	0.	.2	1000.6
17 JUN 1410	171	0.	0.	.2	1000.7
17 JUN 1415	172	0.	0.	.2	1000.9
17 JUN 1420	173	0.	0.	.3	1001.1
17 JUN 1425	174	40.	0.	.1	1000.2
17 JUN 1430	175	0.	0.	.0	1000.0
17 JUN 1435	176	0.	0.	.0	1000.1
17 JUN 1440	177	0.	0.	.1	1000.3
17 JUN 1445	178	0.	0.	.1	1000.4
17 JUN 1450	179	0.	0.	.1	1000.6
17 JUN 1455	180	0.	0.	.2	1000.7
17 JUN 1500	181	0.	0.	.2	1000.8
17 JUN 1505	182	0.	0.	.3	1000.9
17 JUN 1510	183	0.	0.	.3	1001.0
17 JUN 1515	184	40.	0.	.0	1000.1
17 JUN 1520	185	0.	0.	.0	1000.0
17 JUN 1525	186	0.	0.	.0	1000.1
17 JUN 1530	187	0.	0.	.1	1000.2
17 JUN 1535	188	0.	0.	.1	1000.3
17 JUN 1540	189	0.	0.	.1	1000.4
17 JUN 1545	190	0.	0.	.1	1000.5
17 JUN 1550	191	0.	0.	.2	1000.6
17 JUN 1555	192	0.	0.	.2	1000.7
17 JUN 1600	193	0.	0.	.2	1000.8
17 JUN 1605	194	0.	0.	.2	1000.9
17 JUN 1610	195	0.	0.	.3	1001.0
17 JUN 1615	196	0.	0.	.3	1001.0
17 JUN 1620	197	40.	0.	.0	1000.1
17 JUN 1625	198	0.	0.	.0	1000.0
17 JUN 1630	199	0.	0.	.0	1000.1
17 JUN 1635	200	0.	0.	.0	1000.2
17 JUN 1640	201	0.	0.	.1	1000.2
17 JUN 1645	202	0.	0.	.1	1000.3
17 JUN 1650	203	0.	0.	.1	1000.4
17 JUN 1655	204	0.	0.	.1	1000.5
17 JUN 1700	205	0.	0.	.1	1000.5
17 JUN 1705	206	0.	0.	.2	1000.6
17 JUN 1710	207	0.	0.	.2	1000.7
17 JUN 1715	208	0.	0.	.2	1000.7
17 JUN 1720	209	0.	0.	.2	1000.8
17 JUN 1725	210	0.	0.	.2	1000.9

17 JUN 0500	61	0.	0.	.3	1001.0	*	17 JUN 1730	211	0.	0.	.3	1000.9
17 JUN 0505	62	40.	0.	.0	1000.0	*	17 JUN 1735	212	0.	0.	.3	1001.0
17 JUN 0510	63	0.	0.	.0	1000.0	*	17 JUN 1740	213	40.	0.	.0	1000.1
17 JUN 0515	64	0.	0.	.0	1000.0	*	17 JUN 1745	214	0.	0.	.0	1000.0
17 JUN 0520	65	0.	0.	.0	1000.1	*	17 JUN 1750	215	0.	0.	.0	1000.1
17 JUN 0525	66	0.	0.	.0	1000.1	*	17 JUN 1755	216	0.	0.	.0	1000.1
17 JUN 0530	67	0.	0.	.1	1000.2	*	17 JUN 1800	217	0.	0.	.1	1000.2
17 JUN 0535	68	0.	0.	.1	1000.2	*	17 JUN 1805	218	0.	0.	.1	1000.2
17 JUN 0540	69	0.	0.	.1	1000.3	*	17 JUN 1810	219	0.	0.	.1	1000.3
17 JUN 0545	70	0.	0.	.1	1000.3	*	17 JUN 1815	220	0.	0.	.1	1000.4
17 JUN 0550	71	0.	0.	.1	1000.4	*	17 JUN 1820	221	0.	0.	.1	1000.4
17 JUN 0555	72	0.	0.	.1	1000.5	*	17 JUN 1825	222	0.	0.	.1	1000.5
17 JUN 0600	73	0.	0.	.1	1000.5	*	17 JUN 1830	223	0.	0.	.1	1000.5
17 JUN 0605	74	0.	0.	.2	1000.6	*	17 JUN 1835	224	0.	0.	.2	1000.6
17 JUN 0610	75	0.	0.	.2	1000.6	*	17 JUN 1840	225	0.	0.	.2	1000.6
17 JUN 0615	76	0.	0.	.2	1000.7	*	17 JUN 1845	226	0.	0.	.2	1000.7
17 JUN 0620	77	0.	0.	.2	1000.7	*	17 JUN 1850	227	0.	0.	.2	1000.7
17 JUN 0625	78	0.	0.	.2	1000.8	*	17 JUN 1855	228	0.	0.	.2	1000.8
17 JUN 0630	79	0.	0.	.2	1000.8	*	17 JUN 1900	229	0.	0.	.2	1000.8
17 JUN 0635	80	0.	0.	.2	1000.9	*	17 JUN 1905	230	0.	0.	.2	1000.9
17 JUN 0640	81	0.	0.	.3	1001.0	*	17 JUN 1910	231	0.	0.	.3	1000.9
17 JUN 0645	82	0.	0.	.3	1001.0	*	17 JUN 1915	232	0.	0.	.3	1001.0
17 JUN 0650	83	40.	0.	.0	1000.1	*	17 JUN 1920	233	0.	0.	.3	1001.0
17 JUN 0655	84	0.	0.	.0	1000.0	*	17 JUN 1925	234	40.	0.	.0	1000.1
17 JUN 0700	85	0.	0.	.0	1000.1	*	17 JUN 1930	235	0.	0.	.0	1000.0
17 JUN 0705	86	0.	0.	.0	1000.1	*	17 JUN 1935	236	0.	0.	.0	1000.0
17 JUN 0710	87	0.	0.	.1	1000.2	*	17 JUN 1940	237	0.	0.	.0	1000.1
17 JUN 0715	88	0.	0.	.1	1000.3	*	17 JUN 1945	238	0.	0.	.0	1000.1
17 JUN 0720	89	0.	0.	.1	1000.3	*	17 JUN 1950	239	0.	0.	.1	1000.2
17 JUN 0725	90	0.	0.	.1	1000.4	*	17 JUN 1955	240	0.	0.	.1	1000.2
17 JUN 0730	91	0.	0.	.1	1000.5	*	17 JUN 2000	241	0.	0.	.1	1000.3
17 JUN 0735	92	0.	0.	.1	1000.5	*	17 JUN 2005	242	0.	0.	.1	1000.3
17 JUN 0740	93	0.	0.	.2	1000.6	*	17 JUN 2010	243	0.	0.	.1	1000.4
17 JUN 0745	94	0.	0.	.2	1000.7	*	17 JUN 2015	244	0.	0.	.1	1000.4
17 JUN 0750	95	0.	0.	.2	1000.8	*	17 JUN 2020	245	0.	0.	.1	1000.5
17 JUN 0755	96	0.	0.	.2	1000.8	*	17 JUN 2025	246	0.	0.	.1	1000.5
17 JUN 0800	97	0.	0.	.2	1000.9	*	17 JUN 2030	247	0.	0.	.1	1000.5
17 JUN 0805	98	0.	0.	.3	1001.0	*	17 JUN 2035	248	0.	0.	.2	1000.6
17 JUN 0810	99	40.	0.	.0	1000.1	*	17 JUN 2040	249	0.	0.	.2	1000.6
17 JUN 0815	100	0.	0.	.0	1000.0	*	17 JUN 2045	250	0.	0.	.2	1000.7
17 JUN 0820	101	0.	0.	.0	1000.1	*	17 JUN 2050	251	0.	0.	.2	1000.7
17 JUN 0825	102	0.	0.	.0	1000.2	*	17 JUN 2055	252	0.	0.	.2	1000.7
17 JUN 0830	103	0.	0.	.1	1000.3	*	17 JUN 2100	253	0.	0.	.2	1000.8
17 JUN 0835	104	0.	0.	.1	1000.3	*	17 JUN 2105	254	0.	0.	.2	1000.8
17 JUN 0840	105	0.	0.	.1	1000.4	*	17 JUN 2110	255	0.	0.	.2	1000.9
17 JUN 0845	106	0.	0.	.1	1000.5	*	17 JUN 2115	256	0.	0.	.2	1000.9
17 JUN 0850	107	0.	0.	.2	1000.6	*	17 JUN 2120	257	0.	0.	.3	1000.9
17 JUN 0855	108	0.	0.	.2	1000.7	*	17 JUN 2125	258	0.	0.	.3	1001.0
17 JUN 0900	109	0.	0.	.2	1000.8	*	17 JUN 2130	259	0.	0.	.3	1001.0
17 JUN 0905	110	0.	0.	.2	1000.9	*	17 JUN 2135	260	40.	0.	.0	1000.0
17 JUN 0910	111	0.	0.	.3	1001.0	*	17 JUN 2140	261	0.	0.	.0	1000.0
17 JUN 0915	112	40.	0.	.0	1000.1	*	17 JUN 2145	262	0.	0.	.0	1000.0
17 JUN 0920	113	0.	0.	.0	1000.0	*	17 JUN 2150	263	0.	0.	.0	1000.1
17 JUN 0925	114	0.	0.	.0	1000.1	*	17 JUN 2155	264	0.	0.	.0	1000.1
17 JUN 0930	115	0.	0.	.1	1000.2	*	17 JUN 2200	265	0.	0.	.0	1000.1
17 JUN 0935	116	0.	0.	.1	1000.4	*	17 JUN 2205	266	0.	0.	.0	1000.2
17 JUN 0940	117	0.	0.	.1	1000.5	*	17 JUN 2210	267	0.	0.	.1	1000.2
17 JUN 0945	118	0.	0.	.2	1000.6	*	17 JUN 2215	268	0.	0.	.1	1000.3
17 JUN 0950	119	0.	0.	.2	1000.7	*	17 JUN 2220	269	0.	0.	.1	1000.3
17 JUN 0955	120	0.	0.	.2	1000.9	*	17 JUN 2225	270	0.	0.	.1	1000.3

17 JUN 1000	121	0.	0.	.3	1001.0	*	17 JUN 2230	271	0.	0.	.1	1000.4
17 JUN 1005	122	40.	0.	.0	1000.2	*	17 JUN 2235	272	0.	0.	.1	1000.4
17 JUN 1010	123	0.	0.	.0	1000.0	*	17 JUN 2240	273	0.	0.	.1	1000.4
17 JUN 1015	124	0.	0.	.0	1000.2	*	17 JUN 2245	274	0.	0.	.1	1000.5
17 JUN 1020	125	0.	0.	.1	1000.3	*	17 JUN 2250	275	0.	0.	.1	1000.5
17 JUN 1025	126	0.	0.	.1	1000.5	*	17 JUN 2255	276	0.	0.	.1	1000.5
17 JUN 1030	127	0.	0.	.2	1000.7	*	17 JUN 2300	277	0.	0.	.2	1000.6
17 JUN 1035	128	0.	0.	.2	1000.9	*	17 JUN 2305	278	0.	0.	.2	1000.6
17 JUN 1040	129	0.	0.	.3	1001.0	*	17 JUN 2310	279	0.	0.	.2	1000.6
17 JUN 1045	130	40.	0.	.1	1000.2	*	17 JUN 2315	280	0.	0.	.2	1000.7
17 JUN 1050	131	0.	0.	.0	1000.0	*	17 JUN 2320	281	0.	0.	.2	1000.7
17 JUN 1055	132	0.	0.	.1	1000.2	*	17 JUN 2325	282	0.	0.	.2	1000.7
17 JUN 1100	133	0.	0.	.1	1000.5	*	17 JUN 2330	283	0.	0.	.2	1000.8
17 JUN 1105	134	0.	0.	.2	1000.7	*	17 JUN 2335	284	0.	0.	.2	1000.8
17 JUN 1110	135	0.	0.	.3	1001.0	*	17 JUN 2340	285	0.	0.	.2	1000.8
17 JUN 1115	136	0.	0.	.3	1001.3	*	17 JUN 2345	286	0.	0.	.2	1000.8
17 JUN 1120	137	40.	0.	.1	1000.5	*	17 JUN 2350	287	0.	0.	.2	1000.9
17 JUN 1125	138	40.	0.	.0	1000.0	*	17 JUN 2355	288	0.	0.	.2	1000.9
17 JUN 1130	139	0.	0.	.0	1000.0	*	18 JUN 0000	289	0.	0.	.3	1000.9
17 JUN 1135	140	0.	0.	.1	1000.4	*	18 JUN 0005	290	0.	0.	.3	1001.0
17 JUN 1140	141	0.	0.	.3	1001.0	*	18 JUN 0010	291	0.	0.	.3	1001.0
17 JUN 1145	142	40.	0.	.3	1000.9	*	18 JUN 0015	292	0.	0.	.3	1001.0
17 JUN 1150	143	40.	0.	.3	1001.2	*	18 JUN 0020	293	40.	0.	.0	1000.0
17 JUN 1155	144	40.	0.	.5	1001.9	*	18 JUN 0025	294	0.	0.	.0	1000.0
17 JUN 1200	145	120.	0.	.4	1001.3	*	18 JUN 0030	295	0.	0.	.0	1000.0
17 JUN 1205	146	120.	0.	.6	1002.1	*	18 JUN 0035	296	0.	0.	.0	1000.0
17 JUN 1210	147	120.	0.	1.5	1003.4	*	18 JUN 0040	297	0.	0.	.0	1000.0
17 JUN 1215	148	200.	0.	2.1	1005.4	*	18 JUN 0045	298	0.	0.	.0	1000.0
17 JUN 1220	149	200.	0.	2.5	1007.0	*	18 JUN 0050	299	0.	0.	.0	1000.0
17 JUN 1225	150	200.	0.	2.6	1007.2	*	18 JUN 0055	300	0.	0.	.0	1000.0
						*						

****

PEAK OUTFLOW IS 0. AT TIME 12.42 HOURS

***** PUMP FLOW HYDROGRAPH *****

PEAK FLOW (CFS)	TIME (HR)		MAXIMUM AVERAGE FLOW 6-HR	24-HR	72-HR	24.92-HR
200.	12.25	(CFS)	32.	9.	9.	9.
		(INCHES)	2.681	3.151	3.151	3.151
		(AC-FT)	16.	18.	18.	18.

***** OUTFLOW HYDROGRAPH *****

PEAK FLOW (CFS)	TIME (HR)		MAXIMUM AVERAGE FLOW 6-HR	24-HR	72-HR	24.92-HR
0.	12.42	(CFS)	0.	0.	0.	0.
		(INCHES)	.005	.013	.013	.013
		(AC-FT)	0.	0.	0.	0.

PEAK STORAGE (AC-FT)	TIME (HR)	MAXIMUM AVERAGE STORAGE 6-HR	24-HR	72-HR	24.92-HR
3.	12.42	0.	0.	0.	0.

PEAK STAGE (FEET)	TIME (HR)	MAXIMUM AVERAGE STAGE 6-HR	24-HR	72-HR	24.92-HR
1007.20	12.42	1001.03	1000.62	1000.60	1000.60

CUMULATIVE AREA = .11 SQ MI

RUNOFF SUMMARY
FLOW IN CUBIC FEET PER SECOND
TIME IN HOURS, AREA IN SQUARE MILES

OPERATION	STATION	PEAK FLOW	TIME OF PEAK	AVERAGE FLOW FOR MAXIMUM PERIOD 6-HOUR	24-HOUR	72-HOUR	BASIN AREA	MAXIMUM STAGE	TIME OF MAX STAGE
HYDROGRAPH AT	SUB1	228.	12.25	26.	8.	7.	.09		
HYDROGRAPH AT	SUB2	81.	12.17	7.	2.	2.	.02		
2 COMBINED AT	CP1	285.	12.25	33.	10.	9.	.11		
PUMP FLOW TO	PUMP	200.	12.25	32.	9.	9.	.11		
HYDROGRAPH AT	PUMP	0.	12.42	0.	0.	0.	.11	1007.20	12.42

*** NORMAL END OF HEC-1 ***

```
-----DSS---ZCLOSE Unit:  71,   File: PMP50YR.DSS
          Pointer Utilization:   .25
          Number of Records:      3
          File Size:     14.8  Kbytes
          Percent Inactive:   .00
```

2-YEAR RUNOFF EVENT

18JUN81 14:09:36

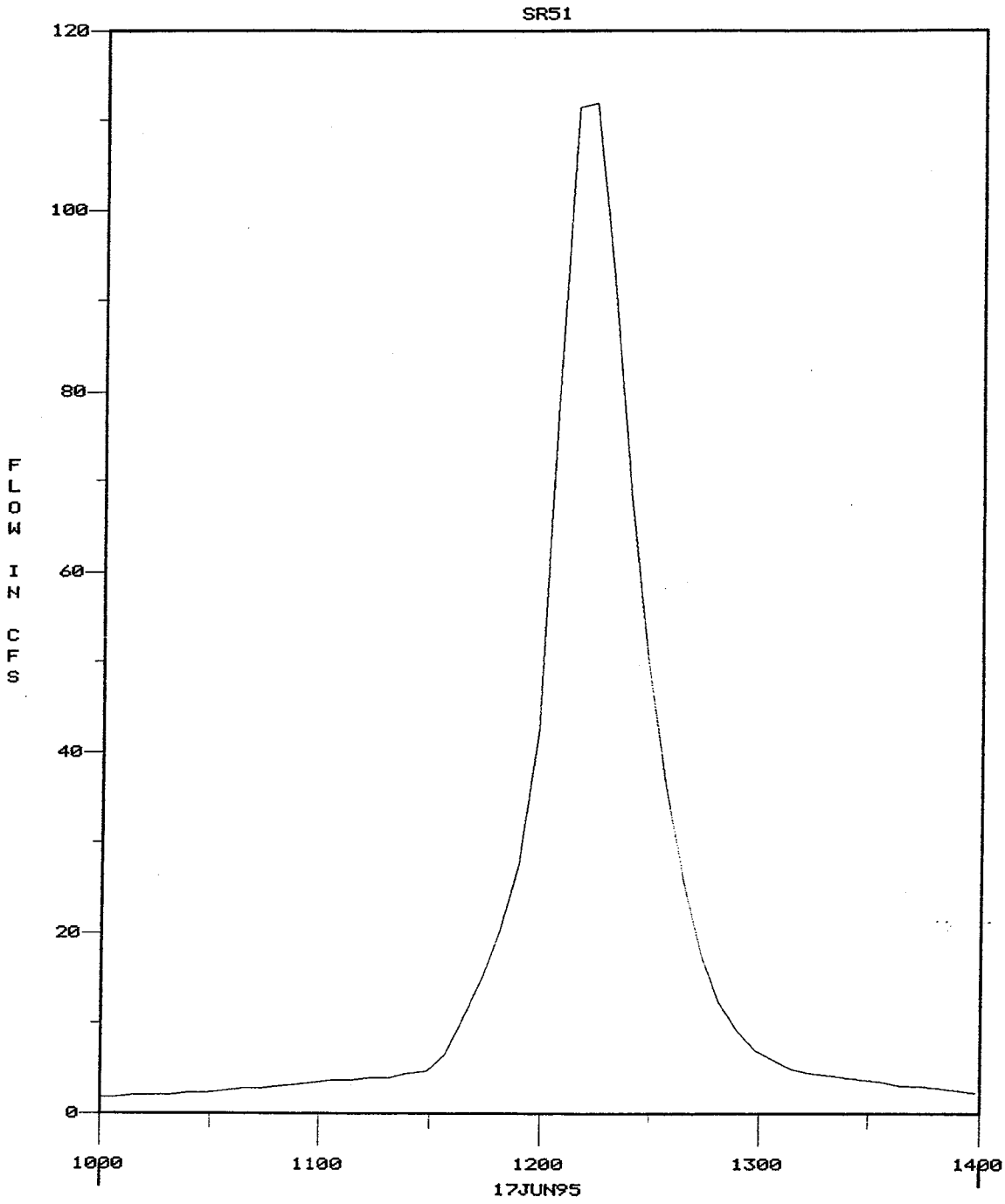

PUMPINFLOW 02YR FLOW

2-YEAR RUNOFF EVENT

/SR51/PUMPINFLOW/FLOW/16JUN1995/5MIN/02YR/
RTS Ver: 1 Prog:HEC1 LW:18JUN81 13:54:11 Tag:T4
Start: 16JUN1995 at 2400 hours; End: 16JUN1995 at 2400 hours;
Number: 1
Units: CFS Type: INST-VAL

.00
END DATA
/SR51/PUMPINFLOW/FLOW/17JUN1995/5MIN/02YR/
RTS Ver: 1 Prog:HEC1 LW:18JUN81 13:54:11 Tag:T5
Start: 17JUN1995 at 0005 hours; End: 17JUN1995 at 2400 hours;
Number: 288
Units: CFS Type: INST-VAL

.04	.14	.23	.30	.34	.37	.38	.39
.40	.40	.41	.41	.41	.42	.42	.42
.43	.43	.43	.43	.44	.44	.44	.45
.45	.45	.46	.46	.46	.47	.47	.48
.48	.48	.49	.49	.49	.50	.50	.51
.51	.52	.52	.52	.53	.53	.54	.54
.55	.55	.56	.56	.57	.57	.58	.59
.59	.60	.60	.61	.62	.62	.63	.64
.64	.65	.66	.66	.67	.68	.69	.70
.71	.73	.76	.78	.79	.80	.82	.83
.84	.85	.86	.88	.89	.90	.92	.93
.94	.96	.97	.99	1.00	1.02	1.04	1.06
1.07	1.09	1.11	1.14	1.16	1.18	1.20	1.23
1.25	1.28	1.31	1.34	1.38	1.45	1.51	1.57
1.63	1.68	1.73	1.78	1.83	1.89	1.94	2.01
2.07	2.15	2.23	2.31	2.40	2.50	2.64	2.84
3.04	3.25	3.46	3.68	3.83	3.91	4.02	4.22
4.52	4.93	6.79	10.65	15.10	20.59	27.97	42.65
78.44	111.75	112.18	93.57	68.72	50.30	36.84	25.93
17.92	12.56	9.26	7.20	5.93	5.14	4.61	4.29
4.02	3.79	3.55	3.29	3.07	2.87	2.71	2.58
2.47	2.36	2.27	2.19	2.11	2.04	1.98	1.92
1.86	1.80	1.75	1.71	1.65	1.58	1.51	1.45
1.40	1.36	1.33	1.30	1.27	1.24	1.22	1.19
1.17	1.15	1.12	1.10	1.08	1.07	1.05	1.03
1.01	1.00	.98	.96	.95	.94	.92	.91
.90	.88	.87	.86	.85	.84	.82	.81
.80	.77	.75	.73	.72	.70	.69	.68
.68	.67	.66	.65	.65	.64	.63	.63
.62	.61	.61	.60	.59	.59	.58	.58
.57	.57	.56	.56	.55	.55	.54	.54
.53	.53	.52	.52	.51	.51	.50	.50
.50	.49	.49	.48	.48	.48	.47	.47
.47	.46	.46	.46	.45	.45	.45	.44
.44	.44	.43	.43	.43	.42	.42	.42
.42	.41	.41	.41	.41	.40	.40	.40

END DATA
/SR51/PUMPINFLOW/FLOW/18JUN1995/5MIN/02YR/
RTS Ver: 1 Prog:HEC1 LW:18JUN81 13:54:11 Tag:T6

Start: 18JUN1995 at 0005 hours; End: 18JUN1995 at 0055 hours;
Number: 11
Units: CFS Type: INST-VAL

.35	.26	.16	.09	.05	.03	.02	.01
.01	.00	.00					

END FILE

2-24R
34/58

2-YEAR
RUNOFF EVENT

/SR51/PUMPINFLOW/FLOW/16JUN1995/5MIN/02YR/
RTS Ver: 1 Prog:HEC1 LW:18JUN81 13:54:11 Tag:T4
Start: 16JUN1995 at 2400 hours; End: 16JUN1995 at 2400 hours;
Number: 1
Units: CFS Type: INST-VAL

.00
END DATA
/SR51/PUMPINFLOW/FLOW/17JUN1995/5MIN/02YR/
RTS Ver: 1 Prog:HEC1 LW:18JUN81 13:54:11 Tag:T5
Start: 17JUN1995 at 0005 hours; End: 17JUN1995 at 2400 hours;
Number: 288
Units: CFS Type: INST-VAL

.04
.14
.23
.30
.34
.37
.38
.39
.40
.40
.41
.41
.41
.42
.42
.42
.43
.43
.43
.43
.44
.44
.44
.45
.45
.45
.46
.46
.46
.47
.47
.48
.48
.48
.49
.49
.49
.50
.50
.51

.51
.52
.52
.52
.53
.53
.54
.54
.55
.55
.56
.56
.57
.57
.58
.59
.59
.60
.60
.61
.62
.62
.63
.64
.64
.65
.66
.66
.67
.68
.69
.70
.71
.73
.76
.78
.79
.80
.82
.83
.84
.85
.86
.88
.89
.90
.92
.93
.94
.96
.97
.99
1.00
1.02

36/58

2-24R

1.04
1.06
1.07
1.09
1.11
1.14
1.16
1.18
1.20
1.23
1.25
1.28
1.31
1.34
1.38
1.45
1.51
1.57
1.63
1.68
1.73
1.78
1.83
1.89
1.94
2.01
2.07
2.15
2.23
2.31
2.40
2.50
2.64
2.84
3.04
3.25
3.46
3.68
3.83
3.91
4.02
4.22
4.52
4.93
6.79
10.65
15.10
20.59
27.97
42.65
78.44
111.75
112.18
93.57

37/58
3-2YR

68.72
50.30
36.84
25.93
17.92
12.56
9.26
7.20
5.93
5.14
4.61
4.29
4.02
3.79
3.55
3.29
3.07
2.87
2.71
2.58
2.47
2.36
2.27
2.19
2.11
2.04
1.98
1.92
1.86
1.80
1.75
1.71
1.65
1.58
1.51
1.45
1.40
1.36
1.33
1.30
1.27
1.24
1.22
1.19
1.17
1.15
1.12
1.10
1.08
1.07
1.05
1.03
1.01
1.00

38/58
4-2YR

.98
.96
.95
.94
.92
.91
.90
.88
.87
.86
.85
.84
.82
.81
.80
.77
.75
.73
.72
.70
.69
.68
.68
.67
.66
.65
.65
.64
.63
.63
.62
.61
.61
.60
.59
.59
.58
.58
.57
.57
.56
.56
.55
.55
.54
.54
.53
.53
.52
.52
.51
.51
.50
.50

39/58
5-24R

.50
.49
.49
.48
.48
.48
.47
.47
.47
.46
.46
.46
.45
.45
.45
.44
.44
.44
.43
.43
.43
.42
.42
.42
.42
.41
.41
.41
.41
.40
.40
.40
END DATA
/SR51/PUMPINFLOW/FLOW/18JUN1995/5MIN/02YR/
RTS Ver: 1 Prog:HEC1 LW:18JUN81 13:54:11 Tag:T6
Start: 18JUN1995 at 0005 hours; End: 18JUN1995 at 0055 hours;
Number: 11
Units: CFS Type: INST-VAL

.35
.26
.16
.09
.05
.03
.02
.01
.01
.00
.00
END FILE

40/53
6-2YR

```
****************************************
*                                      *
*   FLOOD HYDROGRAPH PACKAGE  (HEC-1)  *
*          SEPTEMBER 1990              *
*           VERSION 4.0                *
*                                      *
* RUN DATE  06/18/2081  TIME  13:54:11 *
*                                      *
****************************************
```

```
****************************************
*                                      *
*   U.S. ARMY CORPS OF ENGINEERS       *
*   HYDROLOGIC ENGINEERING CENTER      *
*         609 SECOND STREET            *
*      DAVIS, CALIFORNIA 95616         *
*          (916) 756-1104              *
*                                      *
****************************************
```

2 YR EVENT

```
X     X  XXXXXXX   XXXXX          X
X     X  X       X     X        XX
X     X  X       X                X
XXXXXXX  XXXX    X       XXXXX    X
X     X  X       X                X
X     X  X       X     X          X
X     X  XXXXXXX   XXXXX         XXX
```

THIS PROGRAM REPLACES ALL PREVIOUS VERSIONS OF HEC-1 KNOWN AS HEC1 (JAN 73), HEC1GS, HEC1DB, AND HEC1KW.

THE DEFINITIONS OF VARIABLES -RTIMP- AND -RTIOR- HAVE CHANGED FROM THOSE USED WITH THE 1973-STYLE INPUT STRUCTURE.
THE DEFINITION OF -AMSKK- ON RM-CARD WAS CHANGED WITH REVISIONS DATED 28 SEP 81. THIS IS THE FORTRAN77 VERSION
NEW OPTIONS: DAMBREAK OUTFLOW SUBMERGENCE , SINGLE EVENT DAMAGE CALCULATION, DSS:WRITE STAGE FREQUENCY,
DSS:READ TIME SERIES AT DESIRED CALCULATION INTERVAL LOSS RATE:GREEN AND AMPT INFILTRATION
KINEMATIC WAVE: NEW FINITE DIFFERENCE ALGORITHM

```
LINE          ID.......1.......2.......3.......4.......5.......6.......7.......8.......9......10

  1           ID                    -----------SQUAW PEAK HIGHWAY-----------
  2           ID                                  SR 51
  3           ID                        SHEA BOULEVARD TO THUNDERBIRD ROAD
  4           ID
  5           ID                                 BRW, INC.
  6           ID                               17 JUNE 1995
  7           ID                              FINAL HYDROGRAPHS
  8           ID
  9           ID     ON-SITE DRAINAGE/STORAGE ANALYSIS 02-YEAR, 24-HOUR STORM EVENT
 10           ID     WITHOUT PIPE ROUTING STORAGE
 11           ID     CA FROM RATIONAL METHOD IS ENTERED AS THE CONTRIBUTING AREA WITH
 12           ID     100 PERCENT RUNOFF (CN = 100)
 13           ID     ASSUME THAT THE FUTURE HOV LANES HAVE BEEN INSTALLED IN THE MEDIAN AND
 14           ID     THE MEDIAN IS COMPLETELY IMPERVIOUS
 15           ID     Q02 = IxCA = 1.80x70.39 = 127 CFS BY THE RATIONAL METHOD
 16           ID     TOTAL RUNOFF AREA = 82.51 ACRES
 17           ID
 18           ID     FILE NAME: PMP02YR.DAT
              *DIAGRAM
 19           IT      5. 17JUN95      0.    300.
 20           IO      3.      0.
 21           IN     30. 17JUN95      0.

 22           KK    SUB1
 23           KM        RUNOFF FROM SUB-BASIN 1
 24           KM        AREA FROM SOUTH OF PUMP HOUSE
 25           KM        TIME OF CONCENTRATION INCLUDING 5 MINUTE INLET TIME IS 20.66 MINUTES
 26           KM        CONTRIBUTING AREA = 64.63 ACRES & CA = 55.09 ACRES
 27           BA  .08608
              *       HYPOTHETICAL STORM DISTRIBUTION
 28           PH      50   .1289    0.33    0.59    0.96    1.04    1.10    1.20    1.30    1.40
 29           LS      0.    100.
 30           UD   .2066

 31           KK    SUB2
 32           KM        RUNOFF FROM SUB-BASIN 2
 33           KM        AREA FROM NORTH OF PUMP HOUSE
 34           KM        TIME OF CONCENTRATION INCLUDING INLET TIME IS 10 MINUTES
 35           KM        CONTRIBUTING AREA = 17.88 ACRES & CA = 15.20 ACRES
 36           BA  .02375
 37           LS      0.    100.
 38           UD  .10000

 39           KK     CP1  COMBINE SUB1 AND SUB2 HYDROGRAPHS
 40           KO       2       2
 41           ZW   A=SR51 B=PUMPINFLOW C=FLOW D=17JUN1995 E=5MIN F=02YR
 42           HC       2

 43           KK    PUMP  96" STORAGE RCP's
 44           KM          L = 2400
 45           KM        PUMP CARDS ARE INCLUDED ONLY FOR INFORMATIONAL PURPOSES.  ACTUAL
 46           KM        SIZING OF PUMP STATION STORAGE AND PUMP SIZES WILL BE DETERMINED
 47           KM        BY A SEPARATE SPREAD SHEET PROGRAM THAT TAKES INTO ACCOUNT THE ACTUAL
 48           KM        PUMP RATING CURVES.
 49           RS       1    ELEV    1000       0
```

```
LINE          ID.......1.......2.......3.......4.......5.......6.......7.......8.......9......10

  50          SV        0      .54     1.39     2.23     2.77
  51          SE     1000     1002     1003     1006     1008
  52          SQ      .01       .1       .2       .3       .4
  53          WP                                PUMP
  54          WP     1001       40     1000     PUMP
  55          WP   1001.5       40   1001.0     PUMP
  56          WP   1001.5       40   1001.0     PUMP
  57          WP   1002.5       40   1002.0     PUMP
  58          WP   1002.5       40   1002.0     PUMP
  59          KO        1        2
  60          ZZ
```

SCHEMATIC DIAGRAM OF STREAM NETWORK

```
INPUT
LINE      (V) ROUTING          (--->) DIVERSION OR PUMP FLOW

 NO.      (.) CONNECTOR        (<---) RETURN OF DIVERTED OR PUMPED FLOW

 22        SUB1
             .
             .
 31          .        SUB2
             .           .
             .           .
 39        CP1............
             V
             V
 53          .------->    PUMP
 43        PUMP
```

(**) RUNOFF ALSO COMPUTED AT THIS LOCATION

```
****************************************
*                                      *
*   FLOOD HYDROGRAPH PACKAGE  (HEC-1)  *
*            SEPTEMBER 1990            *
*             VERSION 4.0              *
*                                      *
* RUN DATE  06/18/2081  TIME  13:54:11 *
*                                      *
****************************************
```

```
****************************************
*                                      *
*    U.S. ARMY CORPS OF ENGINEERS      *
*    HYDROLOGIC ENGINEERING CENTER     *
*          609 SECOND STREET           *
*       DAVIS, CALIFORNIA 95616        *
*           (916) 756-1104             *
*                                      *
****************************************
```

----------SQUAW PEAK HIGHWAY----------
SR 51
SHEA BOULEVARD TO THUNDERBIRD ROAD

BRW, INC.
17 JUNE 1995
FINAL HYDROGRAPHS

ON-SITE DRAINAGE/STORAGE ANALYSIS 02-YEAR, 24-HOUR STORM EVENT
WITHOUT PIPE ROUTING STORAGE
CA FROM RATIONAL METHOD IS ENTERED AS THE CONTRIBUTING AREA WITH
100 PERCENT RUNOFF (CN = 100)
ASSUME THAT THE FUTURE HOV LANES HAVE BEEN INSTALLED IN THE MEDIAN AND
THE MEDIAN IS COMPLETELY IMPERVIOUS
Q02 = IxCA = 1.80x70.39 = 127 CFS BY THE RATIONAL METHOD
TOTAL RUNOFF AREA = 82.51 ACRES

FILE NAME: PMP02YR.DAT

```
20 IO        OUTPUT CONTROL VARIABLES
                  IPRNT          3  PRINT CONTROL
                  IPLOT          0  PLOT CONTROL
                  QSCAL         0.  HYDROGRAPH PLOT SCALE

   IT        HYDROGRAPH TIME DATA
                   NMIN          5  MINUTES IN COMPUTATION INTERVAL
                  IDATE     17JUN95  STARTING DATE
                  ITIME       0000  STARTING TIME
                     NQ        300  NUMBER OF HYDROGRAPH ORDINATES
                 NDDATE     18JUN95  ENDING DATE
                 NDTIME       0055  ENDING TIME
                  ICENT         19  CENTURY MARK

            COMPUTATION INTERVAL     .08 HOURS
                 TOTAL TIME BASE   24.92 HOURS

      ENGLISH UNITS
          DRAINAGE AREA          SQUARE MILES
          PRECIPITATION DEPTH    INCHES
          LENGTH, ELEVATION      FEET
          FLOW                   CUBIC FEET PER SECOND
          STORAGE VOLUME         ACRE-FEET
          SURFACE AREA           ACRES
          TEMPERATURE            DEGREES FAHRENHEIT
```

*** ***

```
          **************
          *            *
22 KK     *     SUB1   *
          *            *
          **************
```

RUNOFF FROM SUB-BASIN 1
AREA FROM SOUTH OF PUMP HOUSE
TIME OF CONCENTRATION INCLUDING 5 MINUTE INLET TIME IS 20.66 MINUTES
CONTRIBUTING AREA = 64.63 ACRES & CA = 55.09 ACRES

SUBBASIN RUNOFF DATA

27 BA SUBBASIN CHARACTERISTICS

TAREA	.09	SUBBASIN AREA

PRECIPITATION DATA

28 PH DEPTHS FOR 50-PERCENT HYPOTHETICAL STORM

..... HYDRO-35			..... TP-40					..... TP-49			
5-MIN	15-MIN	60-MIN	2-HR	3-HR	6-HR	12-HR	24-HR	2-DAY	4-DAY	7-DAY	10-DAY
.33	.59	.96	1.04	1.10	1.20	1.30	1.40	.00	.00	.00	.00

STORM AREA = .13

29 LS SCS LOSS RATE

STRTL	.00	INITIAL ABSTRACTION
CRVNBR	100.00	CURVE NUMBER
RTIMP	.00	PERCENT IMPERVIOUS AREA

0 UD SCS DIMENSIONLESS UNITGRAPH

TLAG	.21	LAG

***

UNIT HYDROGRAPH
14 END-OF-PERIOD ORDINATES

39.	130.	168.	139.	81.	46.	27.	16.	9.	5.
3.	2.	1.	1.						

*** *** *** *** ***

HYDROGRAPH AT STATION SUB1

TOTAL RAINFALL = 1.23, TOTAL LOSS = .00, TOTAL EXCESS = 1.23

PEAK FLOW (CFS)	TIME (HR)		MAXIMUM AVERAGE FLOW 6-HR	24-HR	72-HR	24.92-HR
90.	12.25	(CFS)	10.	3.	3.	3.
		(INCHES)	1.055	1.231	1.232	1.232
		(AC-FT)	5.	6.	6.	6.

CUMULATIVE AREA = .09 SQ MI

*** ***

```
          **************
          *            *
 31 KK    *     SUB2   *
          *            *
          **************
```

RUNOFF FROM SUB-BASIN 2
AREA FROM NORTH OF PUMP HOUSE
TIME OF CONCENTRATION INCLUDING INLET TIME IS 10 MINUTES
CONTRIBUTING AREA = 17.88 ACRES & CA = 15.20 ACRES

SUBBASIN RUNOFF DATA

36 BA SUBBASIN CHARACTERISTICS

TAREA	.02	SUBBASIN AREA

PRECIPITATION DATA

28 PH DEPTHS FOR 50-PERCENT HYPOTHETICAL STORM

..... HYDRO-35			..... TP-40					..... TP-49			
5-MIN	15-MIN	60-MIN	2-HR	3-HR	6-HR	12-HR	24-HR	2-DAY	4-DAY	7-DAY	10-DAY
.33	.59	.96	1.04	1.10	1.20	1.30	1.40	.00	.00	.00	.00

STORM AREA = .13

37 LS SCS LOSS RATE

STRTL	.00	INITIAL ABSTRACTION
CRVNBR	100.00	CURVE NUMBER
RTIMP	.00	PERCENT IMPERVIOUS AREA

38 UD SCS DIMENSIONLESS UNITGRAPH

TLAG	.10	LAG

***

UNIT HYDROGRAPH
8 END-OF-PERIOD ORDINATES

52. 77. 34. 13. 5. 2. 1. 0.

*** *** *** *** ***

HYDROGRAPH AT STATION SUB2

TOTAL RAINFALL = 1.23, TOTAL LOSS = .00, TOTAL EXCESS = 1.23

PEAK FLOW (CFS)	TIME (HR)		MAXIMUM AVERAGE FLOW 6-HR	24-HR	72-HR	24.92-HR
33.	12.17	(CFS)	3.	1.	1.	1.
		(INCHES)	1.055	1.231	1.232	1.232
		(AC-FT)	1.	2.	2.	2.

CUMULATIVE AREA = .02 SQ MI

47/58

*** ***

```
              **************
              *            *
39 KK         *      CP1   *      COMBINE SUB1 AND SUB2 HYDROGRAPHS
              *            *
              **************

40 KO          OUTPUT CONTROL VARIABLES
                    IPRNT          2  PRINT CONTROL
                    IPLOT          2  PLOT CONTROL
                    QSCAL         0.  HYDROGRAPH PLOT SCALE

42 HC          HYDROGRAPH COMBINATION
                    ICOMP          2  NUMBER OF HYDROGRAPHS TO COMBINE

                                                  ***
```

****

HYDROGRAPH AT STATION CP1
SUM OF 2 HYDROGRAPHS

****

DA MON HRMN	ORD	FLOW	DA MON HRMN	ORD	FLOW	DA MON HRMN	ORD	FLOW	DA MON HRMN	ORD	FLOW
17 JUN 0000	1	0.	17 JUN 0615	76	1.	17 JUN 1230	151	50.	17 JUN 1845	226	1.
17 JUN 0005	2	0.	17 JUN 0620	77	1.	17 JUN 1235	152	37.	17 JUN 1850	227	1.
17 JUN 0010	3	0.	17 JUN 0625	78	1.	17 JUN 1240	153	26.	17 JUN 1855	228	1.
17 JUN 0015	4	0.	17 JUN 0630	79	1.	17 JUN 1245	154	18.	17 JUN 1900	229	1.
17 JUN 0020	5	0.	17 JUN 0635	80	1.	17 JUN 1250	155	13.	17 JUN 1905	230	1.
17 JUN 0025	6	0.	17 JUN 0640	81	1.	17 JUN 1255	156	9.	17 JUN 1910	231	1.
17 JUN 0030	7	0.	17 JUN 0645	82	1.	17 JUN 1300	157	7.	17 JUN 1915	232	1.
17 JUN 0035	8	0.	17 JUN 0650	83	1.	17 JUN 1305	158	6.	17 JUN 1920	233	1.
17 JUN 0040	9	0.	17 JUN 0655	84	1.	17 JUN 1310	159	5.	17 JUN 1925	234	1.
17 JUN 0045	10	0.	17 JUN 0700	85	1.	17 JUN 1315	160	5.	17 JUN 1930	235	1.
17 JUN 0050	11	0.	17 JUN 0705	86	1.	17 JUN 1320	161	4.	17 JUN 1935	236	1.
17 JUN 0055	12	0.	17 JUN 0710	87	1.	17 JUN 1325	162	4.	17 JUN 1940	237	1.
17 JUN 0100	13	0.	17 JUN 0715	88	1.	17 JUN 1330	163	4.	17 JUN 1945	238	1.
17 JUN 0105	14	0.	17 JUN 0720	89	1.	17 JUN 1335	164	4.	17 JUN 1950	239	1.
17 JUN 0110	15	0.	17 JUN 0725	90	1.	17 JUN 1340	165	3.	17 JUN 1955	240	1.
17 JUN 0115	16	0.	17 JUN 0730	91	1.	17 JUN 1345	166	3.	17 JUN 2000	241	1.
17 JUN 0120	17	0.	17 JUN 0735	92	1.	17 JUN 1350	167	3.	17 JUN 2005	242	1.
17 JUN 0125	18	0.	17 JUN 0740	93	1.	17 JUN 1355	168	3.	17 JUN 2010	243	1.
17 JUN 0130	19	0.	17 JUN 0745	94	1.	17 JUN 1400	169	3.	17 JUN 2015	244	1.
17 JUN 0135	20	0.	17 JUN 0750	95	1.	17 JUN 1405	170	2.	17 JUN 2020	245	1.
17 JUN 0140	21	0.	17 JUN 0755	96	1.	17 JUN 1410	171	2.	17 JUN 2025	246	1.
17 JUN 0145	22	0.	17 JUN 0800	97	1.	17 JUN 1415	172	2.	17 JUN 2030	247	1.
17 JUN 0150	23	0.	17 JUN 0805	98	1.	17 JUN 1420	173	2.	17 JUN 2035	248	1.
17 JUN 0155	24	0.	17 JUN 0810	99	1.	17 JUN 1425	174	2.	17 JUN 2040	249	1.
17 JUN 0200	25	0.	17 JUN 0815	100	1.	17 JUN 1430	175	2.	17 JUN 2045	250	1.
17 JUN 0205	26	0.	17 JUN 0820	101	1.	17 JUN 1435	176	2.	17 JUN 2050	251	1.
17 JUN 0210	27	0.	17 JUN 0825	102	1.	17 JUN 1440	177	2.	17 JUN 2055	252	1.
17 JUN 0215	28	0.	17 JUN 0830	103	1.	17 JUN 1445	178	2.	17 JUN 2100	253	1.
17 JUN 0220	29	0.	17 JUN 0835	104	1.	17 JUN 1450	179	2.	17 JUN 2105	254	1.
17 JUN 0225	30	0.	17 JUN 0840	105	1.	17 JUN 1455	180	2.	17 JUN 2110	255	1.
17 JUN 0230	31	0.	17 JUN 0845	106	1.	17 JUN 1500	181	2.	17 JUN 2115	256	1.
17 JUN 0235	32	0.	17 JUN 0850	107	1.	17 JUN 1505	182	2.	17 JUN 2120	257	1.
17 JUN 0240	33	0.	17 JUN 0855	108	1.	17 JUN 1510	183	2.	17 JUN 2125	258	0.
17 JUN 0245	34	0.	17 JUN 0900	109	1.	17 JUN 1515	184	2.	17 JUN 2130	259	0.

17 JUN 0250	35	0.	*	17 JUN 0905	110	1.	*	17 JUN 1520	185	1.	*	17 JUN 2135	260	0.
17 JUN 0255	36	0.	*	17 JUN 0910	111	1.	*	17 JUN 1525	186	1.	*	17 JUN 2140	261	0.
17 JUN 0300	37	0.	*	17 JUN 0915	112	2.	*	17 JUN 1530	187	1.	*	17 JUN 2145	262	0.
17 JUN 0305	38	0.	*	17 JUN 0920	113	2.	*	17 JUN 1535	188	1.	*	17 JUN 2150	263	0.
17 JUN 0310	39	0.	*	17 JUN 0925	114	2.	*	17 JUN 1540	189	1.	*	17 JUN 2155	264	0.
17 JUN 0315	40	1.	*	17 JUN 0930	115	2.	*	17 JUN 1545	190	1.	*	17 JUN 2200	265	0.
17 JUN 0320	41	1.	*	17 JUN 0935	116	2.	*	17 JUN 1550	191	1.	*	17 JUN 2205	266	0.
17 JUN 0325	42	1.	*	17 JUN 0940	117	2.	*	17 JUN 1555	192	1.	*	17 JUN 2210	267	0.
17 JUN 0330	43	1.	*	17 JUN 0945	118	2.	*	17 JUN 1600	193	1.	*	17 JUN 2215	268	0.
17 JUN 0335	44	1.	*	17 JUN 0950	119	2.	*	17 JUN 1605	194	1.	*	17 JUN 2220	269	0.
17 JUN 0340	45	1.	*	17 JUN 0955	120	2.	*	17 JUN 1610	195	1.	*	17 JUN 2225	270	0.
17 JUN 0345	46	1.	*	17 JUN 1000	121	2.	*	17 JUN 1615	196	1.	*	17 JUN 2230	271	0.
17 JUN 0350	47	1.	*	17 JUN 1005	122	2.	*	17 JUN 1620	197	1.	*	17 JUN 2235	272	0.
17 JUN 0355	48	1.	*	17 JUN 1010	123	2.	*	17 JUN 1625	198	1.	*	17 JUN 2240	273	0.
17 JUN 0400	49	1.	*	17 JUN 1015	124	2.	*	17 JUN 1630	199	1.	*	17 JUN 2245	274	0.
17 JUN 0405	50	1.	*	17 JUN 1020	125	2.	*	17 JUN 1635	200	1.	*	17 JUN 2250	275	0.
17 JUN 0410	51	1.	*	17 JUN 1025	126	2.	*	17 JUN 1640	201	1.	*	17 JUN 2255	276	0.
17 JUN 0415	52	1.	*	17 JUN 1030	127	3.	*	17 JUN 1645	202	1.	*	17 JUN 2300	277	0.
17 JUN 0420	53	1.	*	17 JUN 1035	128	3.	*	17 JUN 1650	203	1.	*	17 JUN 2305	278	0.
17 JUN 0425	54	1.	*	17 JUN 1040	129	3.	*	17 JUN 1655	204	1.	*	17 JUN 2310	279	0.
17 JUN 0430	55	1.	*	17 JUN 1045	130	3.	*	17 JUN 1700	205	1.	*	17 JUN 2315	280	0.
17 JUN 0435	56	1.	*	17 JUN 1050	131	3.	*	17 JUN 1705	206	1.	*	17 JUN 2320	281	0.
17 JUN 0440	57	1.	*	17 JUN 1055	132	3.	*	17 JUN 1710	207	1.	*	17 JUN 2325	282	0.
17 JUN 0445	58	1.	*	17 JUN 1100	133	4.	*	17 JUN 1715	208	1.	*	17 JUN 2330	283	0.
17 JUN 0450	59	1.	*	17 JUN 1105	134	4.	*	17 JUN 1720	209	1.	*	17 JUN 2335	284	0.
17 JUN 0455	60	1.	*	17 JUN 1110	135	4.	*	17 JUN 1725	210	1.	*	17 JUN 2340	285	0.
17 JUN 0500	61	1.	*	17 JUN 1115	136	4.	*	17 JUN 1730	211	1.	*	17 JUN 2345	286	0.
17 JUN 0505	62	1.	*	17 JUN 1120	137	4.	*	17 JUN 1735	212	1.	*	17 JUN 2350	287	0.
17 JUN 0510	63	1.	*	17 JUN 1125	138	5.	*	17 JUN 1740	213	1.	*	17 JUN 2355	288	0.
17 JUN 0515	64	1.	*	17 JUN 1130	139	5.	*	17 JUN 1745	214	1.	*	18 JUN 0000	289	0.
17 JUN 0520	65	1.	*	17 JUN 1135	140	7.	*	17 JUN 1750	215	1.	*	18 JUN 0005	290	0.
17 JUN 0525	66	1.	*	17 JUN 1140	141	11.	*	17 JUN 1755	216	1.	*	18 JUN 0010	291	0.
17 JUN 0530	67	1.	*	17 JUN 1145	142	15.	*	17 JUN 1800	217	1.	*	18 JUN 0015	292	0.
17 JUN 0535	68	1.	*	17 JUN 1150	143	21.	*	17 JUN 1805	218	1.	*	18 JUN 0020	293	0.
17 JUN 0540	69	1.	*	17 JUN 1155	144	28.	*	17 JUN 1810	219	1.	*	18 JUN 0025	294	0.
17 JUN 0545	70	1.	*	17 JUN 1200	145	43.	*	17 JUN 1815	220	1.	*	18 JUN 0030	295	0.
17 JUN 0550	71	1.	*	17 JUN 1205	146	78.	*	17 JUN 1820	221	1.	*	18 JUN 0035	296	0.
17 JUN 0555	72	1.	*	17 JUN 1210	147	112.	*	17 JUN 1825	222	1.	*	18 JUN 0040	297	0.
17 JUN 0600	73	1.	*	17 JUN 1215	148	112.	*	17 JUN 1830	223	1.	*	18 JUN 0045	298	0.
17 JUN 0605	74	1.	*	17 JUN 1220	149	94.	*	17 JUN 1835	224	1.	*	18 JUN 0050	299	0.
17 JUN 0610	75	1.	*	17 JUN 1225	150	69.	*	17 JUN 1840	225	1.	*	18 JUN 0055	300	0.
			*				*				*			

****

PEAK FLOW (CFS)	TIME (HR)		MAXIMUM AVERAGE FLOW 6-HR	24-HR	72-HR	24.92-HR
112.	12.25	(CFS)	12.	4.	4.	4.
		(INCHES)	1.055	1.231	1.232	1.232
		(AC-FT)	6.	7.	7.	7.

CUMULATIVE AREA = .11 SQ MI

```
-----DSS---ZOPEN:  Version: 6-EA;  Existing File Opened
                   Unit:  71,  File: PMP02YR.DSS
-----DSS---ZWRITE Unit  71; Vers.    1:  /SR51/PUMPINFLOW/FLOW/16JUN1995/5MIN/02YR/
-----DSS---ZWRITE Unit  71; Vers.    1:  /SR51/PUMPINFLOW/FLOW/17JUN1995/5MIN/02YR/
-----DSS---ZWRITE Unit  71; Vers.    1:  /SR51/PUMPINFLOW/FLOW/18JUN1995/5MIN/02YR/
```

STATION CP1

(O) OUTFLOW

DAHRMN	PER	0.	20.	40.	60.	80.	100.	120.	0.	0.	0.	0.	0.	0.
170000	10													
170005	20													
170010	30													
170015	40													
170020	50													
170025	60													
170030	70													
170035	80													
170040	90													
170045	100													
170050	110													
170055	120													
170100	130													
170105	140													
170110	150													
170115	160													
170120	170													
170125	180													
170130	190													
170135	200													
170140	210													
170145	220													
170150	230													
170155	240													
170200	250													
170205	260													
170210	270													
170215	280													
170220	290													
170225	300													
170230	310													
170235	320													
170240	330													
170245	340													
170250	350													
170255	360													
170300	370													
170305	380													
170310	390													
170315	400													
170320	410													
170325	420													
170330	430													
170335	440													
170340	450													
170345	460													
170350	470													
170355	480													
170400	490													
170405	500													
170410	510													
170415	520													
170420	530													
170425	540													
170430	550													

170435 560
170440 570
170445 580
170450 590
170455 600
170500 610
170505 620
170510 630
170515 640
170520 650
170525 660
170530 670
170535 680
170540 690
170545 700
170550 710
170555 720
170600 730
170605 740
170610 750
170615 760
170620 770
170625 780
170630 790
170635 800
170640 810
170645 820
170650 830
170655 840
170700 850
170705 860
170710 870
170715 880
170720 890
170725 900
170730 910
170735 920
170740 930
170745 94.0
170750 95.0
170755 96.0
170800 97.0
170805 98.0
170810 99.0
170815 100.0
170820 101.0
170825 102.0
170830 103.0
170835 104.0
170840 105.0
170845 106.0
.70850 107.0
.70855 108.0
.70900 109.0
.70905 110.0
.70910 111.0
.70915 112.0
.70920 113.0
.70925 114.0
.70930 115.0

[redacted]0935 116.0
170940 117.0
170945 118.0
[redacted]0950 119.0
[redacted]0955 120.0
171000 121.0
[redacted]1005 122.0
[redacted]1010 123.0
171015 124.0
171020 125.0
[redacted]1025 126.0
171030 127.0
171035 128.0
[redacted]1040 129.0
[redacted]1045 130. 0
171050 131. 0
[redacted]1055 132. 0
[redacted]1100 133. 0
171105 134. 0
[redacted]1110 135. 0
[redacted]1115 136. 0
171120 137. 0
171125 138. 0
[redacted]1130 139. 0
[redacted]1135 140. 0
171140 141. 0
[redacted]1145 142. 0
[redacted]1150 143. 0
171155 144. 0
[redacted]1200 145. 0
[redacted]1205 146. 0
171210 147. 0
171215 148. 0
[redacted]1220 149. 0
[redacted]1225 150. 0
171230 151. 0
[redacted]1235 152. 0
[redacted]1240 153. 0
171245 154. 0
[redacted]1250 155. 0
[redacted]1255 156. 0
[redacted]1300 157. 0
171305 158. 0
[redacted]1310 159. 0
[redacted]1315 160. 0
171320 161. 0
[redacted]1325 162. 0
[redacted]1330 163. 0
171335 164. 0
[redacted]1340 165. 0
[redacted]1345 166. 0
171350 167.0
171355 168.0
[redacted]1400 169.0
[redacted]1405 170.0
171410 171.0
[redacted]1415 172.0
[redacted]1420 173.0
171425 174.0
171430 175.0
[redacted]

*** ***

```
          **************
          *            *
 43 KK    *     PUMP   *      96" STORAGE RCP's
          *            *
          **************
                              L = 2400
                          PUMP CARDS ARE INCLUDED ONLY FOR INFORMATIONAL PURPOSES.  ACTUAL
                          SIZING OF PUMP STATION STORAGE AND PUMP SIZES WILL BE DETERMINED
                          BY A SEPARATE SPREAD SHEET PROGRAM THAT TAKES INTO ACCOUNT THE ACTUAL
                          PUMP RATING CURVES.

 59 KO          OUTPUT CONTROL VARIABLES
                     IPRNT          1  PRINT CONTROL
                     IPLOT          2  PLOT CONTROL
                     QSCAL         0.  HYDROGRAPH PLOT SCALE

            HYDROGRAPH ROUTING DATA

 49 RS          STORAGE ROUTING
                     NSTPS          1  NUMBER OF SUBREACHES
                      ITYP       ELEV  TYPE OF INITIAL CONDITION
                    RSVRIC    1000.00  INITIAL CONDITION
                         X        .00 WORKING R AND D COEFFICIENT

 50 SV            STORAGE         .0       .5      1.4      2.2      2.8

 51 SE          ELEVATION    1000.00  1002.00  1003.00  1006.00  1008.00

 52 SQ          DISCHARGE        0.       0.       0.       0.       0.

 54 WP          PUMPING DATA

                  PUMP ON    PUMPING    PUMP OFF
                 ELEVATION     RATE    ELEVATION

                   1001.0      40.      1000.0
                   1001.5      40.      1001.0
                   1001.5      40.      1001.0
                   1002.5      40.      1002.0
                   1002.5      40.      1002.0

                     ISTAD       PUMP  PUMP FLOW HYDROGRAPH IDENTIFICATION

                                                   ***
```

****

HYDROGRAPH AT STATION PUMP

****

DA	MON	HRMN	ORD	PUMP Q	OUTFLOW	STORAGE	STAGE	DA	MON	HRMN	ORD	PUMP Q	OUTFLOW	STORAGE	STAGE

17 JUN 0000	1	0.	0.	.0	1000.0	*
17 JUN 0005	2	0.	0.	.0	1000.0	*
17 JUN 0010	3	0.	0.	.0	1000.0	*
17 JUN 0015	4	0.	0.	.0	1000.0	*
17 JUN 0020	5	0.	0.	.0	1000.0	*
17 JUN 0025	6	0.	0.	.0	1000.0	*
17 JUN 0030	7	0.	0.	.0	1000.0	*
17 JUN 0035	8	0.	0.	.0	1000.0	*
17 JUN 0040	9	0.	0.	.0	1000.0	*
17 JUN 0045	10	0.	0.	.0	1000.1	*
17 JUN 0050	11	0.	0.	.0	1000.1	*
17 JUN 0055	12	0.	0.	.0	1000.1	*
17 JUN 0100	13	0.	0.	.0	1000.1	*
17 JUN 0105	14	0.	0.	.0	1000.1	*
17 JUN 0110	15	0.	0.	.0	1000.1	*
17 JUN 0115	16	0.	0.	.0	1000.1	*
17 JUN 0120	17	0.	0.	.0	1000.1	*
17 JUN 0125	18	0.	0.	.0	1000.1	*
17 JUN 0130	19	0.	0.	.0	1000.2	*
17 JUN 0135	20	0.	0.	.0	1000.2	*
17 JUN 0140	21	0.	0.	.0	1000.2	*
17 JUN 0145	22	0.	0.	.0	1000.2	*
17 JUN 0150	23	0.	0.	.1	1000.2	*
17 JUN 0155	24	0.	0.	.1	1000.2	*
17 JUN 0200	25	0.	0.	.1	1000.2	*
17 JUN 0205	26	0.	0.	.1	1000.2	*
17 JUN 0210	27	0.	0.	.1	1000.2	*
17 JUN 0215	28	0.	0.	.1	1000.2	*
17 JUN 0220	29	0.	0.	.1	1000.3	*
17 JUN 0225	30	0.	0.	.1	1000.3	*
17 JUN 0230	31	0.	0.	.1	1000.3	*
17 JUN 0235	32	0.	0.	.1	1000.3	*
17 JUN 0240	33	0.	0.	.1	1000.3	*
17 JUN 0245	34	0.	0.	.1	1000.3	*
17 JUN 0250	35	0.	0.	.1	1000.3	*
17 JUN 0255	36	0.	0.	.1	1000.3	*
17 JUN 0300	37	0.	0.	.1	1000.4	*
17 JUN 0305	38	0.	0.	.1	1000.4	*
17 JUN 0310	39	0.	0.	.1	1000.4	*
17 JUN 0315	40	0.	0.	.1	1000.4	*
17 JUN 0320	41	0.	0.	.1	1000.4	*
17 JUN 0325	42	0.	0.	.1	1000.4	*
17 JUN 0330	43	0.	0.	.1	1000.4	*
17 JUN 0335	44	0.	0.	.1	1000.4	*
17 JUN 0340	45	0.	0.	.1	1000.4	*
17 JUN 0345	46	0.	0.	.1	1000.5	*
17 JUN 0350	47	0.	0.	.1	1000.5	*
17 JUN 0355	48	0.	0.	.1	1000.5	*
17 JUN 0400	49	0.	0.	.1	1000.5	*
17 JUN 0405	50	0.	0.	.1	1000.5	*
17 JUN 0410	51	0.	0.	.1	1000.5	*
17 JUN 0415	52	0.	0.	.1	1000.5	*
17 JUN 0420	53	0.	0.	.1	1000.6	*
17 JUN 0425	54	0.	0.	.2	1000.6	*
17 JUN 0430	55	0.	0.	.2	1000.6	*
17 JUN 0435	56	0.	0.	.2	1000.6	*
17 JUN 0440	57	0.	0.	.2	1000.6	*
17 JUN 0445	58	0.	0.	.2	1000.6	*
17 JUN 0450	59	0.	0.	.2	1000.6	*
17 JUN 0455	60	0.	0.	.2	1000.7	*

17 JUN 1230	151	120.	0.	.0	1000.0
17 JUN 1235	152	0.	0.	.0	1000.0
17 JUN 1240	153	0.	0.	.2	1000.8
17 JUN 1245	154	0.	0.	.4	1001.4
17 JUN 1250	155	40.	0.	.2	1000.7
17 JUN 1255	156	40.	0.	.0	1000.0
17 JUN 1300	157	0.	0.	.0	1000.0
17 JUN 1305	158	0.	0.	.0	1000.2
17 JUN 1310	159	0.	0.	.1	1000.3
17 JUN 1315	160	0.	0.	.1	1000.4
17 JUN 1320	161	0.	0.	.1	1000.5
17 JUN 1325	162	0.	0.	.2	1000.6
17 JUN 1330	163	0.	0.	.2	1000.7
17 JUN 1335	164	0.	0.	.2	1000.8
17 JUN 1340	165	0.	0.	.3	1000.9
17 JUN 1345	166	0.	0.	.3	1001.0
17 JUN 1350	167	40.	0.	.0	1000.1
17 JUN 1355	168	0.	0.	.0	1000.0
17 JUN 1400	169	0.	0.	.0	1000.1
17 JUN 1405	170	0.	0.	.0	1000.1
17 JUN 1410	171	0.	0.	.1	1000.2
17 JUN 1415	172	0.	0.	.1	1000.3
17 JUN 1420	173	0.	0.	.1	1000.3
17 JUN 1425	174	0.	0.	.1	1000.4
17 JUN 1430	175	0.	0.	.1	1000.4
17 JUN 1435	176	0.	0.	.1	1000.5
17 JUN 1440	177	0.	0.	.1	1000.5
17 JUN 1445	178	0.	0.	.2	1000.6
17 JUN 1450	179	0.	0.	.2	1000.6
17 JUN 1455	180	0.	0.	.2	1000.7
17 JUN 1500	181	0.	0.	.2	1000.7
17 JUN 1505	182	0.	0.	.2	1000.7
17 JUN 1510	183	0.	0.	.2	1000.8
17 JUN 1515	184	0.	0.	.2	1000.8
17 JUN 1520	185	0.	0.	.2	1000.9
17 JUN 1525	186	0.	0.	.2	1000.9
17 JUN 1530	187	0.	0.	.2	1000.9
17 JUN 1535	188	0.	0.	.3	1001.0
17 JUN 1540	189	0.	0.	.3	1001.0
17 JUN 1545	190	0.	0.	.3	1001.0
17 JUN 1550	191	40.	0.	.0	1000.0
17 JUN 1555	192	0.	0.	.0	1000.0
17 JUN 1600	193	0.	0.	.0	1000.0
17 JUN 1605	194	0.	0.	.0	1000.1
17 JUN 1610	195	0.	0.	.0	1000.1
17 JUN 1615	196	0.	0.	.0	1000.1
17 JUN 1620	197	0.	0.	.0	1000.1
17 JUN 1625	198	0.	0.	.0	1000.2
17 JUN 1630	199	0.	0.	.1	1000.2
17 JUN 1635	200	0.	0.	.1	1000.2
17 JUN 1640	201	0.	0.	.1	1000.3
17 JUN 1645	202	0.	0.	.1	1000.3
17 JUN 1650	203	0.	0.	.1	1000.3
17 JUN 1655	204	0.	0.	.1	1000.3
17 JUN 1700	205	0.	0.	.1	1000.4
17 JUN 1705	206	0.	0.	.1	1000.4
17 JUN 1710	207	0.	0.	.1	1000.4
17 JUN 1715	208	0.	0.	.1	1000.4
17 JUN 1720	209	0.	0.	.1	1000.4
17 JUN 1725	210	0.	0.	.1	1000.5

17 JUN 0500	61	0.	0.	.2	1000.7	*	17 JUN 1730	211	0.	0.	.1	1000.5
17 JUN 0505	62	0.	0.	.2	1000.7	*	17 JUN 1735	212	0.	0.	.1	1000.5
17 JUN 0510	63	0.	0.	.2	1000.7	*	17 JUN 1740	213	0.	0.	.1	1000.5
17 JUN 0515	64	0.	0.	.2	1000.7	*	17 JUN 1745	214	0.	0.	.1	1000.6
17 JUN 0520	65	0.	0.	.2	1000.7	*	17 JUN 1750	215	0.	0.	.2	1000.6
17 JUN 0525	66	0.	0.	.2	1000.7	*	17 JUN 1755	216	0.	0.	.2	1000.6
17 JUN 0530	67	0.	0.	.2	1000.8	*	17 JUN 1800	217	0.	0.	.2	1000.6
17 JUN 0535	68	0.	0.	.2	1000.8	*	17 JUN 1805	218	0.	0.	.2	1000.6
17 JUN 0540	69	0.	0.	.2	1000.8	*	17 JUN 1810	219	0.	0.	.2	1000.7
17 JUN 0545	70	0.	0.	.2	1000.8	*	17 JUN 1815	220	0.	0.	.2	1000.7
17 JUN 0550	71	0.	0.	.2	1000.8	*	17 JUN 1820	221	0.	0.	.2	1000.7
17 JUN 0555	72	0.	0.	.2	1000.8	*	17 JUN 1825	222	0.	0.	.2	1000.7
17 JUN 0600	73	0.	0.	.2	1000.9	*	17 JUN 1830	223	0.	0.	.2	1000.7
17 JUN 0605	74	0.	0.	.2	1000.9	*	17 JUN 1835	224	0.	0.	.2	1000.7
17 JUN 0610	75	0.	0.	.2	1000.9	*	17 JUN 1840	225	0.	0.	.2	1000.8
17 JUN 0615	76	0.	0.	.2	1000.9	*	17 JUN 1845	226	0.	0.	.2	1000.8
17 JUN 0620	77	0.	0.	.2	1000.9	*	17 JUN 1850	227	0.	0.	.2	1000.8
17 JUN 0625	78	0.	0.	.3	1000.9	*	17 JUN 1855	228	0.	0.	.2	1000.8
17 JUN 0630	79	0.	0.	.3	1001.0	*	17 JUN 1900	229	0.	0.	.2	1000.8
17 JUN 0635	80	0.	0.	.3	1001.0	*	17 JUN 1905	230	0.	0.	.2	1000.8
17 JUN 0640	81	0.	0.	.3	1001.0	*	17 JUN 1910	231	0.	0.	.2	1000.8
17 JUN 0645	82	0.	0.	.3	1001.0	*	17 JUN 1915	232	0.	0.	.2	1000.9
17 JUN 0650	83	40.	0.	.0	1000.0	*	17 JUN 1920	233	0.	0.	.2	1000.9
17 JUN 0655	84	0.	0.	.0	1000.0	*	17 JUN 1925	234	0.	0.	.2	1000.9
17 JUN 0700	85	0.	0.	.0	1000.0	*	17 JUN 1930	235	0.	0.	.2	1000.9
17 JUN 0705	86	0.	0.	.0	1000.0	*	17 JUN 1935	236	0.	0.	.2	1000.9
17 JUN 0710	87	0.	0.	.0	1000.1	*	17 JUN 1940	237	0.	0.	.3	1000.9
17 JUN 0715	88	0.	0.	.0	1000.1	*	17 JUN 1945	238	0.	0.	.3	1001.0
17 JUN 0720	89	0.	0.	.0	1000.1	*	17 JUN 1950	239	0.	0.	.3	1001.0
17 JUN 0725	90	0.	0.	.0	1000.1	*	17 JUN 1955	240	0.	0.	.3	1001.0
17 JUN 0730	91	0.	0.	.0	1000.2	*	17 JUN 2000	241	0.	0.	.3	1001.0
17 JUN 0735	92	0.	0.	.0	1000.2	*	17 JUN 2005	242	0.	0.	.3	1001.0
17 JUN 0740	93	0.	0.	.1	1000.2	*	17 JUN 2010	243	40.	0.	.0	1000.0
17 JUN 0745	94	0.	0.	.1	1000.2	*	17 JUN 2015	244	0.	0.	.0	1000.0
17 JUN 0750	95	0.	0.	.1	1000.3	*	17 JUN 2020	245	0.	0.	.0	1000.0
17 JUN 0755	96	0.	0.	.1	1000.3	*	17 JUN 2025	246	0.	0.	.0	1000.0
17 JUN 0800	97	0.	0.	.1	1000.3	*	17 JUN 2030	247	0.	0.	.0	1000.0
17 JUN 0805	98	0.	0.	.1	1000.3	*	17 JUN 2035	248	0.	0.	.0	1000.1
17 JUN 0810	99	0.	0.	.1	1000.4	*	17 JUN 2040	249	0.	0.	.0	1000.1
17 JUN 0815	100	0.	0.	.1	1000.4	*	17 JUN 2045	250	0.	0.	.0	1000.1
17 JUN 0820	101	0.	0.	.1	1000.4	*	17 JUN 2050	251	0.	0.	.0	1000.1
17 JUN 0825	102	0.	0.	.1	1000.4	*	17 JUN 2055	252	0.	0.	.0	1000.1
17 JUN 0830	103	0.	0.	.1	1000.5	*	17 JUN 2100	253	0.	0.	.0	1000.1
17 JUN 0835	104	0.	0.	.1	1000.5	*	17 JUN 2105	254	0.	0.	.0	1000.1
17 JUN 0840	105	0.	0.	.1	1000.5	*	17 JUN 2110	255	0.	0.	.0	1000.1
17 JUN 0845	106	0.	0.	.2	1000.6	*	17 JUN 2115	256	0.	0.	.0	1000.2
17 JUN 0850	107	0.	0.	.2	1000.6	*	17 JUN 2120	257	0.	0.	.0	1000.2
17 JUN 0855	108	0.	0.	.2	1000.6	*	17 JUN 2125	258	0.	0.	.0	1000.2
17 JUN 0900	109	0.	0.	.2	1000.7	*	17 JUN 2130	259	0.	0.	.1	1000.2
17 JUN 0905	110	0.	0.	.2	1000.7	*	17 JUN 2135	260	0.	0.	.1	1000.2
17 JUN 0910	111	0.	0.	.2	1000.7	*	17 JUN 2140	261	0.	0.	.1	1000.2
17 JUN 0915	112	0.	0.	.2	1000.8	*	17 JUN 2145	262	0.	0.	.1	1000.2
17 JUN 0920	113	0.	0.	.2	1000.8	*	17 JUN 2150	263	0.	0.	.1	1000.2
17 JUN 0925	114	0.	0.	.2	1000.8	*	17 JUN 2155	264	0.	0.	.1	1000.3
17 JUN 0930	115	0.	0.	.2	1000.9	*	17 JUN 2200	265	0.	0.	.1	1000.3
17 JUN 0935	116	0.	0.	.3	1000.9	*	17 JUN 2205	266	0.	0.	.1	1000.3
17 JUN 0940	117	0.	0.	.3	1001.0	*	17 JUN 2210	267	0.	0.	.1	1000.3
17 JUN 0945	118	0.	0.	.3	1001.0	*	17 JUN 2215	268	0.	0.	.1	1000.3
17 JUN 0950	119	40.	0.	.0	1000.0	*	17 JUN 2220	269	0.	0.	.1	1000.3
17 JUN 0955	120	0.	0.	.0	1000.0	*	17 JUN 2225	270	0.	0.	.1	1000.3

17 JUN 1000	121	0.	0.	.0	1000.1	*	17 JUN 2230	271	0.	0.	.1	1000.3
17 JUN 1005	122	0.	0.	.0	1000.1	*	17 JUN 2235	272	0.	0.	.1	1000.3
17 JUN 1010	123	0.	0.	.0	1000.2	*	17 JUN 2240	273	0.	0.	.1	1000.4
17 JUN 1015	124	0.	0.	.1	1000.2	*	17 JUN 2245	274	0.	0.	.1	1000.4
17 JUN 1020	125	0.	0.	.1	1000.3	*	17 JUN 2250	275	0.	0.	.1	1000.4
17 JUN 1025	126	0.	0.	.1	1000.3	*	17 JUN 2255	276	0.	0.	.1	1000.4
17 JUN 1030	127	0.	0.	.1	1000.4	*	17 JUN 2300	277	0.	0.	.1	1000.4
17 JUN 1035	128	0.	0.	.1	1000.5	*	17 JUN 2305	278	0.	0.	.1	1000.4
17 JUN 1040	129	0.	0.	.1	1000.5	*	17 JUN 2310	279	0.	0.	.1	1000.4
17 JUN 1045	130	0.	0.	.2	1000.6	*	17 JUN 2315	280	0.	0.	.1	1000.4
17 JUN 1050	131	0.	0.	.2	1000.7	*	17 JUN 2320	281	0.	0.	.1	1000.4
17 JUN 1055	132	0.	0.	.2	1000.8	*	17 JUN 2325	282	0.	0.	.1	1000.4
17 JUN 1100	133	0.	0.	.2	1000.9	*	17 JUN 2330	283	0.	0.	.1	1000.5
17 JUN 1105	134	0.	0.	.3	1000.9	*	17 JUN 2335	284	0.	0.	.1	1000.5
17 JUN 1110	135	0.	0.	.3	1001.0	*	17 JUN 2340	285	0.	0.	.1	1000.5
17 JUN 1115	136	40.	0.	.0	1000.1	*	17 JUN 2345	286	0.	0.	.1	1000.5
17 JUN 1120	137	0.	0.	.0	1000.0	*	17 JUN 2350	287	0.	0.	.1	1000.5
17 JUN 1125	138	0.	0.	.0	1000.1	*	17 JUN 2355	288	0.	0.	.1	1000.5
17 JUN 1130	139	0.	0.	.1	1000.2	*	18 JUN 0000	289	0.	0.	.1	1000.5
17 JUN 1135	140	0.	0.	.1	1000.4	*	18 JUN 0005	290	0.	0.	.1	1000.5
17 JUN 1140	141	0.	0.	.2	1000.6	*	18 JUN 0010	291	0.	0.	.1	1000.5
17 JUN 1145	142	0.	0.	.3	1000.9	*	18 JUN 0015	292	0.	0.	.1	1000.5
17 JUN 1150	143	0.	0.	.4	1001.4	*	18 JUN 0020	293	0.	0.	.1	1000.5
17 JUN 1155	144	40.	0.	.3	1001.0	*	18 JUN 0025	294	0.	0.	.1	1000.5
17 JUN 1200	145	40.	0.	.2	1000.9	*	18 JUN 0030	295	0.	0.	.1	1000.5
17 JUN 1205	146	40.	0.	.4	1001.4	*	18 JUN 0035	296	0.	0.	.1	1000.5
17 JUN 1210	147	40.	0.	.8	1002.2	*	18 JUN 0040	297	0.	0.	.1	1000.5
17 JUN 1215	148	120.	0.	.7	1002.2	*	18 JUN 0045	298	0.	0.	.1	1000.5
17 JUN 1220	149	120.	0.	.6	1002.0	*	18 JUN 0050	299	0.	0.	.1	1000.5
17 JUN 1225	150	120.	0.	.3	1001.1	*	18 JUN 0055	300	0.	0.	.1	1000.5
						*						

****

PEAK OUTFLOW IS 0. AT TIME 12.17 HOURS

***** PUMP FLOW HYDROGRAPH *****

PEAK FLOW (CFS)	TIME (HR)		MAXIMUM AVERAGE FLOW 6-HR	24-HR	72-HR	24.92-HR
120.	12.25	(CFS)	12.	3.	3.	3.
		(INCHES)	.988	1.129	1.129	1.129
		(AC-FT)	6.	7.	7.	7.

***** OUTFLOW HYDROGRAPH *****

PEAK FLOW (CFS)	TIME (HR)		MAXIMUM AVERAGE FLOW 6-HR	24-HR	72-HR	24.92-HR
0.	12.17	(CFS)	0.	0.	0.	0.
		(INCHES)	.003	.011	.011	.011
		(AC-FT)	0.	0.	0.	0.

PEAK STORAGE (AC-FT)	TIME (HR)	MAXIMUM AVERAGE STORAGE 6-HR	24-HR	72-HR	24.92-HR
1.	12.17	0.	0.	0.	0.

PEAK STAGE (FEET)	TIME (HR)	MAXIMUM AVERAGE STAGE 6-HR	24-HR	72-HR	24.92-HR
1002.25	12.17	1000.62	1000.49	1000.48	1000.48

CUMULATIVE AREA = .11 SQ MI

RUNOFF SUMMARY
FLOW IN CUBIC FEET PER SECOND
TIME IN HOURS, AREA IN SQUARE MILES

OPERATION	STATION	PEAK FLOW	TIME OF PEAK	AVERAGE FLOW FOR MAXIMUM PERIOD 6-HOUR	24-HOUR	72-HOUR	BASIN AREA	MAXIMUM STAGE	TIME OF MAX STAGE
HYDROGRAPH AT	SUB1	90.	12.25	10.	3.	3.	.09		
HYDROGRAPH AT	SUB2	33.	12.17	3.	1.	1.	.02		
2 COMBINED AT	CP1	112.	12.25	12.	4.	4.	.11		
PUMP FLOW TO	PUMP	120.	12.25	12.	3.	3.	.11		
HYDROGRAPH AT	PUMP	0.	12.17	0.	0.	0.	.11	1002.25	12.17

* NORMAL END OF HEC-1 ***

-----DSS---ZCLOSE Unit: 71, File: PMP02YR.DSS
Pointer Utilization: .25
Number of Records: 6
File Size: 18.8 Kbytes
Percent Inactive: .00

Appendix I

HEC-2 Computer Model (100-Year), Indian Bend Wash

```
*******************************************
*  HEC-2 WATER SURFACE PROFILES           *
*                                         *
*  Version   4.6.2;  May 1991             *
*                                         *
*  RUN DATE    07AUG95    TIME   18:28:59 *
*******************************************
```

```
*************************************
*  U.S. ARMY CORPS OF ENGINEERS     *
*  HYDROLOGIC ENGINEERING CENTER    *
*  609 SECOND STREET, SUITE D       *
*  DAVIS, CALIFORNIA 95616-4687     *
*         (916) 756-1104            *
*************************************
```

```
X     X  XXXXXXX   XXXXX             XXXXX
X     X  X        X     X           X     X
X     X  X        X                       X
XXXXXXX  XXXX     X         XXXXX    XXXXX
X     X  X        X                 X
X     X  X        X     X           X
X     X  XXXXXXX   XXXXX            XXXXXXX
```

THIS RUN EXECUTED 07AUG95 18:28:59

```
************************************
 HEC-2 WATER SURFACE PROFILES

 Version   4.6.2;  May 1991
************************************


T1      INDIAN BEND WASH - CHANNEL IMPROVEMENTS, FILE: IMIBW5BX.DAT
T2      40TH STREET TO THUNDERBIRD
T3      ALL FLOWS OBTAINED FROM MICHAEL BAKER, JR., INC., "FINAL HYDROLOGY
T4      REPORT:  SQUAW PEAK HIGHWAY", NOVEMBER 1988.
T5      NEW BOX CULVERT AT 36TH STREET
T6      EXISTING CULVERT AT SWEETWATER AV CLEANED OUT & ONE BARREL ADDED
T7      NEW BOX CULERT AT THUNDERBIRD ROAD
T8      CULVERTS MODELLED WITH SPECIAL CULVERT ROUTINE
T9      HEC-2 DATA DEVELOPED BY BRW, INC., MARCH 1995
T6      X-SECTIONS TAKEN LOOKING UPSTREAM
T7      SECTION NUMBERS MATCH PLAN STATIONS FOR APPROX R\W CL OF IBW CHANNEL
T8      GR STATION 250 IS LOCATED ON APPROX R\W CL OF IBW CHANNEL
T9      ROADWAY OVERFLOW AT 36TH STREET, NO ROADWAY OVERFLOW AT SWEETWATER AV

J1  ICHECK    INQ      NINV     IDIR     STRT     METRIC   HVINS    Q        WSEL     FQ

      0        2                         .002                       7071

J2  NPROF     IPLOT    PRFVS    XSECV    XSECH    FN       ALLDC    IBW      CHNIM    ITRACE

      1        0                                                     -6


J3  VARIABLE CODES FOR SUMMARY PRINTOUT

     38       39        1       42        8       43       26       25        4       51
     17        3        5

NC   0.040    0.040    0.035       .1       .3
         BEGIN INDIAN BEND WASH IMPROVED CHANNEL, SECTION NUMBERS
          MATCH APPROXIMATE R/W STATIONS OF INDIAN BEND WASH
         UPSTREAM OF 40TH STREET
         A LOW FLOW FJORD
X1    1150       11     0.00   500.00     0.00     0.00     0.00
CI     239  1379.87     .035        4        4       40
GR  1388.9     0.00  1387.28    30.28  1383.74    64.30  1380.54   198.27  1380.28   235.61
GR  1378.8   250.00  1380.70   266.57  1379.98   313.40  1381.40   410.96  1382.90   474.57
GR  1384.3   500.00

X1    1200       13     0.00   500.00    50.00    50.00    50.00
CI     210  1379.97     .035        4        4       40
GR  1389.0     0.00  1388.71    17.06  1385.30    46.34  1383.79    64.05  1381.89   134.61
GR  1380.7   192.81  1380.60   221.59  1379.26   231.20  1380.78   260.74  1380.37   305.45
GR  1381.5   364.30  1382.00   409.42  1384.22   500.00
```

X1	1300	16	0.00	500.00	100.00	100.00	100.00			
CI	169.5	1380.16	.035	4	4	40				
GR	1388.7	0.00	1388.56	21.22	1385.39	43.01	1384.07	64.93	1382.49	131.37
GR	1381.8	161.26	1380.34	189.66	1381.14	233.08	1381.20	276.80	1380.44	346.83
GR	1381.8	362.71	1383.07	393.26	1384.74	450.54	1385.55	463.50	1388.45	479.32
GR	1387.8	500.00								
X1	1500	17	0.00	500.00	200.00	200.00	200.00			
CI	134	1380.51	.035	4	4	40				
CI	204	1382.21	.035	8	8	200				
GR	1389.4	0.00	1389.54	29.04	1387.56	51.99	1384.39	114.78	1383.25	123.75
GR	1384.4	140.55	1382.90	153.68	1382.72	180.31	1383.90	250.00	1382.32	287.60
GR	1383.6	325.00	1382.01	354.74	1383.85	377.58	1386.16	399.11	1387.72	450.44
GR	1389.4	476.88	1389.19	500.00						
X1	1800	13	0.00	500.00	300.00	300.00	300.00			
CI	130.5	1381.03	.035	4	4	40				
CI	200.5	1383.49	.035	8	8	150				
GR	1390.8	0.00	1389.33	37.50	1387.39	78.29	1386.53	122.27	1385.68	133.45
GR	1386.0	240.87	1385.45	259.73	1385.91	295.00	1386.00	346.61	1387.38	417.36
GR	1389.6	457.27	1389.16	487.47	1389.59	500.00				
X1	2100	13	0.00	500.00	300.00	300.00	300.00			
CI	127.5	1381.55	.035	4	4	40				
CI	197.5	1384.55	.035	8	8	150				
GR	1391.9	0.00	1392.22	33.31	1389.34	61.11	1388.14	95.98	1387.45	136.21
GR	1386.9	200.65	1386.26	219.39	1386.47	263.88	1387.06	283.90	1387.07	361.69
GR	1388.7	421.69	1391.48	462.05	1391.48	500.00				
X1	2400	13	0.00	500.00	300.00	300.00	300.00			
CI	124.5	1382.07	.035	4	4	40				
CI	194.5	1385.07	.035	8	8	150				
GR	1392.5	0.00	1391.60	48.11	1390.32	57.38	1388.52	106.73	1387.89	147.06
GR	1387.2	163.20	1387.13	251.66	1387.46	273.29	1387.42	327.06	1388.41	390.75
GR	1390.2	442.38	1391.14	451.42	1392.00	500.00				
X1	2700	14	0.00	500.00	300.00	300.00	300.00			
CI	125.5	1382.59	.035	4	4	40				
CI	195.5	1385.09	.035	8	8	150				
GR	1393.3	0.00	1392.31	41.28	1393.41	48.93	1390.96	64.67	1387.97	90.91
GR	1387.6	137.24	1387.77	158.06	1387.24	167.88	1387.58	226.01	1386.87	263.44
GR	1388.3	351.95	1391.03	443.66	1392.94	456.01	1392.69	500.00		
QT	1	6874								
X1	2900	15	0.00	500.00	200.00	200.00	200.00			
CI	127	1382.93	.035	4	4	40				
CI	197	1385.93	.035	8	8	150				
GR	1393.6	0.00	1393.44	24.83	1393.03	41.09	1393.81	51.56	1389.63	76.85
GR	1387.8	110.32	1387.67	149.23	1387.30	204.02	1386.89	268.85	1387.61	279.75
GR	1387.2	311.08	1387.87	386.90	1389.81	430.22	1392.89	448.97	1393.34	500.00

```
X1    3000      18      0.00    500.00    100.00    100.00    100.00
CI     128 1383.11      .035         4         4        40
CI     198 1386.11      .035         8         8       150
GR  1393.5    0.00  1393.59     47.42   1393.87     52.85   1389.74     74.43   1388.38     88.37
GR  1387.9  119.05  1388.31    134.21   1387.74    145.26   1387.16    193.37   1387.85    233.82
GR  1387.1  266.60  1387.90    279.40   1387.08    308.55   1387.88    339.46   1388.50    410.10
GR  1389.4  426.48  1393.92    453.85   1394.13    500.00

X1    3300      15      0.00    500.00    300.00    300.00    300.00
CI     131 1383.62      .035         4         4        40
CI     201 1386.62      .035         8         8       150
GR  1394.3    0.00  1394.19     54.63   1389.81     80.94   1388.25    119.99   1389.10    148.04
GR  1387.9  165.61  1388.70    233.51   1388.27    266.45   1388.79    336.79   1388.92    398.68
GR  1389.4  419.07  1392.69    443.26   1394.19    468.19   1395.09    475.43   1394.93    500.00

X1    3600      16      0.00    500.00    304.00    298.00    300.00
CI   131.5 1384.15   305.035         4         4        40
CI   201.5 1387.15   305.035         8         8       150
GR  1395.2    0.00  1394.86     39.69   1396.52     52.97   1394.64     60.22   1389.44     99.64
GR  1388.8  129.18  1388.47    154.61   1389.10    175.87   1389.35    191.23   1388.98    226.06
GR  1389.2  326.70  1390.14    403.46   1391.76    426.42   1394.67    453.01   1395.40    476.10
GR  1394.2  500.00

X1    3900      13      0.00    500.00    307.00    295.00    300.00
CI   204.5 1384.71   320.035         4         4        47
CI   282.0 1387.71   320.035         8         8        94
GR  1395.6    0.00  1395.62     47.01   1390.98     97.12   1390.53    147.91   1390.12    205.14
GR  1389.3  216.85  1390.19    250.00   1389.79    278.01   1390.37    365.14   1390.05    387.47
GR  1390.7  413.68  1394.87    452.16   1394.01    500.00

X1    4000      14      0.00    500.00     98.00    102.00    100.00
CI   232.5 1384.89   102.035         4         4        60
CI   310.0 1387.89   102.035         8         8        80
GR  1394.2    0.00  1394.23     19.66   1395.97     48.98   1392.65     69.77   1391.50    106.89
GR  1390.7  208.15  1389.26    237.51   1389.94    250.00   1389.97    277.29   1389.99    366.90
GR  1390.4  403.34  1395.12    446.66   1395.91    482.97   1395.80    500.00

X1    4100      13      0.00    500.00    102.00     98.00    100.00
CI   247.5 1385.06   100.035         4         4        72
CI   321.0 1388.06   100.035         8         8        62
GR  1394.4    0.00  1393.97     61.53   1392.03    147.70   1391.73    204.70   1389.75    218.94
GR  1389.5  250.42  1389.66    282.76   1391.58    298.16   1390.84    377.05   1391.35    412.94
GR  1395.3  446.04  1395.29    489.25   1395.63    500.00

NC                              0.3       0.5
QT       1    6043
         DOWNSTREAM FACE OF 36TH STREET CULVERT
         6-12'x8' CONCRETE BOX CULVERT
```

```
        ROADWAY OVERFLOW OCCURS DURING THE 100-YEAR EVENT
X1    4187       11      0.00    500.00     88.00     85.00     87.00
CI     250  1385.22    87.035         4         4        76
CI     250  1388.22    87.035         8         8       .01
X3      10                          212               288
GR  1394.8      0.00  1394.48     24.39   1394.90     39.77   1393.64     71.15   1393.02    131.00
GR  1393.1    194.96  1391.94    303.77   1391.52    406.49   1392.32    423.48   1395.89    453.55
GR  1395.6    500.00

SC   6.013        .3     2.63       0.0       8.0      12.0        66      11.4   1385.44   1385.22
        UPSTREAM FACE OF 36TH STREET CULVERT
        6-12'x8' CONCRETE BOX CULVERT
        ROADWAY OVERFLOW OCCURS DURING THE 100-YEAR EVENT
X1    4253       11      0.00    500.00     68.00     64.00     66.00
CI     250  1385.42    66.025         4         4        76
X2                         2   1393.44   1394.00
X3      10                          212               288
BT     -10      -20      1395                -10      1394                    50   1393.50
BT              110   1393.74                175   1394.40                   250   1394.81
BT              325   1394.50                462   1393.50                   487   1393.39
BT              527   1395.00
GR  1395.1      0.00  1394.55     25.33   1394.97     53.84   1393.88     73.60   1393.07    202.08
GR  1393.1    266.10  1392.25    322.38   1392.24    377.08   1392.92    431.38   1395.86    454.04
GR  1396.4    500.00

NC    .025      .025      .025
X1    4400       14      0.00    500.00    145.00    150.00    147.00
CI     250  1385.86   147.025         4         4        58
CI     216  1385.86   147.025         4         4        44
GR  1395.8      0.00  1396.45     29.71   1396.13     55.01   1394.43     77.42   1393.99    176.01
GR  1393.9    205.43  1392.31    234.08   1392.42    274.66   1394.01    297.39   1394.15    381.31
GR  1393.8    410.82  1394.16    465.61   1394.45    494.03   1395.08    500.00

NC                                   .1        .3
X1    4500       15      0.00    500.00     97.00    103.00    100.00
CI     250  1386.17   100.025         4         4        50
CI     194  1386.17   100.025         4         4        62
GR  1396.2      0.00  1396.94     23.65   1396.69     50.86   1395.38     68.65   1394.80     87.61
GR  1394.5    167.75  1394.21    199.93   1392.31    228.09   1392.39    274.84   1395.55    299.35
GR  1396.4    336.08  1395.62    352.21   1395.45    397.67   1395.59    481.58   1394.78    500.00

QT       1    3340.0
        DOWNSTREAM FACE OF SWEETWATER AVENUE CULVERT
        EXISTING 4-10'x8' CBC PLUS AN ADDED 1-10'X8' CBC
X1    4574       12      0.00    500.00     74.00     74.00     74.00
CI     250  1386.40    74.035         4         4        54
CI     250  1386.40    74.035         4         4       .01
X3      10                          224               275
GR  1396.5      0.00  1396.62     35.18   1395.40     85.61   1395.74    120.90   1395.44    181.88
GR  1395.6    196.36  1398.19    214.88   1396.47    234.08   1396.42    290.00   1396.88    296.06
GR  1395.9    346.17  1395.97    500.00
```

```
SC    5.013      .2      2.63      400       8.0      10.0       74      11.4   1387.69   1387.55
        UPSTREAM FACE OF SWEETWATER AVENUE CULVERT
        EXISTING 4-10'x8' CBC PLUS AN ADDED 1-10'X8' CBC
X1     4648      12      0.00    500.00     68.00     76.00    74.00
CI      250  1387.69    74.035         4         4        50
X2                          2   1395.69    1398.0
X3       10                          224               275
GR   1396.8    0.00   1396.57     64.06   1395.77    153.52  1396.45    204.67   1396.64    234.32
GR   1397.4  239.35   1391.02    244.95   1391.71    269.94  1395.38    284.06   1395.94    304.93
GR   1396.0  380.23   1395.92    500.00

QT       1    3227
X1     4800      13      0.00    500.00    155.00    150.00   152.00
CI      249  1388.11   152.035         4         4        50
X3       10                          175               323
GR   1396.7    0.00   1396.23     49.68   1397.01    137.72  1396.90    186.10   1395.98    205.65
GR   1393.3  218.83   1393.69    262.82   1393.44    284.04  1396.26    300.72   1396.43    352.07
GR   1396.2  384.97   1396.52    442.08   1396.63    500.00

NC                                   .1        .3
X1     5000      15      0.00    500.00    204.00    184.00   200.00
CI      228  1388.66   202.035         4         4        50
X3       10                          160               296
GR   1397.2    0.00   1397.56     24.04   1396.76     51.55  1395.63     92.28   1395.96    113.03
GR   1398.7  131.91   1398.46    180.96   1394.30    216.67  1393.80    256.71   1393.96    285.91
GR   1397.0  305.57   1397.03    383.86   1396.90    444.84  1398.07    472.86   1397.69    500.00

X1     5300      13      0.00    500.00    310.00    293.00   300.00
CI     187.5  1389.50   306.035         4         4        50
X3       10                        122.5               252.5
GR   1398.0    0.00   1397.99     79.23   1398.09    112.49  1397.40    151.20   1395.17    166.98
GR   1394.6  217.49   1395.50    261.49   1395.98    280.21  1395.45    299.90   1397.82    338.13
GR   1397.6  388.87   1397.81    464.45   1398.40    500.00

X1     5400      16      0.00    500.00    102.00     98.00   100.00
CI     179.5  1389.77   102.035         4         4        50
X3       10                        111.5               247.5
GR   1398.3    0.00   1398.43     25.74   1399.06     35.10  1398.06     49.12   1398.26     94.09
GR   1397.1  121.26   1395.56    132.40   1395.35    186.79  1397.10    221.02   1398.49    230.81
GR   1398.0  289.53   1397.18    321.57   1397.86    369.28  1397.58    400.37   1398.98    462.05
GR   1399.4  500.00

X1     5700      16      0.00    500.00    305.00    295.00   300.00
CI      172  1390.61   306.035         4         4        50
X3       10                          107               237
GR   1398.8    0.00   1399.32     33.85   1399.11     65.25  1398.56    132.60   1396.12    157.61
GR   1396.8  222.23   1397.59    234.02   1399.46    250.65  1400.18    286.38   1398.75    298.72
GR   1398.6  370.89   1401.49    379.24   1398.79    393.21  1398.29    422.68   1397.85    470.90
GR   1397.9  500.00
```

```
X1    6000      16      0.00    500.00    290.00    310.00    300.00
CI     174 1391.44   307.035         4         4        50
X3      10                      110               238
GR  1399.7    0.00  1399.86     56.51   1399.50    119.28   1400.01    142.74   1399.19    178.02
GR  1399.5  188.53  1397.24    232.21   1398.41    284.47   1399.81    299.84   1399.30    358.33
GR  1399.6  381.33  1400.24    424.96   1399.29    435.32   1399.44    445.55   1401.15    469.46
GR  1401.2  500.00

QT      1    2794
        INDIAN BEND WASH CONFLUENCE AND EMILE ZOLA CHANNEL
X1    6200      13      0.00    500.00    203.00    197.00    200.00
CI     164 1391.99   203.035         4         4        50
X3      10                                        310
GR  1400.9    0.00  1400.79     40.15   1401.00     55.39   1400.41     67.27   1400.64    112.32
GR  1398.8  148.74  1398.74    200.75   1399.34    230.51   1399.06    285.86   1400.45    303.72
GR  1400.2  405.35  1400.22    493.30   1400.48    500.00

X1    6500      15      0.00    500.00    305.00    295.00    300.00
CI   162.5 1392.83   306.035         4         4        50
X3      10                                        311
GR  1401.8    0.00  1400.89     22.98   1401.60     55.32   1401.20     84.84   1402.05    135.47
GR  1402.0  182.27  1399.78    208.88   1399.72    235.62   1399.17    265.27   1400.57    297.50
GR  1401.8  324.52  1401.04    386.40   1401.09    462.63   1401.80    495.01   1402.42    500.00

X1    6700      18      0.00    500.00    200.00    200.00    200.00
CI     180 1393.38   202.035         4         4        50
X3      10                                        303
GR  1402.2    0.00  1401.35     20.83   1402.86     58.52   1401.68     64.24   1402.83     81.96
GR  1402.6  126.54  1402.46    192.16   1401.45    202.25   1401.32    252.07   1401.34    287.86
GR  1402.8  307.06  1402.77    362.80   1403.20    384.47   1402.79    413.75   1402.49    437.49
GR  1403.2  446.99  1402.48    458.06   1404.31    500.00

X1    7000      16      0.00    500.00    300.00    300.00    300.00
CI     233 1394.21   304.035         4         4        50
X3      10                                        299
GR  1403.3    0.00  1402.16     22.12   1403.39     52.55   1404.13     60.22   1403.67     75.03
GR  1404.2  114.65  1403.27    176.26   1402.88    193.22   1402.13    250.05   1402.14    303.94
GR  1403.7  330.31  1403.20    363.38   1403.14    426.42   1403.40    459.57   1403.86    486.80
GR  1405.5  500.00

X1    7400      15      0.00    500.00    400.00    400.00    400.00
CI     265 1395.30   404.035         4         4        50
X3      10                                        295
GR  1404.4    0.00  1404.16     40.41   1405.69     58.75   1404.75     63.98   1406.02     68.01
GR  1404.9   73.93  1405.18    122.81   1404.65    192.82   1403.43    213.79   1403.13    265.78
GR  1404.7  316.06  1404.90    359.71   1404.96    423.77   1405.61    451.61   1406.45    500.00

QT      1    2794
X1    7500      13      0.00    500.00    100.00    100.00    100.00
CI     265 1395.57   100.035         4         4        57
X3      10                                        310
GR  1404.9    0.00  1404.14     24.50   1405.57     55.95   1404.98     73.05   1405.79    145.28
GR  1405.9  190.96  1404.12    204.26   1403.53    267.49   1404.16    299.29   1405.43    333.65
```

GR	1405.6	441.89	1405.46	458.64	1405.94	500.00				
NC				0.3	0.5					
QT	1	1883.0								
X1	7555	8	0.00	500.00	55.00	55.00	55.00			
CI	265	1395.72	55.035	4	4	65				
X3	10			241		289				
GR	1404.9	0.00	1404.23	115.50	1403.41	195.33	1403.93	302.89	1403.78	333.00
GR	1405.0	369.74	1405.35	425.08	1406.22	500.00				
SC	4.013	.3	2.63	150	6.0	12.0	484.0	11.4	1397.03	1395.72
X1	8000	10	0.00	500.00	445.00	445.00	445.00			
CI	250	1397.03	484.035	4	4	50				
X2			2	1403.03	1408					
X3	10			226		274				
GR	1408.4	0.00	1406.66	32.86	1406.34	49.88	1406.74	101.36	1406.70	161.80
GR	1405.1	240.03	1405.75	303.91	1406.96	325.65	1407.04	442.97	1407.93	500.00
X1	8100	13	0.00	500.00	100.00	100.00	100.00			
CI	250	1398.82	100.035	4	4	50				
GR	1409.1	0.00	1407.62	24.93	1407.63	56.18	1407.28	163.96	1407.03	191.11
GR	1406.1	227.46	1406.30	303.73	1407.86	327.48	1407.79	425.58	1408.79	447.85
GR	1408.0	466.44	1408.75	480.69	1409.02	500.00				
NC				0.1	0.3					
X1	8300	15	0.00	500.00	200.00	200.00	200.00			
CI	250	1406.04	200.035	4	4	50				
GR	1409.8	0.00	1409.43	43.93	1408.53	56.58	1409.96	62.95	1407.58	90.10
GR	1407.7	150.16	1407.90	192.89	1406.65	205.71	1406.76	284.53	1408.44	322.90
GR	1408.4	371.45	1408.73	435.37	1409.43	465.42	1410.03	475.68	1409.95	500.00

SECNO	DEPTH	CWSEL	CRIWS	WSELK	EG	HV	HL	OLOSS	L-BANK ELEV
Q	QLOB	QCH	QROB	ALOB	ACH	AROB	VOL	TWA	R-BANK ELEV
TIME	VLOB	VCH	VROB	XNL	XNCH	XNR	WTN	ELMIN	SSTA
SLOPE	XLOBL	XLCH	XLOBR	ITRIAL	IDC	ICONT	CORAR	TOPWID	ENDST

```
*PROF 1

CCHV=     .100 CEHV=     .300
*SECNO 1150.000
CHIMP CLSTA=     239.00 CELCH=    1379.87 BW=      40.00 STCHL=        .00 STCHR=     500.00
EXCAVATION DATA
AEX=       9.2SQ-FT     VEXR=        .0K*CU-YD     VEXT=        .0K*CU-YD

2096 WSEL NOT GIVEN, AVG OF MAX, MIN USED
3280 CROSS SECTION   1150.00 EXTENDED       .71 FEET

        BEGIN INDIAN BEND WASH IMPROVED CHANNEL, SECTION NUMBERS
         MATCH APPROXIMATE R/W STATIONS OF INDIAN BEND WASH
        UPSTREAM OF 40TH STREET
        A LOW FLOW FJORD
  1150.000      6.21   1385.01       .00       .00   1385.32       .30       .00       .00   1388.90
    7071.0        .0    7071.0        .0        .0    1598.0        .0        .0        .0   1384.30
       .00       .00      4.42       .00      .000      .035      .000      .000   1378.80     52.07
   .001999        0.        0.        0.         0         0         6       .00    447.93    500.00


*SECNO 1200.000
CHIMP CLSTA=     210.00 CELCH=    1379.97 BW=      40.00 STCHL=        .00 STCHR=     500.00
EXCAVATION DATA
AEX=      24.5SQ-FT     VEXR=        .0K*CU-YD     VEXT=        .0K*CU-YD

3280 CROSS SECTION   1200.00 EXTENDED       .89 FEET

  1200.000      5.84   1385.10       .00       .00   1385.43       .33       .11       .01   1389.00
    7071.0        .0    7071.0        .0        .0    1525.0        .0       1.8        .5   1384.22
       .00       .00      4.64       .00      .000      .035      .000      .000   1379.26     48.61
   .002361       50.       50.       50.         1         0         0       .00    451.39    500.00


*SECNO 1300.000
CHIMP CLSTA=     169.50 CELCH=    1380.16 BW=      40.00 STCHL=        .00 STCHR=     500.00
EXCAVATION DATA
AEX=      54.8SQ-FT     VEXR=        .1K*CU-YD     VEXT=        .2K*CU-YD

  1300.000      5.15   1385.31       .00       .00   1385.73       .43       .27       .03   1388.70
    7071.0        .0    7071.0        .0        .0    1350.0        .0       5.1       1.5   1387.80
       .01       .00      5.24       .00      .000      .035      .000      .000   1380.16     44.29
   .003166      100.      100.      100.         1         0         0       .00    415.41    459.71
```

SECNO	DEPTH	CWSEL	CRIWS	WSELK	EG	HV	HL	OLOSS	L-BANK ELEV
Q	QLOB	QCH	QROB	ALOB	ACH	AROB	VOL	TWA	R-BANK ELEV
TIME	VLOB	VCH	VROB	XNL	XNCH	XNR	WTN	ELMIN	SSTA
SLOPE	XLOBL	XLCH	XLOBR	ITRIAL	IDC	ICONT	CORAR	TOPWID	ENDST

*SECNO 1500.000
CHIMP CLSTA= 134.00 CELCH= 1380.51 BW= 40.00 STCHL= .00 STCHR= 500.00
CHIMP CLSTA= 204.00 CELCH= 1382.21 BW= 200.00 STCHL= .00 STCHR= 500.00
EXCAVATION DATA
AEX= 351.6SQ-FT VEXR= 1.5K*CU-YD VEXT= 1.7K*CU-YD

1500.000	5.39	1385.90	.00	.00	1386.53	.63	.74	.06	1389.40
7071.0	.0	7071.0	.0	.0	1110.3	.0	10.7	3.2	1389.19
.02	.00	6.37	.00	.000	.035	.000	.000	1380.51	74.47
.004339	200.	200.	200.	2	0	0	.00	322.23	396.70

*SECNO 1800.000
CHIMP CLSTA= 130.50 CELCH= 1381.03 BW= 40.00 STCHL= .00 STCHR= 500.00
CHIMP CLSTA= 200.50 CELCH= 1383.49 BW= 150.00 STCHL= .00 STCHR= 500.00
EXCAVATION DATA
AEX= 596.2SQ-FT VEXR= 5.3K*CU-YD VEXT= 6.9K*CU-YD

1800.000	6.34	1387.38	.00	.00	1388.14	.77	1.57	.04	1390.80
7071.0	.0	7071.0	.0	.0	1006.2	.0	18.0	5.5	1389.59
.03	.00	7.03	.00	.000	.035	.000	.000	1381.03	79.06
.006430	300.	300.	300.	3	0	0	.00	338.05	417.10

*SECNO 2100.000
CHIMP CLSTA= 127.50 CELCH= 1381.55 BW= 40.00 STCHL= .00 STCHR= 500.00
CHIMP CLSTA= 197.50 CELCH= 1384.55 BW= 150.00 STCHL= .00 STCHR= 500.00
EXCAVATION DATA
AEX= 647.3SQ-FT VEXR= 6.9K*CU-YD VEXT= 13.9K*CU-YD

2100.000	7.47	1389.02	.00	.00	1389.51	.49	1.34	.03	1391.90
7071.0	.0	7071.0	.0	.0	1256.1	.0	25.8	7.9	1391.48
.04	.00	5.63	.00	.000	.035	.000	.000	1381.55	70.45
.003288	300.	300.	300.	2	0	0	.00	355.87	426.32

*SECNO 2400.000
CHIMP CLSTA= 124.50 CELCH= 1382.07 BW= 40.00 STCHL= .00 STCHR= 500.00
CHIMP CLSTA= 194.50 CELCH= 1385.07 BW= 150.00 STCHL= .00 STCHR= 500.00
EXCAVATION DATA
AEX= 659.2SQ-FT VEXR= 7.3K*CU-YD VEXT= 21.1K*CU-YD

2400.000	7.89	1389.96	.00	.00	1390.35	.39	.83	.01	1392.50
7071.0	.0	7071.0	.0	.0	1402.8	.0	35.0	10.4	1392.00
.06	.00	5.04	.00	.000	.035	.000	.000	1382.07	67.24
.002382	300.	300.	300.	3	0	0	.00	368.22	435.46

SECNO	DEPTH	CWSEL	CRIWS	WSELK	EG	HV	HL	OLOSS	L-BANK ELEV
Q	QLOB	QCH	QROB	ALOB	ACH	AROB	VOL	TWA	R-BANK ELEV
TIME	VLOB	VCH	VROB	XNL	XNCH	XNR	WTN	ELMIN	SSTA
SLOPE	XLOBL	XLCH	XLOBR	ITRIAL	IDC	ICONT	CORAR	TOPWID	ENDST

*SECNO 2700.000
CHIMP CLSTA= 125.50 CELCH= 1382.59 BW= 40.00 STCHL= .00 STCHR= 500.00
CHIMP CLSTA= 195.50 CELCH= 1385.09 BW= 150.00 STCHL= .00 STCHR= 500.00
EXCAVATION DATA
AEX= 580.2SQ-FT VEXR= 6.9K*CU-YD VEXT= 28.0K*CU-YD

2700.000	8.05	1390.64	.00	.00	1390.98	.34	.62	.01	1393.30
7071.0	.0	7071.0	.0	.0	1514.8	.0	45.0	12.9	1392.69
.08	.00	4.67	.00	.000	.035	.000	.000	1382.59	67.46
.001810	300.	300.	300.	2	0	0	.00	363.16	430.62

*SECNO 2900.000
CHIMP CLSTA= 127.00 CELCH= 1382.93 BW= 40.00 STCHL= .00 STCHR= 500.00
CHIMP CLSTA= 197.00 CELCH= 1385.93 BW= 150.00 STCHL= .00 STCHR= 500.00
EXCAVATION DATA
AEX= 453.3SQ-FT VEXR= 3.8K*CU-YD VEXT= 31.8K*CU-YD

2900.000	8.09	1391.02	.00	.00	1391.30	.28	.31	.01	1393.60
6874.0	.0	6874.0	.0	.0	1631.3	.0	52.2	14.6	1393.34
.09	.00	4.21	.00	.000	.035	.000	.000	1382.93	68.41
.001366	200.	200.	200.	2	0	0	.00	369.20	437.61

*SECNO 3000.000
CHIMP CLSTA= 128.00 CELCH= 1383.11 BW= 40.00 STCHL= .00 STCHR= 500.00
CHIMP CLSTA= 198.00 CELCH= 1386.11 BW= 150.00 STCHL= .00 STCHR= 500.00
EXCAVATION DATA
AEX= 446.9SQ-FT VEXR= 1.7K*CU-YD VEXT= 33.5K*CU-YD

3000.000	8.05	1391.16	.00	.00	1391.44	.28	.14	.00	1393.50
6874.0	.0	6874.0	.0	.0	1625.2	.0	56.0	15.4	1394.13
.10	.00	4.23	.00	.000	.035	.000	.000	1383.11	67.01
.001388	100.	100.	100.	2	0	0	.00	370.13	437.14

*SECNO 3300.000
CHIMP CLSTA= 131.00 CELCH= 1383.62 BW= 40.00 STCHL= .00 STCHR= 500.00
CHIMP CLSTA= 201.00 CELCH= 1386.62 BW= 150.00 STCHL= .00 STCHR= 500.00
EXCAVATION DATA
AEX= 508.4SQ-FT VEXR= 5.3K*CU-YD VEXT= 38.8K*CU-YD

3300.000	7.97	1391.59	.00	.00	1391.90	.31	.46	.01	1394.30
6874.0	.0	6874.0	.0	.0	1528.5	.0	66.8	17.9	1394.93
.12	.00	4.50	.00	.000	.035	.000	.000	1383.62	70.29
.001670	300.	300.	300.	1	0	0	.00	364.82	435.12

SECNO	DEPTH	CWSEL	CRIWS	WSELK	EG	HV	HL	OLOSS	L-BANK ELEV
Q	QLOB	QCH	QROB	ALOB	ACH	AROB	VOL	TWA	R-BANK ELEV
TIME	VLOB	VCH	VROB	XNL	XNCH	XNR	WTN	ELMIN	SSTA
SLOPE	XLOBL	XLCH	XLOBR	ITRIAL	IDC	ICONT	CORAR	TOPWID	ENDST

```
*SECNO 3600.000
CHIMP CLSTA=     131.50 CELCH=    1384.15 BW=      40.00 STCHL=        .00 STCHR=     500.00
CHIMP CLSTA=     201.50 CELCH=    1387.15 BW=     150.00 STCHL=        .00 STCHR=     500.00
EXCAVATION DATA
AEX=     522.2SQ-FT     VEXR=      5.8K*CU-YD     VEXT=      44.6K*CU-YD

  3600.000      7.95   1392.10       .00       .00   1392.45       .34       .53       .01   1395.20
    6874.0        .0    6874.0        .0        .0    1459.9        .0      77.3      20.4   1394.20
       .13       .00      4.71       .00      .000      .035      .000      .000   1384.15     79.44
   .001844      304.      305.      298.         2         0         0       .00    350.13    429.57


*SECNO 3900.000
CHIMP CLSTA=     204.50 CELCH=    1384.71 BW=      47.00 STCHL=        .00 STCHR=     500.00
CHIMP CLSTA=     282.00 CELCH=    1387.71 BW=      94.00 STCHL=        .00 STCHR=     500.00
EXCAVATION DATA
AEX=     577.6SQ-FT     VEXR=      6.5K*CU-YD     VEXT=      51.1K*CU-YD

  3900.000      8.01   1392.72       .00       .00   1393.09       .37       .63       .01   1395.60
    6874.0        .0    6874.0        .0        .0    1406.6        .0      87.8      23.0   1394.01
       .15       .00      4.89       .00      .000      .035      .000      .000   1384.71     78.36
   .002116      307.      320.      295.         2         0         0       .00    353.94    432.30


*SECNO 4000.000
CHIMP CLSTA=     232.50 CELCH=    1384.89 BW=      60.00 STCHL=        .00 STCHR=     500.00
CHIMP CLSTA=     310.00 CELCH=    1387.89 BW=      80.00 STCHL=        .00 STCHR=     500.00
EXCAVATION DATA
AEX=     593.3SQ-FT     VEXR=      2.2K*CU-YD     VEXT=      53.4K*CU-YD

  4000.000      8.05   1392.94       .00       .00   1393.30       .37       .22       .00   1394.20
    6874.0        .0    6874.0        .0        .0    1416.3        .0      91.1      23.9   1395.80
       .16       .00      4.85       .00      .000      .035      .000      .000   1384.89     67.97
   .002105       98.      102.      102.         2         0         0       .00    358.67    426.63


*SECNO 4100.000
CHIMP CLSTA=     247.50 CELCH=    1385.06 BW=      72.00 STCHL=        .00 STCHR=     500.00
CHIMP CLSTA=     321.00 CELCH=    1388.06 BW=      62.00 STCHL=        .00 STCHR=     500.00
EXCAVATION DATA
AEX=     684.8SQ-FT     VEXR=      2.4K*CU-YD     VEXT=      55.7K*CU-YD

  4100.000      8.06   1393.12       .00       .00   1393.55       .42       .22       .02   1394.40
    6874.0        .0    6874.0        .0        .0    1315.8        .0      94.3      24.7   1395.63
       .16       .00      5.22       .00      .000      .035      .000      .000   1385.06     99.21
   .002395      102.      100.       98.         2         0         0       .00    328.58    427.79
```

```
   SECNO     DEPTH     CWSEL     CRIWS     WSELK     EG        HV        HL        OLOSS     L-BANK ELEV
   Q         QLOB      QCH       QROB      ALOB      ACH       AROB      VOL       TWA       R-BANK ELEV
   TIME      VLOB      VCH       VROB      XNL       XNCH      XNR       WTN       ELMIN     SSTA
   SLOPE     XLOBL     XLCH      XLOBR     ITRIAL    IDC       ICONT     CORAR     TOPWID    ENDST

CCHV=     .300 CEHV=     .500
*SECNO 4187.000
CHIMP CLSTA=     250.00 CELCH=    1385.22 BW=      76.00 STCHL=        .00 STCHR=     500.00
EXCAVATION DATA
AEX=     768.2SQ-FT     VEXR=       2.3K*CU-YD     VEXT=       58.1K*CU-YD


3301 HV CHANGED MORE THAN HVINS


3302 WARNING:  CONVEYANCE CHANGE OUTSIDE OF ACCEPTABLE RANGE,  KRATIO =   .59


3470 ENCROACHMENT STATIONS=      212.0     288.0  TYPE=      1  TARGET=       76.000

3495 OVERBANK AREA ASSUMED NON-EFFECTIVE, ELLEA=    100000.00 ELREA=    100000.00

        DOWNSTREAM FACE OF 36TH STREET CULVERT
        6-12'x8' CONCRETE BOX CULVERT
        ROADWAY OVERFLOW OCCURS DURING THE 100-YEAR EVENT
  4187.000      7.54   1392.76       .00       .00   1394.49      1.72       .29       .65 100000.00
    6043.0        .0    6043.0        .0        .0     573.7        .0      96.2      25.1 100000.00
       .17       .00     10.53       .00      .000      .035      .000      .000   1385.22    212.00
   .005292       88.       87.       85.         2         0         0       .00     76.00    288.00


SPECIAL CULVERT

SC  CUNO      CUNV      ENTLC     COFQ      RDLEN     RISE      SPAN      CULVLN    CHRT      SCL       ELCHU     ELCHD
    6         .013      .30       2.63      .00       8.00      12.00     66.00     11        4         1385.44   1385.22

CHART 11 - BOX CULVERT; SKEWED HEADWALL; CHAMFERED OR BEVELED INLET EDGES
SCALE  4 - HEADWALL SKEWED 10 TO 45 DEGREES; INLET EDGES BEVELED

*SECNO 4253.000
CHIMP CLSTA=     250.00 CELCH=    1385.42 BW=      76.00 STCHL=        .00 STCHR=     500.00
EXCAVATION DATA
AEX=     799.7SQ-FT     VEXR=       1.9K*CU-YD     VEXT=       60.0K*CU-YD

5155, 20 TRIALS OF QWEIR NOT ENOUGH; POSSIBLY INVALID
FINAL QWEIR + QCULV =      5940. DOES NOT EQUAL ACTUAL Q =      6043.


SPECIAL CULVERT OUTLET CONTROL + WEIR FLOW EG =   1394.57
```

SECNO	DEPTH	CWSEL	CRIWS	WSELK	EG	HV	HL	OLOSS	L-BANK ELEV
Q	QLOB	QCH	QROB	ALOB	ACH	AROB	VOL	TWA	R-BANK ELEV
TIME	VLOB	VCH	VROB	XNL	XNCH	XNR	WTN	ELMIN	SSTA
SLOPE	XLOBL	XLCH	XLOBR	ITRIAL	IDC	ICONT	CORAR	TOPWID	ENDST

SPECIAL CULVERT

EGIC	EGOC	H4	QWEIR	QCULV	VCH	ACULV	ELTRD	WEIRLN
1395.04	1395.42	.09	603.	5337.	10.854	576.0	1394.00	432.

3470 ENCROACHMENT STATIONS= 212.0 288.0 TYPE= 1 TARGET= 76.000

3495 OVERBANK AREA ASSUMED NON-EFFECTIVE, ELLEA= 100000.00 ELREA= 100000.00

UPSTREAM FACE OF 36TH STREET CULVERT
6-12'x8' CONCRETE BOX CULVERT
ROADWAY OVERFLOW OCCURS DURING THE 100-YEAR EVENT

4253.000	7.33	1392.75	.00	.00	1394.57	1.83	.09	.00	100000.00
6043.0	.0	6043.0	.0	.0	556.8	.0	97.0	25.2	100000.00
.17	.00	10.85	.00	.000	.025	.000	.000	1385.42	212.00
.002964	68.	66.	64.	4	0	0	.00	76.00	288.00

*SECNO 4400.000
CHIMP CLSTA= 250.00 CELCH= 1385.86 BW= 58.00 STCHL= .00 STCHR= 500.00
CHIMP CLSTA= 216.00 CELCH= 1385.86 BW= 44.00 STCHL= .00 STCHR= 500.00
EXCAVATION DATA
AEX= 846.1SQ-FT VEXR= 4.5K*CU-YD VEXT= 64.5K*CU-YD

3301 HV CHANGED MORE THAN HVINS

3302 WARNING: CONVEYANCE CHANGE OUTSIDE OF ACCEPTABLE RANGE, KRATIO = 1.52

4400.000	9.12	1394.98	.00	.00	1395.30	.32	.27	.45	1395.80
6043.0	.0	6043.0	.0	.0	1336.3	.0	100.2	26.0	1395.08
.18	.00	4.52	.00	.000	.025	.000	.000	1385.86	70.13
.001280	145.	147.	150.	4	0	0	.00	428.96	499.08

CCHV= .100 CEHV= .300
*SECNO 4500.000
CHIMP CLSTA= 250.00 CELCH= 1386.17 BW= 50.00 STCHL= .00 STCHR= 500.00
CHIMP CLSTA= 194.00 CELCH= 1386.17 BW= 62.00 STCHL= .00 STCHR= 500.00

SECNO	DEPTH	CWSEL	CRIWS	WSELK	EG	HV	HL	OLOSS	L-BANK ELEV
Q	QLOB	QCH	QROB	ALOB	ACH	AROB	VOL	TWA	R-BANK ELEV
TIME	VLOB	VCH	VROB	XNL	XNCH	XNR	WTN	ELMIN	SSTA
SLOPE	XLOBL	XLCH	XLOBR	ITRIAL	IDC	ICONT	CORAR	TOPWID	ENDST

EXCAVATION DATA
AEX= 1074.0SQ-FT VEXR= 3.6K*CU-YD VEXT= 68.0K*CU-YD

3265 DIVIDED FLOW

3280 CROSS SECTION 4500.00 EXTENDED .29 FEET

3302 WARNING: CONVEYANCE CHANGE OUTSIDE OF ACCEPTABLE RANGE, KRATIO = 1.46

4500.000	8.90	1395.07	.00	.00	1395.39	.32	.08	.00	1396.20
6043.0	.0	6043.0	.0	.0	1328.7	.0	103.3	26.8	1394.78
.18	.00	4.55	.00	.000	.025	.000	.000	1386.17	78.94
.000600	97.	100.	103.	2	0	0	.00	238.12	500.00

*SECNO 4574.000
CHIMP CLSTA= 250.00 CELCH= 1386.40 BW= 54.00 STCHL= .00 STCHR= 500.00
EXCAVATION DATA
AEX= 966.9SQ-FT VEXR= 2.8K*CU-YD VEXT= 70.8K*CU-YD

3301 HV CHANGED MORE THAN HVINS

3302 WARNING: CONVEYANCE CHANGE OUTSIDE OF ACCEPTABLE RANGE, KRATIO = .25

3470 ENCROACHMENT STATIONS= 224.0 275.0 TYPE= 1 TARGET= 51.000

3495 OVERBANK AREA ASSUMED NON-EFFECTIVE, ELLEA= 100000.00 ELREA= 100000.00

DOWNSTREAM FACE OF SWEETWATER AVENUE CULVERT
EXISTING 4-10'x8' CBC PLUS AN ADDED 1-10'X8' CBC

4574.000	8.28	1394.68	.00	.00	1395.65	.97	.07	.19	100000.00
3340.0	.0	3340.0	.0	.0	422.5	.0	104.8	27.0	100000.00
.19	.00	7.91	.00	.000	.035	.000	.000	1386.40	224.00
.003010	74.	74.	74.	2	0	0	.00	51.00	275.00

SECNO	DEPTH	CWSEL	CRIWS	WSELK	EG	HV	HL	OLOSS	L-BANK ELEV
Q	QLOB	QCH	QROB	ALOB	ACH	AROB	VOL	TWA	R-BANK ELEV
TIME	VLOB	VCH	VROB	XNL	XNCH	XNR	WTN	ELMIN	SSTA
SLOPE	XLOBL	XLCH	XLOBR	ITRIAL	IDC	ICONT	CORAR	TOPWID	ENDST

SPECIAL CULVERT

SC	CUNO	CUNV	ENTLC	COFQ	RDLEN	RISE	SPAN	CULVLN	CHRT	SCL	ELCHU	ELCHD
	5	.013	.20	2.63	400.00	8.00	10.00	74.00	11	4	1387.69	1387.55

CHART 11 - BOX CULVERT; SKEWED HEADWALL; CHAMFERED OR BEVELED INLET EDGES
SCALE 4 - HEADWALL SKEWED 10 TO 45 DEGREES; INLET EDGES BEVELED

*SECNO 4648.000
CHIMP CLSTA= 250.00 CELCH= 1387.69 BW= 50.00 STCHL= .00 STCHR= 500.00
EXCAVATION DATA
AEX= 550.1SQ-FT VEXR= 2.1K*CU-YD VEXT= 72.9K*CU-YD

SPECIAL CULVERT OUTLET CONTROL
EGIC = 1395.892 EGOC = 1396.438 PCWSE= 1394.681 ELTRD= 1398.000

SPECIAL CULVERT

EGIC	EGOC	H4	QWEIR	QCULV	VCH	ACULV	ELTRD	WEIRLN
1395.89	1396.44	.79	0.	3340.	8.628	400.0	1398.00	0.

3470 ENCROACHMENT STATIONS= 224.0 275.0 TYPE= 1 TARGET= 51.000

3495 OVERBANK AREA ASSUMED NON-EFFECTIVE, ELLEA= 100000.00 ELREA= 100000.00

UPSTREAM FACE OF SWEETWATER AVENUE CULVERT
EXISTING 4-10'x8' CBC PLUS AN ADDED 1-10'X8' CBC

4648.000	7.59	1395.28	.00	.00	1396.44	1.16	.79	.00	100000.00
3340.0	.0	3340.0	.0	.0	387.1	.0	105.4	27.1	100000.00
.19	.00	8.63	.00	.000	.035	.000	.000	1387.69	224.00
.003901	68.	74.	76.	3	0	0	.00	51.00	275.00

*SECNO 4800.000
CHIMP CLSTA= 249.00 CELCH= 1388.11 BW= 50.00 STCHL= .00 STCHR= 500.00
EXCAVATION DATA
AEX= 450.7SQ-FT VEXR= 2.8K*CU-YD VEXT= 75.7K*CU-YD

3301 HV CHANGED MORE THAN HVINS

3302 WARNING: CONVEYANCE CHANGE OUTSIDE OF ACCEPTABLE RANGE, KRATIO = 1.69

SECNO	DEPTH	CWSEL	CRIWS	WSELK	EG	HV	HL	OLOSS	L-BANK ELEV
Q	QLOB	QCH	QROB	ALOB	ACH	AROB	VOL	TWA	R-BANK ELEV
TIME	VLOB	VCH	VROB	XNL	XNCH	XNR	WTN	ELMIN	SSTA
SLOPE	XLOBL	XLCH	XLOBR	ITRIAL	IDC	ICONT	CORAR	TOPWID	ENDST

3470 ENCROACHMENT STATIONS= 175.0 323.0 TYPE= 1 TARGET= 148.000

3495 OVERBANK AREA ASSUMED NON-EFFECTIVE, ELLEA= 100000.00 ELREA= 100000.00

4800.000	8.40	1396.51	.00	.00	1396.84	.32	.32	.08	100000.00
3227.0	.0	3227.0	.0	.0	706.3	.0	107.4	27.4	100000.00
.20	.00	4.57	.00	.000	.035	.000	.000	1388.11	190.37
.001273	155.	152.	150.	3	0	0	.00	132.62	323.00

CCHV= .100 CEHV= .300
*SECNO 5000.000
CHIMP CLSTA= 228.00 CELCH= 1388.66 BW= 50.00 STCHL= .00 STCHR= 500.00
EXCAVATION DATA
AEX= 502.9SQ-FT VEXR= 3.6K*CU-YD VEXT= 79.3K*CU-YD

3470 ENCROACHMENT STATIONS= 160.0 296.0 TYPE= 1 TARGET= 136.000

3495 OVERBANK AREA ASSUMED NON-EFFECTIVE, ELLEA= 100000.00 ELREA= 100000.00

5000.000	8.10	1396.76	.00	.00	1397.09	.32	.25	.00	100000.00
3227.0	.0	3227.0	.0	.0	705.6	.0	110.6	28.0	100000.00
.21	.00	4.57	.00	.000	.035	.000	.000	1388.66	170.59
.001197	204.	202.	184.	2	0	0	.00	125.41	296.00

*SECNO 5300.000
CHIMP CLSTA= 187.50 CELCH= 1389.50 BW= 50.00 STCHL= .00 STCHR= 500.00
EXCAVATION DATA
AEX= 447.8SQ-FT VEXR= 5.4K*CU-YD VEXT= 84.7K*CU-YD

3470 ENCROACHMENT STATIONS= 122.5 252.5 TYPE= 1 TARGET= 130.000

3495 OVERBANK AREA ASSUMED NON-EFFECTIVE, ELLEA= 100000.00 ELREA= 100000.00

5300.000	7.63	1397.13	.00	.00	1397.52	.39	.42	.02	100000.00
3227.0	.0	3227.0	.0	.0	642.0	.0	115.4	28.9	100000.00
.23	.00	5.03	.00	.000	.035	.000	.000	1389.50	131.96
.001565	310.	306.	293.	0	0	0	.00	120.54	252.50

```
SECNO     DEPTH     CWSEL     CRIWS     WSELK     EG        HV        HL        OLOSS     L-BANK ELEV
Q         QLOB      QCH       QROB      ALOB      ACH       AROB      VOL       TWA       R-BANK ELEV
TIME      VLOB      VCH       VROB      XNL       XNCH      XNR       WTN       ELMIN     SSTA
SLOPE     XLOBL     XLCH      XLOBR     ITRIAL    IDC       ICONT     CORAR     TOPWID    ENDST


*SECNO 5400.000
CHIMP CLSTA=     179.50 CELCH=    1389.77 BW=      50.00 STCHL=        .00 STCHR=     500.00
EXCAVATION DATA
AEX=     470.3SQ-FT     VEXR=      1.7K*CU-YD     VEXT=      86.4K*CU-YD


3470 ENCROACHMENT STATIONS=     111.5     247.5  TYPE=     1  TARGET=     136.000

3495 OVERBANK AREA ASSUMED NON-EFFECTIVE, ELLEA=    100000.00 ELREA=    100000.00

  5400.000      7.50   1397.27       .00       .00   1397.71       .44       .17       .02 100000.00
    3227.0        .0    3227.0        .0        .0     603.4        .0     116.8      29.2 100000.00
       .23       .00      5.35       .00      .000      .035      .000      .000   1389.77    117.27
   .001822      102.      102.       98.         0         0         0       .00    117.24    234.50


*SECNO 5700.000
CHIMP CLSTA=     172.00 CELCH=    1390.61 BW=      50.00 STCHL=        .00 STCHR=     500.00
EXCAVATION DATA
AEX=     480.0SQ-FT     VEXR=      5.4K*CU-YD     VEXT=      91.8K*CU-YD


3470 ENCROACHMENT STATIONS=     107.0     237.0  TYPE=     1  TARGET=     130.000

3495 OVERBANK AREA ASSUMED NON-EFFECTIVE, ELLEA=    100000.00 ELREA=    100000.00

  5700.000      7.23   1397.84       .00       .00   1398.33       .49       .60       .01 100000.00
    3227.0        .0    3227.0        .0        .0     576.9        .0     121.0      30.0 100000.00
       .25       .00      5.59       .00      .000      .035      .000      .000   1390.61    118.08
   .002137      305.      306.      295.         2         0         0       .00    118.17    236.25


*SECNO 6000.000
CHIMP CLSTA=     174.00 CELCH=    1391.44 BW=      50.00 STCHL=        .00 STCHR=     500.00
EXCAVATION DATA
AEX=     631.7SQ-FT     VEXR=      6.3K*CU-YD     VEXT=      98.1K*CU-YD


3470 ENCROACHMENT STATIONS=     110.0     238.0  TYPE=     1  TARGET=     128.000

3495 OVERBANK AREA ASSUMED NON-EFFECTIVE, ELLEA=    100000.00 ELREA=    100000.00

  6000.000      7.06   1398.50       .00       .00   1399.01       .50       .68       .01 100000.00
    3227.0        .0    3227.0        .0        .0     567.1        .0     125.0      30.8 100000.00
       .26       .00      5.69       .00      .000      .035      .000      .000   1391.44    120.74
   .002266      290.      307.      310.         2         0         0       .00    117.26    238.00
```

SECNO	DEPTH	CWSEL	CRIWS	WSELK	EG	HV	HL	OLOSS	L-BANK ELEV
Q	QLOB	QCH	QROB	ALOB	ACH	AROB	VOL	TWA	R-BANK ELEV
TIME	VLOB	VCH	VROB	XNL	XNCH	XNR	WTN	ELMIN	SSTA
SLOPE	XLOBL	XLCH	XLOBR	ITRIAL	IDC	ICONT	CORAR	TOPWID	ENDST

*SECNO 6200.000
CHIMP CLSTA= 164.00 CELCH= 1391.99 BW= 50.00 STCHL= .00 STCHR= 500.00
EXCAVATION DATA
AEX= 567.2SQ-FT VEXR= 4.5K*CU-YD VEXT= 102.6K*CU-YD

3470 ENCROACHMENT STATIONS= .0 310.0 TYPE= 1 TARGET= 309.999

3495 OVERBANK AREA ASSUMED NON-EFFECTIVE, ELLEA= 1400.90 ELREA= 100000.00

INDIAN BEND WASH CONFLUENCE AND EMILE ZOLA CHANNEL

6200.000	7.02	1399.01	.00	.00	1399.41	.40	.39	.01	1400.90
2794.0	.0	2794.0	.0	.0	547.9	.0	127.6	31.4	100000.00
.27	.00	5.10	.00	.000	.035	.000	.000	1391.99	110.93
.001652	203.	203.	197.	2	0	0	.00	106.15	217.07

*SECNO 6500.000
CHIMP CLSTA= 162.50 CELCH= 1392.83 BW= 50.00 STCHL= .00 STCHR= 500.00
EXCAVATION DATA
AEX= 734.5SQ-FT VEXR= 7.4K*CU-YD VEXT= 110.0K*CU-YD

3265 DIVIDED FLOW

3470 ENCROACHMENT STATIONS= .0 311.0 TYPE= 1 TARGET= 310.999

3495 OVERBANK AREA ASSUMED NON-EFFECTIVE, ELLEA= 1401.80 ELREA= 100000.00

6500.000	6.79	1399.61	.00	.00	1400.05	.43	.63	.01	1401.80
2794.0	.0	2794.0	.0	.0	529.9	.0	131.4	32.2	100000.00
.29	.00	5.27	.00	.000	.035	.000	.000	1392.83	110.39
.002603	305.	306.	295.	1	0	0	.00	137.82	275.33

*SECNO 6700.000
CHIMP CLSTA= 180.00 CELCH= 1393.38 BW= 50.00 STCHL= .00 STCHR= 500.00
EXCAVATION DATA
AEX= 745.6SQ-FT VEXR= 5.5K*CU-YD VEXT= 115.5K*CU-YD

3470 ENCROACHMENT STATIONS= .0 303.0 TYPE= 1 TARGET= 302.999

```
SECNO     DEPTH     CWSEL     CRIWS     WSELK     EG        HV        HL        OLOSS     L-BANK ELEV
Q         QLOB      QCH       QROB      ALOB      ACH       AROB      VOL       TWA       R-BANK ELEV
TIME      VLOB      VCH       VROB      XNL       XNCH      XNR       WTN       ELMIN     SSTA
SLOPE     XLOBL     XLCH      XLOBR     ITRIAL    IDC       ICONT     CORAR     TOPWID    ENDST


3495 OVERBANK AREA ASSUMED NON-EFFECTIVE, ELLEA=     1402.20 ELREA=    100000.00

  6700.000      6.67   1400.05       .00       .00   1400.52       .46       .46       .01   1402.20
    2794.0        .0    2794.0        .0        .0     511.2        .0     133.8      32.8 100000.00
       .30       .00      5.47       .00      .000      .035      .000      .000   1393.38    128.33
   .002009      200.      202.      200.         1         0         0       .00    103.34    231.67


*SECNO 7000.000
CHIMP CLSTA=     233.00 CELCH=    1394.21 BW=      50.00 STCHL=        .00 STCHR=     500.00
EXCAVATION DATA
AEX=     687.1SQ-FT     VEXR=       8.1K*CU-YD     VEXT=      123.6K*CU-YD


3470 ENCROACHMENT STATIONS=         .0     299.0  TYPE=      1  TARGET=      298.999

3495 OVERBANK AREA ASSUMED NON-EFFECTIVE, ELLEA=     1403.30 ELREA=    100000.00

  7000.000      6.46   1400.67       .00       .00   1401.18       .50       .65       .01   1403.30
    2794.0        .0    2794.0        .0        .0     490.0        .0     137.3      33.5 100000.00
       .31       .00      5.70       .00      .000      .035      .000      .000   1394.21    182.16
   .002262      300.      304.      300.         2         0         0       .00    101.69    283.84


*SECNO 7400.000
CHIMP CLSTA=     265.00 CELCH=    1395.30 BW=      50.00 STCHL=        .00 STCHR=     500.00
EXCAVATION DATA
AEX=     700.7SQ-FT     VEXR=      10.4K*CU-YD     VEXT=      134.0K*CU-YD


3470 ENCROACHMENT STATIONS=         .0     295.0  TYPE=      1  TARGET=      294.999

3495 OVERBANK AREA ASSUMED NON-EFFECTIVE, ELLEA=     1404.40 ELREA=    100000.00

  7400.000      6.28   1401.58       .00       .00   1402.27       .68      1.04       .05   1404.40
    2794.0        .0    2794.0        .0        .0     421.4        .0     141.5      34.3 100000.00
       .33       .00      6.63       .00      .000      .035      .000      .000   1395.30    214.87
   .002935      400.      404.      400.         2         0         0       .00     80.13    295.00


*SECNO 7500.000
CHIMP CLSTA=     265.00 CELCH=    1395.57 BW=      57.00 STCHL=        .00 STCHR=     500.00
```

SECNO	DEPTH	CWSEL	CRIWS	WSELK	EG	HV	HL	OLOSS	L-BANK ELEV
Q	QLOB	QCH	QROB	ALOB	ACH	AROB	VOL	TWA	R-BANK ELEV
TIME	VLOB	VCH	VROB	XNL	XNCH	XNR	WTN	ELMIN	SSTA
SLOPE	XLOBL	XLCH	XLOBR	ITRIAL	IDC	ICONT	CORAR	TOPWID	ENDST

EXCAVATION DATA
AEX= 771.8SQ-FT VEXR= 2.7K*CU-YD VEXT= 136.7K*CU-YD

3470 ENCROACHMENT STATIONS= .0 310.0 TYPE= 1 TARGET= 309.999

3495 OVERBANK AREA ASSUMED NON-EFFECTIVE, ELLEA= 1404.90 ELREA= 100000.00

7500.000	6.51	1402.08	.00	.00	1402.51	.43	.22	.03	1404.90
2794.0	.0	2794.0	.0	.0	529.4	.0	142.6	34.5	100000.00
.34	.00	5.28	.00	.000	.035	.000	.000	1395.57	210.45
.001747	100.	100.	100.	2	0	0	.00	99.55	310.00

CCHV= .300 CEHV= .500
*SECNO 7555.000
CHIMP CLSTA= 265.00 CELCH= 1395.72 BW= 65.00 STCHL= .00 STCHR= 500.00
EXCAVATION DATA
AEX= 776.2SQ-FT VEXR= 1.6K*CU-YD VEXT= 138.3K*CU-YD

3302 WARNING: CONVEYANCE CHANGE OUTSIDE OF ACCEPTABLE RANGE, KRATIO = .57

3470 ENCROACHMENT STATIONS= 241.0 289.0 TYPE= 1 TARGET= 48.000

3495 OVERBANK AREA ASSUMED NON-EFFECTIVE, ELLEA= 100000.00 ELREA= 100000.00

7555.000	6.39	1402.11	.00	.00	1402.70	.58	.11	.08	100000.00
1883.0	.0	1883.0	.0	.0	306.9	.0	143.1	34.6	100000.00
.34	.00	6.14	.00	.000	.035	.000	.000	1395.72	241.00
.002411	55.	55.	55.	2	0	0	.00	48.00	289.00

SPECIAL CULVERT

SC	CUNO	CUNV	ENTLC	COFQ	RDLEN	RISE	SPAN	CULVLN	CHRT	SCL	ELCHU	ELCHD
	4	.013	.30	2.63	150.00	6.00	12.00	484.00	11	4	1397.03	1395.72

CHART 11 - BOX CULVERT; SKEWED HEADWALL; CHAMFERED OR BEVELED INLET EDGES
SCALE 4 - HEADWALL SKEWED 10 TO 45 DEGREES; INLET EDGES BEVELED

*SECNO 8000.000
CHIMP CLSTA= 250.00 CELCH= 1397.03 BW= 50.00 STCHL= .00 STCHR= 500.00
EXCAVATION DATA
AEX= 714.0SQ-FT VEXR= 13.4K*CU-YD VEXT= 151.6K*CU-YD

SECNO	DEPTH	CWSEL	CRIWS	WSELK	EG	HV	HL	OLOSS	L-BANK ELEV
Q	QLOB	QCH	QROB	ALOB	ACH	AROB	VOL	TWA	R-BANK ELEV
TIME	VLOB	VCH	VROB	XNL	XNCH	XNR	WTN	ELMIN	SSTA
SLOPE	XLOBL	XLCH	XLOBR	ITRIAL	IDC	ICONT	CORAR	TOPWID	ENDST

SPECIAL CULVERT OUTLET CONTROL
EGIC = 1402.781 EGOC = 1403.605 PCWSE= 1402.114 ELTRD= 1408.000

SPECIAL CULVERT

EGIC	EGOC	H4	QWEIR	QCULV	VCH	ACULV	ELTRD	WEIRLN
1402.78	1403.61	.91	0.	1883.	6.666	288.0	1408.00	0.

3470 ENCROACHMENT STATIONS= 226.0 274.0 TYPE= 1 TARGET= 48.000

3495 OVERBANK AREA ASSUMED NON-EFFECTIVE, ELLEA= 100000.00 ELREA= 100000.00

8000.000	5.89	1402.92	.00	.00	1403.61	.69	.91	.00	100000.00
1883.0	.0	1883.0	.0	.0	282.5	.0	146.4	35.2	100000.00
.36	.00	6.67	.00	.000	.035	.000	.000	1397.03	226.00
.003108	445.	484.	445.	3	0	0	.00	48.00	274.00

*SECNO 8100.000
CHIMP CLSTA= 250.00 CELCH= 1398.82 BW= 50.00 STCHL= .00 STCHR= 500.00
EXCAVATION DATA
AEX= 598.1SQ-FT VEXR= 2.4K*CU-YD VEXT= 154.1K*CU-YD

8100.000	4.61	1403.43	.00	.00	1403.98	.55	.33	.04	1409.10
1883.0	.0	1883.0	.0	.0	315.8	.0	147.1	35.3	1409.02
.36	.00	5.96	.00	.000	.035	.000	.000	1398.82	206.54
.003591	100.	100.	100.	2	0	0	.00	86.91	293.46

CCHV= .100 CEHV= .300
*SECNO 8300.000
CHIMP CLSTA= 250.00 CELCH= 1406.04 BW= 50.00 STCHL= .00 STCHR= 500.00
EXCAVATION DATA
AEX= 35.4SQ-FT VEXR= 2.3K*CU-YD VEXT= 156.4K*CU-YD

3685 20 TRIALS ATTEMPTED WSEL,CWSEL
3693 PROBABLE MINIMUM SPECIFIC ENERGY
3720 CRITICAL DEPTH ASSUMED

8300.000	2.47	1408.51	1408.51	.00	1409.04	.53	1.38	.00	1409.80
1883.0	.0	1883.0	.0	.0	321.7	.0	148.6	36.2	1409.95
.37	.00	5.85	.00	.000	.035	.000	.000	1406.04	79.48
.018380	200.	200.	200.	20	11	0	.00	313.42	392.90

PROFILE FOR STREAM ALL FLOWS OBTAINED FROM

PLOTTED POINTS (BY PRIORITY) E-ENERGY,W-WATER SURFACE,I-INVERT,C-CRITICAL W.S.,L-LEFT BANK,R-RIGHT BANK,M-LOWER END STA

ELEVATION SECNO	1379. CUMDIS	1384.	1389.	1394.	1399.	1404.	1409.	1414.	1419.	1424.
1150.00	0.	I	.RWE	L	.	.	.	.	.	.
	20.	I	.RWE	L	.	.	.	.	.	.
	40.	CI	.R E	L	.	.	.	.	.	.
1200.00	60.	CI	.R E	L	.	.	.	.	.	.
	80.	CI	. RE	L	.	.	.	.	.	.
	100.	C I	. ER	L	.	.	.	.	.	.
	120.	C I	. WER	L	.	.	.	.	.	.
	140.	C I	. WE R	L	.	.	.	.	.	.
1300.00	160.	C I	. WE R	L	.	.	.	.	.	.
	180.	C I	. WE R	L	.	.	.	.	.	.
	200.	C I	. WE	RL	.	.	.	.	.	.
	220.	C I	. WE	RL	.	.	.	.	.	.
	240.	C I	. WE	RL	.	.	.	.	.	.
	260.	C I	. WE	RL	.	.	.	.	.	.
	280.	C I	. WE	RL	.	.	.	.	.	.
	300.	C I	. WE	RL	.	.	.	.	.	.
	320.	C I	. WE	RL	.	.	.	.	.	.
	340.	C I	. WE	.L	.	.	.	.	.	.
1500.00	360.	C I	. WE	.L	.	.	.	.	.	.
	380.	C I	. W E	.L	.	.	.	.	.	.
	400.	C I	. WE	.RL	.	.	.	.	.	.
	420.	C I	. WE	.RL	.	.	.	.	.	.
	440.	C I	. WE	.RL	.	.	.	.	.	.
	460.	C I	. W E	.RL	.	.	.	.	.	.
	480.	C I	. W E	.RL	.	.	.	.	.	.
	500.	C I	. WE	.R L	.	.	.	.	.	.
	520.	C I	. WE	.R L	.	.	.	.	.	.
	540.	C I	. WE	.R L	.	.	.	.	.	.
	560.	C I	. W E	.R L	.	.	.	.	.	.
	580.	C I	. W E	.R L	.	.	.	.	.	.
	600.	C I	. WE	.R L	.	.	.	.	.	.
	620.	C I	. WE	.R L	.	.	.	.	.	.
	640.	C I	. WE	. R L	.	.	.	.	.	.
1800.00	660.	C I	. W E.	R L	.	.	.	.	.	.
	680.	C I	. W E.	R L	.	.	.	.	.	.
	700.	C I	. WE.	R L	.	.	.	.	.	.
	720.	C I	. WE.	R L	.	.	.	.	.	.
	740.	C I	. WE.	R L	.	.	.	.	.	.
	760.	C I	. W E	R L	.	.	.	.	.	.
	780.	C I	. W E	R L	.	.	.	.	.	.
	800.	C I	. WE	R L	.	.	.	.	.	.
	820.	C I	. WE	RL	.	.	.	.	.	.
	840.	C I	. WE	RL	.	.	.	.	.	.
	860.	C I	. W.E	RL	.	.	.	.	.	.
	880.	C I	. WE	R L	.	.	.	.	.	.
	900.	C I	. WE	RL	.	.	.	.	.	.
	920.	C I	. WE	RL	.	.	.	.	.	.
	940.	C I	. WE	RL	.	.	.	.	.	.

2100.00	960.	C	I	.	WE	RL	.	.	.	.	.	.	.	.
	980.	C	I	.	.WE	RL	.	.	.	.	.	.	.	.
	1000.	C	I	.	.WE	RL	.	.	.	.	.	.	.	.
	1020.	C	I	.	.WE	L	.	.	.	.	.	.	.	.
	1040.	C	I	.	.WE	RL	.	.	.	.	.	.	.	.
	1060.	C	I	.	.WE	RL	.	.	.	.	.	.	.	.
	1080.	C	I	.	.WE	RL	.	.	.	.	.	.	.	.
	1100.	C	I	.	.WE	RL	.	.	.	.	.	.	.	.
	1120.	C	I	.	.WE	RL	.	.	.	.	.	.	.	.
	1140.	C	I	.	. E	RL	.	.	.	.	.	.	.	.
	1160.	C	I	.	. WE	RL	.	.	.	.	.	.	.	.
	1180.	C	I	.	. WE	RL	.	.	.	.	.	.	.	.
	1200.	C	I	.	. WE	RL	.	.	.	.	.	.	.	.
	1220.	C	I	.	. WE	RL	.	.	.	.	.	.	.	.
	1240.	C	I	.	. WE	RL	.	.	.	.	.	.	.	.
2400.00	1260.	C	I	.	. WE	RL	.	.	.	.	.	.	.	.
	1280.	C	I	.	. WE	R L	.	.	.	.	.	.	.	.
	1300.	C	I	.	. E	RL	.	.	.	.	.	.	.	.
	1320.	C	I	.	. E	RL	.	.	.	.	.	.	.	.
	1340.	C	I	.	. E	RL	.	.	.	.	.	.	.	.
	1360.	C	I	.	. WE	RL	.	.	.	.	.	.	.	.
	1380.	C	I	.	. WE	RL	.	.	.	.	.	.	.	.
	1400.	C	I	.	. WE	RL	.	.	.	.	.	.	.	.
	1420.	C	I	.	. WE	RL	.	.	.	.	.	.	.	.
	1440.	C	I	.	. WE	RL	.	.	.	.	.	.	.	.
	1460.	C	I	.	. WE	RL	.	.	.	.	.	.	.	.
	1480.	C	I	.	. WE	R L.	.	.	.	.	.	.	.	.
	1500.	C	I	.	. WE	RL.	.	.	.	.	.	.	.	.
	1520.	C	I	.	. WE	RL.	.	.	.	.	.	.	.	.
	1540.	C	I	.	. E	RL.	.	.	.	.	.	.	.	.
2700.00	1560.	C	I	.	. E	RL.	.	.	.	.	.	.	.	.
	1580.	C	I	.	. E	RL.	.	.	.	.	.	.	.	.
	1600.	C	I	.	. E	RL.	.	.	.	.	.	.	.	.
	1620.	C	I	.	. WE	RL.	.	.	.	.	.	.	.	.
	1640.	C	I	.	. WE	RL.	.	.	.	.	.	.	.	.
	1660.	C	I	.	. WE	RL.	.	.	.	.	.	.	.	.
	1680.	C	I	.	. WE	L.	.	.	.	.	.	.	.	.
	1700.	C	I	.	. WE	L.	.	.	.	.	.	.	.	.
	1720.	C	I	.	. WE	L.	.	.	.	.	.	.	.	.
	1740.	C	I	.	. WE	RL	.	.	.	.	.	.	.	.
2900.00	1760.	C	I	.	. WE	RL	.	.	.	.	.	.	.	.
	1780.	C	I	.	. WE	RL	.	.	.	.	.	.	.	.
	1800.	C	I	.	. E	ML	.	.	.	.	.	.	.	.
	1820.	C	I	.	. E	LR	.	.	.	.	.	.	.	.
	1840.	C	I.		. E	LR	.	.	.	.	.	.	.	.
3000.00	1860.	C	I.		. E	L.R	.	.	.	.	.	.	.	.
	1880.	C	I.		. E	LR	.	.	.	.	.	.	.	.
	1900.	C	I.		. E	LR	.	.	.	.	.	.	.	.
	1920.	C	I.		. E	LR	.	.	.	.	.	.	.	.
	1940.	C	I.		. WE	LR	.	.	.	.	.	.	.	.
	1960.	C	I.		. WE	LR	.	.	.	.	.	.	.	.
	1980.	C	I.		. WE	LR	.	.	.	.	.	.	.	.
	2000.	C	I.		. WE	LR	.	.	.	.	.	.	.	.
	2020.	C	I.		. WE	L R	.	.	.	.	.	.	.	.
	2040.	C	I.		. WE	L R	.	.	.	.	.	.	.	.
	2060.	C	I.		. WE	L R	.	.	.	.	.	.	.	.
	2080.	C	I.		. WE	.LR	.	.	.	.	.	.	.	.
	2100.	C	I.		. WE	.LR	.	.	.	.	.	.	.	.
	2120.	C	I		. WE	.LR	.	.	.	.	.	.	.	.
	2140.	C	I		. E	.LR	.	.	.	.	.	.	.	.

3300.00	2160.	C	I	.	E .LR	.	.	.	.	.	.	.	.
	2180.	C	I	.	E .LR	.	.	.	.	.	.	.	.
	2200.	C	I	.	E .LR	.	.	.	.	.	.	.	.
	2220.	C	I	.	E .LR	.	.	.	.	.	.	.	.
	2240.	C	I	.	E .LR	.	.	.	.	.	.	.	.
	2260.	C	I	.	WE .ML	.	.	.	.	.	.	.	.
	2280.	C	I	.	WE .ML	.	.	.	.	.	.	.	.
	2300.	C	I	.	WE .ML	.	.	.	.	.	.	.	.
	2320.	C	I	.	WE .RL	.	.	.	.	.	.	.	.
	2340.	C	I	.	WE .RL	.	.	.	.	.	.	.	.
	2360.	C	I	.	WE .RL	.	.	.	.	.	.	.	.
	2380.	C	I	.	WE .RL	.	.	.	.	.	.	.	.
	2400.	C	I	.	WE .RL	.	.	.	.	.	.	.	.
	2420.	C	.I	.	WE .R L	.	.	.	.	.	.	.	.
	2440.	C	.I	.	E .R L	.	.	.	.	.	.	.	.
3600.00	2460.	C	.I	.	E .R L	.	.	.	.	.	.	.	.
	2480.	C	.I	.	E .R L	.	.	.	.	.	.	.	.
	2500.	C	.I	.	E .R L	.	.	.	.	.	.	.	.
	2520.	C	.I	.	WE .R L	.	.	.	.	.	.	.	.
	2540.	C	.I	.	WE .R L	.	.	.	.	.	.	.	.
	2560.	C	.I	.	WE .R L	.	.	.	.	.	.	.	.
	2580.	C	.I	.	WE .R L	.	.	.	.	.	.	.	.
	2600.	C	.I	.	WE .R L	.	.	.	.	.	.	.	.
	2620.	C	.I	.	WE .R L	.	.	.	.	.	.	.	.
	2640.	C	.I	.	WE .R L	.	.	.	.	.	.	.	.
	2660.	C	.I	.	WE .R L	.	.	.	.	.	.	.	.
	2680.	C	.I	.	WE .R L	.	.	.	.	.	.	.	.
	2700.	C	. I	.	E .R L	.	.	.	.	.	.	.	.
	2720.	C	. I	.	E R L	.	.	.	.	.	.	.	.
	2740.	C	. I	.	E R L	.	.	.	.	.	.	.	.
	2760.	C	. I	.	E R L	.	.	.	.	.	.	.	.
3900.00	2780.	C	. I	.	WER L	.	.	.	.	.	.	.	.
	2800.	C	. I	.	WEMR L	.	.	.	.	.	.	.	.
	2820.	C	. I	.	WE.MRL	.	.	.	.	.	.	.	.
	2840.	C	. I	.	WE.MLR	.	.	.	.	.	.	.	.
	2860.	C	. I	.	WE.L R	.	.	.	.	.	.	.	.
4000.00	2880.	C	. I	.	WE.L R	.	.	.	.	.	.	.	.
	2900.	C	. I	.	WE.L R	.	.	.	.	.	.	.	.
	2920.	C	. I	.	WE.L R	.	.	.	.	.	.	.	.
	2940.	C	. I	.	WE.L R	.	.	.	.	.	.	.	.
	2960.	C	. I	.	E.L R	.	.	.	.	.	.	.	.
4100.00	2980.	C	. I	.	WEL R	.	.	.	.	.	.	.	.
	3000.	C	. I	.	W E M	.	.	.	.	.	.	.	L
	3020.	C	. I	.	W E M	.	.	.	.	.	.	.	L
	3040.	C	. I	.	W .E M	.	.	.	.	.	.	.	L
	3060.	C	. I	.	W .E M	.	.	.	.	.	.	.	L
4187.00	3080.	C	. I	.	W .E M	.	.	.	.	.	.	.	L
	3100.	C	. I	.	W .E M	.	.	.	.	.	.	.	L
	3120.	C	. I	.	W .E M	.	.	.	.	.	.	.	L
4253.00	3140.	C	. I	.	W . E M	.	.	.	.	.	.	.	L
	3160.	C	. I	.	W. E M	.	.	.	.	.	.	.	L
	3180.	C	. I	.	W. E M	.	.	.	.	.	.	.	L
	3200.	C	. I	.	W E M	.	.	.	.	.	.	.	L
	3220.	C	. I	.	W E M	.	.	.	.	.	.	.	L
	3240.	C	. I	.	.W E	.	.	.	.	.	.	.	L
	3260.	C	. I	.	. WE	.	.	.	.	.	.	.	L
4400.00	3280.	C	. I	.	. WEL	.	.	.	.	.	.	.	.
	3300.	C	. I	.	. WEL	.	.	.	.	.	.	.	.
	3320.	C	. I	.	. WEL	.	.	.	.	.	.	.	.
	3340.	C	. I	.	. WEL	.	.	.	.	.	.	.	.

```
         3360. C     .  I   .     . RE L   .     .     .     .     .     .     .
4500.00  3380. C     .  I   .     . RE L   .     .     .     .     .     .     .
         3400. C     .  I   .     . WE     .     .     .     .     .     .     L
         3420. C     .  I   .     . WE     .     .     .     .     .     .     L
         3440. C     .  I   .     . W E    .     .     .     .     .     .     L
4574.00  3460. C     .  I   .     . W E    .     .     .     .     .     .     L
         3480. C     .   I  .     . W E    .     .     .     .     .     .     L
         3500. C     .    I .     . W ME   .     .     .     .     .     .     L
         3520. C     .    I .     .  WME   .     .     .     .     .     .     L
4648.00  3540. C     .     I.     .  WME   .     .     .     .     .     .     L
         3560. C     .     I.     .  WME   .     .     .     .     .     .     L
         3580. C     .     I.     .   WE   .     .     .     .     .     .     L
         3600. C     .     I.     .   WME  .     .     .     .     .     .     L
         3620. C     .     I.     .   WME  .     .     .     .     .     .     L
         3640. C     .     I.     .    WE  .     .     .     .     .     .     L
         3660. C     .     I.     .    WE  .     .     .     .     .     .     L
4800.00  3680. C     .      I.    .    WE  .     .     .     .     .     .     L
         3700. C     .      I.    .    WE  .     .     .     .     .     .     L
         3720. C     .      I.    .     E  .     .     .     .     .     .     L
         3740. C     .      I.    .     E  .     .     .     .     .     .     L
         3760. C     .      I.    .     E  .     .     .     .     .     .     L
         3780. C     .      I.    .    EM  .     .     .     .     .     .     L
         3800. C     .      I.    .    EM  .     .     .     .     .     .     L
         3820. C     .      I.    .    EM  .     .     .     .     .     .     L
         3840. C     .      I.    .    EM  .     .     .     .     .     .     L
         3860. C     .       I    .    WEM .     .     .     .     .     .     L
5000.00  3880. C     .       I    .    WEM .     .     .     .     .     .     L
         3900. C     .       I    .    WEM .     .     .     .     .     .     L
         3920. C     .       I    .    WEM .     .     .     .     .     .     L
         3940. C     .       I    .    WEM .     .     .     .     .     .     L
         3960. C     .       I    .    WEM .     .     .     .     .     .     L
         3980. C     .       I    .    WEM .     .     .     .     .     .     L
         4000. C     .       I    .    WEM .     .     .     .     .     .     L
         4020. C     .       I    .    WEM .     .     .     .     .     .     L
         4040. C     .       .I   .    WE M.     .     .     .     .     .     L
         4060. C     .       .I   .    WE M.     .     .     .     .     .     L
         4080. C     .       .I   .    WE M.     .     .     .     .     .     L
         4100. C     .       .I   .    WE M.     .     .     .     .     .     L
         4120. C     .       .I   .     E M.     .     .     .     .     .     L
         4140. C     .       .I   .     E M.     .     .     .     .     .     L
         4160. C     .       .I   .     E M.     .     .     .     .     .     L
         4180. C     .       .I   .     E M.     .     .     .     .     .     L
5300.00  4200. C     .       .I   .     E M.     .     .     .     .     .     L
         4220. C     .       . I  .     WE M     .     .     .     .     .     L
         4240. C     .       . I  .     WE M     .     .     .     .     .     L
         4260. C     .       . I  .     WE M     .     .     .     .     .     L
         4280. C     .       . I  .     WE .M    .     .     .     .     .     L
5400.00  4300. C     .       . I  .     WE .M    .     .     .     .     .     L
         4320. C     .       . I  .     WE .M    .     .     .     .     .     L
         4340. C     .       . I  .     WE .M    .     .     .     .     .     L
         4360. C     .       . I  .     WE .M    .     .     .     .     .     L
         4380. C     .       . I  .     WE M     .     .     .     .     .     L
         4400. C     .       . I  .     WE M     .     .     .     .     .     L
         4420. C     .       .  I .     WE M     .     .     .     .     .     L
         4440. C     .       .  I .     WE M     .     .     .     .     .     L
         4460. C     .       .  I .      E M     .     .     .     .     .     L
         4480. C     .       .  I .      WE.     .     .     .     .     .     L
         4500. C     .       .  I .      WE.     .     .     .     .     .     L
         4520. C     .       .  I .      WE.     .     .     .     .     .     L
         4540. C     .       .  I .      WE.     .     .     .     .     .     L
```

	4560.	C	.	.	I	.	WE.	.	.	.	.	.	L
	4580.	C	.	.	I	.	WE.	.	.	.	.	.	L
5700.00	4600.	C	.	.	I	.	WE.	.	.	.	.	.	L
	4620.	C	.	.	I	.	WE.	.	.	.	.	.	L
	4640.	C	.	.	I	.	WE.	.	.	.	.	.	L
	4660.	C	.	.	I	.	WE.	.	.	.	.	.	L
	4680.	C	.	.	I	.	WEM	.	.	.	.	.	L
	4700.	C	.	.	I	.	WE	.	.	.	.	.	L
	4720.	C	.	.	I	.	WEM	.	.	.	.	.	L
	4740.	C	.	.	I	.	WEM	.	.	.	.	.	L
	4760.	C	.	.	I	.	WE M	.	.	.	.	.	L
	4780.	C	.	.	I	.	WE M	.	.	.	.	.	L
	4800.	C	.	.	I	.	WE M	.	.	.	.	.	L
	4820.	C	.	.	I	.	WE M	.	.	.	.	.	L
	4840.	C	.	.	I	.	WE M	.	.	.	.	.	L
	4860.	C	.	.	I	.	WE M	.	.	.	.	.	L
	4880.	C	.	.	I	.	WE M	.	.	.	.	.	L
6000.00	4900.	C	.	.	I	.	WE M	.	.	.	.	.	L
	4920.	C	.	.	I	.	E M	.	.	.	.	.	L
	4940.	C	.	.	I	.	WE M	.	.	.	.	.	L
	4960.	C	.	.	I	.	WE M	.	.	.	.	.	L
	4980.	C	.	.	I	.	WE M	.	.	.	.	.	L
	5000.	C	.	.	I	.	WE M	.	.	.	.	.	L
	5020.	C	.	.	I	.	WE M	.	.	.	.	.	L
	5040.	C	.	.	I	.	WE M	.	.	.	.	.	L
	5060.	C	.	.	I	.	WE M	.	.	.	.	.	L
	5080.	C	.	.	I	.	WE M	.	.	.	.	.	L
	5100.	C	.	.	I	.	WE M	.	.	.	.	.	L
6200.00	5120.	C	.	.	I	.	WE ML	.	.	.	.	.	R
	5140.	C	.	.	I	.	WE L	.	.	.	.	.	R
	5160.	C	.	.	I	.	.E L	.	.	.	.	.	R
	5180.	C	.	.	I	.	.E ML	.	.	.	.	.	R
	5200.	C	.	.	I	.	.WE ML	.	.	.	.	.	R
	5220.	C	.	.	I	.	.WE L	.	.	.	.	.	R
	5240.	C	.	.	I	.	.WE L	.	.	.	.	.	R
	5260.	C	.	.	I	.	.WE L	.	.	.	.	.	R
	5280.	C	.	.	I	.	.WE L	.	.	.	.	.	R
	5300.	C	.	.	I	.	.WE LM	.	.	.	.	.	R
	5320.	C	.	.	I	.	.WE LM	.	.	.	.	.	R
	5340.	C	.	.	I	.	.WE LM	.	.	.	.	.	R
	5360.	C	.	.	I	.	.WE L	.	.	.	.	.	R
	5380.	C	.	.	I	.	.WE LM	.	.	.	.	.	R
	5400.	C	.	.	I	.	. E LM	.	.	.	.	.	R
6500.00	5420.	C	.	.	I	.	. WE LM	.	.	.	.	.	R
	5440.	C	.	.	I	.	. WE L M	.	.	.	.	.	R
	5460.	C	.	.	I	.	. WE L M	.	.	.	.	.	R
	5480.	C	.	.	I	.	. WE L M	.	.	.	.	.	R
	5500.	C	.	.	I	.	. WE L M.	.	.	.	.	.	R
	5520.	C	.	.	I	.	. WE L M.	.	.	.	.	.	R
	5540.	C	.	.	I	.	. WE L M.	.	.	.	.	.	R
	5560.	C	.	.	I	.	. WE L M	.	.	.	.	.	R
	5580.	C	.	.	I	.	. WE L M	.	.	.	.	.	R
	5600.	C	.	.	I	.	. WE L .M	.	.	.	.	.	R
6700.00	5620.	C	.	.	I	.	. E L .M	.	.	.	.	.	R
	5640.	C	.	.	I	.	. WE L .M	.	.	.	.	.	R
	5660.	C	.	.	I	.	. WE L .M	.	.	.	.	.	R
	5680.	C	.	.	I	.	. WE L .M	.	.	.	.	.	R
	5700.	C	.	.	I	.	. WE L . M	.	.	.	.	.	R
	5720.	C	.	.	I	.	. WE L . M	.	.	.	.	.	R
	5740.	C	.	.	I	.	. WE L . M	.	.	.	.	.	R

```
         5760. C     .     .     I     . WE  L . M     .     .     .     .     R
         5780. C     .     .     I     . WE  L . M     .     .     .     .     R
         5800. C     .     .     I     . WE  L . M     .     .     .     .     R
         5820. C     .     .     I     . WE  L .  M    .     .     .     .     R
         5840. C     .     .     I     . WE  L .  M    .     .     .     .     R
         5860. C     .     .     I     . WE   L.  M    .     .     .     .     R
         5880. C     .     .    .I     .  WE  L.  M    .     .     .     .     R
         5900. C     .     .    .I     .  WE  L.  M    .     .     .     .     R
7000.00  5920. C     .     .    .I     .  WE  L.  M    .     .     .     .     R
         5940. C     .     .    .I     .  WE  L.  M    .     .     .     .     R
         5960. C     .     .    .I     .  WE  L.   M   .     .     .     .     R
         5980. C     .     .    .I     .  WE  L.   M   .     .     .     .     R
         6000. C     .     .    .I     .  WE  L.   M   .     .     .     .     R
         6020. C     .     .    .I     .  WE   L  M    .     .     .     .     R
         6040. C     .     .    .I     .  WE   L  M    .     .     .     .     R
         6060. C     .     .    . I    .  W E  L  M    .     .     .     .     R
         6080. C     .     .    . I    .  W E  L  M    .     .     .     .     R
         6100. C     .     .    . I    .   WE  L  M    .     .     .     .     R
         6120. C     .     .    . I    .   WE  L  M    .     .     .     .     R
         6140. C     .     .    . I    .   WE  L  M    .     .     .     .     R
         6160. C     .     .    . I    .   WE  L   M   .     .     .     .     R
         6180. C     .     .    . I    .   WE  L   M   .     .     .     .     R
         6200. C     .     .    . I    .   WE  .L  M   .     .     .     .     R
         6220. C     .     .    . I    .   WE  .L  M   .     .     .     .     R
         6240. C     .     .    .  I   .   WE  .L  M   .     .     .     .     R
         6260. C     .     .    .  I   .   W E .L  M   .     .     .     .     R
         6280. C     .     .    .  I   .   W E .L  M   .     .     .     .     R
         6300. C     .     .    .  I   .   W E .L  M   .     .     .     .     R
7400.00  6320. C     .     .    .  I   .    WE .L  M   .     .     .     .     R
         6340. C     .     .    .  I   .    WE .L  M   .     .     .     .     R
         6360. C     .     .    .  I   .    WE . L M   .     .     .     .     R
         6380. C     .     .    .  I   .    WE . L M   .     .     .     .     R
         6400. C     .     .    .  I   .    WE . L M   .     .     .     .     R
7500.00  6420. C     .     .    .   I  .     E . L M   .     .     .     .     R
         6440. C     .     .    .   I  .     WE .  M   .     .     .     .     L
         6460. C     .     .    .   I  .     WE .   M  .     .     .     .     L
7555.00  6480. C     .     .    .   I  .     WE .   M  .     .     .     .     L
         6500. C     .     .    .   I  .     WE .   M  .     .     .     .     L
         6520. C     .     .    .   I  .     WE .   M  .     .     .     .     L
         6540. C     .     .    .   I  .     WE .   M  .     .     .     .     L
         6560. C     .     .    .   I  .     WE .   M  .     .     .     .     L
         6580. C     .     .    .   I  .     WE .    M .     .     .     .     L
         6600. C     .     .    .   I  .     WE .    M .     .     .     .     L
         6620. C     .     .    .    I .     WE .    M .     .     .     .     L
         6640. C     .     .    .    I .     WE .    M .     .     .     .     L
         6660. C     .     .    .    I .     WE .    M .     .     .     .     L
         6680. C     .     .    .    I .     W E.    M .     .     .     .     L
         6700. C     .     .    .    I .     W E.    M .     .     .     .     L
         6720. C     .     .    .    I .     W E.     M .     .     .     .     L
         6740. C     .     .    .    I .     W E.     M .     .     .     .     L
         6760. C     .     .    .    I .      WE.     M .     .     .     .     L
         6780. C     .     .    .    I .      WE.     M .     .     .     .     L
         6800. C     .     .    .     I .     WE.     M .     .     .     .     L
         6820. C     .     .    .     I .     WE.     M .     .     .     .     L
         6840. C     .     .    .     I .     WE.     M .     .     .     .     L
         6860. C     .     .    .     I .     WE.      M.     .     .     .     L
         6880. C     .     .    .     I .     WE.      M.     .     .     .     L
         6900. C     .     .    .     I .     WE.      M.     .     .     .     L
         6920. C     .     .    .     I .     WE.      M.     .     .     .     L
         6940. C     .     .    .     I .     W E      M.     .     .     .     L
```

```
8000.00  6960.  C        .        .        .   I  .     W E     M .        .        .        .        L
         6980.  C        .        .        .    I .     W E      M.        .        .        .        L
         7000.  C        .        .        .     I .     WE      M.        .        .        .        L
         7020.  C        .        .        .      I.     WE       M        .        .        .        L
         7040.  C        .        .        .      I.     WE       M        .        .        .        L
8100.00  7060.  C        .        .        .       I     WE       RL       .        .        .        .
         7080.  C        .        .        .      .I      WE      .L        .        .        .        .
         7100.  C        .        .        .       . I     .WE     .L        .        .        .        .
         7120.  C        .        .        .       .  I    . WE    .L        .        .        .        .
         7140.  C        .        .        .        .   I  .  WE   .L        .        .        .        .
         7160.  C        .        .        .        .    I .   WE  .L        .        .        .        .
         7180.  C        .        .        .        .      I.   WE  .LR       .        .        .        .
         7200.  C        .        .        .        .       I    WE . L       .        .        .        .
         7220.  C        .        .        .        .       . I   WE . L       .        .        .        .
         7240.  C        .        .        .        .       .  I   WE. L       .        .        .        .
8300.00  7260.  .        .        .        .        .       .   I   WE L       .        .        .        .
```

THIS RUN EXECUTED 07AUG95 18:29:01

****
HEC-2 WATER SURFACE PROFILES

Version 4.6.2; May 1991
****

NOTE- ASTERISK (*) AT LEFT OF CROSS-SECTION NUMBER INDICATES MESSAGE IN SUMMARY OF ERRORS LIST

ALL FLOWS OBTAINED FROM

SUMMARY PRINTOUT

	SECNO	XLCH	CWSEL	ELMIN	DEPTH	Q	VCH	AREA	TOPWID	DIFWSX	K*XNCH	EG	10*KS
	1150.000	.00	1385.01	1378.80	6.21	7071.00	4.42	1598.01	447.93	.00	35.00	1385.32	19.99
	1200.000	50.00	1385.10	1379.26	5.84	7071.00	4.64	1525.01	451.39	.09	35.00	1385.43	23.61
	1300.000	100.00	1385.31	1380.16	5.15	7071.00	5.24	1349.98	415.41	.21	35.00	1385.73	31.66
	1500.000	200.00	1385.90	1380.51	5.39	7071.00	6.37	1110.34	322.23	.59	35.00	1386.53	43.39
	1800.000	300.00	1387.38	1381.03	6.34	7071.00	7.03	1006.18	338.05	1.47	35.00	1388.14	64.30
	2100.000	300.00	1389.02	1381.55	7.47	7071.00	5.63	1256.14	355.87	1.64	35.00	1389.51	32.88
	2400.000	300.00	1389.96	1382.07	7.89	7071.00	5.04	1402.76	368.22	.94	35.00	1390.35	23.82
	2700.000	300.00	1390.64	1382.59	8.05	7071.00	4.67	1514.76	363.16	.68	35.00	1390.98	18.10
	2900.000	200.00	1391.02	1382.93	8.09	6874.00	4.21	1631.26	369.20	.38	35.00	1391.30	13.66
	3000.000	100.00	1391.16	1383.11	8.05	6874.00	4.23	1625.16	370.13	.14	35.00	1391.44	13.88
	3300.000	300.00	1391.59	1383.62	7.97	6874.00	4.50	1528.50	364.82	.43	35.00	1391.90	16.70
	3600.000	305.00	1392.10	1384.15	7.95	6874.00	4.71	1459.85	350.13	.51	35.00	1392.45	18.44
	3900.000	320.00	1392.72	1384.71	8.01	6874.00	4.89	1406.63	353.94	.61	35.00	1393.09	21.16
	4000.000	102.00	1392.94	1384.89	8.05	6874.00	4.85	1416.28	358.67	.22	35.00	1393.30	21.05
	4100.000	100.00	1393.12	1385.06	8.06	6874.00	5.22	1315.84	328.58	.18	35.00	1393.55	23.95
*	4187.000	87.00	1392.76	1385.22	7.54	6043.00	10.53	573.73	76.00	-.36	35.00	1394.49	52.92
	4253.000	66.00	1392.75	1385.42	7.33	6043.00	10.85	556.76	76.00	-.02	25.00	1394.57	29.64

	SECNO	XLCH	CWSEL	ELMIN	DEPTH	Q	VCH	AREA	TOPWID	DIFWSX	K*XNCH	EG	10*KS
*	4400.000	147.00	1394.98	1385.86	9.12	6043.00	4.52	1336.34	428.96	2.24	24.99	1395.30	12.80
*	4500.000	100.00	1395.07	1386.17	8.90	6043.00	4.55	1328.69	238.12	.08	25.00	1395.39	6.00
*	4574.000	74.00	1394.68	1386.40	8.28	3340.00	7.91	422.48	51.00	-.39	35.00	1395.65	30.10
	4648.000	74.00	1395.28	1387.69	7.59	3340.00	8.63	387.13	51.00	.60	35.00	1396.44	39.01
*	4800.000	152.00	1396.51	1388.11	8.40	3227.00	4.57	706.31	132.62	1.23	35.00	1396.84	12.73
	5000.000	202.00	1396.76	1388.66	8.10	3227.00	4.57	705.57	125.41	.25	35.00	1397.09	11.97
	5300.000	306.00	1397.13	1389.50	7.63	3227.00	5.03	641.98	120.54	.37	35.00	1397.52	15.65
	5400.000	102.00	1397.27	1389.77	7.50	3227.00	5.35	603.38	117.24	.14	35.00	1397.71	18.22
	5700.000	306.00	1397.84	1390.61	7.23	3227.00	5.59	576.86	118.17	.57	35.00	1398.33	21.37
	6000.000	307.00	1398.50	1391.44	7.06	3227.00	5.69	567.10	117.26	.66	35.00	1399.01	22.66
	6200.000	203.00	1399.01	1391.99	7.02	2794.00	5.10	547.93	106.15	.50	35.00	1399.41	16.52
	6500.000	306.00	1399.61	1392.83	6.79	2794.00	5.27	529.89	137.82	.61	35.00	1400.05	26.03
	6700.000	202.00	1400.05	1393.38	6.67	2794.00	5.47	511.16	103.34	.44	35.00	1400.52	20.09
	7000.000	304.00	1400.67	1394.21	6.46	2794.00	5.70	490.05	101.69	.62	35.00	1401.18	22.62
	7400.000	404.00	1401.58	1395.30	6.28	2794.00	6.63	421.40	80.13	.91	35.00	1402.27	29.35
	7500.000	100.00	1402.08	1395.57	6.51	2794.00	5.28	529.44	99.55	.50	35.00	1402.51	17.47
*	7555.000	55.00	1402.11	1395.72	6.39	1883.00	6.14	306.90	48.00	.03	35.00	1402.70	24.11
	8000.000	484.00	1402.92	1397.03	5.89	1883.00	6.67	282.50	48.00	.80	35.00	1403.61	31.08
	8100.000	100.00	1403.43	1398.82	4.61	1883.00	5.96	315.84	86.91	.51	35.00	1403.98	35.91
*	8300.000	200.00	1408.51	1406.04	2.47	1883.00	5.85	321.72	313.42	5.08	35.00	1409.04	183.80

SUMMARY OF ERRORS AND SPECIAL NOTES

```
WARNING SECNO=   4187.000  PROFILE=  1  CONVEYANCE CHANGE OUTSIDE ACCEPTABLE RANGE

WARNING SECNO=   4400.000  PROFILE=  1  CONVEYANCE CHANGE OUTSIDE ACCEPTABLE RANGE

WARNING SECNO=   4500.000  PROFILE=  1  CONVEYANCE CHANGE OUTSIDE ACCEPTABLE RANGE

WARNING SECNO=   4574.000  PROFILE=  1  CONVEYANCE CHANGE OUTSIDE ACCEPTABLE RANGE

WARNING SECNO=   4800.000  PROFILE=  1  CONVEYANCE CHANGE OUTSIDE ACCEPTABLE RANGE

WARNING SECNO=   7555.000  PROFILE=  1  CONVEYANCE CHANGE OUTSIDE ACCEPTABLE RANGE

CAUTION SECNO=   8300.000  PROFILE=  1  CRITICAL DEPTH ASSUMED
CAUTION SECNO=   8300.000  PROFILE=  1  PROBABLE MINIMUM SPECIFIC ENERGY
CAUTION SECNO=   8300.000  PROFILE=  1  20 TRIALS ATTEMPTED TO BALANCE WSEL
```

Appendix J

HEC-2 Computer Model (100-Year), Sweetwater Channel

```
*******************************************
*  HEC-2 WATER SURFACE PROFILES           *
*                                         *
*  Version   4.6.2;  May 1991             *
*                                         *
*  RUN DATE    07AUG95    TIME   18:14:00 *
*******************************************
```

```
*************************************
*  U.S. ARMY CORPS OF ENGINEERS     *
*  HYDROLOGIC ENGINEERING CENTER    *
*  609 SECOND STREET, SUITE D       *
*  DAVIS, CALIFORNIA 95616-4687     *
*         (916) 756-1104            *
*************************************
```

```
X     X  XXXXXXX   XXXXX            XXXXX
X     X  X        X     X          X     X
X     X  X        X                      X
XXXXXXX  XXXX     X        XXXXX    XXXXX
X     X  X        X                X
X     X  X        X     X          X
X     X  XXXXXXX   XXXXX           XXXXXXX
```

THIS RUN EXECUTED 07AUG95 18:14:00

```
************************************
 HEC-2 WATER SURFACE PROFILES

 Version   4.6.2;  May 1991
************************************


T1      IBW IMPROVED CHANNEL AND SWEETWATER AV CHANNEL, FILE: SWTHEC2.DAT
T2      INDIAN BEND WASH, 40TH STREET TO UPSTREAM END OF 36TH STR BOX CULVERT
T3      AND BRANCH TO SWEETWATER AVENUE CHANNEL, UPSTREAM END OF 36TH ST
T4      BOX CULVERT TO UPSTREAM END OF SWEETWATER BOX CULVERT
T5      ALL FLOWS OBTAINED FROM MICHAEL BAKER, JR., INC., "FINAL HYDROLOGY
T6      REPORT:  SQUAW PEAK HIGHWAY", NOVEMBER 1988.
T7      NEW BOX CULVERT AT 36TH STREET
T8      CULVERTS MODELLED WITH SPECIAL CULVERT ROUTINE
T5      HEC-2 DATA DEVELOPED BY BRW, INC., MARCH 1995
T6      X-SECTIONS TAKEN LOOKING UPSTREAM
T7      SECTION NUMBERS: MATCH PLN STA'S IBW APPRO R/W CL & SWTWTR CST CL
T8      GR STATION 250 IS LOCATED ON R/W CL OF NEW INDIAN BEND CHANNEL
T9      ROADWAY OVERFLOW AT 36TH STREET, NO ROADWAY OVERFLOW AT SWEETWATER AV

J1  ICHECK    INQ      NINV     IDIR     STRT     METRIC   HVINS    Q        WSEL     FQ

      0        2                         .002                       7071

J2  NPROF     IPLOT    PRFVS    XSECV    XSECH    FN       ALLDC    IBW      CHNIM    ITRACE

     1        0                                                     -6


J3  VARIABLE CODES FOR SUMMARY PRINTOUT

    38       39        1       42        8       43       26       25        4       51
    17        3        5

NC   0.040    0.040    0.035      .1       .3
        BEGIN INDIAN BEND WASH IMPROVED CHANNEL, SECTION NUMBERS
         MATCH APPROXIMATE R/W STATIONS OF INDIAN BEND WASH
        UPSTREAM OF 40TH STREET
        A LOW FLOW FJORD
X1    1150       11     0.00   500.00     0.00     0.00     0.00
CI     239  1379.87     .035        4        4       40
GR  1388.9     0.00  1387.28    30.28  1383.74    64.30  1380.54   198.27  1380.28   235.61
GR  1378.8   250.00  1380.70   266.57  1379.98   313.40  1381.40   410.96  1382.90   474.57
GR  1384.3   500.00

X1    1200       13     0.00   500.00    50.00    50.00    50.00
CI     210  1379.97     .035        4        4       40
GR  1389.0     0.00  1388.71    17.06  1385.30    46.34  1383.79    64.05  1381.89   134.61
GR  1380.7   192.81  1380.60   221.59  1379.26   231.20  1380.78   260.74  1380.37   305.45
GR  1381.5   364.30  1382.00   409.42  1384.22   500.00
```

X1	1300	16	0.00	500.00	100.00	100.00	100.00			
CI	169.5	1380.16	.035	4	4	40				
GR	1388.7	0.00	1388.56	21.22	1385.39	43.01	1384.07	64.93	1382.49	131.37
GR	1381.8	161.26	1380.34	189.66	1381.14	233.08	1381.20	276.80	1380.44	346.83
GR	1381.8	362.71	1383.07	393.26	1384.74	450.54	1385.55	463.50	1388.45	479.32
GR	1387.8	500.00								
X1	1500	17	0.00	500.00	200.00	200.00	200.00			
CI	134	1380.51	.035	4	4	40				
CI	204	1382.21	.035	8	8	200				
GR	1389.4	0.00	1389.54	29.04	1387.56	51.99	1384.39	114.78	1383.25	123.75
GR	1384.4	140.55	1382.90	153.68	1382.72	180.31	1383.90	250.00	1382.32	287.60
GR	1383.6	325.00	1382.01	354.74	1383.85	377.58	1386.16	399.11	1387.72	450.44
GR	1389.4	476.88	1389.19	500.00						
X1	1800	13	0.00	500.00	300.00	300.00	300.00			
CI	130.5	1381.03	.035	4	4	40				
CI	200.5	1383.49	.035	8	8	150				
GR	1390.8	0.00	1389.33	37.50	1387.39	78.29	1386.53	122.27	1385.68	133.45
GR	1386.0	240.87	1385.45	259.73	1385.91	295.00	1386.00	346.61	1387.38	417.36
GR	1389.6	457.27	1389.16	487.47	1389.59	500.00				
X1	2100	13	0.00	500.00	300.00	300.00	300.00			
CI	127.5	1381.55	.035	4	4	40				
CI	197.5	1384.55	.035	8	8	150				
GR	1391.9	0.00	1392.22	33.31	1389.34	61.11	1388.14	95.98	1387.45	136.21
GR	1386.9	200.65	1386.26	219.39	1386.47	263.88	1387.06	283.90	1387.07	361.69
GR	1388.7	421.69	1391.48	462.05	1391.48	500.00				
X1	2400	13	0.00	500.00	300.00	300.00	300.00			
CI	124.5	1382.07	.035	4	4	40				
CI	194.5	1385.07	.035	8	8	150				
GR	1392.5	0.00	1391.60	48.11	1390.32	57.38	1388.52	106.73	1387.89	147.06
GR	1387.2	163.20	1387.13	251.66	1387.46	273.29	1387.42	327.06	1388.41	390.75
GR	1390.2	442.38	1391.14	451.42	1392.00	500.00				
X1	2700	14	0.00	500.00	300.00	300.00	300.00			
CI	125.5	1382.59	.035	4	4	40				
CI	195.5	1385.09	.035	8	8	150				
GR	1393.3	0.00	1392.31	41.28	1393.41	48.93	1390.96	64.67	1387.97	90.91
GR	1387.6	137.24	1387.77	158.06	1387.24	167.88	1387.58	226.01	1386.87	263.44
GR	1388.3	351.95	1391.03	443.66	1392.94	456.01	1392.69	500.00		
QT	1	6874								
X1	2900	15	0.00	500.00	200.00	200.00	200.00			
CI	127	1382.93	.035	4	4	40				
CI	197	1385.93	.035	8	8	150				
GR	1393.6	0.00	1393.44	24.83	1393.03	41.09	1393.81	51.56	1389.63	76.85
GR	1387.8	110.32	1387.67	149.23	1387.30	204.02	1386.89	268.85	1387.61	279.75
GR	1387.2	311.08	1387.87	386.90	1389.81	430.22	1392.89	448.97	1393.34	500.00

```
X1     3000       18     0.00    500.00    100.00    100.00    100.00
CI      128  1383.11     .035         4         4        40
CI      198  1386.11     .035         8         8       150
GR   1393.5     0.00  1393.59     47.42   1393.87     52.85   1389.74     74.43   1388.38     88.37
GR   1387.9   119.05  1388.31    134.21   1387.74    145.26   1387.16    193.37   1387.85    233.82
GR   1387.1   266.60  1387.90    279.40   1387.08    308.55   1387.88    339.46   1388.50    410.10
GR   1389.4   426.48  1393.92    453.85   1394.13    500.00

X1     3300       15     0.00    500.00    300.00    300.00    300.00
CI      131  1383.62     .035         4         4        40
CI      201  1386.62     .035         8         8       150
GR   1394.3     0.00  1394.19     54.63   1389.81     80.94   1388.25    119.99   1389.10    148.04
GR   1387.9   165.61  1388.70    233.51   1388.27    266.45   1388.79    336.79   1388.92    398.68
GR   1389.4   419.07  1392.69    443.26   1394.19    468.19   1395.09    475.43   1394.93    500.00

X1     3600       16     0.00    500.00    304.00    298.00    300.00
CI     131.5  1384.15  305.035         4         4        40
CI     201.5  1387.15  305.035         8         8       150
GR   1395.2     0.00  1394.86     39.69   1396.52     52.97   1394.64     60.22   1389.44     99.64
GR   1388.8   129.18  1388.47    154.61   1389.10    175.87   1389.35    191.23   1388.98    226.06
GR   1389.2   326.70  1390.14    403.46   1391.76    426.42   1394.67    453.01   1395.40    476.10
GR   1394.2   500.00

X1     3900       13     0.00    500.00    307.00    295.00    300.00
CI     204.5  1384.71  320.035         4         4        47
CI     282.0  1387.71  320.035         8         8        94
GR   1395.6     0.00  1395.62     47.01   1390.98     97.12   1390.53    147.91   1390.12    205.14
GR   1389.3   216.85  1390.19    250.00   1389.79    278.01   1390.37    365.14   1390.05    387.47
GR   1390.7   413.68  1394.87    452.16   1394.01    500.00

X1     4000       14     0.00    500.00     98.00    102.00    100.00
CI     232.5  1384.89  102.035         4         4        60
CI     310.0  1387.89  102.035         8         8        80
GR   1394.2     0.00  1394.23     19.66   1395.97     48.98   1392.65     69.77   1391.50    106.89
GR   1390.7   208.15  1389.26    237.51   1389.94    250.00   1389.97    277.29   1389.99    366.90
GR   1390.4   403.34  1395.12    446.66   1395.91    482.97   1395.80    500.00

X1     4100       13     0.00    500.00    102.00     98.00    100.00
CI     247.5  1385.06  100.035         4         4        72
CI     321.0  1388.06  100.035         8         8        62
GR   1394.4     0.00  1393.97     61.53   1392.03    147.70   1391.73    204.70   1389.75    218.94
GR   1389.5   250.42  1389.66    282.76   1391.58    298.16   1390.84    377.05   1391.35    412.94
GR   1395.3   446.04  1395.29    489.25   1395.63    500.00

NC                                  0.3       0.5
QT       1     6043
         DOWNSTREAM FACE OF 36TH STREET CULVERT
         6-12'x8' CONCRETE BOX CULVERT
```

```
        ROADWAY OVERFLOW OCCURS DURING THE 100-YEAR EVENT
X1    4187       11     0.00   500.00    88.00    85.00    87.00
CI     250  1385.22   87.035        4        4       76
CI     250  1388.22   87.035        8        8      .01
X3      10                      212              288
GR  1394.8     0.00  1394.48    24.39  1394.90    39.77  1393.64    71.15  1393.02   131.00
GR  1393.1   194.96  1391.94   303.77  1391.52   406.49  1392.32   423.48  1395.89   453.55
GR  1395.6   500.00

SC   6.013       .3     2.63      0.0      8.0     12.0       66     11.4  1385.44  1385.22
        UPSTREAM FACE OF 36TH STREET CULVERT
        6-12'x8' CONCRETE BOX CULVERT
        ROADWAY OVERFLOW OCCURS DURING THE 100-YEAR EVENT
X1    4253       11     0.00   500.00    68.00    64.00    66.00
CI     250  1385.42   66.025        4        4       76
X2                        2  1393.44  1394.00
X3      10                      212              288
BT     -10      -20     1395              -10     1394                50  1393.50
BT              110  1393.74              175  1394.40               250  1394.81
BT              325  1394.50              462  1393.50               487  1393.39
BT              527  1395.00
GR  1395.1     0.00  1394.55    25.33  1394.97    53.84  1393.88    73.60  1393.07   202.08
GR  1393.1   266.10  1392.25   322.38  1392.24   377.08  1392.92   431.38  1395.86   454.04
GR  1396.4   500.00

NC    .025     .025     .025
X1    4400       14     0.00   500.00   145.00   150.00   147.00
CI     250  1385.86  147.025        4        4       58
CI     216  1385.86  147.025        4        4       44
GR  1395.8     0.00  1396.45    29.71  1396.13    55.01  1394.43    77.42  1393.99   176.01
GR  1393.9   205.43  1392.31   234.08  1392.42   274.66  1394.01   297.39  1394.15   381.31
GR  1393.8   410.82  1394.16   465.61  1394.45   494.03  1395.08   500.00

NC                                 .1       .3
        INDIAN BEND WASH CHANNEL, CONFLUENCE WITH SWTWTR CHANNEL
X1    4500       15     0.00   500.00    97.00   103.00   100.00
CI     250  1386.17  100.025        4        4       50
CI     194  1386.17  100.025        4        4       62
GR  1396.2     0.00  1396.94    23.65  1396.69    50.86  1395.38    68.65  1394.80    87.61
GR  1394.5   167.75  1394.21   199.93  1392.31   228.09  1392.39   274.84  1395.55   299.35
GR  1396.4   336.08  1395.62   352.21  1395.45   397.67  1395.59   481.58  1394.78   500.00

QT       1     3085
        BEGIN SWTWTR CHANNEL, SECTION NUMBERS MATCH CST CL SWTWTR CHANNEL
        SWTWTR CHANNEL, CONFLUENCE WITH INDIAN BEND WASH
X1    3200        4     0.00      98.0    97.00   117.00   110.00
CI      49   1386.1  110.035         3        4      .01
GR  1396.1     0.00   1386.1    30.00  1386.10    68.00  1396.10    98.00
```

```
NC                                      .3        .5
        DOWNSTREAM FACE OF 1ST CULVERT ACROSS SWEETWATER AVENUE
        3-12'x8' CONCRETE BOX CULVERT
X1    3095        4        0      38.2      105       105       105
X3      10                          0                38.2
GR  1396.2        0   1386.2       0.1   1386.2      38.1    1396.2      38.2

SC   3.013       .3     2.63       400      8.0      12.0       266      11.4   1386.58   1386.21
NC                                      .1        .3
        UPSTREAM FACE OF 1ST CULVERT ACROSS SWEETWATER AVENUE
        3-12'x8' CONCRETE BOX CULVERT
X1    2829        4     0.00      38.2   266.00    266.00    266.00
X2                            2   1394.58   1400.0
X3      10                          0                38.2
GR  1396.6      0.0   1386.6       0.1   1386.6      38.1    1396.6      38.2

X1    2500        4        0        92      389       389       389
GR  1397.0        0   1387.0      30.0   1387.0      62.0    1397.0      92.0

        DOWNSTREAM FACE OF 2ND CULVERT ACROSS SWEETWATER AVENUE
        3-12'x8' CONCRETE BOX CULVERT
X1    2229        4                  32.2      429       429       429
X3      10                          0                32.2
GR  1397.4        0   1387.4       0.1   1387.4      32.1    1397.4      32.2

SC   3.013       .2     2.63       400      8.0      12.0       472      11.4   1388.12   1387.40
NC                                      .3        .5
        UPSTREAM FACE OF 2ND CULVERT ACROSS SWEETWATER AVENUE
        3-12'x8' CONCRETE BOX CULVERT
X1    1758        4     0.00      32.2   472.00    472.00    472.00
X2                            2   1396.05   1401.5
X3      10                          0                32.2
GR  1398.1      0.0   1388.1       0.1   1388.1      32.1    1398.1      32.2

        1ST SECTION UPSTREAM OF 2ND CULVERT ACROSS SWEETWATER AVENUE
        DOWNSTREAM END OF LINEAR DETENTION CHANNEL
X1    2163        4     0.00     121.0      66        66        66
GR  1398.2        0   1388.2       30.   1388.2       81.    1398.2      121.
```

```
   SECNO     DEPTH     CWSEL     CRIWS     WSELK     EG        HV        HL        OLOSS     L-BANK ELEV
   Q         QLOB      QCH       QROB      ALOB      ACH       AROB      VOL       TWA       R-BANK ELEV
   TIME      VLOB      VCH       VROB      XNL       XNCH      XNR       WTN       ELMIN     SSTA
   SLOPE     XLOBL     XLCH      XLOBR     ITRIAL    IDC       ICONT     CORAR     TOPWID    ENDST


*PROF 1

CCHV=     .100 CEHV=     .300
*SECNO 1150.000
CHIMP CLSTA=     239.00 CELCH=    1379.87 BW=      40.00 STCHL=        .00 STCHR=     500.00
EXCAVATION DATA
AEX=       9.2SQ-FT     VEXR=        .0K*CU-YD     VEXT=        .0K*CU-YD

2096 WSEL NOT GIVEN, AVG OF MAX, MIN USED
3280 CROSS SECTION   1150.00 EXTENDED       .71 FEET

        BEGIN INDIAN BEND WASH IMPROVED CHANNEL, SECTION NUMBERS
         MATCH APPROXIMATE R/W STATIONS OF INDIAN BEND WASH
        UPSTREAM OF 40TH STREET
        A LOW FLOW FJORD
  1150.000      6.21   1385.01       .00       .00   1385.32       .30       .00       .00   1388.90
    7071.0        .0    7071.0        .0        .0    1598.0        .0        .0        .0   1384.30
       .00       .00      4.42       .00      .000      .035      .000      .000   1378.80     52.07
   .001999        0.        0.        0.         0         0         6       .00    447.93    500.00


*SECNO 1200.000
CHIMP CLSTA=     210.00 CELCH=    1379.97 BW=      40.00 STCHL=        .00 STCHR=     500.00
EXCAVATION DATA
AEX=      24.5SQ-FT     VEXR=        .0K*CU-YD     VEXT=        .0K*CU-YD

3280 CROSS SECTION   1200.00 EXTENDED       .89 FEET

  1200.000      5.84   1385.10       .00       .00   1385.43       .33       .11       .01   1389.00
    7071.0        .0    7071.0        .0        .0    1525.0        .0       1.8        .5   1384.22
       .00       .00      4.64       .00      .000      .035      .000      .000   1379.26     48.61
   .002361       50.       50.       50.         1         0         0       .00    451.39    500.00


*SECNO 1300.000
CHIMP CLSTA=     169.50 CELCH=    1380.16 BW=      40.00 STCHL=        .00 STCHR=     500.00
EXCAVATION DATA
AEX=      54.8SQ-FT     VEXR=        .1K*CU-YD     VEXT=        .2K*CU-YD

  1300.000      5.15   1385.31       .00       .00   1385.73       .43       .27       .03   1388.70
    7071.0        .0    7071.0        .0        .0    1350.0        .0       5.1       1.5   1387.80
       .01       .00      5.24       .00      .000      .035      .000      .000   1380.16     44.29
   .003166      100.      100.      100.         1         0         0       .00    415.41    459.71
```

SECNO	DEPTH	CWSEL	CRIWS	WSELK	EG	HV	HL	OLOSS	L-BANK ELEV
Q	QLOB	QCH	QROB	ALOB	ACH	AROB	VOL	TWA	R-BANK ELEV
TIME	VLOB	VCH	VROB	XNL	XNCH	XNR	WTN	ELMIN	SSTA
SLOPE	XLOBL	XLCH	XLOBR	ITRIAL	IDC	ICONT	CORAR	TOPWID	ENDST

*SECNO 1500.000
CHIMP CLSTA= 134.00 CELCH= 1380.51 BW= 40.00 STCHL= .00 STCHR= 500.00
CHIMP CLSTA= 204.00 CELCH= 1382.21 BW= 200.00 STCHL= .00 STCHR= 500.00
EXCAVATION DATA
AEX= 351.6SQ-FT VEXR= 1.5K*CU-YD VEXT= 1.7K*CU-YD

1500.000	5.39	1385.90	.00	.00	1386.53	.63	.74	.06	1389.40
7071.0	.0	7071.0	.0	.0	1110.3	.0	10.7	3.2	1389.19
.02	.00	6.37	.00	.000	.035	.000	.000	1380.51	74.47
.004339	200.	200.	200.	2	0	0	.00	322.23	396.70

*SECNO 1800.000
CHIMP CLSTA= 130.50 CELCH= 1381.03 BW= 40.00 STCHL= .00 STCHR= 500.00
CHIMP CLSTA= 200.50 CELCH= 1383.49 BW= 150.00 STCHL= .00 STCHR= 500.00
EXCAVATION DATA
AEX= 596.2SQ-FT VEXR= 5.3K*CU-YD VEXT= 6.9K*CU-YD

1800.000	6.34	1387.38	.00	.00	1388.14	.77	1.57	.04	1390.80
7071.0	.0	7071.0	.0	.0	1006.2	.0	18.0	5.5	1389.59
.03	.00	7.03	.00	.000	.035	.000	.000	1381.03	79.06
.006430	300.	300.	300.	3	0	0	.00	338.05	417.10

*SECNO 2100.000
CHIMP CLSTA= 127.50 CELCH= 1381.55 BW= 40.00 STCHL= .00 STCHR= 500.00
CHIMP CLSTA= 197.50 CELCH= 1384.55 BW= 150.00 STCHL= .00 STCHR= 500.00
EXCAVATION DATA
AEX= 647.3SQ-FT VEXR= 6.9K*CU-YD VEXT= 13.9K*CU-YD

2100.000	7.47	1389.02	.00	.00	1389.51	.49	1.34	.03	1391.90
7071.0	.0	7071.0	.0	.0	1256.1	.0	25.8	7.9	1391.48
.04	.00	5.63	.00	.000	.035	.000	.000	1381.55	70.45
.003288	300.	300.	300.	2	0	0	.00	355.87	426.32

*SECNO 2400.000
CHIMP CLSTA= 124.50 CELCH= 1382.07 BW= 40.00 STCHL= .00 STCHR= 500.00
CHIMP CLSTA= 194.50 CELCH= 1385.07 BW= 150.00 STCHL= .00 STCHR= 500.00
EXCAVATION DATA
AEX= 659.2SQ-FT VEXR= 7.3K*CU-YD VEXT= 21.1K*CU-YD

2400.000	7.89	1389.96	.00	.00	1390.35	.39	.83	.01	1392.50
7071.0	.0	7071.0	.0	.0	1402.8	.0	35.0	10.4	1392.00
.06	.00	5.04	.00	.000	.035	.000	.000	1382.07	67.24
.002382	300.	300.	300.	3	0	0	.00	368.22	435.46

SECNO	DEPTH	CWSEL	CRIWS	WSELK	EG	HV	HL	OLOSS	L-BANK ELEV
Q	QLOB	QCH	QROB	ALOB	ACH	AROB	VOL	TWA	R-BANK ELEV
TIME	VLOB	VCH	VROB	XNL	XNCH	XNR	WTN	ELMIN	SSTA
SLOPE	XLOBL	XLCH	XLOBR	ITRIAL	IDC	ICONT	CORAR	TOPWID	ENDST

*SECNO 2700.000
CHIMP CLSTA= 125.50 CELCH= 1382.59 BW= 40.00 STCHL= .00 STCHR= 500.00
CHIMP CLSTA= 195.50 CELCH= 1385.09 BW= 150.00 STCHL= .00 STCHR= 500.00
EXCAVATION DATA
AEX= 580.2SQ-FT VEXR= 6.9K*CU-YD VEXT= 28.0K*CU-YD

2700.000	8.05	1390.64	.00	.00	1390.98	.34	.62	.01	1393.30
7071.0	.0	7071.0	.0	.0	1514.8	.0	45.0	12.9	1392.69
.08	.00	4.67	.00	.000	.035	.000	.000	1382.59	67.46
.001810	300.	300.	300.	2	0	0	.00	363.16	430.62

*SECNO 2900.000
CHIMP CLSTA= 127.00 CELCH= 1382.93 BW= 40.00 STCHL= .00 STCHR= 500.00
CHIMP CLSTA= 197.00 CELCH= 1385.93 BW= 150.00 STCHL= .00 STCHR= 500.00
EXCAVATION DATA
AEX= 453.3SQ-FT VEXR= 3.8K*CU-YD VEXT= 31.8K*CU-YD

2900.000	8.09	1391.02	.00	.00	1391.30	.28	.31	.01	1393.60
6874.0	.0	6874.0	.0	.0	1631.3	.0	52.2	14.6	1393.34
.09	.00	4.21	.00	.000	.035	.000	.000	1382.93	68.41
.001366	200.	200.	200.	2	0	0	.00	369.20	437.61

*SECNO 3000.000
CHIMP CLSTA= 128.00 CELCH= 1383.11 BW= 40.00 STCHL= .00 STCHR= 500.00
CHIMP CLSTA= 198.00 CELCH= 1386.11 BW= 150.00 STCHL= .00 STCHR= 500.00
EXCAVATION DATA
AEX= 446.9SQ-FT VEXR= 1.7K*CU-YD VEXT= 33.5K*CU-YD

3000.000	8.05	1391.16	.00	.00	1391.44	.28	.14	.00	1393.50
6874.0	.0	6874.0	.0	.0	1625.2	.0	56.0	15.4	1394.13
.10	.00	4.23	.00	.000	.035	.000	.000	1383.11	67.01
.001388	100.	100.	100.	2	0	0	.00	370.13	437.14

*SECNO 3300.000
CHIMP CLSTA= 131.00 CELCH= 1383.62 BW= 40.00 STCHL= .00 STCHR= 500.00
CHIMP CLSTA= 201.00 CELCH= 1386.62 BW= 150.00 STCHL= .00 STCHR= 500.00
EXCAVATION DATA
AEX= 508.4SQ-FT VEXR= 5.3K*CU-YD VEXT= 38.8K*CU-YD

3300.000	7.97	1391.59	.00	.00	1391.90	.31	.46	.01	1394.30
6874.0	.0	6874.0	.0	.0	1528.5	.0	66.8	17.9	1394.93
.12	.00	4.50	.00	.000	.035	.000	.000	1383.62	70.29
.001670	300.	300.	300.	1	0	0	.00	364.82	435.12

SECNO	DEPTH	CWSEL	CRIWS	WSELK	EG	HV	HL	OLOSS	L-BANK ELEV
Q	QLOB	QCH	QROB	ALOB	ACH	AROB	VOL	TWA	R-BANK ELEV
TIME	VLOB	VCH	VROB	XNL	XNCH	XNR	WTN	ELMIN	SSTA
SLOPE	XLOBL	XLCH	XLOBR	ITRIAL	IDC	ICONT	CORAR	TOPWID	ENDST

```
*SECNO 3600.000
CHIMP CLSTA=     131.50 CELCH=    1384.15 BW=      40.00 STCHL=        .00 STCHR=     500.00
CHIMP CLSTA=     201.50 CELCH=    1387.15 BW=     150.00 STCHL=        .00 STCHR=     500.00
EXCAVATION DATA
AEX=     522.2SQ-FT     VEXR=      5.8K*CU-YD     VEXT=      44.6K*CU-YD

  3600.000      7.95   1392.10       .00       .00   1392.45       .34       .53       .01   1395.20
    6874.0        .0    6874.0        .0        .0    1459.9        .0      77.3      20.4   1394.20
       .13       .00      4.71       .00      .000      .035      .000      .000   1384.15     79.44
   .001844      304.      305.      298.         2         0         0       .00    350.13    429.57


*SECNO 3900.000
CHIMP CLSTA=     204.50 CELCH=    1384.71 BW=      47.00 STCHL=        .00 STCHR=     500.00
CHIMP CLSTA=     282.00 CELCH=    1387.71 BW=      94.00 STCHL=        .00 STCHR=     500.00
EXCAVATION DATA
AEX=     577.6SQ-FT     VEXR=      6.5K*CU-YD     VEXT=      51.1K*CU-YD

  3900.000      8.01   1392.72       .00       .00   1393.09       .37       .63       .01   1395.60
    6874.0        .0    6874.0        .0        .0    1406.6        .0      87.8      23.0   1394.01
       .15       .00      4.89       .00      .000      .035      .000      .000   1384.71     78.36
   .002116      307.      320.      295.         2         0         0       .00    353.94    432.30


*SECNO 4000.000
CHIMP CLSTA=     232.50 CELCH=    1384.89 BW=      60.00 STCHL=        .00 STCHR=     500.00
CHIMP CLSTA=     310.00 CELCH=    1387.89 BW=      80.00 STCHL=        .00 STCHR=     500.00
EXCAVATION DATA
AEX=     593.3SQ-FT     VEXR=      2.2K*CU-YD     VEXT=      53.4K*CU-YD

  4000.000      8.05   1392.94       .00       .00   1393.30       .37       .22       .00   1394.20
    6874.0        .0    6874.0        .0        .0    1416.3        .0      91.1      23.9   1395.80
       .16       .00      4.85       .00      .000      .035      .000      .000   1384.89     67.97
   .002105       98.      102.      102.         2         0         0       .00    358.67    426.63


*SECNO 4100.000
CHIMP CLSTA=     247.50 CELCH=    1385.06 BW=      72.00 STCHL=        .00 STCHR=     500.00
CHIMP CLSTA=     321.00 CELCH=    1388.06 BW=      62.00 STCHL=        .00 STCHR=     500.00
EXCAVATION DATA
AEX=     684.8SQ-FT     VEXR=      2.4K*CU-YD     VEXT=      55.7K*CU-YD

  4100.000      8.06   1393.12       .00       .00   1393.55       .42       .22       .02   1394.40
    6874.0        .0    6874.0        .0        .0    1315.8        .0      94.3      24.7   1395.63
       .16       .00      5.22       .00      .000      .035      .000      .000   1385.06     99.21
   .002395      102.      100.       98.         2         0         0       .00    328.58    427.79
```

SECNO	DEPTH	CWSEL	CRIWS	WSELK	EG	HV	HL	OLOSS	L-BANK ELEV
Q	QLOB	QCH	QROB	ALOB	ACH	AROB	VOL	TWA	R-BANK ELEV
TIME	VLOB	VCH	VROB	XNL	XNCH	XNR	WTN	ELMIN	SSTA
SLOPE	XLOBL	XLCH	XLOBR	ITRIAL	IDC	ICONT	CORAR	TOPWID	ENDST

CCHV= .300 CEHV= .500
*SECNO 4187.000
CHIMP CLSTA= 250.00 CELCH= 1385.22 BW= 76.00 STCHL= .00 STCHR= 500.00
EXCAVATION DATA
AEX= 768.2SQ-FT VEXR= 2.3K*CU-YD VEXT= 58.1K*CU-YD

3301 HV CHANGED MORE THAN HVINS

3302 WARNING: CONVEYANCE CHANGE OUTSIDE OF ACCEPTABLE RANGE, KRATIO = .59

3470 ENCROACHMENT STATIONS= 212.0 288.0 TYPE= 1 TARGET= 76.000

3495 OVERBANK AREA ASSUMED NON-EFFECTIVE, ELLEA= 100000.00 ELREA= 100000.00

DOWNSTREAM FACE OF 36TH STREET CULVERT
6-12'x8' CONCRETE BOX CULVERT
ROADWAY OVERFLOW OCCURS DURING THE 100-YEAR EVENT

4187.000	7.54	1392.76	.00	.00	1394.49	1.72	.29	.65	100000.00
6043.0	.0	6043.0	.0	.0	573.7	.0	96.2	25.1	100000.00
.17	.00	10.53	.00	.000	.035	.000	.000	1385.22	212.00
.005292	88.	87.	85.	2	0	0	.00	76.00	288.00

SPECIAL CULVERT

SC	CUNO	CUNV	ENTLC	COFQ	RDLEN	RISE	SPAN	CULVLN	CHRT	SCL	ELCHU	ELCHD
	6	.013	.30	2.63	.00	8.00	12.00	66.00	11	4	1385.44	1385.22

CHART 11 - BOX CULVERT; SKEWED HEADWALL; CHAMFERED OR BEVELED INLET EDGES
SCALE 4 - HEADWALL SKEWED 10 TO 45 DEGREES; INLET EDGES BEVELED

*SECNO 4253.000
CHIMP CLSTA= 250.00 CELCH= 1385.42 BW= 76.00 STCHL= .00 STCHR= 500.00
EXCAVATION DATA
AEX= 799.7SQ-FT VEXR= 1.9K*CU-YD VEXT= 60.0K*CU-YD

5155, 20 TRIALS OF QWEIR NOT ENOUGH; POSSIBLY INVALID
FINAL QWEIR + QCULV = 5940. DOES NOT EQUAL ACTUAL Q = 6043.

SPECIAL CULVERT OUTLET CONTROL + WEIR FLOW EG = 1394.57

SECNO	DEPTH	CWSEL	CRIWS	WSELK	EG	HV	HL	OLOSS	L-BANK ELEV
Q	QLOB	QCH	QROB	ALOB	ACH	AROB	VOL	TWA	R-BANK ELEV
TIME	VLOB	VCH	VROB	XNL	XNCH	XNR	WTN	ELMIN	SSTA
SLOPE	XLOBL	XLCH	XLOBR	ITRIAL	IDC	ICONT	CORAR	TOPWID	ENDST

SPECIAL CULVERT

EGIC	EGOC	H4	QWEIR	QCULV	VCH	ACULV	ELTRD	WEIRLN
1395.04	1395.42	.09	603.	5337.	10.854	576.0	1394.00	432.

3470 ENCROACHMENT STATIONS= 212.0 288.0 TYPE= 1 TARGET= 76.000

3495 OVERBANK AREA ASSUMED NON-EFFECTIVE, ELLEA= 100000.00 ELREA= 100000.00

UPSTREAM FACE OF 36TH STREET CULVERT
6-12'x8' CONCRETE BOX CULVERT
ROADWAY OVERFLOW OCCURS DURING THE 100-YEAR EVENT

4253.000	7.33	1392.75	.00	.00	1394.57	1.83	.09	.00	100000.00
6043.0	.0	6043.0	.0	.0	556.8	.0	97.0	25.2	100000.00
.17	.00	10.85	.00	.000	.025	.000	.000	1385.42	212.00
.002964	68.	66.	64.	4	0	0	.00	76.00	288.00

*SECNO 4400.000
CHIMP CLSTA= 250.00 CELCH= 1385.86 BW= 58.00 STCHL= .00 STCHR= 500.00
CHIMP CLSTA= 216.00 CELCH= 1385.86 BW= 44.00 STCHL= .00 STCHR= 500.00
EXCAVATION DATA
AEX= 846.1SQ-FT VEXR= 4.5K*CU-YD VEXT= 64.5K*CU-YD

3301 HV CHANGED MORE THAN HVINS

3302 WARNING: CONVEYANCE CHANGE OUTSIDE OF ACCEPTABLE RANGE, KRATIO = 1.52

4400.000	9.12	1394.98	.00	.00	1395.30	.32	.27	.45	1395.80
6043.0	.0	6043.0	.0	.0	1336.3	.0	100.2	26.0	1395.08
.18	.00	4.52	.00	.000	.025	.000	.000	1385.86	70.13
.001280	145.	147.	150.	4	0	0	.00	428.96	499.08

CCHV= .100 CEHV= .300
*SECNO 4500.000
CHIMP CLSTA= 250.00 CELCH= 1386.17 BW= 50.00 STCHL= .00 STCHR= 500.00
CHIMP CLSTA= 194.00 CELCH= 1386.17 BW= 62.00 STCHL= .00 STCHR= 500.00

SECNO	DEPTH	CWSEL	CRIWS	WSELK	EG	HV	HL	OLOSS	L-BANK ELEV
Q	QLOB	QCH	QROB	ALOB	ACH	AROB	VOL	TWA	R-BANK ELEV
TIME	VLOB	VCH	VROB	XNL	XNCH	XNR	WTN	ELMIN	SSTA
SLOPE	XLOBL	XLCH	XLOBR	ITRIAL	IDC	ICONT	CORAR	TOPWID	ENDST

EXCAVATION DATA
AEX= 1074.0SQ-FT VEXR= 3.6K*CU-YD VEXT= 68.0K*CU-YD

3265 DIVIDED FLOW

3280 CROSS SECTION 4500.00 EXTENDED .29 FEET

3302 WARNING: CONVEYANCE CHANGE OUTSIDE OF ACCEPTABLE RANGE, KRATIO = 1.46

INDIAN BEND WASH CHANNEL, CONFLUENCE WITH SWTWTR CHANNEL

4500.000	8.90	1395.07	.00	.00	1395.39	.32	.08	.00	1396.20
6043.0	.0	6043.0	.0	.0	1328.7	.0	103.3	26.8	1394.78
.18	.00	4.55	.00	.000	.025	.000	.000	1386.17	78.94
.000600	97.	100.	103.	2	0	0	.00	238.12	500.00

*SECNO 3200.000

3302 WARNING: CONVEYANCE CHANGE OUTSIDE OF ACCEPTABLE RANGE, KRATIO = .47

BEGIN SWTWTR CHANNEL, SECTION NUMBERS MATCH CST CL SWTWTR CHANNEL
SWTWTR CHANNEL, CONFLUENCE WITH INDIAN BEND WASH

3200.000	8.95	1395.05	.00	.00	1395.49	.44	.07	.04	1396.10
3085.0	.0	3085.0	.0	.0	580.8	.0	105.7	27.2	1396.10
.19	.00	5.31	.00	.000	.025	.000	.000	1386.10	3.14
.000711	97.	110.	117.	2	0	0	.00	91.73	94.86

CCHV= .300 CEHV= .500
*SECNO 3095.000

3301 HV CHANGED MORE THAN HVINS

3302 WARNING: CONVEYANCE CHANGE OUTSIDE OF ACCEPTABLE RANGE, KRATIO = .54

3470 ENCROACHMENT STATIONS= .0 38.2 TYPE= 1 TARGET= 38.199

3495 OVERBANK AREA ASSUMED NON-EFFECTIVE, ELLEA= 1396.20 ELREA= 100000.00

```
        DOWNSTREAM FACE OF 1ST CULVERT ACROSS SWEETWATER AVENUE
        3-12'x8' CONCRETE BOX CULVERT
  3095.000     8.49   1394.69      .00      .00   1396.10     1.41      .13      .49   1396.20
    3085.0       .0    3085.0       .0       .0     323.6       .0    106.8     27.4 100000.00
       .19      .00      9.53      .00     .000      .025     .000     .000  1386.20       .02
   .002422     105.      105.     105.        2         0        0      .00    38.17     38.18


SPECIAL CULVERT

SC  CUNO      CUNV      ENTLC     COFQ     RDLEN     RISE      SPAN     CULVLN    CHRT      SCL       ELCHU     ELCHD
     3         .013      .30      2.63    400.00     8.00     12.00    266.00    11        4       1386.58   1386.21

CHART 11 - BOX CULVERT; SKEWED HEADWALL; CHAMFERED OR BEVELED INLET EDGES
SCALE  4 - HEADWALL SKEWED 10 TO 45 DEGREES; INLET EDGES BEVELED

CCHV=     .100 CEHV=     .300
*SECNO 2829.000

SPECIAL CULVERT OUTLET CONTROL
EGIC =   1396.338  EGOC =   1397.736  PCWSE=   1394.693  ELTRD=   1400.000

3280 CROSS SECTION   2829.00 EXTENDED      .15 FEET

SPECIAL CULVERT

    EGIC      EGOC       H4     QWEIR     QCULV      VCH     ACULV     ELTRD    WEIRLN
  1396.34   1397.74     1.63       0.     3085.    7.979     288.0   1400.00       0.


3470 ENCROACHMENT STATIONS=        .0      38.2  TYPE=      1  TARGET=      38.199

3495 OVERBANK AREA ASSUMED NON-EFFECTIVE, ELLEA=     1396.60 ELREA=    100000.00

        UPSTREAM FACE OF 1ST CULVERT ACROSS SWEETWATER AVENUE
        3-12'x8' CONCRETE BOX CULVERT
  2829.000    10.15   1396.75      .00      .00   1397.74      .99     1.63      .00   1396.60
    3085.0       .0    3085.0       .0       .0     386.7       .0    108.9     27.6 100000.00
       .20      .00      7.98      .00     .000      .025     .000     .000  1386.60       .00
   .001446     266.      266.     266.        3         0        0      .00    38.20     38.20


*SECNO 2500.000
3280 CROSS SECTION   2500.00 EXTENDED      .77 FEET


3301 HV CHANGED MORE THAN HVINS


3302 WARNING:  CONVEYANCE CHANGE OUTSIDE OF ACCEPTABLE RANGE,  KRATIO =  1.88

  2500.000    10.77   1397.77      .00      .00   1398.08      .31      .27      .07   1397.00
    3085.0       .0    3085.0       .0       .0     690.5       .0    113.7     28.2   1397.00
       .23      .00      4.47      .00     .000      .025     .000     .000  1387.00       .00
```

.000411	389.	389.	389.	2	0	0	.00	92.00	92.00

SECNO	DEPTH	CWSEL	CRIWS	WSELK	EG	HV	HL	OLOSS	L-BANK ELEV
Q	QLOB	QCH	QROB	ALOB	ACH	AROB	VOL	TWA	R-BANK ELEV
TIME	VLOB	VCH	VROB	XNL	XNCH	XNR	WTN	ELMIN	SSTA
SLOPE	XLOBL	XLCH	XLOBR	ITRIAL	IDC	ICONT	CORAR	TOPWID	ENDST

*SECNO 2229.000

3301 HV CHANGED MORE THAN HVINS

3302 WARNING: CONVEYANCE CHANGE OUTSIDE OF ACCEPTABLE RANGE, KRATIO = .42

3470 ENCROACHMENT STATIONS= .0 32.2 TYPE= 1 TARGET= 32.199

3495 OVERBANK AREA ASSUMED NON-EFFECTIVE, ELLEA= 1397.40 ELREA= 100000.00

DOWNSTREAM FACE OF 2ND CULVERT ACROSS SWEETWATER AVENUE
3-12'x8' CONCRETE BOX CULVERT

2229.000	9.91	1397.31	.00	.00	1398.77	1.46	.35	.34	1397.40
3085.0	.0	3085.0	.0	.0	318.2	.0	118.7	28.8	100000.00
.24	.00	9.69	.00	.000	.025	.000	.000	1387.40	.00
.002366	429.	429.	429.	3	0	0	.00	32.20	32.20

SPECIAL CULVERT

SC	CUNO	CUNV	ENTLC	COFQ	RDLEN	RISE	SPAN	CULVLN	CHRT	SCL	ELCHU	ELCHD
	3	.013	.20	2.63	400.00	8.00	12.00	472.00	11	4	1388.12	1387.40

CHART 11 - BOX CULVERT; SKEWED HEADWALL; CHAMFERED OR BEVELED INLET EDGES
SCALE 4 - HEADWALL SKEWED 10 TO 45 DEGREES; INLET EDGES BEVELED

CCHV= .300 CEHV= .500
*SECNO 1758.000

SPECIAL CULVERT OUTLET CONTROL
EGIC = 1397.877 EGOC = 1400.741 PCWSE= 1397.313 ELTRD= 1401.500

3280 CROSS SECTION 1758.00 EXTENDED 1.57 FEET

SPECIAL CULVERT

EGIC	EGOC	H4	QWEIR	QCULV	VCH	ACULV	ELTRD	WEIRLN
1397.88	1400.74	1.97	0.	3085.	8.302	288.0	1401.50	0.

3470 ENCROACHMENT STATIONS= .0 32.2 TYPE= 1 TARGET= 32.199

3495 OVERBANK AREA ASSUMED NON-EFFECTIVE, ELLEA= 1398.10 ELREA= 100000.00

UPSTREAM FACE OF 2ND CULVERT ACROSS SWEETWATER AVENUE
3-12'x8' CONCRETE BOX CULVERT

1758.000	11.57	1399.67	.00	.00	1400.74	1.07	1.97	.00	1398.10
3085.0	.0	3085.0	.0	.0	371.6	.0	122.5	29.1	100000.00
.25	.00	8.30	.00	.000	.025	.000	.000	1388.10	.00
.001533	472.	472.	472.	3	0	0	.00	32.20	32.20

*SECNO 2163.000
3280 CROSS SECTION 2163.00 EXTENDED 2.75 FEET

3301 HV CHANGED MORE THAN HVINS

3302 WARNING: CONVEYANCE CHANGE OUTSIDE OF ACCEPTABLE RANGE, KRATIO = 3.95

1ST SECTION UPSTREAM OF 2ND CULVERT ACROSS SWEETWATER AVENUE
DOWNSTREAM END OF LINEAR DETENTION CHANNEL

2163.000	12.74	1400.94	.00	.00	1401.05	.10	.02	.29	1398.20
3085.0	.0	3085.0	.0	.0	1192.4	.0	123.6	29.3	1398.20
.26	.00	2.59	.00	.000	.025	.000	.000	1388.20	.00
.000098	66.	66.	66.	2	0	0	.00	121.00	121.00

PROFILE FOR STREAM AND BRANCH TO SWEETWATER

PLOTTED POINTS (BY PRIORITY) E-ENERGY,W-WATER SURFACE,I-INVERT,C-CRITICAL W.S.,L-LEFT BANK,R-RIGHT BANK,M-LOWER END STA

```
ELEVATION  1379.    1384.    1389.    1394.    1399.    1404.    1409.    1414.    1419.    1424.
   SECNO   CUMDIS

 1150.00     0.  I        .RWE     L        .        .        .        .        .        .        .
 1200.00    50.  CI       .R E     L        .        .        .        .        .        .        .
            100.  C I      . WE    L        .        .        .        .        .        .        .
 1300.00   150.  C  I      . WE   R L        .        .        .        .        .        .        .
            200.  C  I      . WE    RL       .        .        .        .        .        .        .
            250.  C  I      .  WE   RL       .        .        .        .        .        .        .
            300.  C  I      .  WE    RL      .        .        .        .        .        .        .
 1500.00   350.  C  I      .  WE    .L       .        .        .        .        .        .        .
            400.  C   I     .   WE   .RL      .        .        .        .        .        .        .
            450.  C   I     .   W E  .RL      .        .        .        .        .        .        .
            500.  C   I     .    WE  .R L     .        .        .        .        .        .        .
            550.  C   I     .    W E .R L     .        .        .        .        .        .        .
            600.  C   I     .     WE .R  L    .        .        .        .        .        .        .
 1800.00   650.  C   I     .     W E. R L     .        .        .        .        .        .        .
            700.  C    I    .      WE. R L    .        .        .        .        .        .        .
            750.  C    I    .      W E  R L   .        .        .        .        .        .        .
            800.  C    I    .       WE  R L   .        .        .        .        .        .        .
            850.  C    I    .       W.E  RL   .        .        .        .        .        .        .
            900.  C    I    .        WE   RL  .        .        .        .        .        .        .
 2100.00   950.  C     I    .        WE   RL  .        .        .        .        .        .        .
           1000.  C     I    .        .WE   L  .        .        .        .        .        .        .
           1050.  C     I    .        .WE   RL .        .        .        .        .        .        .
           1100.  C     I    .        .WE   RL .        .        .        .        .        .        .
           1150.  C     I    .        . WE  RL .        .        .        .        .        .        .
           1200.  C     I    .        . WE  RL .        .        .        .        .        .        .
 2400.00   1250.  C      I   .        . WE  RL .        .        .        .        .        .        .
           1300.  C      I   .        .  E   RL .        .        .        .        .        .        .
           1350.  C      I   .        .  WE  RL .        .        .        .        .        .        .
           1400.  C      I   .        .  WE  RL .        .        .        .        .        .        .
           1450.  C      I   .        .  WE  RL .        .        .        .        .        .        .
           1500.  C      I   .        .  WE   RL.        .        .        .        .        .        .
 2700.00   1550.  C       I  .        .   E   RL.        .        .        .        .        .        .
           1600.  C       I  .        .   WE  RL.        .        .        .        .        .        .
           1650.  C       I  .        .   WE  RL.        .        .        .        .        .        .
           1700.  C       I  .        .   WE   L.        .        .        .        .        .        .
 2900.00   1750.  C       I  .        .   WE   RL        .        .        .        .        .        .
           1800.  C       I  .        .    E   LR        .        .        .        .        .        .
 3000.00   1850.  C        I.         .    E   L.R       .        .        .        .        .        .
           1900.  C        I.         .    E    LR       .        .        .        .        .        .
           1950.  C        I.         .    WE   LR       .        .        .        .        .        .
           2000.  C        I.         .    WE   LR       .        .        .        .        .        .
           2050.  C        I.         .    WE   L R      .        .        .        .        .        .
           2100.  C        I.         .    WE   .LR      .        .        .        .        .        .
 3300.00   2150.  C         I         .     E   .LR      .        .        .        .        .        .
           2200.  C         I         .     E   .LR      .        .        .        .        .        .
           2250.  C         I         .     WE  .ML      .        .        .        .        .        .
           2300.  C         I         .     WE  .ML      .        .        .        .        .        .
           2350.  C         I         .     WE  .RL      .        .        .        .        .        .
```

```
         2400.  C      .I      .   WE  .RL     .       .       .       .       .       .       .
         2450.  C      .I      .    E  .R L    .       .       .       .       .       .       .
3600.00  2500.  C      .I      .    E  .R L    .       .       .       .       .       .       .
         2550.  C      .I      .    E  .R L    .       .       .       .       .       .       .
         2600.  C      .I      .   WE .R L    .       .       .       .       .       .       .
         2650.  C      .I      .   WE .R L    .       .       .       .       .       .       .
         2700.  C      .I      .   WE .R L    .       .       .       .       .       .       .
         2750.  C      . I     .    E .R L    .       .       .       .       .       .       .
3900.00  2800.  C      . I     .    WER  L    .       .       .       .       .       .       .
         2850.  C      . I     .    WE.ML     .       .       .       .       .       .       .
4000.00  2900.  C      . I     .    WE.L  R   .       .       .       .       .       .       .
         2950.  C      . I     .    WE.L  R   .       .       .       .       .       .       .
4100.00  3000.  C      .  I    .     WEL  R   .       .       .       .       .       .       .
         3050.  C      .  I    .    W .E M    .       .       .       .       .       .       L
4187.00  3100.  C      .  I    .    W .E  M   .       .       .       .       .       .       L
4253.00  3150.  C      .  I    .    W . E  M  .       .       .       .       .       .       L
         3200.  C      .   I   .     W. E M   .       .       .       .       .       .       L
         3250.  C      .   I   .      .W E    .       .       .       .       .       .       L
4400.00  3300.  C      .   I   .      . WEL   .       .       .       .       .       .       .
         3350.  C      .   I   .      . WEL   .       .       .       .       .       .       .
4500.00  3400.  C      .    I  .      . RE L  .       .       .       .       .       .       .
         3450.  C      .    I  .      .  E L  .       .       .       .       .       .       .
3200.00  3500.  C      .    I  .      .  E L  .       .       .       .       .       .       .
         3550.  C      .    I  .      . W EL  .       .       .       .       .       .       R
3095.00  3600.  C      .    I  .      . W  E  .       .       .       .       .       .       R
         3650.  C      .    I  .      .  W E  .       .       .       .       .       .       R
         3700.  C      .    I  .      . W LE  .       .       .       .       .       .       R
         3750.  C      .    I  .      .  WLE  .       .       .       .       .       .       R
         3800.  C      .    I  .      .   W E .       .       .       .       .       .       R
         3850.  C      .     I .      .    W E.       .       .       .       .       .       R
2829.00  3900.  C      .     I .      .    W E.       .       .       .       .       .       R
         3950.  C      .     I .      .    W E.       .       .       .       .       .       R
         4000.  C      .     I .      .    W E.       .       .       .       .       .       R
         4050.  C      .     I .      .    LWE.       .       .       .       .       .       R
         4100.  C      .     I .      .    LWE.       .       .       .       .       .       R
         4150.  C      .     I .      .    LWE.       .       .       .       .       .       R
         4200.  C      .     I .      .    LWE.       .       .       .       .       .       R
2500.00  4250.  C      .     I .      .    L WE.      .       .       .       .       .       .
         4300.  C      .     I .      .    L WE.      .       .       .       .       .       R
         4350.  C      .      I.      .     LWE.      .       .       .       .       .       R
         4400.  C      .      I.      .     LWE.      .       .       .       .       .       R
         4450.  C      .      I.      .     LWE.      .       .       .       .       .       R
         4500.  C      .      I.      .     W E.      .       .       .       .       .       R
         4550.  C      .      I.      .     W  E      .       .       .       .       .       R
         4600.  C      .      I.      .     W  E      .       .       .       .       .       R
         4650.  C      .      I.      .     W  E      .       .       .       .       .       R
2229.00  4700.  C      .      I.      .     W  E      .       .       .       .       .       R
         4750.  C      .      I.      .     LW E      .       .       .       .       .       R
         4800.  C      .      I.      .     LW .E     .       .       .       .       .       R
         4850.  C      .       I.     .      LW.E     .       .       .       .       .       R
         4900.  C      .       I.     .      LW. E    .       .       .       .       .       R
         4950.  C      .       I.     .      L W E    .       .       .       .       .       R
         5000.  C      .       I.     .      L W E    .       .       .       .       .       R
         5050.  C      .       I.     .      L .W E   .       .       .       .       .       R
         5100.  C      .       I.     .      L .W E   .       .       .       .       .       R
1758.00  5150.  C      .        I.    .       L. W E  .       .       .       .       .       R
         5200.  C      .        I.    .       L.   E  .       .       .       .       .       R
2163.00  5250.  C      .        I.    .       L.   WE .       .       .       .       .       .
```

THIS RUN EXECUTED 07AUG95 18:14:01

****
HEC-2 WATER SURFACE PROFILES

Version 4.6.2; May 1991
****

NOTE- ASTERISK (*) AT LEFT OF CROSS-SECTION NUMBER INDICATES MESSAGE IN SUMMARY OF ERRORS LIST

AND BRANCH TO SWEETWATER

SUMMARY PRINTOUT

	SECNO	XLCH	CWSEL	ELMIN	DEPTH	Q	VCH	AREA	TOPWID	DIFWSX	K*XNCH	EG	10*KS
	1150.000	.00	1385.01	1378.80	6.21	7071.00	4.42	1598.01	447.93	.00	35.00	1385.32	19.99
	1200.000	50.00	1385.10	1379.26	5.84	7071.00	4.64	1525.01	451.39	.09	35.00	1385.43	23.61
	1300.000	100.00	1385.31	1380.16	5.15	7071.00	5.24	1349.98	415.41	.21	35.00	1385.73	31.66
	1500.000	200.00	1385.90	1380.51	5.39	7071.00	6.37	1110.34	322.23	.59	35.00	1386.53	43.39
	1800.000	300.00	1387.38	1381.03	6.34	7071.00	7.03	1006.18	338.05	1.47	35.00	1388.14	64.30
	2100.000	300.00	1389.02	1381.55	7.47	7071.00	5.63	1256.14	355.87	1.64	35.00	1389.51	32.88
	2400.000	300.00	1389.96	1382.07	7.89	7071.00	5.04	1402.76	368.22	.94	35.00	1390.35	23.82
	2700.000	300.00	1390.64	1382.59	8.05	7071.00	4.67	1514.76	363.16	.68	35.00	1390.98	18.10
	2900.000	200.00	1391.02	1382.93	8.09	6874.00	4.21	1631.26	369.20	.38	35.00	1391.30	13.66
	3000.000	100.00	1391.16	1383.11	8.05	6874.00	4.23	1625.16	370.13	.14	35.00	1391.44	13.88
	3300.000	300.00	1391.59	1383.62	7.97	6874.00	4.50	1528.50	364.82	.43	35.00	1391.90	16.70
	3600.000	305.00	1392.10	1384.15	7.95	6874.00	4.71	1459.85	350.13	.51	35.00	1392.45	18.44
	3900.000	320.00	1392.72	1384.71	8.01	6874.00	4.89	1406.63	353.94	.61	35.00	1393.09	21.16
	4000.000	102.00	1392.94	1384.89	8.05	6874.00	4.85	1416.28	358.67	.22	35.00	1393.30	21.05
	4100.000	100.00	1393.12	1385.06	8.06	6874.00	5.22	1315.84	328.58	.18	35.00	1393.55	23.95
*	4187.000	87.00	1392.76	1385.22	7.54	6043.00	10.53	573.73	76.00	-.36	35.00	1394.49	52.92
	4253.000	66.00	1392.75	1385.42	7.33	6043.00	10.85	556.76	76.00	-.02	25.00	1394.57	29.64

	SECNO	XLCH	CWSEL	ELMIN	DEPTH	Q	VCH	AREA	TOPWID	DIFWSX	K*XNCH	EG	10*KS
*	4400.000	147.00	1394.98	1385.86	9.12	6043.00	4.52	1336.34	428.96	2.24	24.99	1395.30	12.80
*	4500.000	100.00	1395.07	1386.17	8.90	6043.00	4.55	1328.69	238.12	.08	25.00	1395.39	6.00
*	3200.000	110.00	1395.05	1386.10	8.95	3085.00	5.31	580.82	91.73	-.01	25.00	1395.49	7.11
*	3095.000	105.00	1394.69	1386.20	8.49	3085.00	9.53	323.57	38.17	-.36	25.00	1396.10	24.22
	2829.000	266.00	1396.75	1386.60	10.15	3085.00	7.98	386.66	38.20	2.05	25.00	1397.74	14.46
*	2500.000	389.00	1397.77	1387.00	10.77	3085.00	4.47	690.54	92.00	1.02	25.00	1398.08	4.11
*	2229.000	429.00	1397.31	1387.40	9.91	3085.00	9.69	318.22	32.20	-.45	25.00	1398.77	23.66
	1758.000	472.00	1399.67	1388.10	11.57	3085.00	8.30	371.59	32.20	2.36	25.00	1400.74	15.33
*	2163.000	66.00	1400.94	1388.20	12.74	3085.00	2.59	1192.40	121.00	1.27	25.00	1401.05	.98

SUMMARY OF ERRORS AND SPECIAL NOTES

WARNING SECNO= 4187.000 PROFILE= 1 CONVEYANCE CHANGE OUTSIDE ACCEPTABLE RANGE

WARNING SECNO= 4400.000 PROFILE= 1 CONVEYANCE CHANGE OUTSIDE ACCEPTABLE RANGE

WARNING SECNO= 4500.000 PROFILE= 1 CONVEYANCE CHANGE OUTSIDE ACCEPTABLE RANGE

WARNING SECNO= 3200.000 PROFILE= 1 CONVEYANCE CHANGE OUTSIDE ACCEPTABLE RANGE

WARNING SECNO= 3095.000 PROFILE= 1 CONVEYANCE CHANGE OUTSIDE ACCEPTABLE RANGE

WARNING SECNO= 2500.000 PROFILE= 1 CONVEYANCE CHANGE OUTSIDE ACCEPTABLE RANGE

WARNING SECNO= 2229.000 PROFILE= 1 CONVEYANCE CHANGE OUTSIDE ACCEPTABLE RANGE

WARNING SECNO= 2163.000 PROFILE= 1 CONVEYANCE CHANGE OUTSIDE ACCEPTABLE RANGE

Appendix K
Emile Zola Box Culvert Hydraulics

CURRENT DATE: 08-07-1995
CURRENT TIME: 18:52:56

FILE DATE: 03-02-1995
FILE NAME: EMZON

FHWA CULVERT ANALYSIS
HY-8, VERSION 4.1

CULV	SITE DATA			CULVERT SHAPE, MATERIAL, INLET				
	INLET ELEV. (FT)	OUTLET ELEV. (FT)	CULVERT LENGTH (FT)	BARRELS SHAPE MATERIAL	SPAN (FT)	RISE (FT)	MANNING n	INLET TYPE
1	1394.50	1392.86	352.00	1 RCB	10.00	6.00	.013	CONVENTIONAL
2								
3								
4								
5								
6								

SUMMARY OF CULVERT FLOWS (CFS) FILE: EMZON DATE: 03-02-1995

ELEV (FT)	TOTAL	1	2	3	4	5	6	ROADWAY	ITR
1399.01	0	0	0	0	0	0	0	0	1
1399.07	88	88	0	0	0	0	0	0	1
1399.27	175	175	0	0	0	0	0	0	1
1399.59	263	263	0	0	0	0	0	0	1
1400.04	350	350	0	0	0	0	0	0	1
1400.64	438	438	0	0	0	0	0	0	1
1401.60	526	526	0	0	0	0	0	0	1
1402.61	613	613	0	0	0	0	0	0	1
1403.70	701	701	0	0	0	0	0	0	1
1404.88	788	788	0	0	0	0	0	0	1
1405.32	876	819	0	0	0	0	0	54	4
1405.00	796	796	0	0	0	0	0	OVERTOPPING	

SUMMARY OF ITERATIVE SOLUTION ERRORS FILE: EMZON DATE: 03-02-1995

HEAD ELEV(FT)	HEAD ERROR(FT)	TOTAL FLOW(CFS)	FLOW ERROR(CFS)	% FLOW ERROR
1399.01	0.00	0	0	0.00
1399.07	0.00	88	0	0.00
1399.27	0.00	175	0	0.00
1399.59	0.00	263	0	0.00
1400.04	0.00	350	0	0.00
1400.64	0.00	438	0	0.00
1401.60	0.00	526	0	0.00
1402.61	0.00	613	0	0.00
1403.70	0.00	701	0	0.00
1404.88	0.00	788	0	0.00
1405.32	-0.01	876	3	0.35

<1> TOLERANCE (FT) = 0.010 <2> TOLERANCE (%) = 1.000

CURRENT DATE: 08-07-1995 FILE DATE: 03-02-1995
CURRENT TIME: 18:52:56 FILE NAME: EMZON

PERFORMANCE CURVE FOR CULVERT # 1 - 1 (10 BY 6) RCB

DIS-CHARGE FLOW (cfs)	HEAD-WATER ELEV. (ft)	INLET CONTROL DEPTH (ft)	OUTLET CONTROL DEPTH (ft)	FLOW TYPE <F4>	NORMAL DEPTH (ft)	CRITICAL DEPTH (ft)	OUTLET VEL. (fps)	OUTLET DEPTH (ft)	TAILWATER VEL. (fps)	TAILWATER DEPTH (ft)
0	1399.01	0.00	4.51	0-NF	0.00	0.00	0.00	0.00	0.00	6.15
88	1399.07	1.99	4.57	1-S1f	1.16	1.34	1.46	6.00	0.00	6.15
175	1399.27	3.17	4.77	1-S1f	1.84	2.12	2.92	6.00	0.00	6.15
263	1399.59	4.22	5.09	1-S1f	2.42	2.78	4.38	6.00	0.00	6.15
350	1400.04	5.20	5.54	1-S1f	2.96	3.37	5.84	6.00	0.00	6.15
438	1400.64	6.14	6.12	4-FFt	3.47	3.91	7.30	6.00	0.00	6.15
526	1401.60	7.10	6.83	4-FFt	3.96	4.42	8.76	6.00	0.00	6.15
613	1402.61	8.11	7.67	4-FFt	4.43	4.90	10.22	6.00	0.00	6.15
701	1403.70	9.20	8.63	4-FFt	4.90	5.35	11.68	6.00	0.00	6.15
788	1404.88	10.38	9.73	4-FFt	5.35	5.79	13.14	6.00	0.00	6.15
819	1405.32	10.82	10.14	4-FFt	6.00	5.94	13.64	6.00	0.00	6.15

El. inlet face invert 1394.50 ft El. outlet invert 1392.86 ft
El. inlet throat invert 0.00 ft El. inlet crest 0.00 ft

***** SITE DATA ***** CULVERT INVERT **********

INLET STATION (FT)	0.00
INLET ELEVATION (FT)	1394.50
OUTLET STATION (FT)	352.00
OUTLET ELEVATION (FT)	1392.86
NUMBER OF BARRELS	1
SLOPE (V-FT/H-FT)	0.0047
CULVERT LENGTH ALONG SLOPE (FT)	352.00

***** CULVERT DATA SUMMARY **********

BARREL SHAPE	BOX
BARREL SPAN	10.00 FT
BARREL RISE	6.00 FT
BARREL MATERIAL	CONCRETE
BARREL MANNING'S N	0.013
INLET TYPE	CONVENTIONAL
INLET EDGE AND WALL	1:1 BEVEL (45 DEG. FLARE)
INLET DEPRESSION	NONE

CURRENT DATE: 08-07-1995
CURRENT TIME: 18:52:56

FILE DATE: 03-02-1995
FILE NAME: EMZON

TAILWATER

CONSTANT WATER SURFACE ELEVATION
1399.01 (STA 62+00, Indian Bend Wash)

ROADWAY OVERTOPPING DATA

ROADWAY SURFACE	PAVED
EMBANKMENT TOP WIDTH (FT)	24.00
CREST LENGTH (FT)	100.00
OVERTOPPING CREST ELEVATION (FT)	1405.00

Appendix L
Hydraulic Charts

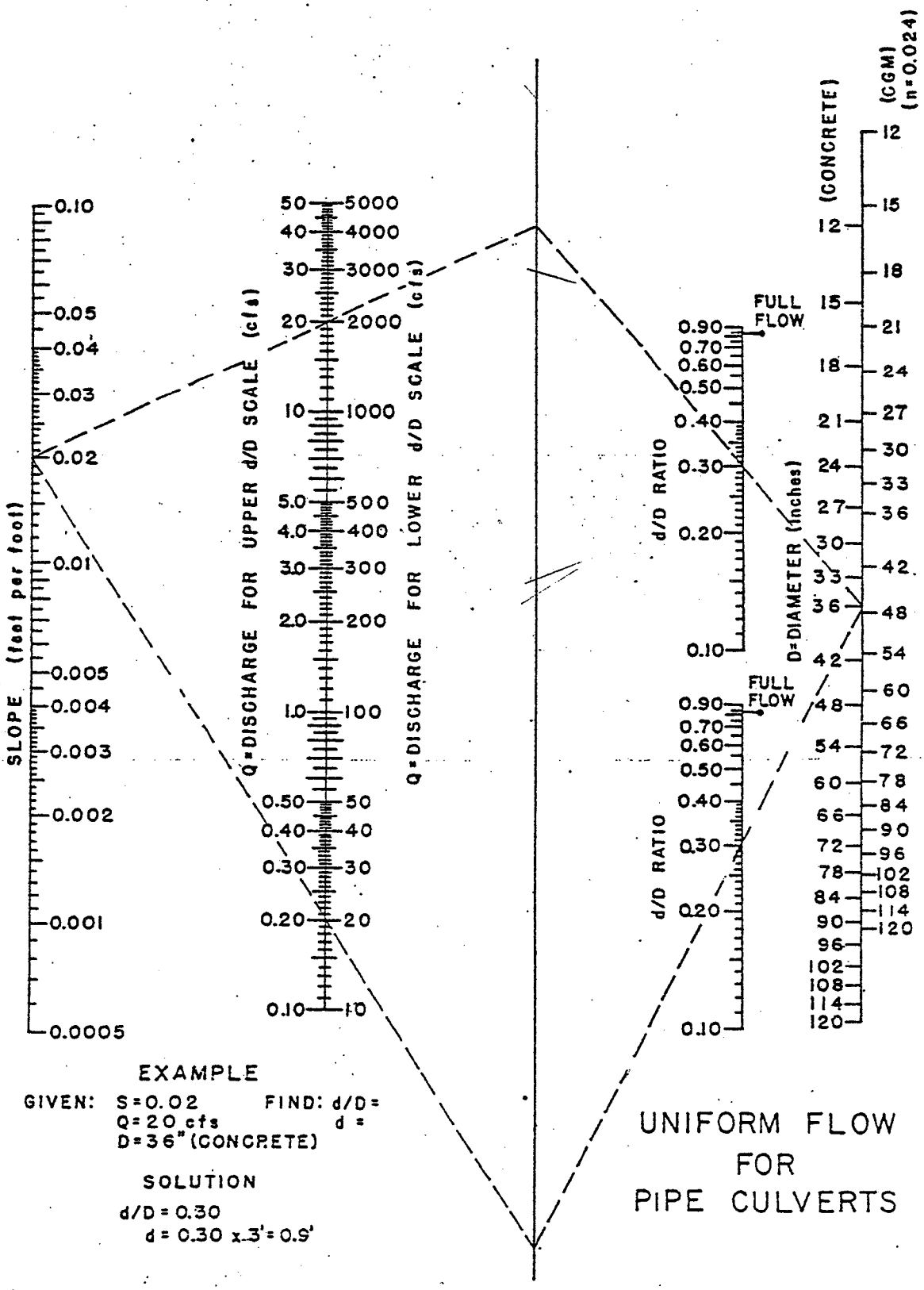

EXAMPLE

GIVEN: S=0.02 FIND: d/D=
Q=20 cfs d =
D=36" (CONCRETE)

SOLUTION

d/D = 0.30
d = 0.30 x 3' = 0.9'

UNIFORM FLOW
FOR
PIPE CULVERTS

AHD
Structures Section
Hydraulics Branch
10-15-72

Chart 15

Texas
Highway
Department

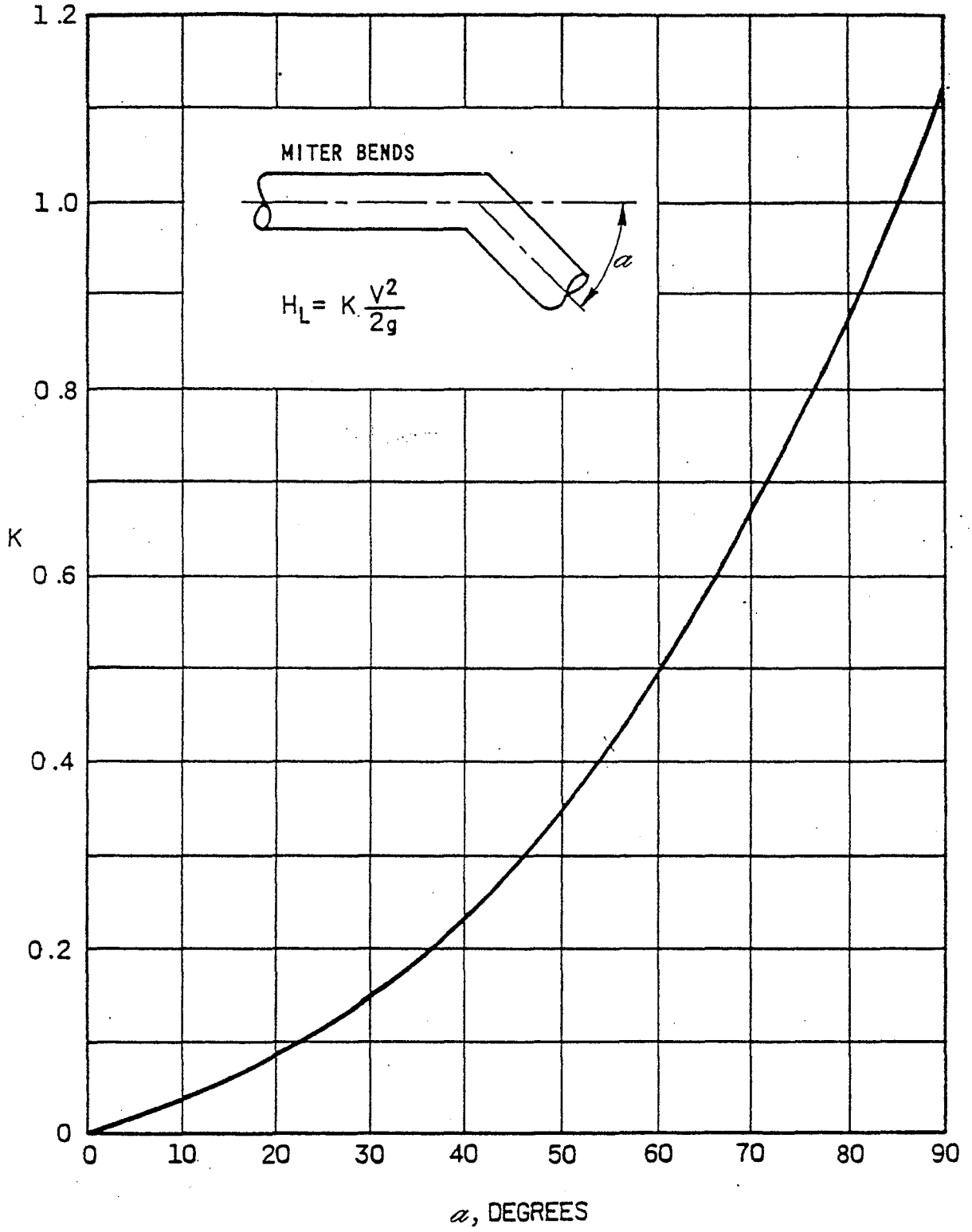

LOSS COEFFICIENTS FOR MITER BENDS

SOURCE: WIS. CONCRETE PIPE ASSOC., CURVILINEAR ALIGNMENTS FOR SEWERS

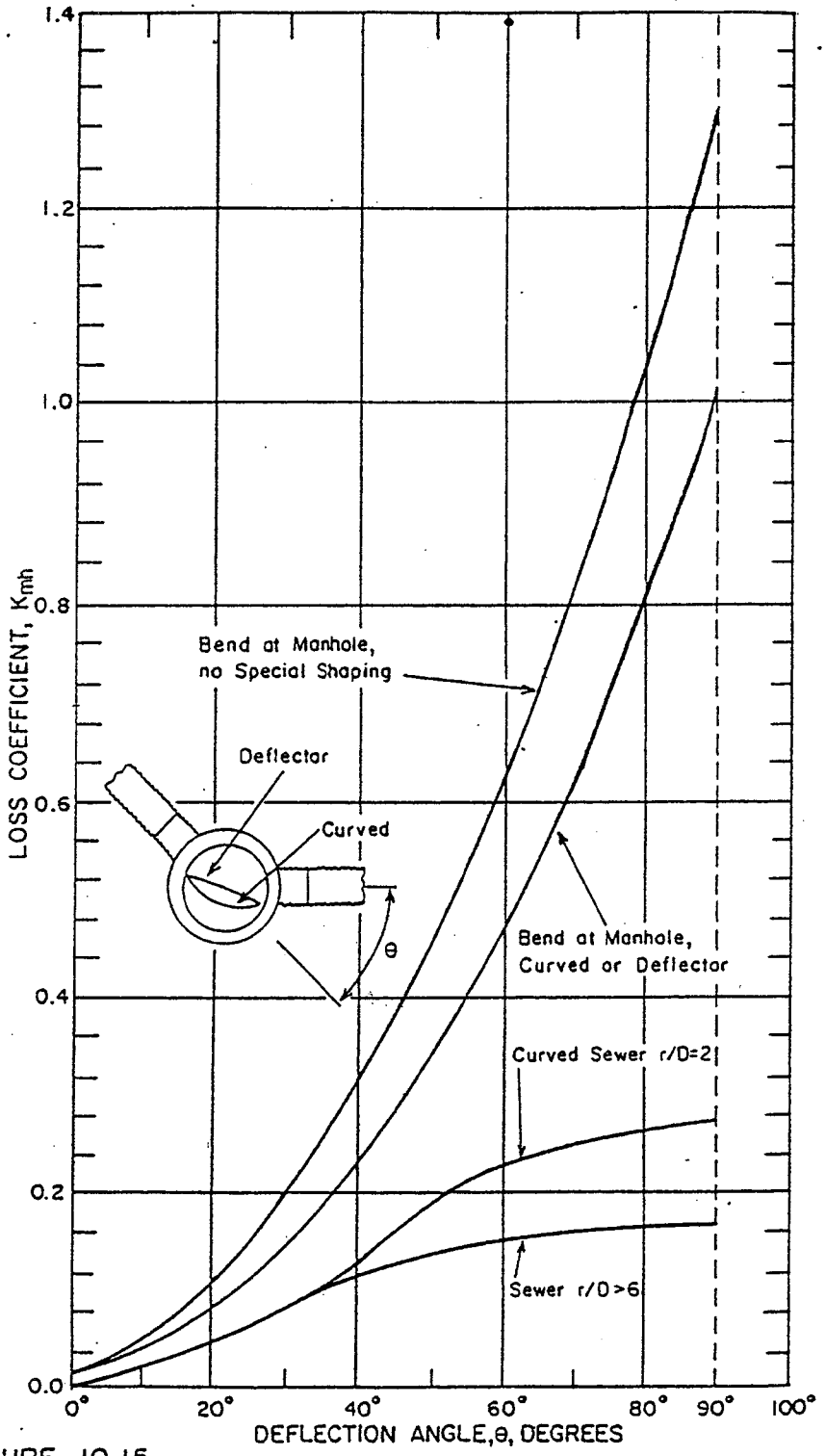

FIGURE 10.15
MANHOLE HEAD LOSS

SOURCE: "STANDARDS MANUAL FOR DRAINAGE DESIGN AND FLOODPLAIN MANAGEMENT," CITY OF TUCSON, DECEMBER 1989

at intermediate points to not exceed the desirable maximum spacing shown in Table 607.2. The spacing of manholes should be coordinated with the location of lateral connections to the trunk line. (See Subsection 607.4.) Where there are significant variations in the ground profile over a trunkline, the maximum desirable manhole spacing may be increased to permit locating manholes to minimize the manhole heights.

Table 607.2

Maximum Manhole Spacing

Pipe Size	Desirable Maximum Manhole Spacing (feet)
Under 33"	330
33" to 39"	440
42" to 69"	660
72" or greater	1200

607.3 - Lateral Connections

Lateral connections to a trunk line should be made at a manhole. Economic comparisons should be made to determine the desired combination and configuration of lateral pipe runs and manholes. Generally, only two or three lateral pipes should enter a individual manhole. Lateral pipe connections to a trunkline do not require a pipe collar if the orientation of the lateral to the trunkline does not exceed 7 degrees from the perpendicular in any direction.

607.4 - Pipe Roughness

Manning's "n" values are given in Table 607.3. The metal pipe "n" values listed are for those installations which satisfy the requirements of Section 607.5.

Table 607.3

Manning's "n"

Pipe Type	"n"
Concrete Pipe:	
Diameter <= 54"	0.011
Diameter > 54"	0.012
Cast-in-Place Concrete	0.014
Plastic:	
Smooth bore PVC	0.010
Polyethylene	0.012
Spiral Rib:	
Diameter <= 54"	0.013
Diameter > 54"	0.014
Corrugated Metal:	
Diameter <= 60"	0.022
Diameter > 60"	0.024
Structural Plate Pipe:	
Corrugation 6x2	0.033
Corrugation 9x2	0.034

607.5 - Material

The following pipe types are available for use on ADOT highway projects. Use of any other pipe types, other than listed below, must be approved by the Roadway Group Manager. See the ADOT 1990 Standard Specifications[4] for additional information on the following pipe types and their installation requirements:

♦ Galvanized Steel:
a. Corrugated Galvanized Steel Pipe - CGSP.
b. Spiral Rib Galvanized Steel Pipe - SRGSP.
c. Corrugated Galvanized steel Structural Pipe - CGSSPP.
d. Concrete-Lined Corrugated Galvanized Steel Pipe - C/LCGSP.

For head losses at junctions due to changes in flow direction and the collision and turbulence of flows in manholes, refer to Section 5.10 of FHWA's publication "Design of Urban Highway Drainage, the State of the Art," 1979. For manhole design these losses shall be considered as required by the manhole structure characteristics. For manholes with square edge pipes at the junction, the sudden enlargement loss coefficient may be up to 1.0 and the entrance loss coefficient may be up to 0.5. For headwater computation of culverts, see Section 3.7-6 Culverts.

3. Manning's Roughness Coefficient

The following table gives Manning's roughness coefficients, which are recommended for design:

Surface	Manning's "n"
Pavement	0.016
Concrete pipe, precast	0.012
Concrete pipe, cast-in-place	0.015
Corrugated metal pipe*	0.024
Cast-iron pipe	0.013
Steel pipe	0.011
Concrete lining channel	0.018
Earth ditch	0.020
Reinforced concrete box culvert	0.013
Gunite or shotcrete	0.018
Aggregate lining ditch	$n = 0.031\ (d_{75})^{0.1667}$

d_{75} = The particle size in feet for which 75 percent of sediment mixture is finer.

* Does not include Structural Plate CMP. For more detailed information see FHWA-TS-80-216 "Hydraulic Flow Resistance Factors for Corrugated Metal Conduits", Figures 6, 7, 8, and 9.

Appendix M
Rainfall Intensity Calculations

ARIZONA DEPARTMENT OF TRANSPORTATION
HYDROLOGIC DESIGN DATA

Project No. SR 51 TRACS No. _____
Project Name Squaw Peak HIGHWAY Date 4/9/95
Location/Station Shea Blvd to Thunderbird Road
Designer Dave Schaub Checker _____

RAINFALL INTENSITY-DURATION-FREQUENCY (I-D-F) WORKSHEET

Divide each rainfall depth from the D-D-F Worksheet (**Figure 1-2 Part E**) by each corresponding duration, in hours, and tabulate below:

Duration	Rainfall Intensity, In Inches/Hour — Frequency, In Years						
	2	5	10	25	50	100	500
5-min.	3.96	5.16	6.00	7.08	8.04	9.00	11.04
10-min.	2.94	3.90	4.56	5.46	6.18	6.84	8.46
15-min.	2.36	3.24	3.80	4.60	5.24	5.88	7.28
30-min.	1.58	2.16	2.56	3.12	3.54	3.98	4.96
1-hour	0.96	1.34	1.59	1.94	2.21	2.48	3.11
2-hour	0.52	0.725	0.816	1.06	1.205	1.355	1.695
3-hour	0.37	0.51	0.61	0.74	0.85	0.95	1.19
6-hour	0.20	0.28	0.34	0.41	0.47	0.52	0.66
12-hour	0.11	0.15	0.18	0.22	0.26	0.29	0.36
24-hour	0.058	0.083	0.099	0.12	0.14	0.16	0.20

Note: 5" denotes 5 minutes, etc.; 1' denotes 1 hour, etc.

Figure 1–2
Rainfall Depth–Duration–Frequency (D–D–F) Worksheet
(Continued)

Part E

Tabulate the rainfall Depth–Duration–Frequency statistics below:

Duration	Rainfall Depth, in inches Frequency, in Years						
	2	5	10	25	50	100	500
5–min	0.33	0.43	0.50	0.59	0.67	0.75	0.92
10–min *	0.49	0.65	0.76	0.91	1.03	1.14	1.41
15–min	0.59	0.81	0.95	1.15	1.31	1.47	1.82
30–min *	0.79	1.08	1.28	1.56	1.77	1.99	2.48
1–hour	0.96	1.34	1.59	1.94	2.21	2.48	3.11
2–hour	1.04	1.45	1.73	2.12	2.41	2.71	3.39
3–hour	1.10	1.53	1.83	2.23	2.55	2.86	3.58
6–hour	1.20	1.68	2.01	2.45	2.80	3.14	3.93
12–hour	1.30	1.83	2.19	2.68	3.06	3.44	4.31
24–hour	1.40	1.98	2.37	2.91	3.33	3.74	4.69

* Note: 10–min and 30–min values are not coded into the PH record
5" denotes 5 minute, etc; 1' denotes 1 hour, etc.

ARIZONA DEPARTMENT OF TRANSPORTATION
HYDROLOGIC DESIGN DATA

Project No.	RAM 600-2-514	TRACS No.	051 MA 009 H-2059 01C
Project Name	SR 51	Date	03 January 1994
Location/Station	Shea Blvd to Thunderbird Road		
Designer	Dave Schaub	Checker	

Figure 1-2
Rainfall Depth-Duration-Frequency (D-D-F) Worksheet

PART A

Determine rainfall depths from the isopluvial maps (Appendix B):

2-year, 6-hour		P 2,6'	=	1.20
2-year, 24-hour		P 2,24'	=	1.40
100-year, 6-hour		P 100,6'	=	3.14
100-year, 24-hour		P 100,24'	=	3.74

PART B

Compute the following:

2-year, 1-hour	$-0.011 + \frac{.942(P_{2,6'})^2}{(P_{2,24'})}$	=	-0.01	+	$\frac{.942\ (1.20)^2}{1.40}$			=	0.96
100-year, 1-hour	$.494 + \frac{.755(P_{100,6'})^2}{(P_{100,24'})}$	=	.494	+	$\frac{.755\ (3.14)^2}{3.74}$			=	2.48
2-year, 2-hour	$.341(P_{2,6'}) + .659(P_{2,1'})$	=	0.341 (	1.20)	+	0.659 (	0.96)	=	1.04
2-year, 3-hour	$.569(P_{2,6'}) + .431(P_{2,1'})$	=	0.569 (	1.20)	+	0.431 (	0.96)	=	1.10
2-year, 12-hour	$.500(P_{2,6'}) + .500(P_{2,24'})$	=	0.500 (	1.20)	+	0.500 (	1.40)	=	1.30
100-year, 2-hour	$.341(P_{100,6'}) + .431(P_{100,1'})$	=	0.341 (	3.14)	+	0.659 (	2.48)	=	2.71
100-year, 3-hour	$.569(P_{100,6'}) + .431(P_{100,1'})$	=	0.569 (	3.14)	+	0.431 (	2.48)	=	2.86
100-year, 12-hour	$.500(P_{100,6'}) + .500(P_{100,24'})$	=	0.500 (	3.14)	+	0.500 (	3.74)	=	3.44

Note: 5" denotes 5 mintes, etc; 1' denotes 1 hour, etc.

Figure 1–2
Rainfall Depth–Duration–Frequency (D–D–F) Worksheet
(Continued)

Part C

Determine the short–duration zone (Figure 1–1):

Zone = 8

Determine the short–duration rainfall ratios (Table 1–1):

Duration (Minutes)	Ratio			
	2–year		100–year	
5	A=	0.34	E=	0.30
10	B=	0.51	F=	0.46
15	C=	0.62	G=	0.59
30	D=	0.82	H=	0.80

Compute the following:

2–year, 5–min	(A) ($P_{2,1'}$)	=	0.34	*	0.96	$P_{2,5''}$	=	0.33
2–year, 10–min	(B) ($P_{2,1'}$)	=	0.51	*	0.96	$P_{2,10''}$	=	0.49
2–year, 15–min	(C) ($P_{2,1'}$)	=	0.62	*	0.96	$P_{2,15''}$	=	0.59
2–year, 30–min	(D) ($P_{2,1'}$)	=	0.82	*	0.96	$P_{2,30''}$	=	0.79
100–year, 5–min	(E) ($P_{100,1'}$)	=	0.30	*	2.48	$P_{100,5''}$	=	0.75
100–year, 10–min	(F) ($P_{100,1'}$)	=	0.46	*	2.48	$P_{100,10''}$	=	1.14
100–year, 15–min	(G) ($P_{100,1'}$)	=	0.59	*	2.48	$P_{100,15''}$	=	1.47
100–year, 30–min	(H) ($P_{100,1'}$)	=	0.80	*	2.48	$P_{100,30''}$	=	1.99

Note: 5" denotes 5 minutes, etc; 1' denotes 1 hour, etc.

(Continued)

Part D

For any flood frequency (T–yr) other than 2–year or 100–year, calculate the rainfall depth for each rainfall duration (t) by the following equation:

$$P_{T,t} = (X)(P_{2,t}) + (Y)(P_{100,t})$$

where X and Y for a selected frequency (T–yr) are:

Frequency (T–yr)	X	Y
5–year	0.674	0.278
10–year	0.496	0.449
25–year	0.293	0.669
50–year	0.146	0.835
500–year	–0.337	1.381

Selected frequency (T–yr) 5 yr X = 0.674 Y = 0.278

5–min	$(X)(P_{2,5''}) + (Y)(P_{100,5''})$	=	(	0.674) (	0.33) + (	0.278) (	0.75)	$P_{10,5''}$	=	0.427
10–min	$(X)(P_{2,10''}) + (Y)(P_{100,10''})$	=	(	0.674) (	0.49) + (	0.278) (	1.14)	$P_{10,10''}$	=	0.647
15–min	$(X)(P_{2,15''}) + (Y)(P_{100,15''})$	=	(	0.674) (	0.59) + (	0.278) (	1.47)	$P_{10,15''}$	=	0.808
30–min	$(X)(P_{2,30''}) + (Y)(P_{100,30''})$	=	(	0.674) (	0.79) + (	0.278) (	1.99)	$P_{10,30''}$	=	1.082
1–hour	$(X)(P_{2,1'}) + (Y)(P_{100,1'})$	=	(	0.674) (	0.96) + (	0.278) (	2.48)	$P_{10,1'}$	=	1.336
2–hour	$(X)(P_{2,2'}) + (Y)(P_{100,2'})$	=	(	0.674) (	1.04) + (	0.278) (	2.71)	$P_{10,2'}$	=	1.454
3–hour	$(X)(P_{2,3'}) + (Y)(P_{100,3'})$	=	(	0.674) (	1.10) + (	0.278) (	2.86)	$P_{10,3'}$	=	1.533
6–hour	$(X)(P_{2,6'}) + (Y)(P_{100,6'})$	=	(	0.674) (	1.20) + (	0.278) (	3.14)	$P_{10,6'}$	=	1.682
12–hour	$(X)(P_{2,12'}) + (Y)(P_{100,12'})$	=	(	0.674) (	1.30) + (	0.278) (	3.44)	$P_{10,12'}$	=	1.833
24–hour	$(X)(P_{2,24'}) + (Y)(P_{100,24'})$	=	(	0.674) (	1.40) + (	0.278) (	3.74)	$P_{10,24'}$	=	1.983

Note: 5" denotes 5 minutes, etc; 1' denotes 1 hour, etc.

Figure 1–2
Rainfall Depth–Duration–Frequency (D–D–F) Worksheet
(Continued)

Part D

For any flood frequency (T–yr) other than 2–year or 100–year, calculate the rainfall depth for each rainfall duration (*t*) by the following equation:

$$P_{T,t} = (X)\,(P_{2,t}) + (Y)\,(P_{100,t})$$

where X and Y for a selected frequency (T–yr) are:

Frequency (T–yr)	X	Y
5–year	0.674	0.278
10–year	0.496	0.449
25–year	0.293	0.669
50–year	0.146	0.835
500–year	–0.337	1.381

Selected frequency (T–yr) 10 yr X = 0.496 Y = 0.449

5–min	$(X)\,(P_{2,5''}) + (Y)\,(P_{100,5''})$	=	(	0.496) (	0.33) + (	0.449) (	0.75)	$P_{10,5''}$	=	0.496
10–min	$(X)\,(P_{2,10''}) + (Y)\,(P_{100,10''})$	=	(	0.496) (	0.49) + (	0.449) (	1.14)	$P_{10,10''}$	=	0.755
15–min	$(X)\,(P_{2,15''}) + (Y)\,(P_{100,15''})$	=	(	0.496) (	0.59) + (	0.449) (	1.47)	$P_{10,15''}$	=	0.953
30–min	$(X)\,(P_{2,30''}) + (Y)\,(P_{100,30''})$	=	(	0.496) (	0.79) + (	0.449) (	1.99)	$P_{10,30''}$	=	1.282
1–hour	$(X)\,(P_{2,1'}) + (Y)\,(P_{100,1'})$	=	(	0.496) (	0.96) + (	0.449) (	2.48)	$P_{10,1'}$	=	1.590
2–hour	$(X)\,(P_{2,2'}) + (Y)\,(P_{100,2'})$	=	(	0.496) (	1.04) + (	0.449) (	2.71)	$P_{10,2'}$	=	1.732
3–hour	$(X)\,(P_{2,3'}) + (Y)\,(P_{100,3'})$	=	(	0.496) (	1.10) + (	0.449) (	2.86)	$P_{10,3'}$	=	1.826
6–hour	$(X)\,(P_{2,6'}) + (Y)\,(P_{100,6'})$	=	(	0.496) (	1.20) + (	0.449) (	3.14)	$P_{10,6'}$	=	2.005
12–hour	$(X)\,(P_{2,12'}) + (Y)\,(P_{100,12'})$	=	(	0.496) (	1.30) + (	0.449) (	3.44)	$P_{10,12'}$	=	2.189
24–hour	$(X)\,(P_{2,24'}) + (Y)\,(P_{100,24'})$	=	(	0.496) (	1.40) + (	0.449) (	3.74)	$P_{10,24'}$	=	2.374

Note: 5" denotes 5 minutes, etc; 1' denotes 1 hour, etc.

Figure 1–2
Rainfall Depth–Duration–Frequency (D–D–F) Worksheet
(Continued)

Part D

For any flood frequency (T–yr) other than 2–year or 100–year, calculate the rainfall depth for each rainfall duration (*t*) by the following equation:

$$P_{T,t} = (X)\,(P_{2,t}) + (Y)\,(P_{100,t})$$

where X and Y for a selected frequency (T–yr) are:

Frequency (T–yr)	X	Y
5–year	0.674	0.278
10–year	0.496	0.449
25–year	0.293	0.669
50–year	0.146	0.835
500–year	–0.337	1.381

Selected frequency (T–yr) 25 yr X = 0.293 Y = 0.669

5–min	$(X)\,(P_{2,5''}) + (Y)\,(P_{100,5''})$	=	(	0.293) (	0.33) + (	0.669) (	0.75)	$P_{10,5''}$	=	0.594
10–min	$(X)\,(P_{2,10''}) + (Y)\,(P_{100,10''})$	=	(	0.293) (	0.49) + (	0.669) (	1.14)	$P_{10,10''}$	=	0.908
15–min	$(X)\,(P_{2,15''}) + (Y)\,(P_{100,15''})$	=	(	0.293) (	0.59) + (	0.669) (	1.47)	$P_{10,15''}$	=	1.154
30–min	$(X)\,(P_{2,30''}) + (Y)\,(P_{100,30''})$	=	(	0.293) (	0.79) + (	0.669) (	1.99)	$P_{10,30''}$	=	1.560
1–hour	$(X)\,(P_{2,1'}) + (Y)\,(P_{100,1'})$	=	(	0.293) (	0.96) + (	0.669) (	2.48)	$P_{10,1'}$	=	1.942
2–hour	$(X)\,(P_{2,2'}) + (Y)\,(P_{100,2'})$	=	(	0.293) (	1.04) + (	0.669) (	2.71)	$P_{10,2'}$	=	2.116
3–hour	$(X)\,(P_{2,3'}) + (Y)\,(P_{100,3'})$	=	(	0.293) (	1.10) + (	0.669) (	2.86)	$P_{10,3'}$	=	2.233
6–hour	$(X)\,(P_{2,6'}) + (Y)\,(P_{100,6'})$	=	(	0.293) (	1.20) + (	0.669) (	3.14)	$P_{10,6'}$	=	2.452
12–hour	$(X)\,(P_{2,12'}) + (Y)\,(P_{100,12'})$	=	(	0.293) (	1.30) + (	0.669) (	3.44)	$P_{10,12'}$	=	2.682
24–hour	$(X)\,(P_{2,24'}) + (Y)\,(P_{100,24'})$	=	(	0.293) (	1.40) + (	0.669) (	3.74)	$P_{10,24'}$	=	2.912

Note: 5" denotes 5 minutes, etc; 1' denotes 1 hour, etc.

Figure 1–2
Rainfall Depth–Duration–Frequency (D–D–F) Worksheet
(Continued)

Part D

For any flood frequency (T–yr) other than 2–year or 100–year, calculate the rainfall depth for each rainfall duration (*t*) by the following equation:

$$P_{T,t} = (X)\,(P_{2,t}) + (Y)\,(P_{100,t})$$

where X and Y for a selected frequency (T–yr) are:

Frequency (T–yr)	X	Y
5–year	0.674	0.278
10–year	0.496	0.449
25–year	0.293	0.669
50–year	0.146	0.835
500–year	–0.337	1.381

Selected frequency (T–yr) 50 yr X = 0.146 Y = 0.835

5–min	$(X)\,(P_{2,5''}) + (Y)\,(P_{100,5''})$	=	(	0.146) (	0.33) + (	0.835) (	0.75)	$P_{10,5''}$	=	0.670
10–min	$(X)\,(P_{2,10''}) + (Y)\,(P_{100,10''})$	=	(	0.146) (	0.49) + (	0.835) (	1.14)	$P_{10,10''}$	=	1.025
15–min	$(X)\,(P_{2,15''}) + (Y)\,(P_{100,15''})$	=	(	0.146) (	0.59) + (	0.835) (	1.47)	$P_{10,15''}$	=	1.310
30–min	$(X)\,(P_{2,30''}) + (Y)\,(P_{100,30''})$	=	(	0.146) (	0.79) + (	0.835) (	1.99)	$P_{10,30''}$	=	1.774
1–hour	$(X)\,(P_{2,1'}) + (Y)\,(P_{100,1'})$	=	(	0.146) (	0.96) + (	0.835) (	2.48)	$P_{10,1'}$	=	2.214
2–hour	$(X)\,(P_{2,2'}) + (Y)\,(P_{100,2'})$	=	(	0.146) (	1.04) + (	0.835) (	2.71)	$P_{10,2'}$	=	2.413
3–hour	$(X)\,(P_{2,3'}) + (Y)\,(P_{100,3'})$	=	(	0.146) (	1.10) + (	0.835) (	2.86)	$P_{10,3'}$	=	2.546
6–hour	$(X)\,(P_{2,6'}) + (Y)\,(P_{100,6'})$	=	(	0.146) (	1.20) + (	0.835) (	3.14)	$P_{10,6'}$	=	2.797
12–hour	$(X)\,(P_{2,12'}) + (Y)\,(P_{100,12'})$	=	(	0.146) (	1.30) + (	0.835) (	3.44)	$P_{10,12'}$	=	3.062
24–hour	$(X)\,(P_{2,24'}) + (Y)\,(P_{100,24'})$	=	(	0.146) (	1.40) + (	0.835) (	3.74)	$P_{10,24'}$	=	3.327

Note: 5" denotes 5 minutes, etc; 1' denotes 1 hour, etc.

Figure 1–2
Rainfall Depth–Duration–Frequency (D–D–F) Worksheet
(Continued)

Part D

For any flood frequency (T–yr) other than 2–year or 100–year, calculate the rainfall depth for each rainfall duration (*t*) by the following equation:

$$P_{T,t} = (X)\,(P_{2,t}) + (Y)\,(P_{100,t})$$

where X and Y for a selected frequency (T–yr) are:

Frequency (T–yr)	X	Y
5–year	0.674	0.278
10–year	0.496	0.449
25–year	0.293	0.669
50–year	0.146	0.835
500–year	–0.337	1.381

Selected frequency (T–yr) 500 yr X = –0.337 Y = 1.381

5–min	$(X)\,(P_{2,5''}) + (Y)\,(P_{100,5''})$	=	(–0.337) (	0.33) + (	1.381) (	0.75)	$P_{10,5''}$	=	0.919
10–min	$(X)\,(P_{2,10''}) + (Y)\,(P_{100,10''})$	=	(–0.337) (	0.49) + (	1.381) (	1.14)	$P_{10,10''}$	=	1.413
15–min	$(X)\,(P_{2,15''}) + (Y)\,(P_{100,15''})$	=	(–0.337) (	0.59) + (	1.381) (	1.47)	$P_{10,15''}$	=	1.824
30–min	$(X)\,(P_{2,30''}) + (Y)\,(P_{100,30''})$	=	(–0.337) (	0.79) + (	1.381) (	1.99)	$P_{10,30''}$	=	2.480
1–hour	$(X)\,(P_{2,1'}) + (Y)\,(P_{100,1'})$	=	(–0.337) (	0.96) + (	1.381) (	2.48)	$P_{10,1'}$	=	3.108
2–hour	$(X)\,(P_{2,2'}) + (Y)\,(P_{100,2'})$	=	(–0.337) (	1.04) + (	1.381) (	2.71)	$P_{10,2'}$	=	3.389
3–hour	$(X)\,(P_{2,3'}) + (Y)\,(P_{100,3'})$	=	(–0.337) (	1.10) + (	1.381) (	2.86)	$P_{10,3'}$	=	3.577
6–hour	$(X)\,(P_{2,6'}) + (Y)\,(P_{100,6'})$	=	(–0.337) (	1.20) + (	1.381) (	3.14)	$P_{10,6'}$	=	3.932
12–hour	$(X)\,(P_{2,12'}) + (Y)\,(P_{100,12'})$	=	(–0.337) (	1.30) + (	1.381) (	3.44)	$P_{10,12'}$	=	4.313
24–hour	$(X)\,(P_{2,24'}) + (Y)\,(P_{100,24'})$	=	(–0.337) (	1.40) + (	1.381) (	3.74)	$P_{10,24'}$	=	4.693

Note: 5" denotes 5 minutes, etc; 1' denotes 1 hour, etc.

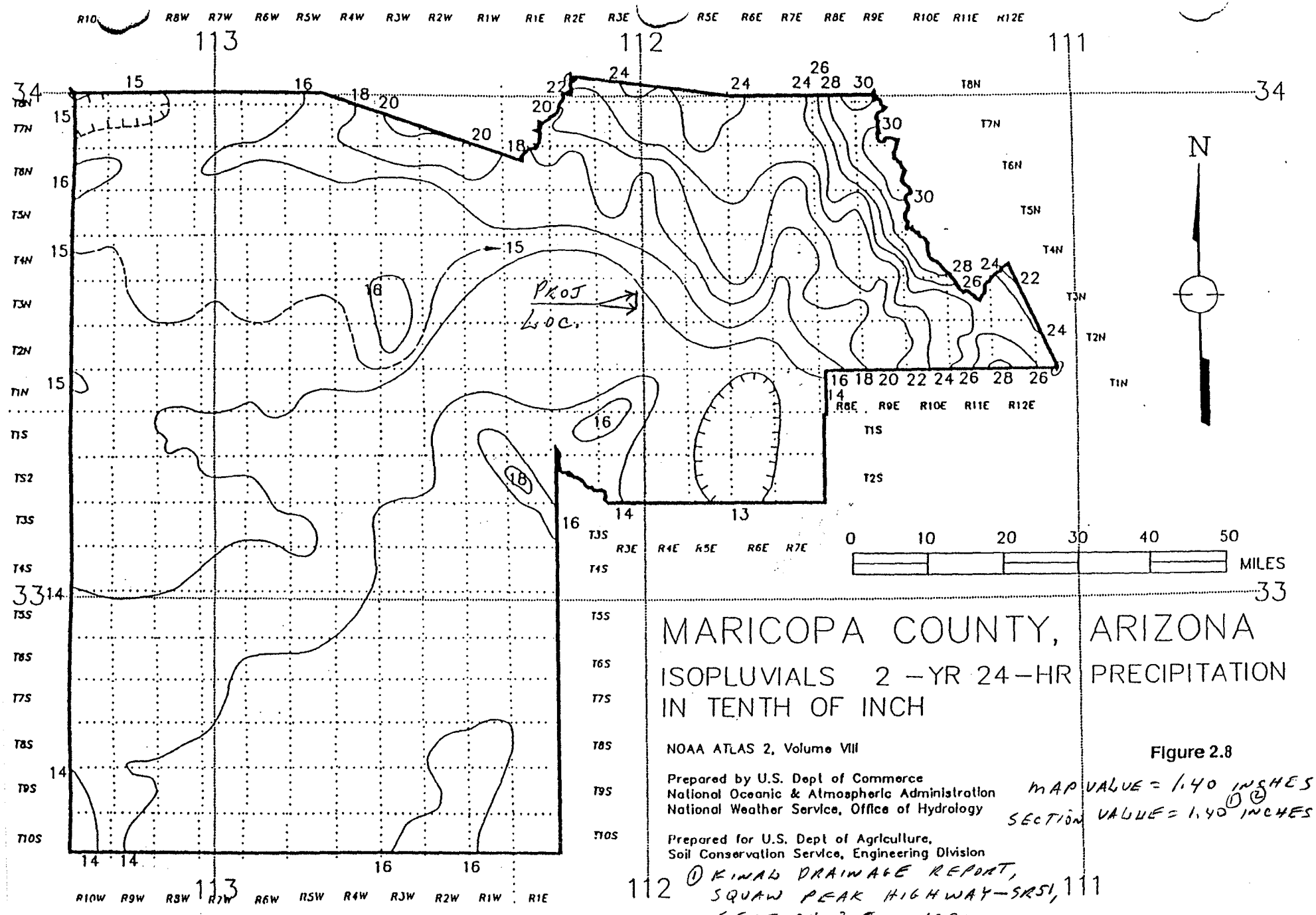

MARICOPA COUNTY, ARIZONA

ISOPLUVIALS 2 –YR 24–HR PRECIPITATION IN TENTH OF INCH

NOAA ATLAS 2, Volume VIII

Prepared by U.S. Dept of Commerce
National Oceanic & Atmospheric Administration
National Weather Service, Office of Hydrology

Prepared for U.S. Dept of Agriculture,
Soil Conservation Service, Engineering Division

Figure 2.8

MAP VALUE = 1.40 INCHES
SECTION VALUE = 1.40 ① ② INCHES

① KINAB DRAINAGE REPORT, SQUAW PEAK HIGHWAY–SR51, SECTION 3, May 1992.
② use this value

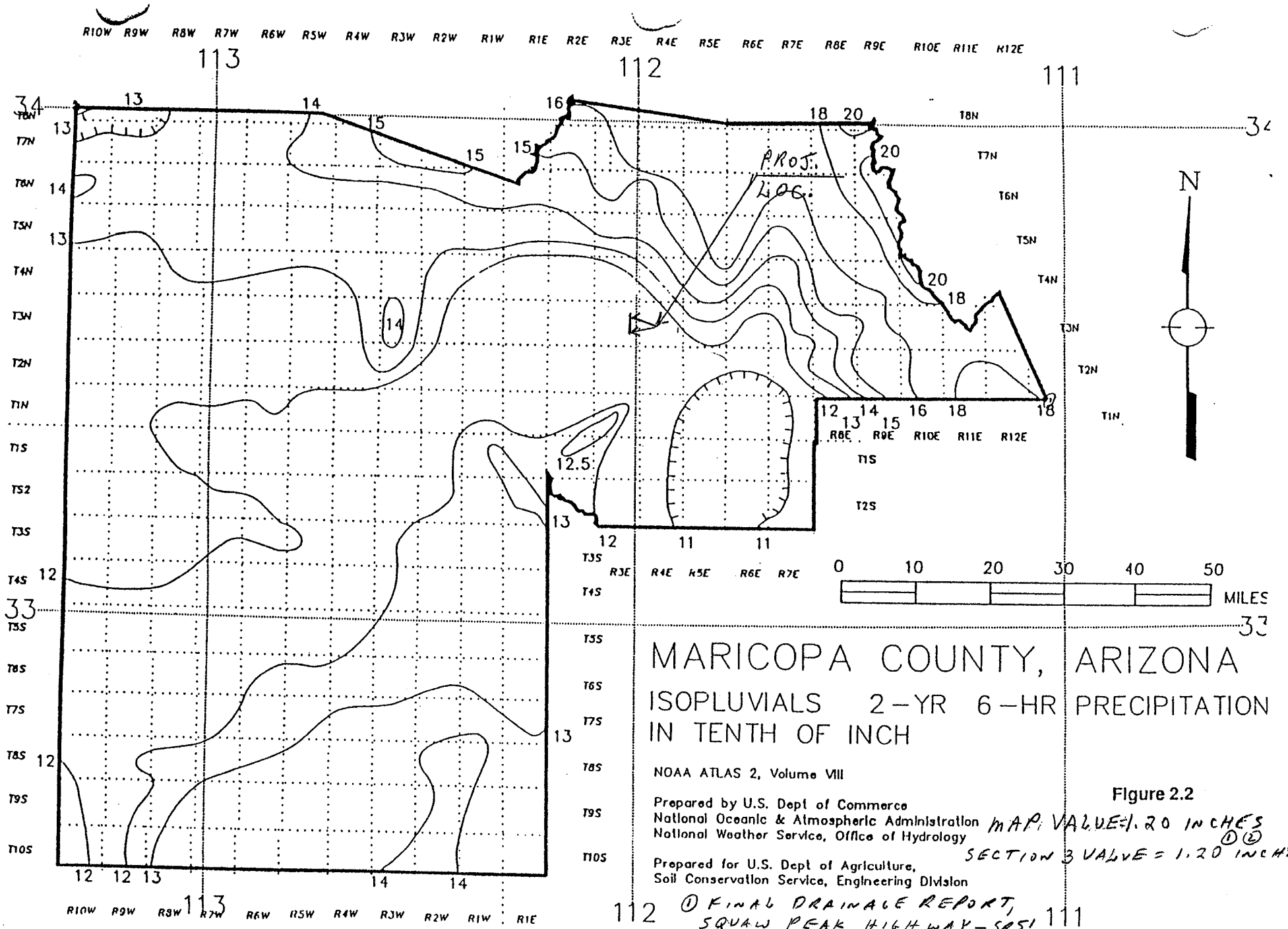

MARICOPA COUNTY, ARIZONA

ISOPLUVIALS 2-YR 6-HR PRECIPITATION IN TENTH OF INCH

NOAA ATLAS 2, Volume VIII

Prepared by U.S. Dept of Commerce
National Oceanic & Atmospheric Administration
National Weather Service, Office of Hydrology

Prepared for U.S. Dept of Agriculture,
Soil Conservation Service, Engineering Division

Figure 2.2

MAP VALUE=1.20 INCHES

SECTION 3 VALUE = 1.20 INCHES ①②

① FINAL DRAINAGE REPORT, SQUAW PEAK HIGHWAY-SR51, SECTION 3, MAY 1992.

② USE THIS VALUE

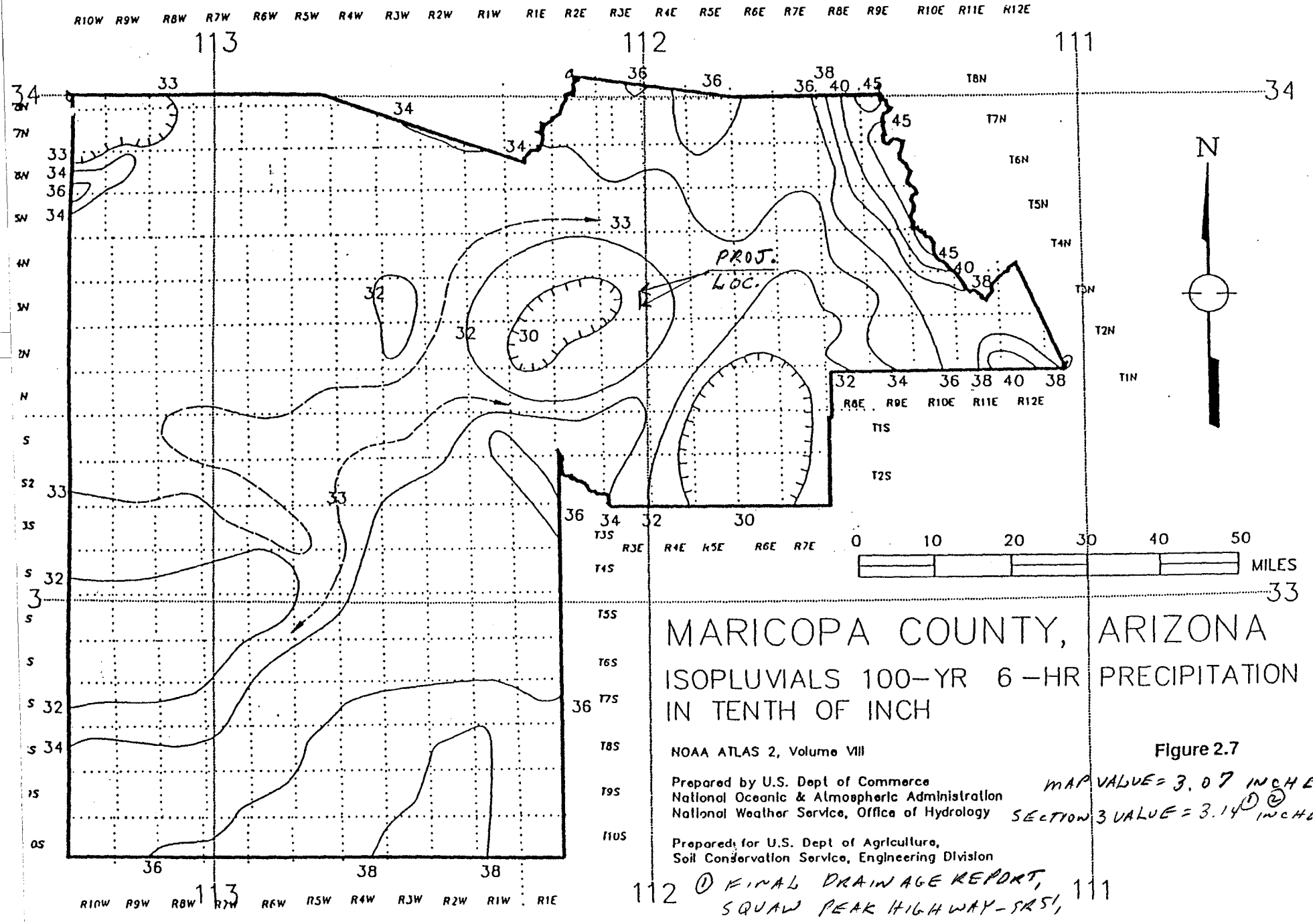

MARICOPA COUNTY, ARIZONA

ISOPLUVIALS 100-YR 6-HR PRECIPITATION IN TENTH OF INCH

NOAA ATLAS 2, Volume VIII

Prepared by U.S. Dept of Commerce
National Oceanic & Atmospheric Administration
National Weather Service, Office of Hydrology

Prepared for U.S. Dept of Agriculture,
Soil Conservation Service, Engineering Division

Figure 2.7

MAP VALUE = 3.07 INCHES
SECTION 3 VALUE = 3.14 ① ② INCHES

① FINAL DRAINAGE REPORT, SQUAW PEAK HIGHWAY-SR51, SECTION 3, MAY 1992.
② USE THIS VALUE

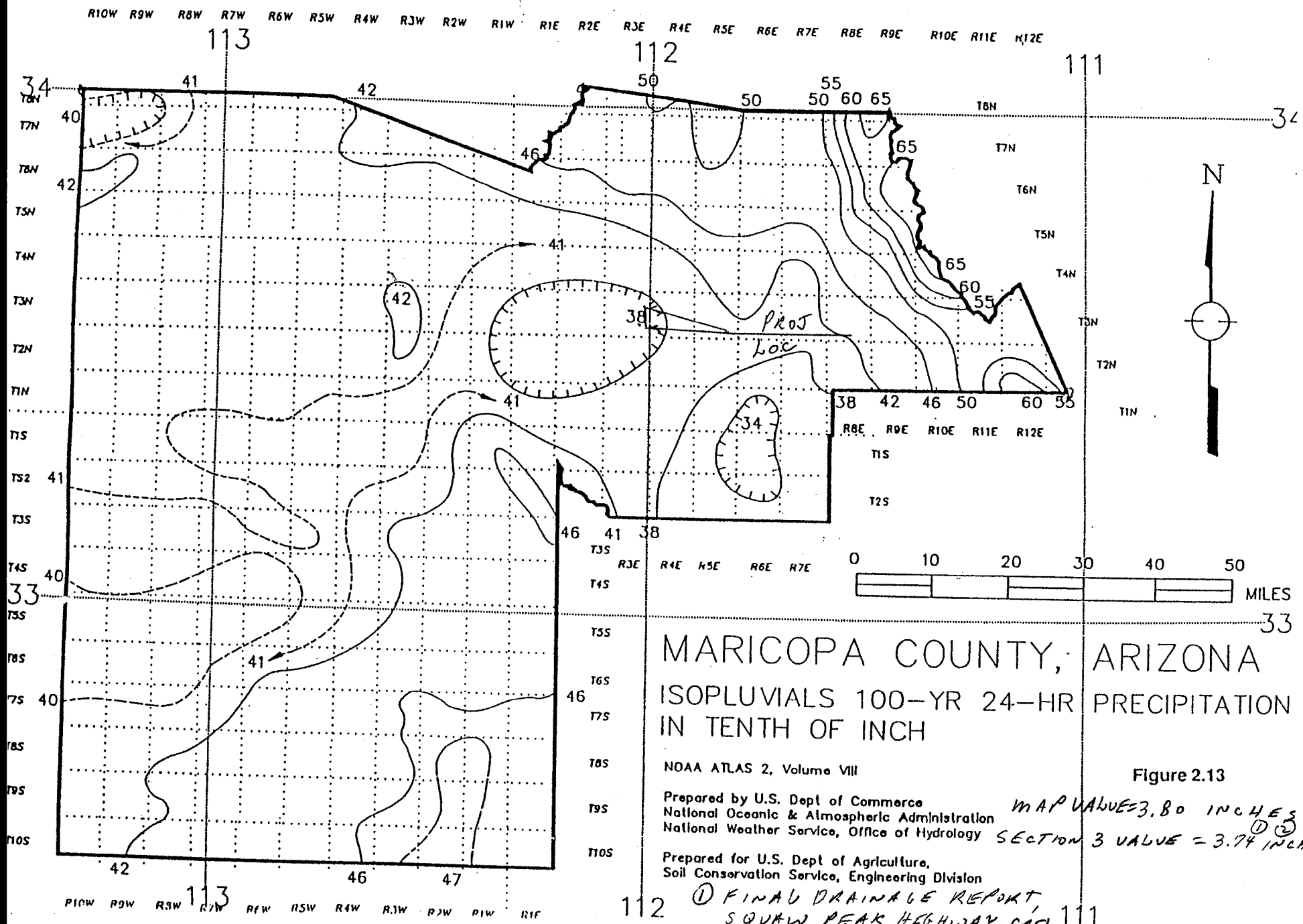

MARICOPA COUNTY, ARIZONA

ISOPLUVIALS 100-YR 24-HR PRECIPITATION IN TENTH OF INCH

NOAA ATLAS 2, Volume VIII

Prepared by U.S. Dept of Commerce
National Oceanic & Atmospheric Administration
National Weather Service, Office of Hydrology

Prepared for U.S. Dept of Agriculture,
Soil Conservation Service, Engineering Division

Figure 2.13

MAP VALUE=3.80 INCHES
SECTION 3 VALUE = 3.74 INCHES ① ②

① FINAL DRAINAGE REPORT, SQUAW PEAK HIGHWAY-SR51, SECTION 3, MAY 1992.
② USE this value.