FLOOD CONTROL DISTRICT
RECEIVED
JUN 09'78

Reference
DACW09-78-B-0017

Property of
Flood Control District of MC Library
Please Return to
2801 W. Durango
Phoenix, AZ 85009

SPECIFICATIONS

for

INDIAN BEND WASH

INLET CHANNEL

MARICOPA COUNTY, ARIZONA

Gila River Basin, Arizona

Appropriation: 96x3122 Construction General
Corps of Engineers, Civil

96x8862 Contributed Funds, Other

U S Army Engineer District
Los Angeles
Corps of Engineers

A680.502

STANDARD FORM 20
JANUARY 1961 EDITION
GENERAL SERVICES ADMINISTRATION
FED. PROC. REG. (41 CFR) 1-16.401

REFERENCE

DACW09-78-B-0017

INVITATION FOR BIDS
(CONSTRUCTION CONTRACT)

DATE

1 June 1978

NAME AND LOCATION OF PROJECT

INDIAN BEND WASH
INLET CHANNEL
MARICOPA COUNTY
ARIZONA

DEPARTMENT OR AGENCY

DEPARTMENT OF THE ARMY

BY (*Issuing office*)

U. S. ARMY ENGINEER DISTRICT, LOS ANGELES

Sealed bids in duplicate for the work described herein will be received until 1 p.m. local time at the place of bid opening, 29 June 1978

at Room 1030 (South Tower), 2721 North Central Avenue, Phoenix, Arizona 85004

and at that time publicly opened.

Information regarding bidding material, bid guarantee, and bonds

BID BONDS. Each bidder shall submit with his bid a Bid Bond (Standard Form 24) with good and sufficient surety or sureties acceptable to the Government, or other security as provided in paragraph 4 of Instructions to Bidders (Standard Form 22) in the form of 20% of the bid price or $3,000,000, whichever is lesser. The bid bond penalty may be expressed in terms of a percentage of the bid price or may be expressed in dollars and cents.

PERFORMANCE AND PAYMENT BONDS. Within 5 days after the prescribed forms are presented to the bidder to whom award is made for signature, a written contract on the form prescribed by the specifications shall be executed and two bonds, each with good and sufficient surety or sureties acceptable to the Government, furnished; namely a performance bond (Standard Form 25) and a payment bond (Standard Form 25-A). The penal sums of such bonds will be as follows:

(a) Performance Bond. The penal sum of the performance bond shall equal 100% of the contract price.

(b) Payment Bond.

(1) When the contract price is $1,000,000 or less, the penal sum will be 50% of the contract price

(2) When the contract price is in excess of $1,000,000, but not more than $5,000,000 the penal sum shall be 40% of the contract price.

(3) When the contract price is more than $5,000,000, the penal sum shall be $2,500,000.

Any bonds furnished will be furnished by the Contractor to the Government prior to commencement of contract performance.

Description of work

The work consists of inlet channel, inclosed concrete siphon, wasteway channel, riding and hiking trail, recorder house and gaging station, control house and appurtenant works, complete.

☆ U.S. GOVERNMENT PRINTING OFFICE: 1961—O-572728

READ THE FOLLOWING IN CONJUNCTION WITH INSTRUCTIONS TO BIDDERS (U.S. STANDARD FORM 22).

1. PLANT AND EQUIPMENT. Each bidder shall, upon request of the Contracting Officer, furnish a list of the plant available to the bidder and proposed for use on the work. 10/11/65

2. MODIFICATIONS PRIOR TO DATE SET FOR OPENING BIDS. The right is reserved, as the interest of the Government may require, to revise or amend the specifications or drawings, or both prior to the date set for opening bids. Such revisions and amendments, if any, will be announced by an amendment or amendments to this Invitation for Bids. If the revisions and amendments are of a nature which requires material changes in quantities or prices bid or both, the date set for opening bids may be postponed by such number of days as in the opinion of the District Engineer will enable bidders to revise their bids. In such cases, the amendment will include an announcement of the new date for opening bids. 3/22/65

3. BIDDERS are required to acknowledge receipt of all amendments to this Invitation on the Bid Form (Standard Form 21) in the space provided, or by separate letter or telegram prior to opening of Bids. Failure to acknowledge all amendments may cause the rejection of the bid. 1/13/65

4. NOTICE REGARDING BUY AMERICAN ACT (1970 SEP). The Buy American Act (41 U.S.C. 10a-10d) generally requires that only domestic construction material be used in the performance of this contract. Exception from the Buy American Act shall be permitted only in the case of nonavailability of domestic construction materials. A bid or proposal offering nondomestic construction material will not be accepted unless specifically approved by the Government. When a bidder or offeror proposes to furnish nondomestic construction material, his bid or proposal must set forth an itemization of the quantity, unit price, and intended use of each item of such nondomestic construction material. When offering nondomestic construction material pursuant to this paragraph, bids or proposals may also offer, at stated prices, any available comparable domestic construction material, so as to avoid the possibility that failure of a nondomestic construction material to be acceptable under this paragraph will cause rejection of the entire bid. 12/1/70

5. AVAILABILITY OF SPECIFICATIONS, STANDARDS AND DESCRIPTIONS (1977 JUN) Specifications, standards and descriptions cited in this solicitation are available as indicated below:

5.1 Unclassified Federal, Military and Other Specifications and Standards (Excluding Commercial), and Data Item Descriptions. Submit request on DD Form 1425 (Specifications and Standards Requisition) to:

Commanding Officer
U.S. Naval Publications and Forms Center
5801 Tabor Avenue – Philadelphia, Pa. 19120

The Acquisition Management Systems and Data Requirements Control List, DoD Directive 5000.19-L, Volume II, may be ordered on the DD Form 1425. The Department of Defense Index of Specifications and Standards (DODISS) may be purchased from the Superintendent of Documents, U.S. Government Printing Office, Washington, D. C., 20402. When requesting a specification or standard, the request shall indicate the title, number, date and any applicable amendment thereto by number and date. When requesting a data item description, the request shall cite the applicable data item number set forth in the solicitation. When DD Form 1425 is not available, the request may be submitted in letter form, giving the same information as listed above, and the solicitation or contract number involved. Such requests may also be made to the activity by Telex No. 834295, Western Union No. 710-670-1685, or telephone (area code 215-697-3321) in case of urgency. 8/25/77

5.2 Commercial Specifications, Standards and Descriptions. These specifications, standards and descriptions are not available from Government sources. They may be obtained from the publishers.

6. AVAILABILITY FOR EXAMINATION OF SPECIFICATIONS, STANDARDS, DRAWINGS, AND OTHER PERTINENT DOCUMENTS. The specifications, standards, drawings, and other pertinent documents cited in this solicitation may be examined at the following location:

U.S. Army Engineer District, Los Angeles
300 No. Los Angeles Street
Los Angeles, California 90053

7. In addition to the immediate site of construction, the Department of Labor has stated that the Davis-Bacon Act applies to Contractor's operations connected with temporary facilities located off the immediate site of construction such as batch plants, sand pits, rock quarries and similar operations which have been set up exclusively to furnish materials for the contract. Therefore, employees related to these temporary facilities are considered on-site employees, and the Contractor shall maintain complete records as set out in the Labor Standards Provisions of the contract. 4/15/71

8. The Government further reserves the right to make award of any or all schedules of any bid, unless the bidder qualifies such bid by specific limitation; also to make award to the bidder whose aggregate bid on any combination of bid schedules is low. For the purpose of this Invitation for Bids, the word "item" as used in paragraph 10(c) of Standard Form 22, shall be considered to mean "schedule."

Read the following in conjunction with instructions to bidders (U.S. Standard Form 22.)

9. DRAWINGS. Sets of drawings, half-size, and of specifications will be furnished upon receipt of payment $6.90 per set. If individual plan sheets are requested, they will be furnished at the rate of $0.10 for half-size, for each sheet requested, but with a minimum charge of $1.00. The maximum charge shall not exceed the charge for a full set of plans. No refund of the payment for drawings will be made and the drawings need not be returned to the District Engineer. Additional copies of the specifications alone will be furnished an applicant at the rate of $1.00 per copy. Payments will be made by cash, check or money order and delivered to the U. S. Army Engineer District, Los Angeles, 300 North Los Angeles Street, Los Angeles, California. Checks and money orders should be made payable to "Treasurer of the United States."

10. HAND CARRIED BIDS. Hand carried bids shall be deposited in Room 1030 (South Tower), 2721 North Central Avenue, Phoenix, Arizona, prior to the time and date set for opening of bids or bids may be delivered to Room 1030 immediately prior to bid opening time.

11. TELEGRAPHIC MODIFICATIONS TO BIDS should be addressed to:

U. S. Army Engineer District, Los Angeles
Resident Office
2721 North Central Avenue
Phoenix, Arizona 85004

12. NOTE THE AFFIRMATIVE ACTION REQUIREMENT OF THE EQUAL OPPORTUNITY CLAUSE WHICH MAY APPLY TO THE CONTRACT RESULTING FROM THIS SOLICITATION.

13. NOTE THE CERTIFICATION OF NONSEGREGATED FACILITIES IN THIS SOLICITATION. Bidders, offerors and applicants are cautioned to note the "Certification of Non-Segregated Facilities" in the solicitation. Failure of a bidder or offeror to agree to the certification will render his bid or offer nonresponsive to the terms of solicitations involving awards of contracts exceeding $10,000 which are not exempt from the provisions of the Equal Opportunity clause. (1975 OCT)

14. ADDITIONAL INFORMATION pertaining to these plans and specifications may be obtained by writing or calling (collect calls not accepted) U. S. Army Engineer District, Los Angeles, Attn: Mr. S. M. Ackerman, P. O. Box 2711, Los Angeles, California 90053. Telephone 213 688-5493.

15. ARITHMETIC DISCREPANCIES.

(a) For the purpose of initial evaluation of bids, the following will be utilized in resolving arithmetic discrepancies found on the face of the bidding schedule as submitted by bidders:

(1) Obviously misplaced decimal points will be corrected;

(2) In case of discrepancy between unit price and extended price, the unit price will govern;

(3) Apparent errors in extension of unit prices will be corrected; and

(4) Apparent errors in addition of lump-sum and extended prices will be corrected.

(b) For the purposes of bid evaluation, the Government will proceed on the assumption that the bidder intends his bid to be evaluated on the basis of the unit prices, extensions, and totals arrived at by resolution of arithmetic discrepancies as provided above and the bid will be so reflected on the abstract of bids.

16. MINIMUM ACCEPTANCE PERIOD (1975 MAR). Bids allowing less than the number of calendar days specified in the "Bid" portion of SF 19 (or on the reverse of SF 21 as applicable) for acceptance by the Government will be rejected as nonresponsive.

17. PRE-AWARD ON SITE EQUAL OPPORTUNITY COMPLIANCE REVIEW (1970 AUG). In accordance with regulations of the Office of Federal Contract Compliance, 41 CFR 60.1, effective 1 July 1968, and award in the amount of $1,000,000 or more will not be made under this solicitation unless the bidder and each of his known first-tier subcontractors (to whom he intends to award a subcontract of $1,000,000 or more) are found, on the basis of a compliance review, to be able to comply with the provisions of the Equal Opportunity clause of this solicitation.

* * * * *

NOTICE OF REQUIREMENT FOR AFFIRMATIVE ACTION TO ENSURE EQUAL EMPLOYMENT OPPORTUNITY (EXECUTIVE ORDER 11246)

1. The Offeror's or Bidder's attention is called to the "Equal Opportunity Clause" and the "Standard Federal Equal Employment Opportunity Construction Contract Specifications" set forth herein.

2. The goals and timetables for minority and female particpation, expressed in percentage terms for the Contractor's aggregate workforce in each trade on all construction work in the covered area, are as follows:

Timetables	Goals for minority participation for each trade	Goals for female participation in each trade
4/1/78 until 3/31/79	25.0 to 30.0	3.1
4/1/79 until 3/31/80	25.0 to 30.0	5.0
4/1/80 until 3/31/81	25.0 to 30.0	6.9

These goals are applicable to all the Contractor's construction work (whether or not it is Federal or federally assisted) performed in the covered area.

The Contractor's compliance with the Executive Order and the regulations in 41 CFR Part 60-4 shall be based on its implementation of the Equal Opportunity Clause, specific affirmative action obligations required by the specifications set forth in 41 CFR 60-4.3(a), and its efforts to meet the goals established for the geographical area where the contract resulting from this solicitation is to be performed. The hours of minority and female employment and training must be substantially uniform throughout the length of the contract, and in each trade, and the contractor shall make a good faith effort to employ minorities and women evenly on each of its projects. The transfer of minority or female employees or trainees from Contractor to Contractor or from project to project for the sole purpose of meeting the Contractor's goals shall be a violation of the contract, the Executive Order and the regulations in 41 CFR Part 60-4. Compliance with the goals will be measured against the total work hours performed.

3. The Contractor shall provide written notification to the Director of the Office of Federal Contract Compliance Programs within 10 working days of award of any construction subcontract in excess of $10,000 at any tier for construction work under the contract resulting from this solicitation. The notification shall list the name, address and telephone number of the subcontractor; employer identification number; estimated dollar amount of the subcontract; estimated starting and completion dates of the subcontract; and the geographical area in which the contract is to be performed.

4. As used in this Notice, and in the contract resulting from this solicitation, the "covered area" is The City of Scottsdale, Maricopa County, Arizona.

STANDARD FORM 22
OCTOBER 1969 EDITION
GENERAL SERVICES ADMINISTRATION
FED. PROC. REG. (41 CFR) 1-16.401

INSTRUCTIONS TO BIDDERS

(CONSTRUCTION CONTRACT)

1. Explanations to Bidders. Any explanation desired by a bidder regarding the meaning or interpretation of the invitation for bids, drawings, specifications, etc., must be requested in writing and with sufficient time allowed for a reply to reach bidders before the submission of their bids. Any interpretation made will be in the form of an amendment of the invitation for bids, drawings, specifications, etc., and will be furnished to all prospective bidders. Its receipt by the bidder must be acknowledged in the space provided on the Bid Form (Standard Form 21) or by letter or telegram received before the time set for opening of bids. Oral explanations or instructions given before the award of the contract will not be binding.

2. Conditions Affecting the Work. Bidders should visit the site and take such other steps as may be reasonably necessary to ascertain the nature and location of the work, and the general and local conditions which can affect the work or the cost thereof. Failure to do so will not relieve bidders from responsibility for estimating properly the difficulty or cost of successfully performing the work. The Government will assume no responsibility for any understanding or representations concerning conditions made by any of its officers or agents prior to the execution of the contract, unless included in the invitation for bids, the specifications, or related documents.

3. Bidder's Qualifications. Before a bid is considered for award, the bidder may be requested by the Government to submit a statement regarding his previous experience in performing comparable work, his business and technical organization, financial resources, and plant available to be used in performing the work.

4. Bid Guarantee. Where a bid guarantee is required by the invitation for bids, failure to furnish a bid guarantee in the proper form and amount, by the time set for opening of bids, may be cause for rejection of the bid.

A bid guarantee shall be in the form of a firm commitment, such as a bid bond, postal money order, certified check, cashier's check, irrevocable letter of credit or, in accordance with Treasury Department regulations, certain bonds or notes of the United States. Bid guarantees, other than bid bonds, will be returned (*a*) to unsuccessful bidders as soon as practicable after the opening of bids, and (*b*) to the successful bidder upon execution of such further contractual documents and bonds as may be required by the bid as accepted.

If the successful bidder, upon acceptance of his bid by the Government within the period specified therein for acceptance (sixty days if no period is specified) fails to execute such further contractual documents, if any, and give such bond(s) as may be required by the terms of the bid as accepted within the time specified (ten days if no period is specified) after receipt of the forms by him, his contract may be terminated for default. In such event he shall be liable for any cost of procuring the work which exceeds the amount of his bid, and the bid guarantee shall be available toward offsetting such difference.

5. Preparation of Bids. (*a*) Bids shall be submitted on the forms furnished, or copies thereof, and must be manually signed. If erasures or other changes appear on the forms, each erasure or change must be initialed by the person signing the bid. Unless specifically authorized in the invitation for bids, telegraphic bids will not be considered.

(*b*) The bid form may provide for submission of a price or prices for one or more items, which may be lump sum bids, alternate prices, scheduled items resulting in a bid on a unit of construction or a combination thereof, etc. Where the bid form explicitly requires that the bidder bid on all items, failure to do so will disqualify the bid. When submission of a price on all items is not required, bidders should insert the words "no bid" in the space provided for any item on which no price is submitted.

(*c*) Unless called for, alternate bids will not be considered.

(*d*) Modifications of bids already submitted will be considered if received at the office designated in the invitation for bids by the time set for opening of bids. Telegraphic modifications will be considered, but should not reveal the amount of the original or revised bid.

6. Submission of Bids. Bids must be sealed, marked, and addressed as directed in the invitation for bids. Failure to do so may result in a premature opening of, or a failure to open, such bid.

7. LATE BIDS, MODIFICATIONS OF BIDS OR WITHDRAWAL OF BIDS (1977 APR)

(a) Any bid received at the office designated in the solicitation after the exact time specified for receipt will not be considered unless it is received before award is made and either:

(i) it was sent by registered or certified mail not later than the fifth calendar day prior to the date specified for receipt of bids (e.g., a bid submitted in response to a solicitation requiring receipt of bids by the 20th of the month must have been mailed by the 15th or earlier); or,

(ii) it was sent by mail (or telegram if authorized) and it is determined by the Government that the late receipt was due solely to mishandling by the Government after receipt at the Government installation.

(b) Any modification or withdrawal of bid is subject to the same conditions as in (a) above. A bid may also be withdrawn in person by a bidder or his authorized representative, *provided* his identity is made known and he signs a receipt for the bid, but only if the withdrawal is made prior to the exact time set for receipt of bids.

(c) The only acceptable evidence to establish:

(i) the date of mailing of a late bid, modification or withdrawal sent either by registered or certified mail is the U.S. Postal Service postmark on the wrapper or on the original receipt from the U.S. Postal Service. If neither postmark shows a legible date, the bid, modification or withdrawal shall be deemed to have been mailed late. (The term "postmark" means a printed, stamped, or otherwise placed impression that is readily identifiable without further action as having been supplied and affixed on the date of mailing by employees of the U.S. Postal Service.)

(ii) the time of receipt at the Government installation is the time/date stamp of such installation on the bid wrapper or other documentary evidence of receipt maintained by the installation.

(d) Notwithstanding the above, a late modification of an otherwise successful bid which makes its terms more favorable to the Government will be considered at any time it is received and may be accepted.

NOTE: The term "telegram" includes mailgrams.

8. Deleted

9. Public Opening of Bids. Bids will be publicly opened at the time set for opening in the invitation for bids. Their content will be made public for the information of bidders and others interested, who may be present either in person or by representative.

10. Award of Contract. (*a*) Award of contract will be made to that responsible bidder whose bid, conforming to the invitation for bids, is most advantageous to the Government, price and other factors considered.

(*b*) The Government may, when in its interest, reject any or all bids or waive any informality in bids received.

(*c*) The Government may accept any item or combination of items of a bid, unless precluded by the invitation for bids or the bidder includes in his bid a restrictive limitation.

11. Contract and Bonds. The bidder whose bid is accepted will, within the time established in the bid, enter into a written contract with the Government and, if required, furnish performance and payment bonds on Government standard forms in the amounts indicated in the invitation for bids or the specifications.

☆ U. S. GOVERNMENT PRINTING OFFICE: 1971—423—808

12. Minority Business Subcontracting. Bidders are cautioned that compliance with the General Provision entitled Minority Business Enterprises Subcontracting Program requires the solicitation of minority business enterprise subcontractors and suppliers at the time of bid preparation where time or other circumstances would not permit such solicitation after award. Bidders desiring assistance in developing a source list of minority business enterprises are encouraged to contact minority contractor associations and appropriate Offices of Minority Business Enterprise, addresses of which may be obtained from U.S. Army Engineer District, Los Angeles, Office of Counsel, Labor Relations Advisor, 300 North Los Angeles Street, Los Angeles, California, 90053, telephone (213) 688-5390.

STANDARD FORM 21
DECEMBER 1965 EDITION
GENERAL SERVICES ADMINISTRATION
FED. PROC. REG. (41 CFR) 1-16.401

BID FORM
(CONSTRUCTION CONTRACT)

REFERENCE

DACW09-78-B-0017

Read the Instructions to Bidders (Standard Form 22)
This form to be submitted in duplicate

DATE OF INVITATION 1 June 1978

NAME AND LOCATION OF PROJECT
INDIAN BEND WASH
INLET CHANNEL
MARICOPA COUNTY
ARIZONA

NAME OF BIDDER *(Type or print)*

(Date)

TO: U. S. ARMY ENGINEER DISTRICT, LOS ANGELES
P. O. Box 2711
Los Angeles, California 90053

In compliance with the above-dated invitation for bids, the undersigned hereby proposes to perform all work for inlet channel, siphon, wasteway channel, riding and hiking trail, recorder house and gaging station, control and appurtenant works, complete.

in strict accordance with the General Provisions, specifications, schedules, drawings, and conditions, for the amounts set forth in the attached Bidding Schedule.

21-108

(Continue on other side)

EQUAL EMPLOYMENT COMPLIANCE (1974 APR) By submission of this offer, the offeror represents that, to the best of his knowledge and belief except as noted below, up to the date of this offer no written notice such as a show cause letter, a letter indicating probable cause, or any other formal written notification citing specific deficiencies, has been received by the offeror from any Federal Government agency or representative thereof that the offeror or any of its divisions or affiliates or know first-tier subcontractors is in violation of any of the provisions of Executive Order No. 11246 of September 24, 1965, Executive Order No. 11375 of October 13, 1967, or rules and regulations of the Secretary of Labor (41 CFR, Chapter 60) and specifically as to not having an acceptable affirmative action program or being in noncompliance with any other aspect of the Equal Employment Opportunity Program. It is further agreed that should there be any change in the status or circumstances between this date and the date of expiration of this offer or any extension thereof, the Contracting Officer will be notified promptly. (ASPR 7-2003.14(b)(3).

The undersigned agrees that, upon written acceptance of this bid, mailed or otherwise furnished within 30 **calendar days** [redacted] **after the date of opening of bids, he will within** 5 **calendar days (unless a longer period is allowed) after receipt of the prescribed forms, execute Standard Form 23, Construction Contract, and give performance and payment bonds on Government standard forms with good and sufficient surety.** (See paragraph No. 16 of the Invitation for Bids).

The undersigned agrees, if awarded the contract, to commence and to complete the work in accordance with the stipulations of Paragraph 1. of the SPECIAL PROVISIONS.

RECEIPT OF AMENDMENTS: *The undersigned acknowledges receipt of the following amendments of the invitation for bids, drawings, and/or specifications, etc. (Give number and date of each):*

The representations and certifications on the accompanying STANDARD FORM 19-B are made a part of this bid.

ENCLOSED IS BID GUARANTEE, CONSISTING OF	IN THE AMOUNT OF
NAME OF BIDDER (*Type or print*)	FULL NAME OF ALL PARTNERS (*Type or print*)
BUSINESS ADDRESS (*Type or print*) (*Include "ZIP Code"*)	
BY (*Signature in ink. Type or print name under signature*)	
TITLE (*Type or print*)	

DIRECTIONS FOR SUBMITTING BIDS: *Envelopes containing bids, guarantee, etc., must be sealed, marked, and addressed as follows:*

Envelopes shall be marked in
the upper left hand corner
Bid Under Reference No.
DACW09-78-B-0017

Envelopes shall be addressed:
U.S. ARMY ENGINEER DISTRICT
LOS ANGELES
Phoenix Resident Office
2721 North Central Avenue
Phoenix, Arizona 85004

CAUTION—Bids should not be qualified by exceptions to the bidding conditions.

☆ U S GOVERNMENT PRINTING OFFICE 1966 O—205-147—(15-F)

BIDDING SCHEDULE

Item No.	Description	Estimated Quantity	Unit	Unit Price	Estimated Amount
1.	DIVERSION AND CONTROL OF WATER	1	Job	L.S.	_____
2.	CLEAR SITE AND REMOVE OBSTRUCTIONS	1	Job	L.S.	_____
3.	REMOVAL AND STORAGE CHAIN LINK FENCING	1	Job	L.S.	_____
4.	EXCAVATION, CHANNEL	672,000	Cu. Yd.	_____	_____
5.	COMPACTED FILL, CHANNEL	77,500	Cu. Yd.	_____	_____
6.	COMPACTED FILL, LEVEE	20,000	Cu. Yd.	_____	_____
7.	COMPACTED FILL, ROADWAYS	49,420	Cu. Yd.	_____	_____
8.	REQUIRED FILL, AREA "B"	1,060	Cu. Yd.	_____	_____
9.	REQUIRED FILL, AREA "C" & "H"	4,860	Cu. Yd.	_____	_____
10.	REQUIRED FILL, AREA "D"	70,240	Cu. Yd.	_____	_____
11.	REQUIRED FILL, AREA "E"	1	Job	L.S.	_____
12.	REQUIRED FILL, AREA "F"	39,400	Cu. Yd.	_____	_____
13.	REQUIRED FILL, AREA "G"	167,540	Cu. Yd.	_____	_____
14.	REQUIRED FILL, AREA "I"	18,670	Cu. Yd.	_____	_____
15.	CONCRETE CHANNEL WALL, LEFT BANK	1	Job	L.S.	_____
16.	CONCRETE CHANNEL WALL, RIGHT BANK	1	Job	L.S.	_____
17.	CONCRETE CHANNEL INVERT, WASTEWAY	470	Cu. Yd.	_____	_____
18.	CONCRETE CHANNEL WALL, WASTEWAY	300	Cu. Yd.	_____	_____
19.	CONCRETE CHANNEL WALL FOOTING, WASTEWAY	430	Cu. Yd.	_____	_____
20.	CONCRETE SILL AT HAYDEN ROAD	1	Job	L.S.	_____

BIDDING SCHEDULE (Continued)

Item No.	Description	Estimated Quantity	Unit	Unit Price	Estimated Amount
21.	CONCRETE DRIVEWAY	1	Job	L.S.	_____
22.	CONCRETE DENTATES	32	Each	_____	_____
23.	CONCRETE CUTOFF WALLS AT INDIAN BEND ROAD	1	Job	L.S.	_____
24.	WASTEWAY BRIDGE	1	Job	L.S.	_____
25.	PORTLAND CEMENT	37,200	Cwt.	_____	_____
26.	STEEL REINFORCEMENT	96,000	Lb.	_____	_____
27.	STONE DROP STRUCTURE	19,000	Ton	_____	_____
28.	15-INCH STONE PROTECTION SIDE SLOPES	35,000	Ton	_____	_____
29.	18-INCH STONE APRON WASTEWAY	530	Ton	_____	_____
30.	DOWNSTREAM END PROTECTION	250	Ton	_____	_____
31.	GROUTING STONEWORK	4,050	Cu. Yd.	_____	_____
32.	FILTER MATERIAL	8,500	Cu. Yd.	_____	_____
33.	OPEN CHANNEL AT INDIAN BEND ROAD STA. 16+50 TO STA. 23+00	1	Job	L.S.	_____
34.	SIDE DRAIN AT INDIAN BEND ROAD STA. 17+91	1	Job	L.S.	_____
35.	SIDE DRAIN AT INDIAN BEND ROAD STA. 24+46	1	Job	L.S.	_____
36.	SIDE DRAIN STA. 423+18.5	1	Job	L.S.	_____
37.	SIDE DRAIN STA. 412+35	1	Job	L.S.	_____
38.	SIDE DRAIN STA. 387+20	1	Job	L.S.	_____

BIDDING SCHEDULE (Continued)

Item No.	Description	Estimated Quantity	Unit	Unit Price	Estimated Amount
39.	SIDE DRAIN STA. 386+85	1	Job	L.S.	_____
40.	SIDE DRAIN STA. 381+51	1	Job	L.S.	_____
41.	SIDE DRAINS STA. 372+81.25	1	Job	L.S.	_____
42.	SIDE DRAIN STA. 368+93	1	Job	L.S.	_____
43.	CANAL SIPHON STA. 13+79.23 TO STA. 21+27.91	1	Job	L.S.	_____
44.	SIPHON INLET STRUCTURE STA. 21+27.91 TO STA. 21+96.41	1	Job	L.S.	_____
45.	SIPHON INLET STRUCTURE, TRANSITION	1	Job	L.S.	_____
46.	SIPHON INLET STRUCTURE STA. 22+08.51 TO STA. 22+60	1	Job	L.S.	_____
47.	SIPHON OUTLET STRUCTURE STA. 12+99.23 TO STA. 13+79.23	1	Job	L.S.	_____
48.	SIPHON OUTLET STRUCTURE, TRANSITION	1	Job	L.S.	_____
49.	SIPHON OUTLET STRUCTURE STA. 12+25 TO STA. 12+87.13	1	Job	L.S.	_____
50.	SIPHON WEIR	1	Job	L.S.	_____
51.	AGGREGATE BASE AND SURFACING	850	Cu. Yd.	_____	_____

BIDDING SCHEDULE (Continued)

Item No.	Description	Estimated Quantity	Unit	Unit Price	Estimated Amount
52.	ASPHALT CONCRETE PAVEMENT, CHANNEL	830	Ton	_____	_____
53.	LANDSCAPE FILL	39,000	Cu. Yd.	_____	_____
54.	TOPSOILING	8,900	Cu. Yd.	_____	_____
55.	LANDSCAPING	1	Job	L.S.	_____
56.	SEEDING	45	Acre	_____	_____
57.	STATION MARKING	1	Job	L.S.	_____
58.	PIPE GATE	5	Each	_____	_____
59.	RIDING AND HIKING TRAIL	5,000	Lin. Ft.	_____	_____
60.	CONTROL HOUSE	1	Job	L.S.	_____
61.	GAGING STATION	1	Job	L.S.	_____
62.	REMOVABLE CHAIN LINK FENCING, 6-FOOT	250	Lin. Ft.	_____	_____
63.	REMOVABLE CHAIN LINK FENCING, 8-FOOT	300	Lin. Ft.	_____	_____
64.	CHAIN LINK FENCE ON CHANNEL WALL AT SAGUARO HIGH SCHOOL	1	Job	L.S.	_____
65.	BOLLARDS AND SIGNS	1	Job	L.S.	_____
66.	INDIAN BEND ROAD MODIFICATION	1	Job	L.S.	_____
67.	HAYDEN ROAD MODIFICATION	1	Job	L.S.	_____

BIDDING SCHEDULE (Continued)

Item No.	Description	Estimated Quantity	Unit	Unit Price	Estimated Amount
68.	VALLEY VISTA LANE MODIFICATION	1	Job	L.S.	_____
69.	HOTEL ACCESS ROAD MODIFICATION	1	Job	L.S.	_____

TOTAL AMOUNT $_____

NOTE All extensions of the unit prices shown will be subject to verification by the Government In case of variation between the unit price and the extension, the unit price will be considered to be the bid.

If a bid or modification to a bid based on unit prices is submitted which provides for a lump sum adjustment to the total estimated cost, the application of the lump sum adjustment to each unit price in the bidding schedule must be stated. If it is not stated, the bidder agrees that the lump sum adjustment shall be applied on a pro rata basis to every unit price in the bidding schedule

Amounts and prices shall be indicated in either figures or words, not both

Bids shall be submitted on all items of the Bidding Schedule.

REPRESENTATIONS AND CERTIFICATIONS

(Construction and Architect-Engineer Contract)

(For use with Standard Forms 19, 21 and 252)

REFERENCE *(Enter same No.(s) as on SF 19, 21 and 252)*

NAME AND ADDRESS OF BIDDER *(No., Street, City, State, and ZIP Code)*

DATE OF BID

In negotiated procurements, "bid" and "bidder" shall be construed to mean "offer" and "offeror."

The bidder makes the following representations and certifications as a part of the bid identified above. *(Check appropriate boxes.)*

1. SMALL BUSINESS

He ☐ is, ☐ is not, a small business concern. (A small business concern for the purpose of Government procurement is a concern, including its affiliates, which is independently owned and operated, is not dominant in the field of operations in which it is bidding on Government contracts, and can further qualify under the criteria concerning number of employees, average annual receipts, or other criteria as prescribed by the Small Business Administration. For additional information see governing regulations of the Small Business Administration (13 CFR Part 121)).

2. MINORITY BUSINESS ENTERPRISE

He ☐ is, ☐ is not a minority business enterprise. A minority business enterprise is defined as a "business, at least 50 percent of which is owned by minority group members or, in case of publicly owned businesses, at least 51 percent of the stock of which is owned by minority group members." For the purpose of this definition, minority group members are Negroes, Spanish-speaking American persons, American-Orientals, American-Indians, American-Eskimos, and American-Aleuts."

3. CONTINGENT FEE

(a) He ☐ has, ☐ has not, employed or retained any company or person (other than a full-time bona fide employee working solely for the bidder) to solicit or secure this contract, and *(b)* he ☐ has, ☐ has not, paid or agreed to pay any company or person (other than a full-time bona fide employee working solely for the bidder) any fee, commission, percentage or brokerage fee, contingent upon or resulting from the award of this contract; and agrees to furnish information relating to *(a)* and *(b)* above as requested by the Contracting Officer. *(For interpretation of the representation, including the term "bona fide employee," see Code of Federal Regulations, Title 41, Subpart 1-1.5.)*

4. TYPE OF ORGANIZATION

He operates as an ☐ individual, ☐ partnership, ☐ joint venture, ☐ corporation, incorporated in State of .....

5. INDEPENDENT PRICE DETERMINATION

(a) By submission of this bid, each bidder certifies, and in the case of a joint bid each party thereto certifies as to his own organization, that in connection with this procurement:

(1) The prices in this bid have been arrived at independently, without consultation, communication, or agreement, for the purpose of restricting competition, as to any matter relating to such prices with any other bidder or with any competitor;

(2) Unless otherwise required by law, the prices which have been quoted in this bid have not been knowingly disclosed by the bidder and will not knowingly be disclosed by the bidder prior to opening, in the case of a bid, or prior to award, in the case of a proposal, directly or indirectly to any other bidder or to any competitor; and

(3) No attempt has been made or will be made by the bidder to induce any other person or firm to submit or not to submit a bid for the purpose of restricting competition.

(b) Each person signing this bid certifies that:

(1) He is the person in the bidder's organization responsible within that organization for the decision as to the prices being bid herein and that he has not participated, and will not participate, in any action contrary to *(a)*(1) through *(a)*(3) above; or

(2) (i) He is not the person in the bidder's organization responsible within that organization for the decision as to the prices being bid herein but that he has been authorized in writing to act as agent for the persons responsible for such decision in certifying that such persons have not participated, and will not participate, in any action contrary to *(a)*(1) through *(a)* (3) above, and as their agent does hereby so certify; and (ii) he has not participated, and will not participate, in any action contrary to *(a)*(1) through *(a)*(3) above.

(c) This certification is not applicable to a foreign bidder submitting a bid for a contract which requires performance or delivery outside the United States, its possessions, and Puerto Rico.

(d) A bid will not be considered for award where *(a)*(1), *(a)*(3), or *(b)* above, has been deleted or modified. Where *(a)*(2) above, has been deleted or modified, the bid will not be considered for award unless the bidder furnishes with the bid a signed statement which sets forth in detail the circumstances of the disclosure and the head of the agency, or his designee, determines that such disclosure was not made for the purpose of restricting competition.

NOTE.—Bids must set forth full, accurate, and complete information as required by this invitation for bids (including attachments). The penalty for making false statements in bids is prescribed in 18 U.S.C. 1001.

STANDARD FORM 19-B, JUNE 1976 EDITION
GENERAL SERVICES ADMINISTRATION
FED. PROC. REG. (41 CFR) 1-16.401 AND 1-16.701

THE FOLLOWING NEED BE CHECKED ONLY IF BID EXCEEDS $10,000 IN AMOUNT.

6. EQUAL OPPORTUNITY

He ☐ has, ☐ has not, participated in a previous contract or subcontract subject to the Equal Opportunity Clause herein, the clause originally contained in Section 301 of Executive Order No. 10925, or the clause contained in Section 201 of Executive Order No. 11114; he ☐ has, ☐ has not, filed all required compliance reports; and representations indicating submission of required compliance reports, signed by proposed subcontractors, will be obtained prior to subcontract awards.

(The above representations need not be submitted in connection with contracts or subcontracts which are exempt from the equal opportunity clause.)

7. PARENT COMPANY AND EMPLOYER IDENTIFICATION NUMBER

Each bidder shall furnish the following information by filling in the appropriate blocks:

(a) Is the bidder owned or controlled by a parent company as described below? ☐ Yes ☐ No. *(For the purpose of this bid, a parent company is defined as one which either owns or controls the activities and basic business policies of the bidder. To own another company means the parent company must own at least a majority (more than 50 percent) of the voting rights in that company. To control another company, such ownership is not required; if another company is able to formulate, determine, or veto basic business policy decisions of the bidder, such other company is considered the parent company of the bidder. This control may be exercised through the use of dominant minority voting rights, use of proxy voting, contractual arrangements, or otherwise.)*

(b) If the answer to *(a)* above is "Yes," bidder shall insert in the space below the name and main office address of the parent company.

NAME OF PARENT COMPANY	MAIN OFFICE ADDRESS *(No., Street, City, State, and ZIP Code)*

(c) Bidder shall insert in the applicable space below, if he has no parent company, his own Employer's Identification Number (E.I. No.) *(Federal Social Security Number used on Employer's Quarterly Federal Tax Return, U.S. Treasury Department Form 941)*, or, if he has a parent company, the E.I. No. of his parent company.

EMPLOYER IDENTIFICATION NUMBER OF ➤	PARENT COMPANY	BIDDER

8. CERTIFICATION OF NONSEGREGATED FACILITIES

(Applicable to (1) contracts, (2) subcontracts, and (3) agreements with applicants who are themselves performing federally assisted construction contracts, exceeding $10,000 which are not exempt from the provisions of the Equal Opportunity clause.)

By the submission of this bid, the bidder, offeror, applicant, or subcontractor certifies that he does not maintain or provide for his employees any segregated facilities at any of his establishments, and that he does not permit his employees to perform their services at any location, under his control, where segregated facilities are maintained. He certifies further that he will not maintain or provide for his employees any segregated facilities at any of his establishments, and that he will not permit his employees to perform their services at any location, under his control, where segregated facilities are maintained. The bidder, offeror, applicant, or subcontractor agrees that a breach of this certification is a violation of the Equal Opportunity clause in this contract. As used in this certification, the term "segregated facilities" means any waiting rooms, work areas, rest rooms and wash rooms, restaurants and other eating areas, time clocks, locker rooms and other storage or dressing areas, parking lots, drinking fountains, recreation or entertainment areas, transportation, and housing facilities provided for employees which are segregated by explicit directive or are in fact segregated on the basis of race, color, religion, or national origin, because of habit, local custom, or otherwise. He further agrees that (except where he has obtained identical certifications from proposed subcontractors for specific time periods) he will obtain identical certificatons from proposed subcontractors prior to the award of subcontractors exceeding $10,000 which are not exempt from the provisions of the Equal Opportunity clause; that he will retain such certifications in his files; and that he will forward the following notice to such proposed subcontractors (except where the proposed subcontractors have submitted identical certifications for specific time periods):

NOTICE TO PROSPECTIVE SUBCONTRACTORS OF REQUIREMENT FOR CERTIFICATIONS OF NONSEGREGATED FACILITIES

A Certification of Nonsegregated Facilities must be submitted prior to the award of a subcontract exceeding $10,000 which is not exempt from the provisions of the Equal Opportunity clause. The certification may be submitted either for each subcontract or for all subcontracts during a period (i.e., quarterly, semiannually, or annually).

NOTE: The penalty for making false statements in offers is prescribed in 18 U.S.C. 1001.

9. CLEAN AIR AND WATER

(Applicable if the bid or offer exceeds $100,000, or the contracting officer has determined that orders under an indefinite quantity contract in any year will exceed $100,000, or a facility to be used has been the subject of a conviction under the Clean Air Act (42 U.S.C. 1857c-8(c)(1)) or the Federal Water Pollution Control Act (33 U.S.C. 1319(c)) and is listed by EPA, or is not otherwise exempt.)

The bidder or offeror certifies as follows:

(a) Any facility to be utilized in the performance of this proposed contract has ☐, has not ☐, been listed on the Environmental Protection Agency List of Violating Facilities.

(b) He will promptly notify the contracting officer, prior to award, of the receipt of any communication from the Director, Office of Federal Activities, Environmental Protection Agency, indicating that any facility which he proposes to use for the performance of the contract is under consideration to be listed on the EPA List of Violating Facilities.

(c) He will include substantially this certification, including this paragraph (c), in every nonexempt subcontract.

☆U. S. GPO:1977-0-241-530/3364

STANDARD FORM 23
JANUARY 1961 EDITION
GENERAL SERVICES ADMINISTRATION
FED PROC REG (41 CFR) 1-16 401

Rev. LAD Nov. 70

CONSTRUCTION CONTRACT

(See instructions on reverse)

CONTRACT NO

DATE OF CONTRACT

NAME AND ADDRESS OF CONTRACTOR

CHECK APPROPRIATE BOX

- [ ] Individual
- [ ] Partnership
- [ ] Joint Venture
- [ ] Corporation, incorporated in the State of _____

DEPARTMENT OR AGENCY

CONTRACT FOR *(Work to be performed)*

PLACE

CONTRACT PRICE *(Express in words and figures)*

ADMINISTRATIVE DATA *(Optional)*

The United States of America (hereinafter called the Government), represented by the Contracting Officer executing this contract, and the individual, partnership, joint venture, or corporation named above (hereinafter called the Contractor), mutually agree to perform this contract in strict accordance with the General Provisions, and the following designated specifications, schedules, drawings, and conditions:

WORK SHALL BE STARTED	WORK SHALL BE COMPLETED

Alterations. The following alterations were made in this contract before it was signed by the parties hereto:

In witness whereof, the parties hereto have executed this contract as of the date entered on the first page hereof.

THE UNITED STATES OF AMERICA	CONTRACTOR
By _____	_____ (Name of Contractor)
_____ (Official title)	By _____ (Signature)
	_____ (Title)

INSTRUCTIONS

1. The full name and business address of the Contractor must be inserted in the space provided on the face of the form. The Contractor shall sign in the space provided above with his usual signature and typewrite or print his name under the signature.

2. An officer of a corporation, a member of a partnership, or an agent signing for the Contractor shall place his signature and title after the word "By" under the name of the Contractor. A contract executed by an attorney or agent on behalf of the Contractor shall be accompanied by two authenticated copies of his power of attorney or other evidence of his authority to act on behalf of the Contractor.

U.S. GOVERNMENT PRINTING OFFICE: 1960 OF—572726—46

INDEX OF GENERAL PROVISIONS
(Construction Contract)

1.1. Definitions

1.2. Definitions

2. Specifications and Drawings

3. Changes

4. Differing Site Conditions

5. Termination for Default – Damages for Delay – Time Extensions

6. Disputes

7. Payments to Contractor

8. Assignment of Claims

9. Material and Workmanship

10. Inspection and Acceptance

11. Superintendence by Contractor

12. Permits and Responsibilities

13. Conditions Affecting the Work

14. Other Contracts

15. Shop Drawings

16. Use and Possession Prior to Completion

17. Suspension of Work

18. Termination for Convenience of the Government – Construction

19. Payment of Interest on Contractors' Claims

20. Pricing of Adjustments

21. Patent Indemnity

22. Additional Bond Security

23. Examination of Records by Comptroller General

24. Buy American Act

25. Equal Opportunity

26. Covenant Against Contingent Fees

27. Officials Not to Benefit

28. Convict Labor

29. Utilization of Small Business Concerns

30. Utilization of Minority Business Enterprises

31. Federal, State and Local Taxes

32. Davis–Bacon Act

33. Contract Work Hours and Safety Standards Act – Overtime Compensation

34. Apprentices and Trainees

35. Payrolls and Basic Records

36. Compliance with Copeland Regulations

37. Withholding of Funds

38. Subcontracts

39. Contract Termination – Debarment

40. Disputes Concerning Labor Standards

41. Contractor Inspection System

42. Gratuities

43. Small Business Subcontracting Program (Maintenance, Repair and Construction)

44. Renegotiation

45. Notice and Assistance Regarding Patent and Copyright Infringement

46. Authorization and Consent

47. Composition of Contractor

48. Site Investigation

49. Protection of Existing Vegetation, Structures, Utilities, and Improvements

50. Operations and Storage Areas

51. Modification Proposals – Price Breakdown

52. Subcontractors

53. Cleaning Up

54. Additional Definitions

55. Accident Prevention

56. Government Inspectors

57. Rights in Shop Drawings

58. Minority Business Enterprises Subcontracting Program

59. Affirmative Action for Disabled Veterans and Veterans of the Vietnam Era

60. Value Engineering Incentive

61. Affirmative Action for Handicapped Workers

62. Clean Air and Water

63. Notice to the Government of Labor Disputes

64. Contract Prices – Bidding Schedule

65. Priorities, Allocations, and Allotments

66. Price Reduction for Defective Cost of Pricing Data – Price Adjustments

67. Interest

68. Audit by Department of Defense

69. Subcontractor Cost or Pricing Data – Price Adjustments

70.1 Government–Furnished Property (Short Form)

70.2 Government Property (Fixed Price)

71. Variations in Estimated Quantities

72. Progress Charts and Requirements for Overtime Work

73. Environmental Litigation

74. Standard Federal Equal Employment Opportunity Construction Contract Specifications

GENERAL PROVISIONS
(Construction Contract)
Issued By: Department of the Army, Corps of Engineers

(General Provisions 1 through 31 and 32 through 40 are those prescribed by the General Services Administration in Standard Form 23–A, April 1975 edition and Standard Form 19–A, November 1972 edition, respectively, as amended pursuant to the latest revisions of the Armed Services Procurement Regulation and Engineer Contract Instructions, ER 1180–1–1.)

1.1 DEFINITIONS

(The following clause is applicable if the procurement instrument identification number is prefixed by the letters "DACW")

(a) The term "head of the agency" or "Secretary" as used herein means the Secretary of the Army; and the term "his duly authorized representative" means the Chief of Engineers, Department of the Army, or an individual or board designated by him.

(b) The term "Contracting Officer" as used herein means the person executing this contract on behalf of the Government and includes a duly appointed successor or authorized representative. (ASPR 7–602.1 & ECI 7–070)

1.2 DEFINITIONS (1964 JUN)

(The following clause is applicable if the procurement instrument identification number is prefixed by the letters "DACA")

(a) The term "head of the agency" or "Secretary" as used herein means the Secretary, the Under Secretary, any Assistant Secretary, or any other head or assistant head of the executive or military department or other Federal agency; and the term "his duly authorized representative" means any person or persons or board (other than the Contracting Officer) authorized to act for the head of the agency or the Secretary.

(b) The term "Contracting Officer" as used herein means the person executing this contract on behalf of the Government and includes a duly appointed successor or authorized representative. (ASPR 7–602.1)

2. SPECIFICATIONS AND DRAWINGS (1964 JUN)

The Contractor shall keep on the work a copy of the drawings and specifications and shall at all times give the Contracting Officer access thereto. Anything mentioned in the specifications and not shown on the drawings, or shown on the drawings and not mentioned in the specifications, shall be of like effect as if shown or mentioned in both. In case of difference between drawings and specifications, the specifications shall govern. In case of discrepancy either in the figures, in the drawings, or in the specifications, the matter shall be promptly submitted to the Contracting Officer, who shall promptly make a determination in writing. Any adjustment by the Contractor without such a determination shall be at his own risk and expense. The Contracting Officer shall furnish from time to time such detail drawings and other information as he may consider necessary, unless otherwise provided. (ASPR 7–602.2)

3. CHANGES (1968 FEB)

(a) The Contracting Officer may, at any time, without notice to the sureties, by written order designated or indicated to be a change order, make any change in the work within the general scope of the contract, including but not limited to changes:

(i) in the specifications (including drawings and designs);

(ii) in the method or manner of performance of the work;

(iii) in the Government–furnished facilities, equipment, materials, services, or site; or

(iv) directing acceleration in the performance of the work.

(b) Any other written order or an oral order (which terms as used in this paragraph (b) shall include direction, instruction, interpretation or determination) from the Contracting Officer, which causes any such change, shall be treated as a change order under this clause, *provided* that the Contractor gives the Contracting Officer written notice stating the date, circumstances, and source of the order and that the Contractor regards the order as a change order.

(c) Except as herein provided, no order, statement, or conduct of the Contracting Officer shall be treated as a change under this clause or entitle the Contractor to an equitable adjustment hereunder.

(d) If any change under this clause causes an increase or decrease in the Contractor's cost of, or the time required for, the performance of any part of the work under this contract, whether or not changed by any order, an equitable adjustment shall be made and the contract modified in writing accordingly: *Provided, however,* That except for claims based on defective specifications, no claim for any change under (b) above shall be allowed for any costs incurred more than 20 days before the Contractor gives written notice as therein required: *And provided further,* That in the case of defective specifications for which the Government is responsible, the equitable adjustment shall include any increased cost reasonably incurred by the Contractor in attempting to comply with such defective specifications.

(e) If the Contractor intends to assert a claim for an equitable adjustment under this clause, he must, within 30 days after receipt of a written change order under (a) above or the furnishing of a written notice under (b) above, submit to the Contracting Officer a written statement setting forth the general nature and monetary extent of such claim, unless this period is extended by the Government. The statement of claim hereunder may be included in the notice under (b) above.

(f) No claim by the Contractor for an equitable adjustment hereunder shall be allowed if asserted after final payment under this contract. (ASPR 7–602.3)

4. DIFFERING SITE CONDITIONS (1968 FEB)

(a) The Contractor shall promptly, and before such conditions are disturbed, notify the Contracting Officer in writing of: (1) subsurface or latent physical conditions at the site differing materially from those indicated in this contract, or (2) unknown physical conditions at the site, of an unusual nature, differing materially from those ordinarily encountered and generally recognized as inhering in work of the character provided for in this contract. The Contracting Officer shall promptly investigate the conditions, and if he finds that such conditions do materially so differ and cause an increase or decrease in the Contractor's cost of, or the time required for, performance of any part of the work under this

contract, whether or not changed as a result of such conditions, an equitable adjustment shall be made and the contract modified in writing accordingly.

(b) No claim of the Contractor under this clause shall be allowed unless the Contractor has given the notice required in (a) above; *provided,* however, the time prescribed therefor may be extended by the Government.

(c) No claim by the Contractor for an equitable adjustment hereunder shall be allowed if asserted after final payment under this contract. (ASPR 7–602.4)

5. TERMINATION FOR DEFAULT – DAMAGES FOR DELAY – TIME EXTENSIONS (1969 AUG)

(a) If the Contractor refuses or fails to prosecute the work, or any separable part thereof, with such diligence as will insure its completion within the time specified in this contract, or any extension thereof, or fails to complete said work within such time, the Government may, by written notice to the Contractor, terminate his right to proceed with the work or such part of the work as to which there has been delay. In such event the Government may take over the work and prosecute the same to completion, by contract or otherwise, and may take possession of and utilize in completing the work such materials, appliances, and plant as may be on the site of the work and necessary therefor. Whether or not the Contractor's right to proceed with the work is terminated, he and his sureties shall be liable for any damage to the Government resulting from his refusal or failure to complete the work within the specified time.

(b) If fixed and agreed liquidated damages are provided in the contract and if the Government so terminates the Contractor's right to proceed, the resulting damage will consist of such liquidated damages until such reasonable time as may be required for final completion of the work together with any increased costs occasioned the Government in completing the work.

(c) If fixed and agreed liquidated damages are provided in the contract and if the Government does not so terminate the Contractor's right to proceed, the resulting damage will consist of such liquidated damages until the work is completed or accepted.

(d) The Contractor's right to proceed shall not be so terminated nor the Contractor charged with resulting damage if:

(1) The delay in the completion of the work arises from causes other than normal weather beyond the control and without the fault or negligence of the Contractor, including but not restricted to, acts of God, acts of the public enemy, acts of the Government in either its sovereign or contractual capacity, acts of another contractor in the performance of a contract with the Government, fires, floods, epidemics, quarantine restrictions, strikes, freight embargoes, unusually severe weather, or delays of subcontractors or suppliers arising from causes other than normal weather beyond the control and without the fault or negligence of both the Contractor and such subcontractors or suppliers; and

(2) The Contractor, within 10 days from the beginning of any such delay (unless the Contracting Officer grants a further period of time before the date of final payment under the contract), notifies the Contracting Officer in writing of the causes of delay. The Contracting Officer shall ascertain the facts and the extent of the delay and extend the time for completing the work when, in his judgment, the findings of fact justify such an extension, and his findings of fact shall be final and conclusive on the parties, subject only to appeal as provided in the "Disputes" clause of this contract.

(e) If, after notice of termination of the Contractor's right to proceed under the provisions of this clause, it is determined for any reason that the Contractor was not in default under the provisions of this clause, or that the delay was excusable under the provisions of this clause, the rights and obligations of the parties shall, if the contract contains a clause providing for termination for convenience of the Government, be the same as if the notice of termination had been issued pursuant to such clause. If, in the foregoing circumstances, this contract does not contain a clause providing for termination for convenience of the Government, the contract shall be equitably adjusted to compensate for such termination and the contract modified accordingly; failure to agree to any such adjustment shall be a dispute concerning a question of fact within the meaning of the clause of this contract entitled "Disputes".

(f) The rights and remedies of the Government provided in this clause are in addition to any other rights and remedies provided by law or under this contract.

(g) As used in paragraph (d)(1) of this clause, the term "subcontractors or suppliers" means subcontractors or suppliers at any tier. (ASPR 7–602.5)

6. DISPUTES (1964 JUN)

(a) Except as otherwise provided in this contract, any dispute concerning a question of fact arising under this contract which is not disposed of by agreement shall be decided by the Contracting Officer, who shall reduce his decision to writing and mail or otherwise furnish a copy thereof to the Contractor. The decision of the Contracting Officer shall be final and conclusive unless, within 30 days from the date of receipt of such copy, the Contractor mails or otherwise furnishes to the Contracting Officer a written appeal addressed to the head of the agency involved. The decision of the head of the agency or his duly authorized representative for the determination of such appeals shall be final and conclusive. This provision shall not be pleaded in any suit involving a question of fact arising under this contract as limiting judicial review of any such decision to cases where fraud by such official or his representative or board is alleged: *Provided, however,* that any such decision shall be final and conclusive unless the same is fraudulent or capricious or arbitrary or so grossly erroneous as necessarily to imply bad faith or is not supported by substantial evidence. In connection with any appeal proceeding under this clause, the Contractor shall be afforded an opportunity to be heard and to offer evidence in support of his appeal. Pending final decision of a dispute hereunder, the Contractor shall proceed diligently with the performance of the contract and in accordance with the Contracting Officer's decision.

(b) This "Disputes" clause does not preclude consideration of questions of law in connection with decisions provided for in paragraph (a) above. Nothing in this contract, however, shall be construed as making final the decision of any administrative official, representative, or board on a question of law. (ASPR 7–602.6(a))

7. PAYMENTS TO CONTRACTOR (1976 MAR)

(a) The Government will pay the contract price as hereinafter provided.

(b) The Government will make progress payments monthly as the work proceeds, or at more frequent intervals as determined by the Contracting Officer, on estimates approved by the Contracting Officer. If requested by the Contracting Officer, the Contractor shall furnish a breakdown of the total contract price showing the amount included therein for each principal category of the work, in

such detail as requested, to provide a basis for determining progress payments. In the preparation of estimates the Contracting Officer, at his discretion, may authorize material delivered on the site and preparatory work done to be taken into consideration. Material delivered to the Contractor at locations other than the site may also be taken into consideration (1) if such consideration is specifically authorized by the contract and (2) if the Contractor furnishes satisfactory evidence that he has acquired title to such material and that it will be utilized on the work covered by this contract.

(c) In making such progress payments, there shall be retained 10 percent of the estimated amount until final completion and acceptance of the contract work. However, if the Contracting Officer finds that satisfactory progress was achieved during any period for which a progress payment is to be made, he may authorize such payment to be made in full without retention of a percentage. Also, whenever the work is substantially complete, the Contracting Officer shall retain an amount he considers adequate for the protection of the Government, and, at his discretion, may release to the Contractor all or a portion of any excess amount. Furthermore, on completion and acceptance of each separate building, public work, or other division of the contract, on which the price is stated separately in the contract, payment may be made therefor without retention of a percentage.

(d) All material and work covered by progress payments made shall thereupon become the sole property of the Government, but this provision shall not be construed as relieving the Contractor from the sole responsibility for all material and work upon which payments have been made or the restoration of any damaged work, or as waiving the right of the Government to require the fulfillment of all of the terms of the contract.

(e) Upon completion and acceptance of all work, the amount due the Contractor under this contract shall be paid upon the presentation of a properly executed voucher and after the Contractor shall have furnished the Government with a release of all claims against the Government arising by virtue of this contract, other than claims in stated amounts as may be specifically excepted by the Contractor from the operation of the release. If the Contractor's claim to amounts payable under the contract has been assigned under the Assignment of Claims Act of 1940, as amended (31 U.S.C. 203, 41 U.S.C. 15), a release may also be required of the assignee. (ASPR 7–602.7)

8. ASSIGNMENT OF CLAIMS (1976 OCT)

(a) Pursuant to the provisions of the Assignment of Claims Act of 1940, as amended (31 U.S.C. 203, 41 U.S.C. 15), if this contract provides for payments aggregating $1,000 or more, claims for moneys due or to become due the Contractor from the Government under this contract may be assigned to a bank, trust company, or other financing institution, including any Federal lending agency, and may thereafter be further assigned and reassigned to any such institution. Any such assignment or reassignment shall cover all amounts payable under this contract and not already paid, and shall not be made to more than one party, except that any such assignment or reassignment may be made to one party as agent or trustee for two or more parties participating in such financing. Unless otherwise provided in this contract, payments to assignee of any moneys due or to become due under this contract shall not, to the extent provided in said Act, as amended, be subject to reduction or setoff. (The preceding sentence applies only if this contract is made in time of war or national emergency as defined in said Act and is with the Department of Defense, the General Services Administration, the Energy Research and Development Administration, the National Aeronautics and Space Administration, the Federal Aviation Administration, or any other department or agency of the United States designated by the President pursuant to Clause 4 of the proviso of section 1 of the Assignment of Claims Act of 1940, as amended by the Act of May 15, 1951, 65 Stat. 41.)

(b) In no event shall copies of this contract or of any plans, specifications, or other similar documents relating to work under this contract, if marked "Top Secret," "Secret," or "Confidential," be furnished to any assignee of any claim arising under this contract or to any other person not entitled to receive the same. However, a copy of any part or all of this contract so marked may be furnished, or any information contained therein may be disclosed, to such assignee upon the prior written authorization of the Contracting Officer. (ASPR 7–602.8)

9. MATERIAL AND WORKMANSHIP (1964 JUN)

(a) Unless otherwise specifically provided in this contract, all equipment, material, and articles incorporated in the work covered by this contract are to be new and of the most suitable grade for the purpose intended. Unless otherwise specifically provided in this contract, reference to any equipment, material, article, or patented process, by trade name, make, or catalog number, shall be regarded as establishing a standard of quality and shall not be construed as limiting competition, and the Contractor may, at his option, use any equipment, material, article, or process which, in the judgment of the Contracting Officer, is equal to that named. The Contractor shall furnish to the Contracting Officer for his approval the name of the manufacturer, the model number, and other identifying data and information respecting the performance, capacity, nature, and rating of the machinery and mechanical and other equipment which the Contractor contemplates incorporating in the work. When required by this contract or when called for by the Contracting Officer, the Contractor shall furnish the Contracting Officer for approval full information concerning the material or articles which he contemplates incorporating in the work. When so directed, samples shall be submitted for approval at the Contractor's expense, with all shipping charges prepaid. Machinery, equipment, material, and articles installed or used without required approval shall be at the risk of subsequent rejection.

(b) All work under this contract shall be performed in a skillful and workmanlike manner. The Contracting Officer may, in writing, require the Contractor to remove from the work any employee the Contracting Officer deems incompetent, careless, or otherwise objectionable. (ASPR 7–602.9)

10. INSPECTION AND ACCEPTANCE (1976 OCT)

(a) All work (which term includes but is not restricted to materials, workmanship, and manufacture and fabrication of components) shall be subject to inspection and test by the Government at all reasonable times and at all places prior to acceptance. Any such inspection and test is for the sole benefit of the Government and shall not relieve the Contractor of the responsibility of providing quality control measures to assure that the work strictly complies with the contract requirements. No inspection or test by the Government shall be construed as constituting or implying acceptance. Inspection or test shall not relieve the Contractor of responsibility for damage to or loss of

the material prior to acceptance, nor in any way affect the continuing rights of the Government after acceptance of the completed work under the terms of paragraph (f) of this clause, except as hereinabove provided.

(b) The Contractor shall, without charge, replace any material or correct any workmanship found by the Government not to conform to the contract requirements, unless in the public interest the Government consents to accept such material or workmanship with an appropriate adjustment in contract price. The Contractor shall promptly segregate and remove rejected material from the premises.

(c) If the Contractor does not promptly replace rejected material or correct rejected workmanship, the Government (1) may, by contract or otherwise, replace such material or correct such workmanship and charge the cost thereof to the Contractor, or (2) may terminate the Contractor's right to proceed in accordance with the clause of this contract entitled "Termination for Default – Damages for Delay – Time Extensions."

(d) The Contractor shall furnish promptly, without additional charge, all facilities, labor, and material reasonably needed for performing such safe and convenient inspection and test as may be required by the Contracting Officer. All inspection and test by the Government shall be performed in such manner as not unnecessarily to delay the work Special, full size, and performance tests shall be performed as described in this contract. The Government reserves the right to charge to the Contractor any additional cost of inspection or test when material or workmanship is not ready at the time specified by the Contractor for inspection or test or when reinspection or retest is necessitated by prior rejection.

(e) Should it be considered necessary or advisable by the Government at any time before acceptance of the entire work to make an examination of work already completed, by removing or tearing out same, the Contractor shall, on request, promptly furnish all necessary facilities, labor and material. If such work is found to be defective or nonconforming in any material respect, due to the fault of the Contractor or his subcontractors, he shall defray all the expenses of such examination and of satisfactory reconstruction. If, however, such work is found to meet the requirements of the contract, an equitable adjustment shall be made in the contract price to compensate the Contractor for the additional services involved in such examination and reconstruction and, if completion of the work has been delayed thereby, he shall, in addition, be granted a suitable extension of time.

(f) Unless otherwise provided in this contract, acceptance by the Government shall be made as promptly as practicable after completion and inspection of all work required by this contract, or that portion of the work that the Contracting Officer determines can be accepted separately. Acceptance shall be final and conclusive except as regards latent defects, fraud, or such gross mistakes as may amount to fraud or as regards the Government's rights under any warranty or guarantee. (ASPR 7–602.11)

11. SUPERINTENDENCE BY CONTRACTOR (1976 OCT)

The Contractor, at all times during performance and until the work is completed and accepted, shall give his personal superintendence to the work or have on the work a competent superintendent, satisfactory to the Contracting Officer and with authority to act for the Contractor. (ASPR 7–602.12)

12. PERMITS AND RESPONSIBILITIES (1964 JUN)

The Contractor shall, without additional expense to the Government, be responsible for obtaining any necessary licenses and permits, and for complying with any applicable Federal, State, and municipal laws, codes, and regulations, in connection with the prosecution of the work. He shall be similarly responsible for all damages to persons or property that occur as a result of his fault or negligence. He shall take proper safety and health precautions to protect the work the workers, the public, and the property of others. He shall also be responsible for all materials delivered and work performed until completion and acceptance of the entire construction work, except for any completed unit of construction thereof which theretofore may have been accepted. (ASPR 7–602.13)

13. CONDITIONS AFFECTING THE WORK (1964 JUN)

The Contractor shall be responsible for having taken steps reasonably necessary to ascertain the nature and location of the work and the general and local conditions which can affect the work or the cost thereof. Any failure by the Contractor to do so will not relieve him from responsibility for successfully performing the work without additional expense to the Government. The Government assumes no responsibility for any understanding or representations concerning conditions made by any of its officers or agents prior to the execution of this contract, unless such understanding or representations by the Government are expressly stated in the contract. (ASPR 7–602.14)

14. OTHER CONTRACTS (1964 JUN)

The Government may undertake or award other contracts for additional work and the Contractor shall fully cooperate with such other contractors and Government employees and carefully fit his own work to such additional work as may be directed by the Contracting Officer. The Contractor shall not commit or permit any act which will interfere with the performance of work by any other contractor or by Government employees. (ASPR 7–602.15)

15. SHOP DRAWINGS (1976 OCT)

(a) The term *"shop drawings"* includes drawings, diagrams, layouts, schematics, descriptive literature, illustrations, schedules, performance and test data; and similar materials furnished by the Contractor to explain in detail specific portions of the work required by the contract.

(b) If this contract requires shop drawings, the Contractor shall coordinate all such drawings, and review them for accuracy, completeness, and compliance with contract requirements and shall indicate his approval thereon as evidence of such coordination and review. Shop drawings submitted to the Contracting Officer without evidence of the Contractor's approval may be returned for resubmission. The Contracting Officer will indicate his approval or disapproval of the shop drawings and if not approved as submitted shall indicate his reasons therefor. Any work done prior to such approval shall be at the Contractor's risk. Approval by the Contracting Officer shall not relieve the Contractor from responsibility for any errors or omissions in such drawings, nor from responsibility for complying with the requirements of this contract, except with respect to variations described and approved in accordance with (c) below.

(c) If shop drawings show variations from the contract requirements, the Contractor shall describe such variations in writing, separate from the drawings, at the time of submission. If the Contracting Officer approves any such variation(s), he shall issue an appropriate contract

modification, except that, if the variation is minor and does not involve a change in price or in time of performance, a modification need not be issued.

(d) The Contractor shall submit to the Contracting Officer for approval four copies (unless otherwise indicated herein) of all shop drawings as called for under the various headings of these specifications. Three sets (unless otherwise indicated herein) of all shop drawings will be retained by the Contracting Officer and one set will be returned to the Contractor. (ASPR 7–602.54(a))

16. USE AND POSSESSION PRIOR TO COMPLETION (1976 OCT)

The Government shall have the right to take possession of or use any completed or partially completed part of the work. Prior to such possession or use, the Contracting Officer shall furnish the Contractor an itemized list of work remaining to be performed or corrected on such portions of the project as are to be possessed or used by the Government, *provided* that failure to list any item of work shall not relieve the Contractor of responsibility for compliance with the terms of the contract. Such possession or use shall not be deemed an acceptance of any work under the contract. While the Government has such possession or use, the Contractor, notwithstanding the provisions of the clause of this contract entitled "Permits and Responsibilities," shall be relieved of the responsibility for the loss or damage to the work resulting from the Government's possession or use. If such prior possession or use by the Government delays the progress of the work or causes additional expense to the Contractor, an equitable adjustment in the contract price or the time of completion will be made and the contract shall be modified in writing accordingly. (ASPR 7–602.39)

17. SUSPENSION OF WORK (1968 FEB)

(a) The Contracting Officer may order the Contractor in writing to suspend, delay, or interrupt all or any part of the work for such period of time as he may determine to be appropriate for the convenience of the Government.

(b) If the performance of all or any part of the work is, for an unreasonable period of time, suspended, delayed, or interrupted by an act of the Contracting Officer in the administration of this contract, or by his failure to act within the time specified in this contract (or if no time is specified, within a reasonable time), an adjustment shall be made for any increase in the cost of performance of this contract (excluding profit) necessarily caused by such unreasonable suspension, delay, or interruption and the contract modified in writing accordingly. However, no adjustment shall be made under this clause for any suspension, delay, or interruption to the extent (1) that performance would have been so suspended, delayed, or interrupted by any other cause, including the fault or negligence of the Contractor or (2) for which an equitable adjustment is provided for or excluded under any other provision of this contract.

(c) No claim under this clause shall be allowed (1) for any costs incurred more than 20 days before the Contractor shall have notified the Contracting Officer in writing of the act or failure to act involved (but this requirement shall not apply as to a claim resulting from a suspension order), and (2) unless the claim, in an amount stated, is asserted in writing as soon as practicable after the termination of such suspension, delay, or interruption, but not later than the date of final payment under the contract. (ASPR 7–602.46)

18. TERMINATION FOR CONVENIENCE OF THE GOVERNMENT–CONSTRUCTION (1974 APR)

(a) The performance of work under this contract may be terminated by the Government in accordance with this clause in whole, or from time to time in part, whenever the Contracting Officer shall determine that such termination is in the best interest of the Government. Any such termination shall be effected by delivery to the Contractor of a Notice of Termination specifying the extent to which performance of work under the contract is terminated, and the date upon which such termination becomes effective.

(b) After receipt of a Notice of Termination, and except as otherwise directed by the Contracting Officer, the Contractor shall:

(i) stop work under the contract on the date and to the extent specified in the Notice of Termination;

(ii) place no further orders or subcontracts for materials, services or facilities, except as may be necessary for completion of such portion of the work under the contract as is not terminated;

(iii) terminate all orders and subcontracts to the extent that they relate to the performance of work terminated by the Notice of Termination;

(iv) assign to the Government, in the manner, at the times, and to the extent directed by the Contracting Officer, all of the right, title, and interest of the Contractor under the orders and subcontracts so terminated, in which case the Government shall have the right, in its discretion, to settle or pay any or all claims arising out of the termination of such orders and subcontracts;

(v) settle all outstanding liabilities and all claims arising out of such termination of orders and subcontracts, with the approval or ratification of the Contracting Officer, to the extent he may require, which approval or ratification shall be final for all the purposes of this clause;

(vi) transfer title and deliver to the Government, in the manner, at the times, and to the extent, if any, directed by the Contracting Officer, (A) the fabricated or unfabricated parts, work in process, completed work supplies, and other material produced as a part of, or acquired in connection with the performance of, the work terminated by the Notice of Termination, and (B) the completed or partially completed plans, drawings, information, and other property which, if the contract had been completed, would have been required to be furnished to the Government;

(vii) use his best efforts to sell, in the manner, at the times, to the extent, and at the price or prices directed or authorized by the Contracting Officer, any property of the types referred to in (vi) above; *provided,* however, that the Contractor (A) shall not be required to extend credit to any purchaser, and (B) may acquire any such property under the conditions prescribed by and at a

price or prices approved by the Contracting Officer; and *provided further* that the proceeds of any such transfer or disposition shall be applied in reduction of any payments to be made by the Government to the Contractor under this contract or shall otherwise be credited to the price or cost of the work covered by this contract or paid in such other manner as the Contracting Officer may direct;

(viii) complete performance of such part of the work as shall not have been terminated by the Notice of Termination; and

(ix) take such action as may be necessary, or as the Contracting Officer may direct, for the protection and preservation of the property related to this contract which is in the possession of the Contractor and in which the Government has or may acquire an interest.

At any time after expiration of the plant clearance period, as defined in Section VIII, Armed Services Procurement Regulation, as it may be amended from time to time, the Contractor may submit to the Contracting Officer a list, certified as to quantity and quality, of any or all items of termination inventory not previously disposed of, exclusive of items the disposition of which has been directed or authorized by the Contracting Officer, and may request the Government to remove such items or enter into a storage agreement covering them. Not later than fifteen (15) days thereafter, the Government will accept title to such items and remove them or enter into a storage agreement covering the same; *provided,* that the list submitted shall be subject to verification by the Contracting Officer upon removal of the items, or if the items are stored, within forty–five (45) days from the date of submission of the list, and any necessary adjustment to correct the list as submitted shall be made prior to final settlement.

(c) After receipt of a Notice of Termination, the Contractor shall submit to the Contracting Officer his termination claim, in the form and with certification prescribed by the Contracting Officer. Such claim shall be submitted promptly but in no event later than one year from the effective date of termination, unless one or more extensions in writing are granted by the Contracting Officer, upon request of the Contractor made in writing within such one year period or authorized extension thereof. However, if the Contracting Officer determines that the facts justify such action, he may receive and act upon any such termination claim at any time after such one year period or any extension thereof. Upon failure of the Contractor to submit his termination claim within the time allowed, the Contracting Officer may determine, on the basis of information available to him, the amount, if any, due to the Contractor by reason of the termination and shall thereupon pay to the Contractor the amount so determined.

(d) Subject to the provisions of paragraph (c), the Contractor and the Contracting Officer may agree upon the whole or any part of the amount or amounts to be paid to the Contractor by reason of the total or partial termination of work pursuant to this clause, which amount or amounts may include a reasonable allowance for profit on work done; *provided,* that such agreed amount or amounts, exclusive of settlement costs, shall not exceed the total contract price as reduced by the amount of payments otherwise made and as further reduced by the contract price of work not terminated. The contract shall be amended accordingly, and the Contractor shall be paid the agreed amount. Nothing in paragraph (e) of this clause, prescribing the amount to be paid to the Contractor in the event of failure of the Contractor and the Contracting Oficer to agree upon the whole amount to be paid to the Contractor by reason of the termination of work pursuant to this clause, shall be deemed to limit, restrict, or otherwise determine or affect the amount or amounts which may be agreed upon to be paid to the Contractor pursuant to this paragraph (d).

(e) In the event of the failure of the Contractor and the Contracting Officer to agree, as provided in paragraph (d), upon the whole amount to be paid to the Contractor by reason of the termination of work pursuant to this clause, the Contracting Officer shall pay to the Contractor the amounts determined by the Contracting Officer as follows, but without duplication of any amounts agreed upon in accordance with paragraph (d):

(i) with respect to all contract work performed prior to the effective date of the Notice of Termination, the total (without duplication of any items) of–

(A) the cost of such work;

(B) the cost of settling and paying claims arising out of the termination of work under subcontracts or orders as provided in paragraph (b)(v) above, exclusive of the amounts paid or payable on account of supplies or materials delivered or services furnished by the subcontractor prior to the effective date of the Notice of Termination of Work under this contract, which amounts shall be included in the cost on account of which payment is made under (A) above; and

(C) a sum, as profit on (A) above, determined by the Contracting Officer pursuant to 8–303 of the Armed Services Procurement Regulation, in effect as of the date of execution of this contract, to be fair and reasonable; *provided,* however, that if it appears that the Contractor would have sustained a loss on the entire contract had it been completed, no profit shall be included or allowed under this subdivision (C) and an appropriate adjustment shall be made reducing the amount of the settlement to reflect the indicated rate of loss; and

(ii) the reasonable cost of the preservation and protection of property incurred pursuant to paragraph (b)(ix); and any other reasonable cost incidental to termination of work under this contract, including expense incidental to the determination of the amount due to the Contractor as the result of the termination of work under this contract.

The total sum to be paid to the Contractor under (i) above shall not exceed the total contract price as reduced by the amount of payments otherwise made and as further reduced by the contract price of work not terminated. Except for normal spoilage, and except to the extent that the Government shall have otherwise expressly assumed the

risk of loss, there shall be excluded from the amounts payable to the Contractor under (i) above, the fair value, as determined by the Contracting Officer, of property which is destroyed, lost, stolen, or damaged so as to become undeliverable to the Government, or to a buyer pursuant to paragraph (b)(vii).

(f) Costs claimed, agreed to, or determined pursuant to (c), (d), (e), and (i) hereof shall be in accordance with Section XV of the Armed Services Procurement Regulation as in effect on the date of this contract.

(g) The Contractor shall have the right of appeal, under the clause of this contract entitled "Disputes", from any determination made by the Contracting Officer under paragraph (c), (e), or (i) hereof, except that if the Contractor has failed to submit his claim within the time provided in paragraph (c) or (i) hereof, and has failed to request extension of such time, he shall have no such right of appeal. In any case where the Contracting Officer has made a determination of the amount due under paragraph (c), (e) or (i) hereof, the Government shall pay to the Contractor the following: (i) if there is no right of appeal hereunder or if no timely appeal has been taken, the amount so determined by the Contracting Officer, or (ii) if an appeal has been taken, the amount finally determined on such appeal.

(h) In arriving at the amount due the Contractor under this clause there shall be deducted (i) all unliquidated advance or other payments on account theretofore made to the Contractor, applicable to the terminated portion of this contract, (ii) any claim which the Government may have against the Contractor in connection with this contract, and (iii) the agreed price for, or the proceeds of sale of, any materials, supplies, or other things acquired by the Contractor or sold, pursuant to the provisions of this clause, and not otherwise recovered by or credited to the Government.

(i) If the termination hereunder be partial, the Contractor may file with the Contracting Officer a claim for an equitable adjustment of the price or prices specified in the contract relating to the continued portion of the contract (the portion not terminated by the Notice of Termination), and such equitable adjustment as may be agreed upon shall be made in such price or prices. Any claim by the Contractor for an equitable adjustment under this clause must be asserted within ninety (90) days from the effective date of the termination notice, unless an extension is granted in writing by the Contracting Officer.

(j) The Government may from time to time, under such terms and conditions as it may prescribe, make partial payments and payments on account against costs incurred by the Contractor in connection with the terminated portion of this contract whenever in the opinion of the Contracting Officer the aggregate of such payments shall be within the amount to which the Contractor will be entitled hereunder. If the total of such payments is in excess of the amount finally agreed or determined to be due under this clause, such excess shall be payable by the Contractor to the Government upon demand, together with interest computed at the rate established by the Secretary of the Treasury pursuant to Public Law 92–41, 85 STAT 97 for the Renegotiation Board, for the period from the date such excess payment is received by the Contractor to the date on which such excess is repaid to the Government; *provided*, however, that no interest shall be charged with respect to any such excess payment attributable to a reduction in the Contractor's claim by reason of retention or other disposition of termination inventory until ten days after the date of such retention or disposition, or such later date as determined by the Contracting Officer by reason of the circumstances.

(k) Unless otherwise provided for in this contract, or by applicable statute, the Contractor shall – from the effective date of termination until the expiration of three years after final settlement under this contract – preserve and make available to the Government at all reasonable times at the office of the Contractor but without direct charge to the Government, all his books, records, documents and other evidence bearing on the costs and expenses of the Contractor under this contract and relating to the work terminated hereunder, or, to the extent approved by the Contracting Officer, photographs, microphotographs, or other authentic reproductions thereof. (ASPR 7–602.29(a))

19. PAYMENT OF INTEREST ON CONTRACTORS' CLAIMS (1976 JUL)

(a) If an appeal is filed by the Contractor from a final decision of the Contracting Officer under the "Disputes" clause of this contract, denying a claim arising under the contract, simple interest on the amount of the claim finally determined owed by the Government shall be payable to the Contractor. Such interest shall be at the rate established by the Secretary of the Treasury pursuant to Public Law 92–41; 85 STAT 97, from the date the Contractor furnishes to the Contracting Officer his written appeal under the "Disputes" clause of this contract, to the date of (i) a final judgment by a court of competent jurisdiction, or (ii) mailing to the Contractor of a supplemental agreement for execution either confirming completed negotiations between the parties or carrying out a decision of a board of contract appeals.

(b) Notwithstanding (a) above, (i) interest shall be applied only from the date payment was due, if such date is later than the filing of appeal; and (ii) interest shall not be paid for any period of time that the Contracting Officer determines the Contractor has unduly delayed in pursuing his remedies before a board of contract appeals or a court of competent jurisdiction. (ASPR 7–104.82)

20. PRICING OF ADJUSTMENTS (1970 JUL)

When costs are a factor in any determination of a contract price adjustment pursuant to the "Changes" clause or any other provision of this contract, such costs shall be in accordance with Section XV of the Armed Services Procurement Regulation as in effect on the date of this contract. (ASPR 7–103.26)

21. PATENT INDEMNITY (1964 JUN)

Except as otherwise provided, the Contractor agrees to indemnify the Government and its officers, agents, and employees against liability, including costs and expenses, for infringement upon any Letters Patent of the United States (except Letters Patent issued upon an application which is now or may hereafter be, for reasons of national security, ordered by the Government to be kept secret or otherwise withheld from issue) arising out of the performance of this contract or out of the use or disposal by or for the account of the Government of supplies furnished or construction work performed hereunder. (ASPR 7–602.16(a))

22. ADDITIONAL BOND SECURITY (1976 OCT)

If any surety upon any bond furnished in connection with this contract becomes unacceptable to the Government, or if any such surety fails to furnish reports as to his financial condition from time to time as requested by the Government, or if the contract price is increased to such an extent that the penal sum of any bond becomes

inadequate in the opinion of the Contracting Officer, the Contractor shall promptly furnish such additional security as may be required from time to time to protect the interests of the Government and of persons supplying labor or materials in the prosecution of the work contemplated by this contract. (ASPR 7–602.17)

23. EXAMINATION OF RECORDS BY COMPTROLLER GENERAL (1975 JUN)

(a) This clause is applicable if the amount of this contract exceeds $10,000 and was entered into by means of negotiation, including small business restricted advertising but is not applicable if this contract was entered into by means of formal advertising.

(b) The Contractor agrees that the Comptroller General of the United States or any of his duly authorized representatives shall, until the expiration of three years after final payment under this contract or such lesser time specified in either Appendix M of the Armed Services Procurement Regulation or the Federal Procurement Regulations Part 1–20, as appropriate, have access to and the right to examine any directly pertinent books, documents, papers, and records of the Contractor involving transactions related to this contract.

(c) The Contractor further agrees to include in all his subcontracts hereunder a provision to the effect that the subcontractor agrees that the Comptroller General of the United States or any of his duly authorized representatives shall, until the expiration of three years after final payment under the subcontract or such lesser time specified in either Appendix M of the Armed Services Procurement Regulation or the Federal Procurement Regulations Part 1–20, as appropriate, have access to and the right to examine any directly pertinent books, documents, papers, and records of such subcontractor, involving transactions related to the subcontract. The term "subcontract" as used in this clause excludes (i) purchase orders not exceeding $10,000 and (ii) subcontracts or purchase orders for public utility services at rates established for uniform applicability to the general public.

(d) The periods of access and examination described in (b) and (c) above for records which relate to (i) appeals under the "Disputes" clause of this contract, (ii) litigation or the settlement of claims arising out of the performance of this contract, or (iii) costs and expenses of this contract as to which exception has been taken by the Comptroller General or any of his duly authorized representatives, shall continue until such appeals, litigation, claims or exceptions have been disposed of. (ASPR 7–104.15)

24. BUY AMERICAN ACT (1966 OCT)

(a) *Agreement.* In accordance with the Buy American Act (41 U.S.C. 10a–10d), the Contractor agrees that only domestic construction material will be used (by the Contractor, subcontractors, materialmen, and suppliers) in the performance of this contract, except for nondomestic construction material listed in the "Nondomestic Construction Materials" clause, if any, of this contract.

(b) *Domestic construction material.* "Construction material" means any article, material, or supply brought to the construction site for incorporation in the building or work. An unmanufactured construction material is a "domestic construction material" if it has been mined or produced in the United States. A manufactured construction material is a "domestic construction material" if it has been manufactured in the United States and if the cost of its components which have been mined, produced, or manufactured in the United States exceeds 50 percent of the cost of all its components. "Component" means any article, material, or supply directly incorporated in a construction material.

(c) *Domestic component.* A component shall be considered to have been "mined, produced, or manufactured in the United States" (regardless of its source in fact) if the article, material, or supply in which it is incorporated was manufactured in the United States and the component is of a class or kind determined by the Government to be not mined, produced, or manufactured in the United States in sufficient and reasonably available commercial quantities and of a satisfactory quality. (ASPR 7–602.20)

25. EQUAL OPPORTUNITY (1976 JUL)

(The following clause is not applicable if this contract is exempt under ASPR 12–805. Exemptions include contracts and subcontracts not exceeding $10,000, and work under contracts and subcontracts which is to be performed outside the United States by employees who were not recruited within the United States. The requirements of paragraph (3) of the clause shall be satisfied whenever the prime contractor or subcontractor posts copies of the notification prescribed by or pursuant to paragraph (1) of the clause (ASPR 12–804(e)(2).)

During the performance of this contract, the Contractor agrees as follows:

(1) The Contractor will not discriminate against any employee or applicant for employment because of race, color, religion, sex, or national origin. The Contractor will take affirmative action to ensure that applicants are employed, and that employees are treated during employment, without regard to their race, color, religion, sex, or national origin. Such action shall include but not be limited to the following: Employment, upgrading, demotion, or transfer, recruitment or recruitment advertising: layoff or termination, rates of pay or other forms of compensation; and selection for training, including apprenticeship. The Contractor agrees to post in conspicuous places, available to employees and applicants for employment, notices to be provided by the Contracting Officer setting forth the provisions of this Equal Opportunity clause.

(2) The Contractor will, in all solicitations or advertisements for employees placed by or on behalf of the Contractor, state that all qualified applicants will receive consideration for employment without regard to race, color, religion, sex, or national origin.

(3) The Contractor will send to each labor union or representative of workers with which he has a collective bargaining agreement or other contract or understanding a notice to be provided by the agency Contracting Officer, advising the labor union or workers' representative of the contractor's commitments under this Equal Opportunity clause and shall post copies of the notice in conspicuous places available to employees and applicants for employment.

(4) The Contractor will comply with all provisions of Executive Order No. 11246 of September 24, 1965, as amended by Executive Order No. 11375 of October 13, 1967, and of the rules, regulations, and relevant orders of the Secretary of Labor.

(5) The Contractor will furnish all information and reports required by Executive Order No. 11246 of September 24, 1965, as amended by Executive Order No. 11375 of October 13, 1967, and by the rules, regulations, and orders of the Secretary of Labor or pursuant thereto, and will permit access to his books, records, and accounts by the contracting agency and the Secretary of Labor for purposes of investigation to ascertain compliance with such rules, regulations and orders.

(6) In the event of the Contractor's noncompliance with the Equal Opportunity clause of this contract or with any of the said rules, regulations, or orders, this contract

may be canceled, terminated or suspended in whole or in part, and the Contractor may be declared ineligible for further Government contracts in accordance with procedures authorized in Executive Order No. 11246 of September 24, 1965 as amended by Executive Order No. 11375 of October 13, 1967, and such other sanctions may be imposed and remedies invoked as provided in Executive Order No. 11246 of September 24, 1965, as amended by Executive Order No. 11375 of October 13, 1967, or by rule, regulation, or order of the Secretary of Labor, or as otherwise provided by law.

(7) The Contractor will include the provisions of paragraphs (1) through (7) in every subcontract or purchase order unless exempted by rules, regulations, or orders of the Secretary of Labor issued pursuant to Section 204 of Executive Order No. 11246 of September 24, 1965, as amended by Executive Order No. 11375 of October 13, 1967, so that such provisions will be binding upon each subcontractor or vendor. The Contractor will take such action with respect to any subcontract or purchase order as the contracting agency may direct as a means of enforcing such provisions including sanctions for noncompliance: *Provided,* however, that in the event the Contractor becomes involved in, or is threatened with, litigation with a subcontractor or vendor as a result of such direction by the contracting agency, the Contractor may request the United States to enter into such litigation to protect the interests of the United States. (ASPR 7–103.18(a))

26. COVENANT AGAINST CONTINGENT FEES (1958 JAN)

The contractor warrants that no person or selling agency has been employed or retained to solicit or secure this contract upon an agreement or understanding for a commission, percentage, brokerage, or contingent fee, excepting bona fide employees or bona fide established commercial or selling agencies maintained by the Contractor for the purpose of securing business. For breach or violation of this warranty the Government shall have the right to annul this contract without liability or in its discretion, to deduct from the contract price or consideration, or otherwise recover, the full amount of such commission, percentage, brokerage or contingent fee. (ASPR 7–103.20)

27. OFFICIALS NOT TO BENEFIT (1949 JUL)

No member of or delegate to Congress, or resident commissioner, shall be admitted to any share or part of this contract, or to any benefit that may arise therefrom; but this provision shall not be construed to extend to this contract if made with a corporation for its general benefit. (ASPR 7–103.19)

28. CONVICT LABOR (1975 OCT)

In connection with the performance of work under this contract, the Contractor agrees not to employ any person undergoing sentence of imprisonment except as provided by Public Law 89–176, September 10, 1965 (18 U.S.C. 4082(c)(2)) and Executive Order 11755, December 29, 1973. (ASPR 7–104.17)

29. UTILIZATION OF SMALL BUSINESS CONCERNS (1958 JAN)

(a) It is the policy of the Government as declared by the Congress that a fair proportion of the purchases and contracts for supplies and services for the Government be placed with small business concerns.

(b) The Contractor agrees to accomplish the maximum amount of subcontracting to small business concerns that the Contractor finds to be consistent with the efficient performance of this contract. (ASPR 7–104.14(a))

30. UTILIZATION OF MINORITY BUSINESS ENTERPRISES (1971 NOV)

(a) It is the policy of the Government that Minority Business Enterprises shall have the maximum practicable opportunity to participate in the performance of Government contracts.

(b) The Contractor agrees to use his best efforts to carry out this policy in the award of his subcontracts to the fullest extent consistent with the efficient performance of this contract. As used in this contract, the term "minority business enterprise" means a business, at least 50 percent of which is owned by minority group members or, in case of publicly–owned businesses, at least 51 percent of the stock of which is owned by minority group members. For the purposes of this definition, minority group members are Negroes, Spanish–speaking American persons, American–Orientals, American–Indians, American Eskimos, and American Aleuts. Contractors may rely on written representations by subcontractors regarding their status as minority business enterprises in lieu of an independent investigation. (ASPR 7–104.36(a))

31. FEDERAL, STATE, AND LOCAL TAXES (1971 NOV)

(a) Except as may be otherwise provided in this contract, the contract price includes all applicable Federal, State, and local taxes and duties.

(b) Nevertheless, with respect to any Federal excise tax or duty on the transactions or property covered by this contract, if a statute, court decision, written ruling, or regulation takes effect after the contract date, and –

(1) results in the Contractor being required to pay or bear the burden of any such Federal excise tax or duty or increase in the rate thereof which would not otherwise have been payable on such transactions or property, the contract price shall be increased by the amount of such tax or duty or rate increase, *provided* the Contractor warrants in writing that no amount for such newly imposed Federal excise tax or duty or rate increase was included in the contract price as a contingency reserve or otherwise; or

(2) results in the Contractor not being required to pay or bear the burden of, or in his obtaining a refund or drawback of, any such Federal excise tax or duty which would otherwise have been payable on such transactions or property or which was the basis of an increase in the contract price, the contract price shall be decreased by the amount of the relief, refund, or drawback or that amount shall be paid to the Government, as directed by the Contracting Officer. The contract price shall be similarly decreased if the Contractor, through his fault or negligence or his failure to follow instructions of the Contracting Officer, is required to pay or bear the burden of, or does not obtain a refund or drawback of, any such Federal excise tax or duty.

(c) Paragraph (b) above shall not be applicable to social security taxes or to any other employment tax.

(d) No adjustment of less than $100 shall be made in the contract price pursuant to paragraph (b) above.

(e) As used in paragraph (b) above, the term "contract date" means the date set for bid opening, or if this is a negotiated contract, the contract date. As to additional supplies or services procured by modification to this contract, the term "contract date" means the date of such modification.

(f) Unless there does not exist any reasonable basis to sustain an exemption, the Government upon the

request of the Contractor shall, without further liability, furnish evidence appropriate to establish exemption from any Federal, State, or local tax; *provided* that, evidence appropriate to establish exemption from any Federal excise tax or duty which may give rise to either an increase or decrease in the contract price will be furnished only at the discretion of the Government.

(g) The Contractor shall promptly notify the Contracting Officer of matters which will result in either an increase or decrease in the contract price and shall take action with respect thereto as directed by the Contracting Officer. (ASPR 7–103.10(a))

32. DAVIS–BACON ACT (40 U.S.C. 276a to a–7)(1977 DEC)

(If this contract is with a State or political subdivision thereof, the Contractor agrees to comply with the requirements of the Contract Work Hours Standards Act and to insert this clause in all subcontracts hereunder with private persons or firms)

(a) All mechanics and laborers employed or working directly upon the site of the work shall be paid unconditionally and not less often than once a week, and without subsequent deduction or rebate on any account (except such payroll deductions as are permitted by the Copeland Regulations, (29 CFR, Part 3)), the full amounts due at time of payment computed at wage rates not less than the aggregate of the basic hourly rates and the rates of payments, contributions, or costs for any fringe benefits contained in the wage determination decision of the Secretary of Labor which is attached hereto and made a part hereof, regardless of any contractual relationship which may be alleged to exist between the Contractor or subcontractor and such laborers and mechanics. A copy of such wage determination decision shall be kept posted by the Contractor at the site of the work in a prominent place where it can be easily seen by the workers. The term *mechanics and laborers* shall be deemed to include apprentices and trainees not covered by an approved program as provided by the apprentice and trainee clause of the contract.

(b) The Contractor may discharge his obligation under this clause to workers in any classification for which the wage determination decision contains:

(1) Only a basic hourly rate of pay, by making payment at not less than such basic hourly rate, except as otherwise provided in the Copeland Regulations. (29 CFR, Part 3); or

(2) Both a basic hourly rate of pay and fringe benefits payments, by making payment in cash, by irrevocably making contributions pursuant to a fund, plan, or program for, and/or by assuming an enforceable commitment to bear the cost of, bona fide fringe benefits contemplated by the Davis–Bacon Act, or by any combination thereof. Contributions made, or costs assumed, on other than a weekly basis shall be considered as having been constructively made or assumed, during a weekly period to the extent that they apply to such period. Where a fringe benefit is expressed in a wage determination in any manner other than as an hourly rate and the Contractor pays a cash equivalent or provides an alternative fringe benefit, he shall furnish information with his payrolls showing how he determined that the cost incurred to make the cash payment or to provide the alternative fringe benefit is equal to the cost of the wage determination fringe benefit. In any case where the Contractor provides a fringe benefit different from any contained in the wage determination, he shall similarly show how he arrived at the hourly rate shown therefor. In the event of disagreement between or among the interested parties as to an equivalent of any fringe benefit, the Contracting Officer shall submit the question, together with his recommendation, to the Secretary of Labor for final determination.

(c) The assumption of an enforceable commitment to bear the cost of fringe benefits, or the provision of any fringe benefits not expressly listed in section 1(b)(2) of the Davis–Bacon Act or in the wage determination decision forming a part of the contract, may be considered as payment of wages only with the approval of the Secretary of Labor pursuant to a written request by the Contractor. The Secretary of Labor may require the Contractor to set aside assets, in a separate account, to meet his obligations under any unfunded plan or program.

(d) The Contracting Officer shall require that any class of laborers or mechanics, including apprentices and trainees, which is not listed in the wage determination decision and which is to be employed under the contract shall be classified or reclassified conformably to the wage determination decision and shall report the action taken to the Secretary of Labor. If the interested parties cannot agree on the proper classification or reclassification of a particular class of laborers or mechanics, including apprentices and trainees, to be used, the Contracting Officer shall submit the question, together with his recommendation, to the Secretary of Labor for final determination.

(e) In the event it is found by the Contracting Officer that any laborer or mechanic, including all apprentices and trainees, employed by the Contractor or any subcontractor directly on the site of the work covered by this contract has been or is being paid at a rate of wages less than the rate of wages required by paragraph (a) of this clause, or by the "Apprentices and Trainees" clause of this contract, the Contracting Officer may (i) by written notice to the Government Prime Contractor terminate his right to proceed with the work, or such part of the work as to which there has been a failure to pay said required wages, and (ii) prosecute the work to completion by contract or otherwise, whereupon such Contractor and his sureties shall be liable to the Government for any excess costs occasioned the Government thereby.

(f) Paragraphs (a) through (e) of the clause shall apply to this contract to the extent that it is (i) a prime contract with the Government subject to the Davis–Bacon Act or (ii) a subcontract also subject to the Davis–Bacon Act under such prime contract. (ASPR 7–602.23(a)(i))

33. CONTRACT WORK HOURS AND SAFETY STANDARDS ACT – OVERTIME COMPENSATION (40 U.S.C. 327–333) (1977 DEC)

(If this contract is with a State or political subdivision thereof, the Contractor agrees to comply with the requirements of the Contract Work Hours Standards Act and to insert this clause in all subcontracts hereunder with private persons or firms)

This contract is subject to the Contract Work Hours and Safety Standards Act and to the applicable rules, regulations, and interpretations of the Secretary of Labor.

(a) The Contractor shall not require or permit any laborer or mechanic, including apprentices, trainees, watchmen, and guards in any workweek in which he is employed on any work under this contract to work in excess of eight (8) hours in any calendar day or in excess of forty (40) hours in such workweek on work subject to the provisions of the Contract Work Hours and Safety Standards Act unless such laborer or mechanic, including apprentices, trainees, watchmen, and guards, receives compensation at a rate not less than one and one–half times his basic rate of pay for all such hours worked in

excess of eight (8) hours in any calendar day or in excess of forty (40) hours in such workweek, whichever is the greater number of overtime hours. The "basic rate of pay," as used in this clause, shall be the amount paid per hour, exclusive of the Contractor's contribution or cost for fringe benefits and any cash payment made in lieu of providing fringe benefits, or the basic hourly rate contained in the wage determination, whichever is greater.

(b) In the event of any violation of the provisions of paragraph (a), the Contractor shall be liable to any affected employee for any amounts due, and to the United States for liquidated damages. Such liquidated damages shall be computed with respect to each individual laborer or mechanic, including an apprentice, trainee, watchman, or guard, employed in violation of the provisions of paragraph (a) in the sum of $10 for each calendar day on which such employee was required or permitted to be employed on such work in excess of eight (8) hours or in excess of the standard workweek of forty (40) hours without payment of the overtime wages required by paragraph (a). (ASPR 7–602.23(a)(ii))

34. APPRENTICES AND TRAINEES (1977 DEC)

(If this contract is with a State or political subdivision thereof, the Contractor agrees to comply with the requirements of the Contract Work Hours Standards Act and to insert this clause in all subcontracts hereunder with private persons or firms)

(a) Apprentices will be permitted to work at less than the predetermined rate for the work they performed when they are employed and individually registered in a bona fide apprenticeship program registered with the U.S. Department of Labor, Employment and Training Administration, Bureau of Apprenticeship and Training, or with a state apprenticeship agency recognized by the Bureau, or if a person is employed in his first ninety (90) days of probationary employment as an apprentice in such an apprenticeship program, who is not individually registered in the program, but who has been certified by the Bureau of Apprenticeship and Training or a state apprenticeship agency (where appropriate) to be eligible for probationary employment as an apprentice. The allowable ratio of apprentices to journeymen in any craft classification employed on this contract shall not be greater than the ratio permitted to the Contractor as to his entire work force under the registered program. Any employee listed on a payroll at an apprentice wage rate, who is not a trainee as defined in paragraph (b) of this clause or is not registered or otherwise employed as stated above, shall be paid the wage rate determined by the Secretary of Labor for the classification of work he actually performed. The Contractor or subcontractor shall furnish to the Contracting Officer written evidence of the registration of his program and apprentices as well as the appropriate ratios and wage rates (expressed in percentages of the journeyman hourly rates), for the area of construction prior to using apprentices on the contract work. The wage rate paid apprentices shall be not less than the appropriate percentage of the journeyman's rate contained in the applicable wage determination.

(b) Trainees will be permitted to work at less than the predetermined rate for the work performed when they are employed pursuant to and individually registered in a program which has received prior approval, evidenced by formal certification, by the U.S. Department of Labor, Employment and Training Administration, Bureau of Apprenticeship and Training. The ratio of trainees to journeymen on this contract shall not be greater than permitted under the plan approved by the Bureau of Apprenticeship and Training. Every trainee must be paid at not less than the rate specified in the approved program for his level of progress. Any employee listed on the payroll at a trainee rate who is not registered and not participating in a training plan approved by the Bureau of Apprenticeship and Training shall be paid not less than the wage rate determined by the Secretary of Labor for the classification of work he actually performed. The Contractor or subcontractor shall furnish the Contracting Officer written evidence of the certification of his program, the registration of the trainee, and the ratios and wage rates prescribed in that program. In the event the Bureau of Apprenticeship and Training withdraws the approval of a training program, the Contractor shall no longer be permitted to utilize trainees at less than the applicable predetermined rate for the work performed until an acceptable program is approved.

(c) The utilization of apprentices, trainees, and journeymen under this clause shall be in conformity with the equal employment opportunity requirements of this contract. (ASPR 7–602.23(a)(iii)

35. PAYROLLS AND BASIC RECORDS (1977 DEC)

(If this contract is with a State or political subdivision thereof, the Contractor agrees to comply with the requirements of the Contract Work Hours Standards Act and to insert this clause in all subcontracts hereunder with private persons or firms)

(a) The Contractor shall maintain payrolls and basic records relating thereto during the course of the work and shall preserve them for a period of three (3) years thereafter for all laborers and mechanics, including apprentices, trainees, watchmen, and guards, working at the site of the work. Such records shall contain the name and address of each such employee, his correct classification, rate of pay (including rates of contributions for, or costs assumed to provide, fringe benefits), daily and weekly number of hours worked, deductions made and actual wages paid. (NOTE: Watchmen and guards are reflected on payroll records for Contract Work Hours and Safety Standards Act purposes only.) Whenever the Contractor has obtained approval from the Secretary of Labor as provided in paragraph (c) of the clause entitled "Davis–Bacon Act," he shall maintain records which show the commitment, its approval, written communication of the plan or program to the laborers or mechanics affected, and the costs anticipated or incurred under the plan or program.

(b) The Contractor shall submit weekly a copy of all payrolls to the Contracting Officer. The Government Prime Contractor shall be responsible for the submission of copies of payrolls of all subcontractors. The copy shall be accompanied by a statement signed by the Contractor indicating that the payrolls are correct and complete, that the wage rates contained therein are not less than those determined by the Secretary of Labor, and that the classifications set forth for each laborer or mechanic, including apprentices and trainees, conform with the work he performed. Weekly submission of the "Statement of Compliance" required under this contract and the Copeland Regulations of the Secretary of Labor (29 CFR Part 3) shall satisfy the requirement for submission of the above statement. The Contractor shall submit also a copy of any approval by the Secretary of Labor with respect to fringe benefits which is required by paragraph (c) of the clause entitled "Davis–Bacon Act."

(c) The Contractor shall make the records required under this clause available for inspection by authorized representatives of the Contracting Officer and the Department of Labor, and shall permit such representatives

to interview employees during working hours on the job. (ASPR 7–602.23(a)(iv))

36. COMPLIANCE WITH COPELAND REGULATIONS (1964 JUN)

(If this contract is with a State or political subdivision thereof, the Contractor agrees to comply with the requirements of the Contract Work Hours Standards Act and to insert this clause in all subcontracts hereunder with private persons or firms)

The Contractor shall comply with the Copeland Regulations of the Secretary of Labor (29 CFR Part 3) which are incorporated herein by reference. (ASPR 7–602.23(a)(v))

37. WITHHOLDING OF FUNDS (1977 DEC)

(If this contract is with a State or political subdivision thereof, the Contractor agrees to comply with the requirements of the Contract Work Hours Standards Act and to insert this clause in all subcontracts hereunder with private persons or firms)

(a) The Contracting Officer may withhold or cause to be withheld from the Government Prime Contractor so much of the accrued payments or advances as may be considered necessary (i) to pay laborers and mechanics, including apprentices, trainees, watchmen, and guards, employed by the Contractor or any subcontractor on the work the full amount of wages required by the contract, and (ii) to satisfy any liability of the Contractor and any subcontractor for liquidated damages under paragraph (b) of the clause entitled "Contract Work Hours and Safety Standards Act–Overtime Compensation."

(b) If the Contractor or any subcontractor fails to pay any laborer, mechanic, apprentice, trainee, watchman, or guard employed or working on the site of the work, all or part of the wages required by the contract, the Contracting Officer may, after written notice to the Government Prime Contractor, take such action as may be necessary to cause suspension of any further payments or advances until such violations have ceased. (ASPR 7–602.23(a)(vi))

38. SUBCONTRACTS (1972 FEB)

(If this contract is with a State or political subdivision thereof, the Contractor agrees to comply with the requirements of the Contract Work Hours Standards Act and to insert this clause in all subcontracts hereunder with private persons or firms)

The Contractor agrees to insert the clauses hereof entitled "Davis–Bacon Act," "Contract Work Hours and Safety Standards Act–Overtime Compensation," "Apprentices and Trainees," "Payrolls and Basic Records," "Compliance with Copeland Regulations," "Withholding of Funds," "Subcontracts," and "Contract Termination–Debarment" in all subcontracts. The term "Contractor" as used in such clauses in any subcontract shall be deemed to refer to the subcontractor except in the phrase "Government Prime Contractor." (ASPR 7–602.23(a)(vii)

39. CONTRACT TERMINATION–DEBARMENT (1972 APR)

(If this contract is with a State or political subdivision thereof, the Contractor agrees to comply with the requirements of the Contract Work Hours Standards Act and to insert this clause in all subcontracts hereunder with private persons or firms)

A breach of the clauses hereof entitled "Davis–Bacon Act," "Contract Work Hours and Safety Standards Act–Overtime Compensation," "Apprentices and Trainees," "Payrolls and Basic Records," "Compliance with Copeland Regulations," "Withholding of Funds," and "Subcontracts" may be grounds for termination of the contract, and for debarment as provided in 29 CFR 5.6 (ASPR 7–602.23(a)(viii)

40. DISPUTES CONCERNING LABOR STANDARDS (1977 DEC)

(If this contract is with a State or political subdivision thereof, the Contractor agrees to comply with the requirements of the Contract Work Hours Standards Act and to insert this clause in all subcontracts hereunder with private persons or firms)

Disputes arising out of the labor standards provisions of this contract shall be subject to the Disputes clause except to the extent such disputes involve the meaning of classifications or wage rates contained in the wage determination decision of the Secretary of Labor or the applicability of the labor provisions of this contract which questions shall be referred to the Secretary of Labor in accordance with the procedures of the Department of Labor. (ASPR 7–602.23(a)(ix))

41. CONTRACTOR INSPECTION SYSTEM (1964 NOV)

The Contractor shall (i) maintain an adequate inspection system and perform such inspections as will assure that the work performed under the contract conforms to contract requirements, and (ii) maintain and make available to the Government adequate records of such inspections. (ASPR 7–602.10(a))

42. GRATUITIES (1952 MAR)

(a) The Government may, by written notice to the Contractor, terminate the right of the Contractor to proceed under this contract if it is found, after notice and hearing, by the Secretary or his duly authorized representative, that gratuities (in the form of entertainment, gifts, or otherwise) were offered or given by the Contractor, or any agent or representative of the Contractor, to any officer or employee of the Government with a view toward securing a contract or securing favorable treatment with respect to the awarding or amending, or the making of any determinations with respect to the performing of such contract; *provided,* that the existence of the facts upon which the Secretary or his duly authorized representative makes such findings shall be in issue and may be reviewed in any competent court.

(b) In the event this contract is terminated as provided in paragraph (a) hereof, the Government shall be entitled (i) to pursue the same remedies against the Contractor as it could pursue in the event of a breach of the contract by the Contractor, and (ii) as a penalty in addition to any other damages to which it may be entitled by law, to exemplary damages in an amount (as determined by the Secretary or his duly authorized representative) which shall be not less than three nor more than ten times the costs incurred by the Contractor in providing any such gratuities to any such officer or employee.

(c) The rights and remedies of the Government provided in this clause shall not be exclusive and are in addition to any other rights and remedies provided by law or under this contract. (ASPR 7–104.16)

43. SMALL BUSINESS SUBCONTRACTING PROGRAM (MAINTENANCE, REPAIR AND CONSTRUCTION) (1976 OCT)

(The following clause is applicable if this contract is in excess of $500,000)

(a) The Contractor agrees to establish and conduct

a small business subcontracting program which will enable small business concerns to be considered fairly as subcontractors, including suppliers, under this contract. In this connection, the Contractor shall designate an individual to (i) maintain liaison with the Government on small business matters, and (ii) administer the Contractor's Small Business Subcontracting Program.

(b) The Contractor shall submit DD Form 1140–1 each quarter in accordance with the instructions provided on the form, except that where the Contractor submits the report on a corporate basis rather than a plant basis, he may submit his reports to the Department having the responsibility for the Small Business Subcontracting Program at the corporate headquarters. The reporting requirements of this subparagraph (b) do not apply to small business contractors, small business subcontractors, or educational and nonprofit institutions.

(c) The Contractor further agrees (i) to insert the "Utilization of Small Business Concerns" clause in subcontracts which offer substantial subcontracting opportunities, and (ii) to insert in each such subcontract exceeding $500,000 a clause conforming substantially to the language of this clause except that subcontractors shall submit DD Form 1140–1 direct to the Government addressees prescribed on the Form. The Contractor will notify the Contracting Officer of the name and address of each subcontractor that will be required to submit a report on DD Form 1140–1. (ASPR 7–602.26(b))

44. RENEGOTIATION (1959 OCT)

(a) To the extent required by law, this contract is subject to the Renegotiation Act of 1951 (50 U.S.C. App. 1211, et seq.), as amended, and to any subsequent act of Congress providing for the renegotation of contracts. Nothing contained in this clause shall impose any renegotiation obligation with respect to this contract or any subcontract hereunder which is not imposed by an act of Congress heretofore or hereafter enacted. Subject to the foregoing this contract shall be deemed to contain all the provisions required by section 104 of the Renegotiation Act of 1951, and by any such other act, without subsequent contract amendment specifically incorporating such provisions.

(b) The Contractor agrees to insert the provisions of this clause, including this paragraph (b), in all subcontracts, as that term is defined in section 103g of the Renegotiation Act of 1951, as amended. (ASPR 7–103.13(a))

45. NOTICE AND ASSISTANCE REGARDING PATENT AND COPYRIGHT INFRINGEMENT (1965 JAN)

(The provisions of this clause shall be applicable only if the amount of this contract exceeds $10,000.)

(a) The Contractor shall report to the Contracting Officer, promptly and in reasonable written detail, each notice or claim of patent or copyright infringement based on the performance of this contract of which the Contractor has knowledge.

(b) In the event of any claim or suit against the Government on account of any alleged patent or copyright infringement arising out of the performance of this contract or out of the use of any supplies furnished or work or services performed hereunder, the Contractor shall furnish to the Government, when requested by the Contracting Officer, all evidence and information in possession of the Contractor pertaining to such suit or claim. Such evidence and information shall be furnished at the expense of the Government except where the Contractor has agreed to indemnify the Government.

(c) This clause shall be included in all subcontracts. (ASPR 7–103.23)

46. AUTHORIZATION AND CONSENT (1964 MAR)

The Government hereby gives its authorization and consent (without prejudice to any rights of indemnification) for all use and manufacture, in the performance of this contract or any part hereof or any amendment hereto or any subcontract hereunder (including any lower–tier subcontract), of any invention described in and covered by a patent of the United States (i) embodied in the structure or composition of any article the delivery of which is accepted by the Government under this contract, or (ii) utilized in the machinery, tools, or methods the use of which necessarily results from compliance by the Contractor or the using subcontractor with (a) specifications or written provisions now or hereafter forming a part of this contract, or (b) specific written instructions given by the Contracting Officer directing the manner of performance. The entire liability to the Government for infringement of a patent of the United States shall be determined solely by the provisions of the indemnity clauses, if any, included in this contract or any subcontract hereunder (including any lower–tier subcontract), and the Government assumes liability for all other infringement to the extent of the authorization and consent hereinabove granted. (ASPR 7–103.22)

47. COMPOSITION OF CONTRACTOR (1965 JAN)

If the Contractor hereunder is comprised of more than one legal entity, each such entity shall be jointly and severally liable hereunder. (ASPR 7–602.32)

48. SITE INVESTIGATION (1965 JAN)

The Contractor acknowledges that he has investigated and satisfied himself as to the conditions affecting the work, including but not restricted to those bearing upon transportation, disposal, handling and storage of materials, availability of labor, water, electric power, roads and uncertainties of weather, river stages, tides or similar physical conditions at the site, the conformation and conditions of the ground, the character of equipment and facilities needed preliminary to and during prosecution of the work. The Contractor further acknowledges that he has satisfied himself as to the character, quality and quantity of surface and subsurface materials or obstacles to be encountered insofar as this information is reasonably ascertainable from an inspection of the site, including all exploratory work done by the Government, as well as from information presented by the drawings and specifications made a part of this contract. Any failure by the Contractor to acquaint himself with the available information will not relieve him from responsibility for estimating properly the difficulty or cost of successfully performing the work. The Government assumes no responsibility for any conclusions or interpretations made by the Contractor on the basis of the information made available by the Government. (ASPR 7–602.33)

49. PROTECTION OF EXISTING VEGETATION, STRUCTURES, UTILITIES, AND IMPROVEMENTS (1965 JAN)

(a) The Contractor will preserve and protect all existing vegetation such as trees, shrubs, and grass on or adjacent to the site of work which is not to be removed and which does not unreasonably interfere with the construction work. Care will be taken in removing trees authorized for removal to avoid damage to vegetation to

remain in place. Any limbs or branches of trees broken during such operations or by the careless operation of equipment, or by workmen, shall be trimmed with a clean cut and painted with an approved tree pruning compound as directed by the Contracting Officer.

(b) The Contractor will protect from damage all existing improvements or utilities at or near the site of the work, the location of which is made known to him, and will repair or restore any damage to such facilities resulting from failure to comply with the requirements of this contract or the failure to exercise reasonable care in the performance of the work. If the Contractor fails or refuses to repair any such damage promptly, the Contracting Officer may have the necessary work performed and charge the cost thereof to the Contractor. (ASPR 7-602.34)

50. OPERATIONS AND STORAGE AREAS (1965 JAN)

(a) All operations of the Contractor (including storage of materials) upon Government premises shall be confined to areas authorized or approved by the Contracting Officer. The Contractor shall hold and save the Government, its officers and agents, free and harmless from liability of any nature occasioned by his operations.

(b) Temporary buildings (storage sheds, shops, offices, etc.) may be erected by the Contractor only with the approval of the Contracting Officer, and shall be built with labor and materials furnished by the Contractor without expense to the Government. Such temporary buildings and utilities shall remain the property of the Contractor and shall be removed by him at his expense upon the completion of the work. With the written consent of the Contracting Officer, such buildings and utilities may be abandoned and need not be removed.

(c) The Contractor shall, under regulations prescribed by the Contracting Officer, use only established roadways or construct and use such temporary roadways as may be authorized by the Contracting Officer. Where materials are transported in the prosecution of the work, vehicles shall not be loaded beyond the loading capacity recommended by the manufacturer of the vehicle or prescribed by any Federal, State or local law or regulation. When it is necessary to cross curbings or sidewalks, protection against damage shall be provided by the Contractor and any damaged roads, curbings, or sidewalks shall be repaired by, or at the expense of the Contractor. (ASPR 7-602.35)

51. MODIFICATION PROPOSALS – PRICE BREAKDOWN (1968 APR)

The Contractor, in connection with any proposal he makes for a contract modification, shall furnish a price breakdown, itemized as required by the Contracting Officer. Unless otherwise directed, the breakdown shall be in sufficient detail to permit an analysis of all material, labor, equipment, subcontract, and overhead costs, as well as profit, and shall cover all work involved in the modification, whether such work was deleted, added or changed. Any amount claimed for subcontracts shall be supported by a similar price breakdown. In addition, if the proposal includes a time extension, a justification therefor shall also be furnished. The proposal, together with the price breakdown and time extension justification, shall be furnished by the date specified by the Contracting Officer. (ASPR 7-602.36)

52. SUBCONTRACTORS (1972 FEB)

Within seven days after the award of any subcontract either by himself or a subcontractor, the Contractor shall deliver to the Contracting Officer a statement setting forth the name and address of the subcontractor and a summary description of the work subcontracted. The Contractor shall at the same time furnish a statement signed by the subcontractor acknowledging the inclusion in his subcontract of the clauses of this contract entitled "Equal Opportunity," "Davis-Bacon Act," "Contract Work Hours and Safety Standards Act – Overtime Compensation," "Apprentices and Trainees," "Payrolls and Basic Records," "Compliance with Copeland Regulations," "Withholding of Funds," "Subcontracts" and "Contract Termination – Debarment." Nothing contained in this contract shall create any contractual relation between the subcontractor and the Government. (ASPR 7-602.37)

53. CLEANING UP (1965 JAN)

The Contractor shall at all times keep the construction area, including storage areas used by him, free from accumulations of waste material or rubbish and prior to completion of the work remove any rubbish from the premises and all tools, scaffolding, equipment, and materials not the property of the Government. Upon completion of the construction the Contractor shall leave the work and premises in a clean, neat and workmanlike condition satisfactory to the Contracting Officer. (ASPR 7-602.40)

54. ADDITIONAL DEFINITIONS (1965 JAN)

(a) Wherever in the specifications or upon the drawings the words "directed," "required," "ordered," "designated," "prescribed," or words of like import are used, it shall be understood that the "direction," "requirement," "ordered," "designation," or "prescription," of the Contracting Officer is intended and similarly the words "approved," "acceptable," "satisfactory" or words of like import shall mean "approved by" or "acceptable to," or "satisfactory to" the Contracting Officer, unless otherwise expressly stated.

(b) Where "as shown," "as indicated," "as detailed," or words of similar import are used, it shall be understood that the reference is made to the drawings accompanying this contract unless stated otherwise. The word "provided" as used herein shall be understood to mean "provided complete in place," that is "furnished and installed." (ASPR 7-602.41)

55. ACCIDENT PREVENTION (1977 JUN)

(a) In order to provide safety controls for protection to the life and health of employees and other persons; for prevention of damage to property, materials, supplies, and equipment; and for avoidance of work interruptions in the performance of this contract, the Contractor shall comply with all pertinent provisions of Corps of Engineers Manual, EM 385-1-1, dated 1 June 1977, entitled "General Safety Requirements", as amended, and will also take or cause to be taken such additional measures as the Contracting Officer may determine to be reasonably necessary for the purpose.

(b) The Contractor will maintain an accurate record of, and will report to the Contracting Officer in the manner and on the forms prescribed by the Contracting Officer, exposure data and all accidents resulting in death, traumatic injury, occupational disease, and damage to property, materials, supplies and equipment incident to work performed under this contract.

(c) The Contracting Officer will notify the Contractor of any noncompliance with the foregoing provisions and the action to be taken. The Contractor shall, after receipt of such notice, immediately take corrective action. Such notice, when delivered to the Contractor or his representative at the site of the work, shall be deemed sufficient for the purpose. If the Contractor fails or refuses

to comply promptly, the Contracting Officer may issue an order stopping all or part of the work until satisfactory corrective action has been taken. No part of the time lost due to any such stop orders shall be made the subject of claim for extension of time or for excess costs or damages by the Contractor.

(d) Compliance with the provisions of this clause by subcontractors will be the responsibility of the Contractor.

(e) Prior to commencement of the work the Contractor will:

(1) submit in writing his proposals for effectuating this provision for accident prevention;

(2) meet in conference with representatives of the Contracting Officer to discuss and develop mutual understandings relative to administration of the over–all safety program. (ASPR 7–602.42(a) & (b))

56. GOVERNMENT INSPECTORS (1965 JAN)

The work will be conducted under the general direction of the Contracting Officer and is subject to inspection by his appointed inspectors to insure strict compliance with the terms of the contract. No inspector is authorized to change any provision of the specifications without written authorization of the Contracting Officer, nor shall the presence or absence of an inspector relieve the Contractor from any requirements of the contract. (ASPR 7–602.43)

57. RIGHTS IN SHOP DRAWINGS (1966 APR)

(Applicable to all contracts calling for the delivery of shop drawings)

(a) Shop drawings for construction means drawings, submitted to the Government by the Construction Contractor, subcontractor or any lower tier subcontractor pursuant to a construction contract, showing in detail (i) the proposed fabrication and assembly of structural elements and (ii) the installation (i.e., form, fit, and attachment details) of materials or equipment. The Government may duplicate, use, and disclose in any manner and for any purpose shop drawings delivered under this contract.

(b) This clause, including this paragraph (b), shall be included in all subcontracts hereunder at any tier. (ASPR 7–602.47)

58. MINORITY BUSINESS ENTERPRISES SUBCONTRACTING PROGRAM (1971 NOV)

(The following clause is applicable if this contract is in excess of $500,000)

(a) The Contractor agrees to establish and conduct a program which will enable minority business enterprises (as defined in the clause, entitled, "Utilization of Minority Business Enterprises") to be considered fairly as subcontractors and suppliers under this contract. In this connection, the Contractor shall:

(1) Designate a liaison officer who will administer the Contractor's "Minority Business Enterprises Program."

(2) Provide adequate and timely consideration of the potentialities of known minority business enterprises in all "make–or–buy" decisions.

(3) Assure that known minority business enterprises will have an equitable opportunity to compete for subcontracts, particularly by arranging solicitations, time for the preparation of bids, quantities, specifications, and delivery schedules so as to facilitate the participation of minority business enterprises.

(4) Maintain records showing (i) procedures which have been adopted to comply with the policies set forth in this clause, including the establishment of a source list of minority business enterprises, (ii) awards to minority business enterprises on the source list, and (iii) specific efforts to identify and award contracts to minority business enterprises.

(5) Include the "Utilization of Minority Business Enterprises" clause in subcontracts which offer substantial minority business enterprise subcontracting opportunities.

(6) Cooperate with the Contracting Officer in any studies and surveys of the Contractor's minority business enterprises procedures and practices that the Contracting Officer may from time to time conduct.

(7) Submit periodic reports of subcontracting to known minority business enterprises with respect to the records referred to in subparagraph (4) above, in such form and manner and at such time (not more often than quarterly) as the Contracting Officer may prescribe.

(b) The Contractor further agrees to insert, in any subcontract hereunder which may exceed $500,000 provisions which shall conform substantially to the language of this clause, including this paragraph (b), and to notify the Contracting Officer of the names of such subcontractors. (ASPR 7–104.36(b))

CONTINUED ON NEXT PAGE

59. AFFIRMATIVE ACTION FOR DISABLED VETERANS AND VETERANS OF THE VIETNAM ERA (1976 JUL)

(This clause is applicable pursuant to 41 C.F.R. 60–250, if this contract is for $10,000 or more.)

(a) The contractor will not discriminate against any employee or applicant for employment because he or she is a disabled veteran or veteran of the Vietnam era in regard to any position for which the employee or applicant for employment is qualified. The contractor agrees to take affirmative action to employ, advance in employment and otherwise treat qualified disabled veterans and veterans of the Vietnam era without discrimination based upon their disability or veterans status in all employment practices such as the following: employment upgrading, demotion or transfer, recruitment, advertising, layoff or termination, rates of pay or other forms of compensation, and selection for training, including apprenticeship.

(b) The contractor agrees that all suitable employment openings of the contractor which exist at the time of the execution of this contract and those which occur during the performance of this contract, including those not generated by this contract and including those occurring at an establishment of the contractor other than the one wherein the contract is being performed but excluding those of independently operated corporate affiliates, shall be listed at an appropriate local office of the State employment service system wherein the opening occurs. The contractor further agrees to provide such reports to such local office regarding employment openings and hires as may be required.

State and local government agencies holding Federal contracts of $10,000 or more shall also list all their suitable openings with the appropriate office of the State employment service, but are not required to provide those reports set forth in paragraphs (d) and (e).

(c) Listing of employment openings with the employment service system pursuant to this clause shall be made at least concurrently with the use of any other recruitment source or effort and shall involve the normal obligations which attach to the placing of a bona fide job order, including the acceptance of referrals of veterans and nonveterans. The listing of employment openings does not require the hiring of any particular job applicant or from any particular group of job applicants, and nothing herein is intended to relieve the contractor from any requirements in Executive Orders or regulations regarding nondiscrimination in employment.

(d) The reports required by paragraph (b) of this clause shall include, but not be limited to, periodic reports which shall be filed at least quarterly with the appropriate local office or, where the contractor has more than one hiring location in a State, with the central office of that State employment service. Such reports shall indicate for each hiring location (1) the number of individuals hired during the reporting period, (2) the number of nondisabled veterans of the Vietnam era hired, (3) the number of disabled veterans of the Vietnam era hired, and (4) the total number of disabled veterans hired. The reports should include covered veterans hired for on–the–job training under 38 USC 1787. The contractor shall submit a report within 30 days after the end of each reporting period wherein any performance is made on this contract identifying data for each hiring location. The contractor shall maintain at each hiring location copies of the reports submitted until the expiration of one year after final payment under the contract, during which time these reports and related documentation shall be made available, upon request, for examination by any authorized representatives of the contracting officer or of the Secretary of Labor. Documentation would include personnel records respecting job openings, recruitment and placement.

(e) Whenever the contractor becomes contractually bound to the listing provisions of this clause, it shall advise the employment service system in each State where it has establishments of the name and location of each hiring location in the State. As long as the contractor is contractually bound to these provisions and has so advised the State system, there is no need to advise the State system of subsequent contracts. The contractor may advise the State system when it is no longer bound by this contract clause.

(f) This clause does not apply to the listing of employment openings which occur and are filled outside of the 50 States, the District of Columbia, Puerto Rico, Guam, and the Virgin Islands.

(g) The provisions of paragraphs (b), (c), (d) and (e) of this clause do not apply to openings which the contractor proposes to fill from within his own organization or to fill pursuant to a customary and traditional employer–union hiring arrangement. This exclusion does not apply to a particular opening once an employer decides to consider applicants outside of his own organization or employer–union arrangement for that opening.

(h) As used in this clause: (1) "All suitable employment openings" includes, but is not limited to, openings which occur in the following job categories: production and nonproduction; plant and office; laborers and mechanics; supervisory and nonsupervisory; technical; and executive, administrative, and professional openings as are compensated on a salary basis of less than $25,000 per year. This term includes full–time employment, temporary employment of more than 3 days' duration, and part–time employment. It does not include openings which the contractor proposes to fill from within his own organization or to fill pursuant to a customary and traditional employer–union hiring arrangement nor openings in an educational institution which are restricted to students of that institution. Under the most compelling circumstances an employment opening may not be suitable for listing, including such situations where the needs of the Government cannot reasonably be otherwise supplied, where listing would be contrary to national security, or where the requirement of listing would otherwise not be for the best interest of the Government.

(2) "Appropriate office of the State employment service system" means the local office of the Federal–State national system of public employment offices with assigned responsibility for serving the area where the employment opening is to be filled, including the District of Columbia, Guam, Puerto Rico, and the Virgin Islands.

(3) "Openings which the contractor proposes to

fill from within his own organization" means employment openings for which no consideration will be given to persons outside the contractor's organization (including any affiliates, subsidiaries, and the parent companies) and includes any openings which the contractor proposes to fill from regularly established "recall" lists.

(4) "Openings which the contractor proposes to fill pursuant to a customary and traditional employer–union hiring arrangement" means employment openings which the contractor proposes to fill from union halls, which is part of the customary and traditional hiring relationship which exists between the contractor and representatives of his employees.

(i) The contractor agrees to comply with the rules, regulations, and relevant orders of the Secretary of Labor issued pursuant to the Vietnam Veterans Readjustment Act, hereinafter referred to as the "Act" (38 U.S.C. 2012).

(j) In the event of the contractor's noncompliance with the requirements of this clause, actions for noncompliance may be taken in accordance with the rules, regulations, and relevant orders of the Secretary of Labor issued pursuant to the Act.

(k) The contractor agrees to post in conspicuous places, available to employees and applicants for employment, notices in a form to be prescribed by the Director, Office of Federal Contract Compliance Programs, provided by or through the contracting officer. Such notice shall state the contractor's obligation under the law to take affirmative action to employ and advance in employment qualified disabled veterans and veterans of the Vietnam era for employment, and the rights of applicants and employees.

(l) The contractor will notify each labor union or representative of workers with which it has a collective bargaining agreement or other contract understanding, that the contractor is bound by the terms of the Vietnam Era Veterans Readjustment Assistance Act, and is committed to take affirmative action to employ and advance in employment qualified disabled veterans and veterans of the Vietnam Era.

(m) The contractor will include the provisions of this clause in every subcontract or purchase order of $10,000 or more unless exempted by rules, regulations, or orders of the Secretary issued pursuant to the Act, so that such provisions will be binding upon each subcontractor or vendor. The contractor will take such action with respect to any subcontract or purchase order as the Director of the Office of Federal Contract Compliance Programs may direct to enforce such provisions, including action for noncompliance. (ASPR 7–103.27)

60. VALUE ENGINEERING INCENTIVE (1977 AUG)

(The following clause is applicable if this contract is in excess of $100,000)

(a) Application. This clause applies to a Contractor developed and documented Value Engineering Change Proposal (VECP) which:

(i) requires a change to this contract to implement the VECP; and

(ii) reduces the contract price without impairing essential function or characteristics, provided that it is not based solely on a change in deliverable end item quantities.

(b) Documentation. As a minimum, the following information shall be submitted by the contractor with each VECP:

(i) a description of the difference between the existing contract requirement and the proposed change, and the comparative advantages and disadvantages of each; justification where function or characteristics of a work item is being altered; and the effect of the change on the performance of the end item;

(ii) an analysis and itemization of the requirements of the contract which must be changed if the VECP is accepted and a recommendation as to how to make each such change (e.g., a suggested specification revision);

(iii) a separate detailed cost estimate for both the existing contract requirement and the proposed change to provide an estimate of the reduction in costs, if any, that will result from acceptance of the VECP, taking into account the costs of development and implementation by the Contractor (including any amount attributable to subcontracts in accordance with paragraph (f) below);

(iv) a prediction of any effects the proposed change would have on related costs to the Military Department such as Government furnished property costs, and costs of maintenance and operation;

(v) a statement of the time by which a change order adopting the VECP must be issued so as to obtain the maximum cost reduction during the remainder of this contract, noting any effect on the contract completion time or delivery schedule; and

(vi) identification of any previous submission of the VECP, including the dates submitted, the agencies involved, the numbers of the Government contracts involved, and the previous actions by the Government, if known.

(c) Submission. To expedite a determination, VECPs shall be submitted to the Resident Engineer at the worksite with a copy to the Contracting Officer. Proposals shall be processed expeditiously; however, the Government shall not be liable for any delay in acting upon any proposal submitted pursuant to this clause. If the evaluation period is likely to exceed 45 calendar days, the PCO shall promptly notify the Contractor of the estimated decision date and provide the reasons for the additional time required. The Contractor has the right to withdraw, in whole or in part, any VECP not accepted by the Government within the period specified in the VECP.

(d) Acceptance. The Contracting Officer may accept, in whole or in part, by contract modification any VECP submitted pursuant to this clause. The Contracting Officer may accept the VECP even though an agreement on price reduction has not been reached, by issuing the Contractor a notice to proceed with the change. Until a notice to proceed is issued or a contract modification applies a VECP to this contract, the Contractor shall remain obligated to perform in accordance with this contract. Contract modifications made pursuant to this clause will so state. The decision of the Contracting Officer as to the acceptance of any VECP under this contract shall be final and shall not be subject to the "Disputes" clause of this contract.

(e) Sharing. If a VECP submitted by the Contractor pursuant to this clause is accepted, the contract price shall be adjusted without regard to profit in accordance with the following provisions:

(i) Definition:

(A) Instant contract savings to the Contractor (ICS) are the estimated reduction in the Contractor's cost

of performance resulting from the acceptance of the VECP. The proposed cost reduction includes estimated allowable Contractor development and implementation costs (CC). The Contractor's development and implementation costs include any subcontractor development and implementation costs (see (f) below). For purposes of this clause, Contractor development costs are those costs incurred after the Contractor has identified a specific VE project and prior to acceptance and implementation by the Government.

(B) Government Costs (GC) are those DOD costs which directly result from development and implementation of the VECP, such as test and evaluation of the VECP.

(ii) Calculations and Actions.
Multiply ICS by 45% and GC by 55%. Add these two results, e.g., (.45 ICS + .55 GC) and subtract from the contract price.

(f) Subcontracts. The Contractor shall include appropriate VE arrangements in any subcontract of $50,000 or greater, and may include such arrangements in contracts of lesser value. To compute any adjustment in the contract price under paragraph (e) above, the Contractor's cost of development and implementation of a VECP which is accepted under this contract shall include any development and implementation costs of a subcontractor which clearly pertains to such VECP, but shall exclude any VE incentive payments which the Contractor may make to a subcontractor. The Contractor may make whatever VE incentive payment arrangements he chooses with his subcontractors, *provided* that any payments to subcontractors under such arrangements are made from the Contractor's, and not the Government's, share of the savings resulting from the VECP.

(g) Data. The Contractor may restrict the Government's right to use any sheet of a VECP or of the supporting data, submitted pursuant to this clause, in accordance with the terms of the following legend if it is marked on such sheet:

> "This data furnished pursuant to the Value Engineering Incentive clause of contract _____ shall not be disclosed outside the Government, or duplicated, used, or disclosed, in whole or in part, for any purpose other than to evaluate a VECP submitted under said clause. This restriction does not limit the Government's right to use information contained in this data if it is or has been obtained, or is otherwise available, from the Contractor or from another source, without limitations."

In the event of acceptance of a VECP, the Contractor hereby grants to the Government unlimited rights, as defined in the clause of ASPR 7–104.9(a), in the VECP and supporting data, except that, with respect to data which qualifies as and is submitted as limited rights technical data in accordance with the clause of ASPR 7–104.9(a), the Government shall have the rights specified in the contract modification referred to in paragraph (d) hereof and the data shall be appropriately marked. (ASPR 7–602.50)

61. AFFIRMATIVE ACTION FOR HANDICAPPED WORKERS (1976 MAY)

(a) The contractor will not discriminate against any employee or applicant for employment because of physical or mental handicap in regard to any position for which the employee or applicant for employment is qualified. The contractor agrees to take affirmative action to employ, advance in employment and otherwise treat qualified handicapped individuals without discrimination based upon their physical or mental handicap in all employment practices such as the following: employment, upgrading, demotion or transfer, recruitment, advertising, layoff or termination, rates of pay or other forms of compensation, and selection for training, including apprenticeship.

(b) The contractor agrees to comply with the rules, regulations, and relevant orders of the Secretary of Labor issued pursuant to the Act.

(c) In the event of the contractor's noncompliance with the requirements of this clause, action for noncompliance may be taken in accordance with the rules, regulations and relevant orders of the Secretary of Labor issued pursuant to the Act.

(d) The contractor agrees to post in conspicuous places, available to employees and applicants for employment, notices in a form to be prescribed by the Director, provided by or through the contracting officer. Such notices shall state the contractor's obligation under the law to take affirmative action to employ and advance in employment qualified handicapped employees and applicants for employment, and the rights of applicants and employees.

(e) The contractor will notify each labor union or representative of workers with which it has a collective bargaining agreement or other contract understanding, that the contractor is bound by the terms of section 503 of the Rehabilitation Act of 1973, and is committed to take affirmative action to employ and advance in employment physically and mentally handicapped individuals.

(f) The contractor will include the provisions of this clause in every subcontract or purchase order of $2,500 or more unless exempted by rules, regulations, or orders of the Secretary issued pursuant to section 503 of the Act, so that such provisions will be binding upon each subcontractor or vendor. The contractor will take such action with respect to any subcontract or purchase order as the Director of the Office of Federal Contract Compliance Programs may direct to enforce such provisions, including action for noncompliance. (ASPR 7–103.28)

62. CLEAN AIR AND WATER (1975 OCT)

(Applicable only if the contract exceeds $100,000, or the contracting officer has determined that orders under an indefinite quantity contract in any one year will exceed $100,000, or a facility to be used has been the subject of a conviction under the Clean Air Act (42 U.S.C. 1857c–8(c)(1)) or the Federal Water Pollution Control Act (33 U.S.C. 1319(c)) and is listed by EPA, or the contract is not otherwise exempt.)

(a) The Contractor agrees as follows:

(i) To comply with all the requirements of section 114 of the Clean Air Act, as amended (42 U.S.C. 1857, et seq., as amended by Public Law 91–604) and section 308 of the Federal Water Pollution Control Act (33 U.S.C. 1251, as amended by Public Law 92–500), respectively, relating to inspection, monitoring, entry, reports, and information, as well as other requirements specified in section 114 and section 308 of the Air Act and the Water Act, respectively, and all regulations and guidelines issued thereunder before the award of this contract;

(ii) That no portion of the work required by this prime contract will be performed in a facility listed on the Environmental Protection Agency List of Violating Facilities on the date this contract was awarded unless and until the EPA eliminates the name of such facility or facilities from such listing;

(iii) To use his best efforts to comply with clean air standards and clean water standards at the facilities in which the contract is being performed; and

(iv) To insert the substance of the provisions of this clause in any nonexempt subcontract, including this paragraph (iv).

(b) The terms used in this clause have the following meanings.

(i) The term *"Air Act"* means the Clean Air Act, as amended (42 U.S.C. 1857 et seq., as amended by Public Law 91–604).

(ii) The term *"Water Act"* means Federal Water Pollution Control Act, as amended (33 U.S.C. 1251 et seq., as amended by Public Law 92–500).

(iii) The term *"clean air standards"* means any enforceable rules, regulations, guidelines, standards, limitations, orders, controls, prohibitions, or other requirements which are contained in, issued under, or otherwise adopted pursuant to the Air Act or Executive Order 11738, an applicable implementation plan as described in section 110(d) of the Clean Air Act (42 U.S.C. 1857c–5(d), an approved implementation procedure or plan under section 111(c) or section 111(d), respectively, of the Air Act (42 U.S.C. 1857c–6(c) or (d)), or an approved implementation procedure under section 112(d) of the Air Act (42 U.S.C. 1857c–7(d)).

(iv) The term *"clean water standards"* means any enforceable limitation, control, condition, prohibition, standard or other requirement which is promulgated pursuant to the Water Act or contained in a permit issued to a discharger by the Environmental Protection Agency or by a State under an approved program, as authorized by section 402 of the Water Act (33 U.S.C. 1342), or by a local government to ensure compliance with pretreatment regulations as required by section 307 of the Water Act (33 U.S.C. 1317).

(v) The term *"compliance"* means compliance with clean air or water standards. Compliance shall also mean compliance with a schedule or plan ordered or approved by a court of competent jurisdiction, the Environmental Protection Agency or an air or water pollution control agency in accordance with the requirement of the Air Act or Water Act and regulations issued pursuant thereto.

(vi) The term *"facility"* means any building, plant, installation, structure, mine, vessel or other floating craft, location, or site of operations, owned, leased, or supervised by a contractor, subcontractor, to be utilized in the performance of a contract or subcontract. Where a location or site of operations contains or includes more than one building, plant, installation, or structure, the entire location or site shall be deemed to be a facility except where the Director, Office of Federal Activities, Environmental Protection Agency, determines that independent facilities are colocated in one geographical area.

(vii) The term *"nonexempt contract or subcontract"* means a contract or subcontract of more than $100,000 which is not otherwise exempted pursuant to the EPA regulations implementing the Air Act and Water Act (40 CFR 15.5), as further implemented in ASPR 1–2302.4 or in FPR 1–1.2302–4 (whichever is applicable) and the procedures of the Department awarding the contract. (ASPR 7–103.29)

63. NOTICE TO THE GOVERNMENT OF LABOR DISPUTES (1958 SEP)

(a) Whenever the Contractor has knowledge that any actual or potential labor dispute is delaying or threatens to delay the timely performance of this contract, the Contractor shall immediately give notice thereof, including all relevant information with respect thereto, to the Contracting Oficer.

(b) The Contractor agrees to insert the substance of this clause, including this paragraph (b), in any subcontract hereunder as to which a labor dispute may delay the timely performance of this contract; except that each such subcontract shall provide that in the event its timely performance is delayed or threatened by delay by any actual or potential labor dispute, the subcontractor shall immediately notify his next higher tier subcontractor, or the prime contractor, as the case may be, of all relevant information with respect to such dispute. (ASPR 7–104.4)

64. CONTRACT PRICES – BIDDING SCHEDULE (1968 APR)

(The following clause is applicable to contracts containing unit prices)

Payment for the various items listed in the Bidding Schedule shall constitute full compensation for furnishing all plant, labor, equipment, appliances, and materials, and for performing all operations required to complete the work in conformity with the drawings and specifications. All costs for work not specifically mentioned in the Bidding Schedule shall be included in the contract prices for the items listed. (ASPR 7–603.5)

65. PRIORITIES, ALLOCATIONS, AND ALLOTMENTS (1975 OCT)

(The following clause is applicable to rateable contracts)

The Contractor shall follow the provisions of DMS Reg. 1 or DPS Reg. 1 and all other applicable regulations and orders of the Bureau of Domestic Commerce in obtaining controlled materials and other products and materials needed to fill this order. (ASPR 7–104.18)

66. PRICE REDUCTION FOR DEFECTIVE COST OR PRICING DATA – PRICE ADJUSTMENT (1970 JAN)

(The following clause is applicable if this contract is in excess of $100,000)

(a) This clause shall become operative only with respect to any modification of this contract which involves aggregate increases and/or decreases in costs plus applicable profits in excess of $100,000 unless the modification is priced on the basis of adequate competition, established catalog or market prices of commercial items sold in substantial quantities to the general public, or prices set by law or regulation. The right to price reduction under this clause is limited to defects in data relating to such modification.

(b) If any price, including profit, or fee, negotiated

in connection with any price adjustment under this contract was increased by any significant sums because:

(i) the Contractor furnished cost or pricing data which was not complete, accurate and current as certified in the Contractor's Certificate of Current Cost or Pricing Data;

(ii) a subcontractor, pursuant to the clause of this contract entitled "Subcontractor Cost or Pricing Data" or "Subcontractor Cost or Pricing Data – Price Adjustments" or any subcontract clause therein required, furnished cost or pricing data which was not complete, accurate and current as certified in the subcontractor's Certificate of Current Cost or Pricing Data;

(iii) a subcontractor or prospective subcontractor furnished cost or pricing data which was required to be complete, accurate and current and to be submitted to support a subcontract cost estimate furnished by the Contractor but which was not complete, accurate and current as of the date certified in the Contractor's Certificate of Current Cost or Pricing Data; or

(iv) the Contractor or a subcontractor or prospective subcontractor furnished any data, not within (i), (ii) or (iii) above, which was not accurate, as submitted;

the price shall be reduced accordingly and the contract shall be modified in writing as may be necessary to reflect such reduction. However, any reduction in the contract price due to defective subcontract data of a prospective subcontractor, when the subcontract was not subsequently awarded to such subcontractor, will be limited to the amount (plus applicable overhead and profit markup) by which the actual subcontract, or actual cost to the Contractor if there was no subcontract, was less than the prospective subcontract cost estimate submitted by the Contractor, *provided* the actual subcontract price was not affected by defective cost or pricing data.

Note: Since the contract is subject to reduction under this clause by reason of defective cost or pricing data submitted in connection with certain subcontracts, it is expected that the contractor may wish to include a clause in each such subcontract requiring the subcontractor to appropriately indemnify the contractor. However, the inclusion of such a clause and the terms thereof are matters for negotiation and agreement between the contractor and the subcontractor, *provided* that they are consistent with ASPR 23–203 relating to Disputes provisions in subcontracts. It is also expected that any subcontractor subject to such indemnification will generally require substantially similar indemnification for defective cost or pricing data required to be submitted by his lower tier subcontractors. (ASPR 7–104.29(b))

67. INTEREST (1972 MAY)

Notwithstanding any other provision of this contract, unless paid within thirty (30) days, all amounts that become payable by the Contractor to the Government under this contract (net of any applicable tax credit under the Internal Revenue Code) shall bear interest from the date due until paid and shall be subject to adjustments as provided by Part 6 of Appendix E of the Armed Services Procurement Regulation, as in effect on the date of this contract. The interest rate per annum shall be the interest rate in effect which has been established by the Secretary of the Treasury pursuant to Public Law 92–41; 85 STAT 97 for the Renegotiation Board, as of the date the amount becomes due as herein provided. Amounts shall be due upon the earliest one of (i) the date fixed pursuant to this contract; (ii) the date of the first written demand for payment, consistent with this contract, including demand consequent upon default termination; (iii) the date of transmittal by the Government to the Contractor of a proposed supplemental agreement to confirm completed negotiations fixing the amount; or (iv) if this contract provides for revision of prices, the date of written notice to the Contractor stating the amount of refund payable in connection with a pricing proposal or in connection with a negotiated pricing agreement not confirmed by contract supplement. (ASPR 7–104.39)

68. AUDIT BY DEPARTMENT OF DEFENSE (1975 JUN)

(The following clause is applicable unless this contract was entered into by formal advertising and is not in excess of $100,000)

(a) *General.* The Contracting Officer or his representatives shall have the audit and inspection rights described in the applicable paragraphs (b), (c) and (d) below.

(b) *Examination of Costs.* If this is a cost reimbursement type, incentive, time and materials, labor hour, or price redeterminable contract, or any combination thereof, the Contractor shall maintain, and the Contracting Officer or his representatives shall have the right to examine books, records, documents, and other evidence and accounting procedures and practices, sufficient to reflect properly all direct and indirect costs of whatever nature claimed to have been incurred and anticipated to be incurred for the performance of this contract. Such right of examination shall include inspection at all reasonable times of the Contractor's plants, or such parts thereof, as may be engaged in the performance of this contract.

(c) *Cost or Pricing Data.* If the Contractor submitted cost or pricing data in connection with the pricing of this contract or any change or modification thereto, unless such pricing was based on adequate price competition, established catalog or market prices of commercial items sold in substantial quantities to the general public, or prices set by law or regulation, the Contracting Officer or his representatives who are employees of the United States Government shall have the right to examine all books, records, documents and other data of the Contractor related to the negotiation, pricing or performance of such contract, change or modification, for the purpose of evaluating the accuracy, completeness and currency of the cost or pricing data submitted. Additionally, in the case of pricing any change or modification exceeding $100,000 to formally advertised contracts, the Comptroller General of the United States or his representatives who are employees of the United States Government shall have such rights. The right of examination shall extend to all documents necessary to permit adequate evaluation of the cost or pricing data submitted, along with the computations and projections used therein.

(d) *Reports.* If the Contractor is required to furnish Cost Information Reports (CIR) or Contract Fund Status Reports (CFSR), the Contracting Officer or his representatives shall have the right to examine books, records, documents, and supporting materials, for the purpose of evaluating (i) the effectiveness of the Contractor's policies and procedures to produce data compatible with the objectives of these reports, and (ii) the data reported.

(e) *Availability.* The materials described in (b), (c) and (d) above shall be made available at the office of the Contractor, at all reasonable times, for inspection, audit, or reproduction, until the expiration of three years

from the date of final payment under this contract or such lesser time specified in Appendix M of the Armed Services Procurement Regulation, and for such longer period, if any, as is required by applicable statute, or by other clauses of this contract, or by (1) and (2) below:

(1) If this contract is completely or partially terminated, the records relating to the work terminated shall be made available for a period of three years from the date of any resulting final settlement.

(2) Records which relate to appeals under the "Disputes" clause of this contract, or litigation or the settlement of claims arising out of the performance of this contract, shall be made available until such appeals, litigation, or claims have been disposed of.

(f) The Contractor shall insert a clause containing all the provisions of this clause, including this paragraph (f), in all subcontracts exceeding $10,000 hereunder, except altered as necessary for proper identification of the contracting parties and the Contracting Officer under the Government prime contract. (ASPR 7-104.41(a))

69. SUBCONTRACTOR COST OR PRICING DATA – PRICE ADJUSTMENTS (1970 JAN)

(The following clause is applicable if this contract is in excess of $100,000)

(a) Paragraphs (b) and (c) of this clause shall become operative only with respect to any modification made pursuant to one or more provisions of this contract which involves aggregate increases and/or decreases in costs plus applicable profits expected to exceed $100,000. The requirements of this clause shall be limited to such modifications.

(b) The Contractor shall require subcontractors hereunder to submit cost or pricing data under the following circumstances: (i) prior to the award of any subcontract the amount of which is expected to exceed $100,000 when entered into; (ii) prior to the pricing of any subcontract modification which involves aggregate increases and/or decreases in costs plus applicable profits expected to exceed $100,000; except where the price is based on adequate price competition, established catalog or market prices of commercial items sold in substantial quantities to the general public, or prices set by law or regulation.

(c) The Contractor shall require subcontractors to certify that to the best of their knowledge and belief the cost and pricing data submitted under (b) above is accurate, complete, and current as of the date of agreement on the negotiated price of the subcontract or subcontract change or modification.

(d) The Contractor shall insert the substance of this clause including this paragraph (d) in each subcontract which exceeds $100,000. (ASPR 7-104.42(b))

70.1 GOVERNMENT-FURNISHED PROPERTY (SHORT FORM) (1964 NOV)

(The following clause is applicable when Government Property having an acquisition cost of $25,000 or less is furnished to or acquired by the Contractor)

(a) The Government shall deliver to the Contractor, for use only in connection with this contract, the property described in the schedule or specifications (hereinafter referred to as "Government-furnished property"), at the times and locations stated therein. If the Government-furnished property, suitable for its intended use, is not so delivered to the Contractor, the Contracting Officer shall, upon timely written request made by the Contractor, and if the facts warrant such action, equitably adjust any affected provision of this contract pursuant to the procedures of the "Changes" clause hereof.

(b) Title to Government-furnished property shall remain in the Government. The Contractor shall maintain adequate property control records of Government-furnished property in accordance with sound industrial practice.

(c) Unless otherwise provided in this contract, the Contractor, upon delivery to him of any Government-furnished property, assumes the risk of, and shall be responsible for, any loss thereof or damage thereto except for reasonable wear and tear, and except to the extent that such property is consumed in the performance of this contract.

(d) The Contractor shall, upon completion of this contract, prepare for shipment, deliver f.o.b. origin, or dispose of all Government-furnished property not consumed in the performance of this contract or not theretofore delivered to the Government, as may be directed or authorized by the Contracting Officer. The net proceeds of any such disposal shall be credited to the contract price or paid in such other manner as the Contracting Officer may direct. (ASPR 7-104.24(f))

70.2 GOVERNMENT PROPERTY (FIXED PRICE) (1968 SEP)

(The following clause is applicable when Government Property having an acquisition cost in excess of $25,000 is furnished to or acquired by the Contractor)

(a) *Government-Furnished Property.* The Government shall deliver to the Contractor, for use in connection with and under the terms of this contract, the property described as Government-furnished property in the Schedule or specifications, together with such related data and information as the Contractor may request and as may reasonably be required for the intended use of such property (hereinafter referred to as "Government-furnished property"). The delivery or performance dates for the supplies or services to be furnished by the Contractor under this contract are based upon the expectation that Government-furnished property suitable for use (except for such property furnished "as is") will be delivered to the Contractor at the times stated in the Schedule or, if not so stated, in sufficient time to enable the Contractor to meet such delivery or performance dates. In the event that Government-furnished property is not delivered to the Contractor by such time or times, the Contracting Officer shall, upon timely written request made by the Contractor, make a determination of the delay, if any, occasioned the Contractor thereby, and shall equitably adjust the delivery or performance dates or the contract price, or both, and any other contractual provision affected by any such delay, in accordance with the procedures provided for in the clause of this contract entitled "Changes." Except for Government-furnished property furnished "as is," in the event the Government-furnished property is received by the Contractor in a condition not suitable for the intended use the Contractor shall, upon receipt thereof, notify the Contracting Officer of such fact and, as directed by the Contracting Officer, either (i) return such property at the Government's expense or otherwise dispose of the property, or (ii) effect repairs or modifications. Upon the completion of (i) or (ii) above, the Contracting Officer upon written request of the Contractor shall equitably adjust the delivery or performance dates or the contract price, or both, and any other contractual provision affected by the rejection or disposition, or the repair or modification, in accordance with the procedures provided for in the clause of this contract entitled "Changes." The foregoing provisions for adjustment are exclusive and the Government shall not be liable to suit for breach of contract by reason of any delay in delivery of Government-furnished property or delivery of such property in a condition not suitable for its

intended use.

(b) *Changes in Government-furnished Property.*

(1) By notice in writing, the Contracting Officer may (i) decrease the property provided or to be provided by the Government under this contract, or (ii) substitute other Government-owned property for property to be provided by the Government, or to be acquired by the Contractor for the Government, under this contract. The Contractor shall promptly take such action as the Contracting Officer may direct with respect to the removal and shipping of property covered by such notice.

(2) In the event of any decrease in or substitution of property pursuant to subparagraph (1) above, or any withdrawal of authority to use property provided under any other contract or lease, which property the Government had agreed in the Schedule to make available for the performance of this contract, the Contracting Officer, upon the written request of the Contractor (or, if the substitution of property causes a decrease in the cost of performance, on his own initiative), shall equitably adjust such contractual provisions as may be affected by the decrease, substitution, or withdrawal, in accordance with the procedures provided for in the "Changes" clause of this contract.

(c) *Title.* Title to all property furnished by the Government shall remain in the Government. In order to define the obligations of the parties under this clause, title to each item of facilities, special test equipment, and special tooling (other than that subject to a "Special Tooling" clause) acquired by the Contractor for the Government pursuant to this contract shall pass to and vest in the Government when its use in the performance of this contract commences, or upon payment therefor by the Government, whichever is earlier, whether or not title previously vested. All Government-furnished property, together with all property acquired by the Contractor title to which vests in the Government under this paragraph, is subject to the provisions of this clause and is hereinafter collectively referred to as "Government property." Title to Government property shall not be affected by the incorporation or attachment thereof to any property not owned by the Government, nor shall such Government property, or any part thereof, be or become a fixture or lose its identity as personalty by reason of affixation to any realty.

(d) *Property Administration.* The Contractor shall comply with the provisions of Appendix B, Armed Services Procurement Regulation, as in effect on the date of the contract, which is hereby incorporated by reference and made a part of this contract. Material to be furnished by the Government shall be ordered or returned by the Contractor, when required, in accordance with the "Manual for Military Standard Requisitioning and Issue Procedure (MILSTRIP) for Defense Contractors" (Appendix H, Armed Services Procurement Regulation) as in effect on the date of this contract, which Manual is hereby incorporated by reference and made a part of this contract.

(e) *Use of Government Property.* The Government property shall, unless otherwise provided herein or approved by the Contracting Officer, be used only for the performance of this contract.

(f) *Utilization, Maintenance and Repair of Government Property.* The Contractor shall maintain and administer, in accordance with sound industrial practice, and in accordance with applicable provisions of Appendix B, a program for the utilization, maintenance, repair, protection, and preservation of Government property until disposed of by the Contractor in accordance with this clause. In the event that any damage occurs to Government property the risk of which has been assumed by the Government under this contract, the Government shall replace such items or the Contractor shall make such repair of the property as the Government directs; *provided,* however, that if the Contractor cannot effect such repair within the time required, the Contractor shall dispose of such property in the manner directed by the Contracting Officer. The contract price includes no compensation to the Contractor for the performance of any repair or replacement for which the Government is responsible, and an equitable adjustment will be made in any contractual provisions affected by such repair or replacement of Government property made at the direction of the Government, in accordance with the procedures provided for in the "Changes" clause of this contract. Any repair or replacement for which the Contractor is responsible under the provisions of this contract shall be accomplished by the Contractor at his own expense.

(g) *Risk of Loss.* Unless otherwise provided in this contract, the Contractor assumes the risk of, and shall be responsible for, any loss of or damage to Government property provided under this contract upon its delivery to him or upon passage of title thereto to the Government as provided in paragraph (c) hereof, except for reasonable wear and tear and except to the extent that such property is consumed in the performance of this contract.

(h) *Access.* The Government, and any persons designated by it, shall at all reasonable times have access to the premises wherein any Government property is located, for the purpose of inspecting the Government property.

(i) *Final Accounting and Disposition of Government Property.* Upon the completion of this contract, or at such earlier dates as may be fixed by the Contracting Officer, the Contractor shall submit, in a form acceptable to the Contracting Officer, inventory schedules covering all items of Government property not consumed in the performance of this contract (including any resulting scrap) or not theretofore delivered to the Government, and shall prepare for shipment, deliver f.o.b. origin, or dispose of the Government property, as may be directed or authorized by the Contracting Officer. The net proceeds of any such disposal shall be credited to the contract price or shall be paid in such other manner as the Contracting Officer may direct.

(j) *Restoration of Contractor's Premises and Abandonment.* Unless otherwise provided herein, the Government:

(i) may abandon any Government property in place, and thereupon all obligations of the Government regarding such abandoned property shall cease; and

(ii) has no obligation to the Contractor with regard to restoration or rehabilitation of the Contractor's premises, neither in case of abandonment (paragraph (j)(i) above), disposition on completion of need or of the contract (paragraph (i) above), nor otherwise, except for restoration or rehabilitation costs which are properly included in an equitable adjustment under paragraph (b) above.

(k) *Communications.* All communications issued pursuant to this clause shall be in writing or in accordance with the "Manual for Military Standard Requisitioning and Issue Procedure (MILSTRIP) for Defense Contractors" (Appendix H, Armed Services Procurement Regulation). (ASPR 7-104.24(a))

71. VARIATIONS IN ESTIMATED QUANTITIES (1968 APR)

(The following clause is not applicable to bid items listed in the "Variations in Estimated Quantities – Subdivided Items" clause, and also is not applicable to contracts for dredging work which contain the "Variations in Estimated Quantities – Dredging" clause.)

Where the quantity of a pay item in this contract is an estimated quantity and where the actual quantity of such pay item varies more than fifteen percent (15%) above or below the estimated quantity stated in this contract, an equitable adjustment in the contract price shall be made upon demand of either party. The equitable adjustment shall be based upon any increase or decrease in costs due solely to the variation above one hundred fifteen percent (115%) or below eighty-five percent (85%) of the estimated quantity. If the quantity variation is such as to cause an increase in the time necessary for completion, the Contracting Officer shall, upon receipt of a written request for an extension of time within ten (10) days from the beginning of such delay, or within such further period of time which may be granted by the Contracting Oficer prior to the date of final settlement of the contract, ascertain the facts and make such adjustment for extending the completion date as in his judgment the findings justify. (ASPR 7-603.27)

72. PROGRESS CHARTS AND REQUIREMENTS FOR OVERTIME WORK (1965 JAN)

(a) The Contractor shall within 5 days or within such time as determined by the Contracting Officer, after date of commencement of work prepare and submit to the Contracting Officer for approval a practicable schedule, showing the order in which the Contractor proposes to carry on the work, the date on which he will start the several salient features (including procurement of materials, plant and equipment) and the contemplated dates for completing the same. The schedule shall be in the form of a progress chart of suitable scale to indicate appropriately the percentage of work scheduled for completion at any time. The Contractor shall enter on the chart the actual progress at such intervals as directed by the Contracting Officer, and shall immediately deliver to the Contracting Officer three copies thereof. If the Contractor fails to submit a progress schedule within the time herein prescribed, the Contracting Officer may withhold approval of progress payment estimates until such time as the Contractor submits the required progress schedule.

(b) If, in the opinion of the Contracting Officer, the Contractor falls behind the progress schedule, the Contractor shall take such steps as may be necessary to improve his progress and the Contracting Officer may require him to increase the number of shifts, or overtime operations, days of work, or the amount of construction plant, or all of them, and to submit for approval such supplementary schedule or schedules in chart form as may be deemed necessary to demonstrate the manner in which the agreed rate of progress will be regained, all without additional cost to the Government.

(c) Failure of the Contractor to comply with the requirements of the Contracting Officer under this provision shall be grounds for determination by the Contracting Officer that the Contractor is not prosecuting the work with such diligence as will insure completion within the time specified. Upon such determination the Contracting Officer may terminate the Contractor's right to proceed with the work or any separable part thereof, in accordance with the clause of the contract entitled "Termination for Default – Damages for Delay – Time Extensions." (ASPR 7-603.48)

73. ENVIRONMENTAL LITIGATION (1974 NOV)(OCE)

(a) If the performance of all or any part of the work is suspended, delayed, or interrupted due to an order of a court of competent jurisdiction as a result of environmental litigation, as defined below, the Contracting Officer, at the request of the Contractor, shall determine whether the order is due in any part to the acts or omissions of the Contractor or a Subcontractor at any tier not required by the terms of this contract. If it is determined that the order is not due in any part to acts or omissions of the Contractor or a Subcontractor at any tier other than as required by the terms of this contract, such suspension, delay, or interruption shall be considered as if ordered by the Contracting Officer in the administration of this contract under the terms of the "Suspension of Work" clause of this contract. The period of such suspension, delay or interruption shall be considered unreasonable, and an adjustment shall be made for any increase in the cost of performance of this contract (excluding profit) as provided in that clause, subject to all the provisions thereof.

(b) The term "environmental litigation", as used herein, means a lawsuit alleging that the work will have an adverse effect on the environment or that the Government has not duly considered, either substantively or procedurally, the effect of the work on the environment. (ECI 7-671.10)

74. STANDARD FEDERAL EQUAL EMPLOYMENT OPPORTUNITY CONSTRUCTION CONTRACT SPECIFICATIONS (EXECUTIVE ORDER 11246)

1. As used in these specifications:

a. "Covered area" means the geographical area described in the solicitation from which this contract resulted;

b. "Director" means Director, Office of Federal Contract Compliance Programs, United States Department of Labor, or any person to whom the Director delegates authority;

c. "Employer identification number" means the Federal Social Security number used on the Employer's Quarterly Federal Tax Return, U.S. Treasury Department Form 941.

d. "Minority" includes:

(i) Black (all persons having origins in any of the Black African racial groups not of Hispanic origin);

(ii) Hispanic (all persons of Mexican, Puerto Rican, Cuban, Central or South American or other Spanish Culture or origin, regardless of race);

(iii) Asian and Pacific Islander (all persons having origins in any of the original peoples of the Far East, Southeast Asia, the Indian Subcontinent, or the Pacific Islands); and

(iv) American Indian or Alaskan Native (all persons having origins in any of the original peoples of North America and maintaining identifiable tribal affiliations through membership and participation or community identification).

2. Whenever the Contractor, or any Subcontractor at any tier, subcontracts a portion of the work involving any construction trade, it shall physically include in each subcontract in excess of $10,000 the provisions of these specifications and the Notice which contains the applicable goals for minority and female participation and which is set forth in the solicitations from which this contract resulted.

3. If the Contractor is participating (pursuant to 41 CFR 60-4.5) in a Hometown Plan approved by the U.S. Department of Labor in the covered area either individually or through an association, its affirmative action obligations on all work in the Plan area (including goals and timetables) shall be in accordance with that Plan for those trades which have unions participating in the Plan. Contractors must be able to demonstrate their participation in and compliance with the provisions of any such Hometown Plan. Each Contractor or Subcontractor participating in an approved Plan is individually required to comply with its obligations under the EEO clause, and to make a good faith effort to achieve each goal under the Plan, in each trade in which it has employees. The overall good faith performance by other Contractors or Subcontractors toward a goal in an approved Plan does not excuse any covered Contractor's or Subcontractor's failure to take good faith efforts to achieve the Plan goals and timetables.

4. The Contractor shall implement the specific affirmative action standards provided in paragraphs 7a through p of these specifications. The goals set forth in the solicitation from which this contract resulted are expressed as percentages of the total hours of employment and training of minority and female utilization the Contractor should reasonably be able to achieve in each construction trade in which it has employees in the covered area. The Contractor is expected to make substantially uniform progress toward its goals in each craft during the period specified.

5. Neither the provisions of any collective bargaining agreement, nor the failure by a union with whom the Contractor has a collective bargaining agreement, to refer either minorities or women shall excuse the Contractor's obligations under these specifications, Executive Order 11246, or the regulations promulgated pursuant thereto.

6. In order for the nonworking training hours of apprentices and trainees to be counted in meeting the goals, such apprentices and trainees must be employed by the Contractor during the training period, and the Contractor must have made a commitment to employ the apprentices and trainees at the completion of their training, subject to the availability of employment opportunities. Trainees must be trained pursuant to training programs approved by the U.S. Department of Labor.

7. The Contractor shall take specific affirmative actions to ensure equal employment opportunity. The evaluation of the Contractor's compliance with these specifications shall be based upon its effort to achieve maximum results from its actions. The Contractor shall document these efforts fully, and shall implement affirmative action steps at least as extensive as the following:

a. Ensure and maintain a working environment free of harassment, intimidation, and coercion at all sites, and in all facilities at which the Contractor's employees are assigned to work. The Contractor, where possible, will assign two or more women to each construction project. The Contractor shall specifically ensure that all foremen, superintendents, and other on-site supervisory personnel are aware of and carry out the Contractor's obligation to maintain such a working environment, with specific attention to minority or female individuals working at such sites or in such facilities.

b. Establish and maintain a current list of minority and female recruitment sources, provide written notification to minority and female recruitment sources and to community organizations when the Contractor or its unions have employment opportunities available, and maintain a record of the organizations' responses.

c. Maintain a current file of the names, addresses and telephone numbers of each minority and female off-the-street applicant and minority or female referral from a union, a recruitment source or community organization and of what action was taken with respect to each such individual. If such individual was sent to the union hiring hall for referral and was not referred back to the Contractor by the union or, if referred, not employed by the Contractor, this shall be documented in the file with the reason therefor, along with whatever additional actions the Contractor may have taken.

d. Provide immediate written notification to the Director when the union or unions with which the Contractor has a collective bargaining agreement has not referred to the Contractor a minority person or woman sent by the Contractor, or when the Contractor has other information that the union referral process has impeded the Contractor's efforts to meet its obligations.

e. Develop on-the-job training opportunities and/or participate in training programs for the area which expressly include minorities and women, including upgrading programs and apprenticeship and trainee programs relevant to the Contractor's employment needs, especially those programs funded or approved by the Department of Labor. The Contractor shall provide notice of these programs to the sources compiled under 7b above.

f. Disseminate the Contractor's EEO policy by providing notice of the policy to unions and training programs and requesting their cooperation in assisting the Contractor in meeting its EEO obligations; by including it in any policy manual and collective bargaining agreement; by publicizing it in the company newspaper, annual report, etc.; by specific review of the policy with all management personnel and with all minority and female employees at least once a year; and by posting the company EEO policy on bulletin boards accessible to all employees at each location where construction work is performed.

g. Review, at least annually, the company's EEO policy and affirmative action obligations under these specifications with all employees having any responsibility for hiring, assignment, layoff, termination or other employment decisions including specific review of these items with onsite supervisory personnel such as Superintendents, General Foremen, etc., prior to the initiation of construction work at any job site. A written record shall be made and maintained identifying the time and place of these meetings, persons attending, subject matter discussed, and disposition of the subject matter.

h. Disseminate the Contractor's EEO policy externally by including it in any advertising in the news media, specifically including minority and female news media, and providing written notification to and discussing the Contractor's EEO policy with other Contractors and Subcontractors with whom the Contractor does or anticipates doing business.

i. Direct its recruitment efforts, both oral and written, to minority, female and community organizations, to schools with minority and female students and to minority and female recruitment and training organizations serving the Contractor's recruitment area and employment needs. Not later than one month prior to the date for the acceptance of applications for apprenticeship or other training by any recruitment source, the Contractor shall send written notification to organizations such as the above, describing the openings, screening procedures, and tests to be used in the selection process.

j. Encourage present minority and female employees to recruit other minority persons and women and, where reasonable, provide after school, summer and vacation employment to minority and female youth both on the site and in other areas of a Contractor's workforce.

k. Validate all tests and other selection requirements where there is an obligation to do so under 41 CFR Part 60-3.

l. Conduct, at least annually, an inventory and evaluation at least of all minority and female personnel for promotional opportunities and encourage these employees to seek or to prepare for, through appropriate training, etc., such opportunities.

m. Ensure that seniority practices, job classifications, work assignments and other personnel practices, do not have a discriminatory effect by continually monitoring all personnel and employment related activities to ensure that the EEO policy and the Contractor's obligations under these specifications are being carried out.

n. Ensure that all facilities and company activities are nonsegregated except that separate or single-user toilet and necessary changing facilities shall be provided to assure privacy between the sexes.

o. Document and maintain a record of all solicitations of offers for subcontracts from minority and female construction contractors and suppliers, including circulation of solicitations to minority and female contractor associations and other business associations.

p. Conduct a review, at least annually, of all supervisors' adherence to and performance under the Contractor's EEO policies and affirmative action obligations.

8. Contractors are encouraged to participate in voluntary associations which assist in fulfilling one or more of their affirmative action obligations (7a through p). The efforts of a contractor association, joint contractor-union, contractor-community, or other similar group of which the contractor is a member and participant, may be asserted as fulfilling any one or more of its obligations under 7a through p of these Specifications provided that the contractor actively participates in the group, makes every effort to assure that the group has a positive impact on the employment of minorities and women in the industry, ensures that the concrete benefits of the program are reflected in the Contractor's minority and female workforce participation, makes a good faith effort to meet its individual goals and timetables, and can provide access to documentation which demonstrates the effectiveness of actions taken on behalf of the Contractor. The obligation to comply, however, is the Contractor's and failure of such a group to fulfill an obligation shall not be a defense for the Contractor's noncompliance.

9. A single goal for minorities and a separate single goal for women have been established. The Contractor, however, is required to provide equal employment opportunity and to take affirmative action for all minority groups, both male and female, and all women, both minority and non-minority groups, both male and female, and all women, both minority and non-minority. Consequently, the Contractor may be in violation of the Executive Order if a particular group is employed in a substantially disparate manner (for example, even though the Contractor has achieved its goals for women generally, the Contractor may be in violation of the Executive Order if a specific minority group of women is underutilized).

10. The Contractor shall not use the goals and timetables or affirmative action standards to discriminate against any person because of race, color, religion, sex, or national origin.

11. The Contractor shall not enter into any Subcontract with any person or firm debarred from Government contracts pursuant to Executive Order 11246.

12. The Contractor shall carry out such sanctions and penalties for violation of these specifications and of the Equal Opportunity Clause, including suspension, termination and cancellation of existing subcontracts as may be imposed or ordered pursuant to Executive Order 11246, as amended, and its implementing regulations, by the Office of Federal Contract Compliance Programs. Any Contractor who fails to carry out such sanctions and penalties shall be in violation of these specifications and Executive Order 11246, as amended.

13. The Contractor, in fulfilling its obligations under these specifications, shall implement specific affirmative action steps, at least as extensive as those standards prescribed in paragraph 7 of these specifications, so as to achieve maximum results from its efforts to ensure equal employment opportunity. If the Contractor fails to comply with the requirements of the Executive Order, the implementing regulations, or these specifications, the Director shall proceed in accordance with 41 CFR 60-4.8.

14. The Contractor shall designate a responsible official to monitor all employment related activity to ensure that the company EEO policy is

being carried out, to submit reports relating to the provisions hereof as may be required by the Government and to keep records. Records shall at least include for each employee the name, address, telephone numbers, construction trade, union affiliation if any, employee identification number when assigned, social security number, race, sex, status (e.g., mechanic, apprentice, trainee, helper, or laborer), dates of changes in status, hours worked per week in the indicated trade, rate of pay, and locations at which the work was performed. Records shall be maintained in an easily understandable and retrievable form; however, to the degree that existing records satisfy this requirement, contractors shall not be required to maintain separate records.

15. Nothing herein provided shall be construed as a limitation upon the application of other laws which establish different standards of compliance or upon the application of requirementsa for the hiring of local or other area residents (e.g., those under the Public Works Employment Act of 1977 and the Community Development Block Grant Program).

SUPERSEDEAS DECISION

STATE: Arizona COUNTY: Statewide
DECISION NUMBER: AZ77-5058 DATE: Date of Publication
Supersedes Decision No. AZ76-5109 dated November 26, 1976, in 41 FR 52189.
DESCRIPTION OF WORK: Building Construction (does not include single family homes and garden type apartments up to and including 4 stories), heavy and highway construction.

	Basic Hourly Rates	Fringe Benefits Payments			
		H & W	Pensions	Vacation	Education and/or Appr. Tr.
ASBESTOS WORKERS	$ 11.04	.50	$ 1.10		.02
BOILERMAKERS	13.175	.775	1.00	.50	.02
BRICKLAYERS: (Phoenix Area)					
Bricklayers; Manhole Builders; Stonemasons:					
Zone A (0-25 miles from the City Hall in Phoenix; Flagstaff and Yuma)	10.05	.65	.90		.06
Zone B (25-40 miles from the City Hall in Phoenix; and Williams AFB)	10.55	.65	.90		.06
Zone C (40-70 miles from the City Hall in Phoenix)	11.56	.65	.90		.06
Zone D (70-100 miles from City Hall in Phoenix)	12.06	.65	.90		.06
Zone E (100-200 miles from the City Hall in Phoenix)	12.56	.65	.90		.06
Zone F (200 miles and over from the City Hall in Phoenix)	13.07	.65	.90		.06
BRICKLAYERS: (Tucson Area)					
Bricklayers; Stonemasons:					
Zone A (0-15 miles from Tucson City limits)	10.42	.80	.80		.06
Zone B (Over 15 miles to 30 miles from Tucson City limits)	10.79	.80	.80		.06
Zone C (Over 30 miles to 40 miles from Tucson City limits)	11.17	.80	.80		.06
Zone D (Over 40 miles from Tucson City limits)	11.92	.80	.80		.06
Manhole Builders:					
Zone A (0-15 miles from Tucson City limits)	10.67	.80	.80		.06
Zone B (Over 15 miles to 30 miles from Tucson City limits)	11.04	.80	.80		.06
Zone C (Over 30 miles to 40 miles from Tucson City limits)	11.41	.80	.80		.06

	Basic Hourly Rates	Fringe Benefits Payments			
		H & W	Pensions	Vacation	Education and/or Appr. Tr.
BRICKLAYERS: (Tucson Area) (Cont'd)					
Manhole Builders: (Cont'd)					
Zone D (Over 40 miles from Tucson City limits)	$ 12.17	.80	.80		.06
CARPENTERS:					
(Central and Southern Areas):					
Carpenters; Drywall Applicators; Saw Filers; Shingler	9.785	.845	.955		.05
Floorlayers (finish); Pile-drivermen	10.07	.845	.955		.05
Millwrights	10.20	.845	.955		.05
(Northern Area)					
Carpenters; Drywall Applicator; Saw Filer; Shingler	11.66	.845	.955		.05
Floorlayers (finish); Pile-drivermen	11.945	.845	.955		.05
Millwrights	12.075	.845	.955		.05
CEMENT MASONS:					
(Apache, Coconino, Gila, Mohave, Navajo, Yavapai, Yuma and the Northern portions of Graham, Greenlee, Maricopa and Pinal Counties)					
(Central and Southern Areas)					
Cement Masons	9.51	.95	1.00		.05
Concrete troweling machine; Sawing and scoring machine; Curb and gutter machine	9.67	.95	1.00		.05
(Northern Area)					
Cement Masons	11.385	.95	1.00		.05
Concrete troweling machine; Sawing and scoring machine; Curb and gutter machine	11.545	.95	1.00		.05
(Cochise, Pima, Santa Cruz and the southern portions of Graham, Greenlee, Maricopa and Pinal Counties)					
(Central and Southern Areas)					
Cement Masons	10.22	.85	.85		.05
Concrete troweling machine; Sawing and scoring machine; Curb and gutter machine	10.385	.85	.85		.05

	Basic Hourly Rates	Fringe Benefits Payments			
		H & W	Pensions	Vacation	Education and/or Appr. Tr.
DRYWALL:					
(From Court House in Phoenix, Mesa, including Luke and Williams Air Force Bases)					
Tapers:					
Zone A (0-40 miles)	$ 9.71	.59	.50		.07
Zone B (41-60 miles)	10.71	.59	.50		.07
Zone C (61 miles and over)	11.96	.59	.50		.07
Texture Spraymen:					
Zone A (0-40 miles)	9.81	.59	.50		.07
Zone B (41-60 miles)	10.81	.59	.50		.07
Zone C (61 miles and over)	12.06	.59	.50		.07
ELECTRICIANS: (Flagstaff Area)					
Zone A (in the City of Flagstaff, that area lying in a square extending 20 miles North-South, East and West of the Post Office) (Williams, Winslow and Sedona covering a square extending 5 miles North-South, East and West of the Post Office in each town)					
Electricians	12.64	.96	1%+.70		1/2%
Cable Splicers	12.84	.96	1%+.70		1/2%
Zone B (All territoral jurisdiction allotted outside of Zone A)					
Electricians	14.94	.96	1%+.70		1/2%
Cable Splicers	15.14	.96	1%+.70		1/2%
ELECTRICIANS: (Gallup Area-Northern Apache County)					
Electricians	12.60	.60	1%+.70		1/2%
Cable Splicers	13.65	.60	1%+.70		1/2%
ELECTRICIANS: (Globe-Miami Area)					
Zone A (The area within 16 road miles beginning where the Southern Pacific Railroad intersects Highway 60-70 at Kaiser Crossing)					
Electricians	13.09	6%	9%		1/2%
Cable Splicers	13.34	6%	9%		1/2%

DECISION NO. AZ77-5058 Page 4

	Basic Hourly Rates	Fringe Benefits Payments			
		H & W	Pensions	Vacation	Education and/or Appr. Tr.
ELECTRICIANS: (Globe-Miami Area) (Cont'd)					
Zone B (16-28 miles)					
Electricians	$ 13.79	6%	9%		1/2%
Cable Splicers	14.04	6%	9%		1/2%
Zone C (28-46 miles)					
Electricians	14.39	6%	9%		1/2%
Cable Splicers	14.64	6%	9%		1/2%
Zone D (46 miles and over)					
Electricians	15.09	6%	9%		1/2%
Cable Splicers	15.34	6%	9%		1/2%
ELECTRICIANS: (Phoenix)					
Zone A (Beginning at the northeast corner, a line extending southward on Bush Highway to McKellips Road; a line extending east on McKellips Road to a point one mile east of the intersection of State Highway 88 and U. S. 60 and 70 near Apache Junction; Southward to Baseline Road; west on Baseline Road to the intersection of Baseline Road and Ellsworth Road; South on Ellsworth Road to Hunt Highway; west on Hunt Highway to Powers Road; a line extending south on Powers Road five miles, then extending straight west to a point five miles west of Interstate 10, then northwest on a line parallel with Interstate 10 to intersect with Pecos Road, west on Pecos Road to intersect with Cotton Lane, North on Cotton Lane to Beloat Road. West on Beloat Road to Airport Road. North on Airport Road in a straight line to intersect Waddell Road. East on Waddell Road to intersect with Cotton Lane, North on Cotton Lane to Deer Valley Drive and east on Deer Valley Drive to intersect with Bush Highway including Luke and Williams Air Force Bases.)					

DECISION NO. AZ77-5058 Page 5

	Basic Hourly Rates	Fringe Benefits Payments			
		H & W	Pensions	Vacation	Education and/or Appr. Tr.
ELECTRICIANS: (Cont'd)					
Electricians	$ 12.04	.96	1%+.70		1/2%
Cable Splicers	12.64	.96	1%+.70		1/2%
Zone B (Area outside of Zone A and bounded by a line formed by measuring sixteen (16) road miles from the outer boundaries of an area enclosed by the following boundaries: Power Road on the east, from Hunt Highway on the south to one mile south of Pinnacle Peak Road on the north; One mile south Pinnacle Peak Road to Cotton Lane on the west; Cotton Lane to Pecos Road on the south. Pecos Road to Price Road and from Price Road to Hunt Highway on the south. Hunt Highway to Powers Road on the east)					
Electricians	14.15	.96	1%+.70		1/2%
Cable Splicers	14.85	.96	1%+.70		1/2%
Zone C (outside edge of Zone B and extended to the outside limits of the union's jurisdiction)					
Electricians	15.23	.96	1%+.70		1/2%
Cable Splicers	15.99	.96	1%+.70		1/2%
ELECTRICIANS: (Kingman)					
Zone A (The area within the 16th road mile from the City Hall)					
Electricians	12.04	.96	1%+.70		1/2%
Cable Splicers	12.64	.96	1%+.70		1/2%
Zone B (from the 16th road mile and extend up to and including the 32nd road mile)					
Electricians	14.15	.69	1%+.70		1/2%
Cable Splicers	14.85	.69	1%+.70		1/2%

	Basic Hourly Rates	Fringe Benefits Payments			
		H & W	Pensions	Vacation	Education and/or Appr. Tr.
ELECTRICIANS: (Kingman) (Cont'd)					
Zone C (From the 32nd road mile and extend up to the outside limits of the union's jurisdiction)					
Electricians	$ 15.23	.96	1%+.70		1/2%
Cable Splicers	15.99	.96	1%+.70		1/2%
ELECTRICIANS: (Prescott)					
Zone A (The area within 20 road miles from the City Hall)					
Electricians	12.04	.96	1%+.70		1/2%
Cable Splicers	12.64	.96	1%+.70		1/2%
Zone B (From the 20th road mile and extend up to and including the 32nd road mile)					
Electricians	14.15	.96	1%+.70		1/2%
Cable Splicers	14.85	.96	1%+.70		1/2%
Zone C (From the 32nd road mile and extend to the outside limits of the union's jurisdiction)					
Electricians	15.23	.96	1%+.70		1/2%
Cable Splicers	15.99	.96	1%+.70		1/2%
ELECTRICIANS: (Tucson Area)					
Zone A (Area within 16 road miles from the City Hall in Tucson and Douglas. Nogales and Sierra Vista shall be limited to 16 road miles from the center of the respective towns)					
Electricians	13.09	6%	9%		1/2%
Cable Splicers	13.34	6%	9%		1/2%
Zone B (Area from the outer limits of the 16 mile radius and extend up to and including 12 road miles)					
Electricians	13.79	6%	9%		1/2%
Cable Splicers	14.04	6%	9%		1/2%

	Basic Hourly Rates	Fringe Benefits Payments			
		H & W	Pensions	Vacation	Education and/or Appr. Tr.
ELECTRICIANS: (Tucson Area) (Cont'd)					
Zone C (Area from 12 road miles up to and including 30 road miles)					
Electricians	$ 14.39	5%	8%		1/2%
Cable Splicers	14.64	5%	8%		1/2%
Zone D (Area from 30 road miles and extend to the outside limits of the union's jurisdiction)					
Electricians	15.09	5%	8%		1/2%
Cable Splicers	15.34	5%	8%		1/2%
ELECTRICIANS: (Yuma Area)					
Zone A (Yuma North of Colorado River, East of County Avenue 5E, South to County 16th Street, and West to County Avenue E; Cities of Somerton and Parker)					
Electricians	11.88	.45	7%		1%
Cable Splicers	12.13	.45	7%		1%
Zone B (1-16 miles from Zone A)					
Electricians	12.58	.45	7%		1%
Cable Splicers	12.83	.45	7%		1%
Zone C (16-42 miles from Zone A)					
Electricians	13.18	.45	7%		1%
Cable Splicers	13.43	.45	7%		1%
Zone D (42 miles from Zone A and out)					
Electricians	13.88	.45	7%		1%
Cable Splicers	14.13	.45	7%		1%
ELEVATOR CONSTRUCTORS	11.55	.495	.32	3%+a	.02
ELEVATOR CONSTRUCTORS' HELPERS	70%JR	.495	.32	3%+a	.02
ELEVATOR CONSTRUCTORS' HELPERS (PROB.)	50%JR				
GLAZIERS	9.42	.70	.30		.01
IRONWORKERS:					
Central and Southern Areas	10.94	1.14	1.86		.08
Northern Area	12.94	1.14	1.86		.08
LATHERS: (Tucson Area)					
Zone A (0-30 miles from Tucson)	9.28	.35	.40		
Zone B (30-40 miles from Tucson)	9.78	.35	.40		
Zone C (40-50 miles from Tucson)	10.03	.35	.40		
Zone D (Area outside Zone C)	10.78	.35	.40		

DECISION NO. AZ77-5058 Page 8

	Basic Hourly Rates	Fringe Benefits Payments			
		H & W	Pensions	Vacation	Education and/or Appr. Tr.
PAINTERS: (Flagstaff Area)					
Zone A (From Falgstaff Court House to 20 miles)					
Brush; Soft Floor Layers	$ 9.73	.70	.60	.50	.20
Brush, steel and bridge	10.23	.70	.60	.50	.20
Spray	10.18	.70	.60	.50	.20
Spray, steel and bridge	10.73	.70	.60	.50	.20
Zone B (20-35 miles from Court House in Flagstaff)					
Brush; Soft Floor Layers	10.48	.70	.60	.50	.20
Brush, steel and bridge	10.98	.70	.60	.50	.20
Spray	10.93	.70	.60	.50	.20
Spray, steel and bridge	11.48	.70	.60	.50	.20
Zone C (35-80 miles from Court House in Flagstaff)					
Brush; Soft Floor Layers	11.48	.70	.60	.50	.20
Brush, steel and bridge	11.98	.70	.60	.50	.20
Spray	11.93	.70	.60	.50	.20
Spray, steel and bridge	12.48	.70	.60	.50	.20
Zone D (80 miles and over from Court House in Flagstaff)					
Brush; Soft Floor Layers	11.73	.70	.60	.50	.20
Brush, steel and bridge	12.23	.70	.60	.50	.20
Spray	12.18	.70	.60	.50	.20
Spray, steel and bridge	12.73	.70	.60	.50	.20
PAINTERS: (Phoenix Area)					
Zone A (0-40 miles from Court House in Phoenix, Mesa and including Luke and Williams Air Force Bases):					
Brush	9.69	.59	.38		.05
Spray	9.94	.59	.38		.05
Steel and bridge, brush	10.04	.59	.38		.05
Steel and bridge, spray	10.24	.59	.38		.05
Zone B (41-60 miles from Court House in Phoenix)					
Brush	10.69	.59	.38		.05
Spray	10.94	.59	.38		.05
Steel and bridge, brush	11.04	.59	.38		.05
Steel and bridge, spray	11.24	.59	.38		.05

DECISION NO. AZ77-5058 Page 9

	Basic Hourly Rates	Fringe Benefits Payments			
		H & W	Pensions	Vacation	Education and/or Appr. Tr.
PAINTERS: (Phoenix Area) (Cont'd)					
Zone C (60 miles and over from Court House in Phoenix)					
Brush	$ 10.69	.59	.38		.05
Spray	11.94	.59	.38		.05
Steel and bridge, brush	12.04	.59	.38		.05
Steel and bridge, spray	12.24	.59	.38		.05
PAINTERS: (Tucson and Yuma Areas)					
Zone A (0-30 miles from Stone and Congress in Tucson and from the County Courthouse in Yuma)					
Brush	8.78	.67	.35		.04
Spray	9.28	.67	.35		.04
Steel and bridge, brush	9.78	.67	.35		.04
Steel and bridge, spray	10.28	.67	.35		.04
Zone B (31-40 miles from Stone and Congress in Tucson and from the County Courthouse in Yuma)					
Brush	9.53	.67	.35		.04
Spray	10.03	.67	.35		.04
Steel and bridge, brush	10.53	.67	.35		.04
Steel and bridge, spray	11.03	.67	.35		.04
Zone C (41-50 miles from Stone and Congress in Tucson and from the County Courthouse in Yuma)					
Brush	10.03	.67	.35		.04
Spray	10.53	.67	.35		.04
Steel and bridge, brush	11.03	.67	.35		.04
Steel and bridge, spray	11.53	.67	.35		.04
Zone D (51 miles and over from Stone and Congress in Tucson and from the County Courthouse in Yuma)					
Brush	10.78	.67	.35		.04
Spray	11.28	.67	.35		.04
Steel and bridge, brush	11.78	.67	.35		.04
Steel and bridge, spray	12.28	.67	.35		.04

	Basic Hourly Rates	Fringe Benefits Payments			
		H & W	Pensions	Vacation	Education and/or Appr. Tr.
PLASTERERS: (Phoenix Area)					
Zone A (0-35 miles from Phoenix)	$ 9.045	.60	.85		.035
Zone B (35-60 miles from Phoenix)	9.795	.60	.85		.035
Zone C (60 miles and over from Phoenix)	10.67	.60	.85		.035
PLASTERERS: (Tucson Area)					
Zone A (0-30 miles from Tucson)	8.57	.35	.60		
Zone B (30-40 miles from Tucson)	9.07	.35	.60		
Zone C (40-50 miles from Tucson)	9.32	.35	.60		
Zone D (50 miles and over from Tucson)	10.07	.35	.60		
PLASTERERS' TENDERS:					
Central and Southern Areas	9.16	.85	.85		.10
PLUMBERS; Steamfitters:					
FREE ZONE 0-15 miles					
The "Free Zone" (Zone I) shall be 15 road miles from the stated base points in Flagstaff, Yuma, Tucson and Douglas. The "Free Zone" from Phoenix shall be 15 miles radius from the stated base point. In addition, all areas within the city limits of Phoenix, Chandler, Scottsdale, Tempe, Glendale, Mesa, Kingman, Havasu City, Prescott, Winslow and Holbrook will be included as Free Zones. Any work contracted for outside of these Zones will be determined from the Phoenix and Tucson basing points.					
Zone I (0-15 miles)	11.14	.75	1.35		.10
Zone II (15-30 miles)	11.49	.75	1.35		.10
Zone III (30-40 miles)	11.91	.75	1.35		.10
Zone IV (40 miles and over)	13.21	.75	1.35		.10

	Basic Hourly Rates	Fringe Benefits Payments			
		H & W	Pensions	Vacation	Education and/or Appr. Tr.
ROOFERS: (Tucson Area)					
Asbestos; Shinglers; Tile and Waterproofing:					
Zone A (0-44 miles from Tucson)	$ 8.97	.845	.20		.02
Zone B (Over 44 miles from Tucson)	10.72	.845	.20		.02
ROOFERS: (Phoenix Area)					
Roofers and Waterproofers	9.66	.845	.20		.02
SHEET METAL WORKERS:					
Zones Bases - from the Administration Building or City Hall in Flagstaff, Kingman, Phoenix, Prescott and Yuma):					
Zone I (0-25 miles)	10.43	3%+.70	1.10		.07
Zone II (25-50 miles)	11.08	3%+.70	1.10		.07
Zone III (50 miles and over)	12.93	3%+.70	1.10		.07
SHEET METAL WORKERS:					
Zone Bases - from the Administration Building or City Hall in Douglas and Tuscon:					
Zone A (0-22 miles)	9.99	3%+.94	1.91		.04
Zone B (22-45 miles)	10.94	3%+.94	1.91		.04
Zone C (Over 45 miles)	12.49	3%+.94	1.91		.04
SOFT FLOOR LAYERS: (Phoenix Area)					
Zone A (0-40 miles from Court House in Phoenix and Flagstaff including Luke and Williams Air Force Bases)	8.81	.49	.12		.12
Zone B (41-60 miles from Court House in Phoenix and Flagstaff)	9.81	.49	.12		.12
Zone C (61 miles and over from Court House in Phoenix and Flagstaff)	10.81	.49	.12		.12
SOFT FLOOR LAYERS: (Tucson Area)	9.25	.38			
SPRINKLER FITTERS	12.29	.65	.95		.08
TERRAZZO WORKERS; Tile Setters; Marble Mason: (Tucson Area)	9.42	.70	.75		

	Basic Hourly Rates	Fringe Benefits Payments			
		H & W	Pensions	Vacation	Education and/or Appr. Tr.
LINE CONSTRUCTION:					
Zone I (Phoenix and Tucson 30 mile radius from center of town):					
Groundmen	8.79	8%	8%		1/2%
Equipment Operators; Powdermen; Mechanics	10.15	8%	8%		1/2%
Linemen; Technicians; Crane Operators; Linemen Welder	11.45	8%	8%		1/2%
Cable Splicers	11.82	8%	8%		1/2%
Zone I-A (Douglas, Flagstaff, Globe, Kingman, Prescott and Yuma 10 mile radius from center of town):					
Groundmen	9.55	8%	8%		1/2%
Equipment Operators; Powdermen; Mechanics	10.85	8%	8%		1/2%
Linemen; Technicians; Crane Operators; Linemen Welder	12.20	8%	8%		1/2%
Cable Splicers	12.64	8%	8%		1/2%
Zone II (Other Areas):					
Groundmen	10.26	8%	8%		1/2%
Equipment Operators; Powdermen; Mechanics	11.57	8%	8%		1/2%
Linemen; Technicians; Crane Operators; Linemen Welder	12.93	8%	8%		1/2%
Cable Splicers	13.31	8%	8%		1/2%

FOOTNOTE:

a. Employer contributes 4% of basic hourly rate for 5 years' service and 2% basic hourly rate for 6 months to 5 years' service as Vacation Pay Credit. Six Paid Holidays: A through F.

PAID HOLIDAYS:

A-New Year's Day; B-Memorial Day; C-Independence Day; D-Labor Day; E-Thanksgiving Day; F-Christmas Day.

	Basic Hourly Rates C & S AREA	Basic Hourly Rates N AREA	Fringe Benefits Payments			
			H & W	Pensions	Vacation	Education and/or Appr. Tr.
LABORERS						
Group 1:	$ 8.01	$ 9.635	.85	.85		.10
Group 2:	8.14	9.765	.85	.85		.10
Group 3:	8.28	9.905	.85	.85		.10
Group 4:	8.39	10.015	.85	.85		.10
Group 5:	8.56	10.185	.85	.85		.10
Group 6:	8.935	10.56	.85	.85		.10
Group 7:	9.565	11.19	.85	.85		.10
LABORERS (Tunnel and Shaft Work)						
Group 1:	8.255	9.88	.85	.85		.10
Group 2:	8.42	10.045	.85	.85		.10
Group 3:	8.55	10.175	.85	.85		.10
Group 4:	8.91	10.535	.85	.85		.10
Group 5:	9.085	10.71	.85	.85		.10
Group 5A:	9.335	10.96	.85	.85		.10
POWER EQUIPMENT OPERATORS (Except Piledriving and Steel Erection)						
Group 1:	8.60	10.225	.95	.90		.06
Group 2:	8.97	10.595	.95	.90		.06
Group 3:	9.43	11.055	.95	.90		.06
Group 4:	9.96	11.585	.95	.90		.06
Group 5:	10.49	12.115	.95	.90		.06
Group 5A:	10.80	12.425	.95	.90		.06
Group 6:	11.13	12.755	.95	.90		.06
Group 7:	11.73	13.355	.95	.90		.06
TRUCK DRIVERS						
Group 1:	8.19	9.815	.85	.85		.06
Group 2:	8.32	9.945	.85	.85		.06
Group 3:	8.54	10.165	.85	.85		.06
Group 4:	8.89	10.515	.85	.85		.06
Group 5:	9.05	10.675	.85	.85		.06
Group 5A:	9.23	10.855	.85	.85		.06
Group 6:	9.37	10.995	.85	.85		.06
Group 7:	9.78	11.405	.85	.85		.06
Group 8:	10.295	11.92	.85	.85		.06
Group 8A:	10.95	12.575	.85	.85		.06
Group 8B:	10.64	11.265	.85	.85		.06
Group 8C:	8.75	10.375	.85	.85		.06

LABORERS

Group 1: All Helpers not herein separately classified; Cesspool Diggers and installers; Chat Box Man; Checker, tool dispatcher; Concrete dump manbelt, pipe and/or hoseman; Dumpman and/or spotter; Fence builder, guard rail builder highway; Form strippers; Labor, general or construction; Landscape gardener and nurseryman; Packing rod steel and pans; Rip rap stoneman; Astro turf layer; Cleanup, Bull gang; Trackman-railroad

Group 2: Cement finisher tender; Concrete curer (impervious membrane); Cutting torch operator; Fine grader (highway, engineering and sewer work only); Kettleman - Tarman; Power type concrete buggy

Group 3: Bander; Chucktender (except tunnel); Creosote tieman; Guinea chaser; Powderman helper; Rip-rap stone paver; Sandblaster (pot tender); Spiker and wrenchers

Group 4: Cement dumpers (Skip-type mixer or handling bulk cement); Chain saw machines (on clearing and grubbing); Concrete vibrating machines; Cribber and shorer (except tunnel); Floor sanders concrete; Hydraulic jacks, and similar mechanical tools not separately classified herein; Operators and tenders of penumatic and electric tools; Pipe caulker and/or backup man (pipeline); Pipe wrapper; Pneumatic gopher; Rigger/Signalman (pipeline)

Group 5: Air and water wash-out nozzleman; Asphalt rakers and ironers; Driller; Grade setter (pipeline); Hand guided trencher and similar operated equipment; Jackhammer and/or pavement breakers; Pipelayers (including but not limited to non-metallic, transite and plastic pipe, water pipe, sewer pipe, drain pipe, underground tile and conduit); Rock slinger; Scaler (using Bos'ns chairs or safety belt); Tampers (mechanical - all types); Precast manhole erector

Group 6: Concrete Cutting Torch; Concrete saw (hand guided); Driller, (core, diamond, wagon or air track); Drill doctor and/or air tool repairman; Gunman and mixerman (gunite); Sandblaster (nozzleman)

Group 7: Concrete Road Form Setter; Gunite nozzleman or rodman; Drillers, Joy Mustang, PR 143, 220 Gardner-Denver, Hydrasonic; Powderman; Scaler (drillers); Welders and/or pipelayers installing process piping; Form setter and/or builder

LABORERS
(Tunnel and Shaft Workers)

Group 1: Bull Gang, muckers, trackman; Dumpmen; Concrete crew (includes rodders and spreaders); Grout crew; Swamper (brakeman and switchmen on tunnel work); Change house man

Group 2: Nipper; Chucktender, Cabletender, Vibratorman, Jackhammer, Pneumatic tools (except driller)

Group 3: Grout Gunman

Group 4: Timberman, Retimberman - wood or steel blaster, driller powderman; Cherry pickerman; Powderman - primer house; Steel form raiser and setter; Kemper and other pneumatic concrete placer operator; Miner - finisher; Miners - Tunnel (hand or machine)

Group 5: Diamond Drill

Group 5A: Shaft and Raise Miner Welder

POWER EQUIPMENT OPERATORS
(Except Piledriving and Steel Erection)

Group 1: Air compressor operator; Field equipment servicemen helper; Heavy duty repair helper; Heavy duty welder helper; Oiler; Pump operator

Group 2: Conveyor operator; Generator operator - portable; Power grizzly operator; Self-propelled chip spreading machine - conveyor operator; Watch fireman; Welding machine operator - gasoline and diesel power

Group 3: Concrete mixer operator - skip type; Dinky operator - (under 20 tons wt.); Driver-moto paver, Slurry seal machine, and similar type equipment; Motor crane driver; Power sweeper operator - self-propelled; Ross carrier or fork lift operator; Skip loader operator - all types with rated capacity 1-1/2 cu. yds. or less; Wheel type tractor operator (Ford, Ferguson, or similar type) with attachments such as fresno, push blade, post hole auger, mower, etc., excluding compacting equipment

Group 4: A-Frame boom truck or winch truck operator; Asphalt plant firemen; Elevator hoist operator (including Tuskey hoist or similar types); Grade checker (excluding civil engineer); Multiple power concrete saw operator; Pavement breaker, mechanical compactor operator, power propelled; Roller operator - all types - except as otherwise classified; Screed operator; Self-propelled chip spreading machine operator (including Slurry seal machine operator) Stationary pipewrapping and cleaning machine operator; Tugger operator

Group 5: Aggregate plant operator (including crushing, screening and sand plants, etc.); Asphalt plant mixer operator; Beltcrete machine; Boring machine operator; Concrete mechanical tamping, spreading or finishing machine (incl. Clary, Johnson, or similar types); Concrete pump operator; Concrete batch plant operator, all types and sizes; Conductor, brakeman, or handler; Drilling machine, including water wells; Elevating grader operator - all types and sizes (except as otherwise classified); Field equipment serviceman; Highline cableway signalman; Kolman belt loader operator or similar, w/belt width 48" or over; Locomotive engineer (incl. Dinky-20 tons wt. and over); Moto-paver and similar type equipment operator; Operating engineer rigger; Pneumatic-tired scraper operator (Turnapull, Euclid, Cat, D-W, Hancock and similar equipment) up to and including 12 cu. yds.; Power jumbo form setter operator; Pressure grout machine operator (as used in heavy engineering construction); Road Oil mixing machine operator; Roller operator-on all types asphalt pavement; Self-propelled compactor, with blade; Skip loader operator-all types with rated capacity over 1-1/2 but less than 4 cu. yds.; Slip form operator (power driven lifting device for concrete forms); Soil cement road mixing machine operator - single pass type; Stationary Central generating plant operator-rated 300 k.w. or more; Surface heater and planer operator; Traveling pipewrapping machine operator

Group 5-A: Heavy duty mechanic and/or welder; Pneumatic tired scraper, all sizes and types over 12 cu. yds. up to and incl. 45 cu. yds. MRC (Turnapull, Euclid, Cat, D-W, Hancock and similar equipment); Tractor operator (Pusher,

POWER EQUIPMENT OPERATORS (Cont'd)
(Except Piledriving and Steel Erection)

Bulldozer, Scraper) up to 400 net horsepower rating; Trenching machine operator

Group 6: Auto-Grade Machine (CMI and similar equipment); Boring machine operator (including Mole, Badger and similar type); Concrete mixer operator-paving type, and mobile mixer; Concrete pump operator with boom attachment (Truck mounted); Crane operator-crawler and pneumatic type, under 100 ton capacity MRC; Crawler type tractor operator - with boom attachment; Derrick operator; Forklift operator for hoisting personnel; Grade-all operator; Helicopter hoist; Highline cableway operator (less than 20 tons rated capacity); Mass excavator operator (150 Bucyrus Erie and similar types); Mechanical hoist operator (two or more drums); Motor grade operator - any type power blade; Motor grade operator with elevating grader attachment; Mucking machine operator; Overhead crane operator; Piledriver engineer (portable, stationary or skid rig); Pneumatic-tired scraper operator - all sizes and types (Turnapull, Euclid, Cat, D-W, Hancock & similar equipment over 45 cu. yds., MRC); Power driven ditch lining or ditch trimming machine operator; Skip loader operator - all types with rated capacity 4 cu. yds., but less than 8 cu. yds.; Slip form paving machine operator (including Gunnert, Zimmerman & similar types); Specialized power digger operator- attached to wheel-type tractor; Tower crane (or similar type) operator; Tractor operator (Pusher, Bulldozer, Scraper (400 net horsepower and over; Tugger operator (two or more); Universal equipment operator-Shovel, Backhoe, Dragline, Clamshell, etc., up to 8 cu. yds.

Group 7: Crane operator - pneumatic or crawler (100 ton hoisting capacity and over MRC rating); Helicopter pilot - FAA qualified when used in construction work; Highline cableway operator, over 20 ton rated capacity and using traveling head and tail tower; Remote control earth moving equipment operator; Skip loader operator - all types with rate capacity of 8 cu. yds. or more; Universal equipment - Shovel, backhoe, dragline, clamshell, etc., 8 cu. yds. and over

TRUCK DRIVERS

Group 1: Teamsters; Pickups; Station Wagons; Manhaul driver

Group 2: Dump or flatrack (2 or 3 axle); Water truck (under 2500 gals.); Buggymobile (1 c. y. or less); Fireman; Bus drivers, ambulance driver, self-propelled street sweeper; Warehouseman

Group 3: Dump or flatrack (4 axle); Dumptor or dumpster (less than 7 c. y.); Water truck (2500 gals. but less than 4000 gals.)

Group 4: Dumptor or dumpster (7 c. y. but less than 16 c. y.); Dump or flatrack (5 axle); Water truck (4000 gals. and over); Slurry type equipment or leverman; Flaherty spreader or similar type equipment or leverman; Transit mix (8 c. y. or less)

Group 5: Dump or flatrack (6 axle); Transit mix (over 8 c. y. but less than 10.5 c. y.); Rock truck (i.e. Dart, Euclid and other similar type end dumps, single unit, less than 16 c. y.))

Group 5A: Oil tanker or spreader and/or bootman, retortman or leverman

Group 6: Transit mix (over 10.5 c. y. but less than 14 c. y.); Ross Carrier fork lift or lift truck; Hydro lift, Swedish Crane Iowa 300 and similar types; Concrete pump (when integral part of transit mix truck); Dump or flatrack (7 axle)

Group 7: Dump or Flatrack (8 axles)

Group 8: Off-Highway Equipment Driver including but not limited to: 2 or 4 wheel power unit, i.e., Cat DW Series, Euclid, International and similar type equipment, transporting material when top loaded or by external means including pulling water tanks, fuel tanks or other applications under Teamster Classifications; Rock trucks (Dart, Euclid, or other similar end dump types) 16 c. y. and over; Ejectalls; Dumptor or dumpster (16 c. y. and over); Dump or flatrack (9 axles)

Group 8A: Heavy duty mechanic/welder; Body and fender man

Group 8B: Field Equipment serviceman or fuel truck driver

Group 8C: Heavy duty mechanic/welder helper

FCCI 101 PO, A277 058 - Mod. 21
(42 FR 31356 - June 17, 1977)
Statewide, Arizona

	Basic Hourly Rates	Fringe Benefits Payments			
		H & W	Pensions	Vacation	Education and/or Appr. Tr.
Change:					
Bricklayers (Tucson Area):					
Bricklayers, Stonemasons:					
Zone A	$ 10.82	.90	.85		.06
Zone B	11.19	.90	.85		.06
Zone C	11.56	.90	.85		.06
Zone D	12.32	.90	.85		.06
Manhole Builders:					
Zone A	11.07	.90	.85		.06
Zone B	11.44	.90	.85		.06
Zone C	11.81	.90	.85		.06
Zone D	12.57	.90	.85		.06
Electricians (Phoenix, Kingman and Prescott Areas)					
Zone A	12.24	.96	3%+.78		3/4%
Zone B	14.38	.96	3%+.78		3/4%
Zone C	15.48	.96	3%+.78		3/4%
Electricians (Tucson Area)					
Zone A					
Electricians	13.09	6%	3%+8%		1/2%
Cable Splicers	13.34	6%	3%+8%		1/2%
Zone B					
Electricians	13.79	6%	3%+8%		1/2%
Cable Splicers	14.04	6%	3%+8%		1/2%
Zone C					
Electricians	14.39	6%	3%+8%		1/2%
Cable Splicers	14.64	6%	3%+8%		1/2%
Zone D					
Electricians	15.09	6%	3%+8%		1/2%
Cable Splicers	15.34	6%	3%+8%		1/2%
Line Construction:					
Zone I (Phoenix and Tucson 30 mile radius from center of town)					
Groundmen	9.67	8%	3%+7%		1/2%
Equipment Operators; Powdermen; Mechanics	11.17	8%	3%+7%		1/2%
Linemen; Technicians; Crane Operators; Linemen Welder	12.60	8%	3%+7%		1/2%
Cable Splicers	13.00	8%	3%+7%		1/2%
Zone I-A (Douglas, Flagstaff, Globe, Kingman, Prescott and Yuma 10 mile radius from center of town)					
Groundmen	$ 10.51	8%	3%+7%		1/2%
Equipment Operators; Powdermen; Mechanics	11.94	8%	3%+7%		1/2%
Linemen; Technicians; Crane Operators; Linemen Welder	13.42	8%	3%+7%		1/2%
Zone II (Other areas):					
Groundmen	11.29	8%	3%+7%		1/2%
Equipment Operators; Powdermen; Mechanics	12.73	8%	3%+7%		1/2%
Linemen; Technicians; Crane Operators; Linemen Welder	14.22	8%	3%+7%		1/2%
Cable Splicers	14.65	8%	3%+7%		1/2%

DECISION NO. AZ77-5058 - Mod. #2
(42 FR 31056 - June 17, 1977)
Statewide, Arizona

	Basic Hourly Rates	Fringe Benefits Payments			
		H & W	Pensions	Vacation	Education and/or Appr. Tr.
Changes:					
Electricians (Flagstaff Area):					
Zone A					
Electricians	$ 12.20	.96	3%+.78		1/2%
Cable Splicers	12.20	.96	3%+.78		1/2%
Zone B					
Electricians	14.50	.96	3%+.78		1/2%
Cable Splicers	14.50	.96	3%+.78		1/2%
Electricians (Gallup Area-Northern Apache County):					
Electricians	12.60	.60	3%+.70		1/2%
Cable Splicers	13.65	.60	3%+.70		1/2%
Electricians (Globe-Miami Area):					
Zone A					
Electricians	13.09	6%	3%+8%		1/2%
Cable Splicers	13.34	6%	3%+8%		1/2%
Zone B					
Electricians	13.79	6%	3%+8%		1/2%
Cable Spilcers	14.04	6%	3%+8%		1/2%
Zone C					
Electricians	14.39	6%	3%+8%		1/2%
Cable Splicers	14.64	6%	3%+8%		1/2%
Zone D					
Electricians	15.09	6%	3%+8%		1/2%
Cable Splicers	15.34	6%	3%+8%		1/2%
Electricians (Yuma Area):					
Zone A					
Electricians	11.88	5.25%	3%+8.35%		
Cable Splicers	12.13	5.25%	3%+8.35%		
Zone B					
Electricians	12.58	5.25%	3%+8.35%		
Cable Splicers	12.83	5.25%	3%+8.35%		
Zone C					
Electricians	13.18	5.25%	3%+8.35%		
Cable Splicers	13.43	5.25%	3%+8.35%		
Zone D					
Electricians	13.88	5.25%	3%+8.35%		
Cable Splicers	14.13	5.25%	3%+8.35%		

DECISION NO. AZ77-5058 - Mod. #3
(42 FR 31056 - June 17, 1977)
Statewide, Arizona

Change:

	Basic Hourly Rates	Fringe Benefits Payments			
		H & W	Pensions	Vacation	Education and/or Appr. Tr.
Ironworkers:					
Central and Southern Areas	$11.48	$1.24	$2.22		.08
Northern Area	13.48	1.24	2.22		.08
Plumbers; Steamfitters:					
Zone I	11.74	.75	1.35		.10
Zone II	12.09	.75	1.35		.10
Zone III	12.51	.75	1.35		.10
Zone IV	13.81	.75	1.35		.10
Sheet Metal Workers:					
(Zone Bases - from the Administration Building or City Hall in Flagstaff, Kingman, Phoenix, Prescott and Yuma)					
Zone I	10.48	3%+.75	1.20		.10
Zone II	11.13	3%+.75	1.20		.10
Zone III	12.90	3%+.75	1.20		.10
(Zone Bases - from the Administration Building or City Hall in Douglas and Tucson)					
Zone A	9.90	3%+1.04	1.91		.04
Zone B	10.85	3%+1.04	1.91		.04
Zone C	12.40	3%+1.04	1.91		.04
Terrazzo Workers; Tile Setters; Marble Masons (Tucson Area)	9.27	.90	.85		

DECISION NO. AZ77-5058 - Mod. #4
(42 FR 31056 - June 17, 1977
Statewide, Arizona

Change:

	Basic Hourly Rates	Fringe Benefits Payments			
		H & W	Pensions	Vacation	Education and/or Appr. Tr.
Asbestos Workers	$11.94	.50	$1.20		.02
Bricklayers; Stonemasons (Phoenix Area):					
Zone A	10.65	.65	.90		.09
Zone B	11.50	.65	.90		.09
Zone C	12.04	.65	.90		.09
Zone D	12.57	.65	.90		.09
Zone E	12.99	.65	.90		.09
Zone F	13.85	.65	.90		.09
Drywall Tapers (Phoenix, Mesa, Luke and Williams Air Force Bases)					
Zone A	10.21	.59	.50		.07
Zone B	11.21	.59	.50		.07
Zone C	12.46	.59	.50		.07
Electricians (Yuma Area):					
Zone A					
Electricians	11.88	5.25%	3%+8.35%		1%
Cable Splicers	12.13	5.25%	3%+8.35%		1%
Zone B					
Electricians	12.58	5.25%	3%+8.35%		1%
Cable Splicers	12.83	5.25%	3%+8.35%		1%
Zone C					
Electricians	13.18	5.25%	3%+8.35%		1%
Cable Splicers	13.43	5.25%	3%+8.35%		1%
Zone D					
Electricians	13.88	5.25%	3%+8.35%		1%
Cable Splicers	14.13	5.25%	3%+8.35%		1%

	Basic Hourly Rates	Fringe Benefits Payments			
		H & W	Pensions	Vacation	Education and/or Appr. Tr.
DECISION NO. AZ77-5058 - Mod. #5					
(42 FR 31656 - June 17, 1977)					
Statewide, Arizona					
Change:					
Bricklayers; Stonemasons (Phoenix Area):					
Zone A	$10.88	.65	.90		.09
Zone B	11.75	.65	.90		.09
Zone C	12.29	.65	.90		.09
Zone D	12.84	.65	.90		.09
Zone E	13.27	.65	.90		.09
Zone F	14.14	.65	.90		.09
Electricians (Pheonix, Kingman and Prescott Areas):					
Zone A	12.78	.96	3%+.88		3/4%
Zone B	15.02	.96	3%+.88		3/4%
Zone C	16.17	.96	3%+.88		3/4%
Elevator Constructors	11.775	.745	.56	a	.025
Elevator Constructors' Helpers	70%JR	.745	.56	a	.025
Painters (Phoenix Area):					
Zone A					
Steel and bridge, brush	10.93	.59	.38		.05
Steel and bridge, spray	11.13	.59	.38		.05
Zone B					
Steel and bridge, brush	11.93	.59	.38		.05
Steel and bridge, spray	12.13	.59	.38		.05
Zone C					
Brush	11.94	.59	.38		.05
Spray	12.19	.59	.38		.05
Steel and bridge, brush	13.18	.59	.38		.05
Steel and bridge, spray	13.38	.59	.38		.05
Footnote: a. Employer contributes 8% of basic hourly rates for over 5 years' service, and 6% of basic hourly rate for 6 months to 5 years as Vacation Pay Credit. Six Paid Holidays. A through F					

DECISION NO. AZ77-5058 - Mod. #6 (42 FR 11056 - June 17, 1977) Statewide, Arizona	Basic Hourly Rates	Fringe Benefits Payments			
		H & W	Pensions	Vacation	Education and/or Appr. Tr.
Change:					
Painters (Phoenix Area):					
Zone A					
Brush	$9.85	.60	.40		.08
Spray	10.10	.60	.40		.08
Steel and bridge, brush	10.93	.60	.40		.08
Steel and bridge, spray	11.13	.60	.40		.08
Zone B					
Brush	10.85	.60	.40		.08
Spray	11.10	.60	.40		.08
Steel and bridge, brush	11.93	.60	.40		.08
Steel and bridge, spray	12.13	.60	.40		.08
Zone C					
Brush	12.10	.60	.40		.08
Spray	12.35	.60	.40		.08
Steel and bridge, brush	13.18	.60	.40		.08
Steel and bridge, spray	13.38	.60	.40		.08
Plumbers; Steamfitters:					
Zone I	12.24	.75	1.35		.10
Zone II	12.59	.75	1.35		.10
Zone III	13.01	.75	1.35		.10
Zone IV	14.31	.75	1.35		.10
Sheet Metal Workers:					
Flagstaff, Kingman and Phoenix Area:					
Zone I	10.83	3%+.80	1.30		.10
Zone II	11.48	3%+.80	1.30		.10
Zone III	13.33	3%+.80	1.30		.10
Soft Floor Layers: (Phoenix Area)					
Zone A	9.21	.59	.12		.12
Zone B	10.21	.59	.12		.12
Zone C	10.71	.59	.12		.12

Mod. 6

Decision No. AZ77-5058 (Cont'd)	Basic Hourly Rates	Fringe Benefits Payments			
		H & W	Pensions	Vacation	Education and/or Appr. Tr.
Line Construction:					
Zone I					
Groundmen	9.97	8%	3%+7%		1/2%
Equipment Operators; Powdermen; Mechanics	11.47	8%	3%+7%		1/2%
Linemen; Technicians; Crane Operators; Linemen Welders	12.90	8%	3%+7%		1/2%
Cable Splicers	13.30	8%	3%+7%		1/2%
Zone I-A					
Groundmen	10.81	8%	3%+7%		1/2%
Equipment Operators; Powdermen; Mechanics	12.24	8%	3%+7%		1/2%
Linemen; Technicians; Crane Operators; Linemen Welder	$13.72	8%	3%+7%		1/2%
Cable Splicers	14.20	8%	3%+7%		1/2%
Zone II					
Groundmen	11.59	8%	3%+7%		1/2%
Equipment Operators; Powdermen; Mechanics	13.03	8%	3%+7%		1/2%
Linemen; Technicians; Crane Operators; Linemen Welder	14.52	8%	3%+7%		1/2%
Cable Splicers	14.95	8%	3%+7%		1/2%

DECISION #AZ77-5058 - Mod. #7
(42 FR 31056 - June 17, 1977)
Statewide, Arizona

Changes:
Boilermakers

Basic Hourly Rates	Fringe Benefits Payments			
	H & W	Pensions	Vacation	Education and/or Appr. Tr.
$13.625	$1.075	$1.00	.75	.02

DECISION #AZ77-5058 - Mod. #8
(42 FR 31056 - June 17, 1977)
Statewide, Arizona

Change:				
Painters: (Flagstaff Area):				
Zone A: From Flagstaff Courthouse to 20 miles:				
Brush; Soft Floor Layers	$10.70	.90	.60	.20
Brush, steel and bridge	11.20	.90	.60	.20
Spray	11.15	.90	.60	.20
Spray, steel and bridge	11.70	.90	.60	.20
Zone B: 20-35 miles from Courthouse in Flagstaff:				
Brush; Soft Floor Layers	11.45	.90	.60	.20
Brush, steel and bridge	11.95	.90	.60	.20
Spray	11.85	.90	.60	.20
Spray, steel and bridge	12.45	.90	.60	.20
Zone C: 35-80 miles from Courthouse in Flagstaff:				
Brush; Soft Floor Layers	12.45	.90	.60	.20
Brush, steel and bridge	12.95	.90	.60	.20
Spray	12.85	.90	.60	.20
Spray, steel and bridge	13.45	.90	.60	.20
Zone D: 80 miles and over from Courthouse in Flagstaff:				
Brush; Soft Floor Layers	12.70	.90	.60	.20
Brush, steel and bridge	13.20	.90	.60	.20
Spray	13.10	.90	.60	.20
Spray, steel and bridge	13.70	.90	.60	.20
Sprinkler Fitters	12.74	.75	1.05	.08

DECISION #AZ77-5058 - Mod. #9
(42 FR 31056 - June 17, 1977)
Statewide, Arizona

Change:

	Basic Hourly Rates	Fringe Benefits Payments			
		H & W	Pensions	Vacation	Education and/or Appr. Tr.
Plasterers:					
Phoenix Area:					
Zone A: 0 to 35 miles from Phoenix, Arizona	$10.22	.95	$1.10		.06
Zone B: 35 to 60 miles from Phoenix, Arizona	10.97	.95	1.10		.06
Zone C: 60 miles and over from Phoenix, Arizona	12.095	.95	1.10		.06

Reference
DACW09-78-B-0017

SPECIFICATIONS

for

INDIAN BEND WASH

INLET CHANNEL

MARICOPA COUNTY, ARIZONA

Gila River Basin, Arizona

Appropriation: 96x3122 Construction General
Corps of Engineers, Civil

96x8862 Contributed Funds, Other

U S Army Engineer District
Los Angeles
Corps of Engineers

TABLE OF CONTENTS

PART I SPECIAL PROVISIONS

PART II TECHNICAL PROVISIONS

Section	Title
1A	General Requirements
1B	Measurement and Payment
1D	Environment Protection
2A	Diversion and Control of Water
2B	Clearing Site and Removing Obstructions
2F	Detours and Traffic Control Facilities
3A	Excavation
3B	Fills and Subgrade Preparation
4A	Concrete Construction
4B	Concrete for Bridge
4C	Precast-Prestressed Concrete Girders
4E	Concrete Curb, Gutter, Combination Curb and Gutter, and Driveway
4F	Concrete Sidewalk
4H	Grouting Stone Protection
4M	Concrete Trails
5D	Stone Protection
6A	Miscellaneous Metalwork and Materials
6D	Fencing
6E	Control House
6F	Recorder House
7C	Sheet Metalwork, General
8A	Side Drains
9A	Select-Material Subbase Course
9B	Aggregate Base
9D	Prime Coat and Weed Killer
9G	Asphalt Concrete
9L	Guardrail and Traffic Barricades
10A	Seeding
10B	Trees
11A	Station Marking
14B	Built-Up Roofing
14C	Insulation for Built-Up Roofing
14D	Roof Decking, Steel

PART I

SPECIAL PROVISIONS

Index

1. Commencement, Prosecution, and Completion of Work
2. Liquidated Damages
3. Contract Drawings, Maps and Specifications
4. Contractor Submittals
5. Physical Data
6. Salvage Materials and Equipment
7. Layout of Work
8. Quantity Surveys
9. Damage to Work
10. Performance of Work by Contractor
11. Contractor Quality Control
12. Progress Schedule
13. Continuing Contracts
14. Approved Aggregate Sources

1. COMMENCEMENT, PROSECUTION, AND COMPLETION OF WORK. (1965 JAN.)

1.1 General. The Contractor will be required to commence work under this contract within 5 calendar days after the date of receipt by him of notice to proceed, to prosecute said work diligently, and to complete the entire work ready for use not later than 15 November 1979, except seeding and planting and completions dates scheduled hereinafter. Seeding and planting shall be accomplished as soon as practicable and within time limits stated in the Technical Provisions or directed by the Contracting Officer. The time stated for completion shall include final clean-up of the premises.

1.2 Completion Schedules.

1.2.1 Arizona Canal Siphon.

Description	Completion Date
Siphon Structure Sta. 21+87.91 to Sta. 22+60	31 October 1978
Wasteway Structure and Wasteway Bridge	31 October 1978
Control House	31 October 1978
Siphon Structure Sta. 12+25 to Sta. 21+69.41 including Maintenance Road	15 February 1979
24-Inch Drainage Structure Inlet Channel Sta. 412+35 including 130 feet of 24" pipe	31 October 1979

1.2.2 Construction Upstream (north) of the Arizona Canal. The Contractor shall complete all works upstream from the existing north bank of the Arizona Canal between 15 April 1979 and 15 November 1979. No work shall begin prior to 15 April 1979. The Contractor may commence layout of work and quantity surveys after 1 March 1979.

1.2.3 Required Fill Areas. All work associated with required fill areas shall be complete as scheduled below.

Description	Completion Date
Contractor's Work Area	Within 30 days after date of receipt of notice to proceed if Contractor elects to use as work area, otherwise 28 February 1979.
Area "G"	28 February 1979
Areas "B", "C", "D", "E" and "H"	15 November 1979
Area "F", "X" and "T"	15 November 1979

1.3 Upon completion of the Required Fill Areas at the approval of the Contracting Officer, the Contractor shall terminate all usage and activities in the Required Fill Areas and access ceased upon removal of all equipment.

2. LIQUIDATED DAMAGES. (1965 JAN.). In case of failure on the part of the Contractor to complete the work within the time fixed in the contract or any extensions thereof, the Contractor shall pay the Government as liquidated damages, pursuant to the clause of this contract entitled "Terminations for Default-Damages for Delay-Time Extensions," the sum of $200.00 for each day of delay.

2.3 Completion of remaining work including clean-up.

3. CONTRACT DRAWINGS, MAPS AND SPECIFICATIONS. (1965 JAN.).

3.1 Ten sets of large scale contract drawings, maps and specifications will be furnished the Contractor without charge, except for applicable publications incorporated into the Technical Provisions by reference. Additional sets will be furnished on request at the cost of reproduction. The work shall conform to the following contract drawings and maps, all of which form a part of these specifications and are available in the office of the U. S. Army Engineer District, Los Angeles, 300 North Los Angeles Street, Los Angeles, California.

Drawing No. (District File No.)	Title
246/124	Index to Contract Drawings
246/125	Project Location
246/126	General Plan
246/127	Foundation Investigation, Sta. 426+90.00 to Sta. 399+70.00
246/128	Foundation Investigation, Sta. 399+70.00 to Sta. 364+13.00
246/129	General Plan No. 1, Sta. 426+06.98 to Sta. 417+44.14
246/130	General Plan No. 2, Sta. 417+44.14 to Sta. 401+00.00
246/131	General Plan No. 3, Sta. 401+00.00 to Sta. 384+00.00
246/132	General Plan No. 4, Sta. 384+00.00 to Sta. 367+58.02
246/133	Upstream Levee-Sections and Details
246/134	Channel Cross Sections No. 1
246/135	Channel Cross Sections No. 2
246/136	Channel Wall at Left Bank Between Sta. 387+41.62 and Sta. 371+01.76, Plan Profile and Structural Details
246/137	Channel Wall at Right Bank Between Sta. 385+00.00 and Sta. 368+58.15, Plan, Profile and Structural Details
246/138	Arizona Canal Siphon and Wasteway - General Plan
246/139	Arizona Canal Siphon - Plan, Elevation and Structural Details
246/140	Arizona Canal Siphon - Plans, Elevations and Structural Details
246/141	Arizona Canal Siphon - Plans, Elevations, Structure, Gate and Fence Details
246/142	Arizona Canal Siphon - Manhole Details
246/143	Arizona Canal Wasteway - Plan, Profile, and Structural Details
246/144	Arizona Canal Wasteway - Plan, Profile, and Structural Details
246/145	Arizona Canal Wasteway - Vehicle Bridge Details
246/146	Arizona Canal Wasteway - Vehicle Bridge Details
246/147	Arizona Canal Control House - Architectural Details

246/148	Arizona Canal Control House - Architectural Details
246/149	Arizona Canal Control House - Structural Details
246/150	Arizona Canal Siphon and Wasteway - Wear Plate, Sleeve for Chain Sheave Pivot, and Stilling Well Details
246/151	Side Drains - Tabulation and Protection Barrier Details
246/152	Side Drains - Inlet Structures and Trashrack Details
246/153	Side Drains - Outlet Structures and Details
246/154	Pipe Gate and Driveway Details
246/155	Recorder House and Gaging Station Details
246/156	Planting Plan and Planting Schedule Sta. 426+00 to Sta. 417+44.14
246/157	Planting Plan, Riding and Hiking Trail Sta. 417+44.14 to Sta. 401+00
246/158	Planting Plan, Riding and Hiking Trail Sta. 401+00 to Sta. 384+00
246/159	Planting Plan, Riding and Hiking Trail Sta. 384+00 to Sta. 367+58.02
246/160	Canal Siphon and Wasteway - Riding and Hiking Plan
246/161	Planting, Riding and Hiking Trail Details, and Contractor's Work Area and Storage Yard
246/162	Indian Bend Road - Typical Sections and General Information
246/163	Indian Bend Road - Plan and Profile Sta. 16+50 to 18+00
246/164	Indian Bend Road - Plan and Profile Sta. 18+00 to 24+40
246/165	Indian Bend Road - Plan and Profile Sta. 24+40 to 31+00
246/166	Indian Bend Road - Plan and Profile Sta. 31+00 to 37+50
246/167	Indian Bend Road - Plan and Profile Sta. 37+50 to 44+00
246/168	Indian Bend Road - Plan and Profile Sta. 44+00 to 50+30
246/169	Indian Bend Road - Plan and Profile Sta. 50+30 to 52+00
246/170	Indian Bend Road - Structural Details and Notes
246/171	Indian Bend Road - Structural Details and Notes
246/172	Indian Bend Road - Rocking Road and Inlet Details
246/173	Indian Bend Road - Pipe and Channel Profile
246/174	Indian Bend Road - Hotel Access Road and Grading Plan for Fill Area "C"
246/175	Indian Bend Road - Hotel Access Road Profiles
246/176	Indian Bend Road - Grading Plan for Fill Area "A"
246/177	Indian Bend Road - Grading Plan for Fill Area "B"
246/178	Indian Bend Road - Grading Plan for Fill Area "D"
246/179	Hayden Road and Valley Vista Lane Typical Sections and General Information
246/180	Hayden Road - Plan and Profile Sta. 12+80 to 13+20
246/181	Hayden Road, Plan and Profile Sta. 13+20 to 19+60
246/182	Hayden Road, Plan and Profile Sta. 19+60 to 26+00
246/183	Valley Vista Lane, Plan and Profile Sta. 0+00 to 5+00
246/184	Valley Vista Lane, Plan and Profile Sta. 5+00 to 8+00
246/185	Valley Vista Lane, Drainage Plan

246/186	Valley Vista Lane, Side Drain Profiles
246/187	Valley Vista Lane, Side Drain Structural Details
246/188	Valley Vista Lane, Side Drain Structural Details
246/189	Valley Vista Lane, Side Drain Structural Details
246/190	Grading Plan for Fill Areas "F" & "H"
246/191	Grading Plan for Fill Area "E"
246/192	Grading Plan for Fill Area "G"

3.2 Omissions from the drawings or specifications or the misdescription of details of work which are manifestly necessary to carry out the intent of the drawings and specifications, or which are customarily performed, shall not relieve the Contractor from performing such omitted or misdescribed details of the work but they shall be performed as if fully and correctly set forth and described in the drawings and specifications.

3.3 The Contractor shall check all drawings furnished him immediately upon their receipt and shall promptly notify the Contracting Officer of any discrepancies. Figures marked on drawings shall in general be followed in preference to scale measurements. Large scale drawings shall in general govern small scale drawings. The Contractor shall compare all drawings and verify the figures before laying out the work and will be responsible for any errors which might have been avoided thereby.

4. CONTRACTOR SUBMITTALS.

4.1 General. Reference is made to the General Provision entitled Shop Drawings. The Contractor shall submit for approval all shop drawings, certificates of compliance and/or equipment lists called for under the various headings of these specifications. These drawings, certificates and lists shall be complete and detailed. If approved by the Contracting Officer, each copy of the drawings, certificates, or lists will be identified as having received such approval by being so stamped and dated. The Contractor shall make any corrections required by the Contracting Officer. Unless otherwise specified in the Technical Provisions, the number of copies to be submitted shall be as stated herein. The Contractor shall complete ENG Form 4025, "Transmittal of Shop Drawings, Equipment Data, Material Samples, or Manufacturer's Certificates of Compliance for Approval" and forward copies of same with each set of shop drawings, certificates of compliance, or equipment lists submitted. Blank ENG Forms 4025 will be furnished by the Contracting Officer on request. Each shop drawing submitted for approval shall have, in the lower right hand corner just above the title, a white space 3 inches x 4 inches in which the Contracting Officer can indicate the action taken. Shop drawings for submittal shall be either blue line or black line prints on a white background. Blueprints are not acceptable. Each shop drawing, certificate of compliance, and/or equipment list shall be identified with the following information as applicable:

Contract Number
Project Title and Location
Subcontractor's Name
Supplier's Name
Manufacturer's Name
Contract Specification and Paragraph Number
Contract Drawing File Number

4.1.1 Contractor Certification. Each submittal of the shop drawings shall contain the following certification on the face of the ENG Form 4025 accompanying the submittal:

"I have reviewed the shop drawings in detail
and they are correct and in strict conformance
with the contract drawings and specifications
except as otherwise explicitly stated.

Authorized Prime Contractor Representative"

4.2 Shop Drawings and Materials Submittal Register. Within 15 calendar days after commencement of work under this contract, the Contractor shall submit a preliminary register showing all shop drawings, certificates of compliance, equipment lists, samples, and other data required to be submitted under the various headings of these specifications. The register shall be submitted in duplicate. The preliminary register shall show the submittal identification number, the type of submittal, and the description for all items to be submitted under this contract and, for all items needed prior to submittal of the Project Progress Schedule, the scheduled submittal date, approval need date, and the material/equipment need date shall also be included. The register shall be expanded to include all Contractor scheduled dates and shall be resubmitted within 15 calendar days after submittal of the project progress schedule. After original approval the register shall be updated to indicate actual dates, actions completed, and any additional submittals or resubmittals required, and two copies of all updated sheets shall be submitted on or before the fifteenth of each month. The register shall provide adequate time for review and approval of the submitted material and shall be coordinated with the construction progress schedule to assure that all equipment and materials will be available for incorporation into the work in accordance with approved schedule of construction operations. Payment for materials incorporated into the work will not be allowed until required approvals have been obtained.

4.3 Shop Drawings. The Contractor shall submit to the Contracting Officer for approval 8 copies of all shop drawings as called for under the various headings of these specifications. six sets of all shop drawings will be retained by the Contracting Officer and one set will be returned to the Contractor.

4.4 Certificates of Compliance. (1969 MAY OCE) Any certificates required for demonstrating proof of compliance of materials with specification requirements shall be executed in 6 copies. Each certificate shall be signed by an authorized officer of the manufacturing company and shall contain the name and address of the Contractor, the project name and location, and the quantity and date or dates of shipment or delivery to which the certificates apply. Copies of laboratory test reports submitted with certificates shall contain the name and address of the testing laboratory and the date or dates of the tests to which the report applies. Certification shall not be construed as relieving the Contractor from furnishing satisfactory material, if, after tests are performed on selected samples, the material is found not to meet the specific requirements.

4.5 Resubmittals. If a submittal is returned for correction or is not satisfactory and is disapproved by the Contracting Officer, the Contractor shall resubmit the corrected material in the same quantity, as specified for the original submittal, for approval within 14 calendar days after receipt by him of the disapproved material.

5. PHYSICAL DATA. (1965 JAN.).

5.1 General. Information and data furnished or referred to below are furnished for the Contractor's information. However, it is expressly understood that the Government will not be responsible for any interpretation or conclusion drawn therefrom by the Contractor.

5.2 The physical conditions indicated on the drawings and in the specifications are the result of site investigations by surveys and auger borings.

5.3 Weather Conditions. Meteorological information including rainfall and temperature data are available for inspection in the office of the District Engineer at 300 North Los Angeles Street, Los Angeles, California. Temperature statistics based on the National Weather Service, Phoenix, Arizona Sky Harbor International Airport weather station are as follows:

TEMPERATURE DATA (IN DEGREES FAHRENHEIT)

Month	Average Daily Maximum*	Average Daily Minimum*	Average*	Maximum**	Minimum**
January	65	38	52	88	16
February	69	42	56	89	22
March	75	46	61	97	25
April	83	53	68	104	32
May	92	60	76	113	40
June	102	69	85	117	50
July	104	78	91	118	61
August	102	76	89	117	60
September	98	69	84	118	47
October	87	57	72	105	34
November	75	45	60	92	25
December	66	39	52	88	22

* Taken from Local Climatological Data – Annual Summary for Phoenix 1974.

** Taken from Local Climatological Data – Annual Summary for Phoenix 1974 and from Climatography of the United States No. 80-2 supplement for 1951-1960.

5.3.1 Streamflow Conditions. Discharge frequency and flood hydrograph information are available for inspection in the office of the District Engineer, at 300 North Los Angeles Street, Los Angeles, California.

5.4 Transportation Facilities. The Southern Pacific Company serves the area adjacent to the site of the work. The Contractor shall investigate the availability of sidings and shall make all arrangements with the railroad company for any siding, spurs, or other facilities necessary for the delivery of materials to be used on the work. The Contractor shall make his own investigation of the condition of available public and private roads and of clearances, restrictions, bridge load limits, and other limitations affecting transportation and ingress and egress at the site of the work. It shall be the Contractor's responsibility to construct and maintain at his own expense, any haul roads required for construction operations.

5.5 Additional Information, including but not necessarily limited to, results of laboratory tests of material encountered in test holes or other explorations and field logs is available for inspection and study in the office of the District Engineer at

6. SALVAGE MATERIALS AND EQUIPMENT. (1965 JAN.). The Contractor shall maintain adequate property control records for all materials or equipment specified to be salvaged. These records may be in accordance with the Contractor's system of property control, if approved by the property administrator. The Contractor shall be responsible for the adequate storage and protection of all salvaged materials and equipment and shall replace, at no cost to the Government, all salvaged materials and equipment which are broken or damaged during salvage operations as the result of his negligence, or while in his care.

7. LAYOUT OF WORK. (1965 APR OCE)

7.1 The Government will establish the following control points and bench marks indicated at the site of the work. Necessary additional information relating to lines and grades will be made available to the Contractor.

7.2 From the control points and bench marks established by the Government, the Contractor shall complete the layout of the work and shall be responsible for all measurements that may be required for the execution of the work to the location and limit marks prescribed in the specifications or on the contract drawings, subject to such modifications as the Contracting Officer may require to meet changed conditions or as a result of necessary modifications to the contract work.

7.3 The Contractor shall furnish, at his own expense, such stakes, templates, platforms, equipment, tools and materials, and all labor as may be required in laying out any part of the work from the base lines and bench marks established by the Government. It shall be the responsibility of the Contractor to maintain and preserve all stakes and other marks established by the Contracting Officer until authorized to remove them, and if such marks are destroyed, by the Contractor or through his negligence prior to their authorized removal they may be replaced by the Contracting Officer, at his discretion, and the expense of replacement will be deducted from any amounts due or to become due the Contractor. The Contracting Officer may require that work be suspended at any time when location and limit marks established by the Contractor are not reasonably adequate to permit checking of the work.

8. QUANTITY SURVEYS (1968 APR.)

8.1 The Contractor shall make such surveys and computations as are necessary to determine the quantities of work performed or placed during each period for which a progress payment is to be made. The Contractor shall also make original and final surveys. The Government will make such computations as are necessary to determine the quantities of work performed or finally in place. Unless waived by the Contracting Officer in each specific case, quantity surveys made by the Contractor shall be made under the direction of a representative of the Contracting Officer.

8.2 All original field notes, computations and other records of the Contractor for the purposes of layout, original, progress and final surveys shall be recorded in duplicating field books, the original pages of which shall be furnished promptly in ring binders to the representative of the Contracting Officer at the site of the work and shall be used by the Contracting Officer to the extent necessary in determining the proper amounts of progress and final payments.

9. DAMAGE TO WORK. (1966 MAR OCE) The responsibility for damage to any part of the permanent work shall be as set forth in the clause of the contract entitled "Permits and Responsibilities." However, if, in the judgment of the Contracting Officer, any part of the permanent work performed by the Contractor is damaged by flood or earthquake, work performed by the Contractor is damaged by flood or earthquake, which damage is not due to the failure of the Contractor to take reasonable precautions or to exercise sound engineering and construction practices in the conduct of the work, the Contractor will make the repairs as ordered by the Contracting Officer and full compensation for such repairs will be made at the applicable contract unit or lump sum prices as fixed and established in the contract. If, in the opinion of the Contracting Officer, there are no contract unit or lump sum prices applicable to any part of such work an equitable adjustment pursuant to Clause 3, Changes, of the contract, will be made as full compensation for the repairs of that part of the permanent work for which there are no applicable contract unit or lump sum prices. Except as herein provided, damage to all work (including temporary construction), utilities, materials, equipment and plant shall be repaired to the satisfaction of the Contracting Officer at the Contractor's expense, regardless of the cause of such damage.

10. PERFORMANCE OF WORK BY CONTRACTOR. (1965 JAN.). The Contractor shall perform on the site, and with his own organization, work equivalent to at least 35 percent of the total amount of work to be performed under the contract. If during the progress of the work hereunder the Contractor requests a reduction in such percentage, and the Contracting Officer determines that it would be to the Government's advantage, the percentage of the work required to be performed by the Contractor may be reduced; provided, written approval of such reduction is obtained by the Contractor from the Contracting Officer.

11. CONTRACTOR QUALITY CONTROL. The Contractor shall provide and maintain an effective quality control program that complies with General Provision 41 of the contract entitled "Contractor Inspection System."

11.1 The Contractor shall establish a quality control system to perform sufficient inspection and tests of all items of work, including that of his subcontractors, to ensure conformance to applicable specifications and drawings with respect to the materials, workmanship, construction, finish, functional performance, and identification. This control will be established for all construction except where the Technical Provisions of the contract provide for specific Government control by inspections, tests or other means. The Contractor's control system will specifically include the surveillance and tests required in the Technical Provisions of the contract specifications.

11.2 The Contractor's quality control system is the means by which he assures himself that his construction complies with the requirements of the contract plans and specifications. The controls shall be adequate to cover all construction operations and should be keyed to the proposed construction sequence.

11.3 The Contractor's job supervisory staff may be used for quality control, supplemented as necessary by additional personnel for surveillance, special technicians, or testing facilities to provide capability for the controls required by the Technical Provisions of the specifications. Prior approval is required for facilities, equipment, and personnel used by the Contractor in performing the specified tests.

11.4 After the contract is awarded and before construction operations are started, the Contractor shall meet with the Contracting Officer, or his representative, and discuss quality control requirements. The meeting shall develop mutual understanding relative to details of the system, including the forms to be used for recording the quality control operations, inspections, administration of the system, and the interrelationship of Contractor and Government inspection.

11.5 The Contractor shall submit for approval within 10 days after the receipt of the Notice to Proceed a quality control plan which shall include the procedures, instructions, and reports to be used. This document will include as a minimum:

(1) The quality control organization.

(2) Number and qualifications of personnel to be used for this purpose.

(3) Authority and responsibilities of quality control personnel.

(4) Methods of quality control including that for his subcontractor's work.

(5) Test methods including, as specified, name of qualified testing laboratory to be used.

(6) Method of documenting quality control operation, inspection, and testing.

(7) A copy of a letter of direction to the Contractor's representative responsible for the quality control, outlining his duties and responsibilities, and signed by a responsible officer of the firm.

11.6 Unless specifically authorized in writing no construction shall be started until the Contractor's quality control plan is approved.

11.7 All compliance inspection will be recorded on an approved form, including but not limited to the specific items required in the Technical Sections of the specifications. This form, to include records of corrective action taken, will be furnished to the Government as required by the Contracting Officer.

11.8 If recurring deficiencies in an item or items indicate that the quality control system is not adequate, such corrective actions will be taken as directed by the Contracting Officer.

11.9 In the event the Contractor fails to satisfactorily perform any required inspections and tests; to submit timely, complete, and factual reports and test data; or otherwise comply with the quality control provisions, the Contracting Officer may provide these services from another source and all costs for providing these services will be deducted from payments due the Contractor.

12. PROGRESS SCHEDULE.

12.1 Reference is made to the General Provision entitled "Progress Charts and Requirements for Overtime Work."

12.2 The Progress schedule shall provide for a uniform rate of progress throughout the entire construction period. Actual progress shall be entered on the schedule weekly. The determination of whether or not the work is behind schedule will be based upon a uniform rate of production in each feature of the work. Falling more than 5 calendar days behind the approved progress schedule in any feature of the work shall constitute sufficient grounds for a determination that the Contractor has fallen behind the progress schedule. Failure of the Contracting Officer to act under this provision shall in no way relieve the Contractor of the responsibility for completion of the work on schedule.

13. CONTINUING CONTRACTS (1977 OCT OCE).

13.1 This is a continuing contract, as authorized by Section 10 of the River and Harbor Act of September 22, 1922 (33 U.S. Code 261). The payment of some portion of the contract price is dependent upon reservations of funds from future appropriations. The responsibilities of the Government are limited by this clause notwithstanding any contrary provision of the "Payments to Contractor" clause or any other clause of this contract.

13.2 The sum of $847,000 from Construction, General and $400,000 from Flood Control District of Maricopa County has been reserved for this contract and is available for payments to the Contractor during the current fiscal year. It is expected that Congress will make appropriations for future fiscal years from which additional funds will be reserved for this contract.

13.3 Failure to make payments in excess of the amount currently reserved, or that may be reserved from time to time, shall not entitle the Contractor to a price adjustment under the terms of this contract except as specifically provided in paragraphs 13.6 thru 13.9 below. No such failure shall constitute a breach of this contract, except that this provision shall not bar a breach-of contract action if an amount finally determined to be due as a termination allowance remains unpaid for one year due to solely to a failure to reserve sufficient additional funds therefor.

13.4 The Government may at any time reserve additional funds for payments under the contract if there are funds available for such purpose. The Contracting Officer will promptly notify the Contractor in writing of any additional funds reserved for the contract.

13.5 If earnings will be such that funds reserved for the contract will be exhausted before the end of any fiscal year, the Contractor shall give written notice to the Contracting Officer of the estimated date of exhaustion and the amount of additional funds which will be needed to meet payments due or to become due under the contract during that fiscal year. This notice shall be given not less than 45 nor more than 60 days prior to the estimated date of exhaustion.

13.6 No payments will be made after exhaustion of funds except to the extent that additional funds are reserved for the contract. The Contractor shall be entitled to simple interest on any payment that the Contracting Officer determines was actually earned under the terms of the contract and would have been made except for exhaustion of funds. Interest shall be computed from the time such payment would otherwise have been made until actually or constructively made, and shall be at the rate established by the Secretary of the Treasury pursuant to Public Law 92-41, 85 STAT 97, for the Renegotiation Board, as in effect on the first day of the delay in such payment.

13.7 Any suspension, delay, or interruption of work arising from exhaustion or anticipated exhaustion of funds shall not constitute a breach of this contract and shall not entitle the Contractor to any price adjustment under the "Suspension of Work" clause or in any other manner under this contract.

13.8 An equitable adjustment in performance time shall be made for any increase in the time required for performance of any part of the work arising from exhaustion of funds or the reasonable anticipation of exhaustion of funds.

13.9 If, upon the expiration of sixty (60) days after the beginning of the fiscal year following an exhaustion of funds, the Government has failed to reserve sufficient additional funds to cover payments otherwise due, the Contractor, by written notice delivered to the Contracting Officer at any time before such additional funds are reserved, may elect to treat his right to proceed with the work as having been terminated. Such a termination shall be considered a termination for the convenience of the Government.

13.10 If at any time it becomes apparent that the funds reserved for any fiscal year are in excess of the funds required to meet all payments due or to become due the Contractor because of work performed and to be performed under the contract during the fiscal year, the Government reserves the right, after notice to the Contractor, to reduce said reservation by the amount of such excess.

14. APPROVED AGGREGATE SOURCES. (1965 APR OCE)

14.1 Concrete Aggregates meeting the requirements of these specifications can be produced from the approved sources listed below.

14.1.1 Commercial sources along the Salt River near Phoenix, Arizona.

14.1.2 Commercial sources along the Aqua Fria River near Luke Air Force Base.

14.2 Concrete Aggregates may be furnished from any of the above listed sources or at the option of the Contractor may be furnished from any other source designated by the Contractor and approved by the Contracting Officer, subject to the conditions hereinafter stated.

14.3 After the Award of the Contract, the Contractor shall designate in writing only one source or one combination of sources from which he proposes to furnish aggregates. If the Contractor proposes to furnish aggregates from a source or from sources not listed above, he may designate only a single source or single combination of sources for aggregates. Samples for acceptance testing shall be provided as required by Section: CONCRETE CONSTRUCTION of the "Technical Provisions." If a source for coarse and/or fine aggregate so designated by the Contractor is not approved for use by the Contracting Officer, the Contractor may not submit for approval other sources but shall furnish the coarse and/or fine aggregate, as the case may be, from an approved source listed above at no additional cost to the Government.

14.4 Approval of a source of concrete aggregate is not to be construed as approval of all material from that source. The right is reserved to reject materials from certain localized areas, zones, strata, or channels, when such materials are unsuitable for concrete aggregate as determined by the Contracting Officer. Materials produced from an approved source shall meet all the requirements of Section: CONCRETE CONSTRUCTION of the "Technical Provisions" of these specifications.

* * * * *

PART II

TECHNICAL PROVISIONS

SECTION 1 A

GENERAL REQUIREMENTS

Index

1. Applicable Publications
2. Project Facilities
3. Construction Signs
4. Project Engineer's Office and Laboratory
5. Bulletin Board
6. Maintenance and Disposal of Project Facilities
7. Scrap Materials
8. Salvage Materials
9. Archaeological Findings During Construction
10. Public Utilities, Notices, and Restrictions
11. Public Safety
12. Personal Clothing Standards
13. Deleted
14. Occupational Safety and Health Act (OSHA) Standards
15. Quality Control

1. APPLICABLE PUBLICATIONS. The following publications of the issues listed below, but referred to thereafter by basic designation only, form a part of this specification to the extent indicated by the references thereto.

1.1 Federal Specifications.

FF-B-575C	Bolts, Hexagon and Square
FF-N-105B & Am-3	Nails, Brads, Staples and Spikes: Wire, Cut and Wrought
FF-N-836D & Am-1	Nut: Square, Hexagon, Cap, Slotted, Castle, Knurled, Welding, and Single Ball Seat
MM-L-751H	Lumber; Softwood
TT-E-529C & Am-1	Enamel, Alkyd, Semi- Gloss
TT-P-25E & Am-1	Primer Coating, Exterior (Undercoat for Wood, Ready-Mixed, White and Tints)

1.2 U.S. Department of Commerce National Bureau of Standards, Product Standard.

PS 1-74	Construction and Industrial Plywood

2. PROJECT FACILITIES. The Contractor shall construct and/or erect the following project facilities.

2.1 Construction Signs. The signs shall be erected as soon as possible and within 15 days after commencement of work under this contract.

2.1.1 Two project signs at locations designated by the Contracting Officer.

2.1.2 Warning Signs facing approaching traffic on all haul roads crossing under overhead power transmission lines.

2.1.3 Four hard hat signs at locations directed.

2.2 Project Engineer's Office and Laboratory, including a fenced parking area and a flagpole.

2.3 Bulletin Board at the Contractor's office.

2.4 Sanitary Facilities.

3. CONSTRUCTION SIGNS.

3.1 Materials.

3.1.1 Lumber shall conform to Federal Specification MM-L-751, and shall be seasoned Douglas Fir, S4S, Grade D or better except that posts, braces and spacers shall be construction Grade (WCLB).

3.1.2 Plywood shall conform to Product Standard PS 1, grade A-C, Group 1, exterior type.

3.1.3 Bolts, Nuts and Nails. Bolts shall conform to Federal Specification FF-B-575, nuts shall conform to Federal Specification FF-N-836, and nails shall conform to Federal Specification FF-N-105.

3.1.4 Paints and Oils. Paints shall conform to Federal Specifications TT-P-25 for primer and TT-E-529 for finish paint and lettering.

3.2 Construction.

3.2.1 Project and hard hat signs shall be constructed as detailed on Figures 1, 1A, 2 and 3. Decals and safety signs will be furnished by the Contracting Officer.

3.2.2 Warning Signs shall be constructed of plywood not less than 1/2 inch thick and shall be securely bolted to the supports with the bottom of the sign face 3 feet above the ground. The sign face shall be 2 x 4 feet, all letters shall be 4 inches in height, and the wording shall be: "WARNING: OVERHEAD TRANSMISSION LINES."

3.3 Painting. All exposed surfaces and edges of plywood shall be given one coat of linseed oil and be wiped prior to applying primer. All exposed surfaces of signs and supports shall be given one coat of primer and 2 finish coats of white paint. Except as otherwise indicated, lettering on all signs shall be black and sized as indicated.

4. PROJECT ENGINEER'S OFFICE AND LABORATORY.

4.1 General. The Contractor shall provide a suitable office trailer and a laboratory building for the Project Engineer. The exact site will require the Contracting Officer's approval. Both the trailer and the building shall be adequately heated, well lighted, suitably ventilated, and cooled with an exterior mounted 1,000 cubic feet per minute minimum size, pad-type evaporative cooler, complete, with all piping and electrical connections. An adequate supply of cooled drinking water shall be furnished and maintained. Open parking space for 6 vehicles and water and sanitary facilities shall be located convenient to the office and laboratory. The combined parking and building area shall be enclosed with a woven wire fence approximately 6 feet high with a 10-foot wide lockable gate accessible from a road or street. The fenced area shall be of sufficient size to permit ease in the parking of vehicles. Materials for the facilities need not be new provided they are adequate for the intended use.

4.2 Officer Trailer shall be approximately 10 feet wide by 40 feet in length.

4.3 Laboratory Building shall be weathertight and shall have a 6-inch concrete slab floor and contain not less than 400 square feet of floor area. The laboratory shall be equipped with water supply, a sink approximately 20 x 35 x 8 inches, and the usual utilities.

4.4 Flagpole. The Contractor shall furnish and erect a flagpole at the Project Engineer's Office. The flagpole shall be either wood or sectional steel type, a product of a reputable manufacturer who has been regularly engaged in the manufacture of flagpoles. The flagpole shall be complete with standard fittings and equipment, including pulley, cleats, ground protector, halyards, and snap hooks. The pole shall have 20 feet exposed height and be set in concrete foundation in conformance with the manufacturer's recommendations. Painting of the wooden pole shall conform to the applicable requirements for the project sign. Steel pole shall be galvanized.

5. BULLETIN BOARD. A weatherproof bulletin board, approximately 36 inches wide and 30 inches high, with hinged glass door shall be provided adjacent to or mounted on the Contractor's project office. If adjacent to the office, the bulletin board shall be securely mounted on no less than 2 posts. Bulletin board and posts shall be painted or have other approved factory finish. The bulletin board shall be easily accessible at all times and shall contain wage rates, equal opportunity notice, and such other items required to be posted.

6. MAINTENANCE AND DISPOSAL OF PROJECT FACILITIES. The Contractor shall maintain the project facilities in good condition throughout the life of the project. Upon completion of work under this contract, the facilities covered under this section will remain the property of the Contractor and shall be removed from the site at his expense.

7. SCRAP MATERIAL. Materials indicated to be removed and not indicated to be salvaged, stored or reinstalled are designated as scrap and shall become the property of the Contractor and be removed from the site of the work. The Contractor by signing this contract hereby acknowledges that he made due allowance for value, if any, of such scrap in the contract price.

8. SALVAGE MATERIALS. All materials and/or equipment removed and indicated to be either stored or reinstalled are designated as salvaged materials and/or equipment. Any salvaged materials and equipment which are excess upon completion of the work and are not indicated to be stored shall become the property of the Contractor.

9. ARCHAEOLOGICAL FINDINGS DURING CONSTRUCTION. There are no known archaeological remains at the project site. Should any skeletons, artifacts, or other archaeological remains be uncovered, the Contractor shall suspend operations at the site of discovery and continue operations in other areas. The Contractor shall notify the

Project Engineer immediately of the findings. Included with the notifications shall be a brief statement to the Contracting Officer of the location and the findings. Should the discovery site require archaeological studies resulting in delays and/or additional work, the Contractor will be compensated by an equitable adjustment under the General Provisions of the contract.

10. PUBLIC UTILITIES, NOTICES, AND RESTRICTIONS.

10.1 General. The approximate location of all railroads, pipe lines, power and communication lines, and other utilities known to exist within the limits of the work are indicated on the drawings. The sizes, locations, and names of owners of such utilities are given from available information, but their accuracy is not guaranteed. Except as otherwise indicated on the drawings, all existing utilities will be left in place and the Contractor shall conduct his operations in such a manner that the utilities will be protested from damage at all times, or arrangements shall be made by the Contractor for their relocation at the Contractor's own expense. The Contractor shall be responsible for any damage to utilities known to exist and shall reimburse the owners for such damage caused by his operations.

10.2 Relocation or Removal. Utilities to be relocated or removed not as part of this contract are designated "To be Relocated by Others" or "To be Removed by Others," respectively. Utilities shown on the plans and not so designated will be left in place and be subject to the provisions of the clause: PROTECTION OF EXISTING VEGETATION, STRUCTURES, UTILITIES, AND IMPROVEMENTS of the General Provisions. The Contractor may make arrangements with the owner for the temporary relocation and restoration of utilities not designated to be relocated, or for additional work in excess of the work needed to relocate utilities designated for relocation at no additional cost to the Government.

10.3 Utilities Not Shown. If the Contractor encounters, within the construction limits of the entire project, utilities not shown on the plans and not visible as of the date of this contract and if such utilities will interfere with construction operations, he shall immediately notify the Contracting Officer in writing to enable a determination by the Contracting Officer as to the necessity for removal or relocation. If such utilities are left in place, removed or relocated, as directed by the Contracting Officer, the Contractor shall be entitled to an equitable adjustment for any additional work or delay.

10.4 Coordination.

10.4.1 Utilities. The Contractor shall consult and cooperate with the owner of utilities that are to be relocated or removed by others to establish a mutual performance schedule and to enable coordination of such work with the construction work. The consultations shall be held as soon as possible after award of the contract or sufficiently in advance of anticipated interference with construction operations to provide required time for the removal or relocation of affected utilities.

10.4.2 Others. The Contractor shall consult and cooperate with representatives of the Saguaro High School and Radisson Hotel to establish a performance schedule and to enable the School and Hotel to schedule their activities to cause the minimum of disruption to their operations. The consultations shall be held as soon as possible after award of the contract to facilitate long-range planning of activities by the School and Hotel. Additional consultations shall be held as necessary to communicate details of the Contractor's work schedule and to facilitate final planning of activities by the School and Hotel.

Saguaro High School:

Mr. William Pederson (602) 949-6144

Radisson Hotel:

Mr. Godfrey Love (612) 540-5361

10.5 Notices.

10.5.1 Traffic Routing. The Contractor shall notify the Contracting Officer 7 days in advance of the time work will be started in areas requiring the rerouting of traffic, traffic lane striping, and removal of street signs. The foregoing shall apply to progressive modifications of traffic routings within an area in which work is in progress. Additional requirements regarding traffic are included in section: DETOURS AND TRAFFIC CONTROL FACILITIES.

10.5.2 Notification of Local Jurisdictions.

10.5.2.1 The Contractor shall notify City of Scottsdale Engineering in writing at least 30 days prior to any work within any road right-of-way. The notification shall contain a description of the work, a schedule of work, a statement of intended method of traffic routing or closure, duration of traffic interruption and a citation of the contract provisions governing the traffic routing or closure.

10.5.2.2 City Engineers, County Road Departments, Police, Highway Patrol, and Fire Departments shall be notified by the Contractor whenever a street is to be closed to traffic. If the closing is to be of long duration, a single notification to each department on the last working day before closing will be sufficient. A single notification shall then be made at the time the street is again opened to traffic. If the closing is to be of short duration or if different sections of the street are to be closed at different times, notifications shall be made on a day-to-day basis.

10.5.3 Utilities To Be Relocated or Protected.

10.5.3.1 The Contractor shall notify the Contracting Officer, in writing, 14 calendar days prior to starting work on any utility to be relocated or protected. On each relocation, notification shall include dates on which the Contractor plans excavation, by-pass work, removal work and/or installation work, as applicable. The Contractor shall also notify the following representatives of utility owners not less than 14 days prior to start of work in vicinity of their respective utilities.

10.5.3.2 Staking of Utilities. In addition to notification of representatives of utility owners, the Contractor shall notify the Blue Stakes Center, phone (602) 263-1100, two working days prior to any excavation within any street right-of-way or any work in the vicinity of known underground utilities, to have underground utilities field located and staked.

CITY OF SCOTTSDALE
3939 Civic Center Plaza
Scottsdale, Arizona 85251

Engineering:
Mr. George Iannella
Phone: (602) 994-2351

Parks and Maintenance:
Mr. Bill Ensign
Phone: (602) 994-2408

Sewer:
Mr. Bill English
Phone: (602) 994-2552

Traffic Signal Locations:
Mr. Rich Romer
Phone: (602) 994-2553

MOUNTAIN BELL TELEPHONE CO.

Mr. Bob Earl
BELL PLAZA
3033 North 3rd Street - Rm 912
Phoenix, Arizona 85012
Phone: (602) 263-3219

ARIZONA PUBLIC SERVICE
501 South 3rd Avenue
Phoenix, Arizona 85004
Phone: (602) 271-7076
Mr. Dale Martin

SALT RIVER PROJECT
1521 Project Drive
P.O. Box 1980
Phoenix, Arizona 85001
Phone: (602) 273-5900

Irrigation Facilities:
Mr. Clarence Whalin
Phone: (602) 273-5524

Electrical:
Mr. Terry Winter
Phone: (602) 273-5330

10.5.4 Existing Beach Marks and R/W Markers. The Contractor shall notify the Contracting Officer, in writing, 7 days in advance of the time he proposes to remove any bench mark or right-of-way marker.

10.6 Restrictions.

10.6.1 Representatives of Other Agencies. Personnel representing owners and agencies may be present for various portions of the work. However, the Contractor will be responsible only to the Contracting Officer.

10.6.2 Restrictions During Roadway Construction.

10.6.2.1 Indian Bend Road. Indian Bend Road may be closed to Thru Traffic for a maximum period of 90 calendar days. The Contractor shall provide convenient passage for Local Traffic through the work or along temporary access at all times to all driveways, parking lots, houses, hotels, and buildings in the vicinity of the work.

10.6.2.2 Hayden Road. Hayden Road shall be maintained open to traffic at all times. During construction of the roadway fill, the Contractor shall phase constructions to provide at all times convenient passage for one lane of traffic in each direction over the surface of the fill. Upon completion of the roadway fill, the Contractor shall provide a paved detour and shall maintain the detour as necessary for safe travel for the duration of construction of the Hayden Road Paving. The Contractor shall close the detour to all traffic as soon as practicable after completion of the Hayden Road Paving.

10.6.2.3 Valley Vista Lane. The Contractor shall provide convenient passage through the work at all times for one lane of traffic. The Contractor shall provide positive traffic control necessary to route traffic one way westbound from noon until 5:00 P.M. and eastbound at all other times each day traffic is restricted to one lane. The Contractor may, at his option, close Valley Vista Lane to Thru Traffic during the months of June, July and August for construction within the road right-of-way. Under either option the Contractor shall provide convenient passage through the work or along temporary access at all times to all driveways serving Saguaro High School.

10.6.2.4 Hotel Access Road. The Contractor shall provide convenient passage through the work or along temporary access from Indian Bend Road to the Hotel at all times.

10.6.3 Restrictions at Saguaro High School.

10.6.3.1 Security Fence for Football Stadium. The chain link fence Station 6+90 to Station 12+23, Hayden Road and Station 0+65 to Station 3+97 Valley Vista Lane is security fence for the football stadium. The Contractor shall schedule construction of the walls to maintain integrity of the football stadium security fence at all times during the months of September through December. The Contractor may, at his option and at his sole expense, temporarily relocate the fence to a more convenient location within the project right-of-way or construct the floodwall and retaining wall with the fence in place. The stadium security fence may be removed during the months of January through August.

10.6.3.2 Tennis Court Fence. The chain link fence for the tennis courts, Station 12+23 to Station 14+59 Hayden Road shall not be removed.

10.6.3.3 Baseball Field Fence. The fence along the baseball field, Station 14+59 to Station 19+90 may be removed for construction.

10.6.3.4 Running Track. The Contractor shall schedule construction or provide necessary work at his sole expense to maintain full use of the running track during the months of February through May. Any restoration of the running track required as a result of the Contractor's work shall be completed by January 31 following removal.

10.6.4 Golf Course South of Valley Vista Lane. The Contractor shall complete the work within the golf course so as to cause minimum damage. All work and cleanup shall be completed within 90 calendar days of commencement of construction within Parcel S-2228-1.F.E. Limits of Contractor's access shall be strictly observed. The Contractor shall provide an as-built drawing showing all works of construction, location and size of all water and electric lines severed and location of any other works of improvement disturbed during construction.

11. PUBLIC SAFETY. Attention is invited to the general provision: PERMITS AND RESPONSIBILITIES. The Contractor shall provide temporary fencing, barricades, and/or guards, as required, to provide protection in the interest of public safety. Whenever the Contractor's operations create a condition hazardous to the public, he shall furnish at his own expense and without cost to the Government, such flagmen and guards as are necessary to give adequate warning to the public of any dangerous conditions to be encountered and he shall furnish, erect, or maintain such fences, barricades, lights, signs and other devices as are necessary to prevent accidents and avoid damage or injury to the public. Flagmen and guards, while on duty and assigned to give warning and safety devices shall conform to applicable city, county, and state requirements. Should the Contractor appear to be neglectful or negligent in furnishing adequate warning and protection measures, the Contracting Officer may direct attention to the existence of a hazard and the necessary warning and protective measures shall be furnished and installed by the Contractor without additional cost to the Government. Should the Contracting Officer point out the inadequacy of warning and protective measures, such action of the Contracting Officer shall not relieve the Contractor from any responsibility for public safety or abrogate his obligation to furnish and pay for those devices. The installation of any general illumination shall not relieve the Contractor of his responsibility for furnishing and maintaining any protective facility.

12. PERSONAL CLOTHING STANDARDS.

12.1 Each employee shall be required to wear clothing suitable for the weather and job conditions of the work. At a minimum, the following personal clothing requirements shall be enforced:

12.1.1 Short sleeve shirts.

12.1.2 Long trousers.

12.1.3 Leather work shoes or other appropriate protective shoes or boots. Canvas shoes, tennis or deck shoes are not acceptable.

13. DELETED.

14. OCCUPATIONAL SAFETY AND HEALTH ACT (OSHA) STANDARDS. The OCCUPATIONAL SAFETY and HEALTH ACT (OSHA) STANDARDS for CONSTRUCTION (Title 29, Code of Federal Regulations Part 1926 as revised from time to time) and the Corps of Engineers General Safety Requirements Manual, EM 385-1-1, are both applicable to this contract. The most stringent requirement of the two standards will be applicable.

15. QUALITY CONTROL. The Contractor shall inspect the work of his own forces and the work of all subcontractors for compliance with the contract requirements and record the results of the inspections. Legible copies of the daily inspection reports shall be maintained by the Contractor at the project site at all times and the original copies of the "Construction Quality Control Report" shall be delivered to the Contracting Officer on the work day following the date of the report.

15.1 Control of on-site construction. The Contractor's control shall include three phases of inspection for all definable features of work as follows:

15.1.1 Preparatory inspection shall be performed prior to beginning any work on any definable feature of work. It shall include a review of contract requirements; a check to assure that all materials and/or equipment have been tested, submitted, and approved; a check to assure that provisions have been made to provide required control testing; examination of the work area to ascertain that all preliminary work has been completed; and a physical examination of material and equipment to assure that they conform to approved shop drawings or submittal data and that all material and/or equipment are on hand.

15.1.2 Initial inspection shall be performed as soon as work begins on a representative portion of the particular feature of work and shall include examination of the quality of workmanship as well as a review of control testing for compliance with contract requirements.

15.1.3 Follow-up inspections shall be performed daily to assure continuing compliance with contract requirements, including control testing, until completion of the particular feature of work.

15.2 The specified reports must be factual records of the Contractor's daily quality control activities and resulting actions. As such, they shall stress as major components of the report, the following:

(a) Phase(s) of construction underway during the time frame of the report. (i.e. earthwork, concrete work, structural steel erection, etc.)

(b) Phase (preparatory, initial, or follow-up), and locations of inspections and/or check tests that were made.

(c) Results of inspection, including nature of deficiencies observed and corrective actions taken or to be taken. If no inspections are listed on the report, it must be assumed that no inspections were made and that CQC is not being implemented.

(d) Report of tests performed, including those specified, with the results of the tests, including failures and remedial action to be taken. Test results, including all computations should be attached to the report form. Where test results cannot be completed by the time the report is submitted, a notation should be made that the test was performed and the approximate date test results will be available. Delayed test results should be submitted with the report form on the date received.

(e) Monitoring of materials and equipment upon arrival at the jobsite and prior to incorporation into the work for compliance with submittal approvals, damage and proper storage.

(f) Offsite surveillance activities.

(g) Job safety.

15.3 The report must contain a record of inspections and tests for all work accomplished subsequent to the previous report. Separate reports in different phases of the work may be submitted by the responsible CQC inspectors or they may be combined into one consolidated report if all CQC activities and results are covered and the responsible CQC inspectors are identified.

15.4 In all cases, the report or reports must be verified and signed by the one person delegated this responsibility by the Contractor. The verification should contain the statement that all supplies and materials incorporated in the work are in compliance with the terms of the contract except as noted.

* * * * *

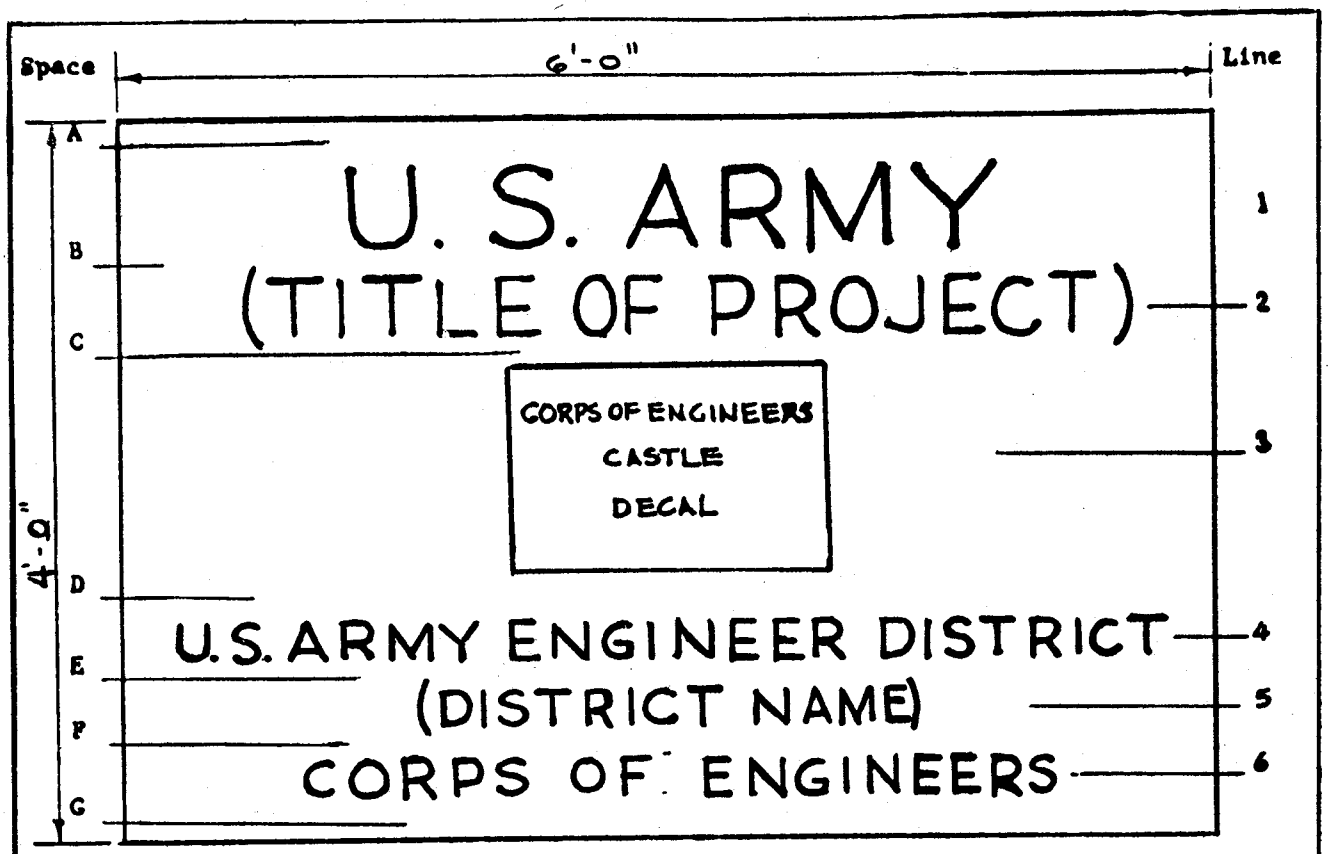

S C H E D U L E

Space	Height	Line	Description	Letter Height	Stroke
A	3"				
		1	U. S. ARMY	5 1/2"	7/8"
B	2"				
		2	PROJECT NOMENCLATURE	4"	5/8"
C	2"				
		3	CORPS OF ENGINEERS CASTLE (DECAL)	14"	--
D	3"				
		4	U. S. ARMY ENGINEER DISTRICT	2 3/4"	3/8"
E	2"				
		5	DISTRICT NAME	2 1/4"	1/4"
F	2"				
		6	CORPS OF ENGINEERS	2 1/2"	3/8"
G	3"				

Lettering Color -- Black

PROJECT SIGN
(Army-Civil Works)

Figure 1
14 August 1972

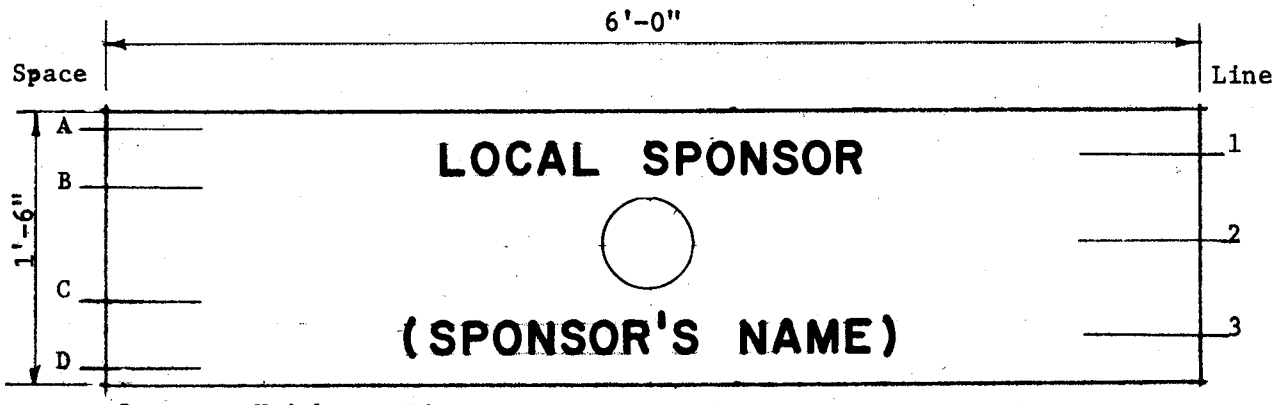

Space	Height	Line	Description	Letter Height	Stroke
A	2"				
		1	LOCAL SPONSOR	2"	3/8"
B	2" **Min.**				
		2	SPONSOR'S EMBLEM (DECAL)		
C	2" **Min.**				
		3	SPONSOR'S NAME	2"	3/8"
D	2"				

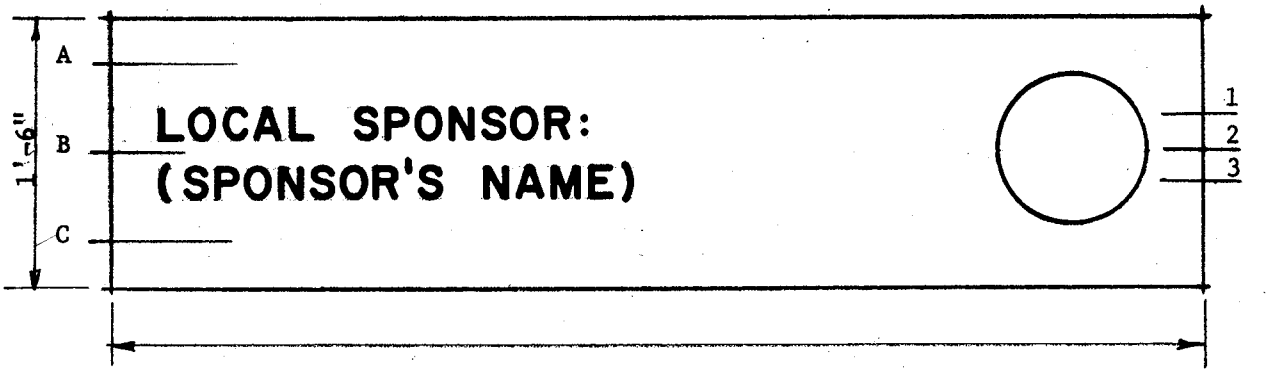

Space	Height	Line	Description	Letter Height	Stroke
A	6"				
		1	LOCAL SPONSOR	2"	3/8"
B	2"				
		2	SPONSOR'S EMBLEM (DECAL)		
C	6"				
		3	SPONSOR'S NAME	2"	3/8"

Lettering Color -- Black

Figure 1A
21 February 1975

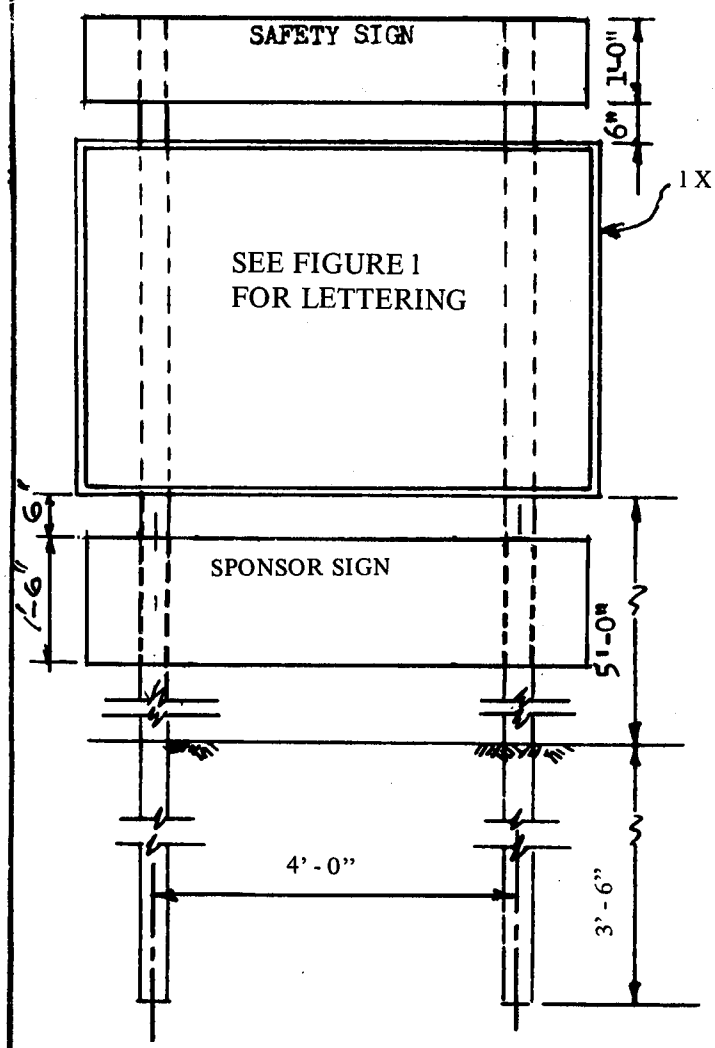

ELEVATION

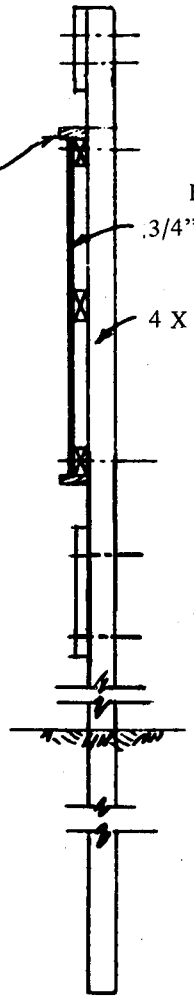

SECTION

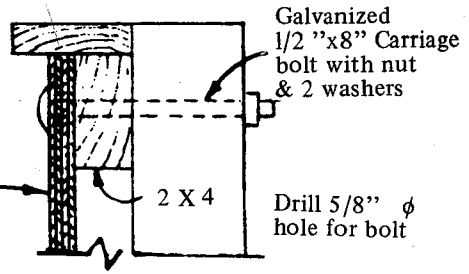

DETAIL

General Notes

1 - Lumber to be cut & formed accurately.

2 - Secure 1 X 4 and plywood with 6d finish nails at not less than 12" O.C.

3 - All exposed nails to be set & holes filled with putty.

4 - Sign to be set in good solid ground & backfill carefully tamped into place.

5 - Where necessary, posts shall be braced to provide a solid installation.

SIGN DETAILS

Figure 2
25 February 1975

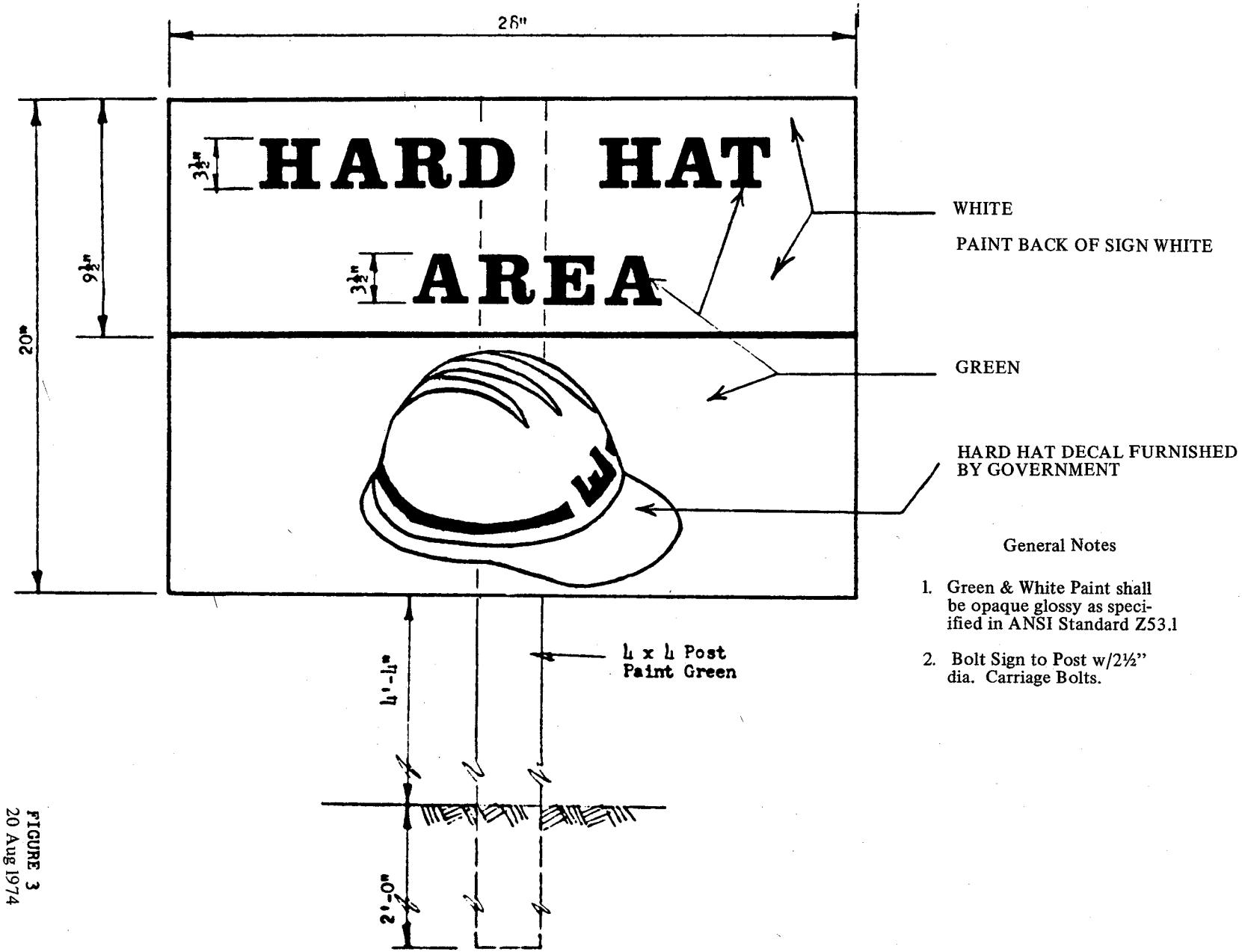

General Notes

1. Green & White Paint shall be opaque glossy as specified in ANSI Standard Z53.1
2. Bolt Sign to Post w/2½" dia. Carriage Bolts.

FIGURE 3
20 Aug 1974

SECTION 1B

MEASUREMENT AND PAYMENT

Index

1. Diversion and Control of Water
2. Clearing Site and Removing Obstructions
3. Removal and Storage Existing Chain Link Fencing
4. Excavation
5. Fills
6. Concrete
7. Concrete, Channel Walls
8. Concrete Sill
9. Concrete Driveway
10. Concrete Dentates
11. Cutoff Walls at Indian Bend Road
12. Wasteway Bridge
13. Portland Cement
14. Steel, Reinforcement
15. Stonework
16. Grouting Stonework
17. Filter Material
18. Open Channel at Indian Bend Road
19. Side Drains
20. Canal Siphon
21. Siphon Inlet and Outlet Structures
22. Siphon Weir
23. Aggregate Base and Surfacing
24. Asphalt Concrete Pavement
25. Landscape Fill
26. Topsoiling
27. Landscaping
28. Seeding
29. Station Marking
30. Pipe Gate
31. Riding and Hiking Trails
32. Control House
33. Gaging Station
34. Chain Link Fencing
35. Bollards and Signs
36. Road Modifications

1. DIVERSION AND CONTROL OF WATER. Payment for Diversion and Control of Water will be made at the applicable contract price, which payment shall constitute full compensation for maintaining the work areas in a dry condition.

2. CLEARING SITE AND REMOVING OBSTRUCTIONS.

2.1 Payment for Clear Site and Remove Obstructions will be made at the applicable contract price which payment shall constitute full compensation for clearing, obstruction removal and protection work, including applicable earthwork, protection of features indicated to remain and disposal of all materials.

3. REMOVAL AND STORAGE EXISTING CHAIN LINK FENCING. Payment for Removal and Storage of chain link fencing at Saguaro High School, adjacent to Hayden Road from Station 6+90 to Station 12+23 and adjacent to Valley Vista Lane from Station 0+65 to Station 3+97 will be made at the applicable contract price which payment shall constitute full compensation for removal and storage of the chain link fencing, complete, including gates and posts.

4. EXCAVATION.

4.1 Measurement.

4.1.1 Excavation. A survey of the site shall be made prior to commencement of work, and all measurements will be based on this survey without regard to any changes in the site that may be made between the excavation lines and grades indicated on the drawings or staked in the field and the ground surfaces as indicated by the above mentioned survey. The actual slopes as excavated may be greater or less than those indicated or staked, depending on the materials excavated and methods used in performing the work, but such alterations shall not change the measurement for payment from the original lines as specified herein. The quantity of directed excavation necessary for the removal of unsuitable foundation material as specified shall be included in the measurement of the excavation where the unsuitable soils are encountered. Quantities will be computed in cubic yards by the average end area method and the planimeter will be considered a precise instrument for measurement of plotted cross sections. All excavation outside of excavation lines shown on the drawings will be considered as being for the convenience of the Contractor.

4.2 Payment.

4.2.1 Payment for Excavation, Channel will be made at the applicable contract price, which payment shall constitute full compensation for excavation and disposal of excavated materials. This item includes the excavation for inlet and wasteway channel and levees.

5. FILLS.

5.1 Measurement for payment for fills will be made between the excavation and structure lines and the fill limit lines, or between the ground lines and fill lines, as indicated or staked in the field. Quantities will be computed in cubic yards by the average end area method and the planimeter will be considered a precise instrument for measuring plotted cross sections.

5.2 Payment.

5.2.1 Payment for Compacted Fill, Channel and Compacted Fill, Levee will be made at the applicable contract prices, which payments shall constitute full compensation for placing and compacting the fills, complete.

5.2.2 Subgrade Preparation. No separate payment will be made for subgrade preparation and all costs in connection therewith shall be included in the contract prices for the items to which the work applies.

5.2.3 Backfill for directed overcut will be measured and paid for at the applicable contract price for the type of fill placed therein. When there is no applicable contract item, an adjustment in the contract price will be made.

5.2.4 Excess Excavation. No separate payment will be made for the disposal of the excess excavation. Excess excavation shall be deposited within areas designated Required Fill Areas, and Stockpile Areas Uncompacted. All such costs shall be included with the contract price for the excavation to which the work applies.

5.2.5 Fill for Structures. No separate payment will be made for fill or backfill about structures. All such costs shall be included in the applicable contract prices for the items to which the work applies.

5.2.6 Payment for Compacted Fill, Roadway will be made at the applicable contract prices, which payment shall constitute full compensation for placing and compacting the fills, complete.

5.2.7 Compacted Fill, Required Fill Areas "B", "C", "D", "F", "G", "H" and "I".

5.2.7.1 Measurement. A survey of each required fill area shall be made prior to commencement of work. Measurement if in place fill shall be made at the applicable requirement as specified in paragraph: EXCAVATION.

5.2.7.2 Payment for Compacted Fill, Required Fill Areas will be made at the applicable contract price for the various items of the schedule, which payment shall constitute full compensation for clearing site and removing obstructions, placing, compacting, and certifying the fills, complete.

5.2.7.2.1 Required Fill Area "D". Payment for Compacted Fill, Required Fill Area "D" will be made at the applicable contract price, which payment shall constitute full compensation for compacted fill, complete, including use of borrow from remaining stockpile above surrounding grade within the temporary construction easement S-2205-1.T.C. and borrow from the proposed Interceptor Channel prism within Parcel S-2205-2.

5.2.7.2.2 Required Fill Area "I". Payment for Compacted Fill, Required Fill Area "I" will be made at the applicable contract price, which payment shall constitute full compensation for compacted fill, complete, including temporary stockpile and borrow from stockpile fill material as necessitated by relay of water until the siphon and inlet channel are functional for flood flows across existing Arizona Canal.

5.2.8 Fill and Grading, Required Fill Area "E". Payment for fill and grading, required fill Area "E" shall be made at the applicable contract price, which payment shall be full compensation for grading of Required Fill Area "E". Area "E" is available for disposal of unsuitable inorganic spoil mixed in equal parts with suitable fill material. Compaction and certification are not required. No compensation shall be made for clearing site, removing obstructions or compaction.

6. CONCRETE.

6.1 Measurement of Concrete will be made on the basis of the actual volume of concrete within the pay lines of the wasteway channel walls, wall footings and invert as indicated on the drawings. Measurement of concrete placed against the sides of any excavation without the use of intervening forms will be made only within the pay lines of the structure. No deductions will be made for rounded or beveled edges or space occupied by metal work, electrical conduits or timber nor for voids or embedded items which are either less than 5 cubic feet in volume or one square foot in cross section. Concrete placed in items of work other than those specifically mentioned above, and concrete wasted or used for the convenience of the Contractor will not be included in the measurement.

6.2 Payment for Concrete will be made at the applicable contract prices for the various items of the schedule, which payments shall constitute full compensation for labor, materials (except cement and reinforcement for which other payment is provided), and for all equipment and tools required to complete the concrete work. Embedded items shall be included in cost of the concrete except when other payments is specifically provided. No payment will be made for concrete, as such, which is placed in structures for which payment is made on a lump sum basis.

7. CONCRETE, CHANNEL WALLS.

7.1 Payment for Concrete Channel Wall, Left and Right Bank will be made at the applicable contract price, which payment shall constitute full compensation for the channel walls, complete in place, including cement, reinforcement, excavation and backfill. Payment will not include fencing for which separate payment is provided.

7.2 Payment for Concrete, Channel Invert, Wasteway will be made at the applicable contract price, which payment shall constitute full compensation for all concrete placed in the channel invert; complete.

7.3 Payment for Concrete, Channel Wall, Wasteway will be made at the applicable contract price, which payment shall constitute full compensation for all concrete placed in channel vertical walls, complete.

7.4 Payment for Concrete, Channel Wall Footing, Wasteway will be made at the applicable contract price, which payment shall constitute full compensation for all concrete placed in channel wall footings.

8. CONCRETE SILL. Payment for concrete sill will be made at the applicable contract price which payment shall constitute full compensation for the sill complete, including earthwork outside the limits of channel excavation and fills, cement and reinforcement.

9. CONCRETE DRIVEWAY. Payment for concrete driveway will be made at the applicable contract price, which payment shall constitute full compensation for the driveway, complete, including removal and disposal of existing concrete curb and further excavation and backfill.

10. CONCRETE DENTATES. Payment for concrete dentates will be made at the applicable contract price per each, which payment shall constitute full compensation for the conctrete dentates, complete in place, including cement and reinforcement.

11. CUTOFF WALLS AT INDIAN BEND ROAD. Payment for cutoff walls shall be made at applicable contract price, which payment shall be full compensation for cutoff walls, conplete, including excavation, disposal of excess material and any oversizing for convenience of the Contractor.

12. WASTEWAY BRIDGE. Payment for wasteway bridge will be made at the applicable contract price, which payment shall constitute full compensation for the wasteway bridge, complete, including earthwork and fill outside the limits of channel excavation and fill, concrete (including cement and steel reinforcement) and bridge railing.

13. PORTLAND CEMENT.

13.1 Measurement. The quantity to be paid for will be the number of hundred weight (100 pounds) of Portland cement used in the concrete paid for on a cubic yard basis and grouting stonework unless specifically excepted, wasted or used for the convenience of the Contractor. The quantity to be paid for will be determined by multiplying the approved batch weight of Portland cement by the number of batches of concrete placed within the pay lines of the structures and dividing by 100. The quantity of cement used in grouting stonework will be the actual weight of cement used in batches divided by 100.

13.2 Payment for Portland Cement will be made at the applicable contract price, which payment shall constitute full compensation for furnishing the Portland cement complete, ready for use in the work. No payment will be made for Portland cement as such, which is used in concrete in structures for which payment is made on a lump sum basis.

14. STEEL, REINFORCEMENT.

14.1 Measurement for reinforcement in concrete structures paid on a cubic yard basis will be made of the lengths of bars actually placed in the completed work in accordance with the drawings, approved bar schedules, or as directed. The measured lengths will be converted to weights for the bar numbers listed by the use of the unit weights per linear foot contained in ASTM A 615. Steel in laps indicated on the drawings or required by the Contracting Officer will be measured. Longitudinal steel for channel invert and side slopes will be measured on the basis of the use of 60 foot bar lengths. No measurement will be made for the additional steel in laps which are authorized for the convenience of the Contractor. No measurement will be made of steel supports and spacers. All costs for furnishing and installing supports and spacers shall be included in the various items with the reinforcement.

14.2 Payment for Steel, Reinforcement will be made at the applicable contract price, which payment shall constitute full compensation for furnishing and placing the reinforcement, complete.

15. STONEWORK.

15.1 Measurement. The quantity of stone for the various uses to be paid for will be the number of tons determined by scale weights acceptably placed within the lines and grades indicated on the drawings or directed by the Contracting Officer.

15.2 Payment for stone placed in the various locations will be made at the applicable contract prices, which payments shall constitute full compensation for the stone, complete in place.

16. GROUTING STONEWORK.

16.1 Measurement. The quantity of grout to be paid for will be measured to the nearest cubic yard by weighing all ingredients in trial batches of grout and converting each batch to absolute volume; the volume thus determined and the number of batches of grout corresponding proportions acceptably placed in the work shall be used to determine the quantity of grout.

16.2 Payment for Grouting Stonework will be made at the applicable contract price which payment shall constitute full compensation for all costs for grouting stonework (except for Portland Cement), including placing and curing.

17. FILTER MATERIAL.

17.1 Measurement. The quantity to be paid for will be the number of cubic yards of filter material acceptably placed in the completed work, measured to the lines and grades shown on the drawings as directed.

17.2 Payment for Filter Material will be made at the applicable contract price, which payment shall constitute full compensation for the filter material complete in place.

18. OPEN CHANNEL AT INDIAN BEND ROAD STATION 16+50 to STATION 23+00. Payment for the Open Channel will be made at the applicable contract price, which payment shall constitute full compensation for the Open Channel including earthwork, concrete paving of the channel and box culvert outlet structure, riprap, filter and grading required for drainage.

19. SIDE DRAINS. Payment for storm drains will be made at the applicable contract prices, which payment shall constitute full compensation for the storm drains, complete, including earthwork, pipe, concrete inlet structures and trashracks, concrete outlet structures and barriers, gate structures, gates and tie-ins of existing pipes. Earthwork included shall be only that earthwork outside the lines of earthwork for which other payment is provided.

19.1 Side Drain at Indian Bend Road Sta. 17+91. Payment for the Box Culvert will be made at the applicable contract price, which payment shall be full compensation for the box culvert, complete, including excavation and backfill, wingwalls, inlet structure and guardrails.

19.2 Side Drains at Sta. 372+81.25. Payment for the Valley Vista Drainage Structures will be made at the applicable contract prices, which payment shall constitute full compensation for the Valley Vista Drainage Structures, complete, including earthwork, restoration of excavation to a smooth grade, specifed grading and shaping, pipe, inlet structures, manholes, outlet structures, catch basins, grates, trashracks, gate structures, gates, tie-in of existing pipes, concrete outlet basin and tie-in to lake.

20. CANAL SIPHON. Payment for canal siphon will be made at the applicable contract price which payment shall constitute full compensation for the canal siphon complete, including excavation and backfill outside the limits of channel excavation.

21. SIPHON INLET AND OUTLET STRUCTURES. Payment for siphons inlet and outlet structures shall be made at the applicable contract prices, which payments shall constitute full compensation for the inlet and outlet structure, complete, including earthwork outside the limits of channel excavation and fill, concrete (including cement and reinforcement). Payment will not include fencing for which separate payment is provided.

22. SIPHON WEIR. Payment for siphon weir will be made at the applicable contract price, which payment shall constitute full compensation for the weir complete in place, including earthwork outside the limits of channel excavation and fills and concrete (including cement and reinforcement).

23. AGGREGATE BASE AND SURFACING.

23.1 Measurement of aggregate base and surfacing completed and accepted by the Contracting Officer will be in cubic yards. The volume of aggregate base and surfacing in place and accepted by the Contracting Officer will be determined by the average job thickness obtained in accordance with paragraph: THICKNESS CONTROL of the section: AGGREGATE BASE COURSE and the dimensions indicated.

23.2 Payment for stabilized aggregate base and surfacing will be made at the applicable contract price, which shall constitute full compensation for the construction and completion of the stabilized-aggregate base and surfacing and for the furnishing of all other labor and incidentals necessary to complete the work.

24. ASPHALT CONCRETE PAVEMENT.

24.1 Measurement. The unit of for the asphalt concrete will be the ton (2,000 lbs.). The Contractor shall weigh each load on a certified platform scale and shall furnish the Contracting Officer with duplicate Weighmasters' Certificates showing the actual net weights. One ticket shall be furnished to the plant inspector and one ticket to the street inspector. The bituminous mixture shall be weighed after mixing and no deduction will be made for the weight of bituminous material incorporated therein. Asphalt concrete used for convenience of the Contractor will not be measured for payment.

24.2 Payment for Asphalt Concrete Pavement will be made at the applicable contract price, which payment shall constitute full compensation for asphalt concrete surfacing on channel banks complete in place, including weed killer, prime coat, subgrade preparation and all incidentals.

25. LANDSCAPE FILL. Payment for landscape fill will be made at the applicable contract price, which payment shall constitute full compensation for placing and compacting the fill.

26. TOPSOILING.

26.1 Measurement of topsoil will be the actual number of cubic yards acceptably placed in the work within the limits indicated based upon the specified average depth in place.

26.2 Payment for Topsoiling will be made at the applicable contract price which payment shall constitute full compensation for placing the material.

27. LANDSCAPING. Payment for landscaping will be made at the applicable contract price which payment shall constitute full compensation for the planting of trees complete, including maintenance.

28. SEEDING.

28.1 Measurement. The unit of measurement for seeding shall be the acre. The quantity of seeding to be paid for will be the acreage acutally seeded as specified, computed to the nearest 1/10 of an acre.

28.2 Payment for seeding will be made at the applicable contract price which payment shall constitute full compensation for seeding, complete, including maintenance.

29. STATION MARKING. Payment for Station Marking will be made at the applicable contract price, which payment shall constitute full compensation for obtaining materials, fabrication and installation necessary for the work, complete in place.

30. PIPE GATE. Payment for pipe gates will be made at the applicable contract price constitute full compensation for furnishing and installing the gates, complete in place.

31. RIDING AND HIKING TRAILS.

31.1 Measurement of riding and hiking trails of the various types will be made to the nearest linear foot horizontally along the center line from end to end of the trails in place.

31.2 Payment for riding and hiking trails will be made at the applicable contract prices which payments shall constitute full compensation for the trails, complete, including earthwork. Payment will not included bollards, signs and trail lighting for which separate payments are provided.

32. CONTROL HOUSE. Payment for control house will be made at the applicable contract price which payment shall constitute full compensation for the control house, complete, including earthwork, lip, gas tank, chain link fence, conduits and utility trench.

33. GAGING STATION. Payment for gaging station will be made at the applicable contract price, which payment shall consitute full compensation for the gaging station complete in place, including recorder house, pull boxes, foundation and pipe conduit.

34. CHAIN LINK FENCING.

34.1 Measurement of chain link fencing of the various heights will be made to the nearest linear foot horizontally along the center line from end-to-end of the fence in place.

34.2 Payment for chain link fencing of the various heights will be made at the applicable contract prices which payments shall constitute full compensation for the fencing, complete in place.

35. BOLLARDS AND SIGNS. Payment for bollards and signs will be made at the applicable contract price which payment shall constitute full compensation for bollards and signs complete.

36. ROAD MODIFICATIONS.

36.1 Payment for road modifications will be made at the applicable contract prices for the various items of the schedule, which payments shall constitute full compensation for removal and disposal of existing paving, curb and gutter and sidewalk; asphaltic concrete pavement including earthwork, subgrade preparation, supplying and placing select material, aggregate base, prime coat and asphaltic concrete pavement; adjusting value boxes and manholes to grade and traffic control.

36.2 Indian Bend Road. Payment for Indian Bend Road Modifications will be made at the applicable contract price, which payment shall constitute full compensation for Indian Bend Road Modification, complete, including driveway ramps, removal, disposal, and replacement of Rocking Road Culvert, survey monument, and proper grading for drainage.

36.3 Hayden Road. Payment for Hayden Road Modifications will be made at the applicable contract price which payment shall constitute full compensation for Hayden Road Modification, complete, including sidewalks, curb and gutters, guardrail, removal and reinstallation of fencing, security of the Saguaro High School Athletic Field, and appurtenances.

36.4 Valley Vista Lane. Payment for Valley Vista Lane Modification will be made at the applicable contract price which payments shall constitute full compensation for Valley Vista Lane Modification, complete, including sidewalks, driveways, driveway gates, curb and gutter, removal of 18" concrete pipe drain, and security of the Saguaro High School Athletic Field.

36.5 Hotel Access Road. Payment for Hotel Access Road Modification shall be made at the applicable contract price which payment shall constitute full compensation for Hotel Access Road Modification, complete, including concrete curb and asphaltic concrete driveway.

* * * * *

SECTION 1D

ENVIRONMENT PROTECTION

Index

1. Scope
2. Reference
3. General
4. Notification
5. Subcontractors
6. Implementation
7. Protection of Land Resources
8. Recording and Preserving Historical and Archeological Finds
9. Protection of Water Resources
10. Protection of Fish and Wildlife
11. Disposal of Cleared and Grubbed Material and other Debris
12. Dust Control
13. Maintenance of Pollution Control Facilities During Construction

1. SCOPE. This section covers the furnishing of all labor, materials and equipment and performing all work required for the protection of the environment during construction operations except for those measures set forth in other Technical Provisions of these specifications.

2. REFERENCE. "Standard Methods for the Examination of Water, Sewage, and Industrial Wastes", Thirteenth Edition, 1971, published by American Public Health Association, 1015 Eighteenth Street, N.W., Washington, D.C. 20036.

3. GENERAL. For the purpose of this specification, environment protection is defined as the retention of the environment in its natural state to the greatest possible extent during project construction and to enhance the natural appearance in its final condition. Environment protection requires consideration of air, water, and land, and involves noise, solid waste-management and management of radiant energy and radioactive materials, as well as other pollutants. In order to prevent, and to provide for abatement and control of, any environmental pollution arising from the construction activities in the performance of this contract, the Contractor and his subcontractors shall comply with all applicable Federal, State, and local laws and regulations concerning environmental pollution control and abatement.

4. NOTIFICATION. The Contracting Officer will notify the Contractor in writing of any non-compliance with the aforementioned Federal, State or local laws or regulations. Such notice, when delivered to the Contractor or his authorized representative at the site of the work, shall be deemed sufficient for the purpose. The Contractor shall, after receipt of such notice, immediately inform the Contracting Officer of proposed corrective action and take such action as may be approved. If the Contractor fails or refuses to comply promptly, the Contracting Officer may issue an order stopping all or part of the work until satisfactory corrective action has been taken. No part of the time lost due to any such stop orders shall be made the subject of a claim for extension of time or for excess costs or damages by the Contractor.

5. SUBCONTRACTORS. Compliance with the provisions of this section by subcontractors will be the responsibility of the Contractor.

6. IMPLEMENTATION. Prior to commencement of the work the Contractor will:

(1) submit in writing his proposals for implementing this section for environment protection;

(2) meet with representatives of the Contracting Officer to develop mutual understandings relative to compliance with this provision and administration of the environment protection program.

Approval of the Contractor's plan for environment protection will not relieve the Contractor of his responsibility for adequate and continuing control of pollutants.

7. PROTECTION OF LAND RESOURCES.

7.1 General. The land resources within the project boundaries and outside the limits of permanent work performed under this contract shall be preserved in their present condition or be restored to a condition after completion of construction that will appear to be natural and not detract from the appearance of the project. The Contractor shall confine his construction activities to areas defined by the plans or specifications. The following additional requirements are intended to supplement the requirements of General Provisions 49, 50, and 53.

7.2 Prevention of Landscape Defacement. Except in areas indicated on the plans or specified to be cleared, the Contractor shall not deface, injure, or destroy trees, cacti or shrubs, nor remove or cut them without the authority of the Contracting Officer. Ropes, cables, or guys shall not be fastened to or attached to any existing nearby trees for anchorages unless specifically authorized. Where such special emergency use is permitted, it shall be performed in such a manner as to avoid damage to the trees. The Contractor shall in any event be responsible for any damage resulting from such use. Where the possibility exists that trees may be defaced, bruised, injured, or otherwise damaged by the Contractor's equipment or operations, the Contractor shall adequately protect such trees. Stone, earth or other material that is displaced into uncleared areas shall be removed. Monuments and markers shall be protected before construction operations commence. A preconstruction survey including photographs shall be accomplished by the Contractor and a report of survey furnished when required by the Contracting Officer.

7.3 Restoration of Landscape Damage. Any trees, cacti, shrubs, or other landscape features scarred or damage by the Contractor's equipment or operations shall be restored to a condition satisfactory to the Contracting Officer. Restoration of scarred and damaged trees, cacti, shrubs, and other features shall be performed in an approved manner by experienced workmen. Items damaged beyond restoration shall be removed and disposed of under requirements for clearing and grubbing. Trees, cacti and other shrubs that are to be removed because of damage shall be replaced at the Contractor's expense by matured replacements of the same species or a species approved by the Contracting Officer. The size and quality of all replacements shall also be approved by the Contracting Officer.

7.4 Location of Camp Sites, Storage and Housing Facilities. Contractor's camps, storage, and other construction buildings, located on Government property, which is required in the performance of the work, shall be located upon cleared portions of the job site or areas to be cleared, and shall require written approval of the Contracting Officer. The preservation of the landscape shall be an imperative consideration in the selection of all sites and in the construction of buildings. Plans showing camp sites, storage and housing facilities shall be submitted for approval of the Contracting Officer. Where buildings or tent platforms are constructed on sidehills, the Contracting Officer may require cribbing to be used to obtain level foundations. Benching or leveling of earth may be permitted, depending on the location of the proposed facility.

7.5 Temporary Excavation and Embankments. If the Contractor proposes to construct temporary roads or embankments and excavations for plant and/or work areas, he shall submit the following for approval prior to scheduled start of such temporary work.

7.5.1 A layout of all temporary roads, excavations and embankments to be constructed within the work area.

7.5.2 A landscaping plan showing the proposed restoration of the area. The plan shall provide for the obliteration of construction scars as such and shall provide for a reasonably natural appearing final condition of the area. No unauthorized road construction, excavation or embankment construction (including borrow and disposal areas) will be permitted.

7.6 Post-Construction Cleanup or Obliteration. The Contractor shall obliterate all signs of temporary construction facilities such as haul roads, work areas, structures, foundations of temporary structures, or stockpiles of excess or waste materials, as directed by the Contracting Officer. The area will be restored to near natural conditions which will permit the growth of vegetation thereon. Except in specific cases, restoration to original contours will not be required, however all restored areas shall be smoothly and evenly dressed and sloped to drain.

8. RECORDING AND PRESERVING HISTORICAL AND ARCHEOLOGICAL FINDS. All items having any apparent historical or archeological interest which are discovered in the course of any construction activities shall be carefully preserved. The Contractor shall leave the archeological find undisturbed and shall immediately report the find to the Contracting Officer so that the proper authorities may be notified.

9. PROTECTION OF WATER RESOURCES.

9.1 General. The Contractor shall not pollute streams, lakes, water course or reservoirs with fuels, oils, bitumens, calcium chloride, acids, insecticides, herbicides or other harmful materials. The Contractor shall investigate and comply with all applicable Federal, State, County and Municipal laws concerning pollution of rivers and streams.

9.2 Erosion Control. Prior to any major construction the Contractor shall submit a plan for approval of the Contracting Officer showing his scheme for controlling erosion and disposing of wastes contained in the SPECIAL PROVISIONS.

9.2.1 Surface drainage from cuts and fills within the construction limits, whether or not completed, and from borrow and waste disposal areas, shall, if turbidity producing materials are present, be held in suitable sedimentation ponds or shall be graded to control erosion within acceptable limits. Temporary erosion and sediment control measures such as berms, dikes, drains, immediate seeding of cut and fill slopes, or sedimentation basins, if required to meet the above standards, shall be provided and maintained until permanent drainage and erosion control facilities are completed and operative. The area of bare soil exposed at any one time by construction operations should be held to a minimum. Stream crossings by fording with equipment shall be limited to control turbidity. Any temporary culverts or bridge structures shall be removed upon completion of the project. Fills and waste areas shall be constructed by selective placement to eliminate silts or clays on the surface that will erode and contaminate adjacent streams.

9.3 Spillages. Special measures shall be taken to prevent chemicals, fuels, oils, greases, bituminous materials, waste washings, herbicides and insecticides, and concrete drainage from entering public waters.

9.4 Washing and Curing Water. Water used in embankment material processing, aggregate processing, concrete curing, foundation and concrete lift cleanup, and other waste waters shall not be allowed to reenter the watercourse if a significant increase in the turbidity of the watercourse will result therefrom. The Contractor shall remove from within the cofferdam all wash, curing and waste waters derived from sources either within or outside the cofferdam.

9.5 Disposal. Disposal of any materials, wastes, effluents, trash, garbage, oil, grease, chemicals, etc., in areas adjacent to watercourse shall not be permitted. If any waste material is dumped in unauthorized areas, the Contractor shall remove the material and restore the area to the original condition before being disturbed. If necessary, contaminated ground shall be excavated, disposed of as directed by the Contracting Officer, and replaced with suitable fill material, compacted and finished with topsoil and planted as required to reestablish vegetation.

10. PROTECTION OF FISH AND WILDLIFE. The Contractor shall at all times perform all work and take such steps required to minimize interference with or disturbance to fish and wildlife. The Contractor will not be permitted to alter water flows or otherwise disturb native habitat adjacent to the project area which, in the opinion of the Contracting Officer, are critical to fish or wildlife.

11. DISPOSAL OF CLEARED AND GRUBBED MATERIAL AND OTHER DEBRIS.

11.1 General. Disposal of cleared and grubbed materials shall conform to section: CLEARING SITE AND REMOVING OBSTRUCTIONS

11.2 Burning. No burning permitted.

12. DUST CONTROL. The Contractor will be required to maintain all excavations, embankments, stockpiles, haul roads, permanent access roads, plant sites, waste areas, borrow areas, and all other work areas within or without the project boundaries free from dust which would cause a hazard or nuisance to others. Approved temporary methods of stabilization consisting of sprinkling, chemical treatment, light bituminous treatment or similar methods will be permitted to control dust. Sprinkling, to be approved, must be repeated at such intervals as to keep all parts of the disturbed area at least damp at all times, and the Contractor must have sufficient competent equipment on the job to accomplish this if sprinkling is used. Dust control shall be performed as the work proceeds and whenever a dust nuisance or hazard occurs. No separate or direct payment will be made for dust control and the cost thereof shall be considered incidental to and included in the contract prices for excavation and embankments.

13. MAINTENANCE OF POLLUTION CONTROL FACILITIES DURING CONSTRUCTION. During the life of this contract, the Contractor shall maintain all facilities constructed for pollution control under this contract as long as the operations creating the particular pollutant are being carried out or until the material concerned has become stabilized to the extent that pollution is no longer being created. During the construction period the Contractor should conduct frequent training periods on environment protection. The curricula should include methods of detecting and avoiding pollution; familiarity with pollution standards, both statutory and contractual; and installation and care of vegetative covers, plants and other facilities to prevent and correct environmental pollution.

* * * * *

SECTION 2A

DIVERSION AND CONTROL OF WATER

1. REQUIREMENT.

1.1 General. All permanent construction shall be carried on in areas free from water. Water in varying quantities may be flowing in the channel during the entire period of construction. Runoff from the watersheds is rapid and, during periods of rain, intermittent freshets may be expected. The responsibility of the Contractor for protection of work against water flows is specified in paragraph: DAMAGE TO WORK of the SPECIAL PROVISIONS. At all locations where construction work is at a lower elevation than the elevation of the stream or ground water at the time of doing the work, suitable cofferdams or dikes, if necessary, shall be constructed, the construction area shall be dewatered prior to commencement of the work, and all subgrades, whether for earth fill, filter, stone, or concrete, shall be kept drained and free of water throughout the working period. Within 10 days after award of contract, the Contractor shall submit plans showing the methods he proposes to use to dewater each working area and control the water from rain, sheet flow and other surface water. The plans shall show the scheme of operations and a complete layout of drainage pipes, pumps, diversion channels, cofferdams, etc. The plans shall also take into consideration the following specific requirements.

1.2 The schedule for construction operations pertaining to the channel, siphon and wasteway shall be in accordance with the requirements specified in the SPECIAL PROVISIONS.

1.3 The existing levee near the project control line between Sta. 381+00 and 414+00 may be utilized for diversion and control of water. The channel between the existing levee and the west bank of the wash has a capacity of more than 2,000 cfs.

1.4 General. The Contractor shall provide for diversion of channel flows as hereinafter specified. The channel flows will include water originating upstream of the work, water from Arizona Canal, water from side drains and channels adjacent to the work site and will be in addition to any and all ground water originating within the work. Surface flows in excess of 4,000 cfs will be regarded as floodflows. Water flowing in the Arizona Canal will also be diverted. Operation of the canal shall be as specified in section: GENERAL REQUIREMENTS. Surface flows in excess of the following quantities listed hereinafter will be regarded as floodflows.

1.4.1 Runoff Quantities During Periods 1 April to 30 June and 1 October to 30 November – a stream flow of 400 cfs.

1.4.2 Runoff Quantities During Other Periods – a stream flow of 2,000 cfs.

1.5 Drainage Ditches. The location and depth of any drainage ditches shall be subject to approval of the Contracting Officer. Special precautions shall be taken to avoid impairing the permanent subgrade, and any excavation below the existing streambed or invert subgrade shall be refilled with compacted fill in accordance with section: FILLS AND SUBGRADE PREPARATION by and at the expense of the Contractor.

* * * * *

SECTION 2B

CLEARING SITE AND REMOVING OBSTRUCTIONS

1. REQUIREMENTS.

1.1 General. Except as otherwise specified, and/or indicated areas to be cleared and grubbed will be limited to actual excavation area or areas on which fills and/or structures are to be placed. The removal of trees, shrubs, turf, and other vegetation outside of these areas shall be held to a minimum and care shall be exercised not to damage any trees, shrubs, turf, or vegetation which can be left in place.

1.2 Existing Structures and Obstructions. The Contractor shall clear the site, including all fill and excavation areas, and remove and dispose of all existing structures and obstructions for channel and embankment construction, except as otherwise noted on the drawings. Obstructions which are designated or specified to be removed but which are not designated or specified to be removed by others shall be removed by the Contractor. Except as otherwise specified, obstructions designated to be removed by others will be removed in sufficient time to preclude interference with the Contractor's operations. Utility relocations are not considered obstructions. Except as otherwise specified and/or indicated, materials to be removed are scrap, the property of the Contractor, and shall be removed from the site. Except as otherwise specified, incombustible waste material, such as broken concrete, pavement, and other like materials shall be considered scrap and shall not be used in fills.

1.3 Clearing. Trees less than 1-1/2 inches in diameter and other vegetation, except as specified, shall be cut off 6 inches below the indicated channel subgrade or ground level whichever is lower. Other vegetation shall be cut off flush or slightly below the original ground surface. Clearing operations shall be conducted so as to prevent damage to trees, structures, and installations under construction, or to remain in place, and to provide for the safety of employees and others. All rubbish, waste dumps, and debris areas shall be cleared.

1.4 Grubbing shall consist of removing all trees, stumps, roots, logs, and other objectionable vegetable matter in the required fills, foundation areas, and all excavation areas. In grubbing out stumps and roots, all roots or other timber more than 1-1/2 inches in diameter shall be removed to 3 feet below the depth of the required excavation or existing ground level, whichever is lower. Trees and stumps shall be pulled, not cut off.

1.5 Obstructions to channel construction, except as indicated shall be removed within limits of excavation for new channel construction.

1.6 Filling of Holes. Holes made by removal of obstructions and grubbing operations shall be refilled to subgrade with compacted fill material as specified in the section: FILLS AND SUBGRADE PREPARATION.

1.7 Utilities. Prior to removing an obstruction, all applicable utility relocations shall have been coordinated.

1.8 The removal of materials for salvage shall be performed in a manner to avoid damage to such materials and to portions of existing work to remain in place. The Contractor has the option of furnishing new fastenings and fittings in lieu of salvaging such material. Such new materials shall be the equivalent of existing material.

1.9 Existing Structures within the rights-of-way and to remain shall be protected and supported as necessary during removal and construction operations.

2. DISPOSAL OF CLEARED AND GRUBBED MATERIAL. All material removed, except material specified and/or indicated to be salvaged, is designated as scrap, shall become the property of the Contractor, and shall be removed from the site. Trash, organic material, stone, broken concrete, pavement and similar materials may be wasted in the disposal areas in accordance with the requirements of the section: EXCAVATION. Unsuitable materials from clearing operations may be temporarily used for diversion and control of water.

3. PIPE REMOVALS. Abandoned pipe from utilities shall be removed within the limits of the channel as necessary for prosecution of the work. All pipe shall be plugged at the cut ends. Pipe removed is designated as scrap, except as otherwise specified, shall become the property of the Contractor and shall be removed from the site.

4. PROTECTION AND SUPPORT OF UTILITIES.

4.1 General. The Contractor shall adequately support and protect from damage all existing utilities which are located within, or close to the construction area and which are to remain in place.

* * * * *

SECTION 2F

DETOURS AND TRAFFIC CONTROL FACILITIES

1. DETOURS. Traffic on streets that are closed to through traffic for construction shall be routed over existing streets. The Contractor shall submit for approval a plan for routing of traffic including traffic control facilities prior to start of construction. Street closures shall conform to the applicable requirements of the GENERAL REQUIREMENTS.

2. EQUIPMENT CROSSINGS. The Contractor shall not cross existing paved roadways with construction equipment except at approved marked crossings. Crossings shall be maintained in accordance with applicable state, county, and city regulations.

3. TRAFFIC CONTROL FACILITIES. As required by applicable state, city, and county traffic regulations, the Contractor shall furnish, install, maintain, and remove all temporary barricades, lights, warning signs, flagmen, and other facilities necessary to control the traffic and protect pedestrians within the limits of the construction area. All signs to be used on the job during periods of darkness shall be reflectorized. Traffic control shall conform to the Traffic Barricade Manual, City of Phoenix and Part 400 of Uniform Standard Specifications for Public Works Construction, Maricopa Association of Governments, Arizona.

* * * * *

SECTION 3A

EXCAVATION

Index

1. General
2. Blasting
3. Preservation of Property
4. Excavation for Structures
5. Excavation for Drains
6. Removal of Unsatisfactory Soils
7. Disposal of Excavated Materials
8. Overcut
9. Equipment

1. GENERAL. Excavation shall consist of the removal of every type of material encountered except materials covered by the provisions of the section: CLEARING SITE AND REMOVING EXISTING OBSTRUCTION) in the designated areas or form areas directed. The material to be removed may include but is not limited to earth, hardpan, silt, clay, sand, gravel, cemented sand and gravel, rock, adobe, detached pieces of stone and concrete, rock fills, existing fills of miscellaneous debris and rubbish, and other unsuitable materials. Slope lines indicated on the drawings for temporary cuts do not necessarily represent the actual slope to which the excavation must be made to safely perform the work. Excavation for permanent cuts shall be made to the slope lines indicated. Excavation shall be performed in a manner which will not impair the subgrade. Except as otherwise specified, the finished surface of subgrades shall be smooth and shall not vary more than 1/2 inch from indicated grade.

2. BLASTING. Blasting will not be permitted.

3. PRESERVATION OF PROPERTY. All excavation operations shall be conducted in such a manner that street pavements, sidewalks, curbs, utilities, or other facilities and improvements which are to remain in place permanently will not be subjected to settlement or horizontal movement. The Contractor shall furnish and install sheet piling, cribbing, bulkheads, shores, or whatever means may be necessary to adequately support material carrying such improvements or to support the improvements themselves and shall maintain such means in position until they are no longer needed. Temporary sheet piling, cribbing, bulkheads, shores or other protective means shall remain the property of the Contractor and when no longer needed shall be removed from the site.

4. EXCAVATION FOR STRUCTURES. Excavation within the vicinity of existing structures, utilities, and drainage pipes to remain in place shall be performed in a manner to prevent damage to the structure. Earth banks and facilities to remain in place shall be supported as necessary during excavation. In general, unless otherwise shown or specified, the actual side slopes will be at the Contractor's option.

5. EXCAVATION FOR DRAINS. All excavations shall be made by open cut unless otherwise specified. The banks of trenches shall be kept as nearly vertical as practicable. Unless otherwise indicated, trenches shall be not less than 12 inches wider nor more than 16 inches wider than the outside diameter of the pipe to be laid therein, and shall be excavated true to line, so that a clear space not less than 6 inches nor more than 8 inches in width is provided on each side of the pipe. The maximum width of trench specified applies to the width at and below the level of the top of the pipe; the width of the trench above the level may be made as wise as necessary for sheathing and bracing; and the proper installation of the work. The bottom of trenches shall be accurately graded to provide uniform bearing and support for each section of the pipe at every point along its entire length, except for portions of the pipe sections where it is necessary to excavate for the proper sealing of pipe joints. Except as otherwise indicated, the bottom of all trenches excavated shall be shaped and rounded to conform to the lowest one-fourth of the outside portion of circular pipe or to the lower curved portion of pipe arch for the entire length of the pipe or arch. If soft, spongy, unstable material, or material which by reason of its nature cannot be properly shaped or finished to a true pipe subgrade is encountered, it shall be removed and replaced with compacted fill.

6. REMOVAL OF UNSATISFACTORY SOILS. The removal of soils which are unsatisfactory for foundations of the channel, structures, and drains, may be required in certain areas. The Contractor will be required to excavate any such areas to the depth directed and backfill the areas with compacted fill conforming to the requirements of the section: FILLS AND SUBGRADE PREPARATION.

7. DISPOSAL OF EXCAVATED MATERIALS. Excavated materials suitable for required fills shall be placed in temporary stock piles or used directly in the work. All excess materials suitable for fills shall be placed in the indicated disposal areas. Disposal areas indicated shall be filled in accordance with the requirements of the section: FILLS AND SUBGRADE PREPARATION. Excavated material not suitable for fills and unsatisfactory materials shall become the property of the Contractor and shall be removed from the site. No excavated material or waste of any kind shall be disposed of at any place beyond the limits of the work under this contract without express authority. Prior to placing material, the disposal and stockpile areas shall be cleared of trash and vegetation. Vegetation shall be cut off at the existing ground line. Clearing shall conform to the applicable requirements of the section: CLEARING SITE AND REMOVING EXISTING OBSTRUCTIONS. The stockpiles and disposal fills shall be placed in a manner to preclude ponding of water. Contractor shall furnish notice of his intentions in connection with the use of indicated disposal areas in accordance with the requirements of the paragraph: PUBLIC UTILITIES, NOTICES, and RESTRICTIONS of the GENERAL REQUIREMENTS.

8. OVERCUT. Except as otherwise specified or as may be ordered in writing, any overcut or excavation made outside the lines indicated on the drawings or directed shall be backfilled with compacted fill or concrete, and all excavating, backfilling, compacting of backfill, and concreting occasioned thereby shall be by the Contractor at no additional cost to the Government. Any overcut under bridge footings shall be backfilled with concrete.

9. EQUIPMENT shall conform to the requirements as specified in section: FILLS AND SUBGRADE PREPARATION.

* * * * *

SECTION 3B

FILLS AND SUBGRADE PREPARATION

Index

1. Applicable Publications
2. Equipment
3. General Requirements for Compacted Fills and Compacted Backfills
4. Compacted Fill, Channel
5. Compacted Fill, Siphon
6. Compacted Fill, Levee
7. Backfills
8. Landscape Fill
9. Subgrade Preparation

1. APPLICABLE PUBLICATIONS. The following publications of the issues listed below, but referred to thereafter by basic designation only, form a part of this specification to the extent indicated by the references thereto.

1.1 American Society for Testing and Materials (ASTM) Publications.

D 698-70	Moisture-Density Relations of Soils Using a 5.5-Lb. Rammer and a 12-In. Drop
D 1557-70	Moisture-Density Relations of Soils Using 10-Lb. Rammer and 18-In. Drop
D 1556-64 (1974)	Density of Soil In Place by the Sand-Cone Method

1.2 American Association of State Highway and Transportation Officials (AASHTO) Standards.

T 99-70	Moisture-Density Relations of Soils Using a 5.5-Lb. Rammer and a 12-In. Drop
T 180-74	Moisture-Density Relations of Soils Using a 10-Lb. Rammer and an 18-In Drop
T 191-61 (1974)	Density of Soil In-Place by the Sand Cone Method

2. EQUIPMENT.

2.1 All equipment, tools, and machines shall be maintained in satisfactory working condition at all times. Compaction equipment shall be suitable for consistently producing uniform soil densities.

2.2 Equipments with loading higher than H-20 shall NOT be permitted to operate over concrete siphon structure at any time.

3. GENERAL REQUIREMENTS FOR COMPACTED FILLS AND COMPACTED BACKFILLS.

3.1 Control. Moisture-density relations shall be established by the Contractor. Field density tests shall be performed by the Contractor in sufficient number and in such locations to insure that the specified density is being obtained. Moisture-density relations and field densities shall be reported on approved forms. One copy of density data less dry weight determinations shall be provided on the day each test is taken. The completed test reports shall be provided with the Contractor Quality Control Report on the work day following the test.

3.1.1 Laboratory Control. One moisture-density relation shall be made for each classification, blend or change in classification of soil materials encountered. Approval of moisture-density relations shall be obtained prior to the compaction of any material in the work. The moisture-density relations shall be determined in a laboratory in accordance with the following requirements:

3.1.1.1 Outside of Street, Road, and Highway Rights-of-Way. AASHTO Standard T 99, Method D or ASTM Specification D 698, Method D, modified as specified hereafter.

3.1.1.2 Within Street, Road, and Highway Rights-of-Way. AASHTO Standard T 180, Method D, or ASTM Specifications D 1557, Method D, modified as specified hereafter.

3.1.1.2.1 All material over 3/4 inch in size will be removed and replaced with an equal portion of material between 0.187 inch, No. 4 sieve, and 3/4 inch in size.

3.1.1.2.2 A separate batch of materials will be used for each compaction test specimen. No materials will be re-used.

3.1.1.2.3 The desired amount of mixing water will be added for each compaction test specimen, mixed well, and the mixture will be placed in a container with an airtight cover and allowed to cure for 24 hours. A shorter curing time may be allowed where tests show that shortening the curing time will not affect the results.

3.1.2 Field Control. Field in-place density shall be determined in accordance with AASHTO Standard T 191 or ASTM Specifications D 1556, except that in each test, the weight of the disturbed sample representing the full depth of layer shall be not less than 10 pounds for fine grain material and 12 pounds for coarse grain material using a scale for weighing of sufficient capacity and sensitive to .01 pounds. The density tests shall be well distributed and shall average not less than one test for each 2,500 cubic yards of material. At least one test shall be made in each 2 feet of compacted material processed as a unit and at least one test shall be made in each area.

3.1.3 Moisture-Density Curves for Cohesionless and Cohesive Materials. Cohesionless materials include gravels, gravel-sand mixtures, sands, and gravelly sands. Cohesive materials include clayey and silty gravels, gravel-silt mixtures, clayey and silty sands, sand-clay mixtures, clays, silts, and very fine sands. When results of compaction tests for moisture-density relations are recorded on graphs, cohesionless soils will show straight lines or reverse-shaped moisture-density curves, and cohesive soils will show normal moisture density curves.

3.2 Settling of Fills or Backfills With Water will not be permitted.

3.3 Material shall be obtained from the required excavations shall be free from sod, roots, brush, debris, trash or other objectionable material, and shall contain no stone whose greatest dimension is more than 3/4 of the layer thickness.

3.4 Placement. Fill material shall not be placed against concrete which has not been in place at least 14 days or until the concrete has attained a strength of 2,500 p.s.i. when tested in accordance with the section: CONCRETE CONSTRUCTION. Heavy equipment shall not be operated over pipes and buried structures until at least 2 feet of fill material has been placed and compacted over them in conformance with the requirements of the paragraph: BACKFILL, PIPE TRENCHES. Compacted fill and backfill shall be placed with suitable equipment in horizontal layers which after compaction, shall not exceed 12 inches in depth for rubber-tired or vibratory rollers, 6 inches in depth for tamping rollers, and 4 inches in depth when mechanical tampers are used. The Contractor may vary the layer thickness within these limits for most efficient operations. Material containing stones shall be placed in a manner to prevent the stones from striking the concrete structures and to prevent the formation of voids.

3.5 Moisture Content. Material shall have a uniform moisture content while being placed and compacted. Water shall be added at the source, if required, or by sprinkling each layer of material during placement. Uniform distribution of moisture shall be obtained by disking, harrowing, or otherwise manipulating the soil during and after the time water is added. Material containing an excess of moisture shall be manipulated with suitable implements to facilitate maximum aeration and shall be permitted to dry to the proper consistency before being compacted. Fill shall have a maximum moisture content of not more than 3% above optimum and a minimum moisture content of not less than 3% below optimum.

3.6 Compaction. No layer of fill shall be compacted before the practicable uniform moisture content has been obtained. Scarified areas shall be compacted as specified for the fill placed thereon. Rollers will not be permitted to operate within one foot of channel or structure walls or over buried structures until the compacted fill over the top of the structures has reached a depth of 2 feet. Compaction equipment shall be so operated that structures are not damaged nor overstressed during compaction operations. Mechanical tampers shall be used for compaction of fill material adjacent to structures where rolling equipment is impracticable for use in compaction.

4. COMPACTED FILL, CHANNEL.

4.1 Invert.

4.1.1 Preparation for Placing. Before placing material for compacted fill, the foundation surface shall be cleared of all existing obstructions, vegetation, and debris. Unsuitable material not meeting the requirements for fill material shall be removed where directed, and the existing surfaces scarified to a depth of 6 inches before placing the fill. Sloped ground surfaces steeper than one vertical to 4 horizontal, on which fill or compacted backfill is to be placed, shall be stepped in such a manner that the compaction equipment will bear on the full depth of the fill layer.

4.1.2 Compaction. Each layer of the materials shall be compacted to not less than 95% of maximum density.

4.2 Behind Channel Walls.

4.2.1 Limitations on Equipment. The gross weight of any piece of equipment, or the combined weight of any combinations of equipment coupled together, used to place, moisten and/or compact fill behind channel walls and up to 2 feet above the top of covered section shall not exceed 35,000 pounds, including dynamic forces produced by vibratory equipment. Equipment used to compact the fill behind the channel walls shall be of such size as to be capable of operating in the area between the cut slope and the channel wall. Compaction equipment will not be required to operate at elevations lower than 2 feet above the top of wall footings. This equipment shall be of such size as to be capable of operating in the area between the cut slope and the channel wall at any point 2 feet above the top of the heel of wall footings.

4.2.2 Compaction. Each layer of fill behind channel walls shall be compacted to not less than 90% of maximum density.

4.2.3 Trimming. The levee top of fill adjacent to open channel walls shall be trimmed to the lines indicated on the drawings with a tolerance of plus or minus one inch. Any material loosened by trimming shall be recompacted and the levee area moistened and compacted with one pass of a smooth-wheeled roller. Tolerances shall apply after rolling. The fill slopes shall be trimmed to a uniform alignment at top of levee and to a reasonably uniform slope at or outside the lines shown on the drawings. The bridge approach areas other than paved areas shall be trimmed to a uniform alignment and reasonably uniform slopes.

5. COMPACTED FILL, SIPHON.

5.1 General. No fill material shall be placed over the top of the siphon until the excavation at the sides of the siphon has been backfill and compacted to the specified density to the top of the roof slab in accordance with paragraph: BACKFILLS.

5.2 Backfill for the siphon shall consist of silty sands, clayey sands, or sandy clays. Organic material, silt, clay, broken concrete or pavement, boulders and other objectionable material shall not be used.

5.3 Placement. Fill material shall not be placed against the siphon concrete until the concrete has attained a strength of 3,000 p.s.i. Test will be made in conformance with the Section: CONCRETE CONSTRUCTION. The first layer of fill over the siphon shall be 12 inches in thickness and shall be compacted with a rubber-tired roller having a maximum weight of 10 tons. The remainder of the fill shall be deposited in 6-inch layers and compacted with a rubber-tired roller, or other approved equipment with a maximum weight of 10 tons until the structure has a cover of at least 2 feet. The remainder of the compacted fill shall be placed as specified in paragraph: COMPACTED FILLS AND COMPACTED BACKFILLS of this section.

5.4 Compaction. Each layer of fill on top of the siphon shall be compacted to not less than 90% of maximum density.

6. COMPACTED FILL, LEVEE.

6.1 Preparation for Placing shall conform to the requirements specified for preparation for placing of fill material for the invert in the paragraph: COMPACTED FILL, CHANNEL.

6.2 Compaction. Each layer of levee fill for channel construction shall be compacted to not less than 90% of maximum density.

6.3 Trimming. The river side and top of levees shall be trimmed to the lines indicated on the drawings with a tolerance of plus or minus one inch, as measured perpendicular to the slope. Any material loosened by trimming shall be recompacted. The land side of levees shall be trimmed to a uniform alignment at top of levee and to a reasonably uniform slope at or outside the lines shown on the drawings. The ramps and bridge approach areas other than paved areas shall be trimmed to a uniform alignment and reasonably uniform slopes.

7. BACKFILLS.

7.1 Backfill and Fill About Structures.

7.1.1 Location. Backfill and fill shall consist of all fill against and/or around structures, except backfill for pipe trenches.

7.1.2 Material. Backfill and fill material shall be obtained from the required excavation as approved by the Contracting Officer. In general, the best material available will be designated as backfill and fill about structures. Backfill may consist of sand, gravelly sand, silty sands, sandy silts, clayey sands, and sandy clays.

7.1.3 Placing. Fill material shall not be placed against concrete other than siphon which has not been in place at least 14 days or until the concrete has attained a strength of 2,500 p.s.i. when tested in accordance with section: CONCRETE CONSTRUCTION. Fill shall be placed in 4-inch layers.

7.1.4 Compaction shall be not less than 95% of maximum density.

7.2 Backfill, Pipe Trenches.

7.2.1 Location. Backfill for pipe trenches shall consist of all fill placed in pipe trench or open excavation for pipes.

7.2.2 Material shall conform to the requirements in paragraph: BACKFILL AND FILL ABOUT STRUCTURES except that the material placed around the pipe and until the pipe has a cover of 2 feet, shall not contain any stone larger than 3/4 inch. Bedding under the pipe shall consist of compacted sand.

7.2.3 Placing. Backfill shall be placed in 4-inch layers.

7.2.4 Compaction of the material around the pipe, and until a pipe has a cover of 2 feet, shall be not less than 90% of maximum density. The compaction of the remainder of backfill shall be not less than 95% of maximum density.

7.3 Backfill, Toe shall consist of material placed over the toe stone protection. In general the fill shall consist of material suitable for compacted fill placed in horizontal layers not more than 24 inches in thickness, smoothed and dressed to the lines and grades indicated, and compacted to not less than 90% maximum density. Broken concrete, rock, and boulders to be wasted may be buried in the lower portion of toe backfill areas, provided such material is placed in a manner that will prevent the formation of voids and provided it is placed in a manner that compaction will not be impeded. No depressions shall be left in toe backfill areas.

8. LANDSCAPE FILL shall consist of top 6" material from the required excavation, placed in the area indicated and shall be placed with suitable equipment in layers which shall not exceed 12 inches in depth before compaction. Material shall be free from sod, roots, brush, debris, trash or other objectionable material, and shall contain no stone larger than 3 inches. Each layer of fill shall be compacted to not less than 85 percent of the maximum density.

9. SUBGRADE PREPARATION.

9.1 Subgrade for Grouted Stone, Invert. After the channel has been excavated to rough grade, the entire subgrade for the grouted stone, invert, shall be trimmed to a uniform grade and smoothed with a steel-wheeled roller to make the subgrade ready to receive the stone work. If the subgrade is disturbed by the Contractor's operations or is overexcavated, the subgrade shall be restored to grade and compacted to a density of 95% of maximum density. The finished surface of the subgrade shall not be more than 1/2 inch from the indicated grade at any point when tested with a 10-foot straightedge.

9.2 Subgrade for Levee Slope Protection. Fills and excavation for levee slopes shall be trimmed to the lines and grades indicated on the drawings. The finished surface of subgrade shall be smooth and shall not vary more than 1/2 inch from the indicated grade at any point when tested with a 10-foot straightedge.

* * * * *

10. Required Fill areas B C D F G H, I

11. Compacted Fill, Street

SECTION 4A

CONCRETE CONSTRUCTION

Index

1. Applicable Publications
2. Composition
3. Quality
4. Cement
5. Admixtures
6. Aggregates
7. Epoxy-Resin Grout
8. Water
9. Proportioning of Concrete
10. Batching and Mixing
11. Conveying
12. Placing
13. Construction Joint Treatment
14. Expansion, Contraction and Vertical Construction Joints
15. Finishing
16. Curing and Protection
17. Forms and Formed Surfaces
18. Furnishing and Placing Steel Reinforcement
19. Formed Holes
20. Embedded Items
21. Appearance
22. Contractor Quality Control

1. APPLICABLE PUBLICATIONS. The following publications of the issues listed below, but referred to thereafter by basic designation only, form a part of this specification to the extent indicated by the references thereto.

1.1 Federal Specifications (Fed. Spec.).

SS-C-153C	Cement, Bituminous, Plastic
SS-C-1960/3	Cement, Portland
TT-S-00227E [COM-NBS] & Am-3	Sealing Compound; Elastomeric Type, Multi-Component (for Calking, Sealing, and Glazing in Buildings and Other Structures)
MMM-G-650B	Grout, Adhesive, Epoxy Resin, Flexible, Filled

1.2 U.S. Army Corps of Engineers, Handbook for Concrete and Cement (CRD).

CRD-C 5-76	Slump of Portland Cement Concrete
CRD-C 13-66	Air-Entraining Admixture for Concrete by the Pressure Method
CRD-C 55-73	Concrete Mixer Performance
CRD-C 100-75	Concrete Aggregate and Aggregate Sources and Selection of Material for Testing
CRD-C 103-60	Sieve Analysis of Fine and Coarse Aggregates for Use in Portland-Cement Concrete
CRD-C 104-48	Method of Calculation of the Fineness Modulus of Aggregate
CRD-C 111-75	Surface Moisture in Fine Aggregate
CRD-C 112-69	Surface Moisture in Aggregate by Water Displacement
CRD-C 113-68	Total Moisture Content of Aggregate by Drying
CRD-C 119-53 Rev. June 1963	Flat and Elongated Particles in Coarse Aggregate
CRD-C 143-62	Specifications for Meters for Automatic Indication of Moisture in Fine Aggregate

CRD-C 300-72	Specifications for Membrane-Forming Compounds for Curing Concrete
CRD-C 400-63	Water for Use in Mixing or Curing Concrete
CRD-C 513-74	Rubber Waterstops
CRD-C 572-74	Polyvinylchloride Waterstops

1.3 National Bureau of Standards (NBS) Handbook.

H 44	Specifications, Tolerances and Other Technical Requirements for Commercial Weighing and Measuring Devices (4th Edition, 1971 with Replacement Sheets 1972, 1973, 1974, 1975)

1.4 American Concrete Institute (ACI) Standards.

ACI 315-74	Manual of Standard Practice for Detailing Reinforced Concrete Structures
ACI 318-71	Building Code Requirements for Reinforced Concrete with Commentary & 1975 Supplement

1.5 American Society for Testing and Materials (ASTM) Standards.

A 185-73	Welded Steel Wire Fabric for Concrete Reinforcement
C 231-75	Air Content of Freshly Mixed Concrete by the Pressure Method
C 117-69 (R 1974)	Materials Finer Than No. 200 (75-um) Sieve in Mineral Aggregates by Washing
A 615-75	Deformed and Plain Billet - Steel Bars for Concrete Reinforcement
A 446-75	Steel Sheet, Zinc-Coated (Galvanized) by the Hot-Dip Process, (Structural) Physical Quality
C 94-74a	Ready-Mixed Concrete
C174-49 (R 1969)	Measuring Length of Drilled Concrete Cores
D1752-67 (R 1973)	Preformed Sponge Rubber and Cork Expansion Joint Fillers for Concrete Paving and Structural Construction

1.6 Concrete Plant Manufacturers Bureau (CPMB).

March 1, 1973 Concrete Plant Standards

1.7 American Welding Society (AWS) Standard.

D12.1-75	Reinforcing Steel, Welding Code

2. COMPOSITION. Concrete shall be composed of a cementitious material, water, fine and coarse aggregates and admixtures. The cementitious materials shall be Portland cement. The admixture shall be an air-entraining agent.

3. QUALITY. The concrete mixtures will be designed by the Contracting Officer.

4. CEMENT.

4.1 General. Cement shall be furnished in bulk except that cement necessary for finishing and patching may be packaged.

4.2 Portland Cement. Portland cement shall conform to Fed. Spec. SS-C-1960/3, Type I or II, Low alkali.

4.3 High-Early-Strength Portland Cement. High-early-strength Portland cement shall conform to Fed. Spec. SS-C-1960/3, Type III, and shall be used only when specifically approved in writing. Concrete made with such cement shall be subject to all applicable provisions of these specifications.

4.4 Temperature of Cement. The temperature of the cement as delivered to storage at the site, shall not exceed 150 degrees F.

4.5 Test Requirements.

4.5.1 The Contractor shall arrange for the cement sampling, testing and reporting, and the cost thereof shall be included in the appropriate bid item for cement. Cement shall be sampled and tested at the mill by the cement manufacturer in accordance with the specifications. The manufacturer shall furnish a report of results of tests for each lot of cement offered for use under this contract, shall identify the test report with the particular lot of cement, and shall certify that the sampling and testing procedures conform with the requirements of the specifications. No cement shall be used until notice of acceptance has been given by the Contracting Officer. All cement will be subject to check testing from samples obtained at the mill, at transfer points, or at the project, as scheduled by the Contracting Officer, and such sampling and testing will be by, or under the supervision of, the Government and at its expense. Access shall be granted as required to inspect storage and to sample for check testing. Cement not meeting specifications shall be promptly removed from the site of the work. Cement which has not been used within 6 months after test will be retested at the expense of the Contractor when directed by the Contracting Officer and shall be rejected if the test results are not satisfactory.

4.6 Transportation of Bulk Cement. When bulk cement is not unloaded from primary carriers directly into weathertight hoppers at the batching plant, transportation from the railhead, mill, or intermediate storage to the batching plant shall be accomplished in adequately designed weathertight trucks, conveyors, or other means which will protect the cement completely from exposure to moisture.

4.7 Storage. Immediately upon receipt at the site of the work, cement shall be stored in a dry, weathertight and properly ventilated structure. All storage facilities shall be subject to approval and shall be such as to permit easy access for inspection and identification. Sufficient cement shall be in storage to complete any lift of concrete started. In order that cement may not become unduly aged after delivery, the Contractor shall use any cement which has been stored at the site for 60 days or more before using cement of lesser age.

4.8 Separation of Materials. Separate facilities shall be provided for unloading, transporting, storage, and handling each type of cement.

4.9 Source. The Contractor shall notify the Contracting Officer of the source or sources from which the cement will be obtained at least 60 days in advance of the time when concrete placing is expected to begin. If cement is to be obtained from more than one mill, the notification shall state the estimated amount of cement to be obtained from each mill and the proposed schedule of shipments.

5. ADMIXTURES.

5.1 Air-entraining Admixtures.

5.1.1 General. The air-entraining admixture shall conform to CRD-C 13 and shall consistently entrain the air content in the specified ranges under field conditions. The air-entraining admixture shall be in a solution of suitable viscosity for field use.

5.1.2 Tests. The Contractor shall notify the Contracting Officer of the source from which the admixture will be obtained at least 60 days in advance of the item when concrete placing is expected to begin. The Contractor shall provide satisfactory facilities for the ready procurement of adequate test samples. All sampling and testing of an admixture will be by and at the expense of the Government. An air-entraining admixture which has been in storage at the project site for longer than 6 months or which has been subjected to freezing will be retested at the expense of the Contractor when directed by the Contracting Officer and shall be rejected if test results are not satisfactory.

6. AGGREGATES.

6.1 Composition. Fine aggregate shall consist of natural sand, manufactured sand, or a combination of natural and manufactured sands. Coarse aggregate shall consist of gravel, crushed gravel, crushed stone, blast-furnace slag, or a combination thereof.

6.2 Sources and Evaluation Testing. Aggregates shall be produced from the sources listed in the SPECIAL PROVISIONS or from another source when approved in accordance with the SPECIAL PROVISIONS and the technical provisions herein. If the Contractor proposes to furnish aggregates from a source not listed, the Government will make such tests and other investigations as necessary to determine whether or not aggregates meeting the requirements of this project can be produced from the proposed source. The tests to which the aggregate will be subjected may include specific gravity, absorption, Los Angeles abrasion, soundness in magnesium sulfate, petrographic analyses, freezing and thawing in concrete, alkali-aggregate reaction, organic impurities, and any other tests that are necessary to demonstrate that concrete of acceptable quality and cost can be produced from the materials proposed. These tests will be conducted in accordance with the applicable Corps of Engineers methods of those given in the Handbook for Concrete and Cement. When the Contractor desires to use aggregates from a source not listed suitable samples for quality evaluation consisting of not less than 300 pounds of each size coarse aggregate and 200 pounds of fine aggregate shall be taken under the supervision of the Contracting Officer in accordance with CRD-C 100 and shall be delivered transportation prepaid to Division Laboratory, U.S. Army Engineer Division, South Pacific, Sausalito, California, within 15 days after date of notice to proceed. Sampling and shipping of samples shall be at the Contractor's expense. A maximum of 30 days will be required to complete evaluation of the aggregates.

6.3 Sample for Mixture Design Studies. At least 45 days in advance of the time when placing of concrete is expected to begin samples of representative materials proposed for this project shall be delivered transportation prepaid to Division Laboratory, U.S. Army Engineer Division, South Pacific, Sausalito, California, by the Contractor at his expense. Samples of approved aggregates shall be taken under the supervision of the Contracting Officer in accordance with CRD-C 100 accompanied by test reports indicating conformance with grading requirements hereinafter specified. Samples of materials other than aggregates shall be representative of those proposed for the project and shall be submitted accompanied by manufacturer's test reports indicating compliance with applicable specified requirements. Quantities of materials required shall be as follows:

Material	Quantity
1-1/2" maximum size coarse aggregate	1,500 pounds
3/4" maximum size coarse aggregate	1,500 pounds
Fine aggregate	1,500 pounds
Cement	1,000 pounds
Air-Entraining Admixture	1 quart

Mixture design studies will be made by the Government and at its expense. If concrete is to be placed by pumping, data shall be submitted on pumping equipment and samples submitted shall be capable of being proportioned to a pumpable concrete mixture.

6.4 Acceptance Sampling and Testing. During construction, aggregates will be sampled for acceptance testing as delivered to the mixer to determine compliance with specification provisions. The Contractor shall provide facilities and labor as may be necessary for the ready procurement of representative test samples. Samples from the weigh batcher will be obtained when directed by the Contracting Officer and under his supervision. The Government will test such samples at its expense using appropriate Corps of Engineers and ASTM test methods. Tests of aggregates at various stages in the process and handling operations will be made at the discretion of the Contracting Officer.

6.5 Quality. Aggregates, as delivered to the mixer, shall consist of clean, hard, and uncoated particles. Where required, fines shall be removed from the coarse aggregates by adequate washing, or another suitable method approved by the Contracting Officer. Washing of coarse aggregates will be required when the material finer than No. 200 sieve exceeds 1.0 percent when tested in accordance with ASTM C 117. Coarse aggregate shall be stored in separated size groups, as stipulated in paragraph COARSE AGGREGATES, adjacent to the batch plant and in such manner as to prevent the inclusion of foreign materials in the concrete.

6.5.1 Grading.

6.5.1.1 Fine Aggregate. The grading and uniformity of the fine aggregate shall conform to the following requirements as delivered to the mixers:

Sieve Designation, U.S. Standard Square Mesh	Percentage by Weight Passing
3/8 in (9.5 mm)	–
No. 4 (4.75 mm)	95-100
No. 8 (2.36 mm)	80-90
No. 16 (1.18 mm)	55-75
No. 30 (600 mm)	30-60
No. 50 (300 mm)	12-30
No. 100 (150 mm)	2-10

The minimum percent shown for material passing the No. 50 and No. 100 sieves may be reduced to 5 and 0 respectively, if the aggregate is to be used in air-entrained concrete containing more than 425 pounds of cement per cubic yard, or if an approved mineral admixture is used to supply the deficiency in percent passing these sieves. In addition to the grading limits shown above, the fine aggregate, as delivered to the mixer shall have a fineness modulus of not less than 2.40 nor more than 3.10. The grading of the fine aggregate shall also be controlled so that the fineness moduli of at least four of any five consecutive test samples of the fine aggregate as delivered to the mixer shall not vary more than 0.15 from the average fineness modulus of all samples taken during the first 30 days of concrete placement unless otherwise directed. The fineness modulus shall be determined by dividing by 100, the sum of the cumulative percentages retained on U.S. Standard Sieves Nos. 4, 8, 16, 30, 50 and 100. At the option of the Contractor, fine aggregate may be separated into two or more sizes or classifications, but the uniformity of grading of the separate sizes shall be controlled so that they may be combined throughout the job in fixed proportions established during the first 30 days of concrete placement.

6.5.1.2 Coarse Aggregate. The grading of the coarse aggregate within the separated size groups shall conform to the following requirements as delivered to the mixer:

Sieve Size U.S. Standard Square Mesh	Percent by Weight Passing Individual Sieves	
	No. 4 to 3/4 In.	3/4 In. to 1-1/2 In.
1-1/2 in.	–	90-100
1 in.	100	20-45
3/4 in.	90-100	0-10
3/8 in.	20-45	0-5
No. 4	0-5	–

6.5.2 Particle Shape. The shape of the particles in the fine aggregate and in the coarse aggregate shall be generally spherical or cubical. The quantity of flat and elongated particles in the separated size groups of coarse aggregate, as defined and determined by CRD-C119, shall not exceed 25 percent in any size group.

6.6 Storage. Aggregates shall be stored in approved size groups adjacent to the batch plant in such manner as to prevent the inclusion of foreign materials in the concrete. Sufficient aggregate shall be maintained at the site at all times to permit continuous placement and completion of any lift of concrete started.

6.7 Moisture Control. All fine aggregate and the smallest size group of the coarse aggregate shall remain in free-draining storage at the site until a stable moisture content is obtained prior to use.

7. EPOXY-RESIN GROUT shall be a two-component material conforming to Fed. Spec. MMM-G-650, type I or II. Type I shall be used when pavement, materials, or atmospheric temperature is 70 degrees F. or above. Type II shall be used when pavement, material, or atmospheric temperature is below 70 degrees F. Epoxy-resin grout shall be stored in a windowless and weatherproof, but ventilated, insulated, noncombustible structure with provision nearby for conditioning the material to 70 to 85 degrees F. for a period of 48 hours prior to use. The ambient temperature in the storage area shall at no time be higher than 100 degrees F.

8. WATER. Water for washing aggregates and for mixing and curing concrete shall be fresh and free from injurious amounts of oil, acid, salt, alkali, organic matter, or other deleterious substances and shall comply with CRD-C 400.

9. PROPORTIONING OF CONCRETE.

9.1 Control. The proportions of all material entering into the concrete shall be as directed. The proportions will be changed as necessary. Adjustments shall be made to the batch weights of cement and water as necessary to maintain the water-cement ratio and the stipulated slump with approval of the Contracting Officer.

9.2 Cement Content. The cement content of the concrete for the various parts of the structure will range from an approximate minimum of 470 to an approximate maximum of 660 pounds per cubic yard. The cement content of the concrete for lump sum items will be 560 pounds per cubic yard.

9.3 Aggregate Content. The amount and maximum size of aggregate to be used in the various parts of the structure shall be as directed. In general, the maximum size of coarse aggregate to be used in the various parts of the work will be in accordance with the following:

FEATURES	MAXIMUM SIZE AGGREGATE, INCHES
Sections 7-1/2 inches or less in width or with a clear distance between reinforcement less than 2-1/4 inches	3/4
Sections over 7-1/2 inches and in which the clear distance between reinforcement is at least 2-1/4 inches	1-1/2

9.4 Air Content. The air content by volume based on measurements made immediately after discharge from the mixer shall be determined by ASTM C 231. The total calculated air content of that portion containing no aggregate particles that would be retained on a 2-inch square mesh sieve shall be 5.0 plus or minus 1.5 percent except that when the maximum size coarse aggregate is 3/4 inch the air content shall be 6.0 plus or minus 1.5 percent.

9.5 Slump. For each portion of the work slump shall be stipulated by the Contracting Officer. The slump shall not depart by more than 1-1/2 inches from that stipulated.

10. BATCHING AND MIXING.

10.1 Capacity. The Contractor shall provide a batching plant and concrete mixing equipment having a capacity of at least 100 cubic yards per hour.

10.2 Batching Plant.

10.2.1 Location. The batching plant may be located "on site" or "off-site."

10.2.2 Arrangement. Separate bins or compartments shall be provided for each size or classification of aggregate and for bulk Portland cement when used. The compartments shall be of ample size and so constructed that the materials will be maintained separated under working conditions. The batching plant shall be equipped so that the flow of each material into its batcher is stopped automatically when the designated weight has been reached. Aggregates may be weighed in separate weigh batchers with individual scales, or cumulatively in one weigh batcher on one scale. Bulk cement shall be weighed on a separate scale in a separate weigh batcher. Water may be measured by weight or by volume. If measured by weight, it shall not be weighed cumulatively with another ingredient. Batching controls shall be so interlocked that the charging mechanism cannot be opened until the scales have returned to zero. These requirements can be satisfied by a semi-automatic batching system as defined in the CPMB Concrete Plant Standards with interlocking as described above, or by an automatic batching system as defined in the Concrete Plant Standards. The plant shall be arranged so as to facilitate the inspection of all operations at all times. Suitable facilities shall be provided for obtaining representative samples of aggregate from each of the bins or compartments for test purposes. Delivery of materials from the batching equipment shall be within the following limits of accuracy:

Material	Percent
Cement	1
Water	1
Aggregate	2
Admixtures	3

When aggregates are weighed cumulatively, the limit for aggregate applies to the total weight in the batcher after each aggregate size has been batched.

10.2.3 Water Batcher and Dispenser for Admixture. Equipment for batching water and admixtures shall be provided at the batching plant or included with the paving mixers or truck mixers as required for the type of plant used.

10.2.3.1 Water Batchers. A suitable water measuring device shall be provided which will be capable of measuring the mixing water within the specified requirements for each batch. The mechanism for delivering water to the mixers shall be such that leakage will not occur when the valves are closed. The filling and discharge valves for the water batcher shall be so interlocked that the discharge valve cannot be opened before the filling valve is fully closed.

10.2.3.2 Dispensers. An accurate mechanical device for measuring and dispensing each admixture shall be provided. Each device shall be capable of ready adjustment to permit varying the quantity of admixture to be batched. Each dispenser shall be interlocked with the batching and discharging operations of the water so that each admixture is separately batched and discharged automatically in a manner to obtain uniform distribution throughout the batch in the specified mixing period. When use of truck mixers makes this requirement impracticable, the admixture dispensers shall be interlocked with the sand batcher. Admixtures will not be combined prior to introduction into water or sand.

10.2.4 Moisture Control. The plant shall be capable of ready adjustment to compensate for the varying moisture contents of the aggregate, and to change the weights of the materials being batched. An electric moisture meter complying with the provisions of CRD-C 143 shall be provided for measurement of moisture in the fine aggregate. The sensing element shall be arranged so that the measurement is made near the batcher charging gate of the sand bin or in the sand batcher.

10.2.5 Scales. Adequate facilities shall be provided for the accurate measurement and control of each of the materials entering each batch of concrete. The weighing equipment shall conform to the applicable requirements of NBS Handbook 44, except that the accuracy shall be within 0.2 percent of scale capacity. The Contractor shall provide standard test weights and any other auxiliary equipment required for checking the operating performance of each scale or other measuring device. Tests shall be made in accordance with the requirements set forth in paragraph: CONTRACTOR QUALITY CONTROL in the presence of a Government inspector in such a manner and at such intervals as may be directed. Each weighing unit shall include a visible springless dial which shall indicate the scale load at all stages of the weighing operation, or shall include a beam scale with a beam balance indicator which will show the scale in balance at zero load and at any beam setting. The indicator shall have an over and under travel equal to at least 5 percent of the capacity of the beam. The weighing equipment shall be arranged so that the plant operator can conveniently observe all dials or indicators.

10.2.6. Recorders.

10.2.6.1 An accurate recorder or recorders shall produce a graphical or digital record of the scale reading after each of the aggregates and cementitious materials has been batched prior to delivery to the mixer and after the batchers have been discharged (return to zero reference). The weights or volumes of water and admixture shall also be recorded if batched at a central batching plant.

10.2.6.2 Each recorder shall be housed in a cabinet which shall be capable of being locked.

10.2.6.3 The charts or tapes shall clearly indicate the different types of mixes used by stamped letter, numerals, colored ink or by other suitable means. The charts or tapes shall be so marked that variations in batch weights of each type of mix can be readily observed.

10.2.6.4 The charts or tapes shall show time of day (stamped or pre-printed) at intervals of not more than 15 minutes.

10.2.6.5 The recorded charts or tapes shall become the property of the Government.

10.2.6.6 The recorders shall be placed in a position convenient for observation by the plant operator and Government inspector.

10.2.6.7 All weighing, indicating, recording, and control equipment shall be sufficiently protected against exposure to dust, moisture, and vibration so that there is no interference with proper operation of the equipment.

10.2.6.8 The recorded weights when compared to the weights actually batched shall be within the following limits of accuracy:

Material	Percent
Cement	2
Water	2
Aggregate	4

10.3 Concrete Mixers. Mixers may be stationary mixers, truck mixers, or paving mixers of approved design. The mixers shall have a rated capacity of at least 27 cubic feet of mixed concrete, and shall not be charged in excess of the capacity recommended by the manufacturer. Mixers shall be capable of combining the materials into a uniform mixture and of discharging this mixture without segregation. Stationary and paving mixers shall be provided with an acceptable device to lock the discharge mechanism until the required mixing time has elasped. The mixers or mixing plant shall include a device for automatically counting the total number of batches of concrete mixed. The mixers shall be operated at the drum or mixing blade speed designated by the manufacturer on the nameplate. The mixing periods specified herein are predicated on proper control of the speed of rotation of the mixer drum or blades, and on proper introduction of the materials into the mixer. The mixing time for stationary or paving mixers will be increased when such increase is necessary to secure the required uniformity and consistency of the concrete, or when test samples of concrete taken from the first, middle, and last portions of the mixer discharge exceed any of the following uniformity requirements when tested in accordance with the provisions of CRD-C 55. When authorized by the Contracting Officer, the mixing time may be reduced to the minimum time required to meet all the following requirements.

Test	Variability Index, Min †
Water content of mortar, % by weight	91.5
Coarse aggregate content of concrete, % by weight	90.5
Unit weight of air-free mortar, lb/ft^3	98.5
Cement content of dried mortar, % by weight	82.5

$$\dagger \text{Variability Index} = \frac{\text{Smallest value} \times 100}{\text{Largest value}}$$

Uniformity tests will be made by the Government at its expense as frequently as necessary to determine that the mixing time in use on the project is adequate. When the Contractor proposes to reduce the mixing time, three uniformity tests at reduced mixing time will be made by the Government at the Contractor's expense to determine whether the reduced mixing time meets the requirements of these specifications. Excessive overmixing requiring additions of water will not be permitted. The mixers shall be maintained in satisfactory operating condition, and mixer drums shall be kept free of hardened concrete. Mixer blades shall be replaced when worn down more than 10 percent of their depth. Should any mixer at any time produce unsatisfactory results, its use shall be promptly discontinued until it is repaired. Suitable facilities shall be provided for obtaining representative samples of concrete for uniformity tests. All necessary platforms, tools, and equipment for obtaining samples shall be furnished by the Contractor.

10.3.1 Stationary Mixers. If no uniformity test data are available, the mixing time for each batch after all solid materials are in the mixer, provided that all of the mixing water is introduced before one-fourth of the mixing time has elapsed, shall be one minute for mixers having a capacity of one cubic yard; for mixers of larger capacities, the mixing time shall be increased 15 seconds for each additional cubic yard or fraction thereof of concrete mixed. When a stationary mixer is used for partial mixing of the concrete (shrink mixed) the mixing time in the stationary mixer may be reduced to the minimum necessary to intermingle the ingredients (about 30 seconds).

10.3.2 Truck Mixers. Truck mixers shall conform to the requirements of ASTM C 94, including requirements for uniformity of concrete. When a truck mixer is used either for complete mixing (transit-mixed) or to finish the partial mixing done in a stationary mixer, in the absence of uniformity test data, each batch or concrete shall be mixed not less than 70 nor more than 100 revolutions of the drum at the rate of rotation designated by the manufacturer of the equipment as mixing speed and at the capacity designated in ASTM C 94. If the batch is at least 1/2 cubic yard less than the rated capacity, in the absence of uniformity test data, the number of revolutions at mixing speed may be reduced to not less than 50. Any additional mixing shall be done at the speed designated by the manufacturer of the equipment as agitating speed. Each truck shall be equipped with two counters from which it shall be possible to determine the number of revolutions at mixing speed and the number of revolutions at agitating speed.

10.3.3 Paving Mixers. Paving mixers shall be used at the site of the work. For paving use, paving mixers shall be equipped with boom and bottom-dump bucket to handle the concrete from the mixer to the form. The bucket shall be of adequate size to handle the complete batch of concrete mixed, and the boom shall be of sufficient length to permit discharge of the concrete into its final position in the form. Paving mixers may be either single compartment drum or multiple compartment drum type. A sled or box of suitable size shall be attached to the mixer under the bucket so as to catch any spillage of concrete that may occur when the mixer is discharging concrete into the bucket. For use other than paving, the boom is not required; the mixer may discharge directly into the bucket to be used for final placement. Multiple compartment drum paving mixers shall be properly synchronized, and the mixing time shall be determined by including the time required to transfer the concrete between compartments of the drum. If no uniformity test data are available, the mixing time for each batch, after all solid materials are in the mixer drum, provided that all the mixing water is introduced, before one-fourth of the mixing time has elapsed, shall be one minute for mixers having a capacity of one cubic yard; for mixers of larger capacities, the minimum mixing times shall be increased 15 seconds for each additional cubic yard or fraction thereof of concrete mixed. Vehicles used in transporting materials from the batching plant to the mixers shall have bodies or compartments of adequate capacity to carry the materials and to deliver each batch, separated and intact, to the mixer. Except as otherwise approved by the Contracting Officer, loose cement shall be transported from the batching plant to the mixers in separate boxes or compartments which shall be equipped with wind-proof and rain-proof covers.

10.4 Sampling. The Contractor shall provide suitable facilities and labor for obtaining representatives samples of concrete for Contractor Quality Control and Government quality assurance testing. All necessary platforms, tools, and equipment for obtaining samples shall be furnished by the Contractor.

11. CONVEYING.

11.1 General. Concrete shall be conveyed from mixer to forms as rapidly as practicable, by methods which will prevent segregation or loss of ingredients. Any concrete transferred from one conveying device to another shall be passed through a hopper which is conical in shape and shall not be dropped vertically more than 5 feet except where suitable equipment is provided to prevent segregation and where specifically authorized. Methods and equipment for

handling and depositing the concrete in the form shall be subject to the approval of the Contracting Officer. Telephonic or other satisfactory means of rapid communication between the mixing plant and the forms in which concrete is being placed shall be provided and made available for use by the inspectors in the mixing plant and forms.

11.2 Buckets. Bottom-dump buckets shall have a capacity not exceeding 2 cubic yards and shall conform to the following requirements. The interior hopper slope shall be not less than 50 degrees from the horizontal, the minimum dimension of the clear gate opening shall be at least 5 times the maximum size aggregate or 12-inches, whichever is greater; and the area of the gate opening shall be not less than one square foot. The maximum dimension shall not be greater than twice the minimum dimension. The bucket gates shall be essentially grout tight when closed and may be manually, pneumatically or hydraulically operated. The design of the bucket shall provide means for positive regulation of the amount and rate of deposit of concrete in each dumping position.

11.3 Trucks. Truck mixers or agitators used for transporting central-mixed concrete shall conform to the applicable requirements of ASTM C 94. Non-agitating equipment may be used for transporting central mixed concrete over a smooth road when the hauling time is less than 15 minutes.

11.4 Chutes. When concrete can be placed directly from a truck mixer, agitator or non-agitating equipment the chutes attached to this equipment may be used. Separate chutes and other similar equipment will not be permitted for conveying concrete except when specifically approved.

11.5 Belt Conveyors. Belt conveyors may be used when approved. Such conveyors shall be designed and operated to assure a uniform flow of concrete from mixer to final place of deposit without segregation of ingredients or loss of mortar and shall have a speed of travel in excess of 500 feet per minute and be provided with positive means for preventing segregation of the concrete at the transfer points and the point of placing.

11.6 Pump Placement. Concrete may be conveyed by positive displacement pump when approved. The pumping equipment shall be piston or squeeze pressure type. The pipeline shall be rigid steel pipe or heavy duty flexible hose. The diameter of the pipe shall be at least three times the nominal maximum size coarse aggregate in the concrete mixture to be pumped. The maximum size coarse aggregate will not be reduced to accommodate the pumps. The distance to be pumped shall not exceed limits recommended by the pump manufacturer. The concrete shall be supplied to the concrete pump continuously. When pumping is completed, concrete remaining in the pipeline shall be ejected without contamination of concrete in place. After each operation, equipment shall be thoroughly cleaned, and flushing water shall be wasted outside of the forms.

12. PLACING.

12.1 General. Concrete shall be worked into the corners and angles of the forms and around all reinforcement and embedded items without permitting the material to segregate. Placing the concrete shall, so far as practicable, be done by bottom dump buckets conforming to requirements of paragraph: BUCKETS. Concrete shall be deposited as close as possible to its final position in the forms and in so depositing there shall be no vertical drop greater than 5 feet except where suitable equipment is provided to prevent segregation and where specifically authorized. Depositing of the concrete shall be so regulated that it may be effectively compacted in horizontal layers approximately 1-1/2 feet in thickness with a minimum of lateral movement. Not more than 4 cubic yards may be deposited in one pile for compaction in open, unrestricted areas in the forms. In restricted areas such as around embedded items deposit of less than 4 cubic yards in one pile will be required in most locations to insure that the concrete will be thoroughly and properly compacted. The amount deposited in each location shall be that which can be readily and thoroughly compacted. The surfaces of construction joints shall be kept continuously wet for the first 12 hours during the 24-hour period prior to placing concrete. Free water shall be removed prior to placement of mortar and additional concrete. All concrete placing equipment and methods shall be subject to approval. Concrete placement will not be permitted when, in the opinion of the Contracting Officer, weather conditions prevent proper placement and consolidation.

12.2 Time Interval Between Mixing and Placing. Concrete mixed in stationary mixers and transported by non-agitating equipment shall be placed within 30 minutes after it has been mixed, unless otherwise authorized. When concrete is truck mixed or when a truck mixer or agitator is used for transporting concrete mixed by stationary mixers, the concrete shall be delivered to the site of the work and discharge shall be completed within 1-1/2 hours after introduction of the cement to the aggregate except that when the temperature of the concrete exceeds 85 degrees F. the time shall be reduced to 45 minutes. The concrete shall be placed within 15 minutes after it has been discharged.

12.3 Placing Temperatures.

12.3.1 Cold Weather. Concrete shall have a temperature of not more than 60 degrees F. and not less than 40 degrees F. when measured 20 minutes after mixing. Heating of the mixing water and/or aggregate will not be permitted until the temperature of the concrete has decreased to 45 degrees F. All methods and equipment shall be subject to approval.

12.3.2 Hot Weather. When local weather records show maximum daily temperature is likely to exceed 90 degrees F., the following precautions shall be taken in placing, curing, and protecting the concrete. The forms and subgrade, horizontal or sloped, shall be sprinkled with water immediately before placing the concrete. The concrete shall be placed at the coolest temperature practicable, and in no case shall the temperature of the concrete when deposited in the forms or the subgrade exceed 90 degrees F. Control of the temperature of the concrete shall be by water spraying, or sprinkling of the coarse aggregate stockpiles and/or by placing waterlines and water storage tanks below the ground surface. Refrigeration of aggregates and water or addition of ice to the water may be used. Methods will be approved in writing by the Contracting Officer.

12.4 Concrete on Earth Foundations. Earth foundations upon which concrete is to be placed shall be clean, damp, and free from frost, ice, and standing or running water. Prior to placing concrete the earth foundation shall have been satisfactorily compacted in accordance with the provisions of section: FILLS AND SUBGRADE PREPARATION.

12.5 Lift in Concrete. The depth of concrete placed in each lift will be as shown on the drawings or specified herein. All concrete shall be deposited in approximately horizontal layers about 1-1/2 feet in thickness unless otherwise specifically authorized or directed. The placement shall be carried on at such a rate that the formation of cold joints will be prevented. Slabs (including starter walls) shall be placed in one lift unless otherwise authorized or directed. Other lifts shall terminate at such levels as will conform to architectural details.

12.6 Vibration of Concrete. Concrete shall be consolidated by mechanical vibrating equipment. Except where otherwise approved or directed, internal vibrators shall be used. Surface vibrators will not be used. Handspading may be required if necessary with internal vibration along formed surfaces permanently exposed to view. Where specifically approved or directed, form vibrators shall be used to supplement internal vibration. The vibrators selected for use shall have adequate air pressure available for air vibrators, and voltage for electric vibrators. An adequate number of vibrators shall be on hand to meet placing requirements, and spare vibrators shall be available to maintain production in the event of a breakdown. The head diameter, frequency (measured immersed), and average amplitude (measured in air) of the vibrators shall conform to the following requirements:

Application	Head Diameter (Inch)	Frequency VPM	Average Amplitude† (Inch)
Thin walls	1-1/4 - 2-1/2	9000 - 13500	0.02
Structural (3 inch slump or greater)	2 - 3-1/2	8000 - 12000	0.025
Mass and Structural (less than 3 inch slump)	3 - 6	7000 - 10500	0.03
Mass concrete	5 - 7	5500 - 8500	0.04

†The average amplitude of the vibrator shall be the average of two measurements, one taken near the tip and another taken near the back end of the head.

In no case shall vibrators be used to transport concrete within forms. Vibration shall be systematic, with emphasis on closely spaced insertions. The duration shall be that necessary to produce good consolidation.

12.7 Placing Concrete Through Reinforcement. In placing concrete through reinforcement, care shall be taken that no segregation of the coarse aggregate occurs.

12.8 Placing Concrete Invert. A continuous header or forms shall be placed along all exposed edges of slabs placed by rail or track-laying type of spreading and finishing equipment, to act as a guide and insure consolidation of the concrete along the edge of the slab. This header shall be true to line and grade and sufficiently rigid to prevent deformation under the load of the finishing screeds in the case of rail or track-laying equipment and the full load in the case of conventional concrete spreading and finishing equipment.

13. CONSTRUCTION JOINT TREATMENT.

13.1 General. As a lift is completed, the top surface shall be immediately and carefully protected from any condition that will damage the concrete.

13.2 Cleaning. Unformed concrete surfaces to which concrete is to be bonded shall be prepared for receiving the next lift by cleaning with either wet sandblasting, high pressure water jet, or air-water cutting; however, approved wet sandblasting equipment shall be provided. If the surface of a lift is congested with reinforcing steel, is relatively inaccessible, or, if for any other reason it is considered undesirable to disturb the surface of a lift before it has hardened, surface cutting by means of air-water jets will not be permitted and the use of wet sandblasting or high pressure water jet will be required.

13.2.1 Air-Water Cutting. Air-water cutting of a construction joint shall be performed at the proper time and only on horizontal construction joints. The surface shall be cut with an air-water jet to remove all laitance and to expose clean, sound aggregate, but not so as to undercut the edges of the larger particles of aggregate. The air pressure used in the jet shall be 100 psi plus or minus 10 psi and the water pressure shall be just sufficient to bring the water into effective influence of the air pressure. After cutting, the surface shall be washed and rinsed as long as there is any trace of cloudiness of the wash water. The surface shall again be washed just prior to placing the succeeding lift. Where necessary to remove accumulated laitance, coatings, stains, debris, and other foreign material, wet sandblasting will be required as the last operation before placing the next lift.

13.2.2 High-Pressure Water Jet. A stream of water under a pressure of not less than 3000 psi may be used for cleaning. Its use shall be delayed until the concrete is sufficiently hard so that only the surface skin or mortar is removed and there is no undercutting of coarse aggregate particles. Where the cleaning occurs more than two days prior to placing the next lift or where the work in the area subsequent to the cleaning causes dirt or debris to be deposited on the surface, the surface shall be cleaned again as the last operation prior to placing the next lift. If the water jet is incapable of a satisfactory cleaning, the surface shall be cleaned by wet sandblasting.

13.2.3 Wet Sandblasting. When employed in the preparation of construction joints, wet sandblasting shall be performed as the final operation completed before placing and not more than two days prior to placing the following lift. The operation shall be continued until all accumulated laitance, coatings, stains, debris, and other foreign materials are removed. The surface of the concrete shall then be washed thoroughly to remove all loose material. The surface shall again be washed just prior to placing the succeeding lift.

13.2.4 Waste Disposal. The method used in disposing of waste water employed in cutting, washing and rinsing of concrete surfaces shall be such that the waste water does not stain, discolor, or affect exposed surfaces of the structures, or damage the environment of the project area. Methods of disposal shall be subject to approval.

14. EXPANSION, CONTRACTION AND VERTICAL CONSTRUCTION JOINTS.

14.1 General. Joint locations and details not shown on the drawings shall be as approved or directed. [Type "J" construction joints shall be provided in the invert slab of open channel whenever concrete pouring is stopped for period exceeding 45 minutes. In vertical walls of open channels, Type "B" vertical construction joints shall be provided at intervals of 30 to 60 feet measured along the centerline of channel. On curves, the 60 foot maximum interval shall be measured along the channel wall with the greater radius.] In no case shall any fixed metal, embedded in concrete, be continuous through an expansion or contraction joint.

14.2 Expansion and Contraction Joint Fillers. Expansion and contraction joint fillers shall be installed using material of the type and quality specified hereinafter.

14.2.1 Preformed Expansion Joint Filler shall conform to ASTM D 1752, Type I. The filler shall be securely held in position during concreting operations. Adjacent sections of filler shall be fitted tightly together to prevent entrance of concrete into the expansion space.

14.2.2 Joint Sealer shall conform to Fed. Spec. TT-S-227, Type I for horizontal joints and Type II for vertical joints, class A or B as applicable.

14.2.3 Expansion Joints with Joint Sealer. Premolded expansion-joint filler strips shall be installed at the proper level below the finished slab with a slightly tapered, dressed-and-oiled wood strip temporarily secured to the top thereof to form a groove not less than one inch deep. The wood strip shall be removed after the concrete has set. The groove, when surface dry, shall be cleaned of foreign matter, loose particles, and concrete protrusions, then filled approximately flush with joint sealer so as to be slightly concave after drying.

14.3 Waterstops. Waterstops of rubber or of polyvinylchloride (PVC) shall be installed in joints as shown on the drawings or as otherwise directed. The type, location, dimensions, and method of installation shall be as shown on the drawings. In order to eliminate faulty installation that may result in joint leakage, particular care shall be taken to see that the waterstops are correctly positioned during installation. All waterstops shall be installed so as to form a continuous watertight diaphragm in each joint. Adequate provision shall be made to support and completely protect the waterstops during the progress of the work. The Contractor shall replace or repair, at his expense, any waterstops punctured or otherwise damaged before final acceptance of the work. Maximum density and imperviousness of the concrete shall be insured by thorough working of the concrete in the vicinity of all waterstops. Suitable guards shall be provided to protect exposed projecting edges and ends of partially embedded waterstops from mechanical damage during periods of low temperature when concrete placement has been discontinued.

14.3.1 Type of Material. Waterstops may be rubber composed of natural rubber, a suitable synthetic rubber or a blend of natural and suitable synthetic rubber or of polyvinylchloride. Rubber waterstops shall conform to the requirements of CRD-C 513. Polyvinylchloride waterstops shall conform to the requirements of CRD-C 572.

14.3.2 Splices. All joints in the waterstop shall be spliced together to form a continuous watertight diaphragm in each joint. All splices shall be neat with the ends of the joined materials in true alignment. A temporary shop and bench shall be provided at the site of the installation and in every possible instance splices shall be made on the

bench in the shop. All intersection splices shall be prefabricated at the manufacturer's plant or on the bench in the field shop. A miter box guide and portable power saw shall be provided and used to cut the ends to be joined to insure good alignment and contact between joined surfaces. The continuity of the characteristic members of the cross sections of the waterstop design ribs, tabular center axis, protrusions, and the like shall be maintained across the splice.

14.3.2.1 Rubber. Splices in rubber waterstops shall be vulcanized in accordance with the manufacturer's recommendations.

14.3.3 Polyvinylchloride (PVC). Splices in PVC waterstops shall be made by heat sealing the adjacent surfaces in accordance with the manufacturer's recommendations. A thermostatically controlled electric source of heat shall be used to make all splices. The correct temperature at which splices should be made will differ with the material concerned but should be sufficient to melt but not char the plastic. After splicing, a remolding iron with ribs and corrugations to match the pattern of the waterstop shall be used to reform the ribs at the splice.

14.3.3.1 Testing. The Contractor shall submit samples of waterstops and samples of job-made and factory-made splices of waterstops for inspection and testing in accordance with CRD-C 513 and 572. The testing of the samples of waterstop and splices shall be performed by and at the expense of the Government. If a sample fails to meet the specifications requirements the waterstop or splicing method will be rejected and new samples shall be submitted for inspection and testing. The cost of retesting will be deducted from payments due the Contractor at the rate of $425.00 per waterstop sample retested and $250.00 per splice sample retested.

14.3.3.2 Samples of Waterstop Material. Each sample shall be a piece not less than 12 inches long cut from each 200 feet of finished waterstop furnished. Samples of waterstop furnished for inspection and testing shall include not less than a total of four lineal feet of each size and type furnished in each shipment to the job site. Each sample shall be identified to indicate the manufacturer, size, type of material, and quantity of material and shipment sample respresents.

14.3.3.3 Samples of Job-Made and Factory-Made Splices. As a condition of approval of the proposed method of splicing the Contractor shall make 3 test splices in the presence of the Contracting Officer of the finished waterstops of each size and type of waterstop to be spliced in the factory and at the job site using the proposed method of splicing for inspection and testing. The sample splices shall be made using straight run pieces with the splice located at the mid-length of the sample and finished as required for the installed waterstop. The total length of each spliced sample shall be not less than 12 inches long. In addition to the foregoing test splices at least one test splice of each size and type, using the approved method, shall be furnished for inspection and testing for every 50 splices made in the factory and for every ten splices made at the job site.

15. FINISHING.

15.1 Formed Surfaces. Immediately after removal of forms, all ridges or lips shall be removed and undesirable local bulging on the surfaces to be permanently exposed shall be remedied. Excessive rubbing of formed surfaces will not be permitted. Voids and holes left by the removal of tie rods in all permanently exposed surfaces and surfaces to be exposed to water shall be reamed and completely filled with dry-patching mortar (preshrunk) mixed in the proportions directed. The cement used in the mortar for all surfaces permanently exposed to view shall be a blend of portland cement and white portland cement properly proportioned so that the final color of the cured mortar will be the same as the color of the surrounding concrete. The sand shall pass a No. 16 sieve. Defective concrete shall be repaired by cutting out the unsatisfactory material and placing new concrete which shall be secured with keys, dovetails or anchors. Concrete for patching shall be drier than the usual mixture and shall be thoroughly tamped into place. No patching will be done when either the concrete or ambient temperature is below 50 degrees F.

15.2 Unformed Surfaces. The ambient temperature of spaces adjacent to surfaces being finished shall be not less than 50 degrees F. All unformed surfaces of concrete that are not to be covered by additional concrete or backfill, shall have a wood float finish, unless a steel trowel finish is specified, and shall be true to elevation as shown in drawing. Surfaces to receive additional concrete or backfill shall be brought to the elevation shown on the drawings by screeding and left true and regular. Surfaces to receive a wood float finish shall be screeded and floated with straightedges to bring the surface to the required finish level with no coarse aggregate visible. No cement or mortar shall be added to the surface during the finishing operation. Floating may be performed by use of hand or power driven equipment. The concrete, while still green but sufficiently hardened to bear a man's weight without deep imprint, shall be wood-floated to a true even plane.

Exterior surfaces shall be sloped for drainage unless otherwise shown on the drawings as directed. Joints shall be carefully made with a jointing tool. The finish surface shall be protected from stains or abrasions. Surfaces or edges likely to be injured during the construction period shall be protected from damage.

15.3 Sandblast Finish. The exposed finish surfaces of channel wall located on east side of Hayden Road shall have a sandblasted finish. Sandblasting shall be to a depth of 1/8 inch below the formed surface.

15.4 Concrete Floor and Roof Slab Finishes. The ambient temperature of spaces being finished shall be not less than 50 degrees F. Finished floor and roof slab surfaces shall be true plane surfaces with no deviation in excess of 1/8 inch when tested with a 10-foot straightedge. Surface shall be pitched to drains. The dusting of finish surfaces with dry materials or additions of water to concrete surfaces will not be permitted. The concrete for floor and roof slabs shall be screeded and floated with straightedges to bring the surface to the required finish level with no coarse aggregate visible. The concrete, while still green but sufficiently hardened to bear a man's weight without deep imprint, shall be wood-floated to a true, even plane. After the surface moisture has disappeared, the surfaces shall be troweled to the required finish with no coarse aggregate visible. Floor surface shall be steel-troweled to a smooth, even, dense finish free from blemishes including trowel marks. Roof surfaces shall be lightly steel troweled and left free of ridges and other projections.

Type III portland cement	3 days
Type I portland cement	7 days
Type II portland cement	14 days

The Contractor shall have all equipment needed for adequate curing and protection of the concrete on hand and ready to install before actual concrete placement begins. The curing medium and method, or the combination of mediums and methods used, shall be approved in writing. The curing medium shall be applied so as to prevent loss of moisture from the concrete. Concrete shall be protected from the damaging effects of rain for 12 hours, flowing water for 14 days and direct rays of the sun for 3 days. All concrete shall be adequately protected from damage. No fire or excessive heat shall be permitted near or in direct contact with concrete at any time. Formed openings through the concrete shall be closed during the entire construction period.

16.2 Moist Curing. Concrete shall be moist-cured by maintaining all surfaces continuously (not periodically) wet for the duration of the entire curing period. Water for curing shall comply with the requirements of paragraph: WATER. If water is used which stains or discolors concrete surfaces which are to be permanently exposed, they shall be cleaned as required in paragraph: APPEARANCE. Where forms of tongue-and-groove or shiplap sheathing are left in place during curing, the sheathing shall be kept wet at all times. Horizontal surfaces shall be cured by ponding, by covering with a minimum uniform thickness of 2 inches continuously saturated sand, or by covering with saturated non-staining burlap or cotton mats.

16.3 Membrane Curing. Concrete may be cured with an approved curing compound as indicated below in lieu of moist curing. Membrane curing will not be permitted on surfaces to receive a smooth finish or any surfaces to which concrete is to be painted or bonded, cut-off walls, floor and roof slabs, surfaces to receive a floor hardener, and surfaces to receive joint materials.

16.3.1 A pigmented type curing compound conforming to CRD-C 300 shall be used.

16.3.2 The Contractor shall notify the Contracting Officer of the source from which the curing compound will be obtained at least 45 days in advance of the time when concrete placing is expected to begin. The Contractor shall provide satisfactory facilities for ready procurement of adequate test samples. The sampling and testing will be by and at the expense of the Government.

16.3.3 The curing compound shall be applied to formed surfaces immediately after the forms are removed and prior to any patching or other surface treatment except the cleaning of loose sand, mortar, and debris from the surface. The surfaces shall be thoroughly moistened with water and the curing compound applied as soon as free water disappears. The curing compound shall be applied to unformed surfaces as soon as free water has disappeared. The curing compound shall be applied by approved power spraying equipment with an overlapping coverage that will give a two-coat application at a coverage of not more than 400 square feet per gallon for each coat. The application of curing compound by hand-operated pressure sprayers will be permitted only on odd widths or shapes of slabs, and on concrete surfaces exposed by the removal of forms. When application is made by hand-operated sprayers, the second coat shall be applied in a direction approximately at right angles to the direction of the first coat. The compound shall form a uniform, continuous, cohesive film that will not check, crack, or peel, and that will be free from pinholes and other discontinuities. If pinholes, abrasions, or other discontinuities exist, an additional coat shall be applied to the affected areas within 30 minutes. Concrete surfaces which have been subjected to rainfall within 3 hours after curing compound has been applied shall be resprayed by the method and at the coverage herein specified. All concrete surfaces on which the curing compound has been applied shall be adequately protected for the duration of the entire curing period from pedestrian and vehicular traffic and from any other cause which will disrupt the continuity of the curing membrane.

16.4 Cold Weather. The air and forms in contact with concrete sections having a minimum dimension less than 12 inches shall be maintained at a temperature above 50 degrees F for at least the first 3 days and at a temperature above 32 degrees F for the remainder of the specified curing period. The air and forms in contact with concrete in more massive sections shall be maintained at a temperature above 40 degrees F for at least the first 3 days and at a

temperature above 32 degrees F for the remainder of the specified curing period. In addition, during the period of protection and protection removal, the air temperature adjacent to the concrete surfaces shall be controlled so that concrete near the surface will not be subjected to a temperature differential of more than 25 degrees F as determined by observation of ambient and concrete temperatures indicated by suitable thermometers furnished by the Government as required and installed adjacent to the concrete surface and 2 inches inside the surface of the concrete. The installation of the thermometers shall be made by the Contractor at such locations as may be directed. Curing compounds shall not be used on concrete surfaces which are maintained at curing temperature by use of free steam.

17. FORMS AND FORMED SURFACES.

17.1 General. Forms shall be mortartight and shall be structurally adequate, properly aligned and adequately supported to produce concrete surfaces meeting the surface requirments specified below under "Surface Finish Requirements" and conforming to the positions shown on the drawings within the tolerance specified below under "Construction Tolerances". That portion of the form in contact with the concrete shall not be a material which interferes with the setting of the concrete. Where forms for continuous surfaces are placed in successive units, care shall be taken to fit the forms over the completed surface so as to obtain accurate alignment of the surface and to prevent leakage of mortar. Responsibility for their adequacy shall rest with the Contractor; however, the type, shape, size, quality, and strength of all materials of which the forms are made shall be submitted for review. Bolts and rods used for internal ties shall be so arranged, that when the forms are removed, metal will be not less than 2 inches from any concrete surface. Wire ties will not be permitted where the concrete surface will be exposed to weathering and where discoloration will be objectionable. All forms shall be so constructed that they can be removed without damaging the concrete. All exposed joints, edges, and external corners shall be chamfered and dummy chamfers and false joints shall be used to provide a neat and uniform appearance, unless otherwise directed or indicated on the drawings. Chamfered joints shall not be permitted where earth or rockfill is placed in contact with concrete surfaces. Chamfered joints shall be terminated a sufficient distance outside the limits of the earth or rock fill so that the ends of the joints will be clearly visible.

17.1.1 Starter Walls. Complete shop drawings shall be submitted and approved prior to use. The starter wall forms shall be so supported as to remain vertical during the placement and finishing of concrete. The starter wall form butt joints shall be rigid so that there can be no movement between butting forms. Screed rail supports, which must be removed prior to the setting of concrete, shall not be a part of the starter wall form supports. Starter wall form supports shall not be removed for 12 hours after placement of concrete. The purpose of the starter wall is to provide an aligned vertical face to permit wall forms to be tightened at the bottom to prevent offsets and grout leakage.

17.2 Surface Finish Requirements. The class of finish required for the various surfaces of the structures shall be as hereinafter specified. Allowable irregularities are designated "abrupt" and "gradual" for purposes of providing tolerances. Offsets resulting from displaced, misplaced or mismatched forms, or sheathing, or by loose knots in sheathing, or other similar form defects, shall be considered "abrupt" irregularities. Irregularities resulting from warping, unplaneness and similar uniform variations from planeness, or true curvature, shall be considered "gradual" irregularities. "Gradual" irregularities will be checked for conformance with the prescribed tolerance by means of 5-foot templates composed of a straight edge for plane surfaces, or a "shaped" template for curved or warped surfaces. Where concrete surfaces are to be permanently exposed to view, joints in form panels shall be arranged to provide a pleasing appearance. The requirements for the classes of finish and for the types of form materials permitted for each class shall be as indicated below.

Class "B" Finish. This class of finish shall apply to all formed surfaces of concrete that will be permanently exposed to view. The sheathing shall be composed of tongue and groove lumber, shiplap, plywood, concrete form board, or steel. Steel lining on wood sheathing will not be permitted. The sheathing shall provide a surface which will produce a concrete surface meeting the following tolerances: "Abrupt" irregularities shall not exceed 1/4-inch and "gradual" irregularities shall not exceed 1/2-inch in 5 feet determined in the specified manner.

Class "D" Finish. This class of finish shall apply to all formed surfaces of concrete upon or against which concrete or earth will be placed. The sheathing may be of wood, or steel, or may be steel lined. "Gradual" and/or "abrupt" irregularities shall not exceed 1-inch.

17.3 Construction Tolerances. Variation in alignment, grade and dimensions of the structures from the established alignment, grade and dimensions shown on the drawings shall be within the tolerances specified in the following tables.

TABLE I

CONSTRUCTION TOLERANCES FOR MASS CONCRETE STRUCTURES

(1)	All structures:		
	a.	Variation of the constructed linear outline from established position in plan	. . . . . 1 inch In buried construction and bulkhead faces . . . . . 2 inches
	b.	Variations of dimensions to individual structure features from established	. . . . . 1 inch In buried construction and bulkhead faces . . . . . 2 inches
(2)	a.	Variation from the plumb, from the specified batter, or from the curved surfaces of all structures, including the lines and surfaces of columns, walls, piers, buttresses, vertical joint grooves, and visible arises	In 10 feet . . . . . 1/2 inch In 20 feet . . . . . 3/4 inch In 40 feet or more . . . . . 1-1/4 inches In buried construction, twice the above amounts For watertight joints see (5) below
	b.	Variation from the level or from the grades indicated on the drawing in slabs, beams, soffits, lintels, sills, horizontal joint grooves, and visible arises	In 10 feet . . . . . 1/4 inch In 30 feet or more . . . . . 1/2 inch In buried construction, twice the above amounts
(3)	a.	Variation in cross sectional dimensions of columns, beams, buttresses, piers, and similar members	Minus . . . . . 1/4 inch Plus . . . . . 1/2 inch
	b.	Variation in the thickness of slabs, walls, and similar members	Minus . . . . . 1/4 inch Plus . . . . . 1/2 inch
(4)	Footings for columns, piers, walls, buttresses, and similar members:		
	a.	Variation of dimension in plan	Minus . . . . . 1/2 inch Plus . . . . . 2 inches
	b.	Misplacement of eccentricity	2 percent of footing width in the direction of misplacement, but not more than . . . . . 2 inches
	c.	Reduction in thickness	5 percent of specified thickness
(5)	Sills, sidewalls against which miter gates are mounted, piers against which radial gates are mounted, and similar watertight joints: Variation from the plumb and level		. . . . . not greater than a rate of 1/8 inch in 10 feet
(6)	Variation in the sizes and locations of sleeves, floor openings, and wall openings		. . . . . 1/4 inch
(7)	Variation in steps:		
	a.	In a single step	Riser . . . . . 1/8 inch Tread . . . . . 1/4 inch
	b.	In two consecutive steps	Riser . . . . . 1/16 inch Tread . . . . . 1/8 inch

17.4 Coating. Forms for exposed or painted surfaces shall be coated with form oil or form-release agent before the form or reinforcement is placed in final position. The coating shall be a commercial formulation of satisfactory and proven performance that will not bond with stain or adversely affect concrete surfaces, and will not impair subsequent treatment of concrete surfaces depending upon bond or adhesion nor impede the wetting of surfaces to be cured with water or curing compounds. The coating shall be used as recommended in the manufacturer's printed or written instructions. Forms for unexposed surfaces may be wet with water in lieu of coating immediately before placing concrete, except that in cold weather with probable freezing temperatures coating shall be mandatory. Surplus coating on form surfaces and coating on reinforcing steel and construction joints shall be removed before placing concrete.

17.5 Removal. Forms shall not be removed without approval, and all removal shall be accomplished in a manner which will prevent injury to the concrete. Forms shall not be removed before the expiration of the minimum time indicated below, except as otherwise directed or specifically authorized.

	Concrete with Type I or II Portland Cement
Beams and deck-type slabs	144 hrs
Walls (lifts 15 ft. and under)	24 hrs

When conditions on the work are such as to justify the requirement, forms will be required to remain in place for longer periods.

18. FURNISHING AND PLACING STEEL REINFORCEMENT.

18.1 General. The Contractor shall furnish, cut, bend and place all steel reinforcement including rods, fabric and structural shapes as indicated on the drawings or otherwise required. At the time of concrete placement, all reinforcement shall be free from loose flaky rust, scale (except tight mill scale), mud, oil, grease or other coating that might reduce the bond with the concrete. Unless otherwise indicated herein or on the drawings or approved by the Contracting Officer, furnishing and placing of reinforcement shall be in accordance with ACI 315 or ACI 318. Unless specifically indicated on the drawings arc-welding of crossing bars, ties, stirrups, spirals or any other reinforcement will not be permitted.

18.2 Shop Drawings. The Contractor shall prepare and submit for approval of the Contracting Officer complete shop drawings in accordance with these requirements and requirements given elsewhere in these specifications. The shop drawings shall include details of the bending and placing schedule of the steel reinforcement together with bar schedules indicating the quantity, size, dimensions, total length, unit weight, and total weight of the various bars required. Details of bar supports including types, sizes, and placing tables and sequence shall be submitted for approval.

18.3 Quality. The steel reinforcement shall be Grade 40 deformed billet steel bars conforming to the requirements of ASTM A 615, including the following exceptions:

(1) Tension test specimens will be the full section of the bar as rolled for all sizes;

(2) The bend test requirements shall be based upon 180 degree bends of full size bars, for all grades of steel. The bend diameters for bend tests shall be as indicated in the following table and shall be measured on the inside of the bars.

Bar Size	Maximum Diameter
No. 3, No. 4, and No. 5	3-1/2 bar diameters
No. 6, No. 7 and No. 8	5 bar diameters
No. 9, No. 10 and No. 11 (Grade 40)	5 bar diameters

Welded steel wire fabric shall conform to ASTM A185. The Contractor will furnish results of all tension and bend tests performed.

18.4 Hooks and Bends. Steel reinforcement may be mill or field bent. All bars shall be bent cold unless otherwise authorized. No bars partially embedded in concrete shall be field bent unless indicated on the drawings or otherwise authorized. All hooks or bends shall be in accordance with ACI 318.

18.5 Placing Reinforcement.

18.5.1 General. Steel reinforcement shall be accurately located in the forms within the specified tolerances and adequately supported to prevent displacement during concrete placement.

18.5.2 Supports. Wire bar supports shall conform to ACI 315. Wire ties shall be 16-gage or heavier black annealed wire and shall have ends pointing away from the form. Bar supports for formed surfaces exposed to view or to be painted shall be plastic protected, stainless steel or precast concrete units. Precast concrete bar supports shall be wedge-shaped, not larger than 3-1/2 x 3-1/2 inches and of thickness equal to that indicated for concrete cover with an embedded hooked tie wire for anchorage. If formed surface is exposed to view the precast concrete bar support shall be the same texture and color as the finished surface.

18.5.3 Spacing of Bars. The bars shall be spaced as indicated on the drawings or as otherwise directed. The spacing between adjacent bars and the distance between layers may not vary from the indicated position by more than one bar diameter nor more than one inch.

18.5.4 Concrete Protection for Reinforcement. The minimum concrete cover of main reinforcement shall be as indicated on the drawings. The minimum cover may not vary more than the maximum variation indicated in Table II with all permissible variations increasing the minimum cover required with no reduction of minimum cover permitted.

TABLE II

TOLERANCES FOR REINFORCING STEEL COVER

CLEAR COVER	MAX. VARIATION
6"	1/2"
4"	3/8"
3"	3/8"
2"	1/4"
1-1/2"	1/4"
1"	1/8"
3/4"	1/8"

18.6 Welding Reinforcement. Welding of steel reinforcement will be permitted only where indicated on the drawings or otherwise directed. Welding shall be performed in accordance with AWS Standard D12.1.

18.7 Splicing. All splices in reinforcement shall be as shown on the drawings. Bars may be spliced at alternate or additional locations at no additional cost to the Government, subject to the approval of the Contracting Officer. Except as provided herein, all splicing shall be in accordance with ACI 318.

18.7.1 Lapped Splices. Lapped splices shall be used only for bars smaller than size No. 14. Bar laps may be placed in contact and securely tied or may be separated sufficiently to permit the embedment of the entire surface of each bar in concrete, but shall not be spaced transversely farther apart than one-fifth the required length of lap nor 6 inches. Lengths of laps for bars or welded wire fabric shall conform to the requirements of ACI 318, except when otherwise shown on the drawings.

19. FORMED HOLES shall be formed as approved. Forms shall be removable. The formed holes shall be sealed to prevent the intrusion of concrete during concrete placement. Fence post holes shall conform to the requirements of the section: FENCING.

20. EMBEDDED ITEMS. Before placing concrete, care shall be taken to determine that all embedded items are firmly and securely fastened in place as indicated on the drawings, or required. Embedded items shall be free of oil and other foreign matter such as loose coatings of rust, paint, and scale. The embedding of wood in concrete will be permitted only when specifically authorized or directed. Any air or water lines or other materials embedded in structures, as authorized construction expedients shall conform to the above requirements and upon completion of their use shall be backfilled with concrete or mortar as directed.

21. APPEARANCE. Surfaces which are to be permanently exposed shall be cleaned if stained or otherwise discolored, by a method which does not harm the concrete and which is approved by the Contracting Officer.

22. CONTRACTOR QUALITY CONTROL.

22.1 General. The Contractor shall perform the inspection and tests described in paragraph, "Inspection Details and Frequency of Testing" and based upon the results of these inspections and tests he shall take the action required in paragraph, "Action Required". Reports shall be submitted as required in paragraphs, "Action Required" and "Reports".

22.2 Inspection Details and Frequency of Testing.

22.2.1 Fine Aggregate.

22.2.1.1 Grading. Once during each shift when the concrete plant is operating, there shall be one sieve analysis and fineness modulus determination in accordance with CRD-C 103 and 104 for the fine aggregate or for each fine aggregate, if it is batched in more than one size or classification. The location at which samples are taken may be selected by the Contractor as the most advantageous for control. However, the Contractor is responsible for delivering fine aggregate to the mixer within specification limits. After the first 30 days of concrete placement the results shall be recorded on a sheet on which is also shown the specification limits applicable to the project.

22.2.1.2 Fineness Modulus Control Chart. Results for fineness modulus shall be grouped in sets of three consecutive tests and the average and range of each group plotted on a control chart. The upper and lower control limits for average shall be drawn 0.10 units above and below the target fineness modulus, and the upper control limit for range shall be 0.28.

22.2.1.3 Moisture Content. There shall be when in the opinion of the Contracting Officer the electric moisture meter is not operating satisfactorily at least two pairs of tests for moisture content in accordance with CRD-C 111, 112 or 113 during each 8-hour period of mixing plant operation. The two tests in each pair shall be spaced one hour apart and the times for the pairs shall be selected randomly within the 8-hour period. An additional test shall be made whenever the slump is shown to be out of control or excessive variation in workability is reported by the placing foreman. When the electric moisture meter is operating satisfactorily, at least two direct measurements of moisture content shall be made per week to check the calibration of the meter. Variability within a one-hour or 8-hour period may be determined by meter readings.

22.2.2 Coarse Aggregate.

22.2.2.1 Grading. At least once during each shift in which concrete plant is operating there shall be a sieve analysis in accordance with CRD-C 103 for each size of coarse aggregate. The location at which samples are taken may be selected by the Contractor as the most advantageous for production control. However, the Contractor is responsible for delivering the aggregate to the mixer within specification limits. A test record of samples of aggregate taken at the same locations shall show the results of the current test as well as the average results of the 5 most recent tests including the current test. The Contractor may adopt limits for control coarser than the specification limits for samples taken other than at the batch plant bins to allow for degradation during handling. Where facilities are available to test samples 5 times as large as those required in CRD-C 103, no averaging is necessary.

22.2.2.2 Moisture Content. A test for moisture content of each size of coarse aggregate shall be made at least once a shift. When two consecutive readings for smallest size coarse aggregate differ by more than 1.0 percent, frequency of testing shall be increased to that specified for fine aggregate.

22.2.2.3 Particle Shape. When, in the opinion of the Contracting Officer, a problem exists in connection with aggregate particle shape; tests shall be made in accordance with CRD-C 119. Testing frequency shall be not less than one per day.

22.2.2.4 Material Finer Than No. 200 Sieve. When in the opinion of the Contracting Officer, a problem exists in connection with the cleanliness of aggregate, tests shall be made in accordance with ASTM C 117. Testing frequency shall be not less than one per day.

22.2.3 Scales.

22.2.3.1 Weighing Accuracy. The accuracy of the scales shall be checked by test weights at least once a month for conformance with the applicable requirements of NBS Handbook 44 and shall be within 0.2 percent of scale capacity. Such tests shall also be made whenever there are variations in properties of the fresh concrete which could result from batching errors.

22.2.3.2 Batching and Recording Accuracy. Once a week the accuracy of each batching and recording device shall be checked during a weighing operation by noting and recording the required weight, recorded weight and the actual weight batched.

22.2.4 Batch-Plant Control. When the concrete plant is operating the measurement of all constituent materials including cement, each size of aggregate, water and admixtures shall be continuously controlled. The aggregate weights and amount of added water to compensate for free moisture in the aggregates shall be adjusted as necessary. The amount of air-entraining agent shall be adjusted to control air content within specified limits. A report shall be prepared indicating type and source of cement used, amount and source of admixtures used, aggregate source, the required aggregate and water weights per cubic yard, amount of water as free moisture in each size of aggregate, and the batched aggregate and water weights per cubic yard for each class of concrete batched during plant operation.

22.2.5 Concrete.

22.2.5.1 Air Content. At least two tests for air content shall be made on randomly selected batches of each class of concrete during each 8-hour period of concrete production. Additional tests shall be made when excessive variation in workability is reported by the placing foreman or government inspector. Tests shall be made in accordance with CRD-C 41 on that portion of the concrete containing no aggregate particles that would be retained on 2-inch square mesh sieve. The average of each set of two tests shall be plotted on a control chart on which the average is set at 5.0 percent and the upper and lower control limits at 6.0 and 4.0 percent respectively. The range shall be plotted on a control chart on which the upper control limit is 2.0 percent. For concrete having a maximum aggregate size of 3/4 inch, the average shall be set at 6.0 percent and the lower and upper control limits at 5.0 and 7.0 percent respectively.

22.5.2 Slump. At least two slump tests shall be made on randomly selected batches of each class of concrete during each 8-hour period of concrete production in accordance with CRD-C 5. Additional tests shall be made when excessive variation in workability is reported by the placing foreman or government inspector. The average of each set of two tests shall be plotted on a control chart on which the average is that stipulated by the Contracting Officer and the upper and lower limits are set 1.0 inch above and below the average. The range shall be plotted on a control chart on which the upper control limit is 2.0 inches.

22.5.3 Compressive Strength. The Contractor shall provide one set of test specimens taken under the supervision of the Contracting Officer for each mix design of concrete placed in each 4-hour or less period concrete is being placed. Each set shall consist of 5 test specimens, and shall be made from a separate batch. Samples shall be secured in conformance with ASTM Method C 172. Test specimens shall be made and cured in accordance with ASTM Method C 31. Specimens shall be cured under laboratory conditions except that the Contracting Officer may require curing under field conditions when he considers that there is a possibility of the air temperature falling below 40 degrees F. Cylinders will be tested in accordance with ASTM Test Method C 39. The specimens shall be delivered to the Contracting Officer in sufficient time for Contracting Officer to perform 7-day and 28-day testing.

22.2.6 Preparation for Placing. Foundation or construction joints, forms and embedded items shall be inspected in sufficient time prior to each concrete placement by the Contractor in order to certify to the Contracting Officer it is ready to receive concrete. The results of each inspection shall be reported in writing.

22.2.7 Placing. The placing foreman shall supervise all placing operations, shall determine that the correct class of concrete or grout is placed in each location as directed by the Contracting Officer and shall be responsible for measuring and recording concrete temperatures, ambient temperature, weather conditions, time of placement, yardage placed, and method of placement.

22.2.8 Curing.

22.2.8.1 Moist Curing. At least once each shift an inspection shall be made of all areas subject to moist curing. The surface moisture condition shall be noted and recorded.

22.2.8.2 Curing Compound. No curing compound shall be applied until the Contractor's authorized representative has verified that the compound is properly mixed and ready for spraying. At the end of each operation he shall estimate the quantity of compound used and the area of concrete surface covered and compute the rate of coverage in square feet per gallon. He shall note whether coverage is uniform.

22.2.9 Protection. At least once each shift an inspection shall be made of all areas subject to cold weather protection. Deficiencies shall be noted. During removal of protection, measurement of concrete and ambient temperature shall be made at least hourly.

22.2.10 Mixer Performance. A complete mixer performance test of three batches of concrete shall be made on each mixer in accordance with CRD-C 55 at the start of concrete placing and once a year thereafter. Truck mixers shall be tested for mixer performance in accordance with C 94. Additional tests may be made at any time to support a Contractor's request for reduction of mixing time. Whenever mixer adjustments are necessary because of failure of a mixer to comply, the mixer shall be retested after adjustment. The abbreviated test may be used for this purpose. Abbreviated tests shall be run routinely on each mixer at least once every two months.

22.2.11 Tolerances in Slab Thickness. Invert and side slope pavement shall be of the thicknesses indicated, and any deficiencies in the thickness shall be within the tolerances specified hereinafter.

22.2.11.1 Thickness Determination. The thickness of the invert and side slope pavements will be determined by the Government on the basis of measurements made on cores drilled from selected points within 2 weeks of completion of concreting operation. Measurements of individual cores will be performed in accordance with ASTM Standard C174. Drilling of cores and filling the holes shall be accomplished by the Contractor with at least one core drilled for each 2,500 square feet of pavement invert and side slope.

22.2.11.2 Permissible Deviation. Permissible deviation in concrete thickness will be up to but not including 1/4 inch.

22.3 Action Required.

22.3.1 Fine Aggregate.

22.3.1.1 Grading. When the amount retained on any sieve is outside the specification limits, the fine aggregate shall be resampled and retested. If there is another failure on the same sieve, the fact shall immediately be reported to the Contracting Officer. All such tests shall be included in the control charts. Whenever a point, either for average or range, is beyond one of the control limits the frequency of testing shall be doubled. If two consecutive points are beyond the control limits, the process shall be considered out of control. The Contracting Officer shall be notified, and immediate steps shall be taken to rectify the situation. After two consecutive points have fallen within the control limits, testing at the normal frequency may be resumed.

22.3.1.2 Moisture Content. Whenever the moisture content of the fine aggregate changes by 0.5 percent or more, the scale settings for the fine aggregate batcher and water batcher shall be adjusted directly or by means of a moisture compensation device. If, at any time, the requirements for moisture variation are not met, the Contracting Officer shall be notified and immediate steps shall be taken to reduce the variation.

22.3.2 Coarse Aggregate.

22.3.2.1 Grading. When the amount passing any sieve is outside the specification limits, the coarse aggregate shall be resampled and retested. If the second sample fails on the same sieve, that fact shall be reported to the Contracting Officer. Where two consecutive averages of 5 tests (or two consecutive tests where large samples are used) are outside of specification limits, that fact shall be reported to the Contracting Officer and immediate steps shall be taken to correct the grading.

22.3.2.2 Moisture Content. Whenever the moisture content of the smallest size of coarse aggregate changes by 0.5 percent or more, the scale settings for the aggregate batcher and water batcher shall be adjusted directly or by means of a moisture compensation device. If, at any time, the requirements for moisture variation are not met, the Contracting Officer shall be notified and immediate steps shall be taken to reduce the variation.

22.3.2.3 Particle Shape. When testing for particle shape is required, two consecutive failures in the same sieve size shall be immediately reported to the Contracting Officer, who shall provide instructions as to the necessity for corrective action.

22.3.2.4 Material Finer Than No. 200 Sieve. When testing for material finer than the No. 200 sieve is required by the Contracting Officer, and the tests results exceed 1.0 percent, the Contracting Officer shall be notified and immediate steps, such as washing or other corrective actions, shall be initiated immediately.

22.3.3 Scales. Whenever either the weighing accuracy or batching accuracy is found not to comply with specification requirements, the plant shall not be operated until necessary adjustments or repairs have been made.

22.3.4 Concrete.

22.3.4.1 Air Content. Whenever points on the control chart approach the upper or lower control limits an adjustment should be made in the amount of air-entraining admixture batched. If a single test result is outside the specification limit such adjustment is mandatory. As soon as practical after each adjustment another test shall be made to verify the correctness of the adjustment. Whenever a point falls above the upper control limit for range, the dispenser shall be calibrated to insure that it is operating correctly and with good reproducibility. Whenever two consecutive points either for average or range are outside the control limits, the Contracting Officer shall be notified. Whenever the air content departs from the specified range, the concrete shall not be delivered to the forms.

22.3.4.2 Slump. Whenever points on the control chart approach the upper or lower control limits an adjustment should be made in the batch weights of water and fine aggregate. When a single slump is outside the control limits such adjustment is mandatory. As soon as practical after each adjustment another test shall be made to verify the correctness of the adjustment. Whenever the slump departs from that stipulated by the Contracting Officer by more than 1-1/2 inches the concrete shall not be delivered to the forms. Whenever two consecutive slump tests, made during a period when there was no adjustment of batch weights, produce a point on the control chart for range above the upper control limit, the slump shall be considered to be out of control and the additional testing for aggregate moisture content required in paragraph "Moisture Content" shall be undertaken.

22.3.5 Placing. The placing foreman shall not permit placing to begin unitl he has verified that an adequate number of vibrators in working order and with competent operators are available. Placing shall not be continued if any pile is inadequately consolidated. If any batch of concrete fails to meet the temperature requirements, immediate steps shall be taken to improve temperature control.

22.3.6 Curing.

22.3.6.1 Moist Curing. When a daily inspection report lists an area of inadequate curing, the required curing period for that area shall be extended by one day.

22.3.6.2 Curing Compound. When the coverage rate of curing compound is less than that specified or when the coverage is not uniform, the entire surface shall be sprayed again.

22.3.7 Protection. Whenever any concrete temperature during the period of protection or protection removal fails to comply with the specifications, that fact shall be reported to the Contracting Officer and immediate steps should be taken to correct the situation.

22.3.8 Mixer Performance. When a mixer fails to meet mixer performance requirements, either the mixing time shall be increased or adjustments shall be made to the mixer until compliance is achieved.

22.3.9 Concrete Deficient in Thickness. When measurement of any core indicates that the invert or side slope pavement is deficient in thickness 1/4 inch or more, additional cores shall be drilled at 25 foot intervals along the centerline of the lane on each side of the original deficient core, until the cores indicate that the deficiency in thickness is less than 1/4 inch. Pavement areas deficient in thickness 1/4 inch or more, but less than one inch may be overlaid and left in place provided the slab reinforcement is demonstrated to be in the proper position and subject to approval of the Contracting Officer. Pavement areas deficient in slab thickness 1/4 inch or more, but less than one-inch and having misplaced reinforcement and pavement areas deficient in slab thickness one inch or more shall be removed and replaced for the full width of the original slab. Both the section of the slab removed and the section remaining in place shall have a minimum length equal to the slab width.

22.3.9.1 Removal and Replacement of Defective Pavement Areas. Defective pavement areas shall be removed and replaced as specified herein with pavements of the thickness and quality required by these specifications. The defective pavement shall be carefully removed in such manner that the adjacent pavement will not be damaged. When a portion of a slab is to be replaced, a saw cut the full depth of the slab shall be made 24 bar diameters but not less than 2 feet inside the portion to be removed and the slab removed. After the portion of the slab is removed, a saw cut 2 inches deep shall be made along the joint line, (except where there is an existing joint), using care to avoid damage to the reinforcement, and the remaining portion of the defective slab shall be carefully chipped out to an essentially vertical face on the portion to remain leaving the reinforcement protecting. Following placement of reinforcement and prior to placement of the fresh concrete, the face of the slab shall be cleaned of debris and loose concrete and then thoroughly coated with epoxy-resin grout. The epoxy-resin coating shall be approximately 1/16 inch, and shall be applied by scrubbing a thin coat of grout into the surface with a stiff-bristle brush followed by a second application. Placement of the fresh portland-cement concrete shall be accomplished while the epoxy-resin is still tacky and in such manner that the grout coating will not be removed. The replaced pavements will be paid for at the contract price but no payment will be made for defective pavements removed nor for removing defective pavements.

22.3.9.2 Overlay Pavement. When approved by the Contracting Officer, pavement areas deficient 1/4 inch or more but less than one inch in thickness may be allowed to remain in place and be overlaid with 2 inches of new concrete as follows: The surface of the existing concrete shall be free of all greases, oils, laitance, curing compound, and debris. Curing compound shall be removed by sandblasting and the surface shall be thoroughly washed with a high-pressure water jet followed by an air jet to remove free water. The clean surface shall then be coated with a 20- to 40-mil- thick film of epoxy-resin grout. The epoxy-resin grout shall be placed in one application, just prior to concrete placement, with the use of mechanical combination mixing and spraying equipment, or shall be applied in two coats with stiff brushes. The first brush coat shall be scrubbed into the concrete surface followed by an additional brush coat to obtain the required thickness. When the brush method is used, the initial coat may be allowed to dry, however, the final coat shall be applied just prior to placement of concrete. Edges of the overlay pavement shall be notched into the underlying slab and the surface of the pavements finished flush. When tested with a 10 foot straight edge in the direction of flow deviation from the straight edge at the juncture shall not exceed 1/2 inch and there shall be no abrupt irregularities.

22.3.9.2.1 Epoxy-resin-grout components shall be mixed in the proportions recommended by the manufacturer. The components shall be kept at 70 to 80 degrees F. for 48 hours prior to mixing. The two epoxy components shall be mixed with a power-driven, explosion-proof stirring device in a metal or polyethylene container having a hemispherical bottom for the mixing vessel. The polysulfide curing-agent component shall be added gradually to the epoxy-resin component with constant stirring until a uniform mixture is obtained. The rate of stirring shall be such that the entrained air is a minimum.

22.3.9.2.2 Tools and equipment to be used further in the work shall be thoroughly cleaned before the epoxy-resin grout sets.

22.3.9.2.3 Time of placement of concrete overlay. The placement of the concrete shall be completed while the epoxy-resin grout is still tacky.

22.3.9.2.4 Health and Safety Precautions. Health and safety precautions shall conform to the applicable Federal, State and local regulations and to the following minimum precautions.

a. Full face shields shall be used during all mixing and blending operations and during placing operations as required.

b. Protective coveralls and neoprene-coated gloves shall be provided all workmen engaged in the operations.

c. Protective creams suitable for the operation shall be provided.

d. Adequate fire protection shall be maintained at all mixing and placing operations.

e. Smoking, and the use of spark- or flame-producing devices shall be prohibited within 50 feet of mixing and placing operations.

f. The mixing, placing, or storage of epoxy-resin grout or solvent shall be prohibited within 50 feet of any vehicle, equipment or machinery that could be damaged from fire or could ignite vapors from the material.

22.3.9.2.5 In event the overlay method of correcting pavement deficiencies is used, no additional compensation will be allowed therefor.

22.4 Reports. All results of tests conducted at the project site shall be reported weekly and shall be delivered to a designated representative of the Contracting Officer within 3 days after the end of each weekly reporting period. Each weekly report shall include the updating of control charts covering the entire period from the start of the construction season through the current week. During periods of cold weather protection, reports of pertinent temperatures shall be made daily. These requirements do not relieve the Contractor of the obligation to report certain failures immediately as required in preceding paragraphs. Such reports of failures and the action taken shall be confirmed in writing in the rountine reports. The Contracting Officer has the right to examine all Contractor quality control records.

* * * * *

STANDARD DETAIL 141 & 142

CITY OF PHOENIX
ENGINEERING DEPARTMENT

SINGLE CURB

APPROVED: Sam Tucker 17 June 60
CITY ENGINEER DATE

ALL VERTICAL SURFACES FROM 2" BELOW UNDISTURBED SOIL TO BE FORMED
VERTICAL SURFACES DOWN FROM 2" BELOW UNDISTURBED SOIL MAY BE PLACED AGAINST NEAT CUT IF APPROVED BY THE ENGINEER AND CONCRETE WILL NOT EXTEND MORE THAN 1" BEYOND THEORETICAL FACE
ALL EXPOSED SURFACES TO BE STRIPPED GREEN AND TROWEL FINISHED.

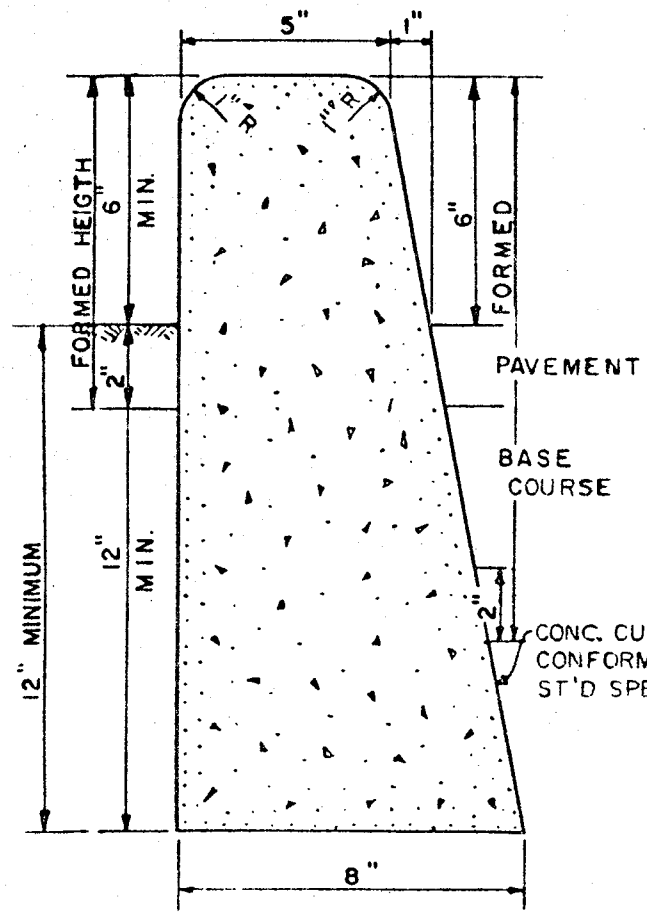

141

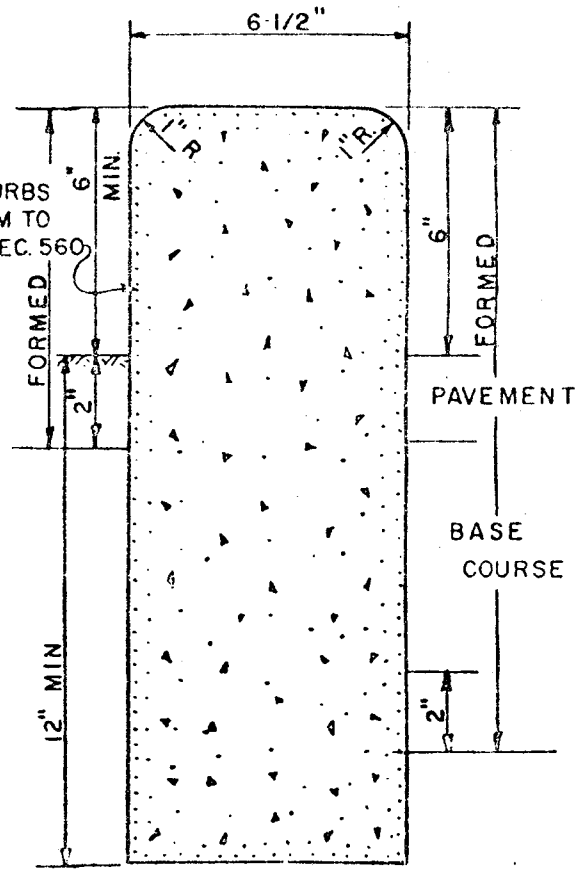

142

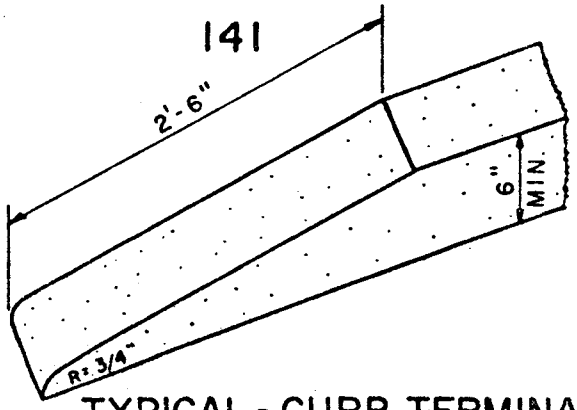

TYPICAL - CURB TERMINATION

REV 3-72 WF
REV EJL 3-60

STANDARD DETAIL 146

CITY OF PHOENIX
ENGINEERING DEPARTMENT

COMBINED CURB & GUTTER

APPROVED J. E. Atteberry 5/27/71
CITY ENGINEER DATE

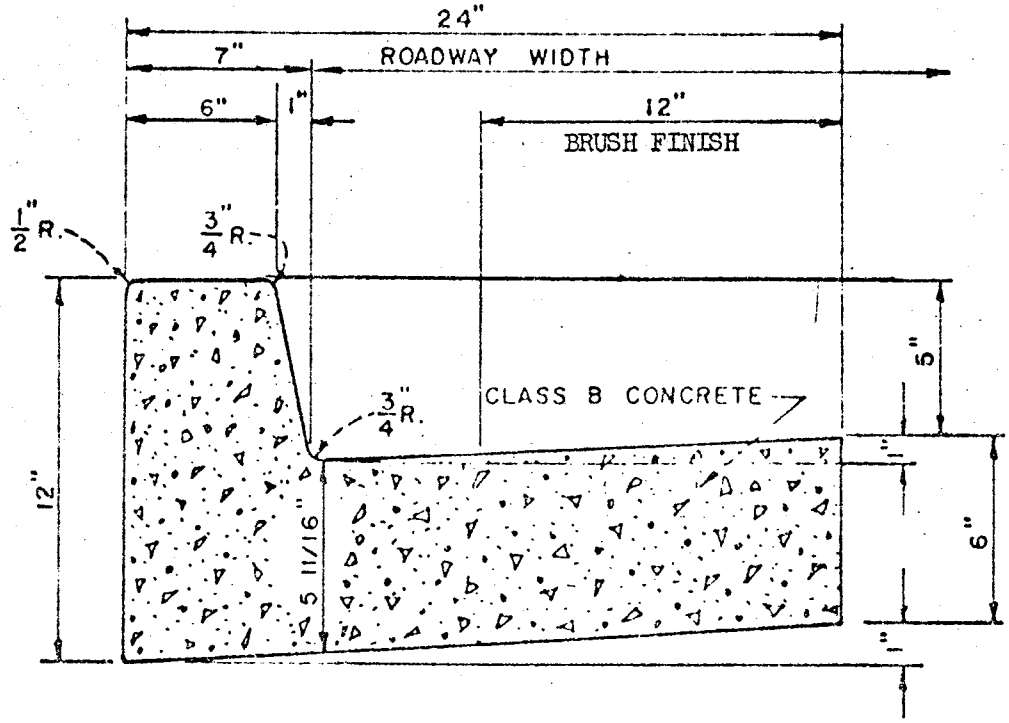

ALL EXPOSED SURFACES TO BE TROWEL FINISHED EXCEPT AS SHOWN.

SEE STANDARD SPECIFICATION 560.

SYMBOL

Rev. 3-72

REV. 9-1-71

NOT TO SCALE

STANDARD DETAIL 155

CITY OF PHOENIX
ENGINEERING DEPARTMENT

COMMERCIAL & INDUSTRIAL DRIVEWAYS (WITH COMBINED CURB & GUTTER)

APPROVED _____ 10/31/74
CITY ENGINEER DATE

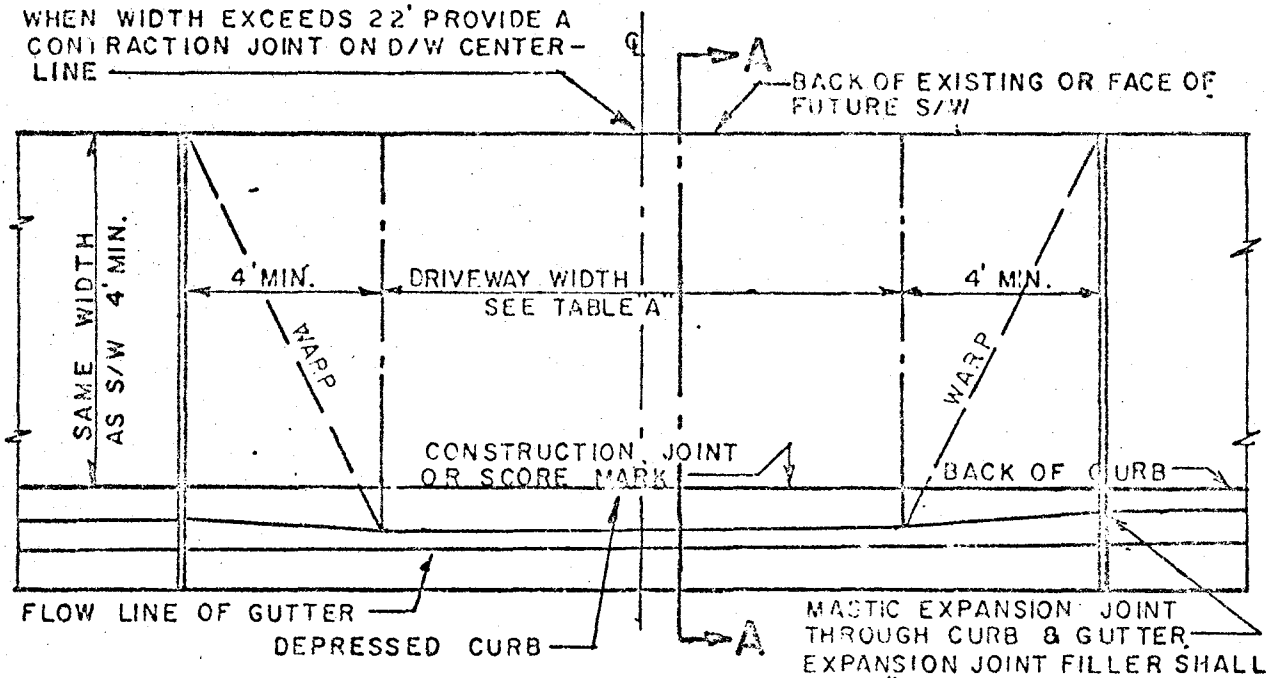

SYMBOL WITH SIDEWALK

DRIVEWAY WIDTH	MIN.	MAX.	CLASS	DEPTH
COMMERCIAL ZONING	16'	40'	B	6"
INDUSTRIAL ZONING	16'	40'	B	6"

TABLE 'A'

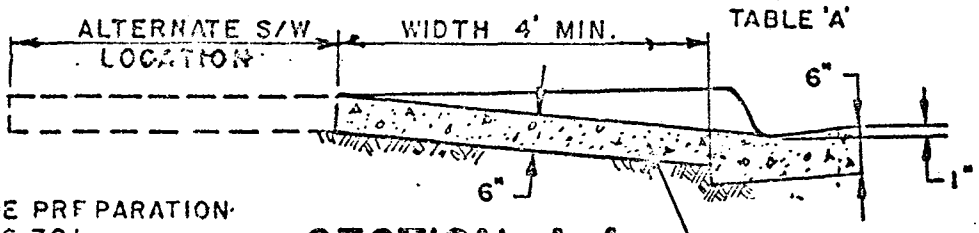

SUBGRADE PREPARATION STD. SPEC. 301

SECTION A-A

CLASS 'B' CONCRETE STD. SPEC. 725

NOTES: 1. DEPRESSED CURB SHALL BE PAID FOR AS COMBINED CURB & GUTTER OR CONCRETE PAVEMENT WITH THICKENED EDGES & INTEGRAL CURB DEPENDING ON WHETHER CONCRETE OR ASPHALT PAVING IS USED.

2. PAYMENT FOR DRIVEWAY SHALL BE ON A SQUARE FOOTAGE BASIS.

NOT TO SCALE

STANDARD DETAIL 180

CITY OF PHOENIX

ENGINEERING DEPARTMENT

SIDEWALKS

APPROVED [illegible] , 10/25/74
CITY ENGINEER DATE

SIDEWALK CONSTRUCTION SHALL CONFORM TO STANDARD SPECIFICATION 340

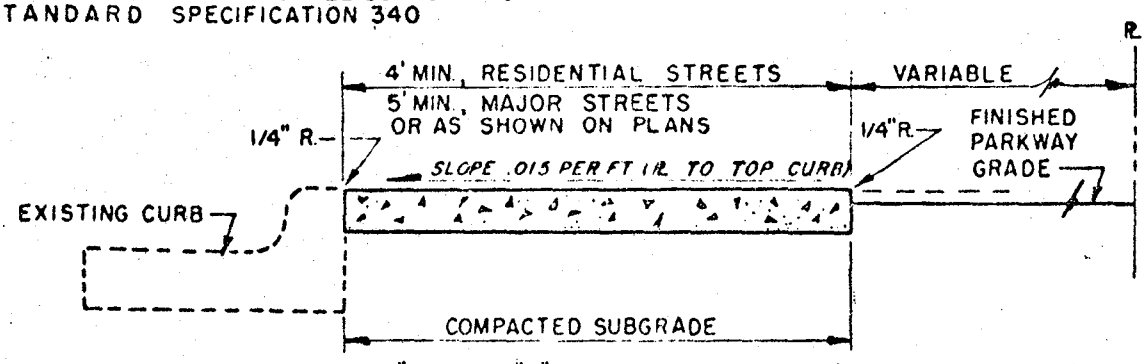

4" CLASS "B" CONCRETE ST'D SPEC'S. 505 & 725

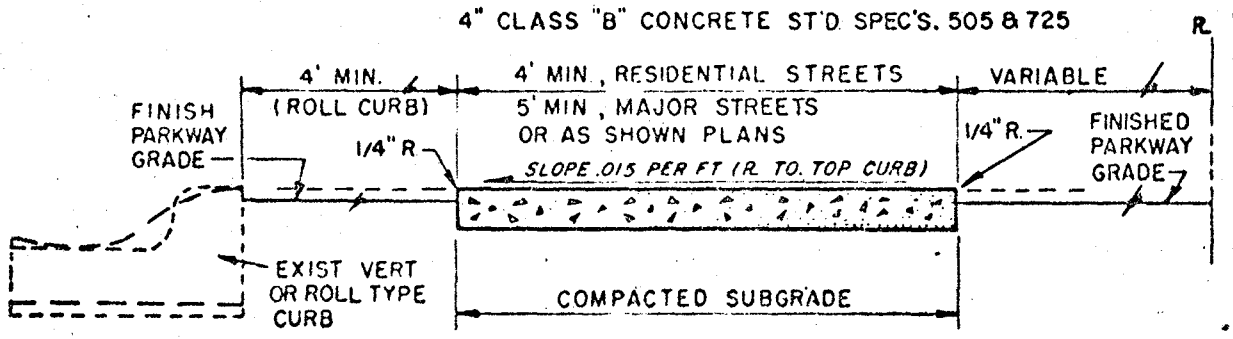

EXPANSION JOINT

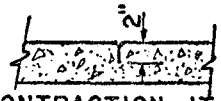

CONTRACTION JT.

EXPANSION JOINT FILLER SHALL BE 1/2" BITUMINOUS TYPE PREFORMED EXPANSION JOINT FILLER, ASTM D-1751

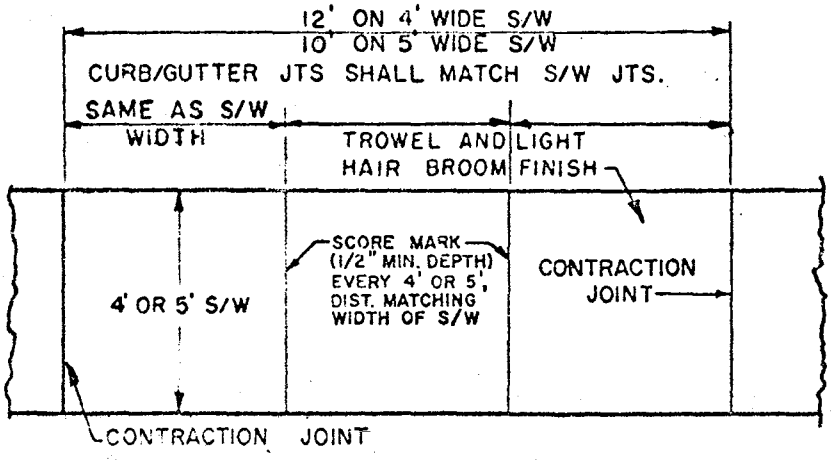

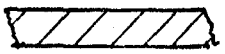

SYMBOL

SECTION 4B

CONCRETE FOR BRIDGE

Index

1. Applicable Publications
2. Prestressed Girders
3. Composition
4. Quality
5. Cement, Air-Entraining Admixture, Aggregates, and Water
6. Proportioning of Concrete
7. Batching and Mixing, and Conveying
8. Placing
9. Construction Joints
10. Finishing
11. Curing and Protection
12. Forms and Falsework
13. Furnishing and Placing Steel Reinforcement
14. Railing Adjustment

1. APPLICABLE PUBLICATIONS. The following publications of the issues listed below, but referred to thereafter by basic designation only, form a part of this specification to the extent indicated by the references thereto.

1.1 American Society for Testing and Materials (ASTM) Publications.

C 31-69	Making and Curing Concrete Compression and Flexure Test Specimens in the Field
C 39-72	Compressive Strength of Molded Concrete Cylinders
C 192-76	Making and Curing Concrete Test Specimens in the Laboratory

1.2 U.S. Department of Commerce Publication, National Bureau of Standard Publications.

Product Standard:

PS 1-74	Construction and Industrial Plywood

1.3 Military Specification.

MIL-W-13518C & Am-1	Tetrachlorophenol and Pentachlorophenol, Surface Sealing Compound

1.4 West Coast Lumber Inspection Bureau (WCLB), Standard.

Standard Grading and Dressing Rules for West Coast Lumber, No. 16 (Sep. 1, 1970, Rev. Dec. 1, 1976)

2. PRESTRESSED GIRDERS for bridge shall conform to the requirements of the section: PRECAST-PRESTRESSED CONCRETE GIRDERS FOR BRIDGE.

3. COMPOSITION Concrete shall be composed of Portland cement, water, fine and coarse aggregate. An air-entraining admixture shall be used when bridge components (bridge abutments and piers) become integral parts of the channel structure.

4. QUALITY.

4.1 General. Except as otherwise specified for the bridge superstructure, the concrete mixtures will be designed by the Contracting Officer who will determine the required quality of the concrete for the structures covered by these specifications.

4.2 Superstructure.

4.2.1 General. In order to allow earlier form removal, upon request, permission will be granted to the Contractor to design the concrete required for the superstructure, consisting of decks, wasteway wall, and railings, and the Government will accept this concrete and also permit the removal of forms on the basis of concrete cylinder tests. If the Contractor elects this option, removal of forms will be governed by stipulations contained in the paragraph: FORMS AND FALSEWORK, and concrete will be accepted on the basis of the paragraph "Contractor-Designed

Concrete for Superstructure." If the Contractor does not elect to accept the option as specified herein, design of the concrete for this item will be made by the Contracting Officer, and form removal will be authorized on the basis of the time table in the paragraph: FORMS AND FALSEWORK.

4.2.2 Contractor-Designed Concrete for Superstructure.

4.2.2.1 Deleted.

4.2.2.2 The concrete for the decks, wasteway wall, and railings shall contain not less than 658 pounds of cement per cubic yard, and shall attain a compressive strength of 3,250 pounds per square inch in less than 28 days. The aggregate and cement shall be as specified herein. Cement in excess of 658 pounds per cubic yard is considered to be for the convenience of the Contractor and no payment for such cement will be made.

4.2.2.3 The Strength Quality of the concrete proposed for use shall be established by tests made in advance of the beginning of operations, using the consistencies suitable for the work. Trial design batches and testing shall be the responsibility of the Contractor. Specimens shall be made and cured in accordance with ASTM Specification C 192 and tested in accordance with ASTM C 39. A curve representing the relationship between the water content and the average 28 day compressive strength, shall be established for all the compressive strengths specified. The curve shall be established by at least 3 points, each point representing average values from at least 4 test specimens. The maximum allowable water content for the concrete for the superstructure shall be determined from this curve and shall correspond to a compressive strength 15 percent greater than that specified, but in no case shall it exceed 312 pounds per cubic yard, plus 70 pounds for each cwt of cement in excess of 5.70 cwt per cubic yard.

4.2.2.4 Prior to Commencing Operations, the Contractor shall furnish a statement to the Contracting Officer giving the proportions by weight (dry) of cement and of fine and coarse aggregates that will be used in the manufacture of the concrete proposed for use. Statement shall be accompanied by test reports or other evidence satisfactory to the Contracting Officer attesting that the proportions thus selected will produce concrete of qualities specified. No substitutions shall be made in the materials used in the work without additional tests in accordance herewith, to show that the quality of the concrete is satisfactory.

4.2.2.5 The Contractor shall provide for test purposes a series of sets of 3 cylinders each, taken from each 250 cubic yards or fraction thereof, or each day's pour, whichever is less. Test specimens shall be made and cured in accordance with ASTM C 31, except that after removal from the mold, specimens shall be stored as near as practicable to the bridge site and shall receive the same protection from the elements during curing as those portions of the structure which they represent.

5. CEMENT, AIR-ENTRAINING ADMIXTURE, AGGREGATES, AND WATER shall conform to the applicable requirements of the section: CONCRETE CONSTRUCTION.

6. PROPORTIONING OF CONCRETE. The proportions of all material entering into the concrete, shall be as directed and shall conform to the applicable requirements of the section: CONCRETE CONSTRUCTION, except as otherwise specified herein in the paragraph: QUALITY.

7. BATCHING AND MIXING, AND CONVEYING shall conform to the applicable requirements of the section: CONCRETE CONSTRUCTION.

8. PLACING.

8.1 General. The method of placing concrete shall conform to the applicable requirements of the section: CONCRETE CONSTRUCTION, except as otherwise specified herein.

8.2 Placing Girders and Slabs. The concrete in each integral part of the structure shall be placed continuously, and the Contractor will not be allowed to commence work on any such part unless sufficiently inspected and approved material for the concrete is on hand and his forces and equipment are sufficient to complete the part without interruption in the placing of the concrete. Joints in the concrete due to stopping work shall be avoided as far as possible. Such joints, when necessary, shall be constructed as directed. At least 5 days shall elapse between the first and subsequent placing operations, unless otherwise permitted by the Contracting Officer. Longitudinal construction joints in the bridge decks, if used, shall be located along the lane lines, unless otherwise indicated. Vehicles weighing over 1,000 pounds will not be allowed on any span until after the concrete in the span has attained a compressive strength of at least, 2,500 pounds per square inch. Vehicles weighing over 4,000 pounds will not be allowed on any span until after the concrete in the span has attained a compressive strength of at least 3,250 pounds per square inch or has attained an age of 28 days, whichever occurs first. Vehicles which exceed the weight limitations set forth for such structures in State of Arizona Vehicle Code will not be allowed to make repetitive crossings of any span until the concrete in the span has attained an age of 28 days.

8.3 Placing Railings. Except as otherwise specified, concrete railings shall not be placed until the falsework supporting the deck has been released. Where bridge deck and railings are structurally one, the falsework supporting the system shall not be released until the concrete has attained a compressive strength of at least 3,250 pounds per square inch or has been in place for 28 days. For further exceptions see the subparagraph: "Contractor's Option" of the paragraph: FORMS AND FALSEWORK.

9. CONSTRUCTION JOINTS.

9.1 Except as specified herein, construction joint treatment and expansion, contraction and vertical construction joints shall conform to the applicable requirements of the section: CONCRETE CONSTRUCTION. Elastomeric bearing pads and expanded polystyrene shall conform to the requirements of the section: MISCELLANEOUS METALWORK AND MATERIALS.

9.2 Construction joints shall be made only where located on the drawings or shown in the placing schedule, unless otherwise approved by the Contracting Officer.

9.3 Horizontal construction joints may be made without keys, except when keys are shown on the drawings. Surfaces of fresh concrete at horizontal construction joints shall be rough floated sufficiently to thoroughly consolidate the concrete at the surface without completely removing surface irregularities.

9.4 In case of emergency, construction joints shall be made as directed by the Contracting Officer. When it is necessary to make a joint because of an emergency, additional reinforcing steel shall be furnished and placed across the joint as directed by the Contracting Officer. Such additional reinforcing steel shall be furnished and placed by the Contractor at his expense.

9.5 All construction joints shall be cleaned of surface laitance, curing compound, and other foreign materials before fresh concrete is placed against the surface of the joint. Abrasive blast methods shall be used to clean horizontal construction joints to the extent that clean aggregate is exposed. All construction joints shall be flushed with water and allowed to dry to a surface dry condition immediately prior to placing concrete.

10. FINISHING.

10.1 General. Finishing shall conform to the applicable requirements of the section: CONCRETE CONSTRUCTION, except as otherwise specified herein.

10.2 Decks. After the concrete has been placed and consolidated, the surface of the concrete shall be carefully struck off by means of a hand-operated strike board operating on headers, or by a finishing machine operating on rails. A uniform deck surface true to the required grade and cross section shall be obtained. Following strike off, the surface of the concrete shall be floated longitudinally. In the event strike off is performed by means of a hand-operated strike board, two separate hand-operated float boards for longitudinal floating shall be provided. The first float shall be placed in operation as soon as the condition of the concrete will permit and the second float shall be operated as far back of the first float as the workability of the concrete will permit. In the event the strike off is performed with a finishing machine, longitudinal floating of the concrete shall be performed by means of a hand-operated float board or a finishing machine equipped with a longitudinal wooden float. The longitudinal wooden float on the finishing machine shall have a length of not less than 12 feet. When both strike off and longitudinal floating are performed by finishing machines, one machine, with operator, shall be used for strike off and a second machine, with a second operator, shall be used for longitudinal floating. Longitudinal floating may be performed with the same finishing machine that is used for strike off provided that the length of deck unit being placed is not more than 30 feet and the strike off operation is completed for said deck unit before the condition of the concrete requires that longitudinal floating be started. Finishing machines used for strike off having a wheel base 6 feet or less shall be followed by two separate hand-operated float boards for longitudinal floating. Hand-operating float boards shall be from 12 feet to 16 feet long, ribbed and trussed as necessary to provide a rigid float and shall be quipped with adjustable handles at each end. The float shall be wood, not less than one inch thick and from 4 inches to 8 inches wide. Adjusting screws spaced at not to exceed 24 inches on centers shall be provided between the float and the rib. The float board shall be maintained free of twist and true at all times. Longitudinal floats, either hand-operated or machine-operated, shall be used with the long axis of the float parallel to the center line of the bridge roadway. The float shall be operated with a combined longitudinal and transverse motion planing off the high areas and floating the material removed into the low areas. Each pass of the float shall lap the previous pass by one-half the length of the float. Floating shall be continued until a smooth riding surface is obtained. After floating and the concrete has set sufficiently to prevent gouging or tearing, the surface of the concrete shall be textured by brooming with a stiff bristled broom or by other suitable devices which will result in uniform scoring. The finished surface of the concrete shall be tested by means of a straightedge 12 feet long. The surface shall not vary more than 1/8-inch from the lower edge of the straightedge. All high areas in the hardened surface shall be removed by abrasive means. After grinding by abrasive means the surface of the concrete shall not be polished. Ground areas shall be of uniform texture and shall present neat and approximately rectangular patterns.

10.3 Ordinary Surface Finish. The undersurface of slab spans, decks, and abutments shall receive an ordinary surface finish. Immediately after the forms have been removed, all form bolts and any metal placed for the convenience of the Contractor shall be removed to a depth of not less than one inch below the surface of the concrete. All rock pockets and other unsound concrete shall be removed. Resulting holes and depressions shall be

cleaned and filled with cement mortar. Cement mortar shall be composed of one part of cement to 2 parts of sand by volume. Care shall be exercised to obtain a perfect bond with the concrete. For exposed surfaces, white cement shall be added to the mortar in an amount sufficient to tint the mortar a shade lighter than the concrete to be repaired. All fins coused by form joints and other projections shall be removed and all pockets shall be cleaned and filled. Surfaces below channel invert grade and surfaces against which backfill is to be placed will not require removal of fins and rubbing or mortar.

10.4 Class 1 Surface Finish. All bridge surfaces except as specified above in the paragraph: ORDINARY SURFACE FINISH shall receive a Class 1 surface finish in addition to the ordinary surface finish. The surfaces shall be thoroughly brushed with stiff wire brushes. Brushing shall continue until a uniform color has been obtained. Carborundum stones shall be used to remove unsightly bulges or discolorations. The object of these operations is to obtain a smooth, even surface of uniform appearance and to remove unsightly bulges or depressions due to form marks and other imperfections. The degree of care in building forms and the character of material used in form work will be a contributing factor in the amount of such finishing required. The wire brush finish shall not be applied until a uniform appearance of the surface can be secured.

10.5 Removal of Stains. The Contractor shall remove all grout drippings, efflorescence or other stains from outside faces of bridges above the finished ground line.

10.6 Finish Under Bearing Pads. The abutment and pier surfaces under the bearing pads shall be uniform and shall not vary from the specified grade by more than 1/16-inch. Irregularities in excess of 1/16-inch shall be ground until a uniform bearing surface is obtained.

11. CURING AND PROTECTION shall conform to the applicable requirements of the section: CONCRETE CONSTRUCTION.

12. FORMS AND FALSEWORK.

12.1 General. Forms shall be true to line and grade, mortartight and sufficiently rigid to prevent objectionable deformation under load. Where forms for continuous surfaces are placed in successive units, care shall be taken to fit the forms over the completed surface so as to obtain accurate alinement of the surface and to prevent leakage of mortar. Except as otherwise specified, responsibility for form adequacy shall rest with the Contractor; however, the type, shape, size, quality, and strength of all materials of which the forms are made shall be subject to specific approval. Bolts and rods used for internal ties shall be so arranged, that when the forms are removed, metal will be so constructed that they can be removed without damaging the concrete. All exposed joints, edges, and external corners shall be chamfered and dummy chamfers and false joints shall be used to provide a neat and uniform appearance. At the time the concrete is placed in the forms, the surfaces of the forms shall be free from encrustations of mortar, grout or other foreign material.

12.1.1 Lumber. All lumber, unless otherwise specified, shall be Douglas fir, selected as to grade, and conforming to the Standard Grading and Dressing Rules of the West Coast Lumber Inspection Bureau. Plywood, except as otherwise specified, shall conform to Product Standard PS 1, Exterior B-B (Concrete Form), Class I. Plywood form panels shall be furnished and placed in 48-inch widths and in uniform lengths of not less than 96 inches, except where the dimensions of the member formed are less than the specified panel dimensions. Lumber for the uses listed shall not be lower than the following grades and materials.

Use	Grade and Material
Falsework joists and stringers, studs, and wales for formwork and all other falsework framing except as otherwise specified	Structural Joists and Planks, Small Timbers, Beams and Stringers
Falsework Posts	Structural Posts and Timbers
Form sheeting for non-showing faces of concrete	Shiplap (loose knots and knot holes will not be permitted) or any grade of plywood
Form sheeting for slabs and walls, ordinary surface finish only	Concrete form grade plywood or select merchantable grade
Form sheeting for faces to receive class 1 surface finish	Plywood Sound 1 Side (Sound Side toward concrete)
Other Lumber	Such that allowable stresses are not exceeded and where used against concrete shall have no knot holes or loose knots

Forms for all surfaces, which will not be completely enclosed or hidden below the permanent surface of the ground, shall be made of plywood, surfaced lumber, or material which will provide a surface at least equally satisfactory.

12.1.2 Metalwork. Bolts shall be mild steel bolts with square or hexagonal heads. Threads shall be American Standard, Free Fit, Class 2. Nuts shall be hexagonal. Other metalwork for form and falsework construction shall be approved.

12.2 Deleted.

12.3 Special Drawings and Stress Diagrams. The Contractor shall submit for approval shop drawings showing the systems of forms which he intends to use. If trusses are used a stress diagram shall be submitted with the design. Drawings shall show the proposed camber for nailing strips. No form construction shall be accomplished until after final approval of the drawings. Supporting calculations shall be signed by a Professional Engineer registered by the State of Arizona.

12.4 Design of Falsework.

12.4.1 General. Falsework shall be designed to carry all the loads which may come upon it, including the full weight of the fresh concrete, a minimum live load of 50 p.s.f., plus the induced horizontal or inclined pressures and whatever earth loads may be placed upon it. Provisions shall be made for adequate walkways outside of deck areas along each side of, and for the full length of any deck pour for the operators of finishing floats. Falsework shall not obstruct more than one-third of the channel cross section.

12.4.2 Deflection and Settlement. Deflection of joists and beams shall be compensated for by cambering the soffit forms. Settlement of forms due to take-up of the joints in the shoring shall be compensated for by raising the entire form 1/16 inch for each joint in the shoring. Falsework shall be cambered to care for the dead load deflection plus a 20-pound per square foot construction load plus a falsework settlement allowance.

12.4.3 Fastenings. All falsework shall be bolted. Spiked or nailed joints will be permitted only in secondary members, and then only when approved.

12.5 Construction of Timber Falsework. Workmanship shall be first-class quality throughout. Only competent bridge carpenters shall be employed for carpenter work and all framing shall be precise and exact. Columns and struts shall not be spliced except at structural joints. Ties may be spliced provided the tension value of the tie is not reduced. Joists and beams shall not be spliced. If a pile has been cut off too short the pile need not be replaced, but a block may be used between the cap and pile when approved. In such cases, the block shall not be less than 4 inches thick and 24 inches long and shall be used as a corbal. The final fit of butt joints shall be made by a new cut after the members are assembled in place, or the fit may be made by filling the joint completely with plaster of paris or molding plaster. Open compression joints will not be permitted. If laminated beams are used they shall be so tied together as to make their various parts act as a unit. Ends of columns bearing on wedges shall be tied in both directions with girts. Where girts are used to reduce the unsupported length of columns, they shall be doubled. Longitudinal lines of girts shall be extended by means of blocks to the abutments. Wedges shall be of hardwood and be pitched not more than 2 inches in 12 inches. Wedges shall be used in pairs. Steel shims may be used subject to approval.

12.6 Construction of Forms.

eneral. The design and construction of forms shall be subject to approval. Lumber for forms may be re-used provided that the nails and spikes are withdrawn and that the lumber is cleaned and made equal in quality to new lumber of the required grade. The material for forms shall be of such thickness and strength, and the construction and bracing of forms shall be of such nature as to be unyielding and mortartight. Forms and reinforcements for any parts of a bridge structure will be completely checked and shall be approved before the Contractor will be permitted to place concrete.

12.6.2 Studs, Wales, and Sheeting. Studs shall be not less than 2 x 4 inches and shall be sized to a uniform depth not less than 3-1/2 inches. Wales held by bolts shall be used to retain the studs. Sheeting shall conform to the grades and material specified. In addition to all other requirements the bending stresses in form sheeting for showing faces shall be such that the deflection will not exceed 1/360 of the span and the stress at the outer fiber of plywood form sheeting shall not exceed 1,875 psi. The outer plies of plywood sheeting shall be laid parallel to the span. Where form panels are attached directly to the studding of joists, the panels shall be not less than 5/8 inch thick and the studding and joists shall be spaced not more than 12 inches center to center for showing faces and not more than 18 inches center to center for nonshowing faces. Form panels less than 5/8 inch thick which otherwise conform to the requirements herein specified may be used with a continuous backing of 3/4-inch surfaced shiplap. Form panels shall be placed in an approved neat and symmetrical pattern. All joints shall be filled with an approved quick setting compound finished flush with the interior of the form. No struts or bracings shall extend into or through concrete.

12.6.3 Form Ties. Forms shall be held by bolts or rods and those portions of bolts and rods within 2 inches of showing surfaces shall be removable. No wire ties or napties shall be used. Nonremovable sleeves around bolts and rods shall not be used.

12.6.4 Forms for Class 1 Surface Finish Concrete. Forms for concrete to receive a Class 1 surface finish shall be equal in quality and workmanship to first-class cabinet work. The forms shall be made of Douglas fir plywood sound one side with the sound side toward the concrete. They shall be of ample strength to retain their shapes during the pouring of concrete without bending or twisting. The design of the forms shall be subject to approval. Forms may be re-used but shall be made equal in quality to that of their first use.

12.6.5 Forms for Railings. Details for anchoring bridge railing forms shall be submitted for approval in accordance with the requirements for shop drawings of the SPECIAL PROVISIONS, and approval shall be obtained prior to railing construction.

12.7 Standards and Tolerances.

12.7.1 Quality and Bracing. The quality of form work shall be within the limits of tolerance specified herein. The forms shall be so braced that these limits will be maintained during and after the placing of concrete. Bracing shall bear against the wales and not against studs or sheeting.

12.7.2 Faces Against Fills. Form for faces which will be in contact with fill may be made of new, used, smooth or rough lumber.

12.7.3 Forms of 1 by 6-Inch Sheeting. Shoulders or lips greater than 1/16 inch shall be planed off. Cracks wider than 1/16 inch shall be filled with an approved material. The warp of any board shall not exceed 3/32 inch. Nail holes shall not be filled. Other holes and defects in board surfaces shall be filled with putty or other approved filler.

12.7.4 Forms. Except as otherwise specifed, forms for all surfaces shall be set exactly to the lines indicated on the drawings. Screed strips for the top surface of the concrete deck shall be set to the drawing elevations indicated plus indicated allowances for camber and settlement and shall be set parallel to the center line of the bridge deck.

12.7.5 Class 1 Surface Finish Concrete. Sheeting shall be securely fastened to the studs or the backing in such a manner that working surfaces are made continuous and without warp or irregularity. Workmanship on the forms shall be equal in quality to first-class cabinet work. Holes, cracks and joints shall be filled flush with an acceptable filler. Surfaces shall be as smooth as that obtainable by the use of a medium grade sandpaper. Corners shall be sharp, clean, and of the angle shown on the drawings. Lines and edges shall be paralled as indicated. Forms shall be correct for position within 1/8 inch and shall be parallel within 1/8 inch to a wire stretched on the true line. Panels shall be true to a plane within 1/8 inch from a 5-foot straightedge. Lines and edges shall be straight within 1/8 inch in the total length of a panel. All lines shall be truly vertical, horizontal, inclined, or curved as shown.

12.8 Coating. Forms facing concrete surfaces shall be coated with nonstaining mineral oil before concrete is placed unless the forms have been treated with a wood sealer conforming to Military Specification MIL-W-13518. Shellac shall not be used on forms. Forms and form lumber shall be oiled before being placed in position as fare as practicable to avoid splashing oil on the reinforcing steel or concrete. Any oil splashed on reinforcing steel or any other surfaces requiring bond with concrete shall be completely removed.

12.9 Removal of Forms.

12.9.1 General. Forms shall not be removed without the approval of the Contracting Officer, and all removal shall be accomplished in a manner which will prevent injury to the concrete. When forms are removed under conditions of a wide differential of temperature between the concrete and the atmosphere, provision, satisfactory to the Contracting Officer, shall be made for maintaining a blanket of moist air adjacent to the concrete and thus gradually reducing the temperature differential between the concrete and the surrounding atmosphere. A temperature differential of less than 25 degrees F, will be required. Forms shall not be removed before the expiration of a minimum time indicated below, except as otherwise specifically authorized by the Contracting Officer.

Deck Slabs	21 days
Walls, Vertical Faces and Railings	3 days

12.9.2 Contractor's Option. At the Contractor's option results from suitable cylinder tests may be used as evidence that concrete has attained sufficient strength to permit removal of supporting forms. Cylinders required for such tests shall be provided in the same manner and shall be in addition to those test specimens specified in the paragraph: QUALITY. In lieu of form removal time as specified above, if the Contractor elects to provide tests as specified, permission will be given to remove forms at such time that concrete for bridge decks has attained a strength of not less than 3,000 pounds per square inch; for sidewalks when the concrete has attained a strength of not less than 2,000 pounds per square inch. This strength shall be the average of three specimens. All testing shall be done at the Contractor's expense. On the basis of the bridge deck concrete having attained the 3,000 pounds per square inch strength, as specified above, the Contracting Officer will authorize the immediate placing of the sidewalk and barrier railing concrete. This time for placing sidewalks and barrier railings is in lieu of time specified in paragraph: PLACING.

13. FURNISHING AND PLACING STEEL REINFORCEMENT. Conform to the applicable requirements of the section: CONCRETE CONSTRUCTION except reinforcement shall be grade 60; reinforcement shall be located exactly as shown on the drawings. Miscellaneous metalwork shall confrom the applicable requirements of the section: MISCELLANEOUS METALWORK AND MATERIALS.

14. RAILING ADJUSTMENT. When ordered by the Contracting Officer the height of the concrete railing or concrete portions of the railing shall be adjusted to compensate for the camber and dead load deflection of the superstructure. The amount of the adjustment will be determined by the Contracting Officer and will be ordered before the concrete is placed.

* * * * *

SECTION 4C

PRECAST-PRESTRESSED CONCRETE GIRDERS

Index

1. Applicable Publications
2. Shop Drawings
3. Materials
4. Formwork
5. Tensioning of Tendons
6. Precast-Prestressed Concrete Construction
7. Accuracy of Stress and Elongation Measurement
8. Inspection

1. APPLICABLE PUBLICATIONS. The following publications of the issues listed below, but referred to thereafter by basic designation only, form a part of this specification to the extent indicated by the references thereto.

1.1 American Society for Testing and Materials (ASTM) Publications.

A 416-74	Uncoated Seven-Wire Stress Relieved Strand for Prestressed Concrete
C 138-75	Unit Weight, Yield, and Air Content (Gravimetric) of Concrete
C 173-75	Air Content of Freshly Mixed Concrete by the Volumetric Method
C 231-75	Air Content for Freshly Mixed Concrete by the Pressure Method

1.2 American Concrete Institute Publication.

318-71	Building Code Requirements for Reinforced Concrete, With Commentary & 1975 Suppl.

2. SHOP DRAWINGS. Complete shop drawings for all prestressed concrete work shall be submitted to the Contracting Officer for approval in accordance with this paragraph, other paragraphs of the TECHNICAL PROVISIONS and the SPECIAL PROVISIONS. The shop drawings shall show complete details including formwork, inserts, reinforcing steel, size and type of tensioning elements and anchorages, sequence of stressing, method of curing, quality of concrete, erection details and methods, and complete stressing calculations. Prestressing shall be performed by the pretensioning method only.

3. MATERIALS.

3.1 Cement, Concrete and Reinforcing Steel. Cement, concrete, reinforcing steel, and admixtures shall conform to the applicable requirements of the section: CONCRETE CONSTRUCTION, except as otherwise specified herein. Reinforcing steel shall be Grade 60. Miscellaneous iron and steel shall conform to the applicable requirements of the section: MISCELLANEOUS METAL WORK AND MATERIALS. The 28-day compressive strength for the prestressed components shall be as shown on the drawings. The Contractor shall be responsible for the design of concrete mixes and for meeting the strength requirements. However, the mixes and curing operation shall be submitted for approval. Neither calcium chloride nor any admixture containing any chloride shall be used in the concrete.

3.1.1 Air content of air-entrained concrete. The volume of entrained air in concrete shall be within the limits shown in the following table.

Maximum Size Coarse Aggregate Inches	Air Content by Volume
1-1/2, 2, or 2-1/2	5 plus or minus 1
3/4, 1	6 plus or minus 1
3/8, 1/2	7-1/2 plus or minus 1
1/4, or less	9-1/2 plus or minus 1

The air content shall be determined by one of the following methods.

a. The gravimetric method, ASTM C 138.

b. The volumetric method, ASTM C 173.

c. The pressure method, ASTM C 231.

3.2 Prestressing Steels. Prestressing steel shall be clean and free of loose rust, scale and pitting. A light oxide is permissible. Unbonded steel shall be permanently protected from corrosion as shown on the drawings. Steel shall be protected against abrasion during shipment and handling.

3.2.1 Seven-Wire Strand and Strand Assemblies. Seven-wire high tensile stress-relieved strand shall conform to ASTM A 416. Strand assemblies shall be shop assembled. The anchor sleeves shall be of an alloy steel positively attached to the strand or strands, and the strand or strands shall be anchored to a cast-in-place bearing assembly with a threaded anchor, wedge, or cone of metal of proven corrosion compatibility as recommended by the material supplier.

3.3 Tendon Anchorage Assemblies. Anchorage assemblies must be set in a plane normal to the axis of the tendons such that uniform bearing on the concrete is assured. Friction or wedge type anchors shall not be used in inaccessible locations. Anchorage assemblies and connections shall be subject to the approval of the Contracting Officer and shall be capable of fully developing the minimum guaranteed ultimate strength of the tendon without excessive slip. Anchorage and end fittings shall be permanently protected against corrosion.

3.4 Tendon Splices. Wires of parallel-wire assemblies shall not be spliced.

No more than one strand shall be spliced in any one member where single strand tensioning is employed. Strand splices shall be capable of developing the full ultimate strength of the strand. Slippage of the splice shall be checked and correction made for differential slippage. Where multiple strand tensioning is used, not more than 10 percent of the strands in any member shall be spliced.

Strands to be spliced shall have the same lay or direction of twist and the ends shall be cut by shears or abrasive grinders.

3.5 Test Reports. Certified test reports showing the results of manufacturers' mill or plant tests performed by an independent laboratory shall be submitted to the Contracting Officer in advance of any prestressing operation. They shall show that the materials comply with the applicable specifications and shall include but not be limited to the following items: strand, reinforcing steels, and admixtures. Reports shall be furnished for each shipment and shall be identified with reels, heats, or other specific lots.

A system of identification shall be established showing disposition of tested materials and correlated with specific beds and members. These records shall be furnished the Contracting Officer before completion of the contract.

4. FORMWORK. Forms and formed surfaces shall conform to the applicable portions of the section: CONCRETE CONSTRUCTION of these specifications as well as to the following. Forms for pretensioned members shall be constructed to permit movement of the member without damage during release of the pretensioning force. Deflection of members due to the prestressing force and deformation of falsework shall be considered in the design. Forms shall be made and maintained true to the grade, alignment and dimensions shown on the drawings. Form joints shall be smooth and tight. Beds and forms shall be thoroughly cleaned before reuse.

5. TENSIONING OF TENDONS.

5.1 General. The stress induced in the tendons by any method of tensioning shall be determined independently by both (1) measurement of strand elongation and (2) direct measurement of force using a pressure gage and/or load cell. The results of these two measurements shall check each other and the theoretical values within 5%. If they do not, the operation shall be carefully checked and the source of error determined and corrected before proceeding further.

NOTE: DETERMINATION OF THE INITIAL PRESTRESS FORCE MUST CONSIDER PRESTRESS LOSSES IN ACCORDANCE WITH ACI BUILDING CODE ACI 318, SECTION 18.6.

The concrete strength at transfer of stress shall be adequate for the requirements of the anchorages or for transfer through bond as well as meet camber or deflection requirements. In any case, concrete cylinder tests shall indicate a breaking strength of at least 4,500 pounds per square inch before transfer unless otherwise indicated on the drawings. The final prestress load in each unit after seating shall be as shown on the drawings. The prestressing steel shall not be placed until such time as all welding has been completed on any portion of the supports, or any part which might be in contact with the prestressing steel. The Contractor shall certify to the Contracting Officer that a technician skilled in the use of the prestressing system to be used will be available to give as much instruction in the operation as may be necessary to obtain satisfactory results. Safety measures shall be taken by the Contractor to prevent accidents caused by failure of a prestressing wire, tendon or component.

5.2 Pretensioning. Tendons may be tensioned by jacking of groups or may be tensioned individually by means of a single-strand jack. Before final tensioning of tendons, all tendons shall be brought to a uniform initial tension of approximately 1,000 pounds per strand per 200 feet of bed, with a minimum of 1,000 pounds and a maximum of 3,000 pounds per strand. The force corresponding to the initial tension shall be measured by a dynamometer or other approved method to aid in determining the final elongation. After this initial tensioning, the tendons shall be stressed to the total tension required by the plans using hydraulic or mechanical equipment with gages of dynamometers graduated and calibrated to accurately determine the load applied.

Draped pretensioned strands shall be tensioned partially jacking at the end of the bed and partially by uplifting or depressing strands, or they shall be tensioned entirely by jacking, with the strands being held in their draped positions by means of rollers, pins or other approved methods during the jacking operation. Approved low-friction devices shall be used at all points of change in slope of strand trajectory at the time of tensioning of draped pretensioned strands regardless of the tensioning method used. Cable stress shall be maintained between anchorages until the concrete has reached a compressive strength as indicated in above paragraph: GENERAL.

5.3 Detensioning.

5.3.1 General. Forces from pretensioned strands shall be transferred to the concrete by either the multiple-strand release or the single-strand release method. The stress transfer shall not be performed until concrete strength, as indicated by test cylinders, has reached the transfer strength required in this section of the specifications. If concrete has been heat-cured, the detensioning shall be done immediately following the curing period while the concrete is still warm and moist. During detensioning, the prestressing forces shall be kept nearly symmetrical about the vertical axis of the member and shall be applied in a manner that will minimize sudden loading. Maximum eccentricity about the vertical axis shall be limited to one strand.

5.3.2 Multiple-strand Release. In this method, all strands shall be detensioned simultaneously and the load transferred gradually to the concrete by hydraulic jacking.

6. PRECAST-PRESTRESSED CONCRETE CONSTRUCTION.

6.1 Fabrication. Fabrication of precast-prestressed members shall follow the applicable provisions of the Prestressed Concrete Institute Manual for Quality Control except as specified herein. Shop drawings must be approved by the Contracting Officer before any fabrication is begun. Unless otherwise shown on the contract drawings, the following dimensional tolerances of members will govern:

6.1.1 Cross Section Dimensions. Dimensions less than 6", plus or minus 1/8"; 6" to 18", plus or minus 3/16"; 18" to 36", plus or minus 1/4"; over 36", plus or minus 3/8".

6.1.2 Overall Length. Plus or minus 1/8" per 10' max. plus or minus 3/4".

6.1.3 Deviations from a Straight Line. 1/8" per 10', max. plus or minus 3/4".

6.1.4 Deviation from Specified Design Camber after Installation. plus or minus 1/8" per 10' of span length.

6.1.5 Differential Camber Between Adjacent Units after Installation. plus or minus 1/16" per 10' of span length.

6.2 Marking. All precast units shall be plainly marked and identified for ready correlation with corresponding test specimens. Pickup points shall be plainly marked on all units. Units shall be marked to show the number, size, and location of reinforcement bars and to identify the top face and the position on the placement drawings. Units designed specifically to be erected adjacent to other units with which they are to function, shall be adequately match-marked before removal from the casting bed.

6.3 Erection. Points of support used in handling, transporation, storage and erection of members shall be as close as practical to the final points of bearing. All erection details including shoring and bracing shall be clearly shown on the shop drawings. Extreme care shall be taken during storage, hoisting and handling to prevent cracking and damage. Members damaged during handling, storage or erection shall be replaced by the Contractor at his expense.

7. ACCURACY OF STRESS AND ELONGATION MEASUREMENT.

7.1 Stress Measurement. Hydraulic gages, dynamometers, load cells or other devices for measuring stressing load shall have an accuracy of reading within two percent. Gages shall be calibrated for the jacks for which they are used by approval testing laboratory and a certified testing curve shall accompany each gage. Recalibration shall be performed at any time that a gaging system shows indication of erratic results in the opinion of the Contracting Officer and, in any case, at intervals not greater than 12 months. Gages shall indicate loads directly in pounds or be accompanied by a chart which converts dial readings into pounds.

7.2 Elongation Measurement. After the initial force has been applied to a tendon, reference points for measuring elongation due to additional tensioning forces shall be established. They shall be located according to the method of tensioning and type of equipment. The system used shall be capable of measuring the true elongation plus or minus 1/16 inch.

8. INSPECTION. The Contractor's facilities shall be open for inspection by the Contracting Officer at any time. The Contractor shall maintain full and accurate records of all materials incorporated into prestressed concrete. Manufacturer's test reports shall be submitted on all tendon steels and anchor assemblies, reinforcing steels, cement, admixtures, and curing materials. All concrete and cement testing shall be as provided in the section: CONCRETE CONSTRUCTION. Complete tensioning records shall be maintained by the Contractor showing date of tensioning, description, location and identification of the tendon members, manufacturer and size of tendon, identification of jacking equipment, final and initial design load for each tendon, theoretical elongation per tendon, actual tensioning load per tendon, and actual elongation per tendon. Certified calibration records for each set of jacking equipment shall be submitted to the Contracting Officer prior to the start of tensioning.

* * * * *

SECTION 4E

CONCRETE CURB, GUTTER, COMBINATION CURB AND GUTTER, AND DRIVEWAY

Index

1. Applicable Publications
2. Concrete
3. Subgrade Preparation
4. Forms
5. Joints
6. Construction
7. Curing and Protection

1. APPLICABLE PUBLICATIONS. The following publications of the issues listed below, but referred to thereafter by basic designation only, form a part of this specification to the extent indicated by the references thereto.

1.1 Federal Specifications.

CCC-C-467C	Cloth, Burlap, Jute (or Kenaf)

1.2 American Society for Testing and Materials (ASTM) Standards.

C 171-69	Sheet Materials for Curing Concrete
C 309-73	Liquid Membrane-Forming Compounds for Curing Concrete
D 1751-73	Preformed Expansion Joint Fillers for Concrete Paving and Structural Construction (Nonextruding and Resilient Bituminous Types)
D 1752-67	Preformed Expansion Joint Fillers for Concrete Paving and Structural Construction (Nonextruding and Resilient Nonbituminous Types)

2. CONCRETE and the equipment, workmanship, and materials therefor shall conform to the applicable requirements of the Section: CONCRETE, except as hereinafter specified. Concrete shall have a minimum compressive strength of 3,000 psi at 28 days. The maximum size of coarse aggregate shall be 1-1/2 inches.

3. SUBGRADE PREPARATION. The subgrade shall be constructed true to grade and cross section. The subgrade shall be of materials equal in bearing quality to the subgrade under the adjacent roadway, street, or open area and shall be placed and compacted to conform with applicable requirements of the Section: FILLS AND SUBGRADE PREPARATION. The subgrade shall be tested for grade and cross section by means of a template extending the full width of the curb, gutter, driveway, or combination curb and gutter. The subgrade shall be maintained in a smooth, compacted condition, in conformity with the required section and established grade until the concrete is placed. The subgrade shall be in a moist condition when concrete is placed. In cold weather, the subgrade shall be prepared and protected so as to produce a subgrade free from frost when the concrete is deposited.

4. FORMS shall be of wood or steel, straight, and of sufficient strength to resist springing during depositing and consolidating the concrete. The outside forms shall have a height equal to the full depth of the curb or gutter. The inside form of curb shall have batter as indicated and shall be securely fastened to and supported by the outside form. Straight forms of wood shall be 2-inch nominal surfaced plank, and of steel, shall be of approved section with a flat surface at the top. Rigid forms shall be provided for curb returns, except that benders or thin plank forms may be used for curb or curb returns with a radius of 10 feet or more, where grade changes occur in the return, or where the central angle is such that a rigid form with a central angle of 90 degrees cannot be used. Back forms for curb returns may be made of 1/2-inch benders, for the full height of the curb, cleated together. Curb forms shall be carefully set to alinement and grade and to conform to the dimensions of the curb. Forms shall be held rigidly in place by the use of stakes placed at intervals not to exceed 4 feet. Clamps, spreaders, and braces shall be used where required to insure rigidity in the forms. The forms on the front of the curb shall be removed not less than 2 hours nor more than 6 hours after the concrete has been placed. Forms back of curb shall remain in place until the face and top of the curb have been finished as specified in the Finishing paragraph. Gutter forms shall not be removed for 12 hours after the concrete has been placed. Forms shall not be removed while the concrete is sufficiently plastic to slump in any direction. Forms shall be cleaned and coated with form oil each time before concrete is placed. Wood forms may, instead, be thoroughly wetted with water before concrete is placed, except that with probable freezing temperatures, oiling is mandatory.

5. JOINTS. Expansion joints and contraction joints shall be constructed at right angles to the line of curb, gutter, driveway, and combination curb and gutter.

5.1 Contraction Joints shall be constructed by means of 1/8-inch-thick separators, of a section conforming to the cross section of the curb, gutter, driveway, and combination curb and gutter. Contraction joints shall be constructed directly opposite contraction joints in abutting Portland-cement-concrete pavement. Where curb, gutter, driveway, and combination curb and gutter do not abut Portland-cement-concrete pavements, contraction joints shall be so placed that monolithic sections between curb returns will be not less than 5 feet nor greater than 15 feet in length. Separators shall be removed as soon as practicable after the concrete has set sufficiently to preserve the width and shape of the joint. Separators shall be removed prior to finishing.

5.2 Expansion Joints shall be formed by means of preformed expansion-joint filler material cut and shaped to the cross section of the curb, gutter, entrance, and combination curb and gutter. Expansion joint filler, unless otherwise specified, shall conform to ASTM Specifications D 1751 or D 1752 or shall be resin-impregnated fiberboard conforming to the physical requirements of ASTM Specifications D 1752. Expansion joints shall be provided in curb at the ends of all returns. Expansion joints shall be provided in curb, gutter, driveway, and combination curb and gutter directly opposite the expansion joints of abutting Portland-cement-concrete pavement and shall be of the same type and thickness as the joints in the pavement. Where curb, gutter, drive, and combination curb and gutter do not abut Portland-cement-concrete pavement, expansion joints at least 1/2 inch in width shall be provided at intervals not less than 30 feet nor greater than 120 feet. Expansion joints shall be provided in nonreinforced concrete gutter at the locations indicated.

6. CONSTRUCTION.

6.1 Placing Concrete. Concrete shall be placed in 6-inch layers in curb. The concrete shall be thoroughly consolidated by tamping and spading or with approved mechanical vibrators.

6.2 FINISHING. The edges of the gutter and top of the curb shall be rounded with an edging tool to a radius of 1/4 inch and the surfaces shall be floated and finished with a smooth wood float until true to grade and section and uniform in texture. The floated surfaces shall then be brushed with a fine-hair brush with longitudinal strokes. Immediately after removing the front curb form, the face of the curb shall be rubbed with a wood or concrete rubbing block and water until blemishes, form marks, and tool marks have been removed. The surface, while still wet, shall be brushed in the same manner as the gutter and curb top. The top surface of gutter and driveway shall be finished to grade with a wood float. Except at grade changes or curves, the finished surfaces shall not vary. from the testing edge of a 10-foot straightedge, more than 1/8 inch for gutter and driveway and 1/4 inch for top and face of curb. Irregularities exceeding the above shall be satisfactorily corrected. Visible surfaces and edges of the finished curb, gutter, driveway, and combination curb and gutter shall be free of blemishes and form and tool marks, and shall be uniform in color, shape, and appearance.

6.3 Curb-Forming Machines for constructing curb and gutter will be approved based on trial use on the job. Use of the equipment shall be discontinued at any time during the construction if the equipment produces satisfactory results, and the work shall be accomplished as specified hereinbefore. Unsatisfactory work shall be removed and reconstructed for the full length between regularly scheduled joints. Removed portions shall be disposed of as directed.

7. CURING AND PROTECTION.

7.1 Curing. Immediately after the finishing operations, the exposed concrete surfaces shall be cured by one of the following methods as the Contractor may elect.

7.1.1 Mat Method. The entire exposed surface shall be covered with cotton mats conforming to Federal Specification DDD-M-148 or with 2 or more layers of burlap conforming to Federal Specification CCC-C-467 having a combined weight of 14 ounces or more per square yard when dry. Mats shall overlap each other at least 6 inches. The mat shall be thoroughly wetted with water prior to placing on the concrete surface and shall be kept continuously in a saturated condition and in intimate contact with concrete for not less than 7 days.

7.1.2 Impervious-Sheeting Method. The entire exposed surface shall be wetted with a fine spray of water and then covered with a white sheet material conforming to ASTM Specification C 171. Sheets shall be laid directly on the concrete surface with the light-colored side up and overlapped 12 inches when a continuous sheet is not used. The curing medium shall be not less than 18 inches wider than the concrete surface to be cured and shall be securely weighted down by placing a bank of moist earth on the edges just outside the forms and over the transverse laps to form closed joints. Sheets shall be satisfactorily repaired or replaced if damaged during curing. The curing medium shall remain on the concrete surface to be cured for not less than 7 days.

7.1.3 Membrane-Curing Method. The entire exposed surfaces shall be covered with a non-pigmented membrane-forming curing compound conforming to ASTM C309, type I-D. Surfaces coated with membrane forming compound shall be shaded from the direct rays of the sun for the entire 7 day curing period. The curing compound shall be applied in 2 coats by hand-operated pressure sprayers at a coverage of approximately 200 square feet per gallon for both coats. The second coat shall be applied in a direction approximately at right angles to the direction

of application of the first coat. The compound shall form a uniform continuous, coherent film that will not check, crack, or peel and shall be free from pinholes or other imperfections. Concrete surfaces that are subjected to heavy rainfall within 3 hours after the curing compound has been applied shall be resprayed by the method and at the coverage specified above at no additional cost to the Government. Joint openings shall be sealed at the top by inserting moistened paper or fiber rope or covering with strips of waterproof paper prior to application of the curing compound, in a manner to prevent the curing compound from entering the joint. Concrete surfaces to which membrane-curing compounds have been applied shall be adequately protected for 7 days from pedestrian and vehicular traffic and from any other action which might disrupt the continuity of the membrane. Any area covered with curing compound and damaged by subsequent construction operations within the 7-day period shall be resprayed as specified above at no additional expense to the Government.

7.2 Backfilling. After curing, debris shall be removed, and the backfill shall be placed as indicated.

7.3 Protection. The completed curb, gutter, driveway, and combination curb and gutter shall be protected from damage until accepted. The Contractor shall repair damaged concrete and clean concrete discolored during construction. Curb, gutter, driveway, and combination curb and gutter that are damaged shall be removed and reconstructed for the entire length between regularly scheduled joints. Refinishing the damaged portion will not be acceptable. Removed damaged portions shall be disposed of as directed.

* * * * *

SECTION 4F

CONCRETE SIDEWALK

Index

1. Applicable Publications
2. Concrete
3. Subgrade Preparation
4. Forms
5. Concrete Placement and Finishing
6. Curing and Protection

1. APPLICABLE PUBLICATIONS. The following publications of the issues listed below, but referred to thereafter by basic designation only, form a part of this specification to the extent indicated by the references thereto.

1.1 Federal Specifications.

CCC-C-467C	Cloth, Burlap, Jute (or Kenaf)
DDD-M-148	Mats; Cotton (for Concrete-Curing)

1.2 American Society for Testing and Materials (ASTM) Publications.

C 171-69	Sheet Materials for Curing Concrete
C 231-74	Air Content of Freshly Mixed Concrete by the Pressure Method
C 309-73	Liquid Membrane-Forming Compounds for Curing Concrete
D 1751-73	Preformed Expansion Joint Fillers for Concrete Paving and Structural Construction (Nonextruding and Resilient Bituminous Types)
D 1752-67	Preformed Expansion Joint Fillers for Concrete Paving and Structural Construction (Nonextruding and Resilient Nonbituminous Types)

2. CONCRETE and the equipment, workmanship, and materials including all sampling and testing shall conform to the applicable requirements of section: CONCRETE, except as hereinafter specified. Concrete shall have a minimum compressive strength of 2,500 psi at 28 days. The maximum size of coarse aggregate shall be 1-1/2 inch. Concrete shall have a slump of not more than 3 inches. The concrete mixtures shall have an air content by volume of concrete, based on measurements made immediately after discharge from the mixer, of 3 to 5 percent. Air content shall be determined in accordance with ASTM C 231.

3. SUBGRADE PREPARATION. The subgrade shall be constructed true to grade and to the cross section. The subgrade shall be compacted to a density of 95% maximum density in accordance with the requirements of the section: FILLS AND SUBGRADE PREPARATION. The completed subgrade shall be tested for grade and cross section with a template extending the full width of the walk and supported between side forms. The subgrade and forms shall be wet down sufficiently in advance of placing the concrete to insure a firm and moist condition. In cold weather the subgrade shall be protected and prepared so as to provide a satisfactory subgrade entirely free from frost when the concrete is deposited.

4. FORMS shall be of wood or steel, straight, free from warp, of sufficient strength to resist springing during construction and of a height equal to the full depth of the finished walk. Wood forms shall be 2-inch surfaced plank. Steel forms shall be of approved section with a flat top surface. Forms shall be set with the upper edge true to line and grade and shall be held rigidly in place by stakes, braced as necessary , placed at intervals not to exceed 4 feet on the outside of forms and set flush with the top edge of the form. Forms shall be coated with form oil each time before concrete is placed. Wood forms may be thoroughly wetted with water before concrete is placed except that with probable freezing temperatures, oiling is mandatory. Side forms shall remain in place at least 12 hours after finishing operation.

5. CONCRETE PLACEMENT AND FINISHING.

5.1 General. Concrete shall be placed in the forms in one layer of such thickness that when compacted and finished the sidewalk will be of the thickness indicated. Concrete placement shall be continuous between expansion joints. After the concrete has been placed in the forms, a strike-off guided by the side forms shall be used to bring the surface to the proper section to be compacted. The concrete shall be tamped and consolidated with a suitable

wood or metal tamping bar, and the surface shall be finished to grade with a wood float. After floating, the surface shall be troweled smooth and then finished with a fine-hair push broom drawn over the surface transverse to the line of traffic. The finished surface of the walk shall not vary more than 3/16 inch from the testing edge of a 10-foot straightedge. Irregularities exceeding the above shall be satisfactorily corrected. The surface shall be divided into rectangular areas by means of contraction joints.

5.2 Contraction Joints. The contraction joints shall be formed in the fresh concrete as shown on the attached drawing by cutting a groove in the top portion of the slab to a depth of at least one-fourth of the sidewalk slab thickness, using a jointer to cut the groove, or by sawing a groove in the hardened concrete with a power-driven saw in conformance with paragraph: SAWED JOINTS hereinafter, unless otherwise approved.

5.2.1 Sawed Joints shall be constructed by sawing a groove in the concrete with a 1/8-inch blade to a depth of at least one-fourth of the sidewalk slab thickness. The time of sawing shall be varied, depending on existing and anticipated weather conditions, and shall be such as to prevent uncontrolled cracking of the pavement. Sawing of the joints shall commence as soon as the concrete has hardened sufficiently to permit cutting the concrete without chipping, spalling or tearing. The sawed faces of joints will be inspected for undercutting or washing of the concrete due to early sawing, and sawing shall be delayed if undercutting or washing is sufficiently deep to cause structural weakness or excessive roughness in the joint. The sawing operation shall be carried on as required during both day and night regardless of weather conditions. The joints shall be sawed at the required spacing consecutively in the sequence of the concrete placement. A chalk line or other suitable guide shall be used to mark the alinement of the joint. The saw cut shall not vary more than 1/2 inch from the true joint alinement. Before sawing a joint, the concrete shall be examined closely for cracks, and the joint shall not be sawed if a crack has occurred near the joint location. Sawing shall be discontinued when a crack develops ahead of the saw cut. Workmen and inspectors shall wear clean, rubber-soled footwear, and the number of persons walking on the pavement shall be limited to those actually performing the sawing operation. Immediately after each joint is sawed, the saw cut and adjacent concrete surface shall be thoroughly flushed with water until all waste from sawing is removed from the joint. Any membrane-cured surface damaged during the sawing operations shall be resprayed as soon as the surface becomes dry. The sawing equipment shall be adequate in number of units and power to complete the sawing at the required rate. An ample supply of saw blades shall be available on the job before concrete placement is started, and at least one standby sawing unit in good working order shall be available at the jobsite at all times during the sawing operations.

5.3 Expansion Joints. Transverse expansion joints shall be installed at all walk returns. Transverse expansion joints shall be installed at the intervals and as detailed on attached drawing. The expansion joint filler strips shall be of the thickness shown and shall conform to ASTM D 1751 or D 1752, or may be resin-impregnated fiberboard conforming to the physical requirements of ASTM D 1752. Joint filler shall be held in place by means of steel pins or other devices to prevent warping of the filler during floating and finishing. Expansion joints shall be formed about structures and features that project through or into or abut the walk pavement, installed in such manner as to form a complete, uniform separation between the structure and walk pavement. Immediately after finishing operations are completed, joint edges shall be rounded with an edging tool having a radius of 1/4 inch and concrete over the joint filler shall be removed.

5.4 Surface Uniformity. The complete surface shall be uniform in color and free of surface blemishes and tool marks.

6. CURING AND PROTECTION.

6.1 Curing. Immediately after the finishing operations, the exposed concrete surfaces shall be cured by one of the following methods.

6.1.1 Mat Method. The entire exposed surface shall be covered with cotton mats conforming to Fed. Spec. DDD-M-148 or with two or more layers of burlap conforming to Fed. Spec. CCC-C-467 having a combined weight of 14 ounces or more per square yard when dry. Mats shall overlap each other at least 6 inches. The mat shall be thoroughly wetted with water before placing, and shall be kept continuously in a saturated condition and in intimate contact with concrete for not less than 7 days.

6.1.2 Impervious Sheeting Method. The entire exposed surface shall be wetted with a fine spray of water and then covered with a white sheet material conforming to ASTM C 171. Sheets shall be laid directly on the concrete surface with the light-colored side up and overlapped 12 inches when a continuous sheet is not used. The curing medium shall be not less than 18 inches wider than the concrete surface to be cured and shall be securely weighted down by heavy wood planks or by placing a bank of moist earth on the edges and laps in the sheets. Sheets shall be repaired or replaced if torn or otherwise damaged during curing. The curing medium shall remain on the concrete surface to be cured for not less than 7 days.

6.1.3 Membrane-Curing Method. The entire exposed surfaces shall be covered with a non-pigmented membrane-forming curing compound conforming to ASTM C 309, type I-D. Surfaces shall be shaded from the direct rays of the sun during the entire 7 day curing period. The curing compound shall be applied in two coats by hand-operated pressure sprayers at a coverage of approximately 400 square feet per gallon for each coat. The second coat shall be applied in a direction approximately at right angles to the direction of application of the first coat. The compound shall form a uniform, continuous, coherent film that will not check, crack, or peel and shall be free from

pinholes or other imperfections. Concrete surfaces that are subjected to heavy rainfall within 3 hours after the curing compound has been applied shall be resprayed by the method and at the above coverage at no additional cost to the Government. Concrete surfaces to which membrane- curing compounds have been applied shall be adequately protected for 7 days from pedestrian and vehicular traffic and from any other action which might disrupt the continuity of the membrane. Any area covered with curing compound and damaged by subsequent construction within the 7-day curing period shall be resprayed as specified above.

6.2 Protection After Curing. After the concrete has been cured, all debris shall be removed and the area adjacent to the walk shall be backfilled, graded and compacted in accordance with the lines and grades shown. The completed sidewalk shall be protected from damage until accepted. The Contractor shall clean concrete discolored during construction. Sidewalk that is damaged shall be removed and reconstructed for the entire length between joints, rather than by refinishing the damaged portion. Removed damaged portion shall be disposed of as directed.

* * * * *

SECTION 4H

GROUTING STONE PROTECTION

1. APPLICABLE PUBLICATIONS. The following publications of the issues listed below, but referred to thereafter by basic designation only form a part of this specification to the extent indicated by the references thereto.

1.1 Federal Specifications (Fed. Spec.).

SS-C-1960/GEN	Cement and Pozzolan, General Requirements for
SS-C-1960/3	Cement, Portland

1.2 American Society for Testing and Materials (ASTM), Publications.

C33-74a	Concrete Aggregates

1.3 U.S. Department of the Army, Corps of Engineers, Handbook for Concrete and Cement.

CRD-C 300-72	Membrane-Forming Compounds for Curing Concrete

2. MATERIALS.

2.1 Aggregate shall conform to the requirements specified for fine aggregate of the section: CONCRETE CONSTRUCTION.

2.2 Portland Cement shall conform to the requirements of Fed. Spec. SS-C-1960/3, Type I and/or Type II. The alkali content of the cement shall not exceed 0.6 percent.

2.3 Water shall be fresh, clean, and potable.

3. MIXING. Grout shall be composed of cement, sand, and water mixed in the proportions as directed. The estimated cement content requirement per cubic yard of grout is 7-1/2 sacks. The water content of the mix shall not exceed 8-1/2 gallons per sack of cement. In calculating total water content of the mix, the amount of moisture carried on the surfaces of aggregate particles shall be included. Slump of grout mix shall be between 9 and 10 inches for the first course and between 7 and 8 inches for the second course or where one course is placed. The grout shall be mixed in a concrete mixer in the manner specified for concrete, except that time of mixing shall be as long as is required to produce a satisfactory mixture, and the grout shall be used in the work within a period of 30 minutes after mixing. Retempering of grout will not be permitted. The consistency of the grout shall be such as to permit gravity flow into the interstices of the stones with the help of spading, rodding, and brooming. Grout batches in the same course shall be uniform in mix, size, and consistency.

4. PLACING. Prior to grouting, the stone shall be flushed with water to wash down the fines and to prevent absorption of water from grout. The stone shall be kept wet just ahead of the actual placing of grout. The grout shall be placed in one course in invert and in 2 courses in side slopes. Each course shall be placed full width or in successive lateral strips approximately 10 feet in width, as applicable, extending from toe of slope to top on side slopes. The grout shall be brought to the place of final deposit by approved means and discharged directly on the stones using a splash plate of metal or wood to prevent displacement of stone directly under the discharge. The flow of grout shall be directed with brooms or other approved baffles to cover the entire area and to assure that all crevices are filled. Sufficient barring shall be done to loosen tight pockets of stone and otherwise aid the penetration of grout. The first course shall fully penetrate the stone blanket. The second course shall be placed as soon as the first course has sufficiently stiffened so that it will not flow when additional grout is added. On side slopes, all brooming shall be uphill, and after the second course has stiffened the entire surface shall be rebroomed to eliminate runs in the top course and to fill voids caused by sloughing of the layers of grout. After completion of any strip or panel, no workmen or other load shall be permitted on the grouted surface for a period of 24 hours. The grouted surface shall be protected from injurious action of the sun; shall be protected from rain, flowing water, and mechanical injury; and shall be moist cured or membrane cured at the Contractor's option. Moist curing shall consist of covering the grout with a uniform thickness of 2 inches of sand which shall be kept continuously saturated for a period of 14 days.

Membrane curing compound shall be a pigmented curing compound, conforming to Corps of Engineers Serial No. CRD-C 300.

The curing compound shall be applied as soon as the free water disappears and shall be applied in a 2-coat continuous operation by approved power-spraying equipment at a rate of not to exceed 200 square feet per gallon for the combined coats. The second coat shall be applied to overlap the first coat in a direction approximately at right angles to the direction of the first application.

* * * * *

SECTION 4M

CONCRETE TRAILS

Index

1. Applicable Publications
2. Submittals
3. Storage
4. Concrete
5. Materials Other Than Concrete
6. Subgrade Preparation
7. Forms
8. Concrete Placement and Finishing
9. Curing and Protection

1. APPLICABLE PUBLICATIONS. The following publications of the issues listed below, but referred to thereafter by basic designation only, form a part of this specification to the extent indicated by the references thereto.

1.1 American Society for Testing and Materials (ASTM) Publications.

C 94-74a	Ready-Mixed Concrete
C 150-76a	Portland Cement
D 1751-73	Preformed Expansion Joint Fillers for Concrete Paving and Structural Construction (Nonextruding and Resilient Bituminous Types)
D 1752-67 (1973)	Preformed Sponge Rubber and Cork Expansion Joint Fillers for Concrete Paving and Structural Construction
C 1850-74	Concrete Joint Sealer, Cold-Application Type

2. SUBMITTALS.

2.1 Certified Laboratory Test Reports. Before delivery of materials, certified copies in triplicate of the reports of all tests required in referenced publications shall be submitted to and approved by the Contracting Officer. The testing shall have been performed by an approved independent laboratory, acceptable to the Contracting Officer, within one year of submittal of reports for approval. Test reports on previously tested material shall be accompanied by notarized certificates from the manufacturer certifying that the previously tested material is of the same type, quality, manufacturer, and make as that proposed to be supplied.

2.2 Concrete Certification Report. A concrete certification report shall be furnished with each batch of concrete prior to unloading at the site in accordance with ASTM C 94 Section 15.

3. STORAGE. Storage accommodations for concrete materials shall be subject to approval and shall afford easy access for inspection and identification of each shipment in accordance with test reports.

3.1 Cement. Immediately upon receipt on work site, cement shall be stored separately in a dry, weathertight, properly ventilated structure and adequate provision made to prevent absorption of moisture.

3.2 Aggregates. Aggregates shall be stored to assure good drainage, to proclude inclusion of foreign matter, and to preserve gradation.

4. CONCRETE. Concrete and the equipment, workmanship, and materials therefor shall conform to the applicable requirements of SECTION: CONCRETE except as specified below. The maximum size of coarse aggregate shall be 1-1/2 inches. Concrete shall have a slump of not more than 3 inches.

5. MATERIALS OTHER THAN CONCRETE.

5.1 Joint Materials.

5.5.1 Expansion joint fillers shall conform to ASTM D 1751 or D 1752 or shall be resin impregnated fiberboard conforming to the physical requirements of ASTM D 1752.

6. SUBGRADE PREPARATION. The subgrade shall be constructed true to grade and cross section. The subgrade shall be thoroughly wetted and then compacted with two passes of a 500-pound roller. Yielding material deflecting more than 1/2 inch under the specified roller shall be removed to a depth of not less than 4 inches below

subgrade elevation and replaced with an approved granular material. The material shall then be compacted as described above. The completed subgrade shall be tested for grade and cross section with a template extending the full width of the path and supported between side forms. The subgrade shall be maintained in a smooth, compacted condition, in conformity with the required section and established grade until the concrete is placed. The subgrade shall be in a moist condition when the concrete is placed. The subgrade shall be prepared and protected so as to provide a subgrade free from frost when the concrete is deposited.

7. FORMS. Forms shall be of wood or steel, straight, of sufficient strength to resist springing during depositing and consolidating concrete, and of a height equal to the full depth of the finished path. Wood forms shall be surfaced plank, 2 inch nominal thickness, straight and free from warp, twist, loose knots, splits or other defects. Wood forms shall have a nominal length of 10 feet, with a minimum of three stakes per form, at maximum spacing of 4 feet. Corners, deep sections, and radius bends shall have additional stakes and braces, as required. Radius bends may be formed with 3/4 inch boards, laminated to the required thickness. Steel forms shall be channel-formed sections with a flat top surface and with welded braces at each end and at not less than two intermediate points. Form ends shall be interlocked and self-aligning. Forms shall include flexible forms for radius forming, corner forms, form spreaders, and fillers. Form shall have a nominal length of 10 feet, with a minimum of two welded stake pockets per form. Stake pins shall be solid steel rods with chamfered heads and pointed tips, designed for use with steel forms. Forms shall be set with the upper edge true to line and grade and shall be held rigidly in place by stakes placed at intervals not to exceed 4 feet. After forms are set, grade and alignment shall be checked with a 10 foot straightedge. Forms shall conform to line and grade with an allowable tolerance of 1/8-inch in any 10 foot long section. Forms shall have a transverse slope of 1/4-inch per foot with the low side adjacent to the roadway. Forms shall be coated with form oil each time before concrete is placed. Wood forms may, instead, be thoroughly wetted with water before concrete is placed, except that with probable freezing temperatures, soiling is mandatory. Side forms shall not be removed for less than 12 hours after finishing has been completed.

8. CONCRETE PLACEMENT AND FINISHING.

8.1 Concrete shall be placed in the forms in one layer of such thickness that when compacted and finished the path will be of the thickness indicated. After concrete has been placed in the forms, a strike-off guided by side forms shall be used to bring the surface solidated with a suitable wood or metal tamping bar, and the surface shall be finished to grade with a wood float. Finished surface of the path shall not vary more than 3/16-inch from the testing edge of a 10 foot straightedge. Irregularities exceeding the above shall be satisfactorily corrected. The surface shall be divided into rectangular areas by means of contraction joints spaced at nor more than 5 feet on center.

8.1.1 Concrete Finishing. After straightedging, when most of the water sheen has disappeared, and just before the concrete hardens, the surface shall be finished to a smooth and uniformly fine granular or sandy texture, free of waves, irregularities, or tool marks. A scored surface shall be produced brooming with a soft-bristled broom.

8.1.2 Edge and Joint Finishing. All slab edges, including those at formed joints, shall be finished carefully with an edger having a radius of 1/8 inch. When brooming is selected for the final surface finish, the transverse joints shall be edged before brooming, and the brooming shall eliminate the flat surface left by the surface face of the edger. Corners and edges which have crumbled and areas which lack sufficient mortar for proper finishing shall be cleaned and filled solidly with a properly proportioned mortar mixture and then finished.

8.1.3 Contraction Joints. The contraction joints shall be formed in the fresh concrete by cutting a groove in the top portion of the slab to a depth of at least 1/4 of the slab thickness, using a jointer to cut the groove, or by sawing a groove in the hardened concrete with a power-driven saw in conformance with paragraph "Sawed Joints" below unless otherwise approved.

8.1.3.1 Sawed Joints. Sawed joints shall be constructed by sawing a groove in the concrete with a 1/8-inch blade to the depth indicated. The time of sawing shall be varied, depending on existing and anticipated weather conditions, and such sawing shall be at the required rate. An ample supply of saw blades shall be available on the job before concrete placement is started, and at least one standby sawing unit in good working order shall be available at the jobsite at all times during the sawing operations.

8.1.4 Expansion Joints. Transverse expansion joints shall be installed at path returns and opposite expansion joints in adjoining concrete construction. Where the path is not in contact with adjoining concrete construction, transverse expansion joints shall be installed as indicated. Transverse expansion joints shall be filled with 1/4-inch-thick joint filler strips. Joint filler shall be placed with top edge 1/4 inch below the surface and shall be held in place with steel pins or other devices to prevent warping of the filler during floating and finishing. Immediately after finishing operations are completed, joint edges shall be rounded with an edging tool having a radius of 1/8 inch, and concrete over the joint filler shall be removed. Expansion joints shall be formed about structures and features that project through or into the pavement, using joint filler of the type, thickness, and width indicated. The filler shall be installed in such manner as to form a complete, uniform separation between the structure and pavement. At the end of the curing period, expansion joints shall be carefully cleaned.

8.1.5 Surface Uniformity. The completed surface shall be uniform in color and free of surface blemishes and tool marks.

9. CURING AND PROTECTION.

9.1 Curing. Immediately after the finishing operations, exposed concrete surfaces shall be cured by one of the following methods as the Contractor may elect.

9.1.1 Mat Method. The entire exposed surface shall be covered with two or more layers of burlap. Mats shall overlap each other at least 6 inches. The mat shall be thoroughly wetted with water prior to placing on concrete surface and shall be kept continuously in a saturated condition and in intimate contact with concrete for not less than seven days.

9.1.2 Impervious Sheeting Method. The entire exposed surface shall be wetted with a fine spray of water and then covered with impervious sheeting material. Sheets shall be laid directly on the concrete surface with the light-colored side up and overlapped 12 inches when a continuous sheet is not used. The curing medium shall not be less than 18 inches wider than the concrete surface to be cured, and shall be securely weighted down by heavy wood planks, or by placing a bank of moist earth along edges and laps in the sheets. Sheets shall be satisfactorily repaired or replaced if torn or otherwise damaged during curing. The curing medium shall remain on the concrete surface to be cured for not less than seven days.

9.1.3 Membrane-Curing Method. The entire exposed surface shall be covered with a membrane-forming curing compound. Where type I curing compound is used, the concrete surface shall be shaded from the direct rays of the sun during the curing priod. Curing compound shall be applied in two coats by hand-operated pressure sprayers at a coverage of approximately 200 square feet per gallon for both coats. The second coat shall be applied in a direction approximately at right angles to the direction of application of the first coat. The compound shall form a uniform, continuous, coherent film that will not check, crack, or peel and shall be free from pinholes or other imperfections. Apply an additional coat to all surfaces showing discontinuity, pinholes or other defects. Concrete surfaces that are subjected to heavy rainfall within 3 hours after curing compound has been applied shall be resprayed by the above method and at the above coverage at no additional cost to the Government. Expansion-joint openings shall be sealed at the top by inserting moistened paper or fiber rope or covering with strips of waterproof paper prior to application of the curing compound, in a manner to prevent the curing compound entering the joint. Concrete surfaces to which membrane-curing compounds have been applied shall be adequately protected for 7 days from pedestrian and vehicular traffic and from any other action that might disrupt the continuity of the membrane. Any area covered with curing compound and damaged by subsequent construction operations within the 7-day curing period shall be resprayed as specified above at no additional expense to the Government.

9.2 Backfilling. After curing, debris shall be removed, and the area adjoining the path shall be backfilled, graded, and compacted to conform to the surrounding area in accordance with lines and grades indicated.

9.3 Protection. The completed path shall be protected from damage until accepted. The Contractor shall repair damaged concrete and clean concrete discolored during construction. Concrete path that is damaged shall be removed and reconstructed for the entire length between regularly scheduled joints. Refinishing the damaged portion will not be acceptable. Removed damaged portions shall be disposed of as directed.

* * * * *

SECTION 5D

STONE PROTECTION

Index

1. Applicable Publications
2. Materials
3. Foundation Preparation
4. Placement
5. Scales
6. Waybills and Delivery Tickets

1. APPLICABLE PUBLICATIONS. The following American Society for Testing and Materials Standards of the issues listed below, but referred to thereafter by basic designation only, form a part of this specification to the extent indicated by the references thereto.

C 88-73	Soundness of Aggregates by Use of Sodium Sulfate or Magnesium Sulfate
C 127-73	Specific Gravity and Absorption of Coarse Aggregate
C 136-71	Sieve or Screen Analysis of Fine and Coarse Aggregates
C 131-69	Resistance to Abrasion of Small Size Coarse Aggregate by Use of the Los Angeles Machine
C 535-69 (R 1975)	Resistance to Abrasion of Large Size Coarse Aggregate by Use of the Los Angeles Machine
D 1141-52	Substitute Ocean Water

2. MATERIALS.

2.1 Source and Material Approval. The Contractor shall make all arrangements, pay all royalties, and secure all permits for the procurement, furnishing and transporting of materials. The source(s) from which the Contractor proposes to obtain the material shall be selected and a sample submitted a minimum of 45 days in advance of the time when the material will be required in the work. Stone from a proposed source where exploratory investigations and compliance test reports or satisfactory service records are not available, will be tested by the Government for quality compliance. The Government will test one sample at its expense. If the material fails the tests or if the Contractor desires to utilize more than one source, additional testing will be accomplished by the Government for the sum of $1,100.00 for each sample tested. The costs of such tests will be deducted from payment due the Contractor. All test samples (500 pounds minimum) shall be representative of the rock source and shall be obtained by the Contractor under the supervision of the Contracting Officer and delivered at the Contractor's expense to the South Pacific Division Laboratory, U.S. Army Engineer Division, South Pacific, Sausalito, California. A list of sources from which acceptable stone protection materials have been obtained is available for informational purposes in the office of the District Engineer, Foundations and Materials Branch, 300 North Los Angeles Street, Los Angeles, California. Sources listed may no longer be available due to depletion or may not be acceptable because of changes in the material. The Contractor shall vary the quarrying, processing, loading and placing operations to secure the type and quality of stone protection specified. If the stone being furnished by the Contractor does not fully meet all the requirements of these specifications, the Contractor shall furnish at no additional cost to the Government, other stone meeting the requirements of these specifications. Approval of stone from a source shall not be construed as a waiver of the right of the Government to require the Contractor to furnish stone which complies with these specifications. Materials produced from localized areas, zones or strata will be rejected when such materials do not comply with the specifications.

2.2 Quality Compliance. Test results and service records may be used to determine the acceptability of the stone protection materials. In the event compliance test reports and/or service records are not available, the material shall be subjected to the tests outlined in these specifications to determine its acceptability for use in the work. Before a proposed new source of stone will be considered for sampling and testing, one of the following criteria must be met:

a. A sufficiently developed quarry operation to demonstrate that an adequate quantity of stone is available to fulfill the contract requirements; or,

b. An exposed face plus sufficient explorations (results of which are made available to the Government) to demonstrate that an adequate quantity of stone is available to fullfill the contract requirements.

2.2.1 Filter Material. Material shall contain no organic matter nor soft, friable particles, shall be clean, hard, and uncoated, and shall have a percentage of wear not to exceed 50 percent after 500 revolut ons when tested in accordance with ASTM C131.

2.3 Quality Compliance Tests for Stone Protection. Stone shall meet the following test requirements.

Test	Test Method	Requirement
Specific Gravity (Bulk SSD)	ASTM C 127	2.50 minimum
Absorption	ASTM C 127	2.0% maximum
Wetting & Drying	SPD Test Procedures(1)	No fracturing (3)
Sodium Sulfate	ASTM C 88(2)	10% max. loss(4)
Abrasion Loss	ASTM C 535	50% max. loss

In addition to the above tests, the stone shall be subjected to a petrographic and X-ray diffraction analysis. The stone must not contain any swelling type clay (illite or montmorillonite).

NOTE: (1): Test procedure wetting-and-drying tests. The initial step of the test is the careful examination of the entire sample and the selection of representative test specimens. The piece should be large enough to produce two cut slabs, one inch thick (+ 1/4 inch) with a minimum surface area of 30 square inches on one side. Two chunks approximately three by four inches are also chosen. The slabs and chunks are carefully examined under a low-power microscope and all visible surface features are noted and recorded. The specimens are then oven dried at 140 degrees F., for eight hours, cooled and weighed to the nearest tenth of a gram. The test specimens are photographed to show all surface features before the test. The chunks and slabs are then subjected to fifteen cycles of wetting and drying. One slab and one chunk are soaked in fresh tap water, the other slab and chunk are soaked in salt water prepared in accordance with ASTM D1141. Each cycle consists of soaking for sixteen hours at room temperature and then drying in an oven for eight hours at 140 degrees F. After each cycle the specimens are examined with the low-power microscope to check for opening or movement of fractures, flaking along edges, swelling of clays, softening or rock surface, heaving of micaceous minerals, breakdown of matrix material and any other evidence of weakness developing in the rock. The cycle in which any of these actions occurs is recorded. After fifteen cycles, the slabs and chunks are again carefully examined and all changes in the rocks are noted and recorded. The test specimens together with all flakes or particles which come off during the test are oven dried, weighed and photographed.

NOTE: (2): The test shall be made on 50 particles each weighing 100 grams, ± 20 grams, in lieu of the gradation given in C 88.

NOTE: (3): Weakening and loss of individual surface particles is permissible unless bond of the surface grains softens and causes general disintegration of the surface material.

NOTE: (4): Sandstones which have a loss greater than the specified limit will be accepted if the Contractor demonstrates that the rock has a satisfactory service record.

2.4 Gradation Sampling and Testing for Stone Protection. Tests shall be performed by an approved testing laboratory on samples selected by the Contracting Officer. The Government reserves the right to perform check tests and to use the Contractor's sampling and testing facilities to make the tests. Each sample shall consist of not less than five tons of materials and shall be selected at random from the production run. One gradation test is required at the beginning of production prior to delivery of stone to the project and a minimum of one additional test for each (10,000) tons of material placed. All sampling and gradation tests performed by the Contractor shall be under the supervision of the Contracting Officer.

2.5 Gradation.

2.5.1 General. All points on individual grading curves shall be between the boundary limits as defined by smooth curves drawn through specified grading limits plotted on a mechanical analysis diagram. The individual grading curves shall not exhibit abrupt changes in slope denoting skip grading or scalping of certain sizes. Specified grading of all material shall be met both at the source and as delivered to the project. In addition, material not meeting the required grading due to segregation or degradation during placement shall be rejected. If best results show that stone does not meet the required grading, the hauling operation will be stopped immediately and will not resume until processing procedures are adjusted and a gradation test is completed showing gradation requirements are met. All gradation tests shall be at the expense of the Contractor.

2.5.2 Filter Material. Filter material shall be well graded between the limits specified below when tested in accordance with ASTM C136.

Sieve Size	Percent Finer (by Weight)
4 inch	100
1-1/2 inch	50-80
No. 4	30-60
No. 200	0-10

2.5.3 Stone shall be quarried stone or cobblestone reasonably well graded within the limits specified below:

Weight of Individual Pieces (Pounds)	Percent Smaller (by Weight)
160	100
70	60-100
35	15-50
10	0-15

3. FOUNDATION PREPARATION. Areas on which filter material or stone is to be placed shall be trimmed and dressed to conform to cross sections indicated or directed, within an allowable tolerance of plus or minus one inch from the theoretical slope lines and grades. Where such areas are below the allowable minus tolerance limit they shall be brought to grade by filling with earth similar to the adjacent material and well compacted, or by filling with approved material, and no additional payment will be made for any material thus required. Immediately prior to placing the filter material or stone, the prepared base shall be inspected by the Contracting Officer and no material shall be placed thereon until that area has been approved.

4. PLACEMENT.

4.1 Filter Material shall be spread uniformly on the prepared base, in a satisfactory manner, to the neat lines indicated or directed. Placing of material by methods which will tend to segregate particle sizes will not be permitted. Any damage to the prepared surface of the base during placing of the filter material shall be repaired before proceeding with the work. Compaction of the filter material will not be required but it shall be finished to present a reasonably even surface free from mounds or windrows. A tolerance of plus or minus one inch from the slope lines and grades when measured with a 10-foot straightedge will be allowed in each finished course, except that either extreme of such tolerance shall not be continuous over an area greater than 200 square feet.

4.2 Stone shall be placed in a manner to produce a reasonably well graded mass with the minimum practicable percentage of voids, and shall be constructed to the lines and grades indicated or directed. Stone shall be placed to its full course thickness in one operation and in a manner to avoid displacing the underlying material. Method of placement shall be submitted to Contracting Officer for approval prior to commencement of placement operations. The Contractor shall maintain the stone protection until accepted and any material displaced by any cause shall be replaced at his expense to the lines and grades shown on the drawings. Self propelled equipment shall not be used on the levee slopes. Hand placing, barring, or placing by crane will be required only to the extent necessary to secure the results specified. Placing stone by dumping into chutes or by similar methods likely to cause segregation will not be permitted. A tolerance of plus or minus 1-1/2 inches from the indicated slope lines and grades will be allowed in the finished surface, except that either extreme of such tolerance shall not be continuous over an area greater than 200 square feet.

5. SCALES shall be standard truck scales of the beam type. The scales shall be of sufficient size and capacity to accommodate all trucks used in hauling the material. Scales shall be tested, approved, and sealed by an inspector of the State Inspection Bureau charged with scales inspection within the state in which the project is located. Scales shall be calibrated and resealed as often as necessary to insure continuous accuracy. The necessary number of standard weights for testing the scales shall be on hand at all times and, if an official inspection bureau of the state is not available, the scales will be tested by the Contracting Officer.

6. WAYBILLS AND DELIVERY TICKETS. Copies of waybills or delivery tickets shall be submitted to the Contracting Officer during the progress of the work. Before the final statement is allowed, the Contractor shall file with the Contracting Officer certified waybills and/or certified delivery tickets for all stone actually used in the construction covered by the contract.

* * * * *

SECTION 6A

MISCELLANEOUS METALWORK AND MATERIALS

Index

1. Applicable Publications
2. Materials
3. Workmanship
4. Finishing
5. Zinc Coating (Galvanizing)
6. Castings
7. Elastomeric Bearing Pads
8. Expanded Polystyrene
9. Anchorage
10. Miscellaneous Plates and Shapes
11. Side Drain Gates
12. Pipe Gate
13. Shop Painting
14. Drainage Gates

1. APPLICABLE PUBLICATIONS. The following publications of the issues listed below, but referred to thereafter by basic designation only, form a part of this specification to the extent indicated by the references thereto.

1.1 Federal Specification (Fed. Spec.).

FF-B-575C	Bolts, Hexagon and Square
FF-N-836D & Am-1	Nut: Square, Hexagon, Cap, Slotted, Castle, Knurled, Welding and Single Ball Seat
QQ-B-750 & Am-2	Bronze, Phosphor; Bar, Plate, Rod, Sheet Strip, Flat Wire, and Structural and Special Shaped Sections
QQ-S-763d & Int. Am-1	Steel Bars, Wire, Shapes, and Forgings, Corrosion-Resisting
TT-V-51e	Varnish; Asphalt
WW-P-401E	Pipe and Pipe Fittings, Cast-iron, Soil
LLL-B-810B	Building Board, (Hardwood) Hard Pressed, Vegetable Fiber

1.2 American Society for Testing and Materials (ASTM) Standards.

A 36-75	Structural Steel
A 48-74	Gray Iron Castings
A 120-73	Black and Hot-Dipped Zinc-Coated (Galvanized) Welded and Seamless Steel Pipe for Ordinary Uses
A 123-73	Zinc (Hot Galvanized) Coatings on Products Fabricated from Rolled, Pressed, and Forged Steel Shapes, Plates, Pads, and Strip
A 126-73	Gray Iron Castings for Valves, Flanges, and Pipe Fittings
A 320-74	Alloy-Steel Bolting Materials for Low-Temperature Service
A 501-74	Hot-Formed Welded Seamless Carbon Steel Structural Tubing
A 603-70	Zinc-Coated Steel Structural Wire Rope
B 32-76	Solder Metal

B 211-75	Aluminum-Alloy Bars, Rod, and Wires
C 203-58 (R 1972)	Breaking Load and Calculated Flexural Strength of Preformed Block-Type Thermal Insulation, Test for
D 1149-64 (R 1970)	Accelerated Ozone Cracking of Vulcanized Rubber
D 22-40-68 (R 1974)	Indentation Hardness of Rubber and Plastics by Means of a Durometer

1.3 American Welding Society (AWS) Standard.

B3.0-41T	Standard Qualifications Procedure (Reprinted April 1969)
D1.1-75	Structural Welding Code

1.4 American Association of State Highway and Transportation Officials (AASHTO) Specification.

M 251-74	Laminated Elastomeric Bridge Bearings

1.5 Military Specification (Mil. Spec.).

MIL-C-18480A & Am-3 (Docks)	Coating Compound, Bituminous, Solvent, Coal Tar Base

2. MATERIALS.

2.1 General. Materials indicated on the drawings or required in the work and not covered elsewhere by detailed requirements shall conform to the requirements of this section. In all cases not specifically covered in these specifications, the Contractor shall furnish approved highest grade commercial materials or products.

2.2 Structural Steel shall conform to ASTM A 36.

2.3 Corrosion-Resisting Steel Bolts and Anchor Bolts shall conform to Fed. Spec. QQ-S-763, Class 304, Condition A, or or the applicable requirements of ASTM A 320, Grade BB.

2.4 Bronze shall conform to Fed. Spec. QQ-B-750, hard temper of either composition.

2.5 Bolts shall conform to Fed. Spec. FF-B-575.

2.6 Nuts shall conform to Fed. Spec. FF-N-836.

2.7 Cast Iron for Drainage Gates shall conform to ASTM A 126, Class B.

2.8 Cast Iron Pipe and Fittings shall conform to the applicable requirements of Fed. Spec. WW-P-401.

2.9 Coal Tar Base Paint shall conform to Mil. Spec. MIL-C-18480. A special primer shall be used only if as recommended by the manufacturer of the coating.

3. WORKMANSHIP. Steel with welds will not be accepted, excepted where welding is definitely specified or called for on the drawings. All bolts, nuts, and screws shall be tight. All exposed ferrous metalwork (except cast-iron and corrosion-resistant steel and items to be completely embedded in concrete) shall be galvanized unless other protective coatings are specified. Metalwork shall be galvanized after fabrication. Complete shop drawings for fabrication of all miscellaneous metalwork shall be submitted for approval, in accordance with the requirements for shop drawings of Special Provisions.

4. FINISHING. In general, tolerances for machine-finished surfaces designated by nondecimal dimensions shall be within 1/64 inch. Sufficient machining stock shall be allowed on placing pads to insure true surfaces of solid material. Finished contact or bearing surfaces shall be true and exact to secure full contact. All drilled holes for bolts shall be accurately located and drilled from templates.

5. ZINC COATING (GALVANIZING). Zinc coatings shall be applied in a manner and of a thickness and quality conforming to ASTM A 123. In the event that any portion of galvanized metalwork is abraded or otherwise damaged to the extent that the base metal is exposed, such damaged or abraded portions shall be neatly covered with Grade 50B solder conforming to the requirements of ASTM B 32.

6. CASTINGS. Each casting shall have the mark number and heat number cast or stamped upon it. Dimensions of castings shown on the approved shop drawings will be the finish dimensions. Before leaving the foundry, all castings shall be thoroughly cleaned and subjected to hammer inspection after which they shall be treated.

7. ELASTOMERIC BEARING PADS shall conform to requirements of AASHTO M 251. The Contractor shall furnish to the Contracting Officer a certification by the manufacturer that the elastomer, and fabric (if used), in the elastomeric bearing pads to be furnished conforms to the specification requirements.

8. EXPANDED POLYSTYRENE shall be a commercially available polystyrene board. Expanded polystyrene shall have a flexural strength of 35 pounds per square inch, minimum, determined in accordance with ASTM C 203, and a compressive yield strength of between 16 and 40 pounds per square inch at 5 percent compression. Vertical surfaces of expanded polystyrene against which concrete is to be placed shall be faced with hardboard. Hardboard shall be 1/8 inch minimum thickness, conforming to Federal Specification LLL-B-810, any type. Other facing materials may be used provided they furnish equivalent protection. All boards shall be held in place by nails, waterproof adhesive, or other approved means.

9. ANCHORAGE shall be provided where necessary for fastening miscellaneous metal items securely in place. Anchorage not otherwise specified or indicated shall include slotted inserts, expansion shields, and powder-driven fasteners when approved for concrete; toggle bolts and through bolts for masonry; machine and carriage bolts for steel; through bolts, lag bolts, and screws for wood. Slotted inserts shall be of types required to engage with the anchors and shall be approved.

10. MISCELLANEOUS PLATES AND SHAPES for items that do not form a part of the structural steel framework, such as lintels, sill angles, miscellaneous mountings, and frames, shall be provided to complete the work. Miscellaneous plates and shapes shall conform to ASTM A 36.

11. SIDE DRAIN GATES. Automatic drainage gates for side drains shall be of the size indicated and constructed for a minimum 20 foot seating head. Frames, covers, and seats shall be cast iron. Links may be cast iron, steel, or high strength malleable iron. Bushings shall be bronze or brass. Fasteners shall be galvanized steel or corrosion resistant steel. Gates shall have fully adjustable linkage. Each gate shall be rigidly secured in place with seating faces inclined from the vertical by approximately 3 degrees. Installation of gates shall be as recommended by the gate manufacturer. Fasteners of the size recommended by the gate manufacturer shall be utilized in assembly of gate and to secure the gates of the headwall. The gates shall be so constructed as to prevent locking in any partially open position.

12. PIPE GATE. Pipe posts shall conform to ASTM A 120, standard weight, galvanized, of the sizes shown. Posts shall be set plumb in concrete bases of dimension indicated. Concrete in bases shall be thoroughly compacted and finished in a dome. Pipe gate chain shall be welded type, steel, proof coil, welded to part as indicated. Reflectors shall be 3-inch diameter, plastic or glass, clear type mounted on target plate with baked enamel finish. Plate shall be secured to pipe rail with tamper proof fasteners.

13. SHOP PAINTING. Unless otherwise specified, surfaces of ferrous metal, except galvanized surfaces, shall be cleaned and shop coated with the manufacturer's standard protective coating. Items to be finish painted shall not be given a bituminous protective coating. Surfaces shall be cleaned with solvents to remove grease and oil and with power wire-brushing or sandblasting to remove loose rust, loose mill scale, and other foreign substances. Surfaces of items embedded in concrete shall not be painted. Bituminous primer shall conform to Fed. Spec. TT-V-51 or to Military Specification MIL-C-18480.

14. DRAINAGE GATES shall be given 3 coats of cold applied coal tar base paint. The paint shall be applied heavily by brush, at a coverage rate of approximately 100 sq. ft./gal. to give a total film thickness for 3 coats of 1/32 of an inch. Each additional coat shall be brushed perpendicularly to strokes of preceding coat. Drying time between coats shall be as recommended by manufacturer of coating.

* * * * *

SECTION 6D

FENCING

Index

1. Applicable
2. Materials
3. Installation of Fence
4. Bridge Fences

1. APPLICABLE PUBLICATIONS. The following publications of the issues listed below, but referred to thereafter by basic designation only, form a part of this specification to the extent indicated by the references thereto.

1.1 Federal Specifications.

RR-F-191G/GEN.	Fencing, Wire and Post, Metal (and Gates, Chain-Link Fabric, and Accessories)

1.2 American Society for Testing and Materials (ASTM) Standards.

B 32-70	Solder Metal
C 94-74a	Ready-Mixed Concrete

2. MATERIALS shall conform to Fed. Spec. RR-F-191G/GEN and other requirements specified below.

2.1 Chain-Link Fabric. Fed. Spec. RR-F-191, type 1, 2 oz. coating and shall be 9 gage wire woven in a 2-inch mesh.

2.2 Concrete. ASTM C 94, using 3/4-inch maximum size aggregate, and having minimum compressive strength of 3,000 p.s.i. at 28 days. Grout shall consist of one part Portland cement to 3 parts clean, well-graded sand and the minimum amount of water to produce a workable mix.

2.3 Accessories for Chain-Link Fences. Fed. Spec. RR-F-191, zinc-coated, except as modified herein.

2.3.1 Gates. Gates less than 8 feet wide shall have truss rods or intermediate braces. Gate fabric shall be attached to the gate frame by method standard with the manufacturer except that welding will not be permitted. Latches shall be arranged for padlocking so that padlock will be accessible from both sides of the gate regardless of the latching arrangement. All gate hinges shall be the non-removable bolt-pin type.

2.3.2 Barbed Wire shall be zinc-coated.

2.3.3 Tension Wire. Minimum tensile strength of 80,000 pounds per square inch, zinc-coated.

2.3.4 Tie Wire. Aluminum alloy of 0.144-inch diameter for attaching fabric to top rail and to intermediate posts. Preformed clips of 6-gage zinc-coated steel wire may be used for attaching fabric to intermediate posts.

2.3.5 Hog Rings. Aluminum wire of 0.110-inch diameter for attaching fabric to top and bottom tension wires.

2.3.6 Post Braces and Truss Rods. For each gate, corner, pull, or end post. Truss rods shall be provided with turnbuckles or other equivalent provisions for adjustment.

2.3.7 Post, Rails, and Braces. The posts, rails, and braces, shall be either round or H-Section; however, the same type shall be used throughout the project.

3. INSTALLATION OF FENCE.

3.1 General. The fence shall be installed to the alinement indicated. Fence installation shall be in accordance with the fence manufacturer's written installation instructions except as modified herein. Details shall conform to the attached sketches Nos. 2 and 3.

3.2 Post Setting. Posts shall be set plumb and in alinement. Posts shall be set in concrete bases of dimensions indicated except where posts are set in preformed holes. Concrete shall be thoroughly compacted so as to be free of voids and finished in a dome. Braced pull posts shall be installed at fence ends, intersections, each change in direction of 10 degrees or more horizontally, and at each grade change of 5 degrees or more. In addition, straight runs between braced pull posts shall not exceed 500 feet. In preformed holes, posts shall be set with a minimum of 1 inch of grout around each post. Grout shall be thoroughly worked into the hole so as to be free of voids and finished in a dome. Concrete and grout shall be cured a minimum of 72 hours before any further work is done on the posts.

3.3 Post Caps and Supporting Arms shall be installed as recommended by the manufacturer. Post caps and barbed-wire supporting arms shall be of the design as required to accommodate the top rail. In addition to manufactuers's standard connections, supporting arms shall be securely anchored to posts in such manner that will prevent easy removal with hand tools. Studs driven by low-velocity explosive-actuated tool may be used with steel, wrought iron, ductile iron, or malleable iron. Studs driven by any explosive-actuated tool will not be used with gray iron or other material that will be fractured.

3.4 Top Rails. Top rail shall be installed before installing chain-link fabric and shall pass through intermediate post caps. The top rail shall have expansion couplings spaced as indicated. Toprail shall be installed at bridge approaches and where the slope of the wall is greater than 2:1.

3.5 Top and Bottom Reinforcing Wires shall be installed before installing chain-link fabric and shall be pulled taut.

3.6 Fabric shall be pulled taut and secured to the top wire and bottom wire close to both sides of each post and at intervals of not more than 24 inches on centers. Fabric shall be attached to the sides of the post away from the channel or enclosed opening. Fabric shall be secured to braced pull posts using stretcher bars and ties or clips or by integrally weaving to integral fastening loops of ends, corner, pull, and gate posts for the full length of each post. Fabric shall be attached to line posts at not greater than 15 inches on center using ties or clips. Splices in fabric shall be made with suitable splicing wire. Edges of fabric made by field cuts shall be knuckled or barbed as applicable.

3.7 Barbed Wire shall be installed on supporting arms above the fence posts. Each end member of gate frames shall be extended sufficiently above the top member to carry three strands of barbed wire in horizontal alinement with barbed wire strands on the fence. Each strand shall be pulled taut and securely fastened to each supporting arm and extended member. The method of securing wires shall be positive and complete.

3.8 Gates shall be installed as indicated. Hinge bolts shall be installed in drilled holes in the gate posts. Bolts and nuts shall be tack welded to gate posts.

3.9 Repair. In the event that any portion of galvanized items is abraded or otherwise damaged to the extent that the base metal is exposed, such damaged or abraded portions shall be neatly covered with Grade 50B solder conforming to the requirements of ASTM B,32.

4. BRIDGE FENCES, including fence or wing walls and channel walls within bridge limits, shall consist of chain line fabric supported on round steel posts and braces. The top and bottom of the fabric shall be knuckled. A top rail and a bottom galvanized coiled spring tension reinforcing wire shall be provided.

* * * * *

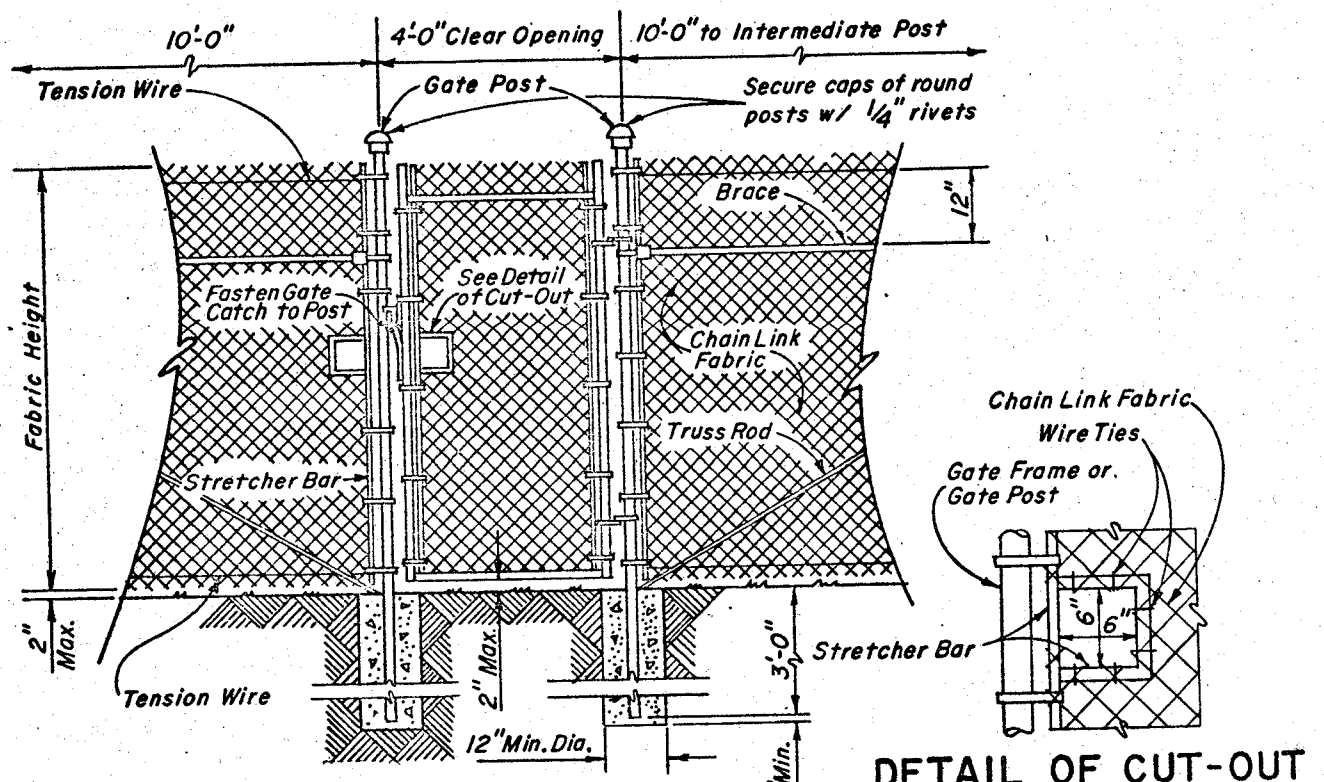

WALK GATE

DETAIL OF CUT-OUT

For Chain and Lock

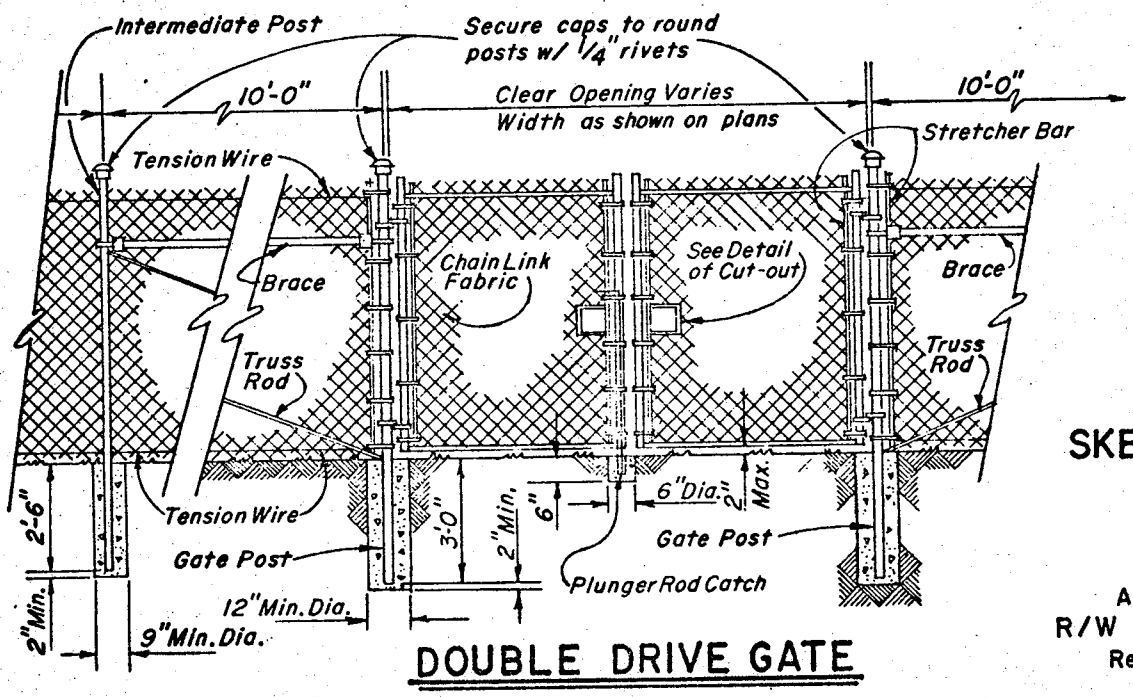

DOUBLE DRIVE GATE

SKETCH NO.

2

APRIL 1973

R/W FENCE GATES

Rev. Sept. 1973

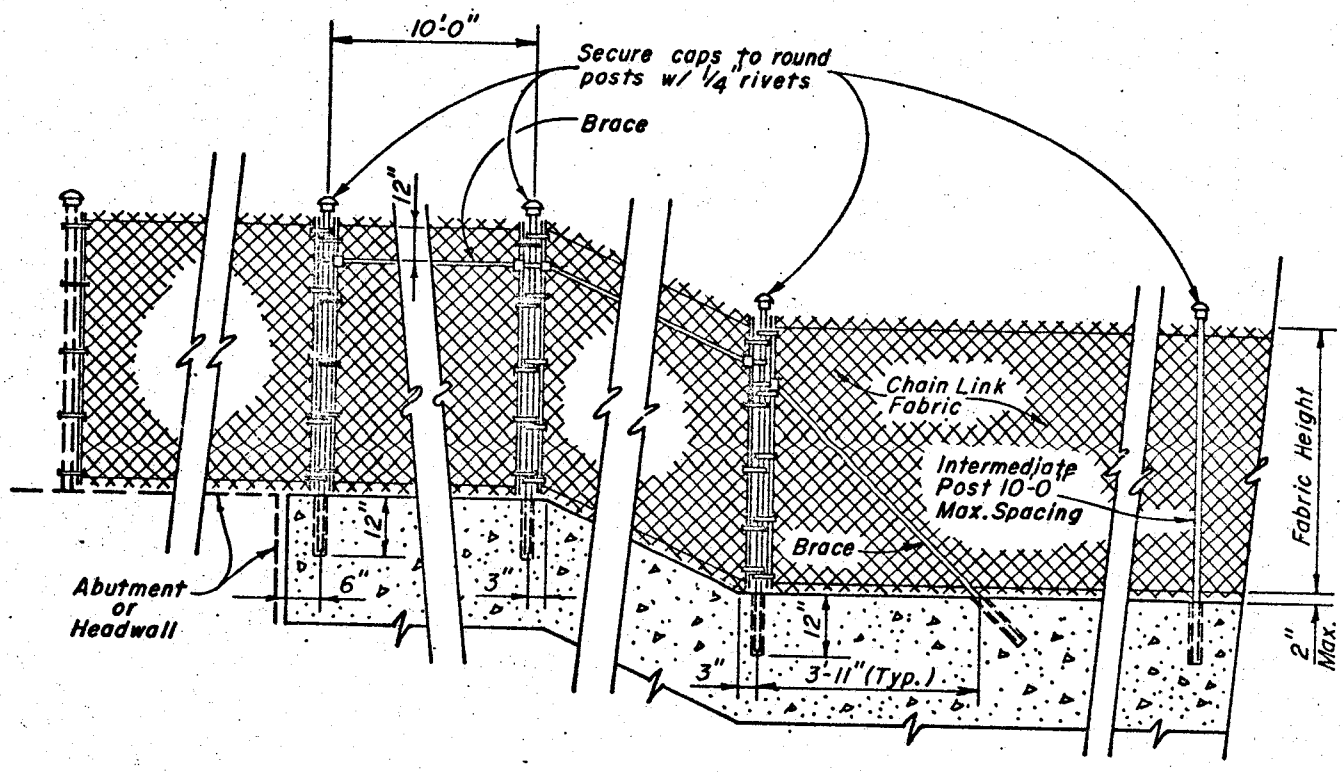

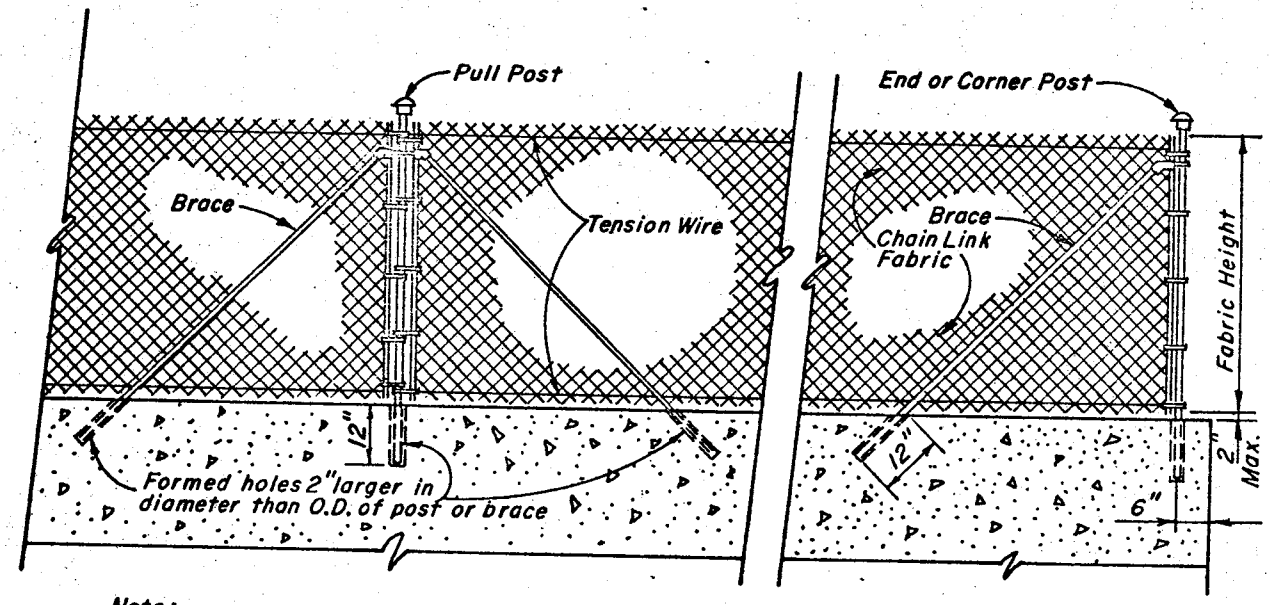

Note: Grout all post and diagonal braces in place.

CHANNEL FENCE DETAILS

SKETCH NO.

3

APRIL 1973
CHANNEL WALL FENCE
Rev. Sept. 1973

SECTION 6E

CONTROL HOUSE

Index

1. Applicable Publications
2. Concrete
3. Masonry, Concrete Block
4. Hollow Metal Door and Steel Frame
5. Hinges
6. Safety Latch
7. Ventilators and Steel Pipe
8. Painting

1. APPLICABLE PUBLICATIONS. The following publications of the issues listed below, but referred to thereafter by basic designation only, form a part of this specification to the extent indicated by the references thereto.

1.1 American Society for Testing and Materials (ASTM).

C 90-75	Hollow Load-Bearing Concrete Masonry Units

1.2 Federal Specifications (Fed. Spec.).

SS-C-1960/GEN SS-C-1960/3	Cement and Pozzolan, General Requirements for Cement, Portland
TT-P-19C	Paint, Acrylic Emulsion: Exterior
TT-P-55b & Am-2	Paint, Polyvinyl Acetate Emulsion, Exterior
TT-P-86G	Paint, Red-Lead-Base, Ready Mixed
TT-P-105a & Am-1	Paint, Oil; Chalk-Resistant, Lead-Free Exterior Ready-Mixed, White and Tints
TT-P-615d & Am-3	Primer Coating: Basic Lead Silico Chromate, Ready Mixed

1.3 American National Standards Institute (ANSI) Standards.

A 156.1-1976	Butts and Hinges

2. CONCRETE. Concrete and reinforcement shall conform to the requirements of section: CONCRETE CONSTRUCTION.

3. MASONRY, CONCRETE BLOCK.

3.1 General. The concrete masonry units shall be 2 core units conforming to ASTM C 90, Type I, Grade N-I, having an oven dry weight of less than 105 pounds per cubic foot. Units shall be of standard sizes and shapes including closers and shapes required by the construction, and shall be adequately cured before shipment.

3.1.1 Slump Block shall conform to the requirements specified for concrete masonry units, except faces shall have a simulated slump finish. Slump block shall weight not more than 135 pounds per cubic foot.

3.2 Erection. No masonry shall be erected when the ambient temperature is below 32 degrees F on a rising temperature or below 40 degrees F on a falling temperature, or when there is a probability of such a condition existing within 48 hours, unless special provisions are made for heating the materials and protecting the work. Such provisions shall be as directed or approved by the Contracting Officer. Units having a film of water on their surface shall not be laid in the walls. All masonry shall be laid plumb, true to line, with level and accurately spaced courses and reveals, with corners plumb and true, and with each course breaking joint with the course below. Bond shall be kept plumb throughout. Work required to be built in the masonry shall be built in as the erection progresses. Each course shall be solidly bedded in mortar, with vertical joints breaking half way over the course below. Vertical joints shall be buttered their entire length. Reinforcing bars in the walls shall be placed as shown on the drawings. All cells shall be filled with concrete with a maximum aggregate size of 3/8-inch. Reinforcing bars, mortar materials, and concrete shall conform to the applicable requirements of section: CONCRETE CONSTRUCTION.

3.3 Mortar shall be machine-mixed in an approved type of mixer in which the quantity of water can be accurately and uniformly controlled; however, when specifically approved by the Contracting Officer, mortar may be mixed by hand. The mixing time shall not be less than 5 minutes, approximately 2 minutes of which shall be for mixing the dry materials and not less than 3 minutes for continuing the mixing after the water has been added. The Contractor will have the option of using the dry mix method or first converting the hydrated lime into putty. Hand mixing shall be done in a tight mortar-mixing box. Where the dry mix method is employed, the materials for each batch shall be well raked and turned over together before the water is added, until the even color of the mixed material indicates that the cementitious material has been thoroughly distributed throughout the mass, after which the water shall be gradually added until a thoroughly mixed mortar of the required plasticity is obtained. The proportioning of materials for mortar shall be as follows:

Portland cement	1 cubic foot
Hydrated lime	1/4 cubic foot
Sand (dry)	3 cubic feet

The volume units of mortar shall be taken as follows:

Portland cement - one sack 94 pounds net	1 cubic foot
Hydrated lime (dry) - one sack 40 pounds net	1 cubic foot
Sand - 80 pounds dry, or 85 pounds damp	1 cubic foot

3.4 Finish Joints. Joints of exterior surfaces shall be rough struck flush with the face of the wall, and left without tooling or pointing. Joints of interior surfaces shall not be struck, tooled, or pointed. Excess mortar extruding beyond the interior faces of walls, shall prior to its initial set, be rubbed with burlap sacking and scrubbed over and into the face of the wall leaving the joint and wall face flush and blending together, as much as practical, the joints and faces of units.

4. HOLLOW METAL DOOR AND STEEL FRAME. Door, frame, and trim shall be the best standard products of a recognized, approved manufacturer. All bolts, anchors, connecting members, sleeves and clips shall be provided for proper anchorage and support of all work. Anchors shall be coated with an approved bituminous paint. Machine screws and bolts in concealed locations shall be galvanized or cadmium-plated steel. Door and frame shall be fitted and reinforced for all finish hardware. Exposed steel work shall be of best grade, cold-rolled, furniture stock steel and have smooth, clean surfaces. Concealed structural or reinforcing members shall be well finished sheet steel or cold-rolled steel shapes. The finished work shall be strong and rigid, neat in appearance. Free from defects. Plain surfaces shall be smooth, free from warp or buckle. Molded members and miters shall be clean cut, straight and true. Suitable sinkages shall be provided in doors, frames, and jambs for all mortise or countersunk hardware. Steel reinforcements shall be inserted for attaching all hardware and shall be of ample size to stiffen sheet metal against any strain. Door shall be 1-3/4 inches thick, and shall be made of No. 180 gage steel plates, properly formed, rigidly connected and reinforced by means of formed steel sections, full height with closed top and bottom and no seams on faces. Jamb shall be anchored to the structural concrete floors with angle knees and 3/8-inch expansion bolts. At hinge and lock locations, reinforcement plates shall be welded to the inner surface of the jambs. Frame shall rest on and be anchored to the finished floor surface. Anchors for frame shall not be lighter than No. 16 gage. Door and frame shall be pretreated and then given a factory baked-on prime coat ready to receive finish painting.

5. HINGES shall be butt hinges and shall conform to ANSI Standard A 156.1 and A 156.7. Hinges shall be Type A211 and so constructued that the pins cannot be removed when door is closed.

6. SAFETY LATCH. The safety latch shall be fabricated and installed as indicated on the drawings. Metalwork shall conform to the applicable requirements of the section: MISCELLANEOUS METALWORK AND MATERIALS. After assembly, all bolt ends shall be peened in a manner to prevent removal of nuts.

7. VENTILATORS AND STEEL PIPE shall conform to the applicable requirements of the section: MISCELLANEOUS METALWORK AND MATERIALS.

8. PAINTING.

8.1 General. The term "paint," as used herein, includes emulsions and cement-latex filler, whether used as prime or finish coat.

8.2 Materials. Paints shall be in sealed containers that plainly show the designated name, formula or specification number, batch number, color, date of manufacturer, manufacturer's directions, and name of manufacturer, all of which shall be plainly legible at the time of use. Materials shall conform to the specifications shown in the painting schedule herein and to the requirements hereinafter specified.

8.2.1 Cement-Latex Filler shall be either acrylic base cement-emulsion filler or polyvinyl acetate base cement-emulsion filler at the option of the Contractor. However, when used in an exterior latex system, the same resin shall be used in the filler and in the finish paint. Filler shall be tinted to match the color selected for the finish coat using cellulose, all purpose, water dispersion type colors. When color tint is mixed with the mixing liquid before addition of the dry-mix, sufficient mixing liquid should be prepared to cover an entire building. When the color tint is added to the fill coat after mixing, colors shall be matched as closely as possible.

8.2.1.1 Acrylic Base Cement-Emulsion Filler.

8.2.1.1.1 Materials.

8.2.1.1.1.1 White Portland Cement shall conform to Federal Specification SS-C-1960/3, Type I or II.

8.2.1.1.1.2 Aggregate shall be washed silica sand containing not more than 0.5 percent colloidal clay. One hundred percent shall pass a No. 20 sieve, 15-30 percent shall pass a No. 70 sieve, and 0-15 percent shall pass a No. 100 sieve.

8.2.1.1.1.3 Mixing Liquid, acrylic emulsion polymer, 46 percent nonvolatile, shall be the same resin emulsion as used in the formulating exterior acrylic emulsion paint specified below.

8.2.1.1.1.4 Acrylic Emulsion Paint, Exterior, shall conform to Federal Specification TT-P-19.

8.2.1.1.2 Compositon.

White Portland Cement	16.5 pounds
Aggregate	33.5 pounds
Mixing Liquid	0.75 gallon
Potable Water Maximum	1.0 gallon
Acrylic Emulsion Paint, Exterior	1.0 gallon

8.2.1.1.3 Mixing Instructions. Mixing shall be in accordance with the procedures specified for poly-vinyl acetate cement-emulsion filler.

8.2.1.2 Polyvinyl Acetate Base Cement-Emulsion Filler.

8.2.1.2.1 Materials.

8.2.1.2.1.1 White Portland Cement shall conform to Federal Specification SS-C-1960/3, Type I or II.

8.2.1.2.1.2 Aggregate shall be washed silica sand containing not more than 0.5 percent colloidal clay. One hundred percent shall pass through a No. 20 sieve, 15-30 percent shall pass a No. 70 sieve, and 0-15 percent shall pass a No. 100 sieve.

8.2.1.2.1.3 Mixing Liquid, polyvinyl acetate, emulsion polymer shall be the same specified resin emulsion as used in formulating exterior polyvinyl acetate emulsion paint specified below. The mixing liquid shall be factory-prepared and shall be proportioned as follows by weight.

	Percent
Vinyl Polymer (55 percent nonvolatile)	92.6
Carbitol Acetate	3.7
Potable Water	3.7

8.2.1.2.1.4 Polyvinyl Acetate Emulsion Paint, Exterior, shall conform to Fed. Spec. TT-P-55, Type II.

8.2.1.2.2 Composition.

White Portland Cement	16.5 pounds
Aggregate	33.5 pounds
Mixing Liquid	0.75 gallon
Potable Water Maximum	1.0 gallons
Polyvinyl Acetate Emulsion Paint, Exterior	1.0 gallon

8.2.1.2.3 Mixing Instructions. Cement and aggregate shall be dry mixed so that uniform distribution and intermixing are obtained. Mixing liquid and one-half of the total amount of water shall be added gradually to the white portland cement and aggregate with constant stirring until a thick, smooth material is obtained. Emulsion paint shall then be added to the foregoing and stirred until uniformity is obtained. The blend shall have a thick, creamy consistency. The remainder of the water shall be added if necessary, to obtain a material with adequate application characteristics. Blending resin emulsion or emulsion paint with any other component shall be done with caution; too rapid agitation will cause air entrapment and foaming. Filler shall be free of entrapped air and foam when applied.

8.3 Exterior Emulsion Paint shall be either exterior polyvinyl acetate emulsion paint conforming to Federal Specification TT-P-55, Type II, or exterior acrylic emulsion paint conforming to Federal Specification TT-P-19. Only one type emulsion shall be used in an exterior emulsion system.

8.4 Exterior Oil Paint shall conform to Fed. Spec. TT-P-105.

8.5 Ferrous Metal Primer shall conform to Fed. Spec. TT-P-86, Type II or TT-P-615, Type I, II, or V.

8.6 Cleaning and Preparation of Surfaces.

8.6.1 Masonry surfaces to be painted shall be prepared by removing efflorescence, chalk, dust, dirt, grease, oil, tar, and oil weathered paint, and by roughening to remove glaze. Surface deposits of free iron shall be removed prior to painting. Immediately before coating with cement-latex, filler concrete-masonry-unit surfaces to be painted shall be uniformly and thoroughly dampened, with no free surface water visible, by several applications of potable water with a fog spray, allowing times between the sprayings for the water to be absorbed.

8.6.2 Ferrous Surfaces shall have all oil, grease, loose rust, loose mill scale and other foreign substances removed. Shop coated surfaces shall be solvent cleaned and abraded spots touched-up.

8.7 Paint Application.

8.7.1 General. The finished surfaces shall be free from runs, drops, ridges, waves, laps, brush marks, and variations in color, texture, and finish. The hiding shall be so completed that the addition of another coat of paint would not increase the hiding. Each coat shall be so applied as to produce film of uniform thickness. Special attention shall be given to insure that edges, corners, crevices, welds, and rivets receive a film thickness equivalent to that of adjacent painted surfaces. Adjacent areas and installations shall be protected by the use of drop cloths or other approved precautionary measures. Respirators shall be worn by persons engaged in or assisting in spray painting.

8.7.2 Storage, Mixing, and Thinning. At time of application. Paint shall show no signs of deterioration. Paint shall be thoroughly stirred, strained, and kept at a uniform consistency during application. Paints of different manufacturers shall not be mixed together. Where necessary to suit conditions of surface, temperature, weather, and method of application, packaged paint other than cement-latex filler may be thinned immediately prior to application in accordance with the manufacturer's directions, but not in excess of one pint of suitable thinner per gallon. The use of thinner for any reason shall not relieve the Contractor from obtaining complete hiding.

8.7.3 Atmospheric Conditions. In no case shall paint be applied to surfaces upon which there is visible frost or ice. While painting is being done, the temperature of the surfaces to be painted and of the atmosphere in contact therewith shall be maintained at or above 50 degrees F. During periods of inclement weather, painting may be continued by inclosing the surfaces with temporary shelters and applying artificial heat, provided the temperature requirements prescribed above are maintained. Salamanders and open fires will not be permitted.

8.7.4 Time Between Surface Preparation and Painting. Surfaces that have been cleaned, pretreated, and/or otherwise prepared for painting shall be given a coat of the specified first coat material as soon as practicable after such preparation has been completed, but in any event prior to any deterioration of the prepared surface.

8.7.5 Method of Paint Application. Applications on exterior masonry shall be by brush only. The first coat on metal shall be by brush only, subsequent coats may be brush or spray.

8.7.5.1 Cement-Latex Filler shall be vigorously scrubbed into the surface with a stiff-bristle brush having Tampico or Palmyra bristles not longer than 2-1/2 inches. All surface voids, pores, and cracks shall be completely filled. The dry film shall be uniform and free from pinholes or other voids. Surface irregularities need not be completely filled. The material shall not be applied over calking compound.

8.7.5.2 Exterior Latex Paint. At least 24 hours shall elapse before applying exterior latex paint over cement-latex filler coat. When the ambient temperature is in excess of 85 degrees F., cement-latex filler surfaces shall be lightly dampened with a fog spray of potable water immediately prior to application of the subsequent latex paint coat.

8.8 Surfaces To Be Painted.

8.8.1 General. The surfaces listed in the painting schedule below shall receive the surface preparation, paints, and number of coats prescribed. Explanatory information for use with the painting schedule is as follows.

8.8.1.1 Color shall be a light buff or light tan, standard with the manufacturer of the material.

8.8.1.2 Method of Surface Preparation and pretreatment shown in the schedule is for identification purposes only. Cleaning and pretreatment of surfaces prior to painting shall be accomplished in accordance with the detailed requirements hereinbefore described.

8.8.2 Painting Schedule.

Surface	Surface Preparation and Pretreatment	1st Coat	2d Coat
Exterior concrete masonry unit and exposed poured concrete in masonry unit construction.	Remove foreign matter, loose particles, and efflorescence. Dampen as specified	Cement-emulsion filler.	Exterior emulsion paint.
Exterior ferrous surface, exposed unless otherwise specified.	Remove foreign matter.	Exterior oil paint.	Exterior oil paint.
Exterior galvanized surfaces.	As previously specified.	TT-P-641, type II, or MIL-P-26915, type I, class A.	Exterior oil paint.
Exposed exterior calking compound.	As specified in HOLLOW METAL DOORS AND STEEL FRAMES	Aluminum paint.	Same as adjacent areas.
Interior concrete-masonry-units.	As previously specified for each type of surface. Fill concrete masonry units with cement emulsion filler or TT-F-1098 filler.	TT-C-535.	TT-C-535.
Interior exposed ferrous surfaces, unless otherwise specified.	As previously specified.	TT-E-543 or TT-E-545	TT-E-508 or TT-E-509
Ferrous surfaces of mechanical equipment that has been factory finished.	Clean as required.	None.	None.
Interior galvanized surfaces, unless otherwise specified.	As previously specified.	Same as for adjacent surfaces.	
Interior wood surfaces to receive stain or natural finish, as follows:	Clean and sandpaper as required. Stain with TT-S-711 for shade as necessary. Fill and seal as necessary.	TT-S-711	None.

8.9 Cleaning. Cloths and cotton waste that might constitute a fire hazard shall be placed in closed metal containers or destroyed at the end of each day. Upon completion of the work, staging, scaffolding, and containers shall be removed from the site or destroyed in an approved manner. Paint spots, oil, or stains upon adjacent surfaces shall be removed and the entire job left clean and acceptable.

* * * * *

SECTION 6F

RECORDER HOUSE

Index

1. Applicable Publications
2. Concrete
3. Hollow Metal Door and Steel Frame
4. Hinges
5. Ventilators and Electric Conduit
6. Painting
7. Steel Door Plate
8. Plywood Shelf

1. APPLICABLE PUBLICATIONS. The following publications of the issues listed below, but referred to thereafter by basic designation only, form a part of this specification to the extent indicated by the references thereto.

1.1 American Society for Testing and Materials (ASTM).

C 90-75	Hollow Load-Bearing Concrete Masonry Units

1.2 Federal Specifications (Fed. Spec.).

TT-P-19C & Am-1	Paint, Acrylic Emulsion: Exterior

1.3 American National Standards Institute (ANSI) Standards.

A 156.1-1976	Butts and Hinges
A 156.7-1972	Template Hinge Dimensions

2. CONCRETE. Concrete and reinforcement shall conform to the requirements of section: CONCRETE CONSTRUCTION.

3. HOLLOW METAL DOOR AND STEEL FRAME. Door, frame, and trim shall be the best standard products of a recognized, approved manufacturer. All bolts, anchors, connecting members, sleeves and clips shall be provided for proper anchorage and support of all work. Anchors shall be coated with an approved bituminous paint. Machine screws and bolts in concealed locations shall be galvanized or cadmium-plated steel. Door and frame shall be fitted and reinforced for all finish hardware. Exposed steel work shall be of best grade, cold-rolled, furniture stock steel and have smooth, clean surfaces. Concealed structural or reinforcing members shall be well finished sheet steel or surfaces shall be smooth, free from warp or buckle. Molded members and miters shall be clean cut, straight and true. Suitable sinkages shall be provided in door, frame, and jamb for all mortise or countersunk hardware. Steel reinforcements shall be inserted for attaching all hardware including recorder house lock device, and shall be of ample size to stiffen sheet metal against any strain. Door shall be 1-3/4 inches thick, and shall be made of No. 180 gage steel plates, properly formed, rigidly connected and reinforced by means of formed steel sections, full height with closed top and bottom and no seams on faces. Jamb shall be anchored to the structural concrete floors with angle knees and 3/8-inch expansion bolts. At hinge and lock locations, reinforcement plates shall be welded to the inner surface of the jambs. Frame shall rest on and be anchored to the finished floor surface. Anchors for frame shall not be lighter than No. 16 gage. Door and frame shall be pretreated and then given a factory baked-on prime coat ready to receive finish painting.

4. HINGES shall be butt hinges and shall conform to ANSI Standard A 156.1 and A 156.7. Hinges shall be Type A 2111 and so constructed that the pins cannot be removed when door is closed.

5. VENTILATORS AND ELECTRIC CONDUIT. Ventilators shall conform to the applicable requirements of the section: MISCELLANEOUS METALWORK AND MATERIALS.

6. PAINTING.

6.1 General. The term "paint," as used herein, includes emulsions whether used as prime or finish coat.

6.2 Materials. Paints shall be in sealed containers that plainly show the designated name, formula or specification number, batch number, color, date of manufacturer, manufacturer's directions, and name of manufacturer, all of which shall be plainly legible at the time of use. Materials shall conform to the specifications shown in the painting schedule herein and to the requirements hereinafter specified.

6.3 Exterior Emulsion Paint shall be exterior acrylic emulsion paint conforming to Federal Specification TT-P-19.

6.4 Cleaning and Preparation of Surfaces.

6.4.1 Surfaces to be painted shall be prepared by removing efflorescence, chalk, dust, dirt, grease, oil, tar, and oil weathered paint, and by roughening to remove glaze. Surface deposits of free iron shall be removed prior to painting.

6.5 Paint Applications.

6.5.1 General. The finished surfaces shall be free from runs, drops, ridges, waves, laps, brush marks, and variations in color, texture, and finish. The hiding shall be so completed that the addition of another coat of paint would not increase the hiding. Each coat shall be so applied as to produce film of uniform thickness. Special attention shall be given to insure that edges, corners, crevices, welds, and rivets receive a film thickness equivalent to that of adjacent painted surfaces. Adjacent areas and installations shall be protected by the use of drop cloths or other approved precautionary measures. Respirators shall be worn by persons engaged in or assisting in spray painting.

6.5.2 Storage, Mixing, and Thinning. At time of application, paint shall show no signs of deterioration. Paint shall be thoroughly stirred, strained, and kept at a uniform consistency during application. Paints of different manufacturers shall not be mixed together. Where necessary to suite conditions of surface, temperature, weather, and method of application, packaged paint other than cement-emulsion filler may be thinned immediately prior to application in accordance with the manufacturer's directions, but not in excess of one pint of suitable thinner per gallon. The use of thinner for any reason shall not relieve the Contractor from obtaining complete hiding.

6.5.3 Atmospheric Conditions. In no case shall paint be applied to surfaces upon which there is visible frost or ice. While painting is being done, the temperature of the surfaces to be painted and of the atmosphere in contact therewith shall be maintained at or above 50 degrees F. During periods of inclement weather, painting may be continued by inclosing the surfaces with temporary shelters and applying artificial heat, provided the temperature requirements prescribed above are maintained. Unvented combustion type heaters will not be permitted.

6.5.4 Time Between Surface Preparation and Painting. Surfaces that have been cleaned, pretreated, and/or otherwise prepared for painting shall be given a coat of the specified first coat material as soon as practicable after such preparation has been completed, but in any event prior to any deterioration of the prepared surface.

6.5.5 Method of Paint Application. Applications shall be by brush only.

6.6 Surfaces To Be Painted.

6.6.1 General. The surfaces listed in the painting schedule below shall receive the surface preparation, paints, and number of coats prescribed. Explanatory information for use with the painting schedule is as follows.

6.6.1.1 Color shall be a light buff or light tan, standard with the manufacturer of the material.

6.6.1.2 Method of Surface Preparation and pretreatment shown in the schedule is for identification purposes only. Cleaning and pretreatment of surfaces prior to painting shall be accomplished in accordance with the detailed requirements hereinbefore described.

6.6.2 Painting Schedule.

Surface	Surface Preparation and Pretreatment	1st coat	2d coat
Exterior concrete	Remove foreign matter loose particles, and efflorescence from units	Cement-emulsion filler TT-P-19	Exterior emulsion paint TT-P-19

6.7 Cleaning. Cloths and cotton waste that might constitute a fire hazard shall be placed in closed metal containers or destroyed at the end of each day. Upon completion of the work, staging, scaffolding, and containers shall be removed from the site or destroyed in an approved manner. Paint spots, oil, or stains upon adjacent surfaces shall be removed and the entire job left clean and acceptable.

7. STEEL DOOR PLATE shall conform to the applicable requirements of section: MISCELLANEOUS METALWORK AND MATERIAL.

8. PLYWOOD SHELF. Plywood shall conform to U.S. Department of Commerce, Prod. Std. PS 1, grade A-D and thickness as indicated. Shelf frame and hardware shall conform to applicable requirements in section: MISCALLANEOUS METALWORK AND MATERIAL.

* * * * *

SECTION 7C

SHEET METALWORK, GENERAL

Index

1. Applicable Publications
2. General
3. Shop Drawings
4. Materials
5. Exposed Sheet Metal
6. Sheet Metal Installation

1. APPLICABLE PUBLICATIONS. The following publications of the issues listed below, but referred to thereafter by basic designation only, form a part of this specification to the extent indicated by the references thereto.

1.1 Federal Specifications.

QQ-S-571E & Am-2	Solder; Tin Alloy; Lead-Tin Alloy; and Lead Alloy
TT-P-645	Primer, Paint, Zinc-Chromate, Alkyd Type

1.2 American Society for Testing and Materials (ASTM) Publications.

A 525-73	Steel Sheet, Zinc-Coated (Galvanized) by the Hot-Dip Process, General Requirements

2. GENERAL. Sheet metal items shall be fabricated to the thickness or weight indicated. Surfaces that are to receive sheet metal and underlayments shall be even, smooth, sound, thoroughly clean and dry, and free from defects that might affect the application. Sheet metal items shall be furnished in 8- to 10-foot lengths. Single pieces less than 8 feet long may be used to connect to factory fabricated inside and outside corners, and at ends of runs. Cutting, fitting, drilling, and other operations in connection with sheet metal required to accommodate the work of other trades shall be performed by sheet metal mechanics. Accessories and other items essential to complete the sheet metal installation, though not specifically indicated or specified shall be provided. Where sheet metal abuts or extends into adjacent materials, the juncture shall be executed in a manner to assure weathertight construction. Factory fabricated components such as reglets, flashings, and gutters shall be packed in cartons which are marked with the manufacturer's name or trademark. Bulk materials from which items are field fabricated shall have manufacturers name or trademark printed or embossed at frequent intervals to permit easy identification. Sheet metalwork, including ductwork, pertaining to heating, ventilating and air conditioning is included in appropriate sections.

3. SHOP DRAWINGS showing complete erection layouts, details, and installation instructions shall be submitted for approval in accordance with the SPECIAL PROVISIONS.

4. MATERIALS shall conform to the respective specifications and other requirements specified below.

4.1 Sheet metal shall be galvanized sheet steel with not less than 1.25 ounce per square foot, commercial class, zinc coating prime finish, conforming to ASTM A525. Steel shall be hot-dipped and shall be tight coated so that any working of the metal will not affect the zinc coating. Sheet metal shall be gauge as shown but not less than 24 gauge where not noted.

4.2 Nails, rivets, screws, bolts and nuts used for fastening sheet metal shall be iron or steel, galvanized or cadmium plated. Rivets shall be soft iron, tinned.

4.3 Solder shall conform to Federal Specification QQ-S-571, Composition Sn 50.

4.4 Sealing Compound. Sealing compounds referred to herein are specified in section: CALKING AND SEALING.

4.5 Zinc-Chromate Primer. Federal Specification TT-P-645.

5. EXPOSED SHEET METAL. The following items shall be considered as exposed sheet metal: fasciae, cap, base, and eave flashings.

6. SHEET METAL INSTALLATION.

6.1 All surfaces to which sheet metal is to be applied shall be free from defects of any kind and brushed clean. Any projections, nails, fins, etc., shall be set flush or removed as required for a complete and workmanlike installation.

6.2 All dimensions shall be verified, in the field, for work which is to be shop fabricated. All work shall be accurately formed with clean straight, and sharply defined profiles. Sheet metal shall be formed, fabricated and installed so as to provide for any necessary expansion and contraction in the complete work and, in addition, so that all joints will remain watertight and weathertight at all times.

6.3 Soldering. All surfaces shall be thoroughly cleaned before soldering. Soldering shall be performed slowly with full flowing joints and with the joints as thin as possible. Flat locked seams shall be at least 1/2-inch wide, and shall be sweated full of solder. Lap seams where soldered, shall be at least 3 inches wide. All flat and lap seam joints shall be made in the direction of the flow.

6.4 All exposed raw edges of sheet metal shall be doubled back 1/2-inch minimum.

6.5 Where necessary to provide strength and stiffness, joints shall be additionally reinforced with rivets or screws.

6.6 Sheet metal fasciae, and the like which will be exposed in the finished work, and which are visible from the exterior shall have flush joints, not lapped or seamed joints. Joints shall be either swaged or butted with backup plates, extending at least 4 inches on each side of the joint. Backup plate shall be sweat soldered on one side, in the shop, and sealed on the other side with caulking.

* * * * *

SECTION 8A

SIDE DRAINS

Index

1. Applicable Publications
2. Delivery, Storage, and Handling of Materials
3. General
4. Tests for Pipe
5. Pipe
6. Drainage Structures
7. Mortar
8. Joints
9. Excavation and Trenching
10. Bedding
11. Placing Pipe
12. Backfilling
13. Hydrostatic Test on Watertight Joints
14. Installation of Side Drain Pipe in Channel Walls
15. Automatic Drainage Gate
16. Plugging Abandoned Drains and
17. Paving

1. APPLICABLE PUBLICATIONS. The following publications of the issues listed below, but referred to thereafter by basic designation only, form a part of this specification to the extent indicated by the references thereto:

1.1 Federal Specifications (Fed. Spec.).

SS-S-210A & Am-1 (GSA-FSS)	Sealing Compound, Preformed Plastic, for Expansion Joints and Pipe Joints

1.2 Federal Standard (Fed. Std.).

No. 601 & Change Notices 1 through 6	Rubber: Sampling and Testing

1.3 American Association of State Highway and Transportation Officials (AASHTO) Publications.

M 170-74	Reinforced Concrete Culvert, Storm Drain, and Sewer Pipe
M 198-75I	Joints for Circular Concrete Sewer and Culvert Pipe Using Rubber Gaskets
T 180-74	Moisture-Density Relations of Soil Using a 10-lb (4.5 kg) Rammer and a 18-in. (457 mm) Drop
T 191-61	Density of Soil in Place by the Sand Cone Method

1.4 American Society for Testing and Materials (ASTM) Publications.

C 76-75	Reinforced Concrete Culvert, Storm Drain, and Sewer Pipe
C 443-72a	Joints for Circular Concrete Sewer and Culvert Pipe, Using Rubber Gaskets
D 1556-64	Density of Soil in Place by the Sand-Cone Method
D 1557-70	Moisture-Density Relations of Soils, Using 10-lb. (4.5-Kg) Rammer and 18-in. (457-mm) Drop

2. DELIVERY, STORAGE, AND HANDLING OF MATERIALS.

2.1 Delivery and Storage. Materials delivered to site shall be inspected for damage, unloaded, and stored with the minimum of handling. Do not store materials directly on the ground. Inside of pipes and fittings shall be kept free of dirt and debris.

2.2 Handling. Materials shall be handled in such a manner as to insure delivery to the trench in sound undamaged condition. Pipe shall be carried to the trench not dragged. Gasket materials and plastic materials that are not to be installed immediately shall not be stored in the direct sunlight.

3. GENERAL. Concrete shall conform to the section: CONCRETE CONSTRUCTION. Where pipe is embedded in concrete, the pipe shall be supported in such a manner to hold it rigidly in position while concrete is placed. Earthwork about the drains and structures shall conform to the applicable requirements of the sections: EXCAVATION and FILLS AND SUBGRADE PREPARATION. Welding shall conform to the requirements of the section: MISCELLANEOUS METALWORK AND MATERIALS. Removal of existing side drains is specified in the section: CLEARING SITE AND REMOVING EXISTING OBSTRUCTIONS. Specified and/or indicated pipe thickness, D-loading, weight, or gage are the minimum acceptable and heavier pipe may be furnished at the option of the Contractor. Before connecting side drains to the new channel, the Contractor shall have completed all of the channel located downstream of the connection.

3.1 Manufacturers Recommendations. Where installation procedures or any part thereof are required to be in accordance with the recommendations of the manufacturer of the material being installed, printed copies of these recommendations shall be furnished to the Contracting Officer prior to installation. Installation of the item will not be allowed until the recommendations are received. Failure to furnish these recommendations can be cause for rejection of the material.

4. TESTS FOR PIPE. Certified copies of test reports demonstrating conformance to applicable pipe specifications shall be delivered to the Contracting Officer before pipe is installed. Strength tests for concrete pipe as required in applicable specifications shall be the three-edge bearing tests.

5. PIPE shall be as indicated and shall conform to requirements for the following pertinent types:

5.1 Reinforced Concrete Pipe. ASTM C 76 or AASHTO M 170, Class and/or D-load as indicated. Pipe shall be suitable for rubber gasket joints.

6. DRAINAGE STRUCTURES.

6.1 Outlet Gates and Inlets. Construction shall be of reinforced concrete conforming to details indicated.

7. MORTAR. Mortar and grout for connections to drainage structures shall conform to ASTM C 476, Mortar Type PL. The mortar shall be used within 30 minutes after the ingredients are mixed with water.

8. JOINTS.

8.1 Joints Under Levees.

8.1.1 Materials and Test Requirements. Joints under levees shall be made with rubber-type gaskets. The design of joints and the physical requirements for rubber-type gaskets shall conform to ASTM C 443 or AASHTO M 198. Gaskets shall have not more than one factory-fabricated splice, except that two factory-fabricated splices of the rubber gasket type are permitted if nominal diameter of pipe being gasketed exceeds 54 inches. Material conforming to Fed. Spec. SS-S-210 is acceptable as an alternate to ASTM C 443 provided the necessary installation instructions are furnished.

8.1.2 Joints for Pipe Under Levees. Joints shall be tested and shall meet test requirements of paragraph: HYDROSTATIC TEST ON WATERTIGHT JOINTS. Certified copies of test results shall be delivered to the Contracting Officer before gaskets or jointing materials are installed. Alternate types of watertight joint may be furnished if specifically approved.

8.1.3 Installation. Gaskets and joining materials shall be as recommended by the particular manufacturer in regard to use of lubricants, cements, adhesives, and other special installation requirements. Surfaces to receive lubricants, cements, or adhesives shall be clean and dry. Gaskets and jointing materials shall be affixed to the pipe not more than 24 hours prior to the installation of the pipe, and shall be protected from the sun, blowing dust, and other deleterious agents at all times. Gaskets and jointing materials shall be inspected before installing the pipe; any loose or improperly affixed gaskets and jointing materials shall be removed and replaced. The pipe shall be aligned with the previously installed pipe, and the joint pulled together. If, while making the joint, the gasket or jointing material becomes loose and can be seen through the exterior joint recess when joint is pulled up to within one inch of closure, the pipe shall be removed and the joint remade.

9. EXCAVATION AND TRENCHING. Excavation of trenches and backfilling shall be in accordance with the applicable portions of SECTIONS: EXCAVATION AND FILLS and SUBGRADE PREPARATION and the following requirements.

9.1 Trenching. Sheeting and bracing where required shall be placed within the trench width as specified. Care shall be taken not to over excavate. Where trench widths are exceeded, redesign with a resultant increase in cost of stronger pipe or special installation procedures shall be necessary. Cost of this redesign and increased cost of pipe or installation shall be borne by the Contractor without additional cost to the Government.

9.2 Removal of Rock. Rock in either ledge or boulder formation shall be replaced with selected materials to provide a compacted earth cushion having a thickness between unremoved rock and the pipe of at least 8 inches or 1/2-inch for each foot of fill over the top of the pipe, whichever is greater, but not more than three-fourths the nominal diameter of the pipe. Where bell-and-spigot pipe is used, the cushion shall be maintained under the bell as well as under the straight portion of the pipe.

9.3 Removal of Unstable Material. Where wet or otherwise unstable soil incapable of properly supporting the pipe, as determined by the Contracting Officer, is encountered in bottom of trench, such material shall be removed to depth required and replaced to the proper grade with selected material, compacted as provided in paragraph BACKFILLING. When removal of unstable material is due to the fault or neglect of the Contractor in his performance of shoring and sheeting, water removal, or other specified requirements, resulting material shall be excavated and replaced.

10. BEDDING. The bedding surface for the pipe shall provide a firm foundation of uniform density throughout the entire length of the pipe. The pipe shall be bedded carefully in a soil foundation accurately shaped and rounded to conform to the lowest one-fourth of the outside portion of circular pipe for the entire length of pipe. When necessary, the bedding shall be tamped. Bell holes and depressions for joints shall be only of such length, depth, and width as required for properly making the particular type joint.

11. PLACING PIPE. Each pipe shall be carefully examined before being laid, and defective or damaged pipe shall not be used. Pipelines shall be laid to the grades and alignment indicated. Proper facilities shall be provided for lowering sections of pipe into trenches. Under no circumstances shall pipe be laid in water, and no pipe shall be laid when trench conditions or weather are unsuitable for such work. Diversion of drainage or dewatering of trenches during construction shall be provided as necessary. All pipe in place shall be inspected before backfilling, and those damaged during placement shall be removed and replaced at no additional cost to the Government.

11.1 Concrete Pipe. Laying shall proceed upgrade with spigot ends of bell-and-spigot pipe and tongue ends of tongue-and-groove pipe pointing in the direction of the flow. Circular concrete pipe with elliptical reinforcing shall be placed so that reference lines designating top of pipes will be not more than 5 degrees from the vertical plane through the longitudinal axis of the pipe. In all backfilling operations care shall be taken to prevent damage to or misalignment of the pipe.

12. BACKFILLING.

12.1 Backfilling Pipe in Trenches. After the bedding has been prepared and the pipe installed, selected material from excavation or borrow, at a moisture content that will facilitate compaction, shall be placed along both sides of pipe in layers not exceeding 6 inches in compacted depth. The backfill shall be brought up evenly on both sides of pipe for the full length of pipe. Care shall be taken to insure thorough compaction of the fill under the haunches of the pipe. Each layer shall be thoroughly compacted with mechanical tampers or rammers. This method of filling and compacting shall continue until the fill has reached an elevation of at least 12 inches above the top of the pipe. The remainder of the trench shall be backfilled and compacted by spreading and rolling or compacted by mechanical rammers or tampers in layers not exceeding 8 inches. Tests for density will be made as necessary to insure conformance to the compaction requirements specified in "Compaction" below. Where it is necessary in the opinion of the Contracting Officer, any sheeting and/or portions of bracing used shall be left in place, and the contract will be adjusted accordingly. Untreated sheeting shall not be left in place beneath structures or pavements.

12.2 Backfilling Pipe in Fill Sections. For pipe placed in fill sections, backfill material and the placement and compaction procedures shall be as specified above and in "Compaction" below. The fill material shall be uniformly spread in layers longitudinally on both sides of pipe, not exceeding 6 inches in compacted depth, and shall be compacted by rolling parallel with pipe or by mechanical tamping or ramming. Prior to commencing normal filling operations, the crown width of the fill at a height of 12 inches above the top of the pipe shall extend a distance of not less than twice the outside pipe diameter on each side of the pipe or 12 feet, whichever is less. After the backfill has reached at least 12 inches above the top of the pipe, the remainder of the fill shall be placed and thoroughly compacted in layers not exceeding 8 inches.

12.3 Movement of Construction Machinery. In compacting by rolling or operating heavy equipment parallel with the pipe, displacement of or injury to the pipe shall be avoided. Movement of construction machinery over a culvert or storm drain at any stage of the construction shall be at the Contractor's risk. Any pipe damaged thereby shall be repaired or replaced at the expense of the Contractor.

12.4 Compaction. Cohesionless materials include gravels, gravel-sand mixtures, sands, and gravelly sands. Cohesive materials include clayey and silty gravels, gravel-silt mixtures, clayey and silty sands, sand-clay mixtures, clays, silts, and very fine sands. When results of compaction tests for moisture-density relations are recorded on graphs, cohesionless soils will show straight lines or reverse-shaped moisture-density curves, and cohesive soils will show normal moisture-density curves.

12.4.1 Minimum Density. Backfill over and around pipe and backfill around and adjacent to drainage structures shall be compacted at the approved moisture content to the following applicable minimum density(ies) which will be determined as specified below in "Determination of Density."

12.4.1.1 Under paved roads, streets, parking areas, and similar-use pavements including adjacent shoulder areas, the density shall be not less than 90 percent of maximum density for cohesive material and 95 percent of maximum density for cohesionless material up to the elevation where requirements for pavement subgrade materials and compaction shall control.

12.4.1.2 Under other areas, 90 percent of maximum density for cohesive material and 95 percent of maximum density for cohesionless material.

12.4.2 Determination of Density. Testing shall be the responsibility of the Contractor and performed at no additional cost to the Government. Testing shall be performed by an approved commercial testing laboratory or by the Contractor subject to approval. Tests shall be performed in sufficient number to insure that specified density is being obtained and shall average not less than one test shall be made in each trench.

12.4.2.1 Laboratory Control. The moisture-density relations shall be determined in a laboratory in accordance with AASHTO T180, Method D, or ASTM D 1557, Method D, modified as follows:

a. All material over 3/4 inch in size shall be removed and replaced with an equal portion of material between 0.187 inch (No. 4 sieve) and 3/4 inch in size.

b. A separate batch of materials shall be used for each compaction test specimen. No materials shall be re-used.

c. The desired amount of mixing water shall be added for each compaction test specimen, mixed well, and the mixture placed in a container with an airtight cover and allowed to cure for 24 hours. A shorter curing time may be allowed where tests show that shortening the curing time will not affect the results.

12.4.2.2 Field Control. Field in-place density shall be determined in accordance with AASHTO T191 or ASTM D 1556, except that in each tests, the weight of the disturbed sample representing the full depth of layer shall be not less than 10 pounds for fine grain material and 12 pounds for coarse grain material using a scale for weighing of sufficient capacity and sensitive to .01 pounds.

13. HYDROSTATIC TEST ON WATERTIGHT JOINTS. A hydrostatic test shall be made on the watertight joint types proposed. Only one sample joint of each type needs testing; however, if the sample joint fails because of faulty workmanship, an additional sample joint may be tested. During the test period the joint shall be protected from high temperatures that might soften or adversely affect the jointing materials. The possibility that some water may be adsorbed by concrete pipes during this test will be considered before rejecting any rubber seals proposed. Performance requirements for joints in reinforced concrete pipe shall conform to ASTM C 443 or AASHTO M 198 except that tests shall be performed at an internal hydrostatic pressure of 10 psi for a 24-hour period.

14. INSTALLATION OF SIDE DRAIN PIPE IN CHANNEL WALLS. At the option of the Contractor, side drain pipes may be either cast in place in the channel walls or installed through a blockout. The edge of the pipe shall end approximately 3/4 inch back of the channel face of the wall. Pipe installed in blockouts shall be dry-packed in place.

14.1 Special Anchorage consisting of anchor bolts, bolted to the pipe as indicated shall be used where a corrugated metal pipe entrance angle does not provide at least one continuous corrugation within the wall thickness. Anchor bolts shall be located in the bottom inside corrugations and parallel to the face of the wall. Anchor bolts, nuts and washers shall be galvanized steel or corrosion-resisting steel conforming to the requirements of the section: MISCELLANEOUS METALWORK AND MATERIALS.

14.2 Dry-Pack Installation. Dry-pack material shall consist of one part portland cement, 2 parts aggregate, and water. Aggregate shall consist of sand and fine gravel. The water content shall be such that a ball of dry-pack may be squeezed in the hand without bringing free water to the surface. Materials shall conform to the applicable requirements of the section: CONCRETE CONSTRUCTION. The dry-pack shall be tamped uniformly and symmetrically around the pipe and finished to match the channel wall.

15. AUTOMATIC DRAINAGE GATE. Gate and fastening shall conform to the requirements of the section: MISCELLANEOUS METALWORK AND MATERIALS. All gates shall be the product of the same manufacturer. The gate shall be rigidly secured in place with the seating surfaces vertical. The gate shall be cast in place, flush with the wall, and with the indicated recess for link clearance.

16. PLUGGING ABANDONED DRAINS AND FUTURE DRAIN OUTLETS. Drain pipe indicated as abandoned, drain pipe abandoned on completion of new drain lines, and drain outlets for future use shall be plugged with standard clay sewer disks calked with oakum and mortared in place, or plugged with brickwork in accordance with the applicable requirements of the section: CONCRETE CONSTRUCTION.

17. PAVING removed for the construction or modification of side drains shall be replaced to match the existing paving.

* * * * *

STANDARD DETAIL 200

CITY OF PHOENIX
ENGINEERING DEPARTMENT

MANHOLE FRAME - GRADE ADJUSTMENT

APPROVED Attebury 2-1-71 APPROVED
CITY ENGINEER DATE WATER & SEWERS DIRECTOR DATE

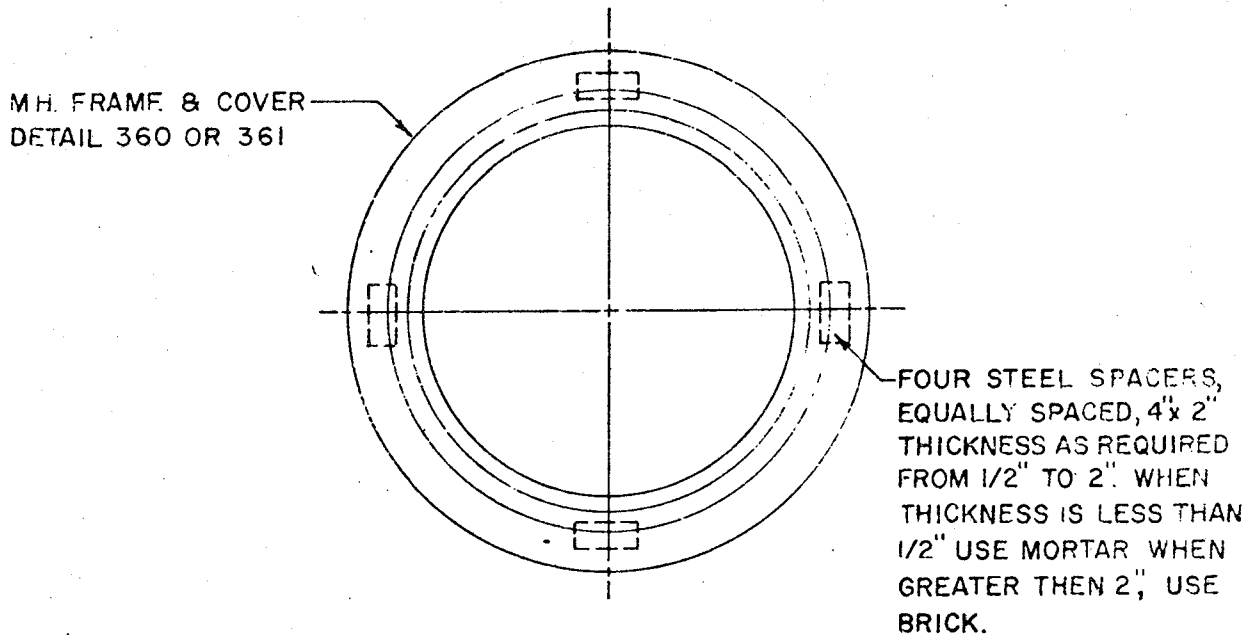

PLAN

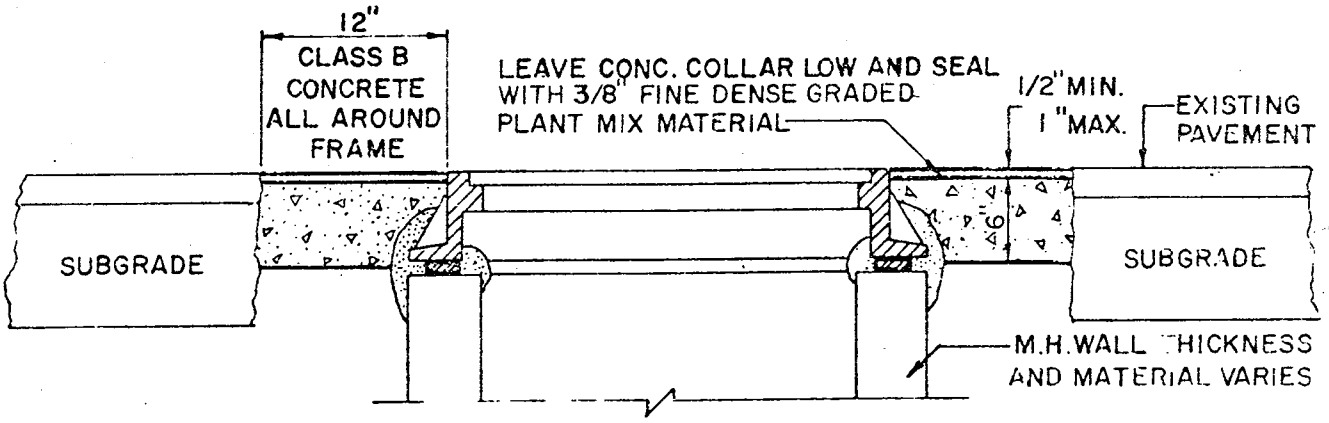

SECTION

REV. FEB. 1971 NOT TO SCALE

STANDARD DETAIL 201

CITY OF PHOENIX

PUBLIC WORKS DEPARTMENT

DIVISION OF ENGINEERING

WATER VALVE, SURVEY MONUMENT, OR SEWER CLEAN OUT FRAME - GRADE ADJUSTMENT

APPROVED: J.C. Estebrooks Oct 1, 1968

CITY ENGINEER DATE

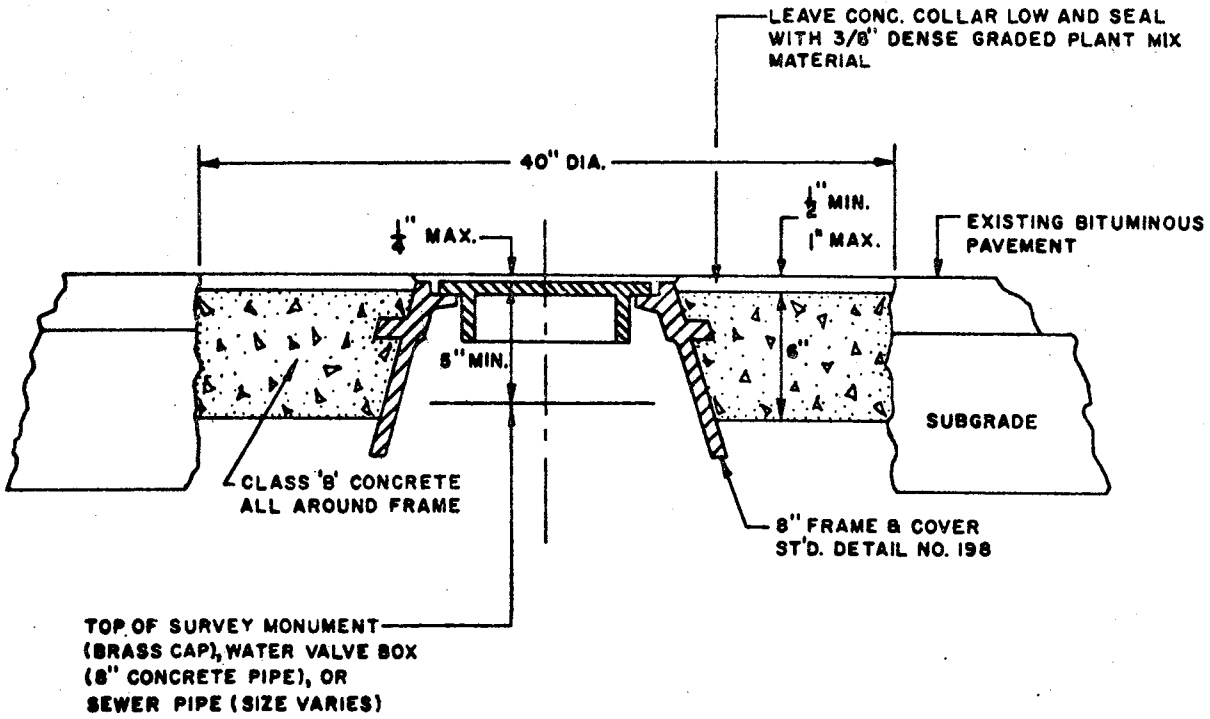

REV. 3-15-72
NEW 10-1-68

STANDARD DETAIL 260

CITY OF PHOENIX
ENGINEERING DEPARTMENT

STORM DRAIN MANHOLE SHAFT

APPROVED: C. Atteberry — CITY ENGINEER — 3/20/72 DATE

UNLESS OTHERWISE SHOWN ON PLANS USE 2-2½" PRECAST CONCRETE RINGS ON IMPROVED STREETS & USE 4-2½" RINGS ON UNIMPROVED STREETS.

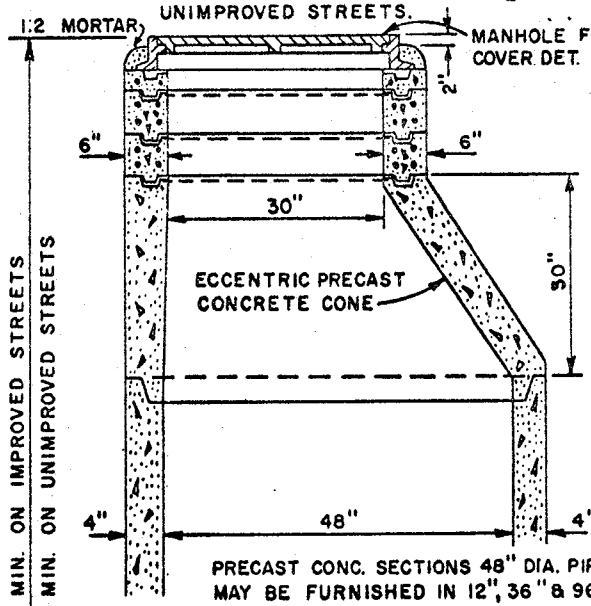

PRECAST CONC. SECTIONS 48" DIA. PIPE MAY BE FURNISHED IN 12", 36" & 96" LENGHTS.

ALL JOINTS SHALL BE FILLED WITH 1:2 MORTAR AND NEATLY POINTED OR WIPED ON INSIDE OF SHAFT.

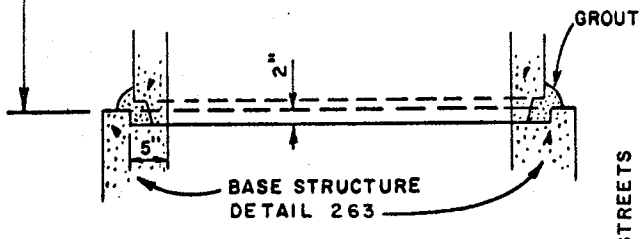

VERTICAL SECTION OF ECCENTRIC MANHOLE SHAFT

NOTES:
PRECAST CONC. CONES & SECTIONS TO BE ASTM C-76 CLASS II WALL A

UNLESS OTHERWISE SPECIFIED BRICK MAY BE USED IN LIEU OF CONCRETE ADJUSTING RINGS.

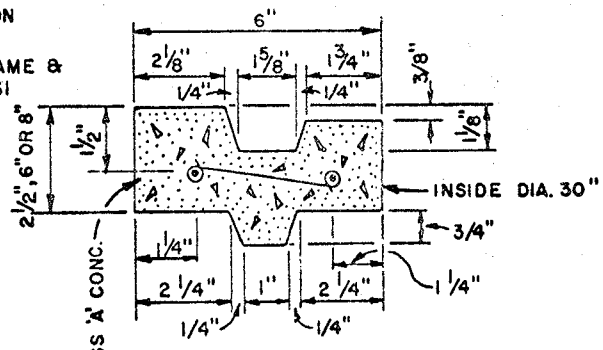

2½" RINGS SHALL BE REINFORCED WITH TWO 1/4" ROUND STEEL HOOPS; 6" & 8" RINGS SHALL BE REINFORCED WITH FOUR 1/4" HOOPS, TIED WITH NO. 14 A.S.&W. GAUGE WIRE 8" O.C..

REINFORCED CONC. RING

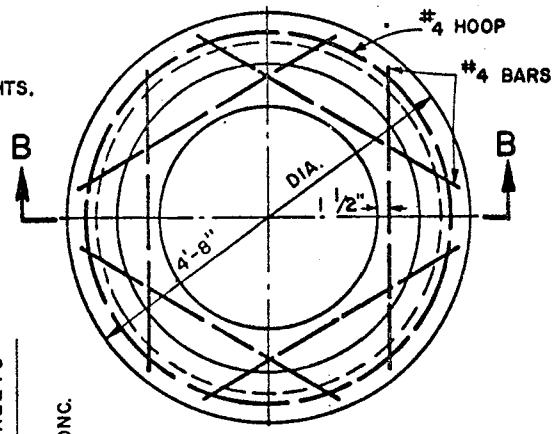

PLAN

USE WHERE THERE IS 3'-11" OR LESS COVER OVER PIPE ON IMPROVED STREETS OR 4'-4" OR COVER OVER PIPE ON UNIMPROVED STREETS.

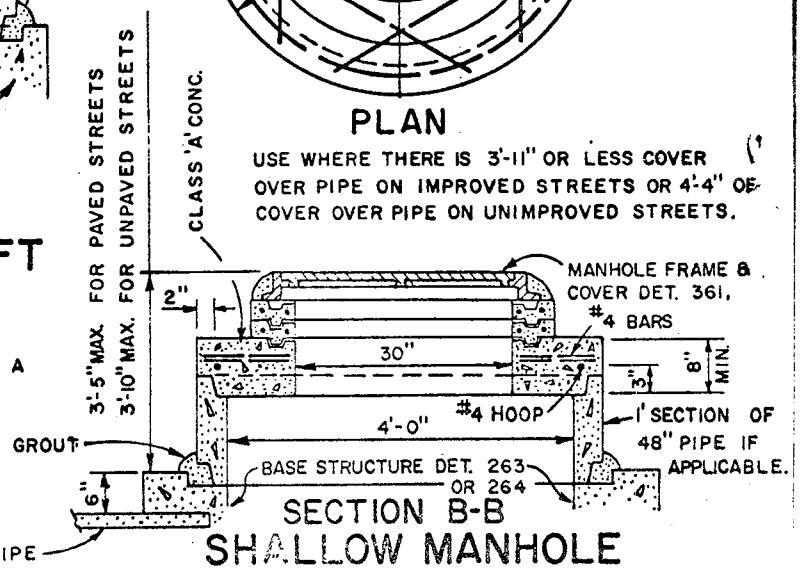

SECTION B-B
SHALLOW MANHOLE

REV. 3-72 WF
NEW: JUNE 1966

STANDARD DETAIL 263

CITY OF PHOENIX

PUBLIC WORKS DEPARTMENT

DIVISION OF ENGINEERING

STORM DRAIN MANHOLE BASE NO. 1, 48" DIA. PIPE & UNDER

APPROVED: R C Estlewood 3/31/66
CITY ENGINEER DATE

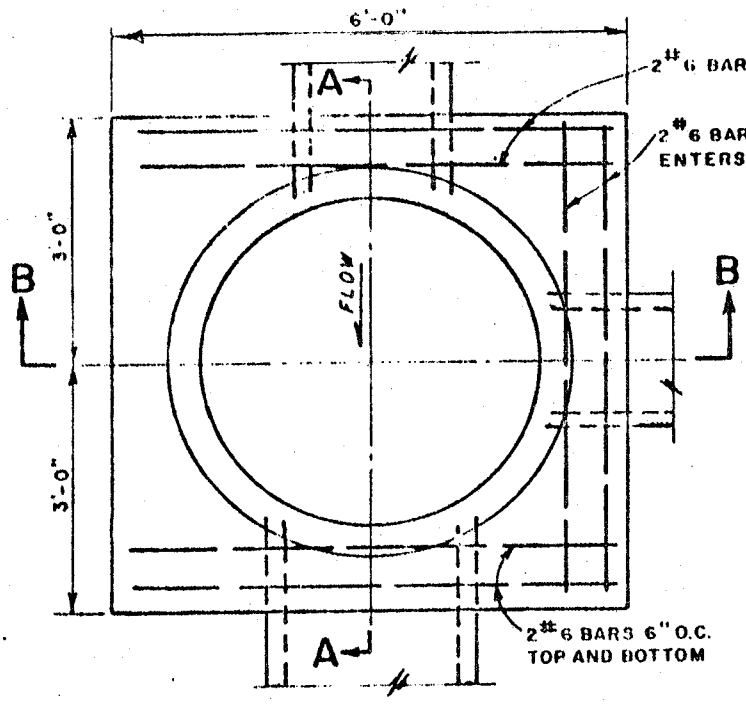

PLAN

NOTES:

ALL CONCRETE CLASS 'A'.

MATCH SPRING LINES OF PIPES ENTERING M.H. UNLESS OTHERWISE NOTED.

CUT PIPES TO ALLOW SETTING OF 4' DIA. CYLINDRICAL FORM FROM 6" ABOVE MAIN LINE PIPE TO SPRING LINE. CUT PIPE 2" LARGER THAN FORM TO ALLOW 2" CONC. OVER ENDS OF ALL CUT PIPE. INVERT AND BASE OF M.H. TO BE POURED AND INVERT TO BE SHAPED BY HAND TO MAKE SMOOTH TRANSITION. FINISH WITH RUBBER FLOAT.

CENTER M.H. ON PIPE JOINT WHERE PIPE CHANGES SIZE, LEAVE GAP. 12" MIN., 24" MAX.

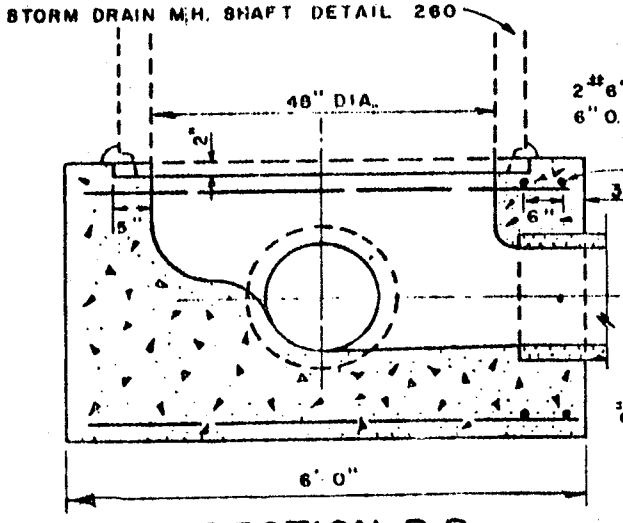

SECTION B-B

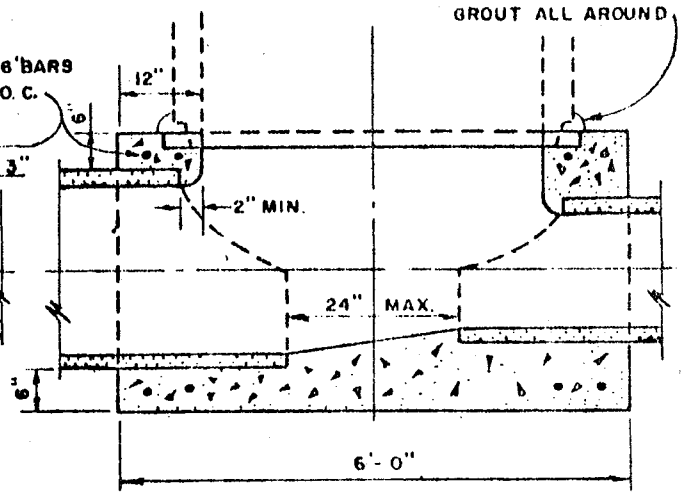

SECTION A-A

N. W. JUNE 1966

STANDARD DETAIL 361

CITY OF PHOENIX
PUBLIC WORKS DEPARTMENT
DIVISION OF ENGINEERING

30" MANHOLE FRAME & COVER

APPROVED K. C. Estabrooks Feb 3, 1966 APPROVED David Travanini Feb 1 1966
CITY ENGINEER DATE WATER & SEWERS DIRECTOR DATE

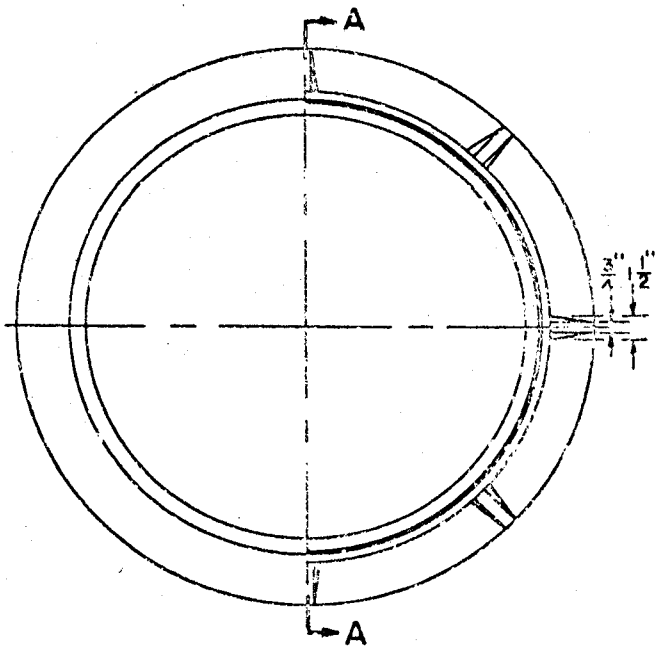

BOTTOM VIEW TOP VIEW

FRAME

APPROXIMATE WEIGHT - 224 LBS.

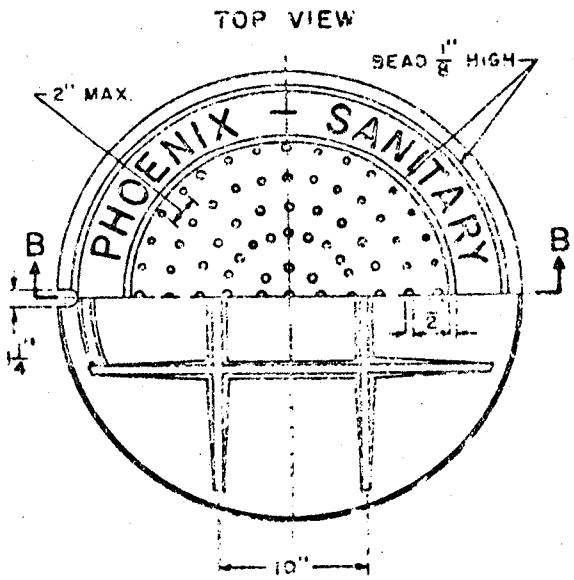

BOTTOM VIEW

COVER

APPROXIMATE WEIGHT - 324 LBS.

SEE STANDARD SPEC. 954 FOR CASTINGS

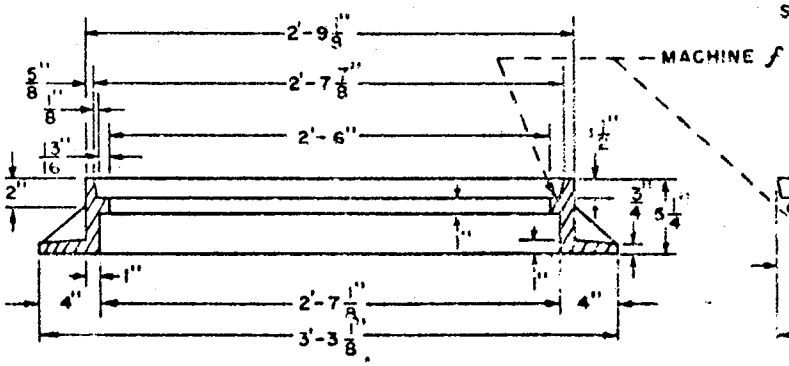

SECTION A-A

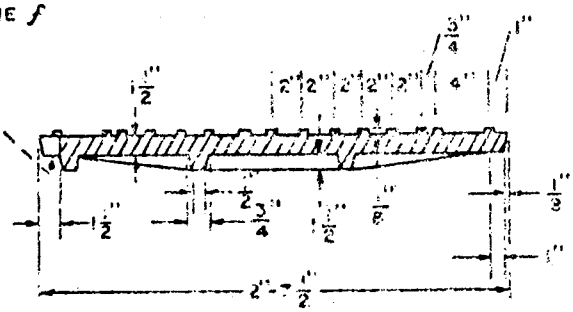

SECTION B-B

LETTERING ON MANHOLE COVER TO BE AS FOLLOWS "PHOENIX STORM SEWER" "PHOENIX SANITARY SEWER," "PHOENIX WATER" OR AS DIRECTED. THE TOTAL WIDTH OF INDIVIDUAL LETTERS TO BE SUCH THAT LETTERS AND WORDS ARE EQUALLY SPACED AND BALANCED TO FORM A COMPLETE CIRCLE WITH SPACERS BEFORE AND AFTER THE WORD PHOENIX AS SHOWN. ABOVE LETTERS TO BE 2" IN HEIGHT AND RAISED 1/8" ABOVE LEVEL OF COVER. TYPE OF LETTERS TO BE SUBMITTED FOR APPROVAL. WEIGHT OF CASTINGS SHALL BE NO MORE THAN 2% LESS THAN THE APPROXIMATE WEIGHT SPECIFIED.

REV: JUNE 1966

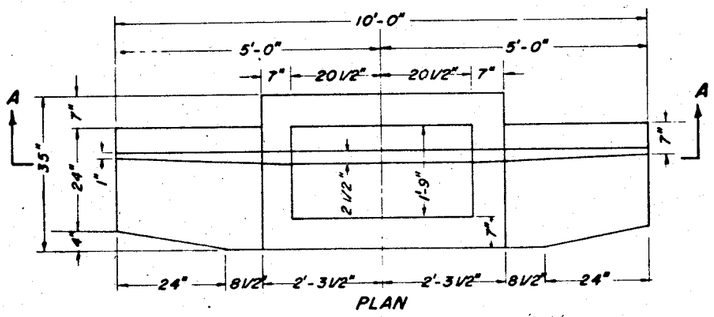

PLAN

Curb & Gutter Detail — Catch Basin 'E'

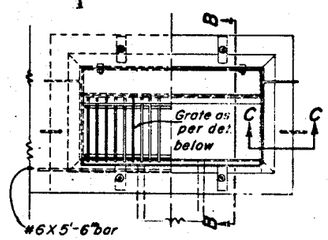

Half Plan Gutter & Grate

Half Plan Frame & Anchors

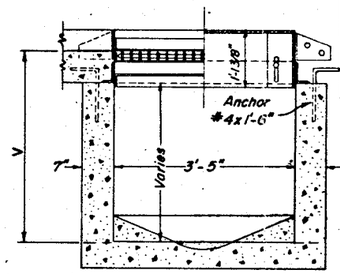

LONGITUDINAL SECTION

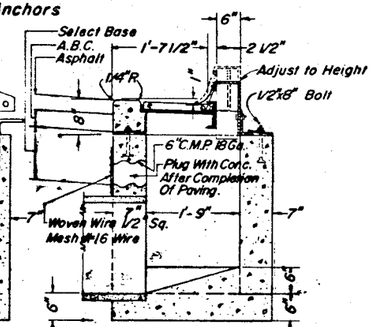

CROSS SECTION

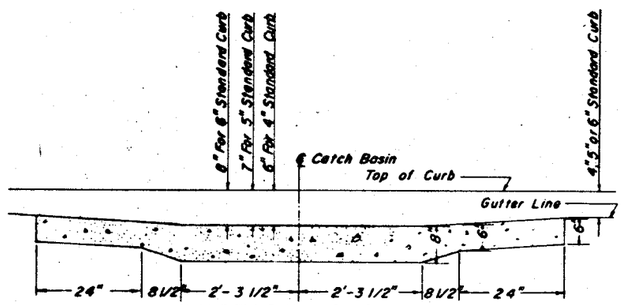

SECTION A-A

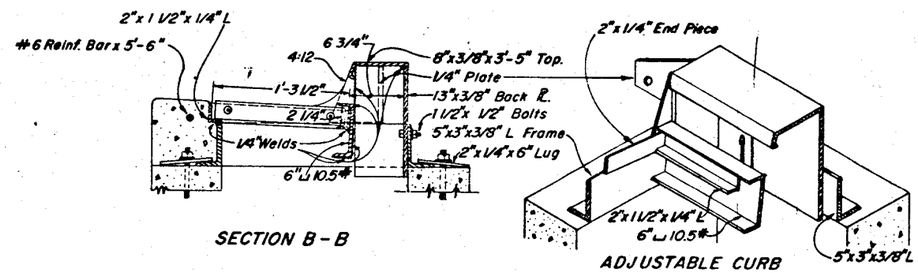

SECTION B-B

ADJUSTABLE CURB

Composite View

Showing relation of angles, Channel and end piece.

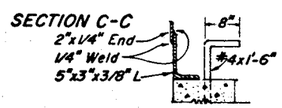

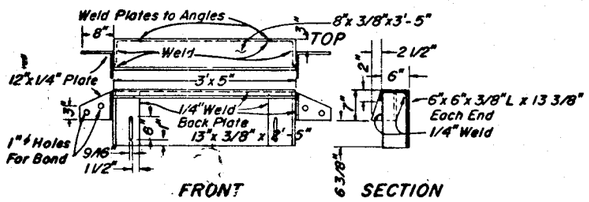

FRONT SECTION

Detail of Adjustable Curb

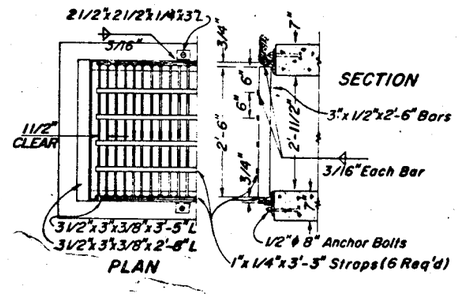

PLAN

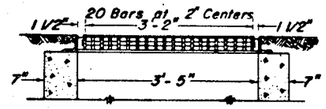

SECTION

Welded frame and bar grate unit for use without curb. Bottom of concrete box is as shown for DETAIL 'E'.

TYPE 'F'

CONCRETE CATCH BASIN

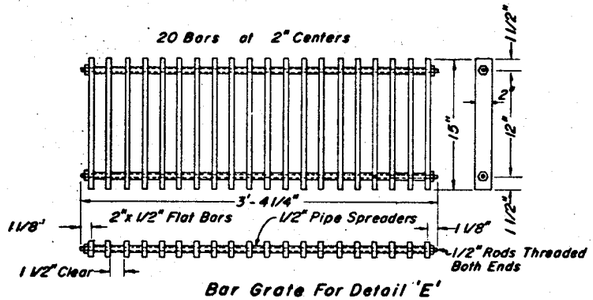

Bar Grate For Detail 'E'

GENERAL NOTES

Adjustable curb, frame, & grating units shall be structural steel A.S.T.M. A-7, painted one shop coat of No. 1 paint and two field coats of No. 10 paint. (Ariz. Hwy. Dept. Std Spec. Sec. 604 & 718 Paint and Painting.)

All concrete to be class "A."

Pipes may enter or leave any wall. Bottom of box to be sloped to outlet pipe from all directions and troweled to a hard smooth surface.

C.M.P. Drains to be installed in all inlets built with paving projects.

See Project Plans for inlet details and depth of paving.

"V" = 3'-0" unless otherwise specified.

TYPE 'E'

CONCRETE CATCH BASIN

REV. 3-73
REV. 3-72
NEW. 10-1-68

STANDARD DETAIL — 219
CITY OF PHOENIX
ENGINEERING DEPARTMENT
CATCH BASIN TYPE 'E' & TYPE 'F'

APPROVED R. C. Estabrooks — CITY ENGINEER — Oct. 1, 1968 — DATE

Master 12-5-76

SECTION 9A

SELECT-MATERIAL SUBBASE COURSE

Index

1. Applicable Publications
2. Definitions
3. Sampling and Testing
4. Equipment
5. Operation of Pits
6. Weather Limitations
7. Preparation of Subgrade
8. Grade Control
9. Placing and Compacting Select Material
10. Edges of Subbase Course
11. Smoothness Test
12. Thickness Control
13. Maintenance

1. APPLICABLE PUBLICATIONS. The following publications of the issues listed below, but referred to thereafter by basic designation only, form a part of this specification to the extent indicated by the references thereto.

1.1 American Society for Testing and Materials (ASTM), Publications.

C 117-69(R 1974)	Materials Finer than No. 200 Sieve in Mineral Aggregates by Washing
C 136-71	Sieve or Screen Analysis of Fine and Coarse Aggregates
D 75-71	Sampling Aggregates
D 1556-64	Density of Soil in Place by the Sand-Cone Method
D 1557-70	Moisture-Density Relations of Soils Using 10-lb (4.5-kg) Rammer and an 18-in. (457-mm) Drop

2. DEFINITIONS.

2.1 Select Materials shall consist of selected soil or other materials from field excavation, stockpiles, or other sources. Select material shall be free from lumps, balls of clay, organic and other objectionable matter. The maximum size of the material shall not exceed 3 inches. Not more than 12 percent by weight shall pass the No. 200 sieve. The portion of material passing the No. 40 sieve shall have a liquid limit less than 35 and a plasticity index less than 5.

3. SAMPLING AND TESTING shall be the responsibility of the Contractor. Sampling and testing shall be performed by an approved commercial testing laboratory, or by the Contractor subject to approval. Tests shall be performed in sufficient number to insure that materials meet specified requirements. Copies of test results shall be furnished to Contracting Officer.

3.1 Samples for material gradation, liquid-limit tests, and plastic-limit tests shall be taken in conformance with ASTM D 75. Samples for density tests shall be taken as specified in ASTM D 1556, after the material has been placed and compacted. When deemed necessary, the sampling will be observed by the Contracting Officer.

3.2 Tests.

3.2.1 Sieve Analysis shall be made in conformance with ASTM C 117 and C 136. Sieves shall conform to ASTM E 11.

3.2.2 Liquid Limit shall be determined in accordance with ASTM D 423.

3.2.3 Plasticity Index shall be determined in accordance with ASTM D 424.

3.2.4 Density Tests. Density shall be measured in the field in accordance with ASTM D 1556. Maximum density at optimum moisture will be determined in the laboratory in accordance with ASTM D 1557, Method D.

3.3 Approval of Material. The source of the material shall be selected well in advance of the time the material will be required in the work. Tentative approval of source will be based on an inspection by the Contracting Officer. Tentative approval of material will be based on tests of samples for the specific job. Final approval will be based on tests made on samples of material taken from the completed and compacted select-material subbase-course layer. The completed select-material subbase-course layer is defined as one that is ready for the next layer.

4. EQUIPMENT. All plant, equipment, tools, and machines used in the performance of the work will be subject to approval before the work is started and shall be maintained in satisfactory working condition at all times.

4.1 Rollers.

4.1.1 Steel-Wheeled Rollers shall be self-propelled, 3-wheel type, weighing not less than 10 tons, and having a minimum weight of 300 pounds per inch width of rear wheel. The wheels shall be equipped with adjustable scrapers. The use of vibratory rollers is optional.

4.1.2 Light Pneumatic-Tired Rollers shall have 2 axles on which are mounted not less than 9 pneumatic-tired wheels in such manner that the rear group of tires will not follow in the tracks of the forward group. Axles shall be mounted in a rigid frame provided with a loading platform or body suitable for ballast loading. Tires shall be uniformly inflated. Tractor or other towing equipment shall also be pneumatic-tired.

4.1.3 Tamping Rollers, sheepsfoot type, shall consist of one or more units. Each unit shall consist of a watertight cylindrical drum not less than 48 inches in length, surmounted by metal studs with tamping feet projecting not less than 7 inches from the surface of drum, and spaced 6 to 10 inches apart, measured diagonally from center to center. The tamping feet shall be an approved type suitable for compacting select-material subbase courses. Each unit shall be equipped with a suitable device for cleaning the tamping feet. The rolling units of multitype tamping rollers shall be pivoted on the main frame in a manner that will permit the units to adapt themselves to uneven ground surfaces and to rotate independently. When fully loaded, the rollers shall produce a pressure of at least 300 psi on the combined areas of the tamping feet in contact with the ground.

4.2 Blade Graders shall have a wheel base of not less than 15 feet, a blade of not less than 10 feet, and shall be self-propelled.

4.3 Sprinkling Equipment shall consist of tank trucks, pressure distributors, or other equipment designed to apply water uniformly and at controlled quantities to variable widths of surface.

4.4 Hauling Equipment shall consist of pneumatic-tired vehicles having dump bodies suitable for dumping materials in windrows or spreading machines.

4.5 Tampers shall be an approved mechanical type, operated by pneumatic pressure or internal combustion. Tampers shall have sufficient weight and striking power to produce the compaction required in paragraph: PLACING AND COMPACTING SELECT MATERIAL.

4.6 Miscellaneous Equipment. Tractors, plows, and other equipment shall be approved types, suitable for constructing select-material courses.

5. OPERATION OF PITS. All clearing, stripping, and excavating work involved in the opening or operation of pits shall be performed by the Contractor. Pits shall be opened to expose vertical faces of the deposit for suitable working depths. Materials excavated from pits shall be obtained in successive vertical cuts extending through all exposed strata. All pockets or strata of unsuitable materials overlying or occurring in the deposit shall be wasted as directed. The methods of operating pits may be changed or modified by the Contracting Officer when necessary to obtain material conforming to specified requirements. Upon completion of work, pits shall be left in an approved condition that is also in agreement with local laws and authorities.

6. WEATHER LIMITATIONS. Select-material subbase courses shall be constructed when the atmospheric temperature is above 35 degrees F. When the temperature falls below 35 degrees F., all areas of completed select-material subbase course shall be protected by approved methods against detrimental effects of freezing. Areas of completed select-material subbase course damaged by freezing, rainfall, or other weather conditions shall be corrected to meet specified requirements.

7. PREPARATION OF SUBGRADE. Prior to constructing the select-material subbase course, the previously constructed subgrade shall be cleaned of all foreign substances. Surface of subgrade shall meet specified compaction and surface tolerances. Subgrade for select-material subbase course shall conform to requirements of section: FILLS AND SUBGRADE PREPARATION. Ruts or soft, yielding spots that may appear in subgrade, areas having inadequate compaction, and deviations of the surface from requirements set forth therein shall be corrected by loosening, removing, and by adding approved material, reshaping to line and grade, and recompacting to specified density requirements.

8. GRADE CONTROL. Finished and completed subbase course shall conform to lines, cross sections, and dimensions shown. The lines and grades indicated shall be maintained by means of line and grade stakes placed by Contractor at the worksite in accordance with the SPECIAL PROVISIONS.

9. PLACING AND COMPACTING SELECT-MATERIAL. The select material shall be hauled to the area to be paved in approved pneumatic-tired vehicles and dumped or spread on the subgrade. Material shall be leveled with blade graders to a uniform thickness so that the layer, after compaction, will not exceed 6 inches in thickness. Water shall be added by sprinkling and mixing or reduced by aeration as necessary. Mixing and aeration shall be accomplished with mechanical mixers, plows, graders, or other approved equipment until the water content is at optimum or at the percentage directed. Mixing shall be continued until a uniform distribution of water is obtained. The layer shall be compacted with sheepsfoot rollers, pneumatic-tired rollers, or other approved equipment until the layer is compacted through the full depth to at least 95 percent maximum density. Methods of determining the maximum density and the density of compacted material are specified in paragraph: SAMPLING AND TESTING. In places inaccessible to rolling equipment, compaction of the degree specified shall be accomplished with tampers. Field densities will be measured on the total sample. The surface shall be finished by blading and rolling with steel-wheeled rollers, pneumatic-tired rollers, or combinations thereof. Adjustments shall be made in placing, spreading, rolling, or finishing procedures as may be directed to obtain uniform layer thickness and true grades, to minimize segregation and degradation where pertinent, to reduce or increase water content, and to insure a satisfactory select-material course. Materials found unsatisfactory shall be replaced with satisfactory material or reworked to produce a satisfactory material.

10. EDGES OF SUBBASE COURSE. Earth or other approved material shall be placed along the edges of the select-material subbase course in sufficient quantity to allow at least one foot of the shoulder to be rolled and compacted simultaneously with the rolling and compacting of each subbase-course layer.

11. SMOOTHNESS TESTS. The surface shall show no deviations in excess of 3/8 inch when tested with a 10-foot straightedge applied parallel with and at right angles to centerline of area to be paved. Deviations exceeding this amount shall be corrected by loosening, adding or removing material, reshaping, and compacting as directed.

12. THICKNESS CONTROL. The completed thickness of the subbase course shall be within 1/2 inch of the thickness shown. The thickness of the select-material subbase course shall be measured at intervals providing at least one depth measurement for each 500 square yards of subbase course. The depth measurement shall be made by test holes at least 3 inches in diameter. Where the measured thickness of the select-material subbase course is more than 1/2 inch deficient, the Contractor shall correct such areas by scarifying, adding mixture of proper gradation, reblading, and recompacting as directed. Where the measured thickness of the select-material subbase course is 1/2 inch thicker than shown, the course will be considered as conforming to the specified thickness requirements plus 1/2 inch. The average job thickness shall be the average of the job measurements as specified above but within 1/4 inch of the thickness shown.

13. MAINTENANCE. The finished select-material subbase course shall be maintained in a satisfactory condition until accepted.

* * * * *

SECTION 9B

AGGREGATE BASE

Index

1. Applicable Publications
2. Materials
3. Sampling and Testing
4. Equipment
5. Operation of Pits for Quarries
6. Weather Limitations
7. Preparation of Underlying Surface
8. Grade Control
9. Mixing and Placing Materials
10. Layer Thickness
11. Compaction
12. Edges of Base Course
13. Smoothness Test
14. Thickness Control
15. Maintenance
16. Waybills and Delivery Tickets

1. APPLICABLE PUBLICATIONS. The following publications of the issues listed below, but referred to thereafter by basic designation only, form a part of this specification to the extent indicated by the references thereto.

1.1 American Society for Testing and Materials (ASTM) Publications.

C 117-69	Materials Finer than No. 200 (75-m) Sieve in Mineral Aggregates by Washing
C 127-73	Specific Gravity and Absorption of Coarse Aggregate
C 128-73	Specific Gravity and Absorption of Fine Aggregate
C 131-69	Resistance to Abrasion of Small Size Coarse Aggregate by Use of the Los Angeles Machine
C 136-71	Sieve or Screen Analysis of Fine and Coarse Aggregates
D 75-71	Sampling Aggregates
D 422-63	Particle-Size Analysis of Soils
D 423-66	Liquid Limit of Soils
D 424-59	Plastic Limit and Plasticity Index of Soils
D 1556-64	Density of Soil in Place by the Sand-Cone Method
D 1557-70	Moisture-Density Relations of Soils, Using 10-lb. (4.5-kg) Rammer and 18-in. (457-mm) Drop
E 11-61	Sieves for Testing Purposes

2. MATERIALS. Aggregates shall consist of crushed stone, crushed gravel, angular sand, soil, or other approved materials processed and blended or naturally combined. Aggregates shall be free from lumps and balls of clay, organic matter, objectionable coatings, and other foreign material and shall be durable and sound. It shall be the responsibility of the Contractor to obtain materials that will meet the requirements specified herein and that can be constructed to meet the grade and smoothness requirements specified herein after all compaction requirements have been completed. The material retained on a No. 4 sieve shall be known as coarse aggregate, and the material passing the No. 4 sieve shall be known as binder material.

2.1 Coarse Aggregate conforming to the requirements specified above shall have a percentage of wear not to exceed 40 percent after 500 revolutions. Coarse aggregate shall consist of angular fragments reasonably uniform in density and quality. The amount of flat and elongated particles shall not exceed 30 percent. A flat particle is one having a ration of width to thickness greater than 3, and an elongated particle is one having a ration of length to width greater than 3.

2.1.2 Coarse aggregate retained on each sieve specified shall contain at least 50 percent by weight of crushed pieces having two or more freshly fractured faces with the area of each face being at least equal to 75 percent of the smallest midsectional area of the piece. When two fractures are adjacent, the angle between the planes of the fractures must be at least 30 degrees to count as two fractured faces.

2.2 Binder Material shall consist of screenings, angular sand, soil, or other finely divided mineral matter processed or naturally combined with the coarse aggregate. Liquid-limit and plasticity-index requirements stated herein shall apply to any component that is blended to meet the required gradation and shall also apply to the completed course. The portion of any component or of the completed course passing the No. 40 sieve shall be either nonplastic or shall have a liquid limit not greater than 25 and a plasticity index not greater than 3.

2.3 Gradation requirements specified herein shall apply to the completed base course, and it shall be the responsibility of the Contractor to obtain materials that will meet the gradation requirements after mixing, placing, compacting, and other operations. The aggregates shall have a maximum size of one inch and shall be continuously graded within the limits specified below:

Sieve Designation	Percentage by Weight Passing Square-Mesh Sieve†
1 inch	100
3/4 inch	90-100
1/4 inch	38-70
No. 200	3-12

†The values are based on aggregates of uniform specific gravity, and the percentages passing the various sieves are subject to appropriate correction by the Contracting Officer when aggregates of varying specific gravities are used.

3. SAMPLING AND TESTING shall be by and at the expense of the Contractor.

3.1 Samples shall be the size required and shall be taken by the Contractor. Copies of test results shall be submitted for approval 30 days prior to starting the work, and thereafter at regular intervals during production as specified hereinafter. These samples shall be obtained at the source, from test pits, borings, trucks, stockpiles, or from other designated locations. Samples for material gradation, liquid-limit determination, and plasticity-index tests shall be taken in conformance with ASTM D 75. After the material has been placed and compacted, samples for density tests shall be taken as specified in ASTM D 1556, and additional samples for gradation, liquid-limt, and plasticity-index tests shall be taken by an appropriate method. Where deemed necessary, the sampling will be supervised by the Contracting Officer. The Contractor shall arrange his work so that sampling and testing may be performed without interruption.

3.2 Tests.

3.2.1 Aggregate Gradation. Aggregate gradation shall be determined in accordance with ASTM C 117, C 127, C 128, C 136, and D 422. Sieves shall conform to ASTM E 11.

3.2.2 Liquid Limit shall be determined in accordance with ASTM D 423.

3.2.3 Plasticity Index shall be determined in accordance with ASTM D 424.

3.2.4 Weat Test shall be made in conformance with ASTM C 131.

3.2.5 Field-In Place Density shall be determined in accordance with ASTM D 1556. Moisture-density relations shall be established in the laboratory in accordance with ASTM D 1557, method D.

3.3 Frequency of Testing. Results of tests to determine particle shape, presence of objectionable coatings and foreign matter, percentage of wear, fracture count, gradation, liquid-limit, plasticity-index, specific gravity, and other specification requirements for determination of the acceptability of the source shall be submitted for approval at least 7 days prior to starting of manufacture of the base course material. Production testing for material gradation, liquid limit, and plasticity index shall be performed at regular intervals with at least one test being made at the start of production and one test at the mid point of production and the results shall be submitted. Deviations from specification requirements shall be corrected immediately upon discovery. After the material has been placed and compacted, one field density test for each 1,000 square yards or fraction thereof of finished base course and one additional gradation, liquid-limit, and plasticity index test for each 3,000 square yards of base course or fraction thereof shall be performed. Maximum-density moisture relations shall be established for each 1,000 square yards of base course material. The location of the after-placement tests shall be as directed. One copy of density data (less dry weight determinations) shall be provided on the day each test is taken. The completed test report shall be provided with the Contractor Quality Control Report on the following work day. Results of all tests made shall be submitted for approval on a daily basis and subsequent paving operations shall not commence until final approval has been obtained. Failure of any test shall be reported verbally, by the most expeditious means and followed promptly by written report. Contractor field operations shall immediately reflect corrective measures. For every failing test, retesting after completion of corrective measures have been taken will be required.

3.4 Approval of Material. The source of material shall be selected well in advance of the time materials will be required in the work. Tentative approval of the preliminary reports submitted by the Contractor and the source will be based on an inspection by the Contracting Officer. Tentative approval of the materials will be based on test samples as specified herein. Final approval of both the source and the materials will be based on specified tests performed on samples taken from the completed and compacted base course.

4. EQUIPMENT. All plant equipment, tolls, and machines used in the performance of the work covered by this section shall be approved prior to commencement of work. This equipment shall be maintained in satisfactory working condition at all times.

4.1 Aggregate Spreader shall be of the hopper type and shall be equipped with an adjustable screed capable of laying material to uniform thicknesses ranging from 1 to 8 inches or more over a minimum lane width of 8 feet. The hopper shall be a shape that minimizes segregation, and shall be carried on pneumatic-tired trucks or on drum-type steel rollers that will not dig into or scuff the subgrade or subbase. The spreader may be either the towed type for attaching directly to the dump truck or the self-propelled type with sufficient power to propel the dump truck. An asphaltic-concrete paver may be used at the option of the Contractor.

4.2 Blade Graders shall have a wheelbase of not less than 15 feet, a blade of not less than 10 feet in length, and shall be self-propelled.

4.3 Compaction Equipment.

4.3.1 Steel-Wheeled Rollers shall be the self-propelled three-wheel type weighing not less than 10 tons, and shall have a minimum of 300 pounds per inch width of rear wheel. The wheels shall be equipped with adjustable scrapers. The use of vibrating roller is optional.

4.3.2 Light Pneumatic-Tired Rollers shall consist of two axles on which are mounted not less than nine rubber-tired wheels, five wheels on one axle and four on the other, mounted in such a manner that the rear group of tires will not follow in the tracks of the forward group. The axles shall be mounted in a rigid frame provided with a loading platform or body suitable for ballast loading. The tires shall be uniformly inflated. The rollers shall be weighted as directed. The tractor or other towing equipment shall aslo be rubber-tired.

4.3.3 Tampers shall be of an approved mechanical type operated by either pneumatic pressure or internal combustion. They shall have sufficient weight and striking power to produce the compaction required in paragraph COMPACTION hereinafter.

4.4 Hauling Equipment shall consist of pneumatic-tired vehicles having dump bodies suitable for dumping materials in windrows or into spreading machines.

4.5 Mixing Plants, if used, shall be so designed and constructed as to thoroughly mix the coarse aggregate, binder material, and water without excessive degradation of the aggregates. Each plant shall have a capacity of not less than 100 tons of mixed material per hour.

4.6 Sprinkling Equipment shall consist of tank trucks, pressure distributors, or other equipment designed to apply controlled quantities of water uniformly over variable widths of surface.

4.7 Miscellaneous Equipment. Other equipment used on the job shall be of approved types suitable for constructing aggregate base course.

5. OPERATION OF PITS OR QUARRIES. All work involved in clearing, stripping, and excavating in opening or operation of pits or quarries shall be performed by the Contractor. Pits or quarries shall be opened so as to expose the vertical faces of the deposit to depths suitable for working. Materials excavated from pits shall be obtained in successive vertical cuts extending through all exposed strata. All pockets or strata of unsuitable materials overlying or occurring within the deposit shall be wasted as directed. The methods of operating the pits or quarries and the processing and blending of the material may be changed or modified by the Contracting Officer without adjustments in the contract prices when such action is necessary to obtain material conforming to the specified requirements. Quarries shall be conditioned in agreement with the local laws or authorities.

6. WEATHER LIMITATIONS. Aggregate base courses shall not be constructed when the atmospheric temperature is below 35 degrees F. When the temperature falls below 35 degrees F., it shall be the responsibility of the Contractor to protect by approved method or methods, all areas of the completed aggregate base course against any detrimental effects of freezing. Any areas of completed aggregate base course that are damaged by freezing, rainfall, or other weather conditions shall be brought to a satisfactory condition by the Contractor in conformance with this specification without additional cost to the Government.

7. PREPARATION OF UNDERLYING SURFACE. Prior to constructing the aggregate base course, the previously constructed subgrade and subbase course shall be cleaned of all foreign substances. The surface of the subgrade and subbase course shall be inspected by the Contractor for adequate compaction and surface tolerances. The subbase shall conform to section: SELECT MATERIAL SUBBASE. Ruts or soft, yielding spots that may appear in the subgrade and subbase course, areas having inadequate compaction, and deviations of the surface from the requirements set forth therein shall be corrected to line and grade and to all specification requirements. The finished subgrade and subbase shall not be disturbed by traffic or other operations and shall be maintained by the Contractor in a satisfactory condition until the base course is placed.

8. GRADE CONTROL. During construction the lines and grades including crown and cross slope indicated for the aggregate base course shall be maintained by means of line and grade stakes placed by the Contractor at the worksite in accordance with SPECIAL PROVISIONS of these specifications.

9. MIXING AND PLACING MATERIALS. The placing procedures apply to each layer of the aggregate base course. The Contractor shall, as directed, make such adjustments in mixing or placing procedures or in equipment as are necessary to obtain grades within the allowable tolerance, to minimize segregation and degradation, reduce or accelerate loss or gain of water, and to insure a satisfactory aggregate base course. The coarse aggregates and binder materials shall be proportioned by weight or by volume in quantities so that the specified gradation, liquid-limit, and plasticity-index requirements will be met. Adjustments of percentages of coarse aggregates and binder material shall be made by the Contractor when required to conform with these specifications. Water in approved quantities, measured by weight or volume, shall be added during mixing. Mixing operations shall produce an approved uniform blend. The finished mixture shall be hauled to the area to be paved in approved pneumatic-tired vehicles. The material shall be placed in a uniform layer to the required contour and grades, and to a loose depth that, when compacted, will produce a layer of the designated thickness. The material shall be placed uniformly on the subgrade and subbase course from moving vehicles, spreader boxes, or mechanical spreaders and brought to the required contour and grades with blade graders. Unsatisfactory areas shall be removed and replaced with satisfactory mixture, or the material shall be mixed in the area, as directed.

10. LAYER THICKNESS. The compacted thickness of the aggregate base course shall be as indicated. When a compacted layer of 6 inches or less is indicated, the material shall be placed in a single layer.

11. COMPACTION. Each layer of the aggregate base course (including shoulders) shall be compacted with steel-wheeled rollers, light pneumatic-tired rollers, or other equipment as approved. Water content shall be maintained at optimum or at the percentage specified during compaction. In places not accessible to the rollers, the mixture shall be compacted with mechanical tampers. Compaction shall continue until each layer through the full depth is compacted to at least 100 percent of maximum density. The Contractor shall make such adjustments in rolling or finishing procedures as may be required to obtain true grades, to minimize segregation and degradation, to reduce or accelerate loss or gain of water, and to insure a satisfactory aggregate base course. Unsatisfactory materials shall be reworked to produce a satisfactory material.

12. EDGES OF BASE COURSE. Where the course is not placed between curbs or similar construction, approved material shall be placed along the edges of the aggregate base course in such quantities as will compact to the thickness of the course being considered, or, when the course is being constructed in two layers, to the thickness of each layer of the course, allowing in each operation at least a 1-foot width of the shoulder to be rolled and compacted simultaneously with the rolling and compacting of each layer of the base course, as directed.

13. SMOOTHNESS TEST. The surface of each layer shall not show any deviations in excess of 3/8 inch when tested with either a 10- or 12-foot straightedge applied both parallel with and at right angles to the centerline of the paved area. Any deviation in excess of this amount shall be corrected by the Contractor by removing material and replacing with new material, or by reworking existing material and compacting, as directed. The Contractor shall perform such straightedge testing as is required to demonstrate compliance with the smoothness requirements.

14. THICKNESS CONTROL. The completed thicknesses of the base course shall be within 1/4 inch, plus or minus, of the thickness indicated. Thickness test shall be made and recorded by the Contractor. The thickness of the base course shall be measured at intervals in such manner that there will be a thickness measurement for at least each 500 square yards of base course. The thickness measurement shall be made by test holes at least 3 inches in diameter through the base course. Where the measured thickness of the base course is more than 1/4 inch deficient in thickness, the Contractor, at no additional expense to the Government, shall correct such areas by scarifying, adding mixture of proper gradation, reblading, and recompacting, as directed. Where the measured thickness of the base course is more than 1/4 inch thicker than that indicated, it shall be considered as conforming with the specified thickness requirements plus 1/2 inch. The average job thickness shall be the average of the job measurements determined as specified above, but shall be within 1/4 inch of the thickness indicated.

15. MAINTENANCE. The Contractor shall maintain the aggregate base course in a satisfactory condition until the completed work is accepted.

16. WAYBILLS AND DELIVERY TICKETS. Copies of waybills or delivery tickets shall be attached to the Daily Contractor Quality Control Report for the day of delivery. Before the final statement is allowed, the Contractor shall file with the Contracting Officer waybills and/or certified delivery tickets for all aggregates actually used in the construction covered by the contract.

* * * * *

SECTION 9D

PRIME COAT AND WEED KILLER

Index

1. Applicable Publications
2. Bituminous Materials
3. Sampling and Testing
4. Quantity To Be Applied
5. Weather Limitations
6. Equipment
7. Preparation of Surface
8. Weed Killer
9. Application of Bituminous Material
10. Waybills and Delivery Tickets

1. APPLICABLE PUBLICATIONS. The following publications of the issues listed below, but referred to thereafter by basic designation only, form a part of this specification to the extent indicated by the references thereto.

1.1 American Society for Testing and Materials (ASTM) Publications.

D 140-70 (R 1976)	Sampling Bituminous Materials
D 1250-56 (R 1977)	Petroleum Measurement Tables
D 2027-76	Liquid Asphalt (Medium-Curing Type)

2. BITUMINOUS MATERIAL. The bituminous material for the prime coat shall be liquid asphalt, conforming to ASTM D 2027, designation MC-70.

3. SAMPLING AND TESTING.

3.1 Sampling. Samples of bituminous material, unless otherwise specified, shall be in accordance with ASTM D 140.

3.2 Testing shall be the responsibility of the Contractor. Testing shall be performed by an acceptable commercial testing laboratory or by the Contractor on approval of the Contracting Officer. Materials shall be tested to establish compliance with the specified requirements.

3.3 Certified Laboratory Test Reports. Before delivery of bituminous materials, certified copies, in triplicate, of the tests specified herein and in referenced publications shall be submitted to and approved by the Contracting Officer. The testing shall have been performed by an independent laboratory approved by the Contracting Officer.

4. QUANTITY TO BE APPLIED. Bituminous material for the prime coat shall be applied in quantities of not less than 0.15 gallon nor more than 0.25 gallon per square yard of the surface to be primed. Application of prime coat shall be divided, if necessary, into 2 applications to avoid flowing off the surface. The exact quantities which may be varied to meet field conditions shall be determined by the Contractor and approved.

5. WEATHER LIMITATIONS. The prime coat shall be applied only when the prepared surface is dry or contains moisture not exceeding quantity to permit uniform distribution and desired penetrations; and the temperature has not been below 35 degrees F. for 12 hours immediately prior to application. Prime coat shall not be applied when the atmospheric temperature in the shade is below 50 degrees F.

6. EQUIPMENT.

6.1 General. All equipment, tools, and machines, used in the performance of the work required by this section shall be subject to the approval and shall be maintained in satisfactory working condition.

6.2 Bituminous Distributor shall have pneumatic tires of such width and number than the load produced on the base surface shall not exceed 650 pounds per inch of tire width. The distributor shall be designed and equipped to distribute the bituminous material uniformly at even heat on variable widths of surface at readily determined and controlled rates from 0.05 to 2.0 gallons per square yard with a pressure range of 25 to 75 pounds per square inch and with an allowable variation not to exceed 5% from any specified rate. Distributor equipment shall include a separate power unit for the bitumen pump, full circulation spray bars, tachometer, pressure gage, volume measuring devices, adequate heaters for heating the materials to the proper application temperature, a thermometer to show the temperature of the tank contents, and a hose attachment suitable for applying bituminous material to spots unavoidably missed by the distributor. The distributor shall be equipped to circulate and agitate the bituminous material during the heating process.

6.3 Heating Equipment for Storage Tanks. Equipment for heating bituminous material shall consist of steam coils and equipment for producing steam, so designed that steam cannot get into the material. An armored thermometer with a range from 40 to 200 degrees F. shall be fixed to the tank so that the temperature of the bituminous material may be read at all times.

6.4 Brooms and Blowers shall be of the power type and shall be suitable for cleaning prepared surfaces.

7. PREPARATION OF SURFACE. Immediately before applying the weed killer and prime coat, all loose material, dirt, clay or other objectionable substance shall be removed from the surface by means of a power broom or blower supplemented with hand brooms. After the cleaning operation and prior to the application of the material, an inspection of the area to be treated shall be made by the Contractor to determine its fitness to receive the material. The Contracting Officer shall be notified 24 hours in advance of application of the material. To assure a uniform spread of the material, the areas prepared for treatment, if excessively dry, shall be lightly sprinkled with water immediately before the application as directed.

8. WEED KILLER. A chemical weed killer shall be applied to subgrade surfaces of top of levees and access ramps to be paved prior to application of the prime coat. The weed killer may be either a fire retardant non-corrosive, water soluble mixture of sodium chlorates and sodium borates, or dry, free flowing borax. The sodium chlorate-sodium borate mixture shall be applied in a water solution at a rate that will yield a minimum of one pound of sodium chlorate per 100 square feet of treated surface. The equipment used for application of the solution shall mechanically agitate and circulate the solution at all times application is in process. Borax shall be applied dry on a previously dampened subgrade at a rate to yield the equivalent of 3 pounds of boron trioxide (B^2O^3) per 100 square feet of treated surface. After application of the borax, the area shall be uniformly sprinkled with water. The quantity of water applied in the solutions or after application of dry borax shall be at least 4 gallons per 100 square feet of treated surface.

9. APPLICATION OF BITUMINOUS MATERIAL. Immediately following the preparation of the surface, the bituminous material shall be applied by means of a bituminous distributor. The bituminous material shall be applied at a pressure within the range of 25 to 75 pounds per square inch and in the amounts as directed. The bituminous material shall be so applied that uniform distribution is obtained at all points of the surface to be treated. Unless the distributor is equipped to obtain satisfactory results at the junction of the previous and subsequent applications, building paper shall be spread on the surface of applied material for a sufficient distance back from the ends of each application so that flow from the sprays may be started and stopped on the paper, and all sprayers operate at full force on the surface to be treated. Immediately after the application, building paper shall be removed and destroyed. Spots unavoidably missed by the distributor shall be properly treated with bituminous material. Following the application of bituminous material, the surface shall be allowed to dry without being disturbed for a period of not less than 48 hours, or longer as necessary to attain penetration into the foundation course and evaporation of the volatiles from prime material. The Contractor shall furnish and spread enough approved sand to blot up effectively and cure any excess bituminous material. The Contractor shall maintain the primed surface until the succeeding layer of pavement is placed by protecting the surface against damage and by repairing and repriming deficient areas at no additional cost to the Government. No smoking, fires, or flames other than heaters that are a part of the equipment shall be permitted without heating, distributing, or transferring operations of bituminous material.

9.1 Application Temperature shall be as directed and shall provide an application viscosity between 40 and 120 centistrokes, kinematic, or 20 and 60 seconds, Saybolt-Furol. Application temperatures shall be between 120-190 degrees F the following ranges, except that appropriate changes should be made when the range of viscosity is raised or lowered.

The temperature-viscosity relationship shall be furnished to the Contracting Officer.

10. WAYBILLS AND DELIVERY TICKETS. Copies of waybills or delivery tickets shall be submitted during the progress of the work. Before the final statement is allowed, the Contractor shall file with the Contracting Officer certified waybills and/or certified delivery tickets for all bituminous material actually used in the construction of pavement covered by this section of the specification. The Contractor shall not remove bituminous material from the tank car or storage tank until the initial outage and temperature measurements have been taken by the Contracting Officer; nor shall the Contractor release the car or storage tank until the final outage has been taken by the Contracting Officer.

* * * * *

SECTION 9G

ASPHALT CONCRETE

Index

1. Applicable Publications
2. Description
3. Aggregates
4. Bituminous Material
5. Aggregate Gradation
6. Composition of Mixture
7. Mixing Plant
8. Other Equipment
9. Treatment of Underlying Surface
10. Transportation of Bituminous Mixture
11. Placing
12. Compaction of Mixture
13. Joints
14. Protection of Pavement
15. Surface Requirements
16. Sampling

1. APPLICABLE PUBLICATIONS. The following publications of the issues listed below, but referred to thereafter by basic designation only, form a part of this specification to the extent indicated by the references thereto.

1.1 American Association of State Highway and Transportation Officials (AASHTO) Standard.

M 226-731	Viscosity Graded Asphalt Cement

1.2 American Society for Testing and Materials (ASTM) Publications.

C 117-69	Materials Finer Than No. 200 (75 um) Sieve in Mineral Aggregates by Washing
C 127-73	Specific Gravity and Absorption of Coarse Aggregate
C 128-73	Specific Gravity and Absorption of Fine Aggregate
C 136-71	Sieve or Screen Analysis of Fine and Coarse Aggregates
D 242-70	Mineral Filler for Bituminous Paving Mixtures
D 1559-73	Resistance to Plastic Flow of Bituminous Mixtures Using Marshall Apparatus

1.3 Military Standard.

MIL-STD-620A & Notice 1	Test Methods for Bituminous Paving Materials

2. DESCRIPTION. Asphalt concrete indicated as "A.C." shall consist of fine and coarse aggregates and mineral filler, if required, uniformly mixed with hot bituminous material, and placed and compacted on a prepared subgrade.

3. AGGREGATES shall consist of crushed stone, crushed slag, crushed or uncrushed gravel, screenings, sand, and mineral filler. Aggregates shall have a satisfactory service record in bituminous pavement construction. The source selected shall be approved by the Contracting Officer. Material passing the No. 200 sieve shall be known as mineral filler. Mineral filler shall conform to ASTM D 242. The combined aggregates and mineral filler shall meet the requirements of subsequent paragraphs entitled AGGREGATE GRADATION and COMPOSITION OF MIXTURE.

4. BITUMINOUS MATERIAL to be mixed with the mineral aggregates shall be asphalt cement conforming to AASHO M226, viscosity grade AR-80 Table 3.

5. AGGREGATE GRADATION. The aggregate gradation as determined by ASTM C 117 and C 136 and as selected by the Contracting Officer shall conform to one of the following:

Sieve Openings	Percentage by Weight, Passing		
	a	b	c
1 inch	100	–	–
3/4 inch	90-100	100	–
1/2 inch	–	90-100	100
3/8 inch	70-85	80-95	80-95
No. 4	50-65	55-72	55-73
No. 8	38-53	40-55	45-60
No. 50	12-26	14-27	17-30
No. 200	4-8	4-8	4-9

6. COMPOSITION OF MIXTURE.

6.1 Job-Mix Formula shall be submitted by the Contractor, and no bituminous mixture shall be manufactured until it has been approved. The formula will indicate the percentage of each sieve fraction of aggregate, percentage of asphalt, and temperature of the mixture as discharged from the mixer. The percentage of asphalt in the job-mix formula will be between 5.0 percent and 8.5 percent. Samples of the aggregates and asphalt shall be submitted for approval with the job-mix formula.

6.2 Test Properties of Bituminous Mixtures. The apparent specific gravity, as determined by ASTM C 127 and C 128, shall be used in computing the voids total mix and voids filled with bitumen, and the mixture shall meet the following requirements as determined by ASTM D 1559:

Test Property	50-Blow Compaction
Stability, minimum, pounds	500
Flow, maximum, 1/100-inch	20
Voids total mix, percent	3-5
Voids filled with bitumen, percent	75-85

6.3 Stripping of Aggregates. If the index of retained stability of the job-mix formula is less than 75 when tested in accordance with Method 104 of MIL-STD-620, the aggregates shall be rejected or treated by one of the following procedures:

(1) Addition of heat-stable additives to bitumen.

(2) Addition of hydrated lime, or other cementitious material containing free lime, as a portion of the mineral filler.

7. MIXING PLANT shall be a weigh-batch or continuous-mixing type approved by the Contracting Officer and operated so as to produce a mixture within the job-mix formula.

8. OTHER EQUIPMENT.

8.1 Bituminous-Materials Spreaders shall be self-propelled, capable of producing a finished surface conforming to the smoothness requirements specified hereinafter. The use of a spreader that leaves indentations or other objectionable irregularities in the freshly-laid mix will not be permitted.

8.2 Blowers and Brooms shall be of the power type suitable for cleaning the surface to be paved.

8.3 Saw shall be of the power type, capable of rapidly cutting pavement and trimming joints and edges of pavement.

8.4 Small Tools available on the work shall consist of the following: rakes, lutes, shovels, tampers, smoothing irons, pavement cutters, portable heater for heating small tools, wood sandals and stilt sandals of standard type, and other small tools as may be required.

8.5 Steel-Wheel Rollers shall be self-propelled, 3-wheel (tricycle) and/or tandem type, weighing not less than 20,000 pounds each. The rollers shall have adjustable wheel scrapers, water tanks, and sprinkling apparatus to keep the wheels sufficiently wet to prevent the bituminous mixture from sticking to the wheels. Rollers shall be capable of reversing without backlash and shall be free from worn parts. Roller wheels shall not have flat or pitted areas or projections that will leave marks in the pavement.

8.6 Pneumatic-Tired Rollers shall be self-propelled and shall consist of two axles on which are mounted multiple pneumatic-tired wheels in such manner that the rear group of wheels will not follow in the tracks of the forward group but spaced to give essentially uniform coverage with each pass. Axles shall be mounted in a rigid frame provided with a loading platform or body suitable for ballast loading. Tires shall be smooth and capable of being inflated to at least 90 p.s.i. Construction of roller shall be such that each wheel can be loaded to a minimum of 4,500 pounds.

9. TREATMENT OF UNDERLYING SURFACE. Prior to laying a bituminous course, the underlying surface shall be cleaned of loose and foreign matter by sweeping with power sweepers, power brooms, and hand brooms, as directed. The surface to be paved shall receive a prime coat conforming to the requirements of the section: PRIME COAT.

10. TRANSPORTATION OF BITUMINOUS MIXTURE. The bituminous mixture shall be transported from the mixing plant to the site in trucks having tight, clean, smooth bodies with a minimum coating of concentrated solution of hydrated lime and water to prevent adhesion of the mixture. Each load of mixture shall be covered with canvas or other suitable material to protect the mixture from the weather and to prevent loss of heat. Mixtures having temperatures greater than 350 degrees, mixtures having temperatures less than 235 degrees, or mixtures which form or show indications of moisture will be rejected. Hauling over freshly laid material will not be permitted.

11. PLACING.

11.1 Surface Preparation of Underlying Course. Prior to placing of asphalt surface course, the underlying course shall be cleared of all foreign or objectionable matter with power blowers, power brooms, or hand brooms.

11.2 Spraying of Contract Surfaces of Structures. Contact surfaces of previously constructed pavement, curbs, manholes, and similar structures shall be sprayed with a tack coat. Tack coat shall be asphalt emulsion conforming to ASTM D 977, Grade SS-1h.

11.3 General Requirements for Use of Mechanical Spreader. Range of temperatures of the mixtures, when dumped into the mechanical spreader shall be as determined by the Contracting Officer. Asphalt mixtures having temperatures less than 200 degrees F. when dumped into a mechanical spreader will be rejected. The mechanical spreader shall be adjusted and speed regulated so that surface of the course will be smooth and continuous without tears and pulling, and of such depth that, when compacted, surface will conform with cross section, grade, and contour indicated. Unless otherwise directed, placing shall begin along the centerline of areas paved on a crowned section of on the high side of areas with a one-way slope, and shall be in the direction of the major traffic flow. Mixture shall be placed in consecutive adjacent strips having a minimum width of 10 feet, except when edge lanes require strips less than 10 feet to complete area. Each strip placed before a succeeding strip shall be of such length that sufficient heat will be retained to make strip readily compactible so that joint can be obtained to conform to requirements for texture, density, and smoothness specified in paragraph: JOINTS. Length of a strip that is to be followed by another strip will be determined by the Contracting Officer, and may be decreased or increased as required by air temperatures, wind, and other climatic conditions existing at time of placement. Longitudinal joints and edges shall be constructed to true line markings. The Contractor shall establish lines parallel to the centerline of area to be paved and shall place stringlines coinciding with established lines for spreading machine to follow. Number and location of lines shall be as directed. Placing of mixture shall be as nearly continuous as possible; speed of placing shall be adjusted, as directed, to permit proper rolling.

11.4 Special Requirements for Placing Strips Succeeding Initial Strips. In placing each succeeding strip after the initial strip has been spread and compacted as specified below, screed of the mechanical spreader shall overlap previously placed strip 3 to 4 inches and shall be sufficiently high so that compaction will produce a smooth, dense joint. Mixture placed on edge of previously placed strip by mechanical spreader shall be pushed back to edge of strip being placed by use of lute. When the quantity of mixture on previously placed strip plus uncompacted material in strip being placed exceeds that required to produce smooth, dense joint, excess mixture shall be removed and wasted.

11.5 Shoveling, Raking, and Tamping After Machine Spreading. A sufficient number of experienced shovelers and rakers shall follow spreading machine, adding hot mixture and raking mixtures as required to produce a course that, when completed, will conform to all requirements specified herein. Broadcasting or fanning of mixture over areas being compacted will not be permitted. When segregation occurs in mixture during placing, the spreading operation shall be suspended until cause is determined and corrected. Irregularities in alinement of the course left by mechanical spreader shall be corrected by trimming directly behind machine. Immediately after trimming, edges of the course shall be thoroughly compacted by tamping laterally with lute. Distortion of course during tamping will not be permitted.

11.6 Hand Spreading in Lieu of Machine Spreading. In areas where use of machine spreading is impractical, mixture shall be spread by hand. Spreading shall be in a manner to prevent segregation. Mixture shall be spread uniformly with hot rakes in a loose layer of thickness that, when compacted, will conform to required grade and thickness. Rakers without stilt sandals shall not be permitted to stand in hot mixture while raking course.

12. COMPACTION OF MIXTURE shall be accomplished by steel-wheel and pneumatic tired rollers. Rolling shall begin as soon after placing as the mixture will support the roller without undue displacement. Rolling of the course shall be continued until all roller marks are eliminated and at least 95 percent of the density of a laboratory specimen of the same mixture has been obtained. The speed of the rollers at all times shall be slow enough to avoid displacement of the hot mixture. The wheels of the roller shall be moistened to prevent adhesion of the mixture. In areas not accessible to the roller, the mixture shall be compacted with hot hand tampers.

13. JOINTS. The joints between old and new pavements or between lanes of new work shall be constructed so as to insure uniform bond, texture, density, and smoothness as in other sections of the course. Edges of existing pavement shall be cut to straight, vertical surfaces. All contact surfaces of existing pavement shall be painted with a thin, uniform coat of asphalt.

14. PROTECTION OF PAVEMENT. After final rolling, no vehicular traffic shall be permitted on the pavement for at least 6 hours after rolling.

15. SURFACE REQUIREMENTS. The finished surface shall not vary more than 1/4 inch from a 10-foot straightedge. The straightedge shall be furnished by the Contractor. Defective areas shall be corrected by the Contractor at no additional cost to the Government.

16. SAMPLING. Sampling for the determination of thickness and density of the completed pavements will be performed by the Contracting Officer. All tests necessary to determine conformance with the specified requirements will be performed by the Contracting Officer without cost to the Contractor. The Contractor shall replace the pavement where samples are removed at his expense. No payment will be made for areas of pavement deficient in composition, density, or thickness until they are removed and replaced by the Contractor as directed by the Contracting Officer.

* * * * *

STANDARD DETAIL 175

CITY OF PHOENIX
ENGINEERING DEPARTMENT

PAVEMENT AND SURFACING REPLACEMENT

APPROVED _____ CITY ENGINEER _____ DATE

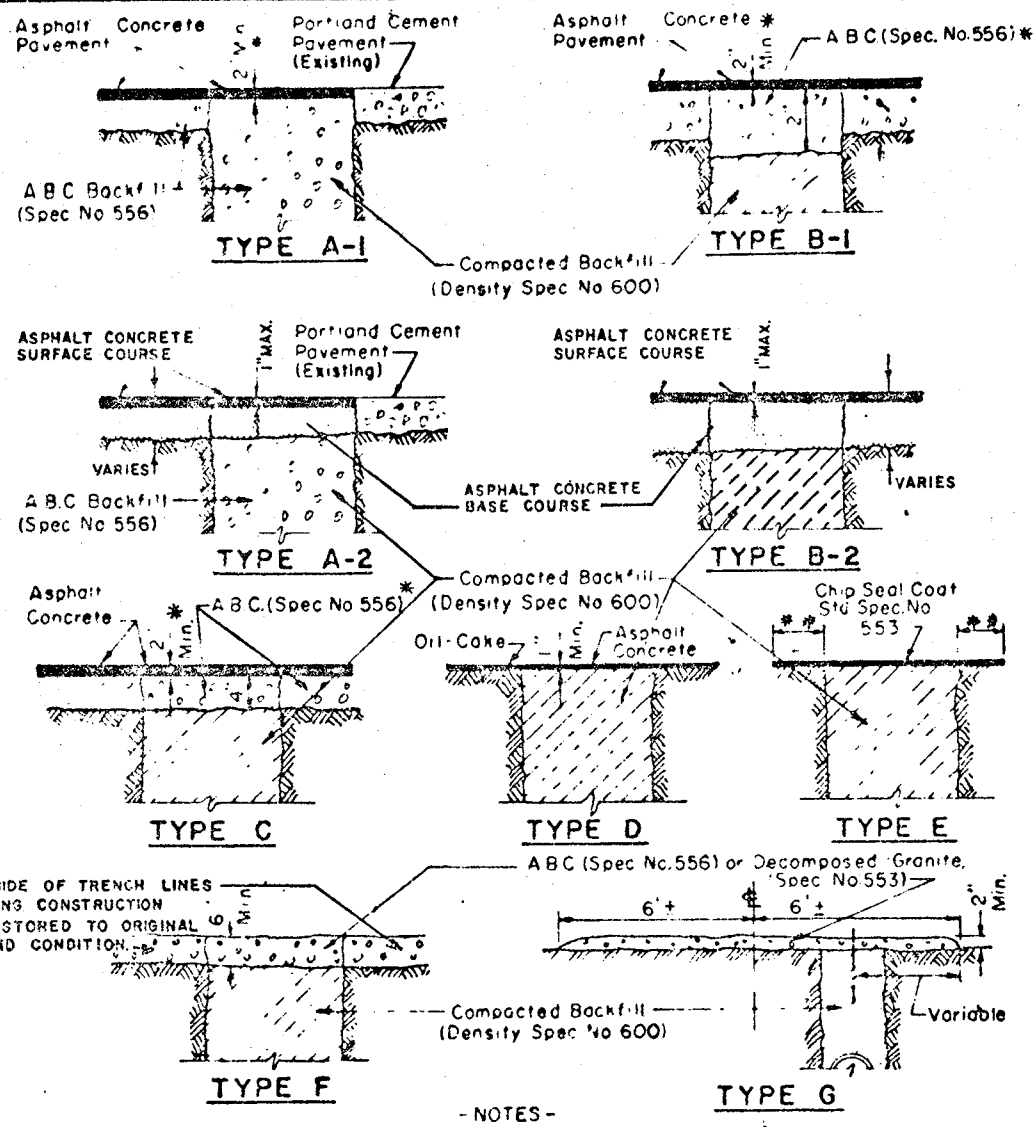

- NOTES -

1. Asphalt Concrete shall be in accordance with the requirements of Std Spec No 558
2. Replacement of Street & Alley pavement and surfacing within City of Phoenix Rights-Of-Way, shall be as shown on the Plans, in accordance with the applicable City of Phoenix Standard Details & Specifications, and/or Contract Documents
3. Pavement & Surfacing Replacement within Arizona State Highway or Maricopa County Rights-Of-Way shall be constructed in accordance with Arizona Highway Department or Maricopa County Permit and/or Specification Requirements
4. Construction, Measurement, and Payment of Pavement and Surfacing replacement shall be in accordance with the requirements of Standard Specification No 553
5. * The thickness indicated is a minimum requirement. The actual compacted thickness placed shall be to this minimum requirement or to the thickness of the existing pavement and/or base, whichever is greater.
6. * * Variable, as indicated on the Plans.

REV. 10-72 WF △
REV. 9-1-71

NOT TO SCALE

STANDARD DETAIL 176

CITY OF PHOENIX
PUBLIC WORKS DEPARTMENT
DIVISION OF ENGINEERING

PAVEMENT SECTION AT TERMINATION

APPROVED Sam Tucker — CITY ENGINEER — 6-19-59 DATE

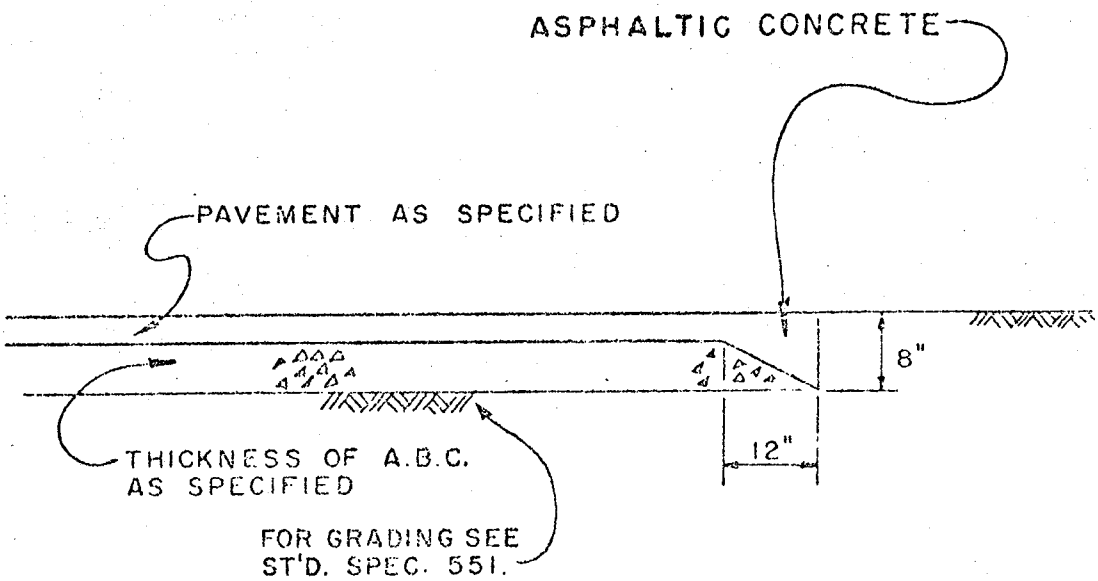

CONSTRUCTION METHOD

THICKENED EDGE SHALL BE CONSTRUCTED IN COURSES NOT OVER 4" IN THICKNESS, EACH COURSE THOROUGHLY COMPACTED BEFORE PLACING NEXT COURSE. FINAL COURSE TO BE PLACED MONOLITHIC WITH PAVEMENT AS SPECIFIED.

SECTION 9L

GUARDRAIL AND TRAFFIC BARRICADES

Index

1. Applicable Publications
2. Materials
3. Preservative Treatment
4. Metal Guardrail
5. Traffic Barricades

1. APPLICABLE PUBLICATIONS. The following publications of the issues listed below, but referred to thereafter by basic designation only, form a part of this specification to the extent indicated by the references thereto.

1.1 Federal Specifications (Fed. Spec.).

TT-P-105A & Am-1	Paint, Oil: Chalk-Resistant, Lead Free, Exterior, Ready-Mixed, White and Light Tints
TT-P-641F	Primer Coating; Zinc Dust-Zinc Oxide (For Galvanized Surfaces)
WW-P-406D	Pipe, Steel (Seamless and Welded) (For Ordinary Use)

1.2 Military Specifications (Mil. Spec.).

MIL-C-15328C & Am-1	Primer (Wash), Pretreatment, Blue (Formula No. 117-B for Metals)
MIL-P-28582	Primer Coating, Exterior Lead Pigment-Free (Undercoat for Wood, Ready-Mixed, White and Tints)

1.3 American Society for Testing and Materials (ASTM) Publications.

A 123-73	Zinc (Hot-Galvanized) Coatings on Products Fabricated from Rolled, Pressed, and Forged Steel Shapes, Plates, Bars, and Strip

1.4 Redwood Inspection Service (RIS) Publication.

Standard Specifications for Grades of California Redwood Lumber (November 1970, and Supplement No. 1, October 1, 1972)

1.5 West Coast Lumber Inspection Bureau (WLCB) Publication.

No. 16	Standard Grading and Dressing Rules for West Coast Lumber (September 1, 1970)

1.6 American Association of State Highway and Transportation Officials (AASHTO) Standard.

M 180-70	Corrugated Sheet Steel Beams for Highway Guardrail

1.7 American Wood Preservers' Association (AWPA) Standard.

C 14-73	Wood for Highway Construction Preservative Treatment by Pressure Processes

2. MATERIALS.

2.1 Lumber.

2.1.1 Douglas Fir shall be No. 1 grade, graded in accordance with the standard grading and dressing rules of the West Coast Lumber Inspection Bureau.

2.1.2 Redwood shall be S4S construction heart, graded in accordance with rules for grading of the Redwood Inspection Service.

2.2 Metal Beam Guard Railing. Except as otherwise specified rail elements, terminal sections, bolts, nuts, and other fittings shall conform to AASHTO M 180. The rail metal shall be open hearth, oxygen furnace, or electric furnace steel and, in addition to conforming to the requirements of AASHTO M 180, shall withstand a cold bend, without cracking, of 180 degrees around a mandrel of a diameter equal to 2-1/2 times the thickness of the plate. The rail elements may be hot-dip galvanized before fabrication, in which case the provisions in Section 3 of ASTM A 123 shall not apply. The weight of zinc coating on rail elements, per square foot of actual surface shall average not less than 2.0 ounces and no individual specimen shall show less than 1.8 ounces. Workmanship shall be equivalent to good commercial practice and all edges, bolt holes and surfaces shall be free of torn metal, burrs, sharp edges and protrusions. Bolts shall have shoulders of such shape that will prevent the bolts from turning. Holes in rail elements shall be of similar shape as the bolt shoulder. Rail elements shall be spliced at intervals not to exceed 12 feet 6 inches and such splices shall be made at posts, unless otherwise shown.

2.4 Paint.

2.4.1 Exterior Finish Paint for wood and metal shall conform to Fed. Spec. TT-P-105.

2.4.2 Metal Primer Paint shall conform to Fed. Spec. TT-P-641.

2.4.3 Vinyl-Type Wash Coat shall conform to Mil. Spec. MIL-C-15328.

2.4.4 Wood Primer Paint shall conform to Mil. Spec. MIL-P-28582.

2.5 Galvanizing shall conform to ASTM A 123.

3. PRESERVATIVE TREATMENT. Lumber shall be preservative-treated after fabrication. Treatment shall be in accordance with AWPA C 14. Surfaces to be painted shall be treated with water-borne preservatives or pentachlorophenol in suitable solvents. After using a salt treatment, the moisture content of the lumber shall be reduced to not over 19 percent.

4. METAL GUARDRAIL.

4.1 Posts shall be treated Douglas fir 8 x 8 inches, 5 feet 4 inches long, and shall be rough or S4S. Only one type of post shall be used for any continuous length of guardrail. Post shall be embedded 3 feet, in the ground and set in such position that the top of the guardrail shall be one inch below the top of the post. The space around the post shall be backfilled with approved earth material and shall be thoroughly tamped. The surface of the backfill shall be crowned. Posts placed in paved areas shall have the pavement replaced in kind around the posts and crowned. Spacing of posts shall be at equal intervals in accordance with the manufacturer's standards.

4.2 Blocks for metal beam guard railing shall be treated Douglas fir 8 inches x 8 inches nominal size by one foot 2-inches, rough or S4S. The size tolerance of rough sawn blocks in the direction of the bolt holes shall be not more than plus or minus 1/4 inch. Only one type of block shall be used for any one continuous length of guard railing. Blocks shall be toenailed to posts with one 16 penny galvanized nail on each side of the block.

4.3 Rail shall be installed so that the top of the rail shall be one inch below the top of the post. Ends of all rails shall be turned away from the roadway and shall be fitted with manufacturer's standard terminal sections. Joint design shall be in accordance with the manufacturer's standards. The rail at joints shall have full bearing. Rails element joints shall be lapped not less than 12-1/2 inches in the direction of traffic and bolted. The bolted connection of the rail element to the post shall withstand a 5,000-pound pull at right angles to the line of the railing.

4.4 Painting. Exposed portions of posts shall be painted with one prime coat and 2 finish coats of white paint. Guardrail shall be cleaned of all grease and other foreign material and shall be solvent cleaned and treated with vinyl-type wash coat. Vinyl-type wash coat shall be mixed by adding one volume of acid component to 4 volumes of resin component. The acid component shall be added slowly with constant stirring to the resin component. After mixing, the wash coat shall be used within 8 hours. If additional thinning is required to maintain a wet spray, reduction shall be made with normal butyl alcohol or 99 percent isopropyl alcohol. After the vinyl-type wash coat treatment the guardrail shall receive 2 prime coats and one finish coat of white paint.

5. TRAFFIC BARRICADES.

5.1 Barricades shall be of the type and size indicated. Size and shape of lettering shall conform to the requirements of the Federal Highway Administration.

5.2 Posts. Except as otherwise specified, posts shall be redwood, 4 x 4 inches nominal size, with 1/2-inch chamfered tops, and embedded 2 feet 6 inches in the ground. Exposed portion of the post shall be painted with one prime and two finish coats of paint and the buried portion shall be dipped in hot asphalt. All other posts shall be painted white. An anchor piece of 1 x 4 x 8-inch material shall be nailed securely to the post approximately one foot from the lower end the post.

5.3 Rails shall be nailed to posts using a minimum of four 16d nails per rail.

* * * * *

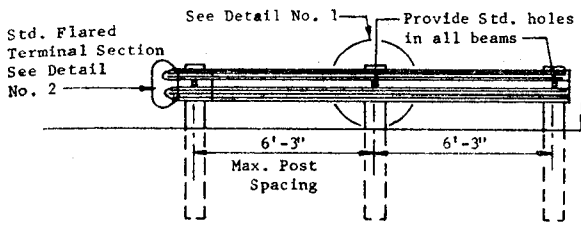

GUARD RAIL FACE ELEVATION

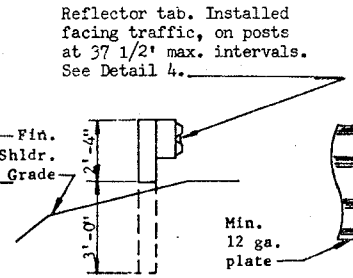

SIDE ELEVATION

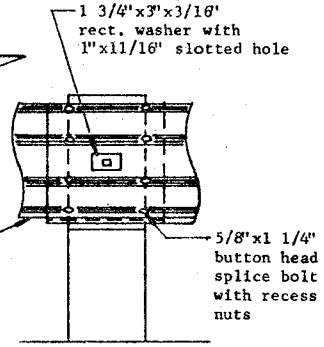

DETAIL NO. 1

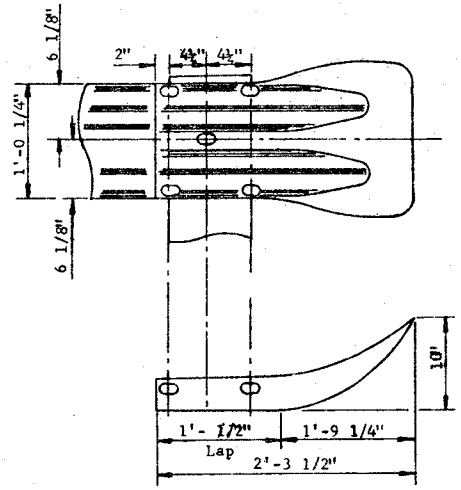

DETAIL NO. 2

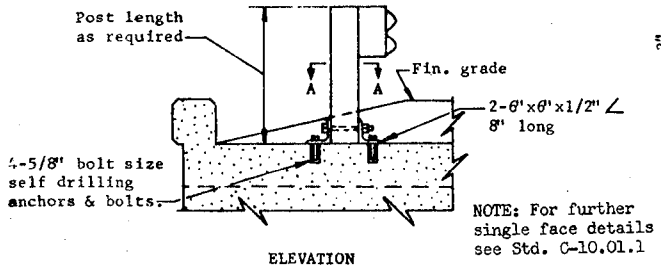

ELEVATION

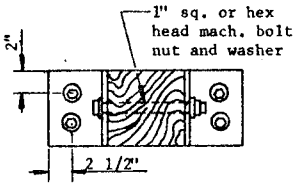

SECTION A-A

DETAIL NO. 3 - GUARD RAIL POST INSTALLATION ON STRUCTURES

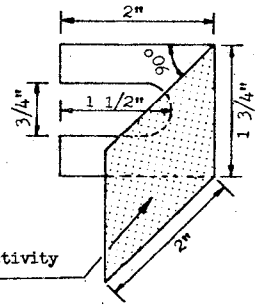

REFLECTOR TAB
DETAIL NO. 4

GENERAL NOTES

Posts and blocks shall be nominal 8'x8' rough, unpainted and pressure treated after holes are drilled.

All guard rail, fittings and hardware shall be galvanized steel.

5/8' self drilling anchors (Details 3 & 5) shall have a min. pullout strength of 1500# in 2500 p.s.i. concrete.

For additional details see Std. C-10.02.

Reflector tabs may be either 3003-H14 Aluminum sheet, 0.063 inches thick or Galvinized steel with a minimum thickness of 0.164 inches.

Silver-white standard reflectivity reflective sheeting will be placed on side facing oncoming traffic only.

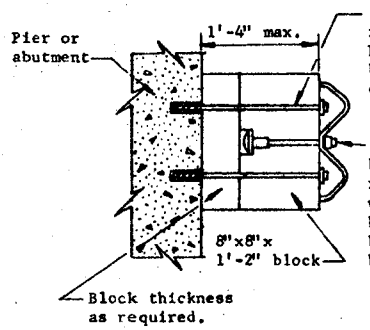

SECTION

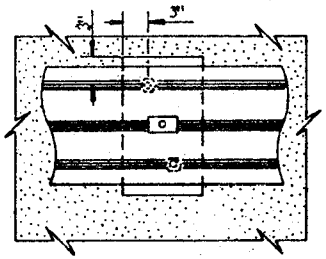

ELEVATION

DETAIL NO. 5 - ATTACHMENT OF GUARD RAIL TO STRUCTURES

DESIGN APPROVED	STATE OF ARIZONA DEPARTMENT OF TRANSPORTATION DIVISION OF HIGHWAYS STANDARD DRAWINGS	REV 6/74
APPROVED FOR DISTRIBUTION	GUARD RAIL SINGLE FACE DETAILS	DRAWING NO. C-10.01

SECTION 10A

SEEDING

Index

1. Applicable Publications
2. Submittals
3. Delivery, Storage, and Handling
4. Environmental Protection
5. Materials
6. Installation

1. APPLICABLE PUBLICATIONS. The following publications of the issues listed below, but referred to thereafter by basic designation only, form a part of this specification to the extent indicated by the references thereto.

1.1 Federal Specifications (Fed. Spec.).

O-F-241D — Fertilizers, Mixed, Commercial

1.2 U.S. Department of Agriculture Federal Seed Act of August 9, 1939.

53 Stat. 1275 — Rules and Regulations

2. SUBMITTALS.

2.1 Certificates of Conformance or Compliance. Before delivery, notarized certificates attesting that the following materials meet the requirements specified, shall be submitted in triplicate, for approval.

a. Seed

b. Fertilizer

3. DELIVERY, STORAGE, AND HANDLING.

3.1 Delivery.

3.1.1 The Contractor shall notify the Contracting Officer of the delivery schedule in advance so material may be inspected upon arrival at the jobsite. Unacceptable material shall be removed from the jobsite immediately.

3.1.2 During Delivery, seed shall be protected from drying out and contamination.

3.1.3 Fertilizer shall be delivered to the site in the original, unopened containers bearing the manufacturer's guaranteed chemical analysis, name, trademark, and conformance to state and Federal laws. In lieu of container, fertilizer may be furnished in bulk and a certificate indicating the above information shall accompany each delivery.

3.2 Storage.

3.2.1 Seed and fertilizer shall be kept in dry storage away from contaminants.

3.2.2 Storage of materials shall be in areas designated or as approved.

4. ENVIRONMENTAL PROTECTION. All work and Contractor operations shall comply with the requirements of section: ENVIRONMENTAL PROTECTION.

5. MATERIALS.

5.1 Seed. Seed shall be state-certified seed of the latest season's crop and shall be delivered in original sealed packages bearing the producer's guaranteed analysis for percentages of mixtures, purity, germination, weed-seed content, and inert material. Seed shall be labeled in conformance with U.S. Department of Agriculture rules and regulations under the Federal Seed Act and applicable state seed laws. Seed that has become wet, moldy, or otherwise damaged will not be acceptable. Onsite seed mixing shall be done only in the presence of the Contracting Officer. Seed mixtures shall be proportioned by weight as follows:

Name of Grass (Botanical and Common)	Percent by Weight	Percent Germination	Maximum Percent Weed-Seed
1. Eragrost lehmanniana (Lehmann Lovegrass)	60%	70%	1.0%

Name of Grass (Botanical and Common)	Percent by Weight	Percent Germination	Maximum Percent Weed-Seed
2. Oryzopsis hymenoides (Ricegrass)	20%	70%	0.5%
3. Encelia Farinosa (Desert Encelia)	5%	40%	0.5%
4. Pennisetum villosus	5%	40%	0.5%
5. Calliandra eriophylla (Fairy Duster)	2%	80%	0.5%
6. Atriplex semibaccata (Australian Saltbush)	3%	66%	0.5%

5.2 Fertilizer. Fertilizer shall be commercial grade, free flowing, uniform in composition and shall conform to applicable state and Federal regulations. Granular fertilizer shall conform to Fed. Spec. O-F-241, Type I, Level B, and shall bear the manufacturer's guaranteed statement of analysis. Granular fertilizer shall contain a minimum percentage by weight of 17 nitrogen (of which 50 percent shall be organic), 13 available phosphoric acid, and 5 potash. Slow release fertilizer shall contain a minimum percentage by weight of 38 nitrogen, 0 phosphoric acid, and 0 potash.

5.3 Mulch.

5.3.1 Wood cellulose fiber for use with hydraulic application of seed, and fertilizer shall consist of specially prepared wood cellulose fiber, processed to contain no growth or germination-inhibiting factors and dyed an appropriate color to facilitate visual metering of the application of materials. On an air-dry weight basis, the wood cellulose fiber shall contain a maximum of 12 percent moisture, plus or minus three percent at the time of manufacture. The pH range shall be from 3.5 to 5.0. The wood cellulose fiber shall be manufactured so that:

a. After addition and agitation in slurry tanks with fertilizer, seeds, water, and other approved additives, the fibers in the material will become uniformly suspended to form a homogenous slurry.

b. When hydraulically sprayed on the ground, the material will form a blotterlike cover impregnated uniformly with seed.

c. The cover will allow the absorption of moisture and allow rainfall or applied water to percolate to the underlaying soil.

6. INSTALLATION.

6.1 Planting Season. Seeding shall be done between 1 April 1978 and 31 August 1978.

Planting shall not be done when the ground is in an unsatisfactory condition for planting. If special conditions exist that may warrant a variance in the above planting dates or conditions, a written request shall be submitted to the Contracting Officer stating the special conditions and proposed variance.

6.2 Seeding. When hydroseeding, the seed and fertilizer shall be mixed in the required amount of water to produce a homogeneous slurry and then uniformly applied under pressure at the following rates (dry weight) per acre:

1500 lbs. wood cellulose fiber mulch
300 lbs. 17-13-5 inorganic fertilizer
100 lbs. 38-0-0 slow release fertilizer
120 lbs. mulch binder
50 lbs. native seed mix

6.3 Restoration and Clean-Up. Excess and waste material shall be removed daily. When seeding in an area has been completed, the area shall be cleaned of all debris and excess material. Where seeded areas have been damaged during seeding operations, the Contractor shall restore the areas to their original condition at his expense.

* * * * *

SECTION 10B

TREES

Index

1. Applicable Publications
2. Source Inspections
3. Submittals
4. Delivery, Storage, and Handling
5. Deleted
6. Environmental Protection
7. Materials
8. Installation
9. Plant Establishment Period

1. APPLICABLE PUBLICATIONS. The following publications of the issues listed below, but referred to thereafter by basic designation only, form a part of this specification to the extent indicated by the references thereto.

1.1 Federal Specifications (Fed. Spec.).

O-F-241D	Fertilizers, Mixed, Commercial

1.2 American National Standards Institute (ANSI) Publication.

Z60.1-1973	Nursery Stock

1.3 American Joint Committee on Horticultural Nomenclature (AJCHN) Publication.

Second Edition-1942	Standarized Plant Names

2. SOURCE INSPECTIONS.

2.1 Plant Materials. Plant materials will be inspected by the Contracting Officer at the growing site and tagged or otherwise approved for delivery. Such inspection does not preclude right of rejection at the project site.

3. SUBMITTALS.

3.1 Certificates of Conformance or Compliance. Before delivery, notarized certificates attesting that the following materials meet the requirements specified, shall be submitted for approval in accordance with SPECIAL PROVISIONS.

a. Plant Materials

b. Fertilizers

4. DELIVERY, STORAGE, AND HANDLING.

4.1 Delivery.

4.1.1 The Contractor shall notify the Contracting Officer of the delivery schedule in advance so the plant material may be inspected upon arrival at the job site. Unacceptable plant material shall be removed from the job site immediately.

4.1.2 Plants shall be protected during delivery to prevent damage to the root balls or desiccation of leaves. Trees shall be protected during transportation by tying in the branches and covering all exposed branches.

4.1.3 The use of equipment such as "tree spades" shall be permitted provided that the plant balls are sized in accordance with ANSI Z60.1 and tops are protected from damage.

4.1.4 Fertilizer and Gypsum shall be delivered to the site in the original, unopened containers bearing the manufacturer's guaranteed chemical analysis, name, trade name or trademark, and in conformance to state and Federal law. In lieu of containers, fertilizer and gypsum may be furnished in bulk and a certificate indicating the above information shall accompany each delivery.

4.2 Storage.

4.2.1 Plants not installed on the day of arrival at the site shall be stored and protected as follows:

a. Outside storage shall be shaded and protected from the wind.

b. Plants stored on the project shall be protected from drying out at all times.

c. Plants, including those in containers, shall be kept in a moist condition until planted by watering with a fine mist spray.

4.2.2 Gypsum and fertilizer shall be kept in dry storage away from contaminants.

4.2.3 Storage of materials shall be in areas designated or as approved by the Contracting Officer.

4.3 Handling. Care shall be taken to avoid damaging plants being moved from the nursery or storage area to the planting site. Plants shall be protected from drying out. Plants shall not be handled by the trunk or stems. Plants shall be protected from freezing or drying out by a covering of burlap, tarpaulin. Damaged plants will be rejected and shall be removed from the site.

5. DELETED.

6. ENVIRONMENTAL PROTECTION. All work and Contractor operations shall comply with the requirements of section ENVIRONMENTAL PROTECTION.

7. MATERIALS.

7.1 Plants.

7.1.1 Plants shall conform to the varieties specified in the plant list and be true to botanical names as listed in AJCHN Standarized Plant Names. Plants shall be in accordance with ANSI Z60.1 except as otherwise stated in the specifications or shown on the plans. Where the drawings or specifications are in conflict with ANSI Z60.1, the drawings and specifications shall prevail.

7.1.2 Planting stock shall be well-branched and well-formed, sound, vigorous, healthy, and free from disease, sun-scald, windburn, abrasion, and harmful insects or insect eggs and shall have healthy, normal and unbroken root systems. Deciduous trees shall be symmetrically developed, of uniform habit of growth, with straight boles or stems and free from objectionable disfigurements. Evergreen trees shall have well developed symmetrical tops with typical spread of branches for each particular species or variety. Plants shall have been grown under climatic conditions similar to those in the locality of the project.

7.1.3 The minimum acceptable sizes of all plants, measured before pruning and with branches in normal position, shall conform to the measurements indicated. Plants larger in size than specified may be used with the approval of the Contracting Officer, with no change in the contract price. If larger plants are used, the ball of earth or spread of roots shall be increased in accordance with ANSI Z60.1.

7.1.4 The Contractor shall facilitate inspection and identification by labeling trees with a durable waterproof label and weather-resistant ink. Labels shall state the correct plant name and size as specified in the list of required plants. Labels shall be securely attached to plants, and shall be legible for 60 days after delivery to the planting site.

7.1.5 Plant material shall be nursery grown unless otherwise indicated and shall conform to the requirements and recommendations of ANSI Z60.1. Plants shall be dug and prepared for shipment in a manner that will not cause damage to branches, shape, and future development after planting.

7.1.5.1 Container grown plants shall have sufficient root growth to hold the earth intact when removed from containers but shall not be root bound.

7.1.6 Substitutions shall be made only when a plant is not obtainable and the Contracting Officer authorizes a change order providing for use of the nearest equivalent obtainable size or variety of plant having the same essential characteristics with an equitable adjustment of the contract price.

7.2 Topsoil. Topsoil shall be the existing surface soil stripped and stockpiled on the site.

7.3 Soil Conditioners.

7.3.1 Rotted sawdust shall have 7.5 pounds of nitrogen added uniformly to each cubic yard and shall be free of chips, stones, sticks, soil and toxic substances.

7.3.2 Gypsum shall be agricultural grade.

7.4 Planting Soil Mixture. The planting soil mixture shall be composed of 200 parts topsoil, 50 parts rotted sawdust, 1 part fertilizer, and 1 part gypsum.

7.5 Fertilizer. Fertilizer shall be commercial grade and uniform in composition and shall conform to applicable state and Federal regulations.

7.5.1 Granular fertilizer shall conform to Fed. Spec. O-F-241, Type I, Level B, and shall bear the manufacturer's guaranteed statement of analysis. Granular fertilizer shall contain a minimum percentage by weight of: 18 nitrogen (of which 50 percent shall be organic), 6 available phosphoric acid, and 12 potash.

7.5.2 With the approval of the Contracting Officer, packet, tablet, pellet, or other forms of slow release fertilizer may be used.

7.6 Staking Material.

7.6.1 Stakes for tree support shall be rough sawn wood, free from knots, rot, cross grain, or other defects that would impair the strength. Standard stakes shall be a minimum of 2 inches by 10 feet long and pointed at one end.

7.6.2 Hose chafing guards shall be new 2-ply reinforced rubber or plastic hose and shall be all the same color on the project.

7.7 Water. Water shall not contain elements toxic to plant life. It shall be obtained from sources selected by Contractor.

7.8 Tree Wound Dressing. Tree wound dressing shall be a black asphalt base antiseptic paint or a black paint consisting of Bordeaux Mixture.

8. INSTALLATION.

8.1 Planting Season. Planting shall be done between 1 April and 31 August 1979.

Planting shall be done with the approval of the Contracting Officer only when the ground is in a suitable condition for planting. If special conditions exist that may warrant a variance in the above planting dates or conditions, a written request shall be submitted to the Contracting Officer stating the special conditions and proposed variance.

8.2 Layout. Plant material locations shall be staked on the project site by the Contractor and approved by the Contracting Officer before any plants pits are dug. The Contracting Officer may adjust plant material locations to meet field conditons.

8.3 Excavation for Planting.

8.3.1 Prior to excavating for plant pits the area shall conform to the lines and grades shown on the plans and the location of any underground utilities shall be verified by the Contractor and the Contracting Officer. Damage to utility lines shall be repaired at the Contractor's expense.

8.3.2 Rocks and other underground obstructions shall be removed to a depth necessary to permit proper planting according to plans and specifications. If underground utilities, construction, or solid rock ledges are encountered, other locations may be selected by the Contracting Officer.

8.3.3 Plant pits may be dug by any method approved by the Contracting Officer provided that the pits have vertical sides and flat bottoms. When pits are dug with an auger and the sides of the pits become glazed, the glazed surface shall be scarified. The minimum allowable dimensions of plant pits shall be: 6 inches deeper than the depth of ball or the depth of base roots; for ball or root spreads up to 2 feet, pit diameters shall be twice the root spread; for ball or root spreads from 2 to 4 feet, pit diameters shall be 2 feet greater; for ball or root spreads over 4 feet, pit diameters shall be 1-1/2 times the ball or root spread.

8.4 Setting Plants. Container-grown plants shall be handled and moved only by the container. Plants shall be set plumb and held in position until sufficient soil has been firmly placed around roots. Plants shall be set in relation to surrounding grade so that they are even with the depth at which they were grown in the container. When fertilizer in packet or tablet form is used, it shall be placed prior to back-filling and in accordance with the manufacturer's recommendations.

8.4.1 Container grown stock shall be removed from containers in such a way so as to prevent damage to plant or root system. Container grown stock shall be backfilled with planting soil mixture to approximately half the depth of the ball and then tamped and watered. The remainder of backfill of planting soil mixture shall be tamped and watered. Earth saucers or water basins shall then be formed around isolated plants.

8.5 Fertilization.

8.5.1 After establishment of finished grade around plants, all pit shall be topdressed with fertilizer at the rate of 10 pounds per 100 square feet of area. If any fertilizer adheres to plants, it shall be carefully flushed off.

8.6 Staking.

8.6.1 Plants shall be staked as indicated.

8.6.2 Standard stakes shall be driven vertically into the ground to a depth of 2-1/2 to 3 feet in such a manner as not to injure the ball or roots.

8.7 Pruning.

8.7.1 New plant material shall be pruned in the following manner: Dead and broken branches shall be removed. Deciduous trees shall be pruned to reduce total amount of anticipated foliage by one fourth to one third. Typical growth habit of individual plants shall be retained with as much height and spread as is practicable. Cuts shall be made with sharp instruments, and shall be flush with trunk or adjacent branch to insure elimination of stubs. "Headback" cuts at right angles to line of growth shall not be permitted. Trees shall not be poled or the leader removed. Trimmings shall be removed from the site. Cuts 1/2 inch in diameter and larger shall be painted with the specified tree wound dressing.

8.8 Restoration and Clean-Up. Excess and waste material shall be removed daily. When planting in an area has been completed, the area shall be cleared of all debris, spoil piles, and containers. Where existing grass areas have been damaged or scarred during planting operations, the Contractor shall restore disturbed areas to their original condition at his expense. Other paving shall be cleaned when work in adjacent areas is completed.

8.9 Maintenance During Installation. Maintenance operations shall begin immediately after each plant is planted and shall continue as required until final acceptance. Plants shall be kept in a healthy, growing condition by watering, pruning, spraying, weeding, and any other necessary operations of maintenance. Plant saucers and beds shall be kept free of weeds, grass, and other undesired vegetation. Plants shall be inspected at least once per week by the Contractor during the installation period and needed maintenance performed promptly.

9. PLANT ESTABLISHMENT PERIOD. Final acceptance of all work and materials under this section shall be at the end of a period of establishment to be determined as follows.

9.1 Beginning of the Plant Establishment Period. The period of establishment shall begin on the date that an inspection by the Contracting Officer shows that all plants are in place and have been installed in accordance with the specifications and plans. Replacement of plants that were not supplied by the Contractor but were relocated under this contract and that die for any reason other than improper handling during transplanting and/or lack of proper care will not be required. Loss through Contractor negligence, however, shall require replacement in kind and size per specification and shall be at the Contractor's expense.

9.2 During the Plant Establishment Period.

9.2.1 During the plant establishment period, the Contractor shall water all plants as necessary to maintain an adequate supply of moisture within the root zone. An adequate supply of moisture is estimated to be the equivalent of one inch of absorbed water per week that is delivered at weekly intervals in the form of natural rain or is augmented as required by periodic waterings. Water shall not be applied with a force sufficient to displace mulch and shall not be applied so quickly that it cannot be absorbed by the mulch and plants.

9.2.2 Plants shall be pruned as required.

9.2.3 Stakes, and eroded plant saucers shall be replaced as required.

9.2.4 Other work, such as spraying with approved insecticides and fungicides to control pests, shall be done to ensure plant survival in a healthy growing condition.

9.2.5 Plants shall be fertilized at least once during the period of establishment. Fertilization shall be either by topdressing at 10 pounds per 100 square feet of plant pit or by tablet or packet form fertilizer applied as per manufacturer's recommendations. Formula for the application shall be 18N-6P-12K.

9.2.6 Dead plants shall be removed immediately at the Contractor's expense. The Contractor will not be responsible for theft or damage to plants by vehicles or vandalism following completion and approval of the installation portion of the planting contract.

9.3 Termination of the Plant Establishment Period.

9.3.1 A preliminary inspection by the Contractor and the Contracting Officer will be held three months from the date of the beginning of the plant establishment period to determine plant acceptability and the number of replacements. Alternate or substituted varieties of plants shall be used only if approved by the Contracting Officer.

9.3.2 A final inspection of all plants will be held after the replacement planting has been completed. No additional plant establishment period will be required for replacement plants. The establishment period will end on the date of this inspection and said inspection will be considered final acceptance provided the Contractor has complied with the following requirements.

a. Dead, missing, and defective plant material shall have been replaced as directed by the Contracting Officer; otherwise, final acceptance will be delayed until such replacements have been satisfactorily accomplished.

b. Stakes shall be in good condition.

c. Remedial measures directed by the Contracting Officer to ensure plant survival shall have been carried out.

d. Plant material shall have been fertilized as required prior to acceptance.

* * * * *

SECTION 11A

STATION MARKING

Index

1. Applicable Publications
2. Materials
3. Installation
4. Painting
5. Tabulation of Location and Text of Markings

1. APPLICABLE PUBLICATIONS. The following publications of the issues listed below, but referred to thereafter by basic designation only, form a part of this specification to the extent indicated by the references thereto.

1.1 Federal Specifications.

TT-P-115D & Am-2	Paint, Traffic, Highway, White and Yellow

2. MATERIALS.

2.1 Paint.

2.1.1 Exterior Paint on Concrete shall conform to Federal Specification TT-P-115, except the color shall be non-fading black.

2.2 Concrete for markers shall conform to the applicable requirements of the section: CONCRETE CONSTRUCTION.

3. INSTALLATION.

3.1 General. The intersection of the channel control line or levee control line with the center lines of new, relocated, and existing facilities such as bridges, street intersections, underground utility crossings, side drains, upstream and downstream limits of permanent work, and other required information shall be marked by painting station numbers and additional identifying data as listed in the tabulation of location and text of markings. All markings shall be painted either on concrete walls (headwalls, abutments, etc.) or on concrete markers as indicated.

3.2 Concrete Markers (for trapezoidal channels) shall be 24 inches long, 18 inches wide, and a minimum of 3-5/8 inches thick. Markers may be poured in place or precast. The top surface of each marker shall be set flush with the top of berm and the longer side aligned along the edge of berm.

4. PAINTING.

4.1 Preparation of Surfaces. Concrete shall be thoroughly cleaned of all curing compound, efflorescence, dirt, oil or other deleterious material by approved methods. The surface preparation shall be accomplished in such manner that paint will satisfactorily adhere to the surface.

4.2 Application. Painting shall be done in a neat and workmanlike manner and may be applied by brush, spray, roller or any combination of these methods. Painting of numbers and letters shall be accomplished with stencils and brush or spray application. Color for letters and numbers shall be black. All markings on concrete shall be in uniform capital block letters and numbers, 6 inches high, 3 inches wide, and 3/4-inch width of line. Markings on concrete walls shall be horizontal with the bottom of the marking not lower than 2 feet below the top of the wall. Markings shall read from left to right looking downstream. Markings on concrete markers shall be read from the center of the berm.

5. TABULATION OF LOCATION AND TEXT OF MARKINGS.

5.1 Abbreviations. The following abbreviations shall be used where applicable. All other words shall be spelled out.

Description	Abbreviation
Arizona Canal Siphon	ACS
Arizona Canal Wasteway	ACW
Communications and Electric Power Conduits	
(1) Number and Multiple Duct (with or without concrete encasement)	(8) MD
(2) Direct Burial Cable	
Side Drains (size of pipe)	SD-24
East Valley Vista Lane	EVVLN

5.2 Tabulation.

Wall or Bank	Location of Marking: Station	Marking Painted on	Text of Marking	Remarks
N	85+37	CM	85+37 (2)MD	
N	89+40	CM	89+40 (2)MD	
N	103+98	CM	103+98 (2)MD	
L&R	413+55	CM	413+55 (2)MD	
L&R	411+00	CM	411+00 ACS	
L&R	410+97	CM	410+97 (1)MD	
L	408+18	CM	408+18 ACW	
L	382+30	CM	382+30 SD-24	
L	376+20	CM	376+20 SD-24	
L	374+09	CM	374+09 EVVLN	
L	372+00	CM	372+00 SD	
L	371+47	CM	371+47 SD	
R	368+65	CW	368+65 SD-24	
R	368+58	CW	368+58	Downstream End-Right Bank
L	367+58	CM	367+58	Downstream End-Left Bank

R = Right Bank (Looking Downstream)
L = Left Bank (Looking Downstream)
N = North Side of Upstream Levee
CW = Concrete Wall
CM = Concrete Marker

5.3 "As Constructed" – Corrections. The above tabulation is based on project drawings. Where the "As Constructed" condition will deviate from the data contained in the above tabulation, the "As Constructed" condition shall be used for markings, with station numbers rounded off to the nearest foot.

* * * * *

STANDARD DETAIL 195

CITY OF PHOENIX
PUBLIC WORKS DEPARTMENT
DIVISION OF ENGINEERING

SURVEY MONUMENT INSTALLATION — WITH FRAME

APPROVED R. C. Cartwright — CITY ENGINEER
Oct 1, 1968 — DATE

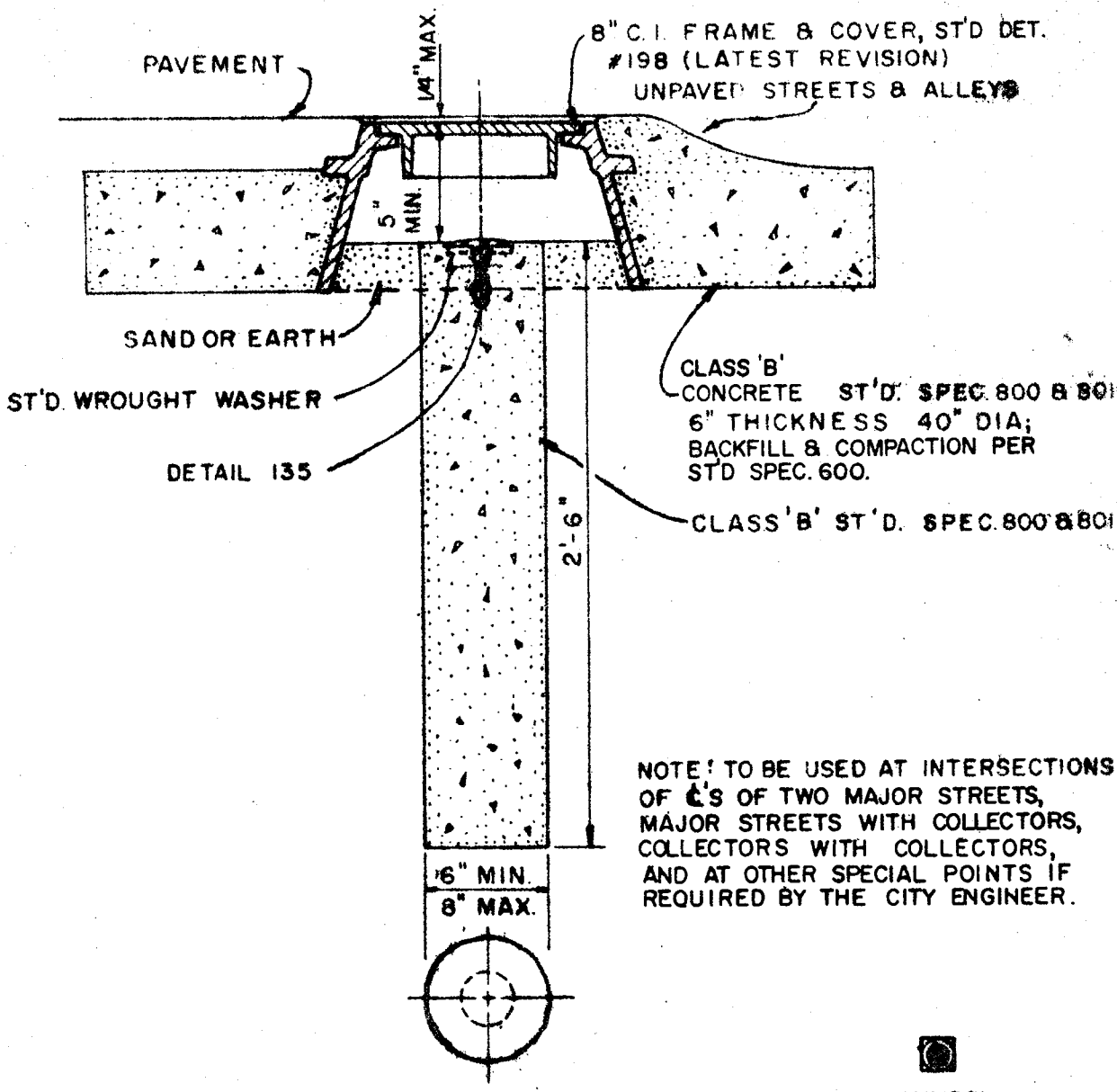

NOTE: TO BE USED AT INTERSECTIONS OF ℄'S OF TWO MAJOR STREETS, MAJOR STREETS WITH COLLECTORS, COLLECTORS WITH COLLECTORS, AND AT OTHER SPECIAL POINTS IF REQUIRED BY THE CITY ENGINEER.

SYMBOL

REV. 10-1-68

SECTION 14B

BUILT-UP ROOFING

Index

1. Applicable Publications
2. General
3. Materials
4. Roofing Systems
5. Application of Roofing
6. Flashings
7. Roof Cutout Samples
8. Surfacing

1. APPLICABLE PUBLICATIONS. The following publications of the issues listed below, but referred to thereafter by basic designation only, form a part of this specification to the extent indicated by the references thereto.

1.1 Federal Specifications (Fed. Spec.).

HH-R-590A	Roofing, Felt (Asbestos, Asphalt Saturated)
SS-C-153C	Cement, Bituminous, Plastic
SS-R-620B	Roofing Felt, Glass Fiber, Asphalt Coated (for Flashing and Roofing)

1.2 American Society for Testing and Materials (ASTM) Publications.

D 226-75	Asphalt-Saturated Roofing Felt for Use in Membrane Waterproofing and Built-Up Roofing
D 312-71	Asphalt for Use in Constructing Built-Up Roof Coverings
D 1863-64	Mineral Aggregate for Use on Built-Up Roofs
D 2626-73	Asphalt-Base Sheet for Use in Construction of Built-Up Roofs

2. GENERAL. Asphalt built-up roofing shall be applied to the roof surfaces indicated.

2.1 Storage of Materials. Felts and roll roofing shall not be exposed to any moisture before, during, or after delivery to the site. Felts and roll roofing shall be stored in an enclosed building or in a trailer, stacked on end, and maintained above 50 degrees F for 24 hours immediately before laying. Aggregate shall be maintained surface dry as defined by ASTM D 1863.

2.2 Coordination Requirements. Roofing operations shall be coordinated with sheet metalwork so that flashings are installed to permit continuous roof surfacing operations the same day felts are installed. Roofing operations shall also be coordinated with roof insulation work so that all insulation applied each day is waterproofed the same day with the complete roofing system.

2.3 Preparation Requirements. The entire roof-deck construction of any bay or section of the building shall be completed before roofing work is begun thereon. Items penetrating the roof shall be secured in position and properly prepared for flashing.

2.4 Application Requirements. Surfaces shall be inspected and approved immediately prior to application of roofing and flashings. The roofing or flashings shall be applied to a smooth and firm surface free from ice, frost, moisture, dirt, projections, and foreign materials. Application of roofing shall not be performed under damp or wet conditions, excessive wind conditions, or when the ambient temperature is less than 40 degrees F.

2.4.1 Asphalt shall be used with asphalt-saturated felts. Bituminous-plastic-type flashings installed in accordance with these specifications shall be used throughout unless otherwise specified or indicated. Metal flashings are specified in section: SHEET METALWORK, GENERAL.

3. MATERIALS shall conform to the following requirements.

3.1 Bitumen.

3.1.1 Asphalt. ASTM D 312, Type III on slopes above 1 inch per foot up to and including 3 inches per foot.

3.2 Felt. Felt shall be the bituminous saturated type and shall conform to the following requirements.

3.2.1 Organic-Fiber Felt.

3.2.1.1 Asphalt-Saturated Roofing Felt. ASTM D 226, Type I.

3.2.2 Glass-Fiber Felt.

3.2.2.1 Asphalt-Saturated Roofing Felt. Fed. Spec. SS-R-620, Type I or III.

3.2.3 Asbestos Fiber Felt.

3.2.3.1 Asphalt-Saturated Roofing Felt. Fed. Spec. HH-R-590, Type I, Class A, minimum weight of 13 pounds per square.

3.3 Nails, Fasteners, and Anchors. Nails, fasteners, and anchors shall be an approved type recommended by the roofing felt manufacturer. Fasteners for securing roofing felts to mineral-fiber, expanded perlite or fiberboard insulation shall provide a minimum holding power of 20 pounds each when installed.

3.4 Bituminous Cement. Fed. Spec. SS-C-153, Type I with asphalt-saturated felts.

3.5 Surfacing Materials. Crushed stone, gravel, or crushed slag shall conform to ASTM D 1863. Subject to approval, other materials may be used when blended to the grading requirements of ASTM D 1863.

4. ROOFING SYSTEMS.

4.1 Asphalt Built-Up 4-Ply Organic Roofing.

4.1.1 On Insulation Surfaces. Four plies of 15-pound saturated felt shall be mopped in solid with hot asphalt. Felts shall be laid shingle-fashion at right angles to the direction of the roof slope and lapped in accordance with Table I and fastened in accordance with Table II. The flashings shall be installed and the flood coat and surfacing applied.

4.2 Asphalt Built-Up 4-Ply Glass-Fiber Roofing.

4.2.1 On Insulation Surfaces. Four plies of glass-fiber felt shall be mopped in solid with hot asphalt. Felts shall be laid shingle-fashion at right angles to the direction of the roof slope and lapped in accordance with Table I and fastened in accordance with Table II. The flashings shall be installed and the flood coat and surfacing applied.

4.3 Asphalt Built-Up 4-Ply Asbestos Roofing.

4.4.2 On Insulation Surfaces. Four plies of asbestos felt shall be mopped in solid with hot asphalt. Felts shall be laid shingle-fashion at right angles to the direction of the roof slope and lapped in accordance with Table I and fastened in accordance with Table II. The flashings shall be installed and the flood coat and surfacing applied.

5. APPLICATION OF ROOFING.

5.1 General Requirements. The entire roofing system, including aggregate surfacing, shall be finished in one operation up to the line of termination at end of day's work. Application of roofing shall immediately follow application of insulation as a continuous operation. Phased construction will not be permitted. To insure a waterproof membrane, care shall be taken to preclude bare spots between plies. To prevent slippage, care shall be taken to preclude use of an excessive amount of bitumen.

5.2 Detail Requirements.

5.2.1 Bitumen stops, formed of edge envelopes shall be installed at eaves and rakes. Envelopes shall be formed of two 18-inch wide layers of roofing felt. Only organic or asbestos felts shall be used. Nine inches of the width shall be attached to the roof surface with 9 inches extending beyond the edge. The first layer shall be applied in a 4-inch wide layer of plastic roofing cement and nailed 1/2-inch from the roof edge at 6-inch spacing. The second layer shall be applied to the first in a 9-inch wide mopping bitumen. The free edges shall be protected from damage throughout the roofing period.

5.2.2 Asphalt shall not be heated above 475 degrees F. Heating kettles shall be provided with a thermometer and kettlemen shall be in attendance at all times during the heating to insure that the maximum temperature specified is not exceeded. Temperature of bitumen at the time it is applied shall be in accordance with the roofing felt manufacturers recommendations. Application temperatures shall be measured at the mop bucket - and/or mechanical applicator. Each layer of organic roofing felt shall be laid in not less than 15 pounds of asphalt per square, and a maximum of 25 pounds of asphalt per square. Each layer of glass-fiber felt shall be laid in not less 20 pounds of asphalt per square or more than 30 pounds of asphalt per square. Each layer of asbestos felt shall be laid in not less than 15 pounds of asphalt per square or more than 25 pounds of asphalt per square.

5.2.3 Layers of roofing shall be laid free of wrinkles, creases or fishmouths, at right angles to the slope of the deck, immediately behind the applicator. The surface of the felts shall be broomed-in full width to obtain complete adhesion between plies and to eliminate air pockets. The method of mopping a half-sheet width and turning the sheet back to mop under the other half will not be used. Workmen shall not walk on mopped surfaces when the bitumen is sticky. Each layer of roofing felt shall be carried up abutting vertical surfaces at least 4 inches, or to the top of the cant strip. After the last ply of roofing felt is applied, the edge envelope shall be formed by folding back and mopping each layer. The gravel stop, specified in section: SHEET METALWORK, GENERAL, shall be embedded in bituminous cement.

5.2.4 Each course of roofing felts, in addition to being mopped in hot bitumen, shall be lapped as specified in Table I. For roof slopes above 1/2-inch per foot, felts shall be nailed as specified in Table II.

5.2.5 Nails and fasteners for securing roofing shall be flush-driven through flat metal disks of not less than 1-inch diameter. Metal disks may be omitted where heads of fasteners are equivalent in size to the 1-inch diameter disks.

5.2.6 At end of day's work or whenever precipitation is imminent, the terminated edge of built-up roofing shall be sealed with two full width strips of felt set in plastic bituminous cement. Extend half-width of strips up and over the finished roofing and extend the other half-width out and onto the bare roof deck surface. Water cutoffs shall be removed before continuing installation of roof system.

6. FLASHINGS. Flashings shall be provided in the angles formed at walls and other vertical surfaces and where required to make the work watertight. Bituminous-plastic-type flashings described below shall be used, except where metal flashings are indicated or specified in section: SHEET METALWORK, GENERAL. Flashings shall be provided and installed immediately after the top ply of roofing is placed and shall be returned and sealed or capped and sealed to waterproof edges and ends. Flashings shall be stepped where vertical surfaces abut sloped-roof surfaces.

6.1 Base Flashings. Base flashings for organic-fiber and asbestos-fiber felt roofing systems shall consist of one ply of asbestos roof felt and one ply of a reinforced asbestos flashing sheet as the outer ply. Materials and installation shall be in strict accordance with the published recommendations of the roofing felt manufacturer. Base flashings for glass-fiber felt roofing systems shall be a three ply system using a mineral cap sheet as the outer ply. Materials and installation shall be in strict accordance with the published recommendations of the roofing felt manufacturer.

6.1.1 Cants shall be installed in the angles formed at walls and other vertical surfaces as backing for base flashings. Cants shall be laid in a solid coat of bituminous cement just prior to laying the roofing plies. Cants shall have a 5-1/2-inch face dimension and shall be continuous and installed in lengths as long as practicable. Cants are not required at locations where cast-in-place cants, specified under other sections, are integrally formed with the structural deck or roof fill.

6.2 Strip Flashings. Roof flanges of lead and sheetmetal flashings such as gravel stops, base flashings, and plumbing flashings, furnished and installed under other sections of the specifications shall be stripped with two layers of roofing felt set in plastic cement. After installation of flanges or flashings over the top ply of roofing, the strip flashings, consisting of two layers of roofing felt, 9 and 12 inches wide, shall be successively cemented to the top of the roof flange using bituminous plastic cement, to form a waterproof joint between roofing and flashings.

7. ROOF CUTOUT SAMPLES. Samples shall be taken as directed by the Contracting Officer when there is reason to believe that deficiencies exist in the roofing membrane. When samples indicate deficiencies in the roofing membrane, corrective action shall be taken as directed.

8. SURFACING. After roofing felts have been laid and flashings installed, the roof surface, except for cants, shall be flood-coated uniformly with 60 pounds of hot asphalt per square. While bitumen is still hot, 400 pounds per square of roofing gravel or 300 pounds per square of other approved aggregate shall be embedded therein. Aggregate shall be placed in the manner and quantity required to form a compact embedded overlay. Roof surface shall be swept and all loose aggregate removed. Flood coat and aggregate shall be applied the same day as the felts are laid. If there is a probability of rain falling on the felts before the flood coat and aggregate can be applied, a light glaze coat of bitumen, 10 to 15 pounds per square, shall be applied over the exposed felts. The glaze coat may be considered as part of the flood coat provided the surfacing operation is completed within 48 hours after application of the glaze coat. Where glaze coat is used, surface treatment shall be completed as soon as weather conditions permit.

TABLE I

LAPS FOR ROOFING FELTS AND ROLL ROOFING(a)

Layers or plies	Laps in inches for 36-inch width	Starting widths in inches for 36-inch width
1	4	36
2	19	18 and 36
3	24-2/3	12, 24, and 36
4	27-1/2	9, 18, 27 and 36

(a) End laps of roofing felts and roll roofing shall be not less than 6 inches and shall be staggered a minimum of 12 inches.

TABLE II

NAILING OF BUILT-UP ROOFING LAID ON INSULATION FOR ROOF SLOPES ABOVE 1/2 INCH PER FOOT

Expanded-Perlite, Fiberboard, or Mineral-Fiber	Composite Board, Cellular Glass
Nail 12" on centers into insulation staggered in two rows 2" and 6" from upper edge.	Nail into surface mounted roof nailing strips provided and installed in section: INSULATION FOR BUILT-UP ROOFING. Nail each ply at 2", 5", and 8" from upper edge with nails penetrating at least 3/4" into nailing strips.

* * * * *

SECTION 14C

INSULATION FOR BUILT-UP ROOFING

Index

1. Applicable Publications
2. General
3. Submittals
4. Materials
5. Application of Insulation
6. Wood Nailers

1. APPLICABLE PUBLICATIONS. The following publications of the issues listed below, but referred to thereafter by basic designation only, form a part of this specification to the extent indicated by the references thereto.

1.1 Federal Specifications (Fed. Spec.).

FF-N-105B & Am-3	Nails, Brads, Staples and Spikes: Wire, Cut and Wrought
HH-I-526C	Insulation Board, Thermal (Mineral Fiber)
HH-I-529B	Insulation Board, Thermal (Mineral Aggregate)
HH-I-551E	Insulation Block and Boards, Thermal (Cellular Glass)
SS-C-153C	Cement, Bituminous, Plastic

1.2 American Society for Testing and Materials (ASTM) Publications.

C 208-72	Insulation Board (Cellulosic Fiber), Structural and Decorative
D 41-73	Primer for Use with Asphalt in Damp-proofing and Waterproofing
D 61-75	Softening Point of Pitches (Cube-in-Water Method)
D 226-75	Asphalt-Saturated Roofing Felt for Use in Membrane Waterproofing and Built-Up Roofing
D 227-56 (R 1970)	Coal-Tar Saturated Roofing Felt for Use in Waterproofing and in Constructing Built-Up Roofs
D 250-70	Asphalt-Saturated Asbestos Felts for Use in Waterproofing and in Constructing Built-Up Roofs
D 312-71	Asphalt for Use in Constructing Built-Up Roof Coverings
D 450-71	Coal-Tar Pitch for Roofing, Damp-proofing, and Waterproofing
D 2626-73	Asphalt-Base Sheet for Use in Construction of Built-Up Roofs
E 96-66 (R 1972)	Water Vapor Transmission of Materials in Sheet Form

1.3 American Society of Heating, Refrigerating and Air-Conditioning Engineers, Inc. (ASHRAE) Publication.

ASHRAE Handbook of Fundamentals (1972)

2. GENERAL. Insulation for built-up roofing shall be applied to the surfaces indicated.

2.1 Storage of Materials. Insulation and felts shall not be exposed to moisture in any form before, during, or after delivery to the site. Store insulation and felts in an enclosed building or in a trailer. Wet materials shall not be used and shall be removed from the worksite. Felt rolls shall be stacked on end. For 24 hours immediately before laying, materials shall be maintained at a temperature above 50 degrees F. Urethane and composite board insulation shall be stored away from areas where welding is being performed or where contact with open flames is possible.

2.2 Preparation Requirements. The roof-deck surface shall be free from ice, frost, and surface moisture and shall be smooth, firm, free from dirt, projections, and foreign materials. Vents and other items penetrating the roof shall be secured in position and properly prepared for flashing.

2.3 Application Requirements.

2.3.1 Surfaces shall be inspected and approved prior to application of insulation.

2.3.2 Application of materials shall not be performed under damp or wet conditions, excessive wind conditions, or when the ambient temperature is less than 40 degrees F. Except when used as part of composite board insulation, urethane shall not be used on steel decks.

2.3.3 Asphalt shall be used with asphalt-saturated felts. Asphalt shall not be heated above 475 degrees F. Heating kettles shall be provided with a thermometer, and kettlemen shall be in attendance at all times during heating to insure that the maximum temperature specified is not exceeded. Temperature of the bitumen at the time it is applied shall be in accordance with the insulation manufacturer's recommendations. Application temperatures shall be measured at the mop bucket and/or mechanical applicator.

2.3.4 On roof slopes greater than 1/2-inch per foot, insulation shall be mechanically attached. Method of attachment shall be in accordance with insulation manufacturer's recommendations and the requirements specified hereinafter.

2.3.5 Insulation work shall be coordinated with roofing and sheet metalwork so that all material applied each day is waterproofed the same day with the complete roofing system and sheetmetal flashings.

2.3.6 Uninsulated steel decks shall have insulation applied as an underlayment to span the steel deck flutes. Minimum thickness of the insulation shall be in accordance with the insulation manufacturer's published literature.

3. SUBMITTALS. Computations used for determining insulation thickness shall be submitted for approval. The Contractor shall submit proof that adhesives for application of insulation on steel decks meets the requirements of Underwriters' Laboratories, Inc., or Factory Mutual Research Corporation.

4. MATERIALS shall conform to the following requirements.

4.1 Adhesive.

4.1.1 Adhesive for application of insulation to steel decks shall meet the requirements of the Underwriters' Laboratories, Inc., for metal roof-deck construction or Factory Mutual Research Corporation for Class I steel deck construction.

4.1.2 Adhesive for application of film or laminate type vapor barrier, or for the application of insulation thereto, shall be manufacturer's recommended product.

4.3 Bitumen.

4.3.1 Asphalt. ASTM D 312, Type III.

4.4 Bituminous Cement. Fed. Spec. SS–C-153, Type I with asphalt-saturated felts.

4.5 Insulation shall be one of the following materials.

4.5.1 Cellular Glass. Fed. Spec. HH-I-551, Type I or IV.

4.5.2 Expanded-Perlite Insulation Board. Fed. Spec. HH-I-529.

4.5.3 Fiverboard. ASTM C 208, Roof insulating board, treated for moisture resistance by integral treatment with wax or other sizing or with bituminous impregnation. Bituminous impregnation shall be limited to 4 percent by weight when used over steel decks.

4.5.4 Mineral-Fiber Insulation Board. Fed. Spec. HH-I-526.

4.6 Nails and Fasteners.

4.6.1 Nails for Fastening Insulation to Flush Mounted Wood Nailers. Fed. Spec. FF-N-105, Type II, Style 20, of sufficient length to hold insulation securely in place.

4.6.2 Fasteners.

4.6.2.1 Fasteners designed to secure insulation to steel decks shall conform to the requirements of Underwriters' Laboratories, Inc., or Factory Mutual Research Corporation.

4.6.2.2 Bolts and nuts shall be semifinished or finished, threaded for medium fit with either hexagonal-shaped or square-shaped nuts and boltheads.

4.6.2.3 Metal disks shall be flat and not less than 30 gage thickness. Disks used with nails or fasteners for securing fiberboard insulation shall be minimum 1-inch diameter. Disks used with nails or fasteners for securing other board insulation shall be minimum 2-1/8 inch diameter.

5. APPLICATION OF INSULATION.

5.1 Installation Requirements.

5.1.1 Insulation shall be laid in one or more layers. Units of insulation shall be laid in parallel courses parallel with the roof slope. End joints shall be staggered. Insulation shall be cut to fit neatly against adjoining surfaces. If installed in more than one layer, joints in successive layers shall be staggered with respect to joints of preceding layer. Insulation which can be readily lifted after installation is not considered to be adequately secured.

5.1.2 Bitumen shall not be applied further than one panel length ahead of roof insulation being installed.

5.1.3 Insulation laid directly on steel deck shall be installed using 12 to 15 pounds of asphalt per square. In lieu of asphalt, nonflammable adhesive may be applied in the quantity recommended by Underwriters' Laboratories, Inc., or Factory Mutual Research Corporation. Asphalt or adhesive shall be applied to steel decks by machine whenever possible. Asphalt or adhesive shall be applied in ribbons parallel to flutes and on every top flange. The continuous joints between insulation units, parallel with the roof slopes, shall not occur over the fluted openings in steel decks.

5.2 Fastening Requirements. When mechanical fasteners are used for insulation installed in two or more layers, only the first layer need be secured with fasteners. When using serrated nail-type fasteners for steel decks and through an asphalt covering, a hole will be prepunched in the covering.

5.3 Protection Requirements. The insulation shall be kept dry at all times and shall be laid just before application of the roofing felts. No more insulation shall be laid than can be covered the same day with the complete roofing system. Exposed edges of the insulation shall be protected by the cutoffs at the end of each days work or whenever precipitation is imminent. Cutoffs shall be two layers of bituminous-saturated felt set in plastic bituminous cement. Cutoffs shall be removed when work is resumed.

6. WOOD NAILERS. Wood nailers installed on the surface of the roof deck shall be furnished and installed under this section. Nailers shall be treated with waterborne preservative.

6.1 Surface Mounted Nailers. Surface mounted wood nailers shall be provided where cellular glass insulation is installed on roof slopes greater than 1/2-inch per foot. Nailers shall be installed parallel with the roof slope. The nailers shall be a nominal 3 inches wide by the full thickness of the insulation. Nailers shall be spaced not over 4 feet face-to-face, except that where the insulation units are less than 4 feet in length the nailers shall be spaced to accommodate the insulation units without cutting.

6.2 Nailer Securement. Nailers shall be secured to steel decks as indicated. Bolt anchors shall have nuts and washers countersunk, and bolts shall be cut flush with top of nailer. Powder-actuated fasteners, sized and spaced for nailer anchorage equivalent to that specified and indicated, may be used when approved.

* * * * *

SECTION 14D

ROOF DECKING, STEEL

Index

1. Applicable Publication
2. Submittals
3. Materials
4. Delivery and Storage
5. Design and Fabrication
6. Erection

1. APPLICABLE PUBLICATION. The following Steel Deck Institute publication of the issue listed below, but referred to thereafter by basic designation only, forms a part of this specification to the extent indicated by the references thereto.

Steel Deck Institute (SDI). Steel Roof Deck Design Manual, 1976.

2. SUBMITTALS.

2.1 Shop Drawings. Shop drawings shall be submitted for approval in accordance with the SPECIAL PROVISIONS. Drawings shall include type, location, and necessary details of decking units, accessories, and supporting members; design loads; required section properties; fire rated construction system details; size and location of holes to be cut and reinforcement to be provided; location and sequence of welded or fastener connections; and the manufacturer's erection instructions.

2.2 Design Computations. Design computations for the structural properties of the decking units shall be submitted with the shop drawings.

3. MATERIALS shall conform to the SDI Steel Roof Deck Design Manual. Roof deck shall receive one prime coat of manufacturer's standard paint, or shall be zinc coated.

4. DELIVERY AND STORAGE. Materials shall be delivered to the site in a dry and undamaged condition, stored out of contact with the ground and under a weather-tight covering permitting good air circulation. Finish of decking units shall be maintained at all times, using touch-up paint whenever necessary to prevent the formation of rust. Touch-up paint for shop-painted units shall be of the same type used for the shop painting, and touch-up paint for zinc-coated units shall be an approved high zinc dust content galvanizing repair paint.

5. DESIGN AND FABRICATION.

5.1 Decking Units. Units shall have the configuration and properties as shown on the drawings. Decking units shall be fabricated from 20 gage or thicker steel sheets. Section properties shall be determined in accordance with the SDI Steel Roof Deck Design Manual. The deck units shall extend over two supports as indicated on the drawing. The maximum allowable deflection of deck and maximum working stress shall conform to SDI Steel Roof Deck Design Manual. Decking with cross-sectional configuration differing from the units indicated may be used, provided that the properties of the proposed units are equal to, or greater than, the properties of the units indicated, and the material will fit the space provided without requiring revisions to adjacent materials or systems. There shall be no loads suspended from the decking.

5.2 Accessories. The manufacturer's standard type accessories shall be furnished as necessary to complete the roof deck installation. Metal accessories shall be of the same material as the decking and have minimum gage as follows: saddles, 18 gage; welding washers, 16 gage; cant strip, 22 gage; other metal accessories, 20 gage, unless otherwise indicated.

5.2.1 Adjusting plates or segments of deck units shall be provided in locations too narrow to accommodate full-size units. As far as practical, the plates shall be the same gage and configuration as the decking.

5.2.2 Voids above interior walls shall be closed with 22 gage sheet metal where shown on the drawings. Open deck cells at end walls, eaves, and openings through roofs shall be located with manufacturer's standard closure material.

5.2.3 Cover plates, underlapping sleeves, or pressure sensitive tape shall be provided to cover joints between adjoining nonlapping units. Pressure sensitive tape shall be at least 2 inches wide, and shall have a noncombustible adhesive.

6. ERECTION of decking and accessories shall be in accordance with the SDI Steel Roof Deck Design Manual and the approved shop drawings. Damaged decking and accessories and units with burned holes shall not be installed. The deck units shall be placed on secured supports, properly adjusted, and alined at right angles to supports before being permanently secured in place. The deck shall not be used for storage or as a working platform until the units have been secured in position. The maximum uniform distributed storage load shall not exceed the design live load.

6.1 Attachment. The deck units shall be welded or fastened with screws or powder actuated fasteners to supports as indicated on the shop drawings and in accordance with SDI Steel Roof Deck Design Manual requirements. Holes and similar defects will not be acceptable. Powder actuated fasteners shall be driven with low velocity piston tool by an operator authorized by the manufacturer of the piston tool.

6.2 Repair of Coatings. Welds shall be cleaned by chipping or wire brushing. Finish of decking and accessories shall be maintained using touch-up paint whenever necessary to prevent the formation of rust. Touch-up paint for shop-painted units shall be of the same type used for the shop painting, and touch-up paint for zinc-coated units shall be an approved high zinc dust content galvanizing repair paint.

6.3 Openings through Deck. Holes and other openings required shall be drilled or cut, adequately reinforced and framed as necessary for rigidity and sufficient load-carrying capacity.

* * * * *

U.S. ARMY ENGINEER DISTRICT, LOS ANGELES
300 North Los Angeles Street
Los Angeles, California

Army - C. of E. - Los Angeles