Reference: DACW09-82-B-0018

Received
6-7-82
Property of
Flood Control District of MC Library
Please Return to
2801 W. Durango
Phoenix, AZ 85009

SPECIFICATIONS

for

INDIAN BEND WASH SIDE CHANNEL SYSTEM

Maricopa County
Gila River Basin, Arizona

Appropriation: 96x3122 Construction General, Corps of Engineers, Civil

96x8862 Contributed Fund , Other

Authority: PL 97-88 (H.R. 4144) December 4, 1981 Energy and Water Development Act,FY82

US Army Corps of Engineers
Angeles District

A680.504

STANDARD FORM 20
JANUARY 1961 EDITION
GENERAL SERVICES ADMINISTRATION
FED. PROC. REG. (41 CFR) 1-16.401

REFERENCE
DACW09-82-B-0018

INVITATION FOR BIDS
(CONSTRUCTION CONTRACT)

DATE
82 MAY 18

NAME AND LOCATION OF PROJECT
INDIAN BEND WASH,
SIDE CHANNELS SYSTEM,
AT MARICOPA COUNTY,
GILA RIVER BASIN, ARIZONA

DEPARTMENT OR AGENCY
DEPARTMENT OF THE ARMY

BY (Issuing office)

U. S. ARMY ENGINEER DISTRICT, LOS ANGELES

Sealed bids in duplicate for the work described herein will be received until 1 p.m. local time at the place of bid opening, 15 June 1982

at Room 1030 (South Tower), 2721 North Central Avenue, Phoenix, Arizona 85004

and at that time publicly opened.

Information regarding bidding material, bid guarantee, and bonds

BID BONDS. Each bidder shall submit with his bid a Bid Bond (Standard Form 24) with good and sufficient surety or sureties acceptable to the Government, or other security as provided in paragraph 4 of Instructions to Bidders (Standard Form 22) in the form of 20% of the bid price or $3,000,000, whichever is lesser. The bid bond penalty may be expressed in terms of a percentage of the bid price or may be expressed in dollars and cents.

PERFORMANCE AND PAYMENT BONDS. Within 5 days after the prescribed forms are presented to the bidder to whom award is made for signature, a written contract on the form prescribed by the specifications shall be executed and two bonds, each with good and sufficient surety or sureties acceptable to the Government, furnished; namely a performance bond (Standard Form 25) and a payment bond (Standard Form 25-A). The penal sums of such bonds will be as follows.

(a) Performance Bond. The penal sum of the performance bond shall equal 100% of the contract price.

(b) Payment Bond.

(1) When the contract price is $1,000,000 or less, the penal sum will be 50% of the contract price.

(2) When the contract price is in excess of $1,000,000, but not more than $5,000,000, the penal sum shall be 40% of the contract price.

(3) When the contract price is more than $5,000,000, the penal sum shall be $2,500,000.

Any bonds furnished will be furnished by the Contractor to the Government prior to commencement of contract performance.

NOTE: For bids less than $25,000, bid bonds, performance and payment bonds will not be required.

Description of work

Construction of approximately 3/4 mile of open channel, 3/4 mile of concrete box, ½ mile of concrete pipe, with related paving, walks, landscaping and appurtenances.
ESTIMATED CONSTRUCTION COST IS BETWEEN $1,000,000 AND $5,000,000.

This is a Civil Works Program procurement and is not funded by the Department of Defense. Buy American Act price differential to foreign qualifying country end products in accordance with paragraph 6-104.f(f) of the Defense Acquisition Regulation applies.

☆ U.S. GOVERNMENT PRINTING OFFICE: 1969—O-372728

READ THE FOLLOWING IN CONJUNCTION WITH INSTRUCTIONS TO BIDDERS (U. S. STANDARD FORM 22).

1. PLANT AND EQUIPMENT. Each bidder shall, upon request of the Contracting Officer, furnish a list of the plant available to the bidder and proposed for use on the work. 10/11/65

2. MODIFICATIONS PRIOR TO DATE SET FOR OPENING BIDS. The right is reserved, as the interest of the Government may require, to revise or amend the specifications or drawings, or both prior to the date set for opening bids. Such revisions and amendments, if any, will be announced by an amendment or amendments to this Invitation for Bids. If the revisions and amendments are of a nature which requires material changes in quantities or prices bid or both, the date set for opening bids may be postponed by such number of days as in the opinion of the District Engineer will enable bidders to revise their bids. In such cases, the amendment will include an announcement of the new date for opening bids. 3/22/65

3. BIDDERS are required to acknowledge receipt of all amendments to this Invitation on the Bid Form (Standard Form 21) in the space provided, or by separate letter or telegram prior to opening of Bids. Failure to acknowledge all amendments may cause the rejection of the bid. 1/13/65

4. NOTICE REGARDING BUY AMERICAN ACT (1970 SEP). The Buy American Act (41 U.S.C. 10a-10d) generally requires that only domestic construction material be used in the performance of this contract. Exception from the Buy American Act shall be permitted only in the case of nonavailability of domestic construction materials. A bid or proposal offering nondomestic construction material will not be accepted unless specifically approved by the Government. When a bidder or offeror proposes to furnish nondomestic construction material, his bid or proposal must set forth an itemization of the quantity, unit price, and intended use of each item of such nondomestic construction material. When offering nondomestic construction material pursuant to this paragraph, bids or proposals may also offer, at stated prices, any available comparable domestic construction material, so as to avoid the possibility that failure of a nondomestic construction material to be acceptable under this paragraph will cause rejection of the entire bid. 12/1/70

5. AVAILABILITY OF SPECIFICATIONS, STANDARDS AND DESCRIPTIONS (1977 JUN) Specifications, standards and descriptions cited in this solicitation are available as indicated below:

5.1 Unclassified Federal, Military and Other Specifications and Standards (Excluding Commercial), and Data Item Descriptions. Submit request on DD Form 1425 (Specifications and Standards Requisition) to:

Commanding Officer
U.S. Naval Publications and Forms Center
5801 Tabor Avenue – Philadelphia, Pa. 19120

The Acquisition Management Systems and Data Requirements Control List, DoD Directive 5000.19-L, Volume II, may be ordered on the DD Form 1425. The Department of Defense Index of Specifications and Standards (DODISS) may be purchased from the Superintendent of Documents, U.S. Government Printing Office, Washington, D. C., 20402. When requesting a specification or standard, the request shall indicate the title, number, date and any applicable amendment thereto by number and date. When requesting a data item description, the request shall cite the applicable data item number set forth in the solicitation. When DD Form 1425 is not available, the request may be submitted in letter form, giving the same information as listed above, and the solicitation or contract number involved. Such requests may also be made to the activity by Telex No. 834295, Western Union No. 710-670-1685, or telephone (area code 215-697-3321) in case of urgency. 8/25/77

5.2 Commercial Specifications, Standards and Descriptions. These specifications, standards and descriptions are not available from Government sources. They may be obtained from the publishers.

6. AVAILABILITY FOR EXAMINATION OF SPECIFICATIONS, STANDARDS, DRAWINGS, AND OTHER PERTINENT DOCUMENTS. The specifications, standards, drawings, and other pertinent documents cited in this solicitation may be examined at the following location:

U.S. Army Engineer District, Los Angeles
300 No. Los Angeles Street
Los Angeles, California 90053

7. In addition to the immediate site of construction, the Department of Labor has stated that the Davis-Bacon Act applies to Contractor's operations connected with temporary facilities located off the immediate site of construction such as batch plants, sand pits, rock quarries and similar operations which have been set up exclusively to furnish materials for the contract. Therefore, employees related to these temporary facilities are considered on-site employees, and the Contractor shall maintain complete records as set out in the Labor Standards Provisions of the contract. 4/15/71

8. The Government further reserves the right to make award of any or all schedules of any bid, unless the bidder qualifies such bid by specific limitation; also to make award to the bidder whose aggregate bid on any combination of bid schedules is low. For the purpose of this Invitation for Bids, the word "item" as used in paragraph 10(c) of Standard Form 22, shall be considered to mean "schedule."

Read the following in conjunction with instructions to bidders (U.S. Standard Form 22).

9. DRAWINGS. Sets of drawings, half-size, and of specifications will be furnished upon receipt of payment of $20.50 for full size, and $4.10 for half-size per set. If individual plan sheets are requested, they will be furnished at the rate of $0.10 for half size, and $0.50 for full size, for each sheet requested, but with a minimum charge of $1.00. The maximum charge shall not exceed the charge for a full set of plans. No refund of the payment for drawings will be made and the drawings need not be returned to the District Engineer. Additional copies of the specifications alone will be furnished an applicant at rate of $1.00 per copy. Payments will be made by cash, check or money order and delivered to the U.S. Army Engineer District, Los Angeles, 300 North Los Angeles Street, Los Angeles, California. Checks and money should be made payable to "FAO, U. S. Army, Los Angeles District."

10. HAND CARRIED BIDS. Hand carried bids shall be deposited in Room 1030, (South Tower) 2721 North Central Avenue, Phoenix, Arizona prior to the time and date set for opening of bids or bids may be delivered to Room 1030 immediately prior to bid opening time.

11. TELEGRAPHIC MODIFICATIONS TO BIDS should be addressed to:

U.S. Army Engineer District, Los Angeles
Resident Office
2721 North Central Avenue
Phoenix, Arizona 85004

12. NOTE THE AFFIRMATIVE ACTION REQUIREMENT OF THE EQUAL OPPORTUNITY CLAUSE WHICH MAY APPLY TO THE CONTRACT RESULTING FROM THIS SOLICITATION.

13. NOTE THE CERTIFICATION OF NONSEGREGATED FACILITIES IN THIS SOLICITATION. Bidders or offerors and applicants are cautioned to note the "Certification of Non-Segregated Facilities" in the solicitation. Failure of a bidder or offeror to agree to the certification will render his bid or offer nonresponsive to the terms of solicitation involving awards of contracts exceeding $10,000 which are not exempt from the provisions of the Equal Opportunity clause. (1975 OCT)

14. ADDITIONAL INFORMATION pertaining to these plans and specifications may be obtained by writing or calling (collect calls not accepted) U.S. Army Engineer District, Los Angeles, Attn: Mr. George E. Davis, P.O. Box 2711, Los Angeles, California 90053. Telephone 213 688-5493.

15. NOTICE OF TOTAL SMALL BUSINESS SET-ASIDE. (1972 JUL)

15.1 Restriction. Offers under this procurement are solicited from small business concerns only and this procurement is to be awarded only to one or more small business concerns.. This action is based on a determination by the Contracting Officer, alone or in conjunction with a representative of the Small Business Administration that it is in the interest of maintaining or mobilizing the Nation's full productive capacity, in the interest of war or national defense programs, or in the interest of assuring that a fair proportion of Government procurement is placed with small business concerns. Offers received from firms which are not small business concerns shall be considered nonresponsive and shall be rejected.

15.2 Definition. A "Small Business Concern" is a concern including its affiliates, which is independently owned and operated, is not dominant in the field of operation in which it is offering on Government contracts, and can further qualify under the criteria set forth in regulations of the Small Business Administration (Code of Federal Regulations, Title 13, Section 121.3-8). For the purpose of this Invitation for Bids, in order to qualify as a "Small Business Concern" the average annual receipts of the concern and its affiliates for its preceding three fiscal years must not exceed $12,000,000, except that if the concern has 50 percent or more of its annual sales or receipts attributable to business activity within Alaska, such average annual receipts must not exceed $15,000,000.

16. PRE-AWARD SURVEY.

16.1 As part of the pre-award survey, the low bidders will be required to, within 48 hours after bid opening, submit a detailed list of all equipment to be used on the work, including earth moving, materials handling, concrete batching, hauling, paving, and all associated equipment, with supporting evidence of its availability, as well as written assurance said equipment is to be committed to this project alone. Release of any equipment from the project to any other work is subject to the approval of the Contracting Officer.

16.2 Failure to provide timely and satisfactory information data required for the pre-award survey may cause rejection of the bid.

17. ARITHMETIC DISCREPANCIES.

(a) For the purpose of initial evaluation of bids, the following will be utilized in resolving arithmetic discrepancies found on the face of the bidding schedule as submitted by bidders:

(1) Obviously misplaced decimal points will be corrected;

(2) In case of discrepancy between unit price and extended price, the unit price will govern;

(3) Apparent errors in extension of unit prices will be corrected; and

(4) Apparent errors in addition of lump-sum and extended prices will be corrected.

(b) For the purposes of bid evaluation, the Government will proceed on the assumption that the bidder intends his bid to be evaluated on the basis of the unit prices, extensions, and totals arrived at by resolution of arithmetic discrepancies as provided above and the bid will be so reflected on the abstract of bids.

18. SITE INSPECTION. Arrangements for visiting the site may be made by contacting Mr. Edgar Dunnigan, Project Office, Indian Bend Wash, telephone (602) 992-6848.

19. MINIMUM ACCEPTANCE PERIOD (1975 MAR). Bids allowing less than the number of calendar days specified in the "Bid" portion of SF 19 (or on the reverse of SF 21 as applicable) for acceptance by the Government will be rejected as nonresponsive.

20. SMALL DISADVANTAGED BUSINESS CONCERNS SUBCONTRACTING. Bidders are cautioned that compliance with GENERAL PROVISIONS; UTILIZATION OF SMALL BUSINESS AND SMALL DISADVANTAGED BUSINESS CONCERNS requires direct and specific solicitation of small business and small disadvantaged business in the preparation of the bid for any subcontract or supplies when time or other circumstances would not permit such solicitation after award. In order to assist prime contractors in developing a source list of these business concerns, you are encouraged to contact minority contractor associations, the Minority Business Development Agency or its appropriate business development center and/or the Small Business Administration, addresses of which may be obtained from:

Write:	U. S. Army Engineer District, Los Angeles ATTN: SPLED-B 300 North Los Angeles Street, P.O. Box 2711 Los Angeles, CA 90053
Telephone:	Mr. Aubrey E. Simons Small and Disadvantaged Business Utilization Specialist Area Code (213) 688-5676

21. EQUIPMENT OWNERSHIP AND OPERATING EXPENSE SCHEDULE. Whenever, a modification or equitable adjustment of contract price is required, the Contractor's cost proposals for equipment ownership and operating expenses shall be determined in accordance with the requirements of paragraph: EQUIPMENT OWNERSHIP AND OPERATING EXPENSE SCHEDULE, contained in the SPECIAL PROVISIONS section of the specifications. A copy of EP 1110-1-8 "Construction Equipment Ownership and Operating Expense Schedule" is available for review upon request.

22. DATA UNIVERSAL NUMBERING SYSTEM (DUNS) NUMBERING REPORTING (1980 DEC). In the block with its name and address, the offeror should supply the Data Universal Numbering System (DUNS) Number applicable to that name and address. The DUNS Number should be preceded by "DUNS:". If the offeror does not have a DUNS Number, it may obtain one from any Dun and Bradstreet branch office. No offeror should delay the submission of its offer pending receipt of its DUNS Number.

NOTICE OF REQUIREMENT FOR AFFIRMATIVE ACTION TO ENSURE EQUAL EMPLOYMENT OPPORTUNITY (1982 FEB)

1. The Offeror's or Bidder's attention is called to the "Equal Opportunity" and the "Affirmative Action Compliance Requirements for Construction" clauses set forth herein.

2. The goals for minority and female participation, expressed in percentage terms for the Contractor's aggregate work force in each trade on all construction work in the covered area, are as follows:

Goals for minority participation for each trade	Goals for female participation in each trade
25.0 to 30.0%	6.9%

These goals are applicable to all the Contractor's construction work (whether or not it is Federal or Federally assisted) performed in the covered area. If the Contractor performs construction work (whether or not it is Federal or Federally assisted) in a geographical area located outside the covered area, it shall apply the goals established for the geographical area where such work is actually performed. Goals are published periodically in the Federal Register in notice form, and such notices may be obtained from any Office of Federal Contract Compliance Programs (OFCCP) office. The Contractor's compliance with the Executive Order and the regulations in 41 CFR Part 60-4 shall be based on its implementation of the Equal Opportunity clause, specific affirmative action obligations required by the clause entitled "Affirmative Action Compliance Requirements for Construction" and its efforts to meet prescribed goals. The hours of minority and female employment and training must be substantially uniform throughout the length of the contract, and each trade, and the Contractor shall make a good faith effort to employ minorities and women evenly on each of its projects. The transfer of minority or female employees or trainees from Contractor to Contractor or from project to project for the sole purpose of meeting the Contractor's goals shall be a violation of the contract, the Executive Order and the regulations in 41 CFR Part 60-4. Compliance with the goals will be measured against the total work hours performed.

3. The Contractor shall provide written notification to the Director, OFCCP within 10 working days of award of any construction subcontract in excess of $10,000 at any tier for construction work under the contract resulting from this solicitation. The notification shall list the name, address and telephone number of the subcontractor; employer identification number of the subcontractor; estimated dollar amount of the subcontract; estimated starting and completion dates of the subcontract; and the geographical area in which the subcontract is to be performed.

4. As used in this Notice, and in the contract resulting from this Solicitation, of the "covered area" is: State of Arizona.

INSTRUCTIONS TO BIDDERS

(CONSTRUCTION CONTRACT)

1. Explanations to Bidders.—Any explanation desired by a bidder regarding the meaning or interpretation of the invitation for bids, drawings, specifications, etc., must be requested in writing and with sufficient time allowed for a reply to reach bidders before the submission of their bids. Any interpretation made will be in the form of an amendment of the invitation for bids, drawings, specifications, etc., and will be furnished to all prospective bidders. Its receipt by the bidder must be acknowledged in the space provided on the Bid Form (Standard Form 21) or by letter or telegram received before the time set for opening of bids. Oral explanations or instructions given before the award of the contract will not be binding.

2. Conditions Affecting the Work.—Bidders should visit the site and take such other steps as may be reasonably necessary to ascertain the nature and location of the work, and the general and local conditions which can affect the work or the cost thereof. Failure to do so will not relieve bidders from responsibility for estimating properly the difficulty or cost of successfully performing the work. The Government will assume no responsibility for any understanding or representations concerning conditions made by any of its officers or agents prior to the execution of the contract, unless included in the invitation for bids, the specifications, or related documents.

3. Bidder's Qualifications.—Before a bid is considered for award, the bidder may be requested by the Government to submit a statement regarding his previous experience in performing comparable work, his business and technical organization, financial resources, and plant available to be used in performing the work.

4. Bid Guarantee.—Where a bid guarantee is required by the invitation for bids, failure to furnish a bid guarantee in the proper form and amount, by the time set for opening of bids, may be cause for rejection of the bid.

A bid guarantee shall be in the form of a firm commitment, such as a bid bond, postal money order, certified check, cashier's check, irrevocable letter of credit or, in accordance with Treasury Department regulations, certain bonds or notes of the United States. Bid guarantees, other than bid bonds, will be returned (*a*) to unsuccessful bidders as soon as practicable after the opening of bids, and (*b*) to the successful bidder upon execution of such further contractual documents and bonds (including any necessary coinsurance or reinsurance agreements) as may be required by the bid as accepted.

If the successful bidder, upon acceptance of his bid by the Government within the period specified therein for acceptance (sixty days if no period is specified) fails to execute such further contractual documents, if any, and give such bond(s) (including any necessary coinsurance or reinsurance agreements) as may be required by the terms of the bid as accepted within the time specified (ten days if no period is specified) after receipt of the forms by him, his contract may be terminated for default. In such event he shall be liable for any cost of procuring the work which exceeds the amount of his bid, and the bid guarantee shall be available toward offsetting such difference.

5. Preparation of Bids.—(*a*) Bids shall be submitted on the forms furnished, or copies thereof, and must be manually signed. If erasures or other changes appear on the forms, each erasure or change must be initialed by the person signing the bid. Unless specifically authorized in the invitation for bids, telegraphic bids will not be considered.

(*b*) The bid form may provide for submission of a price or prices for one or more items, which may be lump sum bids, alternate prices, scheduled items resulting in a bid on a unit of construction or a combination thereof, etc. Where the bid form explicitly requires that the bidder bid on all items, failure to do so will disqualify the bid. When submission of a price on all items is not required, bidders should insert the words "no bid" in the space provided for any item on which no price is submitted.

(*c*) Unless called for, alternate bids will not be considered.

(*d*) Modification of bids already submitted will be considered if received at the office designated in the invitation for bids by the time set for opening of bids. Telegraphic modifications will be considered, but should not reveal the amount of the original or revised bid.

6. Submission of Bids.—Bids must be sealed, marked, and addressed as directed in the invitation for bids. Failure to do so may result in a premature opening of, or a failure to open, such bid.

7. Withdrawal of Bids.—Bids may be withdrawn by written or telegraphic request received from bidders prior to the time set for opening of bids. (See par. 8 regarding late withdrawals.)

STANDARD FORM 22 (Rev. 2–78)
Prescribed by GSA, FPR (41 CFR) 1–16.401

8. Late Bids, Modifications of Bids, or Withdrawal of Bids.—(*a*) Any bid received at the office designated in the soliciation after the exact time specified for receipt will not be considered unless it is received before award is made and either:

(1) It was sent by registered or certified mail not later than the fifth calendar day prior to the date specified for the receipt of bids (e.g., a bid submitted in response to a solicitation requiring receipt of bids by the 20th of the month must have been mailed by the 15th or earlier); or

(2) It was sent by mail (or telegram if authorized) and it is determined by the Government that the late receipt was due solely to mishandling by the Government after receipt at the Government installation.

(*b*) Any modification or withdrawal of a bid is subject to the same conditions as in (a), above. A bid may also be withdrawn in person by a bidder or his authorized representative, provided his identify is made known and he signs a receipt for the bid, but only if the withdrawal is made prior to the exact time set for receipt of bids.

(*c*) The only acceptable evidence to establish:

(1) The date of mailing of a late bid, modification, or withdrawal sent either by registered or certified mail is the U.S. Postal Service postmark on both the envelope or wrapper and on the original receipt from the U.S. Postal Service. If neither postmark shows a legible date, the bid, modification, or withdrawal shall be deemed to have been mailed late. (The term "postmark" means a printed, stamped, or otherwise placed impression (exclusive of a postage meter machine impression) that is readily identifiable without further action as having been supplied and affixed on the date of mailing by employees of the U.S. Postal Service. Therefore, offerors should request the postal clerk to place a hand cancellation bull's-eye "postmark" on both the receipt and the envelope or wrapper.)

(2) The time of receipt at the Government installation is the time-date stamp of such installation on the bid wrapper or other documentary evidence of receipt maintained by the installation.

(*d*) Notwithstanding (a) and (b) of this provision, a late modification of an otherwise successful bid which makes its terms more favorable to the Government will be considered at any time it is received and may be accepted.

NOTE: The term "telegram" includes mailgrams.

9. Public Opening of Bids.—Bids will be publicly opened at the time set for opening in the invitation for bids. Their content will be made public for the information of bidders and others interested, who may be present either in person or by representative.

10. Award of Contract.—(*a*) Award of contract will be made to that responsible bidder whose bid, conforming to the invitation for bids is most advantageous to the Government, price and other factors considered.

(*b*) The Government may, when in its interest, reject any or all bids or waive any informality in bids received.

(*c*) The Government may accept any item or combination of items of a bid, unless precluded by the invitation for bids or the bidder includes in his bid a restrictive limitation.

11. Contract and Bonds.—The bidder whose bid is accepted will, within the time established in the bid, enter into a written contract with the Government and, if required, furnish performance and payment bonds on Government standard forms in the amounts indicated in the invitation for bids or the specifications.

☆U.S. GOVERNMENT PRINTING OFFICE: 1978-261-647/3634

Paragraph 12 below replaces paragraphs 7 and 8 of Standard Form 22 which have been deleted.

12. LATE BIDS, MODIFICATIONS OF BIDS OR WITHDRAWAL OF BIDS (1979 MAR)

(a) Any bid received at the office designated in the solicitation after the exact time specified for receipt will not be considered unless it is received before award is made and either:

(i) it was sent by registered or certified mail not later than the fifth calendar day prior to the date specified for the receipt of bids (e.g., a bid submitted in response to a solicitation requiring receipt of bids by the 20th of the month must have been mailed by the 15th or earlier); or,

(ii) it was sent by mail (or telegram if authorized) and it is determined by the Government that the late receipt was due solely to mishandling by the Government after receipt at the Government installation.

(b) Any modification or withdrawal of bid is subject to the same conditions as in (a) above except that withdrawal of bids by telegram is authorized. A bid may also be withdrawn in person by a bidder or his authorized representative, provided his identity is made known and he signs a receipt for the bid, but only if the withdrawal is made prior to the exact time set for receipt of bids.

(c) The only acceptable evidence to establish:

(i) the date of mailing of a late bid, modification or withdrawal sent either by registered or certified mail is the U.S. or Canadian Postal Service postmark on the wrapper or on the original receipt from the U.S. or Canadian Postal Service. If neither postmark shows a legible date, the bid, modification or withdrawal shall be deemed to have been mailed late. (The term "postmark" means a printed, stamped, or otherwise placed impression (exclusive of a postage meter machine impression) that is readily identifiable without further action as having been supplied and affixed on the date of mailing by employees of the U.S. or Canadian Postal Service. Therefore, offerors should request the postal clerk to place a hand cancellation bull's eye "postmark" on both the receipt and the envelope or wrapper.)

(ii) the time of receipt at the Government installation is the time/date stamp of such installation on the bid wrapper or other documentary evidence of receipt maintained by the installation.

(d) Notwithstanding the above, a late modification of an otherwise successful bid which makes its terms more favorable to the Government will be considered at any time it is received and may be accepted.

NOTE: The term "telegram" includes mailgrams.

STANDARD FORM 21
DECEMBER 1965 EDITION
GENERAL SERVICES ADMINISTRATION
FED. PROC. REG. (41 CFR) 1-16.401

BID FORM
(CONSTRUCTION CONTRACT)

REFERENCE
DACW09-82-B-0018

Read the Instructions to Bidders (Standard Form 22)
This form to be submitted in duplicate

DATE OF INVITATION
82 MAY 18

NAME AND LOCATION OF PROJECT
INDIAN BEND WASH,
SIDE CHANNELS SYTEM,
AT MARICOPA COUNTY,
GILA RIVER BASIN, ARIZONA

NAME OF BIDDER *(Type or print)*

(Date)

TO: U. S. ARMY ENGINEER DISTRICT, LOS ANGELES
P. O. Box 2711
Los Angeles, California 90053

In compliance with the above-dated invitation for bids, the undersigned hereby proposes to perform all work for Indian Bend Wash Side Channel System at Maricopa County, Gila River Basin, Arizona.

in strict accordance with the General Provisions, specifications, schedules, drawings, and conditions, for the amounts set forth in the attached Bidding Schedule.

21-108

(Continue on other side)

EQUAL EMPLOYMENT COMPLIANCE (1978 SEP) By submission of this offer, the offeror represents that, to the best of his knowledge and belief, except as noted below, up to the date of this offer no written notice such as a show cause letter, a letter indicating probable cause, or any other written notification citing specific deficiencies, has been received by the offeror from any Federal Government agency or representative thereof that the offeror or any of its divisions or affiliates or known first-tier subcontractors is in violation of any of the provisions of Executive Order 11246 of September 24, 1965, as amended, or rules and regulations of the Secretary of Labor (41 CFR, Chapter 60) and specifically as to not having an acceptable affirmative action compliance program or being in noncompliance with any other aspect of the Equal Employment Opportunity Program. It is further agreed that should there be any change (i) in the offeror's status or circumstances between this date and the date of expiration of this offer or any extension thereof, or (ii) during any contract or extension thereof resulting from this solicitation, the Contracting Office will be notified promptly.

The undersigned agrees that, upon written acceptance of this bid, mailed or otherwise furnished within 30 calendar days [redacted] after the date of opening of bids, he will within 5 calendar days (unless a longer period is allowed) after receipt of the prescribed forms, execute Standard Form 23, Construction Contract, and give performance and payment bonds on Government standard forms with good and sufficient surety. (See paragraph No. 19 of the Invitation for Bids).

The undersigned agrees, if awarded the contract, to commence and to complete the work in accordance with the stipulations of Paragraph 1. of the SPECIAL PROVISIONS.

RECEIPT OF AMENDMENTS: *The undersigned acknowledges receipt of the following amendments of the invitation for bids, drawings, and/or specifications, etc. (Give number and date of each):*

The representations and certifications on the accompanying STANDARD FORM 19-B are made a part of this bid.

ENCLOSED IS BID GUARANTEE, CONSISTING OF	IN THE AMOUNT OF

NAME OF BIDDER (*Type or print*)	FULL NAME OF ALL PARTNERS (*Type or print*)
BUSINESS ADDRESS (*Type or print*) (*Include "ZIP Code"*)	
BY (*Signature in ink. Type or print name under signature*)	
TITLE (*Type or print*)	

DIRECTIONS FOR SUBMITTING BIDS: *Envelopes containing bids, guarantee, etc., must be sealed, marked, and addressed as follows:*

Envelopes shall be marked in the upper left hand corner
Bid Under Reference No.

DACW09-82-B-0018

Envelopes shall be addressed:
U.S. ARMY ENGINEER DISTRICT
PHOENIX RESIDENT OFFICE
2721 North Central Avenue
Phoenix, Arizona 85004

CAUTION—Bids should not be qualified by exceptions to the bidding conditions.

U.S. GOVERNMENT PRINTING OFFICE 1966 O—205-147—(15-F)

BIDDING SCHEDULE

Item No.	Description	Estimated Quantity	Unit	Unit Price	Estimated Amount
1.	DIVERSION AND CONTROL OF WATER	1	Job	L.S.	$ _____
1A.	CLEARING SITE AND REMOVING OBSTRUCTIONS	1	Job	L.S.	_____
2.	EXCAVATION, CHANNEL	25,900	Cu. Yd.	_____	_____
3.	COMPACTED FILL, CHANNEL	3,530	Cu. Yd.	_____	_____
4.	CONCRETE, CHANNEL WALLS	325	Cu. Yd.	_____	_____
5.	CONCRETE, CHANNEL FOOTINGS	110	Cu. Yd.	_____	_____
6.	CONCRETE, CHANNEL INVERT	210	Cu. Yd.	_____	_____
7.	CONCRETE, TRAPEZOIDAL CHANNEL	210	Cu. Yd.	_____	_____
8.	PORTLAND CEMENT	4820	Cwt.	_____	_____
9.	STEEL REINFORCEMENT	56,800	Lbs.	_____	_____
10.	WELDED WIRE FABRIC	15,200	S.F.	_____	_____
11.	STONE, TYPE III	1390	Tons	_____	_____
12.	FILTER MATERIAL	1150	Tons	_____	_____
13.	FENCING	5200	L.F.	_____	_____
14.	STREET REMOVAL AND REPLACEMENT	1	Job	L.S	_____
15.	OUTLET STRUCTURE, REACH 1	1	Job	L.S.	_____
16.	OUTLET STRUCTURE, McDONALD DRIVE	1	Job	L.S.	_____
17.	INLET STRUCTURE, REACH 3	1	Job	L.S.	_____
18.	OUTLET STRUCTURE, CHAPARRAL ROAD	1	Job	L.S.	_____
19.	REINFORCED CONCRETE BOX, STA. 100+20 to STA. 111+80	1	Job	L.S.	_____

BIDDING SCHEDULE (Continued)

Item No.	Description	Estimated Quantity	Unit	Unit Price	Estimated Amount
20.	DROP INLET STA. 104+30	1	Job	L.S.	$ _____
21.	DROP INLET 1088+03	1	Job	L.S.	_____
22.	TRANSITION STRUCTURE STA. 111+80 to STA. 112+00	1	Job	L.S.	_____
23.	REINFORCED CONCRETE BOX STA. 112+00 to STA. 116+75	1	Job	L.S.	_____
23A.	REINFORCED CONCRETE BOX WITH CANAL LINING STA. 116+75 to STA. 118+16.17	1	Job	L.S.	_____
24.	JUNCTION STRUCTURE, REACH 2 COLLECTOR CHANNEL AND McDONALD SIDE CHANNEL	1	Job	L.S.	_____
25.	REINFORCED CONCRETE BOX STA. 120+10.83 to STA. 123+00.17	1	Job	L.S.	_____
26.	DROP INLET STA. 121+10	1	Job	L.S.	_____
27.	DROP INLET STA. 123+11	1	Job	L.S.	_____
28.	REINFORCED CONCRETE BOX STA. 210+20.5 to STA. 212+50	1	Job	L.S.	_____
29.	TRANSITION STRUCTURE STA. 212+50 to STA. 212+70	1	Job	L.S.	_____
30.	REINFORCED CONCRETE BOX STA. 212+70 to STA. 217+55	1	Job	L.S.	_____
31.	TRANSITION STRUCTURE STA. 217+55 to STA. 217+95	1	Job	L.S.	_____
32.	CONCRETE PIPE, 96" STA. 217+95 to STA. 239_63	1	Job	L.S.	_____
32A.	CONCRETE PIPE, 96" WITH CANAL LINING STA. 239+63 to STA. 241+45	1	Job	L.S.	_____
33.	JUNCTION STRUCTURE, REACH 3 COLLECTOR CHANNEL AND CHAPARRAL SIDE CHANNEL	1	Job	L.S.	_____

BIDDING SCHEDULE (Continued)

Item No.	Description	Estimated Quantity	Unit	Unit Price	Estimated Amount
34.	CONCRETE PIPE, 72" STA. 250+16 to STA. 256+70	1	Job	L.S.	$ _____
35.	DROP INLET STA. 252+00	1	Job	L.S.	_____
36.	TRANSITION STRUCTURE STA. 256+70 TO STA. 256+85	1	Job	L.S.	_____
37.	TRANSITION STRUCTURE STA. 264+05 TO STA. 264+20	1	Job	L.S.	_____
38.	TRANSITION STRUCTURE STA. 266+00 TO STA. 266+10	1	Job	L.S.	_____
39.	CONCRETE PIPE 144" STA. 358+33 to STA. 359+85 WITH CANAL LINING	1	Job	L.S.	_____
40.	MANHOLE, STANDARD	6	Each	_____	_____
41.	MANHOLE, PRESSURE	4	Each	_____	_____
42.	LANDSCAPING	1	Job	L.S.	_____
43.	NATIVE SEEDING	1	Job	L.S.	_____
44.	REPLACE IRRIGATION SYSTEM	1	Job	L.S.	_____
45.	SEWER RELOCATION SIDE CHANNEL - McDONALD DR.	1	Job	L.S.	_____
45A.	WATERLINE RELOCATION SIDE CHANNEL - McDONALD DR.	1	Job	L.S.	_____
46.	SEWER RELOCATION COLLECTOR CHANNEL - REACH 3	1	Job	L.S.	_____
47.	SEWER RELOCATION SIDE CHANNEL - CHAPARRAL RD.	1	Job	L.S.	_____
47A.	WATERLINE RELOCATION SIDE CHANNEL - CHAPARRAL RD.	1	Job	L.S.	_____
48.	AGGREGATE BASE	730	Tons	_____	_____

BIDDING SCHEDULE (Continued)

Item No.	Description	Estimated Quantity	Unit	Unit Price	Estimated Amount
49.	ASPHALT CONCRETE	310	Tons	_____	$ _____
50.	SIDE DRAIN, STA. 218+25	1	Job	L.S.	_____
51.	SIDE DRAIN, STA. 260+25	1	Job	L.S.	_____
				TOTAL ESTIMATED AMOUNT	$ _____

NOTE: All extensions of the unit prices shown will be subject to verification by the Government. In case of variation between the unit price and the extension, the unit price will be considered to be the bid.

If a bid or modification to a bid based on unit prices is submitted which provides for a lump sum adjustment to the total estimated cost, the application of the lump sum adjustment to each unit price in the bidding schedule must be stated. If it is not stated, the bidder agrees that the lump sum adjustment shall be applied on a pro rata basis to every unit price in the bidding schedule.

Bids shall be submitted on all items of the Bidding Schedule.

Amounts and prices shall be indicated in either figures or words, not both.

REPRESENTATIONS AND CERTIFICATIONS

(Construction and Architect-Engineer Contract)

(For use with Standard Forms 19, 21 and 252)

REFERENCE *(Enter same No.(s) as on SF 19, 21 and 252)*

NAME AND ADDRESS OF BIDDER *(No., Street, City, State, and ZIP Code)*

DATE OF BID

In negotiated procurements, "bid" and "bidder" shall be construed to mean "offer" and "offeror."

The bidder makes the following representations and certifications as a part of the bid identified above. *(Check appropriate boxes.)*

1. SMALL BUSINESS

He ☐ is, ☐ is not, a small business concern. (A small business concern for the purpose of Government procurement is a concern, including its affiliates, which is independently owned and operated, is not dominant in the field of operations in which it is bidding on Government contracts, and can further qualify under the criteria concerning number of employees, average annual receipts, or other criteria as prescribed by the Small Business Administration. For additional information see governing regulations of the Small Business Administration (13 CFR Part 121)).

2. MINORITY BUSINESS ENTERPRISE

He ☐ is, ☐ is not a minority business enterprise. A minority business enterprise is defined as a "business, at least 50 percent of which is owned by minority group members or, in case of publicly owned businesses, at least 51 percent of the stock of which is owned by minority group members." For the purpose of this definition, minority group members are Negroes, Spanish-speaking American persons, American-Orientals, American-Indians, American-Eskimos, and American-Aleuts."

3. CONTINGENT FEE

(a) He ☐ has, ☐ has not, employed or retained any company or person (other than a full-time bona fide employee working solely for the bidder) to solicit or secure this contract, and *(b)* he ☐ has, ☐ has not, paid or agreed to pay any company or person (other than a full-time bona fide employee working solely for the bidder) any fee, commission, percentage or brokerage fee, contingent upon or resulting from the award of this contract; and agrees to furnish information relating to *(a)* and *(b)* above as requested by the Contracting Officer. *(For interpretation of the representation, including the term "bona fide employee," see Code of Federal Regulations, Title 41, Subpart 1-1.5.)*

4. TYPE OF ORGANIZATION

He operates as an ☐ individual, ☐ partnership, ☐ joint venture, ☐ corporation, incorporated in State of .....

5. INDEPENDENT PRICE DETERMINATION

(a) By submission of this bid, each bidder certifies, and in the case of a joint bid each party thereto certifies as to his own organization, that in connection with this procurement:

(1) The prices in this bid have been arrived at independently, without consultation, communication, or agreement, for the purpose of restricting competition, as to any matter relating to such prices with any other bidder or with any competitor;

(2) Unless otherwise required by law, the prices which have been quoted in this bid have not been knowingly disclosed by the bidder and will not knowingly be disclosed by the bidder prior to opening, in the case of a bid, or prior to award, in the case of a proposal, directly or indirectly to any other bidder or to any competitor; and

(3) No attempt has been made or will be made by the bidder to induce any other person or firm to submit or not to submit a bid for the purpose of restricting competition.

(b) Each person signing this bid certifies that:

(1) He is the person in the bidder's organization responsible within that organization for the decision as to the prices being bid herein and that he has not participated, and will not participate, in any action contrary to *(a)*(1) through *(a)*(3) above; or

(2) (i) He is not the person in the bidder's organization responsible within that organization for the decision as to the prices being bid herein but that he has been authorized in writing to act as agent for the persons responsible for such decision in certifying that such persons have not participated, and will not participate, in any action contrary to *(a)*(1) through *(a)* (3) above, and as their agent does hereby so certify; and (ii) he has not participated, and will not participate, in any action contrary to *(a)*(1) through *(a)*(3) above.

(c) This certification is not applicable to a foreign bidder submitting a bid for a contract which requires performance or delivery outside the United States, its possessions, and Puerto Rico.

(d) A bid will not be considered for award where *(a)*(1), *(a)*(3), or *(b)* above, has been deleted or modified. Where *(a)*(2) above, has been deleted or modified, the bid will not be considered for award unless the bidder furnishes with the bid a signed statement which sets forth in detail the circumstances of the disclosure and the head of the agency, or his designee, determines that such disclosure was not made for the purpose of restricting competition.

NOTE.—Bids must set forth full, accurate, and complete information as required by this invitation for bids (including attachments). The penalty for making false statements in bids is prescribed in 18 U.S.C. 1001.

STANDARD FORM 19-B, JUNE 1976 EDITION
GENERAL SERVICES ADMINISTRATION
FED. PROC. REG. (41 CFR) 1-16.401 AND 1-16.701

THE FOLLOWING NEED BE CHECKED ONLY IF BID EXCEEDS $10,000 IN AMOUNT.

6. EQUAL OPPORTUNITY

He ☐ has, ☐ has not, participated in a previous contract or subcontract subject to the Equal Opportunity Clause herein, the clause originally contained in Section 301 of Executive Order No. 10925, or the clause contained in Section 201 of Executive Order No. 11114; he ☐ has, ☐ has not, filed all required compliance reports; and representations indicating submission of required compliance reports, signed by proposed subcontractors, will be obtained prior to subcontract awards.

(The above representations need not be submitted in connection with contracts or subcontracts which are exempt from the equal opportunity clause.)

7. PARENT COMPANY AND EMPLOYER IDENTIFICATION NUMBER

Each bidder shall furnish the following information by filling in the appropriate blocks:

(a) Is the bidder owned or controlled by a parent company as described below? ☐ Yes ☐ No. *(For the purpose of this bid, a parent company is defined as one which either owns or controls the activities and basic business policies of the bidder. To own another company means the parent company must own at least a majority (more than 50 percent) of the voting rights in that company. To control another company, such ownership is not required; if another company is able to formulate, determine, or veto basic business policy decisions of the bidder, such other company is considered the parent company of the bidder. This control may be exercised through the use of dominant minority voting rights, use of proxy voting, contractual arrangements, or otherwise.)*

(b) If the answer to *(a)* above is "Yes," bidder shall insert in the space below the name and main office address of the parent company.

NAME OF PARENT COMPANY	MAIN OFFICE ADDRESS *(No., Street, City, State, and ZIP Code)*

(c) Bidder shall insert in the applicable space below, if he has no parent company, his own Employer's Identification Number (E.I. No.) *(Federal Social Security Number used on Employer's Quarterly Federal Tax Return, U.S. Treasury Department Form 941)*, or, if he has a parent company, the E.I. No. of his parent company.

EMPLOYER IDENTIFICATION NUMBER OF ➤	PARENT COMPANY	BIDDER

8. CERTIFICATION OF NONSEGREGATED FACILITIES

(Applicable to (1) contracts, (2) subcontracts, and (3) agreements with applicants who are themselves performing federally assisted construction contracts, exceeding $10,000 which are not exempt from the provisions of the Equal Opportunity clause.)

By the submission of this bid, the bidder, offeror, applicant, or subcontractor certifies that he does not maintain or provide for his employees any segregated facilities at any of his establishments, and that he does not permit his employees to perform their services at any location, under his control, where segregated facilities are maintained. He certifies further that he will not maintain or provide for his employees any segregated facilities at any of his establishments, and that he will not permit his employees to perform their services at any location, under his control, where segregated facilities are maintained. The bidder, offeror, applicant, or subcontractor agrees that a breach of this certification is a violation of the Equal Opportunity clause in this contract. As used in this certification, the term "segregated facilities" means any waiting rooms, work areas, rest rooms and wash rooms, restaurants and other eating areas, time clocks, locker rooms and other storage or dressing areas, parking lots, drinking fountains, recreation or entertainment areas, transportation, and housing facilities provided for employees which are segregated by explicit directive or are in fact segregated on the basis of race, color, religion, or national origin, because of habit, local custom, or otherwise. He further agrees that (except where he has obtained identical certifications from proposed subcontractors for specific time periods) he will obtain identical certificatons from proposed subcontractors prior to the award of subcontractors exceeding $10,000 which are not exempt from the provisions of the Equal Opportunity clause; that he will retain such certifications in his files; and that he will forward the following notice to such proposed subcontractors (except where the proposed subcontractors have submitted identical certifications for specific time periods):

NOTICE TO PROSPECTIVE SUBCONTRACTORS OF REQUIREMENT FOR CERTIFICATIONS OF NONSEGREGATED FACILITIES

A Certification of Nonsegregated Facilities must be submitted prior to the award of a subcontract exceeding $10,000 which is not exempt from the provisions of the Equal Opportunity clause. The certification may be submitted either for each subcontract or for all subcontracts during a period (i.e., quarterly, semiannually, or annually).

NOTE: The penalty for making false statements in offers is prescribed in 18 U.S.C. 1001.

9. CLEAN AIR AND WATER

(Applicable if the bid or offer exceeds $100,000, or the contracting officer has determined that orders under an indefinite quantity contract in any year will exceed $100,000, or a facility to be used has been the subject of a conviction under the Clean Air Act (42 U.S.C. 1857c-8(c)(1)) or the Federal Water Pollution Control Act (33 U.S.C. 1319(c)) and is listed by EPA, or is not otherwise exempt.)

The bidder or offeror certifies as follows:

(a) Any facility to be utilized in the performance of this proposed contract has ☐, has not ☐, been listed on the Environmental Protection Agency List of Violating Facilities.

(b) He will promptly notify the contracting officer, prior to award, of the receipt of any communication from the Director, Office of Federal Activities, Environmental Protection Agency, indicating that any facility which he proposes to use for the performance of the contract is under consideration to be listed on the EPA List of Violating Facilities.

(c) He will include substantially this certification, including this paragraph (c), in every nonexempt subcontract.

☆ U.S. GOVERNMENT PRINTING OFFICE : 1975—O-580-456 #18-1

Alterations to Standard Form 19-B, REPRESENTATIONS AND CERTIFICATIONS

Delete Item No. 2, MINORITY BUSINESS ENTERPRISE and insert the following:

2. SMALL DISADVANTAGED BUSINESS CONCERN (1980 AUG).

(a) The offeror represents that he is, is not, a small business concern owned and controlled by socially and economically disadvantaged individuals. The term "small business concern" means a small business as defined pursuant to Section 3 of the Small Business Act and relevant regulations promulgated pursuant thereto. The term "small business concern owned and controlled by socially and economically disadvantaged individuals" means a small business concern-

(1) that is at least 51 per centum owned by one or more socially and economically disadvantaged individuals; or, in the case of any publicly owned business, at least 51 per centum of the stock of which is owned by one or more socially and economically disadvantaged individuals; and

(2) whose management and daily business operations are controlled by one or more such individuals.

(b) The offeror shall presume that socially and economically disadvantaged individuals include Black Americans, Hispanic Americans, Native Americans (i.e. American Indians, Eskimos, Aleuts, and Native Hawaiians), Asian-Pacific Americans (i.e. U.S. citizens whose origins are from Japan, China, the Philippines, Vietnam, Korea, Samoa, Guam, the U.S. Trust Territories of the Pacific, Northern Marianas, Laos, Cambodia, and Taiwan), and other minorities or any other individuals found to be disadvantaged by the Small Business Administration pursuant to Section 8(a) of the Small Business Act.

Delete Item No. 3, CONTINGENT FEE, and insert the following:

3. CONTINGENT FEE (1974 APR).

The Offeror/Quoter represents and certifies as part of his proposal/quotation that: (Check all applicable boxes or blocks).

(a) He has, has not, employed or retained any company or person (other than a full time, bona fide employee working solely for the offeror/quoter) to solicit or secure this contract, and (b) he has, has not, paid or agreed to pay any company or person (other than a full-time bona fide employee working solely for the offeror/quoter) any fee, commission, percentage, or brokerage fee contingent upon or resulting from the award of this contract; and agrees to furnish information relating to (a) and (b) above, as requested by the Contracting Officer. (For interpretation of the representation, including the term "bona fide employee", see Code of Federal Regulations. Title 41, Subpart 1-1.5.)

If the offeror/quoter, by checking the appropriate box provided therefor, has represented that he has employed or retained a company or person (other than a full-time bona fide employee working solely for the offeror/quoter) to solicit or secure this contract, or that he has paid or agreed to pay any fee, commission, percentage, or brokerage fee to any company or person contingent upon or resulting from the award of this contract, he shall furnish, in duplicate, a complete Standard Form 119, Contractor's Statement of Contingent or Other Fees. If offeror/quoter has previously furnished a completed Standard Form 119 to the office issuing this solicitation, he may accompany his proposal/quotation with a signed statement (a) indicating when such completed form was previously furnished, (b) identifying by number the previous solicitation or contract, if any, in connection with which such form was submitted, and (c) representing that the statement in such form is applicable to this proposal/quotation.

Standard Form 19-B, REPRESENTATIONS AND CERTIFICATIONS (continued)

The bidder makes the following representations and certifications as a part of the bid identified hereinbefore. (Check appropriate boxes).

10. WOMEN-OWNED BUSINESS (1981 JUL).

The offeror represents that the firm submitting this offer is, is not, a women-owned business. A **women-owned business** is a business that (i) is at least 51 percent owned by a woman or women who are U.S. citizens and who also control and operate the business; and (ii) is a small business as defined pursuant to Section 3 of the Small Business Act and relevant regulations promulgated pursuant thereto. **Control** in this context means exercising the power to make policy decisions. **Operate** in this context means being actively involved in the day-to-day management.

11. PERCENT FOREIGN CONTENT (1978 SEP).

Approximately _____ percent of the proposed contract price represents foreign content or effort.

12. HANDICAPPED ORGANIZATIONS (1981 SEP).

The Offeror certifies that it is is not an organization eligible for assistance under section 7(h) of the Small Business Act (15 USC 636). An Offeror certifying in the affirmative is eligible to participate in any resultant contracts hereunder or any part thereof as if he were a small business concern as elsewhere defined in the solicitation. An organization to be eligible under section 7(h) of the Small Business Act must be one (i) organized under the laws of the United States or any state; (ii) operated in the interest of handicapped individuals; (iii) the net income of which does not inure in whole or part to the benefit of any shareholder or other individual; (iv) that complies with any applicable occupational health and safety standard prescribed by the Secretary of Labor; (v) that, during the fiscal year in which it bids upon a set-aside, employs handicapped individuals for not less than 75 per cent of the man-hours required for the production or provision of commodities or services; and (vi) that can qualify under the additional criteria prescribed in Section 118.11, SBA Rules and Regulations, 13 CFR 118.11. For purposes of this clause, the term "handicapped individual" means a person who has a physical, mental, or emotional impairment, defect, ailment, disease, or disability of a permanent nature which in any way limits the selection of any type of employment for which the person would otherwise be qualified or qualifiable.

STANDARD FORM 23
JANUARY 1961 EDITION
GENERAL SERVICES ADMINISTRATION
FED PROC REG (41 CFR) 1-16 401

Rev. LAD Nov. 70

CONSTRUCTION CONTRACT

(See instructions on reverse)

CONTRACT NO

DATE OF CONTRACT

NAME AND ADDRESS OF CONTRACTOR

CHECK APPROPRIATE BOX

- [ ] Individual
- [ ] Partnership
- [ ] Joint Venture
- [ ] Corporation, incorporated in the State of _____

DEPARTMENT OR AGENCY

CONTRACT FOR *(Work to be performed)*

PLACE

CONTRACT PRICE *(Express in words and figures)*

ADMINISTRATIVE DATA *(Optional)*

The United States of America (hereinafter called the Government), represented by the Contracting Officer executing this contract, and the individual, partnership, joint venture, or corporation named above (hereinafter called the Contractor), mutually agree to perform this contract in strict accordance with the General Provisions, and the following designated specifications, schedules, drawings, and conditions:

WORK SHALL BE STARTED	WORK SHALL BE COMPLETED

Alterations. The following alterations were made in this contract before it was signed by the parties hereto:

In witness whereof, the parties hereto have executed this contract as of the date entered on the first page hereof.

THE UNITED STATES OF AMERICA	CONTRACTOR
By _____	_____ (Name of Contractor)
_____ (Official title)	By _____ (Signature)
	_____ (Title)

INSTRUCTIONS

1. The full name and business address of the Contractor must be inserted in the space provided on the face of the form. The Contractor shall sign in the space provided above with his usual signature and typewrite or print his name under the signature.

2. An officer of a corporation, a member of a partnership, or an agent signing for the Contractor shall place his signature and title after the word "By" under the name of the Contractor. A contract executed by an attorney or agent on behalf of the Contractor shall be accompanied by two authenticated copies of his power of attorney or other evidence of his authority to act on behalf of the Contractor.

U.S. GOVERNMENT PRINTING OFFICE: 1960 OF—572728—46

INDEX OF GENERAL PROVISIONS
(Construction Contract)
Edition of 29 July 1980

1.1 Definitions

1.2 Definitions

2. Specifications and Drawings

3. Changes

4. Differing Site Conditions

5. Termination for Default-Damages for Delay-Time Extensions

6. Disputes

7. Payments to Contractor

8. Assignment of Claims

9. Material and Workmanship

10. Inspection and Acceptance

11. Superintendence by Contractor

12. Permits and Responsibilities

13. Conditions Affecting the Work

14. Other Contracts

15. Shop Drawings

16. Use and Possession Prior to Completion

17. Suspension of Work

18. Termination for Convenience of the Government-Construction

19. Pricing of Adjustments

20. Patent Indemnity

21. Additional Bond Security

22. Examination of Records by Comptroller General

23. Buy American Act

24. Equal Opportunity

25. Covenant Against Contingent Fees

26. Officials Not to Benefit

27. Convict Labor

28. Utilization of Small Business and Small Disadvantaged Business Concerns

29. Federal, State and Local Taxes

30. Davis-Bacon Act

31. Contract Work Hours and Safety Standards Act-Overtime Compensation

32. Apprentices and Trainees

33. Payrolls and Basic Records

34. Compliance with Copeland Regulations

35. Withholding of Funds

36. Subcontracts

37. Contract Termination-Debarment

38. Disputes Concerning Labor Standards

39. Contractor Inspection System

40. Gratuities

41. Subcontracting Plan for Small Business and Small Disadvantaged Business Concerns (Formally Advertised)

42. Notice and Assistance Regarding Patent and Copyright Infringement

43. Authorization and Consent

44. Composition of Contractor

45. Site Investigation

46. Protection of Existing Vegetation, Structures, Utilities, and Improvements

47. Operations and Storage Areas

48. Modification Proposals-Price Breakdown

49. Subcontractors

50. Cleaning Up

51. Additional Definitions

52. Accident Prevention

53. Government Inspectors

54. Rights in Shop Drawings

55. Affirmative Action for Disabled Veterans and Veterans of the Vietnam Era

56. Value Engineering Incentive--Construction

57. Affirmative Action for Handicapped Workers

58. Clean Air and Water

59. Notice to the Government of Labor Disputes

60. Contract Prices-Bidding Schedule

61. Priorities, Allocations, and Allotments

62. Price Reduction for Defective Cost or Pricing Data-Price Adjustments

63. Interest

64. Audit by Department of Defense

65. Subcontractor Cost or Pricing Data-Price Adjustments

66.1 Government-Furnished Property (Short Form)

66.2 Government Property (Fixed Price)

67. Variations in Estimated Quantities

68. Progress Charts and Requirements for Overtime Work

69. Certification of Requests for Adjustment or Relief Exceeding $100,000

70. Affirmative Action Compliance Requirements for Construction

71. Utilization of Women-Owned Business Concerns (Over $10,000)

72. Environmental Litigation

GENERAL PROVISIONS
(Construction Contract)
(Edition of 29 July 1980)
Issued By: Department of the Army, Corps of Engineers

(General Provisions 1 through 29 and 30 through 38 are those prescribed by the General Services Administration in Standard Form 23-A, April 1975 edition and Standard Form 19-A, January 1979 edition, respectively, as amended pursuant to the latest revisions of the Defense Acquisition Regulation and Engineer Contract Instructions, ER 1180-1-1.)

1.1 DEFINITIONS

(The following clause is applicable if the procurement instrument identification number is prefixed by the letters "DACW")

(a) The term "head of the agency" or "Secretary" as used herein means the Secretary of the Army; and the term "his duly authorized representative" means the Chief of Engineers, Department of the Army, or an individual or board designated by him.

(b) The term "Contracting Officer" as used herein means the person executing this contract on behalf of the Government and includes a duly appointed successor or authorized representative. (DAR 7-602.1 & ECI 7-070)

1.2 DEFINITIONS (1964 JUN)

(The following clause is applicable if the procurement instrument identification number is prefixed by the letters "DACA")

(a) The term "head of the agency" or "Secretary" as used herein means the Secretary, the Under Secretary, any Assistant Secretary, or any other head or assistant head of the executive or military department or other Federal agency; and the term "his duly authorized representative" means any person or persons or board (other than the Contracting Officer) authorized to act for the head of the agency or the Secretary.

(b) The term "Contracting Officer" as used herein means the person executing this contract on behalf of the Government and includes a duly appointed successor or authorized representative. (DAR 7-602.1)

2. SPECIFICATIONS AND DRAWINGS (1964 JUN)

The Contractor shall keep on the work a copy of the drawings and specifications and shall at all times give the Contracting Officer access thereto. Anything mentioned in the specifications and not shown on the drawings, or shown on the drawings and not mentioned in the specifications, shall be of like effect as if shown or mentioned in both. In case of difference between drawings and specifications, the specifications shall govern. In case of discrepancy either in the figures, in the drawings, or in the specifications, the matter shall be promptly submitted to the Contracting Officer, who shall promptly make a determination in writing. Any adjustment by the Contractor without such a determination shall be at his own risk and expense. The Contracting Officer shall furnish from time to time such detail drawings and other information as he may consider necessary, unless otherwise provided. (DAR 7-602.2)

3. CHANGES (1968 FEB)

(a) The Contracting Officer may, at any time, without notice to the sureties, by written order designated or indicated to be a change order, make any change in the work within the general scope of the contract, including but not limited to changes:

(i) in the specifications (including drawings and designs);
(ii) in the method or manner of performance of the work;
(iii) in the Government-furnished facilities, equipment, materials, services, or site; or
(iv) directing acceleration in the performance of the work.

(b) Any other written order or an oral order (which terms as used in this paragraph (b) shall include direction, instruction, interpretation or determination) from the Contracting Officer, which causes any such change, shall be treated as a change order under this clause, provided, that the Contractor gives the Contracting Officer written notice stating the date, circumstances, and source of the order and that the Contractor regards the order as a change order.

(c) Except as herein provided, no order, statement, or conduct of the Contracting Officer shall be treated as a change under this clause or entitle the Contractor to an equitable adjustment hereunder.

(d) If any change under this clause causes an increase or decrease in the Contractor's cost of, or the time required for, the performance of any part of the work under this contract, whether or not changed by any order, an equitable adjustment shall be made and the contract modified in writing accordingly: Provided however, That except for claims based on defective specifications, no claim for any change under (b) above shall be allowed for any costs incurred more than 20 days before the Contractor gives written notice as therein required: And provided further, That in the case of defective specifications for which the Government is responsible, the equitable adjustment shall include any increased cost reasonably incurred by the Contractor in attempting to comply with such defective specifications.

(e) If the Contractor intends to assert a claim for an equitable adjustment under this clause, he must, within 30 days after receipt of a written change order under (a) above or the furnishing of a written notice under (b) above, submit to the Contracting Officer a written statement setting forth the general nature and monetary extent of such claim, unless this period is extended by the Government. The statement of claim hereunder may be included in the notice under (b) above.

(f) No claim by the Contractor for an equitable adjustment hereunder shall be allowed if asserted after final payment under this contract. (DAR 7-602.3)

4. DIFFERING SITE CONDITIONS (1968 FEB)

(a) The Contractor shall promptly, and before such conditions are disturbed, notify the Contracting Officer in writing of: (1) subsurface or latent physical conditions at the site differing materially from those indicated in this contract, or (2) unknown physical conditions at the site, of an unusual nature, differing materially from those ordinarily encountered and generally recognized as inhering in work of the character provided for in this contract. The Contracting Officer shall promptly investigate the conditions, and if he finds that such conditions do materially so differ and cause an increase or decrease in the Contractor's cost of, or the time required for, performance of any part of the work under this contract, whether or not changed as a result of such conditions, an equitable adjustment shall be made and the contract modified in writing accordingly.

(b) No claim of the Contractor under this clause shall be allowed unless the Contractor has given the notice required in (a) above; provided, however, the time prescribed therefor may be extended by the Government.

(c) No claim by the Contractor for an equitable adjustment hereunder

shall be allowed if asserted after final payment under this contract. (DAR 7-602.4)

5. TERMINATION FOR DEFAULT - DAMAGES FOR DELAY - TIME EXTENSIONS (1969 AUG)

(a) If the Contractor refuses or fails to prosecute the work, or any separable part thereof, with such diligence as will insure its completion within the time specified in this contract, or any extension thereof, or fails to complete said work within such time, the Government may, by written notice to the Contractor, terminate his right to proceed with the work or such part of the work as to which there has been delay. In such event the Government may take over the work and prosecute the same to completion, by contract or otherwise, and may take possession of and utilize in completing the work such materials, appliances, and plant as may be on the site of the work and necessary therefor. Whether or not the Contractor's right to proceed with the work is terminated, he and his sureties shall be liable for any damage to the Government resulting from his refusal or failure to complete the work within the specified time.

(b) If fixed and agreed liquidated damages are provided in the contract and if the Government so terminates the Contractor's right to proceed, the resulting damage will consist of such liquidated damages until such reasonable time as may be required for final completion of the work together with any increased costs occasioned the Government in completing the work.

(c) If fixed and agreed liquidated damages are provided in the contract and if the Government does not so terminate the Contractor's right to proceed, the resulting damage will consist of such liquidated damages until the work is completed or accepted.

(d) The Contractor's right to proceed shall not be so terminated nor the Contractor charged with resulting damage if:

(1) The delay in the completion of the work arises from unforeseeable causes beyond the control and without the fault or negligence of the Contractor, including but not restricted to, acts of God, acts of the public enemy, acts of the Government in either its sovereign or contractual capacity, acts of another contractor in the performance of a contract with the Government, fires, floods, epidemics, quarantine restrictions, strikes, freight embargoes, unusually severe weather, or delays of subcontractors or suppliers arising from unforeseeable causes beyond the control and without the fault or negligence of both the Contractor and such subcontractors or suppliers; and

(2) The Contractor, within 10 days from the beginning of any such delay (unless the Contracting Officer grants a further period of time before the date of final payment under the contract), notifies the Contracting Officer in writing of the causes of delay. The Contracting Officer shall ascertain the facts and the extent of the delay and extend the time for completing the work when, in his judgment, the findings of fact justify such an extension, and his findings of fact shall be final and conclusive on the parties, subject only to appeal as provided in the "Disputes" clause of this contract.

(e) If, after notice of termination of the Contractor's right to proceed under the provisions of this clause, it is determined for any reason that the Contractor was not in default under the provisions of this clause, or that the delay was excusable under the provisions of this clause, the rights and obligations of the parties shall, if the contract contains a clause providing for termination for convenience of the Government, be the same as if the notice of termination had been issued pursuant to such clause. If, in the foregoing circumstances, this contract does not contain a clause providing for

termination for convenience of the Government, the contract shall be equitably adjusted to compensate for such termination and the contract modified accordingly; failure to agree to any such adjustment shall be a dispute concerning a question of fact within the meaning of the clause of this contract entitled "Disputes."

(f) The rights and remedies of the Government provided in this clause are in addition to any other rights and remedies provided by law or under this contract.

(g) As used in paragraph (d)(1) of this clause, the term "subcontractors or suppliers" means subcontractors or suppliers at any tier. (DAR 7-602.5)

6. DISPUTES (1980 JUN)

(a) This contract is subject to the Contract Disputes Act of 1978 (P.L. 95-563).

(b) Except as provided in the Act, all disputes arising under or relating to this contract shall be resolved in accordance with this clause.

(c) (i) As used herein, "claim" means a written demand or assertion by one of the parties seeking, as a matter of right, the payment of money, adjustment or interpretation of contract terms, or other relief, arising under or relating to this contract. However, a written demand by the contractor seeking the payment of money in excess of $50,000 is not a claim until certified in accordance with (d) below.

(ii) A voucher, invoice, or other routine request for payment that is not in dispute when submitted is not a claim for the purposes of the Act. However, where such submission is subsequently disputed either as to liability or amount or not acted upon in a reasonable time, it may be converted to a claim pursuant to the Act by complying with the submission and certification requirements of this clause.

(iii) A claim by the contractor shall be made in writing and submitted to the contracting officer for decision. A claim by the Government against the contractor shall be subject to a decision by the Contracting Officer.

(d) For contractor claims of more than $50,000, the contractor shall submit with the claim a certification that the claim is made in good faith; the supporting data are accurate and complete to the best of the contractor's knowledge and belief; and the amount requested accurately reflects the contract adjustment for which the contractor believes the Government is liable. The certification shall be executed by the contractor if an individual. When the contractor is not an individual, the certification shall be executed by a senior company official in charge at the contractor's plant or location involved, or by an officer or general partner of the contractor having over-all responsibility for the conduct of the contractor's affairs.

(e) For contractor claims of $50,000 or less, the Contracting Officer must, if requested in writing by the contractor, render a decision within 60 days of the request. For contractor certified claims in excess of $50,000 the Contracting Officer must decide the claim within 60 days or notify the contractor of the date when the decision will be made.

(f) The Contracting Officer's decision shall be final unless the contractor appeals or files a suit as provided in the Act.

(g) Interest on the amount found due on a contractor claim shall be paid from the date the contracting officer receives the claim, or from the date payment otherwise would be due, if such date is later, until the date of payment.

(h) The Contractor shall proceed diligently with performance of this contract, pending final resolution of any request for relief, claim, appeal or action arising under the contract, and comply with any decision of the Contracting Officer. (DAR 7-103.12(a))

7. PAYMENTS TO CONTRACTOR (1979 MAR)

(a) The Government will pay the contract price as hereinafter provided.

(b) The Government will make progress payments monthly as the work proceeds, or at more frequent intervals as determined by the Contracting Officer, on estimates approved by the Contracting Officer. If requested by the Contracting Officer, the Contractor shall furnish a breakdown of the total contract price showing the amount included therein for each principal category of the work, in such detail as requested, to provide a basis for determining progress payments. In the preparation of estimates the Contracting Officer, at his discretion, may authorize material delivered on the site and preparatory work done to be taken into consideration. Material delivered to the Contractor at locations other than the site may also be taken into consideration (1) if such consideration is specifically authorized by the contract and (2) if the Contractor furnishes satisfactory evidence that he has acquired title to such material and that it will be utilized on the work covered by this contract.

(c) In making such progress payments, there shall be retained 10 percent of the estimated amount until final completion and acceptance of the contract work. However, if the Contracting Officer finds that satisfactory progress was achieved during any period for which a progress payment is to be made, he may authorize such payment to be made in full without retention of a percentage. Also, whenever the work is substantially complete, the Contracting Officer shall retain an amount he considers adequate for the protection of the Government, and, at his discretion, may release to the Contractor all or a portion of any excess amount. Furthermore, on completion and acceptance of each separate building, public work, or other division of the contract, on which the price is stated separately in the contract, payment may be made therefor without retention of a percentage.

(d) All material and work covered by progress payments made shall thereupon become the sole property of the Government, but this provision shall not be construed as relieving the Contractor from the sole responsibility for all material and work upon which payments have been made or the restoration of any damaged work, or as waiving the right of the Government to require the fulfillment of all of the terms of the contract.

(e) The Contractor shall, upon request, be reimbursed for the entire amount of premiums paid for performance and payment bonds (including coinsurance and reinsurance agreements, when applicable) after furnishing evidence of full payment to the surety.

(f) Upon completion and acceptance of all work, the amount due the Contractor under this contract shall be paid upon the presentation of a properly executed voucher and after the Contractor shall have furnished the Government with a release of all claims against the Government arising by virtue of this contract, other than claims in stated amounts as may be specifically excepted by the Contractor from the operation of the release. If the Contractor's claim to amounts payable under the contract has been assigned under the Assignment of Claims Act of 1940, as amended (31 U.S.C. 203, 41 U.S.C. 15), a release may also be required of the assignee. (DAR 7-602.7)

8. ASSIGNMENT OF CLAIMS (1976 OCT)

(a) Pursuant to the provisions of the Assignment of Claims Act of 1940, as amended (31 U.S.C. 203, 41 U.S.C. 15), if this contract provides for

payments aggregating $1,000 or more, claims for moneys due or to become due the Contractor from the Government under this contract may be assigned to a bank, trust company, or other financing institution, including any Federal lending agency, and may thereafter be further assigned and reassigned to any such institution. Any such assignment or reassignment shall cover all amounts payable under this contract and not already paid, and shall not be made to more than one party, except that any such assignment or reassignment may be made to one party as agent or trustee for two or more parties participating in such financing. Unless otherwise provided in this contract, payments to assignee of any moneys due or to become due under this contract shall not, to the extent provided in said Act, as amended, be subject to reduction or setoff. (The preceding sentence applies only if this contract is made in time of war or national emergency as defined in said Act and is with the Department of Defense, the General Services Administration, the Energy Research and Development Administration, the National Aeronautics and Space Administration, the Federal Aviation Administration, or any other department or agency of the United States designated by the President pursuant to Clause 4 of the provision of section 1 of the Assignment of Claims Act of 1940, as amended by the Act of May 15, 1951, 65 Stat. 41.)

(b) In no event shall copies of this contract or of any plans, specifications, or other similar documents relating to work under this contract, if marked "Top Secret," "Secret," or "Confidential," be furnished to any assignee of any claim arising under this contract or to any other person not entitled to receive the same. However, a copy of any part or all of this contract so marked may be furnished, or any information contained therein may be disclosed, to such assignee upon the prior written authorization of the Contracting Officer. (DAR 7-602.8)

9. MATERIAL AND WORKMANSHIP (1964 JUN)

(a) Unless otherwise specifically provided in this contract, all equipment, material, and articles incorporated in the work covered by this contract are to be new and of the most suitable grade for the purpose intended. Unless otherwise specifically provided in this contract, reference to any equipment, material, article, or patented process, by trade name, make, or catalog number, shall be regarded as establishing a standard of quality and shall not be construed as limiting competition, and the Contractor may, at his option, use any equipment, material, article, or process which, in the judgment of the Contracting Officer, is equal to that named. The Contractor shall furnish to the Contracting Officer for his approval the name of the manufacturer, the model number, and other identifying data and information respecting the performance, capacity, nature, and rating of the machinery and mechanical and other equipment which the Contractor contemplates incorporating in the work. When required by this contract or when called for by the Contracting Officer, the Contractor shall furnish the Contracting Officer for approval full information concerning the material or articles which he contemplates incorporating in the work. When so directed, samples shall be submitted for approval at the Contractor's expense, with all shipping charges prepaid. Machinery, equipment, material, and articles installed or used without required approval shall be at the risk of subsequent rejection.

(b) All work under this contract shall be performed in a skillful and workmanlike manner. The Contracting Officer may, in writing, require the Contractor to remove from the work any employee the Contracting Officer deems incompetent, careless, or otherwise objectionable. (DAR 7-602.9)

10. INSPECTION AND ACCEPTANCE (1976 OCT)

(a) All work (which term includes but is not restricted to materials, workmanship, and manufacture and fabrication of components) shall be subject to inspection and test by the Government at all reasonable times and at all places prior to acceptance. Any such inspection and test is for the sole benefit of the Government and shall not relieve the Contractor of the responsibility of providing quality control measures to assure that the work strictly complies with the contract requirements. No inspection or test by the Government shall be construed as constituting or implying acceptance. Inspection or test shall not relieve the Contractor of responsibility for damage to or loss of the material prior to acceptance, nor in any way affect the continuing rights of the Government after acceptance of the completed work under the terms of paragraph (f) of this clause, except as hereinabove provided.

(b) The Contractor shall, without charge, replace any material or correct any workmanship found by the Government not to conform to the contract requirements, unless in the public interest the Government consents to accept such material or workmanship with an appropriate adjustment in contract price. The Contractor shall promptly segregate and remove rejected material from the premises.

(c) If the Contractor does not promptly replace rejected material or correct rejected workmanship, the Government (1) may, by contract or otherwise, replace such material or correct such workmanship and charge the cost thereof to the Contractor, or (2) may terminate the Contractor's right to proceed in accordance with the clause of this contract entitled "Termination for Default - Damages for Delay - Time Extensions."

(d) The Contractor shall furnish promptly, without additional charge, all facilities, labor, and material reasonably needed for performing such safe and convenient inspection and test as may be required by the Contracting Officer. All inspection and test by the Government shall be performed in such manner as not unnecessarily to delay the work. Special, full size, and performance tests shall be performed as described in this contract. The Government reserves the right to charge to the Contractor any additional cost of inspection or test when material or workmanship is not ready at the time specified by the Contractor for inspection or test or when reinspection or retest is necessitated by prior rejection.

(e) Should it be considered necessary or advisable by the Government at any time before acceptance of the entire work to make an examination of work already completed, by removing or tearing out same, the Contractor shall, on request, promptly furnish all necessary facilities, labor and material. If such work is found to be defective or nonconforming in any material respect, due to the fault of the Contractor or his subcontractors, he shall defray all the expenses of such examination and of satisfactory reconstruction. If, however, such work is found to meet the requirements of the contract, an equitable adjustment shall be made in the contract price to compensate the Contractor for the additional services involved in such examination and reconstruction and, if completion of the work has been delayed thereby, he shall, in addition, be granted a suitable extension of time.

(f) Unless otherwise provided in this contract, acceptance by the Government shall be made as promptly as practicable after completion and inspection of all work required by this contract, or that portion of the work that the Contracting Officer determines can be accepted separately. Acceptance shall be final and conclusive except as regards latent defects, fraud, or such gross mistakes as may amount to fraud or as regards the Government's rights under any warranty or guarantee. (DAR 7-602.11)

11. SUPERINTENDENCE BY CONTRACTOR (1976 OCT)

The Contractor, at all times during performance and until the work is completed and accepted, shall give his personal superintendence to the work or have on the work a competent superintendent, satisfactory to the Contracting Officer and with authority to act for the Contractor. (DAR 7-602.12)

12. PERMITS AND RESPONSIBILITIES (1964 JUN)

The Contractor shall, without additional expense to the Government, be responsible for obtaining any necessary licenses and permits, and for complying with any applicable Federal, State, and municipal laws, codes, and regulations, in connection with the prosecution of the work. He shall be similarly responsible for all damages to persons or property that occur as a result of his fault or negligence. He shall take proper safety and health precautions to protect the work, the workers, the public, and the property of others. He shall also be responsible for all materials delivered and work performed until completion and acceptance of the entire contruction work, except for any completed unit of construction thereof which theretofore may have been accepted. (DAR 7-602.13)

13. CONDITIONS AFFECTING THE WORK (1964 JUN)

The Contractor shall be responsible for having taken steps reasonably necessary to ascertain the nature and location of the work, and the general and local conditions which can affect the work or the cost thereof. Any failure by the Contractor to do so will not relieve him from responsibility for successfully performing the work without additional expense to the Government. The Government assumes no responsibility for any understanding or representations concerning conditions made by any of its officers or agents prior to the execution of this contract, unless such understanding or representations by the Government are expressly stated in the contract. (DAR 7-602.14)

14. OTHER CONTRACTS (1964 JUN)

The Government may undertake or award other contracts for additional work, and the Contractor shall fully cooperate with such other contractors and Government employees and carefully fit his own work to such additional work as may be directed by the Contracting Officer. The Contractor shall not commit or permit any act which will interfere with the performance of work by any other contractor or by Government employees. (DAR 7-602.15)

15. SHOP DRAWINGS (1976 OCT)

(a) The term, "shop drawings", includes drawings, diagrams, layouts, schematics, descriptive literature, illustrations, schedules, performance and test data; and similar materials furnished by the Contractor to explain in detail specific portions of the work required by the contract.

(b) If this contract requires shop drawings, the Contractor shall coordinate all such drawings, and review them for accuracy, completeness, and compliance with contract requirements and shall indicate his approval thereon as evidence of such coordination and review. Shop drawings submitted to the Contracting Officer without evidence of the Contractor's approval may be returned for resubmission. The Contracting Officer will indicate his approval or disapproval of the shop drawings and if not approved as submitted shall indicate his reasons therefor. Any work done prior to such approval shall be at the Contractor's risk. Approval by the Contracting Officer shall not relieve the Contractor from responsibility for any errors or omissions in such drawings, nor from responsibility for complying with the requirements of this

contract, except with respect to variations described and approved in accordance with (c) below.

(c) If shop drawings show variations from the contract requirements, the Contractor shall describe such variations in writing, separate from the drawings, at the time of submission. If the Contracting Officer approves any such variation(s), he shall issue an appropriate contract modification, except that, if the variation is minor and does not involve a change in price or in time of performance, a modification need not be issued.

(d) The Contractor shall submit to the Contracting Officer for approval four copies (unless otherwise indicated herein) of all shop drawings as called for under the various headings of these specifications. Three sets (unless otherwise indicated herein) of all shop drawings will be retained by the Contracting Officer and one set will be returned to the Contractor. (DAR 7-602.54(a))

16. USE AND POSSESSION PRIOR TO COMPLETION (1976 OCT)

The Government shall have the right to take possession of or use any completed or partially completed part of the work. Prior to such possession or use, the Contracting Officer shall furnish the Contractor an itemized list of work remaining to be performed or corrected on such portions of the project as are to be possessed or used by the Government, provided that failure to list any item of work shall not relieve the Contractor of responsibility for compliance with the terms of the contract. Such possession or use shall not be deemed an acceptance of any work under the contract. While the Government has such possession or use, the Contractor, notwithstanding the provisions of the clause of this contract entitled "Permits and Responsibilities," shall be relieved of the responsibility for the loss or damage to the work resulting from the Government's possession or use. If such prior possession or use by the Government delays the progress of the work or causes additional expense to the Contractor, an equitable adjustment in the contract price or the time of completion will be made and the contract shall be modified in writing accordingly. (DAR 7-602.39)

17. SUSPENSION OF WORK (1968 FEB)

(a) The Contracting Officer may order the Contractor in writing to suspend, delay, or interrupt all or any part of the work for such period of time as he may determine to be appropriate for the convenience of the Government.

(b) If the performance of all or any part of the work is, for an unreasonable period of time, suspended, delayed, or interrupted by an act of the Contracting Officer in the administration of this contract, or by his failure to act within the time specified in this contract (or if no time is specified, within a reasonable time), an adjustment shall be made for any increase in the cost of performance of this contract (excluding profit) necessarily caused by such unreasonable suspension, delay, or interruption and the contract modified in writing accordingly. However, no adjustment shall be made under this clause for any suspension, delay, or interruption to the extent (1) that performance would have been so suspended, delayed, or interrupted by any other cause, including the fault or negligence of the Contractor or (2) for which an equitable adjustment is provided for or excluded under any other provision of this contract.

(c) No claim under this clause shall be allowed (1) for any costs incurred more than 20 days before the Contractor shall have notified the Contracting Officer in writing of the act or failure to act involved (but this requirement shall not apply as to a claim resulting from a suspension order),

and (2) unless the claim, in an amount stated, is asserted in writing as soon as practicable after the termination of such suspension, delay, or interruption, but not later than the date of final payment under the contract. (DAR 7-602.46)

18. TERMINATION FOR CONVENIENCE OF THE GOVERNMENT-CONSTRUCTION (1974 APR)

(a) The performance of work under this contract may be terminated by the Government in accordance with this clause in whole, or from time to time in part, whenever the Contracting Officer shall determine that such termination is in the best interest of the Government. Any such termination shall be effected by delivery to the Contractor of a Notice of Termination specifying the extent to which performance of work under the contract is terminated, and the date upon which such termination becomes effective.

(b) After receipt of a Notice of Termination, and except as otherwise directed by the Contracting Officer, the Contractor shall:

(i) stop work under the contract on the date and to the extent specified in the Notice of Termination;

(ii) place no further orders or subcontracts for materials, services or facilities, except as may be necessary for completion of such portion of the work under the contract as is not terminated;

(iii) terminate all orders and subcontracts to the extent that they relate to the performance of work terminated by the Notice of Termination;

(iv) assign to the Government, in the manner, at the times, and to the extent directed by the Contracting Officer, all of the right, title, and interest of the Contractor under the orders and subcontracts so terminated, in which case the Government shall have the right, in its discretion, to settle or pay any or all claims arising out of the termination of such orders and subcontracts;

(v) settle all outstanding liabilities and all claims arising out of such termination of orders and subcontracts, with the approval or ratification of the Contracting Officer, to the extent he may require, which approval or ratification shall be final for all the purposes of this clause;

(vi) transfer title and deliver to the Government, in the manner, at the times, and to the extent, if any, directed by the Contracting Officer, (A) the fabricated or unfabricated parts, work in process, completed work, supplies, and other material produced as a part of, or acquired in connection with the performance of, the work terminated by the Notice of Termination, and (B) the completed or partially completed plans, drawings, information, and other property which, if the contract had been completed, would have been required to be furnished to the Government;

(vii) use his best efforts to sell, in the manner, at the times, to the extent, and at the price or prices directed or authorized by the Contracting Officer, any property of the types referred to in (vi) above; provided however, that the Contractor (A) shall not be required to extend credit to any purchaser, and (B) may acquire any such property under the conditions prescribed by and at a price or prices approved by the Contracting Officer; and provided further, that the proceeds of any such transfer or disposition shall be applied in

reduction of any payments to be made by the Government to the Contractor under this contract or shall otherwise be credited to the price or cost of the work covered by this contract or paid in such other manner as the Contracting Officer may direct;

(viii) complete performance of such part of the work as shall not have been terminated by the Notice of Termination; and

(ix) take such action as may be necessary, or as the Contracting Officer may direct, for the protection and preservation of the property related to this contract which is in the possession of the Contractor and in which the Government has or may acquire an interest.

At any time after expiration of the plant clearance period, as defined in Section VIII, Defense Acquisition Regulation, as it may be amended from time to time, the Contractor may submit to the Contracting Officer a list, certified as to quantity and quality, of any or all items of termination inventory not previously disposed of, exclusive of items the disposition of which has been directed or authorized by the Contracting Officer, and may request the Government to remove such items or enter into a storage agreement covering them. Not later than fifteen (15) days thereafter, the Government will accept title to such items and remove them or enter into a storage agreement covering the same; provided, that the list submitted shall be subject to verification by the Contracting Officer upon removal of the items, or if the items are stored, within forty-five (45) days from the date of submission of the list, and any necessary adjustment to correct the list as submitted shall be made prior to final settlement.

(c) After receipt of a Notice of Termination, the Contractor shall submit to the Contracting Officer his termination claim, in the form and with certification prescribed by the Contracting Officer. Such claim shall be submitted promptly but in no event later than one year from the effective date of termination, unless one or more extensions in writing are granted by the Contracting Officer, upon request of the Contractor made in writing within such one year period or authorized extension thereof. However, if the Contracting Officer determines that the facts justify such action, he may receive and act upon any such termination claim at any time after such one year period or any extension thereof. Upon failure of the Contractor to submit his termination claim within the time allowed, the Contracting Officer may determine, on the basis of information available to him, the amount, if any, due to the Contractor by reason of the termination and shall thereupon pay to the Contractor the amount so determined.

(d) Subject to the provisions of paragraph (c), the Contractor and the Contracting Officer may agree upon the whole or any part of the amount or amounts to be paid to the Contractor by reason of the total or partial termination of work pursuant to this clause, which amount or amounts may include a reasonable allowance for profit on work done; provided, that such agreed amount or amounts, exclusive of settlement costs, shall not exceed the total contract price as reduced by the amount of payments otherwise made and as further reduced by the contract price of work not terminated. The contract shall be amended accordingly, and the Contractor shall be paid the agreed amount. Nothing in paragraph (e) of this clause, prescribing the amount to be paid to the Contractor in the event of failure of the Contractor and the Contracting Officer to agree upon the whole amount to be paid to the Contractor by reason of the termination of work pursuant to this clause, shall be deemed to limit, restrict, or otherwise determine or affect the amount or amounts which may be agreed upon to be paid to the Contractor pursuant to this paragraph (d).

(e) In the event of the failure of the Contractor and the Contracting Officer to agree, as provided in paragraph (d), upon the whole amount to be paid to the Contractor by reason of the termination of work pursuant to this clause, the Contracting Officer shall pay to the Contractor the amounts determined by the Contracting Officer as follows, but without duplication of any amounts agreed upon in accordance with paragraph (d):

(i) with respect to all contract work performed prior to the effective date of the Notice of Termination, the total (without duplication of any items) of:

(A) the cost of such work;

(B) the cost of settling and paying claims arising out of the termination of work under subcontracts or orders as provided in paragraph (b)(v) above, exclusive of the amounts paid or payable on account of supplies or materials delivered or services furnished by the subcontractor prior to the effective date of the Notice of Termination of Work under this contract, which amounts shall be included in the cost on account of which payment is made under (A) above; and

(C) a sum, as profit on (A) above, determined by the Contracting Officer pursuant to 8-303 of the Defense Acquisition Regulation, in effect as of the date of execution of this contract, to be fair and reasonable; provided, however, that if it appears that the Contractor would have sustained a loss on the entire contract had it been completed, no profit shall be included or allowed under this subdivision (C) and an appropriate adjustment shall be made reducing the amount of the settlement to reflect the indicated rate of loss; and

(ii) the reasonable cost of the preservation and protection of property incurred pursuant to paragraph (b)(ix); and any other reasonable cost incidental to termination of work under this contract, including expense incidental to the determination of the amount due to the Contractor as the result of the termination of work under this contract. The total sum to be paid to the Contractor under (i) above shall not exceed the total contract price as reduced by the amount of payments otherwise made and as further reduced by the contract price of work not terminated. Except for normal spoilage, and except to the extent that the Government shall have otherwise expressly assumed the risk of loss, there shall be excluded from the amounts payable to the Contractor under (i) above, the fair value, as determined by the Contracting Officer, of property which is destroyed, lost, stolen, or damaged so as to become undeliverable to the Government, or to a buyer pursuant to paragraph (b)(vii).

(f) Costs claimed, agreed to, or determined pursuant to (c), (d), (e), and (i) hereof shall be in accordance with Section XV of the Defense Acquisition Regulation as in effect on the date of this contract.

(g) The Contractor shall have the right of appeal, under the clause of this contract entitled "Disputes", from any determination made by the Contracting Officer under paragraph (c), (e), or (i) hereof, except that if the Contractor has failed to submit his claim within the time provided in paragraph (c) or (i) hereof, and has failed to request extension of such time,

he shall have no such right of appeal. In any case where the Contracting Officer has made a determination of the amount due under paragraph (c), (e) or (i) hereof, the Government shall pay to the Contractor the following: (i) if there is no right of appeal hereunder or if no timely appeal has been taken, the amount so determined by the Contracting Officer, or (ii) if an appeal has been taken, the amount finally determined on such appeal.

(h) In arriving at the amount due the Contractor under this clause there shall be deducted (i) all unliquidated advance or other payments on account theretofore made to the Contractor, applicable to the terminated portion of this contract, (ii) any claim which the Government may have against the Contractor in connection with this contract, and (iii) the agreed price for, or the proceeds of sale of, any materials, supplies, or other things acquired by the Contractor or sold, pursuant to the provisions of this clause, and not otherwise recovered by or credited to the Government.

(i) If the termination hereunder be partial, the Contractor may file with the Contracting Officer a claim for an equitable adjustment of the price or prices specified in the contract relating to the continued portion of the contract (the portion not terminated by the Notice of Termination), and such equitable adjustment as may be agreed upon shall be made in such price or prices. Any claim by the Contractor for an equitable adjustment under this clause must be asserted within ninety (90) days from the effective date of the termination notice, unless an extension is granted in writing by the Contracting Officer.

(j) The Government may from time to time, under such terms and conditions as it may prescribe, make partial payments and payments on account against costs incurred by the Contractor in connection with the terminated portion of this contract whenever in the opinion of the Contracting Officer the aggregate of such payments shall be within the amount to which the Contractor will be entitled hereunder. If the total of such payments is in excess of the amount finally agreed or determined to be due under this clause, such excess shall be payable by the Contractor to the Government upon demand, together with interest computed at the rate established by the Secretary of the Treasury pursuant to Public Law 92-41, 85 STAT 97 for the Renegotiation Board, for the period from the date such excess payment is received by the Contractor to the date on which such excess is repaid to the Government; provided, however, that no interest shall be charged with respect to any such excess payment attributable to a reduction in the Contractor's claim by reason of retention or other disposition of termination inventory until ten days after the date of such retention or disposition, or such later date as determined by the Contracting Officer by reason of the circumstances.

(k) Unless otherwise provided for in this contract, or by applicable statute, the Contractor shall - from the effective date of termination until the expiration of three years after final settlement under this contract - preserve and make available to the Government at all reasonable times at the office of the Contractor but without direct charge to the Government, all his books, records, documents and other evidence bearing on the costs and expenses of the Contractor under this contract and relating to the work terminated hereunder, or, to the extent approved by the Contracting Officer, photographs, microphotographs, or other authentic reproductions thereof. (DAR 7-602.29(a))

19. PRICING OF ADJUSTMENTS (1970 JUL)

When costs are a factor in any determination of a contract price adjustment pursuant to the "Changes" clause or any other provision of this contract, such costs shall be in accordance with Section XV of the Defense Acquisition Regulation as in effect on the date of this contract. (DAR 7-103.26)

20. PATENT INDEMNITY (1964 JUN)

Except as otherwise provided, the Contractor agrees to indemnify the Government and its officers, agents, and employees against liability, including costs and expenses, for infringement upon any Letters Patent of the United States (except Letters Patent issued upon an application which is now or may hereafter be, for reasons of national security, ordered by the Government to be kept secret or otherwise withheld from issue) arising out of the performance of this contract or out of the use or disposal by or for the account of the Government of supplies furnished or construction work performed hereunder. (DAR 7-602.16(a))

21. ADDITIONAL BOND SECURITY (1976 OCT)

If any surety upon any bond furnished in connection with this contract becomes unacceptable to the Government, or if any such surety fails to furnish reports as to his financial condition from time to time as requested by the Government, or if the contract price is increased to such an extent that the penal sum of any bond becomes inadequate in the opinion of the Contracting Officer, the Contractor shall promptly furnish such additional security as may be required from time to time to protect the interests of the Government and of persons supplying labor or materials in the prosecution of the work contemplated by this contract. (DAR 7-602.17)

22. EXAMINATION OF RECORDS BY COMPTROLLER GENERAL (1975 JUN)

(a) This clause is applicable if the amount of this contract exceeds $10,000 and was entered into by means of negotiation, including small business restricted advertising but is not applicable if this contract was entered into by means of formal advertising.

(b) The Contractor agrees that the Comptroller General of the United States or any of his duly authorized representatives shall, until the expiration of three years after final payment under this contract or such lesser time specified in either Appendix M of the Defense Acquisition Regulation or the Federal Procurement Regulations Part 1-20, as appropriate, have access to and the right to examine any directly pertinent books, documents, papers, and records of the Contractor involving transactions related to this contract.

(c) The Contractor further agrees to include in all his subcontracts hereunder a provision to the effect that the subcontractor agrees that the Comptroller General of the United States or any of his duly authorized representatives shall, until the expiration of three years after final payment under the subcontract or such lesser time specified in either Appendix M of the Defense Acquisition Regulation or the Federal Procurement Regulations Part 1-20, as appropriate, have access to and the right to examine any directly pertinent books, documents, papers, and records of such subcontractor, involving transactions related to the subcontract. The term "subcontract" as used in this clause excludes (i) purchase orders not exceeding $10,000 and (ii) subcontracts or purchase orders for public utility services at rates established for uniform applicability to the general public.

(d) The periods of access and examination described in (b) and (c) above for records which relate to (i) appeals under the "Disputes" clause of this contract, (ii) litigation or the settlement of claims arising out of the performance of this contract, or (iii) costs and expenses of this contract as to which exception has been taken by the Comptroller General or any of his duly authorized representatives, shall continue until such appeals, litigation, claims or exceptions have been disposed of. (DAR 7-104.15)

23. BUY AMERICAN ACT (1966 OCT)

(a) Agreement. In accordance with the Buy American Act (41 U.S.C. 10a-10d), the Contractor agrees that only domestic construction material will be used (by the Contractor, subcontractors, materialmen, and suppliers) in the performance of this contract, except for nondomestic construction material listed in the "Nondomestic Construction Materials" clause, if any, of this contract.

(b) Domestic construction material. "Construction material" means any article, material, or supply brought to the construction site for incorporation in the building or work. An unmanufactured construction material is a "domestic construction material" if it has been mined or produced in the United States. A manufactured construction material is a "domestic construction material" if it has been manufactured in the United States and if the cost of its components which have been mined, produced, or manufactured in the United States exceeds 50 percent of the cost of all its components. "Component" means any article, material, or supply directly incorporated in a construction material.

(c) Domestic component. A component shall be considered to have been "mined, produced, or manufactured in the United States" (regardless of its source in fact) if the article, material, or supply in which it is incorporated was manufactured in the United States and the component is of a class or kind determined by the Government to be not mined, produced, or manufactured in the United States in sufficient and reasonably available commercial quantities and of a satisfactory quality. (DAR 7-602.20)

24. EQUAL OPPORTUNITY (1978 SEP)

(If, during any twelve (12) month period (including the 12 months preceding the award of this contract), the Contractor has been or is awarded Federal contracts and/or subcontracts which have an aggregate value in excess of $10,000, the Contractor shall comply with (1) through (7) below. Upon request, the Contractor shall provide information necessary to determine the applicability of this clause.)

During the performance of this contract, the Contractor agrees as follows:

(1) The Contractor will not discriminate against any employee or applicant for employment because of race, color, religion, sex, or national origin. The Contractor will take affirmative action to ensure that applicants are employed, and that employees are treated during employment, without regard to their race, color, religion, sex, or national origin. Such action shall include but not be limited to the following: Employment, upgrading, demotion, or transfer, recruitment or recruitment advertising: layoff or termination, rates of pay or other forms of compensation; and selection for training, including apprenticeship. The Contractor agrees to post in conspicuous places, available to employees and applicants for employment, notices to be provided by the Contracting Officer setting forth the provisions of this Equal Opportunity clause.

(2) The Contractor will, in all solicitations or advertisements for employees placed by or on behalf of the Contractor, state that all qualified applicants will receive consideration for employment without regard to race, color, religion, sex, or national origin.

(3) The Contractor will send to each labor union or representative of workers with which he has a collective bargaining agreement or other contract or understanding a notice to be provided by the agency Contracting Officer, advising the labor union or workers' representative of the contractor's commitments under this Equal Opportunity clause and shall post copies of the notice in conspicuous places available to employees and applicants for employment.

(4) The Contractor will comply with all provisions of Executive Order No. 11246 of September 24, 1965, as amended by Executive Order No. 11375 of October 13, 1967, and of the rules, regulations, and relevant orders of the Secretary of Labor.

(5) The Contractor will furnish all information and reports required by Executive Order No. 11246 of September 24, 1965, as amended by Executive Order No. 11375 of October 13, 1967, and by the rules, regulations, and orders of the Secretary of Labor or pursuant thereto, and will permit access to his books, records, and accounts by the contracting agency and the Secretary of Labor for purposes of investigation to ascertain compliance with such rules, regulations and orders.

(6) In the event of the Contractor's noncompliance with the Equal Opportunity clause of this contract or with any of the said rules, regulations, or orders, this contract may be canceled, terminated or suspended in whole or in part, and the Contractor may be declared ineligible for further Government contracts in accordance with procedures authorized in Executive Order No. 11246 of September 24, 1965, as amended by Executive Order No. 11375 of October 13, 1967, and such other sanctions may be imposed and remedies invoked as provided in Executive Order No. 11246 of September 24, 1965, as amended by Executive Order No. 11375 of October 13, 1967, or by rule, regulation, or order of the Secretary of Labor, or as otherwise provided by law.

(7) The Contractor will include the provisions of paragraphs (1) through (7) in every subcontract or purchase order unless exempted by rules, regulations, or orders of the Secretary of Labor issued pursuant to Section 204 of Executive Order No. 11246 of September 24, 1965, as amended by Executive Order No. 11375 of October 13, 1967, so that such provisions will be binding upon each subcontractor or vendor. The Contractor will take such action with respect to any subcontract or purchase order as the contracting agency may direct as a means of enforcing such provisions including sanctions for noncompliance: Provided, however, that in the event the Contractor becomes involved in, or is threatened with, litigation with a subcontractor or vendor as a result of such direction by the contracting agency, the Contractor may request the United States to enter into such litigation to protect the interests of the United States. (DAR 7-103.18(a))

25. COVENANT AGAINST CONTINGENT FEES (1958 JAN)

The Contractor warrants that no person or selling agency has been employed or retained to solicit or secure this contract upon an agreement or understanding for a commission, percentage, brokerage, or contingent fee, excepting bona fide employees or bona fide established commercial or selling agencies maintained by the Contractor for the purpose of securing business. For breach or violation of this warranty the Government shall have the right to annul this contract without liability or in its discretion, to deduct from the contract price or consideration, or otherwise recover, the full amount of such commissions, percentage, brokerage or contingent fee. (DAR 7-103.20)

26. OFFICIALS NOT TO BENEFIT (1949 JUL)

No member of or delegate to Congress, or resident commissioner, shall be admitted to any share or part of this contract, or to any benefit that may arise therefrom; but this provision shall not be construed to extend to this contract if made with a corporation for its general benefit. (DAR 7-103.19)

27. CONVICT LABOR (1975 OCT)

In connection with the performance of work under this contract, the Contractor agrees not to employ any person undergoing sentence of imprisonment

except as provided by Public Law 89-176, September 10, 1965 (18 U.S.C. 4082(c)(2)) and Executive Order 11755, December 29, 1973. (DAR 7-104.17)

28. UTILIZATION OF SMALL BUSINESS AND SMALL DISADVANTAGED BUSINESS CONCERNS (1980 AUG)

(a) It is the policy of the United States that small business and small business concerns owned and controlled by socially and economically disadvantaged individuals shall have the maximum practicable opportunity to participate in the performance of contracts let by any Federal agency.

(b) The Contractor hereby agrees to carry out this policy in the awarding of subcontracts to the fullest extent consistent with the efficient performance of this contract. The term "subcontract" means any agreement (other than one involving an employer-employee relationship) to be entered into by a Federal Government prime contractor or subcontractor calling for supplies or services required for the performance of the original contract or subcontract. The Contractor further agrees to cooperate in any studies or surveys as may be conducted by the United States Small Business Administration or the awarding agency of the United States as may be necessary to determine the extent of the Contractor's compliance with this clause.

(c) As used in this contract, the term "small business concern" shall mean a small business as defined pursuant to Section 3 of the Small Business Act and relevant regulations promulgated pursuant thereto. The term "small business concern owned and controlled by socially and economically disadvantaged individuals," hereafter referred to as disadvantaged business, shall mean a small business concern -

(1) which is at least 51 per centum owned by one or more socially and economically disadvantaged individuals; or, in the case of any publicly owned business, at least 51 per centum of the stock of which is owned by one or more socially and economically disadvantaged individuals; and

(2) whose management and daily business operations are controlled by one or more of such individuals. The Contractor shall presume that socially and economically disadvantaged individuals include Black Americans, Hispanic Americans, Native Americans (i.e., American Indians, Eskimos, Aleuts and Native Hawaiians), Asian-Pacific Americans (i.e., U.S. citizens whose origins are from Japan, China, the Philippines, Vietnam, Korea, Samoa, Guam, the U.S. Trust Territories of the Pacific, Northern Marianas, Laos, Cambodia, and Taiwan, and other minorities, or any individuals found to be disadvantaged by the Administration pursuant to Section 8(a) of the Small Business Act.

(d) Contractors acting in good faith may rely on written representations by their subcontractors regarding their status as either a small business concern or a small business concern owned and controlled by socially and economically disadvantaged individuals. (DAR 7-104.14(a))

29. FEDERAL, STATE, AND LOCAL TAXES (1971 NOV)

(a) Except as may be otherwise provided in this contract, the contract price includes all applicable Federal, State, and local taxes and duties.

(b) Nevertheless, with respect to any Federal excise tax or duty on the transactions or property covered by this contract, if a statute, court decision, written ruling, or regulation takes effect after the contract date, and -

(1) results in the Contractor being required to pay or bear the burden of any such Federal excise tax or duty or increase in the rate thereof which would not otherwise have been payable on such transactions or property, the contract price shall be increased by the amount of such tax or duty or rate increase, provided the Contractor warrants in writing that no amount for

such newly imposed Federal excise tax or duty or rate increase was included in the contract price as a contingency reserve or otherwise; or

(2) results in the Contractor not being required to pay or bear the burden of, or in his obtaining a refund or drawback of, any such Federal excise tax or duty which would otherwise have been payable on such transactions or property or which was the basis of an increase in the contract price, the contract price shall be decreased by the amount of the relief, refund, or drawback, or that amount shall be paid to the Government, as directed by the Contracting Officer. The contract price shall be similarly decreased if the Contractor, through his fault or negligence or his failure to follow instructions of the Contracting Officer, is required to pay or bear the burden of, or does not obtain a refund or drawback of, any such Federal excise tax or duty.

(c) Paragraph (b) above shall not be applicable to social security taxes or to any other employment tax.

(d) No adjustment of less than $100 shall be made in the contract price pursuant to paragraph (b) above.

(e) As used in paragraph (b) above, the term "contract date" means the date set for bid opening, or if this is a negotiated contract, the contract date. As to additional supplies or services procured by modification to this contract, the term "contract date" means the date of such modification.

(f) Unless there does not exist any reasonable basis to sustain an exemption, the Government upon the request of the Contractor shall, without further liability, furnish evidence appropriate to establish exemption from any Federal, State, or local tax; provided that, evidence appropriate to establish exemption from any Federal excise tax or duty which may give rise to either an increase or decrease in the contract price will be furnished only at the discretion of the Government.

(g) The Contractor shall promptly notify the Contracting Officer of matters which will result in either an increase or decrease in the contract price and shall take action with respect thereto as directed by the Contracting Officer. (DAR 7-103.10(a))

30. DAVIS-BACON ACT (40 U.S.C. 276a to a-7) (1977 DEC)

(If this contract is with a State or political subdivision thereof, the Contractor agrees to comply with the requirements of the Contract Work Hours Standards Acts and to insert this clause in all subcontracts hereunder with private persons or firms)

(a) All mechanics and laborers, including apprentices and trainees, employed or working directly upon the site of the work shall be paid unconditionally and not less often than once a week, and without subsequent deduction or rebate on any account (except such payroll deductions as are permitted by the Copeland Regulations (29 CFR, Part 3)), the full amounts due at time of payment computed at wage rates not less than the aggregate of the basic hourly rates and the rates of payments, contributions, or costs for any fringe benefits contained in the wage determination decision of the Secretary of Labor which is attached hereto and made a part hereof, regardless of any contractual relationship which may be alleged to exist between the Contractor or subcontractor and such laborers and mechanics. A copy of such wage determination decision shall be kept posted by the Contractor at the site of the work in a prominent place where it can be easily seen by the workers. The term mechanics and laborers shall be deemed to include apprentices and trainees not covered by an approved program as provided by the apprentice and trainee clause of the contract.

(b) The Contractor may discharge his obligation under this clause to workers in any classification for which the wage determination decision contains:

(1) Only a basic hourly rate of pay, by making payment at not less than such basic hourly rate, except as otherwise provided in the Copeland Regulations (29 CFR, Part 3); or

(2) Both a basic hourly rate of pay and fringe benefits payments, by making payment in cash, by irrevocably making contributions pursuant to a fund, plan, or program for, and or by assuming an enforceable commitment to bear the cost of, bona fide fringe benefits contemplated by the Davis-Bacon Act, or by any combination thereof. Contributions made, or costs assumed, on other than a weekly basis shall be considered as having been constructively made or assumed during a weekly period to the extent that they apply to such period. Where a fringe benefit is expressed in a wage determination in any manner other than as an hourly rate and the Contractor pays a cash equivalent or provides an alternative fringe benefit, he shall furnish information with his payrolls showing how he determined that the cost incurred to make the cash payment or to provide the alternative fringe benefit is equal to the cost of the wage determination fringe benefit. In any case where the Contractor provides a fringe benefit different from any contained in the wage determination, he shall similarly show how he arrived at the hourly rate shown therefor. In the event of disagreement between or among the interested parties as to an equivalent of any fringe benefit, the Contracting Officer shall submit the question, together with his recommendation, to the Secretary of Labor for final determination.

(c) The assumption of an enforceable commitment to bear the cost of fringe benefits, or the provision of any fringe benefits not expressly listed in section 1(b)(2) of the Davis-Bacon Act or in the wage determination decision forming a part of the contract, may be considered as payment of wages only with the approval of the Secretary of Labor pursuant to a written request by the Contractor. The Secretary of Labor may require the Contractor to set aside assets, in a separate account, to meet his obligations under any unfunded plan or program.

(d) The Contracting Officer shall require that any class of laborers or mechanics, including apprentices and trainees, which is not listed in the wage determination decision and which is to be employed under the contract shall be classified or reclassified conformably to the wage determination decision, and shall report the action taken to the Secretary of Labor. If the interested parties cannot agree on the proper classification or reclassification of a particular class of laborers or mechanics, including apprentices and trainees, to be used, the Contracting Officer shall submit the question, together with his recommendation, to the Secretary of Labor for final determination.

(e) In the event it is found by the Contracting Officer that any laborer or mechanic, including all apprentices and trainees, employed by the Contractor or any subcontractor directly on the site of the work covered by this contract has been or is being paid at a rate of wages less than the rate of wages required by paragraph (a) of this clause, or by the "Apprentices and Trainees" clause of this contract, the Contracting Officer may (i) by written notice to the Government Prime Contractor terminate his right to proceed with the work, or such part of the work as to which there has been a failure to pay said required wages, and (ii) prosecute the work to completion by contract or otherwise, whereupon such Contractor and his sureties shall be liable to the Government for any excess costs occasioned the Government thereby.

(f) Paragraphs (a) through (e) of the clause shall apply to this contract to the extent that it is (i) a prime contract with the Government subject to

the Davis-Bacon Act or (ii) a subcontract also subject to the Davis-Bacon Act under such prime contract. (DAR 7-602.23(a)(i))

31. CONTRACT WORK HOURS AND SAFETY STANDARDS ACT - OVERTIME COMPENSATION (40 U.S.C. 327-333) (1977 DEC)

(If this contract is with a State or political subdivision thereof, the Contractor agrees to comply with the requirements of the Contract Work Hours Standards Act and to insert this clause in all subcontracts hereunder with private persons or firms)

This contract is subject to the Contract Work Hours and Safety Standards Act and to the applicable rules, regulations, and interpretations of the Secretary of Labor.

(a) The Contractor shall not require or permit any laborer or mechanic, including apprentices, trainees, watchmen, and guards in any workweek in which he is employed on any work under this contract to work in excess of eight (8) hours in any calendar day or in excess of forty (40) hours in such workweek on work subject to the provisions of the Contract Work Hours and Safety Standards Act unless such laborer or mechanic, including apprentices, trainees, watchmen, and guards, receives compensation at a rate not less than one and one-half times his basic rate of pay for all such hours worked in excess of eight (8) hours in any calendar day or in excess of forty (40) hours in such workweek, whichever is the greater number of overtime hours. The "basic rate of pay," as used in this clause, shall be the amount paid per hour, exclusive of the Contractor's contribution or cost for fringe benefits and any cash payment made in lieu of providing fringe benefits, or the basic hourly rate contained in the wage determination, whichever is greater.

(b) In the event of any violation of the provisions of paragraph (a), the Contractor shall be liable to any affected employee for any amounts due, and to the United States for liquidated damages. Such liquidated damages shall be computed with respect to each individual laborer or mechanic, including an apprentice, trainee, watchman, or guard, employed in violation of the provisions of paragraph (a) in the sum of $10 for each calendar day on which such employee was required or permitted to be employed on such work in excess of eight (8) hours or in excess of the standard workweek of forty (40) hours without payment of the overtime wages required by paragraph (a). (DAR 7-602.23(a)(ii))

32. APPRENTICES AND TRAINEES (1977 DEC)

(If this contract is with a State or political subdivision thereof, the Contractor agrees to comply with the requirements of the Contract Work Hours Standards Act and to insert this clause in all subcontracts hereunder with private persons or firms)

(a) Apprentices will be permitted to work at less than the predetermined rate for the work they performed when they are employed and individually registered in a bona fide apprenticeship program registered with the U.S. Department of Labor, Employment and Training Administration, Bureau of Apprenticeship and Training, or with a state apprenticeship agency recognized by the Bureau, or if a person is employed in his first ninety (90) days of probationary employment as an apprentice in such an apprenticeship program, who is not individually registered in the program, but who has been certified by the Bureau of Apprenticeship and Training or a state apprenticeship agency (where appropriate) to be eligible for probationary employment as an apprentice. The allowable ratio of apprentices to journeymen in any craft classification employed on this contract shall not be greater than the ratio permitted to the Contractor as to his entire work force under the register

program. Any employee listed on a payroll at an apprentice wage rate, who is not a trainee as defined in paragraph (b) of this clause or is not registered or otherwise employed as stated above, shall be paid the wage rate determined by the Secretary of Labor for the classification of work he actually performed. The Contractor or subcontractor shall furnish to the Contracting Officer written evidence of the registration of his program and apprentices as well as the appropriate ratios and wage rates (expressed in percentages of the journeyman hourly rates), for the area of construction prior to using apprentices on the contract work. The wage rate paid apprentices shall be not less than the appropriate percentage of the journeyman's rate contained in the applicable wage determination.

(b) Trainees will be permitted to work at less than the predetermined rate for the work performed when they are employed pursuant to and individually registered in a program which has received prior approval, evidenced by formal certification, by the U.S. Department of Labor, Employment and Training Administration, Bureau of Apprenticeship and Training. The ratio of trainees to journeymen on this contract shall not be greater than permitted under the plan approved by the Bureau of Apprenticeship and Training. Every trainee must be paid at not less than the rate specified in the approved program for his level of progress. Any employee listed on the payroll at a trainee rate who is not registered and not participating in a training plan approved by the Bureau of Apprenticeship and Training shall be paid not less than the wage rate determined by the Secretary of Labor for the classification of work he actually performed. The Contractor or subcontractor shall furnish the Contracting Officer written evidence of the certification of his program, the registration of the trainee, and the ratios and wage rates prescribed in that program. In the event the Bureau of Apprenticeship and Training withdraws the approval of a training program, the Contractor shall no longer be permitted to utilize trainees at less than the applicable predetermined rate for the work performed until an acceptable program is approved.

(c) The utilization of apprentices, trainees, and journeymen under this clause shall be in conformity with the equal employment opportunity requirements of this contract. (DAR 7-602.23(a)(iii))

33. PAYROLLS AND BASIC RECORDS (1977 DEC)

(If this contract is with a State or political subdivision thereof, the Contractor agrees to comply with the requirements of the Contract Work Hours Standards Act and to insert this clause in all subcontracts hereunder with private persons or firms)

(a) The Contractor shall maintain payrolls and basic records relating thereto during the course of the work and shall preserve them for a period of three (3) years thereafter for all laborers and mechanics, including apprentices, trainees, watchmen, and guards, working at the site of the work. Such records shall contain the name and address of each such employee, his correct classification, rate of pay (including rates of contributions for, or costs assumed to provide, fringe benefits), daily and weekly number of hours worked, deductions made and actual wages paid. (NOTE: Watchmen and guards are reflected on payroll records for Contract Work Hours and Safety Standards Act purposes only.) Whenever the Contractor has obtained approval from the Secretary of Labor as provided in paragraph (c) of the clause entitled "Davis-Bacon Act," he shall maintain records which show the commitment, its approval, written communication of the plan or program to the laborers or mechanics affected, and the costs anticipated or incurred under the plan or program.

(b) The Contractor shall submit weekly a copy of all payrolls to the Contracting Officer. The Government Prime Contractor shall be responsible for the submission of copies of payrolls of all subcontractors. The copy shall be accompanied by a statement signed by the Contractor indicating that the payrolls are correct and complete, that the wage rates contained therein are not less than those determined by the Secretary of Labor, and that the classifications set forth for each laborer or mechanic, including apprentices and trainees, conform with the work he performed. Weekly submission of the "Statement of Compliance" required under this contract and the Copeland Regulations of the Secretary of Labor (29 CFR, Part 3) shall satisfy the requirement for submission of the above statement. The Contractor shall submit also a copy of any approval by the Secretary of Labor with respect to fringe benefits which is required by paragraph (c) of the clause entitled "Davis-Bacon Act."

(c) The Contractor shall make the records required under this clause available for inspection by authorized representatives of the Contracting Officer and the Department of Labor, and shall permit such representatives to interview employees during working hours on the job. (DAR 7-602.23(a)(iv))

34. COMPLIANCE WITH COPELAND REGULATIONS (1964 JUN)

(If this contract is with a State or political subdivision thereof, the Contractor agrees to comply with the requirements of the Contract Work Hours Standards Act and to insert this clause in all subcontracts hereunder with private persons or firms)

The Contractor shall comply with the Copeland Regulations of the Secretary of Labor (29 CFR, Part 3) which are incorporated herein by reference. (DAR 7-602.23(a)(v))

35. WITHHOLDING OF FUNDS (1977 DEC)

(If this contract is with a State or political subdivision thereof, the Contractor agrees to comply with the requirements of the Contract Work Hours Standards Act and to insert this clause in all subcontracts hereunder with private persons or firms)

(a) The Contracting Officer may withhold or cause to be withheld from the Government Prime Contractor so much of the accrued payments or advances as may be considered necessary (i) to pay laborers and mechanics, including apprentices, trainees, watchmen, and guards, employed by the Contractor or any subcontractor on the work the full amount of wages required by the contract, and (ii) to satisfy any liability of the Contractor and any subcontractor for liquidated damages under paragraph (b) of the clause entitled "Contract Work Hours and Safety Standards Act-Overtime Compensation."

(b) If the Contractor or any subcontractor fails to pay any laborer, mechanic, apprentice, trainee, watchman, or guard employed or working on the site of the work, all or part of the wages required by the contract, the Contracting Officer may, after written notice to the Government Prime Contractor, take such action as may be necessary to cause suspension of any further payments or advances until such violations have ceased. (DAR 7-602.23(a)(vi))

36. SUBCONTRACTS (1972 FEB)

(If this contract is with a State or political subdivision thereof, the Contractor agrees to comply with the requirements of the Contract Work Hours Standards Act and to insert this clause in all subcontracts hereunder with private persons or firms)

The Contractor agrees to insert the clauses hereof entitled "Davis-Bacon Act," "Contract Work Hours and Safety Standards Act-Overtime Compensation," "Apprentices and Trainees," "Payrolls and Basic Records," "Compliance with Copeland Regulations," "Withholding of Funds," "Subcontracts," and "Contract Termination-Debarment" in all subcontracts. The term "Contractor" as used in such clauses in any subcontract shall be deemed to refer to the subcontractor except in the phrase "Government Prime Contractor." (DAR 7-602.23(a)(vii))

37. CONTRACT TERMINATION - DEBARMENT (1972 APR)

(If this contract is with a State or political subdivision thereof, the Contractor agrees to comply with the requirements of the Contract Work Hours Standards Act and to insert this clause in all subcontracts hereunder with private persons or firms)

A breach of the clauses hereof entitled "Davis-Bacon Act," Contract Work Hours and Safety Standards Act-Overtime Compensation," "Apprentices and Trainees," "Payrolls and Basic Records," "Compliance with Copeland Regulations," "Withholding of Funds," and "Subcontracts" may be grounds for termination of the contract, and for debarment as provided in 29 CFR 5.6. (DAR 7-602.23(a)(viii))

38. DISPUTES CONCERNING LABOR STANDARDS (1977 DEC)

(If this contract is with a State or political subdivision thereof, the Contractor agrees to comply with the requirements of the Contract Work Hours Standards Act and to insert this clause in all subcontracts hereunder with private persons or firms)

Disputes arising out of the labor standards provisions of this contract shall be subject to the Disputes clause except to the extent such disputes involve the meaning of classifications or wage rates contained in the wage determination decision of the Secretary of Labor or the applicability of the labor provisions of this contract which questions shall be referred to the Secretary of Labor in accordance with the procedures of the Department of Labor. (DAR 7-602.23(a)(ix))

39. CONTRACTOR INSPECTION SYSTEM (1964 NOV)

The Contractor shall (i) maintain an adequate inspection system and perform such inspections as will assure that the work performed under the contract conforms to contract requirements, and (ii) maintain and make available to the Government adequate records of such inspections. (DAR 7-602.10(a))

40. GRATUITIES (1952 MAR)

(a) The Government may, by written notice to the Contractor, terminate the right of the Contractor to proceed under this contract if it is found, after notice and hearing, by the Secretary or his duly authorized representative, that gratuities (in the form of entertainment, gifts, or otherwise) were offered or given by the Contractor, or any agent or representative of the Contractor, to any officer or employee of the Government with a view toward securing a contract or securing favorable treatment with respect to the awarding or amending, or the making of any determinations with respect to the performing of such contract; provided, that the existence of the facts upon which the Secretary or his duly authorized representative makes such findings shall be in issue and may be reviewed in any competent court.

(b) In the event this contract is terminated as provided in paragraph (a) hereof, the Government shall be entitled (i) to pursue the same remedies against the Contractor as it could pursue in the event of a breach of the

contract by the Contractor, and (ii) as a penalty in addition to any other damages to which it may be entitled by law, to exemplary damages in an amount (as determined by the Secretary or his duly authorized representative) which shall be not less than three nor more than ten times the costs incurred by the Contractor in providing any such gratuities to any such officer or employee.

(c) The rights and remedies of the Government provided in this clause shall not be exclusive and are in addition to any other rights and remedies provided by law or under this contract. (DAR 7-104.16)

41. SUBCONTRACTING PLAN FOR SMALL BUSINESS AND SMALL DISADVANTAGED BUSINESS CONCERNS (FORMALLY ADVERTISED) (1980 AUG)

(The following clause is applicable if this contract (1) offers subcontracting possibilities, (2) is expected to exceed $500,000, or $1,000,000 in the case of construction of any public facility, and (3) is required to include the clause in DAR 7-104.14(a))

(a) This provision does not apply to small business concerns.

(b) The apparent low bidder, upon request by the Contracting Officer, shall submit a subcontracting plan which addresses separately subcontracting with small business concerns and small disadvantaged business concerns, and which shall be included in and made a material part of the resultant contract. The subcontracting plan shall be submitted within the time specified by the Contracting Officer. Failure to submit the subcontracting plan shall make the bidder ineligible for award of a contract. As a minimum, the subcontracting plan shall include -

(1) Separate percentage goals (expressed in terms of percentage of total planned subcontracting dollars) for the utilization as subcontractors of small business concerns and small business concerns owned and controlled by socially and economically disadvantaged individuals. For the purposes of the subcontracting plan, the Contractor shall include all subcontracts to be awarded for the specific purpose of performing this contract and may include a proportionate share of supplies and services whose costs are normally allocated as indirect or overhead costs when reasonably determined to be attributable to this contract.

a. A statement of: (i) total dollars planned to be subcontracted; (ii) total dollars planned to be subcontracted to small business; and (iii) total dollars planned to be subcontracted to small disadvantaged business.

b. A description of the principal supply and service areas to be subcontracted and an identification of those areas where it is planned to use (i) small business subcontractors, and (ii) small disadvantaged business subcontractors.

c. A statement of the method used in developing proposed subcontracting goals for small business and small disadvantaged business concerns.

d. If the offeror includes indirect and overhead costs as an element in establishing the goals in the subcontracting plan, the method used in determining the proportionate share of indirect and overhead costs incurred with (i) small business, and (ii) small disadvantaged business subcontractors shall be explained.

e. A statement of the method used for solicitation purposes (e.g., did the offeror use company source lists, the small business and disadvantaged small business source identification system provided by the Small Business Administration's Procurement Automated Source System, the National Minority Purchasing Council Vendor Information Service, or the services provided by the U.S. Department of Commerce Minority Business

Development Agency's Research and Information Division, and the facilities of small business and disadvantaged business trade associations?).

(2) The name of an individual within the employ of the bidder who will administer the subcontracting plan of the bidder and a description of the duties of such individual;

(3) A description of the efforts the bidder will make to assure that small business and small disadvantaged business concerns will have an equitable opportunity to compete for subcontracts;

(4) Assurances that the bidder will include the clause entitled "Utilization of Small Business and Small Disadvantaged Business Concerns" in all subcontracts which offer further subcontracting possibilities in the United States and that the bidder will require all subcontractors (except small business concerns) who receive subcontracts in excess of $1,000,000 in the case of a contract for the construction of any public facility, or in excess of $500,000 in the case of all other contracts, to adopt a plan in consonance with this clause;

(5) Assurances that the bidder will submit such periodic reports and cooperate in any studies or surveys as may be required by the contracting agency or the Small Business Administration in order to determine the extent of compliance by the bidder with the subcontracting plan; and

(6) A recitation of the types of records the successful bidder will maintain to demonstrate procedures which have been adopted to comply with the requirements and goals set forth in the plan, including the establishment of source lists of small business concerns and small disadvantaged business concerns; and efforts to identify and award subcontracts to such small business concerns. The records shall include at least the following (these records may be maintained on a plant-wide or company-wide basis unless otherwise indicated):

a. Small and disadvantaged business source lists, guides, and other data identifying small and small disadvantaged business vendors.

b. Organizations contacted for small and disadvantaged business sources.

c. On a contract-by-contract basis, records on all subcontract solicitations over $100,000, indicating on each solicitation (i) whether small business was solicited and if not, why not; (ii) whether small disadvantaged business was solicited and if not, why not; and (iii) reasons for the failure of responding small businesses or small disadvantaged businesses to receive the subcontract award.

d. Records to support such efforts as:

(i) contacts with disadvantaged and small business trade associations;

(ii) contacts with business development organizations; and

(iii) attendance at small and disadvantaged business procurement conferences and trade fairs.

e. Records to support internal activities to guide and encourage buyers such as:

(i) workshops, seminars, training programs, etc.; and

(ii) monitoring activities to evaluate compliance.

f. On a contract-by-contract basis, records to support award data submitted to the Government to include name, address, and size status of subcontractor.

(c) In order to effectively implement this plan, the Contractor shall:

(1) Issue and promulgate company-wide policy statements in support of this effort, develop written procedures and work instructions, and assign specific responsibilities regarding the requirements of this clause.

(2) Demonstrate continuing management interest and involvement in support of these programs through such actions as regular reviews of progress and establishment of overall corporate and divisional goals and objectives.

(3) Train and motivate Contractor personnel in support of these programs.

(4) Assist small business and small disadvantaged business concerns by arranging solicitations, time for the preparation of bids, quantities, specifications, and delivery schedules so as to facilitate the participation by such concerns. Where the Contractor's lists of potential small business and disadvantaged subcontractors are excessively long, reasonable effort shall be made to give all such small business concerns an opportunity to compete over a period of time.

(5) Provide adequate and timely consideration of the potentialities of small business and small disadvantaged business concerns in all "make-or-buy" decisions.

(6) Counsel and discuss subcontracting opportunities with representatives of small and disadvantaged business firms as are referred by the Small and Disadvantaged Business Utilization Specialist responsible for monitoring performance under this program and representatives of the SBA.

(d) The Contractor shall submit SF 295 in accordance with instructions provided on the form.

(e) The bidder understands that:

(1) Prior compliance of the bidder with other such subcontracting plans under previous contracts will be considered by the Contracting Officer in determining the responsibility of the bidder for award of the contract.

(2) The failure of any Contractor or subcontractor to comply in good faith with (i) the clause entitled "Utilization of Small Business and Small Disadvantaged Business Concerns", or (ii) the terms of any subcontracting plan required by this "Small Business and Small Disadvantaged Business Subcontracting Plan (Advertised)" provision, will be a material breach of the contract or subcontract.

(f) In the acquisition of commercial products, the bidder further understands that:

(1) If a commercial product (defined below) is offered, the required subcontracting plan may cover the company's production generally, both for Government contracts and for regular commercial sales, rather than just this acquisition. In such cases, the Contractor may request approval from the Contracting Officer to submit one company-wide, or division-wide, annual plan. If such request is deemed appropriate, the offeror shall submit a proposed company-wide, or division-wide, annual plan for acceptance.

(2) Upon approval by the Contracting Officer, the plan will remain in effect for the company's entire fiscal year. During this period, Government contracts for commercial products of the affected company or division will not be required to contain individual subcontracting plans relating only to the supply or services being acquired, unless the Contracting Officer determines for a particular contract that there are unforeseen possibilities for small business and small disadvantaged business subcontracting.

(3) At least 60 days before the scheduled termination of the company or division-wide plan, the Contractor may submit to the Contracting Officer a proposed company or division-wide subcontracting plan for its commercial products for the succeeding fiscal year. If the plan would

otherwise terminate prior to approval of the succeeding fiscal year's plan, it will remain in effect until the succeeding plan is accepted or rejected, but no longer than 60 days after the end of the company's fiscal year.

(4) For the purpose of this program, the term "commercial product" means a product in regular production sold in substantial quantities to the general public and/or industry at established catalog or market prices. A product which, in the opinion of the Contracting Officer, differs only insignificantly from the Contractor's commercial product may be regarded for the purpose of this clause as a commercial product. (DAR 7-104.14(c))

42. NOTICE AND ASSISTANCE REGARDING PATENT AND COPYRIGHT INFRINGEMENT (1965 JAN)

(The provisions of this clause shall be applicable only if the amount of this contract exceeds $10,000.)

(a) The Contractor shall report to the Contracting Officer, promptly and in reasonable written detail, each notice or claim of patent or copyright infringement based on the performance of this contract of which the Contractor has knowledge.

(b) In the event of any claim or suit against the Government on account of any alleged patent or copyright infringement arising out of the performance of this contract or out of the use of any supplies furnished or work or services performed hereunder, the Contractor shall furnish to the Government, when requested by the Contracting Officer, all evidence and information in possession of the Contractor pertaining to such suit or claim. Such evidence and information shall be furnished at the expense of the Government except where the Contractor has agreed to indemnify the Government.

(c) This clause shall be included in all subcontracts. (DAR 7-103.23)

43. AUTHORIZATION AND CONSENT (1964 MAR)

The Government hereby gives its authorization and consent (without prejudice to any rights of indemnification) for all use and manufacture, in the performance of this contract or any part hereof or any amendment hereto or any subcontract hereunder (including any lower-tier subcontract), of any invention described in and covered by a patent of the United States (i) embodied in the structure or composition of any article the delivery of which is accepted by the Government under this contract, or (ii) utilized in the machinery, tools, or methods the use of which necessarily results from compliance by the Contractor or the using subcontractor with (a) specifications or written provisions now or hereafter forming a part of this contract, or (b) specific written instructions given by the Contracting Officer directing the manner of performance. The entire liability to the Government for infringement of a patent of the United States shall be determined solely be the provisions of the indemnity clauses, if any, included in this contract or any subcontract hereunder (including any lower-tier subcontract), and the Government assumes liability for all other infringement to the extent of the authorization and consent hereinabove granted. (DAR 7-103.22)

44. COMPOSITION OF CONTRACTOR (1965 JAN)

If the Contractor hereunder is comprised of more than one legal entity, each such entity shall be jointly and severally liable hereunder. (DAR 7-602.32)

45. SITE INVESTIGATION (1965 JAN)

The Contractor acknowledges that he has investigated and satisfied himself as to the conditions affecting the work, including but not restricted to those

bearing upon transportation, disposal, handling and storage of materials, availability of labor, water, electric power, roads and uncertainties of weather, river stages, tides or similar physical conditions at the site, the conformation and conditions of the ground, the character of equipment and facilities needed preliminary to and during prosecution of the work. The Contractor further acknowledges that he has satisfied himself as to the character, quality and quantity of surface and subsurface materials or obstacles to be encountered insofar as this information is reasonably ascertainable from an inspection of the site, including all exploratory work done by the Government, as well as from information presented by the drawings and specifications made a part of this contract. Any failure by the Contractor to acquaint himself with the available information will not relieve him from responsibility for estimating properly the difficulty or cost of successfully performing the work. The Government assumes no responsibility for any conclusions or interpretations made by the Contractor on the basis or the information made available by the Government. (DAR 7-602.33)

46. PROTECTION OF EXISTING VEGETATION, STRUCTURES, UTILITIES, AND IMPROVEMENTS (1965 JAN)

(a) The Contractor will preserve and protect all existing vegetation such as trees, shrubs, and grass on or adjacent to the site of work which is not to be removed and which does not unreasonably interfere with the construction work. Care will be taken in removing trees authorized for removal to avoid damage to vegetation to remain in place. Any limbs or branches of trees broken during such operations or by the careless operation of equipment, or by workmen, shall be trimmed with a clean cut and painted with an approved tree pruning compound as directed by the Contracting Officer.

(b) The Contractor will protect from damage all existing improvements or utilities at or near the site of the work, the location of which is made known to him, and will repair or restore any damage to such facilities resulting from failure to comply with the requirements of this contract or the failure to exercise reasonable care in the performance of the work. If the Contractor fails or refuses to repair any such damage promptly, the Contracting Officer may have the necessary work performed and charge the cost thereof to the Contractor. (DAR 7-602.34)

47. OPERATIONS AND STORAGE AREAS (1965 JAN)

(a) All operations of the Contractor (including storage of materials) upon Government premises shall be confined to areas authorized or approved by the Contracting Officer. The Contractor shall hold and save the Government, its officers and agents, free and harmless from liability of any nature occasioned by his operations.

(b) Temporary buildings (storage sheds, shops, offices, etc.) may be erected by the Contractor only with the approval of the Contracting Officer, and shall be built with labor and materials furnished by the Contractor without expense to the Government. Such temporary buildings and utilities shall remain the property of the Contractor and shall be removed by him at his expense upon the completion of the work. With the written consent of the Contracting Officer, such buildings and utilities may be abandoned and need not be removed.

(c) The Contractor shall, under regulations prescribed by the Contracting Officer, use only established roadways or construct and use such temporary roadways as may be authorized by the Contracting Officer. Where materials are transported in the prosecution of the work, vehicles shall not be loaded beyond the loading capacity recommended by the manufacturer of the vehicle or

prescribed by any Federal, State or local law or regulation. When it is necessary to cross curbings or sidewalks, protection against damage shall be provided by the Contractor and any damaged roads, curbings, or sidewalks shall be repaired by, or at the expense of the Contractor. (DAR 7-602.35)

48. MODIFICATION PROPOSALS - PRICE BREAKDOWN (1968 APR)

The Contractor, in connection with any proposal he makes for a contract modification, shall furnish a price breakdown, itemized as required by the Contracting Officer. Unless otherwise directed, the breakdown shall be in sufficient detail to permit an analysis of all material, labor, equipment, subcontract, and overhead costs, as well as profit, and shall cover all work involved in the modification, whether such work was deleted, added or changed. Any amount claimed for subcontracts shall be supported by a similar price breakdown. In addition, if the proposal includes a time extension, a justification therefor shall also be furnished. The proposal, together with the price breakdown and time extension justification, shall be furnished by the date specified by the Contracting Officer. (DAR 7-602.36)

49. SUBCONTRACTORS (1979 MAR)

(In construction contracts to be performed in United States possessions (as defined in DAR 18-703.2) and in Puerto Rico, the second sentence is modified to refer only to the clauses required by DAR 18-703.2)

Within seven days after the award of any subcontract either by himself or a subcontractor, the Contractor shall deliver to the Contracting Officer a completed DD Form 1566. The form shall include the subcontractor's acknowledgement of the inclusion in his subcontract of the clauses of this contract entitled "Davis-Bacon Act," "Contract Work Hours and Safety Standards Act-Overtime Compensation," "Apprentices and Trainees," "Compliance with Copeland Regulations," "Withholding of Funds," "Subcontracts," "Contract Termination-Debarment," and "Payrolls and Basic Records." Nothing contained in this contract shall create any contractual relation between the subcontractor and the Government. (DAR 7-602.37)

50. CLEANING UP (1965 JAN)

The Contractor shall at all times keep the construction area, including storage areas used by him, free from accumulations of waste material or rubbish and prior to completion of the work remove any rubbish from the premises and all tools, scaffolding, equipment, and materials not the property of the Government. Upon completion of the construction the Contractor shall leave the work and premises in a clean, neat and workmanlike condition satisfactory to the Contracting Officer. (DAR 7-602.40)

51. ADDITIONAL DEFINITIONS (1965 JAN)

(a) Wherever in the specifications or upon the drawings the words "directed," "required," "ordered," "designated," "prescribed," or words of like import are used, it shall be understood that the "direction," "requirement," "ordered," "designation," or "prescription," of the Contracting Officer is intended and similarly the words "approved," "acceptable," "satisfactory" or words of like import shall mean "approved by" or "acceptable to," or "satisfactory to" the Contracting Officer, unless otherwise expressly stated.

(b) Where "as shown," "as indicated," "as detailed," or words of similar import are used, it shall be understood that the reference is made to the drawings accompanying this contract unless stated otherwise. The word

"provided" as used herein shall be understood to mean "provided complete in place," that is "furnished and installed." (DAR 7-602.41)

52. ACCIDENT PREVENTION (1981 AUG)

(a) In order to provide safety controls for protection to the life and health of employees and other persons; for prevention of damage to property, materials, supplies, and equipment; and for avoidance of work interruptions in the performance of this contract, the Contractor shall comply with all pertinent provisions of Corps of Engineers Manual, EM 385-1-1, dated 1 April 1981, entitled "Safety and Health Requirements Manual", and will also take or cause to be taken such additional measures as the Contracting Officer may determine to be reasonably necessary for the purpose.

(b) The Contractor will maintain an accurate record of, and will report to the Contracting Officer in the manner and on the forms prescribed by the Contracting Officer, exposure data and all accidents resulting in death, traumatic injury, occupational disease, and damage to property, materials, supplies and equipment incident to work performed under this contract.

(c) The Contracting Officer will notify the Contractor of any noncompliance with the foregoing provisions and the action to be taken. The Contractor shall, after receipt of such notice, immediately take corrective action. Such notice, when delivered to the Contractor or his representative at the site of the work, shall be deemed sufficient for the purpose. If the Contractor fails or refuses to comply promptly, the Contracting Officer may issue an order stopping all or part of the work until satisfactory corrective action has been taken. No part of the time lost due to any such stop orders shall be made the subject of claim for extension of time or for excess costs or damages by the Contractor.

(d) Compliance with the provisions of this clause by subcontractors will be the responsibility of the Contractor.

(e) Prior to commencement of the work the Contractor will:

(1) submit in writing his proposals for effectuating this provision for accident prevention;

(2) meet in conference with representatives of the Contracting Officer to discuss and develop mutual understandings relative to administration of the over-all safety program. (DAR 7-602.42(a) & (b))

53. GOVERNMENT INSPECTORS (1965 JAN)

The work will be conducted under the general direction of the Contracting Officer and is subject to inspection by his appointed inspectors to insure strict compliance with the terms of the contract. No inspector is authorized to change any provision of the specifications without written authorization of the Contracting Officer, nor shall the presence or absence of an inspector relieve the Contractor from any requirements of the contract. (DAR 7-602.43)

54. RIGHTS IN SHOP DRAWINGS (1966 APR)

(Applicable to all contracts calling for the delivery of shop drawings)

(a) Shop drawings for construction means drawings, submitted to the Government by the Construction Contractor, subcontractor or any lower tier subcontractor pursuant to a construction contract, showing in detail (i) the proposed fabrication and assembly of structural elements and (ii) the installation (i.e., form, fit, and attachment details) of materials or equipment. The Government may duplicate, use, and disclose in any manner and for any purpose shop drawings delivered under this contract.

(b) This clause, including this paragraph (b), shall be included in all subcontracts hereunder at any tier. (DAR 7-602.47)

55. AFFIRMATIVE ACTION FOR DISABLED VETERANS AND VETERANS OF THE VIETNAM ERA (1976 JUL)

(This clause is applicable pursuant to 41 C.F.R. 60-250, if this contract is for $10,000 or more.)

(a) The Contractor will not discriminate against any employee or applicant for employment because he or she is a disabled veteran or veteran of the Vietnam era in regard to any position for which the employee or applicant for employment is qualified. The Contractor agrees to take affirmative action to employ, advance in employment and otherwise treat qualified disabled veterans and veterans of the Vietnam era without discrimination based upon their disability or veterans status in all employment practices such as the following: employment upgrading, demotion or transfer, recruitment, advertising, layoff or termination, rates of pay or other forms of compensation, and selection for training, including apprenticeship.

(b) The Contractor agrees that all suitable employment openings of the Contractor which exist at the time of the execution of this contract and those which occur during the performance of this contract, including those not generated by this contract and including those occurring at an establishment of the Contractor other than the one wherein the contract is being performed but excluding those of independently operated corporate affiliates, shall be listed at an appropriate local office of the State employment service system wherein the opening occurs. The Contractor further agrees to provide such reports to such local office regarding employment openings and hires as may be required.

State and local government agencies holding Federal contracts of $10,000 or more shall also list all their suitable openings with the appropriate office of the State employment service, but are not required to provide those reports set forth in paragraphs (d) and (e).

(c) Listing of employment openings with the employment service system pursuant to this clause shall be made at least concurrently with the use of any other recruitment source or effort and shall involve the normal obligations which attach to the placing of a bona fide job order, including the acceptance of referrals of veterans and nonveterans. The listing of employment openings does not require the hiring of any particular job applicant or from any particular group of job applicants, and nothing herein is intended to relieve the Contractor from any requirements in Executive Orders or regulations regarding nondiscrimination in employment.

(d) The reports required by paragraph (b) of this clause shall include, but not be limited to, periodic reports which shall be filed at least quarterly with the appropriate local office or, where the Contractor has more than one hiring location in a State, with the central office of that State employment service. Such reports shall indicate for each hiring location (1) the number of individuals hired during the reporting period, (2) the number of nondisabled veterans of the Vietnam era hired, (3) the number of disabled veterans of the Vietnam era hired, and (4) the total number of disabled veterans hired. The reports should include covered veterans hired for on-the-job training under 38 U.S.C. 1787. The Contractor shall submit a report within 30 days after the end of each reporting period wherein any performance is made on this contract identifying data for each hiring location. The Contractor shall maintain at each hiring location copies of the reports submitted until the expiration of one year after final payment under the contract, during which time these reports and related documentation shall

be made available, upon request, for examination by any authorized representatives of the Contracting Officer or of the Secretary of Labor. Documentation would include personnel records respecting job openings, recruitment and placement.

(e) Whenever the Contractor becomes contractually bound to the listing provisions of this clause, it shall advise the employment service system in each State where it has establishments of the name and location of each hiring location in the State. As long as the Contractor is contractually bound to these provisions and has so advised the State system, there is no need to advise the State system of subsequent contracts. The Contractor may advise the State system when it is no longer bound by this contract clause.

(f) This clause does not apply to the listing of employment openings which occur and are filled outside of the 50 States, the District of Columbia, Puerto Rico, Guam, and the Virgin Islands.

(g) The provisions of paragraphs (b), (c), (d) and (e) of this clause do not apply to openings which the Contractor proposes to fill from within his own organization or to fill pursuant to a customary and traditional employer-union hiring arrangement. This exclusion does not apply to a particular opening once an employer decides to consider applicants outside of his own organization or employer-union arrangement for that opening.

(h) As used in this clause:

(1) "All suitable employment openings" includes, but is not limited to, openings which occur in the following job categories: production and nonproduction; plant and office; laborers and mechanics; supervisory and nonsupervisory; technical; and executive, administrative, and professional openings as are compensated on a salary basis of less than $25,000 per year. This term includes full-time employment, temporary employment of more than three (3) days duration, and part-time employment. It does not include openings which the Contractor proposes to fill from within his own organization or to fill pursuant to a customary and traditional employer-union hiring arrangement nor openings in an educational institution which are restricted to students of that institution. Under the most compelling circumstances an employment opening may not be suitable for listing, including such situations where the needs of the Government cannot reasonably be otherwise supplied, where listing would be contrary to national security, or where the requirement of listing would otherwise not be for the best interest of the Government.

(2) "Appropriate office of the State employment service system" means the local office of the Federal-State national system of public employment offices with assigned responsibility for serving the area where the employment opening is to be filled, including the District of Columbia, Guam, Puerto Rico, and the Virgin Islands.

(3) "Openings which the Contractor proposes to fill from within his own organization" means employment openings for which no consideration will be given to persons outside the Contractor's organization (including any affiliates, subsidiaries, and the parent companies) and includes any openings which the Contractor proposes to fill from regularly established "recall" lists.

(4) "Openings which the Contractor proposes to fill pursuant to a customary and traditional employer-union hiring arrangement" means employment openings which the Contractor proposes to fill from union halls, which is part of the customary and traditional hiring relationship which exists between the Contractor and representatives of his employees.

(i) The Contractor agrees to comply with the rules, regulations, and relevant orders of the Secretary of Labor issued pursuant to the Vietnam Era Veterans' Readjustment Assistance Act, hereinafter referred to as the "Act" (38 U.S.C. 2012).

(j) In the event of the Contractor's noncompliance with the requirements of this clause, actions for noncompliance may be taken in accordance with the rules, regulations, and relevant orders of the Secretary of Labor issued pursuant to the Act.

(k) The Contractor agrees to post in conspicuous places, available to employees and applicants for employment, notices in a form to be prescribed by the Director, Office of Federal Contract Compliance Programs, provided by or through the Contracting Officer. Such notice shall state the Contractor's obligation under the law to take affirmative action to employ and advance in employment qualified disabled veterans and veterans of the Vietnam era for employment, and the rights of applicants and employees.

(l) The Contractor will notify each labor union or representative of workers with which it has a collective bargaining agreement or other contract understanding, that the Contractor is bound by the terms of the Act, and is committed to take affirmative action to employ and advance in employment qualified disabled veterans and veterans of the Vietnam era.

(m) The Contractor will include the provisions of this clause in every subcontract or purchase order of $10,000 or more unless exempted by rules, regulations, or orders of the Secretary issued pursuant to the Act, so that such provisions will be binding upon each subcontractor or vendor. The Contractor will take such action with respect to any subcontract or purchase order as the Director of the Office of Federal Contract Compliance Programs may direct to enforce such provisions, including action for noncompliance. (DAR 7-103.27)

56. VALUE ENGINEERING INCENTIVE--CONSTRUCTION (1980 DEC)

(The following clause is applicable if this contract is in excess of $100,000)

(a) Applicability. This clause applies to any Contractor developed, prepared, and submitted Value Engineering Change Proposal (VECP).

(b) Definitions.

(1) "Contractor's development and implementation costs" means those costs incurred on a VECP before Government acceptance and those costs the Contractor incurs specifically to make the changes required by Government acceptance of a VECP.

(2) "Government costs" means those agency costs that result directly from developing and implementing the VECP and any net increases in the cost of testing, operations, maintenance, and logistic support. They do not include the normal administrative costs of processing the VECP.

(3) "Instant contract savings" means the estimated reduction in Contractor cost of performance resulting from acceptance of the VECP, minus allowable Contractor's development and implementation costs (including subcontractor's development and implementation costs). (See paragraph (g).)

(4) "Value Engineering Change Proposal (VECP)" means a proposal that:

(i) requires a change to this, the instant contract, to implement; and

(ii) results in reducing the contract price or estimated cost without impairing essential functions or characteristics, provided that it does not involve a change in deliverable end-item quantities only.

(c) VECP Preparation. As a minimum, the Contractor shall include the information described in (1) through (6) in each VECP. If the proposed change affects contractually required configuration management procedures, the instructions in the procedures relating to format, identification, and priority assignment shall govern VECP preparation. The VECP shall include the following:

(1) A description of the difference between the existing contract requirement and that proposed, the comparative advantages and disadvantages of each, a justification when an item's function or characteristics are being altered, and the effect of the change on the end item's performance.

(2) A list of the contract requirements that must be changed if the VECP is accepted, including any suggested specification revisions.

(3) A separate, detailed cost estimate for both the affected portions of the existing contract requirement and the VECP. The cost reduction associated with the VECP shall take into account the Contractor's allowable development and implementation costs, including any amount attributable to subcontracts under paragraph (g). The Contractor shall also include a description and estimate of costs the Government may incur in implementing the VECP, such as test and evaluation and operating and support costs.

(4) A projection of any effects the proposed change would have on collateral costs to the agency.

(5) A statement of the time by which a contract modification accepting the VECP must be issued in order to achieve the maximum cost reduction, noting any effect on the contract completion time or delivery schedule.

(6) Identification of any previous submissions of the VECP, including the dates submitted, the agencies and contract numbers involved, and previous Government actions, if known.

(d) Submissions.

(1) The Contractor shall submit VECPs to the Resident Engineer at the worksite, with a copy to the Contracting Officer. The Contracting Officer shall notify the Contractor of the status of the VECP within 45 calendar days after the contracting office receives it. If additional time is required because of extenuating circumstances, the Contractor shall be notified within the 45-day period and provided the reason for the delay and the expected date of the Contracting Officer's decision. VECPs shall be processed expeditiously; however, the Government shall not be liable for any delay in acting upon a VECP.

(2) If the VECP is not accepted, the Contracting Officer shall provide the Contractor written notification fully explaining the reasons for rejection. The Contractor may withdraw, in whole or in part, any VECP not accepted by the Government within the period specified in the VECP. The Contracting Officer may require that the Contractor provide written notification before undertaking significant expenditures for VECP effort.

(e) Acceptance. Any VECP may be accepted in whole or in part by the Contracting Officer's award of a modification to this contract citing this clause. The Contracting Officer may accept the VECP, even though an agreement on price reduction has not be reached, by issuing the Contractor a notice to proceed with the change. Until a notice to proceed is issued or a contract modification applies a VECP to this contract, the Contractor shall perform in accordance with the existing contract. The Contracting Officer's decision to accept all or part of any VECP shall be final and not subject to the Disputes clause.

(f) Sharing.

(1) Rates. The Contractor's share of savings is determined by subtracting Government costs from instant contract savings and multiplying the result by 55 percent for fixed-price contracts and 25 percent for cost-reimbursement contracts.

(2) Payment. Payment of any share due the Contractor for use of a VECP on this contract shall be authorized by a modification to this contract to:

(i) accept the VECP;
(ii) reduce the contract price or estimated cost by the amount of instant contract savings; and
(iii) provide the Contractor's share of savings by adding the amount calculated in (f)(1) to the contract price or fee.

(g) Subcontract. The Contractor shall include appropriate VE clauses in an subcontract of $50,000 or more and may include them in subcontracts of lesser value. To compute any adjustment in the contract price under paragraph (f), the Contractor's VECP development and implementation costs shall include any subcontractor's development and implementation costs that clearly result from the VECP, but shall exclude any VE incentive payments to subcontractors. The Contractor may choose any arrangement for subcontractor VE incentive payments, provided that these payments are not made from the Government's share of the savings resulting from the VECP.

(h) Data. The Contractor may restrict the Government's right to use any part of a VECP or the supporting data by marking the following legend on the affected parts:

> "These data, furnished under the Value Engineering Incentive--Construction clause of Contract _____, shall not be disclosed outside the Government or duplicated, used, or disclosed, in whole or in part, for any purpose other than to evaluate a VECP submitted under the clause. This restriction does not limit the Government's right to use information contained in these data if it has been obtained or is otherwise available from the Contractor or from another source without limitations."

If a VECP is accepted, the Contractor hereby grants the Government unlimited rights in the VECP and supporting data, except that, with respect to data qualifying and submitted as limited rights technical data, the Government shall have the rights specified in the contract modification implementing the VECP and shall appropriately mark the data. (DAR 7-602.50)

57. AFFIRMATIVE ACTION FOR HANDICAPPED WORKERS (1976 MAY)

(Contracts and subcontracts are exempt from the requirements of the following clause with regard to work performed outside the United States by employees who were not recruited within the United States.)

(a) The Contractor will not discriminate against any employee or applicant for employment because of physical or mental handicap in regard to any position for which the employee or applicant for employment is qualified. The Contractor agrees to take affirmative action to employ, advance in employment and otherwise treat qualified handicapped individuals without discrimination based upon their physical or mental handicap in all employment practices such as the following: employment, upgrading, demotion or transfer, recruitment, advertising, layoff or termination, rates of pay or other forms of compensation, and selection for training, including apprenticeship.

(b) The Contractor agrees to comply with the rules, regulations, and relevant orders of the Secretary of Labor issued pursuant to the Act.

(c) In the event of the Contractor's noncompliance with the requirements of this clause, action for noncompliance may be taken in accordance with the rules, regulations and relevant orders of the Secretary of Labor issued pursuant to the Act.

(d) The Contractor agrees to post in conspicuous places, available to employees and applicants for employment, notices in a form to be prescribed by the Director, provided by or through the Contracting Officer. Such notices shall state the Contractor's obligation under the law to take affirmative action to employ and advance in employment qualified handicapped employees and applicants for employment, and the rights of applicants and employees.

(e) The Contractor will notify each labor union or representative of workers with which it has a collective bargaining agreement or other contract understanding, that the Contractor is bound by the terms of section 503 of the Rehabilitation Act of 1973, and is committed to take affirmative action to employ and advance in employment physically and mentally handicapped individuals.

(f) The Contractor will include the provisions of this clause in every subcontract or purchase order of $2,500 or more unless exempted by rules, regulations, or orders of the Secretary issued pursuant to section 503 of the Act, so that such provisions will be binding upon each subcontractor or vendor. The Contractor will take such action with respect to any subcontract or purchase order as the Director of the Office of Federal Contract Compliance Programs may direct to enforce such provisions, including action for noncompliance. (DAR 7-103.28)

58. CLEAN AIR AND WATER (1975 OCT)

(Applicable only if the contract exceeds $100,000, or the contracting officer has determined that orders under an indefinite quantity contract in any one year will exceed $100,000, or a facility to be used has been the subject of a conviction under the Clean Air Act (42 U.S.C. 1857c-8(c)(1) or the Federal Water Pollution Control Act (33 U.S.C. 1319(c)) and is listed by EPA, or the contract is not otherwise exempt.)

(a) The Contractor agrees as follows:

(i) To comply with all the requirements of section 114 of the Clean Air Act, as amended (42 U.S.C. 1857, et seq., as amended by Public Law 91-604) and section 308 of the Federal Water Pollution Control Act (33 U.S.C. 1251, as amended by Public Law 92-500), respectively, relating to inspection, monitoring, entry, reports, and information, as well as other requirements specified in section 114 and section 308 of the Air Act and the Water Act, respectively, and all regulations and guidelines issued thereunder before the award of this contract;

(ii) That no portion of the work required by this prime contract will be performed in a facility listed on the Environmental Protection Agency List of Violating Facilities on the date this contract was awarded unless and until the EPA eliminates the name of such facility or facilities from such listing;

(iii) To use his best efforts to comply with clean air standards and clean water standards at the facilities in which the contract is being performed; and

(iv) To insert the substance of the provisions of this clause in any nonexempt subcontract, including this paragraph (iv).

(b) The terms used in this cluase have the following meanings.

(i) The term "Air Act" means the Clean Air Act, as amended (42 U.S.C. 1857 et seq., as amended by Public Law 91-604).

(ii) The term "Water Act" means Federal Water Pollution Control Act, as amended (33 U.S.C. 1251 et seq., as amended by Public Law 92-500).

(iii) The term "clean air standards" means any enforceable rules, regulations, guidelines, standards, limitations, orders, controls, prohibitions, or other requirements which are contained in, issued under, or otherwise adopted pursuant to the Air Act or Executive Order 11738, an applicable implementation plan as described in section 110(d) of the Clean Air Act (42 U.S.C. 1857c-5(d), an approved implementation procedure or plan under section 111(c) or section 111(d), respectively, of the Air Act (42 U.S.C. 1857c-6(c) or (d)), or an approved implementation procedure under section 112(d) of the Air Act (42 U.S.C. 1857c-7(d)).

(iv) The term "clean water standards" means any enforceable limitation, control, condition, prohibition, standard or other requirement which is promulgated pursuant to the Water Act or contained in a permit issued to a discharger by the Environmental Protection Agency or by a State under an approved program, as authorized by section 402 of the Water Act (33 U.S.C. 1342), or by a local government to ensure compliance with pretreatment regulations as required by section 307 of the Water Act (33 U.S.C. 1317)

(v) The term "compliance" means compliance with clean air or water standards. Compliance shall also mean compliance with a schedule or plan ordered or approved by a court of competent jurisdiction, the Environmental Protection Agency or an air or water pollution control agency in accordance with the requirement of the Air Act or Water Act and regulations issued pursuant thereto.

(vi) The term "facility" means any building, plant, installation, structure, mine, vessel or other floating craft, location, or site of operations, owned, leased, or supervised by a contractor, subcontractor, to be utilized in the performance of a contract or subcontract. Where a location or site of operations contains or includes more than one building, plant, installation, or structure, the entire location or site shall be deemed to be a facility except where the Director, Office of Federal Activities, Environmental Protection Agency, determines that independent facilities are colocated in one geographical area.

(vii) The term "nonexempt contract or subcontract" means a contract or subcontract of more than $100,000 which is not otherwise exempted pursuant to the EPA regulations implementing the Air Act and Water Act (40 CFR 15.5), as further implemented in DAR 1-2302.4 or in FPR 1-1.2302-4 (whichever is applicable) and the procedures of the Department awarding the contract. (DAR 7-103.29)

59. NOTICE TO THE GOVERNMENT OF LABOR DISPUTES (1958 SEP)

(a) Whenever the Contractor has knowledge that any actual or potential labor dispute is delaying or threatens to delay the timely performance of this contract, the Contractor shall immediately give notice thereof, including all relevant information with respect thereto, to the Contracting Officer.

(b) The Contractor agrees to insert the substance of this clause, including this paragraph (b), in any subcontract hereunder as to which a labor dispute may delay the timely performance of this contract; except that each such subcontract shall provide that in the event its timely performance is delayed or threatened by delay by any actual or potential labor dispute, the subcontractor shall immediately notify his next higher tier subcontractor, or the prime contractor, as the case may be, of all relevant information with respect to such dispute. (DAR 7-104.4)

60. CONTRACT PRICES - BIDDING SCHEDULE (1968 APR)

(The following clause is applicable to contracts containing unit prices)

Payment for the various items listed in the Bidding Schedule shall constitute full compensation for furnishing all plant, labor, equipment, appliances, and materials, and for performing all operations required to complete the work in conformity with the drawings and specifications. All costs for work not specifically mentioned in the Bidding Schedule shall be included in the contract prices for the items listed. (DAR 7-603.5)

61. PRIORITIES, ALLOCATIONS, AND ALLOTMENTS (1975 OCT)

(The following clause is applicable to ratable contracts)

The Contractor shall follow the provisions of DMS Reg. 1 or DPS Reg. 1 and all other applicable regulations and orders of the Bureau of Domestic Commerce in obtaining controlled materials and other products and materials needed to fill this order. (DAR 7-104.18)

62. PRICE REDUCTION FOR DEFECTIVE COST OR PRICING DATA - PRICE ADJUSTMENTS (1970 JAN)

(The following clause is applicable if this contract is in excess of $500,000)

(a) This clause shall become operative only with respect to any modification of this contract which involves aggregate increases and/or decreases in costs plus applicable profits in excess of $500,000 unless the modification is priced on the basis of adequate competition, established catalog or market prices of commercial items sold in substantial quantities to the general public, or prices set by law or regulation. The right to price reduction under this clause is limited to defects in data relating to such modification.

(b) If any price, including profit, or fee, negotiated in connection with any price adjustment under this contract was increased by any significant sums because:

(i) the Contractor furnished cost or pricing data which was not complete, accurate and current as certified in the Contractor's Certificate of Current Cost or Pricing Data;

(ii) a subcontractor, pursuant to the clause of this contract entitled "Subcontractor Cost or Pricing Data" or "Subcontractor Cost or Pricing Data - Price Adjustments" or any subcontract clause therein required, furnished cost or pricing data which was not complete, accurate and current as certified in the subcontractor.s Certificate of Current Cost or Pricing Data;

(iii) a subcontractor or prospective subcontractor furnished cost or pricing data which was required to be complete, accurate and current and to be submitted to support a subcontract cost estimate furnished by the Contractor but which was not complete, accurate and current as of the date certified in the Contractor's Certificate of Current Cost or Pricing Data; or

(iv) the Contractor or a subcontractor or prospective subcontractor furnished any data, not within (i), (ii) or (iii) above, which was not accurate, as submitted;

the price shall be reduced accordingly and the contract shall be modified in writing as may be necessary to reflect such reduction. However, any reduction in the contract price due to defective subcontract data of a prospective subcontractor, when the subcontract was not subsequently awarded to such subcontractor, will be limited to the amount (plus applicable overhead and profit markup) by which the actual subcontract, or actual cost to the

Contractor if there was no subcontract, was less than the prospective subcontract cost estimate submitted by the Contractor, provided the actual subcontract price was not affected by defective cost or pricing data.
Note: Since the contract is subject to reduction under this clause by reason of defective cost or pricing data submitted in connection with certain subcontracts, it is expected that the contractor may wish to include a clause in each such subcontract requiring the subcontractor to appropriately indemnify the contractor. However, the inclusion of such a clause and the terms thereof are matters for negotiation and agreement between the contractor and the subcontractor, provided that they are consistent with DAR 23-203 relating to Disputes provisions in subcontracts. It is also expected that any subcontractor subject to such indemnification will generally require substantially similar indemnification for defective cost or pricing data required to be submitted by his lower tier subcontractors. (DAR 7-104.29(b))

63. INTEREST (1972 MAY)

Notwithstanding any other provision of this contract, unless paid within thirty (30) days, all amounts that become payable by the Contractor to the Government under this contract (net of any applicable tax credit under the Internal Revenue Code) shall bear interest from the date due until paid and shall be subject to adjustments as provided by Part 6 of Appendix E of the Defense Acquisition Regulation, as in effect on the date of this contract. The interest rate per annum shall be the interest rate in effect which has been established by the Secretary of the Treasury pursuant to Public Law 92-41; 85 STAT 97 for the Renegotiation Board, as of the date the amount becomes due as herein provided. Amounts shall be due upon the earliest one of (i) the date fixed pursuant to this contract; (ii) the date of the first written demand for payment, consistent with this contract, including demand consequent upon default termination; (iii) the date of transmittal by the Government to the Contractor of a proposed supplemental agreement to confirm completed negotiations fixing the amount; or (iv) if this contract provides for revision of prices, the date of written notice to the Contractor stating the amount of refund payable in connection with a pricing proposal or in connection with a negotiated pricing agreement not confirmed by contract supplement. (DAR 7-104.39)

64. AUDIT BY DEPARTMENT OF DEFENSE (1978 AUG)

(The following clause is applicable unless this contract was entered into by formal advertising and is not in excess of $100,000)

(a) General. The Contracting Officer or his representatives shall have the audit and inspection rights described in the applicable paragraphs (b), (c) and (d) below.

(b) Examination of Costs. If this is a cost reimbursement type, incentive, time and materials, labor hour, or price redeterminable contract, or any combination thereof, the Contractor shall maintain, and the Contracting Officer or his representatives shall have the right to examine books, records, documents, and other evidence and accounting procedures and practices, sufficient to reflect properly all direct and indirect costs of whatever nature claimed to have been incurred and anticipated to be incurred for the performance of this contract. Such right of examination shall include inspection at all reasonable times of the Contractor's plants, or such parts thereof, as may be engaged in the performance of this contract.

(c) Cost or Pricing Data. If the Contractor submitted cost or pricing data in connection with the pricing of this contract or any change or modification thereto, unless such pricing was based on adequate price

competition, established catalog or market prices of commercial items sold in substantial quantities to the general public, or prices set by law or regulation, the Contracting Officer or his representatives who are employees of the United States Government shall have the right to examine all books, records, documents and other data of the Contractor related to the negotiation, pricing or performance of such contract, change or modification, for the purpose of evaluating the accuracy, completeness and currency of the cost or pricing data submitted. Additionally, in the case of pricing any change or modification exceeding $100,000 to formally advertised contracts, the Comptroller General of the United States or his representatives who are employees of the United States Government shall have such rights. The right of examination shall extend to all documents necessary to permit adequate evaluation of the cost or pricing data submitted, along with the computations and projections used therein.

(d) Reports. If the Contractor is required to furnish Contractor Cost Data Reports (CCDR), Contract Fund Status Reports (CFSR), or Cost Performance Reports (CPR) the Contracting Officer or his representatives shall have the right to examine books, records, other documents, and supporting materials, for the purpose of evaluating (i) the effectiveness of the Contractor's policies and procedures to produce data compatible with the objectives of these reports, and (ii) the data reported.

(e) Availability. The materials described in (b), (c) and (d) above shall be made available at the office of the Contractor, at all reasonable times, for inspection, audit, or reproduction, until the expiration of three years from the date of final payment under this contract or such lesser time specified in Appendix M of the Defense Acquisition Regulation, and for such longer period, if any, as is required by applicable statute, or by other clauses of this contract, or by (1) and (2) below:

(1) If this contract is completely or partially terminated, the records relating to the work terminated shall be made available for a period of three years from the date of any resulting final settlement.

(2) Records which relate to appeals under the "Disputes" clause of this contract, or litigation or the settlement of claims arising out of the performance of this contract, shall be made available until such appeals, litigation, or claims have been disposed of.

(f) The Contractor shall insert a clause containing all the provisions of this clause, including this paragraph (f), in all subcontracts exceeding $10,000 hereunder, except altered as necessary for proper identification of the contracting parties and the Contracting Officer under the Government prime contract. (DAR 7-104.41(a))

65. SUBCONTRACTOR COST OR PRICING DATA - PRICE ADJUSTMENTS (1970 JAN)

(The following clause is applicable if this contract is in excess of $500,000)

(a) Paragraphs (b) and (c) of this clause shall become operative only with respect to any modification made pursuant to one or more provisions of this contract which involves aggregate increases and/or decreases in costs plus applicable profits expected to exceed $500,000. The requirements of this clause shall be limited to such modifications.

(b) The Contractor shall require subcontractors hereunder to submit cost or pricing data under the following circumstances: (i) prior to the award of any subcontract the amount of which is expected to exceed $500,000 when entered into; (ii) prior to the pricing of any subcontract modification which involves aggregate increases and/or decreases in costs plus applicable profits expected to exceed $500,000; except where the price is based on adequate price

competition, established catalog or market prices of commercial items sold in substantial quantities to the general public, or prices set by law or regulation.

(c) The Contractor shall require subcontractors to certify that to the best of their knowledge and belief the cost and pricing data submitted under (b) above is accurate, complete, and current as of the date of agreement on the negotiated price of the subcontract or subcontract change or modification.

(d) The Contractor shall insert the substance of this clause including this paragraph (d) in each subcontract which exceeds $500,000. (DAR 7-104.42(b))

66.1 GOVERNMENT-FURNISHED PROPERTY (SHORT FORM) (1964 NOV)

(The following clause is applicable when Government Property having an acquisition cost of $50,000 or less is furnished to or acquired by the Contractor)

(a) The Government shall deliver to the Contractor, for use only in connection with this contract, the property described in the schedule or specifications (hereinafter referred to as "Government-furnished property"), at the times and locations stated therein. If the Government-furnished property, suitable for its intended use, is not so delivered to the Contractor, the Contracting Officer shall, upon timely written request made by the Contractor, and if the facts warrant such action, equitably adjust any affected provision of this contract pursuant to the procedures of the "Changes" clause hereof.

(b) Title to Government-furnished property shall remain in the Government. The Contractor shall maintain adequate property control records of Government-furnished property in accordance with sound industrial practice.

(c) Unless otherwise provided in this contract, the Contractor, upon delivery to him of any Government-furnished property, assumes the risk of, and shall be responsible for, any loss thereof or damage thereto except for reasonable wear and tear, and except to the extent that such property is consumed in the performance of this contract.

(d) The Contractor shall, upon completion of this contract, prepare for shipment, deliver f.o.b. origin, or dispose of all Government-furnished property not consumed in the performance of this contract or not theretofore delivered to the Government, as may be directed or authorized by the Contracting Officer. The net proceeds of any such disposal shall be credited to the contract price or paid in such other manner as the Contracting Officer may direct. (DAR 7-104.24(f))

66.2 GOVERNMENT PROPERTY (FIXED PRICE) (1968 SEP)

(The following clause is applicable when Government Property having an acquisition cost in excess of $50,000 is furnished to or acquired by the Contractor)

(a) Government-Furnished Property. The Government shall deliver to the Contractor, for use in connection with and under the terms of this contract, the property described as Government-furnished property in the Schedule or specifications, together with such related data and information as the Contractor may request and as may reasonably be required for the intended use of such property (hereinafter referred to as "Government-furnished property"). The delivery or performance dates for the supplies or services to be furnished by the Contractor under this contract are based upon the expectation that Government-furnished property suitable for use (except for such property furnished "as is") will be delivered to the Contractor at the times stated in the Schedule or, if not so stated, in sufficient time to

enable the Contractor to meet such delivery or performance dates. In the event that Government-furnished property is not delivered to the Contractor by such time or times, the Contracting Officer shall, upon timely written request made by the Contractor, make a determination of the delay, if any, occasioned the Contractor thereby, and shall equitably adjust the delivery or performance dates or the contract price, or both, and any other contractual provision affected by any such delay, in accordance with the procedures provided for in the clause of this contract entitled "Changes." Except for Government-furnished property furnished "as is," in the event the Government-furnished property is received by the Contractor in a condition not suitable for the intended use the Contractor shall, upon receipt thereof, notify the Contracting Officer of such fact and, as directed by the Contracting Officer, either (i) return such property at the Government's expense or otherwise dispose of the property, or (ii) effect repairs or modifications. Upon the completion of (i) or (ii) above, the Contracting Officer upon written request of the Contractor shall equitably adjust the delivery or performance dates or the contract price, or both, and any other contractual provision affected by the rejection or disposition, or the repair or modification, in accordance with the procedures provided for in the clause of this contract entitled "Changes." The foregoing provisions for adjustment are exclusive and the Government shall not be liable to suit for breach of contract by reason of any delay in delivery of Government-furnished property or delivery of such property in a condition not suitable for its intended use.

(b) Changes in Government-furnished Property.

(1) By notice in writing, the Contracting Officer may (i) decrease the property provided or to be provided by the Government under this contract, or (ii) substitute other Government-owned property for property to be provided by the Government, or to be acquired by the Contractor for the Government, under this contract. The Contractor shall promptly take such action as the Contracting Officer may direct with respect to the removal and shipping of property covered by such notice.

(2) In the event of any decrease in or substitution of property pursuant to subparagraph (1) above, or any withdrawal of authority to use property provided under any other contract or lease, which property the Government had agreed in the Schedule to make available for the performance of this contract, the Contracting Officer, upon the written request of the Contractor (or, if the substitution of property causes a decrease in the cost of performance, on his own initiative), shall equitably adjust such contractual provisions as may be affected by the decrease, substitution, or withdrawal, in accordance with the procedures provided for in the "Changes" clause of this contract.

(c) Title. Title to all property furnished by the Government shall remain in the Government. In order to define the obligations of the parties under this clause, title to each item of facilities, special test equipment, and special tooling (other than that subject to a "Special Tooling" clause) acquired by the Contractor for the Government pursuant to this contract shall pass to and vest in the Government when its use in the performance of this contract commences, or upon payment therefor by the Government, whichever is earlier, whether or not title previously vested. All Government-furnished property, together with all property acquired by the Contractor title to which vests in the Government under this paragraph, is subject to the provisions of this clause and is hereinafter collectively referred to as "Government

property." Title to Government property shall not be affected by the incorporation or attachment thereof to any property not owned by the Government, nor shall such Government property, or any part thereof, be or become a fixture or lose its identity as personalty by reason of affixation to any realty.

(d) Property Administration. The Contractor shall comply with the provisions of Appendix B, Defense Acquisition Regulation, as in effect on the date of the contract, which is hereby incorporated by reference and made a part of this contract. Material to be furnished by the Government shall be ordered or returned by the Contractor, when required, in accordance with the "Manual for Military Standard Requisitioning and Issue Procedure (MILSTRIP) for Defense Contractors" (Appendix H, Defense Acquisition Regulation) as in effect on the date of this contract, which Manual is hereby incorporated by reference and made a part of this contract.

(e) Use of Government Property. The Government property shall, unless otherwise provided herein or approved by the Contracting Officer, be used only for the performance of this contract.

(f) Utilization, Maintenance and Repair of Government Property. The Contractor shall maintain and administer, in accordance with sound industrial practice, and in accordance with applicable provisions of Appendix B, a program for the utilization, maintenance, repair, protection, and preservation of Government property until disposed of by the Contractor in accordance with this clause. In the event that any damage occurs to Government property the risk of which has been assumed by the Government under this contract, the Government shall replace such items or the Contractor shall make such repair of the property as the Government directs; provided however, that if the Contractor cannot effect such repair within the time required, the Contractor shall dispose of such property in the manner directed by the Contracting Officer. The contract price includes no compensation to the Contractor for the performance of any repair or replacement for which the Government is responsible, and an equitable adjustment will be made in any contractual provisions affected by such repair or replacement of Government property made at the direction of the Government, in accordance with the procedures provided for in the "Changes" clause of this contract. Any repair or replacement for which the Contractor is responsible under the provisions of this contract shall be accomplished by the Contractor at his own expense.

(g) Risk of Loss. Unless otherwise provided in this contract, the Contractor assumes the risk of, and shall be responsible for, any loss of or damage to Government property provided under this contract upon its delivery to him or upon passage of title thereto to the Government as provided in paragraph (c) hereof, except for reasonable wear and tear and except to the extent that such property is consumed in the performance of this contract.

(h) Access. The Government, and any persons designated by it, shall at all reasonable times have access to the premises wherein any Government property is located, for the purpose of inspecting the Government property.

(i) Final Accounting and Disposition of Government Property. Upon the completion of this contract, or at such earlier dates as may be fixed by the Contracting Officer, the Contractor shall submit, in a form acceptable to the Contracting Officer, inventory schedules covering all items of Government property not consumed in the performance of this contract (including any resulting scrap) or not theretofore delivered to the Government, and shall prepare for shipment, deliver f.o.b. origin, or dispose of the Government property, as may be directed or authorized by the Contracting Officer. The net proceeds of any such disposal shall be credited to the contract price or shall be paid in such other manner as the Contracting Officer may direct.

(j) Restoration of Contractor's Premises and Abandonment. Unless otherwise provided herein, the Government:

(i) may abandon any Government property in place, and thereupon all obligations of the Government regarding such abandoned property shall cease; and

(ii) has no obligation to the Contractor with regard to restoration or rehabilitation of the Contractor's premises, neither in case of abandonment (paragraph (j)(i) above), disposition on completion of need or of the contract (paragraph (i) above), nor otherwise, except for restoration or rehabilitation costs which are properly included in an equitable adjustment under paragraph (b) above.

(k) Communications. All communications issued pursuant to this clause shall be in writing or in accordance with the "Manual for Military Standard Requisitioning and Issue Procedure (MILSTRIP) for Defense Contractors" (Appendix H, Defense Acquisition Regulation). (DAR 7-104.24(a))

67. VARIATIONS IN ESTIMATED QUANTITIES (1968 APR)

(The following clause is not applicable to bid items listed in the "Variations in Estimated Quantities - Subdivided Items" clause, and also is not applicable to contracts for dredging work which contain the "Variations in Estimated Quantities - Dredging" clause.)

Where the quantity of a pay item in this contract is an estimated quantity and where the actual quantity of such pay item varies more than fifteen percent (15%) above or below the estimated quantity stated in this contract, an equitable adjustment in the contract price shall be made upon demand of either party. The equitable adjustment shall be based upon any increase or decrease in costs due solely to the variation above one hundred fifteen percent (115%) or below eighty-five percent (85%) of the estimated quantity. If the quantity variation is such as to cause an increase in the time necessary for completion, the Contracting Officer shall, upon receipt of a written request for an extension of time within ten (10) days from the beginning of such delay, or within such further period of time which may be granted by the Contracting Officer prior to the date of final settlement of the contract, ascertain the facts and make such adjustment for extending the completion date as in his judgment the findings justify. (DAR 7-603.27)

68. PROGRESS CHARTS AND REQUIREMENTS FOR OVERTIME WORK (1965 JAN)

(a) The Contractor shall within 5 days or within such time as determined by the Contracting Officer, after date of commencement of work, prepare and submit to the Contracting Officer for approval a practicable schedule, showing the order in which the Contractor proposes to carry on the work, the date on which he will start the several salient features (including procurement of materials, plant and equipment) and the contemplated dates for completing the same. The schedule shall be in the form of a progress chart of suitable scale to indicate appropriately the percentage of work scheduled for completion at any time. The Contractor shall enter on the chart the actual progress at such intervals as directed by the Contracting Officer, and shall immediately deliver to the Contracting Officer three copies thereof. If the Contractor fails to submit a progress schedule within the time herein prescribed, the Contracting Officer may withhold approval of progress payment estimates until such time as the Contractor submits the required progress schedule.

(b) If, in the opinion of the Contracting Officer, the Contractor falls behind the progress schedule, the Contractor shall take such steps as may be necessary to improve his progress and the Contracting Officer may require him

to increase the number of shifts, or overtime operations, days of work, or the amount of construction plant, or all of them, and to submit for approval such supplementary schedule or schedules in chart form as may be deemed necessary to demonstrate the manner in which the agreed rate of progress will be regained, all without additional cost to the Government.

(c) Failure of the Contractor to comply with the requirements of the Contracting Officer under this provision shall be grounds for determination by the Contracting Officer that the Contractor is not prosecuting the work with such diligence as will insure completion within the time specified. Upon such determination the Contracting Officer may terminate the Contractor's right to proceed with the work, or any separable part thereof, in accordance with the clause of the contract entitled "Termination for Default - Damages for Delay - Time Extensions." (DAR 7-603.48)

69. CERTIFICATION OF REQUESTS FOR ADJUSTMENT OR RELIEF EXCEEDING $100,000 (1980 FEB)

(The following clause is applicable if this contract is expected to exceed $100,000 and the procurement instrument identification number is prefixed by the letters "DACA")

(a) Any contract claim, request for equitable adjustment to contract terms, request for relief under Public Law 85-804, or other similar request exceeding $100,000 shall bear, at the time of submission, the following certificate given by a senior company official in charge at the plant or location involved:

> I certify that the claim is made in good faith, that the supporting data are accurate and complete to the best of my knowledge and belief; and that the amount requested accurately reflects the contract adjustment for which the Contractor believes the Government is liable.
>
> _____
> (Official's Name)
>
> _____
> (Title)

(b) The certification in paragraph (a) requires full disclosure of all relevant facts, including cost and pricing data.

(c) The certification requirement in paragraph (a) does not apply to:

(i) requests for routine contract payments--for example, those for payment for accepted supplies and services, routine vouchers under cost reimbursement-type contracts and progress payment invoices;

(ii) final adjustments under incentive provisions of contracts;

(d) In those situations where no claim certification for the purposes of Section 813 has been submitted prior to the inception of a contract dispute, a single certification, using the language prescribed by the Contract Disputes Act but signed by a senior company official in charge at the plant or location involved, will be deemed to comply with both statutes. (DAR 7-104.102)

70. AFFIRMATIVE ACTION COMPLIANCE REQUIREMENTS FOR CONSTRUCTION (1982 FEB)

(a) As used in this clause:

(1) "Covered area" means the geographical area described in the solicitation from which this contract resulted;

(2) "Director" means Director, Office of Federal Contract Compliance Programs, United States Department of Labor, or any person to whom the Director delegates authority;

(3) "Employer identification number" means the Federal social security number used on the employer's quarterly federal tax return, U.S. Treasury Department Form 941.

(4) "Minority" includes:

(i) Black (all persons having origins in any of the Black African racial groups not of Hispanic origin);

(ii) Hispanic (all persons of Mexican, Puerto Rican, Cuban, Central or South American or other Spanish Culture or origin, regardless of race);

(iii) Asian and Pacific Islander (all persons having origins in any of the original peoples of the Far East, Southeast Asia, the Indian Subcontinent, or the Pacific Islands); and

(iv) American Indian or Alaskan Native (all persons having origins in any of the original peoples of North America and maintaining identifiable tribal affiliations through membership and participation or community identification).

(b) Whenever the Contractor, or any subcontractor at any tier, subcontracts a portion of the work involving any construction trade, it shall physically include in each subcontract in excess of $10,000 the provisions of this clause and the Notice which contains the applicable goals for minority and female participation and which is set forth in the solicitation from which this contract resulted.

(c) If the Contractor is participating (pursuant to 41 CFR 60-4.5) in a Hometown Plan approved by the U.S. Department of Labor in the covered area either individually or through an association, its affirmative action obligations on all work in the Plan area (including goals) shall be in accordance with that Plan for those trades which have unions participating in the Plan. Contractors must be able to demonstrate their participation in and compliance with the provisions of any such Hometown Plan. Each Contractor or subcontractor participating in an approved Plan is individually required to comply with its obligations under the EEO clause, and to make a good faith effort to achieve each goal under the Plan, in each trade in which it has employees. The overall good faith performance by other Contractors or Subcontractors toward a goal in an approved Plan does not excuse any covered Contractor's or subcontractor's failure to take good faith efforts to achieve the Plan goals.

(d) The Contractor shall implement the specific affirmative action standards provided in subparagraphs (g)(1) through (16) of this clause. The goals set forth in the solicitation from which this contract resulted are expressed as percentages of the total hours of employment and training of minority and female utilization the Contractor should reasonably be able to achieve in each construction trade in which it has employees in the covered area. If the Contractor performs construction work (whether or not it is Federal or Federally assisted) in a geographical area located outside of the covered area, it shall apply the goals established for the geographical area where such work is actually performed. The Contractor is expected to make substantially uniform progress toward its goal in each craft.

(e) Neither the provisions of any collective bargaining agreement, nor the failure by a union with whom the Contractor has a collective bargaining agreement, to refer either minorities or women shall excuse the Contractor's obligations under this clause, Executive Order 11246, or the regulations promulgated pursuant thereto.

(f) In order for the nonworking training hours of apprentices and trainees to be counted in meeting the goals, such apprentices and trainees must be employed by the Contractor during the training period, and the Contractor must have made a commitment to employ the apprentices and trainees at the completion of their training, subject to the availability of employment opportunities. Trainees must be trained pursuant to training programs approved by the U.S. Department of Labor.

(g) The Contractor shall take specific affirmative actions to ensure equal employment opportunity. The evaluation of the Contractor's compliance with this clause shall be based upon its effort to achieve maximum results from its actions. The Contractor shall document these efforts fully, and shall implement affirmative action steps at least as extensive as the following:

(1) Ensure and maintain a working environment free of harassment, intimidation, and coercion at all sites, and in all facilities at which the Contractor's employees are assigned to work. The Contractor, where possible, will assign two or more women to each construction project. The Contractor shall specifically ensure that all foremen, superintendents, and other on-site supervisory personnel are aware of and carry out the Contractor's obligation to maintain such a working environment, with specific attention to minority or female individuals working at such sites or in such facilities.

(2) Establish and maintain a current list of minority and female recruitment sources, provide written notification to minority and female recruitment sources and to community organizations when the Contractor or its unions have employment opportunities available, and maintain a record of the organizations' responses.

(3) Maintain a current file of the names, addresses and telephone numbers of each minority and female off-the-street applicant and minority or female referral from a union, a recruitment source or community organization and of what action was taken with respect to each individual. If such individual was sent to the union hiring hall for referral and was not referred back to the Contractor by the union or, if referred, not employed by the Contractor, this shall be documented in the file with the reason therefor, along with whatever additional actions the Contractor may have taken.

(4) Provide immediate written notification to the Director when the union or unions with which the Contractor has a collective bargaining agreement has not referred to the Contractor a minority person or woman sent by the Contractor, or when the Contractor has other information that the union referral process has impeded the Contractor's efforts to meet its obligations.

(5) Develop on-the-job training opportunities and/or participate in training programs for the area which expressly include minorities and women, including upgrading programs and apprenticeship and trainee programs relevant to the Contractor's employment needs, especially those programs funded or approved by the Department of Labor. The Contractor shall provide notice of these programs to the sources compiled under (g)(2) above.

(6) Disseminate the Contractor's EEO policy by providing notice of the policy to unions and training programs and requesting their cooperation in assisting the Contractor in meeting its EEO obligations; by including it in any policy manual and collective bargaining agreement; by publicizing it in the company newspaper, annual report, etc.; by specific review of the policy with all management personnel and with all minority

and female employees at least once a year; and by posting the company EEO policy on bulletin boards accessible to all employees at each location where construction work is performed.

(7) Review, at least annually, the company's EEO policy and affirmative action obligations under this clause with all employees having any responsibility for hiring, assignment, layoff, termination or other employment decisions including specific review of these items with onsite supervisory personnel such as Superintendents, General Foremen, etc., prior to the initiation of construction work at any job site. A written record shall be made and maintained identifying the time and place of these meetings, persons attending, subject matter discussed, and disposition of the subject matter.

(8) Disseminate the Contractor's EEO policy externally by including it in any advertising in the news media, specifically including minority and female news media, and providing written notification to and discussing the Contractor's EEO policy with other Contractors and subcontractors with whom the Contractor does or anticipates doing business.

(9) Direct its recruitment efforts, both oral and written, to minority, female and community organizations, to schools with minority and female students and to minority and female recruitment and training organizations serving the Contractor's recruitment area and employment needs. Not later than one month prior to the date for the acceptance of applications for apprenticeship or other training by any recruitment source, the Contractor shall send written notification to organizations such as the above, describing the openings, screening procedures, and tests to be used in the selection process.

(10) Encourage present minority and female employees to recruit other minority persons and women and, where reasonable, provide after school, summer and vacation employment to minority and female youth both on the site and in other areas of a Contractor's workforce.

(11) Validate all tests and other selection requirements where there is an obligation to do so under 41 CFR Part 60-3.

(12) Conduct, at least annually, an inventory and evaluation at least of all minority and female personnel for promotional opportunities and encourage these employees to seek or to prepare for, through appropriate training, etc., such opportunities.

(13) Ensure that seniority practices, job classifications, work assignments and other personnel practices, do not have a discriminatory effect by continually monitoring all personnel and employment related activities to ensure that the EEO policy and the Contractor's obligations under this clause are being carried out.

(14) Ensure that all facilities and company activities are nonsegregated except that separate or single-user toilet and necessary changing facilities shall be provided to assure privacy between the sexes.

(15) Document and maintain a record of all solicitations of offers for subcontracts from minority and female construction contractors and suppliers, including circulation of solicitations to minority and female contractor associations and other business associations.

(16) Conduct a review, at least annually, of all supervisors' adherence to and performance under the Contractor's EEO policies and affirmative action obligations.

(h) Contractors are encouraged to participate in voluntary associations which assist in fulfilling one or more of their affirmative action obligations ((g)(1) through (16)). The efforts of a contractor association, joint contractor-union, contractor-community, or other

similar group of which the contractor is a member and participant, may be asserted as fulfilling any one or more of its obligations under (g)(1) through (16) of this clause provided that the contractor actively participates in the group, makes every effort to assure that the group has a positive impact on the employment of minorities and women in the industry, ensures that the concrete benefits of the program are reflected in the Contractor's minority and female workforce participation, makes a good faith effort to meet its individual goals, and can provide access to documentation which demonstrates the effectiveness of actions taken on behalf of the Contractor. The obligation to comply, however, is the Contractor's and failure of such a group to fulfill an obligation shall not be a defense for the Contractors noncompliance.

(i) A single goal for minorities and a separate single goal for women have been established. The Contractor, however, is required to provide equal employment opportunity and to take affirmative action for all minority groups, both male and female, and all women, both minority and non-minority. Consequently, the Contractor may be in violation of the Executive Order if a particular group is employed in a substantially disparate manner (for example, even though the Contractor has achieved its goals for women generally, the Contractor may be in violation of the Executive Order if a specific minority group of women is underutilized).

(j) The Contractor shall not use the goals or affirmative action standards to discriminate against any person because of race, color, religion, sex, or national origin.

(k) The Contractor shall not enter into any subcontract with any person or firm debarred from Government contracts pursuant to Executive Order 11246.

(l) The Contractor shall carry out such sanctions and penalties for violation of this clause and of the Equal Opportunity clause, including suspension, termination and cancellation of existing subcontracts as may be imposed or ordered pursuant to Executive Order 11246, as amended, and its implementing regulations, by the Office of Federal Contract Compliance Programs. Any Contractor who fails to carry out such sanctions and penalties shall be in violation of this clause and Executive Order 11246, as amended.

(m) The Contractor, in fulfilling its obligations under this clause shall implement specific affirmative action steps, at least as extensive as those standards prescribed in paragraph (g) of this clause, so as to achieve maximum results from its efforts to ensure equal employment opportunity. If the Contractor fails to comply with the requirements of the Executive Order, the implementing regulations, or this clause, the Director shall proceed in accordance with 41 CFR 60-4.8.

(n) The Contractor shall designate a responsible official to monitor all employment related activity to ensure that the company EEO policy is being carried out, to submit reports relating to the provisions hereof as may be required by the Government and to keep records. Records shall at least include for each employee the name, address, telephone numbers, construction trade, union affiliation if any, employee identification number when assigned, social security number, race, sex, status (e.g., mechanic, apprentice, trainee, helper, or laborer), dates of changes in status, hours worked per week in the indicated trade, rate of pay, and locations at which the work was performed. Records shall be maintained in an easily understandable and retrievable form; however, to the degree that existing records satisfy this requirement, contractors shall not be required to maintain separate records.

(o) Nothing herein provided shall be construed as a limitation upon the application of other laws which establish different standards of compliance or upon the application of requirements for the hiring of local or other area residents (e.g., those under the Public Works Employment Act of 1977 and the Community Development Block Grant Program). (DAR 7-603.60)

71. UTILIZATION OF WOMEN-OWNED BUSINESS CONCERNS (OVER $10,000) (1980 AUG)

(a) It is the policy of the United States Government that women-owned businesses shall have the maximum practicable opportunity to participate in the performance of contracts awarded by any Federal agency.

(b) The Contractor agrees to use its best efforts to carry out this policy in the award of subcontracts to the fullest extent consistent with the efficient performance of this contract. As used in this contract, a "women-owned business" concern means a business that is at least 51 percent owned by a woman or women who are U.S. citizens and who also control and operate the business and that is a small business as defined pursuant to Section 3 of the Small Business Act and relevant regulations promulgated pursuant thereto. "Control" in this context means exercising the power to make policy decisions. "Operate" in this context means being actively involved in the day-to-day management.

(c) Contractors acting in good faith may rely on written representations by their subcontractors regarding their status as women-owned business concerns. (DAR 7-104.52)

72. ENVIRONMENTAL LITIGATION (1974 NOV)(OCE)

(a) If the performance of all or any part of the work is suspended, delayed, or interrupted due to an order of a court of competent jurisdiction as a result of environmental litigation, as defined below, the Contracting Officer, at the request of the Contractor, shall determine whether the order is due in any part to the acts or omissions of the Contractor or a Subcontractor at any tier not required by the terms of this contract. If it is determined that the order is not due in any part to acts or omissions of the Contractor or a Subcontractor at any tier other than as required by the terms of this contract, such suspension, delay, or interruption shall be considered as if ordered by the Contracting Officer in the administration of this contract under the terms of the "Suspension of Work" clause of this contract. The period of such suspension, delay or interruption shall be considered unreasonable, and an adjustment shall be made for any increase in the cost of performance of this contract (excluding profit) as provided in that clause, subject to all the provisions thereof.

(b) The term "environmental litigation", as used herein, means a lawsuit alleging that the work will have an adverse effect on the environment or that the Government has not duly considered, either substantively or procedurally, the effect of the work on the environment. (ECI 7-671.10)

SUPERSEDEAS DECISION

STATE: Arizona COUNTIES: Statewide
DECISION NUMBER: AZ82-5109 DATE: Date of Publication
Supersedes Decision No. AZ81-5142 dated August 14, 1981, in 46 FR 41299
DESCRIPTION OF WORK: Building Projects (does not include single family homes and apartments up to and including 4 stories), Heavy and Highway Projects

	Basic Hourly Rates	Fringe Benefits Payments			
		H & W	Pensions	Vacation	Education and/or Appr. Tr.
ASBESTOS WORKERS:*					
Zone 1	$17.04	.75	$ 1.49		.03
Zone 2	19.04	.75	1.49		.03
Zone 3	21.04	.75	1.49		.03
BOILERMAKERS	19.01	1.30	1.25	1.00	.04
BRICKLAYERS; Stonemasons:*					
Northern Area:*					
Zone A	15.18	1.07	1.50		.17
Zone B	16.39	1.07	1.50		.17
Zone C	17.15	1.07	1.50		.17
Zone D	17.91	1.07	1.50		.17
Zone E	18.52	1.07	1.50		.17
Zone F	19.73	1.07	1.50		.17
Southern Area:*					
Zone A:					
Bricklayers; Stonemasons	13.68	1.00	.95		.06
Manhole Builders	13.93	1.00	.95		.06
Zone B:					
Bricklayers; Stonemasons	14.05	1.00	.95		.06
Manhole Builders	14.30	1.00	.95		.06
Zone C:					
Bricklayers; Stonemasons	14.43	1.00	.95		.06
Manhole Builders	14.68	1.00	.95		.06
Zone D:					
Bricklayers; Stonemasons	15.18	1.00	.95		.06
Manhole Builders	15.43	1.00	.95		.06

*See AREA and ZONE Descriptions - Page 2

AREA and ZONE DEFINITIONS

ASBESTOS WORKERS:
Zone 1: Area lying 0-25 miles radius from the City Hall in Phoenix or Tucson
Zone 2: Area lying 25-50 miles radius from the City Hall in Phoenix or Tucson
Zone 3: Area lying over 50 miles from City Hall in Phoenix and Tucson

BRICKLAYERS; STONEMASONS:
Northern Area: Apache, Coconino and Gila Counties; Graham County (west and north of the San Francisco River to the Gila River); Greenlee County (west and north of the San Francisco River to the Gila River); Maricopa, Mohave, and Navajo Counties; Pinal County (north of a boundary line drawn west along the Gila River to the western city limits of Florence, a straight line from the extreme southwestern city limits of Florence to the extreme southern city limits of Coolidge, then a straight line to the extreme southern city limits of Casa Granda, with the line extending to the Maricopa/Pinal County Line); Yavapai, and Yuma Counties:

ZONE A: 0-40 road miles from the City Hall in Phoenix
ZONE B: 40-50 road miles from the City Hall in Phoenix
ZONE C: 50-75 road miles from the City Hall in Phoenix
ZONE D: 75-100 road miles from the City Hall in Phoenix
ZONE E: 100-200 road miles from the City Hall in Phoenix
ZONE F: 200 road miles and over from the City Hall in Phoenix

Southern Area: Cochise County; Graham County (east and south of the San Francisco River to the Gila River); Greenlee County (east and south of the San Francisco River to the Gila River); Pima County; Pinal County (south of a boundary line drawn west along the Gila River to the western city limits of Florence, a straight line from the extreme southwestern city limits of Florence to the extreme southern city limits of Coolidge, then a straight line to the extreme southern city limits of Casa Grande, with the line extending to the Maricopa/Pinal County Line); Santa Cruz Counties:

Zone A: 0-15 road miles from Tucson City limits
Zone B: 15-30 road miles from Tucson City limits
Zone C: 30-40 road miles from Tucson City limits
Zone D: Over 40 road miles from Tucson City limits

DECISION NO. AZ82-5109 Page 3

	Basic Hourly Rates	Fringe Benefits Payments			
		H & W	Pensions	Vacation	Education and/or Appr. Tr.
CARPENTERS:*					
Northern Area:					
Carpenters; Drywall Applicator; Saw Filer; Shingler	$15.06	$1.335	$1.115		.08
Floorlayers (finish); Piledrivermen	15.405	1.335	1.115		.08
Millwrights	15.565	1.335	1.115		.08
Central and Southern Areas:					
Carpenters; Saw Filers	12.935	1.335	1.115		.08
Floorlayers (finish); Piledrivermen	13.28	1.335	1.115		.08
Millwrights	13.44	1.335	1.115		.08
CEMENT MASONS:*					
Zone 1:					
Northern Area:					
Cement Masons	15.035	.95	1.40		.05
Concrete Troweling Machine; Sawing and Scoring Machine; Curb and Gutter Machine	15.225	.95	1.40		.05
Central & Southern Areas:					
Cement Masons	12.91	.95	1.40		.05
Concrete Troweling Machine; Sawing and Scoring Machine; Curb and Gutter Machine	13.10	.95	1.40		.05
Zone 2:					
Cement Masons	12.84	1.12	1.30		.05
Concrete Troweling Machine; Sawing and Scoring Machine; Curb and Gutter Machine; Clary and similar type of power screed Operator	13.03	1.12	1.30		.05
DRYWALL TAPERS:*					
Zone A	13.79	.60	.50		.10
Zone B	14.79	.60	.50		.10
Zone C	16.29	.60	.50		.10

*See AREA and ZONE Descriptions - Page 4

DECISION NO. AZ82-5109 Page 4

AREA and ZONE DEFINITIONS

CARPENTERS:

Northern Area: Area north of a straight line drawn between a point 35 miles due north of the City Hall in Flagstaff and a point 35 miles due north of the City Hall in Kingman, extending to the Arizona/Nevada State Line on the west; and connecting to a point 35 miles due north of the City Hall in Holbrook, thence due east to the intersection of the Arizona/New Mexico State Line

Central and Southern Areas: All areas not included in the Northern Area

CEMENT MASONS:

Zone 1: Apache, Coconino, and Gila Counties; Graham County (north of Sentinel-Casa Grande-Safford Line); Greenlee County (north of Sentinel-Casa Grande-Safford Line); Maricopa County (north of Sentinel-Casa Grande-Safford Line); Mohave, and Navajo Counties; Pinal County (north of Sentinel-Casa Grande-Safford Line); Yavapai and Yuma Counties

Northern Area: Area north of a straight line drawn between a point 35 miles due north of the City Hall in Flagstaff and a point 35 miles due north of the City Hall in Kingman, extending to the Arizona/Nevada State Line on the west and connecting to a point 35 miles due north of the City Hall in Holbrook, thence due east to the intersection of the Arizona/New Mexico State Line.

Central and Southern Areas: All Areas not included in the Northern Area.

Zone 2: Southern parts of Cochise, Graham, Greenlee, Maricopa, and Pinal Counties; Pima and Santa Cruz Counties

DRYWALL TAPERS:

Zone A: 0-40 road miles from Courthouse in Phoenix; Also Luke and William Air Force Bases

Zone B: 41-60 road miles from Courthouse in Phoenix

Zone C: 61 road miles and over from Courthouse in Phoenix

	Basic Hourly Rates	Fringe Benefits Payments			
		H & W	Pensions	Vacation	Education and/or Appr. Tr.
ELECTRICIANS:*					
Area 1:					
Electricians	$16.81	.60	3%+.70		3/4%
Cable Splicers	18.16	.60	3%+.70		3/4%
Area 2:					
Electricians; Technicians; and Cable Splicers:					
Zone A	17.00	.96	3%+.93		1/2%
Zone B	20.12	.96	3%+.93		1/2%
Area 3:					
Zone A:					
Electricians; Technicians	17.24	.60	11%		1%
Cable Splicers	17.49	.60	11%		1%
Zone B:					
Electricians; Technicians	18.74	.60	11%		1%
Cable Splicers	18.99	.60	11%		1%
Zone C:					
Electricians; Technicians	19.24	.60	11%		1%
Cable Splicers	19.49	.60	11%		1%
Zone D:					
Electricians; Technicians	20.24	.60	11%		1%
Cable Splicers	20.49	.60	11%		1%
Area 4:					
Electricians	17.95	.96	3%+.93		.10
Area 5:					
Zone A:					
Electricians	16.44	.60	11%		1%
Cable Splicers	16.69	.60	11%		1%
Zone B:					
Electricians	17.24	.60	11%		1/2%
Cable Splicers	17.49	.60	11%		1/2%
Zone C:					
Electricians	17.94	.60	11%		1/2%
Cable Splicers	18.19	.60	11%		1/2%
Zone D:					
Electricians	18.94	.60	11%		1/2%
Cable Splicers	19.19	.60	11%		1/2%

*See AREA and ZONE Descriptions - Pages 6 and 7

AREA and ZONE DEFINITIONS

ELECTRICIANS:

Area 1: Apache County (north of Highway #66)

Area 2: Coconino County; Navajo County (north and west of a boundary line beginning at a point where Clear Creek crosses the Coconino/Navajo County Line and then extending in a northeasterly direction along Clear Creek and northeasterly to Cottonwood Wash, along Cottonwood Wash extending northeasterly to where it intersects the Navajo Indian Reservation, then easterly along the Navajo Indian Reservation boundary line to a point where it intersects the Navajo/Apache County Line):

Zone A: 5 miles north-south, east and west of the Post Offices of Williams, Sedona, and Winslow

Zone B: Remainder of Area 2 not covered by Zone A

Area 3: Apache County (south of Highway #66); Gila County; Navajo County (south and east of a boundary beginning at a point where Clear Creek crosses the Coconino/Navajo County Line, then extending in a northeasterly direction along Clear Creek and northeasterly to Cottonwood Wash, along Cottonwood Wash extending northeasterly to where it intersects the Navajo Indian Reservation, then easterly along the Navajo Indian Reservation boundary line to a point where it intersects the Navajo/Apache County Line); Pinal County (north of the line, "First Standard Parallel South" and east of the line "Second Guide Meridian East"):

Zone A: Area within 16 road miles beginning where the Southern Pacific Railroad intersects Highway 60-70 at Kaiser Crossing; Area within 12 miles radius from the school in Lakeside, Arizona

Zone B: Area within 16-28 road miles from point where the Southern Pacific Railroad intersects Highway 60-70 at Kaiser Crossing

Zone C: Area within 28-46 road miles from point where the Southern Pacific Railroad intersects Highway 60-70 at Kaiser Crossing

Zone D: Area 46 road miles and over from point where the Southern Pacific Railroad intersects Highway 60-70 at Kaiser Crossing; Area over 12 miles radius from school in Lakeside, Arizona

AREA and ZONE DEFINITIONS (Cont'd)

ELECTRICIANS: (Cont'd)

Area 4: Maricopa and Mohave Counties; Pinal County (north and west of the boundary line beginning at a point where the Papago Indian Reservation Road #15 crosses the Pima/Pinal County Line, then extending in a northeasterly direction on the Papago Indian Reservation Road #15 to the intersection with the Florence Canal, north and east on the Florence Canal to the intersection with the line, "Second Guide Meridian East", then north to the Pinal/Maricopa County Line); Yavapai County

Area 5: Cochise, Graham, Greenlee, and Pima Counties, Pinal County (south and east of the boundary line beginning at a point where the Papago Indian Reservation Road #15 crosses the Pima/Pinal County Line, then extending in a northeasterly direction on the Papago Indian Reservation Road #15 to the intersection with the Florence Canal, north and east on the Florence Canal to the intersection with the line, "Second Guide Meridian East", then north to the line, "First Standard Parallel South", and along that line to the Graham/Pinal County Line); Santa Crus and Yuma Counties:

Zone A: Area within 16 miles radius from the City Hall in Tucson or Yuma; Area within 16 road miles from center of Town in Douglas, Nogales or Sierra Vista; Area within the boundaries of the incorporated city limits of Parker, plus an area extending from the south city limits of Parker in a northeasterly direction to Mile-post No. 150 located on State Highway #95, northeast of Parker from the Colorado River on the west, an area 1 mile wide paralleling the Colorado River

Zone B: Area lying beyond the limits of Zone A extending to and including 12 road miles excluding area near Douglas, Nogales and Sierra Vista

Zone C: Area lying beyond the limits of Zone B extending up to and including 18 road miles, excluding area near Douglas, Nogales and Sierra Vista

Zone D: Area lying beyond the limits of Zone C; for area near the Cities of Douglas, Nogales, Sierra Vista, the area lying beyond the limits of Zone A

	Basic Hourly Rates	Fringe Benefits Payments			
		H & W	Pensions	Vacation	Education and/or Appr. Tr.
ELEVATOR CONSTRUCTORS:					
Elevator Constructors	$17.595	$1.345	$ 1.085	a	.035
Helpers	12.32	1.345	1.085	a	.035
Probationary Helpers	8.80				
GLAZIERS:					
Statewide excluding Bullhead City	14.71	.95	.60		.08
Bullhead City	17.02	.75	.40		.08
IRONWORKERS:*					
Northern Area	19.25	1.44	3.07		.11
Southern Area	16.25	1.44	3.07		.11
LATHERS:*					
Area 1	14.325	1.00			.06
Area 2	14.32	1.00			.06
LINE CONSTRUCTION:*					
Zone 1:					
Groundmen	12.81	1.00	3%+2.75		1/2%
Equipment Operators; Powdermen; Mechanics	15.13	1.00	3%+2.75		1/2%
Linemen; Technicians; Crane Operators	17.05	1.00	3%+2.75		1/2%
Cable Splicers	17.56	1.00	3%+2.75		1/2%
Zone 1-A:					
Groundmen	13.81	1.00	3%+2.75		1/2%
Equipment Operators; Powdermen; Mechanics	16.04	1.00	3%+2.75		1/2%
Linemen; Technicians; Crane Operators	18.03	1.00	3%+2.75		1/2%
Cable Splicers	18.63	1.00	3%+2.75		1/2%
Zone 2:					
Groundmen	14.75	1.00	3%+2.75		1/2%
Equipment Operators; Powdermen; Mechanics	16.99	1.00	3%+2.75		1/2%
Linemen; Technicians Crane Operators	18.97	1.00	3%+2.75		1/2%
Cable Splicers	19.52	1.00	3%+2.75		1/2%
MARBLE, TILE, and TERRAZZO FINISHERS	11.02	1.19	.30		.10

*See AREA and ZONE Descriptions - Page 9

AREA and ZONE DEFINITIONS

IRONWORKERS:

Northern Area: Area north from a line 10 miles north of and parallel to Highway #66, North to the Arizona-Utah border and from the Arizona-California border east to the Arizona-New Mexico border

Southern Area: All areas not included in the Northern Area

LATHERS:

Area 1: North of a line crossing the State drawn through Ajo, Randolph and Springerville; except as follows: northeast of a line drawn from Springerville to a point 4 miles northeast of Keams Canyon

Area 2: South of a line crossing the State drawn through Ajo, Randolph and Springerville

LINE CONSTRUCTION:

Zone 1: Phoenix and Tucson 30 mile radius from the center of Town; Area within 10 mile radius from the City Hall of Yuma

Zone 1-A: Flagstaff, Globe, and Kingman; and 10 mile radius from the center of Town

Zone 2: Other Areas not covered by Zone 1 and Zone 1-A

	Basic Hourly Rates	Fringe Benefits Payments			
		H & W	Pensions	Vacation	Education and/or Appr. Tr.
MARBLE WORKERS:*					
Area 1	$13.71	.90	$ 1.10		.19
MASON TENDERS	11.00	1.12	1.30		.06
PAINTERS:*					
Area 1:					
Zone A:					
Brush	11.60	.90	.80		.20
Brush, steel and bridge	12.10	.90	.80		.20
Spray	12.05	.90	.80		.20
Spray, steel and bridge	12.60	.90	.80		.20
Zone B:					
Brush	12.35	.90	.80		.20
Brush, steel and bridge	12.85	.90	.80		.20
Spray	12.80	.90	.80		.20
Spray, steel and bridge	13.35	.90	.80		.20
Zone C:					
Brush	13.35	.90	.80		.20
Brush, steel and bridge	13.85	.90	.80		.20
Spray	13.80	.90	.80		.20
Spray, steel and bridge	14.35	.90	.80		.20
Zone D:					
Brush	13.60	.90	.80		.20
Brush, steel and bridge	14.10	.90	.80		.20
Spray	14.05	.90	.80		.20
Spray, steel and bridge	14.60	.90	.80		.20
Area 2:					
Zone A:					
Brush and Roller; Sandblaster (Nozzleman); Sheetrock Taper; Floor Coverer; Sandblaster (Pot Tender)	13.54	.60	.60		.10
Spray; Paperhanger	13.79	.60	.60		.10
Creosote Applier	13.87	.60	.60		.10
Swing Stage:					
Brush; Sandblaster	13.94	.60	.60		.10
Spray	14.19	.60	.60		.10
Steeplejack	14.40	.60	.60		.10

*See AREA and ZONE Descriptions - Page 14

DECISION NO. AZ82-5109 Page 11

	Basic Hourly Rates	Fringe Benefits Payments			
		H & W	Pensions	Vacation	Education and/or Appr. Tr.
PAINTERS:* (Cont'd)					
Area 2: (Cont'd)					
Zone A: (Cont'd)					
Steel and bridge, brush; Nozzleman and Pot Tender; Steel (steam cleaner); Electric and air tool Operator; Steel Sandblaster	$14.47	.60	.60		.10
Steel and bridge, spray	14.67	.60	.60		.10
Zone B:					
Brush and Roller; Sandblaster (Nozzleman); Sheet Rock Taper; Floor Coverer; Sandblaster (Pot Tender)	14.54	.60	.60		.10
Spray; Paperhangers	14.79	.60	.60		.10
Creosote Applier	14.87	.60	.60		.10
Swing Stage:					
Brush; Sandblaster	14.94	.60	.60		.10
Spray	15.19	.60	.60		.10
Steeplejack	15.40	.60	.60		.10
Steel and bridge, Brush; Nozzleman and Pot Tender; Steel (steam cleaner); Electric and air tool Operator; Steel Sandblaster	15.47	.60	.60		.10
Steel and bridge, Spray	15.67	.60	.60		.10
Zone C:					
Brush and Roller; Sandblaster (Nozzleman); Sheet Rock Taper; Sandblaster (Pot Tender)	16.04	.60	.60		.10
Spray; Paperhangers	16.29	.60	.60		.10
Creosote Applier	16.37	.60	.60		.10
Swing Stage:					
Brush; Sandblaster	16.44	.60	.60		.10
Spray	16.69	.60	.60		.10
Steeplejack	16.90	.60	.60		.10

*See AREA and ZONE Descriptions - Page 14

DECISION NO. AZ82-5109 Page 12

	Basic Hourly Rates	Fringe Benefits Payments			
		H & W	Pensions	Vacation	Education and/or Appr. Tr.
PAINTERS:* (Cont'd)					
Area 2: (Cont'd)					
Zone C: (Cont'd)					
Steel and bridge, Brush; Nozzleman and Pot Tender; Steel (steam cleaner); Electric air tool Operator; Steel Sandblaster	$16.97	.60	.60		.10
Steel and bridge, Spray	17.17	.60	.60		.10
Area 3:					
Zone A:					
Brush	11.62	.97	.55		.10
Spray; Sandblaster	12.22	.97	.55		.10
Paperhanger	11.75	.97	.55		.10
Swing Stage, under 40 ft.:					
Brush	11.92	.97	.55		.10
Spray	12.52	.97	.55		.10
Swing Stage, over 40 ft.:					
Brush	12.37	.97	.55		.10
Spray	12.97	.97	.55		.10
Structural Steel and Tanks:					
Brush	12.62	.97	.55		.10
Spray and Sandblasters	13.22	.97	.55		.10
Creosote Base and Bituminous Material	12.02	.97	.55		.10
Zone B:					
Brush	12.37	.97	.55		.10
Spray and Sandblasters	12.99	.97	.55		.10
Paperhangers	12.50	.97	.55		.10
Swing Stage, under 40 ft.:					
Brush	12.67	.97	.55		.10
Spray	12.97	.97	.55		.10
Swing Stage, over 40 ft.:					
Brush	13.72	.97	.55		.10
Spray	13.72	.97	.55		.10
Structural Steel and Tanks:					
Brush	13.37	.97	.55		.10
Spray and Sandblasters	13.97	.97	.55		.10
Creosote Base and Bituminous Materials	12.77	.97	.55		.10

*See AREA and ZONE Descriptions -Page 14

	Basic Hourly Rates	Fringe Benefits Payments			
		H & W	Pensions	Vacation*	Education and/or Appr. Tr.
PAINTERS:* (Cont'd)					
Area 3: (Cont'd)					
Zone C:					
Brush	$13.12	.97	.55		.10
Spray	13.72	.97	.55		.10
Paperhangers	14.25	.97	.55		.10
Swing Stage, under 40 ft.:					
Brush	13.42	.97	.55		.10
Spray	14.02	.97	.55		.10
Swing Stage, over 40 ft.:					
Brush	13.87	.97	.55		.10
Spray	14.47	.97	.55		.10
Structural Steel and Tanks:					
Brush	14.12	.97	.55		.10
Spray and Sandblasters	14.72	.97	.55		.10
Zone D:					
Brush	14.37	.97	.55		.10
Spray	14.97	.97	.55		.10
Paperhangers	14.50	.97	.55		.10
Swing Stage, under 40 ft.:					
Brush	14.67	.97	.55		.10
Spray	15.27	.97	.55		.10
Swing Stage, over 40 ft.:					
Brush	15.12	.97	.55		.10
Spray	15.72	.97	.55		.10
Structural Steel and Tanks:					
Brush	15.37	.97	.55		.10
Spray and Sandblasters	15.97	.97	.55		.10

*See AREA and ZONE Descriptions - Page 14

AREA and ZONE DEFINITIONS

MARBLE WORKERS:

Area 1: Apache, Coconino, and Gila Counties; Graham County (west and north of San Francisco River to Gila River); Greenlee County (west and north of San Francisco River to Gila River); Maricopa, Mohave, and Navajo Counties; Pinal County (north of a boundary line drawn west along the Gila River to the western city limits of Florence, a straight line from the extreme southwestern city limits of Florence to the extreme southern city limits of Coolidge, then a straight line to the extreme southern city limits of Casa Grande with the line extending to the Maricopa/Pinal County Line); Yavapai and Yuma Counties

PAINTERS:

Area 1: Apache, Coconino, Navajo, and Yavapai Counties (north of woodruff/Camp Wood Line); Mohave County (north of a line following the Geodetic Hualapai Boundary Line to the Colorado River, a distance of 23 miles east of Pierce Ferry and then intersecting the Arizona/Nevada State Line):

Zone A: 0-20 road miles from Courthouse in Flagstaff
Zone B: 20-35 road miles from Courthouse in Flagstaff
Zone C: 35-80 road miles from Courthouse in Flagstaff
Zone D: 80 road miles and over from Courthouse in Flagstaff

Area 2: Apache, Coconino, Navajo, and Yavapai Counties (south of the Woodruff/Camp Wood Line); Gila, Graham, Greenlee, Maricopa, and Pinal Counties (north of 33rd Parallel); Mohave County (south of a line following the Geodetic Hualapai Boundary Line to the Colorado River, a distance of 23 miles east of Pierce Ferry and then intersecting the Arizona/Nevada State Line):

Zone A: 0-40 paved road miles from Courthouse in Phoenix; also, Luke and Williams Air Force Bases
Zone B: 41-60 paved road miles from Courthouse in Phoenix
Zone C: 61 paved road miles and over from Courthouse in Phoenix

Area 3: Cochise County; Graham, Greenlee, Maricopa and Pinal Counties (south of 33rd Parallel); Pima, Santa Cruz, and Yuma Counties:

Zone A: 0-30 paved road miles from Stone and Congress in Tucson or from the County Courthouse in Yuma
Zone B: 31-40 paved road miles from Stone and Congress in Tucson or from the County Courthouse in Yuma
Zone C: 41-50 paved road miles from Stone and Congress in Tucson or from the County Courthouse in Yuma
Zone D: 51 paved road miles and over from Stone and Congress in Tucson or from the County Courthouse in Yuma

	Basic Hourly Rates	Fringe Benefits Payments			
		H & W	Pensions	Vacation	Education and/or Appr. Tr.
PLASTERERS:*					
Area 1:					
Zone A	$11.77	.95	$1.30		.06
Zone B	12.52	.95	1.30		.06
Zone C	13.645	.95	1.30		.06
Area 2:					
Zone A	12.67	1.02	1.20		
Zone B	13.92	1.02	1.20		
Zone C	14.67	1.02	1.20		
PLASTERER TENDERS	11.55	1.12	1.30		.10
PLUMBERS:*					
Zone 1	18.34	1.20	1.35		.23
Zone 2	18.74	1.20	1.35		.23
Zone 3	19.19	1.20	1.35		.23
Zone 4	21.34	1.20	1.35		.23
ROOFERS:*					
Area 1:					
Roofers	13.46	1.095	.95		.05
Pitch and Enamel	14.71	1.095	.95		.05
Area 2:					
Zone A:					
Roofers and Waterproofers; Shinglers (asbestos, wood and asphalt)	12.17	1.095	.35		.03
Pitch and Enamel	13.67	1.095	.35		.03
Zone B:					
Roofers and Waterproofers; Shingler (asbestos, wood and asphalt)	14.67	1.095	.35		.03
Pitch and Enamel	16.17	1.095	.35		.03
SHEET METAL WORKERS:*					
Area 1:					
Zone 1	17.39	1.10	1.92		.13
Zone 2	18.64	1.10	1.92		.13
Zone 3	21.39	1.10	1.92		.13
Area 2:					
Zone A	16.74	1.20	1.92		.07
Zone B	17.96	1.20	1.92		.07
Zone C	20.62	1.20	1.92		.07
SOFT FLOOR LAYERS	12.46	.60	.12		.21
SPRINKLER FITTERS	16.65	.95	1.40		.08
TERRAZZO WORKERS; TILE SETTERS:*					
Area 1	13.71	.90	1.10		.19

*See AREA and ZONE Descriptions - Pages 16 and 17

FOOTNOTE:
a. Employer contributes 8% of basic hourly rate for 5 years' service and 6% of basic hourly rate for 6 months' to 5 years' service as Vacation Pay Credit. Seven Paid Holidays: A through G

PAID HOLIDAYS:
A-New Year's Day; B-Memorial Day; C-Independence Day; D-Labor Day; E-Thanksgiving Day; F-Friday after Thanksgiving; G-Christmas Day

AREA and ZONE DEFINITIONS

PLASTERERS:
Area 1: Apache, Coconino, and Gila Counties; Graham, Greenlee, Maricopa, and Pinal Counties (north of Sentinal - Casa Grande - Safford Line); Mohave, Navajo, Yavapai, and Yuma Counties:
Zone A: 0-35 miles from Phoenix
Zone B: 35-60 miles from Phoenix
Zone C: 60 miles and over from Phoenix

Area 2: Cochise County; Graham, Greenlee, Mariocpa, and Pinal Counties (south of Sentinel - Casa Grande - Safford Line); Santa Cruz County:
Zone A: 0-30 miles radius from Tucson
Zone B: 30-50 miles radius from Tucson
Zone C: 50 miles radius and over from Tucson

PLUMBERS:
Zone 1: Area within 15 road miles from either the intersection of Central Avenue and Jefferson Street in Phoenix or the Old Main Building of the University of Arizona in Tucson or the Main Post Office Building in either Douglas, Flagstaff or Yuma; Also, all areas within the City limits of Havasu City, Holbrook, Kingman, Prescott, and Winslow; Also, that area bordered by the Apache Trail on the north, Higley Road on the east, Elliott Road on the south and Arizona Avenue on the west

Zone 2: Over 15 and up to 30 road miles from either the intersection of Central Avenue and Jefferson Street in Phoenix or the Old Main Building of the University of Arizona in Tucson

PLUMBERS: (Cont'd)
Zone 3: Over 30 and up to 40 road miles from either the intersection of Central Avenue and Jefferson Street in Phoenix or the Old Main Building of the University of Arizona in Tucson

Zone 4: Over 40 road miles from either the intersection of Central Avenue and Jefferson Street in Phoenix or the Old Main Building of the University of Arizona in Tucson

ROOFERS:
Area 1: Apache, Coconino, Gila, Maricopa, Mohave, Navajo, Pinal, Yavapai, and Yuma Counties

Area 2: Cochise, Graham, Greenlee, Pima and Santa Cruz Counties:
Zone A: Area less than 44 road miles from City Hall in Tucson
Zone B: Area from 44 to 100 road miles from City Hall in Tucson

SHEET METAL WORKERS:
Area 1: Apache, Coconino, and Gila Counties; Graham, Greenlee, and Pinal Counties (north of 33rd Parallel); Maricopa, Mohave, Navajo, Yavapai, and Yuma Counties:
Zone 1: 0-25 miles radius, excluding Luke and Williams Air Force Bases, from the following base points: the intersection of 56th Street and Indian School Road in Phoenix, and the City Hall in Flagstaff, Kingman, Prescott and Yuma
Zone 2: 25-50 miles radius from the base points listed in Zone 1; also Luke and Williams Air Force Bases
Zone 3: 50 miles radius and over from the base points listed in Zone 1

Area 2: Cochise, Graham, Greenlee, and Pinal Counties (south of 33rd Parallel); Pima and Santa Cruz Counties:
Zone A: 0-25 miles radius from Tucson City Hall or Douglas City Hall
Zone B: 25-50 miles radius from Tucson City Hall or Douglas City Hall
Zone C: Over 50 miles radius from Tucson City Hall or Douglas City Hall; also San Manuel and vicinity

TERRAZZO WORKERS; TILE SETTERS:
Area 1: Apache, Coconino, and Gila Counties; Graham and Greenlee Counties (west and north of San Francisco River to Gila River); Maricopa, Mohave, and Navajo Counties; Pinal County (north of a boundary line drawn west along the Gila River to the western City limits of Florence, a straight line from the extreme southwestern City limits of Florence to the extreme southern city limits of Coolidge, then a straight line to the extreme southern city limits of Casa Grande, with the line extending to the Maricopa/Pinal County Line); Yavapai and Yuma Counties

LABORERS:	Basic Hourly Rates	Basic Hourly Rates	Fringe Benefits Payments			
			H & W	Pensions	Vacation	Education and/or Appr. Tr.
	N AREA	C and S AREAS				
Group 1	$12.275	$10.15	$1.12	$1.30		.10
Group 2	12.435	10.31	1.12	1.30		.10
Group 3	12.605	10.48	1.12	1.30		.10
Group 4	12.735	10.61	1.12	1.30		.10
Group 5	12.945	10.82	1.12	1.30		.10
Group 6	13.41	11.285	1.12	1.30		.10
Group 7	14.18	12.055	1.12	1.30		.10
(Tunnel and Shaft Work)						
Group 1	12.57	10.445	1.12	1.30		.10
Group 2	12.57	10.65	1.12	1.30		.10
Group 3	12.935	10.81	1.12	1.30		.10
Group 4	13.365	11.24	1.12	1.30		.10
Group 5	13.60	11.475	1.12	1.30		.10
Group 5-A	13.90	11.775	1.12	1.30		.10

AREA DEFINITIONS

NORTHERN AREA:
Area north of a straight line drawn between a point 35 miles due north of the City Hall in Flagstaff and a point 35 miles due north of the City Hall in Kingman, extending to the Arizona/Nevada State Line on the west; and connecting to a point 35 miles due north of the City Hall in Holbrook, thence due east to the intersection of the Arizona/New Mexico State Line

CENTRAL and SOUTHERN AREAS:
All Areas not included in the Northern Area

LABORERS

Group 1: Laborer, general or construction; Manually-controlled Signal Operator; Fence Builder, Guard Rail Builder - highway; Chat Box Man; Dumpman and/or Spotter; Rip Rap Stone Man; Form Stripper; Landscape Gardener and Nurseryman; Packing Rod Steel and Pans; Window Cleaners; Cesspool Diggers and Installers; Concrete Dump Man - belt; Pipe and/or Hoseman; Astro-turf Layers; Clean-up, Bull Gang and Trackman - railroad; Chipper (clearing and grubbing)

Group 2: Cement Finisher Tender; Concrete Curer (Impervious Membrane); Cutting Torch Operator; Fine Grader (highway, engineering and sewer work only); Kettleman - Tarman; Power-type Concrete Buggy

Group 3: Chuck Tender (except tunnel); Sandblaster (Pot Tender); Powderman Tender; Spikers and Wrenchers; Rip Rap Stone Pavers; Creosote Tieman; Guinea Chaser; Bander

Group 4: Operator and Tenders of pneumatic and electric tools; Concrete Vibrating Machines; Chain Saw Machines (on clearing and grubbing); Floor Sanders - concrete; Hydraulic Jacks and similar mechanical tools not separately herein classified; Cement Dumpers (skip-type Mixer or handling bulk cement); Pipe Caulker and/or Backup Man (pipeline); Rigger/Signalman (pipeline); Pipe Wrapper; Cribber and Shorer (except tunnel); Pneumatic Gopher

Group 5: Grade Setter (pipeline); Driller; Jackhammer and/or Pavement Breakers; Pipe Layer (including but not limited to non-metallic, transite and plastic pipe, water pipe, sewer pipe, drain pipe, underground tile and conduit); Rock Slinger; Asphalt Rakers and Ironers; Air and water Wash-out Nozzleman; Scaler (using Bos'n's Chair or Safety Belt); Tampers (mechanical, all types); Hand-guided Trencher and similar operated equipment; Precast Manhole Erector

Group 6: Driller (Core, Diamond, Wagon or Air Track); Sandblaster (Nozzleman); Concrete Saw (hand-guided); Concrete Cutting Torch; Drill Doctor and/or Air Tool Repairman; Gunman and Mixerman (Gunite)

Group 7: Gunite Nozzleman or Rodman; Scaler (Drillers); Form Setter and/or Builder; Welders and/or Pipe Layers, installing process piping; Drillers, Joy Mustang, PR 143, 220 Gardener-Denver, Hydrasonic; Powder Man

LABORERS (cont'd)
(Tunnel and Shaft Workers)

Group 1: Bull Gang, Muckers, Trackman; Dumpmen; Concrete Crew (includes Rodders and Spreaders); Grout Crew; Swamper (Brakeman and Switchmen on tunnel work)

Group 2: Nipper; Chucktender, Cabletender; Vibratorman, Jackhammer, Pneumatic Tools (except Driller)

Group 3: Grout Gunman

Group 4: Timberman, Retimberman - wood or steel blaster, Driller, Powderman; Cherry Pickerman; Powderman - Primer House; Steel Form Raiser and Setter; Kemper and other pneuamtic concrete placer Operator; Miner - Finisher; Miners - Tunnel (hand or machine)

Group 5: Diamond Drill

Group 5A: Shaft and Raise Miner Welder

POWER EQUIPMENT OPERATORS (Except Piledriving and Steel Erection)	Basic Hourly Rates	Basic Hourly Rates	Fringe Benefits Payments			
	N AREA	C and S AREAS	H & W	Pensions	Vacation	Education and/or Appr. Tr.
Group 1	$12.875	$10.75	$1.40	$1.30		.08
Group 2	13.335	11.21	1.40	1.30		.08
Group 3	13.885	11.76	1.40	1.30		.08
Group 4	14.545	12.42	1.40	1.30		.08
Group 5	15.185	13.06	1.40	1.30		.08
Group 5A	15.565	13.44	1.40	1.30		.08
Group 6	15.975	13.85	1.40	1.30		.08
Group 7	16.715	14.59	1.40	1.30		.08

AREA DESCRIPTIONS

NORTHERN AREA:
Area north of a straight line drawn between a point 35 miles due north of the City Hall in Flagstaff and a point 35 miles due north of the City Hall in Kingman, extending to the Arizona/Nevada State Line on the west; and connecting to a point 35 miles due north of the City Hall in Holbrook, thence due east to the intersection of the Arizona/New Mexico State Line

CENTRAL and SOUTHERN AREAS:
All Areas not included in the Northern Area

POWER EQUIPMENT OPERATORS
(Except Piledriving and Steel Erection)

Group 1: Air Compressor Operator; Field Equipment Servicemen Tender; Heavy-duty Repair Tender; Heavy-duty Welder Tender; Oiler; Pump Operator

Group 2: Conveyor Operator; Generator Operator - portable; Power Grizzly Operator; Self-propelled Chip Spreading Machine - Conveyor Operator; Watch Fireman; Welding Machine Operator - gasoline and diesel power

Group 3: Concrete Mixer Operator - skip-type; Driver; Moto-paver, Slurry Seal Machine and similar type equipment; Dinky Operator (under 20 tons wt.); Motor Crane Driver; Power Sweeper Operator, self-propelled; Ross Carrier or Forklift Operator; Skip Loader Operator, all types with rated capacity 1½ cu. yds. or less; Wheel-type Tractor Operator (Ford, Ferguson, or similar type) with attachments such as Fresno, Push Blade, Post Hole Auger, Mover, etc. excluding compacting equipment

Group 4: A-Frame Boom Truck or Winch Truck Operator; Asphalt Plant Fireman; Elevator Hoist Operator (including Tuskey Hoist or similar type); Grade Checker (excluding Civil Engineer); Multiple power Concrete Saw Operator; Pavement Breaker; Mechanical Compactor Operator, power propelled; Roller Operator, all types, except as otherwise classified; Screed Operator; Self-propelled Chip Spreading Machine Operator (including Slurry Seal Machine Operator; Stationary Pipe Wrapping and Cleaning Machine Operator; Tugger Operator

Group 5: Aggregate Plant Operator (including Crushing, Screening and Sand Plants, etc.); Asphalt Laydown Machine Operator; Asphalt Plant Mixer Operator; Beltcrete Operator; Boring Machine Operator; Concrete Mechanical Tamping, Spreading or Finishing Machine (including Clary, Johnson or similar types); Concrete Pump Operators; Concrete Batch Plant Operator, all types and sizes; Conductor, Brakeman or Handler; Drilling Machine; Elevating Grader Operator, all types and sizes (except as otherwise classified); Highline Cableway Signalman; Field Equipment Serviceman; Kolman Belt Loader Operator or similar with belt width 48" or over; Locomotive Engineer (including Dinky, 20 tons wt. and over); Moto-paver and similar type equipment Operator; Operating Engineer Rigger; Pneumatic-tired Scraper Operator (Turnapull, Euclid, Cat, D-W, Hancock and similar equipment) up to and including 12 cu. yds.; Power Jumbo Form Setter Operator; Pressure Grout Machine Operator (as used in heavy engineering construction); Road Oil Mixing Machine Operator; Roller Operator, on all types asphalt pavement; Self-propelled Compactor, with blade; Skip Loader Operator, all types rated capacity, over 1½ but less than 4 cu. yds.; Slip Form Operator (power driven lifting device for concrete forms); Soil Cement Road Mixing Machine Operator, single pass type; Stationary Central Generating Plant Operator, rated 300 K. W. or more; Surface Heater and Planer Operator; Traveling Pipewrapping Machine Operator

POWER EQUIPMENT OPERATORS (Cont'd)
(Except Piledriving and Steel Erection)

Group 5A: Heavy-duty Mechanic and/or Welder; Pneumatic-tired Scraper, all sizes and types over 12 cu. yds. up to and including 45 cu. yds. MRC (Turnapull, Euclid, Cat, D-W, Hancock and similar equipment); Tractor Operator (Pusher, Bulldozer, Scraper) up to 400 net horsepower rating; Trenching Machine Operator

Group 6: Auto Grade Machine (CMI and similar equipment); Boring Machine Operator (including Mole, Badger and similar type); Concrete Mixer Operator, paving type, and Mobile Mixer; Concrete Pump Operator with boom attachment (truck mounted); Crane Ope- Crawler type Tractor Operator, with boom attachment or slope bar; Derrick Operator; Forklift Operator for hoisting personnel; Grade-all Operator; Helicopter Hoist; Highline Cableway Operator (less than 20 tons rated capacity); Mass Excavator Operator (150 Bucyrus Erie and similar types); Mechanical Hoist Operator (two or more drums); Motor Grade Operator, any type power blade; Motor Grade Operator with elevating grader attachment; Mucking Machine Operator; Overhead Crane Operator; Piledriver Engineer (portable, stationary or skid rig); Pneumatic-tired Scraper Operator, all sizes and types (Turnapull, Euclid, Cat, D-W, Hancock and similar equipment over 45 cu. yds., MRC); Power driven Ditch Lining or Ditch Trimming Machine Operator; Skip Loader Operator, all types with rated capacity 4 cu. yds., but less than 8 cu. yds.; Slip Form Paving Machine Operator (including Gunnert, Zimmerman and similar types); Specialized Power Digger Operator, attached to wheel-type Tractor; Tower Crane (or similar type) Operator; Tractor Operator (Pusher, Bulldozer, Scraper) (400 net horsepower and over); Tugger Operator (two or more); Universal Equipment Operator, Shovel, Backhoe, Dragline, Clamshell, etc., up to 8 cu. yds.

Group 7: Crane Operator, Pneumatic or Crawler (100 ton hoisting capacity and over MRC rating); Helicopter Pilot, FAA qualified, when used in construction work; Highline Cableway Operator, over 20 ton rated capacity and using Traveling Head and Tail Tower; Remote-controll Earth Moving Equipment Operator; Skip Loader Operator, all types with rated capacity of 8 cu. yds. or more; Universal Equipment - Shovel, Backhoe, Dragline, Clamshell, etc., 8 cu. yds. and over

TRUCK DRIVERS	Basic Hourly Rates	Basic Hourly Rates	Fringe Benefits Payments			
			H & W	Pensions	Vacation	Education and/or Appr. Tr.
	N AREA	C and S AREAS				
Group 1	$12.445	$10.32	$1.12	$1.30		.10
Group 2	12.605	10.48	1.12	1.30		.10
Group 3	12.875	10.75	1.12	1.30		.10
Group 4	13.305	11.18	1.12	1.30		.10
Group 5	13.495	11.37	1.12	1.30		.10
Group 5A	13.735	11.61	1.12	1.30		.10
Group 6	13.895	11.77	1.12	1.30		.10
Group 7	14.395	12.27	1.12	1.30		.10
Group 8	15.03	12.903	1.12	1.30		.10
Group 8A	15.825	13.70	1.12	1.30		.10
Group 8B	13.135	11.01	1.12	1.30		.10
Group 8C	15.445	13.32	1.12	1.30		.10

AREA DESCRIPTIONS

NORTHERN AREA:
Area north of a straight line drawn between a point 35 miles due north of the City Hall in Flagstaff and an point 35 miles due north of the City Hall in Kingman, extending to the Arizona/Nevada State Line on the west; and connecting to a point 35 miles due north of the City Hall in Holbrook, thence due east to the intersection of the Arizona/New Mexico State Line

CENTRAL and SOUTHERN AREAS:
All Areas not included in the Northern Area

DECISION NO. AZ82-5109 Page 25

TRUCK DRIVERS

Group 1: Teamsters; Pick-ups; Station Wagon; Man Haul Driver

Group 2: Dump or Flatrack (2 or 3 axle); Water Truck (under 2500 gallons); Buggymobile (1 cu. yd. or less); Bus Driver; Self-propelled Street Sweeper; Shop Greaser

Group 3: Dump or Flatrack (4 axle); Dumptor or Dumpster (less than 7 cu. yds.); Water Truck (2500 gallons but less than 4000 gallons); Tireman

Group 4: Dumptor or Dumpster (7 cu. yds. but less than 16 cu. yds.); Dump or Flatrack (5 axle); Water Truck (4000 gallons and over); Slurry type equipment Driver or Leverman; Vacuum Pump Truck Drivers; Flaherty Spreader or similar type equipment or Leverman; Transit Mix (8 cu. yds. or less mixer capacity); Ambulance Driver

Group 5: Dump or Flatrack (6 axle); Transit Mix (over 8 cu. yds. but less than 10.5 cu. yds.); Rock Truck (i.e. Dart, Euclid and other similar type end Dumps, single unit) less than 16 cu. yds.

Group 5A: Oil Tanker or Spreader and/or Bootman, Retortman or Leverman

Group 6: Transit Mix (over 10.5 cu. yds. but less than 14 cu. yds. mixer capacity); Ross Carrier, Fork Lift or Lift Truck; Hydro Lift, Swedish Crane, Iowa 300 and similar types; Concrete Pump (when integral part of Transit Mix Truck); Dump or Flatrack (7 axle); Transport Driver (unless axle rating results in higher classification)

Group 7: Dump or Flatrack (8 axle)

Group 8: Off-highway equipment Driver including but not limited to: 2 or 4 wheel power unit, i.e. Cat, DW Series, Euclid, International and similar type equipment, transporting material when top loaded or by external means including pulling Water Tanks, Fuel Tanks or other applications under Teamster Classifications; Rock Trucks (Dart, Euclid, or other similar end dump types) 16 cu. yds. and over; Eject-alls; Dumptor or Dumpster (16 cu. yds. and over); Dump or Flatrack (9 axle)

Group 8A: Heavy-duty Mechanic/Welder; Body and Fender Man

Group 8B: Heavy-duty Mechanic/Welder Tender

Group 8C: Field Equipment Serviceman or Fuel Truck Drivers

Unlisted classifications needed for work not included within the scope of the classifications listed may be added after award only as provided in the labor standards contract clauses (29 CFR, 5.5 (a)(1)(ii)).

[FR Doc. 82-10928 Filed 4-22-82; 8:45 am]
BILLING CODE 4510-27-C

DECISION NO. AZ82-5109 - Mod. #1 (47 FR 17723 - April 23, 1982) Statewide, Arizona		
Omit:		
Landscape Gardener and Nurseryman classification from Laborers, Group 1:		
ADD:		
Plumbers:		
Hoover Dam Only:		
Zone 4	$19.35	$3.83

Reference: DACW09-82-B-0018

SPECIFICATIONS

for

INDIAN BEND WASH SIDE CHANNEL SYSTEM

Maricopa County

Gila River Basin, Arizona

Appropriation: 96x3122 Construction General, Corps of Engineers, Civil

96x8862 Contributed Fund , Other

Authority: PL 97-88 (H.R. 4144) December 4, 1981 Energy and Water Development Act,FY82

US Army Corps of Engineers

Los Angeles District

TABLE OF CONTENTS

PART I	SPECIAL PROVISIONS
PART II	TECHNICAL PROVISIONS

Section	Title
1A	General Requirements
1B	Measurement and Payment
1C	Environmental Protection
2A	Diversion and Control of Water
2AA	Clearing Site and Removing Obstructions
2B	Detour and Traffic Control Facilities
2C	Excavation
2D	Fills and Subgrade Preparation
2E	Concrete Pipe
2F	Stone Protection
2G	Aggregate Base
2H	Prime Coat and Weed Killer
2I	Tack Coat
2J	Asphalt Concrete
2JJ	Bituminous Surface Treatment
2K	Fencing
2L	Waterline Relocation
2M	Sewer Relocation
2N	Seeding
2O	Trees and Shrubs
2P	Irrigation System
2R	Concrete Sidewalks and Curbs and Gutters
3A	Concrete
3B	Formwork for Concrete
3C	Steel Bars, Welded Wire Fabric, and Accessories for Concrete Reinforcement
3D	Expansion, Contraction and Construction Joints in Concrete
3E	Grouting Stone Protection
5A	Miscellaneous Metalwork and Materials

PART I

SPECIAL PROVISIONS

Index

1. Commencement Prosecution and Completion of Work
2. Liquidated Damages
3. Contract Drawings, Maps and Specifications
4. Contractor Submittals
5. Physical Data
6. Salvage Materials and Equipment
7. Layout of Work
8. Quantity Surveys
9. Damage to Work
10. Performance of Work by Contractor
11. Contractor Quality Control
12. Progress Schedule
13. Time Extension
14. Continuing Contracts
15. Required Insurance
16. Availability and Use of Utility Services
17. Equipment Ownership and Use of Operating Expense Schedules

1. COMMENCEMENT, PROSECUTION, AND COMPLETION OF WORK (1965 JAN). The Contractor will be required to commence work under this contract within 5 calendar days after the date of receipt by him of notice to proceed, to prosecute said work diligently, and to complete the entire work ready for use not later than dates scheduled below. Seeding and planting shall be accomplished as soon as practicable and within time limits stated in the Technical Provisions or directed by the Contracting Officer. The time stated for completion shall include final clean-up of the premises.

1.1 Completion Schedule.

Description	Completion Date
Chapparal Side Channel sta. 211 + 11 to sta. 239 + 44	12 November 1982
Canals Undercrossings with Canal Linings listed below	11 December 1982
McDonald Drive (Sta. 116+75 to Sta. 118+16.17)	
Chaparral Road (Sta. 239+63 to Sta. 241+45)	
Camelback Road (Sta. 358+33 to Sta. 359+85)	
Complete remaining work	1 July 1983

1.2 The foregoing completion dates are based on the assumption that the successful bidder will receive the notice to proceed by 30 June 1982. The Government will extend the complete remaining work completion date by the number of calendar days after the above date that the Contractor receives the notice to proceed, except to the extent that the delay in issuance of the notice to proceed

results from the failure of the Contractor to execute the contract and give the required performance and payment bonds within the time specified in the bid. (1968 APR).

1.3 Canal Undercrossings and Lining. The Contractor shall complete the side channel undercrossings of the Arizona Canal and the Canal Lining ready for flood control use not later than 30 calendar days after the date on which flow in the canal is stopped by others. Flow is scheduled to be stopped on Friday, 19 November 1982 at 12:00 midnight. Flow is scheduled to start at 12:00 midnight Saturday, 18 December 1982.

2. LIQUIDATED DAMAGES (1965 JAN). In case of failure on the part of the Contractor to complete the work within the time fixed in the contract or any extensions thereof, the Contractor shall pay to the Government as liquidated damages, pursuant to the clause of this contract entitled "Termination for Default-Damages for Delay-Time Extensions," the following sums separately for each day of delay.

3. CONTRACT DRAWINGS, MAPS AND SPECIFICATIONS (1965 JAN).

3.1 Ten sets of large scale contract drawings, maps and specifications will be furnished the Contractor without charge, except applicable publications incorporated into the Technical Provisions by reference. Additional sets will be furnished on request at the cost of reproduction. The work shall conform to the following contract drawings and maps, all of which form a part of these specifications and are available in the office of the U.S. Army Engineer District, Los Angeles, 300 North Los Angeles Street, Los Angeles, California.

Drawing No. (District File No.)	Title
241/144	Index to Contract Drawings
145	Project Location
146	General Plan and Survey Control
147	Foundation Investigation - Collector Channels - Reach 1 & Reach 2, Side Channel - McDonald Drive
148	Foundation Investigation - Collector Channel - Reach 3
149	Foundation Investigation - Side Channel - Chaparral Road
150	Foundation Investigation - Camelback Road Canal Crossing
151	Collector Channel - Reach 1, Plan and Profile No. 1, Sta. 9+70.00 to Sta. 19+50.00
152	Collector Channel - Reach 1, Plan and Profile No. 2, Sta. 19+50.00 to Sta. 28+98.86
153	Collector Channel - Reach 1, Cross Sections
154	Collector Channel - Reach 2, Plan and Profile No. 1, Sta. 120+00 to Sta. 123+11.00
155	Side Channel - McDonald Drive, Plan and Profile No. 1, Sta. 118+21.25 to Sta. 108+90.00
156	Side Channel - McDonald Drive, Plan and Profile No. 2, Sta. 108+90.00 to Sta. 100+00.00
157	Collector Channel - Reach 2, Side Channel - McDonald Drive Cross Sections
158	Collector Channel - Reach 3, Plan and Profile No. 1, Sta. 273+90.00 to Sta. 261+00.00

Drawing No. (District File No.)	Title
241/159	Collector Channel - Reach 3, Plan and Profile No. 2, Sta. 261+00.00 to Sta. 248+83.62
160	Side Channel - Chaparral Road, Plan and Profile No. 1, Sta. 241+54.88 to Sta. 229+85.00
161	Side Channel - Chaparral Road Plan and Profile No. 2, Sta. 229+85.00 to Sta. 213+45.00
162	Side Channel - Chaparral Road Plan and Profile No. 3, Sta. 218+45.00 to Sta. 209+94.00
163	Collector Channel - Reach 3, Cross Sections
164	Side Channel - Chaparral Road Cross Sections
165	Side Channels - McDonald Drive and Chaparral Road Canal Lining - Plans, Sections and Details
166	Collector and Side Channels - Sections and Standard Details
167	Collector Channel - Reach 1, Outlet Structure Plan, Profile and Sections
168	Collector Channel - Reach 1, Outlet Structure and Side Drain Structure Elevations, Sections and Details
169	Side Channel - McDonald Drive Outlet and Drop Inlet Structures, Plans, Sections and Details
170	Collector Channel - Reach 2, Inlet and Junction Structures, Plans and Profiles
171	Collector Channel - Reach 3, Inlet Structure, Side Channel - Chaparral Road Outlet Structure Plans, Profiles, Sections and Details
172	Side Channels - McDonald Drive and Chaparral Road Manhole and Divider Wall Details
173	Collector Channel - Reach 3, Side Channel - Chaparral Road Transition Structures and Drop Inlet Plans, Sections and Elevations
174	Collector Channel, Reach 3, Junction Structure Details and Typical Grating Details
175	Collector Channel - Reach 1, Esthetic Treatment, No. 1
176	Collector Channel - Reach 1, Esthetic Treatment, No. 2
177	Side Chennel - McDonald Drive Irrigation and Landscaping Plan
178	Collector Channel - Reach 3, Esthetic Treatment
179	Side Channel - McDonald Drive Utility Relocations and Miscellaneous Details
180	Collector Channel - Reach 3, Utility Relocations
181	Side Channel - Chaparral Road Utility Relocations No. 1
182	Side Channel - Chaparral Road Utility Relocations No. 2
183	Side Channel - Chaparral Road Utility Relocations No. 3
184	Camelback Road Canal Crossing Plans, Sections, Elevation and Detail

3.2 Omissions from the drawings or specifications or the misdescription of details of work which are manifestly necessary to carry out the intent of the drawings and specifications, or which are customarily performed, shall not relieve the Contractor from performing such omitted or misdescribed details of the work but they shall be performed as if fully and correctly set forth and described in the drawings and specifications.

3.3 The Contractor shall check all drawings furnished him immediately upon their receipt and shall promptly notify the Contracting Officer of any discrepancies. Figures marked on drawings shall in general be followed in preference to scale measurements. Large scale drawings shall in general govern small scale drawings. The Contractor shall compare all drawings and verify the figures before laying out the work and will be responsible for any errors which might have been avoided thereby.

4. CONTRACTOR SUBMITTALS.

4.1 General. Reference is made to the General Provision entitled "Shop Drawings". The Contractor shall submit for approval all shop drawings, certificates of compliance and/or equipment lists called for under the various headings of these specifications. These drawings, certificates and lists shall be complete and detailed. If approved by the Contracting Officer, each copy of the drawings, certificates, or lists will be identified as having received such approval by being so stamped and dated. The Contractor shall make any corrections required by the Contracting Officer. Unless otherwise specified in the Technical Provisions, the number of copies to be submitted shall be as stated herein. The Contractor shall complete ENG Form 4025, "Transmittal of Shop Drawings, Equipment Data, Material Samples, or Manufacturer's Certificates of Compliance for Approval" and forward 6 copies of same with each set of shop drawings, certificates of compliance, or equipment lists submitted. Blank ENG Forms 4025 will be furnished by the Contracting Officer on request. Each shop drawing submitted for approval shall have, in the lower right hand corner just above the title, a white space 3 inches x 4 inches in which the Contracting Officer can indicate the action taken. Shop drawings for submittal shall be either blue line or black line prints on a white background. Blueprints are not acceptable. Each shop drawing, certificate of compliance, and/or equipment list shall be identified with the following information as applicable:

Contract Number
Project Title and Location
Subcontractor's Name
Supplier's Name
Manufacturer's Name
Contract Specification and Paragraph Number
Contract Drawing File Number

4.1.1 Contractor Certification. Each submittal of the shop drawings shall contain the following certification on the face of the ENG Form 4025 accompanying the submittal:

"I have reviewed the shop drawings in detail
and they are correct and in strict conformance
with the contract drawings and specifications
except as otherwise explicitly stated.
Authorized Prime Contractor Representative"

4.2 Shop Drawings and Materials Submittal Register. Within 15 calendar days after commencement of work under this contract, the Contractor shall submit a preliminary register showing all shop drawings, certificates of compliance, equipment lists, samples, and other data required to be submitted under the various headings of these specifications. The register shall be submitted in duplicate. The preliminary register shall show the submittal identification number, the type of submittal, and the description for all items to be submitted under this contract and, for all items needed prior to submittal of the Project Progress Schedule, the scheduled submittal date, approval need date, and the material/equipment need date shall also be included. The register shall be expanded to include all Contractor scheduled dates and shall be resubmitted within 15 calendar days after submittal of the project progress schedule. After original approval the register shall be updated to indicate actual dates, actions completed, and any additional submittals or resubmittals required, and two copies of all updated sheets shall be submitted on or before the fifteenth of each month. The register shall provide adequate time for review and approval of the submitted material and shall be coordinated with the construction progress schedule to assure that all equipment and materials will be available for incorporation into the work in accordance with approved schedule of construction operations. Payment for materials incorporated into the work will not be allowed until required approvals have been obtained.

4.3 Shop Drawings. The Contractor shall submit to the Contracting Officer for approval 10 copies of all shop drawings as called for under the various headings of these specifications. Nine sets of all shop drawings will be retained by the Contracting Officer and one set will be returned to the Contractor.

4.4 Certificates of Compliance (1969 MAY OCE). Any certificates required for demonstrating proof of compliance of materials with specification requirements shall be executed in 6 copies. Each certificate shall be signed by an official authorized to certify in behalf of the manufacturing company and shall contain the name and address of the Contractor, the project name and location, and the quantity and date or dates of shipment or delivery to which the certificates apply. Copies of laboratory test reports submitted with certificates shall contain the name and address of the testing laboratory and the date or dates of the tests to which the report applies. Certification shall not be construed as relieving the Contractor from furnishing satisfactory material, if, after tests are performed on selected samples, the material is found not to meet the specific requirements.

4.5 Resubmittals. If a submittal is returned for correction or is not satisfactory and is disapproved by the Contracting Officer, the Contractor shall resubmit the corrected material in the same quantity, as specified for the original submittal, for approval within 14 calendar days after receipt by him of the disapproved material.

5. PHYSICAL DATA (1965 JAN).

5.1 General. Information and data furnished or referred to below are furnished for the Contractor's information. However, it is expressly understood that the Government will not be responsible for any interpretation or conclusion drawn therefrom by the Contractor.

5.2 The physical conditions indicated on the drawings and in the specifications are the result of site investigations by surveys and auger borings.

5.3 Weather Conditions. Meterological information including rainfall and temperature data are available for inspection in the office of the District Engineer at 300 North Los Angeles Street, Los Angeles California. Temperature statistics based on the National Weather Service, Phoenix, Arizona Sky Harbor International Airport weather station are as follows:

TEMPERATURE DATA (IN DEGREES FAHRENHEIT)

Month	Average Daily Maximum	Average Daily Minimum	Average	Maximum**	Minimum**
January	65	38	52	88	16
February	69	42	56	89	22
March	75	46	61	97	25
May	92	60	76	113	40
June	102	69	85	117	50
July	104	85	91	118	61
August	102	76	89	117	60

* Taken from Local Climatological Data - Annual Summary for Phoenix 1974.

** Taken from Local Climatological Data - Annual Summary for Phoenix 1974 and from Climatology of the United States No. 80-2 supplement for 1951-1960.

5.3.1 Streamflow Conditions. Discharge frequency and flood hydrograph information are available for inspection in the office of the District Engineer, at 300 North Los Angeles, California.

5.4 Additional information, including but not necessarily limited to, results of laboratory tests of material encountered in test holes or other explorations and field logs is available for inspection and study in the office of District Engineer, Geotechnical Branch, 300 North Los Angeles Street, Los Angeles, California, 90012.

6. SALVAGE MATERIALS AND EQUIPMENT (1965 JAN). The Contractor shall maintain adequate property control records for all materials or equipment specified to be salvaged. These records may be in accordance with the Contractor's system of property control, if approved by the property administrator. The Contractor shall be responsible for the adequate storage and protection of all salvaged materials and equipment and shall replace, at not cost to the Government, all salvaged materials and equipment which are broken or damaged during salvage operations as the result of his negligence, or while in his care.

7. LAYOUT OF WORK

7.1 Bench Marks and Horizontal Control Points have been established at the site of the work. These are described and indicated on the drawings.

7.2 From these control points and bench marks the Contractor shall complete the layout of the work and shall be responsible for all measurements that may be required for the execution of the work to the location and limit marks prescribed in the specifications or on the contract drawings, subject to such modifications as the Contracting Officer may require to meet changed conditions or as a result of necessary modifications to the contract work.

7.3 The Contractor shall furnish, at his own expense, such stakes, spikes, steel pins, templates, platforms, equipment, tools and material, and all labor as may be required in laying out any part of the work from the control points and bench marks established by the Government. It shall be the responsibility of the Contractor to maintain and preserve all stakes and other marks established by the Contracting Officer until authorized to remove them and if such marks are destroyed, by the Contractor or through his negligence prior to their authorized removal they may be replaced by the Contracting Officer, at his discretion, and the expense of replacement will be deducted from any amounts due or to become due the Contractor. The Contracting Officer may require that work be suspended at any time when location and limit marks established by the Contractor are not reasonably adequate to permit checking of the work.

8. QUANTITY SURVEYS (1979 MAR).

8.1 The Contractor shall make such surveys and computations as are necessary to determine the quantities of work performed or placed during each period for which a progress payment is to be made. The Contractor shall also make original and final surveys. The Government will make such computations as are necessary to determine the quantities of work performed or finally in place. Unless waived by the Contracting Officer in each specific case, quantity surveys made by the Contractor shall be made under the direction of a representative of the Contracting Officer.

8.2 All original field notes, computations and other records of the Contractor for the purposes of layout, original, progress and final surveys shall be furnished promptly to the representative of the Contracting Officer at the site of the work and shall be used by the Contracting Officer to the extent necessary in determining the proper amounts of progress and final payments. A copy of the original notes, computations and records furnished to the Contracting Officer shall be retained by the Contractor.

9. DAMAGE TO WORK (1966 MAR OCE). The responsibility for damage to any part of the permanent work shall be as set forth in the clause of the contract entitled "Permits and Responsibilities." However, if, in the judgment of the Contracting Officer, any part of the permanent work performed by the Contractor is damaged by flood or earthquake, which damage is not due to the failure of the Contractor to take reasonable precautions or to exercise sound engineering and construction practices in the conduct of the work, the Contractor will make the repairs as ordered by the Contracting Officer and full compensation for such repairs will be made at the applicable contract unit or lump sum prices as fixed and established in the contract. If, in the opinion of the Contracting Officer, there are no contract unit or lump sum prices applicable to any part of such work an equitable adjustment pursuant to Clause 3, Changes, of the contract, will be made as full compensation for the repairs of that part of the permanent work for which there are no applicable contract unit or lump sum prices. Except as herein provided, damage to all work (including temporary construction), utilities, materials, equipment and plant shall be repaired to the satisfaction of the Contracting Officer at the Contractor's expense, regardless of the cause of such damage.

10. PERFORMANCE OF WORK BY CONTRACTOR (1965 JAN). The Contractor shall perform on the site, and with his own organization, work equivalent to at least thirty-five percent (35%) of the total amount of work to be performed under the contract. If, during the progress of the work hereunder the Contractor requests a reduction in such percentage and the Contracting Officer determines that it would

be to the Government's advantage, the percentage of the work required to be performed by the Contractor may be reduced; provided, written approval of such reduction is obtained by the Contractor from the Contracting Officer.

11. CONTRACTOR QUALITY CONTROL. The Contractor shall provide and maintain an effective quality control program that complies with the clause of the contract entitled "Contractor Inspection System."

11.1 The Contractor shall establish a quality control system to perform sufficient inspection and tests of all items of work, including that of his subcontractors, to ensure conformance to applicable specifications and drawings with respect to the materials, workmanship, construction, finish, functional performance, and identification. This control will be established for all construction except where the Technical Provisions of the contract provide for specific Government control by inspections, tests or other means. The Contractor's control system will specifically include the surveillance and tests required in the Technical Provisions of the contract specifications.

11.2 The Contractor's quality control system is the means by which he assures himself that his construction complies with the requirements of the contract plans and specifications. The controls shall be adequate to cover all construction operations and should be keyed to the proposed construction sequence.

11.3 The Contractor's job supervisory staff may be used for quality control, supplemented as necessary by additional personnel for surveillance, special technicians, or testing factilities to provide capability for the controls required by the Technical Provisions of the specifications. Prior approval is required for facilities, equipment, and personnel used by the Contractor in performing the specified tests.

11.4 After the contract is awarded and before cosntruction operations are started, the Contractor shall meet with the Contracting Officer, or his representative, and discuss quality control requirements. The meeting shall develop mutual understanding relative to details of the system, including the forms to be used for recording the quality control operations, inspections, administration of the system, and the interrelationship of Contractor and Government inspection.

11.5 The Contractor shall submit for approval within days after the receipt of the Notice to Proceed a quality control plan which shall include the procedures, instructions, and reports to be used. This document will include as a minimum:

(1) The quality control organization.

(2) Number and qualifications of personnel to be used for this purpose.

(3) Authority and responsibilities of quality control personnel.

(4) Methods of quality control including that for his subcontractor's work.

(5) Test methods including, as specified, name of qualified testing laboratory to be used.

(6) Method of documenting quality control operation, inspection, and testing.

(7) A copy of a letter of direction to the Contractor's representative responsible for the quality control, outlining his duties and responsibilities, and signed by a responsible officer of the firm.

11.6 Unless specifically authorized in writing no construction shall be started until the Contractor's quality control plan is approved.

11.7 All compliance inspection will be recorded on an approved form, including but not limited to the specific items required in the Technical Sections of the Specifications. This form, to include records of corrective action taken, will be furnished to the Government as required by the Contracting Officer.

11.8 If recurring deficiencies in an item or items indicate that the quality control system is not adequate, such corrective actions will be taken as directed by the Contracting Officer.

11.9 In the event the Contractor fails to satisfactorily perform any required inspections and tests; to submit timely, complete, and factual reports and test data; or otherwise comply with the quality control provisions, the Contracting Officer may provide these services from another source and all costs for providing these services will be deducted from payments due the Contractor.

12. PROGRESS SCHEDULE.

12.1 Reference is made to the General Provision entitled "Progress Charts and Requirements for Overtime Work."

12.2 The Progress schedule shall provide for a uniform rate of progress throughout the entire construction period. Actual progress shall be entered on the schedule weekly. The determination of whether or not the work is behind schedule will be based upon a uniform rate of production in each feature of the work. Falling more than 5 calendar days behind the approved progress schedule in any feature of the work shall constitute sufficient grounds for a determination that the Contractor has fallen behind the progress schedule. Failure of the Contracting Officer to act under this provision shall in no way relieve the Contractor of the responsibility for completion of the work on schedule.

13. TIME EXTENSION (1965 JAN). Notwithstanding any other provisions of this contract it is mutually understood that the time extensions for changes in the work depend upon the extent, if any, by which the changes cause delay in the completion of the various elements of construction. The change order granting the time extension may provide that the contract completion date will be extended only for those specific elements so delayed and that the remaining contract completion dates for all other portions of the work will not be altered and may further provide for an equitable readjustment of liquidated damages pursuant to the new completion schedule. The Contracting Officer will coordinate changes in the progress schedule with City of Scottsdale.

14. CONTINUING CONTRACTS (1977 OCT OCE)

14.1 This is a continuing contract, as authorized by Section 10 of the River and Harbor Act of September 22, 1922 (33 U.S. Code 621). The payment of some portion of the contract price is dependent upon reservations of funds from future appropriations. The responsibilities of the Government are limited by this clause notwithstanding any contrary provision of the "Payments to Contractor" clause or any other clause of this contract.

14.2 The sum of $500,000 has been reserved for this contract and is available for payments to the Contractor during the current fiscal year. It is expected that Congress will make appropriations for future fiscal years from which additional funds will be reserved for this contract.

14.3 Failure to make payments in excess of the amount currently reserved, or that may be reserved from time to time, shall not entitle the Contractor to a price adjustment under the terms of this contract except as specifically provided in paragraphs 14.6, 14.9 below. No such failure shall constitute a breach of this contract, except that this provision shall not bar a breach-of-contract action if an amount finally determined to be due as a termination allowance remains unpaid for one year due solely to a failure to reserve sufficient additional funds therefor.

14.4 The Government may at any time reserve additional funds for payments under the contract if there are funds available for such purpose. The Contracting Officer will promptly notify the Contractor in writing of any additional funds reserved for the contract.

14.5 If earnings will be such that funds reserved for the contract will be exhausted before the end of any fiscal year, the Contractor shall give written notice to the Contracting Officer of the estimated date of exhaustion and the amount of additional funds which will be needed to meet payments due or to become due under the contract during that fiscal year. This notice shall be given not less than 45 nor more than 60 days prior to the estimated date of exhaustion.

14.6 No payments will be made after exhaustion of funds except to the extent that additional funds are reserved for the contract. The Contractor shall be entitled to simple interest on any payment that the Contracting Officer determines was actually earned under the terms of the contract and would have been made except for exhaustion of funds. Interest shall be computed from the time such payment would otherwise have been made until actually or constructively made, and shall be at the rate established by the Secretary of the Treasury pursuant to Public Law 92-41, 85 STAT 97, for the Renegotiation Board, as in effect on the first day of the delay in such payment.

14.7 Any suspension, delay, or interruption of work arising from exhaustion or anticipated exhaustion of funds shall not constitute a breach of this contract and shall not entitle the Contractor to any price adjustment under the "Suspension of Work" clause or in any other manner under this contract.

14.8 An equitable adjustment in performance time shall be made for any increase in the time required for performance of any part of the work arising from exhaustion of funds or the reasonable anticipation of exhaustion of funds.

14.9 If, upon the expiration of sixty (60) days after the beginning of the fiscal year following an exhaustion of funds, the Government has failed to reserve sufficient additional funds to cover payments otherwise due, the Contractor, by written notice delivered to the Contracting Officer at any time before such additional funds are reserved, may elect to treat his right to proceed with the work as having been terminated. Such a termination shall be considered a termination for the convenience of the Government.

14.10 If at any time it becomes apparent that the funds reserved for any fiscal year are in excess of the funds required to meet all payments due or to become due the Contractor because of work performed and to be performed under the contract

during the fiscal year, the Government reserves the right, after notice to the Contractor, to reduce said reservation by the amount of such expenses.

15. REQUIRED INSURANCE.

15.1 The Contractor shall procure and maintain during the entire period of his performance under this contract insurance coverage amounting to at least that required by the Financial Responsibility Compulsory Insurance Law of Arizona. The City of Scottsdale shall be named as additionally insured.

16. AVAILABILITY AND USE OF UTILITY SERVICES. Construction water from fire hydrants can be arranged with the City of Scottsdale. A water meter deposit of $600 is required, refundable if meter is returned in good condition. Charges of $57.60 per month and $0.49 per 1000 gallons will be made for water used.

17. EQUIPMENT OWNERSHIP AND OPERATING EXPENSE SCHEDULE. (1981 JUN OCE.)

17.1 Whenever actual ownership and operating costs for each piece of equipment or equipment groups of similar serial and series cannot be determined by the Contracting Officer from a Contractor's accounting records, allowable costs for construction equipment in sound workable condition owned or controlled and furnished by the Contractor or Subcontractor at any tier for work requiring adjustments in contract price shall be determined in accordance with the applicable provisions of the "Construction Equipment Ownership and Operating Expense Schedule," Region VII. For forward pricing, the Schedule in effect at the time of negotiations shall apply. For retrospective pricing, the Schedule in effect as of the time work was performed shall apply. For the purpose of determination of the hourly rates to be applied under this contract, working conditions shall be considered to be average unless otherwise determined by the Contracting Officer. Rates for equipment not in the schedule will be computed by the Government using the formulas in the schedule. Where applicable, rates in the schedule may be used for unlisted equipment of comparable horsepower and auxiliary features.

17.2 Equipment rental costs are allowable, subject to the provisions of DAR 15-205.34 and 15.402.2, substantiated by certified reproduced copies of invoices or bills. Rates for equipment rented from an organization under common control, lease-purchase or sale-leaseback arrangements will be determined in accordance with the schedule. A copy of the schedule will be provided to the successful bidder upon request.

* * * * *

PART II

TECHNICAL PROVISIONS

SECTION 1A

GENERAL REQUIREMENTS

Index

1. Applicable Publications
2. Project Facilities
3. Construction Signs
4. Project Engineer's Office
5. Bulletin Board
6. Maintenance and Disposal of Project Facilities
7. Scrap Material
8. Salvage Materials
9. Archeological Findings During Construction
10. Public Utilities, Notices, and Restrictions
11. Public Safety
12. Occupational Safety and Health Act (OSHA) Standards
13. Quality Control

1. APPLICABLE PUBLICATIONS. The publications listed below form a part of this specification to the extent referenced. The publications are referred to in the text by the basic designation only.

1.1 Federal Specifications (Fed. Spec.).

FF-B-575C	Bolts, Hexagon and Square
FF-N-105B & Int. Am-4	Nails, Brads, Staples and Spikes: Wire, Cut and Wrought
FF-N-836D & Am-1	Nut: Square, Hexagon, Cap, Slotted, Castle, Knurled, Welding, and Single Ball Seat
MM-L-751H	Lumber; Softwood
TT-E-529C & Am-2	Enamel, Alkyd, Semi-Gloss
TT-P-25E & Am-2	Primer Coating, Exterior (Undercoat for Wood, Ready-Mixed, White and Tints)

1.2 U.S. Department of Commerce National Bureau of Standards, Product Standard.

PS 1-74	Plywood, Construction and Industrial

2. PROJECT FACILITIES. The Contractor shall construct and/or erect the following project facilities.

2.1 Construction Signs. The signs shall be erected as soon as possible and within 15 days after commencement of work under this contract.

2.1.1 Two project signs at locations designated by the Contracting Officer.

2.1.2 Warning Signs facing approaching traffic on all haul roads crossing under overhead power transmission lines.

2.1.3 Six hard hat signs at locations directed.

2.2 Project Engineer's Office and Laboratory, including a fenced parking area and a flagpole.

2.3 Bulletin Board at the Contractor's office.

2.4 Sanitary Facilities.

3. CONSTRUCTION SIGNS.

3.1 Materials.

3.1.1 Lumber shall conform to Fed. Spec. MM-L-751, and shall be seasoned Douglas Fir, S4S, Grade D or better except that posts, braces and spacers shall be construction Grade (WCLB).

3.1.2 Plywood shall conform to Product Standard PS 1, grade A-C, Group 1, exterior type.

3.1.3 Bolts, Nuts and Nails. Bolts shall conform to Fed. Spec. FF-B-575, nuts shall conform to Fed. Spec. FF-N-836, and nails shall conform to Fed. Spec. FF-N-105.

3.1.4 Paints and Oils. Paints shall conform to Fed. Spec. TT-P-25 for primer and TT-E-529 for finish paint and lettering.

3.2 Construction.

3.2.1 Project and hard hat signs shall be constructed as detailed on Figures 1, 1A, 2, and 3. Decals and safety signs will be furnished by the Contracting Officer.

3.2.2 Warning Signs shall be constructed of plywood not less than 1/2 inch thick and shall be securely bolted to the supports with the bottom of the sign face 3 feet above the ground. The sign face shall be 2 x 4 feet, all letters shall be 4 inches in height, and the wording shall be: "WARNING: OVERHEAD TRANSMISSION LINES."

3.3 Painting. All exposed surfaces and edges of plywood shall be given one coat of linseed oil and be wiped prior to applying primer. All exposed surfaces of signs and supports shall be given one coat of primer and 2 finish coats of white paint. Except as otherwise indicated, lettering on all signs shall be black and sized as indicated.

4. PROJECT ENGINEER'S OFFICE.

4.1 General. The Contractor shall provide a suitable office trailer for the Project Engineer. The exact site will require the Contracting Officer's approval. Both the trailer and the building shall be adequately heated, well lighted, suitably ventilated, and cooled with an exterior mounted, 1,000 cubic feet per minute minimum size, pad-type evaporative cooler, complete, with all piping and electrical connections. An adequate supply of cooled drinking water

shall be furnished and maintained. Open parking space for 6 vehicles and water and sanitary facilities shall be located convenient to the office and laboratory. The combined parking and building area shall be enclosed with a woven wire fence approximately 6 feet high with a 10-foot wide lockable gate accessible from a road or street. The fenced area shall be of sufficient size to permit ease in the parking of vehicles. Materials for the facilities need not be new provided they are adequate for the intended use.

4.2 Office Trailer shall be approximately 10 feet wide by 40 feet in length.

4.3 Flagpole. The Contractor shall furnish and erect a flagpole at the Project Engineer's Office. The flagpole shall be either wood or sectional steel type, a product of a reputable manufacturer who has been regularly engaged in the manufacture of flagpoles. The flagpole shall be complete with standard fittings and equipment, including pulley, cleats, ground protector, halyards, and snap hooks. The pole shall have 20 feet exposed height and be set in concrete foundation in conformance with the manufacturer's recommendations. Painting of the wooden pole shall conform to the applicable requirements for the project sign. Steel pole shall be galvanized.

5. BULLETIN BOARD. A weatherproof bulletin board, approximately 36 inches wide and 30 inches high, with hinged glass door shall be provided adjacent to or mounted on the Contractor's project office. If adjacent to the office, the bulletin board shall be securely mounted on no less than 2 posts. Bulletin board and posts shall be painted or have other approved factory finish. The bulletin board shall be easily accessible at all times and shall contain wage rates, equal opportunity notice, and such other items required to be posted.

6. MAINTENANCE AND DISPOSAL OF PROJECT FACILITIES. The Contractor shall maintain the project facilities in good condition throughout the life of the project. Upon completion of work under this contract, the facilities covered under this section will remain the property of the Contractor and shall be removed from the site at his expense.

7. SCRAP MATERIAL. Materials indicated to be removed and not indicated to be salvaged, stored or reinstalled are designated as scrap and shall become the property of the Contractor and be removed from the site of the work. The Contractor by signing this contract hereby acknowledges that he made due allowance for value, if any, of such scrap in the contract price.

8. SALVAGE MATERIALS. All materials and/or equipment removed and indicated to be either stored or reinstalled are designated as salvaged materials and/or equipment. Any salvaged materials and equipment which are excess upon completion of the work and are not indicated to be stored shall become the property of the Contractor.

9. ARCHEOLOGICAL FINDINGS DURING CONSTRUCTION. Should the Contractor or any of his employees in the performance of this contract find or uncover any archaeological remains, he shall notify the Project Engineer immediately. Such notifications will be a brief statement in writing giving the location and the nature of the findings. Should the discovery site require archaeological studies resulting in delays and/or additional work, the Contractor will be compensated by an equitable adjustment under the General Provisions of the contract.

10. PUBLIC UTILITIES, NOTICES, AND RESTRICTIONS.

10.1 General. The approximate location of all pipe lines, power and communication lines, and other utilities known to exist within the limits of the work are indicated on the drawings. The sizes, locations, and names of owners of such utilities are given from available information, but their accuracy is not guaranteed. Except as otherwise indicated on the drawings, all existing utilities will be left in place and the Contractor shall conduct his operations in such a manner that the utilities will be protected from damage at all times, or arrangements shall be made by the Contractor for their relocation at the Contractor's own expense. The Contractor shall be responsible for any damage to utilities known to exist, including traffic signal circuits and equipments, and shall reimburse the owners for such damage caused by his operations.

10.2 Relocation or Removal. Utilities to be relocated or removed not as part of this contract are designated "To be Relocated by Others" or "To be Removed by Others," respectively. Utilities shown on the plans and not so designated will be left in place and be subject to the provisions of the clause: PROTECTION OF EXISTING VEGETATION, STRUCTURES, UTILITIES, AND IMPROVEMENTS of the General Provisions. The Contractor may make arrangements with the owner for the temporary relocation and restoration of utilities not designated to be relocated, or for additional work in excess of the work needed to relocate utilities designated for relocation at no additional cost to the Government.

10.3 Utilities Not Shown. If the Contractor encounters, within the construction limits of the entire project, utilities not shown on the plans and not visible as of the date of this contract and if such utilities will interfere with construction operations, he shall immediately notify the Contracting Officer in writing to enable a determination by the Contracting Officer as to the necessity for removal or relocation. If such utilities are left in place, removed or relocated as directed by the Contracting Officer, the Contractor shall be entitled to an equitable adjustment for any additional work or delay.

10.4 Coordination. The Contractor shall consult and cooperate with the owner of utilities that are to be relocated or removed by others to establish a mutual performance schedule and to enable coordination of such work with the construction work. These consultations shall be held as soon as possible after award of the contract or sufficiently in advance of anticipated interference with construction operations to provide required time for the removal or relocation of affected utilities.

10.5 Notices.

10.5.1 Traffic Routing. The Contractor shall notify the Contracting Officer 7 days in advance of the time work will be started in areas requiring the rerouting of traffic, traffic lane striping, and removal of street signs. The foregoing shall apply to progressive modifications of traffic routings within an area in which work is in progress. Additional requirements regarding traffic are included in section: DETOURS AND TRAFFIC CONTROL FACILITIES.

10.5.2 Notification of Local Jurisdictions.

10.5.2.1 The Contractor shall notify City of Scottsdale Engineering in writing at least 30 days prior to any work within any road right-of-way. The notification shall contain a description of the work, a schedule of work, a statement of intended method of traffic routing or closure, duration of traffic interruption and a citation of the contract provisions governing the traffic routing or closure.

10.5.2.2 City Engineers, County Road Departments, Police, Highway Patrol, and Fire Departments shall be notified by the Contractor whenever a street is to be closed to traffic. If the closing is to be of long duration, a single notification to each department on the last working day before closing will be sufficient. A single notification shall then be made at the time the street is again opened to traffic. If the closing is to be of short duration or if different sections of the street are to be closed at different times, notifications shall be made on a day-to-day basis.

10.5.3 Utilities to be Relocated or Protected.

10.5.3.1 The Contractor shall notify the Contracting Officer, in writing, 14 calendar days prior to starting work on any utility to be relocated or protected. On each relocation, notification shall include dates on which the Contractor plans excavation, by-pass work, removal work and/or installation work, as applicable. The Contractor shall also notify the following representatives of utility owners not less than 14 days prior to start of work in the vicinity of their respective utilities:

Maricopa Flood Control District
3335 West Durango Street
Phoenix, Arizona 85009
Mr. R.W Shobell
Telephone: (602) 262-1501

Arizona Public Service
Metro Engineering Services
2121 W. Cheryl Drive
Phoenix, Arizona 85021
Mr. Dale Martin
Telephone: (602) 271-7676

City of Scottsdale
Water and Sewer
3939 Civic Center Plaza
Scottsdale, Arizona 85251
Mr. Joe Jason
Telephone: (602) 994-2557

Salt River Project
Civil Engineering Dept.
P.O. Box A80
Phoenix, Arizona 85001
Mr. Herb Mattingly
Telephone: (602) 273-2521

Mountain Bell Telephone Co.
3033 North 32 St.
Phoenix, Arizona 85012
Mr. Al Meins
Telephone: (602) 235-3155

10.5.3.2 Staking of Utilities. In addition to notification of representatives of utility owners, the Contractor shall notify the Blue Stakes Center, phone (602) 263-1100, two working days prior to any excavation within any street right-of-way or any work in the vicinity of known underground utilities, to have underground utilities field located and staked.

10.5.4 Existing Bench Marks and R/W Markers. The Contractor shall notify the Contracting Officer, in writing, 7 days in advance of the time he proposes to remove any bench mark or right-of-way marker.

10.5.5 Optional Disposal Areas. The Contractor shall notify the Contracting Officer within 30 days after receipt of Notice to Proceed, as to which optional disposal areas he proposes to use or whether the areas will not be used for disposal. Should the Contractor elect to use any of the disposal areas, he shall indicate the approximate quantities of material he proposes to place in each area. In addition to the above requirements, the Contractor shall notify the Contracting Officer 24 hours in advance of the time he proposes to start

operations in the optional disposal area, and 48 hours in advance of any work which he proposes to do in the disposal areas on Saturday, Sunday or legal holidays.

10.6 Restrictions.

10.6.1 Representatives of Other Agencies. Personnel representing owners and agencies may be present for various portions of the work. However, the Contractor will be responsible only to the Contracting Officer.

10.6.2 Access to Private Property. Convenient passage through the work or along temporary access shall be provided at all times to all driveways, houses and buildings in the vicinity of the work.

10.6.2.1 Arizona Canal Access Road. The Contractor shall notify Mr. Liscum Diven 14 days prior to closing his access road at the south-east corner of McDonald Drive and Arizona Canal.

Mr. Liscum Diven
5821 Canal Bank (Approx. 1/4 mi. south of McDonald)
Telephone: Home (602) 948-5792
Office: (602) 831-4320

10.6.3 Permits. Contractor is required to secure necessary permits at no additional cost to the Government from the Cities of Scottsdale and Phoenix prior to start of work in their respective jurisdiction.

11. PUBLIC SAFETY.

11.1 Attention is invited to the general provision: PERMITS AND RESPONSIBILITIES. The Contractor shall provide temporary fencing, barricades, and/or guards, as required, to provide protection in the interest of public safety. Whenever the Contractor's operations create a condition hazardous to the public, he shall furnish at his own expense and without cost to the Government, such flagmen and guards as are necessary to give adequate warning to the public of any dangerous conditions to be encountered and he shall furnish, erect, or maintain such fences, barricades, lights, signs and other devices as are necessary to prevent accidents and avoid damage or injury to the public. Flagmen and guards, while on duty and assigned to give warning and safety devices shall conform to applicable city, county, and state requirements. Should the Contractor appear to be neglectful or negligent in furnishing adequate warning and protection measures, the Contracting Officer may direct attention to the existence of a hazard and the necessary warning and protective measures shall be furnished and installed by the Contractor without additional cost to the Government. Should the Contracting Officer point out the inadequacy of warning and protective measures, such action of the Contracting Officer shall not relieve the Contractor from any responsibility for public safety or abrogate his obligation to furnish and pay for those devices. The installation of any general illumination shall not relieve the Contractor of his responsibility for furnishing and maintaining any protective facility.

11.2 Contractor will develop routes for haul trucks on public streets which will be submitted in writing through the Contracting Officer to the City of Scottsdale, City Traffic Engineering Manager, for review and approval action. Included in the submittal shall be proposed travel direction, turn movements, hours of use, street sweeping, watering and cleanup.

12. OCCUPATION SAFETY AND HEALTH ACT (OSHA) STANDARDS. The OCCUPATIONAL SAFETY and SAFETY and HEALTH ACT (OSHA) STANDARDS for CONSTRUCTION (Title 29, Code of Federal Regulations Part 1926 as revised from time to time) and the Corps of Engineers Safety and Health Requirements Manual, EM 385-1-1 are both applicable to this contract. The most stringent requirement of the two standards will be applicable.

13. QUALITY CONTROL. The Contractor shall inspect the work of his own forces and the work of all subcontractors for compliance with the contract requirements and record the results of the inspections. Legible copies of the daily inspection reports shall be maintained by the Contractor at the project site at all times and the original copies of the "Construction Quality Control Report" shall be delivered to the Contracting Officer on the work day following the date of the report.

13.1 Control of on-site construction. The Contractor's control shall include three phases of inspection for all definable features of work, as follows.

13.1.1 Preparatory inspection shall be performed prior to beginning any work on any definable feature of work. It shall include a review of contract requirements; a check to assure that all materials and/or equipment have been tested, submitted, and approved; a check to assure that provisions have been made to provide required control testing; examination of the work area to ascertain that all preliminary work has been completed; and a physical examination of material and equipment to assure that they conform to approved shop drawings or submittal data and that all material and/or equipment are on hand.

13.1.2 Initial inspection shall be performed as soon as work begins on a repesentative portion of the particular feature of work and shall include examination of the quality of workmanship as well as a review of control testing for compliance with contract requirements.

13.1.3 Follow-up inspections shall be performed daily to assure continuing compliance with contract requirements, including control testing, until completion of the particular feature of work.

13.2 The specified reports must be factual records of the Contractor's daily quality control activities and resulting actions. As such, they shall stress as major components of the report, the following:

(a) Phase(s) of construction underway during the time frame of the report. (i.e. earthwork, concrete work, structural steel erection, etc.)

(b) Phase (preparatory, initial, or follow-up), and locations of inspections and/or check tests that were made.

(c) Results of inspection, including nature of deficiencies observed and corrective actions taken or to be taken. If no inspections are listed on the report, it must be assumed that no inspections were made and that CQC is not being implemented.

(d) Report of tests performed, including those specified, with the results of the tests, including failures and remedial action to be taken. Test results, including all computations should be attached to the report form. Where test results cannot be completed by the time the report is submitted, a notation

should be made that the test was performed and the approximate date test results will be available. Delayed test results should be submitted with the report form on the date received.

(e) Monitoring of materials and equipment upon arrival at the jobsite and prior to incorporation into the work for compliance with submittal approvals, damage and proper storage.

(f) Offsite surveillance activities.

(g) Job Safety.

13.3 The report must contain a record of inspections and tests for all work accomplished subsequent to the previous report. Separate reports in different phases of the work may be submitted by the responsible CQC inspectors or they may be combined into one consolidated report if all CQC activities and results are covered and the responsible CQC inspectors are indentified.

13.4 In all cases, the report or reports must be verified and signed by the one person delegated this responsibility by the Contractor. The verification should contain the statement that all supplies and materials incorporated in the work are in compliance with the terms of the contract except as noted.

* * * * *

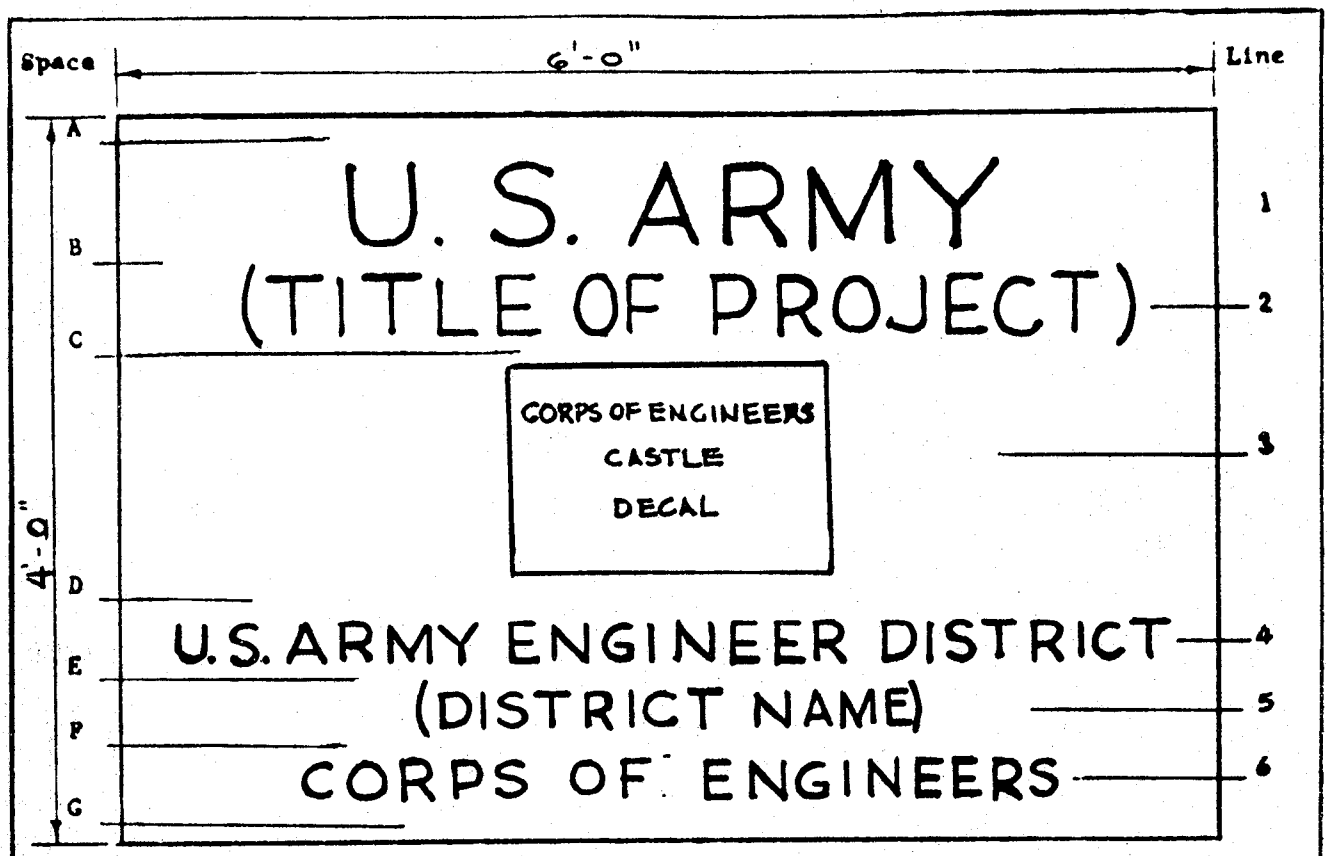

S C H E D U L E

Space	Height	Line	Description	Letter Height	Stroke
A	3"				
		1	U. S. ARMY	5 1/2"	7/8"
B	2"				
		2	PROJECT NOMENCLATURE	4"	5/8"
C	2"				
		3	CORPS OF ENGINEERS CASTLE (DECAL)	14"	--
D	3"				
		4	U. S. ARMY ENGINEER DISTRICT	2 3/4"	3/8"
E	2"				
		5	DISTRICT NAME	2 1/4"	1/4"
F	2"				
		6	CORPS OF ENGINEERS	2 1/2"	3/8"
G	3"				

Lettering Color -- Black

PROJECT SIGN
(Army-Civil Works)

Figure 1
14 August 1972

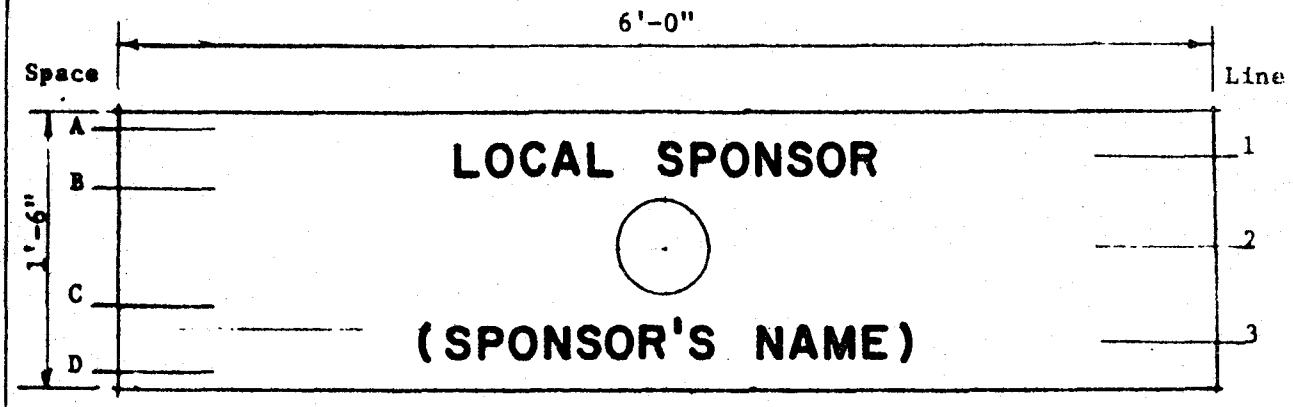

Space	Height	Line	Description	Letter Height	Stroke
A	2"				
		1	LOCAL SPONSOR	2"	3/8"
B	2" Min.				
		2	SPONSOR'S EMBLEM (DECAL)		
C	2" Min.				
		3	SPONSOR'S NAME	2"	3/8"
D	2"				

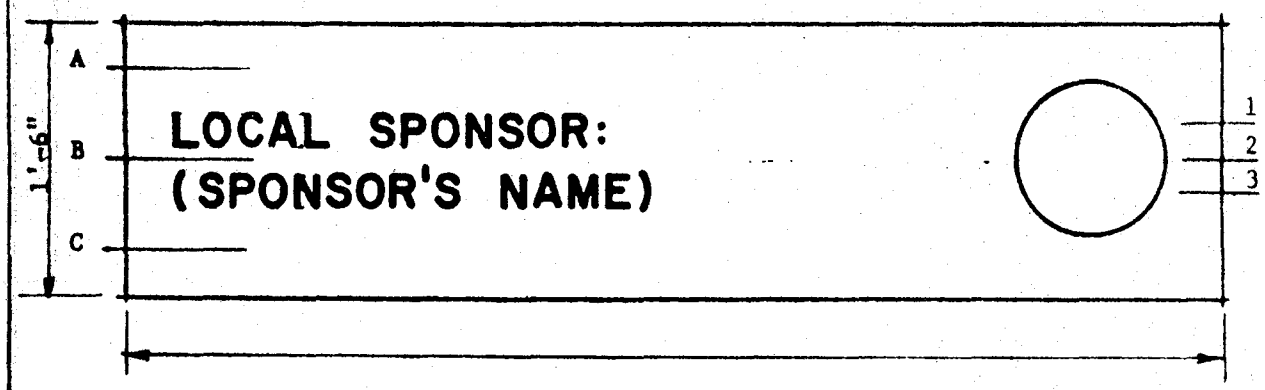

Space	Height	Line	Description	Letter Height	Stroke
A	6"				
		1	LOCAL SPONSOR	2"	3/8"
B	2"				
		2	SPONSOR'S EMBLEM (DECAL)		
C	6"				
		3	SPONSOR'S NAME	2"	3/8"

Lettering Color -- Black

Figure 1A
21 February 1975

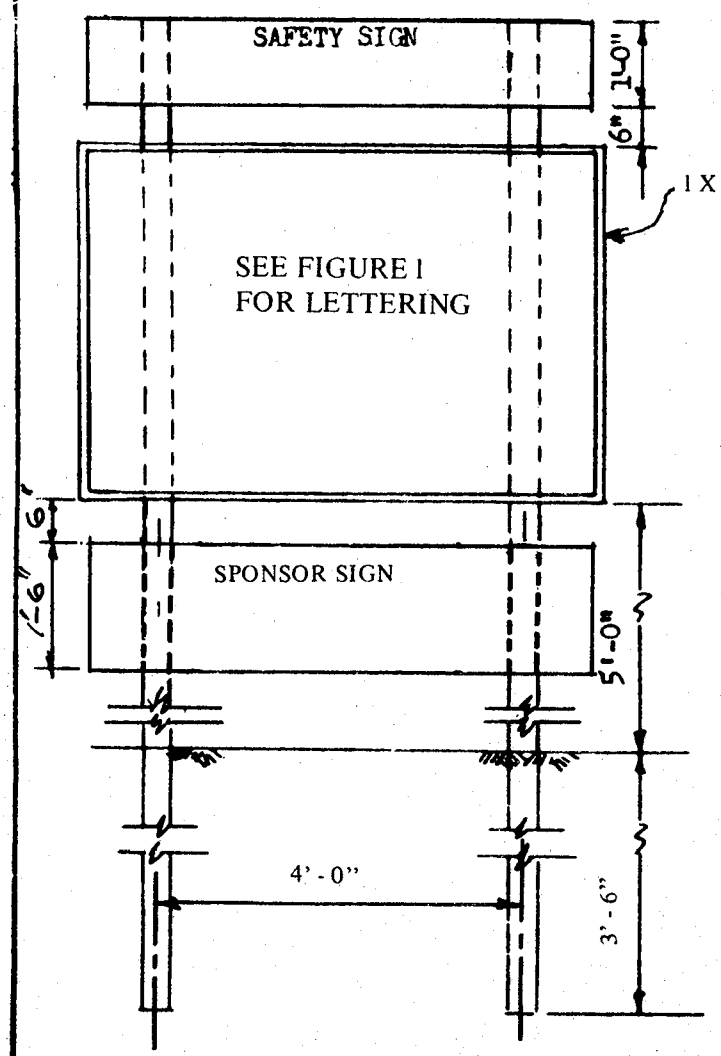

ELEVATION

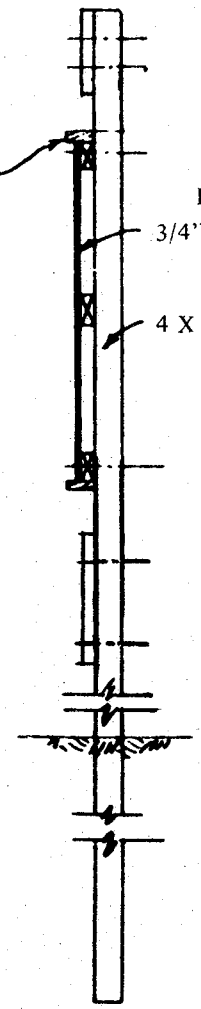

SECTION

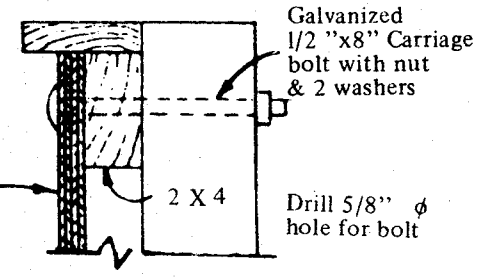

DETAIL

General Notes

1 - Lumber to be cut & formed accurately.

2 - Secure 1 X 4 and plywood with 6d finish nails at not less than 12" O.C.

3 - All exposed nails to be set & holes filled with putty.

4 - Sign to be set in good solid ground & backfill carefully tamped into place.

5 - Where necessary, posts shall be braced to provide a solid installation.

SIGN DETAILS

Figure 2
25 February 1975

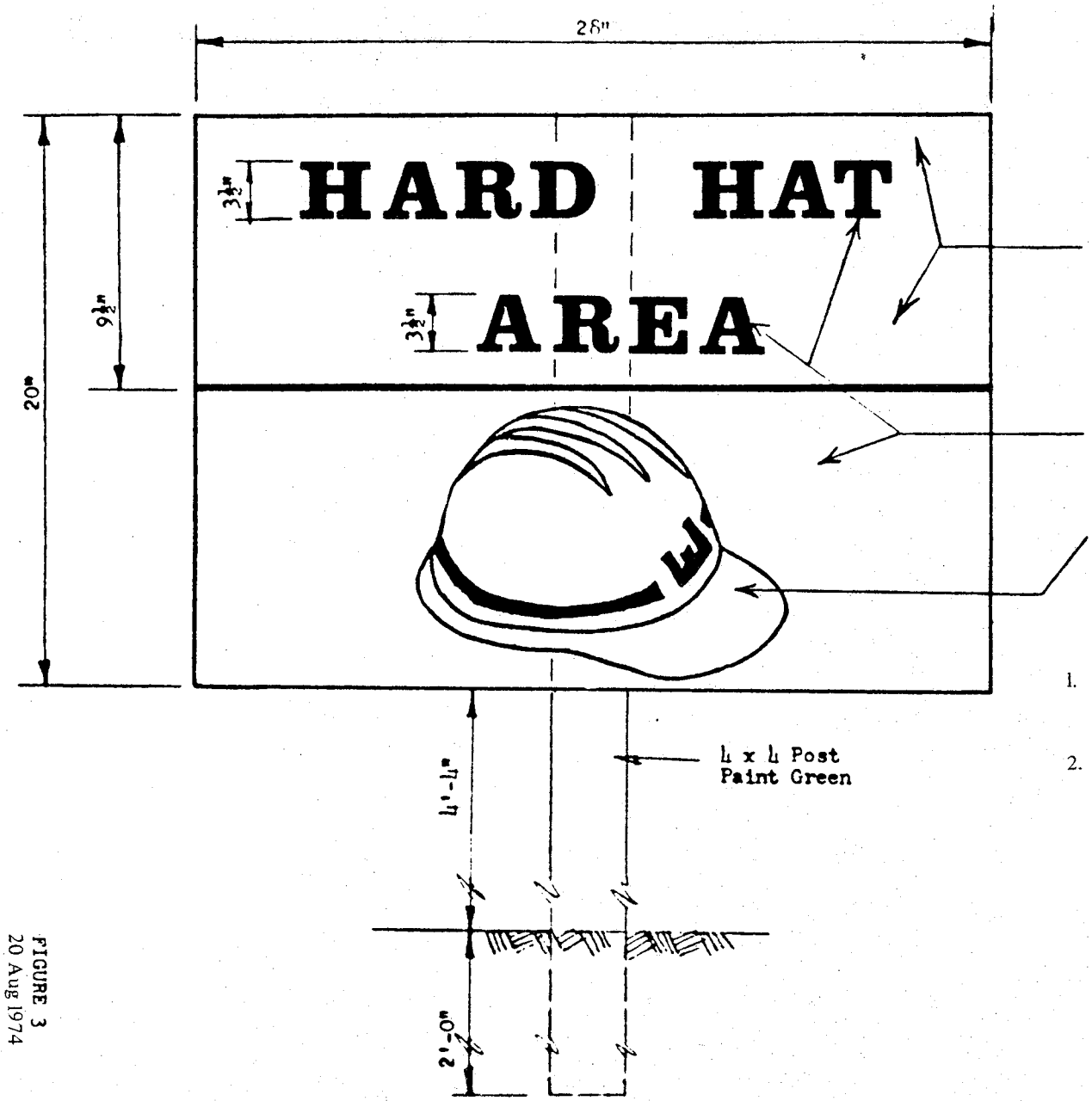

WHITE

PAINT BACK OF SIGN WHITE

GREEN

HARD HAT DECAL FURNISHED BY GOVERNMENT

General Notes

1. Green & White Paint shall be opaque glossy as specified in ANSI Standard Z53.1
2. Bolt Sign to Post w/2½" dia. Carriage Bolts.

FIGURE 3
20 Aug 1974

SECTION 1B

MEASUREMENT AND PAYMENT

Index

1. Clearing Site and Removing Obstructions
2. Excavation
3. Fills
4. Concrete
5. Portland Cement
6. Steel Reinforcement
7. Welded Wire Fabric
8. Stone
9. Filter Material
10. Fencing
11. Street Removal and Replacement
12. Inlet, Outlet and Junction Structures
13. Reinforced Concrete Box
14. Drop Inlets and Transition Structures
15. Concrete Pipe
16. Earthwork
17. Manholes
18. Landscaping
19. Native Seeding
20. Replace Irrigation System
21. Sewer Relocation
22. Waterline Relocation
23. Aggregate Base
24. Asphalt Concrete
25. Side Drains

1. CLEARING SITE AND REMOVING OBSTRUCTIONS.

1.1 General. Payment shall include all costs for clearing, removal, replacement, and restoration work (except work by others) including all existing obstructions within the channel rights-of-way, fill sites, and the obstructions indicated for removal outside of the rights-of-way and inside the construction easements. Except as otherwise specified, payment for clearing and removal work includes applicable earthwork; filling holes, removing and plugging abandoned lines; removal of existing structures; removal of materials for salvage; protection, replacement or restoration of utilities, fences, walls, and features indicated and the disposal of all materials.

1.2 Payment for Clearing Site and Removing Obstructions will be made at the applicable contract price, which payment shall constitute full compensation for clearing site and removing obstructions and protection, replacement and restoration work complete.

2. EXCAVATION.

2.1 Measurement.

2.1.1 Excavation. A survey of the site shall be made prior to commencement of work, and all measurements will be based on this survey without regard to any changes in the site that may be made between the excavation lines and grades indicated on the drawings or staked in the field and the ground surfaces as indicated by the above mentioned surveys. The actual slopes as excavated may be greater or less than those indicated or staked depending on the materials excavated and methods used in performing the work, but such alterations shall not change the measurement for payment from the original lines as specified herein. The quantity of directed excavation necessary for the removal of unsuitable foundation material as specified shall be included in the measurement of the excavation where the unsuitable soils are encountered. Quantities will be computed in cubic yards by the average end area method and the planimeter will be considered a precise instrument for measurement of plotted cross sections. All excavation outside of excavation lines shown on the drawings or staked in the

field will be considered as being for the convenience of the Contractor. Measurement for payment will not include voids larger than 5 cubic feet in structures to be removed.

2.2 Payment.

2.2.1 Payment for Excavation, Channel will be made at the applicable contract price, which payment shall constitute full compensation for excavation and disposal of excavated materials, complete. This item includes the excavation for invert slab, walls, wall footings, and appurtenant work.

2.2.2 Unsuitable Soils. No separate payment will be made for the excavation and disposal of unsuitable soils. When such excavation is directed, payment therefore will be included in the applicable contract price for the items of work under which the unsuitable soils are encountered. When there is not applicable contract item an adjustment will be made.

2.2.3 Excavation for Structures. Except for structures specified hereinbefore no separate payment will be made for excavation for structures. All costs therefore shall be included in the applicable contract prices for the items to which the work applies.

2.2.4 Trenches. No separate payment will be made for excavation of utility and pipe trenches. All costs in connection therewith shall be included in the applicable contract prices for the items to which the work applies.

3. FILLS.

3.1 Measurement for payment for fills will be made between the excavation and structure lines and the fill limit lines, or between the ground lines and fill lines, as indicated or staked in the field. Quantities will be computed in cubic yards by the average end area method and the planimeter will be considered a precise instrument for measuring plotted cross sections.

3.2 Payment.

3.2.1 Payment for Compacted Fill, Channel will be made at the applicable contract price, which payment shall constitute full compensation for placing and compacting the fills, complete.

3.2.2 Fill for Structures. No separate payment will be made for fill or backfill about structures. All such costs shall be included in the applicable contract prices for the items to which the work applies.

3.2.3 Trenches. No separate payment will be made for backfilling for utility and pipelines. All costs in connection therewith shall be included in the contract price for the items to which the work applies.

3.2.4 Subgrade Preparation. No separate payment will be made for subgrade preparation and all costs in connection therewith shall be included in the contract prices for the items to which the work applies.

3.2.5 Backfill for directed overcut will be measured and paid for at the applicable contract price for the type of fill placed therein. When there is no applicable contract item, and adjustment in the contract price will be made.

4. CONCRETE.

4.1 Measurement of Concrete will be made on the basis of the actual volume of concrete within the pay lines of the invert, walls and wall footings, box conduit, and appurtenant work as indicated. Measurement of concrete placed against the sides of any excavation without the use of intervening forms will be made only within the pay lines of the structure. No deductions will be made for rounded or beveled edges or space occupied by metal work, electrical conduits or timber nor for voids or embedded items which are either less than 5 cubic feet in volume or one square foot in cross section. Concrete wasted or used for the convenience of the Contractor will not be included in the measurement.

4.2 Payment for Concrete will be made at the applicable contract prices, for the various items of the schedule, which payments shall constitute full compensation for labor, materials (except cement and reinforcement for which separate payment is provided), and for all equipment and tools required to complete the concrete work. Embedded items shall be included in the cost of the concrete except when other payment is specifically provided. No payment will be made for concrete, as such, which is placed in structures for which payment is made on a lump sum basis.

4.2.1 Payment for Concrete, Channel Invert, Channel Footings, Channel Wall Channel Lining and Trapezoidal Channel will be made at the applicable contract price, which payment shall constitute full compensation for all concrete placed in the Invert, wall footings, walls, and trapezoidal channel, including pipe stubs, complete. Payment will not include concrete of lump sum items for which separate payments are provided.

5. PORTLAND CEMENT.

5.1 Measurement. The quantity of Portland cement to be paid for will be the number of hundred-weight (100 pounds) of cement used in the concrete structures paid for on a cubic yard basis unless specifically excepted, wasted or used for the convenience of the Contractor. The quantity to be paid for will be determined by multiplying the approved batch weight of the cement by the number of batches of concrete of the types placed within the pay lines of the structures and dividing by 100.

5.2 Payment for Portland Cement will be made at the applicable contract price, which payment shall constitute full compensation for furnishing the Portland cement complete, ready for use in the work. No payment will be made for Portland cement as such, which is used in concrete in structures for which payment is made on a lump sum basis.

6. STEEL REINFORCEMENT.

6.1 Measurement of reinforcement in concrete structures paid on a cubic yard basis (except for welded wire fabric for which separate payment is provided) will be made of the lengths of bars actually placed in the completed work in accordance with the drawings, approved bar schedules, or as directed. The measured lengths will be converted to weights for the bar numbers listed by the use of the unit weights per linear foot contained in ASTM A 615. Steel in laps indicated on the drawings or required by the Contracting Officer will be measured. Longitudinal steel for channel invert and side slopes will be measured on the basis of the use of 60 foot bar lengths. No measurement will be made for the additional steel in laps which are authorized for the convenience of the Contractor. No measurement

will be made of steel supports and spacers. All costs for furnishing and installing supports and spacers shall be included in the various items with the reinforcement.

6.2 Payment for Steel Reinforcement will be made at the applicable contract price, which payment shall constitute full compensation for furnishing and placing the reinforcement, complete.

7. WELDED WIRE FABRIC.

7.1 Measurement of welded wire fabric in concrete structures paid on a cubic yard basis will be made for the square feet of fabric actually placed in the completed work in accordance with the drawings, approved bar schedules, or as directed. No measurement will be made for the additional fabric in laps which are authorized for the convenience of the Contractor.

7.2 Payment for Welded Wire Fabric will be made at the applicable contract price, which payment shall constitute full compensation for furnishing and placing the welded wire fabric, complete.

8. STONE.

8.1 Measurement. The quantity of stone to be paid for will be the number of ton determined by scale weights acceptably placed within the lines and grades indicated on the drawings or directed by the Contracting Officer.

8.2 Payment for Stone, Type II will be made at the applicable contract price, which payment shall constitute full compensation for the stone complete in place, except for stone which is placed in structures paid for on a lump sum basis, for which separate payment is provided.

9. FILTER MATERIAL.

9.1 Measurement. The quantity of filter material to be paid for will be the number of tons, determined by scale weights, of filter material acceptably placed within the lines and grades indicated or directed.

9.2 Payment for Filter Material will be made at the applicable contract price, which payment shall constitute full compensation for obtaining and placing the filter material, complete in place.

10. FENCING.

10.1 Measurement of Fencing will be made to the nearest linear foot horizontally along the centerline from end-to-end of the fence in place. Temporary fencing or fencing on other lump sum items will not be included in the measurement.

10.2 Payment for Fencing will be made at the applicable contract price, which payment shall constitute full compensation for the fencing, complete in place.

11. STREET REMOVAL AND REPLACEMENT. Payment for Street Removal and Replacement will be made at the applicable contract price, for which payment shall constitute full compensation for street removal and replacement complete, including removal, transportating, disposal and placement of asphalt concrete, aggregate base, concrete sidewalks, curbs and gutters, and traffic control, tack coat, prime coat and seal coat.

12. INLET, OUTLET AND JUNCTION STRUCTURES. Payment for Inlet, Outlet and Junction Structure will be made at the appliable contract price, which payment shall constitute full compensation for the inlet, outlet or junction structure complete, including excavation and backfill, concrete, cement, reinforcement, pipe, fencing, and miscellaneous metalwork. Payment will also include stone, grouted stone, and soft bottom ditch where indicated.

13. REINFORCED CONCRETE BOX. Payment for Reinforced Concrete Box at various locations will be made at the applicable contract price, which payment shall constitute full compensation for the reinforced concrete box in place, including excavation, backfill, concrete, cement, reinforcement, pipe stub and bulkhead, canal lining, subgrade preparation and shoring complete.

14. DROP INLETS AND TRANSITION STRUCTURES. Payment for Drop Inlets and Transition Structures will be made at the applicable contract price, which payment shall constitute full compensation for the drop inlet and transition structure complete, including excavation, backfill, concrete, cement, reinforcement and miscellaneous metalwork. Payment for Drop Inlet shall also include fencing.

15. CONCRETE PIPE. Payment for Concrete Pipe at various locations will be made at the applicable contract price, which payment shall constitute full compensation for concrete pipe in place, including excavation, backfill, sand fill, bedding material, bulkheads, 4-foot pipe stubs for connecting to side dains, and shoring.

16. EARTHWORK. Sta. 246+60 to Sta. 256+69. Payment for Earthwork at Sta. 246+60 to Sta. 256+69 will be made at the applicable contract price, which payment shall constitute full compensation for the earthwork complete, including excavation and placement of compacted fill indicated for the construction of the V-ditch, drainage ditch and cut-off levee.

17. MANHOLES. Payment for Manholes will be at the applicable contract price, which payment shall constitute full compensation for the manhole complete, including frame and cover, rungs and appurtenant work.

18. LANDSCAPING. Payment for Landscaping will be made at the applicable contract price, which payment shall constitute full compensation for planting of trees, shrubs and turf complete including maintenance period.

19. NATIVE SEEDING. Payment for Native Seeding will be made at the applicable contract price, which payment shall constitute full compensation for native seeding complete.

20. REPLACE IRRIGATION SYSTEM. Payment for Replace Irrigation System will be made at the applicable contract price, which payment shall constitute full compensation for replacement of the irrigation system complete.

21. SEWER RELOCATION. Payment for Sewer Relocation will be made at the applicable contract price, which payment shall constitute full compensation for relocating sewer complete, including trenching, backfill and road replacement.

22. WATERLINE RELOCATION. Payment for Waterline Relocation will be made at the applicable contract price, which payment shall constitute full compensation for relocating waterline complete, including trenching, backfill and pavement replacement, complete.

23. AGGREGATE BASE.

23.1 Measurement for Payment of Aggregate Base completed and accepted by the Contracting Officer will be the actual tons of aggregate base placed within the lines and grades indicated.

23.2 Payment for Aggregate Base and Surfacing will be made at the applicable contract price, which payment shall constitute full compensation for the construction of aggregate base, complete. Payment will include subgrade preparation.

24. ASPHALT CONCRETE.

24.1 Measurement. The unit of measurement for the asphalt concrete will be the actual tons of asphalt concrete acceptably placed in the work. Asphalt concrete used for convenience of the Contractor will not be measured for payment.

24.2 Payment for Asphalt Concrete will be made at the applicable contract price, which payment shall constitute full compensation for asphalt concrete complete in place, including weed killer where required, prime coat, tack coat, subgrade preparation and appurtenant work. Payment will not include asphalt concrete for lump sum items, for which separate payments are provided.

25. SIDE DRAINS.

25.1 Payment for Side Drains will be made at the applicable contract price which payment shall constitute full compensation for concrete pipe, in place, including excavation, backfill, sandfill, bedding material, connections to existing facilities, and shoring.

* * * * *

SECTION 1C

ENVIRONMENT PROTECTION

Index

1. Scope
2. Reference
3. General
4. Notification
5. Subcontractors
6. Implementation
7. Protection of Land Resources
8. Recording and Preserving Historical and Archaeological Finds
9. Protection of Water Resources
10. Protection of Fish and Wildlife
11. Disposal of Cleared and Grubbed Material and Other Debris
12. Dust Control
13. Maintenance of Pollution Control Facilities During Construction

1. SCOPE. This section covers the furnishing of all labor, materials and equipment and performing all work required for the protection of the environment during construction operations except for those measures set forth in other Technical Provisions of these specifications.

2. REFERENCE. "Standard Methods for the Examination of Water, Sewage, and Industrial Wastes," Thirteenth Edition, 1971, published by American Public Health Association, 1015 Eighteenth Street, N.W., Washington, D.C. 20036.

3. GENERAL. For the purpose of this specification, environment protection is defined as the retention of the environment in its natural state to the greatest possible extent during project construction and to enhance the natural appearance in its final condition. Environment protection requires consideration of air, water, and land, and involves noise, solid waste-management of radiant energy and radioactive materials, as well as other pollutants. In order to prevent, and to provide for abatement and control of, any environmental pollution arising from the construction activities in the performance of this contract, the Contractor and his subcontractors shall comply with all applicable Federal, State, and local laws and regulations concerning environmental pollution control and abatement.

4. NOTIFICATION. The Contracting Officer will notify the Contractor in writing of any noncompliance with the aforementioned Federal, State, or local laws or regulations. Such notice, when delivered to the Contractor or his authorized representative at the site of the work, shall be deemed sufficient for the purpose. The Contractor shall, after receipt of such notice, immediately inform the Contracting Officer of proposed corrective action and take such action as may be approved. If the Contractor fails or refuses to comply promptly, the Contracting Officer may issue an order stopping all or part of the work until satisfactory corrective action has been taken. No part of the time lost due to any such stop orders shall be made the subject of a claim for extension of time or for excess costs or damages by the Contractor.

5. SUBCONTRACTORS. Compliance with the provisions of this section by subcontractors will be the responsibility of the Contractor.

6. IMPLEMENTATION. Prior to commencement of the work the Contractor will:

(1) submit in writing his proposals for implementing this section for environment protection;

(2) meet with representatives of the Contracting Officer to develop mutual understandings relative to compliance with this provision and administration of the environment protection program.

Approval of the Contractor's plan for environment protection will not relieve the Contractor of his responsibility for adequate and continuing control of pollutants.

7. PROTECTION OF LAND RESOURCES.

7.1 General. The land resources within the project boundaries and outside the limits of permanent work performed under this contract shall be preserved in their present condition or be restored to a condition after completion of construction that will appear to be natural and not detract from the appearance of the project. The Contractor shall confine his construction activities to areas defined by the plans or specifications. The following additional requirements are intended to supplement the requirements of General Provisions 46, 47, and 50.

7.2 Prevention of Landscape Defacement. Except in areas indicated on the plans or specified to be cleared, the Contractor shall not deface, injure, or destroy trees or shrubs, nor remove or cut them without the authority of the Contracting Officer. Ropes, cables, or guys shall not be fastened to or attached to any existing nearby trees for anchorages unless specifically authorized. Where such special emergency use is permitted, it shall be performed in such a manner as to avoid damage to the trees. The Contractor shall in any event be responsible for any damage resulting from such use. Where the possibility exists that trees may be defaced, bruised, injured, or otherwise damaged by the Contractor's equipment or operations, the Contractor shall adequately protect such trees. Stone, earth or other material that is displaced into uncleared areas shall be removed. Monuments and markers shall be protected before construction operations commence. A preconstruction survey including photographs shall be accomplished by the Contractor and a report of survey furnished when required by the Contracting Officer.

7.3 Restoration of Landscape Damage. Any trees or other landscape features scarred or damaged by the Contractor's equipment or operations shall be restored to a condition satisfactory to the Contracting Officer. Restoration of scarred and damaged trees shall be performed in an approved manner by experienced workmen. Trees damaged beyond restoration shall be removed and disposed of under requirements for clearing and grubbing. Trees that are to be removed because of damage shall be replaced at the Contractor's expense by nursery-grown trees of the same species or a species approved by the Contracting Officer. The size and quality of nursery-grown trees shall also be approved by the Contracting Officer.

7.4 Location of Storage Facilities. Contractor's storage, and other construction buildings, located on Government property, which is required in the performance of the work, shall be located upon cleared portions of the jobsite or areas to be cleared, and shall require written approval of the Contracting Officer. The preservation of the landscape shall be an imperative consideration in the selection of all sites and in the construction of buildings. Plans showing storage facilities shall be submitted for approval of the Contracting Officer. Where buildings or platforms are constructed on sidehills, the Contracting Officer may require cribbing to be used to obtain level foundations. Benching or leveling of earth may be permitted, depending on the location of the proposed facility.

7.5 Temporary Excavation and Embankments. If the Contractor proposes to construct temporary roads or embankments and excavations for plant and/or work

areas, he shall submit the following for approval prior to scheduled start of such temporary work.

7.5.1 A layout of all temporary roads, excavations and embankments to be constructed within the work area.

7.5.2 A landscaping plan showing the proposed restoration of the area. The plan shall provide for the obliteration of construction scars as such and shall provide for a reasonably natural appearing final condition of the area. No unauthorized road construction, excavation or embankment construction (including borrow and disposal areas) will be permitted.

7.6 Post-Construction Cleanup or Obliteration. The Contractor shall obliterate all signs of temporary construction facilities such as haul roads, work areas, structures, foundations of temporary structures or stockpiles of excess or waste materials, as directed by the Contracting Officer. The area will be restored to near natural conditions which will permit the growth of vegetation thereon. Except in specific cases, restoration to original contours will not be required, however, all restored areas shall be smoothly and evenly dressed and sloped to drain.

8. RECORDING AND PRESERVING HISTORICAL AND ARCHAEOLOGICAL FINDS. All items having any apparent historical or archaeological interest which are discovered in the course of any construction activities shall be carefully preserved. The Contractor shall leave the archaeological find undisturbed and shall immediately report the find to the Contracting Officer so that the proper authorities may be notified.

9. PROTECTION OF WATER RESOURCES.

9.1 General. The Contractor shall not pollute streams, lakes, or reservoirs with fuels, oils, bitumens, calcium chloride, acids, insecticides, herbicides or other harmful materials. The Contractor shall investigate and comply with all applicable Federal, State, County, and Municipal laws concerning pollution of rivers and streams.

9.2 Erosion Control. Prior to any major construction the Contractor shall submit a plan for approval of the Contracting Officer showing his scheme for controlling erosion and disposing of wastes.

9.2.1 Surface drainage from cuts and fills within the construction limits, whether or not completed, and from borrow and waste disposal areas, shall, if turbidity producing materials are present, be held in suitable sedimentation ponds or shall be graded to control erosion within the acceptable limits. Temporary erosion and sediment control measures such as berms, dikes, drains, immediate seeding of cut and fill slopes, or sedimentation basins, if required to meet the above standards, shall be provided and maintained until permanent drainage and erosion control facilities are completed and operative. The area of bare soil exposed at any one time by construction operations should be held to a minimum. Stream crossings by fording with equipment shall be limited to control turbidity. Any temporary culverts or bridge structures shall be removed upon completion of the project. Fills and waste areas shall be constructed by selective placement to eliminate silts or clays on the surface that will erode and contaminate adjacent streams.

9.3 Spillages. Special measures shall be taken to prevent chemicals, fuels, oils, greases, bituminous materials, waste washings, herbicides and insecticides, and concrete drainage from entering public waters.

9.4 Washing and Curing Water. Water used in embankment material processing, aggregate processing, concrete curing, foundation and concrete lift cleanup, and other waste waters shall not be allowed to reenter the water course if a significant increase in the turbidity of the water course will result therefrom. The Contractor shall remove from within the cofferdam all wash, curing and waste waters derived from sources either within or outside the cofferdam.

9.5 Disposal. Disposal of any materials, wastes, effluents, trash, garbage, oil, grease, chemicals, etc., in areas adjacent to streams shall not be permitted. If any waste material is dumped in unauthorized areas the Contractor shall remove the material and restore the area to the original condition before being disturbed. If necessary, contaminated ground shall be excavated, disposed of as directed by the Contracting Officer, and replaced with suitable fill material, compacted and finished with topsoil and planted as required to reestablish vegetation.

10. PROTECTION OF FISH AND WILDLIFE. The Contractor shall at all times perform all work and take such steps required to minimize interference with or disturbance to fish and wildlife. The Contractor will not be permitted to alter water flows or otherwise disturb native habitat adjacent to the project area which, in the opinion of the Contracting Officer, are critical to fish or wildlife.

11. DISPOSAL OF CLEARED AND GRUBBED MATERIAL AND OTHER DEBRIS.

11.1 General. Except as specified herein, all debris resulting from construction operations on this contract shall be disposed of in accordance with the requirements of the section: EXCAVATION.

11.2 Burning will not be permitted.

12. DUST CONTROL. The Contractor will be required to maintain all excavations, embankments, stock piles, haul roads, permanent access roads, plant sites, waste areas, borrow areas, and all other work areas within or without the project boundaries free from dust which would cause a hazard or nuisance to others. Approved temporary methods of stabilization consisting of sprinkling, chemical treatment, light bituminous treatment or similar methods will be permitted to control dust. Sprinkling, to be approved, must be repeated at such intervals as to keep all parts of the disturbed area at least damp at all times, and the Contractor must have sufficient competent equipment on the job to accomplish this if sprinkling is used. Dust control shall be performed as the work proceeds and whenever a dust nuisance or hazard occurs. No separate or direct payment will be made for dust control and the cost thereof shall be considered incidental to and included in the contract prices for excavation and embankments.

13. MAINTENANCE OF POLLUTION CONTROL FACILITIES DURING CONSTRUCTION. During the life of this contract, the Contractor shall maintain all facilities constructed for pollution control under this contract as long as the operations creating the particular pollutant are being carried out or until the material concerned has become stabilized to the extent that pollution is no longer being created. During the construction period the Contractor should conduct frequent training periods on environment protection. The curricula should include methods of detecting and avoiding pollution; familiarity with pollution standards; both statutory and contractual; and installation and care of vegetative covers, plants and other facilities to prevent and correct environmental pollution.

* * * * *

SECTION 2A

DIVERSION AND CONTROL OF WATER

1. REQUIREMENT.

1.1 General. All permanent construction shall be carried on in areas free from water. At intermittent periods during the time allowed for completion of construction, water in varying quantities may be flowing in the work area. Runoff from the watersheds is rapid and during periods of rain, intermittent freshets may be expected. In addition, flows up to 5,000 cfs may be diverted from Arizona Canal into Indian Bend Wash. Releases may be made as a result of storm runoff or as required because of operating conditions for the canal. The Salt River Project, operators of the canal, will make every reasonable effort to notify the Contractor when it has been determined that a release from the canal is necessary, however, releases may occur with no advance warning. The responsibility of the Contractor for protection of work against waterflows is specified in paragraph: DAMAGE TO WORK of the SPECIAL PROVISIONS. At all locations where construction work is at a lower elevation than the elevation of the stream or ground water at the time of doing the work, suitable cofferdams or dikes, if necessary, shall be constructed, the construction area shall be dewatered prior to commencement of the work, and all subgrades, whether for earth fill, filter, stone, or concrete, shall be kept drained and free of water throughout the working period. Within 10 days after award of contract, the Contractor shall submit plans showing the methods he proposes to use to dewater each working area and control the water from rain, sheet flow and other surface water. The plans shall show the scheme of operations and a complete layout of drainage pipes, pumps, diversion channels, cofferdams, etc. The plans shall also take into consideration the following specific requirements. The Contractor shall provide for diversion of flows as hereinafter specified. The flows will include water originating upstream of the work, water from the Arizona Canal, water from side drains and channels adjacent to the work site and will be in addition to any and all ground water originating within the work area. Surface flows in excess of the following quantities will be regarded as floodflows.

1.1.1 Indian Bend Wash.

1.1.1.1 Runoff Quantities During Periods 1 April to 30 June and 1 October to 1 November - a streamflow of 400 cfs.

1.1.1.2 Runoff Quantities During Other Periods - a streamflow of 2,000 cfs.

1.1.2 Collector Channels and Side Channels.

1.1.2.1 Runoff from the watersheds contributary to the collector channels and side channels can be rapid and during periods of rain ponding can be expected along the west side of the canal bank. The Contractor shall provide for a means of protecting each working area from runoff and ponding. Runoff from rainfall in excess of one inch within the drainage basin during a 12-hour period will be regarded as floodflows.

1.2 The schedule for construction operations shall be in accordance with the requirements specified in the SPECIAL PROVISIONS.

* * * * *

SECTION 2AA

CLEARING SITE AND REMOVING OBSTRUCTIONS

Index

1. Requirement
2. Disposal of Cleared and Grubbed Material
3. Protection and Support of Utilities
4. Disposal Areas

1. REQUIREMENTS

1.1 General. Except as otherwise specified, and/or indicated areas to be cleared and grubbed will be limited to actual excavation area or areas on which fills and/or structures are to be placed. The removal of trees, shrubs, turf, and other vegetation outside of these areas shall be held to a minimu and care shall be exercised not to damage any trees, shrubs, turf, or vegetation which can be left in place.

1.2 Existing Structures and Obstructions. The Contractor shall clear the site, include all fill and excavation areas, and remove and dispose of all existing structures and obstructions for channel construction, except as otherwise noted on the drawings. Obstruction which are designated or specified to be removed by others shall not be removed by the Contractor. Except as otherwise specified, obstructions designated to be removed by others will be removed in sufficient time to preclude interference with the Contractor's operation. Utility relocations are not considered obstructions. Except as otherwise specified, incombustible waste material, such as broken concrete, pavement, and other like materials shall be considered scrap and shall not be used in fills.

1.3 Clearing. Trees less than 1-1/2 inches in diameter and other vegetation, except as specified, shall be cut off 6 inches below the indicated subgrade or ground level whichever is lower. Other vegetation shall be cut off flush or slightly below the original ground surface. Clearing operations shall be conducted so as to prevent damage to trees, structures, and installations under construction, or to remain in place, and to provide for the safety of employees and others. All rubbish, waste dumps, and debris areas shall be cleared with the channel right of way and work areas.

1.4 Grubbing shall consist of removing all trees, stumps, roots, logs, and other objectionable vegetable matter in the required fills, foundation areas, and all excavation areas. In grubbing out stumps and roots, all roots or other timber more than 1-1/2 inches in diameter shall be removed to 3 feet below the depth of the required excavation or existing ground level, whichever is lower. Trees and stumps shall be pulled, not cut off.

1.5. Obstructions to channel construction, except as indicated shall be removed within limits of excavation for new channel construction.

1.6. Filling of Holes. Holes made by removal of obstructions and grubbing operations shall be refilled to subgrade with compacted fill material as specified in the section: FILLS AND SUBGRADE PREPARATION.

1.7 Utilities. Prior to removing an obstruction, all applicable utility relocation shall have been relocated.

1.8 Concrete in existing construction, which will join new concrete or new construction, shall be saw cut to a depth of 2 inches and the concrete shal be removed in a manner to provide plane surfaces to which new concrete shall be bonded, unless otherwise specified.

1.9 The removal of materials for salvage, replacement or restoration shall be performed in a manner to avoid damage to such materials and to portions of the existing work to remain in place. The Contractor has the option of furnishing new fastenings and fittings in the lieu of salvaging, replacing or restoring such material. Such new materials shall be the equivalent of existing materials.

1.10 Existing Structures including sidewalks, curbs and gutters within the rights-of-way which are to remain shall be protected and supported as necessary during removal and construction operations. Any damage to existing facilities shall be repaired in accordance with applicable General Provision clauses.

2. DISPOSAL OF CLEARED AND GRUBBED MATERIAL. All material removed, except material specified and/or indicated to be salvaged, is designated as scrap, shall become the property of the Contractor, and shall be removed from the site. Disposal shall comply with all applicable Federal, State, and local laws.

3. PROTECTION AND SUPPORT OF UTILITIES.

3.1 General. The Contractor shall adequately support and protect from damage all existing utilities which are located within, or below, or close to the construction area and which are to remain in place.

4. DISPOSAL AREAS.

4.1 General. Disposal Area and Salt River Landfill Disposal Site may be used at the option of the Contractor for disposal of materials as specified hereinafter.

4.2 Disposal Area. Material placed in disposal shall be excess excavated material including broken concrete. Material may be placed in uniform layers not exceeding 5 feet in depth within limits as indicated. Compaction other than that obtained by controlled movement of the construction equipment will not be required.

4.3 SALT RIVER LANDFILL DISPOSAL SITE. Salt River Landfill Disposal Site is located approximately 6 1/2 miles from the project site near the intersection of McDowell Road and Phoenix-Payson Beeline Highway next to Salt River. Material shall consist of any unsuitable material pavement, or any organic and inorganic trash. The size or shape of the material to be disposed shall be such that no special handling is required. The operator will provide the Contractor, without charge, a weigh ticket for each acceptable load. Weigh tickets shall be presented by the Contractor to the Contracting Officer at the end of each days work. The person to contact is Mr. Lamar Thomas, Salt River Landfill Project, Route 1 - Box 216, Scottsdale, Arizona, Telephone (602) 947-6052; Mr. Wayne Hill, Scottsdale, Arizona, Telephone (602) 990-1982.

* * * * *

SECTION 2B

DETOURS AND TRAFFIC CONTROL FACILITIES

Index

1. Detours
2. Equipment Crossing
3. Traffic Control Facilities
4. Restrictions - Chapparal Road

1. DETOURS. Traffic on streets that are closed to thru traffic for construction shall be routed over existing streets. Only public streets shall be used in rerouting traffic. The Contractor shall submit for approval a plan for routing of traffic including traffic control facilities prior to start of construction. Street closures shall conform to the applicable requirements of the GENERAL REQUIREMENTS.

2. EQUIPMENT CROSSINGS. The Contractor shall not cross existing paved roadways with construction equipment except at approved marked crossings. Crossings shall be maintained in accordance with applicable state, county, and city regulations.

3. TRAFFIC CONTROL FACILITIES. As required by applicable state, city, and county traffic regulations, the Contractor shall furnish, install, maintain, and remove all temporary barricades, lights, warning and regulatory signs, flagmen, and other facilities necessary to control the traffic and protect pedestrians within the limits of the construction area. All signs to be used on the job during periods of darkness shall be reflectorized. Traffic control shall conform to the Part 400 of Uniform Standard Specifications for Public Works Construction, Maricopa Association of Governments, Arizona (MAG).

4. RESTRICTIONS - CHAPPARAL ROAD. The following restrictions shall be considered in the development of a detour and traffic control plan.

4.1 General.

4.1.1 No more than 200 feet of trench can be opened at any one time. All trenching must be backfilled and prepared in a condition that will allow vehicles to cross before an additional 200 feet of trench is opened except between 78th Street and Indian Bend Wash where the entire reach can be opened.

4.1.2 No work will be allowed before 7:00 A.M. or after 7:00 P.M. unless otherwise approved by the City of Scottsdale.

4.1.3 No utility relocation work that would obstruct the flow of traffic shall be done between the hours of 7:00 A.M. to 9:00 A.M. and 4:00 P.M. to 6:00 P.M. At other times a minimum of one lane of traffic shall be maintained.

4.1.4 Temporary no parking signs will be posted along both sides of Chapparal Road within the active work area.

4.2 Arizona Canal to Miller Road.

4.2.1 Two-way traffic shall be maintained on the south side of the trench.

4.2.2 Two-way traffic shall be maintained along Miller Road.

4.2.3 Only half of the Chapparal Road/Miller Road intersection can be trenched at one time.

4.3 Miller Road to 78th Street.

4.3.1 One-way traffic (westbound) shall be maintained north of the trench.

4.3.2 Eastbound traffic shall be detoured either north or south on Miller Road.

4.3.3 Vehicular access shall be provided for along the south side of the trench between 5:00 P.M. and 7:00 A.M. No Contractor equipment shall be permitted to be parked in this area during those hours.

4.3.4 One-way traffic shall be maintained along 78th Street.

4.3.5 Only half of the Chapparal Road/78th Street intersection shall be trenched at one time.

4.4 78th Street to Hayden Road.

4.4.1 Two-way traffic shall be maintained on north side of trench.

4.4.2 Placement of signs to allow left turns for eastbound traffic into Chapparal Plaza Shopping Center will be placed appropriate to conditions as construction progresses.

* * * * *

SECTION 2C

EXCAVATION

Index

1. General
2. Blasting
3. Preservation of Property
4. Excavation for Structures
5. Excavation for Pipes
6. Removal of Unsatisfactory Soils
7. Disposal of Excavated Materials
8. Overcut

1. GENERAL. Excavation shall consist of the removal of every type of material encountered except materials covered by the provisions of the section: CLEARING SITE AND REMOVING OBSTRUCTION in the designated areas or from areas directed. The material to be removed may include but is not limited to earth, hardpan, silt, clay, gravel, cemented sand and gravel, rock, adobe, detached pieces of stone and concrete, rock fills, existing fills of miscellaneous debris and rubbish, and other unsuitable materials. Slope lines indicated on the drawings for temporary cuts do not necessarily represent the actual slope to which the excavation must be made to safely perform the work. Excavation for permanent cuts shall be made to the slope lines indicated. Excavation shall be performed in a manner which will not impair the subgrade. Except as otherwise specified, the finish surface of subgrades shall be smooth and shall not vary more than 1/2 inch from indicated grade.

2. BLASTING. Blasting will not be permitted.

3. PRESERVATION OF PROPERTY. All excavation operations shall be conducted in such a manner that street pavements, sidewalks, curbs, utilities, or other facilities and improvements which are to remain in place permanently will not be subjected to settlement or horizontal movement. The Contractor shall furnish and install sheet piling, cribbing, bulkheads, shores, or whatever means may be necessary to adequately support material carrying such improvements or to support the improvements themselves and shall maintain such means in position until they are no longer needed. Temporary sheet piling, cribbing, bulkheads, shores or other protective means shall remain the property of the Contractor and when no longer needed shall be removed from the site. The Contractor shall submit for approval shop drawings showing proposed method of bracing which he intends to use. All shoring and bracing shall be designed so that it is effective to the bottom of the excavation, and shall be based upon calculation of pressures exerted by and the condition and nature of the materials to be retained, including surcharge imparted to the side of the trench by equipment and stored materials. Removal of shoring shall be performed in such manner as not to disturb or damage the finished concrete.

4. EXCAVATION FOR STRUCTURES. Excavation within the vicinity of existing structures, utilities, and drainage pipes to remain in place shall be performed in a manner to prevent damage to the structure. Earth banks and facilities to remain in place shall be supported as necessary during excavation. In general, unless otherwise shown or specified, the actual side slopes will be at the Contractor's option.

5. EXCAVATION FOR PIPES. All excavations shall be made by open cut unless otherwise specified. The banks of trenches shall be kept as nearly vertical as practicable. Unless otherwise indicated, trenches shall be not less than 36 inches wider than the outside diameter of the pipe to be laid therein, and

shall be excavated true to line, so that a clear space not less than 18 inches in width is provided on each side of the pipe. The maximum width of trench specified applies to the width at and below the level of the top of the pipe; the width of the trench above the level may be made as wide as necessary for sheathing and bracing; and the proper installation of the work providing sufficient lane widths for traffic movement is maintained. Temporary cut slopes shall not be steeper than 1V to 0.75H. The bottom of trenches shall be accurately graded to provide uniform bearing and support for each section of the pipe at every point along its entire length, except for portions of the pipe sections where it is necessary to excavate for the proper sealing of pipe joints. Except as otherwise indicated, the bottom of all trenches excavated shall be shaped and rounded to conform to the lowest one-fourth of the outside portion of circular pipe or to the lower curved portion of pipe arch for the entire length of the pipe or arch. If soft, spongy, unsuitable material, or material which by reason of its nature cannot be properly shaped or finished to a true pipe subgrade is encountered, it shall be removed and replaced with compacted fill.

6. REMOVAL OF UNSATISFACTORY SOILS. The removal of soils which are unsatifactory for foundations of the channel, structures, streets, and drains, may be required in certain areas. The Contractor will be required to excavate any such areas to the depth directed and backfill the areas with compacted fill conforming to the requirements of the Section: FILLS AND SUBGRADE PREPARATION.

7. DISPOSAL OF EXCAVATED MATERIALS. Excavated materials suitable for required fills shall be placed in temporary stock piles or used directly in the work. All excess materials shall become the property of the Contractor and removed from the site. Excavated material not suitable for fills and unsatifactory materials shall become the property of the Contractor and shall be removed from the site. No excavated materials or waste of any kind shall be disposed of at any place beyond the limits of the work under this contract without express authority. Prior to placing material, the stockpile areas shall be cleared of trash and vegetation. Vegetation shall be cut off at the existing ground line. Clearing shall conform to the applicable requirements of the Section: CLEARING SITE AND REMOVING OBSTRUCTIONS. The stockpiles and disposal fills shall be placed in manner to preclude ponding of water and shall not block traffic or access to private property. Contractor shall furnish notice of his intentions in connection with the use of indicated disposal areas in accordance with the requirements of the paragraph: PUBLIC UTILITIES, NOTICES, and RESTRICTIONS of the GENERAL REQUIREMENTS.

8. OVERCUT. Except as otherwise specified or as may be ordered in writing, any overcut or excavation made outside the lines indicated on the drawings or directed shall be backfilled with compacted fill or concrete, and all excavating, backfilling, compacting of backfill, an concreting occasioned thereby shall be by the Contractor at no additional cost to the Government. Any overcut under bridge footings shall be backfilled with concrete.

* * * * *

SECTION 2D

FILLS AND SUBGRADE PREPARATION

Index

1. Applicable Publications
2. Compaction Equipment
3. General Requirements for Compacted Fills
4. Compacted Fills
5. Bedding for Reinforced Concrete
6. Sand Fill
7. Backfills
8. Landscape Fill
9. Subgrade Preparation

1. APPLICABLE PUBLICATIONS. The publications listed below form a part of this specification to the extent referenced. The publications are referred to in the text by the basic designation only.

1.1 American Society for Testing and Materials (ASTM) Publications.

D 698-78	Moisture-Density Relations of Soils Using a 5.5-Lb. Rammer and a 12-In. Drop
D 1557-78	Moisture-Density Relations of Soils Using a 10-Lb. Rammer and an 18-In. Drop
D 1556-64 (R 1974)	Density of Soil In-Place by the Sand-Cone Method

1.2 American Association of State Highway and Transportation Officials (AASHTO) Standards.

T 99-74	Moisture-Density Relations of Soils 5.5-Lb. Rammer and a 12-In. Drop
T 180-74	Moisture-Density Relations of Soils Using a 10-Lb. Rammer and an 18-In. Drop
T 191-61 (1974)	Density of Soil In-Place by the Sand-Cone Method

2. COMPACTION EQUIPMENT.

2.1 General. All equipment, tools, and machines shall be maintained in satisfactory working condition at all times.

2.2 Tamping Rollers. Tamping rollers shall consist of two or more roller drums mounted side by side in a suitable frame. Rollers operated in tandem sets shall be towed in a manner such that the prints of the tamping feet produced by the tandem units do not overlap. Each drum of a roller shall have an outside diameter of not less than 5 feet and shall be not less than 5 feet nor more than 6 feet in length. The space between two adjacent drums, when on a level surface, shall be not less than 12 inches nor more than 15 inches. Each drum shall be free to pivot about an axis parallel to the direction of travel. Each drum ballasted with fluid shall be equipped with at least one pressure-relief value and with at least one safety

head. The safety head shall be equal to Union Type Safety Heads as manufactured by Black, Sivalls and Bryson, Inc., Kansas City, Missouri, with rupture discs suitable for between 50 and 75 pounds-per-square-inch rupturing pressure. The pressure-relief value is a manually operated valve and shall be opened periodically. Personnel responsible for opening pressure-relief valves shall be instructed to ascertain that valve openings are free from plugging to assure that any pressure developed in roller drums is released at each inspection. At least one tamping foot shall be provided for each 100 square inches of drum surface. The space measured on the surface of the drum, between the centers of any two adjacent tamping feet, shall be not less than 9 inches. The length of each tamping foot from the outside surface of the drum shall be not more than 11 inches and shall be maintained at not less than 9 inches. The cross-section area of each tamping foot shall be not more than 10 square inches at a plane normal to the axis of the shank 6 inches from the drum surface, and shall be maintained at not less than 7 square inches nor more than 10 square inches at a plane normal to the axis of the shank 8 inches from the drum surface. During the operation of rolling, the spaces between the tamping feet shall be maintained clear of materials which would impair the effectiveness of the tamping rollers. The weight of a roller when fully loaded shall be not less than 4,000 pounds per foot of length of drum. The weight of a roller empty shall be not more than 2,500 pounds per foot of length of drum. The loading used in the roller drums and operation of the rollers shall be as required to obtain the desired compaction. If more than one roller is used on any one layer of fill, all rollers so used shall be of the same type and essentially of the same dimensions. Rollers shall be drawn by crawler-type or rubber-tired tractors at a speed not to exceed 5.0 miles per hour. The use of rubber-tired tractors shall be discontinued if the tires leave ruts that prevent uniform compaction by the tamping roller. Tractors used for pulling rollers shall have sufficient power to pull the roller satisfactory when drums are fully loaded with sand and water. At the option of the Contractor, self-propelled tamping rollers conforming with the above requirements may be used in lieu of tractor-drawn tamping rollers. Self-propelled rollers exceeding the empty weight requirements may be used, provided that when the Contracting Officer determines self-propelled roller performance is unsatisfactory, the nominal foot pressure on the tamping feet of the self-propelled roller can be adjusted to approximate the nominal foot pressure of the specified towed rollers for the particular working condition required by the substitution of tamping feet having a face area not exceeding 14 square inches. If the self-propelled rollers cause shearing of the fill or laminations in the fill, the Contracting Officer may direct that the rollers be removed from the fill and that tractor-drawn tamping rollers conforming with these specifications be used. For self-propelled rollers, in which steering is accomplished through the use of rubber-tired wheels, the tire pressure shall not exceed 40 pounds per square inch. Self-propelled rollers shall be operated at a speed not to exceed 5.0 miles per hour. The design and operation of the tamping roller shall be subject to the approval of the Contracting Officer who shall have the right at any time during the prosecution of the work to direct such repairs to the tamping feet, minor alterations in the roller, and variations in the weight as may be found necessary to secure optimum compaction of the earth-fill materials.

2.3 Power Rollers shall be tandem or 3-wheel smooth-type, weighing not less than 10 tons. The wheel shall be equipped with adjustable scrapers.

2.4 Vibratory Rollers shall have a total static weight of not less than 10,000 pounds with at least 90 percent of the weight transmitted to the ground through a single smooth drum when the roller is standing in a level position hitched to the towing vehicle. The diameter of the drum shall be between 5 and 5.5 feet, and the width between 6 and 6.5 feet. The unsprung weight of the drum, shaft, and internal

mechanism shall not be less than 6,000 pounds. The frequency of vibration during operation shall be between 1,100 and 1,500 v.p.m., and the dynamic force shall be not less than 20,000 pounds at 1,400 v.p.m. The roller shall be towed at speeds not to exceed 1.5 miles per hour by a crawler tractor with a minimum drawbar rating of 50 horsepower. The Contractor shall submit to the Contracting Officer, from the equipment manufacturer, sufficient data, drawings and computations proving the conformance with the above requirements. The type and efficiency of this equipment will be subject to the approval of the Contracting Officer. Vibratory rollers used for compacting sand and gravel fill, including pervious fill and filter and transition drainage layers, shall conform with these requirements, with the exception that they may be self-propelled. Self-propelled vibratory rollers shall be operated at speeds not exceeding three miles per hour.

2.5 Mechanical Tampers. Compaction of Material, in areas where it is impracticable to use a roller, shall be performed by the use of approved mechanical tampers.

3. GENERAL REQUIREMENTS FOR COMPACTED FILLS.

3.1 Control. Moisture-density relations shall be established by the Contractor. Field density tests shall be performed by the Contractor in sufficient number and in such locations to insure that the specified density is being obtained. Moisture-density relations and field densities shall be reported on approved forms. One copy of density data less dry weight determinations shall be provided on the day each test is taken. The completed test reports shall be provided with the Contractor Quality Control Report on the work day following the test.

3.1.1 Laboratory Control. One moisture-density relation shall be made for each classification, blend or change in classification of soil materials encountered. Approval of moisture-density relations shall be obtained prior to the compacting of any material in the work. The moisture-density relations shall be determined in a laboratory in accordance with the following requirements.

3.1.1.1 Outside of Street, Road, and Highway Rights-of-Way. AASHTO Standard T 99, Method D or ASTM Specification D 698, Method D, modified as specified hereafter.

3.1.1.2 Within Street, Road, and Highway Rights-of-Way. AASHTO Standard T 180, Method D, or ASTM Specifications D 1557, Method D, modified as specified hereafter.

3.1.1.2.1 All material over 3/4 inch in size will be removed and replaced with an equal portion of material between 0.187 inch, No. 4 sieve, and 3/4 inch in size.

3.1.1.2.2 A separate batch of materials will be used for each compaction test specimen. No materials will be re-used.

3.1.1.2.3 The desired amount of mixing water will be added for each compaction test specimen, mixed well, and the mixture will be placed in a container with an airtight cover and allowed to cure for 24 hours. A shorter curing time may be allowed where tests show that shortening the curing time will not affect the results.

3.1.2 Field Control. Field in-place density shall be determined in accordance with AASHTO Standard T 191 or ASTM Specifications D 1556, except that in each test, the weight of the disturbed sample representing the full depth of layer

shall be not less than 10 pounds for fine grain material and 12 pounds for coarse grain material using a scale for weighing of sufficient capacity and sensitive to .01 pounds. The density tests shall be well distributed and shall average not less than one test for each 100 cubic yards of material. At least one test shall be made in each 2 feet of compacted material processed as a unit and at least one test shall be made in each area and each trench.

3.2 Settling of Fills or Backfills with Water will not be permitted, except as specified hereinafter for sand fill.

3.3 Material shall be obtained from the required excavations shall be free from sod, roots, brush, debris, trash or other objectionable material, and shall contain no stone whose greatest dimension is more than 3/4 of the layer thickness.

3.4 Placement. Fill material shall not be placed against concrete which has not been in place at least 14 days or until the concrete has attained a strength of 2,500 p.s.i. when tested in accordance with the Section: CONCRETE. Heavy equipment shall not be operated over pipes and buried structures until at least 2 feet of fill material has been placed and compacted over them in conformance with the requirements of the paragraph: BACKFILL, PIPE TRENCHES. Compacted fill and backfill shall be placed with suitable equipment in horizontal layers which after compaction, shall not exceed 12 inches in depth for rubber-tired or vibratory rollers, and 4 inches in depth when mechanical tampers are used. The Contractor may vary the layer thickness within these limits for most efficient operations. Material containing stones shall be placed in a manner to prevent the stones from striking the concrete structures and to prevent the formation of voids.

3.5 Moisture Content. Material shall have a uniform moisture content while being placed and compacted. Water shall be added at the source, if reuqired, or by sprinkling each layer of material during placement. Uniform distribution of moisture shall be obtained by disking, harrowing, or otherwise manipulating the soil during and after time water is added. Material containing an excess of moisture shall be manipulated with suitable implements to facilitate maximum aeration and shall be permitted to dry to the proper consistency before being compacted. Fill shall have a maximum moisture content of not more than 3 percent above optimum and a minimum moisture content of not less than 3 percent below optimum.

3.6 Compaction. No layer of fill shall be compacted before the practicable uniform moisture content has been obtained. Scarified areas shall be compacted as specified for the fill placed thereon. Rollers will not be permitted to operate within one foot of channel or structure walls or over buried structures until the compacted fill over the top of the structures has reached a depth of 2 feet. Compaction equipment shall be so operated that structures are not damaged nor overstressed during compaction operations. Mechanical tampers shall be used for compaction of fill material adjacent to structures where rolling equipment is impracticable for use in compaction.

4. COMPACTED FILLS.

4.1 Invert.

4.1.1 Preparation for Placing. Before placing material for compacted fill, the foundation surface shall be cleared of all existing obstructions, vegetation, and debris. Unsuitable material not meeting the requirements for fill material shall be removed where directed, and the existing surfaces scarified to a depth of

6 inches before placing the fill. Sloped ground surfaces steeper than one vertical to 4 horizontal, on which fill or compacted backfill is to be placed, shall be stepped in such a manner that the compaction equipment will bear on the full depth of the fill layer.

4.1.2 Compaction. Each layer of the materials shall be compacted to not less than 95 percent of maximum density.

4.2 Behind Channel Walls.

4.2.1 Limitations on Equipment. The gross weight of any piece of equipment, or the combined weight of any combinations of equipment coupled together, used to place, moisten and/or compact fill behind channel walls and up to 2 feet above the top of covered section shall not exceed 35,000 pounds, including dynamic forces produced by vibratory equipment. Equipment used to compact the fill behind the channel walls shall be of such size as to be capable of operating in the area between the cut slope and the channel wall. Compaction equipment will not be required to operate at elevations lower than 2 feet above the top of wall footings. This equipment shall be of such size as to be capable of operating in the area between the cut slope and the channel wall at any point 2 feet above the top of the heel of wall footings.

4.2.2 Construction Balance. Fills behind walls on one side of the channel shall not exceed by more than 5 feet the height of the fill behind the opposite channel wall at any time during construction.

4.2.3 Compaction. Each layer of fill behind channel walls shall be compacted to not less than 90 percent of maximum density.

4.2.4 Trimming. The berms top of fill adjacent to open channel walls shall be trimmed to the lines indicated on the drawings with a tolerance of plus or minus one inch. Any material loosened by trimming shall be recompacted and the berm area moistened and compacted with one pass of a smooth-wheeled roller. Tolerances shall apply after rolling. The fill slopes shall be trimmed to a uniform alinement at top of berm and to a reasonably uniform slope at or outside the lines shown on the drawings. The bridge approach areas other than paved areas shall be trimmed to a uniform alinement and reasonably uniform slopes.

5. BEDDING FOR REINFORCED CONCRETE PIPE.

5.1 General. Bedding for the R.C.P. shall consist of the sand fill placed around the lowest one-sixth of the outside portion of circular reinforced concrete pipe. Compacted fill above the bedding shall conform to the requirements of paragraph: SAND FILL of this section.

5.2 Material. Material for the bedding for the R.C.P. shall be clean sand, free of trash, organic materials, debris, and with 100 percent passing the No. 4 sieve and not more than 10 percent passing the No. 200 sieve.

5.3 Placing. The bedding upon which the R.C.P. is to be constructed shall be a minimum of 10 inches thick placed on undisturbed subgrade. The sand shall be placed true to grade and so shaped as to provide a firm and uniform bearing for the bottom of the pipe for a width equal to at least 0.167 of the outside diameter of the pipe and for the entire length of the pipe. The remaining sand fill may be placed as soon as practicable after pipe is in place. Pipe shall be placed in accordance with requirements of section: CONCRETE PIPE.

5.4 Moisture. The bedding material placed in the bottom of the trench under the pipe shall have a moisture content less than 2 percent.

6 SAND FILL.

6.1 Location. Sand fill shall consist of all material placed between the bedding material and the reinforced pipe until the fill is at least 24 inchs above the top of the pipe except where aggregate base is required for street replacement.

6.2 Material. Material shall be clean and free of trash, organic materials and debris, and shall be 100 percent passing the No. 4 sieve and contain not more than 10 percent passing the No. 200 sieve.

6.3 Placing.

6.3.1 Placing below the springing line. The sand shall be placed along both sides of pipe in a single lift to the springing line (maximum horizontal dimension of a pipe).

6.3.2 Placing above springing line. The sand fill shall be placed along both sides of the pipe in layers not exceeding 4 inches in compacted depth until the fill has reached an elevation of at least 24 inches above the top of the pipe.

6.4 Moisture.

6.4.1 Mositure below the springing line. After each layer of sand has been placed, dikes shall be made to form basins. The basins shall be flooded until the backfill is completely saturated.

6.4.2 Moisture above springing line. The sand shall have a uniform moisture content while being placed and compacted. Fill shall have a maximum moisture content of not more than 3 percent above optimum and a minimum moisture content of not less than 3 percent below optimum.

6.5 Compaction.

6.5.1 Compaction below the springing line. After the fill has been flooded it shall be compacted by means of 3-inch diameter vibrators operated with a minimum speed of 9,500 r.p.m. Vibrators shall be operated in a sequence which will insure uniform compaction as the work progresses. Vibrators shall be operated at intervals not to exceed one foot to the full depth of the layer with at least 2 passes per layer. The compacted sand shall completely fill the space to the springing line. Water jets may be required to insure complete saturation. The jets shall be used in conjunction with the vibrators and shall be removed prior to completion of the compaction with the vibrators. One man shall operate each jet or vibrator. Holes left by the jets or vibrators shall be filled with sand and vibrated until no holes or voids are remaining. Sand fill shall be compacted to not less than 95 percent of maximum density.

6.5.2 Compaction above springing line. Each layer of sand fill above the springing line shall be compacted by mechanical rammers or tampers to not less than 95 percent of maximum density.

7. BACKFILLS.

7.1 Backfill and Fill About Reinforced Concrete Boxes.

7.1.1 Location. Backfill and fill shall consist of all fill against and/or around structures, except backfill for pipe trenches and bridges.

7.1.2 Material. Fill material shall be obtained from the required excavation as approved by the Contracting Officer. In general, the best material available will be designated as backfill and fill about structures. Backfill may consist of sand, gravelly sand, silty sands, sandy silts, clayey sands, and sandy clays. Organic material, silt, clay, broken concrete or pavement, boulders and other objectionable material shall not be used. Sand fill shall conform to he requirements in paragraph: SAND FILL.

7.1.3 Placing. Fill material shall not be placed against concrete which has not been in place at least 14 days or until the concrete has attained a strength of 2,500 p.s.i. when tested in accordance with section: CONCRETE. Fill shall be place in 4-inch layers. Sand fill shall be placed in accordance with the paragraph: SAND FILL.

7.1.4 Compaction shall be not less than 95 percent of maximum density.

7.2 Backfill, Pipe Trenches.

7.2.1 Location. Backfill for pipe trenches shall consist of all fill placed in pipe trench or open excavation for pipes, drains or sewers above bedding material.

7.2.2 Material shall conform to the requirement in paragraph: SAND FILL.

7.2.3 Placing. Backfill shall be placed in accordance with the paragraph: SAND FILL.

7.2.4 Compaction of the material around the pipe, and until a pipe has a cover of 2 feet, shall be not less than 90 percent of maximum density. The compaction of the remainder of backfill shall be not less than 95 percent of maximum density.

8. LANDSCAPE FILL shall consist of top 6" material from the required excavation, placed in the area indicated and shall be placed with suitable equipment in layers which shall not exceed 12 inches in depth before compaction. Material shall be free from sod, roots, brush, debris, trash or other objectionable material, and shall contain no stone larger than 3 inches. Each layer of fill shall be compacted to not less than 85 percent of the maximum density.

9. SUBGRADE PREPARATION.

9.1 Subgrade for Channel Invert or Filter Material. After the channel has been excavated to rough grade, the entire subgrade for the channel invert or filter material shall be trimmed to a uniform grade and smoothed with a steel-wheeled roller to make the subgrade ready to receive filter material or concrete. If the subgrade is disturbed by the Contractor's operations or is overexcavated, the subgrade shall be restored to grade and compacted to a density of 95 percent of maximum density. The finished surface of the subgrade shall not be more than 1/2 inch from the indicated grade at any point when tested with a 10-foot straightedge.

9.2 Subgrade Preparation for Street Pavement, Curbs, Gutters, Sidewalks and Driveways. The subgrade shall be alternately watered and scarified until the material is uniformly moistened throughout for a depth of not less than 4 inches. All stones larger than 4 inches in diameter, and hard ribs of earth shall be

removed. The amount of water to be applied shall be that which is required to provide optimum results in compaction under rolling. Following the above operations, the roadbed shall be shaped to a true cross section sufficiently higher than the specified grade to allow for subsequent compaction and then be thoroughly compacted to not less than 95 percent of maximum density. After the subgrade has been prepared and completed, the surface shall be firm, hard, and unyielding, with a true, even, and uniform surface conforming to the grade and cross section indicated on the drawings. All points of the finished subgrade shall be not more than 1/4 inch below or above true subgrade.

* * * * *

SECTION 2E

CONCRETE PIPE

Index

1. Applicable Publications
2. Delivery, Storage, and Handling of Materials
3. General
4. Tests for Pipe
5. Pipe
6. Drainage Structures
7. Mortar
8. Joints
9. Excavation and Trenching
10. Bedding
11. Placing Pipe
12. Backfilling
13. Hydrostatic Test on Watertight Joints
14. Installation of Side Drain Pipe in Channel Walls
15. Automatic Drainage Gate
16. Plugging Abandoned Drains and Future Drain Outlets

1. APPLICABLE PUBLICATIONS. The publications listed below form a part of this specification to the extent referenced. The publications are referred to in the text by the basic designation only.

1.1 Federal Specifications (Fed. Spec.).

RR-F-621b	Frames, Covers, Gratings, Steps, Sump and Catch Basins, Manhole
SS-L-351B	Lime, Hydrated, For Structural Purposes
SS-S-210A & Am-1 (GSA-FSS)	Sealing Compound, Preformed Plastic, for Expansion Joints and Pipe Joints

1.2 Federal Standard (Fed. Std.).

No. 601 & Change Notices 1 through 6	Rubber: Sampling and Testing

1.3 American Association of State Highway and Transportation Officials (AASHTO) Publications.

M 170-74	Reinforced Concrete Culvert, Storm Drain, and Sewer Pipe
M 198-75I	Joints for Circular Concrete Sewer and Culvert Pipe Using Rubber Gaskets
M 199-74	Precast Reinforced Concrete Manhole Sections
T 180-74	Moisture-Density Relations of Soil Using a 10-lb (4.5 kg) Rammer and a 18-in. (457 mm) Drop
T 191-61	Density of Soil in Place by the Sand Cone Method

1.4 American Society for Testing and Materials (ASTM) Publications.

C 76-80	Reinforced Concrete Culvert, Storm Drain, and Sewer Pipe
C 361-78	Reinforced Concrete Low Head Pressure Pipe
C 476-80	Grout for Reinforced and Non reinforced Masonry
C 443-79	Joints for Circular Concrete Sewer and Culvert Pipe, Using Rubber Gaskets
D 1056-78	Flexible Cellular Materials -- Sponge or Expanded Rubber
D 1171-68 (R 1974)	Weather Resistance Exposure of Automotive Rubber Compounds
D 1556-64 (R-1975)	Density of Soil in Place by the Sand-Cone Method
D 1557-78	Moisture-Density Relations of Soils and Soil Aggregate Mixture Using 10-lb. (4.5-kg) Rammer and 18-in. (457-mm) Drop

1.5 American Concrete Institute (ACI) Standard

346-70 (R-1975)	Cast-In-Place Nonreinforced Concrete Pipe

1.6 American Water Works Association (AWWA) Standards

C 301-79	Prestressed Concrete Pressure Pipe Steel Cylinder Pipe, for water and other liquids

2. DELIVERY, STORAGE, AND HANDLING OF MATERIALS.

2.1 Delivery and Storage. Materials delivered to site shall be inspected for damage, unloaded, and stored with the minimum of handling. Do not store materials directly on the ground. Inside of pipes and fittings shall be kept free of dirt and debris.

2.2 Handling. Materials shall be handled in such a manner as to insure delivery to the trench in sound undamaged condition. Pipe shall be carried to the trench not dragged. Gasket materials and plastic materials that are not to be installed immediately shall not be stored in the direct sunlight.

3. GENERAL. Concrete shall conform to the section: CONCRETE. Where pipe is embedded in concrete, the pipe shall be supported in such a manner to hold it rigidly in position while concrete is placed. Earthwork about the pipes and structures shall conform to the applicable requirements of the sections:

EXCAVATION and FILLS AND SUBGRADE PREPARATION. Welding shall conform to the requirements of the section: MISCELLANEOUS METALWORK AND MATERIALS. Removal of existing side drains is specified in the section: CLEARING SITE AND REMOVING OBSTRUCTIONS. Specified and/or indicated pipe diameter, thickness, D-loading, weight, or gage are the minimum acceptable. One size larger diameter or heavier pipe may be furnished at the option of the Contractor. Before connecting side drains to the new channel, the Contractor shall have completed all of the channel located downstream of the connection.

3.1 Extension of Drain Lines. Drain lines shall be extended with the same kind of pipe and shall have joints to match the existing joints. All joints shall be watertight. Bends, elbows, and other fittings shall be standard fittings for the various types of pipe. Except as otherwise specified, all pipe and fittings shall be new. Salvaged pipe and fittings from drain removals may be used in temporary installations necessary to the work and in permanent installations, where specified.

3.2 Manufacturers Recommendations. Where installation procedures or any part thereof are required to be in accordance with the recommendations of the manufacturer of the material being installed, printed copies of these recommendations shall be furnished to the Contracting Officer prior to installation. Installation of the item will not be allowed until the recommendations are received. Failure to furnish these recommendations can be cause for rejection of the material.

4. TESTS FOR PIPE. Certified copies of test reports demonstrating conformance to applicable pipe specifications shall be delivered to the Contracting Officer before pipe is installed. Strength tests for concrete, clay, an asbestos-cement pipe as required in applicable specifications shall be the three-edge bearing tests.

5. PIPE. Pipe shall be either reinforced concrete pipe or cast in place non-reinforced concrete pipe.

5.1 Reinforced Concrete Pipe. Shall conform to the requirements of ASTM C 76 or C 361, AASHTO M 170, or AWWA C 301 the nearest D-Load equal to or above D-Load indicated.

5.1.1 Salvaged Reinforced Concrete Pipe. Pipe suitable for reuse shall be removed and cleaned. All joint mortar and other foreign matter shall be removed.

5.3 Cast-In-Place nonreinforced concrete pipe shall conform to ACI 346, except that testing shall be the responsibility and at the expense of the contractor. In case of other conflicts between ACI 346 and project specifications, requirements of ACI 346 shall govern.

6. DRAINAGE STRUCTURES.

6.1 Manholes and Junction Structure Inlets. Construction shall be of reinforced concrete or precast reinforced concrete, complete with frames and covers or gratings and with fixed galvanized steel ladders where indicated.

6.1.1 Precast Reinforced Concrete Manholes shall conform to ASTM C 478 or AASHTO M 199. Joints between precast concrete risers and tops shall be full-bedded in cement mortar and shall be smoothed to a uniform surface on both interior and exterior of the structure.

6.1.2 Frame and Cover or Gratings. Fabrication shall be from one or more of the material options presented in Fed. Spec. RR-F-621, except the malleable cast iron option shall conform to ASTM A 220, Grade 40010; or from reinforced concrete conforming to the requirements of section: CONCRETE. Weight, shape, size, and waterway openings for grates and curb inlets shall be as indicated on the plans. Frames and covers for curb inlets and for areas not subject to vehicular traffic or storage may be malleable iron if so indicated. Malleable-iron frames and covers shall conform to ASTM A 220 and shall be of the weight, shape, and size indicated. Manhole steps shall conform to section: MISCELLANEOUS METALWORK AND MATERIALS.

6.2 Walls and Headwalls. Construction shall be of reinforced concrete, as indicated.

7. MORTAR. Mortar and grout for pipe joints and connections to drainage structures shall conform to ASTM C 476, Mortar Type PL. The mortar shall be used within 30 minutes after the ingredients are mixed with water.

8. JOINTS.

8.1 For Reinforced Concrete Pipe. Upon completion of joining pipe sections, the inside of the joint shal be wiped clean and finished smooth. In pipe too small for a man to work inside, wiping may be done by dragging a suitable swab or long handled brush through the pipe as the work progresses. The mortar bead on the outside shall be protected from drying out until satifactorily cured.

8.1.1 Cement-Mortar Bell-and-Spigot Joint. The first pipe shall be bedded to the established gradeline, with the bell end placed upstream. The interior surface of the bell shall be carefully cleaned with a wet brush and the lower portion of the bell filled with mortar to such depth as to bring inner surfaces of abutting pipes flush and even. The spigot end of each subsequent pipe shall be cleaned with a wet brush and uniformly matched into the bell so that sections are closely fitted. After each section is laid, remainder of the joint shall be filled with mortar, and a bead shall be formed around the outside of the joint with sufficient additional mortar. If mortar is not sufficiently stiff to prevent appreciable slump before setting, the outside of the joint shall be wrapped or bandaged with cheesecloth to hold mortar in place.

8.1.2 Cement-Mortar Oakum Joint for Bell-and-Spigot Pipe. A closely twisted gasket shall be made of joint packing, conforming to Fed. Spec. HH-P-117, of the diameter required to support the spigot end of the pipe at the proper grade and to make the joint concentric. Joint packing shall be in one piece of sufficient length to pass around the pipe and lap at top. This gasket shall be thoroughly saturated with neat cement grout. The bell of the pipe shall be thoroughly cleaned with a wet brush, and the gasket shall be laid in the bell for the lower third of the circumference and covered with mortar. The spigot of the pipe shall be thoroughly cleaned with a wet brush, inserted in the bell, and carefully driven home. A small amount of mortar shall be inserted in the annular space for the upper two-thirds of the circumference. The gasket then shall be lapped at the top of the pipe and driven home in the annular space with a calking tool. The remainder of the angle of approximately 45 degrees with outside of the bell. If mortar is not sufficiently stiff to prevent appreciable slump before setting, the outside of the joint shall be wrapped with cheesecloth. Placing of this type joint shall be kept at least five joints behind laying operations.

8.1.3 Cement-Mortar Diaper Joint for Bell-and-Spigot Pipe. The pipe shall be centered so that the annular space is uniform. The annular space shall be calked with joint packing conforming to Fed. Spec. HH-P-117. Before calking, the inside of bell and outside of spigot shall be clean.

8.1.3.1 Diaper bands shall consist of heavy cloth fabric to hold grout in place at joints and shall be cut into such lengths that they will extend one-eighth of the circumference of pipe above the spring line on one side of the pipe and up to the spring line of the other side of the pipe. Longitudinal edges of fabric bands shall be rolled and stitched around two pieces of wire. Width of fabric bands shall be such that after fabric has been securely stitched around both edges on wires, the wires will be uniformly spaced not less than 8 inches apart. Wires shall be cut into lengths to pass around pipe with sufficient extra length for the ends to be twisted at top of pipe to hold band securely in place: bands shall be accurately centered around lower portion of joint.

8.1.3.2 Grout shall be poured between band and pipe from only the high side of band, until grout rises to the top of band at the spring line of pipe, or as nearly so as possible, on the opposite side of pipe, to insure a thorough sealing of joint around the portion of pipe covered by band. Silt, slush, water, or polluted mortar grout forced up on the lower side shall be carefully forced out by the pouring and removed.

8.1.3.3 The remaining unfilled upper portion of the joint shall then be filled with mortar and a bead formed around outside of this upper portion of joint with sufficient amount of additional mortar. The diaper shall be left in place. Placing of this type joint shall be kept at least five joints behind actual laying of pipe. No backfilling around joints shall be done until joints have been fully inspected and approved.

8.1.4 Cement-Mortar Tongue-and-Groove Joint. The first pipe shall be bedded carefully to the established gradeline with the groove upstream. A shallow excavation shall be made underneath the pipe at the joint and filled with mortar to provide a bed for the pipe. The grooved end of the first pipe shall be carefully cleaned with a wet brush, and a layer of soft mortar applied to the lower half of the groove. The tongue of the second pipe shall be cleaned carefully with a wet brush; while in horizontal position, a layer of soft mortar shall be applied to the upper half of the tongue. The tongue end of the second pipe then shall be inserted in the grooved end of the first pipe until mortar is squeezed out on interior and exterior surfaces. Sufficient mortar shall be used to fill the joint completely and to form a bead on the outside.

8.1.5 Cement-Mortar Diaper Joint for Tongue-and-Groove Pipe. The joint shall be of the type described in paragraph: CEMENT-MORTAR TONGUE-AND-GROOVE JOINT above, except that the shallow excavation directly beneath the joint shall not be filled with mortar until after a gauze or cheesecloth band dipped in cement mortar has been wrapped around the outside of the joint. The cement-mortar bead at the joint shall be at least 1/2-inch thick, and the width of the diaper band shall be at least 8 inches. The diaper shall be left in place. Placing of this type joint shall be kept at least five joints behind the actual laying of the pipe. No backfilling around the joints shall be done until joints have been fully inspected and approved.

8.2 Joints Prestressed Concrete Pipe.

8.2.1 Materials and Test Requirements. Joints Prestressed Concrete Pipe shall be made with rubber-type gaskets. The design of joints and the physical requirements for rubber-type gaskets shall conform to ASTM C 443 or AASHTO M 198. Gaskets shall have not more than one factory-fabricated splice, except that two factory-fabricated splices of the rubber gasket type the permitted if nominal diameter of pipe being gasketed exceeds 54 inches. Material conforming to Fed. Spec. SS-S-210 is acceptable as an alternate to ASTM C 443 provided the necessary installation instructions are furnished.

8.2.2 Installation. Gaskets and joining materials shall be as recommended by the particular manufacturer in regard to use of lubricants, cements, adhesives, and other special installation requirements. Surfaces to receive lubricants, cements, or adhesives shall be clean and dry. Gaskets and jointing materials shall be affixed to the pipe not more than 24 hours prior to the installation of the pipe, and shall be protected from the sun, blowing dust, and other deleterious agents at all times. Gaskets and jointing materials shall be inspected before installing the pipe; any loose or improperly affixed gaskets and jointing materials shall be removed and replaced. The pipe shall be aligned with the previously installed pipe, and the joint pulled together. If, while making the joint, the gasket or jointing material becomes loose and can be seen through the exterior joint recess when joint is pulled up to within one inch of closure, the pipe shall be removed and the joint remade.

9. EXCAVATION AND TRENCHING. Excavation of trenches and backfilling shall be in accordance with the applicable portions of sections: EXCAVATION and FILLS and SUBGRADE PREPARATION and the following requirements.

9.1 Trenching. Shoring where indicated or required shall be placed within the trench width as specified. Care shall be taken not to over excavate. Where trench widths are exceeded, redesign with a resultant increase in cost of stronger pipe or special installation procedures shall be necessary. Cost of this redesign and increased cost of pipe or installation shall be borne by the Contractor without additional cost to the Government.

9.2 Removal Of Rock. Rock in either ledge or boulder formation shall be replaced with selected materials to provide a compacted earth cushion having a thickness between unremoved rock and the pipe of at least 8 inches or 1/2-inch for each foot of fill over the top of the pipe, whichever is greater, but not more than three-fourths the nominal diameter of the pipe. Where bell-and-spigot pipe is used, the cushion shall be maintained under the bell as well as under the straight portion of the pipe.

9.3 Removal of Unstable Material. Where wet or otherwise unstable soil incapable of properly supporting the pipe, as determined by the Contracting Officer, is encountered in bottom of trench, such material shall be removed to depth required and replaced to the proper grade with selected material, compacted as provided in paragraph: BACKFILLING. When removal of unstable material is due to the fault or neglect of the Contractor in his performance of shoring and sheeting, water removal, or other specifed requirements, resulting material shall be excavated and replaced.

10. BEDDING. The bedding surface for the pipe shall provide a firm foundation of uniform density throughout the entire length of the pipe. The pipe shall be bedded carefully in a soil foundation accurately shaped and rounded to conform to the lowest one-fourth of the outside portion of circular pipe or arch. When necessary, the bedding shall be tamped. Bell holes and depressions for joints shall be only of such length, depth, and width as required for properly making the particular type joint.

11. PLACING PIPE. Each pipe shall be carefully examined before being laid, and defective or damaged pipe shall not be used. Pipelines shall be laid to the grades and alinement indicated. Proper facilities shall be provided for lowering sections of pipe into trenches. Under no circumstances shall pipe be laid in water, and no pipe shall be laid when trench conditions or weather are unsuitable for such work. Diversion of drainage or dewatering of trenches during construction shall be provided as necessary. All pipe in place shall be inspected before backfilling, and those damaged during placement shall be removed and replaced at no additional cost to the Government.

11.1 Concrete Pipe. Laying shall proceed upgrade with spigot ends of bell-and-spigot pipe and tongue ends of tongue-and-groove pipe pointing in the direction of the flow. Circular concrete pipe with elliptical reinforcing shall be placed so that reference lines designating top of pipes will be not more than 5 degrees from the vertical plane through the longitudinal axis of the pipe. In all backfilling operations care shall be taken to prevent damage to or misalignment of the pipe.

12. BACKFILLING.

12.1 Backfilling Pipe in Trenches. After the bedding has been prepared and the pipe installed, sand fill material, shall be placed along both sides of pipe in a single lift to the springing line (maximum horizontal dimension of a pipe). The backfill shall be brought up evenly on both sides of pipe for the full length of pipe. Water shall be applied to the sand fill by jetting in a manner, quantity, and at a rate sufficient to throughly saturate the entire lift. Vibrating compacting equipment shall be used to obtain not less than 95 percent of maximum density. Care shall be taken to insure thorough compaction of the sand fill under the haunches of the pipe. Above the springing line, the trench shall be filled with sand, fill, conforming to the section: FILLS AND SUBGRADE PREPARATION. The sand fill material, at a moisture content that will facilitate compaction, shall be placed along both sides of pipe in layers not exceeding 4 inches in compacted depth. The backfill shall be brought up evenly on both sides of pipe for the full length of pipe. Each layer shall be thoroughly compacted with mechanical tampers or vibrators to not less than 95 percent of maximum density. This method of filling and compacting shall continue until the fill has reached an elevation of at least 24 inches above the top of the pipe or to the bottom of the Aggregate Base Course except between stations 251+00 and 256+70 where sand fill shall be placed to the top of the pipe. The remainder of the trench shall be backfilled and compacted by spreading and rolling or compacted by mechanical tampers or vibrators in layers not exceeding 6 inches. Where it is necessary in the opinion of the Contracting Officer, any sheeting and/or portions of bracing used shall be left in place, and the contract will be adjusted accordingly. Untreated sheeting shall not be left in place beneath structures or pavements.

12.2 Backfilling Pipe in Fill Sections. For pipe placed in fill sections, backfill material and the placement and compaction procedures shall be as specified above. The fill material above the springing line shall be uniformly spread in layers longitudinally on both sides of pipe, not exceeding 4 inches in

compacted depth, and shall be compacted by rolling parallel with pipe or by mechanical tamping or vibrating to obtain not less than 95 percent of maximum density. Prior to commencing normal filling operations, the crown width of the fill at a height of 24 inches above the top of the pipe shall extend a distance of not less than twice the outside pipe diameter on each side of the pipe or 12 feet, whichever is less. After the backfill has reached at least 24 inches above the top of the pipe, the remainder of the fill shall be placed and thoroughly compacted in layers not exceeding 6 inches.

12.3 Movement of Construction Machinery. In compacting by rolling or operation heavy equipment parallel with the pipe, displacement of or injury to the pipe shall be avoided. Movement of construction machinery over a culvert or storm drain at any stage of the construction shall be at the contractor's risk. Any pipe damaged thereby shall be repaired or replaced at the expense of the Contractor.

13. HYDROSTATIC TEST ON WATERTIGHT JOINTS. A hydrostatic test shall be made on the watertight joint types proposed. Only one sample joint of each type needs testing; however, if the sample joint may be tests. During the test period the joint shall be protected from high temperatures that might soften or adversely affect the jointing materials. The possibility that some water may be absorbed by concrete pipes during this test will be considered before rejecting any rubber seals proposed. Performance requirements for joints in reinforced and nonreinforced concrete pipe shall conform to ASTM C 443 or AASHTO M 198, except that tests for the above-mentioned requirement shall be performed at an internal hydrostatic pressure of 10 psi for a 24-hour period.

14. INSTALLATION OF SIDE DRAIN PIPE IN CHANNEL WALLS. At the option of the Contractor, side drain pipes may be either cast in place in the channel walls or installed through a blockout. The edge of the pipe shall end approximately 3/4 inch back of the channel face of the wall. Pipe installed in blockouts shall be dry-packed in place.

14.2 Dry-Pack Installation. Dry-pack material shall consist of one part portland cement, 2 parts aggregate, and water. Aggregate shall consist of sand and fine gravel. The water content shall be such that a ball of dry-pack may be squeezed in the hand without bringing free water to the surface. Materials shall conform to the applicable requirements of the section: CONCRETE CONSTRUCTION. The dry-pack shall be tamped uniformly and symmetrically around the pipe and finished to match the channel wall.

15. AUTOMATIC DRAINAGE GATE.

15.1 Material. Gate and fastening shall conform to the requirements of the section: MISCELLANEOUS METALWORK AND MATERIALS. All gates shall be the product of the same manufacturer. The gate shall be rigidly secured in place with the seating surfaces vertical. The gate shall be cast in place, flush with the wall, and with the indicated recess for link clearance. Gates larger than 42 inches in diameter shall be secured to the headwall with galvanized steel or corrosion-resisting steel anchor bolts and bronze washers. The anchor bolts shall be of the size recommended by the gate manufacturer with the nuts tightened after the concrete has cured. Gates less than 42 inches in diameter shall be secured to the end of the metal pipe.

16. PLUGGING ABANDONED DRAINS AND FUTURE DRAIN OUTLETS. Drain pipe indicated as abandoned, drain pipe abandoned on completion of new drain lines, and drain outlets for future use shall be plugged with standard clay sewer disks calked with oakum and mortared in place, or plugged with brickwork in accordance with the applicable requirements of the section: CONCRETE.

SECTION 2F

STONE PROTECTION

Index

1. Applicable Publications
2. Materials
3. Foundation Preparation
4. Placement
5. Scales
6. Waybills and Delivery Tickets

1. APPLICABLE PUBLICATIONS. The publications listed below form a part of this specification to the extent referenced. The publications are referred to in the text by the basic designation only.

C 88-73	Soundness of Aggregates by Use of Sodium Sulfate or Magnesium Sulfate
C 127-73	Specific Gravity and Absorption of Coarse Aggregate
C 136-71	Sieve or Screen Analysis of Fine and Coarse Aggregates
C 131-69	Resistance to Abrasion of Small Size Coarse Aggregate by Use of the Los Angeles Machine
C 535-69 (R 1975)	Resistance to Abrasion of Large Size Coarse Aggregate by Use of the Los Angeles Machine

2. MATERIALS.

2.1 Source and Material Approval. The Contractor shall make all arrangements, pay all royalties, and secure all permits for the procurement, furnishing and transporting of materials. The source from which the Contractor proposes to obtain the material shall be selected and a sample submitted a minimum of 45 days in advance of the time when the material will be required in the work. Stone from a proposed source where exploratory investigations and compliance test reports or satisfactory service records are not available, will be tested by the Government for quality compliance. The Government will test one sample at its expense. If the material fails the tests or if the Contractor desires to utilize more than one source, additional testing will be accomplished by the Government for the sum of $1200.00 for each sample tested. The costs of such tests will be deducted from payment due the Contractor. All test samples (500 pounds minimum) shall be representative of the rock source and shall be obtained by the Contractor under the supervision of the Contracting Officer and delivered at the Contractor's expense to the South Pacific Division Laboratory, U.S. Army Engineer Division, South Pacific, Sausalito, California. A list of sources from which acceptable stone protection materials have been obtained is available for informational purposes in the office of the District Engineer, Geotechnical Branch, 300 North Los Angeles Street, Los Angeles, California. Sources listed may no longer be available due to depletion or may not be acceptable because of changes in the material. The Contractor shall vary the quarrying, processing, loading and placing operations to secure the type and quality of stone protection specified. If the stone being furnished by the Contractor does not fully meet all the requirements

of these specifications, the Contractor shall furnish at no additional cost to the Government, other stone meeting the requirements of these specifications. Approval of stone from a source shall not be construed as a waiver of the right of the Government to require the Contractor to furnish stone which complies with these specifications. Materials produced from localized areas, zones or strata will be rejected when such materials do not comply with the specifications.

2.2 Quality Compliance. Test results and service records may be used to determine the acceptability of the stone protection materials. In the event compliance test reports and/or service records are not available, the material shall be subjected to the tests outlined in these specifications to determine its acceptability for use in the work. Before a proposed new source of stone will be considered for sampling and testing, one of the following criteria must be met:

a. A sufficiently developed quarry operation to demonstrate that an adequate quantity of stone is available to fulfill the contract requirements; or,

b. An exposed face plus sufficient explorations (results of which are made available to the Government) to demonstrate that an adequate quantity of stone is available to fulfill the contract requirements.

2.2.1 Bedding Material. Material shall contain no organic matter nor soft, friable particles, shall be clean, hard, and uncoated, and shall have a percentage of wear not to exceed 50 percent after 500 revolutions when tested in accordance with ASTM C 131.

2.3 Quality Compliance Tests for Stone Protection. Stone shall meet the following test requirements.

Test	Test Method	Requirement
Specific Gravity (Bulk SSD)	ASTM C 127	2.65 minimum
Absorption	ASTM C 127	2.0% maximum
Wetting & Drying	SPD Test Procedure(1)	No fracturing(3)
Sodium Sulfate	ASTM C 88(2)	10% max. loss(4)
Abrasion Loss	ASTM C 535	50% max. loss

In addition to the above tests, the stone shall be subjected to a petrographic and X-ray diffraction analysis. The stone must not contain any swelling type clay (illite or montmorillonite).

NOTE: (1): Test procedure wetting-and-drying tests. The initial step of the test is the careful examination of the entire sample and the selection of representative test specimens. The piece should be large enough to produce two cut slabs, 1 inch thick (± 1/4 inch) with a minimum surface area of 30 square inches on one side. Two chunks approximately three by four inches are also chosen. The slabs and chunks are carefully examined under a low-power microscope and all visible surface features are noted and recorded. The specimens are then oven dried at 140 degrees F., for eight hours, cooled and weighed to the nearest tenth of a gram. The test specimens are photographed to show all surface features before the test. The chunks and slabs are then subjected to fifteen cycles of wetting and drying. One slab and one chunk are soaked in fresh tap water, the other slab and chunk are soaked in salt water prepared in accordance with ASTM D 1141. Each cycle consists of soaking for sixteen hours at room temperature and then drying in an oven for eight hours at 140 degrees F. After each cycle the specimens are examined with the low-power microscope to check for opening or movement of fracturs,

flaking along edges, swelling of clays, softening or rock surface, heaving of micaceous minerals, breakdown of matrix material and any other evidence of weakness developing in the rock. The cycle in which any of these action occurs is recorded. After fifteen cycles, the slabs and chunks are again carefully examined and all changes in the rocks are noted and recorded. The test specimens together with all flakes or particles which come off during the test are oven dried, weighed and photographed.

NOTE: (2): The test shall be made on 50 particles each weighing 1000 grams, +20 grams, in liew of the gradation given in C 88.

NOTE: (3): Weakening and loss of individual surface particles is permissible unless bond of the surface grains softens and causes general disintegration of the surface material.

NOTE: (4): Sandstones which have a loss greater than the specified limit will be accepted if the Contractor demonstrates that the rock has a satisfactory service record.

2.4 Gradation Sampling and Testing for Stone Protection. Test shall be performed by an approved testing laboratory on samples selected by the Contracting Officer. The Government reserves the right to perform check tests and to use the Contractor's sampling and testing facilities to make the tests. Each sample shall consist of not less than five tons of materials and shall be selected at random from the production run. One gradation test is required at the beginning of production prior to delivery of stone to the project and a minimum of one additional test for each (10,000) tons of material placed. All sampling and gradation tests performed by the Contractor shall be under the supervision of the Contracting Officer.

2.5 Gradation.

2.5.1 General. All points on individual grading curves shall be between the boundary limits as defined by smooth curves drawn through specified grading limits plotted on a mechanical analysis diagram. The individual grading curves shall not exhibit abrupt changes in slope denoting skip grading or scalping of certain sizes. Specified grading of all material shall be met both at the source and as delivered to the project. In addition, material not meeting the required grading due to segregation or degradation during placement shall be rejected. If best results show that stone does not meet the required grading, the hauling operation will be stopped immediately and will not resume until processing procedures are adjusted and a gradation test is completed showing gradation requirements are met. All gradation tests shall be at the expense of the Contractor.

2.5.2 Filter Material. Filter material shall be well graded between the limits specified below when tested in accordance with ASTM C 136.

Sieve Size	Percent Finer
4 Inch	100
1-1/2 Inch	50-80
No. 4	30-60
No. 200	0-10

2.5.3 Type I stone shall be quarried stone and reasonably well graded within the limits specified below:

Pounds Weight of Pieces	Percent Smaller
1500	100
800	30-100
500	0-50
200	0-15

2.5.4 Type II Stone shall be quarried stone and reasonably well-graded within the limits specified below:

Pounds Weight of Pieces	Percent Smaller
160	100
70	60-100
35	15-50
10	0-15

2.5.5 Type III Stone shall be quarried stone and reasonably well-graded within the limits specified below:

Pounds Weight of Pieces	Percent Smaller
86	100
35	65-100
25	50-85
17	25-50
10	0-35
5	0-15

2.6 Existing stone protection shall be salvaged where indicated. Stone shall be sorted and prepared for reuse. Stone shall be clean, free from earth, clay, refuse, and adherent coating. Stone removed and found of a quality unsuitable for reuse shall be disposed of as directed. Stone in excess of the amount required for the work shall be disposed of as directed.

3. FOUNDATION PREPARATION. Areas on which filter material or stone is to be placed shall be trimmed and dressed to conform to cross sections indicated or directed, within an allowable tolerance of plus or minus one inch from the theoretical slope lines and grades. Where such areas are below the allowable minus tolerance limit they shall be brought to grade by filling with earth similar to the adjacent material and well compacted, or by filling with approved material, and no additional payment will be made for any material thus required. Immediately prior to placing the filter material or stone, the prepared base shall be inspected by the Contracting Officer and no material shall be placed thereon until that area has been approved.

4. PLACEMENT.

4.1 Filter Material shall be spread uniformly on the prepared base, in a satisfactory manner, to the neat lines indicated or directed. Placing of material by methods which will tend to segregate particle sizes will not be permitted. Any damage to the prepared surface of the base during placing of the bedding material shall be repaired before proceeding with the work. Compaction of the bedding

material will not be required but it shall be finished to present a reasonably even surface free from mounds or windrows. A tolerance of plus or minus one inch from the slope lines and grades when measured with a 10-foot straightedge will be allowed in each finished course, except that either extreme of such tolerance shall not be continuous over an area greater than 200 square feet.

4.2 Type I, II and III Stone shall be placed in a manner to produce a reasonably well graded mass with the minimum practicable percentage of voids, and shall be constructed to the lines and grades indicated or directed. Stone shall be placed to its full course thickness in one operation and in a manner to avoid displacing the underlying material. Method of placement shall be submitted to Contracting Officer for approval prior to commencement of placement operations. Type I stone shall be placed such that stone larger than 24" is placed with maximum dimension vertical as indicated. The Contractor shall maintain the stone protection until accepted and any material displaced by any cause shall be replaced at his expense to the lines and grades shown on the drawings. Self propelled equipment shall not be used on the levee slopes and/or toe slopes. Hand placing, barring, or placing by crane will be required only to the extent necessary to secure the results specified. Placing stone by dumping into chutes or by similar methods likely to cause segregation will not permitted. A tolerance of plus 3 inch or minus 1 inch from the indicated slope lines and grades will be allowed in the finished surface, except that either extreme of such tolerance shall not be continuous over an area greater than 200 square feet.

4.3 Stone shall not be placed against concrete which has not been in place at least 14 days. Stone within 12 inches of concrete structures shall be placed by hand or other methods that will preclude damage to the concrete structure.

5. SCALES shall be standard truck scales of the beam type. The scales shall be of sufficient size and capacity to accommodate all trucks used in hauling the material. Scales shall be tested, approved, and sealed by an inspector of the State Inspection Bureau charged with scales inspection within the state in which the project is located. Scales shall be calibrated and resealed as often as necessary to insure continuous accuracy. The necessary number of standard weights for testing the scales shall be on hand at all times and, if an official inspection bureau of the state is not available, the scales will be tested by the Contracting Officer.

6. WAYBILLS AND DELIVERY TICKETS. Copies of waybills or delivery tickets shall be submitted to the Contracting Officer during the progress of the work. Before the final statement is allowed, the Contractor shall file with the Contracting Officer certified waybills and/or certified delivery tickets for all stone actually used in the construction covered by the contract.

* * * * *

SECTION 2G

AGGREGATE BASE

Index

1. Applicable Publications
2. Materials
3. Sampling and Testing
4. Equipment
5. Operation of Pits or Quarries
6. Weather Limitations
7. Preparation of Underlying Surface
8. Grade Control
9. Mixing and Placing Materials
10. Layer Thickness
11. Compaction
12. Edges of Base Course
13. Smoothness Test
14. Thickness Control
15. Maintenance
16. Waybills and Delivery Tickets

1. APPLICALE PUBLICATIONS. The publications listed below form a part of this specification to the extent referenced. The publications listed below form a part of this specification to the extent referenced. The publications are referred to in the text by the basic designation only.

1.1 American Society for Testing and Materials (ASTM) Publications.

C 117-80	Materials Finer than 76-um (No. 200) Sieve in Mineral Aggregates by Washing
C 127-80	Specific Gravity and Absorption of Coarse Aggregate
C 128-73	Specific Gravity and Absorption of Fine Aggregate
C 131-79	Resistance to Abrasion of Small Size Coarse Aggregate by Use of the Los Angeles Machine
C 136-80	Sieve or Screen Analysis of Fine and Coarse Aggregates
D 75-71 (R 1978)	Sampling Aggregates
D 422-63 (R 1972)	Particle-Size Analysis of Soils
D 423-66 (R 1972)	Liquid Limit of Soils
D 424-59 (R 1971)	Plastic Limit and Plasticity Index of Soils
D 1556-64 (R 1974)	Density of Soil In Place by the Sand-Cone Method
D 1557-78	Moisture-Unit Weight Relations of Soils, and Soil-Aggregate Mixtures Using 10-lb. (4.5-kg) Rammer and 18-in. (457-mm) Drop
E 11-70 (R 1977)	Wire-Cloth Sieves for Testing Purposes

2. MATERIALS. Aggregates shall consist of crushed stone or slag, crushed gravel, angular sand, soil, or other sound, durable, approved materials processed and blended or naturally combined. Aggregates shall be durable and sound, free from lumps and balls of clay, organic matter, objectionable coatings, and other foreign material. It shall be the responsibility of the Contractor to obtain materials that will meet the requirements specified herein and that can be constructed to meet the grade and smoothness requirements specified herein after all compaction requirements have been completed. The material retained on a No. 4 sieve shall be known as coarse aggregate, and the material passing the No. 4 sieve shall be known as binder material.

2.1 Coarse Aggregate conforming to the requirements specified above shall have a percentage of wear not to exceed 50 percent after 500 revolutions. Slag shall be an air-cooled blast-furnace product having a dry weight of not less than 65 pounds per cubic foot. Coarse aggregate shall consist of angular fragments reasonably uniform in density and quality. The amount of flat and elongated particles shall not exceed 30 percent. A flat particle is one having a ratio of width to thickness greater than 3, and an elongated particle is one having a ratio of length to width greater than 3.

2.1.1 Coarse aggregate retained on each sieve specified shall contain at least 50 percent by weight of crushed pieces having two or more freshly fractured faces with the area of each face being at least equal to 75 percent of the smallest midsectional area of the piece. When two fractures are adjacent, the angle between the planes of the fractures must be at least 30 degrees to count as two fractured faces.

2.2 Binder Material shall consist of screenings, angular sand, soil, or other finely divided mineral matter processed or naturally combined with the coarse aggregate. Liquid-limit and plasticity-index requirements stated herein shall apply to any component that is blended to meet the requied gradation and shall also apply to the completed course. The portion of any component or of the complete course passing the No. 40 sieve shall be either nonplastic or shall have a liquid limit not greater than 25 and a plasticity index not greater than 5.

2.3 Gradation requirements specified herein shall apply to the completed base course, and it shall be the responsibility of the Contractor to obtain materials that will meet the gradation requirements after mixing, placing, compacting, and other operations. The aggregates shall have a maximum size of one inch and shall be continuously graded within the limits specified below:

Sieve Designation	Percentage by Weight Passing Square-Mesh Sieve
1-inch	100
3/4-inch	90-100
1/4-inch	45-75
No. 200	2-9

The values are based on aggregates of uniform specific gravity, and the percentages passing the various sieves are subject to appropriate correction by the Contracting Officer when aggregates of varying specific gravities are used.

3. SAMPLING AND TESTING shall be by and at the expense of the Contractor.

3.1 Samples shall be the size required and shall be taken by the Contractor. Copies of test results shall be submitted for approval prior to starting the work, and thereafter at regular intervals during production as specified hereinafter. These samples shall be obtained at the source, from test pits, borings, trucks, stockpiles, or from other designated locations. Samples for material gradation, liquid-limit determination, and plasticity-index tests shall be taken in conformance with ASTM D 75. After the material has been placed and compacted, samples for density tests shall be taken as specified in ASTM D 1556, and additional samples for gradation, liquid-limit, and plasticity-index tests shall be taken by an appropriate method. Where deemed necessary, the sampling will be supervised by the Contracting Officer. The Contractor shall arrange his work so that sampling and testing may be performed without interruption.

3.2 Tests.

3.2.1 Aggregate Gradation. Aggregate gradation shall be determined in accordance with ASTM C 117, C 127, C 128, C 136, and D 422. Sieves shall conform to ASTM E 11.

3.2.2 Liquid Limit shall be determined in accordance with ASTM D 423.

3.2.3 Plasticity Index shall be determined in accordance with ASTM D 424.

3.2.4 Wear Test shall be made in conformance with ASTM C 131.

3.2.5 Field-In Place Density shall be determined in accordance with ASTM D 1556. Moisture-density relations shall be established in the laboratory in accordance with ASTM D 1557, method D.

3.3 Testing Frequency. Results of tests to determine particle shape, presence of objectionable coatings and foreign matter, percentage of wear, fracture count, gradation, liquid-limit, plasticity-index, specific gravity, and other specification requirements for determination of the acceptability of the source shall be submitted for approval at least 7 days prior to starting of manufacture of the base course material. Production testing for material gradation, liquid limit, and plasticity index shall be performed at regular intervals with at least one test being made for each 500 cubic yards or fraction thereof, of material produced and results shall be submitted on a daily basis. Deviations from specification requirements shall be corrected immediately upon discovery. After the material has been placed and compacted, one field density test for each 1,000 square yards or fraction thereof of finished base course and one additional gradation, liquid-limit, and plasticity-index test for each 3,000 square yards of base course or fraction thereof shall be performed. Maximum-density moisture relations shall be established for each 4,000 square yards of base course material. The location of the after-placement tests shall be as directed. One copy of density data (less dry weight determinations) shall be provided on the day each test is taken. The completed test report shall be provided with the Contractor Quality Control Report on the following work day. Results of all tests made shall be submitted for approval on a daily basis and subsequent paving operations shall not commence until final approval has been obtained. Failure of any test shall be reported verbally, by the most expeditious means and followed promptly by written report. Contractor field operations shall immediately reflect corrective measures. For every failing test, retesting after completion of corrective measures have been taken will be required.

3.4 Approval of Materials. The source of the material shall be selected 7 days in advance of the time materials will be required in the work. Tentative approval of the preliminary reports submitted by the Contractor and the source will be based on an inspection by the Contracting Officer. Tentative approval of the materials will be based on test samples as specified herein. Final approval of both the source and the materials will be based on specified tests performed on samples taken from the completed and compacted base course.

4. EQUIPMENT. All plant, equipment, and tools used in the performance of the work covered by this section will be subject to approval by the Contracting Officer before the work is started and shall be maintained in satisfactory working condition at all times. The equipment shall be adequate and have the capability of producing the required compaction, meeting grade controls, thickness controls, and smoothness requirements as set forth herein and within the specified time limits.

5. OPERATION OF PITS OR QUARRIES. All work involved in clearing, stripping, and excavating in opening or operation of pits or quarries shall be performed by the Contractor. Pits or quarries shall be opened to expose vertical faces of deposit to depths suitable for working. Materials excavated from pits shall be obtained in successive vertical cuts extending through all exposed strata. All pockets or strata. All pockets or strata of unsuitable materials overlying or occurring within the deposit shall be wasted as directed. The methods of operating pits or quarries and the processing and blending of the material may be changed or modified by the Contracting Office when necessary to obtain material conforming to the specified requirements. Quarries shall be conditioned in agreement with the local laws or authorities.

6. WEATHER LIMITATIONS. Aggregate base courses shall be constructed when the atmospheric temperature is above 35 degrees F. When the temperature falls below 35 degrees F., the Contractor shall protect all areas of the completed aggregate base course, by approved methods, against any detrimental effects of freezing. Areas of completed aggregate base course damaged by freezing, rainfall, or other weather conditions shall be corrected to meet specified requirements.

7. PREPARATION OF UNDERLYING SURFACE. Prior to constructing the aggregate base course, the previously constructed subgrade shall be cleaned of all foreign substances. The surface of the subgrade shall be inspected by the Contractor for adequate compaction and surface tolerances. The subgrade shall conform to section: FILLS AND SUBGRADE PREPARATION. Ruts or soft, yielding spots that may appear in the subgrade areas having inadequate compaction, and deviations of the surface from the requirements set forth therein shall be corrected to line and grade and to all specification requirements. The finished subgrade shall not be disturbed by traffic or other operations and shall be maintained by the Contractor in a satisfactory condition until the base course is placed.

8. GRADE CONTROL. During construction the lines and grades including crown and cross slope indicated for the aggregate base course shall be maintained by means of line and grade stakes placed by the Contractor at the worksite in accordance with SPECIAL PROVISIONS of these specifications.

9. MIXING AND PLACING MATERIALS. The materials shall be mixed by the stationary-plant, traveling-plant or road-mix method and placed in such a manner as to obtain uniformity of the aggregate base course material and at a uniform optimum moisture content for compaction. The Contractor shall make such adjustments in mixing or

placing procedures or in equipment as may be directed to obtain the true grades, or increase of water, and to insure a satisfactory aggregate base course meeting all the requirements of this specification.

10. LAYER THICKNESS. The compacted thickness of the aggregate base course shall be indicated. When a compacted layer of 6 inches is indicated, the material may be placed in a single layer. When a compacted layer thickness of more than 6 inches is indicated, the material shall be placed in two layers of approximately equal thickness.

11. COMPACTION. Each layer of the aggregate base course (including shoulders) shall be compacted with approved compaction equipment. Water content shall be maintained at optimum or at the percentage specified during compaction. In places not accessible to the rollers, the mixture shall be compacted with mechanical tampers. Compaction shall continue until each layer through the full depth is compacted to at least 100 percent of maximum density. The Contractor shall make such adjustments in rolling or finishing procedures as may be required to obtain true grades, to minimize segregation and degradation, to reduce or accelerate loss or gain of water, and to insure a satisfactory aggregate base course. Unsatisfactory materials shall be reworked to produce a satisfactory material.

12. EDGES OF BASE COURSE. Where the course is not placed between curbs or similar construction, approved material shall be placed along the edges of the aggregate base course in such quantities as will compact to the thickness of the course being considered, or when the course is being constructed in two layers, to the thicknes of each layer of the course. Allow in each operation at least a one-foot width of the shoulder to be rolled and compacted simultaneously with the rolling and compacted of each layer of the base course, as directed.

13. SMOOTHNESS TEST. The surface of each layer shall not show any deviations in excess of 3/8 inch when tested with either a 10- or 12-foot straightedge applied both parellel with and at right angles to the centerline of the paved area. deviations exceeding this amount shall be corrected by removing material and replacing with new material, or by reworking existing material and compacting, as directed.

14. THICKNESS CONTROL. The completed thickness of the base course shall be within 1/2 inch, plus or minus, of the thickness indicated. Thickness test shall be made and recorded by the Contractor. The thickness of the base course shall be measured at intervals in such manner that there will be a thickness measurement for at least each 500 square yards of base course. The thickness measurement shall be made by test holes at least 3 inches in diameter through the base course. Where the measured thickness of the base course is more than 1/2 inch deficient in thickness, the Contractor, at no additional expense to the Government, shall correct such areas by scarifying, adding mixture of proper gradation, reblading, and recompacting, as directed. Where the measured thickness of the base course is more than 1/2 inch thicker than that indicated, it shall be considered as conforming with the specified thickness requirements plus 1/2 inch. The average job thickness shall be the average of the job measurements determined as specified above, but shall be within 1/4 inch of the thickness indicated.

15. MAINTENANCE. The Contractor shall maintain the aggregate base course in a satisfactory condition until the completed work is accepted.

16. WAYBILLS AND DELIVERY TICKETS. Copies of waybills or delivery tickets shall be attached to the Daily Contractor Quality Control Report for the day of delivery. Before the final statement is allowed, the Contractor shall file with the Contracting Officer waybills and/or certified delivery tickets for all aggregates actually used in the construction covered by the contract.

* * * * *

SECTION 2H

PRIME COAT AND WEED KILLER

Index

1. Applicable Publications
2. Bituminous Material
3. Sampling and Testing
4. Quantity to be Applied
5. Weather Limitations
6. Equipment
7. Preparation of Surface
8. Weed Killer
9. Application of Bituminous Material
10. Waybills and Delivery Tickets

1. APPLICABLE PUBLICATIONS. The publications listed below form a part of this specification to the extent referenced. The publications are referred to in the text by the basic designation only.

1.1 American Society for Testing and Materials (ASTM) Publications.

D 140-70 (R 1976)	Sampling Bituminous Materials
D 2027-76	Cutback Asphalt (Medium-Curing Type)

1.2 American Association of State Highway and Transportation Officials (AASHTO) Standard.

T 102-74	Spot Test of Asphaltic Materials

2. BITUMINOUS MATERIAL. The bituminous material prime coat shall be liquid asphalt, conforming to ASTM D 2027, designation MC-70 with the additional requirement that the residue from distillation to 680 degrees F., shall show a negative spot test when submitted to AASHTO T 102, using the standard naphtha specified therein.

3. SAMPLING AND TESTING.

3.1 Sampling. Samples of bituminous material, unless otherwise specified, shall be in accordance with ASTM D 140.

3.2 Testing shall be the responsibility of the Contractor. Testing shall be performed by an acceptable commercial testing laboratory or by the Contractor on approval of the Contracting Officer. Materials shall be tested to establish compliance with the specified requirements. Certificate of compliance, with specified requirements shall be submitted to the Contracting Officer.

3.3 Certified Laboratory Test Reports. Before delivery of bituminous materials, certified copies, in triplicate, of the tests specified herein and in referenced publications shall be submitted to and approved by the Contracting Officer. The testing shall have been performed by an independent laboratory approved by the Contracting Officer.

4. QUANTITY TO BE APPLIED. Bituminous material for the prime coat shall be applied in quantities of not less than 0.10 gallon nor more than 0.4 gallon per square yard of the surface to be primed. Application of prime coat shall be divided, if necessary, into 2 applications to avoid flowing off the surface. The

exact quantities which may be varied to meet field conditions shall be determined by the Contractor and approved by the Contracting Officer upon completion of a successful test strip.

5. WEATHER LIMITATIONS. The prime coat shall be applied only when the prepared surface is dry or contains moisture not exceeding quantity to permit uniform distribution and desired penetrations; and the temperature has not been below 35 degrees F., for 12 hours immediately prior to application. Prime coat shall not be applied when the atmospheric temperature in the shade is below 50 degrees F.

6. EQUIPMENT.

6.1 General. All equipment, tools, machines, used in the performance of the work required by this section shall be subject to approval and shall be maintained in satisfactory working condition.

6.2 Bituminous Distributor shall have pneumatic tires of such width and number than the load produced on the base surface shall not exceed 650 pounds per inch of tire width. The distributor shall be designed and equipped to distribute the bituminous material uniformly at even heat on variable widths of surface at readily determined and controlled rates from 0.05 to 2.0 gallons per square yard with a pressure range of 25 to 75 pounds per square inch and with an allowable variation not to exceed 5 percent from any specified rate. Distributor equipment shall include a separate power unit for the bitumen pump, full circulation spray bars, tachometer, pressure gage, volume measuring devices, adequate heaters for heating the materials to the proper application temperature, a thermometer to show the temperature of the tank contents, and a hose attachment suitable for applying bituminous material to spots unavoidably missed by the distributor. The distributor shall be equipped to circulate and agitate the bituminous material during the heating process.

6.3 Heating Equipment for Storage Tanks. Equipment for heating bituminous material shall consist of steam coils and equipment for producing steam, so designed that steam cannot get into the material. An armored thermometer with a range from 40 to 200 degrees F., shall be fixed to the tank so that the temperature of the bituminous material may be read at all times.

6.4 Brooms and Blowers shall be of the power type and shall be suitable for cleaning prepared surfaces.

7. PREPARATION OF SURFACE. Immediately before applying the weed killer and prime coat, all loose material, dirt, clay or other objectionable substance shall be removed from the surface by means of a power broom or blower supplemented with hand brooms. After the cleaning operation and prior to the application of the prime coat, an inspection of the area to be coated shall be made by the Contractor to determine its fitness to receive the bituminous material. The Contracting Officer shall be notified 24 hours in advance of application of the bituminous material. To assure a uniform spread of the bituminous material, the areas prepared for treatment, if excessively dry, shall be lightly sprinkled with water immediately before the application as directed.

8. WEED KILLER. A chemical weed killer shall be applied to subgrade surfaces of areas to be paved prior to application of the prime coat. The weed killer may be either a fire retardant non-corrosive, water soluble mixture of sodium chlorates and sodium borates, a commercial herbicide with active ingredients of not less than 25 percent prometon: 2, 4-bis (isopropylamine-6 methoxy-5-triazone), or dry

free flowing borax. The sodium chlorate-sodium borate mixture shall be applied in a water solution at a rate that will yield a minimum of one pound of sodium chlorate per 100 square feet of treated surface. The equipment used for application of the solution shall mechanically agitate and circulate the solution at all times application is in process. Borax shall be applied dry on a previously dampened subgrade at a rate to yield the equivalent of 3 pounds of boron trioxide (B_2O_3) per 100 square feet of treated surface. After application of the borax, the area shall be uniformly sprinkled with water. The quantity of water applied in the solutions or after application of dry borax shall be at least 4 gallons per 100 square feet of treated surface. The commercial herbicide shall be applied in a water solution at a rate of one gallon per 1,500 square feet.

9. APPLICATION OF BITUMINOUS MATERIAL. Immediately following the preparation of the surface, the bituminous material shall be applied by means of a bituminous distributor. The bituminous material shall be applied at a pressure and in the amounts as directed. The bituminous material shall be so applied that uniform distribution is obtained at all points of the surface to be treated. Unless the distributor is equipped to obtain satisfactory results at the junction of the previous and subsequent applications, building paper shall be spread on the surface of applied material for a sufficient distance back from the ends of each application so that flow from the sprays may be started and stopped on the paper, and all sprayers operate at full force on the surface to be treated. Immediately after the application, building paper shall be removed and destroyed. Spots unavoidably missed by the distributor shall be properly treated with bituminous material. Following the application of bituminous material, the surface shall be allowed to dry without being disturbed for a period of not less than 48 hours, or longer as necessary to attain penetration into the foundation course and evaporation of the volatiles from prime material. The Contractor shall furnish and spread enough approved sand to blot up effectively and cure any excess bituminous material. The Contractor shall maintain the primed surface until the succeeding layer of pavement is placed by protecting the surface against damage and by repairing and repriming deficient areas at no additional cost the Government. No smoking, fire, or flames other than heaters that are a part of the equipment shall be permitted within heating, distributing, or transferring operations of bituminous material.

9.1 Application Temperature shall be as directed and shall provide an application viscosity between 40 and 120 centistokes, kinematic, or 20 and 60 seconds, Saybolt-Furol. Application temperatures shall be within the following range, except that appropriate changes should be made when the range of viscosity is raised or lowered.

MC-70	120-180 degrees F.

The temperature-viscosity relationship shall be furnished to the Contracting Officer.

10. WAYBILLS AND DELIVERY TICKETS. Copies of waybills or delivery tickets shall be submitted during the progress of the work. Before the final statement is allowed, the Contractor shall file with the Contracting Officer certified waybills and/or certified delivery tickets for all bituminous material actually used in the construction of pavement covered by this section of the specification. The Contractor shall not remove bituminous material from the tank car or storage tank until the initial outage and temperature measurements have been taken by the Contracting Officer; nor shall the Contractor release the car or storage tank until the final outage has been taken by the Contracting Officer.

* * * * *

SECTION 2I

TACK COAT

Index

1. Applicable Publication
2. Bituminous Material
3. Sampling and Testing
4. Quantities To Be Applied
5. Equipment
6. Weather Limitations
7. Preparation of Surface
8. Application of Bituminous Material
9. Waybills and Delivery Tickets

1. APPLICABLE PUBLICATIONS. The publications listed below form a part of this specification to the extent referenced. The publications are referred to in the text by the basic designation only.

1.1 American Society for Testing and Materials (ASTM) Standards:

D 140-70 (R-1976)	Sampling Bituminous Materials
D 977-80	Emulsified Asphalt

1.2 American Association of State Highway and Transportation Officials (AASHTO) Standards:

T 102-74	Spot Test of Asphaltic Materials

2. BITUMINOUS MATERIAL used for the tack coat shall be asphalt emulsion and shall conform to the following requirements.

2.1 Asphalt Emulsion shall conform to ASTM D 977, Type RS-1, with the additional requirement that the base asphalt used to manufacture the emulsion shall show a negative spot when tested in accordance with AASHTO T 102, using the standard naphtha specified therein. The Contractor shall furnish a certified statement from the emulsion manufacturer giving an analysis of the base asphalt used in the manufacturer of the emulsion and attesting to conformity to the applicable requirements above.

3. SAMPLING AND TESTING.

3.1 Sampling. Samples of bituminous material, unless otherwise specified, shall be in accordance with ASTM D 140.

3.2 Testing shall be the responsibility of the Contractor. Testing shall be performed by an acceptable commercial testing laboratory or by the Contractor on approval of the Contracting Officer. Materials shall be tested to establish compliance with the specified requirements. Certificates of compliance shall be furnished.

4. QUANTITIES TO BE APPLIED. Bituminous material for the tack coat shall be applied in quantities of not less than 0.05 gallon nor more than 0.15 gallon per square yard. The exact quantities within the range specified may be varied to suit field conditions, shall be determined by the Contractor and approved.

5. EQUIPMENT.

5.1 General. All equipment, tools, and machines used in performance of work required by this section shall be subject to approval and shall be maintained in satisfactory working condition.

5.2 Bituminous Distributor shall have pneumatic tires of such width and number that the load produced on the base surface shall not exceed 650 pounds per inch of tire width. The distributor shall be designed and equipped to distribute bituminous material uniformly at even heat on variable widths of surface at readily determined and controlled rates ranging from 0.05 to 2.0 gallons per square yard, with a pressure range of 25 to 75 pounds per square inch, and with an allowable variation from specified rate not exceeding 5 percent. Distributor equipment shall include a separate power unit for the bitumen pump, full-circulation spray bars, tachometer, pressure gages, volume measuring devices, adequate heaters for heating materials to proper application temperature, thermometer for reading the temperature of tank contents, and a hose attachment suitable for applying bituminous material manually to cover areas inaccessible to the distributor. The distributor shall be equipped for circulation and agitation of the bituminous material during the heating process.

5.3 Heating Equipment. The equipment for heating bituminous material shall consist of steam coils and equipment for producing steam, designed so steam will not be introduced into the material. An armored theremometer with a range from 40 degrees F. to 170 degrees F. shall be fixed to the tank so temperature of the bituminous material may be read at all times.

5.4 Power Brooms and Power Blowers shall be suitable for cleaning the surfaces to which the tack coat is applied.

6. WEATHER LIMITATIONS. Tack coat shall be applied only when the surface to be treated is dry and the temperature shall not have been lower than 35 degrees F. for 12 hours immediately prior to application. It shall not be applied when the atmospheric temperature in the shade is lower than 50 degrees F.

7. PREPARATION OF SURFACE. Immediately before applying the tack coat, if surface is sufficiently bonded, all loose material, dirt, clay, or other objectionable material, shall be removed from the surface to be treated with a power broom or blower supplemented with hand brooms. After the cleaning operation, and prior to application of the tack coat, an inspection of the area to be treated will be made by the Contracting Officer to determine fitness of the area to receive the bituminous coating. That portion of surface prepared for immediate treatment shall be dry and in a satisfactory condition.

8. APPLICATION OF BITUMINOUS MATERIAL. Immediately following preparation of surface, the bituminous material shall be applied by a bituminous distributor at a temperature determined by the Contracting Officer, within the range of 75 to 130 degrees F. Under no circumstances shall emulsion be heated to a temperature greater than 140 degrees F. or exposed to a temperature of less than 40 degrees F. The bituminous material shall be applied so uniform distribution is obtained over all points of the surface to be treated. Unless the distributor is equipped to obtain satisfactory results at the junction of previous and subsequent applications, building paper shall be spread on the surface for a sufficient distance back from the ends of each application so that flow through the sprays may be started and stopped on the paper, and all sprays operate at full force on the surface to be treated. Immediately after application, the building paper

shall be removed and destroyed. Lightly coated areas and spots missed by the distributor shall be properly treated with bituminous material. Following application of bituminous material, the surface shall be allowed to dry to a proper condition of tackiness to receive surfacing. The period of time shall be as determined by the Contracting Officer. The Contractor shall furnish and spread a sufficient quantity of clean, dry sand on all areas that show an excess of bituminous material, to effectively blot up and cure the excess when directed by the Contracting Officer. The treated surface shall be maintained by the Contactor until the succeeding layer of pavements has been placed. During this interval the Contractor shall protect the treated surface against damage and shall repair all damaged spots at no additional cost to the Government.

9. WAYBILLS AND DELIVERY TICKETS. Copies of waybills or delivery tickets shall be submitted during the progress of the work. Before the final statement is allowed, the Contractor shall file with the Contracting Officer certified waybills and/or certified delivery tickets for all bituminous material used in the construction of the pavement covered by this section of the specification. The Contractor shall not remove bituminous material from tank car or storage tank until initial outage and temperature measurements have been taken, nor shall the Contractor release the car or storage tank until the final outage has been taken.

* * * * *

SECTION 2J

ASPHALT CONCRETE

Index

1. Applicable Publications
2. Description
3. Aggregates
4. Bituminous Material
5. Aggregate Gradation
6. Composition of Mixture
7. Mixing Plant
8. Other Equipment
9. Treatment of Underlying Surface
10. Transportation of Bituminous Material
11. Placing
12. Compaction of Mixture
13. Joints
14. Protection of Pavement
15. Surface Requirements
16. Sampling
17. Pavement Replacement

1. APPLICABLE PUBLICATIONS. The publications listed below form a part of this specification to the extent referenced. The publications are referred to in the text by the basic designation only.

1.1 American Association of State Highway Transportation Officials (AASHTO) Standard.

M 226-78	Viscosity Graded Asphalt Cement

1.2 American Society for Testing and Materials (ASTM) Publications.

C 117-80	Materials Finer Than No. 200 (75 um) Sieve in Mineral Aggregates by Washing
C 127-80	Specific Gravity and Absorption of Coarse Aggregate
C 128-79	Specific Gravity and Absorption of Fine Aggregate
C 136-80	Sieve or Screen Analaysis of Fine and Coarse Aggregates
D 242-70 (R 1980)	Mineral Filler for Bituminous Paving Mixtures
D 1559-16	Resistance to Plastic Flow of Bituminous Mixtures Using Marshall Apparatus

1.3 Military Standard (Mil. Std.).

MIL-STD-620A & Notice 1	Test Methods for Bituminous Paving Materials

2. DESCRIPTION. Asphalt concrete indicated as "A.C." shall consist of fine and coarse aggregates and mineral filler, if required, uniformly mixed with hot bituminous material, and placed and compacted on a prepared base course as indicated.

3. AGGREGATES shall consist of crushed stone, crushed slag, crushed or uncrushed gravel, screenings, sand, and mineral filler. Aggregates shall have a satisfactory service record in bituminous pavement construction. The source selected shall be approved by the Contracting Officer. Material passing the No. 200 sieve shall be known as mineral filler. Mineral filler shall conform to ASTM D 242. The combined aggregates and mineral filler shall meet the requirements of subsequent paragraphs entitled AGGREGATE GRADATION and COMPOSITION OF MIXTURE.

4. BITUMINOUS MATERIAL to be mixed with the mineral aggregates shall be asphalt cement conforming to AASHTO M226, viscosity grade (AR-4000) Table 3.

5. AGGREGATE GRADATION. The aggregate for the asphalt concrete and asphalt concrete surface course shall consist of type a gradation, and the aggregate for the asphalt concrete base course shall consist of type b gradation as follows or as approved by the Contracting Officer. The aggregate gradation shall be as determined by ASTM C 117 and C 136.

Sieve Openings	Percentage by Weight, Passing	
	a	b
1 inch	100	100
3/4 inch	80-100	97-100
1/2 inch	65-85	85-100
3/8 inch	55-75	70-90
No. 4	40-60	50-75
No. 8	25-45	35-65
No. 30	20-30	20-40
No. 200	2-8	2-8

6. COMPOSITION OF MIXTURE.

6.1 Job-Mix Formula shall be submitted by the Contractor by the Contracting Officer in coordination with the City of Scottsdale, and no bituminous mixture shall be manufactured until it has been approved. The formula will indicate the percentage of each sieve fraction of aggregate, percentage of asphalt, and temperature of the mixture as discharged from the mixer. The percentage of asphalt in the job-mix formula will be between 5.0 percent and 8.5 percent. Samples of the aggregates and asphalt shall be submitted for approval with the job-mix formula.

6.2 Test Properties of Bituminous Mixtures. The apparent specific gravity, as determined by ASTM C 127 and C 128, shall be used in computing the voids total mix and voids filled with bitumen, and the mixture shall meet the following requirements as determined by ASTM D 1559.

Test Property	50-Blow Compaction
Stability, minimum, pounds	500
Flow, maximum, 1/100-inch	20
Voids total mix, percent	3-5
Voids filled with bitumen, percent	75-85

6.3 Stripping of Aggregates. If the index of retained stability of the job-mix formula is less than 75 tested in accordance with Method 104 of MIL-STD-620, the aggregates shall be rejected or treated by one of the following procedures:

(1) Addition of heat-stable additives to bitumen.

(2) Addition of hydrated lime, or other cementitious material containing free lime, as a portion of the mineral filler.

7. MIXING PLANT shall be a weigh-batch or continous-mixing type approved by the Contracting Officer and operated so as to produce a mixture within the job-mix formula.

8. OTHER EQUIPMENT.

8.1 Bituminous-Material Spreaders shall be self-propelled, capable of producing a finished surface conforming to the smoothness requirements specified hereinafter. The use of a spreader that leaves indentations or other objectionable irregularities in the freshly-laid mix will not be permitted.

8.2 Blowers and Brooms shall be of the power type suitable for cleaning the surface to be paved.

8.3 Saws shall be of the power type, capable of rapidly cutting pavement and trimming joints and edges of pavement.

8.4 Small Tools available on the work shall consist of the following: rakes, lutes, shovels, tampers, smoothing irons, pavement cutters, portable heater for heating small tools, wood sandals and stilt sandals of standard type, and other small tools as may be required.

8.5 Steel-Wheel Rollers shall be self-propelled, 3-wheel (tricycle) and/or tandem type, weighing not less than 20,000 pounds each. The rollers shall have adjustable wheel scrapers, water tanks, and sprinkling apparatus to keep the wheels sufficiently wet to prevent the bituminous mixture from sticking to the wheels. Rollers shall be capable of reversing without backlash and shall be free from worn parts. Roller wheels shall not have flat or pitted areas or projections that will leave marks in the pavement.

8.6 Pneumatic-Tired Rollers shall be self-propelled and shall consist of two axles on which are mounted multiple pneumatic-tired wheels in such manner that the rear group of wheels will not follow in the tracks of the forward group but spaced to give essentially uniform coverage with each pass. Axles shall be mounted in a rigid frame provided with a loading platform or body suitable for ballast loading. Tires shall be smooth and capable of being inflated to at least 90 psi. Construction of roller shall be such that each wheel can be loaded to a minimum of 4,500 pounds.

9. TREATMENT OF UNDERLYING SURFACE. Prior to laying a bituminous course, the underlying surface shall be cleaned of loose and foreign matter by sweeping with power sweepers, power brooms, and hand brooms, as directed. The surface to be paved shall receive a prime coat or tack coat as applicable conforming to the requirements of the section.

10. TRANSPORTATION OF BITUMINOUS MIXTURE. The bituminous mixture shall be transported from the mixing plant to the site in trucks having tight, clean, smooth bodies with a minimum coating of concentrated solution of hydrated lime and water to prevent adhesion of the mixture. Each load of mixture shall be covered with canvas or other suitable material to protect the mixture from the weather and to prevent loss of heat. Mixtures having temperatures greater than 350 degrees, mixtures having temperatures less than 235 degrees, or mixtures which form or show indications of moisture will be rejected. Hauling over freshly laid material will not be permitted.

11. PLACING. Contact surfaces of previously constructed pavement, curbs, manholes, and other structures shall be sprayed with a thin coat of asphalt. The mechanical spreader shall be adjusted and its speed regulated so that the surface of the course being placed will be smooth and continuous without tears and pulling. The course will be of such depth that after compaction, the cross section, grade, and contour will be as indicated. In areas where the use of machine spreading is impractical, the mixture shall be spread by hand. Unless otherwise directed, placing shall begin on the high side of areas with a one-way slope or along the centerline of areas with a crowned section and shall be in the direction of the main traffic flow. Placing of the mixture shall be as continuous as possible, and the speed of placing shall be adjusted, as directed, to permit proper rolling.

12. COMPACTION OF MIXTURE shall be accomplished by steel-wheel and pneumatic tired rollers. Rolling shall begin as soon after placing as the mixture will support the roller without undue displacement. Rolling of the course shall be continued until all roller marks are eliminated and at least 95 percent of the density of a laboratory specimen of the same mixture has been obtained. The speed of the rollers at all times shall be slow enough to avoid displacement of the hot mixture. The wheels of the roller shall be moistened to prevent adhesion of the mixture. In areas not accessible to the roller, the mixture shall be compacted with hot hand tampers.

13. JOINTS. The joints between old and new pavements or between lanes of new work shall be constructed so as to insure uniform bond, texture, density, and smoothness as in other sections of the course. Edges of existing pavement shall be cut to straight, vertical surfaces. All contact surfaces of existing pavement shall be painted with a thin, uniform coat of tack coat.

14. PROTECTION OF PAVEMENT. After final rolling, no vehicular traffic shall be permitted on the pavement for at least 6 hours after rolling.

15. SURFACE REQUIREMENTS. The finished surface shall not vary more than 1/4 inch from a 10-foot straightedge. The straightedge shall be furnished by the Contractor. Defective areas shall be corrected by the Contractor at no additional cost to the Goverment.

16. SAMPLING. Sampling for the determination of thickness and density of the completed pavements will be performed by the Contracting Officer. All tests necessary to determine conformance with the specified requirments will be performed by the Contracting Officer without cost to the Contractor. The Contractor shall replace the pavement where samples are removed at his expense. No payment will be made for areas of pavment deficient in composition, density, or thickness until they are removed and replaced by the Contractor as directed by the Contracting Officer.

17. PAVEMENT REPLACEMENT. A two course installation at a total 4 inch thickness of the A.C. surface shall be placed on 20 inches of A.B.C. at all locations that require pavement replacement on top of trenches. Where the trench crosses a road, 4 inches of pavement shall be placed between the edges of the old pavement. Where the trench is parallel to the road but to one side of the centerline, 3 inches of pavement shall be placed between the edges of the old pavement with the top surfaces even, and a one-inch thickness of pavement shall overlay the old and new pavement between the road centerline and the curb. Where the trench is parallel to the road and extends each side of the road centerline, the above procedure

shall be followed except that the one-inch overlay shall extend from curb to curb. Any structures within the area to be paved which were at road grade shall be adjusted to be flush with the new grade line.

* * * * *

SECTION 2JJ

BITUMINOUS SURFACE TREATMENT

Index

1. Applicable Publication
2. Materials
3. Sampling and Testing
4. Quantities of Materials Per Square Yard
5. Equipment, Tools, and, Machines
6. Weather Limitations
7. Conditioning of Base Courses
8. Preparation of Surface
9. Application of First Bituminous Surface Treatment
10. Brooming and Rolling
11. Waybills and Delivery Tickets

1. APPLICABLE PUBLICATIONS. The publications listed below form a part of this specification to the extent referenced. The publications are referred to in the text by the basic designation only.

1.1 American Society for Testing and Materials (ASTM), publications.

C 29-78	Unit Weight and Voids in Aggregate
C 88-76	Soundess of Aggregates by Use of Sodium Sulfate or Magnesium Sulfate
C 131-81	Resistance to Degradation of Small-Size Coarse Aggregate Abrasion and Impact in the Los Angeles Machine
C 136-81	Sieve Analysis of Fine and Coarse Aggregates
D 75-71 (R 1978)	Sampling Aggregates
D 140-70 (R 1976)	Sampling Bituminous Materials
D 1250-80	Petroleum Measurement Tables
D 1664-80	Coating and Stripping of Bitumen-Aggregate Mixtures
D 2397-79	Cationic Emulsified Asphalt

2. MATERIALS. Minerals aggregate and bituminous material of the following types, gradations, grades, and consistencies and meeting the requirements of stripping, wear, and soundness tests as specified in paragraph SAMPLING AND TESTING shall be used.

2.1 Mineral aggregate shall consist of crushed stone, crushed gravel, or crushed slag and shall be of such nature that thorough coating of bituminous material used in the work will not strip off upon contact with water. Moisture content of the aggregate shall be such that the aggregate will be readily coated with the bituminous material. Drying may be required, as directed. Aggregate shall conform to the gradations shown in Tables 1 and 2, herein. Gradation of the aggregates shall be determined by ASTM C 136. At least 70 percent by weight of the material retained on the No. 8 sieve shall have at least one rough angular face produced by crushing.

2.1.2 Crushed stone shall consist of clean, sound, durable particles, free of soft or disintegrated pieces, dust, or foreign matter.

2.1.2 Crushed gravel shall consist of clean, sound, durable particles, free of soft or disintegrated pieces or foreign matter. At least 90 percent by weight of the particles shall have at least two fractured faces.

2.1.3 Crushed slag shall be an air-cooled blast-furnace product having a dry weight of not less than 70 pounds per cubic foot, and shall consist of angular particles uniform in density and quality and free of dust and foreign matter. The weight of a cubic foot of slag aggregate shall be determined by ASTM C 29.

TABLE 1. AGGREGATE GRADATIONS, BITUMINOUS SURFACE TREATMENT

	Percentage by Weight Passing Square-mesh Sieves Gradation Designations	
Sieve Designation	No. 1	No. 2
1 in.	-	-
3/4 in.	-	-
1/2 in.	-	-
3/8 in.	100	100
No.4	65-100	85-100
No.8	0-20	0-20
No. 40	0-5	0-5
200	0-2	0-2

2.2 Bituminous materials shall be asphalt conforming to ASTM D 2397, CRS-2.

3. SAMPLING AND TESTING shall be the responsibility of the Contractor. Sampling and testing shall be performed by an approved commercial testing laboratory, or by the Contractor subject to approval. Sampling shall be in accordance with ASTM D 75 for aggregates and ASTM D 140 for bituminous material, unless otherwise directed. Tests shall be performed in sufficient number to insure that materials meet specified requirements. Copies of test results shall be furnished to the Contracting Officer.

3.1 Stripping test. A test sample consisting of the aggregate and bitumen to be used shall meet requirements of ASTM D 1664.

3.2 Wear test will be performed in accordance with ASTM C 131 to insure that aggregates have a percentage of wear not exceeding 40 percent after 500 revolutions.

3.3 Soundness test will be performed as specified by ASTM C 88 to insure that aggregates have a weight loss not greater than 18 percent when subjected of five cycles of the magnesium sulfate test.

4. QUANTITIES OF MATERIALS PER SQUARE YARD. The bituminous material and aggregate shall be spread within the quantity limits shown in Table 2. The individual quantities of bituminous material and aggregate may be varied to meet specific field conditions at all times during progress of the work, as directed, without adjustments to contract unit prices. Aggregate weights shown in these tables are those having a specific gravity of 2.65. If the specific gravity of

aggregate used is other than 2.65, appropriate adjustments shall be made in number of pounds required to insure a constant volume of aggregate per square yard of treatment.

TABLE 2. APPLICATION OF BITUMINOUS MATERIAL, SINGLE SURFACE TREATMENT

Aggregate pounds per square yard	CRS-2 gallons per square yard
20-25	0.25-0.35

5. EQUIPMENT, TOOLS, AND MACHINES used in performance of the work shall be subject to approval and shall be maintained in a satisfactory working condition at all times.

5.1 Bituminous distributors shall have pneumatic tires of such width and number that the load produced on the base surface does not exceed 650 pounds per inch of tire width. Distributors shall be designed and equipped to distribute bituminous material uniformly at even heat on various widths of surface at readily determined and controlled rates ranging from 0.05 to 2.00 gallons per square yard, with a pressure range of 25 to 75 p.s.i. The allowable variation from any specified rate shall not exceed 5 percent. Distributor equipment shall include a separate power unit for the bitumen pump, full-circulation spray bars, tachometer, pressure gages, volume-measuring devices, a thermometer for reading the temperature of tank contents, and a hose attachment suitable for applying bituminous material to inaccessible areas and patches. The distributor shall be equipped for circulation and agitation of the bituminous material during the heating process.

5.2 Single-pass, surface-treatment machines shall be capable of spraying bituminous material and spreading aggregate in one pass. Bituminous spraying equipment shall conform to the requirements given above for a bituminous distributor. The machine shall be capable of spreading aggregates at controlled amounts per square yard as specified. In addition, the single-pass, surface-treatment machine shall be capable of placing a surface treatment adjacent to an existing surface treatment, forming a joint of the same thickness and uniformity as other portions of the surface treatment. Ridges or blank spaces will not be permitted. Joints in the second application shall be formed at least one foot from those formed in the first application.

5.3 Heating equipment for storage tanks shall consist of coils and equipment for producing steam or hot oil designed so steam or hot oil will not be introduced into the material. An armored thermometer with a range of 100 to 400 F shall be affixed to the tank so the temperature of the bituminous material may be determined at all times.

5.4 Power rollers shall be steel-wheeled or pneumatic-tired type conforming to the following requirements.

5.4.1 Steel-wheeled rollers shall be of tandem construction weighing 5 to 8 tons and shall be suitable for rolling bituminous pavements. Wheels of the rollers shall be equipped with adjustable scrapers. Rollers shall be equipped with water tanks and sprinkling apparatus used when necessary to keep the wheels wet to prevent adherence of bituminous material to the wheels.

5.4.2 Pneumatic-tired rollers shall be self-propelled and have wheels mounted on two axles in such manner that the rear tires will not follow in the tracks of the forward group. Tires shall be uniformly inflated to not less than 60 nor more than 80 p.s.i. pressure. The pneumatic-tired roller shall be equipped with boxes or platforms for ballast loading and shall be loaded so that the tire print width of each wheel is not less than the clear distance between tire prints.

5.5 Mechanical spreaders shall be adjustable and capable of spreading aggregate at controlled amounts per square yard, as specified.

5.6 Drags shall be a type that will spread the aggregate uniformly over the surface of the area treated. Drags shall be equipped with tow plates for towing. Towing equipment shall be pneumatic-tired.

5.7 Brooms and blowers shall be power type, capable of cleaning surfaces to be treated.

5.8 Scales shall be standard truck scales of the beam type equipped with a weight-recording device. Scales shall be sufficient size and capacity to accommodate trucks used in hauling aggregates. Scales shall be tested and approved by an inspector of the State inspection bureau charged with scale inspection within the state in which the project is located. If an official of the inspection bureau is not available, the scales will be tested by the Contracting Officer. The Contractor shall have the necessary number of standard weights for testing the scales on hand at all times.

5.9 Weighhouse shall be weatherproof and shall be constructed in a manner to afford adequate protection for the indicating and recording devices of the scales. The weighhouse shall have one sliding window facing the scale platform, one end window, and a shelf desk at least 2 feet wide by 6 feet long.

6. WEATHER LIMITATIONS. The double bituminous surface treatment shall be applied only when the existing surface or base course is dry or contains moisture not in excess of that which will permit uniform distribution and desired penetration. Bituminous surface treatment shall not be applied when either the atmospheric temperature in the shade is below 50° F or the pavement surface to be treated is below 70° F, unless otherwise directed.

7. CONDITIONING OF BASE COURSES. Surfaces of base courses will be inspected and tested for tolerance by the Contracting Officer. Deviations exceeding required tolerances shall be corrected, as directed. Ruts or soft yielding spots that appear in the base course shall be corrected by loosening, removing unsuitable material, adding suitable material, reshaping, and recompacting to line and grade, as directed. When so specified, the base course shall be treated with a prime coat as specified in Section: BITUMINOUS PRIME COAT.

8. PREPARATION OF SURFACE. Immediately before applying the first application of bituminous material, the primed surface shall be cleaned of loose material with power brooms or power blowers as directed. Care shall be taken to remove all dirt, clay, and other loose or foreign matter. After the cleaning operation has been completed and prior to the first application of bituminous material, the area to be treated will be inspected by the Contracting Officer to determine the fitness of the area for receiving the first application of bituminous material.

9. APPLICATION OF FIRST BITUMINOUS SURFACE TREATMENT.

9.1 Application of bituminous material shall be applied by means of a bituminous distributor at a temperature within the range of 125° to 185° F, or as directed. The bituminous material shall be applied within the limits specified in paragraph QUANTITIES OF MATERIALS PER SQUARE YARD, as determined by the Contracting Officer. Bituminous material shall be applied so that uniform distribution is obtained over all points of surface treated. Unless the distributor is equipped to obtain a satisfactory result at the junction of previous and subsequent applications, building paper shall be spread on the surface for a sufficient distance back from the ends of each application so that flow through the sprays may be started and stopped on the paper in order that all sprays will operate at full force on the surface treated. Immediately after application, the building paper shall be removed and destroyed. All areas inaccessible to the distributor shall be properly treated with bituminous material using the hose attachment. No smoking, fires, or flames other than the heaters that are part of the equipment shall be permitted within 25 feet of heating, distributing, or transferring operations of bituminous materials other than bituminous emulsions. If tar is used, a full-face, organic, vapor-type respirator and protective creams shall be used by personnel exposed to fumes. Protective creams shall not be substituted for cover clothing.

9.2 Spreading of aggregate. Immediately following application of bituminous material, coarser aggregate shall be spread uniformly over the surface within the limited quantities specified in paragraph QUANTITIES OF MATERIALS PER SQUARE YARD. Spreading shall be done with mechanical spreaders. Aggregate shall be spread evenly by hand on all areas missed by the mechanical spreader. Equipment spreading aggregate shall be operated so that bituminous material will be covered before any vehicle travels thereon. When hand spreading is employed on inaccessible areas, aggregate shall be spread directly from trucks. Additional aggregate shall be spread by hand over areas having insufficient cover, and spreading shall continue during the operations when necessary.

10. BROOMING AND ROLLING. The surface shall be rolled after sufficient aggregate is spread. Rolling shall continue until no more aggregate can be worked into the treated surface. Rolling of the course shall be accomplished by use of a self-propelled pneumatic-tired roller or tandem power roller. If rolling the course with a tandem power roller excessively crushes and shatters the aggregate, the roller shall be removed from the course. Additional rolling required shall be accomplished with self-propelled pneumatic-tired roller, as directed. The surface shall be broom-dragged as soon as possible after the first coverage by the roller, if the aggregate is not distributed properly, but not until the surface has set sufficiently to prevent excessive marking. Dragging, rolling, and supplemental spreading of aggregate shall continue until the surface is cured and rolled sufficiently to key and set the aggregate, as approved. In places not accessible to the rollers, the aggregate shall be adequately compacted with pneumatic tampers. Aggregate that becomes coated or mixed with dirt or any other foreign matter shall be removed, replaced with clean aggregate and rerolled, as directed. Surplus aggregate shall be swept off the surface and removed prior to the second application of bituminous material. The Contractor shall maintain and protect the treated areas by use of barricades, if so directed.

11. WAYBILLS AND DELIVERY TICKETS. Copies of waybills and delivery tickets shall be submitted during progress of the work. Before the final statement is allowed, the Contractor shall file with the Contracting Officer certified waybills and delivery tickets for all bituminous and paving materials used in the bituminous

surface treatment. The Contractor shall not remove bituminous material from the tank car or storage tank until initial outage and temperature measurements have been taken by the Contracting Officer; nor shall the car or tank be released until final outage has been taken by the Contracting Officer.

* * * * *

SECTION 2K

FENCING

Index

1. Applicable Publications
2. Materials
3. Installation

1. APPLICABLE PUBLICATIONS. The publications listed below form a part of this specification to the extent referenced. The publications are referred to in the text by the basic designation only.

1.1 Federal Specification (Fed. Spec.).

RR-F-191H/GEN	Fencing, Wire and Post Metal (and Gates, Chain-Link Fence Fabric, and Accessories)

1.2 American Society for Testing and Materials (ASTM) Standards.

B 32-76	Solder Metal
C 94-80	Ready-Mixed Concrete

2. MATERIALS shall conform to Fed. Spec. RR-F-191H/GEN and other requirements specified below.

2.1 Chain-Link Fabric. Fed. Spec. RR-F-191, part 1, type I, 2 oz. coating and shall be 9 gage wire woven in a 2-inch mesh, with knuckled selvage top and bottom. Fabric shall be 4 foot height, unless indicated otherwise.

2.2 Concrete. ASTM C 94, using 3/4-inch maximum size aggregate, and having minimum compressive strength of 3,000 p.s.i. at 28 days. Grout shall consist of one part Portland cement to 3 parts clean, well-graded sand and the minimum amount of water to produce a workable mix.

2.3 Post, Rails and Accessories for Chain-Link Fences. Fed. Spec. RR-F-191, parts 3 and 4, Zinc coated except as modified herein.

2.3.1 Tension Wire. Minimum Tensile strength of 80,000 pounds per square inch, zinc-coated.

2.3.2 Tie Wire. Aluminum alloy of 0.144-inch diameter for attaching fabric to toprail and to intermediate posts. Hog rings of 0.110-inch diameter aluminum wire shall be used for attaching fabric to top and bottom wires. Preformed clips of 6-gaged zinc-coated steel wire may be used for attaching fabric to intermediate posts.

2.3.3 Post Braces and Truss Rods. For each gate, corner, pull, or end post. Truss rods shall be provided with turnbuckles or other equivalent provisions for adjustment.

2.3.4 Post, Rails, and Braces. Except as otherwise specified, posts, rails, and braces shall be either round or H-Section, however, the same type shall be used throughout the project.

3. INSTALLATION OF FENCE.

3.1 General. The fence shall be installed to the alinement indicated. Fence installation shall be in accordance with the fence manufacturer's written installation instructions except as modified herein. Boundary, spillway and Channel fencing details shall conform to the attached sketches No. 1a and No 3.

3.2 Post Setting. Posts shall be set plumb and in alinement. Posts shall be set in concrete bases of the dimensions indicated except where posts are set in performed holes in the wall. Concrete shall be thorougly compacted, free of voids and finished in a dome. Braced pull posts shall be installed at fence ends, intersections, each change in direction of 10 degrees or more horizontally, and at each grade change of 5 degrees or more. In addition, straight runs between braced pull posts shall not exceed 500 feet unless otherwise indicated or specified. Posts set in concrete walls shall be set with a minimum of one inch of grout around each post. Grout shall be thoroughly worked into the holes so as to be free of voids, and finished in a dome. Grout shall be cured a minimum of 72 hours before any further work is done on the posts.

3.3 Post Tops shall be installed as recommended by the manufacturer and be securely fastened to posts. Post tops shall be of the design as required to accommodate the toprail where required. Studs driven by low-velocity explosive-actuated tool may be used with steel, wrought iron, ductile iron, or malleable iron. Studs driven by any explosive-actuated tool will not be used with gray iron or other material that will be fractured.

3.4 Toprail shall be installed before installing chain-link fabric. Toprail shall be installed on both side of gate opening and at bridge approaches, where the slope of the top of the wall is greater than 2 horizontal to 1 vertical.

3.5 Top and Bottom Tension Wires shall be installed before installing chain-link fabric and shall be pulled taut.

3.6 Fabric shall be pulled taut and secured to the toprail or topwire and to the bottom wire close to both sides of each post and at intervals of not more that 24 inches on centers. Fabrics shall be attached to the sides of the post away from the channel or enclosed opening. Fabric shall be secured to braced pull posts using stretcher bars and ties or clips or by integrally weaving to integral fastening loops of ends, corner, pull, and gate posts for the full length of each post. Fabric shall be attached to line posts at not greater than 15 inches on center using ties or clips. Splices in fabric shall be made with suitable splicing wire. Edges of fabric made by field cuts shall be knuckled or barbed as directed.

3.7 Repair. In the event that any portion of galvanized items is abraded or otherwise damaged to the extent that the base metal is exposed, such damaged or abraded portions shall be neatly covered with Grade 50B solder comforming to the requirements of ASTM B 32.

* * * * *

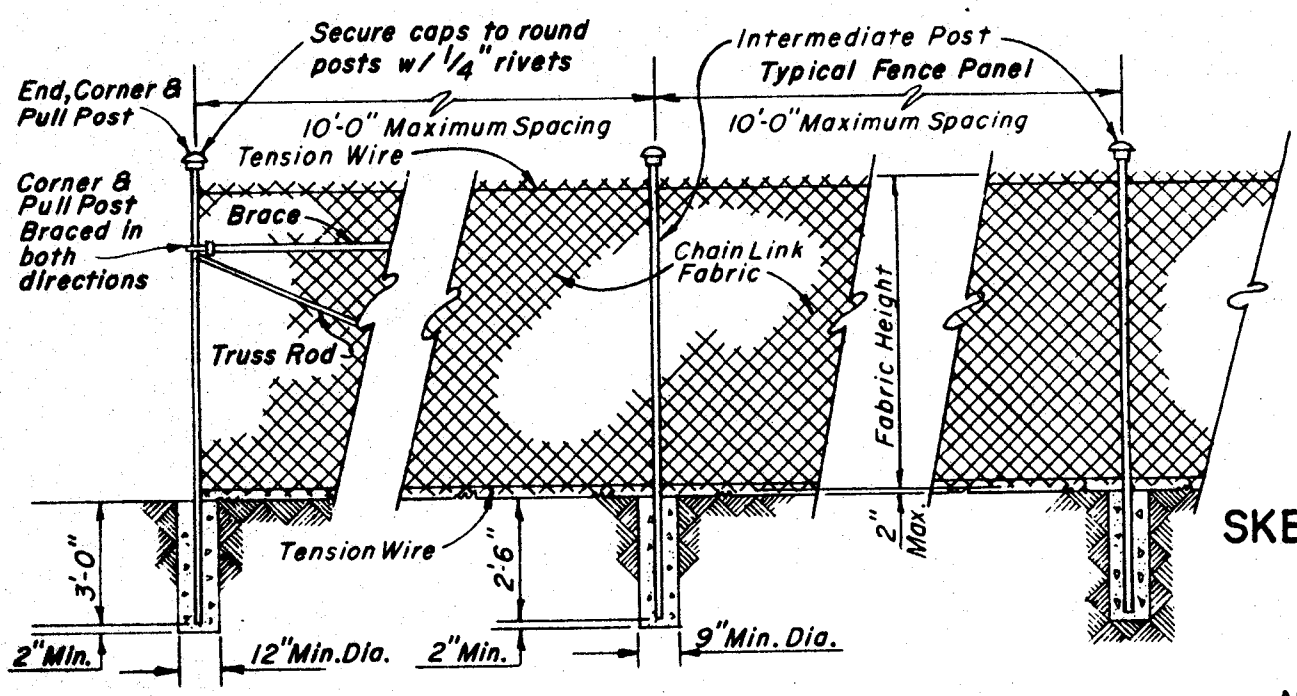

R/W FENCE DETAIL

SKETCH NO.

1a

APRIL 1973
R/W FENCE GATES
Rev. Sept. 1973

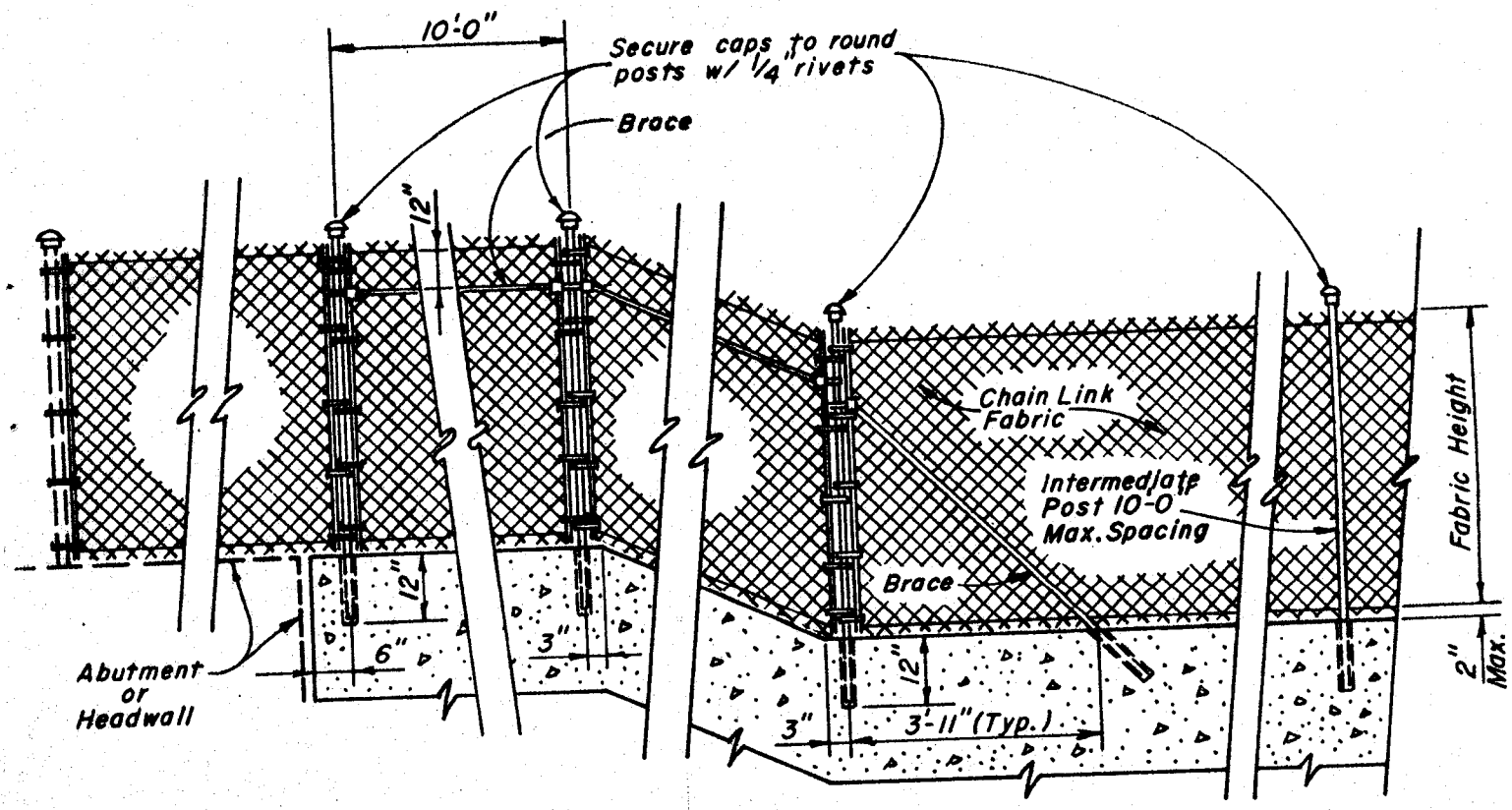

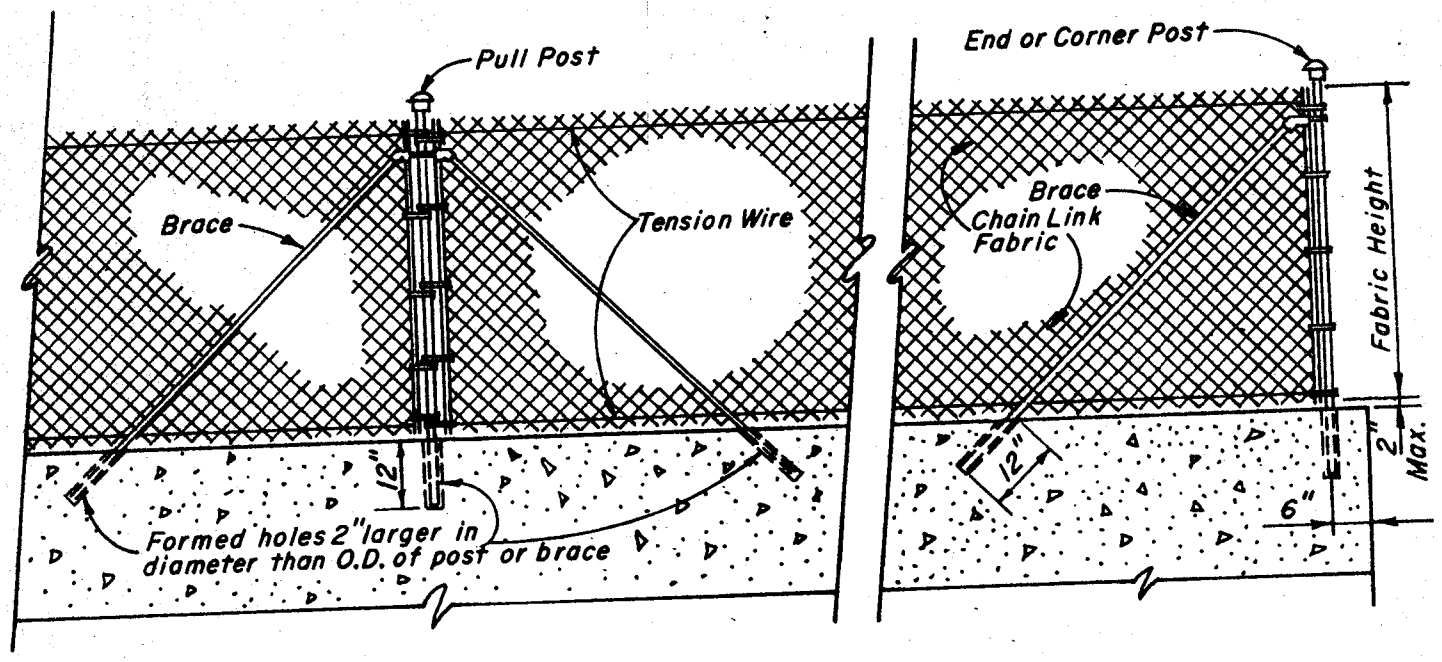

Note: Grout all post and diagonal braces in place.

SKETCH NO.

CHANNEL FENCE DETAILS

3

APRIL 1973

CHANNEL WALL FENCE

Rev. Sept. 1973

SECTION 2L

WATERLINE RELOCATION

Index

1. Applicable Publications
2. General
3. Excavation, Trenching, and Backfilling for Waterlines
4. Materials
5. Deleted
6. Installation
7. Hydrostatic Tests
8. Disinfection
9. Cleanup
10. Salvage

1. APPLICABLE PUBLICATIONS. The publications listed below form a part of this specification to the extent referenced. The publications are referred to in the text by the basic designation only.

1.1 Federal Specifications (Fed. Spec.).

QQ-C-40 & Am-2	Calking: Lead Wool and Lead Pig
SS-P-381a & Am-2	Pipe; Concrete, (Pressure, Reinforced Pretensioned Reinforcement Steel Cylinder Type)
WW-P-325a	Pipe, Bends and Traps; Lead (for) Plumbing and Water-Distribution
WW-P-421c	Pipe, Cast Gray and Ductile Iron, Pressure (for Water and Other Liquids)
WW-V-51E & Int. Am-2 (GSA-FSS)	Valve, Angle, Check, and Globe, Bronze (125, 150 and 200 Pound, Threaded End, Flange Ends, Solder Ends, and Brazed End for Land Use)
WW-V-54D & Int. Am-2 (GSA-FSS)	Valve, Gate, Bronze (125, 150 and 200 Pound, Threaded Ends, Flanged Ends, Solder End, and Brazed Ends, for Land Use)

1.2 American National Standards Institute, Inc. (ANSI) Standards.

A21.4-1974	Cement-Mortar Lining for Cast-Iron and Ductile-Iron Pipe and Fittings for Water
A21.6-1975	Cast-Iron Pipe Centrifugally Cast in Metal Molds, for Water or Other Liquids

A21.8-1975	Cast-Iron Pipe Centrifugally Cast in Sand-Lined Molds, for Water or Other Liquids
A21.10-1971 & A21.10a-1972	Gray-Iron and Ductile-Iron Fittings, 2 in. through 48 in. for Water and Other Liquids
A21.11-1972	Rubber Gasket Joints for Cast-Iron and Ductile-Iron Pressure Pipe and Fittings
A21.51-1971	Ductile-Iron Pipe, Centrifugally Cast in Metal Molds or Sand-Lined Molds, for Water or Other Liquids
B16.1-1975	Cast-Iron Pipe Flanges and Flanged Fittings 25, 125, 250 and 800 lb.
B16.3-1971	Malleable-Iron Threaded Fittings, 150 and 300 lb.
B16.26-1975	Cast Copper Alloy Fittings for Flared Copper Tubes
B36.10-1975	Welded and Seamless Wrought Steel Pipe

1.3 American Society for Testing and Materials (ASTM) Standards.

A 120-73	Black and Hot-Dipped Zinc-Coated (Galvanized) Welded and Seamless Steel Pipe for Ordinary Uses
B 88-76	Seamless Copper Water Tube
C 1784-75	Rigid Poly (Vinyl Chloride) Compounds and Chlorinated Poly(Vinyl Chloride) Compounds
D 2774-72	Recommended Practice for Underground Installation of Thermo-plastic Pressure Piping

1.4 American Water Works Association (AWWA) Standards.

B300-75	Hypochlorites
B301-59	Liquid Chlorine
C200-75	Steel Water Pipe 6 Inches and Larger
C203-73	Coal-Tar Protective Coatings and Linings for Steel Water Pipe Lines-Enamel and Tape-Hot Applied

C205-71	Cement-Mortar Protective Lining and Coating for Steel Water Pipe--4 in. or Larger-Shop Applied
C207-55	Steel Pipe Flanges
C208-59	Dimensions for Steel Water Pipe Fittings
C500-71	Gate Valves--3 in. Through 48 in.--for Water and Other Liquids
C502-73	Dry Barrel Fire Hydrants
C503-75	Wet-Barrel Fire Hydrants for Ordinary Water Works Service
C504-74	Rubber-Seated Butterfly Valves
C600-64	Installation of Cast-Iron Water Mains
C601-68	Disinfecting Water Mains
C800-66	Threads for Underground Service Line Fittings

1.5 National Fire Protection Association (NFPA) Standard.

No. 24-1973	Outside Protection
No. 49-1975	Hazardous Chemicals Data
No. 325M-1969	Flammable Liquids, Gases and Volatile Solids
No. 704-1975	Identification of the Fire Hazards of Materials

1.6 National Sanitation Foundation (NSF) School of Public Health, University of Michigan, Ann Arbor, MI 48106.

1.7 Maricopa Association of Governments Standards (MAG. STD SPEC 1979).

1.8 City of Phoenix Standard Detail.
P-1342 Water Service Connections.

2. GENERAL. This section covers waterline relocation. Pipe and accessories shall be new and unused unless otherwise approved.

2.1 Piping for Waterlines shall be steel, unless otherwise shown or specified.

2.1.1 Non-galvanized-Steel Pipe shall be used on Scottsdale waterline.

2.2 Recommendations of the Manufacturer. The Contractor shall, as a part of the shop drawings, submit to the Contracting Officer the manufacturer's recommendations for each material or procedure to be utilized which is required to be in

accordance with such recommendations. The Contractor shall have a copy of the manufacturer's instructions available at the construction site at all times.

3. EXCAVATION, TRENCHING, AND BACKFILLING FOR WATERLINES. Excavation, trenching, and backfilling shall be in accordance with the applicable provisions of sections: EXCAVATION, and FILLS AND SUBGRADE PREPARATION (MAG STD SPEC. SECT. 601) except as modified herein.

4. MATERIALS shall conform to the respective specifications and other requirements specified below, and MAG details at end of this section.

4.1 Pipe.

4.1.2 Cast-Iron Pipe. Fed. Spec. WW-P-421, class 150, type I, II, or III, unless otherwise shown or specified, or ANSI A21.6 or A21.8, working pressure not less than 150 pounds per square inch, unless otherwise shown or specified. Pipe shall be cement-mortar lined.

4.1.3 Copper Tubing. ASTM B 88, type K, annealed.

4.1.4 Ductile Iron Pipe. ANSI A21.51, working pressure not less than 150 pounds per square inch unless otherwise shown or specified. Pipe shall be cement-mortar lined.

4.1.5 Steel Pipe 3 Inches and Larger, not Galvanized. AWWA C200 with dimensional requirements as given in ANSI B36.10 for pipe 6 inch in diameter and larger, and ASTM A 120 for smaller sizes. Pipe shall be welded or seamless with plain ends for use with mechanical couplings or bell-and-spigot ends with rubber gaskets. Bell-and-spigot ends for sizes less than 6-inch diameter shall be as required by AWWA C200. The minimum wall thickness of the various sizes of pipe shall be as stated for standard weight pipe (schedule 40) in ASTM A 120 unless otherwise directed.

4.1.6 Galvanized-Steel Pipe, Less Than 3 Inches. ASTM A 120, standard weight.

4.1.7 Protective materials for steel pipe, except as hereinafter specified, shall be mechanically applied in a factory or plant especially equipped for the purpose. The materials shall, unless otherwise indicated on the drawings, consist of one of the following for the indicated pipe material and size.

4.1.7.1 Galvanized-Steel Pipe Less Than 3 Inches. Steel pipe and fittings less than 3 inches in diameter shall be thoroughly cleaned of foreign material by wire brushing and solvent cleaning, and then given one coat of coal-tar primer and two coats of coal-tar enamel conforming to AWWA C203, threaded ends of pipe and fittings shall be adquately protected prior to coating.

4.1.7.2 Pipe 3 Inches or Larger, not Galvanized.

4.1.7.2.1 Cement-mortar Coating and Lining shall conform to and shall be applied in conformity with AWWA C205. Cement-mortar coating and lining shall not be used for pipe less than 4 inches in diameter.

4.1.7.2.2 Coal-Tar Enamel Lining, Coating and Wrapping shall conform to AWWA C203 for materials, method of application, tests and handling. Pipe shall be lined with a coat of coal-tar primer followed by a hot coat of coal-tar enamel, a wrapper of asbestos felt impregnated with coal tar, a second coat of coal-tar enamel, a

second wrapper of asbestos felt impregnated with coal tar, and a wrapper of kraft paper or a coat of water-resistant whitewash.

4.1.7.2.3 Cement-Mortar Lining, in lieu of coal-tar enamel lining may be used with coal-tar enamel coating and wrapping. Cement-mortar lining shall conform to and shall be applied in conformity with AWWA C205.

4.2 Joints.

4.2.2 Cast-Iron Pipe.

4.2.2.1 Bell-and-Spigot Joints. Calking lead shall conform to Fed. Spec. QQ-C-40, Type I.

4.2.2.2 Joint Packing. Yarning or packing material for bell-and-spigot joints shall consist of one of the following. Molded or tubular-rubber rings, asbestos rope, or treated paper rope. Rubber gasket may be used without calking where bell end of pipe is especially designed to retain the gasket without calking.

4.2.2.3 Mechanical Joints shall be of the stuffing box type and shall conform to ANSI A21.11.

4.2.2.4 Push-on Joints shall conform to ANSI A21.11.

4.2.2.5 Rubber Gaskets and Lubricant shall conform to the applicable requirements of ANSI A21.11.

4.2.3 Copper Tubing. Joints shall be compression-pattern flared and shall be made with fittings hereinafter specified.

4.2.4 Ductile Iron Pipe.

4.2.4.1 Mechanical Joints shall be of the stuffing box type and shall conform to ANSI A21.11 as modified by ANSI A21.51.

4.2.4.2 Push-On Joints shall conform to ANSI A21.51.

4.2.4.3 Rubber Gaskets and Lubricant shall conform to the applicable requirements of ANSI A21.11.

4.2.5 Steel Pipe, Not Galvanized.

4.2.5.1 Mechanical Couplings shall be as hereinafter specified.

4.2.5.2 Bell-And-Spigot Joints for use with rubber gaskets shall conform to AWWA C200, as appropriate for the type of pipe. Rubber gaskets shall conform to applicable requirements of AWWA C200.

4.2.5.3 Flanges shall conform to AWWA C207, and shall be used only where shown on the drawings or when approved.

4.2.6 Bonded Joints. Where indicated, a metallic bond shall be provided at each joint, including joints made with flexible couplings or rubber gaskets, or ferrous metallic piping to effect continuous conductivity. The bond wire shall be type RHW-USE, size 1/0 neoprene-jacketed copper conductor shaped to stand clear of the joint. The bond shall be of the thermal weld type.

4.2.7 Insulating Joints shall be installed between nonthreaded ferrous and nonferrous metallic pipe, fittings and valves. Insulating joints shall consist of a sandwich-type flange insulating gasket of the dielectric type, insulating washers, and insulating sleeves for flange bolts. Insulating gaskets shall be full faced with outside diameter equal to the flange outside diameter. Bolt insulating sleeves shall be full length. Units shall be of a shape to prevent metal-to-metal contact of dissimilar metallic piping elements.

4.2.8 Connections between asbestos cement pipe and cast-iron fittings, valves or hydrants shall be made with jointing materials conforming to AWWA C603.

4.3 Fittings and Specials.

4.3.1 For Cast-Iron Pipe. Fittings and specials shall be suitable for 150 pound per square inch pressure rating, unless otherwise specified. Fittings and specials for mechanical and bell-and-spigot joint pipe shall conform to ANSI A21.10. Fittings and specials for use with push-on joint pipe shall conform to ANSI A21.10 and A21.11. Cast-iron fittings and specials shall be cement-mortar lined in accordance with ANSI A21.4. Linings shall be standard thickness.

4.3.2 For Copper Tubing. Fittings and specials shall be flared and shall conform to ANSI B16.26.

4.3.3 For Ductile Iron Pipe. Fittings and specials shall be suitable for 150 pound per square inch pressure rating, unless otherwise specified. Fittings and specials for mechanical joint pipe shall conform to ANSI A21.10. Fittings and specials for use with push-on joint pipe shall conform to ANSI A21.10 and A21.11. Fittings and specials shall be cement-mortar lined in accordance with ANSI A21.4. Linings shall be standard thickness.

4.3.4 For Pipe 4-Inch Through 12-Inch Diameter. Fittings and specials shall be cast iron, bell end in accordance with ANSI A21.10, 150 pounds per square inch pressure rating unless otherwise shown or specified, except that profile of bell may have special dimensions as required by the pipe manufacturer; or may be fittings and specials of the same material as the pipe with elastomeric gaskets, all in conformance with the requirements of AWWA C900. Cast-iron fittings and specials shall be cement-mortar lined standard thickness in accordance with ANSI A21.4. Fittings shall be for bell and spigot pipe or plain end pipe, as applicable.

4.3.5 For Steel Pipe 3 Inches and Larger, Not Galvanized. Fittings and specials shall be made of the same materials as the pipe. Specials and fittings may be made of standard steel tube turns or segmentally welded sections, with ends to accommodate the type of couplings or joint specified for the pipe. Dimensions of steel-pipe fittings shall be in accordance with AWWA C208. The thickness and pressure rating of pipe fittings and specials shall be not less than the thickness specified and the pressure rating calculated for the pipe with which they are used. Protective materials for fittings and specials shall be as specified for the pipe. Specials and fittings that cannot be mechanically lined, coated, and wrapped shall be lined, coated, and wrapped by hand, using the same materials as are used for the pipe with the same number of applications of each material carefully and smoothly applied.

4.3.6 For Galvanised Steel Pipe Less Than 3 Inches. Steel fittings shall be galvanized. Screwed fittings shall conform to ANSI B16.3. Flanged fittings shall conform to AWWA C207. Dresser-type fittings shall be suitable for use with type of pipe furnished.

4.4 Couplings.

4.4.1 Mechanical couplings for steel pipe shall be the sleeve type, or when approved, the split sleeve type and shall provide a tight flexible joint under all reasonable conditions, such as pipe movements caused by expansion, contraction, slight settling or shifting in the ground, minor variations in trench gradients, and traffic vibrations. Couplings shall be of strength not less than the adjoining pipeline.

4.4.1.1 Sleeve-Type Couplings shall be used for joining plain end pipe sections. The couplings shall consist of one steel middle ring, two steel followers, two gaskets, and the necessary steel bolts and nuts to compress the gaskets.

4.4.1.2 Split-Sleeve-Type Couplings may be used when approved in special situations and shall consist of side- and end-gaskets and a housing in two or more sections with the necessary bolts and nuts to compress the gaskets.

4.4.2 Dielectric Fittings shall be installed between threaded ferrous and nonferrous metallic pipe, fittings and valves, except where corporation stops join mains. Dielectric fittings shall prevent metal-to-metal contact of dissimilar metallic piping elements and shall be suitable for the required working pressure.

4.5 Valves.

4.5.1 Valves Larger Than 2 Inches shall be iron body, bronze mounted, shall have flanged ends, and shall be the non-slam type. Flanges shall be the 125-pound type conforming to ANSI B16.1.

4.5.2 Gate Valves shall be designed for a working pressure of not less than 150 pounds per square inch. Valve connections shall be as required for the piping in which they are installed. Valves shall have a clear waterway equal to the full nominal diameter of the valve, and shall be opened by turning counterclockwise. The operating nut or wheel shall have an arrow, cast in the metal, indicating the direction of opening.

4.5.2.1 Valves Smaller Than 3 Inches shall be all bronze and shall conform to Fed. Spec. WW-V-54, Type I, Class B.

4.5.2.2 Valves 3 Inches and Larger shall be iron body, bronze mounted, and shall conform to AWWA C500.

4.5.3 Rubber-Seated Butterfly Valves. Rubber-seated butterfly valves shall conform to the performance requirements of AWWA C504. Wafer type valves conforming to the performance requirements of AWWA C504 in all respects, but not meeting laying length requirements will be acceptable if supplied and installed with a spacer providing the specified laying length. All tests required by AWWA C504 must be met. Flanged-end valves shall be installed in an acceptable pit and provided with a union or sleeve-type coupling in the pit to permit removal. Mechanical-end valves 3 through 10-inch in diameter may be direct burial if provided with a suitable valve box, means for manual operation, and an adjacent pipe joint to

facilitate valve removal. Valve operators shall restrict closing to a rate requiring approximately 60 seconds to fully open or fully close.

4.5.4 Check Valves shall be designed for a minimum working pressure of 150 pounds per square inch or as indicated. Valves shall have a clear waterway equal to the full nominal diameter of the valve. Valves shall open to permit flow when inlet pressure is greater than the discharge pressure, and shall close tightly to prevent return flow when discharge pressure exceeds inlet pressure. Distinctly cast on the body of each valve shall be the manufacturer's name, or initials, or trademark by which he can be readily identified, and also the size of the valve, working pressure, and the direction of flow.

4.5 Valve Boxes. Valve boxes shall be cast iron. Cast-iron boxes shall be extension type with slide-type adjustment and with flared base. The minimum thickness of metal shall be 3/16 inch. The work "WATER" shall be cast in the cover. The boxes shall be of such length as will be adapted, without full extension, to the depth of cover required over the pipe at the valve location.

4.6 Miscellaneous Items.

4.6.1 Service clamps shall have a pressure rating not less than that of the pipe to be connected and shall be either the single or double flattened strap type. Clamps shall have a galvanized malleable iron body with cadmium plated straps and nuts. Clamps shall have rubber gasket cemented to the body.

4.6.2 Corporation stops shall have standard corporation stop thread conforming to AWWA C800 on the inlet end, with flanged joints, compression pattern flared tube couplings, or wiped joints for connections to goosenecks.

4.6.3 Service stops shall be water-works inverted-ground-key type, oval or round flow way, tee handle, without drain. Pipe connections shall be suitable for the type of service pipe used. All parts shall be of bronze with female iron-pipe-size connections or compression-pattern flared tube couplings, and shall be designed for a hydrostatic test pressure not less than 200 pounds per square inch.

4.6.4 Service boxes shall be cast iron or concrete. Extension service boxes of the required length and having either screw or slide-type adjustment shall be installed at all service box locations. The boxes shall have housings of sufficient size to completely cover the service stop and shall be complete with identifying covers.

4.6.5 Tapping Sleeve(s) of the size(s) indicated for connection to existing main shall be the cast iron, split-sleeve type with flange on the outlet, and with bolts, follower rings and gaskets on each end of the sleeve. Construction shall be suitable for a maximum working pressure of 150 pounds per square inch. Bolts shall have square heads and hexagonal nuts. Longitudinal gakets, and mechanical joints with gaskets shall be as recommended by the manufacturer of the sleeve.

4.7 Disinfection. Chlorinating materials shall conform to the following:

Chlorine, Liquid: AWWA B301.

Hypochlorite, Calcium and Sodium: AWWA B300.

5. DELETED.

6. INSTALLATION. The Contractor shall verify the exact location of existing utilities with the utility company prior to excavation

6.1 Handling. Pipe and accessories shall be handled so as to insure delivery to the trench in sound, undamaged condition. Particular care shall be taken not to injure the pipe coating. If the coating or lining of any pipe or fitting is damaged, the repair shall be made by the Contractor at his expense in a satisfactory manner. No other pipe or material of any kind shall be placed inside a pipe or fitting after the coating has been applied. Pipe shall be carried into position and not dragged. Use of pinch bars and tongs for alining or turning pipe will be permitted only on the bare ends of the pipe. The interior of pipe and accessories shall be thoroughly cleaned of foreign matter before being lowered into the trench and shall be kept clean during laying operations by plugging or other approved method. Before installation, the pipe shall be inspected for defects. Material found to be defective before or after laying shall be replaced with sound material without additional expense to the Government. Rubber gaskets that are not to be installed immediately shall be stored in a cool and dark place.

6.1.1 Coated and wrapped steel pipe shall be handled in conformance with AWWA C203.

6.2 Cutting of Pipe. Cutting of pipe shall be done in a neat and workmanlike manner without damage to the pipe. Unless otherwise recommended by the manufacturer and authorized by the Contracting Officer, cutting shall be done with an approved type mechanical cutter. Wheel cutters shall be used when practicable.

6.3 Pipe Sleeves. Where sleeves are required, the pipe sleeve shall be steel as shown on the drawings.

6.3.1 Waterlines shall not be laid in the same trench with sewer lines, gas lines, fuel lines, or electric wiring.

6.3.2 Copper tubing shall not be installed in the same trench with ferrous piping materials.

6.3.3 Nonferrous Metallic Pipe. Where nonferrous metallic pipe, e.g., copper tubing, crosses any ferrous piping material, a minimum vertical separation of 12 inches must be maintained between pipes.

6.4 Joint Deflection.

6.4.1 Steel Pipe. For pipe with bell-and-spigot rubber-gasket joints, maximum allowable deflections from a straight line or grade, as required by vertical curves, horizontal curves, or offsets will be 5 degrees unless a lesser amount is recommended by the manufacturer. Short-radius curves and closures shall be formed by short lengths of pipe or fabricated specials specified hereinbefore.

6.4.2 Cast-Iron Pipe and Ductile-Iron Pipe. The maximum allowable deflection will be as given in AWWA C600. Table 1 shows maximum deflection for 18 foot lengths of pipe. For other lengths the deflection will vary proportionately.

TABLE 1. DEFLECTION IN INCHES

Diameter in Inches	Push-On Joint Pipe	Bell-and-Spigot Joint Pipe	Mechanical-Joint Pipe
3	19	22.2	31

If the alinement requires deflection in excess of the above limitations, special bends or a sufficient number of shorter lengths of pipe shall be furnished to provide angular deflections within the limit set forth.

6.5 Placing and Laying. Pipe and accessories shall be carefully lowered into the trench by means of derrick, ropes, belt slings, or other authorized equipment. Under no circumstances shall any of the waterline materials be dropped or dumped into the trench. Care shall be taken to avoid abrasion of the pipe coating. Except where necessary in making connections with other lines or as authorized by the Contracting Officer, pipe shall be laid with the bells facing in the direction of laying. The full length of each section of pipe shall rest solidly upon the pipe bed, with recesses excavated to accommodate bells, couplings, and joints. Pipe that has the grade or joint disturbed after laying shall be taken up and relaid. Pipe shall not be laid in water or when trench conditions are unsuitable for the work. Water shall be kept out of the trench until joining is completed. When work is not in progress, open ends, of pipe, fittings, and valves shall be securely closed so that no trench water, earth, or other substance will enter the pipes or fittings. Where any part of the coating or lining is damaged, the repair shall be made by the Contractor at his expense in a satisfactory manner. Pipe ends left for future connections shall be valved, plugged, or capped, and anchored, as shown.

6.5.1 Connections. Where connections are made between new and exiting work, the connections shall be made by using specials and fittings to suit the actual conditions. Standard methods are available for making connections to various types of pipe, either under pressure or in the dewatered condition. Where made under pressure, these connections shall be installed as approved by the Contracting Officer.

6.5.2 Pipe passing through walls of manholes shall be provided with cast-iron wall sleeves. Annual space between pipe and sleeves shall be filled with mastic.

6.5.3 Waterlines cross under gravity-flow sewer lines. The sewer pipe for a distance of at least 10 feeteach side of the crossing shall be fully encased in concrete or shall be made of pressure pipe with no joint located within 3 feet horizontally of the crossing. Waterlines shall in all cases cross above sewage force mains or invered siphons and shall be not less than 2 feet above the sewer main. Joints in the sewer main, closer horizontally than 3 feet to the crossing, shall be encased in concrete.

6.6 Jointing.

6.6.1 Steel Pipe, not Galvanized.

6.6.1.1 Mechanical couplings shall be installed in accordance with the recommendations of the couplings manufacturer.

6.6.2 Connections betwen different types of pipe and accessories shall be made with transition fittings approved by the Contracting Officer.

6.6.3 Cast-Iron Pipe.

6.6.3.1 Bell-and-Spigot Joints shall be in accordance with AWWA C600, as modified herein. Except at closures, not less than two lenghts of pipe shall be in position ahead of each joint, with packing installed and earth fill tamped alongside the pipe, before the joint is poured. The calking shall progress toward the joint gate. If the packing has been insufficiently calked, permitting the lead to the driven during calking to a depth more than 1/4 inch from the face of the bell at any point, the lead shall be removed and the joint remade. The depth of compound in joints shall be not less than 2-1/2 inches back from the face of the bell. The lead shall be heated and manipulated in accordance with the recommendations of the manufacturer of the joint material. The melting pot, ladle, and pouring pot shall be kept free of deleterious substances and shall be thoroughly cleaned at least daily to assure clean lead in the joints.

6.6.3.2 Mechanical type joints shall be installed in accordance with AWWA C600.

6.6.4 Copper Tubing. Joints shall be made with flared fittings. The flared end tube shall be pulled tightly against the tapered part of the fitting by a nut which is part of the fitting, so there is metal-to-metal contact.

6.6.5 Ductile-Iron Pipe. Mechanical and push-on type joints shall be installed in accordance with AWWA C600, modified as necessary by the recommendations of the manufacturer to provide for special requirements of ductile-iron pipe.

6.6.6.1 Pipe Less Than 4-Inch Diameter. Threaded joints shall be made by wrapping the male threads with approved thread tape or applying an approved thread lubricant, then threading the joining members together. The joint shall be tightened using strap wrenches to prevent damage to the pipe and/or fitting. To avoid excessive torque, joints shall be tightened no more than two threads past hand-tight. Preformed rubber-ring gaskets for elastomeric-gasket joints shall be made in accordance with requirements of AWWA C600 and AWWA C630, as applicable, and as required herein. All pipe ends for push-on joints shall be beveled to facilitate assembly and marked to indicate when the pipe is fully seated. The gasket shall be prelubricated to prevent displacement. Care shall be exercised to assure the gasket and ring groove in the bell or coupling match. The manufacturer of the pipe or fitting must also supply the elastomeric-gasket. Coupling shall be provided with stops or centering rings to assure that the coupling is centered on the joint.

6.6.6.2 Pipe 4-Inch Through 12-Inch Diameter. Joints shall be elastomeric-gasket as specified in AWWA C900. Joints utilizing or requiring solvent-cement will not be accepted. Jointing procedure shall be as specified for pipe less than 4-inch diameter with configuration utilizing elastomeric ring gasket.

6.6.6.3 Rubber gaskets shall be handled, lubricated where necessary, and installed in accordance with the recommendations of the pipe manufacturer.

6.6.7 Galvanized-Steel Pipe. Screw joints shall be made tight with a stiff mixture of graphite and oil, inert filler and oil, or with an approved graphite compound, applied with a brush to the malek threads only. Compounds shall not contain lead.

6.6.8 Bonded joints shall be installed in accordance with details specified in subparagraph Joints under paragraph MATERIALS.

6.6.9 Insulating Joints Dielectric Fittings shall be installed in accordance with details specified in subparagraph Joints under pargraph MATERIALS. Dielectric unions shall be encapsulated in a field poured coal-tar covering with at least 1/8-inch thickness of coal tar over all fitting surfaces.

6.7 Service Lines. Service lines shall include the lines to and connections with the building service at a point approximately 5 feet outside the building where such building service exists. Where building services are not installed, the Contractor shall terminate the service lines approximately 5 feet from the site of the proposed building at a point designated by the Contracting Officer. Such service lines shall be closed with plugs or caps. All service stops and valves shall be provided with extension service boxes of the lengths required by the depth of service-line stops or valves. Service lines shall be constructed in accordance with the following requirements.

6.7.1 Service lines 2-1/2 inches and smaller shall be connected to the main by a directly-tapped corporation stop or by a service clamp. A corporation stop and a lead or copper gooseneck shall be provided with either type of connection.

6.7.1.2 Service lines 1-1/2 inches and smaller shall have a service stop.

6.7.1.3 Service lines 2 inches in size shall have a gate valve.

6.7.1.4 Service lines connection shall be in accordance with the city of Phoenix Standard Det. P-1342, which follow at end of this section.

6.7.2 Service lines larger than 2 inches shall be connected to the main by rigid connection and shall have a gate valve. Three-inch and larger lines may use rubber-seatedd butterfly valves as specified above, or gate valves.

6.8 Field Coating and Lining of Pipe.

6.8.1 Steel Pipe 3 Inches and Larger, not Galvanized.

6.8.1.1 Cement-Mortar Coating and Lining. Field jointing shall conform to Appendix, AWWA C205. Any defective area found in the coating and/or lining of pipe and joints shall be removed to the pipe wall, and the area shall be repaired in a manner such that the repaired areas will be at least equal in thickness to the minimum coating and/or lining required for the pipe. Steel reinforcement in the coating shall be repaired or replaced as necessary to assure a complete and soundly reinforced coating.

6.8.1.2 Coal-Tar Enamel Coating, Lining and Wrapping. Field jointing shall conform to AWWA C203. The applied materials shall be tested by means of a spark-type electrical inspection device in accordance with the requirements of AWWA C203. Any flaws or holidays found in the coating and/or lining of pipe and joints shall be repaired by patching or other approved means such that the repaired areas will be at least equal in thickness to the minimum coating and/or lining required for the pipe.

6.8.2 Galvanized-Steel Pipe. Field joints shall be given one coat of coal-tar primer and two coats of coal-tar enamel conforming to AWWA C203. The tests of the coating shall conform to AWWA C203, and any flaws or holidays found in the coating of pipe and joints shall be repaired by patching or other approved means such that the repaired areas will be at lest equal in thickness to the minimum coating required for the pipe.

6.9 Setting of Valves and Valve Boxes.

6.9.1 Valves and valve boxes shall be installed where shown or specified, and shall be set plumb. Valve boxes shall be centered on the valves. Boxes shall be installed over each outside gate valve unless otherwise shown. Where feasible, valves shall be located outside the area of roads and streets. Earth fill shall be carefully tamped around each valve box to a distance of 4 feet on all sides of the box, or to the undisturbed trench face if less than 4 feet.

6.9.2 Service Boxes. Where waterlines are located below paved streets having curbs, the boxes shall be installed directly back of the curbs. Where no curbing exists, service boxes shall be installed in accessible locations, beyond the limits of street surfacing, walks and driveways.

6.9.3 Check valves, pressure reducing valves, vacuum and air relief valves shall be installed in valve pits as shown.

6.10 Tapped Tees and Crosses. Tapped tees and crosses for future connections shall be installed where shown.

6.11 Thrust Blocks. Plugs, caps, tees and bends deflecting 22-1/2 degrees or more, eigher vertically or horizontally, on waterlines 6 inches in diameter or larger, shall be provided with thrust blocking, or metal tie rods and clamps or lugs, as directed. Thrust blocking shall be concrete of a mix not leaner than 1 cement: 2-1/2 sand: 5 gravel, and having a compressive strength of not less than 2,000 pounds per square inch after 28 days. Blocking shall be placed between solid ground and the hydrant or fitting to be anchores. Unless otherwise indicated or directed the base and thrust bearing sides of thrust blocks shall be poured directly against undisturbed earth. The sides of thrust blocks not subject to thrust may be pored against forms. The area of bearing shall be as shown or as directed. Blocking shall be placed so that the fitting joints will be accessible for repair. Steel rods and clamps shall be protected by galvanizing or by coating with bituminous paint.

7. HYDROSTATIC TESTS. Where any section of a waterline is provided with concrete thrust blocking for fitting or hydrants, the hydrostatic test shall not be made until at east 5 days after installation of the concrete thrust blocking unless otherwise approved. The method proposed for disposal of waste water from hydrotatic test and disinfection shall be submitted to the Contracting Officer for approval prior to performing hydrostatic tests. All pipelines shall be tested for watertightness by subjecting each section to hydrostatic test in accordance with applicable provisions of AWWA C-600, except as modified below, and shall consist of pressure test and leakage tests. The Contractor shall provide all vents, piping, plugs, bulkheads, valves, bracing, blocking, pump, including measuring device, and all other equipment necessary for making the tests, except pressure gages, and shall pay the Contracting Agency for water used in the tests.

7.1 Pressure Tests. All pipe lines shall be tested for watertightness by subjecting each section to a pressure test, measured at the lowest end of the section under test. The test pressure shall be at least 125 percent of class rating of pipe under test. The duration of each pressure test shall be at least 2 hours. Each section of a new line between sectionalizing valves or between the last sectionalizing valve and the end of the project shall be tested separately as required in AWWA C-600, and/or as modified in these specifications, except that any such section less than 500 feet in length may be tested with the adjacent section, if both sections of line have the same pipe class rating. No section

greater than 1/2 mile in total pipe length shall be tested wihout special written permission of the Engineer.

The test may be made before of after backfilling. However, if mechanical compaction is to be used in the backfilling operations as spelled out in AWWA C-600, the test shall not be made until the backfilling is completed and compacted. All connections, blowoffs and hydrants and valves shall be tested with the main as far as is practicable.

The test section shall be slowly filled with potable water and all air shall be vented from the line. The rate of filling shall be as determined by the Superintendent of Water Distribution, with at least 24 hour notice required before tests are scheduled. While the test section is under test pressure, a visual inspection for leaks may be made along the pipe line, and all visible leaks repaired. The pressure test shall not being until the pipe has been filled with water for at least 24 hours to allow for absorption.

7.2 Leakage Tests: Leakage tests shall be made after pressure test has been satisfactorily completed and all backfilling and compaction is completed to top of trench. The Contractor shall furnish the necessary apparatus and assistance to conduct the test.

The duration of each leakage test shall be at least 2 hours. To pass the leakage test, the leakage from the pipe line shall not exceed the leakage allowed by the following formula:

$$L = \frac{ND\sqrt{P}}{4500}$$

in which

L = allowable leakage in gallon per hour.

N = number of joints in the pipe line being tested, this "N" being the standard length of pipe furnished divided into the length being tested, with no allowance for joints at branches, blowoff, fittings, etc.

D = nominal diameter or pipe in inches.

P = average observed test pressure of the pipe being tested, equal to at least 100 percent of the class rating of pipe being tested, in psi gage, based on the elevation of the lowest point in the line or section under test and corrected to the elevation of the test gage.

Should the test on any section of the pipe line show leakage greater than specified above, the Contractor shall locate and repair the defective pipe, fittings, or joint until the leakage is within the specified allowance of 2 hour duration.

Leakage is defined as the quantity of water necessary to be supplied into the pipe line section under test to maintain the specified leakage test pressure after the pipe line has been filled with water and all air expelled. All repairs and retests if required, shall be made at the Contractor's expense.

Connections to the existing pipelines or existing valves shall not be made until after that section of new construction has satisfactorily passed the hydrostatic tests.

7.3 Time for Making Test. Except for joint material setting or where concrete reaction backing necessitates a 5-day delay, pipelines jointed with rubber gaskets, lead, mechanical or push-on joints, or couplings may be subjected to hydrostatic pressure, inspected, and tested for leakage at any time after partial completion of backfill. Cement-mortar lined pipe may be filled with water recommended by the manufacturer before being subjected to the pressure test and subsequent leakage test.

7.4 Concurrent Hydrostatic Tests. The Contractor may elect to conduct the hydrostatic tests using either or both of the following procedures. Regardless of the sequence of tests employed, the results of pressure tests, leakage tests, and disinfection shall be by the Contractor at no additional cost to the Government.

7.4.1 Pressure test and leakage test may be conducted concurrently.

7.4.2 Hydrostatic tests and disinfection may be conducted concurrently using the water treated for disinfection to accomplish the hydrostatic tests. If water is lost when treated for disinfection and air is admitted to the unit being tested, or if any repair procedure results in contamination of the unit, disinfection shall be reaccomplished.

8. DISINFECTION. Before acceptance of potable water operation, each unit of completed waterline shall be disinfected as prescribed by AWWA C601 material. The unit will not be accepted until satisfactory bacteriological results have been obtained. All valves in the lines being disinfected shall be opened and closed several times during the 24 hour period of disinfection.

9. CLEANUP. Upon completion of the installation of the waterline, and water appurtenances, all debris and surplus materials resulting from the work shall be removed. When testing, chlorination, compaction, and cleanup do not follow pipe laying in an orderly manner, the Engineer reserves the right to close down trenching and pipe laying until these operations are adequately advanced.

10. SALVAGE. All salvaged valves, etc., shall be turned-over to the city that owns the waterline. Phoenix valves shall be delivered to water distribution section maintenance yard at 52nd St and Thomas. Point of contact:

Mr. Martin Rhodes
Water Distribution Section City of Phoenix
Phone: (602)-262-4708.

Scottsdale valves shall be delivered to Miller and McKellys Roads.
Contact Mr. Al Accord, Water Operations
Phone: (602) 994-2344

* * * * *

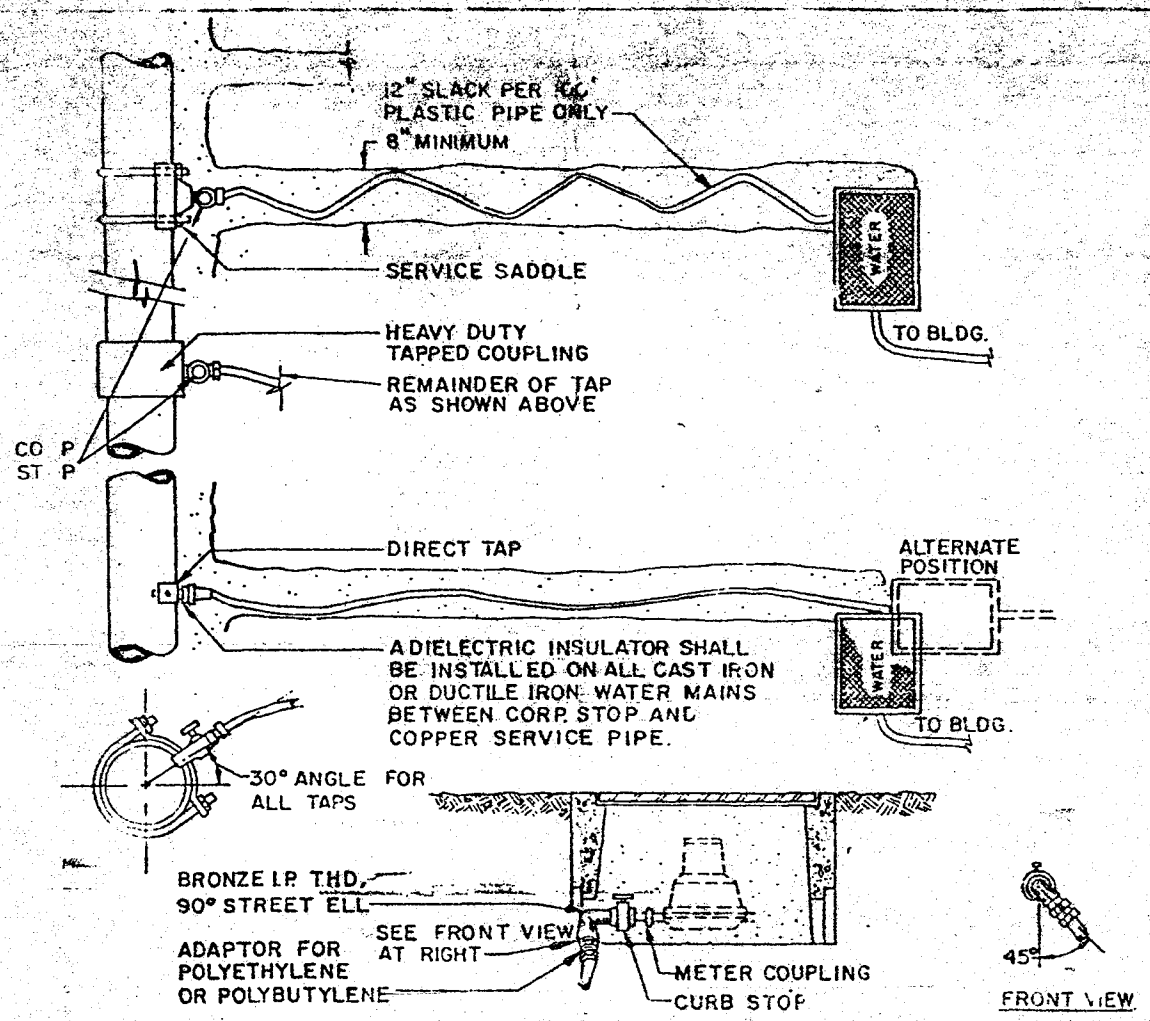

GENERAL NOTES

1. DIRECT TAP WILL NOT BE USED ON MAJOR OR COLLECTOR STREETS OR ON PIPE LESS THAN 6 INCHES, OR FOR WATER SERVICE CONNECTIONS LARGER THAN 1 INCH.
2. 30" MINIMUM COVER IS REQUIRED FOR SERVICE LINES.
3. WATER SERVICE INCLUDES THE CORP STOP, SERVICE PIPE, APPURTENANT FITTINGS, CURB STOP, METER BOX & COVER. APPROVED WATER SERVICE COMPONENTS ARE LISTED IN CITY OF PHOENIX SUPPLEMENTS.
4. ALL ADAPTOR COMPRESSION NON-FLARE FITTINGS FOR POLYETHYLENE OR POLYBUTYLENE PIPE MUST HAVE STAINLESS STEEL OR BRASS INSERT AND RUBBER GRIP SEAL. INSERTS SHALL BE 10-8,300 SERIES STAINLESS STEEL OR BRASS, RUBBER SEALS SHALL BE BUNA N 70 DUROMETER RUBBER ALL FITTINGS SHALL BE 0555 BRONZE.
5. ONLY AUTHORIZED PERSONNEL OF THE WATER AND SEWER DEPT. SHALL INSTALL THE SERVICE CONNECTION FOR ANY EXISTING CITY WATER MAIN SERVING ALL OR PART OF A NEW SUBDIVISION.
6. WATER METER WILL BE INSTALLED BY CITY FORCES.
7. FOR 3/4" OR 1" SERVICE USE COPPER OR POLYETHYLENE PIPE. FOR 1-1/2" OR 2" SERVICE USE POLYBUTYLENE PIPE.
8. FOR WATER METER LOCATION SEE CITY OF PHOENIX DETAIL P-1363.

DETAIL NO.	CITY OF PHOENIX STANDARD DETAIL	WATER SERVICE CONNECTIONS	APPROVED 4/28/81
P-343			

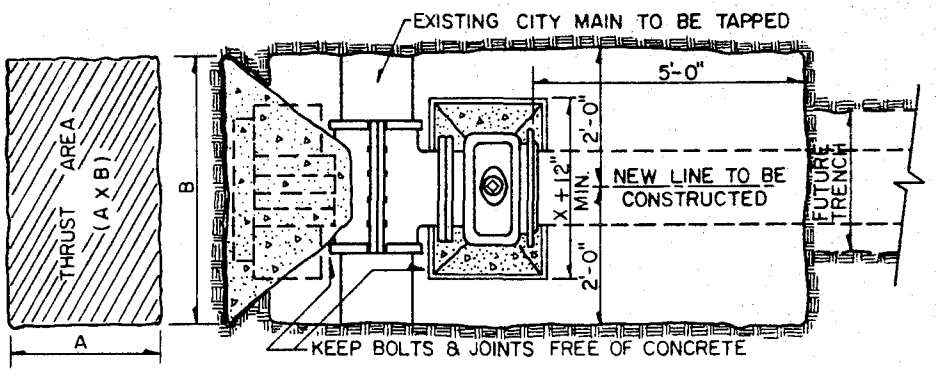

PLAN

CONCRETE: CLASS "B" PER SECT. 725 NORMALLY, CURE 24 HRS. BEFORE BACKFILLING.

OPTIONAL BLOCKING - 2"X8"X12" SOLID CONCRETE MASONRY UNITS AS INDICATED.

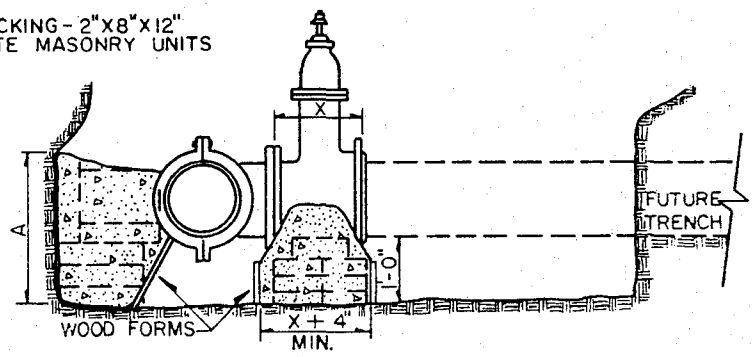

ELEVATION

NOTES

1. BLOCKS ARE TO EXTEND TO UNDISTURBED GROUND.
2. ALL TAPS SHALL BE MADE BY CITY CREWS AT PREVAILING RATES.
3. INSTALL PERMANENT BLOCKING UNDER VALVE BEFORE TAP IS MADE. ALL FLANGE BOLTS SHALL BE CLEAR OF FOOTING.
4. ALL TAPPING SLEEVES MUST BE PRESSURE TESTED PRIOR TO REQUESTS FOR TAP BY CITY.
5. CONTRACTOR SHALL EXCAVATE AS SHOWN AND SHALL SET TAPPING SLEEVE AND VALVE AND TIGHTEN ALL BOLTS PRIOR TO REQUESTING CITY TO MAKE TAP.
6. TAPPING SLEEVE TO BE PLACED A MINIMUM OF 18" FROM ANY BELL, COUPLING, VALVE, OR OTHER OBSTRUCTION.

SIZE OF PIPE BEING CONNECTED	MINIMUM THRUST AREA REQUIRED EQUALS (AXB)
4" & LESS	3 SQUARE FEET
6"	4 " "
8"	6 " "
10"	9 " "
12"	13 " "
16"	23 " "

DETAIL NO. 340	STANDARD DETAIL	INSTALLING TAPPING SLEEVES AND VALVES		DETAIL NO. 340

TYPICAL LOCATIONS OF THRUST BLOCKS

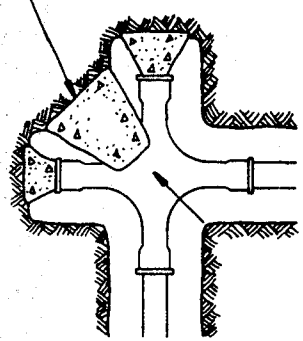

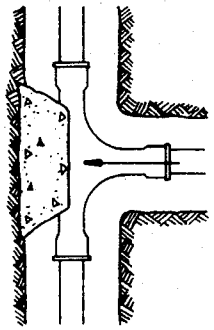

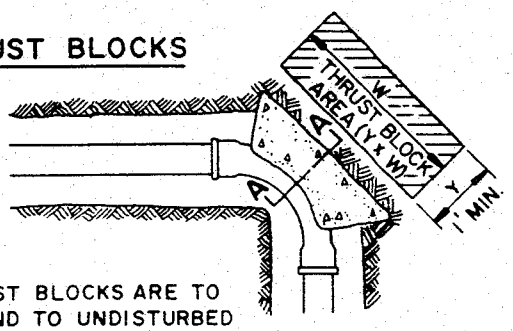

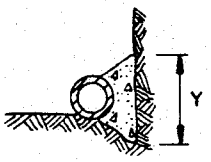

SECTION A-A

NOTE: THRUST BLOCKS ARE TO EXTEND TO UNDISTURBED GROUND. CONCRETE TO BE CLASS C, SECT. 725.

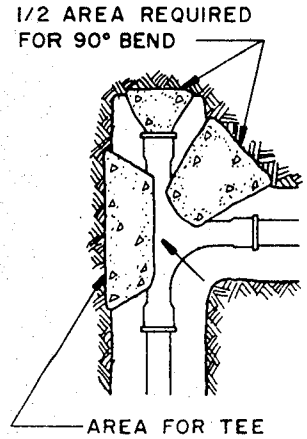

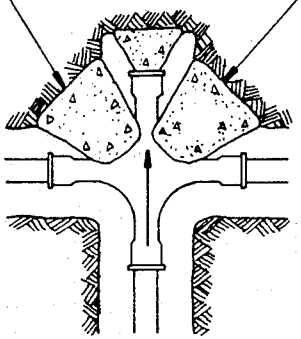

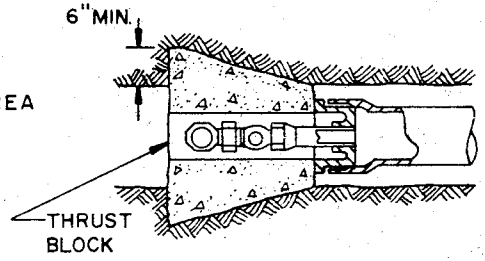

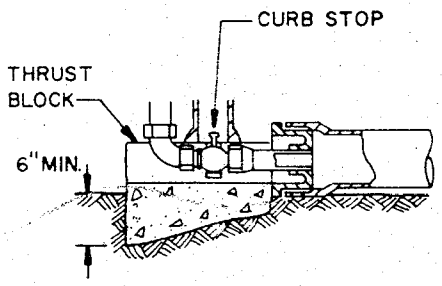

MINIMUM THRUST BLOCK AREA REQUIRED (Y x W)		
PIPE SIZE	WATER PIPE	
	TEE, DEAD END, 90° BEND	45° & 22½° BENDS
4" & LESS	3 SQ. FEET	3 SQ. FEET
6"	4 " "	3 " "
8"	6 " "	3 " "
10"	9 " "	5 " "
12"	13 " "	7 " "
16"	23 " "	12 " "

NOTES:

1. TABLE IS BASED ON 3000#/ SQ. FT. SOIL. IF CONDITIONS ARE FOUND TO INDICATE SOIL BEARING IS LESS, THE AREAS SHALL BE INCREASED ACCORDINGLY.
2. AREAS FOR PIPE LARGER THAN 18" SHALL BE CALCULATED FOR EACH PROJECT.
3. FORM ALL NON-BEARING VERTICAL SURFACES.

DETAIL NO. 380	STANDARD DETAIL	THRUST BLOCKS FOR WATER LINES		DETAIL NO. 380

NOTE

BARS TO CONCRETE THRUST BLOCK TO BE COATED WITH 2 COATS HOT COAL TAR ENAMEL & KRAFT PAPER WRAP. BARS TO HAVE 90° HOOK ON LOWER END, AS PER TABLE.

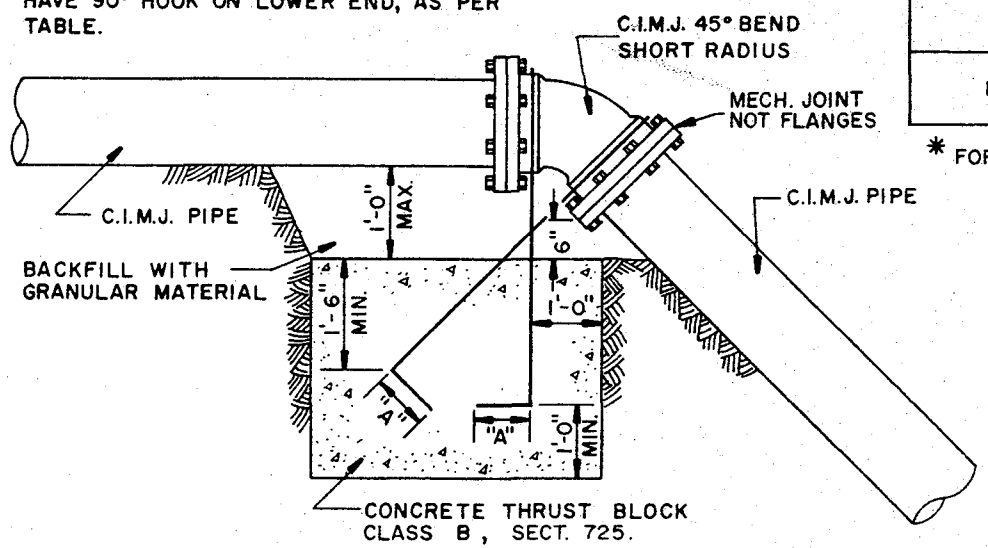

PIPE SIZE	MIN. BAR SIZE	"A"-DIMENSION (HOOK)	MIN. * BLOCK DIM.
6"	#6	6"	3'x 3'x 3'
8"	#6	9"	4'x 4'x 2.5'
12"	#8	9"	4'x 5'x 5'

* FOR 125 PSI WORKING PRESSURE

NOTES

1. EITHER THIS DETAIL OR RESTRAINT RODS CAN BE USED WHEN IT IS ALLOWED TO RELOCATE A WATER LINE UPWARD TO CROSS OVER A CONFLICT.
2. DUCTILE IRON PIPE MAY BE USED.

DETAIL NO. 381	STANDARD DETAIL	ANCHOR BLOCKS FOR VERTICAL BENDS		DETAIL NO. 381

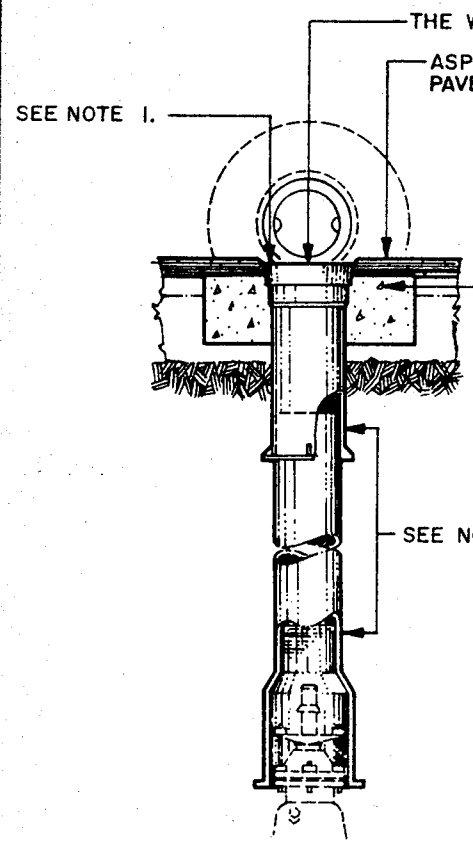

TYPE 'C'

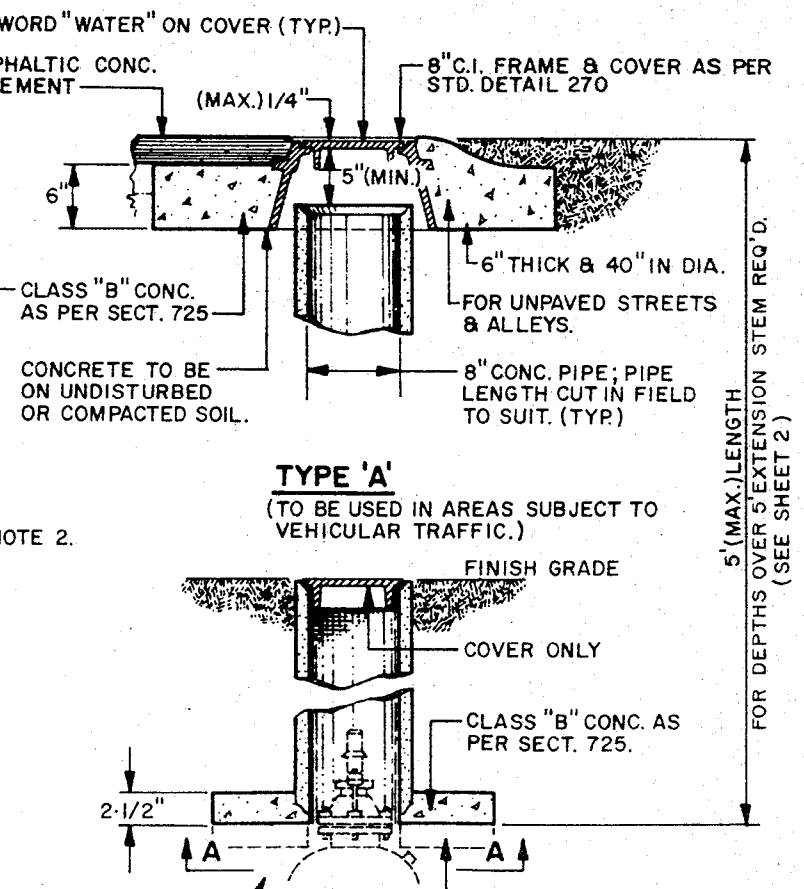

TYPE 'A'
(TO BE USED IN AREAS SUBJECT TO VEHICULAR TRAFFIC.)

TYPE 'B'
(NOT SUBJECT TO VEHICULAR TRAFFIC.)

NOTES

1. VALVE BOX SHALL BE ADJUSTED TO THE FINISHED GRADE PRIOR TO PLACING OF THE ASPHALTIC CONCRETE SURFACE.
2. USE PARKSON TYLER, APCO, OR EQUAL DEEP SKIRTED LID (4" OR MORE) TYPE, SLIDING ADJUSTABLE CAST IRON VALVE BOX. C.I. MIN. T.S. 30,000 P.S.I.
3. GROUND BELOW CONCRETE PAD OR 3 BRICKS TO BE COMPACTED 95% OF MAX. DENSITY.

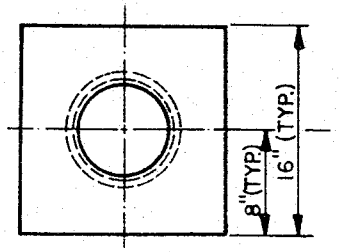

VIEW A-A

SHEET 1 OF 2

DETAIL NO.			
391-1	STANDARD DETAIL	VALVE BOX INSTALLATION	DETAIL NO. 391-1

SECTION 2M

SEWER RELOCATION

Index

1. Applicable Publications
2. General
3. Materials
4. Installation
5. Concrete Cradle and Encasement
6. Wye Branches and Drop Sewer Connections
7. New Manhole Construction Standards
8. Connections to Existing Manholes
9. Clean-up

1. APPLICABLE PUBLICATIONS. The publications listed below form a part of this specification to the extent referenced. The publications are referred to in the text by basic designation only.

1.1 Federal Specification (Fed. Spec.).

HH-P-117	Packing, Jute, Twisted.
HH-P-119a	Packing, Material, Sewer Joint, Asphalt-Saturated Cellulose-Fiber
QQ-C-40 & Am-2	Calking: Lead Wool and Lead Pig

1.2 American Society for Testing and Materials (ASTM) Publications.

A 48-76	Gray Iron Castings
A 74-75	Cast Iron Soil Pipe and Fittings
A 123-78	Zinc (Hot-Galvanized) Coatings on Products Fabricated from Rolled Pressed, and Forged Steel Shapes, Plates, Bars, and Strip
C 12-77	Installing Vitrified Clay Pipe Lines
C 14-75	Concrete Sewer, Storm Drain, and Culvert Pipe
C 32-73 (R 1979)	Sewer and Manhole Brick (Made from Clay or Shale)
C 33-79	Concrete Aggregates
C 62-75a	Building Brick (Solid Masonry Units Made from Clay or Shale)
C 94-74a	Ready-Mixed Concrete
C 150-78a	Portland Cement
C 270-80a	Mortar for Unit Masonry

C 301-79	Standard Mehtods of Testing Vitrified Clay Pipe
C 425-77	Compression Joints for Vitrified Clay Pipe and Fittings
C 564-70 (R 1976)	Rubber Gaskets for Cast Iron Soil Pipe and Fittings
C 700-78a	Vitrified Clay Pipe, Extra Strength, Standard Strength and Perforated
C 828-78	Low-pressure Air Test of Vitrified Clay Pipe Lines
D 3034-78	Type PSM Poly (Vinyl Chloride) (PVC) Sewer Pipe and Fittings
D 3212-76	Joints for Drain and Sewer Plastic Pipes Using Flexible Elastomeric Seals

1.3 National Fire Protection Association (NFPA) Standards.

No. 49-1975	Hazardous Chemicals Data
No. 325M-1977	Flammable Liquids, Gases and Volatile Solids
No. 704-1975	Identification of the Fire Hazards of Materials

1.4 Maricopa Association of Governments Standard (MAG)

2. GENERAL. Gravity sanitary sewers shall be constructed in conformance with this section of the specifications. The construction required herein shall include appurtenant structures to which the sewer system is to be connected. Excavation and backfilling shall conform to sections: EXCAVATION and FILLS AND SUBGRADE PREPARATION Backfilling shall be accomplished after inspection by the Contracting Officer. Work covered by this section will not be accepted until backfilling connected with the work has been completed satisfactorily.

2.1 The short (30'±) length of sewer line at 78th Street on Chaparral Road will require new pipe placement in the old pipe location. Details of the method proposed by the Contractor to complete this work without disruption of sewer service will be approved prior to doing the work. The Corps Inspector will notify the City when inspections are to be done on water and sewer work and the City will be permitted to observe the inspection and/or testing.

3. MATERIALS shall conform to the respective specifications and other requirements specified below, and MAG details at end of this section.

3.1 Pipe may be of the following materials unless otherwise specified or shown.

3.1.1 Cast Iron Soil Pipe and Fittings. ASTM A 74, Class SV.

3.1.1.1 Rubber Gaskets for Compression Joints. ASTM C 564.

3.1.1.2 Vitrified Clay Pipe and Fittings

3.1.1.3 Calked Joints.

a. Joint Packing Material. Twisted jute or oakum, tarred type or Fed. Spec. HH-P-119. Joints for acid resisting cast iron soil pipe shall be made with specially treated pure-asbestos packing. The packing shall contain no material that would coat the pipe so as to adversely affect adhesion of the joint sealing material to the pipe.

b. Lead. Fed. Spec. QQ-C-40.

3.1.2.1 Joints for Precast Reinforced Concrete Manhole Sections. Joints shall be mortar, or an approved mastic or rubber gasket, or an approved combination of these types.

3.1.2.2 Branch Connections. Branch connections shall be made by use of regular fittings and saddles. Use true fittings with elastomeric ring push-on joints. Do not use solvent cemented fittings. Drop Sewer Connections as per MAG STD DTL 426.

3.1.2.3 Protection of Material. Before, during, and after installation, plastic pipe and fittings shall be protected from exposure to sunlight and any environment that would result in damage or deterioration to the material. Lubricants, elastomeric gaskets, and any similar materials required to install the plastic pipe shall be stored in accordance with the manufacturer's recommendation and shall be discarded if the storage period exceeds the recommended shelf life.

3.2 Brick for Manholes. ASTM C 62, Grade SW, or ASTM C 32, Grade MS.

PRE-CAST Concrete Sewer Manholes as Per MAG STD DTL 420.

3.3 Cement Mortar. ASTM C 270, Type M, not allowed for joints.

3.4 Portland Cement. ASTM C 150, Type II for concrete used in manholes and type optional with the Contractor for cement used in concrete cradle and encasement.

3.5 Portland Cement Concrete. ASTM C 94, compressive strength of 3,000 pounds per square inch at 28 days. Concrete in place shall be protected from freezing and moisture loss for 7 days.

3.6.1 Clay Pipe and Fittings. ASTM C 700, bell and spigot type, unless otherwise specified or indicated. (Where shown on the drawings, pipe and fittings shall be acid resistant.)

3.6.1.1 Extra Strength Clay Pipe and Fittings. ASTM C 700, bell and spigot type, (Where shwon on the drawings, pipe and fittings shall be acid resistant.)

4. INSTALLATION. The Contractor shall verify the exact location of existing utilities with the utility company prior to excavation.

4.1 Adjacent Facilities.

4.1.1 Waterlines. Where the location of the sewer is not clearly defined by dimensions on the drawings, the sewer shall not be closer horizontally than 10 feet to a water-supply main or service line, except that where the bottom of the water pipe will be at least 12 inches above the top of the sewer pipe, the horizontal spacing may be a minimum of 6 feet. Where gravity-flow sewers cross above waterlines, the sewer pipe for a distance of 10 feet on each side of the crossing shall be fully encased in concrete or shall be acceptable pressure pipe with no joint closer horizontally than 3 feet to the crossing. The thickness of the concrete encasement including that at the pipe joints shall be not less than 4 inches.

4.1.2 Roads and Reinforced Concrete Box. At primary access road crossings, the sewer pipe is not required to be encased in a sleeve of rigid conduit for the length installed under the road. In all other cases where sleeves are required, the pipe sleeve shall be as required by the authority having jurisdiction, or it shall be of reinforced concrete, steel, or cast grey or ductile iron pipe of the weight, class, size, and strength required for the anticipated superimposed loads. A minimum clearance of at least 2 inches between the inner diameter of the sleeve and the maximum outside diameter of the sleeved pipe, including the joints, shall be provided. Sand bedding shall be provided for the carrier pipe through the sleeve. Sleeves of ferrous material shall be provided with corrosion protection as required for the conditions encountered at the site of installation.

4.2 Pipe Laying.

a. Pipe shall be protected during handling against impact shocks and free fall and the pipe interior shall be free of extraneous material.

b. Pipe laying shall proceed upgrade with the spigot ends of bell-and-spigot pipe and tongue ends of tongue-and-groove pipe pointing in the direction of the flow. Each pipe shall be laid accurately to the line and grade shown on the drawings. Pipe shall be laid and centered so that the sewer has a uniform invert. As the pipe laying progresses, and after partial backfilling, the interior of the sewer or pipeline shall be visually inspected for alinement and grade, by means of artificial or reflected light and shall be cleared of all superfluous material. Necessary corrections shall be made by the Contractor at no additional cost to the Contracting Agency.

c. Before making pipe joints all surfaces of the portions of the pipe to be joined shall be clean and dry. Lubricants, primers, and adhesives shall be used as recommended by the pipe manufacturer. The joints shall then be placed, fitted, joined, and adjusted so as to obtain the degree of water tightness required.

d. Pipe shall be of the type, class, and size called for on the plans. Any pipe used for sanitary sewers up to and including a diameter of 30 inches shall be of extra strength, virtrified clay pipe conforming to MAG STD Section 743. Pipe larger than 30 inches shall be of the type specified in the special provisions.

4.2.1 Calked Joints. The packing material shall be well packed into the annular space so as to prevent the entrance of lead into the pipe. The remainder of the space shall be filled with molten lead that is hot enough to show a rapid change in color when stirred. Scum shall be removed before pouring. The lead shall be calked to form a tight joint without overstraining the bell and shall have a minimum depth of one inch after calking.

4.2.2 Trenches shall be kept free of water and as dry as possible during bedding, laying, and jointing and for as long a period as required. When work is not in progress, open ends of pipe and fittings shall be satisfactorily closed so that no trench water or other material will enter the pipe or fittings.

4.2.3 Backfill. As soon as possible after the joint is made, sufficient backfill material shall be placed along the pipe to prevent pipe movement off line or grade. Backfilling and compaction shall be done in accordance with MAG STD Sect 601.

4.2.4 Width of Trench. If the maximum width of the trench at the top of the pipe, as specified in sections: EXCAVATION and FILLS and SUBGRADE PREPARATION, exceeded for any reason other than by direction, the Contractor shall install at no additional cost to the Government such concrete cradling, pipe encasement, or other bedding as may be required to satisfactorily support the added load of the backfill.

4.2.5 Joints between different pipe materials shall be made as hereinbefore specified, using approved jointing materials.

4.2.6 Handling and Storage. Pipe, fittings and joint material shall be handled and stored in accordance with the manufacturer's recommendations. Storage facilities for plastic pipe, fittings, joint materials and solvents shall be classified and marked in accordance with NFPA Standard 704, with classification as indicated in NFPA 49 and NFPA 325M.

4.3 Leakage Tests. Lines shall be tested for leakage by either infiltration tests or exfiltration tests, as appropriate. Prior to testing for leakage the trench shall be backfilled up to at least the lower half of the pipe. If required, sufficient additional backfill shall be placed to prevent pipe movement during testing, leaving the joints uncovered to permit inspection. Visible leaks encountered shall be corrected regardless of leakage test results. When the water table is 2 feet or more above the top of the pipe at the upper end of the pipeline section to be tested, infiltration shall be measured using a suitable weir or other device acceptable to the Contracting Officer. When the Contracting Officer determines that infiltration cannot be properly tested, an exfiltration test shall be made by filling the line to be tested with water so that a head of at least 2 feet is provided above both the water table and the top of the pipe at the upper end of the pipeline to be tested. The filled line shall be allowed to stand until the pipe has reached its maximum absorption, but not less than 4 hours. After absorption, the head shall be reestablished. The amount of water required to maintain this water level during a 2-hour test period shall be measured. Leakage as measured by either the infiltration test or exfiltration test shall not exceed 0.2 gallons per inch diameter per 100 feet of pipeline per hour. When leakage exceeds the maximum amount specified, satisfactory correction shall be made and retesting accomplished. Testing, correction, and retesting shall be made at no additional cost to the Government.

4.4 Test for Deflection. When flexible pipe is used, a deflection test shall be made on the entire length of the installed pipeline on completion of all work, including the leakage test, backfill, and placement of any fill, grading, paving, concrete, or superimposed loads. Deflection shall be determined by use of a deflection device or by use of a spherical, spheriodal, or elliptical ball, a cylinder, or circular sections fused to a common shaft. The ball, cylinder, or circular sections shall have a diameter, or minor diameter as applicable, of 95 percent of the normal inside diameter of the pipe. A tolerance of +0.5 percent

will be permitted. The ball, cylinder, or circular sections shall be of a homogeneous material throughout, shall have a density greater than 1.0 as related to water at 39.2°F, and shall have a surface brinell hardness of not less than 150. It shall be center bored and through bolted with a 1/4 inch minimum diameter steel shaft having a yield strength of 70,000 pounds per square inch or more, with eyes at each end for attaching pulling cables. The eye or loop shall be suitably backed with flange or heavy washer such that a pull exerted on the opposite end of the shaft shall produce compression throughout the remote end of the ball, cylinder or circular sections. Circular sections shall be so spaced that the distance from the external faces of the front and back sections shall equal or exceed the diameter of the circular section. Failure of the ball, cylinder, or circular sections to pass freely through a pipe run, either by being pulled through or being flushed through with water, shall be cause for rejection of that run. When a deflection device is used for the test in lieu of the ball, cylinder, or circular sections described hereinbefore, such device shall be approved by the Contracting Officer prior to use. The device shall be sensitive to 1.0 percent of the diameter of the pipe being measured and shall be accurate to 1.0 percent of the indicated dimension. Installed pipe showing deflections of 4.5 percent of the normal diameter of the pipe shall be retested by a run from the opposite direction. If the retest indicates a deflection in excess of the 4.5 percent, the suspect pipe shall be replaced. Any pipe showing deflections in excess of 5 percent at the end of one year following installation and acceptance will be replaced at no cost to the Government.

5. CONCRETE CRADLE AND ENCASEMENT. The pipe shall be supported on a concrete cradle, or encased in concrete where indicated or directed.

6. WYE BRANCHES AND DROP SEWER CONNECTIONS shall be installed where sewer connections are indicated or where directed. Cutting into piping, for connections shall not be done except in special approved cases. When conditions are such that the connecting pipe cannot be adequately supported on undisturbed earth or tamped backfill, the pipe shall be encased in concrete backfill or supported on a concrete cradle as directed. Concrete required because of conditions resulting from faulty construction methods or negligence by the Contractor shall be installed at no additional cost to the Government. The installation of wye branches and drop sewer connections in an existing sewer shall be made by a method which does not damage the integrity of the existing sewer. One acceptable method consists of removing one pipe section, breaking off the upper half of the bell of the next lower section and half of the running bell of wye section. After placing the new section, it shall be rotated so that the broken half of the ball will be at the bottom. The two joints shall then be made with joint packing and cement mortar.

7. NEW MANHOLE CONSTRUCTION STANDARDS.

7.1 General. Manholes, if required, shall be constructed of brick, concrete, precast concrete rings, with cast iron or reinforced-concrete frames and covers, and in accordance with the drawings. The invert channels shall be smooth and semicircular in shape conforming to the inside of the adjacent sewer section. Changes in direction of flow shall be made with a smooth curve of as large a radius as the size of the manhole will permit. Changes in size and grade of the channels shall be made gradually and evenly. The invert channels shall be formed directly in the concrete of the manhole base, or shall be built up with brick and mortar, or shall be half tile laid in concrete, or shall be constructed by laying full section sewer pipe through the manhole and breaking out the top half after the surrounding concrete has hardened. Pipe connections shall be made to manhole

using water stops, standard o-ring joints, special manhole couplings, or shall be made in accordance with manufacturer's recommendation. The Contractor's proposed method of connection, list of materials selected, and specials required, shall be submitted to, and approved by, the Contracting Officer prior to installation. The floor of the manhole outside the channels shall be smooth and shall slope toward the channels not less than one inch per foot nor more than 2 inches per foot. Free drop inside the manholes shall not exceed one foot 6 inches, measured from the invert of the inlet pipe to the top of the floor of the manhole outside the channels, and drop manholes shall be constructed whenever the free drop would otherwise be greater than one foot 6 inches. Ladders shall not be installed unless the depth exceeds 12 feet.

7.2 Manhole Ladder. When the depth from top of cover to invert of main sewer exceeds 12 feet, manholes shall be provided with a straight-type steel ladder not less than 16 inches in width with 7/8 inch-diameter rungs spaced 12 inches apart. The rails shall be not less than 2 inches by 1/2-inch in section. The ladder shall be adequately anchored to the wall by means of steel inserts spaced not more than 6 feet apart vertically and shall be so installed as to provide at least 6-1/2 inches of toe space between the wall and the inside of the rungs. The ladder and inserts shall be galvanized after fabrication in conformance with ASTM A 123. The wall along the line of the ladder shall be vertical for its entire height.

7.3 Jointing and Plastering. Mortar joints shall be completely filled and shall be smooth and free from surplus mortar on the inside of the manhole. Mortar and mastic joints between precast rings shall be full-bedded in jointing compound and shall be smoothed to a uniform surface on both the interior and exterior of the manhole. Installation of rubber gasket joints between precast rings shall be in accordance with the recommendations of the manufacturer.

7.4 Frames and Covers. Reinforced-concrete frames and covers shall conform to the drawings. Cast iron frames and covers shall conform to the drawings in all essentials of design or to Fed. Spec. RR-F-621, type as suitable for the application, circular, without vent holes. The frames and covers shall have a combined weight of not less than 400 pounds and shall conform to ASTM A 48, Class 20B. The letter "S", at least 2 inches high, shall be stamped or cast into all covers so as to be plainly visible. Unless otherwise shown on the drawings, the frames and covers shall be so set that the top of the cover will be flush with finished pavement grade or 2 inches higher than finished grade in unpaved areas.

8. CONNECTIONS TO EXISTING MANHOLES. Pipe connections to existing manholes shall be made in such manner that the finished work will conform as nearly as practicable to the essential applicable requirements specified for new manholes, including all necessary concrete work, cutting, and shaping.

9. CLEAN UP. Upon completion of the installation of the sewerline, manhole and appurtenances, all debris and surplus materials resulting from the work shall be removed. The engineer has the right to close down forward trenching and pipe laying where testing, backfill, compaction and clean up does not follow in an orderly manner.

* * * * *

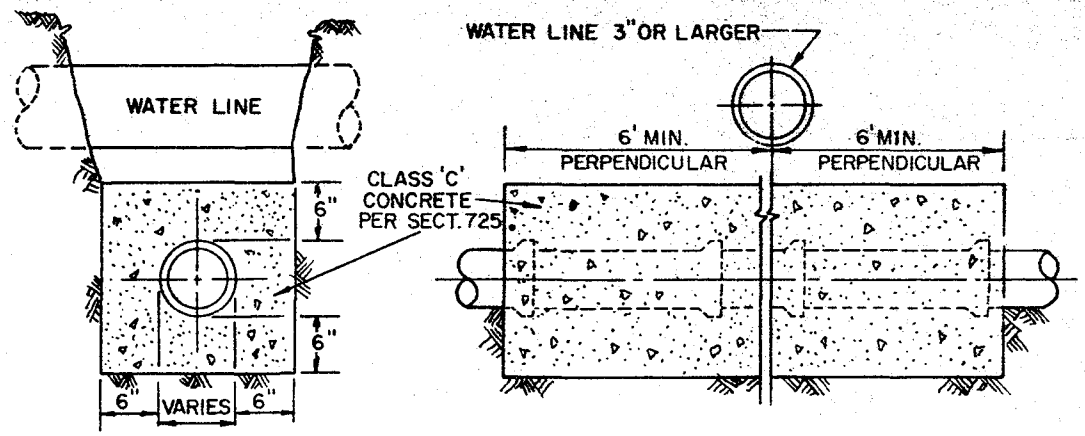

TYPE 'A' ENCASEMENT

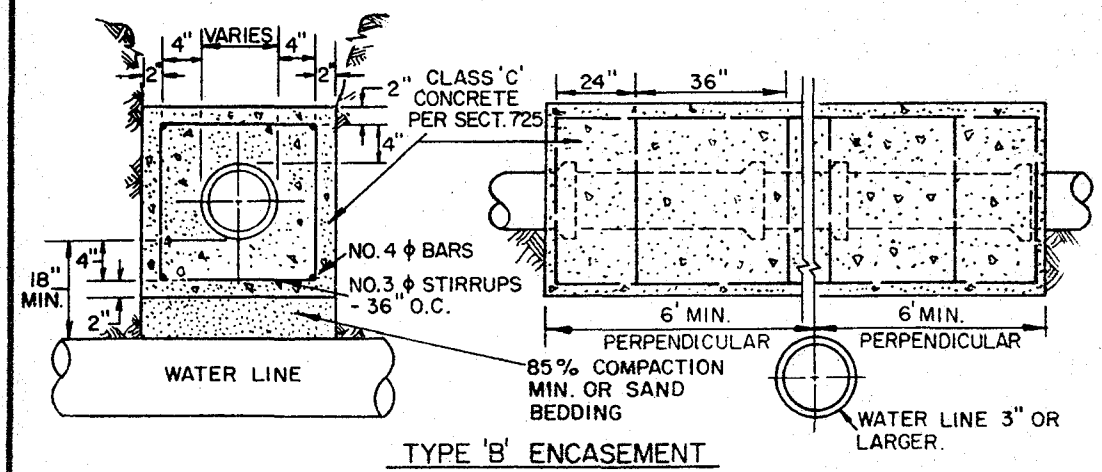

TYPE 'B' ENCASEMENT

TYPE 'A' ENCASEMENT- FOR SEWER LATERALS OR HOUSE CONNECTIONS BELOW WATERLINES.

TYPE 'B' ENCASEMENT- FOR SEWER LATERALS OR HOUSE CONNECTIONS ABOVE WATERLINES.

NOTES

1. THE ENCASEMENT SHALL EXTEND AT LEAST 6' ON EACH SIDE OF THE WATER LINE AND MUST INCLUDE THE NEAREST JOINT.
2. PROTECTION FOR TYPE 'A' REQUIRED WHEN DISTANCE FROM BOTTOM OF WATER TO TOP OF SEWER LINE IS 24" OR LESS EXCEPT WHEN SEWER IS 4" OR 6" HOUSE CONNECTION NO PROTECTION IS REQUIRED IF DISTANCE IS MORE THAN 12".
3. FOR TYPE A CROSSINGS, CLASS 150 C.I.P. OR DUCTILE PIPE MAY BE USED AS AN ALTERNATE. FOR TYPE B CROSSING REINFORCED ENCASEMENT IS ALWAYS REQUIRED.
4. REINFORCED ENCASEMENT FOR TYPE 'B' IS REQUIRED IN ALL CASES WHERE A SANITARY SEWER CROSSES ABOVE THE WATER LINE.

DETAIL NO. 404	STANDARD DETAIL	SANITARY SEWER ENCASEMENT		DETAIL NO. 404

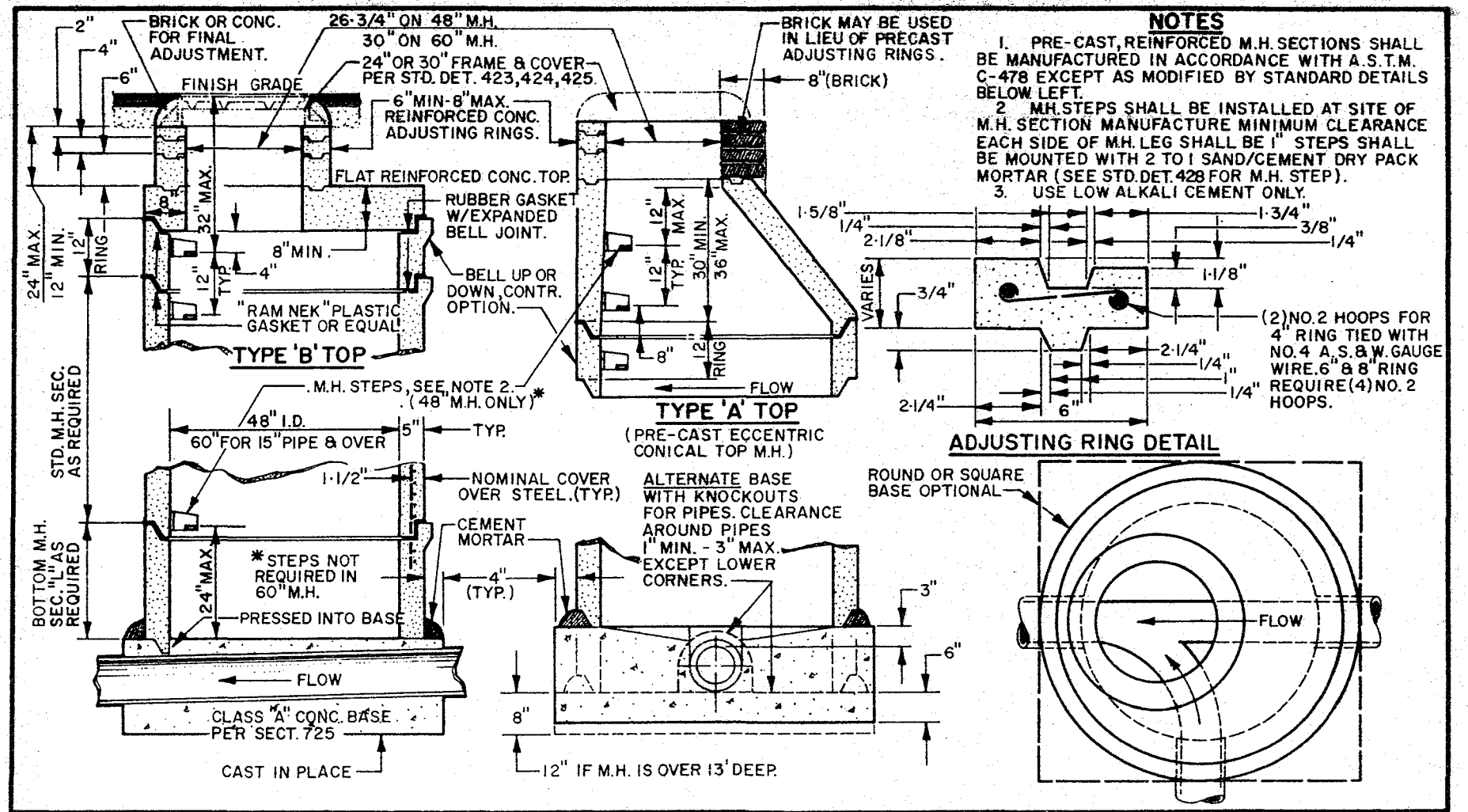

NOTES

1. PRE-CAST, REINFORCED M.H. SECTIONS SHALL BE MANUFACTURED IN ACCORDANCE WITH A.S.T.M. C-478 EXCEPT AS MODIFIED BY STANDARD DETAILS BELOW LEFT.
2. M.H. STEPS SHALL BE INSTALLED AT SITE OF M.H. SECTION MANUFACTURE MINIMUM CLEARANCE EACH SIDE OF M.H. LEG SHALL BE 1" STEPS SHALL BE MOUNTED WITH 2 TO 1 SAND/CEMENT DRY PACK MORTAR (SEE STD. DET. 428 FOR M.H. STEP).
3. USE LOW ALKALI CEMENT ONLY.

DETAIL NO.				DETAIL NO.
420	STANDARD DETAIL	PRE-CAST CONCRETE SEWER MANHOLE		420

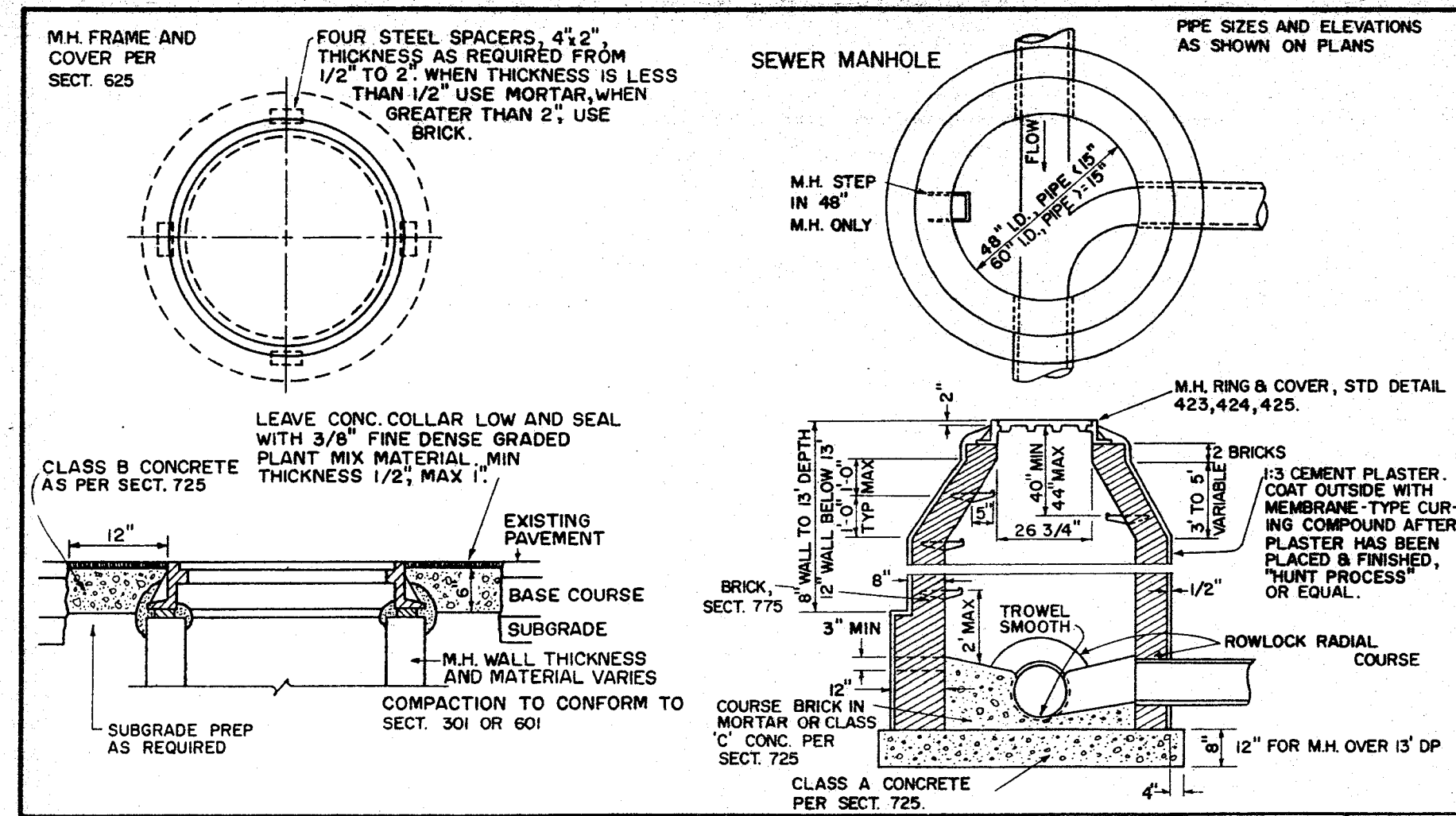

DETAIL NO.				DETAIL NO.
422	STANDARD DETAIL	SEWER MANHOLE AND COVER FRAME ADJ		422

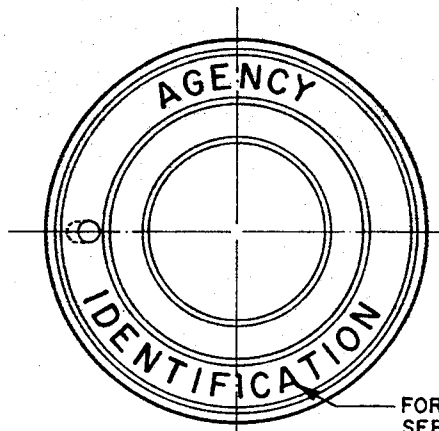

FACE OF COVER
CAST IRON

FOR COVER LETTERING SEE NOTE ON STANDARD DETAIL 424.

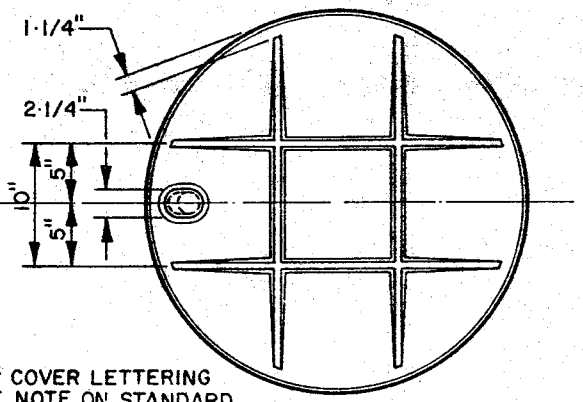

BACK OF COVER

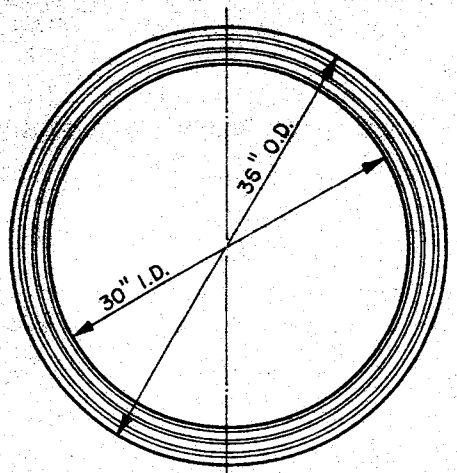

CAST IRON MANHOLE RING

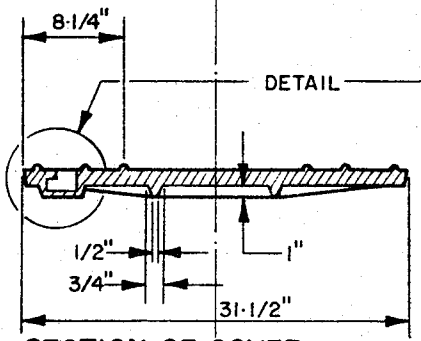

SECTION OF COVER
APPROX. WEIGHT 276 LBS.

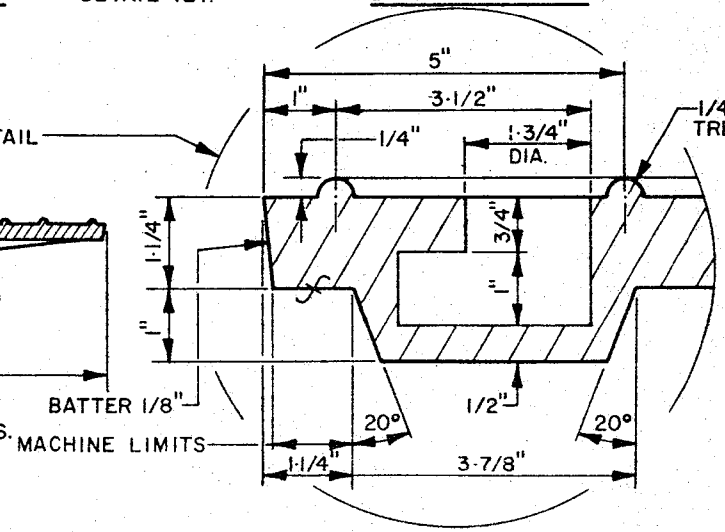

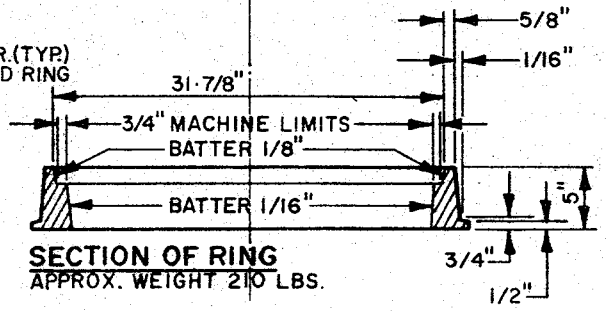

SECTION OF RING
APPROX. WEIGHT 210 LBS.

NOTES

1. WEIGHT OF CASTING SHALL BE NO MORE THAN 2% LESS THAN THE APPROXIMATE WEIGHT SPECIFIED.
2. CASTINGS SHALL CONFORM TO SECT. 787

DETAIL NO.				DETAIL NO.
423	STANDARD DETAIL	WATER TIGHT 30" MANHOLE FRAME & COVER		423

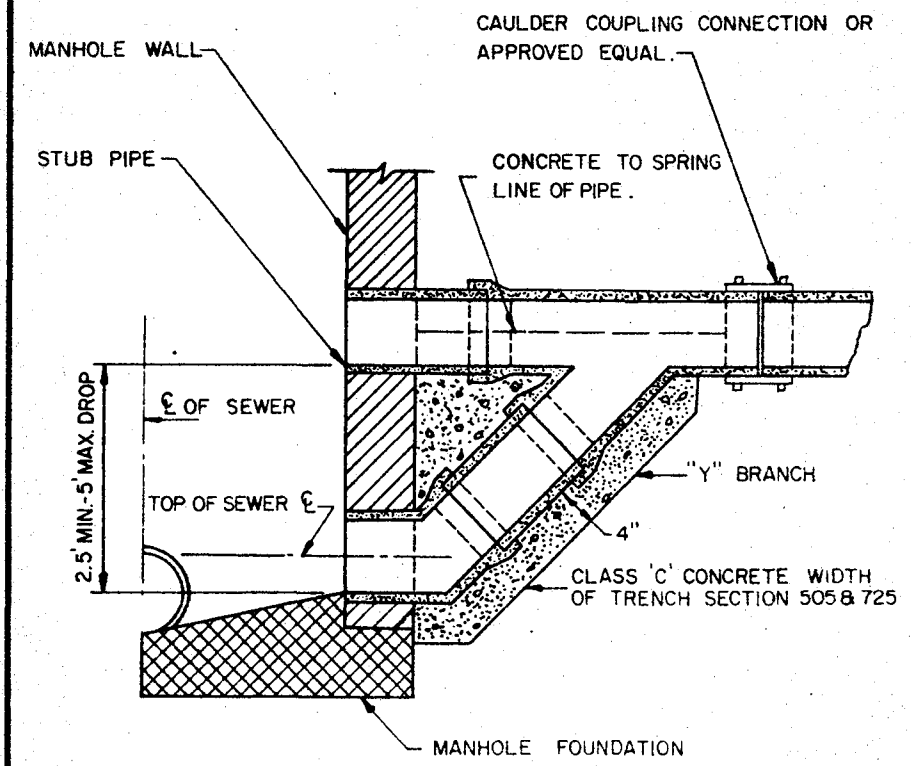

TYPE A

2.5' TO 5' DROP

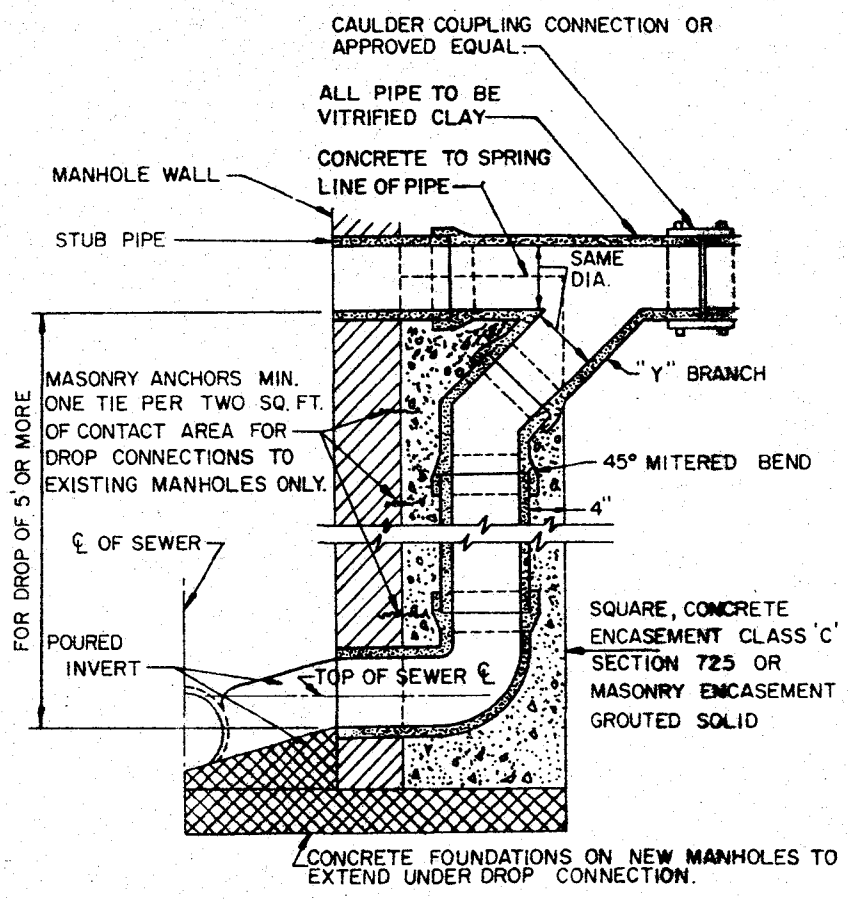

TYPE B

5' OR MORE

DETAIL NO. 426	STANDARD DETAIL	DROP SEWER CONNECTIONS		DETAIL NO. 426

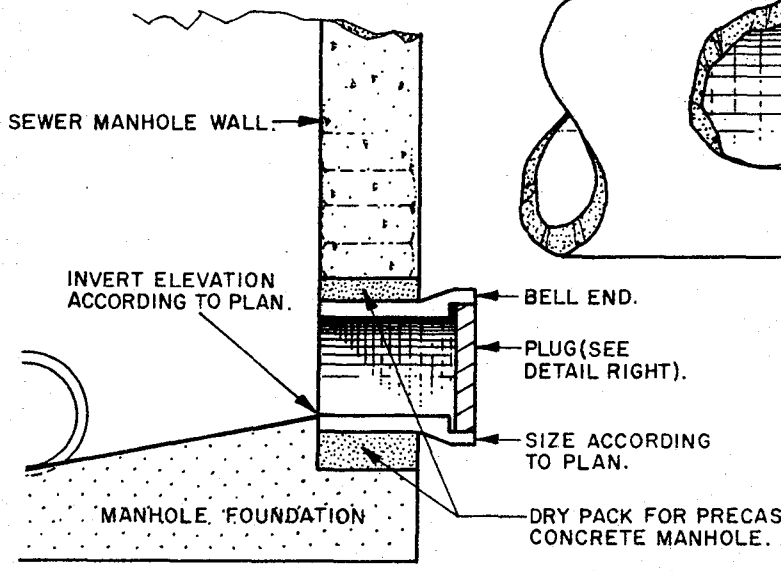

TYPICAL STUB OUT

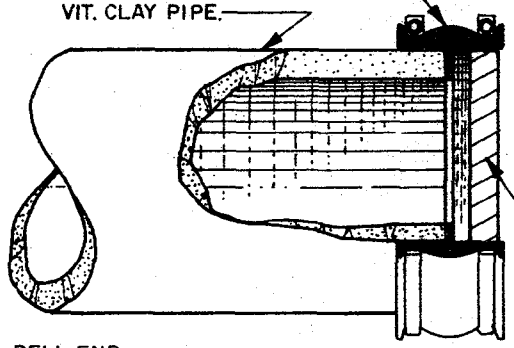

SEWER LINE

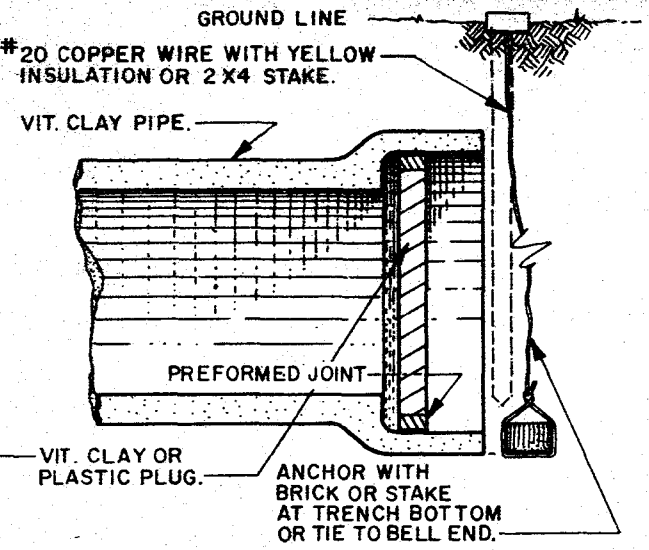

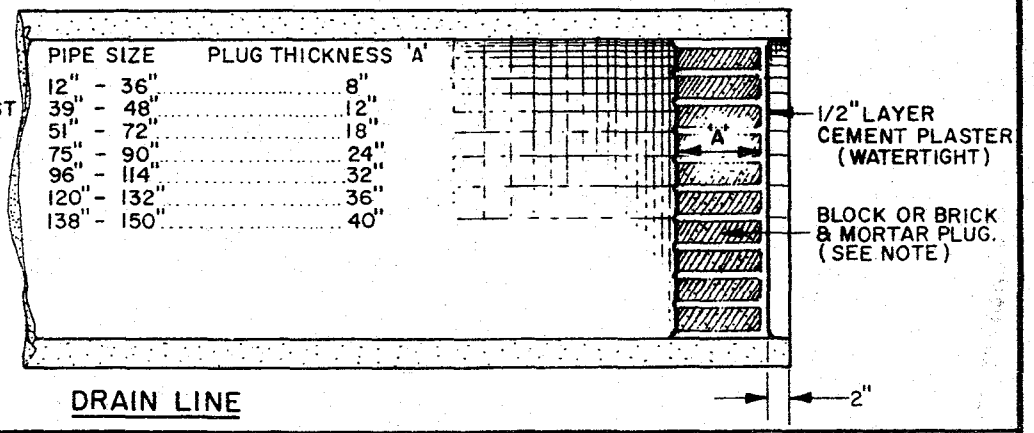

PIPE SIZE	PLUG THICKNESS 'A'
12" - 36"	8"
39" - 48"	12"
51" - 72"	18"
75" - 90"	24"
96" - 114"	32"
120" - 132"	36"
138" - 150"	40"

DRAIN LINE

NOTES

1. NOTE: COMPACT SOIL AT END OF PIPE TO 95% OF MAXIMUM DENSITY.
2. IF DEPTH OF COVER IS LESS THAN 5' OR GREATER THAN 10' INCREASE PLUG THICKNESS A MIN. OF 4"

DETAIL NO. 427	STANDARD DETAIL	STUB OUT AND PLUGS		DETAIL NO. 427

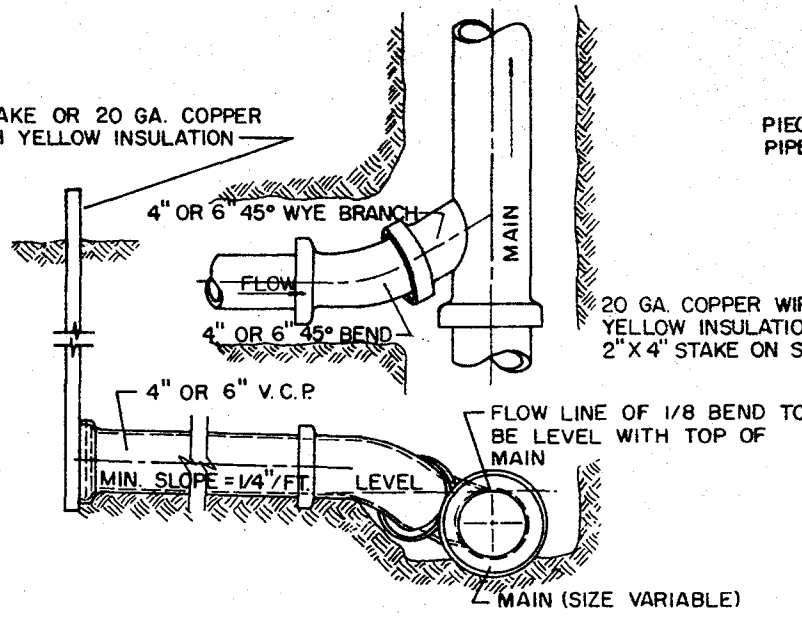

TYPE "A"

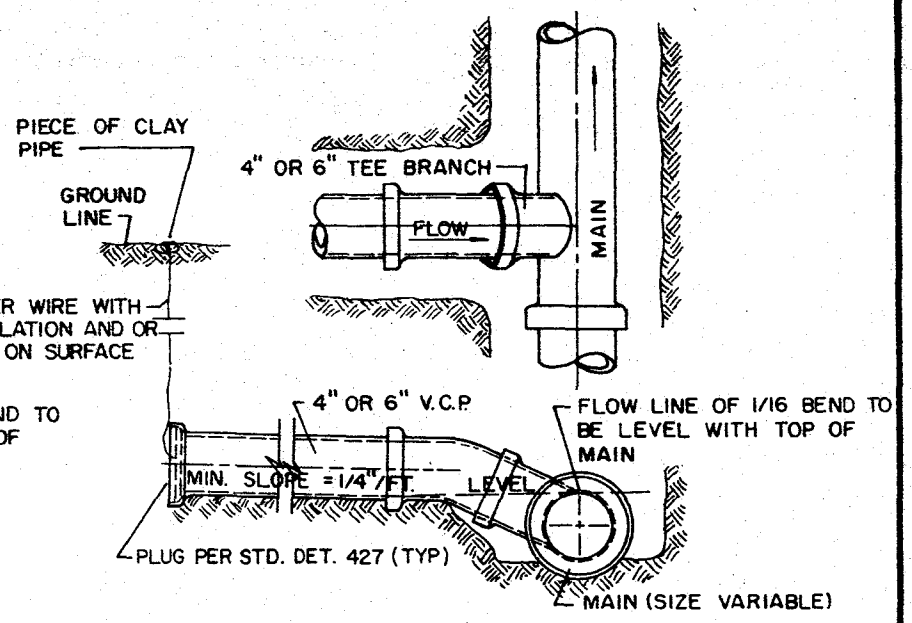

TYPE "B"

NOTES

1. CONSTRUCTION DETAIL APPLIES WHERE CONTRACTOR BUILDS HOUSE CONNECTION. TAP EXTENDS TO PROPERTY LINE IN ALLEYS OR STREETS OR TO ESMT. LINE.
2. SIZE OF TAP SHALL BE DESIGNATED ON PLANS.
3. DETAILS SHOWN MUST BE MET FOR MINIMUM CONDITION OF LESS THAN 5'-0".
4. CONSTRUCT TAP AT MIN. SLOPE IF COVER WILL BE LESS THAN 5 FEET AT PROPERTY LINE.
5. IF DEPTH REQUIRES, MIN. SLOPE CAN BE REDUCED TO 1/8" PER FOOT PROVIDED STUB IS STAKED TO GRADE.
6. FOR DEEPER LATERAL OR TRUNK SEWER CONDITION, THE WYE AND 1/8 BEND OR THE TEE AND 1/16 BEND WILL BE ROTATED TOWARD THE VERTICAL POSITION AS REQUIRED TO OBTAIN 5'-0" COVER OVER TAP AT PROPERTY LINE OR EASEMENT LINE.
7. END OF TAP TO BE SEALED AND MARKED AS NOTED.

DETAIL NO. 440	STANDARD DETAIL	SEWER BUILDING CONNECTION		DETAIL NO. 440

SECTION 2N

Seeding

Index

1. Applicable Publications
2. Deleted
3. Submittals
4. Delivery, Storage, and Handling
5. Environmental Protection
6. Materials
7. Installation
8. Establishment Period
9. Final Acceptance

1. APPLICABLE PUBLICATIONS. The publications listed below form a part of this specification to the extent referenced. The publications are referred to in the text by the basic designation only.

1.1 Federal Specifications (Fed. Spec.).

O-F-241D	Fertilizers, Mixed, Commercial

1.2 U.S. Department of Agriculture Federal Seed Act of August 9, 1939.

53 Stat. 1275	Rules and Regulations

2. DELETED.

3. SUBMITTALS.

3.1 Certificates of Conformance or Compliance. Before delivery, notarized certificates attesting that the following materials meet the requirements specified, shall be submitted for approval.

a. Seed
b. Fertilizer
c. Herbicides
d. Soil Conditioners

3.2 Manufacturer's Literature. Manufacturer's literature on the following materials shall be submitted.

a. Hydro-Mulch
b. Herbicide

4. DELIVERY, STORAGE, AND HANDLING.

4.1 Delivery.

4.1.1 The Contractor shall notify the Contracting Officer of the delivery schedule in advance so material may be inspected upon arrival at the jobsite. Unacceptable material shall be removed from the jobsite immediately.

4.1.2 During delivery, seed shall be protected from drying out and contamination.

4.1.3 Fertilizer and Soil Conditioners shall be delivered to the site in the original, unopened containers bearing the manufacturer's guaranteed chemical analysis, name, trade name, trademark, and conformance to state and Federal laws.

In lieu of containers, fertilizer may be furnished in bulk and a certificate indicating the above information shall accompany each delivery.

4.2 Storage.

4.2.1 Seed, fertilizer, and soil conditioners shall be kept in dry storage away from contaminants.

4.2.2 Storage of materials shall be in areas designated or as approved.

4.2.3 Herbicides shall not be stored with any other materials.

5. ENVIRONMENTAL PROTECTION. All work and Contractor operations shall comply with the requirements of section: ENVIRONMENTAL PROTECTION.

6. MATERIALS.

6.1 Seed. Seed shall be state-certified seed of the latest season's crop and shall be delivered in original sealed packages bearing the producer's guaranteed analysis for percentages of mixtures, purity, germination, weed-seed content, and inert material. Seed shall be labeled in conformance with U.S. Department of Agriculture rules and regulations under the Federal Seed Act and applicable state seed laws. Seed that has become wet, moldy, or otherwise damaged will not be acceptable. Onsite seed mixing shall be done only in the presence of the Contracting Officer. Seed mixtures shall be proportioned by weight as follows:

TURF. NAME	PURE LIVE-SEED IN POUND PER ACRE
Cynodon dactylon Hulled Bermuda grass	90 LBS
Maximum Weed Seed shall not exceed 1% by weight.	
Native Seeds.	
Bristle grass	2 LBS
Panic grass	2 LBS
Fiddleneck	1 LB
Fillaree	2 LBS
Gray Prostrate Salt Bush	1 LB
Quail Bush	2 LBS
Lupen	2 LBS
Desert Sunflower	3 LBS
Golden Bush	1 LB
Desert Buckwheat	2 LBS

6.2 pH Adjusters shall be not less than 99 percent elemental sulfur.

6.3 Soil Conditioners.

6.3.1 Rotted manure shall be unleached stable or cattle manure containing not more than 2 percent by volume of straw, sawdust, or other bedding materials and containing no chemicals or ingredients harmful to plants. It shall measure two or more cubic yards per ton.

6.3.2 Organic Fertilizer shall be commercial grade derived from Guano, digested sludge, and Urea fortified with Micro-Nutrients and acidifying minerals in granular pellet form, uniform in composition, suitable for application with

approved equipment. The fertilizer shall conform to paragraph: FERTILIZER except as specified herein.

6.3.3 Organic Amendment shall be a uniform blend of organic materials containing: Nitrohumus or Centrifuged, digested sludge, long lasting lignin, ground, leached composted, and aged, all to pass a 3/8 inch square mesh sieve, and micronutrients.

6.4 Fertilizers. Fertilizers shall be commercial grade, free flowing, uniform in composition and shall conform to appicable State and Federal regulations. Granular fertilizers shall conform to Fed. Spec. O-F-241, Type I, Level B, and shall bear the manufacturer's guaranteed statement of anlaysis. Granular inorganic fertilizer shall contain a minimum percentage by weight of 16 nitrogen, 8 available phosphoric acid, and 8 potash. Granular slow release fertilizer shall contain a minimum percentage by weight of 5 nitrogen (of which 80 percent shall be organic), 3 available phosphoric acid, and 1 potash.

6.5 Mulch.

6.6 Wood cellulose fiber for use with hydraulic application of grass seed and fertilizer shall consist of specially prepared wood cellulose fiber, processed to contain no growth or germination-inhibiting factors and dyed an appropriate color to facilitate visual metering of the application of materials. On an air-dry weight basis, the wood cellulose fiber shall contain a maximum of 12 percent moisture, plus or minus 3 percent at the time of manufacture. The pH range shall be from 3.5 to 5.0. The wood cellulose fiber shall be manufactured so that:

a. After addition and agitation in slurry tanks with grass, seeds, water, and other approved additives, the fibers in the material will become uniformly suspended to form a homogeneous slurry.

b. When hydraulically sprayed on the ground, the material will form a blotterlike cover impregnated uniformly with grass seed.

c. The cover will allow the absorption of moisture and allow rainfall or applied water to percolate to the underlaying soil.

6.6 Water. Water shall contain no elements toxic to plant life and shall be obtained from sources on project site at no cost to the Contractor. The irrigation system installed as part of this contract may be used.

6.7 Herbicides.

6.7.1 Broadleaf weed control post-emergence type with active ingredient not less than 10 percent diquat di bromide material shall be water soluble.

6.8 Erosion Control Material shall be a totally organic substance supplied in dry, powdered form, at least 70 percent of which is 92 percent pure muciloid, derived from ground Plantago ovata-insularis husk. Erosion control material shall be water-soluble, non-toxic, hydrophyllic and shall not inhibit germination.

7. INSTALLATION.

7.1 Tillage. After the areas required to be seeded have been brought to the grades as specified, they shall be thoroughly tilled to a depth of at least 6 inches by scarifying, disking, harrowing, or other approved methods. All debris

and stones larger than one inch remaining on the surface after tillage shall be removed.

7.2 Application of Soil Conditioner and pH Adjusters.

7.2.1 Inorganic Fertilizer shall be applied at the rate of 8 pounds per 1000 sq. ft. (350 lbs/acre).

7.2.2 Organic Amendment shall be applied at the rate of 6 cu. yds. per 1000 sq. ft. (33 percent by volume).

7.2.3 Soil Sulfur shall be applied at the rate of 15 lbs. of soil sulfur per 1000 sq. ft.

7.2.4 Soil Conditioners shall be incorporated into the soil to a depth of at least 6 inches and may be incorporated as part of the tillage operation hereinbefore specified. Immediately before seeding, the soil shall be restored to an even condition.

7.3 Application of Herbicide. All irrigated areas seeded in turf shall be treated with herbicide after completion of tillage. Pre-irrigation of the areas and application of the herbicide shall be in accordance with the recommendations of the manufacturer.

7.4 Planting Seasons and Conditions. Seed shall be sown between the dates of 15 April and 1 July. Planting shall not be done when the ground is in an unsatisfactory condition for planting. If special conditions exist that may warrant a variance in the above planting dates or conditions, a written request shall be submitted to the Contracting Officer stating the special conditions and proposed variance.

7.5 Seeding. Irrigated turf areas may be seeded by approved methods as specified hereinafter.

7.5.1 Native Seed shall be broadcast by approved sowing equipment. One half of the seed shall be sown in one direction, and the remainder shall be sown at right angles to the first sowing. The seed shall be covered to an average depth of 1/2 inches by means of spike-tooth harrow, cultipacker, or other approved device.

7.5.2 Drill seeding shall be accomplished using approved equipment such as cultipacker seeders and grass seed drills. The seed shall be drilled uniformly to an average depth of 1/2 inches.

7.5.3 When hydroseeding (turf only), the seed, fertilizer, and approved mulch material shall be mixed in the required amount of water to produce a homogeneous slurry and then uniformly applied under pressure at the following rates (dry weight), per acre:

90 pounds seed
200 pounds 16-8-8 inorganic fertilizer
1,000 pounds 5-3-1 slow release fertilizer (organic)
2,000 pounds wood cellulose fiber mulch
100 pounds erosion control material

7.5.4 Immediately after seeding, the entire area shall be firmed with a roller not exceeding 90 pounds for each foot or roller width. If seeding is performed with a cultipacker-type seeder or if seed is applied in combination with hydromulching, rolling may be eliminated.

7.5.5 Rotted Manure shall be evenly spread at the rate of 2/3 cu. yd. per 1000 sq. ft., for non-hydraulic applications.

7.5.6 Erosion Control Material shall be applied in accordance with material manufacturer's instructions.

7.6 Protection of Seeded Areas. Immediately after seeding, the area shall be protected against traffic or other use by erecting barricades, as required, and placing approved signs at appropriate intervals until final acceptance.

7.7 Restoration and Clean-Up. Excess and waste material shall be removed daily. When turfing in an area has been completed, the area shall be cleaned of all debris and excess material. Where existing turf areas have been damaged during turfing operations, the Contractor shall restore the areas to their original condition at his expense. At least one paved pedestrian access route and one paved vehicular access route to each building shall be kept clean at all times. Other paving shall be cleaned when work in adjacent areas is completed.

8. ESTABLISHMENT PERIOD.

8.1 General.

8.1.1 The turf establishment period shall be 90 days.

8.1.2 The Contractor shall be responsible for the establishment and proper care of a stand of turf plants over the entire seeded area.

8.2 Maintenance During the Establishment Period.

8.2.1 The Contractor shall provide the following maintenance: mowing, removal of excess clippings, eradicating weeds, water, fertilizing, overseeding and any other operation necessary to promote the growth of grass.

8.2.2 The seeded turf area shall be mowed to a height of 1 inch whenever the average height of the grass becomes 2 inches.

9. FINAL ACCEPTANCE.

9.1 General. Final inspection and acceptance will be at the end of the turf establishment period. Acceptance will be based upon a coverage of not less than 15 plants per square inch in irrigated areas. Prior to final acceptance, the Contractor shall apply 6 pounds per 1,000 square feet of an inorganic fertilizer. Formula for this application shall be 16N-8P-8K.

9.2 Replacement. Rejected areas shall be replanted within acceptable planting dates as directed by the Contracting Officer.

* * * * *

SECTION 20

TREES AND SHRUBS

Index

1. Applicable Publications
2. Source Inspections
3. Submittals
4. Delivery, Storage, and Handling
5. Materials
6. Site Preparation
7. Installation
8. Plant Establishment Period
9. Final Acceptance

1. APPLICABLE PUBLICATIONS. The publications listed below form a part of this specification to the extent referenced. The publications are referred to in text by the basic designation only.

1.1 Federal Specifications (Fed. Spec.).

O-F-241D	Fertilizers, Mixed, Commercial

1.2 American National Standards Institute (ANSI) Publication.

Z60.1-1973	Nursery Stock

1.3 American Joint Committee on Horticultural Nomenclature (AJCHN) Publication.

Second Edition-1942	Standarized Plant Names

2. SOURCE INSPECTIONS.

2.1 Plant Materials. Plant materials will be inspected by the Contracting Officer at the growing site and tagged or otherwise approved for delivery.

3. SUBMITTALS.

3.1 Samples. The following samples shall be submitted for approval before work is started.

3.1.1 Topsoil. Representative samples shall be taken from several locations on the area under consideration.

3.1.2 Soil Amendments. Ten pounds of each type to be used in the project.

3.2 Certified Laboratory Test Reports. Testing shall be performed by an approved independent laboratory within 10 days of submittal of reports. (Test reports on a previously tested material shall be accompanied by certificates from the manufacturer certifying that the material is equal in all respects to that proposed for this project.) Certified copies of the reports of tests listed below shall be submitted.

3.2.1 Offsite topsoil--for pH, salts, potash, and phosphorus.

3.2.2 Organic Amendments--for classification of total nitrogen moisture ash and organic matter sand content pH.

4. DELIVERY, STORAGE, AND HANDLING.

4.1 Delivery.

4.1.1 Plant material shall be inspected upon arrival at the jobsite and unacceptable plant material shall be removed from the jobsite.

4.1.2 Plants shall be protected during delivery to prevent damage to the root balls or desiccation of leaves. Trees shall be protected during transportation by tying in the branches and covering all exposed branches.

4.1.3 The use of equipment such as "tree spades" shall be permitted provided that the plant balls are sized in accordance with ANSI Z60.1 and tops are protected from damage.

4.1.4 Soil conditioners and amendments shall be delivered to the site in the original, unopened containers bearing the manufacturer's guaranteed chemical analysis and name. In lieu of containers, soil conditioners and amendments may be furnished in bulk and a certificate from the manufacturer indicating the above information shall accompany each delivery.

4.2 Storage.

4.2.1 Plant Storage. Plants not installed on the day of arrival at the site shall be stored and protected. Outside storage locations shall be continually shaded and protected from the wind. Plants stored on the project shall be protected from drying out at all times. Plants, including those in containers, shall be kept in a moist condition until planted by watering with a fine mist spray.

4.2.2 Storage of Other Materials. Soil conditions and amendments shall be kept in dry storage away from contaminants. Soil sterilant shall not be stored with any other landscape materials. Pesticide material shall be kept in dry storage and shall not contaminate adjacent material, and shall be handled and stored following manufacturer's directions. Storage of materials shall be in areas designated or as approved by the Contracting Officer.

4.3 Handling. Care shall be taken to avoid drying or damaging plants being moved from the nursery or storage area to the planting site. Plants shall not be handled by the trunk or stems. Plants shall be protected from freezing or drying out by a covering of burlap, tarpaulin, or mulching material during transportation to the planting site. Damaged plants will be rejected and shall be removed from the site.

5. MATERIALS.

5.1 Plants.

5.1.1 Plants shall be nursery grown conforming to ANSI Z60.1 and shall be of the varieties specified in the plant list bearing botanical names listed in the publication for Standardized Plant Names.

5.1.2 Planting stock shall be well-branched and well-formed, sound, vigorous, healthy, and free from disease, sun-scald, windburn, abrasion, and harmful insects or insect eggs and shall have healthy, normal and unbroken root systems. Deciduous trees and shrubs shall be symmetrically developed, of uniform habit of

growth, with straight boles or stems and free from objectionable disfigurements. Evergreen trees and shrubs shall have well developed symmetrical tops with typical spread of branches for each particular species or variety. Plants shall have been grown under climatic conditions similar to those in the locality of the project. Plants budding into leaf or having soft growth shall be sprayed with an antidesiccant at the nursery.

5.1.3 The minimum acceptable sizes of all plants, measured before pruning and with branches in normal position, shall conform to the measurements indicated. Plants larger in size than specified may be used as approved. If larger plants are used, the ball of earth or spread of roots shall be increased in accordance with ANSI Z60.1.

5.1.6 Container grown plants shall have sufficient root growth to hold the earth intact when removed from containers but shall not be root bound.

5.2 Topsoil.

5.2.1 Topsoil shall be the existing surface soil stripped and stockpiled on the site.

5.2.2 Additional topsoil, if required, beyond that available from stripping operations, shall be a natural, friable soil representative of productive soils at the site. It shall be obtained from well-drained areas and shall be free of any admixture of subsoil, foreign matter, objects larger than one inch in any dimension, toxic substances, and any material or substances that may be harmful to plant growth. The pH range shall be 6.5 to 8.0. Topsoil that does not meet this pH range shall be amended by the addition of pH adjusters, at a rate recommended by the County Extension Service agent, based on soil tests.

5.3 Fir Bark shall have 7.5 pounds of nitrogen added uniformly to each cubic yard and shall be free of chips, stones, sticks, soil, and toxic substances.

5.4 Planting Soil Mixture. The planting soil mixture shall be composed of 2 parts topsoil and 1 part Fir Back.

5.5 Fertilizer. Fertilizer shall be commercial grade and uniform in composition.

5.5.1 Granular fertilizer shall conform to Fed. Spec. O-F-241, Type I, Level B, and shall bear the manufacturer's guaranteed statement of analysis. Granular fertilizer shall contain a minimum percentage by weight of : 16 nitrogen, of which 50 percent shall be organic, 20 available phosphoric acid, and 0 potash.

5.6 Guying and Staking Material.

5.6.1 Stakes for tree support shall be lodge pole pine, free from knots, rot, cross grain, or other defects that would impair the strength. Standard stakes shall be hardwood, treated with pentachlorophenol, and a minimum of 2-1/2 inches in diameter by 8 feet long or as noted on drawings, and pointed at one end.

5.6.2 Guying wire shall be 14 gauge annealed galvanized steel. All 24-inch box trees shall be guyed.

5.6.3 Guying cable shall be a minimum of three-strand, 3/16-inch diameter steel cable.

5.6.4 Hose chafing guards shall be new 2-ply reinforced rubber or plastic hose and shall be all the same color on the project. Length shall be one and one-half times the circumference of the plant at its base.

5.6.5 Flags to be fastened to guys shall be 1/2-inch diameter PVC pipe and 6 feet in length.

5.6.6 Turnbuckles shall be galvanized or cadmium-plated steel and have a 3-inch minimum lengthwise opening fitted with screw eyes.

5.6.7 Deadmen shall be 4-inch by 8-inch rectangular or 8-inch diameter by 36-inch long sound wood.

5.7 Water. Water shall not contain elements toxic to plant life.

5.8 Tree Wound Dressing. Tree wound dressing shall be a black asphalt-base antiseptic paint.

6. SITE PREPARATION.

6.1 Clearing and Grading. Clearing shall consist of the satisfactory removal and disposal of brush, snags, and rubbish occuring within the area shown. Clearing shall be accomplished by hand within 5 feet of existing vegetation to be left standing. Grading shall conform to the lines and grades shown.

6.2 Layout. Plant material locations and bed outlines shall be staked on the project site before any plant pits are dug. Plant material locations may be adjusted by the Contracting Officer to meet field conditions.

6.3 Protection of Existing Vegetation. If lawns have been established prior to planting operations, the surrounding turf shall be covered before excavations are made in a manner that will protect turf areas. Existing trees, shrubbery, and beds that are to be preserved shall be barricaded in a manner that will effectively protect them during planting operations.

6.4 Turf Removal. Where planting beds occur in existing turf areas, the turf shall be removed to a depth that will ensure the removal of the entire root system.

6.5 Underground Obstructions to Planting. If underground utilities, construction, or solid rock ledges are encountered, other locations for planting may be selected by the Contracting Officer.

6.6 Plant Pits. Plant pits shall be dug to produce vertical sides and flat, the uncompacted bottoms. When pits are dug with an auger and the sides of the pits become glazed, the glazed surface shall be scarified. The size of plant pits shall be as shown.

7. INSTALLATION.

7.1 Planting Seasons and Conditions. Planting shall be done when the ground is not frozen, or in an otherwise unsuitable condition for planting. Plants shall be planted as directed by Contracting Officer.

7.2 Setting Plants. Container-grown plants shall be handled and moved only by the container. Plants shall be set plumb and moved only by the container. Plants shall be set plumb and held in position until sufficient soil has been firmly placed around ball. Plants shall be set in relation to surrounding grade so that they are even with the depth at which they were grown in the nursery. Fertilizer in packet or tablet form shall be placed prior to backfilling and in accordance with the manufacturer's recommendations.

7.2.1 Container-grown stock shall be removed from containers without damaging plant or root system.

7.3 Fertilization.

7.3.1 After establishment of finished grade around plants, all pit shall be topdressed with fertilizer at the rate of 10 pounds per 100 square feet of area or by tablet form fertilizer applied as per manufacturer's recommedations. Fertilizer adhering to plants shall be flushed off.

7.4 Watering. All watering shall be done in a manner which will provide uniform coverage but which will not cause erosion or damage to the finished surface. Sufficient water shall be applied to penetrate the planting bed to a depth of 4 inches.

7.5 Pruning.

7.5.1 New plant material shall be pruned in the following manner: Dead and broken branches shall be removed. Deciduous trees and shrubs shall be pruned to reduce total amount of anticipated foilage by one-fourth to one-third. Typical growth habit of individual plants shall be retained with as much height and spread as is practicable. Cuts shall be made with sharp instruments, and shall be flush with trunk or adjacent branch to ensure elimination of stubs. "Headback" cuts at right angles to line of growth shall not be permitted. Trees shall not be poled or the leader removed, nor shall the leader be pruned or "topped off." Trimmings shall be removed from the site. Cuts 1/2 inch in diameter and larger shall be painted with the specified tree wound dressing.

7.5.2 Existing trees to be treated are as indicated by tags on the site. Dead wood 1/2 inch or more in diameter, branches interfering with or hindering the healthy growth of the trees, and diseased branches shall be removed with a cleancut made flush with parent trunk. Cutting back or removal of branches shall be done as necessary to give the trees proper shape and balance. In removing large limbs, the initial cut shall be made on the underside at a safe distance from the trunk or lateral, to prevent ripping of bark. Large branches or limbs that cannot be removed in one piece, without endangering traffic or damaging property, shall be removed in sections and lowered by ropes. Workmen shall not be permitted to climb trees with climbing spurs. Stubs or improper cuts resulting from former pruning or limbs that have been broken shall be cut off flush and painted in order to promote proper healing. Girdling roots shall be removed. Cuts or wounds measuring 1/2 or more inches in diameter and exposed wood and scars resulting from previous work or damage shall be cleaned and painted with specified tree wound dressing. Decayed wood shall be removed to expose healthy tissue. Cavities shall be shaped to provide drainage; exposed cambium layers around cavities shall be promptly sealed with shellac; and the entire cavity shall be painted with specified tree wound dressing.

7.6 Waste Removal and Turf Repair. Excess and waste material shall be removed from the site. Existing turf areas that have been damaged or scarred during planting operations shall be restored to their original condition.

7.7 Maintenance During Installation. Maintenance operations shall begin immediately after each plant is planted and shall continue as required until final acceptance. Plants shall be kept in a healthy, growing condition by watering, pruning, spraying, weeding, and any other necessary operations of maintenance. Plant saucers and beds shall be kept free of weeds, grass, and other undesired vegetation. Plants shall be inspected at least once per week during the installation period and needed maintenance performed.

8. PLANT ESTABLISHEMENT.

8.1 Beginning Date. Plant establishment shall begin on the date all plants are in place as specified.

8.2 Establishment.

8.2.1 The native trees establishment period shall be 90 days.

8.2.2 Plants shall be watered as necessary to maintain an adequate supply of moisture within the root zone. An adequate supply of moisture is estimated to be the equivalent of 2 inches of absorbed water per week that is delivered at weekly intervals in the form of natural rain or is augmented as required by periodic waterings. Water shall not be applied with a force sufficient to displace mulch and shall not be applied so quickly that it cannot be absorbed by the mulch and plants. Dead plants shall be removed and replaced.

8.2.3 Plants shall be pruned as required.

8.2.4 Stakes, guys, and eroded plant saucers shall be replaced as required.

8.2.5 In plant beds, grass and weeds shall not be allowed to reach a height of 3 inches before completely removed, including the root growth. When plants are in groups other than cultivated beds, the Contractor shall not permit grass or other vegetation between them to become more than 5 inches in height.

8.2.6 Other work, such as spraying insecticides and fungicides to control pests, shall be done to ensure plant survival in a healthy, growing condition.

9. FINAL ACCEPTANCE.

9.1 Preliminary Inspection. A preliminary inspection will be held 3 months from the date of the beginning of the plant establishment period to determine plant acceptability and the number of replacements. Plants not in healthy growing condition will be noted and as soon as seasonal conditions permit shall be removed from the site and replaced with plants of the same species and size as originally specified. Alternate or substituted varieties of plants shall be used only if approved.

9.2 Final Inspection. A final inspection of all plants will be held after the replacement planting has been completed. No additional plant establishment period will be required for replacement plants.

* * * * *

SECTION 2P

IRRIGATION SYSTEM

Index

1. Applicable Publications
2. General
3. Materials
4. Installation
5. Tests
6. Disinfection
7. Tools
8. Cleanup
9. Variation in Arrangement of Sprinklers
10. Guarantee

1. APPLICABLE PUBLICATIONS. The publications listed below form a part of this specification to the extent referenced. The publications are referred to in the text by the basic designation only.

1.1 Federal Specification (Fed. Spec.).

WW-V-51E & Int. Am-2	Valve, Angle, Check, and Globe, Bronze, (125, 150 and 200 Pound, Threaded End, Flanged Ends, Solder Ends, and Brazed Ends, for Land Use)
WW-V-54D & Int. Am-1	Valve, Gate, Bronze (125, 150 and 200 Pound, Threaded Ends, Flanged Ends, Solder End and Brazed Ends, for Land Use

1.2 American Society for Testing and Materials (ASTM) Standards.

D 1785-74	Poly (Vinyl Chloride) (PVC) Plastic Pipe, Schedules 40, 80, and 120
D 2241-74	Poly (Vinyl Chloride) (PVC) Plastic Pipe (DDR-PR)
D 2464-74	Threaded Poly (Vinyl Chloride) (PVC) Plastic Pipe Fittings, Schedule 80
D 2466-74	Socket-Type Poly (Vinyl Chloride) (PVC) Plastic Pipe Fittings, Schedule 40
D 2564-73a	Solvent Cements for Poly (Vinyl Chloride) (PVC) Plastic Pipe and Fittings

1.3 American Water Works Association (AWWA) Standards.

C 500-71	Gate Valves 3 In. Through 48 In. for Water and Other Liquids
C 601-68	Disinfecting Water Mains
C 800-66	Threads for Underground Service Line Fittings

2. GENERAL. This section covers irrigation piping including connection to source of water supply, complete. Excavation, trenching, and backfill are specified in sections EXCAVATION and FILLS AND SUBGRADE PREPARATION.

2.1 Aboveground and Riser piping shall be galvanized steel.

2.2 Below Ground Piping. Pipe smaller than 4-inch shall be plastic. Pipe for sleeving shall be plastic. The minimum cover for laterals and branches shall be 12 inches. The minimum cover for pressure lines shall be 2.5 feet except under roadways, parking and paved areas the minimum cover shall be 3 feet.

2.3 Sprinkler heads and control valves shall not be located within 5 feet of building or structure foundations.

3. MATERIALS shall conform to the respective specifications and other requirements specified below.

3.1 Pipe.

3.1.1 Plastic Pipe shall conform to ASTM D 1785, schedule 40 for pipe with solvent welded joints and schedule 80 for pipe with threaded joints, or to ASTM D 2241, Type 1, grade 1, 315 psi for pressure lines and 200 psi for other lines for pipe with solvent welded joints. Pipe and fittings shall bear the seal of approval (nsf mark) of the National Sanitation Foundation's standard for plastic pipe and fittings for potable water service.

3.2 Joints.

3.2.1 Plastic Pipe Joints shall be solvent welded or threaded. Solvent for welded joints shall conform to ASTM D 2564. Use of pipe dope or solvents on threaded joints will not be permitted.

3.3 Fittings and Specials.

3.3.1 For Plastic Pipe. Fittings shall conform to ASTM D 2464 or D 2466.

3.4 Gate Valves shall be designed for a working pressure of not less than 150 psi. Valve connections shall be as required for the piping in which they are installed. Valves shall have a clear waterway equal to the full nominal diameter of the valve, and shall be opened by turning counterclockwise. The operating nut or wheel shall have an arrow, cast in the metal, indicating the direction of the opening.

3.4.1 Valves smaller than 3 inches shall be all bronze and shall conform to Fed. Spec. WW-V-54, type I.

3.5 Valve Boxes shall be plastic, or concrete, except that concrete boxes may be installed only in locations not subjected to vehicular traffic. Concrete boxes shall be the standard product of manufacturer of precast concrete equipment. The words "Irrigate", for gate valves; and "RCV" for remote control valves shall be cast in covers of boxes for the irrigation system. The boxes shall be such length as will be adapted, without full extension to the depth of cover required over the pipe at valve location. Plastic boxes shall be a standard catalog product of a manufacturer regularly engaged in the manufacture of valve boxes. Plastic boxes installed in paved areas, roadways and other areas subject to vehicular traffic shall be equipped with cast iron rings and covers. Plastic boxes installed in

turfed areas shall have green covers. Boxes housing control valves shall have lockable covers. Plastic shall be rigid combination of polyolefin and fibrous inorganic materials having the following physical properties:

ASTM Test	Metohd	Value
Tensile Strength (2.0 in. Min.)	D-638	3,400 psi
Impact Strength, Izod	D-256	0.5 ft-lb/in
Shore-D Hardness	D-2240	63
Deflection Temp. @ 66 psi stress	D-648	230 degrees F
Specific Gravity	D-792	1.15

3.6 Sprinklers.

3.6.1 Fixed Head, Pop-Up Nozzle Sprinklers shall be of the lawn sprinkler type having removeable spray tip nozzles of the full, half or quarter circle patterns, as required. The pop-up feature shall consist of a piston to which the spray tip nozzle is attached, a synthetic rubber gasket and shall be of sufficient height to permit it to rise at least one inch while in operation. Bodies shall be cast red brass, and the recess for the piston shall be sufficiently deep to contain the piston completely within the body of the sprinkler head. Pistons or piston parts, spray tip nozzles and other parts shall be machined from rod brass. Pistons shall be cylindrical in cross section and shall fit sufficiently close in a machined hole at top of head, or shall have a machined flange and seat, so as to exclude debris from the recess.

3.6.2 Single Nozzle Rotary Pop-Up Sprinklers of the full or part circle pattern as indicated actuated by impact drive with spring and level principle. Sprinkler seals shall be noeprene and bearings shall be dry-seal type. Sprinklers shall be of one piece housing type so that interior parts may be removed or replaced from top without removing housing from the riser. Sprinklers shall be equipped with break-up nozzle to regulate diameter, and free turning covers or other device to eliminate vandalism or damage. Full or part circle sprinklers shall be interchangeable in the same housing.

3.6.3 Shrubbery Spray Heads shall be fully adjustable from full flow to shut off. Heads shall be of all brass construction tapped for 1/2-inch I.P.S. female thread. Nozzles shall be interchangeable. Heads shall be equipped with vandal-proof locking screws.

3.6.4 Bubbler Type Irrigation Heads shall be fully adjustable from full flow to shut off. Heads shall be of all brass construction tapped for 1/2-inch I.P.S. female thread. Bubbler heads shall distribute the water in multiple, short throw streams spaced 60 degrees apart. Heads shall be equipped with vandal-proof locking screws.

3.7 Sprinkler Control Valves and Valve Accessories.

3.7.1 Remote Control Valves shall be completely serviceable while installed in line or shall have a union connection on the downstream side; shall have brass bodies, a flow control device; shall operate on approximately 24 volts, be normally closed, be slow closing globe type; and be of the same manufacturer as the automatic controller used in the work.

3.7.2 Quick Coupling Valves shall be two piece, spring-loaded, compression type, normally closed, opening against line pressure, and actuated by downward thrust against the valve. Body shall be of cast red bronze. Machined parts shall be fabricated from red brass. Valve washers and sealers for key stems shall be of a semi-rigid, non-metallic, material and shall be easily replaceable. Inlets shall be tapped for National Standard pipe thread of the pipe riser size or sizes shownon the drawings. Valves shall be suitable for a maximum operating pressure of 150 psi and shall be the standard product of a reputable manufacturer of quick coupling valves for lawn sprinkling systems. The Contractor shall furnish coupler keys for operating the valves in the amount required for assembly with each portable, single nozzle, rotary sprinkler. The Contractor shall furnish coupler keys for operating the valves with hose swivels. Rubber sleeves shall be the standard product of the manufacturer of quick coupling valves adn when required they shall replace hinged cover as regularly furnished. Each sleeve shall have a cover.

3.8 Unions shall conform to the requirements of Fed. Spec. WW-U-531, Type B.

3.9 Electrical Work shall conform to the requirements of section: Electrical wiring from controller to control valves shall be solid, single conductor, copper wire, type UF, size recommended by the controller manufacturer except that minimum wire size shall be No. 16. Common wire shall be different color from all others. Regardless of the number of location of valves connected to a single controller station, separate control wires shall be run from the controller station to each valve. Wiring from controllers to panel shall be installed in rigid conduit.

3.10 Gravel shall be crushed or natural materials washed and uniformly graded between 3/8 and one-inch size.

3.11 Pipe Bedding and Backfill Materials. Sand bedding material not less than 2 inches thick shall be placed under pipe where trench excavation is in rock. Where sand bedding is not required, the bottom of trenches shall be accurately graded to provide uniform bearing and support for each section of pipe on undisturbed soil at every point along its entire length. Backfill material shall be suitable for the required compaction and free from stones larger than one inch in any dimension.

3.12 Miscellaneous Items.

4. INSTALLATION.

4.1 General. Unless otherwise specified, installation of sprinklers, control valves, and boxes shall conform to the standard details attached to this section.

4.2 Handling. Pipe and accessories shall be handled so as to insure delivery to the trench in sound, undamaged condition. The interior of pipe and accessories shall be thoroughly cleaned of foreign matter before being lowered into the trench and shall be kept clean during laying operations by plugging or other approved method. Before installation, the pipe shall be inspected for defects. Material found to be defective before or after laying shall be replaced with sound material at no additional cost to the Government.

4.3 Cutting of pipe shall be done in a neat and workmanlike manner without damage to the pipe. Unless otherwise recommended by the manufacturer and authorized by the Contracting Officer, cutting shall be done with an approved type mechanical cutter. Wheel cutters shall be used when practicable.

4.3.1 Plastic Pipe shall be cut square and all burrs, particles and curls shall be removed.

TABLE I

Deflection in Inches

Diameter in Inches	Push-On Joint Pipe	Mechanical-Joint Pipe
3	19	31
4	19	31
6	19	27
8	19	20
10	19	20

If the alinement required deflection in excess of the above limitations, special bends or a sufficient number of shorter lengths of pipe shall be furnished to provide angular deflection within the limit set forth.

4.5 Placing and Laying. Pipe and accessories shall be carefully lowered in to the trench by authorized equipment. Under no circumstances shall any of the materials be dropped or dumped into the trench. The full length of each section of pipe shall rest solidly upon the pipe bed, with recesses excavated to accommodate joints. Pipe that has the grade or joint disturbed after laying shall be taken up and relaid. Pipe shall not be laid in water or when trench conditions are unsuitable for the work. Water shall be kept out of the trench until jointing is completed. When work is not in progress, open ends of pipe, fitting, and valves shall be securely closed so that no trench water, earth, or other substance will enter the pipes of fittings.

4.5.1 Plastic Pipe shall be installed in accordance with the procedures recommended in ASTM D 2774 and as herein specified.

4.6 Jointing.

4.6.1 Insulating Joints shall be installed in accordance with recommendations of the manufacturer.

4.6.2 Connections between different types of pipe and accessories shall be made with transition fittings approved by the Contracting Officer.

4.7 Pipe Sleeves shall be installed with a minimum of off-set at the joints to permit easy installation and removal of the irrigation lines. All plastic lines shall be installed in sleeves under paved areas. Sleeves shall extend at least 12 inches beyond the edges of the pavement. Sizes of sleeves shall be as follows:

Pipe Size (inches)	Minimum Sleeve Size (inches)
1/2	2
3/4	2-1/2
1,1-1/4 and 1-1/2	3
2 and 2-1/2	4
3 and 4	6

4.8 Setting of Valves, and Boxes. Valves and valve boxes shall be installed where shown or directed, and shall be set plumb. Valve boxes shall be centered on the valves. Valves shall be located outside the area of roads and streets. Earth fill shall be carefully tamped around each valve or meter box to a distance of 4 feet on all sides of the box, or to the undisturbed trench face if less than 4 feet. Valves shall have the interiors cleaned of all foreign matter before installation. Stuffing boxes shall be tightened and the valve shall be inspected in open and closed positions to insure that all parts are in working condition.

9. Reaction Backing.

4.9.1 Thrust blocks shall be concrete mixed not leaner than one cement: 2-1/2 sand: 5 gravel. Blocks shall be placed between solid ground and the fitting to be anchored. The area of bearing shall be as indicated or as approved.

4.9.2 Backing for sprinkler risers shall be redwood stakes size and location as indicated. Tie wire shall be corrosion resistant not less than 0.0475-inch diameter, 18-gage.

4.10 Remote Control Valves.

4.10.1 Install remote control valves in locations as shown on the drawings, with a cover of 8 inches maximum over top of flow control stem. Install a union on downstream side of all valves not provided with a union type connection. Fit with concrete valve box and cover. Top of valve box shall be flush with finish grade.

4.11 Remote Control Wiring. Connections of wiring, other than in the controller housing, shall be made with epoxy encapsulated connectors. Where more than one wire is placed in trench, the wiring shall be taped together at maximum intervals of 10 feet.

5. TESTS.

5.1 After completion of the piping system and prior to backfilling and the installation of the sprinkler heads, the entire system shall be tested for leaks and thoroughly flushed under pressure to remove any dirt, scale or other material. Lines shall be tested at 200 psi for one hour duration. Cracked or defective pipe, fittings, or accessories disclosed in the pressure tests shall be replaced by the Contractor with sound material at no additonal cost to the Government, and the test shall be replaced by the Contractor with sound material at no additional cost to the Government, and the test shall be repeated until results are satisfactory to the Contracting Officer.

5.1.1 No line shall be covered until inspection and approval has been given by the Contracting Officer.

5.1.2 Testing of plastic pipe shall not be done until all joints have had at least 24 hours to set and cure. During cold weather, 48 hours elasped time shall be allowed for setting prior to testing. No water under pressure shall come in contact with any joint during the specified curing period. In hot weather, water shall not be permitted to stand in pipes until after backfilling is completed. Water used in testing shall be drained from pipes after completion of testing.

5.2 Coverage Test. When the irrigation system is completed the entire system shall be adjusted and operated to demonstarate the water coverage is complete and adequate and that the system conforms to the requirements of the plans and specifications. All deficiencies and inadequacies resulting from defective or inadequate materials (excludes salvaged sprinkler heads, remote control value, and quick couplers) and/or workmanship shall be corrected at no additional cost to the Government. In the event any salvage sprinkler head, remote control valve, or quick coupler is found to be defective, or does not conform to manufactures requirements shall be replaced in accordance with these specifications, and an equitable adjustment in contract price will be made.

6. DISINFECTION. The completed line from the backflow prevention unit to the connection to the existing waterline shall be disinfected as prescribed by AWWA C 601.

7. TOOLS. Three sets of special wrenchs for removal and/or installation of sprinkler heads shall be provided at locations designated by the Contracting Officer.

8. CLEANUP. Upon completion of the installation of the irrigation system and appurtenances, all debris and surplus materials resulting from the work shall be removed.

9. VARIATION IN ARRANGEMENT OF SPRINKLERS from those shown on drawings will be permitted. If such variation is made, the Contractor shall submit a shop drawing for approval in accordance with the Special Provisions. If any conflicts occur necessitating departures from the contract drawings, details of departures, hydraulic calculation and reasons shall be submitted as soon as practicable for written approval of the Contracting Officer. Hydraulic calculations shall include application rate per hour, maximum triangular spacing of heads for design flow rate and pressure, overlap including wind loss allowance and friction loss through pipe fittings, valves and accessories.

10. GUARANTEE. The following equipment to be furnished under this specification shall be guaranteed for a period of one year from the date of acceptance thereof, either for beneficial use or final acceptance, whichever is earlier, against defective materials, design, and workmanship:

Quick coupling valves
Rotary sprinklers
Control valves
Pop-up sprinklers

* * * * *

SECTION 2R

CONCRETE SIDEWALKS AND CURBS AND GUTTERS

Index

1. Applicable Publication
2. Field-Control Tests
3. Materials
4. Concrete Strength and Usage
5. Forms
6. Subgrade Preparation
7. Form Setting
8. Concrete Placement and Finishing
9. Curing and Protection
10. Sealing Joints

1. APPLICABLE PUBLICATIONS. The publications listed below form a part of this specification to the extent referenced. The publications are referred to in the text by the basic designation only.

1.1 American Association of State Highway and Transportation Officials (AASHTO) Publication:

M 182-60 (R 1974)	Burlap Cloth Made From Jute or Kenaf

1.2 American Society for Testing and Materials (ASTM) Publications:

C 94-81	Ready-Mixed Concrete
C 171-69 (R-1980)	Sheet Materials for Curing Concrete
C 173-78	Air Content of Freshly Mixed Concrete by the Volumetric Method
C 231-81	Air Content of Freshly Mixed Concrete by the Pressure Method
C 309-81	Liquid Membrane-Forming Compounds for Curing Concrete
D 1751-73 (R 1978)	Preformed Expansion Joint Fillers for Concrete Paving and Structural Construction (Nonextruding and Resilient Bituminous Types)
D 1752-67 (R 1978)	Preformed Sponge Rubber and Cork Expansion Joint Fillers for Concrete Paving and Structural Construction
D 1850-74 (R 1979)	Concrete Joint Sealer, Cold-Application Type

2. FIELD-CONTROL TESTS. Preparation of field-control samples and testing of samples shall be by the Contractor at no additional cost to the Government. The taking of samples, the making of test specimens , and the testing thereof shall be performed under the supervision of the Contracting Officer.

3. MATERIALS. Materials shall conform to the respective publications and other requirements specified herein.

3.1 Concrete Curing Materials.

3.1.1 Burlap. AASHTO M 182 having a wight of 14 ounces or more per square yard when dry.

3.1.2 Impervious Sheeting. ASTM C 171.

3.1.3 Liquid Membrane Curing Compound. ASTM C 309 Type 1D. Compound shall be free of paraffin or petroleum.

3.2 Concrete Protection Materials. Linseed oil mixture shall be equal parts, by volume, of linseed oil and either mineral spirits, naptha, or turpentine. At the option of the Contractor, commercially prepared linseed oil mixtures formulated specifically for application to concrete to provide protection against the action of deicing chemicals may be used except that emulsified mixtures are not acceptable.

3.3 Joint Materials.

3.3.1 Expansion Joint Fillers. ASTM D 1751 ro ASTM D 1752 or shall be resin impregnated fiberboard conforming to the physical requirements of ASTM D 1752.

3.3.2 Joint Sealers. ASTM D 1850 or Fed. Spec. SS-S-1401.

4. CONCRETE STRENGTH AND USAGE.

4.1 Sidewalk Concrete. Concrete and materials therefor shall conform to the applicable requirements of section: CONCRETE and ASTM C 94, Alternative No. 2 except as specified below. Concrete shall have a minimum compressive strength of 2,500 psi. The maximum size of aggregate shall be 1-1/2 inches. Concrete shall have a slump of not more than 3 inches. The concrete mixtures shall have air content by volume of concrete of 5 to 7 percent, based on measurements made immediately after discharge from the mixer. Air content shall be determined in accordance with ASTM C 173 or ASTM C 231. ASTM C 231 shall be used with concretes and mortars made with relatively dense natural aggregates.

4.2 Curb and Gutter Concrete. Concrete and the equipment, workmanship and materials therefor shall conform to the applicable requirements of section: CONCRETE and ASTM C 94, except specified below. Concrete shall have a minimum compressive strength of 3,000 psi. The maximum size of aggregate shall be 1-1/2 inches. Concrete shall have a slump of not more than 3 inches. The concrete mixture shall have a air content by volume of concrete of 5 to 7 percent, based on measurements made immediately after discharge from the mixer.

5. FORMS.

5.1 Sidewalks. Sidewalk forms shall be of wood or steel, straight of sufficient strength to resist springing during depositing and consolidating concrete, and of a height equal to the full depth of the finished sidewalk. Wood forms shall be surfaced plank, 2-inch nominal thickness, straight and free from warp, twist, loose knots, splits or other defects. Wood forms shall have a nominal length of 10 feet, with a minimum of three stakes per form, at maximum spacing of 4 feet. Corners, deep sections, and radius bends shall have additional stakes and braces, as required. Radius bends may be formed with 3/4-inch boards, laminated to the required thickness. Steel forms shall be channel-formed sections with a flat top surface and with welded braces at each end and not less than two intermediate

points. Form ends shall be interlocked and self-alining. Forms shall include flexible forms for radius forming, corner forms, form spreaders, and fillers. Forms shall have a nominal length of 10 feet, with a minimum of two welded stake pockets per form. Stake pins shall be solid steel rods with chamfered heads and pointed tips, designed for use with steel forms.

5.2 Curb and Gutter. Curb and gutter forms shall be of wood or steel, straight, and or sufficient strength to resist spinging during depositing and consolidating the concrete. The outside forms shall have a height equal to the full depth of the curb or gutter. The inside form of curb shall have a batter as indicated and shall be securely fastened to and supported by the outside form. Straight forms of wood shall be surfaced plank, 2-inch nominal thickness, straight and free from warp, twist, loose knots, splits, or other defects. Wood forms shall have a nominal length of 10 feet, with a minimum of three stakes per form, at maximum spacing of 4 feet. Corners, deep sections, and radius bends shall have additonal stakes and braces, as required. Radius bends may be formed with 3/4-inch boards, laminated to the required thickness. Steel forms shall be channel-formed sections with a flat top surface and with welded braces at each end and at not less than two intermediate points. Form ends shall be interlocked and self-alining. Forms shall include flexible forms for radius forming, corner forms, form spreaders, and fillers. Forms shall have a nominal length of 10 feet, with minimum of two welded stake pockets per form. Stake pins shall be solid steel rods with chamfered heads and pointed tips, designed for use with steel forms. Rigid forms shall be provided for curb returns, except that benders of thin plank forms may be used for curb or curb returns with a radius of 10 feet or more, where grade changes occur in the return, or where the central angle is such that a rigid form with a central angle of 90 degrees cannot be used. Back forms for curb returns may be made of 1-1/2-inch benders, for the full height of the curb, cleated together.

6. SUBGRADE PREPARATION. The subgrade shall be constructed to grade and cross section.

6.1 Sidewalk Subgrade. The subgrade shall be thoroughly wetted and then compacted with two passes of a 500-pound roller. Yielding material deflecting more than 1/2 inch under the specified roller shall be removed to a depth of not less than 4 inches below subgrade elevation and replaced with an approved granular material. The material shall then be compacted as described above. The completed subgrade shall be tested for grade and cross section with a template extending the full width of the sidewalk and supported between side forms.

6.2 Curb and Gutter Subgrade. The subgrade shall be of materials equal in bearing quality to the subgrade under the adjacent roadway, street or open storage area and shall be placed and compacted to conform with applicable requirements of sections: EXCAVATION and FILLS AND SUBGRADE PREPARATRION. The subgrade shall be tested for grade and cross section by means of a template extending the full width of the curb and gutter.

6.3 Maintenance of Subgrade. The subgrade shall be maintained in a smooth, compacted condition, in conformity with the required section and established grade until the concrete is placed. The subgrade shall be in a moist condition when concrete is placed. The subgrade shall be prepared and protected so as to produce a subgrade free from frost when the concrete is deposited.

7. FORM SETTING.

7.1 Sidewalk. Forms for sidewalks shall be set with the upper edge true to line and grade and shall be held rigidly in place by stakes placed at intervals not to exceed 4 feet. After forms are set, grade and alinement shall be checked with a 10-foot straightedge. Forms shall conform to line and grade with an allowable tolerance of 1/8 inch in any 10-foot long section. Forms shall have a transverse slope of 1/4 inch per foot with the low side adjacent to the roadway. Forms shall be coated with form oil each time before concrete is placed. Wood forms may, instead, be thoroughly wetted with water before concrete is placed, except that with probable freezing temperatures, oiling is mandatory. Side forms shall not be removed for less than 12 hours after finishing has been completed.

7.2 Curbs. Forms for curbs shall be carefully set to alinement and grade and to conform to the dimensions of the curb. Forms shall be held rigidly in place by the use of stakes placed at intervals not to exceed 4 feet. Clamps, spreaders, and braces shall be used where required to insure rigidity in the forms. The forms on the front of the curb shall be removed not less than 2 hours nor more than 6 hours after the concrete has been placed. Forms back of curb shall remain in place until the face and top of the curb have been finished as specified for concrete finishing. Gutter forms shall not be removed while the concrete is sufficiently plastic to slump in any direction. Forms shall be cleaned and coated with form oil each time before concrete is placed. Wood forms may, instead, be thoroughly wetted with water before concrete is placed, except that with probable freezing temperatures, oiling is mandatory.

8. CONCRETE PLACEMENT AND FINISHING.

8.1 Sidewalk Concrete. Concrete shall be placed in the forms in one layer of such thickness that when compacted and finished the sidewalk will be of the thickness indicated. After concrete has been placed in the forms, a strike-off guided by side forms shall be used to bring the surface to proper section to be compacted. The concrete shall be tamped and consolidated with a suitable wood or metal tamping bar, and the surface shall be finished to grade with a wood float. Finished surface of the walk shall not vary more than 3/16 inch from the testing edge of a 10 foot-straightedge. Irregulatories exceeding the above shall be satisfactorily corrected. The surface shall be divided into rectangular areas by means of contraction joints spaced at not more than 5 feet on centers.

8.1.1 Concrete Finishing. After straightedging, when most of the water sheen has disappeared, and just before the concrete hardens, the surface shall be finished to a smooth and uniformly fine granular or sandy texture free of waves, irregularities, or tool marks. A scored surface shall be produced by brooming with a stiff, coarse, fiber broom or with a soft-bristled broom.

8.1.2 Edge and Joint Finishing. All slab edges, including those at formed joints, shall be finished carefully with an edger having a radius of 1/8 inch. When brooming is selected for the final surface finish, the transverse joints shall be edged before brooming and the brooming shall eliminate the flat surface left by the surface face of the edger. Corner and edges which have crumbled and areas which lack sufficient mortar for proper finishing shall be cleaned and filled solidly with a properly proportioned mortar mixture and then finished.

8.1.3 Contraction Joints. The contraction joints shall be formed in the fresh concrete by cutting a groove in the top portion of the slab to a depth of at least one-fourth of the sidewalk slab thickness, using a jointer to cut the groove, or by sawing a groove in the hardened concrete with a power-driven saw, unless otherwise approved. Sawed joints shall be constructed by sawing a groove in the

concrete with a 1/8-inch blade to the depth indicated. The time of sawing shall be varied, depending on existing and anticipated weather conditions, and such sawing shall be at the required rate. An ample supply of saw blades shall be available on the job before concrete placement is started, and at least one standby sawing unit in good working order shall be available at the jobsite at all times during the sawing operations.

8.1.4 Expansion Joints. Transverse expansion joints shall be installed at sidewalk returns and opposite expansion joints in adjoining curbs. Where the sidewalk is not in contact with the curb, transverse expansion joints shall be installed as indicated. Transverse expansion joints shall be filled with 1/2-inch joint filler strip. Joint filler shall be placed with top edge 1/4 inch below the surface and shall be held in place with steel pins or other devices to prevent warping of the filler during floating and finishing. Immediately after finishing operations are completed, joint edges shall be rounded with an edging tool having a radius of 1/8 inch, and concrete over the joint filler shall be removed. Expansion joints shall be formed about structures and features that project through or into the sidewalk pavement, using joint filler of the type, thickness, and width indicated. The filler shall be installed in such manner as to form a complete, uniform separation between the structure and sidewalk pavement. At the end of the curing period, expansion joints shall be carefully cleaned and filled with joint sealer. Concrete at the joint shall be surface dry, and the atmospheric and pavement temperatures shall be above 50 degrees F. at the time of application of joint-sealing materials. Joints shall be filled flush with the concrete surface in such manner as to minimize spilling on the walk surface. Spilled sealing material shall be removed immediately and the surface of the walk cleaned. Dummy groove joints shall not be sealed.

8.1.5 Surface Uniformity. The completed surface shall be uniform in color and free of surface blemishes and tool marks.

8.2 Curb and Gutter Concrete, Concrete shall be placed in layers not to exceed 6 inches. Concrete shall be thoroughly consolidated by tamping and spading or with approved mechanical vibrators.

8.2.1 Concrete Finishing. The edges of the gutter and top of the curb shall be rounded with an edging tool to a radius of 1/2-inch and the surfaces shall be floated and finshed with a smooth wood float until true to grade and section and uniform in texture. Floated surfaces shall then be brushed with a fine-hair brush with longitudinal strokes. Immediately after removing the front curb form, the face of the curb shall be rubbed with a wood or concrete rubbing block and water until blemishes, form marks, and tool marks have been removed. The surface, while still wet, shall be brushed in the same manner as the gutter and curb top. The top surface of gutter and entrance shall be finished to grade with a wood float. Except at grade changes or curves, finished surfaces shall not vary, from the testing edge of 10-foot straightedge, more than 1/8 inch for gutter and entrance and 1/4 inch for top and face of curb. Irregularities exceeding the above shall be satisfactorily corrected. Visible surfaces and edges of finished curb and gutter shall be free of blemishes and form and tool marks, and shall be uniform in color, shape, and appearance.

8.2.2 Joints. Expansion joints and contraction joints shall be constructed at right angles to the line of curb and gutter.

8.2.2.1 Contraction Joints. Contraction joints shall be constructed by means of 1/8-inch thick separators, of a section conforming to the cross section of the curb and gutter. Contraction joints shall be constructed directly opposite

contraction joints in abutting portland-cement-concrete pavement. Where curb and gutter do not abut portland-cement-concrete pavements, contraction joints shall be so placed that monolithic sections between curb returns will not be less than 5 feet nor greater than 15 feet in length. Separators shall be removed as soon as practicable after concrete has set sufficiently to preserve the width and shape of the joint. Separators shall be removed prior to finishing.

8.2.2.2 Expansion Joints. Expansion joints shall be formed by means of preformed expansion-joint filler material cut and shaped to the cross section of curb and gutter. Expansion joints shall be provided in curb and gutter directly opposite expansion joints of abutting portland-cement-concrete pavement, and shall be of the same type and thickness of joints in the pavement. Where curb and gutter do not abut Portland cement concrete pave, expansion joints at least 1/2-inch in width shall be provided at intervals not exceeding 30 feet. Expansion joints shall be provided in non-reinforced concrere gutter at locations indicated.

8.3 Curb-Forming Machines. Curb-forming machines for constructing curb and gutter will be approved based on trial use on the job. Use of the equipment shall be discontinued at any time during construction if the equipment produces unsatisfactory results, and the work shall be accomplished as specified above. Unsatisfactory work shall be removed and reconstructed for the full length between regularly scheduled joints. Removed portions shall be disposed of as directed.

9. CURING AND PROTECTION.

9.1 Curing. Immediately after the finishing operations, exposed concrete surfaces shall be cured by one of the following methods as the Contractor may elect.

9.1.1 Mat Method. The entire exposed surface shall be covered with two or more layers of burlap. Mats shall overlap each other at least 6 inches. The mat shall be thoroughly wetted with water prior to placing on concrete surface and shall be kept continuously in a saturated condition and in intimate contact with concrete for not less than 7 days.

9.1.2 Impervious Sheeting Method. The entire exposed surface shall be wetted with a fine spray of water and then covered with imperviuos sheeting material. Sheets shall be laid directly on the concrete surface with the light-colored side up and overlap 12 inches when a continous sheet is not used. The curing medium shall not be less than 18 inches wider than the concrete surface to be cured, and shall be securely weighted down by heavy wood planks, or by placing a bank of moist earth along edges and laps in the sheets. Sheets shall be satisfactorily repaired or replaced if torn or otherwise damaged during curing. The curing medium shall remain on the concrete surface to be cured for not less than 7 days.

9.1.3 Membrane-Curing Method. The entire exposed surface shall be covered with a membrane-forming curing compound. Where type 1 curing compound is used, the concrete surface shall be shaded from the direct rays of the sun during the curing period. Curing compound shall be applied in two coats by hand-operated pressure sprayers at a coverage of approximately 200 square feet per gallon for both coats. The second coat shall be applied in a direction approximately at right angles to the direction of application of the first coat. The compound shall form a uniform, continuous, coherent film that will not check, crack, or peel and shall be free from pinholes or other imperfections. Apply an additional coat to all surfaces showing discontinuity, pinholes or other defects. Concrete surfaces that

are subjected to heavy rainfall within 3 hours after curing compound has been applied shall be resprayed by the above method and at the above coverage at no additional cost to the Government. Expansion-joint openings shall be sealed at the top by inserting moistened paper or fiber rope or covering with strips of waterproof paper prior to application of the curing compound, in a manner to prevent the curing compound entering the joint. Concrete surfaces to which membrane-curing compounds have been applied shall be adequately protected for 7 days from pedestrian and vehicular traffic and from any other action that might disrupt the continuity of the membrane. Any area covered with curing compound and damaged by subsequent construction operations within the 7-day curing period shall be resprayed as specified above at no additional expense to the Government.

9.2 Backfilling. After curing, debris shall be removed, and the area adjoining the sidewalk shall be backfilled, graded, and compacted to conform to the surrounding area in accordance with lines and grade indicated.

9.3 Protection. Completed sidewalk shall be protected from damage until accepted. The Contractor shall repair damaged concrete and clean concrete discolored during construction. Sidewalk that is damaged shall be removed and recontructed for the entire length between regularly schedule joints. Refinishing the damaged portion will not be acceptable. Removed damaged poritons shall be disposed of as directed.

10. SEALING JOINTS. The approximately horizontal sections of expansion joints and the top 1-inch depth of contraction-joint openings of curb and gutter shall be sealed with joint sealer. The joint opening shall be thoroughly cleaned before the sealing material is placed. Sealing shall be done so that the material will not be spilled on exposed surfaces of the concrete. Concrete at the joint shall be surface dry and atmospheric and concrete temperatures shall be above 50 degrees F. at the time of application of joint-sealing materials. Excess material on exposed surfaces of the concrete shall be removed immediately and exposed concrete surfaces cleaned.

* * * * *

SECTION 3A

CONCRETE

Index

1. Related Work Specified Elsewhere
2. Applicable Publications
3. Quality Assurance
4. Evaluation and Acceptance
5. Submittals
6. Materials
7. Proportioning
8. Production of Concrete
9. Preparation for Placing
10. Conveying
11. Placing
12. Repair of Surface Defects
13. Finishing Unformed Surfaces
14. Curing and Protection
15. Finishing Formed Surfaces
16. Contractor Quality Control

1. RELATED WORK SPECIFIED ELSEWHERE.

1.1 Concrete Formwork. Section: Formwork for Concrete.

1.2 Concrete Reinforcement. Section: Steel Bars, Welded Wire Fabric and Accessories for Concrete Reinforcement.

1.3 Expansion, Contraction, and Construction Joints. Section: Expansion, Contraction and Construction Joints in Concrete.

2. APPLICABLE PUBLICATIONS. The publications listed below form a part of this specification to the extent referenced. The publications are referred to in the text by the basic designation only.

2.1 American Society for Testing and Materials (ASTM) with Corresponding CRD Standard Indicated Where Available.

C 33-80 (CRD-C 133)	Concrete Aggregates
C 70-79 (CRD-C 111)	Surface Moisture of Fine Aggregate
C 94-80 (CRD-C 31)	Ready-Mixed Concrete
C 117-80 (CRD-C 105)	Materials Finer Than 75-UM (No. 200) Sieve in Mineral Aggregates by Washing
C 143-78	Slump of Portland Cement Concrete
C 150-80 (CRD-C 201)	Portland Cement
C 171-69 (R 1980) (CRD-C 310)	Sheet Materials for Curing Concrete
C 172-71 (R 1977) (CRD-C 4)	Sampling of Fresh Concrete

C 231-80	Air Content of Freshly Mixed Concrete by the Pressure Method
C 494-79 (CRD-C 87)	Chemical Admixtures for Concrete
C 566-78 (CRD-C 113	Total Moisture Content of Aggregate by Drying
E 11-81 (CRD-C 102)	Wire-Cloth Sieves for Testing Purposes
E 329-77 (CRD-C 500)	Inspection and Testing Agencies for Concrete, Steel and Bituminous Materials as Used in Construction

2.2 Concrete Plant Manufacturers Bureau (CPMB).

6th Edition (CRD-C 95)	Concrete Plant Standards

2.3 National Bureau of Standards (NBS) Handbook.

H 44	Specifications, Tolerance and Other Technical Requirements for Weighing and Measuring Devices (4th Edition with Replacement Sheets)

2.4 U.S. Army Corps of Engineers Handbook for Cement and Concrete (CRD).

CRD-C 13-79	Air Entraining Admixtures for Concrete
CRD-C 55-78	Concrete Mixer Performance
CRD-C 94-66	Surface Retarders
CRD-C 100-75	Concrete Aggregate and Aggregate Sources and Selection of Material for Testing
CRD-C 103-60	Sieve Analysis of Fine and Coarse Aggregates for Use in Portland Cement Concrete
CRD-C 104-80	Calculation of Fineness Modulus of Aggregate
CRD-C 112-69	Surface Moisture in Aggregate by Water Displacement
CRD-C 119-53	Flat and Elongated Particles in Coarse Aggregate
CRD-C 143-62	Meters for Automatic Indication of Moisture in Fine Aggregate

CRD-C 300-77	Membrane-Forming Compounds for Curing Concrete
CRD-C 400-63	Water for Use in Mixing or Curing Concrete
CRD-C 521-78	Frequency and Amplitude of Vibrators for Concrete

3. QUALITY ASSURANCE.

3.1 Construction Testing By Government. The Government will sample and test aggregates and concrete to determine compliance with the specifications. The Contractor shall provide facilities and labor as may be necessary for procurement of representatives test samples. When the Contractor proposes to reduce concrete mixing time, uniformity tests at reduced mixing time will be made by the Government at the Contractor's expense. Samples of aggregates will be obtained at the point of batching. Concrete will be sampled in accordance with ASTM C 172. Slump and air content will be determined in accordance with ASTM C 143 and ASTM C 231, respectively. Compression test specimens will be made and cured in accordance with ASTM C 31 and compression test specimens tested in accordance with ASTM C 39. Samples for strength tests of each class of concrete placed each day will be taken not less than once each day, nor less than once for each 150 cu. yd. of concrete, nor less than once for each 5,000 sq. ft. of surface area of one side of slabs or walls. Three specimens will be made from each sample, two will be tested at 28 days for acceptance and one will be tested at 7 days for information. The acceptance test results will be the average of the strengths of the two specimens tested at 28 days.

4. EVALUATION AND ACCEPTANCE

4.1 Concrete. The strength of the concrete will be considered satisfactory so long as the average of all sets of three consecutive tests results equal or exceed the required specified strength $f'c$ and no individual tests fall below the specified strength $f'c$ by more than 500 pounds per square inch. Structural analysis or additional testing may be required at the Contractor's expense when the strength of the concrete in the structure is considered potentially deficient. Concrete work judged inadequate by structural analysis or by results of tests shall be reinforced with additional construction as directed by the Contracting Officer or shall be replaced at the Contractor's expense.

4.2 Construction Tolerances. Variations in alinement, grade and dimension of the structures from the established alignment, grade and dimension shown on the drawings shall be within the tolerance specified in the following tables:

TABLE I

CONSTRUCTION TOLERANCES FOR CONCRETE STRUCTURES
OTHER THAN CONCRETE CHANNEL LINING

(1)	Departure from established alignment	
(2)	Departure from established grades	.....1 inch
(3)	Variation from the plumb, from the specified batter. in the lines and surfaces of columns, walls, piers	Exposed In any 10 ft.....1/2-inch In buried construction.....1-inch
(4)	Variation from the level or from the grades indicated on the drawings in slabs, beams, horizontal grooves, and railing offsets	Exposed In 10 ft.....1/2-inch In buried construction.....1-inch
(5)	Variation in cross-sectional dimensions of columns, beams, walls, and similar members similar members	Minus.....1/4-inch Plus.....1/2-inch
(6)	Variation in the thickness of slabs, walls, and similar members	Minus.....1/8-inch Plus.....1/4-inch
(7)	Footings for columns, piers, walls, and similar members	
	a. Variation of dimensions in plan	Minus.....1/2-inch Plus.....2-inches
	b. Misplacement of eccentricity	2 percent of footing width in the direction of misplacement but not more than.....2-inches
	c. Reduction in thickness	5 percent of specified thickness
(8)	Sills, sidewalls for structures	
	Variation from the plumb and level	.....Not greater than 1/8-inch in 10 feet
(10)	Variation in steps:	
	a. In a flight of stairs	Riser.....1/8-inch Thread.....1/4-inch
	b. In consecutive steps	Riser.....1/16-inch Thread.....1/8-inch

TABLE II

TOLERANCES FOR CONCRETE CHANNEL LINING

(1)	Departure from established alinement	2 inches on tangents 4 inches on curves
(2)	Departure from established profile grade	1-inch
(3)	Reduction in thickness in lining	10 percent of specified thickness: provided, that average thickness is maintained as determined by daily batch volumes
(4)	Variation from specified width of section at any height	1/4 of 1 percent plus 1-inch
(5)	Variation from established height of lining	1/2 of 1 percent plus 1-inch
(6)	Variation in surfaces	Invert 1/4-inch in 10 feet Side slopes 1/2-inch in 10 feet

4.2 Surface Requirements. The surface requirements for the finishes required by section: FORMWORK FOR CONCRETE, shall be as hereinafter specified. Allowable irregularities are designated "abrupt" or "gradual" for purposes of providing for surface variations. Offsets resulting from displaced, misplaced or mismatched forms, or sheathing, or loose knots in sheathing, or other similar form defects, shall be considered "abrupt" irregularities. Irregularities resulting from warping, unplaneness or similar uniform variations from planeness, or true curvature, shall be considered "gradual" irregularities. "Gradual" irregularities will be checked for compliance with the prescribed limits with a 5-foot template, consisting of a straightedge for plane surfaces and shaped template for curved or warped surfaces. In measuring irregularities, the straightedge or template may be placed anywhere on the surface in any direction, with the testing edge held parallel to the intended surface.

Class of Finish	Irregularities	
	Abrupt, inches	Gradual, inches
B	1/4	1/2
D	1	1

4.3 Appearance. Surfaces which are permanently exposed shall be cleaned if stained or otherwise discolored, by a method which does not harm the concrete and which is approved by the Contracting Officer.

5. SUBMITTALS.

5.1 Test Reports.

5.1.1 Concrete mixture proportion shall be submitted for approval. The proportions of all ingredients and nominal maximum coarse aggregate size that will be used in the manufacture of each quality of concrete shall be stated. Proportions shall indicate weight of cement and water and weights of aggregates in a saturated surface-dry condition. The submission shall be accompaned by test reports from a laboratory complying with ASTM E 329 attesting that proportions thus selected will produce concrete of the qualities indicated. No substitution shall be made in the source or type of materials used in the work without additional tests to show that the new materials and quality of concrete are satisfactory.

5.1.2 Cement will be accepted on the basis of manufacturer's certification of compliance, accompanied by mill test reports that materials meet the requirements of the specifications under which it is furnished. Certifications and mill test reports shall identify the particular lot furnished. No cement shall be used until notice of acceptance has been given by the Contracting Officer. Cement will be subject to check testing from samples obtained at the mill, at transfer points or at the project site, as scheduled by the Contracting Officer, and such sampling will be by or under the supervision of the Government at its expense. Material not meeting specifications shall be promptly removed from the site of work.

5.2 Manufacturers' Certificate.

5.2.1 Acceleration admixture shall be certified for compliance with all specification requirements.

5.2.2 Impervious sheet curing materials shall be certified for compliance with all specifications requirements.

5.2.3 Air-entraining admixture shall be certified for compliance with all specifications requirements.

5.2.4 Water-reducing admixture shall be certified for compliance with all specifications requirements.

5.2.5 Curing compound shall be certified for compliance with all specifications requirements.

5.3 Review of Plant, Equipment and Methods.

5.3.1 Batch Plant. Details of the data on concrete plant shall be submitted for review by the Contracting Officer for conformance with paragraph: PRODUCTION OF CONCRETE.

5.3.2 Mixers. The make, type and capacity of concrete mixers proposed for mixing concrete shall be submitted for review by the Contracting Officer for conformance with paragraph: PRODUCTION OF CONCRETE.

5.3.3 Conveying Equipment. The methods and equipment for transporting, handling, and depositing the concrete shall be submitted for review by the Contracting Officer for confrmance with paragraph: CONVEYING.

5.3.4 Placing. All placing equipment and methods shall be submitted for review by the Contracting Officer for conformance with paragraph: PLACING.

5.3.5 Joint Clean-up. The method and equipment proposed for joint clean-up shall be submitted for review by the Contracting Officer for conformance with paragraph: PREPARATION FOR PLACING. Method of waste disposal for any method proposed for joint clean-up shall be approved by the Contracting Officer.

5.3.6 Curing. The curing medium and methods to be used shall be submitted for review by the Contracting Officer for conformance with paragraph: CURING AND PROTECTION.

5.3.7 Cold-weather Requirements. If concrete is proposed to be placed under hot weather conditions the materials and methods proposed to accomplish it in accordance with the requirements of paragraph: PLACING and paragraph: CURING AND PROTECTION shall be approved by the Contracting Officer.

5.3.8 Hot-weather Requirements. If concrete is proposed to be placed under hot weather conditions the materials and methods proposed to accomplish it in accordance with the requirements of paragraph: PLACING and paragraph: CURING AND PROTECTION shall be approved by the Contracting Officer.

6. MATERIALS.

6.1 Cement. Cement shall be Portland cement and shall conform to appropriate specifications listed below.

6.1.1 Portland Cement. Portland cement shall conform to Fed. Spec. SS-C-1960/3, Type I or II, low alkali.

6.1.2 High-Early-Strength Portland Cement. High-early-strength Portland cement shall conform to Fed. Spec. SS-C-1960/3, Type III and shall be used only when specifically approved in writing. Concrete made with such cement shall be subject to all applicable provisions of these specifications.

6.2 Admixtures.

6.2.1 Air-entraining Admixtures. The air entraining admixture shall conform to CRD-C 13.

6.2.2 Water-Reducer. A water-reducing admixture shall meet the requirements of ASTM C-494, Type A, B or D.

6.2.3 Accelerating Admixture. The accelerating admixture shall be calcium chloride conforming to ASTM D 98.

6.3 Curing Materials.

6.3.1 Impervious Sheet Mateials shall conform to ASTM C-171, type optional, except polyethylene film, if used, shall be white opaque.

6.3.2 Membrane-Forming Curing Compounds shall conform to CRD-C 300. The compound shall be pigmented or non-pigmented as required in applicable subparagraph of paragraph, CURING AND PROTECTION, and shall have a chlorinated rubber base when used on surfaces that are to be painted. Non-pigmented compounds shall contain a fugitive dye.

6.4 Water. Water for washing aggregates and for mixing and curing concrete shall be fresh and free from injurious amounts of oil, acid, salt, alkali, organic matter, or other deleterious substances and shall comply with CRD-C 400.

6.5 Aggregates shall be produced from approved sources. Fine aggregate will conform to the grading required of ASTM C-33 and coarse aggregates will conform to the grading requirements of ASTM C-33 sizes 1 1/2 or 3/4. The nominal maximum size shall be as listed in paragraph: PROPORTIONING.

7. PROPORTIONING.

7.1 Quality and Location. Concrete of various qualities indicated and as required under other sections shall be proportioned for use in various structures or portions of structures as follows:

7.1.1 Strength. Specified compressive strength f'c shall be as follows:

f'c, psi	No. of days	Structure
3000	28	Cast-in-place structures other than culverts
4000	7	Cast-in-place culverts under Arizona Canal (Sta 18+25 to Sta 16+80)
4000	28	Culverts other than those under the Arizona Canal.
4000	28	Precast Culvert Sections

7.2 Nominal Maximum size coarse aggregate shall be 1-1/2 inches except 3/4-inch nominal maximum size coarse aggregate shall be used when any of the following conditions exist: the narrowest dimension between sides of forms is less than 7-1/2 inches, the depth of the slab is less than 4-1/2 inches or when the minimum clear spacing between reinforcing is less than 2 inches.

7.3 Air Content as determined by ASTM C 231 shall be 5.0 + 1.5 percent except that when the nominal maximum size coarse aggregate is 3/4-inch it shall be 6.0 + 1.5 percent.

7.4 Slump. The slump shall be determined in accordance with ASTM C-143 and shall not depart more than 1-1/2-inches from that stipulated below:

Structural Element	Slump; inches
Massive or lightly reinforced sections, tunnel inverts, bridge decks and all slabs	1-1/2

7.5 Concrete Proportioning. Trial design batches and testing requirements for various qualities of concrete specified shall be the responsibility of the Contractor. Samples of approved aggregates shall be obtained in accordance with the requirements of ASTM D 75. Samples of materials other than aggregate shall be representative of those proposed for the project and shall be accompanied by manufacturer's test reports indicating compliance with applicable specified requirements. Trial mixtures having proportions, consistencies and air content suitable for the work shall be made based on ACI Standard 211.1, using at least three different water-cement ratio which will prorduce a range of strength encompassing those required for the work. Trial mixtures shall be desgined for masimum permitted slump and air content. The temperature of concrete in each trial batch shall be reported. For each water-cement ratio at least three test cylinders for each test age shall be made and cured in accordance with ASTM C 192. They shall be tested at 7 and 28 days in accordance with ASTM C 39. From these test results a curve shall be plotted showing the relationship between water-cement ratio and strength.

7.6 Average Strength. For each portion of the structure, proportions shall be selected so that the maximum permitted water-cement ratio is not exceeded and so as to produce an average strength f_{cr} exceeding the specified strength f'_c by the amount indicated below. Where the productin facility has a standard deviation record determined in accordance with ACI 214, based on 30 consecutive strength tests of similar mixture proportions as proposed, obtained within one year of the time when concrete placing is expected, it shall be used in selecting average strength. The average strength used as the basis for selecting proportions shall exceed the specified strength f'_c by at least

350 psi if standard deviation is less than 300 psi

550 psi if standard deviation is 300 to 450 psi

750 psi if standard deviation is 450 to 600 psi

900 psi if standard deviation is 600 to 750 psi

If the standard deviation exceeds 750 psi or if a standard deviation record is not available, proportions shall be selected to produce an average strength at least 1,000 psi greater than the specified strength.

8. PRODUCTION OF CONCRETE.

8.1 Capacity. The batching and mixing equipment shall have a capacity of at least 100 cubic yards per hour.

8.2 Batching Plant shall conform to the requirements of the Concrete Plant Standards of CPMB and as specified; however, rating plates attached to batch plant equipment are not required.

8.2.1 Equipment. The batching controls shall be semi-automatic or automatic. The semi-automatic or automatic batching system shall be equipped with an accurate recorder or recorders which meet the requirement of the Concrete Plant Standards of CPMB). Separate bins or compartments shall be provided for each size group of aggregate and cement. Aggregate shall not be weighed in the same batcher with cement. If measured by weight, water shall not be weighed cumulatively with another ingredient. Water batcher filling and discharging valves shall be so interlocked that the discharge valve cannot be opened before the filling valve is fully closed. An accurate mechanical device for measuring and dispensing each admixture shall be provided. Each dispenser shall be interlocked with the batching and discharging operation of the water so that each admixture is separately batched and discharged automatically in a manner to obtain uniform distribution throughout the batch in the specified mixing period. Where use of truck mixers make this requirement impracticable, the admixture dispensers shall be interlocked with the sand batcher. Admixtures will not be combined prior to introduction in water or sand. The plant shall be arranged so as to facilitate the inspection of all operatins at all times. Suitable facilities shall be provided for obtaining representative samples or aggreagates from each bin or compartment.

8.2.2 Scales. The weighing equipment shall conform to the applicable requirements of NBS Handbook 44, except that the accuracy shall be plus or minus 0.2 percent of scale capacity. The Contractor shall provide standard test weights and any other auxiliary equipment required for checking the operating performance of each scale or other measuring devices. The tests shall be made at the frequency required in paragraph: CONTRACTOR QUALITY CONTROL and in the presence of a Government inspector.

8.2.3 Batching Tolerances.

8.2.3.1 Weighing Tolerances. Whichever of the following tolerances is greater shall apply, based on required scale reading.

Material	Percent of Required Weight	Percent of Scale Capacity
Cement	+1	+0.3
Aggregate	+2	+0.3
Water	+1	+0.3
Admixture	+3	+0.3

8.2.3.2 Volumetric Tolerances. For volumetric batching equipment the following tolerances shall apply to the required volume of material being batched:

Water: Plus or minus 1 percent.

Admixtures: Plus or minus 3 percent.

8.2.4 Moisture Control. The plant shall be capable of ready adjustment to compensate for the varying moisture contents of the aggregates, and to change the weights of the materials being batched.

8.3 Mixers.

8.3.1 General. The mixer shall not be charged in excess of the capacity recommended by the manufacturer. The mixers shall be operated at the drum of mixing blade speed designated on the manufacturer's data plate. The mixers shall be maintained in satisfactory operating condition, and the mixer drums shall be kept free of hardened concrete. Should any mixer at any time produce unsatisfactory results, its use shall be promptly discontinued until it is repaired.

8.3.2 Concrete plant mixers shall be tilting, non-tilting, horizontal shaft or vertical-shaft type and shall be provided with an acceptable device to lock the discharge mechanism until the required mixing time has elasped. The mixing time and uniformity shall conform to paragraph: PRODUCTION OF CONCRETE.

8.3.2.1 Mixing Time and Unformity. In the absence of uniformity data for concrete mixers, the mixing time for each batch after all solid materials are in the mixer shall be one minute for mixers having a capacity of one cubic yard, provided that all of the mixing water is introduced before one-fourth of the mixing time has elapsed. For mixers of greater capacity, this minimum time shall be increased 15 seconds for each additional cubic yard or fraction thereof. These mixing times are predicated on operation at designated speed and proper introduction of materials into the mixer. The mixing time will be increased to secure the required uniformity when the average variability index for the tests performed in accordance with paragraph: CONCRETE QUALITY CONTROL is less than any of the following uniformity requirements:

Test	Average Variability Index
Water content, % by wt.	91.5
Coarse aggregate contente, % by wt.	90.5
Unit - weight of air-free mortar, % by st.	98.5
Cement content of dried mortar, % wt.	82.5

The mixing time may be reduced, when requested by the Contractor, to the minimum time required to meet all the uniformity requirements. Mixer performance tests in accordance with CRD-C 55 at reduced mixing times will be performed by the Govnernment at the Contractor's expense.

8.3.3 Truck Mixers. Truck mixers, the mixing of concrete therein, and concrete uniformity, shall conform to the requirments of ASTM C-94. A truck mixer may be used either for complete mixing (transit-mixed) or to finish the partial mixing done in a stationary mixer (shrink-mixed). Each truck shall be equipped with two counters from which it will be possible to determine the number of revolutions at mixing speed and the number of revolutions at agitating speed. Truck mixers shall not be used to mix or to agitate concrete with greater than 1-1/2-inch nominal miximum size aggregate.

9. PREPARATION FOR PLACING.

9.1 Construction Joints. Concrete surfaces to which other concrete is to be bonded shall be prepared for receiving the next lift or adjacent concrete by cleaning with either wet sandblasting, high pressure water jet, or other approved method; however, approved wet sandblasting equipment shall be provided.

9.1.1 High-Pressure Water Jet. A stream of water under a pressure of not less than 3000 psi may be used for cleaning. Its use shall be delayed until the concrete is sufficiently hard so that only the surface skin or mortar is removed and there is no undercutting of coarse aggregate particles. Where the cleaning occurs more than two days prior to placing the next lift or where the work in the area subsequent to the cleaning causes dirt or debris to be deposited on the surface, the surface shall be cleaned again as the last operation prior to placing the next lift. If the water jet is incapable of a satisfactory cleaning, the surface shall be cleaned by wet sandblasting.

9.1.2 Wet Sandblasting. When employed in the preparation of construction joints, wet sandblasting shall be performed as the final operation completed before placing the following lift. The operation shall be continued until all accumulated laitance, coatings, stains, debris, and other foreign materials are removed. The surface of the concrete shall then be washed thoroughly to remove all loose material. The surface shall again be washed just prior to placing the succeeding lift.

9.1.3 Waste Disposal. The method used in disposing of waste water employed in cutting, washing and rinsing of concrete surfaces shall be such that the waste water does not stain, discolor, or affect exposed surfaces of the structures, or damage the environment of the project area. Method of disposal shall be subject to approval.

9.2 Embedded Items. Before placing concrete, care shall be taken to determine that all embedded items are firmly and securely fastened in place as indicated on the drawings, or required. Embedded items shall be free of oil and other foreign matter such as loose coating or rust, paint and scale. The embedding of wood in concrete will be permitted only when specifically authorized or directed. Voids in sleeves, inserts and anchor slots shall be filled temporarily with readily removable materials to prevent the entry of concrete into the voids.

10. CONVEYING.

10.1 General. Concrete shall be conveyed from mixer to forms as rapidly as practicable and within the time interval in paragraph: PLACING by methods which will prevent segregation or loss of ingredients. Any concrete transferred from one conveying device to another shall be passed through a hopper which is conical in shape and shall not be dropped vertically more than 5 feet, except where suitable equipment is provided to prevent segragation and where specifically authorized. Telephonic or other satisfactory means of rapid communication between the mixing plant and the forms in which concrete is being placed shall be provided and available for use by Government inspectors.

10.2 Buckets. The interior hopper slope shall be not less than 58 degrees from the horizontal, the minimum dimension of the clear gate opening shall be at least 5 times the nominal maximum size aggregate and the area of the gate opening shall be not less than two-square feet. The maximum dimension of the gate opening shall not be greater than twice the minimum dimension. The bucket gates shall be essentially grout tight when closed and may be manually, pneumatically or hydraulically operated except for buckets larger than 2 cubic yards shall not be manually operated. The design of the bucket shall provide means for positive regulation of the amount and rate of deposit of concrete in each dumping position.

10.3 Trucks. Truck mixers operating at agitating speed or truck agitators used for transporting plant-mixed concrete shall conform to the requirements of ASTM C-

94. Non-agitating equipment may be used for transporting plant mixed concrete over a smooth road when hauling time is less than 15 minutes. Bodies of non-agitating equipment shall be smooth, watertight, metal containers equipped with gates that will permit the discharge of the concrete. Covers shall be provided for protection against the weather.

10.4 Chutes. When concrete can be placed directly from a truck mixer, agitator or non-agitating equipment, the chutes attached to this equipment may be used. A discharge deflector shall be used when required by the Contracting Officer. Separate chutes and other similar equipment will not be permitted for conveying concrete except when specifically approved.

10.5 Belt Conveyors. Belt conveyors may be used when approved. Such conveyors shall be designed and operated to assure to uniform flow of concrete from mixer to final place of deposit without segregation of ingredients or loss of mortar and shall be provided with positive means for preventing segregation of the concrete at the transfer points and the point of placing.

10.6 Pump Placement. Concrete may be conveyed by positive displacement pump when approved. The pumping equipment shall be piston or squeeze pressure type. The pipeline shall be rigid steel pipe or heavy duty flexible hose. The inside diameter of the pipe shall be at least three times the nominal maximum size coarse aggregate in the concrete mixture to be pumped but not less than 4 inches. The maximum size coarse aggregate will not be reduced to accomodate the pumps. The distance to be pumped shall not exceed limits recommended by the pump manufacturer. The concrete shall be supplied to the concrete pump continuously. When pumping is complete, concrete remaining in the pipeline shall be ejected without contamination of concrete in place. After each operation, equipment shall be thoroughly cleaned, and flushing water shall be wasted outside of the forms.

11. PLACING.

11.1 General. Concrete placement will not be permitted when, in the opinion of the Contracting Officer, weather conditions prevent proper placement and consolidation. Concrete shall be deposited as close as possible to its final position in the forms, and in so depositing there shall be no vertical drop greater than 5 feet except where suitable equipment is provided to prevent segregation and where specifically authorized. Depositing of the concrete shall be so regulated that it may be effectively consolidated in horizontal layers 1-1/2 feet or less in thickness with a minimum of lateral movement. The amount deposited in each location shall be that which can be readily and thoroughly consolidated. The surfaces of construction joints shall be kept continuously wet for the first twelve hours during the twenty-four hour period prior to placing concrete. Free water shall be provided so that concrete placement can be kept plastic and free of cold joints while concrete is being placed.

11.2 Time Interval Between Mixing and Placing. Concrete shall be placed within thirty minutes after it has been mixed except when conveyed by agitating equipment. When concrete is truck mixed or when a truck mixer or agitator is used for transportating concrete mixed by a concrete plant mixer, the concrete shall be delivered to the site of the work and discharge shall be completed within 1/1/2 hours after introduction of the cement to the aggregates except when the concrete temperature exceeds 85°F, the discharge shall be completed within 45 minutes. Concrete shall be placed within 15 minutes after it has been discharged.

11.3 Cold-Weather Placing. Concrete shall not be placed without a procedure approved in accordance with paragraph: SUBMITTALS when the concrete is likely to be subjected to freezing temperatures before the expiration of the curing period. The ambient temperature of the space adjacent to the concrete placement and surfaces to receive concrete shall be maintained at not less than 40°F. The placing temperature of the concrete having a minimum dimension less than 12 inches shall be between 60° and 75°F. The placing temperature of the concrete having a minimum dimension greater than 12 inches shall be between 50° and 75°F. Heating of the mixing water or aggregates will be required to regulate the concrete placing temperatures. Materials entering the mixer shall be free from ice, snow or frozen lumps. Salt, chemicals or other materials shall not be mixed with the concrete to prevent freezing, except that calcium chloride may be used as an accelerator. The amount of calcium chloride in the concrete shall not be exceed 2 percent by weight of cement being used, and it shall be introduced into the concrete in solution.

11.4 Hot-Weather Placing. Concrete shall be properly placed and finished with approved procedures in accordance with paragraph: SUBMITTALS. The concrete placing temperature shall not exceed 90°F. Cooling of the mixing water and/or aggregates will be required to obtain an adequate placing temperature. An approved retarder may be used to facilitate placing and finishing. Steel forms and reinforcement shall be cooled prior to concrete placement when steel temperatures are greater than 120°F. Conveying and placing equipment shall be cooled if necessary to maintain proper concrete placing temperature.

11.5 Concrete on Earth Foundations. Earth surfaces upon which concrete is to be placed shall be clean, damp, and free from frost, ice, and standing or running water. Prior to placing concrete the earth foundation shall have been satisfactorily compacted in accordance with the provisions of Section 2E.

11.6 Consolidation. Immediately after placing, each layer of concrete shall be consolidated by internal equipment. Vibrators will not be used to transport concrete within the forms. Hand spading may be required if necessary with internal vibration along formed surfaces permanently exposed to view. The vibrating equipment shall at all times be adequate in number of units and power of each unit to properly consolidate the concrete. A spare vibrator shall be kept on the job site during all concrete placing operations. Form or surface vibrators shall not be used unless specifically approved. Vibrators of the proper size, frequency and amplitude shall be used for the type of work being preformed in conformance with the following requirements:

Application	Head Diameter (inches)	Frequency VPM	Amplitude (in.)
Thin walls, beams, etc.	1-1/4 - 2-1/2	900 - 13500	0.02 - 0.04
General construction	2 - 3-1/2	800 - 12000	0.25 - 0.05

The frequency and amplitude shall be within the range indicated in th table above when determined in accordance with paragraph: CONTRACTOR QUALITY CONTROL. The vibrator shall be inserted vertically at uniform spacing over the entire area of placement. The distance between insertions shall be approximately 1-1/2 times the radius of action of the vibrator. The vibrator shall penetrate rapidly to the bottom of the layer and at least 6 inches into the preceding layer if such exists. It shall be held stationary until the concrete is consolidated and then withdrawn slowly.

12. REPAIR OF SURFACE DEFECTS. Within 24 hours after form removal, all fins and loose materials shall be removed and surface defects including tie holes shall be remedied. All honeycombed and other defective concrete shall be repaired. All unsound concrete shall be removed from defective areas. Defective areas larger than 36 square inches and deeper than steel or 4 inches shall be delineated in a rectangular shape by a saw cut a minimum depth of 1-inch and repaired with concrete replacement. Minor honeycomb and holes left by the removal of tie rods in all surfaces not to receive additional concrete shall be reamed or chipped and filled with dry mortar. If chipping is necessary the edges shall be perpendicular to the surface or slightly undercut. As determined by trial mixtures, the cement used in the mortar or concrete for all surfaces permanently exposed to view shall be a blend of portland cement and white cement properly proportioned so that the final color when cured will be the same as adjacent concrete. Temperature of the concrete, ambient air, replacement concrete or mortar during remedial work including curing shall be above 50°F. The prepared area shall be dampened, brush-coated with a neat cement grout or with an approved epoxy resin, and filled with mortar or concrete. The mortar shall consist of 1 part cement to 2-1/2 parts fine aggregate. The quantity of mixing water shall be the minimum necessary to obtain a uniform mixture. The mortar shall be remixed without addition of water until it obtains the stiffest consistency that will permit placing. Mortar shall be thoroughly compacted in place and struck off to adjacent concrete. Replacement concrete shall be drier than the usual mixture and thoroughly tamped into place and finished. Forms shall be used if required. Metal tools shall not be used to finish permanently exposed surfaces. The patched areas shall be cured for seven days.

13. FINISHING UNFORMED SURFACES.

13.1 General. The ambient temperature of spaces adjacent to surfaces being finished shall be not less than 50°F. All unformed surfaces that are not to be covered by additional concrete or backfill shall be finished to the elevation shown on the drawings. Surfaces to receive additional concrete or backfill shall be brought to elevation shown on the drawings and left true and regular. Exterior surfaces shall be sloped for drainage unless otherwise shown on the drawings or a as directed. Joints shall be carefully made with a jointing tool. The finished surfaces shall be protected from stains or abrasions. Surfaces or edges likely to be injured during the construction period shall be protected from damage. Tolerance for a screeded finish shall be true planes within 3/8-inch in 10 feet as determined by a 10-foot straightedge placed anywhere on the slab in any direction. Tolerance for a floated finish shall be true planes within 1/4-inch in 10 feet as determined by a 10-foot straightedge placed anywhere on the slab in any direction. Tolerance for a troweled finish shall be true planes within 1/8-inch in 10 feet as determined by a 10-foot straightedge placed anywhere on the slab in any direction.

13.2 Float Finish. All unformed surfaces of concrete that are not to be covered by additional concrete or backfill, shall have a float finish unless a steel trowel finish is specified. Surfaces shall be screeded and darbied or bullfloated to bring the surface to the required finish level with no coarse aggregate visible. No cement or mortar shall be added to th surface during the finishing operation. The concrete, while still green but sufficiently hardened to bear a man's weight without deep imprint, shall be floated to a true and even plane. Floating may be performed by use of hand or power driven equipment. Hand floats shall be made of magnesium or aluminum.

14. CURING AND PROTECTION.

14.1 General. All concrete shall be cured by an approved method for the period of time given below:

Type III Portland cement	3 days
Type I or II Portland cement	21 days

Immediately after placement, concrete shall be protected from premature drying, extremes in temperatures, rapid temperature change, mechanical injury and injury from rain and flowing water. All materials and equipment needed for adequate curing and protection shall be available and at the placement site prior to start of concrete placement. Concrete shall be protected from the damaging effects of rain for 12 hours, flowing water for 14 days. All concrete shall be adequately protected from damage. No fire or excessive heat shall be permitted near or in direct contact with concrete at any time.

14.2 Moist Curing. Concrete moist-cured shall be maintained continuously (not periodically) wet for the entire curing period. If water or curing materials used stain or discolor concrete surfaces which are to be permanently exposed, they shall be cleaned as required in paragraph: EVALUATION AND ACCEPTANCE. When wooden form sheathing is left in place during curing, the sheathing shall be kept wet at all times. Horizontal surfaces shall be cured by ponding, by covering with a minimum uniform thickness of 2 inches continuously saturated sand, or by covering with saturated non-staining burlap or cotton mats or sealed impervious sheet materials. The following exceptions are permitted:

14.2.1 Horizontal construction joints may be allowed to dry for twelve hours immediately prior to placing of the following lift.

14.2.2 Where insulation is approved for cold weather protection, all joints in the insulation shall be sealed to prevent moisture loss and maintained sealed throughout curing period.

14.3 Membrane Curing. Concrete may be cured with an approved curing compound in lieu of moist curing except that membrance curing will not be permitted on any surface to which sack rubbed finish is to be applied, on any surface containing protruding steel reinforcement. It may be used on surfaces to which concrete or any other material is to be bonded only under the conditions given in paragraph: CURING AND PROTECTION.

14.3.1 A pigmented type curing compound conforming to CRD-C 300 may be used on surfaces which will not be exposed to view when the project is completed, on surfaces where the appearance of the compound as determined by the Contracting Officer is not objectinable, or on surfaces that are to be painted. It may also be used on surfaces against which concrete is to be bonded, except those to which sack rubbed finish is to be applied or those containing protruding steel reinforcement, provided that it is completely removed by high-pressure water jet or by wet sandblasting described in paragraph: PREPARATION FOR PLACING prior to placing the new concrete. Only a chlorinated rubber base curing compound conforming to CRD-C may be used on surfaces that are to be painted. A non-pigmented type curing compound containing a fugitive dye, conforming to CRD-C 300 with the reflective requirements waived may be used on surfaces which will be exposed to view when the project is completed.

14.3.2 The curing compound shall be applied to formed surfaces immediately after the forms are removed and prior to any patching or other surface treatment except the cleaning of loose sand, mortar, and debris from the surface. The surfaces shall be thoroughly moistened with water and the curing compound applied as soon as free water disappears. The curing compound shall be applied to unformed surfaces as soon as free water has disappeared. The curing compound shall be applied in a 2-coat continuous operation by approved motorized powerspraying equipment and at a uniform coverage of not more than 400 square feet per gallon for each coat. Concrete surfaces which have been subjected to rainfall within 3 hours after curing compound has been applied shall be resprayed by the method and at the coverage herein specified. All concrete surfaces on which the curing compound has been applied shall be adequately protected for the duration of the entire curing period from pedestrian and vehicular traffic and from any other cause which will disrupt the continuity of the curing membrane.

14.4 Impervious-sheet Curing. The following concrete surfaces may be cured using impervious sheets: Channel invert, L-Wall footings. All surfaces shall be thoroughtly wetted and be completely covered with waterproof paper, polyethylene film or with polythylene-coated burlap having the burlap thoroughly water-saturated before placing. Covering shall be laid with light colored side up. Covering shall be lapped not less than 12 inches and securely weighted down or shall be lapped not less than 4 inches and taped to form a continuous cover with completely closed joints. The sheet shall be weighted to prevent displacement so that it remains in contact with the concrete during the specified length of curing. Coverings shall be folded down over exposed edges of slabs and secured by approved means. Sheets shall be immediately repaired or replaced if tears or holes appears during the curing period.

14.5 Cold Weather. When the mean daily outdoor temperature is less than 40°F, the temperature of the concrete shall be maintained between 50°F and 70°F for required curing period. In addition, during the period of protection removal, the air temperature adjacent during the period of protection removal, the air temperature adjacent to the concrete surfaces shall be controlled so that concrete near the surface will not be subjected to a temperature differential of more than 25°F as determined by observation of ambient and concrete temperatures. Curing compounds shall not be used on concrete surfaces which are maintained at curing temperature by use of free steam.

14.6 Hot Weather. When the rate of evaporation of surface moisture, as determined by use of Fig. 2.1.5 of ACI 305, may be reasonably be expected to exceed 0.2 lb per sq. ft. per hour, provision for windbreaks, shading, fog spraying, or wet covering with a light colored material shall be made in advance of placement, and such protective measures shall be taken as quickly as finishing operations will allow.

15. FINISHING FORMED SURFACES.

15.1 General. Surfaces, unless other type of finish is specified, shall be left with the texture imparted by the forms except defective surfaces shall be repaired in accordance with paragraph: REPAIR ON SURFACE DEFECTS. Unless painting of surfaces is required, uniform color shall be maintained by use of only one mixture design without changes in materials or proportions for any structure or portion of structure which is exposed to view or on which a special finish is required. The form panels used to produce the finish shall be orderly in arrangement, with

joints between panels planned in approved relation to opening, building corners and other architectural features. Forms shall not be reused if there is any evidence of surface wear or defects which would impair the quality of the surface.

16. CONTRACTOR QUALITY CONTROL.

16.1 General. The Contractor shall perform the inspection and tests described in herein and based upon the results of these inspections and tests he shall take the action required reports shall be submitted as required.

16.2 Inspection Details and Frequency of Testing.

16.2.1 Fine Aggregate.

16.2.1.1 Grading. At least once during each shift in which concrete is being delivered, there shall be one sieve analysis and fineness modulus determination in accordance with ASTM C 136 and C 125 respectively, for the fine aggregate. The location at which samples are taken may be selected by the Contractor as the most advantageous for control. However, the Contractor is responsible for delivering fine aggregate to the mixer within specification limits.

16.2.1.3 Moisture Content. There shall be when in the opinion of the Contracting Officer the electric moisture meter is not operating satisfactorily at least four tests for moisture content in accordance with either ASTM C 70, C 566, or CRD-C 112 during each 8-hour period of mixing plant operation. The times for the tests shall be selected randomly within the 8-hour period. An additional test shall be made whenever the slump is shown to be out of control or excessive variation in workability is reported by the placing foreman. When the electric moisture meter is operating satisfactorily, at least two direct measurements of moisture content shall be made per week to check the calibration of the meter.

16.2.2 Coarse Aggregate.

16.2.2.1 Grading. At least once during each shift concrete is being delivered, there shall be a sieve analysis in accordance with ASTM C 136 for each size group of coarse aggregate. The location at which samples are taken may be selected by the Contractor as the most advantageous for production control. However, the Contractor is responsible for delivering the aggregate to the mixer within specification limits. A test record of samples of aggregate taken shall show the results of the 5 most recent tests including the current test. The Contractor may adopt limits for control coarser than the specification limits for samples taken other than at the batch plant bins to allow for degradation during handling.

16.2.2.2 Moisture Content. A test for moisture content of each size group of coarse aggregate shall be made at least once a shift. When two consecutive readings for smallest size coarse aggregate differ by more than 1.0 percent, frequency of testing shall be increased to that specified for fine aggregate.

16.2.3 Deleterious Substances. When in the opinion of the Contracting Officer, a problem exist in connection with deleterious substances in fine or coarse aggregates, tests shall be made in accordance with ASTM C 33. Testing frequency shall be not less than one per week.

16.2.4 Scales.

16.2.4.1 Weighing Accuracy. The accuracy of the scales shall be checked by test weights at least once a month for conformance with the applicable requirement of paragraph: PRODUCTION OF CONCRETE Such tests shall also be made whenever there are variations in properties of the fresh concrete which could result from batching errors.

16.2.4.2 Batching Accuracy. Once a week the accuracy of each batching device shall be checked during a weighing operation by noting and recording the required weight, and the actual weight batched.

16.2.5 Batch-Plant Control. When the concrete plant is operating the measurement of all constituent materials including cement, each size of aggregate, water and admixtures shall be continuously controlled. The aggregate weights and amount of added water to compensate for free moisture in the aggregates shall be adjusted as necessary. The amount of air-entraining admixture shall be adjusted to control air content within specified limits. A report shall be prepared indicating type and source of cement used, amount and source of admixtures used, aggregate source, the required aggregate and water weights per cubic yard, amount of water as free moisture in each size of aggregate, and the batched aggregate and water weights per cubic yard for each class of concrete batched during plant operation.

16.2.6 Concrete.

16.2.6.1 Air Content. At least two tests for air content shall be made on randomly selected batches of each class of concrete during each 8-hour period of concrete production. Additional tests shall be made when excessive variation in workability is reported by the placing foreman or Government inspector. Tests shall be made in accordance with ASTM C 231. The average of each set of two tests shall be plotted on a control chart on which the average is set at 5.0 percent and the upper and lower control chart on which the upper control limit is 2.0 percent. For concrete having a nominal maximum aggregate size of 3/4-inch, the average shall be set at 6.0 percent and the lower and upper control limits at 5.0 and 7.0 percent respectively.

16.2.6.2 Slump. At least two slump tests shall be made on randomly selected batches of each mixture of concrete during each day's concrete production in accordance with ASTM C 143. Additional tests shall be made when excessive variation in workability is reported by the placing foreman or Government inspector. The average of each set of two tests shall be plotted on a control chart on which the average is that stipulated in paragraph: PROPORTIONING and the upper and lower limits are set 1.0 inch above and below the average. The range shall be plotted on a control chart on which the upper control limit is 2.0 inches.

16.2.6.3 Preparation for Placing. Foundation or construction joints, forms and embedded items shall be inspected in sufficient time prior to each concrete placement by the Contractor in order to certify to the Contracting Officer it is ready to receive concrete. The results of each inspection shall be reported in writing.

16.2.7 Placing. The placing foreman shall supervise all placing operations, shall determine that the correct or grout is placed in each location as directed by the Contracting Officer and shall be responsible for measuring and recording

concrete temperatures, ambient temperature, weather conditions, time of placement, yardage placed, and method of placement.

16.2.8 Vibrators. The frequency and amplitude of each vibrator shall be determined prior to initial use and at least once a month when concrete is being placed. Additional tests shall be made when a vibrator does not appear to be adequately consolidating the concrete. A vibrating reed tachometer or resonant reed tachometer shall be used for checking frequency. The frequency shall be determined while the vibrator is operating in concrete holding the tachometer against the upper end of the vibrator while almost submerged and just before the vibrator is withdrawn from the concrete. The amplitude shall be determined with the head vibrating in air. For flexible shaft electric and air vibrators, two measurements shall be taken, one near the tip and another near the upper end of the vibrator head, and these results averaged. For other types of internal vibrators, measurements shall be taken in accordance with ACI 309. A visual effect scales (optical wedge), as shown in ACI 309 or obtained from the vibrator manufacturer, shall be attached to the vibrator where required with the "V" parallel to the axis of the vibrator. The make, model, type and size of the vibrator and frequency and amplitude results shall be reported in writing.

16.2.9 Curing.

16.2.9.1 Moist Curing. At least once each shift an inspection shall be made of all areas subject to moist curing. The surface moisture condition shall be noted and recorded.

16.2.9.2 Curing Compound. No curing compound shall be applied until it has been verified that the compound is properly mixed and ready for spraying. At the end of each operation the quantity of compound used and the area of concrete surface covered shall be reported and the rate of coverage in square feet per gallon shall be computed. The report shall state whether coverage is uniform.

16.2.9.3 Impervious Sheet Curing. At least once each shift an inspection shall be made of all areas being cured using impervious sheets. The condition of the covering and the tightness of the laps and tapes shall be noted and recorded.

16.2.10 Protection. At least once each shift an inspection shall be made of all areas subject to cold weather protection. Deficiencies shall be noted. During removal of protection, measurement of concrete and ambient temperature shall be made at least hourly.

16.2.11 Mixer Uniformity.

16.2.11.1 Concrete Plant Mixer. At the start of concrete placing, and at leat once every three months when concrete is being placed, uniformity of concrete shall be detemrined. The initial and every fourth test shall be performed in accordance with abbreviated tests of CRD-C 55. Whenever adjustments in mixer or increase mixing times are necessary because of failure of any mixer to comply, the mixer shall be retested after adjustment. For complete testing three different batches of concrete shall be tested. For abbreviated tests one batch shall be tested. Results of tests shall be reported in writing.

16.2.11.2 Truck Mixers. At the start of concrete placing at at least once every three months when concrete is being placed, uniformity of concrete shall be determined in accordance with ASTM C 94. The truck mixers shall be selected

randomly for testing. When satisfactory performance is found in one truck mixer, the preformance of mixers of substantially the same design and condition of blades may be regarded as satisfactory. Results of tests shall be reported in writing.

16.3 Action Required.

16.3.1 Fine Aggregate.

16.3.1.1 Grading. When the amount passing on any sieve is outside the specification limits, the fine aggregate shall be immediately be resampled and retested. If there is another failure on any sieve, the fact shall immediately be reported to the Contracting Officer, and immediate steps shall be taken to rectify the situation.

16.3.1.2 Moisture Content. Whenever the moisture content of the fine aggregate changes by 0.5 percent or more, the scale settings for the fine aggregate batcher and water batcher shall be adjusted directly or by means of a moisture compensation device.

16.3.2 Coarse Aggregate.

16.3.2.1 Grading. When the amount passing any sieve is outside the specification limits, the coarse aggregate shall be immediately be resampled and retested. If the second sample fails on any sieve, that fact shall be reported to the Contracting Officer. When two consecutive averages of 5 tests are outside of specification limits, that fact shall be reported to the Contracting Officer and immediate steps shall be taken to correct the grading.

16.3.2.2 Moisture Content. Whenever the moisture content of the smallest size of coarse aggregate changes by 0.5 percent or more, the scale settings for the aggregate batcher and water batcher shall be adjusted directly or by means of a moisture compensation device.

16.3.3 Deleterious Sustances. When the results for a deleterious substance is outside the specification limit, the aggregate shall be resampled and tested for the deleterious susbtance that failed. If the second sample fails, that fact shall be reported to the Contracting Officer. When material finer than No. 200 sieve for coarse aggregate exceeds specification limit, immediate steps, such as washing or other corrective actions, shall be initiated.

16.3.4 Scales. Whenever either the weighing accuracy of batching accuracy is found not to comply with specification requirements, the plant shall not be operated until necessary adjustments or repairs have been made. Discrepancies in recording accuracies shall be corrected immediately.

16.3.5 Concrete.

16.3.5.1 Air Content. Whenever points on the control chart approach the upper or lower control limits an adjustment should be made in the amount of air-entraining admixture batched. If a single test result is outside the specification limit, such adjustment is mandatory. As soon as practical after each adjustment another test shall be made to verify the correctness of the adjustment. Whenever a point falls above the upper control limit for range, the dispenser shall be calibrated to insure that it is operating correctly and with good reproducibility. Whenever

two consective points either for average or range are outside the control limits, the Contracting Officer shall be notified. Whenever the air content departs from the specified range, the concrete shall not be delivered to the forms.

16.3.5.2 Slump. Whenever points on the control chart approach the upper or lower control limits, an adjustment should be made in the batch weights of water and fine aggregate. When a single slump is outside the control limits such adjustment is mandatory. As soon as practical after each adjustment another test shall be made to verify the correctness of the adjustment. Whenever the slump departs from that stipulated in paragraph: PROPORTIONING more than 1-1/2 inches the concrete shall not be delivered to the forms. Whenever two consecutive slump tests, made during a period when there was no adjustment of batch weights, produce a point on the control chart for range above the upper control limit, the slump shall be considered to be out of control and the additional testing for aggregate moisture content shall be undertaken.

16.3.6 Placing. The placing foreman shall not permit placing to begin until he has verified that an adequate number of acceptable vibrators in working order and with competent operators are available. Placing shall not be continued if any pile is inadequately consolidated. If any batch of concrete fails to meet the temperature requirements, immediate steps shall be taken to improve temperature controls.

16.3.7 Curing.

16.3.7.1 Moist Curing. When a daily inspection report lists an area of inadequate curing, the required curing period for that area shall be extended by one day.

16.3.7.2 Curing Compound. When the coverage rate of curing compound is less than that specified or when the coverage is not uniform, the entire surface shall be sprayed again.

16.3.7.3 Impervious Sheet Curing. When a daily inspection report lists any tears, holes or laps of joints that are not completely closed, the tears and holes shall promptly be repaired or the sheets replaced, the joints closed, and the required curing period for those areas shall be extended by one day.

16.3.8 Protection. Whenever any concrete temperature during the period of protection or protection removal fails to comply with the specifications, that fact shall be reported to the Contracting Officer and immediate steps should be taken to correct the situation.

16.3.8 Mixer Uniformity. When a mixer fails to meet mixer uniformity requirements, either the mixing time shall be increased or adjustments shall be made to the mixer until compliance is achieved.

16.4 Reports. All results of tests conducted at the project site shall be reported weekly and shall be delivered to a designated representative of the Contracting Officer within 3 days after the end of each weekly reporting period. Each weekly report shall include the updating of control charts covering the entire period from the start of the construction season through the current week. During periods of cold weather protection, reports or pertinent temperatures shall be made daily. These requirements do not relieve the Contractor of the obligation

to report certain failures immediately as required in preceding paragraphs. Such reports of failures and the action taken shall be confirmed in writing in the routine reports. The Contracting Officer has the right to examine all Contractor quality control records.

* * * * *

SECTION 3B

FORMWORK FOR CONCRETE

Index

1. Applicable Publications
2. Submittals
3. Design
4. Materials
5. Installation
6. Chamfering
7. Coating
8. Removal
9. Field Quality Control

1. APPLICABLE PUBLICATIONS. The publications listed below form a part of this specification to the extent referenced. The publications are referred to in the text by the basic designation only.

1.1 American Concrete Instutute (ACI) Standards.

ACI 347-78	Recommended Practice for Concrete Formwork

1.2 American Soceity for Testing Materials (ASTM).

C 31-69 (R 1975)	Making and Curing Concrete Test Specimens in the Field
C 39-72 (R 1979)	Compressive Strength of Cylindrical Concrete Specimens

1.3 U.S. Department of Commerce, National Bureau of Standards (NBS) Product Standard.

PS 1-74	Construction and Industrial Plywood

2. SUBMITTALS.

2.1 Shop Drawings. Drawings for all formwork required shall be submitted at least 14 days before either fabrication on site or before delivery of prefabricated forms. The drawing and data submitted shall include the type, size, quantity and strength of all materials of which the forms are made, the plan for jointing of facing panels, details affecting the appearance, and the assumed design values and loading conditions.

3. DESIGN. The design and engineering of the formwork, as well as its construction, shall be the responsibility of the Contractor. The formwork shall be designed for loads, lateral pressure and allowable stresses in accordance with Chapter 1 of ACI Standard 347. Forms shall have sufficient strength to withstand the pressure resulting from placement and vibration of the concrete and shall have sufficient rigidity to maintain specified tolerances.

3.1 Starter Walls shall be formed as indicated. Complete shop drawings shall be submitted and approved prior to use. The starter wall forms shall be so supported as to remain vertical during the placement and finishing of concrete. The starter wall form butt joints shall be rigid so that there can be no movement between butting forms. Screed rail supports, which must be removed prior to the setting of concrete, shall not be a part of the starter wall form supports. Starter wall

form supports shall not be removed for 12 hours after placement of concrete. The purpose of the starter wall is to provide an alined vertical face to permit wall forms to be tightened at the bottom to prevent offsets and grout leakage.

4. MATERIALS.

4.1 Forms shall be fabricated with facing materials that produce the specified construction tolerance and surface requirements of section: CONCRETE.

4.1.1 Class "B" Finish. This class of finish shall apply to all formed surfaces that will be permanently exposed to view. The sheathing shall be composed of tongue-and-groove or shiplap lumber, plywood conforming to NBS Product Standard PS-1 exterior type, grade B-B plyform, tempered concrete form hardboard, or steel. Steel lining on wood sheathing will not be permitted.

4.1.2 Class "D" Finish. This class of finish shall apply to all formed surfaces that will not be permanently exposed to view. The sheathing shall be composed of steel.

4.2 Form Accessories. Ties and other similar form accessories to be partially or wholly embedded in the concrete shall be of a commercially manufacturered type. After the ends or end fasteners have been removed, the embedded portion of metal ties shall terminate not less than 2-inches from any concrete surface either exposed to view or exposed to water. Plastic snap ties may be used in locations where the surface will not be exposed to view. Form ties shall be constructed so that the ends or end fasteners can be removed without spalling the concrete.

4.3 Form Coating shall be a commercial formulation of satisfactory and proven performance that will not bond with, stain or adversely affect concrete surfaces and will not impair subsequent treatment of concrete surfaces depending upon bond or adhesion nor impede the wetting of surfaces to be cured with water or curing compounds.

5. INSTALLATION. Forms shall be mortar tight, properly alined and adequately supported to produce concrete surfaces meeting the surface requirements and construction requirements of section: CONCRETE. Where concrete surfaces are to be permanently exposed to view, joints in form panels shall be arranged to provide a pleasing appearance. Where forms for continuous surfaces are placed in successive units, care shall be taken to fit the forms over the completed surface so as to obtain accurate alinement of the surface and to prevent leakage of mortar. Forms shall not be re-used if there is any evidence of surface wear and tear or defects which would impair the quality of the surface. All surfaces of forms and embedded materials shall be cleaned of any mortar from previous concreting and of all other foreign material before concrete is placed in them.

6. CHAMFERING. All exposed joints, edges, and external corners shall be chamfered by molding placed in the forms unless the drawings specifically state that chamfering is to be omitted or as otherwise specified. Chamfered joints shall not be permitted where earth or rockfill is placed in contact with concrete surfaces. Chamfered joints shall be terminated a sufficient distance outside the limit of the earth or rockfill so that the end of the joints will be clearly visible.

7. COATING. Forms for exposed or painted surfaces shall be coated with form oil or a form-release agent before the form or reinforcement is placed in final position. The coating shall be used as recommended in the manufacturer's printed

or written instructions. Forms for unexposed surfaces may be wet with water in lieu of coating immediately before placing concrete, except that in cold weather with probable freezing temperatures coating shall be mandatory. Surplus coating on form surfaces and coating on reinforcing steel and construction joints shall be removed before placing concrete.

8. REMOVAL. Forms shall not be removed without approval and all removal shall be accomplished in a manner which will prevent injury to the concrete. Forms shall not be removed before the expiration of the minimum time indicated below, except as otherwise directed or specifically authorized. When conditions of the work are such as to justify the requirement, forms will be required to remain in place for a longer period.

8.1 Unsupported Concrete. Formwork for walls, columns, sides of beams, gravity structures and other vertical type forms not supporting the weight of concrete shall not be removed in less than 24 hours. The time depends on temperature, lift heights and type and amount of cementitious material in the concrete. Where forms for columns, walls and sides of beams also support formwork for slabs or beam soffits, the removal time of the latter shall govern.

8.2 Supported Concrete. Supporting forms and shoring shall not be removed until structural members have acquired sufficient strength to support safely their own weight and any construction load to which concrete may be subjected. In no case shall forms and shoring be removed until both minimum time and sufficient strength have been attained.

	Concrete with Type II Portland Cement
Beams, deck-type slabs, or girder soffits where clear structural span between support is	
under 10 feet	4 Days
10 to 20 feet	7
over 20 feet	14

In addition to minimum times above, results of control tests conducted in accordance with ASTM C-31 and C-39 will be used as evidence that concrete has attained sufficient strength to permit removal of forms. Concrete cylinders shall be stored in the structure or as near the structure as possible, shall receive insofar as possible the same curing and protection as given those portions of the structure they represent, and shall be tested with 24 hours after removal from the structure. Cylinders will be tested by and at the expense of the Government. Supporting forms shall not be removed until after minimum time and control test specimens have attained at least the percent of strength required for the structure in accordance with quality and location requirements of Section: CONCRETE.

9. FIELD QUALITY CONTROL. Forms and embedded items shall be inspected in sufficient time prior to each concrete placement by the Contractor in order to certify to the Contracting Officer that they are ready to receive concrete. The results of each inspection shall be reported in writing.

* * * * *

SECTION 3C

STEEL BARS, WELDED WIRE FABRIC AND ACCESSORIES FOR CONCRETE REINFORCEMENT

Index

1. Applicable Publications
2. Quality Assurance
3. Submittals
4. Materials
5. Installation

1. APPLICABLE PUBLICATIONS. The publications listed below form a part of this specification to the extent referenced. The publications are referred to in the text by the basic designation only.

1.1 American Concrete Institute (ACI) Standards.

ACI 315-74	Manual of Standard Practice for Detailing Reinforced Concrete Structures
ACI 318-77	Building Code Requirements for Reinforced Concrete

1.2 American Society for Testing and Materials (ASTM) Standards.

A 185-79	Welded Steel Wire Fabric for Concrete Reinforcement
A 497-79	Welded Deformed Steel Wire Fabric for Concrete Reinforcement
A 615-80	Deformed and Plain Billet-Steel Bars for Concrete Reinforcement
A 706-80	Low-Alloy Steel Deformed Bars for Concrete Reinforcement
E 8-80a	Tension Testing of Metallic Materials

1.3 American Welding Society (AWS) Code.

D 1.4-79	Reinforcing Steel Welding Code

2. QUALITY ASSURANCE.

2.1 Materials Tests. The Contractor shall have required material tests performed by an approved laboratory to demonstrate that the materials are in conformance with the specifications. Tension tests shall be performed on full cross section specimens in accordance with ASTM E 8, using a gage length that spans the extremities of specimens with welds or sleeves included. Tests shall be at the Contractor's expense.

3. SUBMITTALS.

3.1 Shop Drawings. The Contractor shall prepare and submit complete shop drawings to the Contracting Officer for approval in accordance with specified requirements. Shop drawings shall include the following:

(1) Reinforcement steel schedules complete with the quantity, shape and size, dimensions, weight per foot and total weights, and bending details.

(2) Details of bar supports including types, sizes, spacing and sequence.

3.2 Test Reports. Certified tests reports of reinforcement steel showing that the steel will comply with the applicable specifications shall be submitted to the Contracting Officer by the Contractor. Reports shall be furnished for each steel shipment and shall be identified with specific lots prior to use of the steel in the work.

4. MATERIALS.

4.1 Steel Reinforcement shall conform to ASTM A 615, Grade 40, with the following exceptions:

(1) Tension test specimens shall be bars of full cross section as rolled for all sizes.

(2) The bend test requirements shall be based upon 180 degree bends of full size bars for all grades of steel. The bend diameters for bend test shall be as indicated in the following table and shall be measured on the inside of bars:

Bar Size	Maximum Diameter
No. 3, 4, and 5	3-1/2 bar diameters
No. 6, 7, and 8	5 bar diameters
No. 9, 10, and 11 (Grade 40)	5 bar diameters

The Contractor shall furnish results of all tension and bend tests performed.

4.2 Welded Wire Fabric shall conform to ASTM A 185, gages, spacing and arrangement of wires as indicated on the drawings or ASTM A 497, sizes, spacing, deformations, and dimensions as indicated on the drawings.

4.3 Accessories.

4.3.1 Bar Supports shall conform to ACI 315. Bar supports for formed surfaces exposed to view or to be painted shall be plastic protected wire, stainless steel or precast concrete supports. Precast concrete bar supports shall be wedge-shaped, not larger than 3-1/2 x 3-1/2 inches, of thickness equal to that indicated for concrete cover and shall have an embedded hooked tie wire for anchorage. If formed surface is exposed to view, the precast concrete bar support shall be the same quality, texture, and color as the finish surface.

4.3.2 Wire Ties shall be 16-gage or heavier black annealed wire and shall have ends pointing away from the form.

5. INSTALLATION. Reinforcement steel and accessories shall be installed or placed as specified and as shown on contract and approved shop drawings. Placement details of reinforcement and accessories not specified or shown on the

drawings shall be in accordance with ACI 315 or ACI 318. Reinforcement shall be fabricated to shapes and dimensions shown, placed where indicated within specified tolerances and adequately supported during concrete placement. At the time of concrete placement all reinforcement shall be free from loose, flaky rust, scale (except tight mill scale), mud, oil, grease or any other coating that might reduce the bond with the concrete. Unless specifically indicated on the drawings, arc-welding of crossing bars, ties, stirups, spirals or any other reinforcement will not be permitted.

5.1 Hooks and Bends. Reinforcement bars may be mill or field bent. All bars shall be bent cold unless otherwise authorized. No bars partially embedded in concrete shall be field bent unless indicated on the drawings or otherwise authorized. All hooks or bends shall be in accordance with ACI 318.

5.2 Welding of reinforcement bars will be permitted only where indicated on the drawings or as otherwise directed by the Contracting Officer. Welding shall be performed in accordance with AWS D 1.4.

5.3 Placing Tolerances.

5.3.1 Spacing of Bars. Bars shall be spaced as indicated on the drawings or as otherwise directed. The spacing between adjacent bars and the distance between layers may not vary from the indicated position by more than one bar diameter nor more than one inch.

5.3.2 Concrete Cover. The minimum concrete cover of main reinforcement steel shall be as indicated on the drawings. The tolerances shall be as follows:

MINIMUM COVER	VARIATION
6"	+ 1/2"
4"	+ 3/8"
3"	+ 3/8"
2"	+ 1/4"
1-1/2"	+ 1/4"
1"	+ 1/8"
3/4"	+ 1/8"

5.4 Splicing. Splices in reinforcement steel shall be as specified, shown on the drawings or as directed by the Contracting Officer. Bars may be spliced at alternate or additional locations at no additional cost to the Government, subject to the approval of the Contracting Officer. Except as provided herein, all splicing shall be in accordance with approved splicing procedures and the requirements of ACI 318.

5.4.1 Lapped Splices shall be used only for bars smaller than size no. 14. Bar laps may be placed in contact and securely tied or may be spaced transversely apart to permit the embedment of the entire surface of each bar in concrete, but shall not be spaced farther apart than one-fifth the required length of lap nor 6-inches. Lengths of laps for bars or welded wire fabric shall conform to the requirements of ACI 318, except when otherwise indicated.

* * * * *

SECTION 3D

EXPANSION, CONTRACTION AND CONSTRUCTION JOINTS IN CONCRETE

Index

1. Applicable Publications
2. Quality Assurance
3. Submittals
4. Materials
5. Installation

1. APPLICABLE PUBLICATIONS. The publications listed below form a part of this specification to the extent referenced. The publications are referred to in the text by the basic designation only.

1.1 American Society for Testing and Materials (ASTM) Standards. (With corresponding U.S. Army Corps of Engineers Handbook for Concrete and Cement (CRD) Specifications where indicated.)

D 1751-73 (R 1978) (CRD-C 508)	Preformed Expansion Joint Fillers for Concrete Paving and Structural Construction (Non-extruding and Resilient Bituminous Types)
D 1752-67 (R 1978) (CRD-C 509)	Preformed Sponge Rubber and Cork Expansion Joint Fillers for Concrete Paving and Structural Construction
D 2628-69 (R 1976) (CRD-C 531)	Preformed Polychloroprene Elastomeric Joint Seals for Concrete Pavements
D 2835-72 (R 1977) (CRD-C 532)	Lubricant for Installation of Preformed Compression Seals in Concrete Pavements
TT-S-227E (CRD-C 506)	Sealing Compound, Elastomeric Type, Multi-Component (For Caulking, Sealing, and Glazing in Building and Other Structures)

2. QUALITY ASSURANCE.

2.1 Materials Tests.

2.1.1 Field-Molded Sealants. Samples of sealant and primer, when use of primer is recommended by the manufacturer, as required in paragraph: SUBMITTALS below shall be tested by and at the expense of the Government for compliance with Fed. Spec. TT-S-227. If the sample fails to meet specifications requirements, new samples shall be provided and the cost of retesting will be deducted from payments due the Contractor at a rate of $300.00 per sample.

3. SUBMITTALS.

3.1 Test Reports. Certified manufacturer's test reports shall be provided for premolded expansion-joint filler strips, and lubricant, to verify compliance with the applicable specification.

3.2 Samples.

3.2.1 Field-Molded Sealant and Primer. One gallon of field-molded sealant and one quart of primer (when use of primer is recommended by the sealant manufacturer) shall be provided for testing.

4. MATERIALS.

4.1 Expansion Joint Filler Strips, Premolded shall conform ASTM D 1751 or ASTM D 1752, Type I or resin impregnated fiberboard conforming to the physical requirements of ASTM D 1752.

4.2 Joint Sealants and Seals.

4.2.1 Field-Molded Sealants shall conform to Fed. Spec. TT-S-227, Type II for vertical joints and Type I for horizontal joints, Class A. Bond breaker material shall be polyethylene tape, coated paper, metal foil or similar type materials. The back-up material shall be compressible, nonshrink, nonreactive with sealant, and nonabsorptive material type such as extruded butyl or polychloroprene foam rubber.

5. INSTALLATION. Joint locations and details, including materials and methods of installation of joint fillers and waterstops, shall be as specified, shown on the drawings and as directed. Type "J" construction joints shall be provided in the invert slab of open channel or spillway whenever concrete pouring is stopped for periods exceeding 45 minutes. In vertical walls of open channels, Type "B" vertical construction joints shall be provided at intervals of 30 to 60 feet measured along the centerline of channel. On curves, the 60 foot maximum interval shall be measured along the channel wall with the greater radius. In no case shall any fixed metal be continuous through an expansion or contraction joint.

5.1 Expansion Joints With Joint Sealer. Premolded expansion-joint filler strips shall have oiled wood strips secured to the top thereof and shall be accurately positioned and secured against displacement to clean, smooth concrete surfaces. The wood strips shall be slightly tapered, dressed and of the size required to install filler strips at the desired level below the finished concrete surface and to form the groove for the joint sealant or seals not less than one inch deep. Material used to secure premolded fillers and wood strips to concrete shall not harm the concrete and shall be compatible with the joint sealant or seals. The wood strips shall not be removed until after the concrete curing period. The groove shall be thoroughly cleaned of all laitance, curing compound, foreign materials, protrusions of hardened concrete and any dust which shall be blown out of the groove with oil-free compressed air.

5.1.1 Joints With Field-Molded Sealant. Joints shall not be sealed when the sealant, air or concrete temperature is less than 40 degrees F. Bond breaker and back-up material shall be installed where required. Joints shall be primed and filled flush with joint sealant in accordance with the manufacturer's recommendations.

5.1.2 Preformed Expansion Joint Filler shall conform to ASTM D 1752, Type I. The filler shall be securely held in position during concreting operations. Adjacent sections of filler shall be fitted tightly together to prevent entrance of concrete into the expansion space.

5.2 Contraction Joints. Joints requiring a bond breaker shall be coated with curing compound or with bituminous paint conforming to Fed. Spec. SS-A-701. Waterstops shall be protected during application of bond breaking material to prevent them from being coated.

5.3 Splices. Joints in waterstops shall be spliced together by qualified splicers using the approved splicing procedures to form a continuous watertight diaphragm.

* * * * *

SECTION 3E

GROUTING STONE PROTECTION

Index

1. Applicable Publications
2. Materials
3. Mixing
4. Placing
5. Curing and Protection

1. APPLICABLE PUBLICATIONS. The publications listed below form a part of this specification to the extent referenced. The publications are referred to in the by the basic designation only.

1.1 Federal Specifications (Fed. Spec.):

SS-C-1960/GEN	Cement and Pozzolan, General Requirements for
SS-C-1960/3B	Cement, Portland

1.2 U.S. Department of the Army, Corps of Engineers, Handbook for Concrete and Cement:

CRD-C 300-77	Membrane-Forming Compounds for Curing Concrete

2. MATERIALS.

2.1 Aggregate shall conform to the requirements specified for Type I and Type II stone of the section: STONE PROTECTION.

2.2 Portland Cement shall conform to the requirements of Fed. Spec. SS-C-1960/3B, Type I and/or Type II. The alkali content of the cement shall not exceed 0.6 percent.

2.3 Water shall be fresh, clean, and potable.

3. MIXING. Grout shall be composed of cement, sand, and water mixed in the proportions as directed. The estimated cement content requirement per cubic yard of grout is 7-1/2 sacks. The water content of the mix shall not exceed 8-1/2 gallons per sack of cement. In calculating total water content of the mix, the amount of moisture carried on the surfaces of aggregate particles shall be included. Slump of grout mix shall be between 9 and 10 inches for the first course and between 7 and 8 inches for the second course or where one course is placed. The grout shall be mixed in a concrete mixer in the manner specified for concrete, except that time of mixing shall be as long as is required to produce a satisfactory mixture, and the grout shall be used in the work within a period of 30 minutes after mixing. Retempering of grout will not be permitted. The consistency of the grout shall be such as to permit gravity flow into the interstices of the stones with the help of spading, rodding, and brooming. Grout batches in the same course shall be uniform in mix, size, and consistency.

4. PLACING. Placing Type II grouted stone.

4.1. Prior to grouting, the stone shall be flushed with water to wash down the fines and to prevent absorption of water from grout. The stone shall be kept wet just ahead of the actual placing of grout. Except where indicated otherwise, the grout shall be placed 2 courses to a depth equal to a maximum of 2/3 and not less than 1/2 of the depth of the stone protection. Each course shall be placed full width or in successive lateral strips approximately 10 feet in width, as applicable, extending from toe of slope to top. The grout shall be brought to the place of final deposit by approved means and discharged directly on the stones using a splash plate of metal or wood to prevent displacement of stone directly under the discharge. The flow of grout shall be directed with brooms or other approved baffles to cover the entire area and to assure that all crevices are filled. Sufficient barring shall be done to loosen tight pockets of stone and otherwise aid the penetration of grout. The first course shall fully penetrate the stone blanket. The second course shall be placed as soon as the first course has sufficiently stiffened so that it will not flow when additional grout is added. All brooming shall be uphill, and after the second course has stiffened the entire surface shall be rebroomed to eliminate runs in the top course and to fill voids caused by sloughing of the layers of grout. After completion of any strip or panel, no workmen or other load shall be permitted on the grouted surface for a period of 24 hours. The grouted surface shall be protected from injurious action of the sun; shall be protected from rain, flowing water, and mechanical injury; and shall be moist cured or membrane cured at the Contractor's option. Moist curing shall consist of covering the grout with a uniform thickness of 2 inches of sand which shall be kept continuously saturated for a period of 14 days.

4.2 Placing Type I grouted stone. Placing Type I grouted stone shall be the same as placing Type II grouted stone except that the depth of grout shall be as indicated.

5. CURING AND PROTECTION.

5.1 Curing. Membrane curing compound shall be a non-pigmented curing compound conforming to Corps of Engineers Serial No. CRD-C 300 except that the compound shall contain a fugitive dye. The grouted surface shall be shaded from the direct rays of the sun for the first 7 days.

5.2 Protection. The curing compound shall be applied as soon as the free water disappears and shall be applied in a 2-coat continuous operation by approved power-spraying equipment at a rate of not to exceed 200 square feet per gallon for the combined coats. The second coat shall be applied to overlap the first coat in a direction approximately at right angles to the direction of the first application.

* * * * *

SECTION 5A

MISCELLANEOUS METALWORK AND MATERIALS

Index

1. Applicable Publications
2. Materials
3. Workmanship
4. Finishing
5. Zinc Coating (Galvanizing)
6. Castings
7. Painting Metalwork
8. Welding
9. Bolted Connections
10. Ladders
11. Automatic Drainage Gates (Flap gates)
12. Gratings, Trash Racks, Barriers and Covers Plates
13. Handrails

1. APPLICABLE PUBLICATIONS. The publications listed below form a part of this specification to the extent referenced. The publications are referred to in the text by the basic designation only.

1.1 Fed. Specifications (Fed. Spec.).

FF-B-575C	Bolts, Hexagon and Square
FF-N-836D & Am-1	Nut: Square, Hexagon, Cap, Slotted, Castle, Knurled, Welding and Single Ball Seat
FF-S-325 & Int. Am-3 (GSA-FSS)	Shield, Expansion; Nail, Expansion; and Nail, Drive Screw (Devices, Anchoring, Masonry)
HH-G-156d & Int. Am-1 (GSA-FSS)	Gasket Material, General Purposes; Rubber Sheets, Strips and Special Shapes
QQ-B-750 & Am-2	Bronze, Phosphor; Bar, Plate, Rod Sheet Strip, Flat Wire, and Structural and Special Shaped Sections
QQ-F-461C & Am-1	Floor Plate Steel Rolled
QQ-S-763D Notice 1	Steel Bars, Wire, Shapes, and Forgings, Corrosion-Resisting
RR-G-661D	Grating, Metal, Bar Type (Floor except for Naval Vessels)
TT-P-38D & Am-1	Paint, Aluminum, Ready-Mixed
WW-P-401E	Pipe and Pipe Fittings, Cast-Iron, Soil

1.2 American Society for Testing and Materials (ASTM) Standards.

A 36-77a	Structural Steel
A 48-76	Gray Iron Castings
A 53-80	Pipe, Steel, Black and Hot-Dipped, Zinc-Coated Welded and Seamless
A 108-79	Steel Bars, Carbon, Cold Finished Standard Quality
A 123-78	Zinc (Hot Galvanized) Coatings on Products Fabricated from Rolled, Pressed, and Forged Steel Shapes, Plates, Bars and Strip
A 126-73	Gray Iron Castings for Valves, Flanges and Pipe Fittings
A 320-80b	Alloy-Steel Bolting Materials for Low-Temperature Service
A 325-80a	High Strength Bolts for Structural Steel Joists, Hardened Washers
A 449-78a	Quenched and Tempered Steel Bolts and Studs
A 500-80	Cold-Formed Welded and Seamless Carbon Steel Structural Tubing in Rounds and Shapes
A 501-80	Hot-Formed Welded and Seamless, Carbon Steel Structural Tubing
A 722-75	Uncoated High-Strength Steel Bar for Prestressing Concrete
B 32-76	Solder Metal

1.3 American Welding Society (AWS) Standard.

B3.0-80	Welding Terms and Definitions
D1.1-80	Structural Welding Code-Steel

1.4 American National Standards Institute, Inc. (ANSI) Standards.

B 1.1-1974	Unified Inch Screw Threads

1.5 Military Specification (Mil. Spec.).

MIL-C-18480A & Am-3 (Docks)	Coating Compound, Bituminous, Solvent, Coal Tar Base

1.6 West Coast Lumber Inspection Bureau (WLCB) Publication.
No. 16 Standard Grading and Dressing Rules for Douglas Fir, Western Hamlock, Western Red Cedar, White Fir, Sitka Spruce Lumber, Sep 1, 1970; Rev. Jan 1, 1979

2. MATERIALS.

2.1 General. Materials indicated on the drawings or required in the work and not covered elsewhere by detailed requirements shall conform to the requirements of this section. In all cases not specifically covered in these specifications, the Contractor shall furnish approved highest grade commercial materials or products which are suitable for the intended use of the item.

2.2 Structural Steel shall conform to ASTM A 36.

2.3 Corrosion-Resisting Steel Bolts and Anchor Bolts shall conform to Fed. Spec. QQ-S-763, Class 304, Condition A, or the applicable requirements of ASTM A 320, Grade B8.

2.4 Bronze shall conform to Fed. Spec. QQ-B-750, hard temper of either composition.

2.5 Bolts shall conform to Fed. Spec. FF-B-575.

2.6 Nuts shall conform to Fed. Spec. FF-N-836.

2.7 Cast Iron for Drainage Gates shall conform to ASTM A 126, Class B.

2.8 Cast Iron Pipe and Fittings shall conform to the applicable requirements of Fed. Spec. WW-P-401.

2.9 Coal Tar Base Paint shall conform to Mil. Spec. MIL-C-18480. A special primer shall be used only if as recommended by the manufacturer of the coating.

2.10 Expansion Anchors shall conform to the applicable requirements of Fed. Spec. FF-S-325. Anchors shall be multiple unit with inside thread.

2.11 Tie rods shall be fabricated from steel conforming to ASTM A 722. Threads shall be course series conforming to ANSI B 1-1. Tie rods shall be hot-dip galvanized after fabrication.

3. WORKMANSHIP. Steel with welds will not be accepted, except where welding is definitely specified or called for on the drawings. All bolts, nuts, and screws shall be tight. All exposed ferrous metalwork (except cast-iron and corrosion-resistant steel and items to be completely embedded in concrete) shall be galvanized unless other protective coatings are specified. Metalwork shall be galvanized after fabrication. Complete shop drawings for fabrication of all miscellaneous metalwork shall be submitted for approval, in accordance with the requirements for shop drawings of SPECIAL PROVISIONS.

4. FINISHING. In general, tolerances for machine-finished surfaces designated by nondecimal dimensions shall be within 1/64 inch. Sufficient machining stock shall be allowed on placing pads to insure true surfaces of solid material. Finished contact of bearing surfaces shall be true and exact to secure full contact. All drilled holes for bolts shall be accurately located and drilled from templates.

5. ZINC COATING (GALVANIZING). Zinc coatings shall be applied in a manner and of a thickness and quality conforming to ASTM A 123. In the event that any portion of galvanized metalwork is abraded or otherwise damaged to the extent that the base metal is exposed, such damaged or abraded portions shall be neatly covered with Grade 50B solder conforming to the requirements of ASTM B 32.

6. CASTINGS. Each casting shall have the mark number and heat number cast or stamped upon it. Dimensions of casting shown on the approved shop drawings will be the finish dimensions. Before leaving the foundry, all castings shall be thoroughly cleaned and subjected to hammer inspection after which they shall be treated.

7. PAINTING METALWORK.

7.1 Cleaning. All oil and grease shall be removed. When required, welds shall be neutralized by the use of ammonia or other suitable agent. All surfaces to be painted shall be cleaned in the shop to remove all rust, scale, dirt, and other foreign matter. "Tight" mill scale, that cannot be lifted by applying a sharp knife to any edge, will be permitted. The cleaning shall be accomplished by scraping, wire brushing, and wiping or other approved methods. The cleaning and painting operations shall be carried on in such a manner that the time between cleaning and the application of the paint will not exceed 24 hours.

7.2 Painting.

7.2.1 Subdrain Manhole Frame and Cover and Gate Box Body shall be dipped twice in a preparation of asphalt , or coal tar, and oil which is at a temperature not less than 290 degrees nor greater than 310 degrees F., in a manner to form a firm and tenacious coating not less than 1/32 inch thick.

7.2.2 Drainage Gates shall be given 3 coats of cold applied coat tar base paint. The paint shall be applied heavily by brush, at a coverage rate of approximately 100 square feet per gallon to give a total film thickness of 3 coats of 1/32 of an inch. Each additional coat shall be brushed perpendicular to strokes of preceding coat. Drying time between coats shall be as recommended by manufacture of coatings.

8. WELDING shall conform to the provisions of AWS D1.1. Welders who have not been certified within 2 years of the date of commencement of work under this contract shall be required to pass successfully the qualification tests as prescribed by AWS B3.0.

9. BOLTED CONNECTIONS. Boltes holes shall be reamed normal to the member and shall be truly cylindrical throughout. Unless otherwise specified, holes for bolts shall not be more than .02 inch larger than the diameter of the bolt.

10. LADDERS. Ladders shall be steel individual rung ladders conforming to ANSI A 14.3. Rungs shall be galvanized, solid-section rods imbedded into concrete where indicated.

11. AUTOMATIC DRAINAGE GATES. Automatic drainage gates shall be of the size indicated and constructed for a minimum 10 foot seating head. Frames and covers shall be cast iron or cast steel. Seating surfaces shall be bronze or ductile iron. Links may be cast iron or cast steel, or high strength malleable iron. Bushings shall be bronze. Fasteners shall be galvanized steel, bronze, or corrosion-resistant steel. Gates shall have fully adjustable linkage. Each gate

shall be rigidly secured in place with seating faces inclined from the vertical by approximately 3 degrees. Installation of gates shall be as recommended by the gate manufacturer. Fasteners of the size recommended by the gate manufacturer shall be utilized in assembly of gate and to secure the gates to the headwall. The gates shall be so constructed as to prevent locking in any partiallfy open position.

12. GRATINGS, TRASH RACKS, BARRIERS AND COVER PLATES. Gratings, trash racks, barriers at the outlet and cover plates, shall be of the type and size specified or shown on the drawings and shall be fabricated to accurately fit the supporting member. Openings shall be provided as shown on the drawings or as required. Steel gratings, trash racks, barriers and cover plates shall be galvanized after fabrication.

12.1 Gratings, trash racks and barriers shall be fabricated of steel conforming to ASTM A 36.

12.2 Cover Plates. Cover plates shall conform to Fed. Spec. QQ-F-461, Class 1, Pattern No. 7, 10, 11, or 17. Cover plate shall be provided with holes as shown on the drawings or as required. Sharp edges and burrs shall be removed from plates.

13. HANDRAILS.

13.1 Steel sleeves, posts and railings shall be standard-weight steel pipe conforming to ASTM A 53. Sizes and fabrication shall be as indicated on the sketch at the end of this section. Joining of posts and rails shall be welded and ground smooth. Posts shall be plumbed and alined.

* * * * *

US ARMY ENGINEER DISTRICT, LOS ANGELES
300 North Los Angeles Street
Los Angeles, California

ARMY - C. of E. - Los Angeles

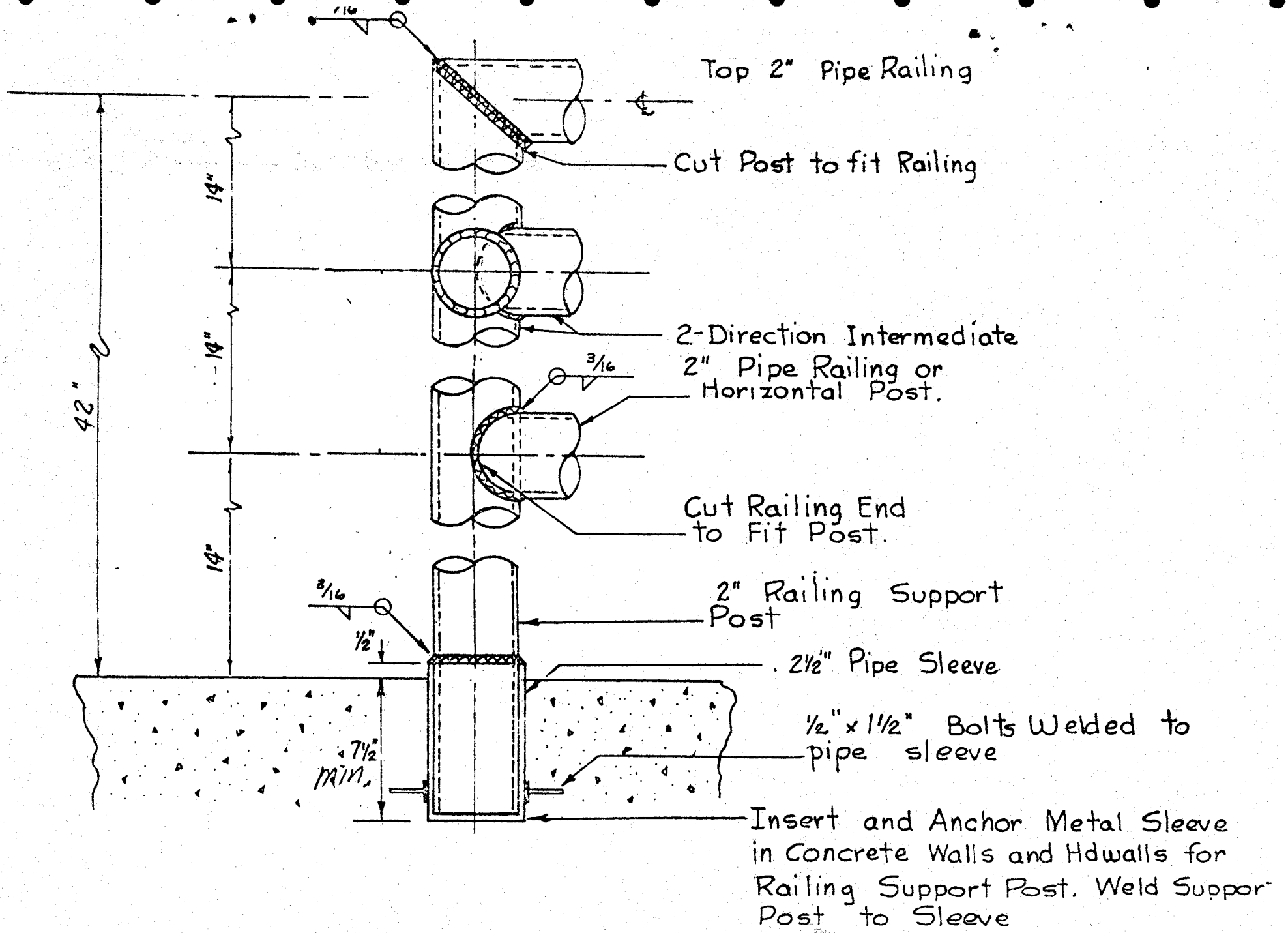

HANDRAIL DETAIL

N.T.S.