# SCOTTSDALE DESERT GREENBELT

## Reata Pass / Beardsley Wash Hydrology Report

by:
Greiner, Inc.
and
City of Scottsdale

Registered Professional Engineer (Civil)
CERTIFICATE NO.
17756
SHI-EN
SHIAU
Date Signed 2-14-95
ARIZONA, U. S. A.

February 1995

# TABLE OF CONTENTS

Property of
Flood Control District of MC Library
Please Return to
2801 W. Durango
Phoenix, AZ 85009

| TITLE | PAGE |
|---|---|
| INTRODUCTION | 1 |
| PURPOSE OF STUDY | 1 |
| WATERSHED DESCRIPTION | 1 |
| EXISTING FLOODING CONDITIONS | 1 |
| HYDROLOGIC MODELING | 2 |
| General | 2 |
| Hydrologic Parameters | 2 |
| Hydrologic Simulation | 3 |
| SUMMARY OF RESULTS | 6 |
| General | 6 |
| Design Conclusion | 7 |
| REFERENCES | 7 |

Registered Professional Engineer (Civil)
CERTIFICATE NO.
17756
SHI-EN
SHIAU
Date Signed 2-14-95
ARIZONA, U.S.A.

RW-HYDRO.GRE

# *LIST OF FIGURES*


| *FIGURE* | *TITLE* |
|---|---|
| 1 | Drainage Areas |
| 2 | Existing Alluvial Fan Flood Zones |
| 3 | Configurations for Reata/Beardsley Regional Channel and Collector Channels |
| 4 | Typical Schematic Flow Diagram |


# *LIST OF TABLES*


| *TABLE* | *TITLE* | *PAGE* |
|---|---|---|
| 1 – | Conditions Used in HEC-1 Models | 5 |
| 2 – | Summary of Hydrologic Results | 6 |

APPENDIX

HEC-1 Printouts

## *INTRODUCTION*

The City of Scottsdale has retained Greiner, Inc. to perform preliminary design for the Desert Greenbelt Project. The Desert Greenbelt will serve as a backbone system for conveying stormwaters from locations where they are not naturally contained, safely through inhabited areas, to an area where they will be retained. The runoff is generated from the mountain ranges and high desert areas to the north of the site during storms. With this project, the Sonoran Desert will be preserved and protected to the maximum extent possible, and cultural and recreational benefits for the entire city will also be incorporated into the project.

The project encompasses three areas: the Reata Pass Wash/Beardsley Wash, the Pima Road Channel and the Rawhide Wash. This report summarizes the hydrologic study results for the Reata Pass/Beardsley Washes. The studies on the other two areas are documented in separate reports.

The proposed regional channel alignment for the Reata Pass/Beardsley Washes was selected by the City of Scottsdale. It is about five (5) miles long stretching north to south from Pinnacle Peak Road to the Central Arizona Project (CAP) Detention Basin No. 4, east and west between 104th Street and 96th Street (see Figure 1). Major and collector channels are also incorporated for this study.

## *PURPOSE OF STUDY*

The purpose of the Desert Greenbelt study is to identify the conceptual channel cross sections and alignment. The peak discharges obtained in this hydrologic study will be used for the final design of open channels, levees, apex structures and outlet structures.

## *WATERSHED DESCRIPTION*

The watershed is located within the Upper Indian Bend Wash Basin north of the CAP facilities and west of the McDowell Mountains. The total tributary drainage area for the Reata Pass Wash and Beardsley Wash is about 20 square miles (see Figure 1). The drainage watershed is characterized by a steady slope of roughly four (4) percent in the north non-mountainous areas of the basin and a slope as steep as 20 to 30 percent in the east mountainous areas.

The washes and slopes consist of alluvial sand and gravel materials which, being washed out from the McDowell Mountains, create extensive alluvial fans, disected fan terraces, inset fans and the alluvial-braided washes that promote flooding problems. The drainage area consists of Tertiary Cretaceous volcanic andesite, rhyolite and granite rocks. Vegetation includes relatively dense Sonoran Desert vegetation consisting of cactus, trees, desert shrubs and grasses.

## *EXISTING FLOODING CONDITIONS*

The 1993 Federal Emergency Management Agency (FEMA) Flood Insurance Rate Maps identifies Reata Pass Wash and Beardsley Wash as Zone "AO" below their apexes with alluvial fan flood hazards. Zone "AO" is described by FEMA as special flood hazard areas inundated

by 100-year flood with water depths of one to three feet. The alluvial fan flood zones for the existing conditions of these areas are shown in Figure 2.

For the Reata Pass Wash, the flow begins breaking out of its contained path at the fan's apex just south of Pinnacle Peak Road and west of the McDowell Mountain Range. It creates an alluvial fan that spreads to the southwest, bordered to the east by the toe of the McDowell Mountains, and spreads west nearly to Scottsdale Road. The toe, or southern boundary of the fan, ends at the CAP.

North Beardsley Wash is a tributary of the Reata Pass Wash. The lower branch of Beardsley Wash flows south and never connects to the Reata Pass fan. However, the Desert Greenbelt Project will include the floodwaters of both the Reata Pass and north Beardsley Wash and route these combined flows south, cross country, and combining both with the lower Beardsley tributary just north of Bell Road.

## *HYDROLOGIC MODELING*

### *General*

The methodology for this study follows the guidelines and criteria provided in the drainage manual by the City of Scottsdale. The 7.5-minute U.S.G.S. topographic maps were used for sub-basin delineations. The U.S. Army Corps of Engineers' HEC-1 Hydrologic Computer Program was used for the analysis.

The existing hydrologic model created by Water Resources Associates, Inc. and Robert L. Ward Consulting Engineer was reviewed and modified to create the Desert Greenbelt hydrologic models for the Reata Pass and Beardsley Washes. The northern and eastern portions of the watershed in the original model remain unchanged in the Desert Greenbelt models. However, significant sub-basin adjustments occurred to reflect the latest alignment of the Thompson Peak Parkway (TPP). Flows will only be allowed to cross the parkway at locations near Beardsley Road, Union Hills Drive and Bell Road. In the original model, the TPP was not to be considered a hydrologic barrier to divert flow from the natural watercourses that cross the roadway alignment (see Figure 1). This study also investigated cutting-off natural split-flow diversions within Beardsley Wash.

The recently completed channel/levee across the southern portion of the 800-acre State Land parcel was also incorporated into the model. Sub-basin delineations were developed for those areas north of Bell Road and south of the State Land channel/levee. These basins were delineated to provide peak discharge data for the Bell Road Bridge design (see Figure 1).

### *Hydrologic Parameters*

The increase in runoff due to future urbanization was simulated by adding the percentage of impervious cover to the runoff curve numbers. The kinematic wave option was used to determine the hydrologic response of the sub-basin areas. A modified Puls channel routing operation, using an 8-point cross section, was assumed for all the major interceptor channels proposed as part of the regional drainage plan. Channel geometry was based on normal depth calculations for typical

reaches of each channel (see Figure 3). Routing lengths were adjusted from the original model due to the flow restrictions along the TPP.

Rainfall losses were simulated with the SCS curve numbers. The same curve number/hydrologic soil group relationship used in the original model was applied for the adjusted drainage sub-basins.

A potential for braided flow conditions to cause runoff from some concentration points to enter more than one downstream sub-basin exists. Therefore, divert operations were included in the models to provide a mechanism for simulating this phenomenon.

This area of Scottsdale receives a rainfall depth of between 3.3 and 3.6 inches for the 100-year 6-hour event, as presented in the National Oceanic and Atmospheric Administration (NOAA) Atlas 2. The 100-year, 6-hour event, which had been used in the FEMA study, was used for this study.

The majority of the soils within the basin are composed of group B and group D. Soils in group B have moderately low runoff potential and those in group D have high runoff potential, that is, the infiltration rate is very slow.

For each sub-basin, the assumption was made of no impervious area for the existing conditions. Although a 6-hour duration was considered for the analysis, the CN used were based on a 24-hour storm selected by Ward in his original model. PH records were used to simulate the hypothetical storm distribution.

For the Reata/Beardsley channel, the original Manning's coefficients "n" seems appropriate for sandy channels and were used in the model. The "n" values for the main channel and overbank areas used were 0.045 and 0.055, respectively. For the natural routing channels, the "n" values used for the main channel and overbank areas were 0.040 and 0.055, respectively. The overbanks are chiefly desert brush (0.050) with scattered trees (0.065). The main channels are generally rocky (0.050) with sand portions (0.024). The collector channels adjacent to the TPP and 96th Street were modeled as shotcrete-lined channel with an "n" value of 0.019 (see Figures 2 and 3).

***Hydrologic Simulation***

The entire watershed covers an area of about 20 square miles. It was divided into 50 sub-basin areas for analysis with the presence of the TPP and proposed Desert Greenbelt channel alignments. Bridges were considered for the Desert Greenbelt channels crossing the TPP near Beardsley Road and Union Hills Drive. The State Land Channel Alignment A-B-C which crosses the TPP near Bell Road and outlets to the Desert Greenbelt channel at Bell Road and 96th Street was also incorporated. This collector channel is to protect State Land, Bell Road and the Newhall property located on the south (see Figure 1). Bridges located along 96th Street at Union Hills Drive and Bell Road were also included. Each of these structures is represented by a concentration point in the models.

Five models were prepared for analysis according to: land use, split flows and hydrologic barrier assumptions. Similar to the original model, divert operations were included for runoff from Sub-basins 2070 and 2130. Runoff from Sub-basin 2070 may enter both Sub-basins 2065 and 2130. The runoff exiting Sub-basin 2130 may split between Sub-basins 2080B and 2135. Both of these areas are part of Beardsley Wash (see Figure 1).

Engineering judgement had been used in the original model to set divert ratios at these two locations. Forty percent of the runoff from Sub-basin 2070 was assumed to enter Sub-basin 2130, with the remaining 60 percent directed to Sub-basin 2065. At the outlet of Sub-basin 2130, a variable divert ratio was established which would divert the initial 500 cfs of outflow to Sub-basin 2135. Eighty-five percent of the outflow at 1,000 cfs would be diverted to Sub-basin 2135, and 72.5 percent of the outflow at 6,000 would be diverted to the same sub-basin. The remaining will be diverted to Sub-basin 2080B.

Since 100 percent of the outflows at the downstream ends of Sub-basin 2070 and 2130 might be able to go either way at any time, models were prepared to simulate these conditions. Table 1 indicates the conditions used for these models and the original model RPBW1.

Model No. 1 (File Name: REAT1)

In this model, split flows were assumed to occur at the downstream ends of Sub-basins 2070 and 2130. Similar to the original model, divert operations were included for runoffs between these sub-basins. Existing watershed conditions were assumed.

The model was also prepared with the State Land channel/levee alignment (see Figure 1). This alignment was developed through coordinated planning efforts by The Newhall Land & Farming Company, the City of Scottsdale, and the State Land Department. This channel is now built and in place.

The configurations of the Desert Greenbelt and collector channels used for routing are depicted in Figure 3.

| TABLE 1 – Conditions Used in HEC-1 Models | | | | | | |
|---|---|---|---|---|---|---|
| *Conditions* | *Model 1* | *Model 2* | *Model 3* | *Model 3A* | *Model 4* | *RPBWI* |
| Future Land Use | No | Yes | Yes | Yes | Yes | Yes |
| Split Flow @ Sub-basin 2070 | Yes | Yes | No | No | No | Yes |
| Split Flow @ Sub-basin 2130 | Yes | Yes | Yes | No | Yes | Yes |
| Latest TPP Alignment | Yes | Yes | Yes | Yes | Yes | No |
| TPP as Hydrologic Barrier | Yes | Yes | Yes | Yes | Yes | No |
| 100% Outflow of Sub-basin 2070 to Sub-basin 2130 | No | No | Yes | Yes | No | No |
| 100% Outflow of Sub-basin 2070 to 2165 | No | No | No | No | Yes | No |

Model No. 2 (File Name: REAT2)

This model was setup similar to Model No. 1 except that the future fully developed watershed conditions were assumed. The percent of impervious area within each sub-basin was incorporated in the LS card of the model in accordance with the City's General Plan. The peak discharges are larger than in Model No. 1 due to the increase of impervious areas for future development.

Model No. 3 (File Name: REAT3)

Model No. 3 was setup similar to Model No. 2 except that a levee was proposed for Sub-basin 2065. The purpose of the levee was to cut off the split flow between Sub-basin 2070 and Sub-basin 2065. In this case, 100 percent of runoff from Sub-basin 2070 was routed to Sub-basin 2130. Split flows from Sub-basins 2130 to Sub-basin 2135 and 2080B was assumed to occur.

Model No. 3A (File Name: REAT3A)

Model No. 3A was set up similar to Model No. 3 except that 100 percent of runoff from Sub-basin 2130 was routed to Sub-basin 2135.

Model No. 4 (File Name: REAT4)

Model No. 4 was setup similar to Model No. 2 except that 100 percent of the runoff generated from Sub-basin 2070 was routed to Sub-basin 2065. Split flows from Sub-basins 2130 to Subbasins 2135 and 2080B was also assumed.

Bob Ward's model existing land use conditions. (RTIMP = $\phi$)

Apex (South of Pinnacle Peak Road) 7.88 mile$^2$ — 965 cfs

| | | |
|---|---|---|
| A | 9.42 mile$^2$ | 9735 cfs. |
| B | 2.23 mi$^2$ | 2803 cfs |
| C | 3.16 mi$^2$ | 5106 cfs |
| D | 12.84 | 10750 cfs |
| E | 19.34 | 13930 cfs |
| F | 19.38 | 13934 cfs |

## *SUMMARY OF RESULTS*

### *General*

The hydrologic output data were generated for all five models and the results were analyzed. Table 2 summarizes the peak flows at specified locations for the Reata hydrology study. The revised model RPBW1 prepared by Robert L. Ward Consulting Engineer was used to compare the results of these models. A typical schematic flow diagram for these models is provided in Figure 4.

***TABLE 2 – Summary of Hydrologic Results***

| *Concentration Point* | *Location* | *Model 1 Peak Flow (CFS)* | *Model 2 Peak Flow (CFS)* | *Model 3 Peak Flow (CFS)* | *Model 3A Peak Flow (CFS)* | *Model 4 Peak Flow (CFS)* | *RPBW1 Peak Flow (CFS)* |
|---|---|---|---|---|---|---|---|
| APEX | Outlet of Sub-basin 50 South of Pinnacle Peak Road: C 50 | 9,600 (7.87)* | 11,236 (7.87) | 11,236 (7.87) | 11,236 (7.87) | ** 11,236 (7.87) | 11,080 (7.88) |
| A | Near Beardsley Road @ Thompson Peak Parkway: C 2060.4 | 11,433 (12.17) | 13,400 (12.17) | 12,802 (11.69) | 12,802 (11.69) | ** 14,659 (13.15) | 11,190 (9.42) |
| B | Near Union Hills Drive @ Thompson Peak Parkway: C 2160B | 3,240 (2.58) | 3,732 (2.58) | 4,515 (3.06) | ** 4,884 (3.06) | 2,583 (1.60) | 3,114 (2.23) |
| C | Near Bell Road @ Thompson Peak Parkway: C 2210B3 | 5,232 (3.29) | 5,431 (3.29) | 5,431 (3.29) | 5,431 (3.29) | ** 5,431 (3.29) | 5,246 (3.16) |
| D | Union Hills Drive @ 96th Street: C 2090 | 10,667 (12.81) | 12,674 (12.81) | 12,165 (12.33) | 12,165 (12.33) | ** 13,775 (13.79) | 13,197 (12.84) |
| E | Bell Road @ 96th Street: C 2160A | 12,987 (19.27) | 15,432 (19.27) | 15,251 (19.27) | 15,195 (19.27) | ** 15,893 (19.27) | *** 16,700 (19.34) |
| F | CAP Dike 4 @ 96th Street: C 2170F | 12,960 (19.46) | 15,498 (19.46) | 15,305 (19.46) | 15,240 (19.46) | ** 15,917 (19.46) | 16,595 (19.38) |

future condition

* Drainage area in square miles.
** Recommended peak flow for Desert Greenbelt Design.
*** Design flow for the bridge at Bell Road.

In comparison of Models 1 and 2, the increase of impervious areas due to future urbanization would increase the outflow at CAP Dike 4 location 2,538 cfs. The outflows at the same location for Models 3, 3A and 4 were found to be 15,305, 15,240 and 15,917 cfs, respectively. The levee

input for Sub-basin 2065 to eliminate split flows may help reduce the outflow at CAP Dike 4 by a maximum of 612 cfs.

Comparing Models 2 and the original model, RPBW1, Greiner estimates the peak discharge at CAP Dike 4 to be approximately seven percent lower. The lower flow can be caused by the longer channel routing around the TPP to each outlet structure and can thus result in a longer time of concentration.

### *Design Conclusion*

To be conservative as well as to eliminate the immediate need of levee construction on the Beardsley washes in Sub-basin 2065, Greiner recommends that the highest outflow at each concentration point, as indicated in Table 2, be used for the Desert Greenbelt design for the main Reata Wash channel, since 100 percent of the outflows at Sub-basins 2070 and 2130 may be able to go either way at any time as mentioned before.

## *REFERENCES*


1. Final Report – Upper Indian Bend Wash Regional Drainage and Flood Control Plan by Water Resources Associates, Inc., July, 1992.

2. Reata Pass/Beardsley Wash Alignment Study by City of Scottsdale, Arizona, November, 1992.

3. 7.5 Minute U.S.G.S. Quadrangle Topographic Map of McDowell Peak, Arizona. Scale 1"=2000', 1965 Edition and Photorevised 1982.

4. Aerial Maps, City of Scottsdale. Scale: 1"=400'.

5. Hydrology, Design Standards and Policies, City of Scottsdale, Revised January 1993.

6. HEC-1 Flood Hydrograph Package – Users Manual, U.S. Army Corps of Engineers, Hydrologic Engineering Center, September 1990 Edition.

7. Soil Survey of Aguila-Carefree Area, Parts of Maricopa and Pinal Counties, Arizona, Soil Conservation Services, Latest Edition.

8. FIRM Flood Insurance Rate Map, Maricopa County, Arizona and Incorporated Areas, FEMA, April 1988.

9. Hydrology Analysis for Reata Pass/Beardsley Wash Regional Channel and Thompson Peak Wash Channel/Levee Alignment by Robert L. Ward, November 8, 1993.


*RW-HYDRO.GRE*

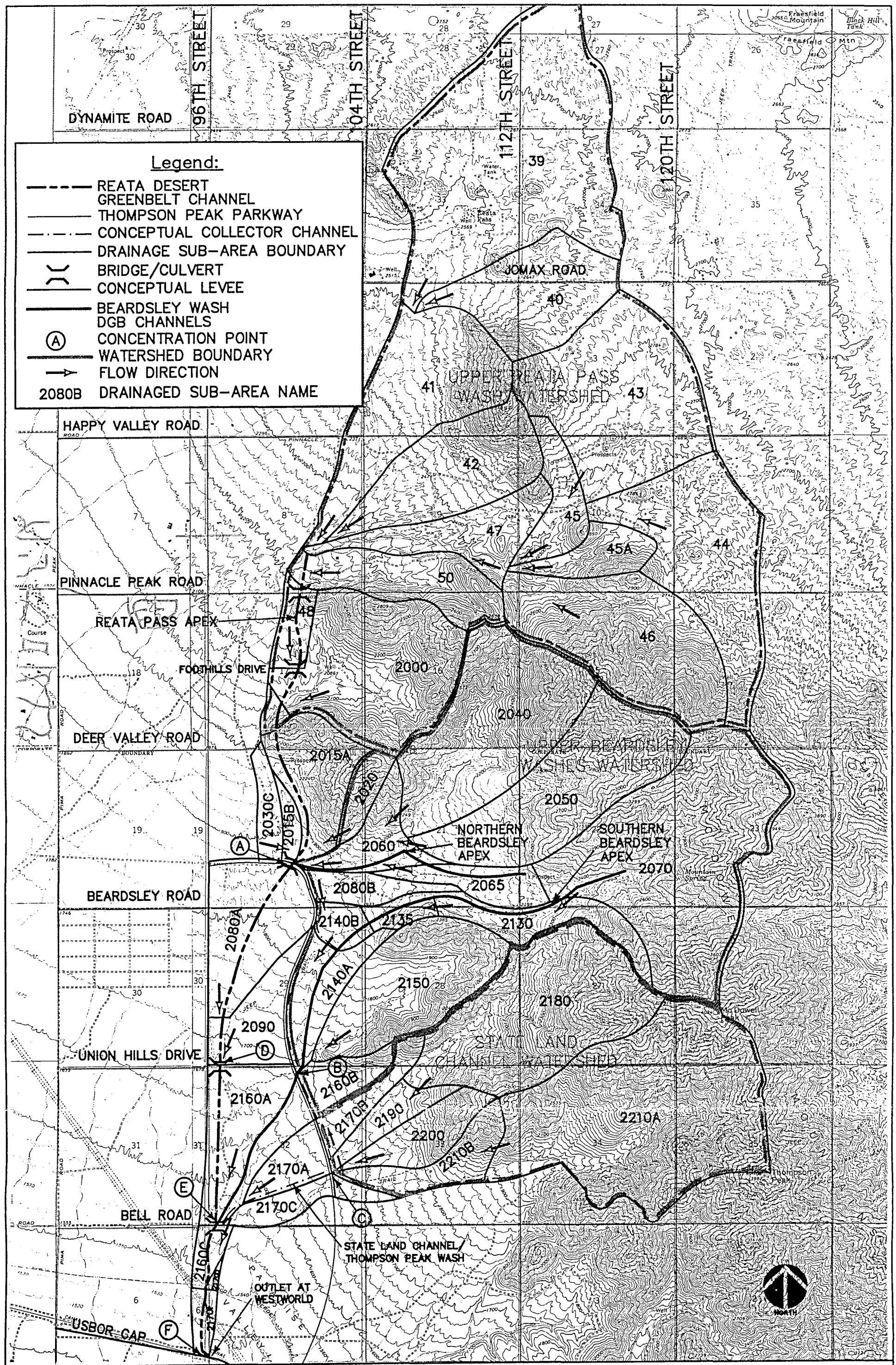


Reata Pass/Beardsley Washes
Drainage Area Map
Overall View

1"=3000'

Figure 1

The Desert Greenbelt

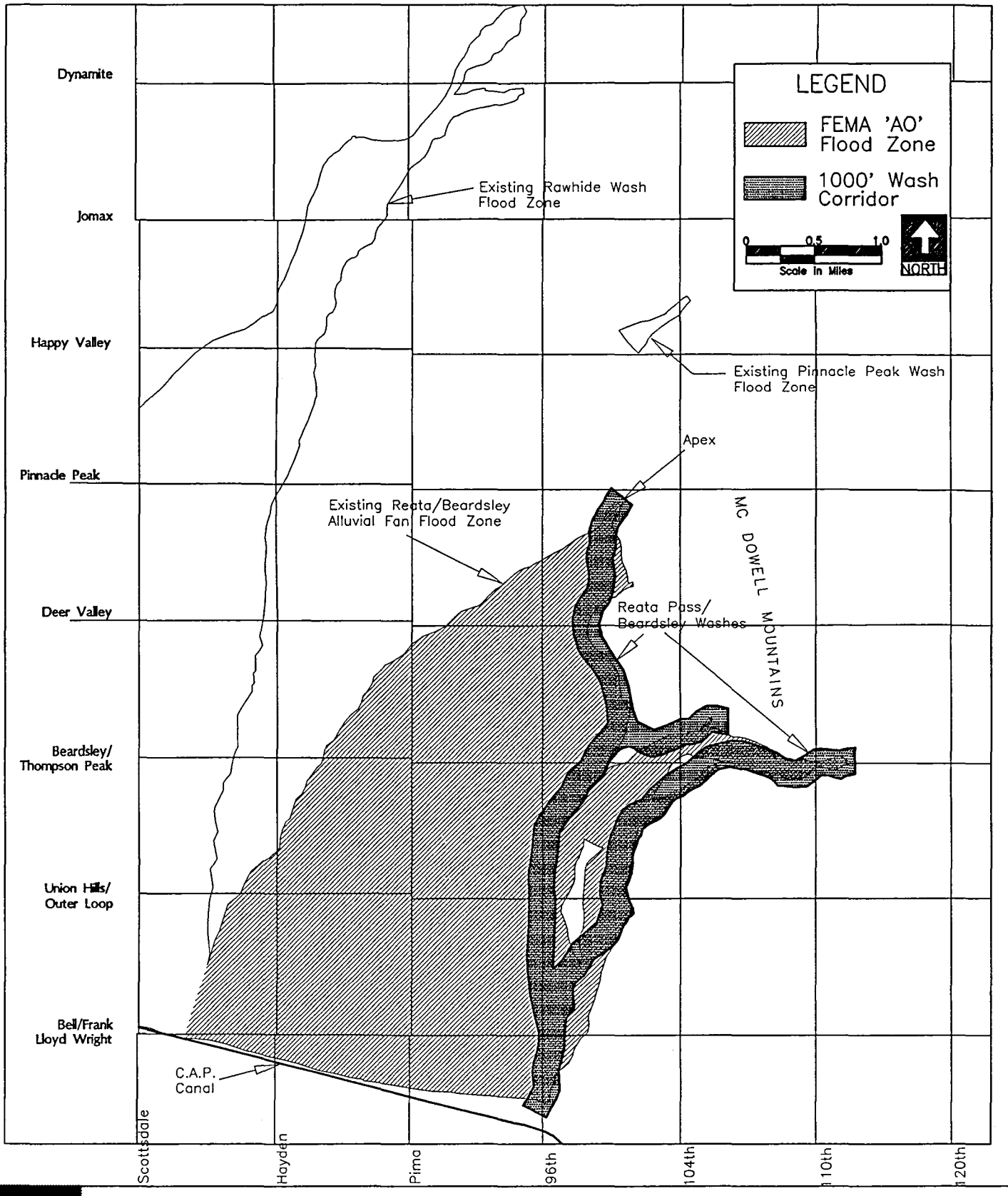


The Desert Greenbelt

# Reata Pass/Beardsley Channel – Existing Alluvial Fan Flood Zones

**FIGURE 2**

1

Earthen Landscaped Collector Channel
n=0.045

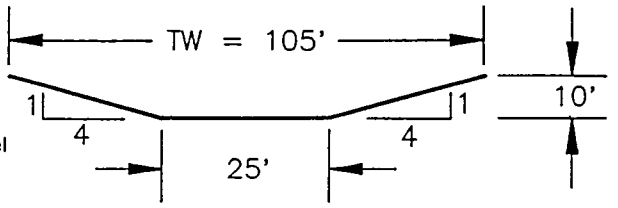


2

Shotcrete Lined Collector Channel
n=0.019

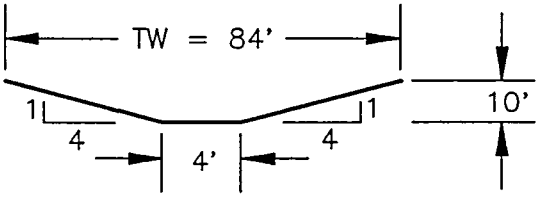


3

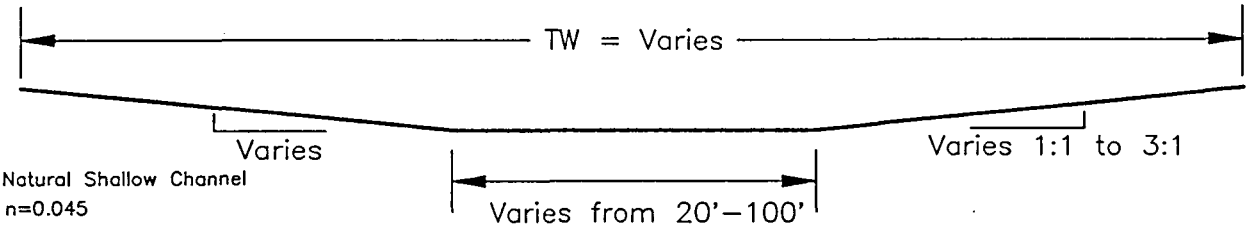


Natural Shallow Channel
n=0.045

4

Proposed Reata/Beardsley
Regional Channel
n=0.055 (overbank); 0.045 (main)

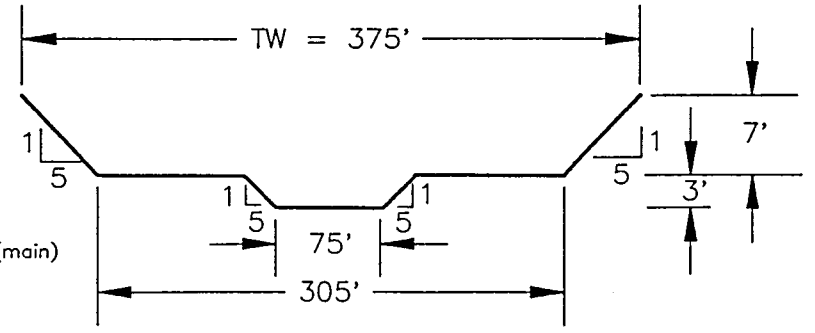


The Desert Greenbelt
Scottsdale Bond Project 1989 "Our Future In Progress"

Greiner, Inc.

* Not to Scale

CONFIGURATIONS FOR THE REATA/BEARDSLEY REGIONAL CHANNEL & COLLECTOR CHANNELS

FIGURE 3

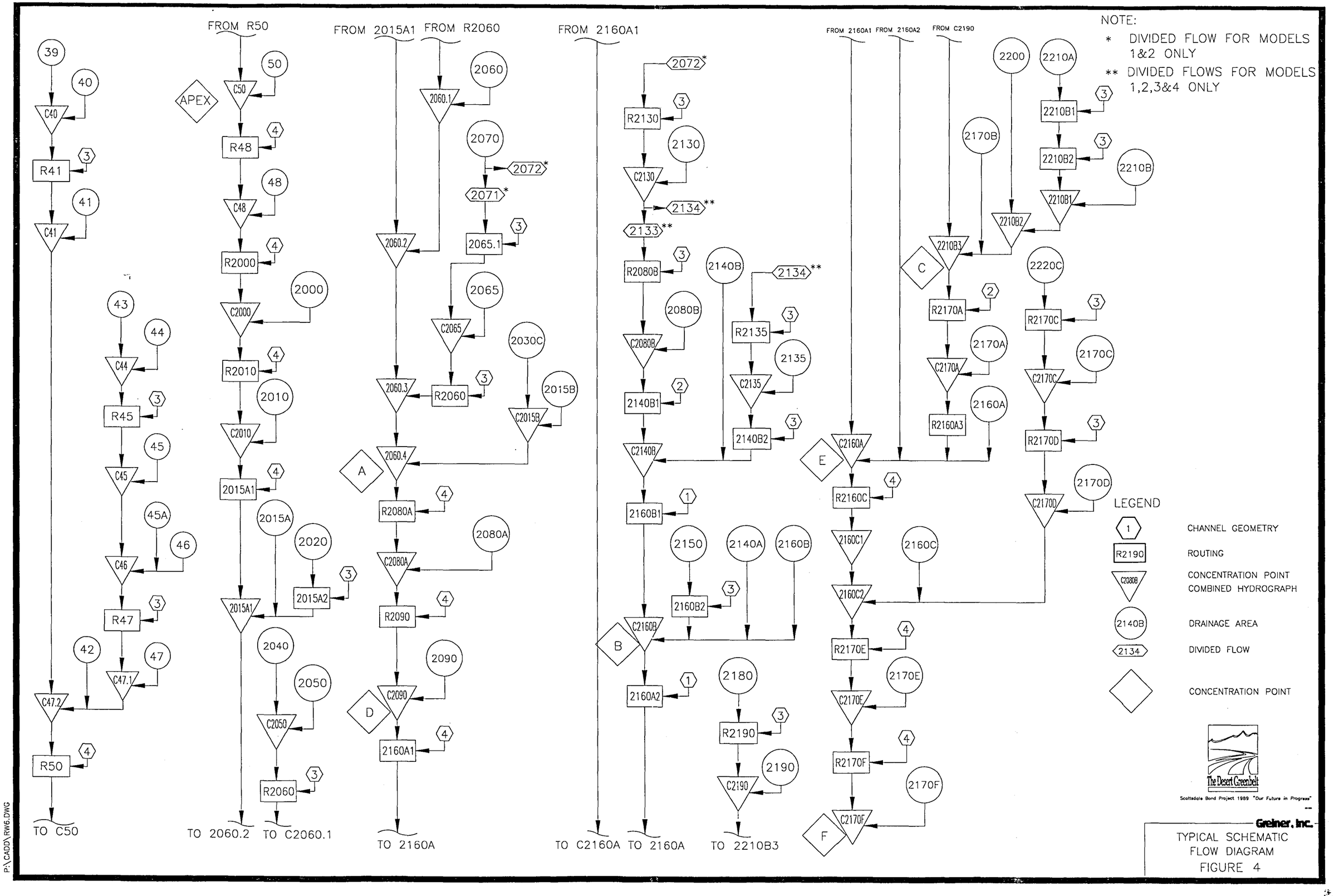
NOTE:
* DIVIDED FLOW FOR MODELS 1&2 ONLY
** DIVIDED FLOWS FOR MODELS 1,2,3&4 ONLY
FROM R50
FROM 2015A1
FROM R2060
FROM 2160A1
FROM 2160A1
FROM 2160A2
FROM C2190
TO C50
TO 2060.2
TO C2060.1
TO 2160A
TO C2160A
TO 2160A
TO 2210B3
LEGEND
CHANNEL GEOMETRY
ROUTING
CONCENTRATION POINT COMBINED HYDROGRAPH
DRAINAGE AREA
DIVIDED FLOW
CONCENTRATION POINT
The Desert Greenbelt
Scottsdale Bond Project 1989 "Our Future in Progress"
Greiner, Inc.
TYPICAL SCHEMATIC FLOW DIAGRAM
FIGURE 4
P:\CADD\RW6.DWG

# APPENDICES

# HEC-1 Printouts

# HEC-1 MODEL NO. 1

# FILE: REAT1

```
****************************************
*                                      *
*   FLOOD HYDROGRAPH PACKAGE  (HEC-1)  *
*            SEPTEMBER 1990            *
*             VERSION 4.0              *
*                                      *
*  RUN DATE  01/11/1995  TIME  13:36:29 *
*                                      *
****************************************
```

```
****************************************
*                                      *
*    U.S. ARMY CORPS OF ENGINEERS      *
*    HYDROLOGIC ENGINEERING CENTER     *
*          609 SECOND STREET           *
*       DAVIS, CALIFORNIA 95616        *
*           (916) 756-1104             *
*                                      *
****************************************
```

```
X     X  XXXXXXX   XXXXX          X
X     X  X        X     X        XX
X     X  X        X              X
XXXXXXX  XXXX     X        XXXXX  X
X     X  X        X              X
X     X  X        X     X        X
X     X  XXXXXXX   XXXXX         XXX
```

THIS PROGRAM REPLACES ALL PREVIOUS VERSIONS OF HEC-1 KNOWN AS HEC1 (JAN 73), HEC1GS, HEC1DB, AND HEC1KW.

THE DEFINITIONS OF VARIABLES -RTIMP- AND -RTIOR- HAVE CHANGED FROM THOSE USED WITH THE 1973-STYLE INPUT STRUCTURE.
THE DEFINITION OF -AMSKK- ON RM-CARD WAS CHANGED WITH REVISIONS DATED 28 SEP 81. THIS IS THE FORTRAN77 VERSION
NEW OPTIONS: DAMBREAK OUTFLOW SUBMERGENCE , SINGLE EVENT DAMAGE CALCULATION, DSS:WRITE STAGE FREQUENCY,
DSS:READ TIME SERIES AT DESIRED CALCULATION INTERVAL  LOSS RATE:GREEN AND AMPT INFILTRATION
KINEMATIC WAVE: NEW FINITE DIFFERENCE ALGORITHM



```
LINE          ID.......1.......2.......3.......4.......5.......6.......7.......8.......9......10

  1           ID        DESERT GREENBELT STUDY BY GREINER, INC.
  2           ID        1992 MODELING REVISIONS BASED ON REATA PASS SENSITIVITY ANALYSIS
  3           ID        MODEL 1   FILE NAME: REAT1.DAT
  4           ID
  5           ID        REATA HYDROLOGY -PROP. CONDITIONS W/O FUTURE LAND USE
  6           ID        ORIGINAL MODEL RPBW1 BY ROBERT L. WARD
  7           ID        100-YEAR 6-HOUR STORM (AMC TYPE II)
  8           ID
  9           ID        SUB-BASINS 39 THRU 50 & 2000 THRU 2220C
 10           ID        WITH GREENBELT REGIONAL CHANNEL IN PLACE IN SUB 48, 50, 2000, 2010,
 11           ID        2015A, 2080A AND PARALLEL 96TH STREET TO CAP DIKE 4
 12           ID
 13           ID        PH CARD FOR SUB 30 TO SUB 50
 14           ID        CHANGE PH CARD FOR SUB 2000 AND DOWNSTREAM
 15           ID        USE JD CARDS
 16           ID        SPLIT FLOWS AT D.S. ENDS OF SUB 2070 & 2130
 17           ID        STATE LAND CHANNEL ALIGNMENT INCORPORATED
 18           ID        NEW TPP ALIGNMENT AS OF AUG 1, 1994
              *DIAGRAM
 19           IT       5   OCT94       0     300
 20           IO       5       0
 21           JD           .0001
```

```
 22          PH                    .72    1.41    2.47    2.79    2.99    3.39
 23          JD            .001
 24          JD             .01
 25          JD              .1
 26          JD              .5
 27          JD               1
 28          JD               5
 29          JD              25
 30          JD              50

 31          KK      39     SUB
 32          KM        RUNOFF FROM SUB-BASIN 39
 33          BA  1.8807
 34          LS              85
 35          UK     330   .0433     .20     100
 36          RK   11240   .0253    .045            TRAP      30       3

 37          KK      40     SUB
 38          KM        RUNOFF FROM SUB-BASIN 40
 39          BA   .5844
 40          LS              83
 41          UK     160   .0627     .20     100
 42          RK    7000   .0350    .045            TRAP      20       3

 43          KK     C40
 44          KM        COMBINE HYDROGRAPHS SUB 39 & SUB 40
 45          HC       2
```



```
LINE         ID.......1.......2.......3.......4.......5.......6.......7.......8.......9......10


 46          KK     R41
 47          KM        ROUTE C40 TO D.S. END OF SUB 41
 48          RS       1    FLOW      -1
 49          RC    .055    .040    .055    9400   .0282
 50          RX       0       1     101     107     157     163     263     264
 51          RY      10       8       3       0       0       3       8      10

 52          KK      41     SUB
 53          KM        RUNOFF FROM SUB-BASIN 41
 54          BA   .8270
 55          LS              74
 56          UK     280   .2386     .20     100
 57          RK    9400   .0282    .045            TRAP      50       3

 58          KK     C41
 59          KM        COMBINE HYDROGRAPHS R41 & SUB 41
 60          HC       2

 61          KK      42     SUB
 62          KM        RUNOFF FROM SUB-BASIN 42
 63          BA   .5844
 64          LS              78
 65          UK     280   .2386     .20     100
 66          RK    8750   .0573    .045            TRAP      20       3

 67          KK      43     SUB
 68          KM        RUNOFF FROM SUB-BASIN 43
 69          BA  1.0665
```

```
 70          LS              85
 71          UK     260   .0515     .20     100
 72          RK    7400   .0255    .045            TRAP      25       3

 73          KK      44     SUB
 74          KM        RUNOFF FROM SUB-BASIN 44
 75          BA   .8389
 76          LS              85
 77          UK     260   .0515     .20     100
 78          RK    9840   .0622    .045            TRAP      25       3

 79          KK     C44
 80          KM        COMBINE HYDROGRAPHS SUB 43 & SUB 44
 81          HC       2

 82          KK     R45
 83          KM        ROUTE C44 TO D.S. END OF SUB 45
 84          RS       1    FLOW      -1
 85          RC    .055    .040    .055    3600   .0366
 86          RX       0       1     101     107     137     143     243     244
 87          RY      10       8       3       0       0       3       8      10
1                                          HEC-1 INPUT                                                    PAGE  3

LINE         ID.......1.......2.......3.......4.......5.......6.......7.......8.......9......10


 88          KK      45     SUB
 89          KM        RUNOFF FROM SUB-BASIN 45
 90          BA   .2037
 91          LS              81
 92          UK     125   .1166     .20     100
 93          RK    3600   .0366    .045            TRAP      30       3

 94          KK     C45
 95          KM        COMBINE HYDROGRAPHS R45 & SUB 45
 96          HC       2

 97          KK     45A     SUB
 98          KM        RUNOFF FROM SUB-BASIN 45A
 99          BA   .1720
100          LS              86
101          UK     275   .2200     .20     100
102          RK    5400   .0411    .045            TRAP      15       3

103          KK      46     SUB
104          KM        RUNOFF FROM SUB-BASIN 46
105          BA   .9268
106          LS              86
107          UK     265   .4958     .20     100
108          RK    3300   .2271    .045    .111    TRAP      10       3
109          RK    7100   .0535    .045            TRAP      25       3

110          KK     C46
111          KM        COMBINE HYDROGRAPHS C45, SUB 45A, & SUB 46
112          HC       3

113          KK     R47
114          KM        ROUTE C46 TO D.S. END OF SUB 47
115          RS       1    FLOW      -1
116          RC    .055    .040    .055    7600   .0268
```

```
117          RX      0       1     101     109     159     167     267     268
118          RY     10       9       4       0       0       4       9      10

119          KK     47     SUB
120          KM        RUNOFF FROM SUB-BASIN 47
121          BA   .3757
122          LS             77
123          UK    375   .1000     .20     100
124          RK   9300   .0357    .045            TRAP      50       3

125          KK   C47.1
126          KM        COMBINE HYDROGRAPHS SUB 47 & R47
127          HC       2

128          KK   C47.2
129          KM        COMBINE HYDROGRAPHS C47.1, C41 & SUB 42
130          HC       3
```



```
LINE         ID.......1.......2.......3.......4.......5.......6.......7.......8.......9......10


131          KK    R50
132          KM        ROUTE C47.2 TO D.S. END OF SUB 50 (BEGINNING OF REATA DESERT
133          KM        GREENBELT CHANNEL)
134          RS       1    FLOW      -1
135          RC    .055    .040    .055    1000   .0200
136          RX       0      35     135     150     225     240     340     375
137          RY      10       3       3       0       0       3       3      10

138          KK     50     SUB
139          KM        RUNOFF FROM SUB-BASIN 50
140          BA   .4052
141          LS             83
142          UK    300   .3555     .20     100
143          RK    730   .1506    .045    .036    TRAP      10       3
144          RK   6400   .0453    .045            TRAP      25       3

145          KK    C50
146          KM        COMBINE HYDROGRAPHS OF SUB 50 AND R50
147          KM        THIS IS THE TOTAL DISCHARGE TO THE REATA PASS ALLUVIAL FAN APEX
148          HC       2

149          KK    R48
150          KM        ROUTE C50 TO OUTLET OF SUB 48
151          RS       1    FLOW      -1
152          RC    .055    .040    .055    2900   .0345
153          RX       0      35     135     150     225     240     340     375
154          RY      10       3       3       0       0       3       3      10

155          KK     48     SUB
156          KM        RUNOFF FROM SUB-BASIN 48
157          BA   .1203
158          LS             72
159          UK    175   .1400     .15     100
160          RK   2900   .0345    .045            TRAP      50       3

161          KK    C48
162          KM        COMBINE HYDROGRAPHS R48 & SUB 48
163          HC       2
```

```
164          KK   R2000
165          KM        ROUTE C48 TO D.S. END OF SUB 2000
166          RS       1    FLOW      -1
167          RC    .055    .045    .055    1300   .0308
168          RX       0      35     135     150     225     240     340     375
169          RY      10       3       3       0       0       3       3      10

170          KK    2000     SUB
171          KM        RUNOFF FROM SUB 2000
172          BA   .8853
173          PH                     .72    1.41    2.47    2.77    2.97    3.35
174          LS              84
175          UK     400   .2750     .25     100
176          RK    2625   .0785    .045    .072    TRAP      10       3
177          RK    3600   .0222    .045            TRAP      25       3
```



```
LINE         ID.......1.......2.......3.......4.......5.......6.......7.......8.......9......10


178          KK   C2000
179          KM        COMBINE HYDROGRAPHS OF R2000 & SUB 2000
180          HC       2

181          KK   R2010
182          KM        ROUTE C2000 TO D.S. END OF SUB 2010
183          RS       1    FLOW      -1
184          RC    .055    .045    .055    1300   .0308
185          RX       0      35     135     150     225     240     340     375
186          RY      10       3       3       0       0       3       3      10

187          KK    2010     SUB
188          KM        RUNOFF FROM SUB-BASIN 2010
189          BA   .0413
190          LS              83
191          UK     800   .6425    0.30     100
192          RK    1300   .0308   0.045            TRAP      50       3

193          KK   C2010
194          KM        COMBINE HYDROGRAPHS R2010 & SUB 2010
195          HC       2

196          KK  2015A1
197          KM        ROUTE C2010 TO D.S. END OF SUB 2015A
198          RS       1    FLOW      -1
199          RC    .055    .045    .055    4800   .0292
200          RX       0      35     135     150     225     240     340     375
201          RY      10       3       3       0       0       3       3      10

202          KK   2015A     SUB
203          KM        RUNOFF FROM SUB-BASIN 2015A
204          BA   .3619
205          LS              82
206          UK     500   .2800     .25     100
207          RK    2400   .1358    .045    .061    TRAP      10       3
208          RK    5300   .0200    .045            TRAP     150       5

209          KK    2020     SUB
210          KM        RUNOFF FROM SUB-BASIN 2020
```

Where is the sub-basin [illegible] for S2010 - Not shown on Map

```
211          BA   .1090
212          LS              85
213          UK     205   .6969    0.30     100
214          RK     900   .3889    .045    .011    TRAP      10       3
215          RK    2800  0.1428    .045            TRAP      20       3

216          KK  2015A2
217          KM        ROUTE SUB 2020 TO D.S. END OF SUB 2015A
218          RS       1    FLOW      -1
219          RC    .055    .045    .055    1600    .025
220          RX       0      .1       2      32      67      97    98.9      99
221          RY      15      10      10       0       0      10      10      15
```



```
LINE         ID.......1.......2.......3.......4.......5.......6.......7.......8.......9......10


222          KK  2015A1
223          KM        COMBINE HYDROGRAPHS OF (R)2015A1, SUB 2015A & (R)2015A2
224          HC       3

225          KK    2040     SUB
226          KM        RUNOFF FROM SUB-BASIN 2040
227          BA   .9290
228          LS              82
229          UK     463   .4072    0.25     100
230          RK    2700   .1878    .045    .056    TRAP      10       3
231          RK    6800   .0485    .045            TRAP      25       3

232          KK    2050     SUB
233          KM        RUNOFF FROM SUB-BASIN 2050
234          BA   .8580
235          LS              81
236          UK     530   .5726    0.25     100
237          RK    3400   .2067    .045    .086    TRAP      10       3
238          RK    6200   .0693    .045            TRAP      25       5

239          KK   C2050
240          KM        COMBINE HYDROGRAPHS OF SUB 2040 & SUB 2050
241          HC       2

242          KK   R2060
243          KM        ROUTE C2050 TO OUTLET OF SUB 2060
244          RS       1    FLOW      -1
245          RC    .055    .045    .055    3900   .0310
246          RX       0       3      53      57      87      91     141     144
247          RY      10       4       2       0       0       2       4      10

248          KK    2060     SUB
249          KM        RUNOFF FROM SUB-BASIN 2060
250          BA   .2169
251          LS              71
252          UK     217   .1667     .20     100
253          RK    2275   .0929    .045    .031    TRAP      10       5
254          RK    3900   .0310    .055            TRAP      30      15

255          KK  2060.1
256          KM        COMBINE HYDROGRAPHS OF R2060 & SUB 2060
257          HC       2
```

```
 258          KK  2060.2
 259          KM        COMBINE HYDROGRAPHS OF C2060.1 & (C)2015A1
 260          HC       2

 261          KK    2070     SUB
 262          KM        RUNOFF FROM SUB-BASIN 2070
 263          BA  1.4649
 264          LS              84
 265          UK     400   .5174     .30     100
 266          RK    1750   .2962    .045    .048    TRAP       5       3
 267          RK    3500   .1236    .045    .483    TRAP      10       3
1                                              HEC-1 INPUT                                                    PAGE  7

LINE          ID.......1.......2.......3.......4.......5.......6.......7.......8.......9......10

 268          RK    3400   .0882    .045            TRAP      30      10

 269          KK    2071     DIV
 270          KM        DIVERT FLOW FROM SUB 2070 TO SUB 2065 (DIV 2071)
 271          KM        DIVERT FLOW FROM SUB 2070 TO SUB 2130 (RET 2072)
 272          DT    2072
 273          DI       0    6000
 274          DQ       0    4000

 275          KK  2065.1
 276          KM        ROUTE DIV 2071 TO D.S. END OF SUB 2065
 277          RS       3    FLOW      -1
 278          RC    .055    .045    .055    6500   .0508
 279          RX       0       3      53      57      87      91     141     144
 280          RY      10       4       2       0       0       2       4      10

 281          KK    2065     SUB
 282          KM        RUNOFF FROM SUB-BASIN 2065
 283          BA   .1720
 284          LS              69
 285          UK     200    .050      .2     100
 286          RK    6500   .0508    .055            TRAP      30      15

 287          KK   C2065
 288          KM        COMBINE HYDROGRAPHS OF SUB 2065 & (R)2065.1
 289          KM        DRAINAGE AREA ADJUSTMENT MADE TO REFLECT FLOW DIVERSION OF U.S. AREAS
 290          HC       2   .6554

 291          KK   R2060
 292          KM        ROUTE C2065 TO D.S. END OF SUB 2060
 293          RS       1    FLOW      -1
 294          RC    .055    .045    .055    1600   .0267
 295          RX       0       3      53      57      87      91     141     144
 296          RY      10       4       2       0       0       2       4      10

 297          KK  2060.3
 298          KM        COMBINE R2060 & (C)2060.2
 299          HC       2

 300          KK   2030C     SUB
 301          KM        RUNOFF FROM SUB-BASIN 2030C
 302          BA   .0723
 303          LS              63
 304          UK     155   .0614     .15     100
 305          RK    3000   .0300    .045            TRAP       5       5
```

```
306          KK   2015B     SUB
307          KM        RUNOFF FROM SUB-BASIN 2015B
308          BA   .0545
309          LS             60
310          UK     500   .2800     .25     100
311          RK    4000   .0288    .045            TRAP      25       5
```



```
LINE         ID.......1.......2.......3.......4.......5.......6.......7.......8.......9......10

312          KK  C2015B
313          KM        COMBINE HYDROGRAPHS OF SUB 2015B & SUB 2030C
314          HC       2

315          KK  2060.4
316          KM        COMBINE HYDROGRAPHS OF C2015B & (C)2060.3
317          HC       2

318          KK  R2080A
319          KM        ROUTE (C)2060.4 TO OUTLET OF SUB 2080A
320          RS       1    FLOW      -1
321          RC    .055    .045    .055    5500   .0291
322          RX       0      35     135     150     225     240     340     375
323          RY      10       3       3       0       0       3       3      10

324          KK   2080A     SUB
325          KM        RUNOFF FROM SUB 2080A
326          BA   .4186
327          LS             69
328          UK     155   .0614     .15     100
329          RK    5500   .0291    .045            TRAP       7       5

330          KK  C2080A
331          KM        COMBINE HYDROGRAPHS OF R2080A & SUB 2080A
332          HC       2

333          KK   R2090
334          KM        ROUTE C2080A TO D.S. OF SUB 2090 (UNION HILL DR.)
335          RS       1    FLOW      -1
336          RC    .055    .045    .055    1400   .0214
337          RX       0      35     135     150     225     240     340     375
338          RY      10       3       3       0       0       3       3      10

339          KK    2090     SUB
340          KM        RUNOFF FROM SUB 2090
341          BA   .2220
342          LS             74
343          UK     337   .0324     .15     100
344          RK    5000   .0280    .045            TRAP      25       3

345          KK   C2090
346          KM        COMBINE HYDROGRAPHS OF R2090 & SUB 2090
347          HC       2

348          KK  2160A1
349          KM        ROUTE C2090 TO D.S. END OF SUB 2160A THRU DESERT GREENBELT
350          RS       1    FLOW      -1
351          RC    .055    .045    .055    5300   .0208
```

```
352          RX       0      35     135     150     225     240     340     375
353          RY      10       3       3       0       0       3       3      10
```



```
LINE         ID.......1.......2.......3.......4.......5.......6.......7.......8.......9......10


354          KK   2160A     SUB
355          KM        RUNOFF FROM SUB-BASIN 2160A
356          BA   .4713
357          LS              74
358          UK     337   .0324     .15     100
359          RK    5300   .0208    .045            TRAP      25       3

360          KK    2072     RET
361          KM        RETRIEVE DIVERTED FLOW FROM DIV 2071
362          DR    2072

363          KK   R2130
364          KM        ROUTE RET 2072 TO OUTLET OF SUB 2130
365          RS       1    FLOW      -1
366          RC    .055    .045    .055    3600   .0555
367          RX       0       5     105     107     137     139     239     244
368          RY      10       5       1       0       0       1       5      10

369          KK    2130     SUB
370          KM        RUNOFF FROM SUB-BASIN 2130
371          BA   .2510
372          LS              86
373          UK     267   .3126     .20     100
374          RK    9240   .0941    .045            TRAP      30      20

375          KK   C2130
376          KM        COMBINE HYDROGRAPHS OF R2130 & SUB 2130
377          KM        DRAINAGE AREA MADE TO REFLECT FLOW DIVERSION OF 67% OF DRAINAGE
378          KM        AREA FROM SUB 2070
379          HC       2  1.2325

380          KK    2133     DIV
381          KM        DIVERT FLOW FROM SUB 2130 TO SUB 2080B (DIV 2133)
382          KM        DIVERT FLOW FROM SUB 2130 TO SUB 2135 (RET 2134)
383          DT    2134
384          DI       0     500    1000    6000
385          DQ       0     500     850    4350

386          KK  R2080B
387          KM        ROUTE NON-DIVERTED FLOW FROM DIV 2133 TO DS. END OF SUB 2080B
388          RS       1    FLOW      -1
389          RC    .055    .045    .055    5000   .0440
390          RX       0       3      53      57      87      91     141     144
391          RY      10       4       2       0       0       2       4      10

392          KK   2080B     SUB
393          KM        RUNOFF FROM SUB-BASIN 2080B
394          BA   .1190
395          LS              74
396          UK     175   .0571     .15     100
397          RK    5000   .0440    .045            TRAP      30      15
```

```
LINE          ID.......1.......2.......3.......4.......5.......6.......7.......8.......9......10


 398          KK  C2080B
 399          KM        COMBINE HYDROGRAPHS OF R2080B & SUB 2080B
 400          HC       2   .3655

 401          KK  2140B1
 402          KM        ROUTE C2080B ALONG THOMPSON PEAK PARKWAY THROUGH
 403          KM        SHOTCRETE-LINED COLLECTOR TO D.S. END OF SUB 2140B
 404          RS       1    FLOW      -1
 405          RC    .019    .019    .019    1900   .0158
 406          RX       0       8      24      40      44      60      76      84
 407          RY      10       8       4       0       0       4       8      10

 408          KK   2140B     SUB
 409          KM        RUNOFF FROM SUB-BASIN 2140B
 410          BA   .0925
 411          LS              74
 412          UK     200   .0500     .15     100
 413          RK    1820   .0461    .045            TRAP      20      10

 414          KK    2134     RET
 415          KM        RETRIEVE DIVERTED FLOW FROM DIV 2133
 416          DR    2134

 417          KK   R2135
 418          KM        ROUTE RET 2134 TO OUTLET OF SUB 2135
 419          RS       1    FLOW      -1
 420          RC    .055    .045    .055    2700   .0444
 421          RX       0     0.1       2      22      42      62    63.9      64
 422          RY      15      10      10       0       0      10      10      15

 423          KK    2135     SUB
 424          KM        RUNOFF FROM SUB-BASIN 2135
 425          BA   .0750
 426          LS              86                      74
 427          UK     800   .4000     .30      40
 428          UK     200   .0500     .15      60
 429          RK    2700   .0444    .045            TRAP      20       2

 430          KK   C2135
 431          KM        COMBINE HYDROGRAPHS OF R2135 & SUB 2135
 432          KM        DRAINAGE AREA ADJUSTMENT MADE TO REFLECT DIVERSION OF U.S. AREAS
 433          HC       2  1.0610

 434          KK  2140B2
 435          KM        ROUTE C2135 TO D.S. END OF SUB 2140B
 436          RS       1    FLOW      -1
 437          RC    .055    .045    .055    1600   .0500
 438          RX       0      .1       2      22      42      62    63.9      64
 439          RY      15      10      10       0       0      10      10      15
```



```
LINE          ID.......1.......2.......3.......4.......5.......6.......7.......8.......9......10


 440          KK  C2140B
 441          KM        COMBINE HYDROGRAPHS OF (R)2140B1, (R)2140B2 & SUB 2140B
 442          HC       3
```

```
443          KK  2160B1
444          KM        ROUTE C2140B THROUGH EARTHEN-LANDSCAPED COLLECTOR TO D.S.
445          KM        END OF SUB 2160B
446          RS       1    FLOW      -1
447          RC    .045    .045    .045    4600   .0326
448          RX       0      24      32      40      65      73      81     105
449          RY      10       4       2       0       0       2       4      10

450          KK    2150     SUB
451          KM        RUNOFF FROM SUB-BASIN 2150
452          BA   .6873
453          LS              86                      74
454          UK     350   .3428     .30      50
455          UK     180   .0555     .15      50
456          RK    1785   .1313    .045    .027    TRAP      10       3
457          RK    6400   .0312    .045            TRAP      20      10

458          KK  2160B2
459          KM        ROUTE SUB 2150 TO D.S. END OF SUB 2160B
460          RS       1    FLOW      -1
461          RC    .045    .045    .045    1000   .0200
462          RX       0      24      32      40      65      73      81     105
463          RY      10       4       2       0       0       2       4      10

464          KK   2140A     SUB
465          KM        RUNOFF FROM SUB-BASIN 2140A
466          BA   .2335
467          LS              74
468          UK     200   .0500     .15     100
469          RK     800   .0500    .045   .0244    TRAP      15       3
470          RK    4600   .0326    .045            TRAP      17       5

471          KK   2160B     SUB
472          KM        RUNOFF FROM SUB-BASIN 2160B
473          BA   .1412
474          LS              75
475          UK     337   .0324     .15     100
476          RK    2275   .0527    .045   .0361    TRAP      15       3
477          RK    1400   .0241    .045            TRAP      17       5

478          KK  C2160B
479          KM        COMBINE HYDROGRAPHS OF(R)2160B1, (R)2160B2, SUB 2140 & SUB 2160B
480          HC       4

481          KK  2160A2
482          KM        ROUTE C2160B THROUGH EARTHEN LANDSCAPED COLLECTOR TO D.S.
483          KM        END OF SUB 2160A
484          RS       2    FLOW      -1
485          RC    .045    .045    .045    4720   .0169
486          RX       0      24      32      40      65      73      81     105
```



```
LINE         ID.......1.......2.......3.......4.......5.......6.......7.......8.......9......10

487          RY      10       4       2       0       0       2       4      10

488          KK   2170B     SUB
489          KM        RUNOFF FROM SUB-BASIN 2170B
490          BA   .1312
```

```
491          LS              74
492          UK     250   .0266     .15     100
493          RK    4640   .0457    .045            TRAP      20       5

494          KK    2180     SUB
495          KM        RUNOFF FROM SUB-BASIN 2180
496          BA  1.0044
497          LS              86
498          UK     468   .4496     .30     100
499          RK    3100   .2558    .045    .121    TRAP      10       3
500          RK    8200   .0731    .045            TRAP      20       5

501          KK   R2190
502          KM        ROUTE SUB 2180 TO OUTLET OF SUB 2190
503          RS       3    FLOW      -1
504          RC    .055    .040    .055    4100   .0390
505          RX       0       7     107     111     141     145     245     252
506          RY      10       3       2       0       0       2       3      10

507          KK    2190     SUB
508          KM        RUNOFF FROM SUB-BASIN 2190
509          BA   .1227
510          LS              79
511          UK     190   .0915     .15     100
512          RK    4100   .0390    .045            TRAP      30      10

513          KK   C2190
514          KM        COMBINE HYDROGRAPHS OF R2190 & SUB 2190
515          HC       2

516          KK    2200     SUB
517          KM        RUNOFF FROM SUB-BASIN 2200
518          BA   .2532
519          LS              81
520          UK     353   .1529     .20     100
521          RK    6150   .0838    .045            TRAP       5      11

522          KK   2210A     SUB
523          KM        RUNOFF FROM SUB-BASIN 2210A
524          BA  1.5847
525          LS              82
526          UK     248   .3717     .30     100
527          RK    4500   .1875    .045    .107    TRAP      10       3
528          RK    4800   .0526    .045            TRAP      20      10
```



```
LINE         ID.......1.......2.......3.......4.......5.......6.......7.......8.......9......10


529          KK  2210B1
530          KM        ROUTE SUB 2210A THRU WIDE BRAIDED WASH ALONG NORTH
531          KM        SIDE OF PARCELS N & O
532          RS       1    FLOW      -1
533          RC    .065    .055    .065    3500   .0476
534          RX       0       1      51      52     152     153     203     204
535          RY      10       3       1       0       0       1       3      10

536          KK  2210B2
537          KM        ROUTE (R)2210B1 THRU INCISED WASH ALONG NORTH SIDE OF PARCEL N.
538          KM        RD RECORD USED TO PROMOTE FLOW CONTINUITY
```

```
539          RD
540          RC    .065    .050    .065    2140   .0417
541          RX       0       1       2      22      45      65      66      67
542          RY      10      10      10       0       0      10      10      10

543          KK   2210B     SUB
544          KM        RUNOFF FROM SUB-BASIN 2210B
545          BA   .1916
546          LS              74
547          UK     248   .3717     .25     100
548          RK    5640   .0444    .050            TRAP      50       4

549          KK  2210B1
550          KM        COMBINE HYDROGRAPHS OF SUB 2210B & (R)2210B2
551          HC       2

552          KK  2210B2
553          KM        COMBINE HYDROGRAPHS OF (C)2210B1 & SUB 2200
554          HC       2

555          KK  2210B3
556          KM        COMBINE HYDROGRAPHS OF (C)2210B2, C2190 &  SUB 2710B
557          KM        THIS IS THE TOTAL FLOW AT THE INTERSECTION OF TTP & PROP. STATE LAND CH.
558          HC       3

559          KK  R2170A
560          KM        ROUTE (C)2210B3 ALONG SHOTCRETE -LINED COLLECTOR TO OUTLET OF SUB 2170A
561          RS       1    FLOW      -1
562          RC    .019    .019    .019    3600   .0194
563          RX       0       8      24      40      44      60      76      84
564          RY      10       8       4       0       0       4       8      10

565          KK   2170A     SUB
566          KM        RUNOFF FROM SUB-BASIN 2170A
567          BA   .1227
568          LS              74
569          UK     250   .0266     .15     100
570          RK    1920   .0250    .045            TRAP      20       5
```



```
LINE         ID.......1.......2.......3.......4.......5.......6.......7.......8.......9......10


571          KK  C2170A
572          KM        COMBINE HYDROGRAPHS OF R2170A & SUB 2170A
573          HC       2

574          KK  2160A3
575          KM        ROUTE C2170A ALONG SHOTCRETE-LINED CHANNEL TO OUTLET OF SUB 2160A
576          RS       1    FLOW      -1
577          RC    .019    .019    .019     400   .0125
578          RX       0       8      24      40      44      60      76      84
579          RY      10       8       4       0       0       4       8      10

580          KK  C2160A
581          KM        COMBINE HYDROGRAPHS OF (R)2160A1, SUB 2160A, (R)2160A2 & (R)2160A3
582          HC       4

583          KK  R2160C
584          KM        ROUTE C2160A TO OUTLET OF SUB 2160C
```

```
585          RS       1    FLOW      -1
586          RC    .055    .045    .055    2036   .0144
587          RX       0      35     135     150     225     240     340     375
588          RY      10       3       3       0       0       3       3      10

589          KK   2160C     SUB
590          KM        RUNOFF FROM SUB 2160C
591          BA   .0261
592          LS              74
593          UK     337   .0324     .15     100
594          RK    2036   .0144    .045            TRAP      75       5

595          KK  C2160C
596          KM        COMBINE HYDROGRAPHS OF SUB 2160C & R2160C
597          HC       2

598          KK   2220C     SUB
599          KM        RUNOFF FROM SUB 2220C
600          BA   .0268
601          LS              74
602          UK     200     .05     .15     100
603          RK    2235   .0434    .045            TRAP       7       3

604          KK  R2170C
605          KM        ROUTE SUB 2220C TO OUTLET OF SUB 2170C AT BELL RD
606          RS       3    FLOW      -1
607          RC    .055    .045    .055    3000   .0216
608          RX       0       1       2      52      67     117     118     119
609          RY      10      10      10       0       0      10      10      10

610          KK   2170C     SUB
611          KM        RUNOFF FROM SUB 2170C
612          BA   .0610
613          LS              74
614          UK     250   .0266     .15     100
615          RK    3000   .0216    .045            TRAP      15       5
```



```
LINE         ID.......1.......2.......3.......4.......5.......6.......7.......8.......9......10


616          KK  C2170C
617          KM        COMBINE HYDROGRAPHS OF SUB 2170C & R2170C
618          HC       2

619          KK  R2170D
620          KM        ROUTE C2170C TO OUTLET OF SUB 2170D
621          RS       2    FLOW      -1
622          RC    .055    .045    .055    2250   .0147
623          RX       0       6      36      45      60      69      99     105
624          RY      10       4       3       0       0       3       4      10

625          KK   2170D     SUB
626          KM        RUNOFF FROM SUB 2170D
627          BA   .0366
628          LS              74
629          UK     250   .0266     .15     100
630          RK    2250   .0147    .045            TRAP      15       5

631          KK  C2170D
```

```
632          KM        COMBINE HYDROGRAPHS OF SUB 2170D & R2170D
633          HC       2

634          KK  2160C2
635          KM        COMBINE HYDROGRAPHS OF C2170D & (C)2160C1
636          HC       2

637          KK  R2170E
638          KM        ROUTE (C)2160C1 TO OUTLET OF SUB 2170E
639          RS       1    FLOW      -1
640          RC    .055    .045    .055     362   .0124
641          RX       0      35     135     150     225     240     340     375
642          RY      10       3       3       0       0       3       3      10

643          KK   2170E     SUB
644          KM        RUNOFF FROM SUB-BASIN 2170E
645          BA   .0245
646          LS              74
647          UK     250   .0266     .15     100
648          RK    1976   .0152    .045            TRAP       7       5

649          KK  C2170E
650          KM        COMBINE HYDROGRAPHS OF R2170E & SUB 2170E
651          KM        THIS IS THE TOTAL FLOW IN THE REGIONAL CHANNEL AT THE OLD VERDE CANAL
652          HC       2

653          KK  R2170F
654          KM        ROUTE C2170E TO CAP DIKE 4
655          RS       1    FLOW      -1
656          RC    .055    .045    .055     850   .0179
657          RX       0      35     135     150     225     240     340     375
658          RY      10       3       3       0       0       3       3      10
```



```
LINE         ID.......1.......2.......3.......4.......5.......6.......7.......8.......9......10


659          KK   2170F     SUB
660          KM        RUNOFF FROM SUB-BASIN 2170F
661          BA   .0091
662          LS              74
663          UK     337   .0324     .15     100
664          RK     850   .0179    .045            TRAP      75       5

665          KK  C2170F
666          KM        COMBINE HYDROGRAPHS OF R2170F & SUB 2170F
667          KM        THIS IS TOTAL FLOW THAT EXITS THE REGIONAL CHANNEL AT CAP DIKE 4
668          HC       2
669          ZZ
```

SCHEMATIC DIAGRAM OF STREAM NETWORK

```
INPUT
 LINE     (V) ROUTING          (--->) DIVERSION OR PUMP FLOW

  NO.     (.) CONNECTOR        (<---) RETURN OF DIVERTED OR PUMPED FLOW

  31          39
               .
               .
  37           .          40
```

```
                .          .
                .          .
43            C40............
                V
                V
46            R41
                .
                .
52              .          41
                .          .
                .          .
58            C41............
                .
                .
61              .          42
                .          .
                .          .
67              .          .          43
                .          .          .
                .          .          .
73              .          .          .          44
                .          .          .          .
                .          .          .          .
79              .          .        C44............
                .          .          V
                .          .          V
82              .          .        R45
                .          .          .
                .          .          .
88              .          .          .          45
                .          .          .          .
                .          .          .          .
94              .          .        C45............
                .          .          .
                .          .          .
97              .          .          .          45A
                .          .          .          .
                .          .          .          .
103             .          .          .          .          46
                .          .          .          .          .
                .          .          .          .          .
110             .          .        C46........................
                .          .          V
                .          .          V
113             .          .        R47
                .          .          .
                .          .          .
119             .          .          .          47
                .          .          .          .
                .          .          .          .
125             .          .      C47.1............
                .          .          .
                .          .          .
128         C47.2........................
                V
                V
131           R50
                .
                .
138             .          50
```

```
                .           .
                .           .
145           C50............
                V
                V
149           R48
                .
                .
155             .         48
                .           .
                .           .
161           C48............
                V
                V
164         R2000
                .
                .
170             .       2000
                .           .
                .           .
178         C2000............
                V
                V
181         R2010
                .
                .
187             .       2010
                .           .
                .           .
193         C2010............
                V
                V
196        2015A1
                .
                .
202             .     2015A
                .           .
                .           .
209             .           .       2020
                .           .          V
                .           .          V
216             .           .     2015A2
                .           .          .
                .           .          .
222        2015A1........................
                .
                .
225             .     2040
                .           .
                .           .
232             .           .       2050
                .           .          .
                .           .          .
239             .     C2050............
                .           V
                .           V
242             .     R2060
                .           .
                .           .
248             .           .       2060
```

```
<x^a..'°
255          2060.1............
258     2060.2............
261          2070
272          .------->    2072
269          2071
             V
             V
275          2065.1
281          2065
287          C2065............
             V
             V
291          R2060
297     2060.3............
300          2030C
306          2015B
312          C2015B............
315     2060.4............
             V
             V
318     R2080A
324          2080A
330     C2080A............
             V
             V
333     R2090
339          2090
345     C2090............
             V
             V
```

```
348     2160A1
          .
          .
354       .     2160A
          .       .
          .       .
362       .       .         .<-------    2072
360       .       .       2072
          .       .         V
          .       .         V
363       .       .      R2130
          .       .         .
          .       .         .
369       .       .         .       2130
          .       .         .          .
          .       .         .          .
375       .       .      C2130............
          .       .         .
          .       .         .
383       .       .         .------->    2134
380       .       .       2133
          .       .         V
          .       .         V
386       .       .     R2080B
          .       .         .
          .       .         .
392       .       .         .      2080B
          .       .         .          .
          .       .         .          .
398       .       .     C2080B...........
          .       .         V
          .       .         V
401       .       .     2140B1
          .       .         .
          .       .         .
408       .       .         .      2140B
          .       .         .          .
          .       .         .          .
416       .       .         .          .          .<-------    2134
414       .       .         .          .     2134
          .       .         .          .          V
          .       .         .          .          V
417       .       .         .          .     R2135
          .       .         .          .          .
          .       .         .          .          .
423       .       .         .          .          .       2135
          .       .         .          .          .          .
          .       .         .          .          .          .
430       .       .         .          .     C2135............
          .       .         .          .          V
          .       .         .          .          V
434       .       .         .          .     2140B2
          .       .         .          .          .
          .       .         .          .          .
440       .       .     C2140B......................
          .       .         V
          .       .         V
443       .       .     2160B1
          .       .         .
          .       .         .
```

```
450   .     .     .     2150
      .     .     .       V
      .     .     .       V
458   .     .     .   2160B2
      .     .     .       .
      .     .     .       .
464   .     .     .       .     2140A
      .     .     .       .       .
      .     .     .       .       .
471   .     .     .       .       .     2160B
      .     .     .       .       .       .
      .     .     .       .       .       .
478   .     .  C2160B.....................................
      .     .     V
      .     .     V
481   .     .  2160A2
      .     .     .
      .     .     .
488   .     .     .     2170B
      .     .     .       .
      .     .     .       .
494   .     .     .       .      2180
      .     .     .       .        V
      .     .     .       .        V
501   .     .     .       .     R2190
      .     .     .       .       .
      .     .     .       .       .
507   .     .     .       .       .       2190
      .     .     .       .       .         .
      .     .     .       .       .         .
513   .     .     .       .     C2190............
      .     .     .       .       .
      .     .     .       .       .
516   .     .     .       .       .       2200
      .     .     .       .       .         .
      .     .     .       .       .         .
522   .     .     .       .       .         .     2210A
      .     .     .       .       .         .       V
      .     .     .       .       .         .       V
529   .     .     .       .       .         .   2210B1
      .     .     .       .       .         .       V
      .     .     .       .       .         .       V
536   .     .     .       .       .         .   2210B2
      .     .     .       .       .         .       .
      .     .     .       .       .         .       .
543   .     .     .       .       .         .       .       2210B
      .     .     .       .       .         .       .         .
      .     .     .       .       .         .       .         .
549   .     .     .       .       .         .   2210B1............
      .     .     .       .       .         .       .
      .     .     .       .       .         .       .
552   .     .     .       .       .     2210B2............
      .     .     .       .       .         .
      .     .     .       .       .         .
555   .     .     .   2210B3......................
      .     .     .       V
      .     .     .       V
559   .     .     .   R2170A
      .     .     .       .
      .     .     .       .
```

```
565          .          .          .          .      2170A
             .          .          .          .          .
             .          .          .          .          .
571          .          .          .     C2170A............
             .          .          .          V
             .          .          .          V
574          .          .          .     2160A3
             .          .          .          .
             .          .          .          .
580     C2160A...................................
             V
             V
583     R2160C
             .
             .
589          .      2160C
             .          .
             .          .
595     C2160C............
             .
             .
598          .      2220C
             .          V
             .          V
604          .     R2170C
             .          .
             .          .
610          .          .      2170C
             .          .          .
             .          .          .
616          .     C2170C............
             .          V
             .          V
619          .     R2170D
             .          .
             .          .
625          .          .      2170D
             .          .          .
             .          .          .
631          .     C2170D............
             .          .
             .          .
634     2160C2............
             V
             V
637     R2170E
             .
             .
643          .      2170E
             .          .
             .          .
649     C2170E............
             V
             V
653     R2170F
             .
             .
659          .      2170F
             .          .
             .          .
```

Not
SL

```
 665      C2170F............

(***) RUNOFF ALSO COMPUTED AT THIS LOCATION
****************************************                                    ****************************************
*                                      *                                    *                                      *
*   FLOOD HYDROGRAPH PACKAGE  (HEC-1)  *                                    *   U.S. ARMY CORPS OF ENGINEERS       *
*            SEPTEMBER 1990            *                                    *   HYDROLOGIC ENGINEERING CENTER      *
*             VERSION 4.0              *                                    *         609 SECOND STREET            *
*                                      *                                    *      DAVIS, CALIFORNIA 95616         *
*  RUN DATE  01/11/1995  TIME  13:36:29 *                                    *          (916) 756-1104              *
*                                      *                                    *                                      *
****************************************                                    ****************************************


                         DESERT GREENBELT STUDY BY GREINER, INC.
                         1992 MODELING REVISIONS BASED ON REATA PASS SENSITIVITY ANALYSIS
                         MODEL 1   FILE NAME: REAT1.DAT

                         REATA HYDROLOGY -PROP. CONDITIONS W/O FUTURE LAND USE
                         ORIGINAL MODEL RPBW1 BY ROBERT L. WARD
                         100-YEAR 6-HOUR STORM (AMC TYPE II)

                         SUB-BASINS 39 THRU 50 & 2000 THRU 2220C
                         WITH GREENBELT REGIONAL CHANNEL IN PLACE IN SUB 48, 50, 2000, 2010,
                         2015A, 2080A AND PARALLEL 96TH STREET TO CAP DIKE 4

                         PH CARD FOR SUB 30 TO SUB 50
                         CHANGE PH CARD FOR SUB 2000 AND DOWNSTREAM
                         USE JD CARDS
                         SPLIT FLOWS AT D.S. ENDS OF SUB 2070 & 2130
                         STATE LAND CHANNEL ALIGNMENT INCORPORATED
                         NEW TPP ALIGNMENT AS OF AUG 1, 1994

 20 IO          OUTPUT CONTROL VARIABLES
                      IPRNT           5  PRINT CONTROL
                      IPLOT           0  PLOT CONTROL
                      QSCAL          0.  HYDROGRAPH PLOT SCALE

    IT          HYDROGRAPH TIME DATA
                       NMIN           5  MINUTES IN COMPUTATION INTERVAL
                      IDATE      10CT94  STARTING DATE
                      ITIME        0000  STARTING TIME
                         NQ         300  NUMBER OF HYDROGRAPH ORDINATES
                     NDDATE      20CT94  ENDING DATE
                     NDTIME        0055  ENDING TIME
                      ICENT          19  CENTURY MARK

                 COMPUTATION INTERVAL     .08 HOURS
                      TOTAL TIME BASE   24.92 HOURS

          ENGLISH UNITS
               DRAINAGE AREA          SQUARE MILES
               PRECIPITATION DEPTH    INCHES
               LENGTH, ELEVATION      FEET
               FLOW                   CUBIC FEET PER SECOND
               STORAGE VOLUME         ACRE-FEET
               SURFACE AREA           ACRES
```

```
          TEMPERATURE          DEGREES FAHRENHEIT

21 JD        INDEX STORM NO. 1
                STRM        3.39  PRECIPITATION DEPTH
                TRDA         .00  TRANSPOSITION DRAINAGE AREA

22 PI          PRECIPITATION PATTERN
                 .01       .01       .01       .01       .01       .01       .01       .01       .01       .01
                 .01       .01       .01       .01       .01       .01       .01       .01       .01       .02
                 .02       .02       .02       .02       .02       .02       .02       .03       .03       .03
                 .08       .09       .10       .15       .20       .41       .72       .28       .17       .11
                 .09       .08       .03       .03       .03       .03       .02       .02       .02       .02
                 .02       .02       .02       .01       .01       .01       .01       .01       .01       .01
                 .01       .01       .01       .01       .01       .01       .01       .01       .01       .01
                 .01       .01

23 JD        INDEX STORM NO. 2
                STRM        3.39  PRECIPITATION DEPTH
                TRDA         .00  TRANSPOSITION DRAINAGE AREA

22 PI          PRECIPITATION PATTERN
                 .01       .01       .01       .01       .01       .01       .01       .01       .01       .01
                 .01       .01       .01       .01       .01       .01       .01       .01       .01       .02
                 .02       .02       .02       .02       .02       .02       .02       .03       .03       .03
                 .08       .09       .10       .15       .20       .41       .72       .28       .17       .11
                 .09       .08       .03       .03       .03       .03       .02       .02       .02       .02
                 .02       .02       .02       .01       .01       .01       .01       .01       .01       .01
                 .01       .01       .01       .01       .01       .01       .01       .01       .01       .01
                 .01       .01

24 JD        INDEX STORM NO. 3
                STRM        3.39  PRECIPITATION DEPTH
                TRDA         .01  TRANSPOSITION DRAINAGE AREA

22 PI          PRECIPITATION PATTERN
                 .01       .01       .01       .01       .01       .01       .01       .01       .01       .01
                 .01       .01       .01       .01       .01       .01       .01       .01       .01       .02
                 .02       .02       .02       .02       .02       .02       .02       .03       .03       .03
                 .08       .09       .10       .15       .20       .41       .72       .28       .17       .11
                 .09       .08       .03       .03       .03       .03       .02       .02       .02       .02
                 .02       .02       .02       .01       .01       .01       .01       .01       .01       .01
                 .01       .01       .01       .01       .01       .01       .01       .01       .01       .01
                 .01       .01

25 JD        INDEX STORM NO. 4
                STRM        3.39  PRECIPITATION DEPTH
                TRDA         .10  TRANSPOSITION DRAINAGE AREA

22 PI          PRECIPITATION PATTERN
                 .01       .01       .01       .01       .01       .01       .01       .01       .01       .01
                 .01       .01       .01       .01       .01       .01       .01       .01       .01       .02
                 .02       .02       .02       .02       .02       .02       .02       .03       .03       .03
                 .08       .09       .10       .15       .20       .41       .72       .28       .17       .11
                 .09       .08       .04       .03       .03       .03       .02       .02       .02       .02
                 .02       .02       .02       .01       .01       .01       .01       .01       .01       .01
                 .01       .01       .01       .01       .01       .01       .01       .01       .01       .01
                 .01       .01

26 JD        INDEX STORM NO. 5
                STRM        3.39  PRECIPITATION DEPTH
```

```
                TRDA        .50  TRANSPOSITION DRAINAGE AREA

22 PI         PRECIPITATION PATTERN
                .01       .01       .01       .01       .01       .01       .01       .01       .01       .01
                .01       .01       .01       .01       .01       .01       .01       .01       .01       .02
                .02       .02       .02       .02       .02       .02       .02       .03       .03       .03
                .08       .09       .10       .15       .20       .41       .72       .28       .17       .11
                .09       .08       .04       .03       .03       .03       .02       .02       .02       .02
                .02       .02       .02       .01       .01       .01       .01       .01       .01       .01
                .01       .01       .01       .01       .01       .01       .01       .01       .01       .01
                .01       .01

27 JD       INDEX STORM NO. 6
                STRM       3.38  PRECIPITATION DEPTH
                TRDA       1.00  TRANSPOSITION DRAINAGE AREA

22 PI         PRECIPITATION PATTERN
                .01       .01       .01       .01       .01       .01       .01       .01       .01       .01
                .01       .01       .01       .01       .01       .01       .01       .01       .01       .02
                .02       .02       .02       .02       .02       .02       .02       .03       .03       .03
                .08       .09       .10       .15       .19       .40       .71       .28       .17       .11
                .09       .08       .04       .03       .03       .03       .02       .02       .02       .02
                .02       .02       .02       .01       .01       .01       .01       .01       .01       .01
                .01       .01       .01       .01       .01       .01       .01       .01       .01       .01
                .01       .01

28 JD       INDEX STORM NO. 7
                STRM       3.35  PRECIPITATION DEPTH
                TRDA       5.00  TRANSPOSITION DRAINAGE AREA

22 PI         PRECIPITATION PATTERN
                .01       .01       .01       .01       .01       .01       .01       .01       .01       .01
                .01       .01       .01       .01       .01       .01       .01       .01       .01       .02
                .02       .02       .02       .02       .02       .02       .03       .03       .03       .03
                .08       .09       .10       .15       .19       .39       .70       .27       .16       .11
                .09       .08       .04       .03       .03       .03       .02       .02       .02       .02
                .02       .02       .02       .02       .02       .01       .01       .01       .01       .01
                .01       .01       .01       .01       .01       .01       .01       .01       .01       .01
                .01       .01

29 JD       INDEX STORM NO. 8
                STRM       3.21  PRECIPITATION DEPTH
                TRDA      25.00  TRANSPOSITION DRAINAGE AREA

22 PI         PRECIPITATION PATTERN
                .01       .01       .01       .01       .01       .01       .01       .01       .01       .01
                .01       .01       .01       .01       .01       .01       .01       .02       .02       .02
                .02       .02       .02       .02       .02       .03       .03       .03       .03       .04
                .08       .09       .10       .13       .17       .35       .61       .24       .15       .11
                .09       .08       .04       .03       .03       .03       .03       .02       .02       .02
                .02       .02       .02       .02       .02       .02       .01       .01       .01       .01
                .01       .01       .01       .01       .01       .01       .01       .01       .01       .01
                .01       .01

30 JD       INDEX STORM NO. 9
                STRM       3.09  PRECIPITATION DEPTH
                TRDA      50.00  TRANSPOSITION DRAINAGE AREA

22 PI         PRECIPITATION PATTERN
                .01       .01       .01       .01       .01       .01       .01       .01       .01       .01
```

| | | | | | | | | | |
|---|---|---|---|---|---|---|---|---|---|
| .01 | .01 | .01 | .01 | .01 | .01 | .02 | .02 | .02 | .02 |
| .02 | .02 | .02 | .02 | .03 | .03 | .03 | .03 | .04 | .04 |
| .08 | .09 | .10 | .11 | .15 | .30 | .54 | .21 | .13 | .11 |
| .10 | .09 | .04 | .04 | .03 | .03 | .03 | .03 | .02 | .02 |
| .02 | .02 | .02 | .02 | .02 | .02 | .01 | .01 | .01 | .01 |
| .01 | .01 | .01 | .01 | .01 | .01 | .01 | .01 | .01 | .01 |
| .01 | .01 | | | | | | | | |

*** FDKRUT - NEWTON RAPHSON FAILEDFIXED POINT ITERATION USED - ITERATION= 2

*** FDKRUT - NEWTON RAPHSON FAILEDFIXED POINT ITERATION USED - ITERATION= 2

*** FDKRUT - NEWTON RAPHSON FAILEDFIXED POINT ITERATION USED - ITERATION= 2

*** FDKRUT - NEWTON RAPHSON FAILEDFIXED POINT ITERATION USED - ITERATION= 2

*** FDKRUT - NEWTON RAPHSON FAILEDFIXED POINT ITERATION USED - ITERATION= 2

*** FDKRUT - NEWTON RAPHSON FAILEDFIXED POINT ITERATION USED - ITERATION= 2

*** FDKRUT - NEWTON RAPHSON FAILEDFIXED POINT ITERATION USED - ITERATION= 2

RUNOFF SUMMARY
FLOW IN CUBIC FEET PER SECOND
TIME IN HOURS, AREA IN SQUARE MILES

| OPERATION | STATION | PEAK FLOW | TIME OF PEAK | AVERAGE FLOW FOR MAXIMUM PERIOD 6-HOUR | 24-HOUR | 72-HOUR | BASIN AREA | MAXIMUM STAGE | TIME OF MAX STAGE |
|---|---|---|---|---|---|---|---|---|---|
| HYDROGRAPH AT + | 39 | 3423. | 3.25 | 380. | 96. | 92. | 1.88 | | |
| HYDROGRAPH AT + | 40 | 1315. | 3.17 | 110. | 27. | 26. | .58 | | |
| 2 COMBINED AT + | C40 | 4484. | 3.25 | 487. | 123. | 118. | 2.47 | | |

| | | | | | | | |
|---|---|---|---|---|---|---|---|
| | ROUTED TO | | | | | | |
| + | R41 | 3229. | 3.42 | 485. | 123. | 118. | 2.47 |
| | HYDROGRAPH AT | | | | | | |
| + | 41 | 890. | 3.33 | 102. | 26. | 25. | .83 |
| | 2 COMBINED AT | | | | | | |
| + | C41 | 3920. | 3.42 | 584. | 148. | 142. | 3.29 |
| | HYDROGRAPH AT | | | | | | |
| . | 42 | 942. | 3.25 | 88. | 22. | 21. | .58 |
| | HYDROGRAPH AT | | | | | | |
| | 43 | 2251. | 3.25 | 218. | 55. | 53. | 1.07 |
| | HYDROGRAPH AT | | | | | | |
| . | 44 | 1767. | 3.25 | 171. | 43. | 41. | .84 |
| | 2 COMBINED AT | | | | | | |
| . | C44 | 3967. | 3.25 | 386. | 97. | 93. | 1.91 |
| | ROUTED TO | | | | | | |
| | R45 | 3520. | 3.25 | 386. | 97. | 93. | 1.91 |
| | HYDROGRAPH AT | | | | | | |
| + | 45 | 470. | 3.17 | 35. | 9. | 9. | .20 |
| | 2 COMBINED AT | | | | | | |
| + | C45 | 3813. | 3.25 | 421. | 106. | 102. | 2.11 |
| | HYDROGRAPH AT | | | | | | |
| + | 45A | 461. | 3.17 | 37. | 9. | 9. | .17 |
| | HYDROGRAPH AT | | | | | | |
| + | 46 | 2766. | 3.17 | 198. | 50. | 48. | .93 |
| | 3 COMBINED AT | | | | | | |
| . | C46 | 5932. | 3.25 | 651. | 163. | 157. | 3.21 |
| | ROUTED TO | | | | | | |
| | R47 | 4975. | 3.33 | 650. | 163. | 157. | 3.21 |
| | HYDROGRAPH AT | | | | | | |
| | 47 | 394. | 3.42 | 53. | 13. | 13. | .38 |
| | 2 COMBINED AT | | | | | | |
| | C47.1 | 5271. | 3.33 | 701. | 176. | 170. | 3.58 |
| | 3 COMBINED AT | | | | | | |
| | C47.2 | 9312. | 3.33 | 1345. | 339. | 326. | 7.46 |
| | ROUTED TO | | | | | | |
| + | R50 | 9238. | 3.42 | 1344. | 339. | 326. | 7.46 |
| | HYDROGRAPH AT | | | | | | |
| + | 50 | 960. | 3.17 | 76. | 19. | 18. | .41 |
| | 2 COMBINED AT | | | | | | |
| + | C50 | 9600. | 3.33 | 1415. | 357. | 343. | 7.87 |

| | | | | | | | |
|---|---|---|---|---|---|---|---|
| | ROUTED TO | | | | | | |
| + | R48 | 9386. | 3.42 | 1414. | 357. | 343. | 7.87 |
| | HYDROGRAPH AT | | | | | | |
| + | 48 | 138. | 3.25 | 13. | 3. | 3. | .12 |
| | 2 COMBINED AT | | | | | | |
| + | C48 | 9439. | 3.42 | 1426. | 360. | 346. | 7.99 |
| | ROUTED TO | | | | | | |
| . | R2000 | 9367. | 3.50 | 1425. | 360. | 346. | 7.99 |
| | HYDROGRAPH AT | | | | | | |
| | 2000 | 1944. | 3.17 | 170. | 43. | 41. | .89 |
| | 2 COMBINED AT | | | | | | |
| | C2000 | 9987. | 3.50 | 1582. | 399. | 384. | 8.87 |
| | ROUTED TO | | | | | | |
| | R2010 | 10099. | 3.50 | 1581. | 399. | 384. | 8.87 |
| | HYDROGRAPH AT | | | | | | |
| | 2010 | 78. | 3.25 | 8. | 2. | 2. | .04 |
| | 2 COMBINED AT | | | | | | |
| . | C2010 | 10127. | 3.50 | 1588. | 401. | 386. | 8.91 |
| | ROUTED TO | | | | | | |
| + | 2015A1 | 9167. | 3.58 | 1584. | 401. | 386. | 8.91 |
| | HYDROGRAPH AT | | | | | | |
| + | 2015A | 498. | 3.42 | 63. | 16. | 15. | .36 |
| | HYDROGRAPH AT | | | | | | |
| + | 2020 | 296. | 3.08 | 22. | 6. | 5. | .11 |
| | ROUTED TO | | | | | | |
| . | 2015A2 | 271. | 3.17 | 22. | 6. | 5. | .11 |
| | 3 COMBINED AT | | | | | | |
| | 2015A1 | 9510. | 3.58 | 1661. | 420. | 405. | 9.38 |
| | HYDROGRAPH AT | | | | | | |
| | 2040 | 1827. | 3.25 | 164. | 41. | 40. | .93 |
| | HYDROGRAPH AT | | | | | | |
| | 2050 | 1630. | 3.25 | 145. | 36. | 35. | .86 |
| | 2 COMBINED AT | | | | | | |
| | C2050 | 3414. | 3.25 | 307. | 77. | 74. | 1.79 |
| | ROUTED TO | | | | | | |
| . | R2060 | 2689. | 3.33 | 307. | 77. | 74. | 1.79 |
| | HYDROGRAPH AT | | | | | | |
| + | 2060 | 183. | 3.33 | 22. | 6. | 5. | .22 |
| | 2 COMBINED AT | | | | | | |
| + | 2060.1 | 2858. | 3.33 | 328. | 83. | 79. | 2.00 |

| | | | | | | | |
|---|---|---|---|---|---|---|---|
| | 2 COMBINED AT | | | | | | |
| + | 2060.2 | 10916. | 3.58 | 1961. | 496. | 478. | 11.39 |
| | HYDROGRAPH AT | | | | | | |
| + | 2070 | 3734. | 3.17 | 281. | 70. | 68. | 1.46 |
| | DIVERSION TO | | | | | | |
| + | 2072 | 2489. | 3.17 | 187. | 47. | 45. | 1.46 |
| | HYDROGRAPH AT | | | | | | |
| . | 2071 | 1245. | 3.17 | 94. | 23. | 23. | 1.46 |
| | ROUTED TO | | | | | | |
| | 2065.1 | 986. | 3.33 | 94. | 23. | 23. | 1.46 |
| | HYDROGRAPH AT | | | | | | |
| | 2065 | 104. | 3.50 | 16. | 4. | 4. | .17 |
| | 2 COMBINED AT | | | | | | |
| | C2065 | 1066. | 3.33 | 110. | 28. | 27. | .66 |
| | ROUTED TO | | | | | | |
| | R2060 | 987. | 3.42 | 110. | 28. | 27. | .66 |
| | 2 COMBINED AT | | | | | | |
| . | 2060.3 | 11417. | 3.58 | 2060. | 521. | 502. | 12.04 |
| | HYDROGRAPH AT | | | | | | |
| + | 2030C | 38. | 3.33 | 5. | 1. | 1. | .07 |
| | HYDROGRAPH AT | | | | | | |
| + | 2015B | 13. | 3.67 | 3. | 1. | 1. | .05 |
| | 2 COMBINED AT | | | | | | |
| + | C2015B | 41. | 3.33 | 7. | 2. | 2. | .13 |
| | 2 COMBINED AT | | | | | | |
| . | 2060.4 | 11433. | 3.58 | 2065. | 522. | 503. | 12.17 |
| | ROUTED TO | | | | | | |
| | R2080A | 10646. | 3.67 | 2059. | 522. | 503. | 12.17 |
| | HYDROGRAPH AT | | | | | | |
| | 2080A | 385. | 3.25 | 39. | 10. | 9. | .42 |
| | 2 COMBINED AT | | | | | | |
| | C2080A | 10732. | 3.67 | 2091. | 530. | 511. | 12.59 |
| | ROUTED TO | | | | | | |
| | R2090 | 10585. | 3.67 | 2089. | 530. | 511. | 12.59 |
| | HYDROGRAPH AT | | | | | | |
| . | 2090 | 207. | 3.33 | 27. | 7. | 6. | .22 |
| | 2 COMBINED AT | | | | | | |
| + | C2090 | 10667. | 3.67 | 2112. | 536. | 516. | 12.81 |
| | ROUTED TO | | | | | | |
| + | 2160A1 | 9943. | 3.83 | 2104. | 536. | 516. | 12.81 |

| | | | | | | | |
|---|---|---|---|---|---|---|---|
| | HYDROGRAPH AT | | | | | | |
| + | 2160A | 461. | 3.33 | 56. | 14. | 14. | .47 |
| | HYDROGRAPH AT | | | | | | |
| + | 2072 | 2489. | 3.17 | 187. | 47. | 45. | 1.46 |
| | ROUTED TO | | | | | | |
| + | R2130 | 1894. | 3.25 | 187. | 47. | 45. | 1.46 |
| | HYDROGRAPH AT | | | | | | |
| + | 2130 | 540. | 3.25 | 53. | 13. | 13. | .25 |
| | 2 COMBINED AT | | | | | | |
| + | C2130 | 2438. | 3.25 | 240. | 60. | 58. | 1.23 |
| | DIVERSION TO | | | | | | |
| + | 2134 | 1856. | 3.25 | 209. | 52. | 50. | 1.23 |
| | HYDROGRAPH AT | | | | | | |
| + | 2133 | 581. | 3.25 | 31. | 8. | 8. | 1.23 |
| | ROUTED TO | | | | | | |
| + | R2080B | 399. | 3.42 | 31. | 8. | 8. | 1.23 |
| | HYDROGRAPH AT | | | | | | |
| + | 2080B | 133. | 3.33 | 14. | 4. | 3. | .12 |
| | 2 COMBINED AT | | | | | | |
| + | C2080B | 515. | 3.33 | 46. | 12. | 11. | .37 |
| | ROUTED TO | | | | | | |
| + | 2140B1 | 522. | 3.42 | 46. | 12. | 11. | .37 |
| | HYDROGRAPH AT | | | | | | |
| + | 2140B | 130. | 3.17 | 11. | 3. | 3. | .09 |
| | HYDROGRAPH AT | | | | | | |
| + | 2134 | 1856. | 3.25 | 209. | 52. | 50. | 1.23 |
| | ROUTED TO | | | | | | |
| + | R2135 | 1769. | 3.33 | 209. | 52. | 50. | 1.23 |
| | HYDROGRAPH AT | | | | | | |
| + | 2135 | 119. | 3.25 | 12. | 3. | 3. | .08 |
| | 2 COMBINED AT | | | | | | |
| + | C2135 | 1865. | 3.33 | 221. | 55. | 53. | 1.06 |
| | ROUTED TO | | | | | | |
| + | 2140B2 | 1886. | 3.33 | 221. | 55. | 53. | 1.06 |
| | 3 COMBINED AT | | | | | | |
| + | C2140B | 2374. | 3.33 | 277. | 69. | 67. | 1.52 |
| | ROUTED TO | | | | | | |
| + | 2160B1 | 2145. | 3.42 | 276. | 69. | 67. | 1.52 |
| | HYDROGRAPH AT | | | | | | |
| + | 2150 | 1213. | 3.25 | 114. | 28. | 27. | .69 |

| | | | | | | | |
|---|---|---|---|---|---|---|---|
| | ROUTED TO | | | | | | |
| + | 2160B2 | 1123. | 3.33 | 114. | 28. | 27. | .69 |
| | HYDROGRAPH AT | | | | | | |
| + | 2140A | 284. | 3.25 | 28. | 7. | 7. | .23 |
| | HYDROGRAPH AT | | | | | | |
| + | 2160B | 157. | 3.33 | 18. | 5. | 4. | .14 |
| | 4 COMBINED AT | | | | | | |
| + | C2160B | 3240. | 3.42 | 432. | 109. | 105. | 2.58 |
| | ROUTED TO | | | | | | |
| . | 2160A2 | 3137. | 3.50 | 432. | 109. | 105. | 2.58 |
| | HYDROGRAPH AT | | | | | | |
| . | 2170B | 136. | 3.33 | 16. | 4. | 4. | .13 |
| | HYDROGRAPH AT | | | | | | |
| . | 2180 | 2299. | 3.25 | 210. | 53. | 51. | 1.00 |
| | ROUTED TO | | | | | | |
| . | R2190 | 1910. | 3.42 | 210. | 53. | 51. | 1.00 |
| | HYDROGRAPH AT | | | | | | |
| . | 2190 | 206. | 3.25 | 19. | 5. | 5. | .12 |
| | 2 COMBINED AT | | | | | | |
| + | C2190 | 2038. | 3.33 | 228. | 57. | 55. | 1.13 |
| | HYDROGRAPH AT | | | | | | |
| + | 2200 | 463. | 3.25 | 43. | 11. | 10. | .25 |
| | HYDROGRAPH AT | | | | | | |
| + | 2210A | 3466. | 3.17 | 279. | 70. | 67. | 1.58 |
| | ROUTED TO | | | | | | |
| + | 2210B1 | 2633. | 3.25 | 279. | 70. | 67. | 1.58 |
| | ROUTED TO | | | | | | |
| . | 2210B2 | 2613. | 3.33 | 280. | 70. | 67. | 1.58 |
| | HYDROGRAPH AT | | | | | | |
| . | 2210B | 208. | 3.33 | 23. | 6. | 6. | .19 |
| | 2 COMBINED AT | | | | | | |
| . | 2210B1 | 2812. | 3.33 | 302. | 76. | 73. | 1.78 |
| | 2 COMBINED AT | | | | | | |
| . | 2210B2 | 3142. | 3.33 | 344. | 86. | 83. | 2.03 |
| | 3 COMBINED AT | | | | | | |
| . | 2210B3 | 5232. | 3.33 | 584. | 146. | 141. | 3.29 |
| | ROUTED TO | | | | | | |
| + | R2170A | 5073. | 3.33 | 584. | 146. | 141. | 3.29 |
| | HYDROGRAPH AT | | | | | | |
| + | 2170A | 143. | 3.25 | 15. | 4. | 4. | .12 |

| | | | | | | | |
|---|---|---|---|---|---|---|---|
| | 2 COMBINED AT | | | | | | |
| + | | C2170A | 5187. | 3.33 | 598. | 150. | 145. | 3.41 |
| | ROUTED TO | | | | | | |
| + | | 2160A3 | 5168. | 3.33 | 598. | 150. | 145. | 3.41 |
| | 4 COMBINED AT | | | | | | |
| + | | C2160A | 12987. | 3.75 | 3079. | 782. | 753. | 19.27 |
| | ROUTED TO | | | | | | |
| . | | R2160C | 12891. | 3.83 | 3076. | 782. | 753. | 19.27 |
| | HYDROGRAPH AT | | | | | | |
| | | 2160C | 21. | 3.42 | 3. | 1. | 1. | .03 |
| | 2 COMBINED AT | | | | | | |
| | | C2160C | 12899. | 3.83 | 3078. | 783. | 754. | 19.30 |
| | HYDROGRAPH AT | | | | | | |
| | | 2220C | 34. | 3.25 | 3. | 1. | 1. | .03 |
| | ROUTED TO | | | | | | |
| | | R2170C | 22. | 3.50 | 3. | 1. | 1. | .03 |
| | HYDROGRAPH AT | | | | | | |
| + | | 2170C | 63. | 3.33 | 7. | 2. | 2. | .06 |
| | 2 COMBINED AT | | | | | | |
| + | | C2170C | 77. | 3.33 | 11. | 3. | 3. | .09 |
| | ROUTED TO | | | | | | |
| + | | R2170D | 67. | 3.50 | 11. | 3. | 3. | .09 |
| | HYDROGRAPH AT | | | | | | |
| + | | 2170D | 38. | 3.33 | 4. | 1. | 1. | .04 |
| | 2 COMBINED AT | | | | | | |
| . | | C2170D | 92. | 3.50 | 15. | 4. | 4. | .12 |
| | 2 COMBINED AT | | | | | | |
| | | 2160C2 | 12942. | 3.83 | 3091. | 786. | 757. | 19.42 |
| | ROUTED TO | | | | | | |
| | | R2170E | 12954. | 3.83 | 3091. | 786. | 757. | 19.42 |
| | HYDROGRAPH AT | | | | | | |
| | | 2170E | 26. | 3.33 | 3. | 1. | 1. | .02 |
| | 2 COMBINED AT | | | | | | |
| | | C2170E | 12959. | 3.83 | 3093. | 787. | 758. | 19.45 |
| | ROUTED TO | | | | | | |
| + | | R2170F | 12958. | 3.83 | 3092. | 787. | 758. | 19.45 |
| | HYDROGRAPH AT | | | | | | |
| + | | 2170F | 9. | 3.33 | 1. | 0. | 0. | .01 |
| | 2 COMBINED AT | | | | | | |
| + | | C2170F | 12960. | 3.83 | 3093. | 787. | 758. | 19.46 |

# HEC-1 MODEL NO. 2

# FILE: REAT2

```
****************************************
*                                      *
*   FLOOD HYDROGRAPH PACKAGE  (HEC-1)  *
*            SEPTEMBER 1990            *
*             VERSION 4.0              *
*                                      *
  RUN DATE  01/11/1995  TIME  14:00:21 *
*                                      *
****************************************
```

```
****************************************
*                                      *
*    U.S. ARMY CORPS OF ENGINEERS      *
*    HYDROLOGIC ENGINEERING CENTER     *
*          609 SECOND STREET           *
*       DAVIS, CALIFORNIA 95616        *
*           (916) 756-1104             *
*                                      *
****************************************
```

```
X     X  XXXXXXX   XXXXX          X
X     X  X        X     X        XX
X     X  X        X              X
XXXXXXX  XXXX     X        XXXXX  X
X     X  X        X              X
X     X  X        X     X        X
X     X  XXXXXXX   XXXXX         XXX
```

THIS PROGRAM REPLACES ALL PREVIOUS VERSIONS OF HEC-1 KNOWN AS HEC1 (JAN 73), HEC1GS, HEC1DB, AND HEC1KW.

THE DEFINITIONS OF VARIABLES -RTIMP- AND -RTIOR- HAVE CHANGED FROM THOSE USED WITH THE 1973-STYLE INPUT STRUCTURE.
THE DEFINITION OF -AMSKK- ON RM-CARD WAS CHANGED WITH REVISIONS DATED 28 SEP 81. THIS IS THE FORTRAN77 VERSION
NEW OPTIONS: DAMBREAK OUTFLOW SUBMERGENCE , SINGLE EVENT DAMAGE CALCULATION, DSS:WRITE STAGE FREQUENCY,
DSS:READ TIME SERIES AT DESIRED CALCULATION INTERVAL  LOSS RATE:GREEN AND AMPT INFILTRATION
KINEMATIC WAVE: NEW FINITE DIFFERENCE ALGORITHM



```
LINE          ID.......1.......2.......3.......4.......5.......6.......7.......8.......9......10

  1           ID        DESERT GREENBELT STUDY BY GREINER, INC.
  2           ID        1992 MODELING REVISIONS BASED ON REATA PASS SENSITIVITY ANALYSIS
  3           ID        MODEL 2   FILE NAME: REAT2.DAT
  4           ID
  5           ID        REATA HYDROLOGY -PROP. CONDITIONS W/ FUTURE LAND USE
  6           ID        ORIGINAL MODEL RPBW1 BY ROBERT L. WARD
  7           ID        100-YEAR 6-HOUR STORM (AMC TYPE II)
  8           ID
  9           ID        SUB-BASINS 39 THRU 50 & 2000 THRU 2220C
 10           ID        WITH GREENBELT REGIONAL CHANNEL IN PLACE IN SUB 48, 50, 2000, 2010,
 11           ID        2015A, 2080A AND PARALLEL 96TH STREET TO CAP DIKE 4
 12           ID
 13           ID        PH CARD FOR SUB 30 TO SUB 50
 14           ID        CHANGE PH CARD FOR SUB 2000 AND DOWNSTREAM
 15           ID        USE JD CARDS
 16           ID        SPLIT FLOWS AT D.S. ENDS OF SUB 2070 & 2130
 17           ID        STATE LAND CHANNEL ALIGNMENT INCORPORATED
 18           ID        NEW TPP ALIGNMENT AS OF AUG 1, 1994
              *DIAGRAM
 19           IT       5   OCT94       0     300
 20           IO       5       0
 21           JD           .0001
```

```
 22          PH                    .72    1.41    2.47    2.79    2.99    3.39
 23          JD            .001
 24          JD             .01
 25          JD              .1
 26          JD              .5
 27          JD               1
 28          JD               5
 29          JD              25
 30          JD              50

 31          KK      39     SUB
 32          KM        RUNOFF FROM SUB-BASIN 39
 33          BA  1.8807
 34          LS              85    23.4
 35          UK     330   .0433     .20     100
 36          RK   11240   .0253    .045            TRAP      30       3

 37          KK      40     SUB
 38          KM        RUNOFF FROM SUB-BASIN 40
 39          BA   .5844
 40          LS              83     9.9
 41          UK     160   .0627     .20     100
 42          RK    7000   .0350    .045            TRAP      20       3

 43          KK     C40
 44          KM        COMBINE HYDROGRAPHS SUB 39 & SUB 40
 45          HC       2
```



```
LINE         ID.......1.......2.......3.......4.......5.......6.......7.......8.......9......10


 46          KK     R41
 47          KM        ROUTE C40 TO D.S. END OF SUB 41
 48          RS       1    FLOW      -1
 49          RC    .055    .040    .055    9400   .0282
 50          RX       0       1     101     107     157     163     263     264
 51          RY      10       8       3       0       0       3       8      10

 52          KK      41     SUB
 53          KM        RUNOFF FROM SUB-BASIN 41
 54          BA   .8270
 55          LS              74    10.1
 56          UK     280   .2386     .20     100
 57          RK    9400   .0282    .045            TRAP      50       3

 58          KK     C41
 59          KM        COMBINE HYDROGRAPHS R41 & SUB 41
 60          HC       2

 61          KK      42     SUB
 62          KM        RUNOFF FROM SUB-BASIN 42
 63          BA   .5844
 64          LS              78    23.3
 65          UK     280   .2386     .20     100
 66          RK    8750   .0573    .045            TRAP      20       3

 67          KK      43     SUB
 68          KM        RUNOFF FROM SUB-BASIN 43
 69          BA  1.0665
```

```
 70          LS              85    10.5
 71          UK     260   .0515     .20     100
 72          RK    7400   .0255    .045            TRAP      25       3

 73          KK      44     SUB
 74          KM        RUNOFF FROM SUB-BASIN 44
 75          BA   .8389
 76          LS              85     8.1
 77          UK     260   .0515     .20     100
 78          RK    9840   .0622    .045            TRAP      25       3

 79          KK     C44
 80          KM        COMBINE HYDROGRAPHS SUB 43 & SUB 44
 81          HC       2

 82          KK     R45
 83          KM        ROUTE C44 TO D.S. END OF SUB 45
 84          RS       1    FLOW      -1
 85          RC    .055    .040    .055    3600   .0366
 86          RX       0       1     101     107     137     143     243     244
 87          RY      10       8       3       0       0       3       8      10
1                                          HEC-1 INPUT                                                    PAGE  3

LINE         ID.......1.......2.......3.......4.......5.......6.......7.......8.......9......10


 88          KK      45     SUB
 89          KM        RUNOFF FROM SUB-BASIN 45
 90          BA   .2037
 91          LS              81    14.5
 92          UK     125   .1166     .20     100
 93          RK    3600   .0366    .045            TRAP      30       3

 94          KK     C45
 95          KM        COMBINE HYDROGRAPHS R45 & SUB 45
 96          HC       2

 97          KK     45A     SUB
 98          KM        RUNOFF FROM SUB-BASIN 45A
 99          BA   .1720
100          LS              86     6.9
101          UK     275   .2200     .20     100
102          RK    5400   .0411    .045            TRAP      15       3

103          KK      46     SUB
104          KM        RUNOFF FROM SUB-BASIN 46
105          BA   .9268
106          LS              86     3.7
107          UK     265   .4958     .20     100
108          RK    3300   .2271    .045    .111    TRAP      10       3
109          RK    7100   .0535    .045            TRAP      25       3

110          KK     C46
111          KM        COMBINE HYDROGRAPHS C45, SUB 45A, & SUB 46
112          HC       3

113          KK     R47
114          KM        ROUTE C46 TO D.S. END OF SUB 47
115          RS       1    FLOW      -1
116          RC    .055    .040    .055    7600   .0268
```

```
117          RX      0       1     101     109     159     167     267     268
118          RY     10       9       4       0       0       4       9      10

119          KK     47     SUB
120          KM        RUNOFF FROM SUB-BASIN 47
121          BA   .3757
122          LS              77     8.6
123          UK    375   .1000     .20     100
124          RK   9300   .0357    .045            TRAP      50       3

125          KK   C47.1
126          KM        COMBINE HYDROGRAPHS SUB 47 & R47
127          HC       2

128          KK   C47.2
129          KM        COMBINE HYDROGRAPHS C47.1, C41 & SUB 42
130          HC       3
```



```
LINE         ID.......1.......2.......3.......4.......5.......6.......7.......8.......9......10


131          KK     R50
132          KM        ROUTE C47.2 TO D.S. END OF SUB 50 (BEGINNING OF REATA DESERT
133          KM        GREENBELT CHANNEL)
134          RS       1    FLOW      -1
135          RC    .055    .040    .055    1000   .0200
136          RX       0      35     135     150     225     240     340     375
137          RY      10       3       3       0       0       3       3      10

138          KK     50     SUB
139          KM        RUNOFF FROM SUB-BASIN 50
140          BA   .4052
141          LS              83     3.3
142          UK    300   .3555     .20     100
143          RK    730   .1506    .045    .036    TRAP      10       3
144          RK   6400   .0453    .045            TRAP      25       3

145          KK     C50
146          KM        COMBINE HYDROGRAPHS OF SUB 50 AND R50
147          KM        THIS IS THE TOTAL DISCHARGE TO THE REATA PASS ALLUVIAL FAN APEX
148          HC       2

149          KK     R48
150          KM        ROUTE C50 TO OUTLET OF SUB 48
151          RS       1    FLOW      -1
152          RC    .055    .040    .055    2900   .0345
153          RX       0      35     135     150     225     240     340     375
154          RY      10       3       3       0       0       3       3      10

155          KK     48     SUB
156          KM        RUNOFF FROM SUB-BASIN 48
157          BA   .1203
158          LS              72     6.8
159          UK    175   .1400     .15     100
160          RK   2900   .0345    .045            TRAP      50       3

161          KK     C48
162          KM        COMBINE HYDROGRAPHS R48 & SUB 48
163          HC       2
```

```
164          KK   R2000
165          KM        ROUTE C48 TO D.S. END OF SUB 2000
166          RS       1    FLOW      -1
167          RC    .055    .045    .055    1300   .0308
168          RX       0      35     135     150     225     240     340     375
169          RY      10       3       3       0       0       3       3      10

170          KK    2000     SUB
171          KM        RUNOFF FROM SUB 2000
172          BA   .8853
173          PH                     .72    1.41    2.47    2.77    2.97    3.35
174          LS              84     2.9
175          UK     400   .2750     .25     100
176          RK    2625   .0785    .045    .072    TRAP      10       3
177          RK    3600   .0222    .045            TRAP      25       3
```



```
LINE         ID.......1.......2.......3.......4.......5.......6.......7.......8.......9......10


178          KK   C2000
179          KM        COMBINE HYDROGRAPHS OF R2000 & SUB 2000
180          HC       2

181          KK   R2010
182          KM        ROUTE C2000 TO D.S. END OF SUB 2010
183          RS       1    FLOW      -1
184          RC    .055    .045    .055    1300   .0308
185          RX       0      35     135     150     225     240     340     375
186          RY      10       3       3       0       0       3       3      10

187          KK    2010     SUB
188          KM        RUNOFF FROM SUB-BASIN 2010
189          BA   .0413
190          LS              83     3.7
191          UK     800   .6425    0.30     100
192          RK    1300   .0308   0.045            TRAP      50       3

193          KK   C2010
194          KM        COMBINE HYDROGRAPHS R2010 & SUB 2010
195          HC       2

196          KK  2015A1
197          KM        ROUTE C2010 TO D.S. END OF SUB 2015A
198          RS       1    FLOW      -1
199          RC    .055    .045    .055    4800   .0292
200          RX       0      35     135     150     225     240     340     375
201          RY      10       3       3       0       0       3       3      10

202          KK   2015A     SUB
203          KM        RUNOFF FROM SUB-BASIN 2015A
204          BA   .3619
205          LS              82     7.7
206          UK     500   .2800     .25     100
207          RK    2400   .1358    .045    .061    TRAP      10       3
208          RK    5300   .0200    .045            TRAP     150       5

209          KK    2020     SUB
210          KM        RUNOFF FROM SUB-BASIN 2020
```

```
211          BA   .1090
212          LS              85     4.1
213          UK     205   .6969    0.30     100
214          RK     900   .3889    .045    .011    TRAP      10       3
215          RK    2800  0.1428    .045            TRAP      20       3

216          KK  2015A2
217          KM        ROUTE SUB 2020 TO D.S. END OF SUB 2015A
218          RS       1    FLOW      -1
219          RC    .055    .045    .055    1600    .025
220          RX       0      .1       2      32      67      97    98.9      99
221          RY      15      10      10       0       0      10      10      15
                                          HEC-1 INPUT                                                    PAGE  6

LINE         ID.......1.......2.......3.......4.......5.......6.......7.......8.......9......10


222          KK  2015A1
223          KM        COMBINE HYDROGRAPHS OF (R)2015A1, SUB 2015A & (R)2015A2
224          HC       3

225          KK    2040     SUB
226          KM        RUNOFF FROM SUB-BASIN 2040
227          BA   .9290
228          LS              82     8.3
229          UK     463   .4072    0.25     100
230          RK    2700   .1878    .045    .056    TRAP      10       3
231          RK    6800   .0485    .045            TRAP      25       3

232          KK    2050     SUB
233          KM        RUNOFF FROM SUB-BASIN 2050
234          BA   .8580
235          LS              81     9.8
236          UK     530   .5726    0.25     100
237          RK    3400   .2067    .045    .086    TRAP      10       3
238          RK    6200   .0693    .045            TRAP      25       5

239          KK   C2050
240          KM        COMBINE HYDROGRAPHS OF SUB 2040 & SUB 2050
241          HC       2

242          KK   R2060
243          KM        ROUTE C2050 TO OUTLET OF SUB 2060
244          RS       1    FLOW      -1
245          RC    .055    .045    .055    3900   .0310
246          RX       0       3      53      57      87      91     141     144
247          RY      10       4       2       0       0       2       4      10

248          KK    2060     SUB
249          KM        RUNOFF FROM SUB-BASIN 2060
250          BA   .2169
251          LS              71    17.8
252          UK     217   .1667     .20     100
253          RK    2275   .0929    .045    .031    TRAP      10       5
254          RK    3900   .0310    .055            TRAP      30      15

255          KK  2060.1
256          KM        COMBINE HYDROGRAPHS OF R2060 & SUB 2060
257          HC       2
```

```
258          KK  2060.2
259          KM        COMBINE HYDROGRAPHS OF C2060.1 & (C)2015A1
260          HC       2

261          KK    2070     SUB
262          KM        RUNOFF FROM SUB-BASIN 2070
263          BA  1.4649
264          LS              84     4.1
265          UK     400   .5174     .30     100
266          RK    1750   .2962    .045    .048    TRAP       5       3
267          RK    3500   .1236    .045    .483    TRAP      10       3
```



```
LINE         ID.......1.......2.......3.......4.......5.......6.......7.......8.......9......10

268          RK    3400   .0882    .045            TRAP      30      10

269          KK    2071     DIV
270          KM        DIVERT FLOW FROM SUB 2070 TO SUB 2065 (DIV 2071)
271          KM        DIVERT FLOW FROM SUB 2070 TO SUB 2130 (RET 2072)
272          DT    2072
273          DI       0    6000
274          DQ       0    4000

275          KK  2065.1
276          KM        ROUTE DIV 2071 TO D.S. END OF SUB 2065
277          RS       3    FLOW      -1
278          RC    .055    .045    .055    6500   .0508
279          RX       0       3      53      57      87      91     141     144
280          RY      10       4       2       0       0       2       4      10

281          KK    2065     SUB
282          KM        RUNOFF FROM SUB-BASIN 2065
283          BA   .1720
284          LS              69    31.5
285          UK     200    .050      .2     100
286          RK    6500   .0508    .055            TRAP      30      15

287          KK   C2065
288          KM        COMBINE HYDROGRAPHS OF SUB 2065 & (R)2065.1
289          KM        DRAINAGE AREA ADJUSTMENT MADE TO REFLECT FLOW DIVERSION OF U.S. AREAS
290          HC       2   .6554

291          KK   R2060
292          KM        ROUTE C2065 TO D.S. END OF SUB 2060
293          RS       1    FLOW      -1
294          RC    .055    .045    .055    1600   .0267
295          RX       0       3      53      57      87      91     141     144
296          RY      10       4       2       0       0       2       4      10

297          KK  2060.3
298          KM        COMBINE R2060 & (C)2060.2
299          HC       2

300          KK   2030C     SUB
301          KM        RUNOFF FROM SUB-BASIN 2030C
302          BA   .0723
303          LS              63    27.3
304          UK     155   .0614     .15     100
305          RK    3000   .0300    .045            TRAP       5       5
```

```
306          KK   2015B     SUB
307          KM        RUNOFF FROM SUB-BASIN 2015B
308          BA   .0545
309          LS              60    15.4
310          UK     500   .2800     .25     100
311          RK    4000   .0288    .045            TRAP      25       5
```



```
LINE         ID.......1.......2.......3.......4.......5.......6.......7.......8.......9......10

312          KK  C2015B
313          KM        COMBINE HYDROGRAPHS OF SUB 2015B & SUB 2030C
314          HC       2

315          KK  2060.4
316          KM        COMBINE HYDROGRAPHS OF C2015B & (C)2060.3
317          HC       2

318          KK  R2080A
319          KM        ROUTE (C)2060.4 TO OUTLET OF SUB 2080A
320          RS       1    FLOW      -1
321          RC    .055    .045    .055    5500   .0291
322          RX       0      35     135     150     225     240     340     375
323          RY      10       3       3       0       0       3       3      10

324          KK   2080A     SUB
325          KM        RUNOFF FROM SUB 2080A
326          BA   .4186
327          LS              69    24.1
328          UK     155   .0614     .15     100
329          RK    5500   .0291    .045            TRAP       7       5

330          KK  C2080A
331          KM        COMBINE HYDROGRAPHS OF R2080A & SUB 2080A
332          HC       2

333          KK   R2090
334          KM        ROUTE C2080A TO D.S. OF SUB 2090 (UNION HILL DR.)
335          RS       1    FLOW      -1
336          RC    .055    .045    .055    1400   .0214
337          RX       0      35     135     150     225     240     340     375
338          RY      10       3       3       0       0       3       3      10

339          KK    2090     SUB
340          KM        RUNOFF FROM SUB 2090
341          BA   .2220
342          LS              74    32.1
343          UK     337   .0324     .15     100
344          RK    5000   .0280    .045            TRAP      25       3

345          KK   C2090
346          KM        COMBINE HYDROGRAPHS OF R2090 & SUB 2090
347          HC       2

348          KK  2160A1
349          KM        ROUTE C2090 TO D.S. END OF SUB 2160A THRU DESERT GREENBELT
350          RS       1    FLOW      -1
351          RC    .055    .045    .055    5300   .0208
```

```
352          RX      0      35     135     150     225     240     340     375
353          RY     10       3       3       0       0       3       3      10
```



```
LINE         ID.......1.......2.......3.......4.......5.......6.......7.......8.......9......10

354          KK   2160A     SUB
355          KM        RUNOFF FROM SUB-BASIN 2160A
356          BA   .4713
357          LS              74    32.1
358          UK     337   .0324     .15     100
359          RK    5300   .0208    .045            TRAP      25       3

360          KK    2072     RET
361          KM        RETRIEVE DIVERTED FLOW FROM DIV 2071
362          DR    2072

363          KK   R2130
364          KM        ROUTE RET 2072 TO OUTLET OF SUB 2130
365          RS       1    FLOW      -1
366          RC    .055    .045    .055    3600   .0555
367          RX       0       5     105     107     137     139     239     244
368          RY      10       5       1       0       0       1       5      10

369          KK    2130     SUB
370          KM        RUNOFF FROM SUB-BASIN 2130
371          BA   .2510
372          LS              86     7.1
373          UK     267   .3126     .20     100
374          RK    9240   .0941    .045            TRAP      30      20

375          KK   C2130
376          KM        COMBINE HYDROGRAPHS OF R2130 & SUB 2130
377          KM        DRAINAGE AREA MADE TO REFLECT FLOW DIVERSION OF 67% OF DRAINAGE
378          KM        AREA FROM SUB 2070
379          HC       2  1.2325

380          KK    2133     DIV
381          KM        DIVERT FLOW FROM SUB 2130 TO SUB 2080B (DIV 2133)
382          KM        DIVERT FLOW FROM SUB 2130 TO SUB 2135 (RET 2134)
383          DT    2134
384          DI       0     500    1000    6000
385          DQ       0     500     850    4350

386          KK  R2080B
387          KM        ROUTE NON-DIVERTED FLOW FROM DIV 2133 TO DS. END OF SUB 2080B
388          RS       1    FLOW      -1
389          RC    .055    .045    .055    5000   .0440
390          RX       0       3      53      57      87      91     141     144
391          RY      10       4       2       0       0       2       4      10

392          KK   2080B     SUB
393          KM        RUNOFF FROM SUB-BASIN 2080B
394          BA   .1190
395          LS              74    32.1
396          UK     175   .0571     .15     100
397          RK    5000   .0440    .045            TRAP      30      15
```

```
LINE          ID.......1.......2.......3.......4.......5.......6.......7.......8.......9......10

 398          KK  C2080B
 399          KM        COMBINE HYDROGRAPHS OF R2080B & SUB 2080B
 400          HC       2   .3655

 401          KK  2140B1
 402          KM        ROUTE C2080B ALONG THOMPSON PEAK PARKWAY THROUGH
 403          KM        SHOTCRETE-LINED COLLECTOR TO D.S. END OF SUB 2140B
 404          RS       1    FLOW      -1
 405          RC    .019    .019    .019    1900   .0158
 406          RX       0       8      24      40      44      60      76      84
 407          RY      10       8       4       0       0       4       8      10

 408          KK   2140B     SUB
 409          KM        RUNOFF FROM SUB-BASIN 2140B
 410          BA   .0925
 411          LS              74    32.1
 412          UK     200   .0500     .15     100
 413          RK    1820   .0461    .045            TRAP      20      10

 414          KK    2134     RET
 415          KM        RETRIEVE DIVERTED FLOW FROM DIV 2133
 416          DR    2134

 417          KK   R2135
 418          KM        ROUTE RET 2134 TO OUTLET OF SUB 2135
 419          RS       1    FLOW      -1
 420          RC    .055    .045    .055    2700   .0444
 421          RX       0     0.1       2      22      42      62    63.9      64
 422          RY      15      10      10       0       0      10      10      15

 423          KK    2135     SUB
 424          KM        RUNOFF FROM SUB-BASIN 2135
 425          BA   .0750
 426          LS              86    19.3              74    19.3
 427          UK     800   .4000     .30      40
 428          UK     200   .0500     .15      60
 429          RK    2700   .0444    .045            TRAP      20       2

 430          KK   C2135
 431          KM        COMBINE HYDROGRAPHS OF R2135 & SUB 2135
 432          KM        DRAINAGE AREA ADJUSTMENT MADE TO REFLECT DIVERSION OF U.S. AREAS
 433          HC       2  1.0610

 434          KK  2140B2
 435          KM        ROUTE C2135 TO D.S. END OF SUB 2140B
 436          RS       1    FLOW      -1
 437          RC    .055    .045    .055    1600   .0500
 438          RX       0      .1       2      22      42      62    63.9      64
 439          RY      15      10      10       0       0      10      10      15
```



```
LINE          ID.......1.......2.......3.......4.......5.......6.......7.......8.......9......10

 440          KK  C2140B
 441          KM        COMBINE HYDROGRAPHS OF (R)2140B1, (R)2140B2 & SUB 2140B
 442          HC       3
```

```
443          KK  2160B1
444          KM        ROUTE C2140B THROUGH EARTHEN-LANDSCAPED COLLECTOR TO D.S.
445          KM        END OF SUB 2160B
446          RS       1    FLOW      -1
447          RC    .045    .045    .045    4600   .0326
448          RX       0      24      32      40      65      73      81     105
449          RY      10       4       2       0       0       2       4      10

450          KK    2150     SUB
451          KM        RUNOFF FROM SUB-BASIN 2150
452          BA   .6873
453          LS              86    15.0              74    15.0
454          UK     350   .3428     .30      50
455          UK     180   .0555     .15      50
456          RK    1785   .1313    .045    .027    TRAP      10       3
457          RK    6400   .0312    .045            TRAP      20      10

458          KK  2160B2
459          KM        ROUTE SUB 2150 TO D.S. END OF SUB 2160B
460          RS       1    FLOW      -1
461          RC    .045    .045    .045    1000   .0200
462          RX       0      24      32      40      65      73      81     105
463          RY      10       4       2       0       0       2       4      10

464          KK   2140A     SUB
465          KM        RUNOFF FROM SUB-BASIN 2140A
466          BA   .2335
467          LS              74    32.1
468          UK     200   .0500     .15     100
469          RK     800   .0500    .045   .0244    TRAP      15       3
470          RK    4600   .0326    .045            TRAP      17       5

471          KK   2160B     SUB
472          KM        RUNOFF FROM SUB-BASIN 2160B
473          BA   .1412
474          LS              75    19.3
475          UK     337   .0324     .15     100
476          RK    2275   .0527    .045   .0361    TRAP      15       3
477          RK    1400   .0241    .045            TRAP      17       5

478          KK  C2160B
479          KM        COMBINE HYDROGRAPHS OF(R)2160B1, (R)2160B2, SUB 2140 & SUB 2160B
480          HC       4

481          KK  2160A2
482          KM        ROUTE C2160B THROUGH EARTHEN LANDSCAPED COLLECTOR TO D.S.
483          KM        END OF SUB 2160A
484          RS       2    FLOW      -1
485          RC    .045    .045    .045    4720   .0169
486          RX       0      24      32      40      65      73      81     105
```



```
LINE         ID.......1.......2.......3.......4.......5.......6.......7.......8.......9......10

487          RY      10       4       2       0       0       2       4      10

488          KK   2170B     SUB
489          KM        RUNOFF FROM SUB-BASIN 2170B
490          BA   .1312
```

```
491          LS              74    34.5
492          UK     250   .0266     .15     100
493          RK    4640   .0457    .045            TRAP      20       5

494          KK    2180     SUB
495          KM        RUNOFF FROM SUB-BASIN 2180
496          BA  1.0044
497          LS              86     1.4
498          UK     468   .4496     .30     100
499          RK    3100   .2558    .045    .121    TRAP      10       3
500          RK    8200   .0731    .045            TRAP      20       5

501          KK   R2190
502          KM        ROUTE SUB 2180 TO OUTLET OF SUB 2190
503          RS       3    FLOW      -1
504          RC    .055    .040    .055    4100   .0390
505          RX       0       7     107     111     141     145     245     252
506          RY      10       3       2       0       0       2       3      10

507          KK    2190     SUB
508          KM        RUNOFF FROM SUB-BASIN 2190
509          BA   .1227
510          LS              79    18.0
511          UK     190   .0915     .15     100
512          RK    4100   .0390    .045            TRAP      30      10

513          KK   C2190
514          KM        COMBINE HYDROGRAPHS OF R2190 & SUB 2190
515          HC       2

516          KK    2200     SUB
517          KM        RUNOFF FROM SUB-BASIN 2200
518          BA   .2532
519          LS              81     6.3
520          UK     353   .1529     .20     100
521          RK    6150   .0838    .045            TRAP       5      11

522          KK   2210A     SUB
523          KM        RUNOFF FROM SUB-BASIN 2210A
524          BA  1.5847
525          LS              82     2.0
526          UK     248   .3717     .30     100
527          RK    4500   .1875    .045    .107    TRAP      10       3
528          RK    4800   .0526    .045            TRAP      20      10
```



```
LINE         ID.......1.......2.......3.......4.......5.......6.......7.......8.......9......10


529          KK  2210B1
530          KM        ROUTE SUB 2210A THRU WIDE BRAIDED WASH ALONG NORTH
531          KM        SIDE OF PARCELS N & O
532          RS       1    FLOW      -1
533          RC    .065    .055    .065    3500   .0476
534          RX       0       1      51      52     152     153     203     204
535          RY      10       3       1       0       0       1       3      10

536          KK  2210B2
537          KM        ROUTE (R)2210B1 THRU INCISED WASH ALONG NORTH SIDE OF PARCEL N.
538          KM        RD RECORD USED TO PROMOTE FLOW CONTINUITY
```

```
539          RD
540          RC    .065    .050    .065    2140   .0417
541          RX       0       1       2      22      45      65      66      67
542          RY      10      10      10       0       0      10      10      10

543          KK   2210B     SUB
544          KM        RUNOFF FROM SUB-BASIN 2210B
545          BA   .1916
546          LS              74     7.8
547          UK     248   .3717     .25     100
548          RK    5640   .0444    .050            TRAP      50       4

549          KK  2210B1
550          KM        COMBINE HYDROGRAPHS OF SUB 2210B & (R)2210B2
551          HC       2

552          KK  2210B2
553          KM        COMBINE HYDROGRAPHS OF (C)2210B1 & SUB 2200
554          HC       2

555          KK  2210B3
556          KM        COMBINE HYDROGRAPHS OF (C)2210B2, C2190 &  SUB 2710B
557          KM        THIS IS THE TOTAL FLOW AT THE INTERSECTION OF TTP & PROP. STATE LAND CH.
558          HC       3

559          KK  R2170A
560          KM        ROUTE (C)2210B3 ALONG SHOTCRETE -LINED COLLECTOR TO OUTLET OF SUB 2170A
561          RS       1    FLOW      -1
562          RC    .019    .019    .019    3600   .0194
563          RX       0       8      24      40      44      60      76      84
564          RY      10       8       4       0       0       4       8      10

565          KK   2170A     SUB
566          KM        RUNOFF FROM SUB-BASIN 2170A
567          BA   .1227
568          LS              74    24.2
569          UK     250   .0266     .15     100
570          RK    1920   .0250    .045            TRAP      20       5
```



```
LINE         ID.......1.......2.......3.......4.......5.......6.......7.......8.......9......10


571          KK  C2170A
572          KM        COMBINE HYDROGRAPHS OF R2170A & SUB 2170A
573          HC       2

574          KK  2160A3
575          KM        ROUTE C2170A ALONG SHOTCRETE-LINED CHANNEL TO OUTLET OF SUB 2160A
576          RS       1    FLOW      -1
577          RC    .019    .019    .019     400   .0125
578          RX       0       8      24      40      44      60      76      84
579          RY      10       8       4       0       0       4       8      10

580          KK  C2160A
581          KM        COMBINE HYDROGRAPHS OF (R)2160A1, SUB 2160A, (R)2160A2 & (R)2160A3
582          HC       4

583          KK  R2160C
584          KM        ROUTE C2160A TO OUTLET OF SUB 2160C
```

```
585          RS       1    FLOW      -1
586          RC    .055    .045    .055    2036   .0144
587          RX       0      35     135     150     225     240     340     375
588          RY      10       3       3       0       0       3       3      10

589          KK   2160C     SUB
590          KM        RUNOFF FROM SUB 2160C
591          BA   .0261
592          LS              74    32.1
593          UK     337   .0324     .15     100
594          RK    2036   .0144    .045            TRAP      75       5

595          KK  C2160C
596          KM        COMBINE HYDROGRAPHS OF SUB 2160C & R2160C
597          HC       2

598          KK   2220C     SUB
599          KM        RUNOFF FROM SUB 2220C
600          BA   .0268
601          LS              74    21.9
602          UK     200     .05     .15     100
603          RK    2235   .0434    .045            TRAP       7       3

604          KK  R2170C
605          KM        ROUTE SUB 2220C TO OUTLET OF SUB 2170C AT BELL RD
606          RS       3    FLOW      -1
607          RC    .055    .045    .055    3000   .0216
608          RX       0       1       2      52      67     117     118     119
609          RY      10      10      10       0       0      10      10      10

610          KK   2170C     SUB
611          KM        RUNOFF FROM SUB 2170C
612          BA   .0610
613          LS              74    24.2
614          UK     250   .0266     .15     100
615          RK    3000   .0216    .045            TRAP      15       5
```



```
LINE         ID.......1.......2.......3.......4.......5.......6.......7.......8.......9......10


616          KK  C2170C
617          KM        COMBINE HYDROGRAPHS OF SUB 2170C & R2170C
618          HC       2

619          KK  R2170D
620          KM        ROUTE C2170C TO OUTLET OF SUB 2170D
621          RS       2    FLOW      -1
622          RC    .055    .045    .055    2250   .0147
623          RX       0       6      36      45      60      69      99     105
624          RY      10       4       3       0       0       3       4      10

625          KK   2170D     SUB
626          KM        RUNOFF FROM SUB 2170D
627          BA   .0366
628          LS              74    24.2
629          UK     250   .0266     .15     100
630          RK    2250   .0147    .045            TRAP      15       5

631          KK  C2170D
```

```
632          KM        COMBINE HYDROGRAPHS OF SUB 2170D & R2170D
633          HC       2

634          KK  2160C2
635          KM        COMBINE HYDROGRAPHS OF C2170D & (C)2160C1
636          HC       2

637          KK  R2170E
638          KM        ROUTE (C)2160C1 TO OUTLET OF SUB 2170E
639          RS       1    FLOW     -1
640          RC    .055    .045    .055     362   .0124
641          RX       0      35     135     150     225     240     340     375
642          RY      10       3       3       0       0       3       3      10

643          KK   2170E     SUB
644          KM        RUNOFF FROM SUB-BASIN 2170E
645          BA   .0245
646          LS              74    24.2
647          UK     250   .0266     .15     100
648          RK    1976   .0152    .045            TRAP       7       5

649          KK  C2170E
650          KM        COMBINE HYDROGRAPHS OF R2170E & SUB 2170E
651          KM        THIS IS THE TOTAL FLOW IN THE REGIONAL CHANNEL AT THE OLD VERDE CANAL
652          HC       2

653          KK  R2170F
654          KM        ROUTE C2170E TO CAP DIKE 4
655          RS       1    FLOW     -1
656          RC    .055    .045    .055     850   .0179
657          RX       0      35     135     150     225     240     340     375
658          RY      10       3       3       0       0       3       3      10
```



```
LINE         ID.......1.......2.......3.......4.......5.......6.......7.......8.......9......10

659          KK   2170F     SUB
660          KM        RUNOFF FROM SUB-BASIN 2170F
661          BA   .0091
662          LS              74    32.1
663          UK     337   .0324     .15     100
664          RK     850   .0179    .045            TRAP      75       5

665          KK  C2170F
666          KM        COMBINE HYDROGRAPHS OF R2170F & SUB 2170F
667          KM        THIS IS TOTAL FLOW THAT EXITS THE REGIONAL CHANNEL AT CAP DIKE 4
668          HC       2
669          ZZ
```

1

SCHEMATIC DIAGRAM OF STREAM NETWORK

```
INPUT
 LINE      (V) ROUTING          (--->) DIVERSION OR PUMP FLOW

  NO.      (.) CONNECTOR        (<---) RETURN OF DIVERTED OR PUMPED FLOW

   31          39
                .
                .
   37           .          40
```

```
                .          .
                .          .
43            C40............
                V
                V
46            R41
                .
                .
52              .        41
                .          .
                .          .
58            C41............
                .
                .
61              .        42
                .          .
                .          .
67              .          .        43
                .          .         .
                .          .         .
73              .          .         .        44
                .          .         .         .
                .          .         .         .
79              .          .      C44............
                .          .        V
                .          .        V
82              .          .      R45
                .          .         .
                .          .         .
88              .          .         .        45
                .          .         .         .
                .          .         .         .
94              .          .      C45............
                .          .         .
                .          .         .
97              .          .         .       45A
                .          .         .         .
                .          .         .         .
103             .          .         .         .        46
                .          .         .         .         .
                .          .         .         .         .
110             .          .      C46........................
                .          .        V
                .          .        V
113             .          .      R47
                .          .         .
                .          .         .
119             .          .         .        47
                .          .         .         .
                .          .         .         .
125             .          .    C47.1............
                .          .         .
                .          .         .
128         C47.2........................
                V
                V
131           R50
                .
                .
138             .        50
```

```
              .           .
              .           .
145         C50............
              V
              V
149         R48
              .
              .
155           .          48
              .           .
              .           .
161         C48............
              V
              V
164       R2000
              .
              .
170           .        2000
              .           .
              .           .
178       C2000............
              V
              V
181       R2010
              .
              .
187           .        2010
              .           .
              .           .
193       C2010............
              V
              V
196      2015A1
              .
              .
202           .       2015A
              .           .
              .           .
209           .           .        2020
              .           .           V
              .           .           V
216           .           .      2015A2
              .           .           .
              .           .           .
222      2015A1........................
              .
              .
225           .        2040
              .           .
              .           .
232           .           .        2050
              .           .           .
              .           .           .
239           .       C2050............
              .           V
              .           V
242           .       R2060
              .           .
              .           .
248           .           .        2060
```

```
            .           .           .
            .           .           .
255         .      2060.1............
            .           .
            .           .
258     2060.2............
            .
            .
261         .        2070
            .           .
            .           .
272         .           .------->    2072
269         .        2071
            .           V
            .           V
275         .      2065.1
            .           .
            .           .
281         .           .        2065
            .           .           .
            .           .           .
287         .       C2065............
            .           V
            .           V
291         .       R2060
            .           .
            .           .
297     2060.3............
            .
            .
300         .       2030C
            .           .
            .           .
306         .           .       2015B
            .           .           .
            .           .           .
312         .      C2015B............
            .           .
            .           .
315     2060.4............
            V
            V
318     R2080A
            .
            .
324         .       2080A
            .           .
            .           .
330     C2080A............
            V
            V
333      R2090
            .
            .
339         .        2090
            .           .
            .           .
345      C2090............
            V
            V
```

```
348     2160A1
            .
            .
354         .       2160A
            .          .
            .          .
362         .          .          .<-------    2072
360         .          .       2072
            .          .          V
            .          .          V
363         .          .      R2130
            .          .          .
            .          .          .
369         .          .          .        2130
            .          .          .          .
            .          .          .          .
375         .          .      C2130............
            .          .          .
            .          .          .
383         .          .          .------->    2134
380         .          .       2133
            .          .          V
            .          .          V
386         .          .     R2080B
            .          .          .
            .          .          .
392         .          .          .       2080B
            .          .          .          .
            .          .          .          .
398         .          .     C2080B............
            .          .          V
            .          .          V
401         .          .     2140B1
            .          .          .
            .          .          .
408         .          .          .       2140B
            .          .          .          .
            .          .          .          .
416         .          .          .          .          .<-------    2134
414         .          .          .          .       2134
            .          .          .          .          V
            .          .          .          .          V
417         .          .          .          .      R2135
            .          .          .          .          .
            .          .          .          .          .
423         .          .          .          .          .        2135
            .          .          .          .          .          .
            .          .          .          .          .          .
430         .          .          .          .      C2135............
            .          .          .          .          V
            .          .          .          .          V
434         .          .          .          .     2140B2
            .          .          .          .          .
            .          .          .          .          .
440         .          .     C2140B........................
            .          .          V
            .          .          V
443         .          .     2160B1
            .          .          .
            .          .          .
```

```
450     .       .       .     2150
        .       .       .       V
        .       .       .       V
458     .       .       .   2160B2
        .       .       .       .
        .       .       .       .
464     .       .       .       .     2140A
        .       .       .       .       .
        .       .       .       .       .
471     .       .       .       .       .     2160B
        .       .       .       .       .       .
        .       .       .       .       .       .
478     .       .   C2160B.......................................
        .       .       V
        .       .       V
481     .       .   2160A2
        .       .       .
        .       .       .
488     .       .       .     2170B
        .       .       .       .
        .       .       .       .
494     .       .       .       .     2180
        .       .       .       .       V
        .       .       .       .       V
501     .       .       .       .    R2190
        .       .       .       .       .
        .       .       .       .       .
507     .       .       .       .       .     2190
        .       .       .       .       .       .
        .       .       .       .       .       .
513     .       .       .       .    C2190............
        .       .       .       .       .
        .       .       .       .       .
516     .       .       .       .       .     2200
        .       .       .       .       .       .
        .       .       .       .       .       .
522     .       .       .       .       .       .     2210A
        .       .       .       .       .       .       V
        .       .       .       .       .       .       V
529     .       .       .       .       .       .   2210B1
        .       .       .       .       .       .       V
        .       .       .       .       .       .       V
536     .       .       .       .       .       .   2210B2
        .       .       .       .       .       .       .
        .       .       .       .       .       .       .
543     .       .       .       .       .       .       .       2210B
        .       .       .       .       .       .       .         .
        .       .       .       .       .       .       .         .
549     .       .       .       .       .       .   2210B1............
        .       .       .       .       .       .       .
        .       .       .       .       .       .       .
552     .       .       .       .       .   2210B2............
        .       .       .       .       .       .
        .       .       .       .       .       .
555     .       .       .   2210B3........................
        .       .       .       V
        .       .       .       V
559     .       .       .   R2170A
        .       .       .       .
        .       .       .       .
```

```
565          .          .          .          .      2170A
             .          .          .          .          .
             .          .          .          .          .
571          .          .          .     C2170A............
             .          .          .          V
             .          .          .          V
574          .          .          .     2160A3
             .          .          .          .
             .          .          .          .
580     C2160A...................................
             V
             V
583     R2160C
             .
             .
589          .      2160C
             .          .
             .          .
595     C2160C............
             .
             .
598          .      2220C
             .          V
             .          V
604          .     R2170C
             .          .
             .          .
610          .          .      2170C
             .          .          .
             .          .          .
616          .     C2170C............
             .          V
             .          V
619          .     R2170D
             .          .
             .          .
625          .          .      2170D
             .          .          .
             .          .          .
631          .     C2170D............
             .          .
             .          .
634     2160C2............
             V
             V
637     R2170E
             .
             .
643          .      2170E
             .          .
             .          .
649     C2170E............
             V
             V
653     R2170F
             .
             .
659          .      2170F
             .          .
             .          .
```

```
 665      C2170F............

(***) RUNOFF ALSO COMPUTED AT THIS LOCATION
****************************************                                    ****************************************
*                                      *                                    *                                      *
*   FLOOD HYDROGRAPH PACKAGE  (HEC-1)  *                                    *   U.S. ARMY CORPS OF ENGINEERS       *
*            SEPTEMBER 1990            *                                    *   HYDROLOGIC ENGINEERING CENTER      *
*             VERSION 4.0              *                                    *         609 SECOND STREET            *
*                                      *                                    *      DAVIS, CALIFORNIA 95616         *
*  RUN DATE  01/11/1995  TIME  14:00:21 *                                    *          (916) 756-1104              *
*                                      *                                    *                                      *
****************************************                                    ****************************************


                              DESERT GREENBELT STUDY BY GREINER, INC.
                              1992 MODELING REVISIONS BASED ON REATA PASS SENSITIVITY ANALYSIS
                              MODEL 2   FILE NAME: REAT2.DAT

                              REATA HYDROLOGY -PROP. CONDITIONS W/ FUTURE LAND USE
                              ORIGINAL MODEL RPBW1 BY ROBERT L. WARD
                              100-YEAR 6-HOUR STORM (AMC TYPE II)

                              SUB-BASINS 39 THRU 50 & 2000 THRU 2220C
                              WITH GREENBELT REGIONAL CHANNEL IN PLACE IN SUB 48, 50, 2000, 2010,
                              2015A, 2080A AND PARALLEL 96TH STREET TO CAP DIKE 4

                              PH CARD FOR SUB 30 TO SUB 50
                              CHANGE PH CARD FOR SUB 2000 AND DOWNSTREAM
                              USE JD CARDS
                              SPLIT FLOWS AT D.S. ENDS OF SUB 2070 & 2130
                              STATE LAND CHANNEL ALIGNMENT INCORPORATED
                              NEW TPP ALIGNMENT AS OF AUG 1, 1994

 20 IO          OUTPUT CONTROL VARIABLES
                      IPRNT           5  PRINT CONTROL
                      IPLOT           0  PLOT CONTROL
                      QSCAL          0.  HYDROGRAPH PLOT SCALE

    IT          HYDROGRAPH TIME DATA
                       NMIN           5  MINUTES IN COMPUTATION INTERVAL
                      IDATE      1OCT94  STARTING DATE
                      ITIME        0000  STARTING TIME
                         NQ         300  NUMBER OF HYDROGRAPH ORDINATES
                     NDDATE      2OCT94  ENDING DATE
                     NDTIME        0055  ENDING TIME
                      ICENT          19  CENTURY MARK

                 COMPUTATION INTERVAL     .08 HOURS
                      TOTAL TIME BASE   24.92 HOURS

          ENGLISH UNITS
               DRAINAGE AREA          SQUARE MILES
               PRECIPITATION DEPTH    INCHES
               LENGTH, ELEVATION      FEET
               FLOW                   CUBIC FEET PER SECOND
               STORAGE VOLUME         ACRE-FEET
               SURFACE AREA           ACRES
```

```
          TEMPERATURE          DEGREES FAHRENHEIT

21 JD        INDEX STORM NO. 1
                 STRM        3.39  PRECIPITATION DEPTH
                 TRDA         .00  TRANSPOSITION DRAINAGE AREA

22 PI          PRECIPITATION PATTERN
                 .01       .01       .01       .01       .01       .01       .01       .01       .01       .01
                 .01       .01       .01       .01       .01       .01       .01       .01       .01       .02
                 .02       .02       .02       .02       .02       .02       .02       .03       .03       .03
                 .08       .09       .10       .15       .20       .41       .72       .28       .17       .11
                 .09       .08       .03       .03       .03       .03       .02       .02       .02       .02
                 .02       .02       .02       .01       .01       .01       .01       .01       .01       .01
                 .01       .01       .01       .01       .01       .01       .01       .01       .01       .01
                 .01       .01

23 JD        INDEX STORM NO. 2
                 STRM        3.39  PRECIPITATION DEPTH
                 TRDA         .00  TRANSPOSITION DRAINAGE AREA

22 PI          PRECIPITATION PATTERN
                 .01       .01       .01       .01       .01       .01       .01       .01       .01       .01
                 .01       .01       .01       .01       .01       .01       .01       .01       .01       .02
                 .02       .02       .02       .02       .02       .02       .02       .03       .03       .03
                 .08       .09       .10       .15       .20       .41       .72       .28       .17       .11
                 .09       .08       .03       .03       .03       .03       .02       .02       .02       .02
                 .02       .02       .02       .01       .01       .01       .01       .01       .01       .01
                 .01       .01       .01       .01       .01       .01       .01       .01       .01       .01
                 .01       .01

24 JD        INDEX STORM NO. 3
                 STRM        3.39  PRECIPITATION DEPTH
                 TRDA         .01  TRANSPOSITION DRAINAGE AREA

22 PI          PRECIPITATION PATTERN
                 .01       .01       .01       .01       .01       .01       .01       .01       .01       .01
                 .01       .01       .01       .01       .01       .01       .01       .01       .01       .02
                 .02       .02       .02       .02       .02       .02       .02       .03       .03       .03
                 .08       .09       .10       .15       .20       .41       .72       .28       .17       .11
                 .09       .08       .03       .03       .03       .03       .02       .02       .02       .02
                 .02       .02       .02       .01       .01       .01       .01       .01       .01       .01
                 .01       .01       .01       .01       .01       .01       .01       .01       .01       .01
                 .01       .01

25 JD        INDEX STORM NO. 4
                 STRM        3.39  PRECIPITATION DEPTH
                 TRDA         .10  TRANSPOSITION DRAINAGE AREA

22 PI          PRECIPITATION PATTERN
                 .01       .01       .01       .01       .01       .01       .01       .01       .01       .01
                 .01       .01       .01       .01       .01       .01       .01       .01       .01       .02
                 .02       .02       .02       .02       .02       .02       .02       .03       .03       .03
                 .08       .09       .10       .15       .20       .41       .72       .28       .17       .11
                 .09       .08       .04       .03       .03       .03       .02       .02       .02       .02
                 .02       .02       .02       .01       .01       .01       .01       .01       .01       .01
                 .01       .01       .01       .01       .01       .01       .01       .01       .01       .01
                 .01       .01

26 JD        INDEX STORM NO. 5
                 STRM        3.39  PRECIPITATION DEPTH
```

```
                TRDA        .50  TRANSPOSITION DRAINAGE AREA

22 PI         PRECIPITATION PATTERN
                .01       .01       .01       .01       .01       .01       .01       .01       .01       .01
                .01       .01       .01       .01       .01       .01       .01       .01       .01       .02
                .02       .02       .02       .02       .02       .02       .02       .03       .03       .03
                .08       .09       .10       .15       .20       .41       .72       .28       .17       .11
                .09       .08       .04       .03       .03       .03       .02       .02       .02       .02
                .02       .02       .02       .01       .01       .01       .01       .01       .01       .01
                .01       .01       .01       .01       .01       .01       .01       .01       .01       .01
                .01       .01

27 JD       INDEX STORM NO. 6
                STRM       3.38  PRECIPITATION DEPTH
                TRDA       1.00  TRANSPOSITION DRAINAGE AREA

22 PI         PRECIPITATION PATTERN
                .01       .01       .01       .01       .01       .01       .01       .01       .01       .01
                .01       .01       .01       .01       .01       .01       .01       .01       .01       .02
                .02       .02       .02       .02       .02       .02       .02       .03       .03       .03
                .08       .09       .10       .15       .19       .40       .71       .28       .17       .11
                .09       .08       .04       .03       .03       .03       .02       .02       .02       .02
                .02       .02       .02       .01       .01       .01       .01       .01       .01       .01
                .01       .01       .01       .01       .01       .01       .01       .01       .01       .01
                .01       .01

28 JD       INDEX STORM NO. 7
                STRM       3.35  PRECIPITATION DEPTH
                TRDA       5.00  TRANSPOSITION DRAINAGE AREA

22 PI         PRECIPITATION PATTERN
                .01       .01       .01       .01       .01       .01       .01       .01       .01       .01
                .01       .01       .01       .01       .01       .01       .01       .01       .01       .02
                .02       .02       .02       .02       .02       .02       .03       .03       .03       .03
                .08       .09       .10       .15       .19       .39       .70       .27       .16       .11
                .09       .08       .04       .03       .03       .03       .02       .02       .02       .02
                .02       .02       .02       .02       .02       .01       .01       .01       .01       .01
                .01       .01       .01       .01       .01       .01       .01       .01       .01       .01
                .01       .01

29 JD       INDEX STORM NO. 8
                STRM       3.21  PRECIPITATION DEPTH
                TRDA      25.00  TRANSPOSITION DRAINAGE AREA

22 PI         PRECIPITATION PATTERN
                .01       .01       .01       .01       .01       .01       .01       .01       .01       .01
                .01       .01       .01       .01       .01       .01       .01       .02       .02       .02
                .02       .02       .02       .02       .02       .03       .03       .03       .03       .04
                .08       .09       .10       .13       .17       .35       .61       .24       .15       .11
                .09       .08       .04       .03       .03       .03       .03       .02       .02       .02
                .02       .02       .02       .02       .02       .02       .01       .01       .01       .01
                .01       .01       .01       .01       .01       .01       .01       .01       .01       .01
                .01       .01

30 JD       INDEX STORM NO. 9
                STRM       3.09  PRECIPITATION DEPTH
                TRDA      50.00  TRANSPOSITION DRAINAGE AREA

22 PI         PRECIPITATION PATTERN
                .01       .01       .01       .01       .01       .01       .01       .01       .01       .01
```

| | | | | | | | | | |
|---|---|---|---|---|---|---|---|---|---|
| .01 | .01 | .01 | .01 | .01 | .01 | .02 | .02 | .02 | .02 |
| .02 | .02 | .02 | .02 | .03 | .03 | .03 | .03 | .04 | .04 |
| .08 | .09 | .10 | .11 | .15 | .30 | .54 | .21 | .13 | .11 |
| .10 | .09 | .04 | .04 | .03 | .03 | .03 | .03 | .02 | .02 |
| .02 | .02 | .02 | .02 | .02 | .02 | .01 | .01 | .01 | .01 |
| .01 | .01 | .01 | .01 | .01 | .01 | .01 | .01 | .01 | .01 |
| .01 | .01 | | | | | | | | |

*** FDKRUT - NEWTON RAPHSON FAILEDFIXED POINT ITERATION USED - ITERATION= 1

*** FDKRUT - NEWTON RAPHSON FAILEDFIXED POINT ITERATION USED - ITERATION= 2

*** FDKRUT - NEWTON RAPHSON FAILEDFIXED POINT ITERATION USED - ITERATION= 2

RUNOFF SUMMARY
FLOW IN CUBIC FEET PER SECOND
TIME IN HOURS, AREA IN SQUARE MILES

| | OPERATION | STATION | PEAK FLOW | TIME OF PEAK | AVERAGE FLOW FOR MAXIMUM PERIOD 6-HOUR | 24-HOUR | 72-HOUR | BASIN AREA | MAXIMUM STAGE | TIME OF MAX STAGE |
|---|---|---|---|---|---|---|---|---|---|---|
| | HYDROGRAPH AT | 39 | 4167. | 3.25 | 445. | 113. | 109. | 1.88 | | |
| + | HYDROGRAPH AT | 40 | 1443. | 3.17 | 120. | 30. | 29. | .58 | | |
| + | 2 COMBINED AT | C40 | 5282. | 3.25 | 563. | 142. | 137. | 2.47 | | |
| + | ROUTED TO | R41 | 3804. | 3.33 | 560. | 142. | 137. | 2.47 | | |
| + | HYDROGRAPH AT | 41 | 1059. | 3.25 | 121. | 31. | 30. | .83 | | |
| | 2 COMBINED AT | C41 | 4764. | 3.33 | 678. | 172. | 166. | 3.29 | | |
| | HYDROGRAPH AT | 42 | 1307. | 3.17 | 116. | 29. | 28. | .58 | | |
| | HYDROGRAPH AT | 43 | 2384. | 3.17 | 234. | 59. | 57. | 1.07 | | |
| | HYDROGRAPH AT | 44 | 1847. | 3.25 | 182. | 46. | 44. | .84 | | |
| | 2 COMBINED AT | C44 | 4139. | 3.25 | 413. | 104. | 100. | 1.91 | | |

| | | | | | | | |
|---|---|---|---|---|---|---|---|
| | ROUTED TO | | | | | | |
| | R45 | 3831. | 3.25 | 413. | 104. | 100. | 1.91 |
| | HYDROGRAPH AT | | | | | | |
| | 45 | 514. | 3.17 | 41. | 10. | 10. | .20 |
| | 2 COMBINED AT | | | | | | |
| + | C45 | 4141. | 3.25 | 453. | 114. | 110. | 2.11 |
| | HYDROGRAPH AT | | | | | | |
| + | 45A | 473. | 3.17 | 38. | 10. | 9. | .17 |
| | HYDROGRAPH AT | | | | | | |
| + | 46 | 2783. | 3.17 | 203. | 51. | 49. | .93 |
| | 3 COMBINED AT | | | | | | |
| + | C46 | 6361. | 3.17 | 690. | 174. | 167. | 3.21 |
| | ROUTED TO | | | | | | |
| | R47 | 5348. | 3.33 | 689. | 174. | 167. | 3.21 |
| | HYDROGRAPH AT | | | | | | |
| | 47 | 441. | 3.33 | 60. | 15. | 15. | .38 |
| | 2 COMBINED AT | | | | | | |
| | C47.1 | 5766. | 3.33 | 748. | 189. | 182. | 3.58 |
| | 3 COMBINED AT | | | | | | |
| | C47.2 | 10796. | 3.33 | 1510. | 383. | 369. | 7.46 |
| | ROUTED TO | | | | | | |
| | R50 | 10783. | 3.33 | 1510. | 383. | 369. | 7.46 |
| | HYDROGRAPH AT | | | | | | |
| + | 50 | 993. | 3.17 | 79. | 20. | 19. | .41 |
| | 2 COMBINED AT | | | | | | |
| + | C50 | 11236. | 3.33 | 1583. | 401. | 386. | 7.87 |
| | ROUTED TO | | | | | | |
| + | R48 | 10886. | 3.42 | 1582. | 401. | 386. | 7.87 |
| | HYDROGRAPH AT | | | | | | |
| + | 48 | 176. | 3.17 | 15. | 4. | 4. | .12 |
| | 2 COMBINED AT | | | | | | |
| | C48 | 10944. | 3.42 | 1596. | 404. | 390. | 7.99 |
| | ROUTED TO | | | | | | |
| | R2000 | 10942. | 3.42 | 1596. | 404. | 390. | 7.99 |
| | HYDROGRAPH AT | | | | | | |
| | 2000 | 2038. | 3.17 | 174. | 44. | 42. | .89 |
| | 2 COMBINED AT | | | | | | |
| | C2000 | 11746. | 3.42 | 1758. | 445. | 429. | 8.87 |
| | ROUTED TO | | | | | | |
| | R2010 | 11505. | 3.42 | 1757. | 445. | 429. | 8.87 |

| | | | | | | | | |
|---|---|---|---|---|---|---|---|---|
| | HYDROGRAPH AT | | | | | | | |
| | | 2010 | 80. | 3.25 | 8. | 2. | 2. | .04 |
| | 2 COMBINED AT | | | | | | | |
| | | C2010 | 11541. | 3.42 | 1765. | 447. | 430. | 8.91 |
| | ROUTED TO | | | | | | | |
| + | | 2015A1 | 10578. | 3.58 | 1762. | 447. | 430. | 8.91 |
| | HYDROGRAPH AT | | | | | | | |
| + | | 2015A | 540. | 3.33 | 68. | 17. | 17. | .36 |
| | HYDROGRAPH AT | | | | | | | |
| + | | 2020 | 315. | 3.08 | 23. | 6. | 6. | .11 |
| | ROUTED TO | | | | | | | |
| + | | 2015A2 | 283. | 3.17 | 23. | 6. | 6. | .11 |
| | 3 COMBINED AT | | | | | | | |
| | | 2015A1 | 10934. | 3.58 | 1845. | 468. | 451. | 9.38 |
| | HYDROGRAPH AT | | | | | | | |
| | | 2040 | 1929. | 3.25 | 177. | 45. | 43. | .93 |
| | HYDROGRAPH AT | | | | | | | |
| | | 2050 | 1741. | 3.25 | 161. | 40. | 39. | .86 |
| | 2 COMBINED AT | | | | | | | |
| | | C2050 | 3626. | 3.25 | 336. | 84. | 81. | 1.79 |
| | ROUTED TO | | | | | | | |
| | | R2060 | 2975. | 3.33 | 335. | 84. | 81. | 1.79 |
| | HYDROGRAPH AT | | | | | | | |
| + | | 2060 | 282. | 3.33 | 32. | 8. | 8. | .22 |
| | 2 COMBINED AT | | | | | | | |
| + | | 2060.1 | 3243. | 3.33 | 367. | 92. | 89. | 2.00 |
| | 2 COMBINED AT | | | | | | | |
| + | | 2060.2 | 12608. | 3.50 | 2181. | 553. | 533. | 11.39 |
| | HYDROGRAPH AT | | | | | | | |
| + | | 2070 | 3805. | 3.17 | 291. | 73. | 70. | 1.46 |
| | DIVERSION TO | | | | | | | |
| | | 2072 | 2536. | 3.17 | 194. | 49. | 47. | 1.46 |
| | HYDROGRAPH AT | | | | | | | |
| | | 2071 | 1268. | 3.17 | 97. | 24. | 23. | 1.46 |
| | ROUTED TO | | | | | | | |
| | | 2065.1 | 1010. | 3.33 | 97. | 24. | 23. | 1.46 |
| | HYDROGRAPH AT | | | | | | | |
| | | 2065 | 227. | 3.33 | 30. | 8. | 7. | .17 |
| | 2 COMBINED AT | | | | | | | |
| | | C2065 | 1246. | 3.33 | 127. | 32. | 31. | .66 |

| | | | | | | | |
|---|---|---|---|---|---|---|---|
| | ROUTED TO | | | | | | |
| + | R2060 | 1139. | 3.42 | 127. | 32. | 31. | .66 |
| | 2 COMBINED AT | | | | | | |
| + | 2060.3 | 13353. | 3.50 | 2296. | 583. | 561. | 12.04 |
| | HYDROGRAPH AT | | | | | | |
| + | 2030C | 107. | 3.17 | 10. | 3. | 3. | .07 |
| | HYDROGRAPH AT | | | | | | |
| + | 2015B | 33. | 3.42 | 5. | 1. | 1. | .05 |
| | 2 COMBINED AT | | | | | | |
| + | C2015B | 121. | 3.17 | 15. | 4. | 4. | .13 |
| | 2 COMBINED AT | | | | | | |
| + | 2060.4 | 13400. | 3.50 | 2309. | 586. | 564. | 12.17 |
| | ROUTED TO | | | | | | |
| + | R2080A | 12365. | 3.67 | 2305. | 586. | 564. | 12.17 |
| | HYDROGRAPH AT | | | | | | |
| + | 2080A | 684. | 3.17 | 65. | 16. | 16. | .42 |
| | 2 COMBINED AT | | | | | | |
| + | C2080A | 12506. | 3.58 | 2359. | 601. | 579. | 12.59 |
| | ROUTED TO | | | | | | |
| + | R2090 | 12571. | 3.67 | 2358. | 601. | 579. | 12.59 |
| | HYDROGRAPH AT | | | | | | |
| + | 2090 | 396. | 3.25 | 43. | 11. | 11. | .22 |
| | 2 COMBINED AT | | | | | | |
| + | C2090 | 12674. | 3.67 | 2396. | 611. | 588. | 12.81 |
| | ROUTED TO | | | | | | |
| + | 2160A1 | 11763. | 3.75 | 2391. | 611. | 588. | 12.81 |
| | HYDROGRAPH AT | | | | | | |
| + | 2160A | 848. | 3.25 | 92. | 23. | 22. | .47 |
| | HYDROGRAPH AT | | | | | | |
| + | 2072 | 2536. | 3.17 | 194. | 49. | 47. | 1.46 |
| | ROUTED TO | | | | | | |
| + | R2130 | 1960. | 3.25 | 194. | 49. | 47. | 1.46 |
| | HYDROGRAPH AT | | | | | | |
| + | 2130 | 567. | 3.25 | 55. | 14. | 13. | .25 |
| | 2 COMBINED AT | | | | | | |
| + | C2130 | 2528. | 3.25 | 249. | 62. | 60. | 1.23 |
| | DIVERSION TO | | | | | | |
| + | 2134 | 1920. | 3.25 | 215. | 54. | 52. | 1.23 |
| | HYDROGRAPH AT | | | | | | |
| + | 2133 | 608. | 3.25 | 33. | 8. | 8. | 1.23 |

| | | | | | | | |
|---|---|---|---|---|---|---|---|
| | ROUTED TO | | | | | | |
| + | | R2080B | 420. | 3.42 | 33. | 8. | 8. | 1.23 |
| | HYDROGRAPH AT | | | | | | |
| + | | 2080B | 220. | 3.25 | 23. | 6. | 6. | .12 |
| | 2 COMBINED AT | | | | | | |
| + | | C2080B | 588. | 3.33 | 57. | 14. | 14. | .37 |
| | ROUTED TO | | | | | | |
| + | | 2140B1 | 573. | 3.42 | 57. | 14. | 14. | .37 |
| | HYDROGRAPH AT | | | | | | |
| + | | 2140B | 214. | 3.17 | 18. | 5. | 4. | .09 |
| | HYDROGRAPH AT | | | | | | |
| + | | 2134 | 1920. | 3.25 | 215. | 54. | 52. | 1.23 |
| | ROUTED TO | | | | | | |
| + | | R2135 | 1811. | 3.33 | 215. | 54. | 52. | 1.23 |
| | HYDROGRAPH AT | | | | | | |
| + | | 2135 | 157. | 3.17 | 15. | 4. | 4. | .08 |
| | 2 COMBINED AT | | | | | | |
| + | | C2135 | 1914. | 3.33 | 230. | 58. | 56. | 1.06 |
| | ROUTED TO | | | | | | |
| + | | 2140B2 | 1948. | 3.33 | 230. | 58. | 56. | 1.06 |
| | 3 COMBINED AT | | | | | | |
| + | | C2140B | 2565. | 3.33 | 303. | 76. | 74. | 1.52 |
| | ROUTED TO | | | | | | |
| + | | 2160B1 | 2341. | 3.42 | 303. | 76. | 74. | 1.52 |
| | HYDROGRAPH AT | | | | | | |
| + | | 2150 | 1388. | 3.25 | 133. | 33. | 32. | .69 |
| | ROUTED TO | | | | | | |
| + | | 2160B2 | 1368. | 3.25 | 133. | 33. | 32. | .69 |
| | HYDROGRAPH AT | | | | | | |
| + | | 2140A | 465. | 3.17 | 46. | 12. | 11. | .23 |
| | HYDROGRAPH AT | | | | | | |
| + | | 2160B | 230. | 3.25 | 24. | 6. | 6. | .14 |
| | 4 COMBINED AT | | | | | | |
| + | | C2160B | 3732. | 3.33 | 501. | 127. | 122. | 2.58 |
| | ROUTED TO | | | | | | |
| + | | 2160A2 | 3578. | 3.42 | 501. | 127. | 122. | 2.58 |
| | HYDROGRAPH AT | | | | | | |
| + | | 2170B | 250. | 3.25 | 26. | 7. | 6. | .13 |
| | HYDROGRAPH AT | | | | | | |
| + | | 2180 | 2312. | 3.25 | 212. | 53. | 51. | 1.00 |

| | | | | | | | |
|---|---|---|---|---|---|---|---|
| | ROUTED TO | | | | | | |
| + | R2190 | 1923. | 3.42 | 212. | 53. | 51. | 1.00 |
| | HYDROGRAPH AT | | | | | | |
| + | 2190 | 261. | 3.17 | 23. | 6. | 6. | .12 |
| | 2 COMBINED AT | | | | | | |
| + | C2190 | 2073. | 3.33 | 234. | 59. | 57. | 1.13 |
| | HYDROGRAPH AT | | | | | | |
| + | 2200 | 482. | 3.25 | 46. | 12. | 11. | .25 |
| | HYDROGRAPH AT | | | | | | |
| + | 2210A | 3552. | 3.17 | 285. | 71. | 69. | 1.58 |
| | ROUTED TO | | | | | | |
| + | 2210B1 | 2725. | 3.25 | 285. | 71. | 69. | 1.58 |
| | ROUTED TO | | | | | | |
| + | 2210B2 | 2681. | 3.33 | 286. | 72. | 69. | 1.58 |
| | HYDROGRAPH AT | | | | | | |
| + | 2210B | 247. | 3.25 | 27. | 7. | 6. | .19 |
| | 2 COMBINED AT | | | | | | |
| + | 2210B1 | 2896. | 3.33 | 312. | 78. | 75. | 1.78 |
| | 2 COMBINED AT | | | | | | |
| + | 2210B2 | 3239. | 3.33 | 357. | 90. | 86. | 2.03 |
| | 3 COMBINED AT | | | | | | |
| + | 2210B3 | 5431. | 3.33 | 613. | 154. | 149. | 3.29 |
| | ROUTED TO | | | | | | |
| + | R2170A | 5342. | 3.33 | 613. | 154. | 149. | 3.29 |
| | HYDROGRAPH AT | | | | | | |
| + | 2170A | 224. | 3.17 | 22. | 6. | 5. | .12 |
| | 2 COMBINED AT | | | | | | |
| + | C2170A | 5480. | 3.33 | 633. | 160. | 154. | 3.41 |
| | ROUTED TO | | | | | | |
| + | 2160A3 | 5478. | 3.33 | 633. | 160. | 154. | 3.41 |
| | 4 COMBINED AT | | | | | | |
| + | C2160A | 15432. | 3.67 | 3498. | 893. | 860. | 19.27 |
| | ROUTED TO | | | | | | |
| + | R2160C | 15440. | 3.75 | 3497. | 893. | 860. | 19.27 |
| | HYDROGRAPH AT | | | | | | |
| + | 2160C | 40. | 3.33 | 5. | 1. | 1. | .03 |
| | 2 COMBINED AT | | | | | | |
| + | C2160C | 15452. | 3.75 | 3502. | 894. | 861. | 19.30 |
| | HYDROGRAPH AT | | | | | | |
| + | 2220C | 55. | 3.17 | 5. | 1. | 1. | .03 |

| | | | | | | | |
|---|---|---|---|---|---|---|---|
| | ROUTED TO | | | | | | |
| | R2170C | 36. | 3.42 | 5. | 1. | 1. | .03 |
| | HYDROGRAPH AT | | | | | | |
| + | 2170C | 103. | 3.25 | 11. | 3. | 3. | .06 |
| | 2 COMBINED AT | | | | | | |
| + | C2170C | 123. | 3.25 | 15. | 4. | 4. | .09 |
| | ROUTED TO | | | | | | |
| + | R2170D | 112. | 3.42 | 15. | 4. | 4. | .09 |
| | HYDROGRAPH AT | | | | | | |
| + | 2170D | 62. | 3.25 | 6. | 2. | 2. | .04 |
| | 2 COMBINED AT | | | | | | |
| + | C2170D | 154. | 3.33 | 22. | 6. | 5. | .12 |
| | 2 COMBINED AT | | | | | | |
| | 2160C2 | 15514. | 3.75 | 3521. | 899. | 866. | 19.42 |
| | ROUTED TO | | | | | | |
| | R2170E | 15524. | 3.75 | 3521. | 899. | 866. | 19.42 |
| | HYDROGRAPH AT | | | | | | |
| | 2170E | 42. | 3.25 | 4. | 1. | 1. | .02 |
| | 2 COMBINED AT | | | | | | |
| | C2170E | 15532. | 3.75 | 3524. | 900. | 867. | 19.45 |
| | ROUTED TO | | | | | | |
| | R2170F | 15495. | 3.75 | 3524. | 900. | 867. | 19.45 |
| | HYDROGRAPH AT | | | | | | |
| + | 2170F | 17. | 3.25 | 2. | 0. | 0. | .01 |
| | 2 COMBINED AT | | | | | | |
| + | C2170F | 15498. | 3.75 | 3526. | 900. | 867. | 19.46 |

SUMMARY OF KINEMATIC WAVE - MUSKINGUM-CUNGE ROUTING
(FLOW IS DIRECT RUNOFF WITHOUT BASE FLOW)

| | | | | | | INTERPOLATED TO COMPUTATION INTERVAL | | | |
|---|---|---|---|---|---|---|---|---|---|
| ISTAQ | ELEMENT | DT | PEAK | TIME TO PEAK | VOLUME | DT | PEAK | TIME TO PEAK | VOLUME |
| | | (MIN) | (CFS) | (MIN) | (IN) | (MIN) | (CFS) | (MIN) | (IN) |
| FOR STORM = 1 | STORM AREA (SQ MI) = | | | .00 | | | | | |
| 39 | MANE | 2.69 | 4294.48 | 193.77 | 2.26 | 5.00 | 4244.11 | 195.00 | 2.25 |

CONTINUITY SUMMARY (AC-FT) - INFLOW= .0000E+00 EXCESS= .2271E+03 OUTFLOW= .2263E+03 BASIN STORAGE= .8393E-01 PERCENT ERROR= .3

| | | | | | | | | | |
|---|---|---|---|---|---|---|---|---|---|
| FOR STORM = 2 | STORM AREA (SQ MI) = | | | .00 | | | | | |
| 39 | MANE | 2.69 | 4294.42 | 193.77 | 2.26 | 5.00 | 4244.06 | 195.00 | 2.25 |

# HEC-1 MODEL NO. 3

# FILE: REAT3

```
|****************************************
*                                      *
*   FLOOD HYDROGRAPH PACKAGE  (HEC-1)  *
*            SEPTEMBER 1990            *
*             VERSION 4.0              *
*                                      *
*  RUN DATE  01/11/1995  TIME  14:07:47 *
*                                      *
****************************************
```

```
****************************************
*                                      *
*    U.S. ARMY CORPS OF ENGINEERS      *
*    HYDROLOGIC ENGINEERING CENTER     *
*          609 SECOND STREET           *
*       DAVIS, CALIFORNIA 95616        *
*           (916) 756-1104             *
*                                      *
****************************************
```

```
X     X  XXXXXXX   XXXXX          X
X     X  X        X     X        XX
X     X  X        X              X
XXXXXXX  XXXX     X        XXXXX  X
X     X  X        X              X
X     X  X        X     X        X
X     X  XXXXXXX   XXXXX         XXX
```

THIS PROGRAM REPLACES ALL PREVIOUS VERSIONS OF HEC-1 KNOWN AS HEC1 (JAN 73), HEC1GS, HEC1DB, AND HEC1KW.

THE DEFINITIONS OF VARIABLES -RTIMP- AND -RTIOR- HAVE CHANGED FROM THOSE USED WITH THE 1973-STYLE INPUT STRUCTURE.
THE DEFINITION OF -AMSKK- ON RM-CARD WAS CHANGED WITH REVISIONS DATED 28 SEP 81. THIS IS THE FORTRAN77 VERSION
NEW OPTIONS: DAMBREAK OUTFLOW SUBMERGENCE , SINGLE EVENT DAMAGE CALCULATION, DSS:WRITE STAGE FREQUENCY,
DSS:READ TIME SERIES AT DESIRED CALCULATION INTERVAL  LOSS RATE:GREEN AND AMPT INFILTRATION
KINEMATIC WAVE: NEW FINITE DIFFERENCE ALGORITHM



```
LINE          ID.......1.......2.......3.......4.......5.......6.......7.......8.......9......10

  1           ID        DESERT GREENBELT STUDY BY GREINER, INC.
  2           ID        1992 MODELING REVISIONS BASED ON REATA PASS SENSITIVITY ANALYSIS
  3           ID        MODEL 3   FILE NAME: REAT3.DAT
  4           ID
  5           ID        REATA HYDROLOGY -PROP. CONDITIONS W/ FUTURE LAND USE
  6           ID        ORIGINAL MODEL RPBW1 BY ROBERT L. WARD
  7           ID        100-YEAR 6-HOUR STORM (AMC TYPE II)
  8           ID
  9           ID        SUB-BASINS 39 THRU 50 & 2000 THRU 2220C
 10           ID        WITH GREENBELT REGIONAL CHANNEL IN PLACE IN SUB 48, 50, 2000, 2010,
 11           ID        2015A, 2080A AND PARALLEL 96TH STREET TO CAP DIKE 4
 12           ID
 13           ID        PH CARD FOR SUB 30 TO SUB 50
 14           ID        CHANGE PH CARD FOR SUB 2000 AND DOWNSTREAM
 15           ID        USE JD CARDS
 16           ID        CONSTRUCT LEVEE IN SUB 2065 TO DIRECT 100% RUNOFF FROM SUB 2070 TO 2130
 17           ID        SPLIT FLOWS FROM SUB 2130 TO 2135 AND 2080B
 18           ID        STATE LAND CHANNEL ALIGNMENT INCORPORATED
 19           ID        NEW TPP ALIGNMENT AS OF AUG 1, 1994
              *DIAGRAM
 20           IT       5   OCT94       0     300
 21           IO       5       0
```

```
 22          JD          .0001
 23          PH                    .72    1.41    2.47    2.79    2.99    3.39
 24          JD           .001
 25          JD            .01
 26          JD             .1
 27          JD             .5
 28          JD              1
 29          JD              5
 30          JD             25
 31          JD             50

 32          KK     39     SUB
 33          KM        RUNOFF FROM SUB-BASIN 39
 34          BA  1.8807
 35          LS             85    23.4
 36          UK    330   .0433     .20     100
 37          RK  11240   .0253    .045           TRAP      30       3

 38          KK     40     SUB
 39          KM        RUNOFF FROM SUB-BASIN 40
 40          BA   .5844
 41          LS             83     9.9
 42          UK    160   .0627     .20     100
 43          RK   7000   .0350    .045           TRAP      20       3

 44          KK    C40
 45          KM        COMBINE HYDROGRAPHS SUB 39 & SUB 40
 46          HC      2
```



```
LINE         ID.......1.......2.......3.......4.......5.......6.......7.......8.......9......10

 47          KK    R41
 48          KM        ROUTE C40 TO D.S. END OF SUB 41
 49          RS      1    FLOW      -1
 50          RC   .055    .040    .055    9400   .0282
 51          RX      0       1     101     107     157     163     263     264
 52          RY     10       8       3       0       0       3       8      10

 53          KK     41     SUB
 54          KM        RUNOFF FROM SUB-BASIN 41
 55          BA   .8270
 56          LS             74    10.1
 57          UK    280   .2386     .20     100
 58          RK   9400   .0282    .045           TRAP      50       3

 59          KK    C41
 60          KM        COMBINE HYDROGRAPHS R41 & SUB 41
 61          HC      2

 62          KK     42     SUB
 63          KM        RUNOFF FROM SUB-BASIN 42
 64          BA   .5844
 65          LS             78    23.3
 66          UK    280   .2386     .20     100
 67          RK   8750   .0573    .045           TRAP      20       3

 68          KK     43     SUB
 69          KM        RUNOFF FROM SUB-BASIN 43
```

```
 70          BA  1.0665
 71          LS              85    10.5
 72          UK     260   .0515     .20     100
 73          RK    7400   .0255    .045            TRAP      25       3

 74          KK      44     SUB
 75          KM        RUNOFF FROM SUB-BASIN 44
 76          BA   .8389
 77          LS              85     8.1
 78          UK     260   .0515     .20     100
 79          RK    9840   .0622    .045            TRAP      25       3

 80          KK     C44
 81          KM        COMBINE HYDROGRAPHS SUB 43 & SUB 44
 82          HC       2

 83          KK     R45
 84          KM        ROUTE C44 TO D.S. END OF SUB 45
 85          RS       1    FLOW      -1
 86          RC    .055    .040    .055    3600   .0366
 87          RX       0       1     101     107     137     143     243     244
 88          RY      10       8       3       0       0       3       8      10
1                                          HEC-1 INPUT                                                    PAGE  3

LINE         ID.......1.......2.......3.......4.......5.......6.......7.......8.......9......10


 89          KK      45     SUB
 90          KM        RUNOFF FROM SUB-BASIN 45
 91          BA   .2037
 92          LS              81    14.5
 93          UK     125   .1166     .20     100
 94          RK    3600   .0366    .045            TRAP      30       3

 95          KK     C45
 96          KM        COMBINE HYDROGRAPHS R45 & SUB 45
 97          HC       2

 98          KK     45A     SUB
 99          KM        RUNOFF FROM SUB-BASIN 45A
100          BA   .1720
101          LS              86     6.9
102          UK     275   .2200     .20     100
103          RK    5400   .0411    .045            TRAP      15       3

104          KK      46     SUB
105          KM        RUNOFF FROM SUB-BASIN 46
106          BA   .9268
107          LS              86     3.7
108          UK     265   .4958     .20     100
109          RK    3300   .2271    .045    .111    TRAP      10       3
110          RK    7100   .0535    .045            TRAP      25       3

111          KK     C46
112          KM        COMBINE HYDROGRAPHS C45, SUB 45A, & SUB 46
113          HC       3

114          KK     R47
115          KM        ROUTE C46 TO D.S. END OF SUB 47
116          RS       1    FLOW      -1
```

```
117          RC    .055    .040    .055    7600   .0268
118          RX       0       1     101     109     159     167     267     268
119          RY      10       9       4       0       0       4       9      10

120          KK      47     SUB
121          KM        RUNOFF FROM SUB-BASIN 47
122          BA   .3757
123          LS              77     8.6
124          UK     375   .1000     .20     100
125          RK    9300   .0357    .045            TRAP      50       3

126          KK   C47.1
127          KM        COMBINE HYDROGRAPHS SUB 47 & R47
128          HC       2

129          KK   C47.2
130          KM        COMBINE HYDROGRAPHS C47.1, C41 & SUB 42
131          HC       3
```



```
LINE         ID.......1.......2.......3.......4.......5.......6.......7.......8.......9......10


132          KK     R50
133          KM        ROUTE C47.2 TO D.S. END OF SUB 50 (BEGINNING OF REATA DESERT
134          KM        GREENBELT CHANNEL)
135          RS       1    FLOW      -1
136          RC    .055    .040    .055    1000   .0200
137          RX       0      35     135     150     225     240     340     375
138          RY      10       3       3       0       0       3       3      10

139          KK      50     SUB
140          KM        RUNOFF FROM SUB-BASIN 50
141          BA   .4052
142          LS              83     3.3
143          UK     300   .3555     .20     100
144          RK     730   .1506    .045    .036    TRAP      10       3
145          RK    6400   .0453    .045            TRAP      25       3

146          KK     C50
147          KM        COMBINE HYDROGRAPHS OF SUB 50 AND R50
148          KM        THIS IS THE TOTAL DISCHARGE TO THE REATA PASS ALLUVIAL FAN APEX
149          HC       2

150          KK     R48
151          KM        ROUTE C50 TO OUTLET OF SUB 48
152          RS       1    FLOW      -1
153          RC    .055    .040    .055    2900   .0345
154          RX       0      35     135     150     225     240     340     375
155          RY      10       3       3       0       0       3       3      10

156          KK      48     SUB
157          KM        RUNOFF FROM SUB-BASIN 48
158          BA   .1203
159          LS              72     6.8
160          UK     175   .1400     .15     100
161          RK    2900   .0345    .045            TRAP      50       3

162          KK     C48
163          KM        COMBINE HYDROGRAPHS R48 & SUB 48
```

```
164          HC       2

165          KK   R2000
166          KM        ROUTE C48 TO D.S. END OF SUB 2000
167          RS       1    FLOW      -1
168          RC    .055    .045    .055    1300   .0308
169          RX       0      35     135     150     225     240     340     375
170          RY      10       3       3       0       0       3       3      10

171          KK    2000     SUB
172          KM        RUNOFF FROM SUB 2000
173          BA   .8853
174          PH                     .72    1.41    2.47    2.77    2.97    3.35
175          LS              84     2.9
176          UK     400   .2750     .25     100
177          RK    2625   .0785    .045    .072    TRAP      10       3
178          RK    3600   .0222    .045            TRAP      25       3
```



```
LINE         ID.......1.......2.......3.......4.......5.......6.......7.......8.......9......10

179          KK   C2000
180          KM        COMBINE HYDROGRAPHS OF R2000 & SUB 2000
181          HC       2

182          KK   R2010
183          KM        ROUTE C2000 TO D.S. END OF SUB 2010
184          RS       1    FLOW      -1
185          RC    .055    .045    .055    1300   .0308
186          RX       0      35     135     150     225     240     340     375
187          RY      10       3       3       0       0       3       3      10

188          KK    2010     SUB
189          KM        RUNOFF FROM SUB-BASIN 2010
190          BA   .0413
191          LS              83     3.7
192          UK     800   .6425    0.30     100
193          RK    1300   .0308   0.045            TRAP      50       3

194          KK   C2010
195          KM        COMBINE HYDROGRAPHS R2010 & SUB 2010
196          HC       2

197          KK  2015A1
198          KM        ROUTE C2010 TO D.S. END OF SUB 2015A
199          RS       1    FLOW      -1
200          RC    .055    .045    .055    4800   .0292
201          RX       0      35     135     150     225     240     340     375
202          RY      10       3       3       0       0       3       3      10

203          KK   2015A     SUB
204          KM        RUNOFF FROM SUB-BASIN 2015A
205          BA   .3619
206          LS              82     7.7
207          UK     500   .2800     .25     100
208          RK    2400   .1358    .045    .061    TRAP      10       3
209          RK    5300   .0200    .045            TRAP     150       5

210          KK    2020     SUB
```

```
211          KM        RUNOFF FROM SUB-BASIN 2020
212          BA   .1090
213          LS              85     4.1
214          UK     205   .6969    0.30     100
215          RK     900   .3889    .045    .011    TRAP      10       3
216          RK    2800  0.1428    .045            TRAP      20       3

217          KK  2015A2
218          KM        ROUTE SUB 2020 TO D.S. END OF SUB 2015A
219          RS       1    FLOW      -1
220          RC    .055    .045    .055    1600    .025
221          RX       0      .1       2      32      67      97    98.9      99
222          RY      15      10      10       0       0      10      10      15
                                        HEC-1 INPUT                                                    PAGE  6

LINE         ID.......1.......2.......3.......4.......5.......6.......7.......8.......9......10


223          KK  2015A1
224          KM        COMBINE HYDROGRAPHS OF (R)2015A1, SUB 2015A & (R)2015A2
225          HC       3

226          KK    2040     SUB
227          KM        RUNOFF FROM SUB-BASIN 2040
228          BA   .9290
229          LS              82     8.3
230          UK     463   .4072    0.25     100
231          RK    2700   .1878    .045    .056    TRAP      10       3
232          RK    6800   .0485    .045            TRAP      25       3

233          KK    2050     SUB
234          KM        RUNOFF FROM SUB-BASIN 2050
235          BA   .8580
236          LS              81     9.8
237          UK     530   .5726    0.25     100
238          RK    3400   .2067    .045    .086    TRAP      10       3
239          RK    6200   .0693    .045            TRAP      25       5

240          KK   C2050
241          KM        COMBINE HYDROGRAPHS OF SUB 2040 & SUB 2050
242          HC       2

243          KK   R2060
244          KM        ROUTE C2050 TO OUTLET OF SUB 2060
245          RS       1    FLOW      -1
246          RC    .055    .045    .055    3900   .0310
247          RX       0       3      53      57      87      91     141     144
248          RY      10       4       2       0       0       2       4      10

249          KK    2060     SUB
250          KM        RUNOFF FROM SUB-BASIN 2060
251          BA   .2169
252          LS              71    17.8
253          UK     217   .1667     .20     100
254          RK    2275   .0929    .045    .031    TRAP      10       5
255          RK    3900   .0310    .055            TRAP      30      15

256          KK  2060.1
257          KM        COMBINE HYDROGRAPHS OF R2060 & SUB 2060
258          HC       2
```

```
259          KK  2060.2
260          KM        COMBINE HYDROGRAPHS OF (C)2060.1 & (C)2015A1
261          HC       2

262          KK    2065     SUB
263          KM        RUNOFF FROM SUB-BASIN 2065
264          BA   .1720
265          LS              69    31.5
266          UK     200    .050      .2     100
267          RK    6500   .0508    .055            TRAP      30      15
```



```
LINE         ID.......1.......2.......3.......4.......5.......6.......7.......8.......9......10

268          KK   R2060
269          KM        ROUTE  SUB 2065 TO D.S. END OF SUB 2060
270          RS       1    FLOW      -1
271          RC    .055    .045    .055    1600   .0267
272          RX       0       3      53      57      87      91     141     144
273          RY      10       4       2       0       0       2       4      10

274          KK  2060.3
275          KM        COMBINE R2060 & (C)2060.2
276          HC       2

277          KK   2030C     SUB
278          KM        RUNOFF FROM SUB-BASIN 2030C
279          BA   .0723
280          LS              63    27.3
281          UK     155   .0614     .15     100
282          RK    3000   .0300    .045            TRAP       5       5

283          KK   2015B     SUB
284          KM        RUNOFF FROM SUB-BASIN 2015B
285          BA   .0545
286          LS              60    15.4
287          UK     500   .2800     .25     100
288          RK    4000   .0288    .045            TRAP      25       5

289          KK  C2015B
290          KM        COMBINE HYDROGRAPHS OF SUB 2015B & SUB 2030C
291          HC       2

292          KK  2060.4
293          KM        COMBINE HYDROGRAPHS OF C2015B & (C)2060.3
294          HC       2

295          KK  R2080A
296          KM        ROUTE (C)2060.4 TO OUTLET OF SUB 2080A
297          RS       1    FLOW      -1
298          RC    .055    .045    .055    5500   .0291
299          RX       0      35     135     150     225     240     340     375
300          RY      10       3       3       0       0       3       3      10

301          KK   2080A     SUB
302          KM        RUNOFF FROM SUB 2080A
303          BA   .4186
304          LS              69    24.1
```

```
305          UK     155   .0614     .15     100
306          RK    5500   .0291    .045            TRAP       7       5

307          KK  C2080A
308          KM        COMBINE HYDROGRAPHS OF R2080A & SUB 2080A
309          HC       2
```



```
LINE         ID.......1.......2.......3.......4.......5.......6.......7.......8.......9......10


310          KK   R2090
311          KM        ROUTE C2080A TO D.S. OF SUB 2090 (UNION HILL DR.)
312          RS       1    FLOW      -1
313          RC    .055    .045    .055    1400   .0214
314          RX       0      35     135     150     225     240     340     375
315          RY      10       3       3       0       0       3       3      10

316          KK    2090     SUB
317          KM        RUNOFF FROM SUB 2090
318          BA   .2220
319          LS              74    32.1
320          UK     337   .0324     .15     100
321          RK    5000   .0280    .045            TRAP      25       3

322          KK   C2090
323          KM        COMBINE HYDROGRAPHS OF R2090 & SUB 2090
324          HC       2

325          KK  2160A1
326          KM        ROUTE C2090 TO D.S. END OF SUB 2160A THRU DESERT GREENBELT
327          RS       1    FLOW      -1
328          RC    .055    .045    .055    5300   .0208
329          RX       0      35     135     150     225     240     340     375
330          RY      10       3       3       0       0       3       3      10

331          KK   2160A     SUB
332          KM        RUNOFF FROM SUB-BASIN 2160A
333          BA   .4713
334          LS              74    32.1
335          UK     337   .0324     .15     100
336          RK    5300   .0208    .045            TRAP      25       3

337          KK    2070     SUB
338          KM        RUNOFF FROM SUB-BASIN 2070
339          BA  1.4649
340          LS              84     4.1
341          UK     400   .5174     .30     100
342          RK    1750   .2962    .045    .048    TRAP       5       3
343          RK    3500   .1236    .045    .483    TRAP      10       3
344          RK    3400   .0882    .045            TRAP      30      10

345          KK   R2130
346          KM        ROUTE SUB 2070 TO OUTLET OF SUB 2130
347          RS       1    FLOW      -1
348          RC    .055    .045    .055    3600   .0555
349          RX       0       5     105     107     137     139     239     244
350          RY      10       5       1       0       0       1       5      10

351          KK    2130     SUB
```

```
352          KM        RUNOFF FROM SUB-BASIN 2130
353          BA   .2510
354          LS              86     7.1
355          UK     267   .3126     .20     100
356          RK    9240   .0941    .045            TRAP      30      20
```



```
LINE         ID.......1.......2.......3.......4.......5.......6.......7.......8.......9......10


357          KK   C2130
358          KM        COMBINE HYDROGRAPHS OF R2130 & SUB 2130
359          HC       2

360          KK    2133     DIV
361          KM        DIVERT FLOW FROM SUB 2130 TO SUB 2080B (DIV 2133)
362          KM        DIVERT FLOW FROM SUB 2130 TO SUB 2135 (RET 2134)
363          DT    2134
364          DI       0     500    1000    6000
365          DQ       0     500     850    4350

366          KK  R2080B
367          KM        ROUTE NON-DIVERTED FLOW FROM DIV 2133 TO DS. END OF SUB 2080B
368          RS       1    FLOW      -1
369          RC    .055    .045    .055    5000   .0440
370          RX       0       3      53      57      87      91     141     144
371          RY      10       4       2       0       0       2       4      10

372          KK   2080B     SUB
373          KM        RUNOFF FROM SUB-BASIN 2080B
374          BA   .1190
375          LS              74    32.1
376          UK     175   .0571     .15     100
377          RK    5000   .0440    .045            TRAP      30      15

378          KK  C2080B
379          KM        COMBINE HYDROGRAPHS OF R2080B & SUB 2080B
380          HC       2   .4622

381          KK  2140B1
382          KM        ROUTE C2080B ALONG THOMPSON PEAK PARKWAY THROUGH
383          KM        SHOTCRETE-LINED COLLECTOR TO D.S. END OF SUB 2140B
384          RS       1    FLOW      -1
385          RC    .019    .019    .019    1900   .0158
386          RX       0       8      24      40      44      60      76      84
387          RY      10       8       4       0       0       4       8      10

388          KK   2140B     SUB
389          KM        RUNOFF FROM SUB-BASIN 2140B
390          BA   .0925
391          LS              74    32.1
392          UK     200   .0500     .15     100
393          RK    1820   .0461    .045            TRAP      20      10

394          KK    2134     RET
395          KM        RETRIEVE DIVERTED FLOW FROM DIV 2133
396          DR    2134

397          KK   R2135
398          KM        ROUTE RET 2134 TO OUTLET OF SUB 2135
```

```
399          RS      1    FLOW      -1
400          RC   .055    .045    .055    2700   .0444
401          RX      0     0.1       2      22      42      62    63.9      64
402          RY     15      10      10       0       0      10      10      15
```



```
LINE         ID.......1.......2.......3.......4.......5.......6.......7.......8.......9......10

403          KK   2135     SUB
404          KM        RUNOFF FROM SUB-BASIN 2135
405          BA  .0750
406          LS              86    19.3              74    19.3
407          UK    800   .4000     .30      40
408          UK    200   .0500     .15      60
409          RK   2700   .0444    .045            TRAP      20       2

410          KK  C2135
411          KM        COMBINE HYDROGRAPHS OF R2135 & SUB 2135
412          KM        DRAINAGE AREA ADJUSTMENT MADE TO REFLECT DIVERSION OF U.S. AREAS
413          HC      2  1.4477

414          KK 2140B2
415          KM        ROUTE C2135 TO D.S. END OF SUB 2140B
416          RS      1    FLOW      -1
417          RC   .055    .045    .055    1600   .0500
418          RX      0      .1       2      22      42      62    63.9      64
419          RY     15      10      10       0       0      10      10      15

420          KK C2140B
421          KM        COMBINE HYDROGRAPHS OF (R)2140B1, (R)2140B2 & SUB 2140B
422          HC      3

423          KK 2160B1
424          KM        ROUTE C2140B THROUGH EARTHEN-LANDSCAPED COLLECTOR TO D.S.
425          KM        END OF SUB 2160B
426          RS      1    FLOW      -1
427          RC   .045    .045    .045    4600   .0326
428          RX      0      24      32      40      65      73      81     105
429          RY     10       4       2       0       0       2       4      10

430          KK   2150     SUB
431          KM        RUNOFF FROM SUB-BASIN 2150
432          BA  .6873
433          LS              86    15.0              74    15.0
434          UK    350   .3428     .30      50
435          UK    180   .0555     .15      50
436          RK   1785   .1313    .045    .027    TRAP      10       3
437          RK   6400   .0312    .045            TRAP      20      10

438          KK 2160B2
439          KM        ROUTE SUB 2150 TO D.S. END OF SUB 2160B
440          RS      1    FLOW      -1
441          RC   .045    .045    .045    1000   .0200
442          RX      0      24      32      40      65      73      81     105
443          RY     10       4       2       0       0       2       4      10

444          KK  2140A     SUB
445          KM        RUNOFF FROM SUB-BASIN 2140A
446          BA  .2335
```

```
447          LS              74    32.1
448          UK     200   .0500     .15     100
449          RK     800   .0500    .045   .0244    TRAP      15       3
```



```
LINE         ID.......1.......2.......3.......4.......5.......6.......7.......8.......9......10

450          RK    4600   .0326    .045            TRAP      17       5

451          KK   2160B     SUB
452          KM        RUNOFF FROM SUB-BASIN 2160B
453          BA   .1412
454          LS              75    19.3
455          UK     337   .0324     .15     100
456          RK    2275   .0527    .045   .0361    TRAP      15       3
457          RK    1400   .0241    .045            TRAP      17       5

458          KK  C2160B
459          KM        COMBINE HYDROGRAPHS OF(R)2160B1, (R)2160B2, SUB 2140 & SUB 2160B
460          HC       4

461          KK  2160A2
462          KM        ROUTE C2160B THROUGH EARTHEN LANDSCAPED COLLECTOR TO D.S.
463          KM        END OF SUB 2160A
464          RS       2    FLOW      -1
465          RC    .045    .045    .045    4720   .0169
466          RX       0      24      32      40      65      73      81     105
467          RY      10       4       2       0       0       2       4      10

468          KK   2170B     SUB
469          KM        RUNOFF FROM SUB-BASIN 2170B
470          BA   .1312
471          LS              74    34.5
472          UK     250   .0266     .15     100
473          RK    4640   .0457    .045            TRAP      20       5

474          KK    2180     SUB
475          KM        RUNOFF FROM SUB-BASIN 2180
476          BA  1.0044
477          LS              86     1.4
478          UK     468   .4496     .30     100
479          RK    3100   .2558    .045    .121    TRAP      10       3
480          RK    8200   .0731    .045            TRAP      20       5

481          KK   R2190
482          KM        ROUTE SUB 2180 TO OUTLET OF SUB 2190
483          RS       3    FLOW      -1
484          RC    .055    .040    .055    4100   .0390
485          RX       0       7     107     111     141     145     245     252
486          RY      10       3       2       0       0       2       3      10

487          KK    2190     SUB
488          KM        RUNOFF FROM SUB-BASIN 2190
489          BA   .1227
490          LS              79    18.0
491          UK     190   .0915     .15     100
492          RK    4100   .0390    .045            TRAP      30      10
```



```
LINE         ID.......1.......2.......3.......4.......5.......6.......7.......8.......9......10
```

```
493          KK   C2190
494          KM        COMBINE HYDROGRAPHS OF R2190 & SUB 2190
495          HC       2

496          KK    2200     SUB
497          KM        RUNOFF FROM SUB-BASIN 2200
498          BA   .2532
499          LS              81     6.3
500          UK     353   .1529     .20     100
501          RK    6150   .0838    .045            TRAP       5      11

502          KK   2210A     SUB
503          KM        RUNOFF FROM SUB-BASIN 2210A
504          BA  1.5847
505          LS              82     2.0
506          UK     248   .3717     .30     100
507          RK    4500   .1875    .045    .107    TRAP      10       3
508          RK    4800   .0526    .045            TRAP      20      10

509          KK  2210B1
510          KM        ROUTE SUB 2210A THRU WIDE BRAIDED WASH ALONG NORTH
511          KM        SIDE OF PARCELS N & O
512          RS       1    FLOW      -1
513          RC    .065    .055    .065    3500   .0476
514          RX       0       1      51      52     152     153     203     204
515          RY      10       3       1       0       0       1       3      10

516          KK  2210B2
517          KM        ROUTE (R)2210B1 THRU INCISED WASH ALONG NORTH SIDE OF PARCEL N.
518          KM        RD RECORD USED TO PROMOTE FLOW CONTINUITY
519          RD
520          RC    .065    .050    .065    2140   .0417
521          RX       0       1       2      22      45      65      66      67
522          RY      10      10      10       0       0      10      10      10

523          KK   2210B     SUB
524          KM        RUNOFF FROM SUB-BASIN 2210B
525          BA   .1916
526          LS              74     7.8
527          UK     248   .3717     .25     100
528          RK    5640   .0444    .050            TRAP      50       4

529          KK  2210B1
530          KM        COMBINE HYDROGRAPHS OF SUB 2210B & (R)2210B2
531          HC       2

532          KK  2210B2
533          KM        COMBINE HYDROGRAPHS OF (C)2210B1 & SUB 2200
534          HC       2
```



```
LINE         ID.......1.......2.......3.......4.......5.......6.......7.......8.......9......10

535          KK  2210B3
536          KM        COMBINE HYDROGRAPHS OF (C)2210B2, C2190 &  SUB 2710B
537          KM        THIS IS THE TOTAL FLOW AT THE INTERSECTION OF TTP & PROP. STATE LAND CH.
538          HC       3
```

```
539          KK  R2170A
540          KM        ROUTE (C)2210B3 ALONG SHOTCRETE -LINED COLLECTOR TO OUTLET OF SUB 2170A
541          RS       1    FLOW      -1
542          RC    .019    .019    .019    3600   .0194
543          RX       0       8      24      40      44      60      76      84
544          RY      10       8       4       0       0       4       8      10

545          KK   2170A     SUB
546          KM        RUNOFF FROM SUB-BASIN 2170A
547          BA   .1227
548          LS              74    24.2
549          UK     250   .0266     .15     100
550          RK    1920   .0250    .045            TRAP      20       5

551          KK  C2170A
552          KM        COMBINE HYDROGRAPHS OF R2170A & SUB 2170A
553          HC       2

554          KK  2160A3
555          KM        ROUTE C2170A ALONG SHOTCRETE-LINED CHANNEL TO OUTLET OF SUB 2160A
556          RS       1    FLOW      -1
557          RC    .019    .019    .019     400   .0125
558          RX       0       8      24      40      44      60      76      84
559          RY      10       8       4       0       0       4       8      10

560          KK  C2160A
561          KM        COMBINE HYDROGRAPHS OF (R)2160A1, SUB 2160A, (R)2160A2 & (R)2160A3
562          HC       4

563          KK  R2160C
564          KM        ROUTE C2160A TO OUTLET OF SUB 2160C
565          RS       1    FLOW      -1
566          RC    .055    .045    .055    2036   .0144
567          RX       0      35     135     150     225     240     340     375
568          RY      10       3       3       0       0       3       3      10

569          KK   2160C     SUB
570          KM        RUNOFF FROM SUB 2160C
571          BA   .0261
572          LS              74    32.1
573          UK     337   .0324     .15     100
574          RK    2036   .0144    .045            TRAP      75       5

575          KK  C2160C
576          KM        COMBINE HYDROGRAPHS OF SUB 2160C & R2160C
577          HC       2
```



```
LINE         ID.......1.......2.......3.......4.......5.......6.......7.......8.......9......10


578          KK   2220C     SUB
579          KM        RUNOFF FROM SUB 2220C
580          BA   .0268
581          LS              74    21.9
582          UK     200     .05     .15     100
583          RK    2235   .0434    .045            TRAP       7       3

584          KK  R2170C
```

```
632          HC       2

633          KK  R2170F
634          KM        ROUTE C2170E TO CAP DIKE 4
635          RS       1    FLOW      -1
636          RC    .055    .045    .055     850   .0179
637          RX       0      35     135     150     225     240     340     375
638          RY      10       3       3       0       0       3       3      10

639          KK   2170F     SUB
640          KM        RUNOFF FROM SUB-BASIN 2170F
641          BA   .0091
642          LS              74    32.1
643          UK     337   .0324     .15     100
644          RK     850   .0179    .045            TRAP      75       5

645          KK  C2170F
646          KM        COMBINE HYDROGRAPHS OF R2170F & SUB 2170F
647          KM        THIS IS TOTAL FLOW THAT EXITS THE REGIONAL CHANNEL AT CAP DIKE 4
648          HC       2
649          ZZ
```

1

```
                SCHEMATIC DIAGRAM OF STREAM NETWORK
 INPUT
  LINE      (V) ROUTING          (--->) DIVERSION OR PUMP FLOW

   NO.      (.) CONNECTOR        (<---) RETURN OF DIVERTED OR PUMPED FLOW

   32          39
                .
                .
   38           .          40
                .           .
                .           .
   44         C40............
                V
                V
   47         R41
                .
                .
   53           .          41
                .           .
                .           .
   59         C41............
                .
                .
   62           .          42
                .           .
                .           .
   68           .           .          43
                .           .           .
                .           .           .
   74           .           .           .          44
                .           .           .           .
                .           .           .           .
   80           .           .         C44............
                .           .           V
                .           .           V
   83           .           .         R45
                .           .           .
```

```
          .          .          .
89        .          .          .         45
          .          .          .          .
          .          .          .          .
95        .          .        C45............
          .          .          .
          .          .          .
98        .          .          .        45A
          .          .          .          .
          .          .          .          .
104       .          .          .          .         46
          .          .          .          .          .
          .          .          .          .          .
111       .          .        C46........................
          .          .          V
          .          .          V
114       .          .        R47
          .          .          .
          .          .          .
120       .          .          .         47
          .          .          .          .
          .          .          .          .
126       .          .      C47.1............
          .          .          .
          .          .          .
129     C47.2........................
          V
          V
132     R50
          .
          .
139       .         50
          .          .
          .          .
146     C50............
          V
          V
150     R48
          .
          .
156       .         48
          .          .
          .          .
162     C48............
          V
          V
165     R2000
          .
          .
171       .       2000
          .          .
          .          .
179     C2000............
          V
          V
182     R2010
          .
          .
188       .       2010
          .          .
```

```
          .          .
194     C2010............
          V
          V
197     2015A1
          .
          .
203       .       2015A
          .          .
          .          .
210       .          .        2020
          .          .          V
          .          .          V
217       .          .      2015A2
          .          .          .
          .          .          .
223     2015A1......................
          .
          .
226       .        2040
          .          .
          .          .
233       .          .        2050
          .          .          .
          .          .          .
240       .       C2050............
          .          V
          .          V
243       .       R2060
          .          .
          .          .
249       .          .        2060
          .          .          .
          .          .          .
256       .      2060.1...........
          .          .
          .          .
259     2060.2...........
          .
          .
262       .        2065
          .          V
          .          V
268       .       R2060
          .          .
          .          .
274     2060.3...........
          .
          .
277       .       2030C
          .          .
          .          .
283       .          .       2015B
          .          .          .
          .          .          .
289       .      C2015B...........
          .          .
          .          .
292     2060.4...........
          V
```

```
            V
295      R2080A
            .
            .
301         .        2080A
            .           .
            .           .
307      C2080A............
            V
            V
310       R2090
            .
            .
316         .         2090
            .           .
            .           .
322       C2090............
            V
            V
325      2160A1
            .
            .
331         .        2160A
            .           .
            .           .
337         .           .        2070
            .           .           V
            .           .           V
345         .           .       R2130
            .           .           .
            .           .           .
351         .           .           .        2130
            .           .           .           .
            .           .           .           .
357         .           .       C2130............
            .           .           .
            .           .           .
363         .           .           .-------->    2134
360         .           .        2133
            .           .           V
            .           .           V
366         .           .      R2080B
            .           .           .
            .           .           .
372         .           .           .       2080B
            .           .           .           .
            .           .           .           .
378         .           .      C2080B............
            .           .           V
            .           .           V
381         .           .      2140B1
            .           .           .
            .           .           .
388         .           .           .       2140B
            .           .           .           .
            .           .           .           .
396         .           .           .           .           .<-------    2134
394         .           .           .           .       2134
            .           .           .           .           V
            .           .           .           .           V
```

```
397     .       .       .       .   R2135
        .       .       .       .      .
        .       .       .       .      .
403     .       .       .       .      .       2135
        .       .       .       .      .         .
        .       .       .       .      .         .
410     .       .       .       .   C2135............
        .       .       .       .      V
        .       .       .       .      V
414     .       .       .       .  2140B2
        .       .       .       .      .
        .       .       .       .      .
420     .       .  C2140B........................
        .       .       V
        .       .       V
423     .       .  2160B1
        .       .       .
        .       .       .
430     .       .       .    2150
        .       .       .       V
        .       .       .       V
438     .       .       .   2160B2
        .       .       .       .
        .       .       .       .
444     .       .       .       .   2140A
        .       .       .       .      .
        .       .       .       .      .
451     .       .       .       .      .       2160B
        .       .       .       .      .         .
        .       .       .       .      .         .
458     .       .  C2160B...................................
        .       .       V
        .       .       V
461     .       .  2160A2
        .       .       .
        .       .       .
468     .       .       .    2170B
        .       .       .       .
        .       .       .       .
474     .       .       .       .    2180
        .       .       .       .       V
        .       .       .       .       V
481     .       .       .       .   R2190
        .       .       .       .      .
        .       .       .       .      .
487     .       .       .       .      .       2190
        .       .       .       .      .         .
        .       .       .       .      .         .
493     .       .       .       .   C2190............
        .       .       .       .      .
        .       .       .       .      .
496     .       .       .       .      .       2200
        .       .       .       .      .         .
        .       .       .       .      .         .
502     .       .       .       .      .         .     2210A
        .       .       .       .      .         .       V
        .       .       .       .      .         .       V
509     .       .       .       .      .         .   2210B1
        .       .       .       .      .         .       V
        .       .       .       .      .         .       V
```

```
516          .          .          .          .          .          .     2210B2
             .          .          .          .          .          .          .
             .          .          .          .          .          .          .
523          .          .          .          .          .          .          .     2210B
             .          .          .          .          .          .          .          .
             .          .          .          .          .          .          .          .
529          .          .          .          .          .          .     2210B1............
             .          .          .          .          .          .          .
             .          .          .          .          .          .          .
532          .          .          .          .          .  2210B2............
             .          .          .          .          .          .
             .          .          .          .          .          .
535          .          .          .  2210B3........................
             .          .          .          V
             .          .          .          V
539          .          .          .  R2170A
             .          .          .          .
             .          .          .          .
545          .          .          .          .     2170A
             .          .          .          .          .
             .          .          .          .          .
551          .          .          .  C2170A............
             .          .          .          V
             .          .          .          V
554          .          .          .  2160A3
             .          .          .          .
             .          .          .          .
560     C2160A..................................
             V
             V
563     R2160C
             .
             .
569          .     2160C
             .          .
             .          .
575     C2160C............
             .
             .
578          .     2220C
             .          V
             .          V
584          .   R2170C
             .          .
             .          .
590          .          .     2170C
             .          .          .
             .          .          .
596          .   C2170C............
             .          V
             .          V
599          .   R2170D
             .          .
             .          .
605          .          .     2170D
             .          .          .
             .          .          .
611          .   C2170D............
             .          .
             .          .
```

```
614      2160C2............
             V
             V
617      R2170E
             .
             .
623          .       2170E
             .           .
             .           .
629      C2170E............
             V
             V
633      R2170F
             .
             .
639          .       2170F
             .           .
             .           .
645      C2170F............
```

(***) RUNOFF ALSO COMPUTED AT THIS LOCATION

```
1****************************************
*                                      *
*   FLOOD HYDROGRAPH PACKAGE  (HEC-1)  *
*            SEPTEMBER 1990            *
*             VERSION 4.0              *
*                                      *
*  RUN DATE  01/11/1995  TIME  14:07:47 *
*                                      *
****************************************
```

```
****************************************
*                                      *
*    U.S. ARMY CORPS OF ENGINEERS      *
*    HYDROLOGIC ENGINEERING CENTER     *
*          609 SECOND STREET           *
*       DAVIS, CALIFORNIA 95616        *
*           (916) 756-1104             *
*                                      *
****************************************
```

DESERT GREENBELT STUDY BY GREINER, INC.
1992 MODELING REVISIONS BASED ON REATA PASS SENSITIVITY ANALYSIS
MODEL 3  FILE NAME: REAT3.DAT

REATA HYDROLOGY -PROP. CONDITIONS W/ FUTURE LAND USE
ORIGINAL MODEL RPBW1 BY ROBERT L. WARD
100-YEAR 6-HOUR STORM (AMC TYPE II)

SUB-BASINS 39 THRU 50 & 2000 THRU 2220C
WITH GREENBELT REGIONAL CHANNEL IN PLACE IN SUB 48, 50, 2000, 2010,
2015A, 2080A AND PARALLEL 96TH STREET TO CAP DIKE 4

PH CARD FOR SUB 30 TO SUB 50
CHANGE PH CARD FOR SUB 2000 AND DOWNSTREAM
USE JD CARDS
CONSTRUCT LEVEE IN SUB 2065 TO DIRECT 100% RUNOFF FROM SUB 2070 TO 2130
SPLIT FLOWS FROM SUB 2130 TO 2135 AND 2080B
STATE LAND CHANNEL ALIGNMENT INCORPORATED
NEW TPP ALIGNMENT AS OF AUG 1, 1994

```
21 IO          OUTPUT CONTROL VARIABLES
                     IPRNT          5  PRINT CONTROL
                     IPLOT          0  PLOT CONTROL
                     QSCAL         0.  HYDROGRAPH PLOT SCALE
```

```
IT          HYDROGRAPH TIME DATA
                 NMIN          5  MINUTES IN COMPUTATION INTERVAL
                IDATE     10CT94  STARTING DATE
                ITIME       0000  STARTING TIME
                   NQ        300  NUMBER OF HYDROGRAPH ORDINATES
               NDDATE     20CT94  ENDING DATE
               NDTIME       0055  ENDING TIME
               ICENT          19  CENTURY MARK

          COMPUTATION INTERVAL     .08 HOURS
               TOTAL TIME BASE   24.92 HOURS

     ENGLISH UNITS
          DRAINAGE AREA          SQUARE MILES
          PRECIPITATION DEPTH    INCHES
          LENGTH, ELEVATION      FEET
          FLOW                   CUBIC FEET PER SECOND
          STORAGE VOLUME         ACRE-FEET
          SURFACE AREA           ACRES
          TEMPERATURE            DEGREES FAHRENHEIT

22 JD       INDEX STORM NO. 1
                 STRM        3.39  PRECIPITATION DEPTH
                 TRDA         .00  TRANSPOSITION DRAINAGE AREA

23 PI         PRECIPITATION PATTERN
                .01       .01       .01       .01       .01       .01       .01       .01       .01       .01
                .01       .01       .01       .01       .01       .01       .01       .01       .01       .02
                .02       .02       .02       .02       .02       .02       .02       .03       .03       .03
                .08       .09       .10       .15       .20       .41       .72       .28       .17       .11
                .09       .08       .03       .03       .03       .03       .02       .02       .02       .02
                .02       .02       .02       .01       .01       .01       .01       .01       .01       .01
                .01       .01       .01       .01       .01       .01       .01       .01       .01       .01
                .01       .01

24 JD       INDEX STORM NO. 2
                 STRM        3.39  PRECIPITATION DEPTH
                 TRDA         .00  TRANSPOSITION DRAINAGE AREA

23 PI         PRECIPITATION PATTERN
                .01       .01       .01       .01       .01       .01       .01       .01       .01       .01
                .01       .01       .01       .01       .01       .01       .01       .01       .01       .02
                .02       .02       .02       .02       .02       .02       .02       .03       .03       .03
                .08       .09       .10       .15       .20       .41       .72       .28       .17       .11
                .09       .08       .03       .03       .03       .03       .02       .02       .02       .02
                .02       .02       .02       .01       .01       .01       .01       .01       .01       .01
                .01       .01       .01       .01       .01       .01       .01       .01       .01       .01
                .01       .01

25 JD       INDEX STORM NO. 3
                 STRM        3.39  PRECIPITATION DEPTH
                 TRDA         .01  TRANSPOSITION DRAINAGE AREA

23 PI         PRECIPITATION PATTERN
                .01       .01       .01       .01       .01       .01       .01       .01       .01       .01
                .01       .01       .01       .01       .01       .01       .01       .01       .01       .02
                .02       .02       .02       .02       .02       .02       .02       .03       .03       .03
                .08       .09       .10       .15       .20       .41       .72       .28       .17       .11
                .09       .08       .03       .03       .03       .03       .02       .02       .02       .02
                .02       .02       .02       .01       .01       .01       .01       .01       .01       .01
```

```
                .01      .01      .01      .01      .01      .01      .01      .01      .01      .01
                .01      .01

26 JD        INDEX STORM NO. 4
                 STRM        3.39  PRECIPITATION DEPTH
                 TRDA         .10  TRANSPOSITION DRAINAGE AREA

23 PI          PRECIPITATION PATTERN
                .01      .01      .01      .01      .01      .01      .01      .01      .01      .01
                .01      .01      .01      .01      .01      .01      .01      .01      .01      .02
                .02      .02      .02      .02      .02      .02      .02      .03      .03      .03
                .08      .09      .10      .15      .20      .41      .72      .28      .17      .11
                .09      .08      .04      .03      .03      .03      .02      .02      .02      .02
                .02      .02      .02      .01      .01      .01      .01      .01      .01      .01
                .01      .01      .01      .01      .01      .01      .01      .01      .01      .01
                .01      .01

27 JD        INDEX STORM NO. 5
                 STRM        3.39  PRECIPITATION DEPTH
                 TRDA         .50  TRANSPOSITION DRAINAGE AREA

23 PI          PRECIPITATION PATTERN
                .01      .01      .01      .01      .01      .01      .01      .01      .01      .01
                .01      .01      .01      .01      .01      .01      .01      .01      .01      .02
                .02      .02      .02      .02      .02      .02      .02      .03      .03      .03
                .08      .09      .10      .15      .20      .41      .72      .28      .17      .11
                .09      .08      .04      .03      .03      .03      .02      .02      .02      .02
                .02      .02      .02      .01      .01      .01      .01      .01      .01      .01
                .01      .01      .01      .01      .01      .01      .01      .01      .01      .01
                .01      .01

28 JD        INDEX STORM NO. 6
                 STRM        3.38  PRECIPITATION DEPTH
                 TRDA        1.00  TRANSPOSITION DRAINAGE AREA

23 PI          PRECIPITATION PATTERN
                .01      .01      .01      .01      .01      .01      .01      .01      .01      .01
                .01      .01      .01      .01      .01      .01      .01      .01      .01      .02
                .02      .02      .02      .02      .02      .02      .02      .03      .03      .03
                .08      .09      .10      .15      .19      .40      .71      .28      .17      .11
                .09      .08      .04      .03      .03      .03      .02      .02      .02      .02
                .02      .02      .02      .01      .01      .01      .01      .01      .01      .01
                .01      .01      .01      .01      .01      .01      .01      .01      .01      .01
                .01      .01

29 JD        INDEX STORM NO. 7
                 STRM        3.35  PRECIPITATION DEPTH
                 TRDA        5.00  TRANSPOSITION DRAINAGE AREA

23 PI          PRECIPITATION PATTERN
                .01      .01      .01      .01      .01      .01      .01      .01      .01      .01
                .01      .01      .01      .01      .01      .01      .01      .01      .01      .02
                .02      .02      .02      .02      .02      .02      .03      .03      .03      .03
                .08      .09      .10      .15      .19      .39      .70      .27      .16      .11
                .09      .08      .04      .03      .03      .03      .02      .02      .02      .02
                .02      .02      .02      .02      .02      .01      .01      .01      .01      .01
                .01      .01      .01      .01      .01      .01      .01      .01      .01      .01
                .01      .01

30 JD        INDEX STORM NO. 8
```

```
                STRM        3.21  PRECIPITATION DEPTH
                TRDA       25.00  TRANSPOSITION DRAINAGE AREA

23 PI        PRECIPITATION PATTERN
                .01       .01       .01       .01       .01       .01       .01       .01       .01       .01
                .01       .01       .01       .01       .01       .01       .01       .02       .02       .02
                .02       .02       .02       .02       .02       .03       .03       .03       .03       .04
                .08       .09       .10       .13       .17       .35       .61       .24       .15       .11
                .09       .08       .04       .03       .03       .03       .03       .02       .02       .02
                .02       .02       .02       .02       .02       .02       .01       .01       .01       .01
                .01       .01       .01       .01       .01       .01       .01       .01       .01       .01
                .01       .01

31 JD       INDEX STORM NO. 9
                STRM        3.09  PRECIPITATION DEPTH
                TRDA       50.00  TRANSPOSITION DRAINAGE AREA

23 PI        PRECIPITATION PATTERN
                .01       .01       .01       .01       .01       .01       .01       .01       .01       .01
                .01       .01       .01       .01       .01       .01       .02       .02       .02       .02
                .02       .02       .02       .02       .03       .03       .03       .03       .04       .04
                .08       .09       .10       .11       .15       .30       .54       .21       .13       .11
                .10       .09       .04       .04       .03       .03       .03       .03       .02       .02
                .02       .02       .02       .02       .02       .02       .01       .01       .01       .01
                .01       .01       .01       .01       .01       .01       .01       .01       .01       .01
                .01       .01

    *** FDKRUT - NEWTON RAPHSON FAILEDFIXED POINT ITERATION USED - ITERATION=  1


    *** FDKRUT - NEWTON RAPHSON FAILEDFIXED POINT ITERATION USED - ITERATION=  2


    *** FDKRUT - NEWTON RAPHSON FAILEDFIXED POINT ITERATION USED - ITERATION=  2

1
                                        RUNOFF SUMMARY
                                   FLOW IN CUBIC FEET PER SECOND
                                TIME IN HOURS,  AREA IN SQUARE MILES

                                 PEAK   TIME OF   AVERAGE FLOW FOR MAXIMUM PERIOD    BASIN   MAXIMUM   TIME OF
    OPERATION      STATION       FLOW    PEAK                                        AREA    STAGE   MAX STAGE
+                                                  6-HOUR     24-HOUR     72-HOUR

    HYDROGRAPH AT
+                     39       4167.    3.25        445.        113.        109.     1.88

    HYDROGRAPH AT
                      40       1443.    3.17        120.         30.         29.      .58

    2 COMBINED AT
                     C40       5282.    3.25        563.        142.        137.     2.47

    ROUTED TO
```

| | | | | | | | |
|---|---|---|---|---|---|---|---|
| + | R41 | 3804. | 3.33 | 560. | 142. | 137. | 2.47 |
| HYDROGRAPH AT | | | | | | | |
| | 41 | 1059. | 3.25 | 121. | 31. | 30. | .83 |
| 2 COMBINED AT | | | | | | | |
| | C41 | 4764. | 3.33 | 678. | 172. | 166. | 3.29 |
| HYDROGRAPH AT | | | | | | | |
| | 42 | 1307. | 3.17 | 116. | 29. | 28. | .58 |
| HYDROGRAPH AT | | | | | | | |
| | 43 | 2384. | 3.17 | 234. | 59. | 57. | 1.07 |
| HYDROGRAPH AT | | | | | | | |
| | 44 | 1847. | 3.25 | 182. | 46. | 44. | .84 |
| 2 COMBINED AT | | | | | | | |
| + | C44 | 4139. | 3.25 | 413. | 104. | 100. | 1.91 |
| ROUTED TO | | | | | | | |
| + | R45 | 3831. | 3.25 | 413. | 104. | 100. | 1.91 |
| HYDROGRAPH AT | | | | | | | |
| + | 45 | 514. | 3.17 | 41. | 10. | 10. | .20 |
| 2 COMBINED AT | | | | | | | |
| + | C45 | 4141. | 3.25 | 453. | 114. | 110. | 2.11 |
| HYDROGRAPH AT | | | | | | | |
| | 45A | 473. | 3.17 | 38. | 10. | 9. | .17 |
| HYDROGRAPH AT | | | | | | | |
| | 46 | 2783. | 3.17 | 203. | 51. | 49. | .93 |
| 3 COMBINED AT | | | | | | | |
| | C46 | 6361. | 3.17 | 690. | 174. | 167. | 3.21 |
| ROUTED TO | | | | | | | |
| | R47 | 5348. | 3.33 | 689. | 174. | 167. | 3.21 |
| HYDROGRAPH AT | | | | | | | |
| | 47 | 441. | 3.33 | 60. | 15. | 15. | .38 |
| 2 COMBINED AT | | | | | | | |
| + | C47.1 | 5766. | 3.33 | 748. | 189. | 182. | 3.58 |
| 3 COMBINED AT | | | | | | | |
| + | C47.2 | 10796. | 3.33 | 1510. | 383. | 369. | 7.46 |
| ROUTED TO | | | | | | | |
| + | R50 | 10783. | 3.33 | 1510. | 383. | 369. | 7.46 |
| HYDROGRAPH AT | | | | | | | |
| + | 50 | 993. | 3.17 | 79. | 20. | 19. | .41 |
| 2 COMBINED AT | | | | | | | |
| | C50 | 11236. | 3.33 | 1583. | 401. | 386. | 7.87 |
| ROUTED TO | | | | | | | |

| | | | | | | | |
|---|---|---|---|---|---|---|---|
| | R48 | 10886. | 3.42 | 1582. | 401. | 386. | 7.87 |
| HYDROGRAPH AT | | | | | | | |
| | 48 | 176. | 3.17 | 15. | 4. | 4. | .12 |
| 2 COMBINED AT | | | | | | | |
| | C48 | 10944. | 3.42 | 1596. | 404. | 390. | 7.99 |
| ROUTED TO | | | | | | | |
| | R2000 | 10942. | 3.42 | 1596. | 404. | 390. | 7.99 |
| HYDROGRAPH AT | | | | | | | |
| | 2000 | 2038. | 3.17 | 174. | 44. | 42. | .89 |
| 2 COMBINED AT | | | | | | | |
| | C2000 | 11746. | 3.42 | 1758. | 445. | 429. | 8.87 |
| ROUTED TO | | | | | | | |
| | R2010 | 11505. | 3.42 | 1757. | 445. | 429. | 8.87 |
| HYDROGRAPH AT | | | | | | | |
| | 2010 | 80. | 3.25 | 8. | 2. | 2. | .04 |
| 2 COMBINED AT | | | | | | | |
| | C2010 | 11541. | 3.42 | 1765. | 447. | 430. | 8.91 |
| ROUTED TO | | | | | | | |
| | 2015A1 | 10578. | 3.58 | 1762. | 447. | 430. | 8.91 |
| HYDROGRAPH AT | | | | | | | |
| | 2015A | 540. | 3.33 | 68. | 17. | 17. | .36 |
| HYDROGRAPH AT | | | | | | | |
| | 2020 | 315. | 3.08 | 23. | 6. | 6. | .11 |
| ROUTED TO | | | | | | | |
| | 2015A2 | 283. | 3.17 | 23. | 6. | 6. | .11 |
| 3 COMBINED AT | | | | | | | |
| | 2015A1 | 10934. | 3.58 | 1845. | 468. | 451. | 9.38 |
| HYDROGRAPH AT | | | | | | | |
| | 2040 | 1929. | 3.25 | 177. | 45. | 43. | .93 |
| HYDROGRAPH AT | | | | | | | |
| | 2050 | 1741. | 3.25 | 161. | 40. | 39. | .86 |
| 2 COMBINED AT | | | | | | | |
| | C2050 | 3626. | 3.25 | 336. | 84. | 81. | 1.79 |
| ROUTED TO | | | | | | | |
| | R2060 | 2975. | 3.33 | 335. | 84. | 81. | 1.79 |
| HYDROGRAPH AT | | | | | | | |
| | 2060 | 282. | 3.33 | 32. | 8. | 8. | .22 |
| 2 COMBINED AT | | | | | | | |
| | 2060.1 | 3243. | 3.33 | 367. | 92. | 89. | 2.00 |
| 2 COMBINED AT | | | | | | | |

| | | | | | | | | |
|---|---|---|---|---|---|---|---|---|
| + | | 2060.2 | 12608. | 3.50 | 2181. | 553. | 533. | 11.39 |
| | HYDROGRAPH AT | | | | | | | |
| + | | 2065 | 227. | 3.33 | 30. | 8. | 7. | .17 |
| | ROUTED TO | | | | | | | |
| + | | R2060 | 213. | 3.42 | 30. | 8. | 7. | .17 |
| | 2 COMBINED AT | | | | | | | |
| + | | 2060.3 | 12755. | 3.50 | 2207. | 560. | 540. | 11.56 |
| | HYDROGRAPH AT | | | | | | | |
| + | | 2030C | 107. | 3.17 | 10. | 3. | 3. | .07 |
| | HYDROGRAPH AT | | | | | | | |
| + | | 2015B | 33. | 3.42 | 5. | 1. | 1. | .05 |
| | 2 COMBINED AT | | | | | | | |
| + | | C2015B | 121. | 3.17 | 15. | 4. | 4. | .13 |
| | 2 COMBINED AT | | | | | | | |
| + | | 2060.4 | 12802. | 3.50 | 2220. | 564. | 543. | 11.69 |
| | ROUTED TO | | | | | | | |
| + | | R2080A | 11892. | 3.67 | 2216. | 564. | 543. | 11.69 |
| | HYDROGRAPH AT | | | | | | | |
| + | | 2080A | 684. | 3.17 | 65. | 16. | 16. | .42 |
| | 2 COMBINED AT | | | | | | | |
| + | | C2080A | 12006. | 3.67 | 2270. | 578. | 557. | 12.10 |
| | ROUTED TO | | | | | | | |
| + | | R2090 | 12061. | 3.67 | 2269. | 578. | 557. | 12.10 |
| | HYDROGRAPH AT | | | | | | | |
| + | | 2090 | 396. | 3.25 | 43. | 11. | 11. | .22 |
| | 2 COMBINED AT | | | | | | | |
| + | | C2090 | 12165. | 3.67 | 2307. | 588. | 567. | 12.33 |
| | ROUTED TO | | | | | | | |
| + | | 2160A1 | 11193. | 3.75 | 2302. | 588. | 567. | 12.33 |
| | HYDROGRAPH AT | | | | | | | |
| + | | 2160A | 848. | 3.25 | 92. | 23. | 22. | .47 |
| | HYDROGRAPH AT | | | | | | | |
| + | | 2070 | 3805. | 3.17 | 291. | 73. | 70. | 1.46 |
| | ROUTED TO | | | | | | | |
| + | | R2130 | 3005. | 3.25 | 291. | 73. | 70. | 1.46 |
| | HYDROGRAPH AT | | | | | | | |
| + | | 2130 | 567. | 3.25 | 55. | 14. | 13. | .25 |
| | 2 COMBINED AT | | | | | | | |
| + | | C2130 | 3551. | 3.25 | 345. | 87. | 83. | 1.72 |
| | DIVERSION TO | | | | | | | |

| | | | | | | | |
|---|---|---|---|---|---|---|---|
| | 2134 | 2636. | 3.25 | 290. | 73. | 70. | 1.72 |
| HYDROGRAPH AT | | | | | | | |
| | 2133 | 915. | 3.25 | 55. | 14. | 13. | 1.72 |
| ROUTED TO | | | | | | | |
| | R2080B | 682. | 3.33 | 55. | 14. | 13. | 1.72 |
| HYDROGRAPH AT | | | | | | | |
| | 2080B | 220. | 3.25 | 23. | 6. | 6. | .12 |
| 2 COMBINED AT | | | | | | | |
| | C2080B | 870. | 3.33 | 79. | 20. | 19. | .46 |
| ROUTED TO | | | | | | | |
| | 2140B1 | 840. | 3.42 | 79. | 20. | 19. | .46 |
| HYDROGRAPH AT | | | | | | | |
| | 2140B | 214. | 3.17 | 18. | 5. | 4. | .09 |
| HYDROGRAPH AT | | | | | | | |
| | 2134 | 2636. | 3.25 | 290. | 73. | 70. | 1.72 |
| ROUTED TO | | | | | | | |
| | R2135 | 2475. | 3.33 | 290. | 73. | 70. | 1.72 |
| HYDROGRAPH AT | | | | | | | |
| | 2135 | 157. | 3.17 | 15. | 4. | 4. | .08 |
| 2 COMBINED AT | | | | | | | |
| | C2135 | 2580. | 3.33 | 305. | 77. | 74. | 1.45 |
| ROUTED TO | | | | | | | |
| | 2140B2 | 2636. | 3.33 | 305. | 77. | 74. | 1.45 |
| 3 COMBINED AT | | | | | | | |
| | C2140B | 3507. | 3.33 | 399. | 100. | 97. | 2.00 |
| ROUTED TO | | | | | | | |
| | 2160B1 | 3208. | 3.42 | 398. | 100. | 97. | 2.00 |
| HYDROGRAPH AT | | | | | | | |
| | 2150 | 1388. | 3.25 | 133. | 33. | 32. | .69 |
| ROUTED TO | | | | | | | |
| | 2160B2 | 1368. | 3.25 | 133. | 33. | 32. | .69 |
| HYDROGRAPH AT | | | | | | | |
| | 2140A | 465. | 3.17 | 46. | 12. | 11. | .23 |
| HYDROGRAPH AT | | | | | | | |
| | 2160B | 230. | 3.25 | 24. | 6. | 6. | .14 |
| 4 COMBINED AT | | | | | | | |
| | C2160B | 4515. | 3.33 | 596. | 151. | 145. | 3.06 |
| ROUTED TO | | | | | | | |
| | 2160A2 | 4335. | 3.42 | 596. | 151. | 145. | 3.06 |
| HYDROGRAPH AT | | | | | | | |

| | | | | | | | |
|---|---|---|---|---|---|---|---|
| + | 2170B | 250. | 3.25 | 26. | 7. | 6. | .13 |
| HYDROGRAPH AT | | | | | | | |
| + | 2180 | 2312. | 3.25 | 212. | 53. | 51. | 1.00 |
| ROUTED TO | | | | | | | |
| + | R2190 | 1923. | 3.42 | 212. | 53. | 51. | 1.00 |
| HYDROGRAPH AT | | | | | | | |
| + | 2190 | 261. | 3.17 | 23. | 6. | 6. | .12 |
| 2 COMBINED AT | | | | | | | |
| + | C2190 | 2073. | 3.33 | 234. | 59. | 57. | 1.13 |
| HYDROGRAPH AT | | | | | | | |
| + | 2200 | 482. | 3.25 | 46. | 12. | 11. | .25 |
| HYDROGRAPH AT | | | | | | | |
| + | 2210A | 3552. | 3.17 | 285. | 71. | 69. | 1.58 |
| ROUTED TO | | | | | | | |
| + | 2210B1 | 2725. | 3.25 | 285. | 71. | 69. | 1.58 |
| ROUTED TO | | | | | | | |
| + | 2210B2 | 2681. | 3.33 | 286. | 72. | 69. | 1.58 |
| HYDROGRAPH AT | | | | | | | |
| + | 2210B | 247. | 3.25 | 27. | 7. | 6. | .19 |
| 2 COMBINED AT | | | | | | | |
| + | 2210B1 | 2896. | 3.33 | 312. | 78. | 75. | 1.78 |
| 2 COMBINED AT | | | | | | | |
| + | 2210B2 | 3239. | 3.33 | 357. | 90. | 86. | 2.03 |
| 3 COMBINED AT | | | | | | | |
| + | 2210B3 | 5431. | 3.33 | 613. | 154. | 149. | 3.29 |
| ROUTED TO | | | | | | | |
| + | R2170A | 5342. | 3.33 | 613. | 154. | 149. | 3.29 |
| HYDROGRAPH AT | | | | | | | |
| + | 2170A | 224. | 3.17 | 22. | 6. | 5. | .12 |
| 2 COMBINED AT | | | | | | | |
| + | C2170A | 5480. | 3.33 | 633. | 160. | 154. | 3.41 |
| ROUTED TO | | | | | | | |
| + | 2160A3 | 5478. | 3.33 | 633. | 160. | 154. | 3.41 |
| 4 COMBINED AT | | | | | | | |
| + | C2160A | 15251. | 3.67 | 3498. | 893. | 860. | 19.27 |
| ROUTED TO | | | | | | | |
| + | R2160C | 15247. | 3.75 | 3497. | 893. | 860. | 19.27 |
| HYDROGRAPH AT | | | | | | | |
| + | 2160C | 40. | 3.33 | 5. | 1. | 1. | .03 |
| 2 COMBINED AT | | | | | | | |

```
+                    C2160C     15259.    3.75       3502.       894.       861.      19.30

        HYDROGRAPH AT
+                     2220C        55.    3.17          5.         1.         1.        .03

        ROUTED TO
+                    R2170C        36.    3.42          5.         1.         1.        .03

        HYDROGRAPH AT
+                     2170C       103.    3.25         11.         3.         3.        .06

        2 COMBINED AT
+                    C2170C       123.    3.25         15.         4.         4.        .09

        ROUTED TO
+                    R2170D       112.    3.42         15.         4.         4.        .09

        HYDROGRAPH AT
+                     2170D        62.    3.25          6.         2.         2.        .04

        2 COMBINED AT
+                    C2170D       154.    3.33         22.         6.         5.        .12

        2 COMBINED AT
+                    2160C2     15321.    3.75       3520.       899.       866.      19.42

        ROUTED TO
+                    R2170E     15330.    3.75       3520.       899.       866.      19.42

        HYDROGRAPH AT
+                     2170E        42.    3.25          4.         1.         1.        .02

        2 COMBINED AT
+                    C2170E     15338.    3.75       3524.       900.       867.      19.45

        ROUTED TO
+                    R2170F     15302.    3.75       3524.       900.       867.      19.45

        HYDROGRAPH AT
+                     2170F        17.    3.25          2.         0.         0.        .01

        2 COMBINED AT
+                    C2170F     15305.    3.75       3525.       900.       867.      19.46
1
                                   SUMMARY OF KINEMATIC WAVE - MUSKINGUM-CUNGE ROUTING
                                       (FLOW IS DIRECT RUNOFF WITHOUT BASE FLOW)
                                                                          INTERPOLATED TO
                                                                       COMPUTATION INTERVAL
          ISTAQ    ELEMENT      DT       PEAK    TIME TO     VOLUME      DT       PEAK    TIME TO     VOLUME
                                                   PEAK                                     PEAK

                              (MIN)     (CFS)     (MIN)      (IN)    (MIN)     (CFS)     (MIN)       (IN)

         FOR STORM = 1  STORM AREA (SQ MI) =        .00
              39  MANE         2.69   4294.48    193.77      2.26     5.00   4244.11    195.00       2.25


 CONTINUITY SUMMARY (AC-FT) - INFLOW= .0000E+00 EXCESS= .2271E+03 OUTFLOW= .2263E+03 BASIN STORAGE= .8393E-01 PERCENT ERROR=    .3
```

# HEC-1 MODEL NO. 3A

# FILE: REAT3A

```
****************************************
*                                      *
*   FLOOD HYDROGRAPH PACKAGE  (HEC-1)  *
*           SEPTEMBER 1990             *
*            VERSION 4.0               *
*                                      *
*  RUN DATE  01/11/1995  TIME  14:20:49 *
*                                      *
****************************************
```

```
****************************************
*                                      *
*    U.S. ARMY CORPS OF ENGINEERS      *
*    HYDROLOGIC ENGINEERING CENTER     *
*          609 SECOND STREET           *
*       DAVIS, CALIFORNIA 95616        *
*           (916) 756-1104             *
*                                      *
****************************************
```

```
X     X  XXXXXXX   XXXXX          X
X     X  X        X     X        XX
X     X  X        X              X
XXXXXXX  XXXX     X       XXXXX  X
X     X  X        X              X
X     X  X        X     X        X
X     X  XXXXXXX   XXXXX         XXX
```

THIS PROGRAM REPLACES ALL PREVIOUS VERSIONS OF HEC-1 KNOWN AS HEC1 (JAN 73), HEC1GS, HEC1DB, AND HEC1KW.

THE DEFINITIONS OF VARIABLES -RTIMP- AND -RTIOR- HAVE CHANGED FROM THOSE USED WITH THE 1973-STYLE INPUT STRUCTURE.
THE DEFINITION OF -AMSKK- ON RM-CARD WAS CHANGED WITH REVISIONS DATED 28 SEP 81. THIS IS THE FORTRAN77 VERSION
NEW OPTIONS: DAMBREAK OUTFLOW SUBMERGENCE , SINGLE EVENT DAMAGE CALCULATION, DSS:WRITE STAGE FREQUENCY,
DSS:READ TIME SERIES AT DESIRED CALCULATION INTERVAL  LOSS RATE:GREEN AND AMPT INFILTRATION
KINEMATIC WAVE: NEW FINITE DIFFERENCE ALGORITHM

1 HEC-1 INPUT PAGE 1

```
LINE          ID.......1.......2.......3.......4.......5.......6.......7.......8.......9......10

  1           ID        DESERT GREENBELT STUDY BY GREINER, INC.
  2           ID        1992 MODELING REVISIONS BASED ON REATA PASS SENSITIVITY ANALYSIS
  3           ID        MODEL 3A   FILE NAME: REAT3A.DAT
  4           ID
  5           ID        REATA HYDROLOGY -PROP. CONDITIONS W/ FUTURE LAND USE
  6           ID        ORIGINAL MODEL RPBW1 BY ROBERT L. WARD
  7           ID        100-YEAR 6-HOUR STORM (AMC TYPE II)
  8           ID
  9           ID        SUB-BASINS 39 THRU 50 & 2000 THRU 2220C
 10           ID        WITH GREENBELT REGIONAL CHANNEL IN PLACE IN SUB 48, 50, 2000, 2010,
 11           ID        2015A, 2080A AND PARALLEL 96TH STREET TO CAP DIKE 4
 12           ID
 13           ID        PH CARD FOR SUB 30 TO SUB 50
 14           ID        CHANGE PH CARD FOR SUB 2000 AND DOWNSTREAM
 15           ID        USE JD CARDS
 16           ID        100% RUNOFF FROM SUB 2070 TO 2130
 17           ID        100% RUNOFF FROM SUB 2130 TO 2135
 18           ID        STATE LAND CHANNEL ALIGNMENT INCORPORATED
 19           ID        NEW TPP ALIGNMENT AS OF AUG 1, 1994
              *DIAGRAM
 20           IT       5   OCT94       0     300
 21           IO       5       0
```

```
 22          JD          .0001
 23          PH                     .72    1.41    2.47    2.79    2.99    3.39
 24          JD           .001
 25          JD            .01
 26          JD             .1
 27          JD             .5
 28          JD              1
 29          JD              5
 30          JD             25
 31          JD             50

 32          KK     39     SUB
 33          KM        RUNOFF FROM SUB-BASIN 39
 34          BA  1.8807
 35          LS             85    23.4
 36          UK    330   .0433     .20     100
 37          RK  11240   .0253    .045           TRAP      30       3

 38          KK     40     SUB
 39          KM        RUNOFF FROM SUB-BASIN 40
 40          BA   .5844
 41          LS             83     9.9
 42          UK    160   .0627     .20     100
 43          RK   7000   .0350    .045           TRAP      20       3

 44          KK    C40
 45          KM        COMBINE HYDROGRAPHS SUB 39 & SUB 40
 46          HC      2
```



```
LINE         ID.......1.......2.......3.......4.......5.......6.......7.......8.......9......10


 47          KK    R41
 48          KM        ROUTE C40 TO D.S. END OF SUB 41
 49          RS      1    FLOW      -1
 50          RC   .055    .040    .055    9400   .0282
 51          RX      0       1     101     107     157     163     263     264
 52          RY     10       8       3       0       0       3       8      10

 53          KK     41     SUB
 54          KM        RUNOFF FROM SUB-BASIN 41
 55          BA   .8270
 56          LS             74    10.1
 57          UK    280   .2386     .20     100
 58          RK   9400   .0282    .045           TRAP      50       3

 59          KK    C41
 60          KM        COMBINE HYDROGRAPHS R41 & SUB 41
 61          HC      2

 62          KK     42     SUB
 63          KM        RUNOFF FROM SUB-BASIN 42
 64          BA   .5844
 65          LS             78    23.3
 66          UK    280   .2386     .20     100
 67          RK   8750   .0573    .045           TRAP      20       3

 68          KK     43     SUB
 69          KM        RUNOFF FROM SUB-BASIN 43
```

```
 70          BA  1.0665
 71          LS              85    10.5
 72          UK     260   .0515     .20     100
 73          RK    7400   .0255    .045            TRAP      25       3

 74          KK      44     SUB
 75          KM        RUNOFF FROM SUB-BASIN 44
 76          BA   .8389
 77          LS              85     8.1
 78          UK     260   .0515     .20     100
 79          RK    9840   .0622    .045            TRAP      25       3

 80          KK     C44
 81          KM        COMBINE HYDROGRAPHS SUB 43 & SUB 44
 82          HC       2

 83          KK     R45
 84          KM        ROUTE C44 TO D.S.  END OF SUB 45
 85          RS       1    FLOW      -1
 86          RC    .055    .040    .055    3600   .0366
 87          RX       0       1     101     107     137     143     243     244
 88          RY      10       8       3       0       0       3       8      10
```



```
LINE         ID.......1.......2.......3.......4.......5.......6.......7.......8.......9......10

 89          KK      45     SUB
 90          KM        RUNOFF FROM SUB-BASIN 45
 91          BA   .2037
 92          LS              81    14.5
 93          UK     125   .1166     .20     100
 94          RK    3600   .0366    .045            TRAP      30       3

 95          KK     C45
 96          KM        COMBINE HYDROGRAPHS R45 & SUB 45
 97          HC       2

 98          KK     45A     SUB
 99          KM        RUNOFF FROM SUB-BASIN 45A
100          BA   .1720
101          LS              86     6.9
102          UK     275   .2200     .20     100
103          RK    5400   .0411    .045            TRAP      15       3

104          KK      46     SUB
105          KM        RUNOFF FROM SUB-BASIN 46
106          BA   .9268
107          LS              86     3.7
108          UK     265   .4958     .20     100
109          RK    3300   .2271    .045    .111    TRAP      10       3
110          RK    7100   .0535    .045            TRAP      25       3

111          KK     C46
112          KM        COMBINE HYDROGRAPHS C45, SUB 45A, & SUB 46
113          HC       3

114          KK     R47
115          KM        ROUTE C46 TO D.S.  END OF SUB 47
116          RS       1    FLOW      -1
```

```
117          RC    .055    .040    .055    7600   .0268
118          RX       0       1     101     109     159     167     267     268
119          RY      10       9       4       0       0       4       9      10

120          KK      47     SUB
121          KM        RUNOFF FROM SUB-BASIN 47
122          BA   .3757
123          LS              77     8.6
124          UK     375   .1000     .20     100
125          RK    9300   .0357    .045            TRAP      50       3

126          KK   C47.1
127          KM        COMBINE HYDROGRAPHS SUB 47 & R47
128          HC       2

129          KK   C47.2
130          KM        COMBINE HYDROGRAPHS C47.1, C41 & SUB 42
131          HC       3
```



```
LINE         ID.......1.......2.......3.......4.......5.......6.......7.......8.......9......10


132          KK     R50
133          KM        ROUTE C47.2 TO D.S. END OF SUB 50 (BEGINNING OF REATA DESERT
134          KM        GREENBELT CHANNEL)
135          RS       1    FLOW      -1
136          RC    .055    .040    .055    1000   .0200
137          RX       0      35     135     150     225     240     340     375
138          RY      10       3       3       0       0       3       3      10

139          KK      50     SUB
140          KM        RUNOFF FROM SUB-BASIN 50
141          BA   .4052
142          LS              83     3.3
143          UK     300   .3555     .20     100
144          RK     730   .1506    .045    .036    TRAP      10       3
145          RK    6400   .0453    .045            TRAP      25       3

146          KK     C50
147          KM        COMBINE HYDROGRAPHS OF SUB 50 AND R50
148          KM        THIS IS THE TOTAL DISCHARGE TO THE REATA PASS ALLUVIAL FAN APEX
149          HC       2

150          KK     R48
151          KM        ROUTE C50 TO OUTLET OF SUB 48
152          RS       1    FLOW      -1
153          RC    .055    .040    .055    2900   .0345
154          RX       0      35     135     150     225     240     340     375
155          RY      10       3       3       0       0       3       3      10

156          KK      48     SUB
157          KM        RUNOFF FROM SUB-BASIN 48
158          BA   .1203
159          LS              72     6.8
160          UK     175   .1400     .15     100
161          RK    2900   .0345    .045            TRAP      50       3

162          KK     C48
163          KM        COMBINE HYDROGRAPHS R48 & SUB 48
```

```
164          HC       2

165          KK   R2000
166          KM        ROUTE C48 TO D.S. END OF SUB 2000
167          RS       1    FLOW      -1
168          RC    .055    .045    .055    1300   .0308
169          RX       0      35     135     150     225     240     340     375
170          RY      10       3       3       0       0       3       3      10

171          KK    2000     SUB
172          KM        RUNOFF FROM SUB 2000
173          BA   .8853
174          PH                     .72    1.41    2.47    2.77    2.97    3.35
175          LS              84     2.9
176          UK     400   .2750     .25     100
177          RK    2625   .0785    .045    .072    TRAP      10       3
178          RK    3600   .0222    .045            TRAP      25       3
```



```
LINE         ID.......1.......2.......3.......4.......5.......6.......7.......8.......9......10


179          KK   C2000
180          KM        COMBINE HYDROGRAPHS OF R2000 & SUB 2000
181          HC       2

182          KK   R2010
183          KM        ROUTE C2000 TO D.S. END OF SUB 2010
184          RS       1    FLOW      -1
185          RC    .055    .045    .055    1300   .0308
186          RX       0      35     135     150     225     240     340     375
187          RY      10       3       3       0       0       3       3      10

188          KK    2010     SUB
189          KM        RUNOFF FROM SUB-BASIN 2010
190          BA   .0413
191          LS              83     3.7
192          UK     800   .6425    0.30     100
193          RK    1300   .0308   0.045            TRAP      50       3

194          KK   C2010
195          KM        COMBINE HYDROGRAPHS R2010 & SUB 2010
196          HC       2

197          KK  2015A1
198          KM        ROUTE C2010 TO D.S. END OF SUB 2015A
199          RS       1    FLOW      -1
200          RC    .055    .045    .055    4800   .0292
201          RX       0      35     135     150     225     240     340     375
202          RY      10       3       3       0       0       3       3      10

203          KK   2015A     SUB
204          KM        RUNOFF FROM SUB-BASIN 2015A
205          BA   .3619
206          LS              82     7.7
207          UK     500   .2800     .25     100
208          RK    2400   .1358    .045    .061    TRAP      10       3
209          RK    5300   .0200    .045            TRAP     150       5

210          KK    2020     SUB
```

```
211          KM        RUNOFF FROM SUB-BASIN 2020
212          BA   .1090
213          LS              85     4.1
214          UK     205   .6969    0.30     100
215          RK     900   .3889    .045    .011    TRAP      10       3
216          RK    2800  0.1428    .045            TRAP      20       3

217          KK  2015A2
218          KM        ROUTE SUB 2020 TO D.S. END OF SUB 2015A
219          RS       1    FLOW      -1
220          RC    .055    .045    .055    1600    .025
221          RX       0      .1       2      32      67      97    98.9      99
222          RY      15      10      10       0       0      10      10      15
1                                          HEC-1 INPUT                                                    PAGE  6

LINE         ID.......1.......2.......3.......4.......5.......6.......7.......8.......9......10


223          KK  2015A1
224          KM        COMBINE HYDROGRAPHS OF (R)2015A1, SUB 2015A & (R)2015A2
225          HC       3

226          KK    2040     SUB
227          KM        RUNOFF FROM SUB-BASIN 2040
228          BA   .9290
229          LS              82     8.3
230          UK     463   .4072    0.25     100
231          RK    2700   .1878    .045    .056    TRAP      10       3
232          RK    6800   .0485    .045            TRAP      25       3

233          KK    2050 .   SUB
234          KM        RUNOFF FROM SUB-BASIN 2050
235          BA   .8580
236          LS              81     9.8
237          UK     530   .5726    0.25     100
238          RK    3400   .2067    .045    .086    TRAP      10       3
239          RK    6200   .0693    .045            TRAP      25       5

240          KK   C2050
241          KM        COMBINE HYDROGRAPHS OF SUB 2040 & SUB 2050
242          HC       2

243          KK   R2060
244          KM        ROUTE C2050 TO OUTLET OF SUB 2060
245          RS       1    FLOW      -1
246          RC    .055    .045    .055    3900   .0310
247          RX       0       3      53      57      87      91     141     144
248          RY      10       4       2       0       0       2       4      10

249          KK    2060     SUB
250          KM        RUNOFF FROM SUB-BASIN 2060
251          BA   .2169
252          LS              71    17.8
253          UK     217   .1667     .20     100
254          RK    2275   .0929    .045    .031    TRAP      10       5
255          RK    3900   .0310    .055            TRAP      30      15

256          KK  2060.1
257          KM        COMBINE HYDROGRAPHS OF R2060 & SUB 2060
258          HC       2
```

```
259          KK  2060.2
260          KM        COMBINE HYDROGRAPHS OF (C)2060.1 & (C)2015A1
261          HC       2

262          KK    2065     SUB
263          KM        RUNOFF FROM SUB-BASIN 2065
264          BA   .1720
265          LS              69    31.5
266          UK     200    .050      .2     100
267          RK    6500   .0508    .055            TRAP      30      15
```



```
LINE         ID.......1.......2.......3.......4.......5.......6.......7.......8.......9......10

268          KK   R2060
269          KM        ROUTE  SUB 2065 TO D.S. END OF SUB 2060
270          RS       1    FLOW      -1
271          RC    .055    .045    .055    1600   .0267
272          RX       0       3      53      57      87      91     141     144
273          RY      10       4       2       0       0       2       4      10

274          KK  2060.3
275          KM        COMBINE R2060 & (C)2060.2
276          HC       2

277          KK   2030C     SUB
278          KM        RUNOFF FROM SUB-BASIN 2030C
279          BA   .0723
280          LS              63    27.3
281          UK     155   .0614     .15     100
282          RK    3000   .0300    .045            TRAP       5       5

283          KK   2015B     SUB
284          KM        RUNOFF FROM SUB-BASIN 2015B
285          BA   .0545
286          LS              60    15.4
287          UK     500   .2800     .25     100
288          RK    4000   .0288    .045            TRAP      25       5

289          KK  C2015B
290          KM        COMBINE HYDROGRAPHS OF SUB 2015B & SUB 2030C
291          HC       2

292          KK  2060.4
293          KM        COMBINE HYDROGRAPHS OF C2015B & (C)2060.3
294          HC       2

295          KK  R2080A
296          KM        ROUTE (C)2060.4 TO OUTLET OF SUB 2080A
297          RS       1    FLOW      -1
298          RC    .055    .045    .055    5500   .0291
299          RX       0      35     135     150     225     240     340     375
300          RY      10       3       3       0       0       3       3      10

301          KK   2080A     SUB
302          KM        RUNOFF FROM SUB 2080A
303          BA   .4186
304          LS              69    24.1
```

```
305          UK     155   .0614     .15     100
306          RK    5500   .0291    .045            TRAP       7       5

307          KK  C2080A
308          KM        COMBINE HYDROGRAPHS OF R2080A & SUB 2080A
309          HC       2
```



```
LINE         ID.......1.......2.......3.......4.......5.......6.......7.......8.......9......10


310          KK   R2090
311          KM        ROUTE C2080A TO D.S. OF SUB 2090 (UNION HILL DR.)
312          RS       1    FLOW      -1
313          RC    .055    .045    .055    1400   .0214
314          RX       0      35     135     150     225     240     340     375
315          RY      10       3       3       0       0       3       3      10

316          KK    2090     SUB
317          KM        RUNOFF FROM SUB 2090
318          BA   .2220
319          LS              74    32.1
320          UK     337   .0324     .15     100
321          RK    5000   .0280    .045            TRAP      25       3

322          KK   C2090
323          KM        COMBINE HYDROGRAPHS OF R2090 & SUB 2090
324          HC       2

325          KK  2160A1
326          KM        ROUTE C2090 TO D.S. END OF SUB 2160A THRU DESERT GREENBELT
327          RS       1    FLOW      -1
328          RC    .055    .045    .055    5300   .0208
329          RX       0      35     135     150     225     240     340     375
330          RY      10       3       3       0       0       3       3      10

331          KK   2160A     SUB
332          KM        RUNOFF FROM SUB-BASIN 2160A
333          BA   .4713
334          LS              74    32.1
335          UK     337   .0324     .15     100
336          RK    5300   .0208    .045            TRAP      25       3

337          KK   2080B     SUB
338          KM        RUNOFF FROM SUB-BASIN 2080B
339          BA   .1190
340          LS              74    32.1
341          UK     175   .0571     .15     100
342          RK    5000   .0440    .045            TRAP      30      15

343          KK  2140B1
344          KM        ROUTE SUB 2080B ALONG THOMPSON PEAK PARKWAY THROUGH
345          KM        SHOTCRETE-LINED COLLECTOR TO D.S. END OF SUB 2140B
346          RS       1    FLOW      -1
347          RC    .019    .019    .019    1900   .0158
348          RX       0       8      24      40      44      60      76      84
349          RY      10       8       4       0       0       4       8      10

350          KK   2140B     SUB
351          KM        RUNOFF FROM SUB-BASIN 2140B
```

```
352          BA   .0925
353          LS              74    32.1
354          UK     200   .0500     .15     100
355          RK    1820   .0461    .045            TRAP      20      10
```



```
LINE         ID.......1.......2.......3.......4.......5.......6.......7.......8.......9......10

356          KK  2140B1
357          KM        COMBINE HYDROGRAPHS OF (R)2140B1 & SUB 2140B
358          HC       2

359          KK    2070     SUB
360          KM        RUNOFF FROM SUB-BASIN 2070
361          BA  1.4649
362          LS              84     4.1
363          UK     400   .5174     .30     100
364          RK    1750   .2962    .045    .048    TRAP       5       3
365          RK    3500   .1236    .045    .483    TRAP      10       3
366          RK    3400   .0882    .045            TRAP      30      10

367          KK   R2130
368          KM        ROUTE SUB 2070 TO OUTLET OF SUB 2130
369          RS       1    FLOW      -1
370          RC    .055    .045    .055    3600   .0555
371          RX       0       5     105     107     137     139     239     244
372          RY      10       5       1       0       0       1       5      10

373          KK    2130     SUB
374          KM        RUNOFF FROM SUB-BASIN 2130
375          BA   .2510
376          LS              86     7.1
377          UK     267   .3126     .20     100
378          RK    9240   .0941    .045            TRAP      30      20

379          KK   C2130
380          KM        COMBINE HYDROGRAPHS OF R2130 & SUB 2130
381          HC       2

382          KK   R2135
383          KM        ROUTE C2130 TO OUTLET OF SUB 2135
384          RS       1    FLOW      -1
385          RC    .055    .045    .055    2700   .0444
386          RX       0     0.1       2      22      42      62    63.9      64
387          RY      15      10      10       0       0      10      10      15

388          KK    2135     SUB
389          KM        RUNOFF FROM SUB-BASIN 2135
390          BA   .0750
391          LS              86    19.3              74    19.3
392          UK     800   .4000     .30      40
393          UK     200   .0500     .15      60
394          RK    2700   .0444    .045            TRAP      20       2

395          KK   C2135
396          KM        COMBINE HYDROGRAPHS OF R2135 & SUB 2135
397          HC       2
```

```
LINE          ID.......1.......2.......3.......4.......5.......6.......7.......8.......9......10


 398          KK  2140B2
 399          KM        ROUTE C2135 TO D.S. END OF SUB 2140B
 400          RS       1    FLOW      -1
 401          RC    .055    .045    .055    1600   .0500
 402          RX       0      .1       2      22      42      62    63.9      64
 403          RY      15      10      10       0       0      10      10      15

 404          KK  C2140B
 405          KM        COMBINE HYDROGRAPHS OF (R)2140B1 & (R)2140B2
 406          HC       2

 407          KK  2160B1
 408          KM        ROUTE C2140B THROUGH EARTHEN-LANDSCAPED COLLECTOR TO D.S.
 409          KM        END OF SUB 2160B
 410          RS       1    FLOW      -1
 411          RC    .045    .045    .045    4600   .0326
 412          RX       0      24      32      40      65      73      81     105
 413          RY      10       4       2       0       0       2       4      10

 414          KK    2150     SUB
 415          KM        RUNOFF FROM SUB-BASIN 2150
 416          BA   .6873
 417          LS              86    15.0              74    15.0
 418          UK     350   .3428     .30      50
 419          UK     180   .0555     .15      50
 420          RK    1785   .1313    .045    .027    TRAP      10       3
 421          RK    6400   .0312    .045            TRAP      20      10

 422          KK  2160B2
 423          KM        ROUTE SUB 2150 TO D.S. END OF SUB 2160B
 424          RS       1    FLOW      -1
 425          RC    .045    .045    .045    1000   .0200
 426          RX       0      24      32      40      65      73      81     105
 427          RY      10       4       2       0       0       2       4      10

 428          KK   2140A     SUB
 429          KM        RUNOFF FROM SUB-BASIN 2140A
 430          BA   .2335
 431          LS              74    32.1
 432          UK     200   .0500     .15     100
 433          RK     800   .0500    .045   .0244    TRAP      15       3
 434          RK    4600   .0326    .045            TRAP      17       5

 435          KK   2160B     SUB
 436          KM        RUNOFF FROM SUB-BASIN 2160B
 437          BA   .1412
 438          LS              75    19.3
 439          UK     337   .0324     .15     100
 440          RK    2275   .0527    .045   .0361    TRAP      15       3
 441          RK    1400   .0241    .045            TRAP      17       5
```



```
LINE          ID.......1.......2.......3.......4.......5.......6.......7.......8.......9......10


 442          KK  C2160B
 443          KM        COMBINE HYDROGRAPHS OF(R)2160B1, (R)2160B2, SUB 2140 & SUB 2160B
```

```
444          HC       4

445          KK  2160A2
446          KM        ROUTE C2160B THROUGH EARTHEN LANDSCAPED COLLECTOR TO D.S.
447          KM        END OF SUB 2160A
448          RS       2    FLOW      -1
449          RC    .045    .045    .045    4720   .0169
450          RX       0      24      32      40      65      73      81     105
451          RY      10       4       2       0       0       2       4      10

452          KK   2170B     SUB
453          KM        RUNOFF FROM SUB-BASIN 2170B
454          BA   .1312
455          LS              74    34.5
456          UK     250   .0266     .15     100
457          RK    4640   .0457    .045            TRAP      20       5

458          KK    2180     SUB
459          KM        RUNOFF FROM SUB-BASIN 2180
460          BA  1.0044
461          LS              86     1.4
462          UK     468   .4496     .30     100
463          RK    3100   .2558    .045    .121    TRAP      10       3
464          RK    8200   .0731    .045            TRAP      20       5

465          KK   R2190
466          KM        ROUTE SUB 2180 TO OUTLET OF SUB 2190
467          RS       3    FLOW      -1
468          RC    .055    .040    .055    4100   .0390
469          RX       0       7     107     111     141     145     245     252
470          RY      10       3       2       0       0       2       3      10

471          KK    2190     SUB
472          KM        RUNOFF FROM SUB-BASIN 2190
473          BA   .1227
474          LS              79    18.0
475          UK     190   .0915     .15     100
476          RK    4100   .0390    .045            TRAP      30      10

477          KK   C2190
478          KM        COMBINE HYDROGRAPHS OF R2190 & SUB 2190
479          HC       2

480          KK    2200     SUB
481          KM        RUNOFF FROM SUB-BASIN 2200
482          BA   .2532
483          LS              81     6.3
484          UK     353   .1529     .20     100
485          RK    6150   .0838    .045            TRAP       5      11
```



```
LINE         ID.......1.......2.......3.......4.......5.......6.......7.......8.......9......10

486          KK   2210A     SUB
487          KM        RUNOFF FROM SUB-BASIN 2210A
488          BA  1.5847
489          LS              82     2.0
490          UK     248   .3717     .30     100
491          RK    4500   .1875    .045    .107    TRAP      10       3
```

```
492          RK    4800   .0526    .045            TRAP      20      10

493          KK  2210B1
494          KM        ROUTE SUB 2210A THRU WIDE BRAIDED WASH ALONG NORTH
495          KM        SIDE OF PARCELS N & O
496          RS       1    FLOW      -1
497          RC    .065    .055    .065    3500   .0476
498          RX       0       1      51      52     152     153     203     204
499          RY      10       3       1       0       0       1       3      10

500          KK  2210B2
501          KM        ROUTE (R)2210B1 THRU INCISED WASH ALONG NORTH SIDE OF PARCEL N.
502          KM        RD RECORD USED TO PROMOTE FLOW CONTINUITY
503          RD
504          RC    .065    .050    .065    2140   .0417
505          RX       0       1       2      22      45      65      66      67
506          RY      10      10      10       0       0      10      10      10

507          KK   2210B     SUB
508          KM        RUNOFF FROM SUB-BASIN 2210B
509          BA   .1916
510          LS              74     7.8
511          UK     248   .3717     .25     100
512          RK    5640   .0444    .050            TRAP      50       4

513          KK  2210B1
514          KM        COMBINE HYDROGRAPHS OF SUB 2210B & (R)2210B2
515          HC       2

516          KK  2210B2
517          KM        COMBINE HYDROGRAPHS OF (C)2210B1 & SUB 2200
518          HC       2

519          KK  2210B3
520          KM        COMBINE HYDROGRAPHS OF (C)2210B2, C2190 &  SUB 2710B
521          KM        THIS IS THE TOTAL FLOW AT THE INTERSECTION OF TTP & PROP. STATE LAND CH.
522          HC       3

523          KK  R2170A
524          KM        ROUTE (C)2210B3 ALONG SHOTCRETE -LINED COLLECTOR TO OUTLET OF SUB 2170A
525          RS       1    FLOW      -1
526          RC    .019    .019    .019    3600   .0194
527          RX       0       8      24      40      44      60      76      84
528          RY      10       8       4       0       0       4       8      10
```



```
LINE         ID.......1.......2.......3.......4.......5.......6.......7.......8.......9......10

529          KK   2170A     SUB
530          KM        RUNOFF FROM SUB-BASIN 2170A
531          BA   .1227
532          LS              74    24.2
533          UK     250   .0266     .15     100
534          RK    1920   .0250    .045            TRAP      20       5

535          KK  C2170A
536          KM        COMBINE HYDROGRAPHS OF R2170A & SUB 2170A
537          HC       2
```

```
538          KK  2160A3
539          KM        ROUTE C2170A ALONG SHOTCRETE-LINED CHANNEL TO OUTLET OF SUB 2160A
540          RS       1    FLOW      -1
541          RC    .019    .019    .019     400   .0125
542          RX       0       8      24      40      44      60      76      84
543          RY      10       8       4       0       0       4       8      10

544          KK  C2160A
545          KM        COMBINE HYDROGRAPHS OF (R)2160A1, SUB 2160A, (R)2160A2 & (R)2160A3
546          HC       4

547          KK  R2160C
548          KM        ROUTE C2160A TO OUTLET OF SUB 2160C
549          RS       1    FLOW      -1
550          RC    .055    .045    .055    2036   .0144
551          RX       0      35     135     150     225     240     340     375
552          RY      10       3       3       0       0       3       3      10

553          KK   2160C     SUB
554          KM        RUNOFF FROM SUB 2160C
555          BA   .0261
556          LS              74    32.1
557          UK     337   .0324     .15     100
558          RK    2036   .0144    .045            TRAP      75       5

559          KK  C2160C
560          KM        COMBINE HYDROGRAPHS OF SUB 2160C & R2160C
561          HC       2

562          KK   2220C     SUB
563          KM        RUNOFF FROM SUB 2220C
564          BA   .0268
565          LS              74    21.9
566          UK     200     .05     .15     100
567          RK    2235   .0434    .045            TRAP       7       3

568          KK  R2170C
569          KM        ROUTE SUB 2220C TO OUTLET OF SUB 2170C AT BELL RD
570          RS       3    FLOW      -1
571          RC    .055    .045    .055    3000   .0216
572          RX       0       1       2      52      67     117     118     119
573          RY      10      10      10       0       0      10      10      10
```



```
LINE         ID.......1.......2.......3.......4.......5.......6.......7.......8.......9......10


574          KK   2170C     SUB
575          KM        RUNOFF FROM SUB 2170C
576          BA   .0610
577          LS              74    24.2
578          UK     250   .0266     .15     100
579          RK    3000   .0216    .045            TRAP      15       5

580          KK  C2170C
581          KM        COMBINE HYDROGRAPHS OF SUB 2170C & R2170C
582          HC       2

583          KK  R2170D
584          KM        ROUTE C2170C TO OUTLET OF SUB 2170D
```

```
585          RS       2    FLOW      -1
586          RC    .055    .045    .055    2250   .0147
587          RX       0       6      36      45      60      69      99     105
588          RY      10       4       3       0       0       3       4      10

589          KK   2170D     SUB
590          KM        RUNOFF FROM SUB 2170D
591          BA   .0366
592          LS              74    24.2
593          UK     250   .0266     .15     100
594          RK    2250   .0147    .045            TRAP      15       5

595          KK  C2170D
596          KM        COMBINE HYDROGRAPHS OF SUB 2170D & R2170D
597          HC       2

598          KK  2160C2
599          KM        COMBINE HYDROGRAPHS OF C2170D & (C)2160C1
600          HC       2

601          KK  R2170E
602          KM        ROUTE (C)2160C1 TO OUTLET OF SUB 2170E
603          RS       1    FLOW      -1
604          RC    .055    .045    .055     362   .0124
605          RX       0      35     135     150     225     240     340     375
606          RY      10       3       3       0       0       3       3      10

607          KK   2170E     SUB
608          KM        RUNOFF FROM SUB-BASIN 2170E
609          BA   .0245
610          LS              74    24.2
611          UK     250   .0266     .15     100
612          RK    1976   .0152    .045            TRAP       7       5

613          KK  C2170E
614          KM        COMBINE HYDROGRAPHS OF R2170E & SUB 2170E
615          KM        THIS IS THE TOTAL FLOW IN THE REGIONAL CHANNEL AT THE OLD VERDE CANAL
616          HC       2
```



```
LINE         ID.......1.......2.......3.......4.......5.......6.......7.......8.......9......10


617          KK  R2170F
618          KM        ROUTE C2170E TO CAP DIKE 4
619          RS       1    FLOW      -1
620          RC    .055    .045    .055     850   .0179
621          RX       0      35     135     150     225     240     340     375
622          RY      10       3       3       0       0       3       3      10

623          KK   2170F     SUB
624          KM        RUNOFF FROM SUB-BASIN 2170F
625          BA   .0091
626          LS              74    32.1
627          UK     337   .0324     .15     100
628          RK     850   .0179    .045            TRAP      75       5

629          KK  C2170F
630          KM        COMBINE HYDROGRAPHS OF R2170F & SUB 2170F
631          KM        THIS IS TOTAL FLOW THAT EXITS THE REGIONAL CHANNEL AT CAP DIKE 4
```

```
632          HC       2
633          ZZ
```

SCHEMATIC DIAGRAM OF STREAM NETWORK

```
INPUT
 LINE     (V) ROUTING          (--->) DIVERSION OR PUMP FLOW

  NO.     (.) CONNECTOR        (<---) RETURN OF DIVERTED OR PUMPED FLOW

   32        39
              .
              .
   38         .          40
              .           .
              .           .
   44       C40............
              V
              V
   47       R41
              .
              .
   53         .          41
              .           .
              .           .
   59       C41............
              .
              .
   62         .          42
              .           .
              .           .
   68         .           .          43
              .           .           .
              .           .           .
   74         .           .           .          44
              .           .           .           .
              .           .           .           .
   80         .           .        C44............
              .           .          V
              .           .          V
   83         .           .        R45
              .           .           .
              .           .           .
   89         .           .           .          45
              .           .           .           .
              .           .           .           .
   95         .           .        C45............
              .           .           .
              .           .           .
   98         .           .           .         45A
              .           .           .           .
              .           .           .           .
  104         .           .           .           .          46
              .           .           .           .           .
              .           .           .           .           .
  111         .           .        C46.......................
              .           .          V
              .           .          V
  114         .           .        R47
              .           .           .
              .           .           .
```

```
120          .           .           .          47
             .           .           .           .
             .           .           .           .
126          .           .       C47.1............
             .           .           .
             .           .           .
129      C47.2........................
             V
             V
132        R50
             .
             .
139          .          50
             .           .
             .           .
146        C50............
             V
             V
150        R48
             .
             .
156          .          48
             .           .
             .           .
162        C48............
             V
             V
165      R2000
             .
             .
171          .        2000
             .           .
             .           .
179      C2000............
             V
             V
182      R2010
             .
             .
188          .        2010
             .           .
             .           .
194      C2010............
             V
             V
197     2015A1
             .
             .
203          .       2015A
             .           .
             .           .
210          .           .        2020
             .           .           V
             .           .           V
217          .           .      2015A2
             .           .           .
             .           .           .
223     2015A1........................
             .
             .
```

```
226          .        2040
             .           .
             .           .
233          .           .        2050
             .           .           .
             .           .           .
240          .       C2050............
             .           V
             .           V
243          .       R2060
             .           .
             .           .
249          .           .        2060
             .           .           .
             .           .           .
256          .      2060.1............
             .           .
             .           .
259     2060.2............
             .
             .
262          .        2065
             .           V
             .           V
268          .       R2060
             .           .
             .           .
274     2060.3............
             .
             .
277          .       2030C
             .           .
             .           .
283          .           .       2015B
             .           .           .
             .           .           .
289          .      C2015B............
             .           .
             .           .
292     2060.4............
             V
             V
295     R2080A
             .
             .
301          .       2080A
             .           .
             .           .
307     C2080A............
             V
             V
310      R2090
             .
             .
316          .        2090
             .           .
             .           .
322      C2090............
             V
             V
```

```
325   2160A1
        .
        .
331     .     2160A
        .       .
        .       .
337     .       .     2080B
        .       .       V
        .       .       V
343     .       .     2140B1
        .       .       .
        .       .       .
350     .       .       .     2140B
        .       .       .       .
        .       .       .       .
356     .       .     2140B1............
        .       .       .
        .       .       .
359     .       .       .      2070
        .       .       .        V
        .       .       .        V
367     .       .       .     R2130
        .       .       .       .
        .       .       .       .
373     .       .       .       .       2130
        .       .       .       .         .
        .       .       .       .         .
379     .       .       .     C2130............
        .       .       .        V
        .       .       .        V
382     .       .       .     R2135
        .       .       .       .
        .       .       .       .
388     .       .       .       .       2135
        .       .       .       .         .
        .       .       .       .         .
395     .       .       .     C2135............
        .       .       .        V
        .       .       .        V
398     .       .       .    2140B2
        .       .       .       .
        .       .       .       .
404     .       .     C2140B............
        .       .       V
        .       .       V
407     .       .     2160B1
        .       .       .
        .       .       .
414     .       .       .      2150
        .       .       .        V
        .       .       .        V
422     .       .       .    2160B2
        .       .       .       .
        .       .       .       .
428     .       .       .       .      2140A
        .       .       .       .        .
        .       .       .       .        .
435     .       .       .       .        .      2160B
        .       .       .       .        .        .
        .       .       .       .        .        .
```

```
442          .          .     C2160B...............................
             .          .          V
             .          .          V
445          .          .     2160A2
             .          .          .
             .          .          .
452          .          .          .      2170B
             .          .          .          .
             .          .          .          .
458          .          .          .          .        2180
             .          .          .          .           V
             .          .          .          .           V
465          .          .          .          .       R2190
             .          .          .          .           .
             .          .          .          .           .
471          .          .          .          .           .        2190
             .          .          .          .           .           .
             .          .          .          .           .           .
477          .          .          .          .       C2190............
             .          .          .          .           .
             .          .          .          .           .
480          .          .          .          .           .        2200
             .          .          .          .           .           .
             .          .          .          .           .           .
486          .          .          .          .           .           .      2210A
             .          .          .          .           .           .          V
             .          .          .          .           .           .          V
493          .          .          .          .           .           .     2210B1
             .          .          .          .           .           .          V
             .          .          .          .           .           .          V
500          .          .          .          .           .           .     2210B2
             .          .          .          .           .           .          .
             .          .          .          .           .           .          .
507          .          .          .          .           .           .          .          2210B
             .          .          .          .           .           .          .            .
             .          .          .          .           .           .          .            .
513          .          .          .          .           .           .     2210B1............
             .          .          .          .           .           .          .
             .          .          .          .           .           .          .
516          .          .          .          .           .     2210B2............
             .          .          .          .           .           .
             .          .          .          .           .           .
519          .          .          .     2210B3......................
             .          .          .          V
             .          .          .          V
523          .          .          .     R2170A
             .          .          .          .
             .          .          .          .
529          .          .          .          .       2170A
             .          .          .          .           .
             .          .          .          .           .
535          .          .          .     C2170A............
             .          .          .          V
             .          .          .          V
538          .          .          .     2160A3
             .          .          .          .
             .          .          .          .
544     C2160A...............................
             V
             V
```

```
547      R2160C
              .
              .
553           .       2160C
              .           .
              .           .
559      C2160C............
              .
              .
562           .       2220C
              .           V
              .           V
568           .      R2170C
              .           .
              .           .
574           .           .       2170C
              .           .           .
              .           .           .
580           .      C2170C............
              .           V
              .           V
583           .      R2170D
              .           .
              .           .
589           .           .       2170D
              .           .           .
              .           .           .
595           .      C2170D............
              .           .
              .           .
598      2160C2............
              V
              V
601      R2170E
              .
              .
607           .       2170E
              .           .
              .           .
613      C2170E............
              V
              V
617      R2170F
              .
              .
623           .       2170F
              .           .
              .           .
629      C2170F............
```

(***) RUNOFF ALSO COMPUTED AT THIS LOCATION

```
1****************************************
*                                      *
*   FLOOD HYDROGRAPH PACKAGE  (HEC-1)  *
*            SEPTEMBER 1990            *
*             VERSION 4.0              *
*                                      *
*  RUN DATE  01/11/1995  TIME  14:20:49 *
*                                      *
****************************************
```

```
****************************************
*                                      *
*    U.S. ARMY CORPS OF ENGINEERS      *
*    HYDROLOGIC ENGINEERING CENTER     *
*          609 SECOND STREET           *
*       DAVIS, CALIFORNIA 95616        *
*           (916) 756-1104             *
*                                      *
****************************************
```

```
                    DESERT GREENBELT STUDY BY GREINER, INC.
                    1992 MODELING REVISIONS BASED ON REATA PASS SENSITIVITY ANALYSIS
                    MODEL 3A   FILE NAME: REAT3A.DAT

                    REATA HYDROLOGY -PROP. CONDITIONS W/ FUTURE LAND USE
                    ORIGINAL MODEL RPBW1 BY ROBERT L. WARD
                    100-YEAR 6-HOUR STORM (AMC TYPE II)

                    SUB-BASINS 39 THRU 50 & 2000 THRU 2220C
                    WITH GREENBELT REGIONAL CHANNEL IN PLACE IN SUB 48, 50, 2000, 2010,
                    2015A, 2080A AND PARALLEL 96TH STREET TO CAP DIKE 4

                    PH CARD FOR SUB 30 TO SUB 50
                    CHANGE PH CARD FOR SUB 2000 AND DOWNSTREAM
                    USE JD CARDS
                    100% RUNOFF FROM SUB 2070 TO 2130
                    100% RUNOFF FROM SUB 2130 TO 2135
                    STATE LAND CHANNEL ALIGNMENT INCORPORATED
                    NEW TPP ALIGNMENT AS OF AUG 1, 1994

21 IO        OUTPUT CONTROL VARIABLES
                  IPRNT          5  PRINT CONTROL
                  IPLOT          0  PLOT CONTROL
                  QSCAL         0.  HYDROGRAPH PLOT SCALE

   IT        HYDROGRAPH TIME DATA
                   NMIN          5  MINUTES IN COMPUTATION INTERVAL
                  IDATE     10CT94  STARTING DATE
                  ITIME       0000  STARTING TIME
                     NQ        300  NUMBER OF HYDROGRAPH ORDINATES
                 NDDATE     20CT94  ENDING DATE
                 NDTIME       0055  ENDING TIME
                  ICENT         19  CENTURY MARK

            COMPUTATION INTERVAL     .08 HOURS
                 TOTAL TIME BASE   24.92 HOURS

      ENGLISH UNITS
           DRAINAGE AREA          SQUARE MILES
           PRECIPITATION DEPTH    INCHES
           LENGTH, ELEVATION      FEET
           FLOW                   CUBIC FEET PER SECOND
           STORAGE VOLUME         ACRE-FEET
           SURFACE AREA           ACRES
           TEMPERATURE            DEGREES FAHRENHEIT

22 JD        INDEX STORM NO. 1
                  STRM        3.39  PRECIPITATION DEPTH
                  TRDA         .00  TRANSPOSITION DRAINAGE AREA

23 PI          PRECIPITATION PATTERN
                 .01      .01      .01      .01      .01      .01      .01      .01      .01      .01
                 .01      .01      .01      .01      .01      .01      .01      .01      .01      .02
                 .02      .02      .02      .02      .02      .02      .02      .03      .03      .03
                 .08      .09      .10      .15      .20      .41      .72      .28      .17      .11
```

```
                .09      .08      .03      .03      .03      .03      .02      .02      .02      .02
                .02      .02      .02      .01      .01      .01      .01      .01      .01      .01
                .01      .01      .01      .01      .01      .01      .01      .01      .01      .01
                .01      .01

24 JD        INDEX STORM NO. 2
                 STRM        3.39  PRECIPITATION DEPTH
                 TRDA         .00  TRANSPOSITION DRAINAGE AREA

23 PI          PRECIPITATION PATTERN
                .01      .01      .01      .01      .01      .01      .01      .01      .01      .01
                .01      .01      .01      .01      .01      .01      .01      .01      .01      .02
                .02      .02      .02      .02      .02      .02      .02      .03      .03      .03
                .08      .09      .10      .15      .20      .41      .72      .28      .17      .11
                .09      .08      .03      .03      .03      .03      .02      .02      .02      .02
                .02      .02      .02      .01      .01      .01      .01      .01      .01      .01
                .01      .01      .01      .01      .01      .01      .01      .01      .01      .01
                .01      .01

25 JD        INDEX STORM NO. 3
                 STRM        3.39  PRECIPITATION DEPTH
                 TRDA         .01  TRANSPOSITION DRAINAGE AREA

23 PI          PRECIPITATION PATTERN
                .01      .01      .01      .01      .01      .01      .01      .01      .01      .01
                .01      .01      .01      .01      .01      .01      .01      .01      .01      .02
                .02      .02      .02      .02      .02      .02      .02      .03      .03      .03
                .08      .09      .10      .15      .20      .41      .72      .28      .17      .11
                .09      .08      .03      .03      .03      .03      .02      .02      .02      .02
                .02      .02      .02      .01      .01      .01      .01      .01      .01      .01
                .01      .01      .01      .01      .01      .01      .01      .01      .01      .01
                .01      .01

26 JD        INDEX STORM NO. 4
                 STRM        3.39  PRECIPITATION DEPTH
                 TRDA         .10  TRANSPOSITION DRAINAGE AREA

23 PI          PRECIPITATION PATTERN
                .01      .01      .01      .01      .01      .01      .01      .01      .01      .01
                .01      .01      .01      .01      .01      .01      .01      .01      .01      .02
                .02      .02      .02      .02      .02      .02      .02      .03      .03      .03
                .08      .09      .10      .15      .20      .41      .72      .28      .17      .11
                .09      .08      .04      .03      .03      .03      .02      .02      .02      .02
                .02      .02      .02      .01      .01      .01      .01      .01      .01      .01
                .01      .01      .01      .01      .01      .01      .01      .01      .01      .01
                .01      .01

27 JD        INDEX STORM NO. 5
                 STRM        3.39  PRECIPITATION DEPTH
                 TRDA         .50  TRANSPOSITION DRAINAGE AREA

23 PI          PRECIPITATION PATTERN
                .01      .01      .01      .01      .01      .01      .01      .01      .01      .01
                .01      .01      .01      .01      .01      .01      .01      .01      .01      .02
                .02      .02      .02      .02      .02      .02      .02      .03      .03      .03
                .08      .09      .10      .15      .20      .41      .72      .28      .17      .11
                .09      .08      .04      .03      .03      .03      .02      .02      .02      .02
                .02      .02      .02      .01      .01      .01      .01      .01      .01      .01
                .01      .01      .01      .01      .01      .01      .01      .01      .01      .01
                .01      .01
```

```
28 JD          INDEX STORM NO. 6
                     STRM        3.38  PRECIPITATION DEPTH
                     TRDA        1.00  TRANSPOSITION DRAINAGE AREA

23 PI            PRECIPITATION PATTERN
                   .01       .01       .01       .01       .01       .01       .01       .01       .01       .01
                   .01       .01       .01       .01       .01       .01       .01       .01       .01       .02
                   .02       .02       .02       .02       .02       .02       .02       .03       .03       .03
                   .08       .09       .10       .15       .19       .40       .71       .28       .17       .11
                   .09       .08       .04       .03       .03       .03       .02       .02       .02       .02
                   .02       .02       .02       .01       .01       .01       .01       .01       .01       .01
                   .01       .01       .01       .01       .01       .01       .01       .01       .01       .01
                   .01       .01

29 JD          INDEX STORM NO. 7
                     STRM        3.35  PRECIPITATION DEPTH
                     TRDA        5.00  TRANSPOSITION DRAINAGE AREA

23 PI            PRECIPITATION PATTERN
                   .01       .01       .01       .01       .01       .01       .01       .01       .01       .01
                   .01       .01       .01       .01       .01       .01       .01       .01       .01       .02
                   .02       .02       .02       .02       .02       .02       .03       .03       .03       .03
                   .08       .09       .10       .15       .19       .39       .70       .27       .16       .11
                   .09       .08       .04       .03       .03       .03       .02       .02       .02       .02
                   .02       .02       .02       .02       .02       .01       .01       .01       .01       .01
                   .01       .01       .01       .01       .01       .01       .01       .01       .01       .01
                   .01       .01

30 JD          INDEX STORM NO. 8
                     STRM        3.21  PRECIPITATION DEPTH
                     TRDA       25.00  TRANSPOSITION DRAINAGE AREA

23 PI            PRECIPITATION PATTERN
                   .01       .01       .01       .01       .01       .01       .01       .01       .01       .01
                   .01       .01       .01       .01       .01       .01       .01       .02       .02       .02
                   .02       .02       .02       .02       .02       .03       .03       .03       .03       .04
                   .08       .09       .10       .13       .17       .35       .61       .24       .15       .11
                   .09       .08       .04       .03       .03       .03       .03       .02       .02       .02
                   .02       .02       .02       .02       .02       .02       .01       .01       .01       .01
                   .01       .01       .01       .01       .01       .01       .01       .01       .01       .01
                   .01       .01

31 JD          INDEX STORM NO. 9
                     STRM        3.09  PRECIPITATION DEPTH
                     TRDA       50.00  TRANSPOSITION DRAINAGE AREA

23 PI            PRECIPITATION PATTERN
                   .01       .01       .01       .01       .01       .01       .01       .01       .01       .01
                   .01       .01       .01       .01       .01       .01       .02       .02       .02       .02
                   .02       .02       .02       .02       .03       .03       .03       .03       .04       .04
                   .08       .09       .10       .11       .15       .30       .54       .21       .13       .11
                   .10       .09       .04       .04       .03       .03       .03       .03       .02       .02
                   .02       .02       .02       .02       .02       .02       .01       .01       .01       .01
                   .01       .01       .01       .01       .01       .01       .01       .01       .01       .01
                   .01       .01

*** FDKRUT - NEWTON RAPHSON FAILEDFIXED POINT ITERATION USED - ITERATION=  1
```

*** FDKRUT - NEWTON RAPHSON FAILEDFIXED POINT ITERATION USED - ITERATION= 2

*** FDKRUT - NEWTON RAPHSON FAILEDFIXED POINT ITERATION USED - ITERATION= 2

1

RUNOFF SUMMARY
FLOW IN CUBIC FEET PER SECOND
TIME IN HOURS, AREA IN SQUARE MILES

| | OPERATION | STATION | PEAK FLOW | TIME OF PEAK | AVERAGE FLOW FOR MAXIMUM PERIOD 6-HOUR | 24-HOUR | 72-HOUR | BASIN AREA | MAXIMUM STAGE | TIME OF MAX STAGE |
|---|---|---|---|---|---|---|---|---|---|---|
| + | HYDROGRAPH AT | 39 | 4167. | 3.25 | 445. | 113. | 109. | 1.88 | | |
| + | HYDROGRAPH AT | 40 | 1443. | 3.17 | 120. | 30. | 29. | .58 | | |
| + | 2 COMBINED AT | C40 | 5282. | 3.25 | 563. | 142. | 137. | 2.47 | | |
| + | ROUTED TO | R41 | 3804. | 3.33 | 560. | 142. | 137. | 2.47 | | |
| + | HYDROGRAPH AT | 41 | 1059. | 3.25 | 121. | 31. | 30. | .83 | | |
| + | 2 COMBINED AT | C41 | 4764. | 3.33 | 678. | 172. | 166. | 3.29 | | |
| + | HYDROGRAPH AT | 42 | 1307. | 3.17 | 116. | 29. | 28. | .58 | | |
| + | HYDROGRAPH AT | 43 | 2384. | 3.17 | 234. | 59. | 57. | 1.07 | | |
| + | HYDROGRAPH AT | 44 | 1847. | 3.25 | 182. | 46. | 44. | .84 | | |
| + | 2 COMBINED AT | C44 | 4139. | 3.25 | 413. | 104. | 100. | 1.91 | | |
| + | ROUTED TO | R45 | 3831. | 3.25 | 413. | 104. | 100. | 1.91 | | |
| + | HYDROGRAPH AT | 45 | 514. | 3.17 | 41. | 10. | 10. | .20 | | |
| - | 2 COMBINED AT | C45 | 4141. | 3.25 | 453. | 114. | 110. | 2.11 | | |
| | HYDROGRAPH AT | | | | | | | | | |

| | | | | | | | |
|---|---|---|---|---|---|---|---|
| | 45A | 473. | 3.17 | 38. | 10. | 9. | .17 |
| HYDROGRAPH AT | | | | | | | |
| | 46 | 2783. | 3.17 | 203. | 51. | 49. | .93 |
| 3 COMBINED AT | | | | | | | |
| | C46 | 6361. | 3.17 | 690. | 174. | 167. | 3.21 |
| ROUTED TO | | | | | | | |
| | R47 | 5348. | 3.33 | 689. | 174. | 167. | 3.21 |
| HYDROGRAPH AT | | | | | | | |
| | 47 | 441. | 3.33 | 60. | 15. | 15. | .38 |
| 2 COMBINED AT | | | | | | | |
| | C47.1 | 5766. | 3.33 | 748. | 189. | 182. | 3.58 |
| 3 COMBINED AT | | | | | | | |
| | C47.2 | 10796. | 3.33 | 1510. | 383. | 369. | 7.46 |
| ROUTED TO | | | | | | | |
| | R50 | 10783. | 3.33 | 1510. | 383. | 369. | 7.46 |
| HYDROGRAPH AT | | | | | | | |
| | 50 | 993. | 3.17 | 79. | 20. | 19. | .41 |
| 2 COMBINED AT | | | | | | | |
| | C50 | 11236. | 3.33 | 1583. | 401. | 386. | 7.87 |
| ROUTED TO | | | | | | | |
| | R48 | 10886. | 3.42 | 1582. | 401. | 386. | 7.87 |
| HYDROGRAPH AT | | | | | | | |
| | 48 | 176. | 3.17 | 15. | 4. | 4. | .12 |
| 2 COMBINED AT | | | | | | | |
| | C48 | 10944. | 3.42 | 1596. | 404. | 390. | 7.99 |
| ROUTED TO | | | | | | | |
| | R2000 | 10942. | 3.42 | 1596. | 404. | 390. | 7.99 |
| HYDROGRAPH AT | | | | | | | |
| | 2000 | 2038. | 3.17 | 174. | 44. | 42. | .89 |
| 2 COMBINED AT | | | | | | | |
| | C2000 | 11746. | 3.42 | 1758. | 445. | 429. | 8.87 |
| ROUTED TO | | | | | | | |
| | R2010 | 11505. | 3.42 | 1757. | 445. | 429. | 8.87 |
| HYDROGRAPH AT | | | | | | | |
| | 2010 | 80. | 3.25 | 8. | 2. | 2. | .04 |
| 2 COMBINED AT | | | | | | | |
| | C2010 | 11541. | 3.42 | 1765. | 447. | 430. | 8.91 |
| ROUTED TO | | | | | | | |
| | 2015A1 | 10578. | 3.58 | 1762. | 447. | 430. | 8.91 |
| HYDROGRAPH AT | | | | | | | |

| | | | | | | | |
|---|---|---|---|---|---|---|---|
| | 2015A | 540. | 3.33 | 68. | 17. | 17. | .36 |
| HYDROGRAPH AT | | | | | | | |
| | 2020 | 315. | 3.08 | 23. | 6. | 6. | .11 |
| ROUTED TO | | | | | | | |
| | 2015A2 | 283. | 3.17 | 23. | 6. | 6. | .11 |
| 3 COMBINED AT | | | | | | | |
| | 2015A1 | 10934. | 3.58 | 1845. | 468. | 451. | 9.38 |
| HYDROGRAPH AT | | | | | | | |
| | 2040 | 1929. | 3.25 | 177. | 45. | 43. | .93 |
| HYDROGRAPH AT | | | | | | | |
| | 2050 | 1741. | 3.25 | 161. | 40. | 39. | .86 |
| 2 COMBINED AT | | | | | | | |
| | C2050 | 3626. | 3.25 | 336. | 84. | 81. | 1.79 |
| ROUTED TO | | | | | | | |
| | R2060 | 2975. | 3.33 | 335. | 84. | 81. | 1.79 |
| HYDROGRAPH AT | | | | | | | |
| | 2060 | 282. | 3.33 | 32. | 8. | 8. | .22 |
| 2 COMBINED AT | | | | | | | |
| | 2060.1 | 3243. | 3.33 | 367. | 92. | 89. | 2.00 |
| 2 COMBINED AT | | | | | | | |
| | 2060.2 | 12608. | 3.50 | 2181. | 553. | 533. | 11.39 |
| HYDROGRAPH AT | | | | | | | |
| | 2065 | 227. | 3.33 | 30. | 8. | 7. | .17 |
| ROUTED TO | | | | | | | |
| | R2060 | 213. | 3.42 | 30. | 8. | 7. | .17 |
| 2 COMBINED AT | | | | | | | |
| | 2060.3 | 12755. | 3.50 | 2207. | 560. | 540. | 11.56 |
| HYDROGRAPH AT | | | | | | | |
| | 2030C | 107. | 3.17 | 10. | 3. | 3. | .07 |
| HYDROGRAPH AT | | | | | | | |
| | 2015B | 33. | 3.42 | 5. | 1. | 1. | .05 |
| 2 COMBINED AT | | | | | | | |
| | C2015B | 121. | 3.17 | 15. | 4. | 4. | .13 |
| 2 COMBINED AT | | | | | | | |
| | 2060.4 | 12802. | 3.50 | 2220. | 564. | 543. | 11.69 |
| ROUTED TO | | | | | | | |
| | R2080A | 11892. | 3.67 | 2216. | 564. | 543. | 11.69 |
| HYDROGRAPH AT | | | | | | | |
| | 2080A | 684. | 3.17 | 65. | 16. | 16. | .42 |
| 2 COMBINED AT | | | | | | | |

| | | | | | | | |
|---|---|---|---|---|---|---|---|
| + | C2080A | 12006. | 3.67 | 2270. | 578. | 557. | 12.10 |
| ROUTED TO | | | | | | | |
| + | R2090 | 12061. | 3.67 | 2269. | 578. | 557. | 12.10 |
| HYDROGRAPH AT | | | | | | | |
| + | 2090 | 396. | 3.25 | 43. | 11. | 11. | .22 |
| 2 COMBINED AT | | | | | | | |
| + | C2090 | 12165. | 3.67 | 2307. | 588. | 567. | 12.33 |
| ROUTED TO | | | | | | | |
| + | 2160A1 | 11193. | 3.75 | 2302. | 588. | 567. | 12.33 |
| HYDROGRAPH AT | | | | | | | |
| + | 2160A | 848. | 3.25 | 92. | 23. | 22. | .47 |
| HYDROGRAPH AT | | | | | | | |
| + | 2080B | 220. | 3.25 | 23. | 6. | 6. | .12 |
| ROUTED TO | | | | | | | |
| + | 2140B1 | 213. | 3.25 | 23. | 6. | 6. | .12 |
| HYDROGRAPH AT | | | | | | | |
| + | 2140B | 214. | 3.17 | 18. | 5. | 4. | .09 |
| 2 COMBINED AT | | | | | | | |
| + | 2140B1 | 365. | 3.17 | 41. | 10. | 10. | .21 |
| HYDROGRAPH AT | | | | | | | |
| + | 2070 | 3805. | 3.17 | 291. | 73. | 70. | 1.46 |
| ROUTED TO | | | | | | | |
| + | R2130 | 3005. | 3.25 | 291. | 73. | 70. | 1.46 |
| HYDROGRAPH AT | | | | | | | |
| + | 2130 | 567. | 3.25 | 55. | 14. | 13. | .25 |
| 2 COMBINED AT | | | | | | | |
| + | C2130 | 3551. | 3.25 | 345. | 87. | 83. | 1.72 |
| ROUTED TO | | | | | | | |
| + | R2135 | 3320. | 3.33 | 345. | 87. | 83. | 1.72 |
| HYDROGRAPH AT | | | | | | | |
| + | 2135 | 157. | 3.17 | 15. | 4. | 4. | .08 |
| 2 COMBINED AT | | | | | | | |
| + | C2135 | 3414. | 3.33 | 359. | 90. | 87. | 1.79 |
| ROUTED TO | | | | | | | |
| + | 2140B2 | 3508. | 3.33 | 359. | 90. | 87. | 1.79 |
| 2 COMBINED AT | | | | | | | |
| + | C2140B | 3786. | 3.33 | 399. | 100. | 97. | 2.00 |
| ROUTED TO | | | | | | | |
| + | 2160B1 | 3387. | 3.42 | 398. | 100. | 97. | 2.00 |
| HYDROGRAPH AT | | | | | | | |

| | | | | | | | | |
|---|---|---|---|---|---|---|---|---|
| + | | 2150 | 1388. | 3.25 | 133. | 33. | 32. | .69 |
| | ROUTED TO | | | | | | | |
| + | | 2160B2 | 1368. | 3.25 | 133. | 33. | 32. | .69 |
| | HYDROGRAPH AT | | | | | | | |
| + | | 2140A | 465. | 3.17 | 46. | 12. | 11. | .23 |
| | HYDROGRAPH AT | | | | | | | |
| + | | 2160B | 230. | 3.25 | 24. | 6. | 6. | .14 |
| | 4 COMBINED AT | | | | | | | |
| + | | C2160B | 4884. | 3.33 | 596. | 151. | 145. | 3.06 |
| | ROUTED TO | | | | | | | |
| + | | 2160A2 | 4650. | 3.42 | 596. | 151. | 145. | 3.06 |
| | HYDROGRAPH AT | | | | | | | |
| + | | 2170B | 250. | 3.25 | 26. | 7. | 6. | .13 |
| | HYDROGRAPH AT | | | | | | | |
| + | | 2180 | 2312. | 3.25 | 212. | 53. | 51. | 1.00 |
| | ROUTED TO | | | | | | | |
| + | | R2190 | 1923. | 3.42 | 212. | 53. | 51. | 1.00 |
| | HYDROGRAPH AT | | | | | | | |
| + | | 2190 | 261. | 3.17 | 23. | 6. | 6. | .12 |
| | 2 COMBINED AT | | | | | | | |
| + | | C2190 | 2073. | 3.33 | 234. | 59. | 57. | 1.13 |
| | HYDROGRAPH AT | | | | | | | |
| + | | 2200 | 482. | 3.25 | 46. | 12. | 11. | .25 |
| | HYDROGRAPH AT | | | | | | | |
| + | | 2210A | 3552. | 3.17 | 285. | 71. | 69. | 1.58 |
| | ROUTED TO | | | | | | | |
| + | | 2210B1 | 2725. | 3.25 | 285. | 71. | 69. | 1.58 |
| | ROUTED TO | | | | | | | |
| + | | 2210B2 | 2681. | 3.33 | 286. | 72. | 69. | 1.58 |
| | HYDROGRAPH AT | | | | | | | |
| + | | 2210B | 247. | 3.25 | 27. | 7. | 6. | .19 |
| | 2 COMBINED AT | | | | | | | |
| + | | 2210B1 | 2896. | 3.33 | 312. | 78. | 75. | 1.78 |
| | 2 COMBINED AT | | | | | | | |
| + | | 2210B2 | 3239. | 3.33 | 357. | 90. | 86. | 2.03 |
| | 3 COMBINED AT | | | | | | | |
| + | | 2210B3 | 5431. | 3.33 | 613. | 154. | 149. | 3.29 |
| | ROUTED TO | | | | | | | |
| + | | R2170A | 5342. | 3.33 | 613. | 154. | 149. | 3.29 |
| | HYDROGRAPH AT | | | | | | | |

| | | | | | | | |
|---|---|---|---|---|---|---|---|
| + | 2170A | 224. | 3.17 | 22. | 6. | 5. | .12 |
| 2 COMBINED AT | | | | | | | |
| + | C2170A | 5480. | 3.33 | 633. | 160. | 154. | 3.41 |
| ROUTED TO | | | | | | | |
| + | 2160A3 | 5478. | 3.33 | 633. | 160. | 154. | 3.41 |
| 4 COMBINED AT | | | | | | | |
| + | C2160A | 15195. | 3.67 | 3498. | 893. | 860. | 19.27 |
| ROUTED TO | | | | | | | |
| + | R2160C | 15176. | 3.75 | 3497. | 893. | 860. | 19.27 |
| HYDROGRAPH AT | | | | | | | |
| + | 2160C | 40. | 3.33 | 5. | 1. | 1. | .03 |
| 2 COMBINED AT | | | | | | | |
| + | C2160C | 15188. | 3.75 | 3502. | 894. | 861. | 19.30 |
| HYDROGRAPH AT | | | | | | | |
| + | 2220C | 55. | 3.17 | 5. | 1. | 1. | .03 |
| ROUTED TO | | | | | | | |
| + | R2170C | 36. | 3.42 | 5. | 1. | 1. | .03 |
| HYDROGRAPH AT | | | | | | | |
| + | 2170C | 103. | 3.25 | 11. | 3. | 3. | .06 |
| 2 COMBINED AT | | | | | | | |
| + | C2170C | 123. | 3.25 | 15. | 4. | 4. | .09 |
| ROUTED TO | | | | | | | |
| + | R2170D | 112. | 3.42 | 15. | 4. | 4. | .09 |
| HYDROGRAPH AT | | | | | | | |
| + | 2170D | 62. | 3.25 | 6. | 2. | 2. | .04 |
| 2 COMBINED AT | | | | | | | |
| + | C2170D | 154. | 3.33 | 22. | 6. | 5. | .12 |
| 2 COMBINED AT | | | | | | | |
| + | 2160C2 | 15251. | 3.75 | 3520. | 899. | 866. | 19.42 |
| ROUTED TO | | | | | | | |
| + | R2170E | 15259. | 3.75 | 3520. | 899. | 866. | 19.42 |
| HYDROGRAPH AT | | | | | | | |
| + | 2170E | 42. | 3.25 | 4. | 1. | 1. | .02 |
| 2 COMBINED AT | | | | | | | |
| + | C2170E | 15267. | 3.75 | 3524. | 900. | 867. | 19.45 |
| ROUTED TO | | | | | | | |
| + | R2170F | 15237. | 3.75 | 3524. | 900. | 867. | 19.45 |
| HYDROGRAPH AT | | | | | | | |
| + | 2170F | 17. | 3.25 | 2. | 0. | 0. | .01 |
| 2 COMBINED AT | | | | | | | |

C2170F 15240. 3.75 3525. 900. 867. 19.46

1

SUMMARY OF KINEMATIC WAVE - MUSKINGUM-CUNGE ROUTING
(FLOW IS DIRECT RUNOFF WITHOUT BASE FLOW)

| ISTAQ | ELEMENT | DT (MIN) | PEAK (CFS) | TIME TO PEAK (MIN) | VOLUME (IN) | INTERPOLATED TO COMPUTATION INTERVAL DT (MIN) | PEAK (CFS) | TIME TO PEAK (MIN) | VOLUME (IN) |
|---|---|---|---|---|---|---|---|---|---|
| FOR STORM = 1 STORM AREA (SQ MI) = | | | | .00 | | | | | |
| 39 | MANE | 2.69 | 4294.48 | 193.77 | 2.26 | 5.00 | 4244.11 | 195.00 | 2.25 |

CONTINUITY SUMMARY (AC-FT) - INFLOW= .0000E+00 EXCESS= .2271E+03 OUTFLOW= .2263E+03 BASIN STORAGE= .8393E-01 PERCENT ERROR= .3

| | | | | | | | | | |
|---|---|---|---|---|---|---|---|---|---|
| FOR STORM = 2 STORM AREA (SQ MI) = | | | | .00 | | | | | |
| 39 | MANE | 2.69 | 4294.42 | 193.77 | 2.26 | 5.00 | 4244.06 | 195.00 | 2.25 |

CONTINUITY SUMMARY (AC-FT) - INFLOW= .0000E+00 EXCESS= .2271E+03 OUTFLOW= .2263E+03 BASIN STORAGE= .8394E-01 PERCENT ERROR= .3

| | | | | | | | | | |
|---|---|---|---|---|---|---|---|---|---|
| FOR STORM = 3 STORM AREA (SQ MI) = | | | | .01 | | | | | |
| 39 | MANE | 2.69 | 4294.02 | 193.77 | 2.26 | 5.00 | 4243.69 | 195.00 | 2.25 |

CONTINUITY SUMMARY (AC-FT) - INFLOW= .0000E+00 EXCESS= .2271E+03 OUTFLOW= .2263E+03 BASIN STORAGE= .8393E-01 PERCENT ERROR= .3

| | | | | | | | | | |
|---|---|---|---|---|---|---|---|---|---|
| FOR STORM = 4 STORM AREA (SQ MI) = | | | | .10 | | | | | |
| 39 | MANE | 2.70 | 4289.99 | 193.77 | 2.26 | 5.00 | 4240.04 | 195.00 | 2.25 |

CONTINUITY SUMMARY (AC-FT) - INFLOW= .0000E+00 EXCESS= .2271E+03 OUTFLOW= .2263E+03 BASIN STORAGE= .8397E-01 PERCENT ERROR= .3

| | | | | | | | | | |
|---|---|---|---|---|---|---|---|---|---|
| FOR STORM = 5 STORM AREA (SQ MI) = | | | | .50 | | | | | |
| 39 | MANE | 2.70 | 4272.21 | 193.76 | 2.25 | 5.00 | 4223.91 | 195.00 | 2.25 |

CONTINUITY SUMMARY (AC-FT) - INFLOW= .0000E+00 EXCESS= .2268E+03 OUTFLOW= .2260E+03 BASIN STORAGE= .8407E-01 PERCENT ERROR= .3

| | | | | | | | | | |
|---|---|---|---|---|---|---|---|---|---|
| FOR STORM = 6 STORM AREA (SQ MI) = | | | | 1.00 | | | | | |
| 39 | MANE | 2.71 | 4250.12 | 193.75 | 2.25 | 5.00 | 4203.87 | 195.00 | 2.24 |

CONTINUITY SUMMARY (AC-FT) - INFLOW= .0000E+00 EXCESS= .2264E+03 OUTFLOW= .2256E+03 BASIN STORAGE= .8423E-01 PERCENT ERROR= .3

| | | | | | | | | | |
|---|---|---|---|---|---|---|---|---|---|
| FOR STORM = 7 STORM AREA (SQ MI) = | | | | 5.00 | | | | | |
| 39 | MANE | 2.74 | 4154.69 | 194.32 | 2.21 | 5.00 | 4111.17 | 195.00 | 2.21 |

CONTINUITY SUMMARY (AC-FT) - INFLOW= .0000E+00 EXCESS= .2234E+03 OUTFLOW= .2221E+03 BASIN STORAGE= .8540E-01 PERCENT ERROR= .5

# HEC-1 MODEL NO. 4

# FILE: REAT4

```
*****************************************
*                                       *
*   FLOOD HYDROGRAPH PACKAGE  (HEC-1)   *
*            SEPTEMBER 1990             *
*             VERSION 4.0               *
*                                       *
*  RUN DATE  01/28/1995  TIME  13:17:49 *
*                                       *
*****************************************
```

```
*****************************************
*                                       *
*    U.S. ARMY CORPS OF ENGINEERS       *
*    HYDROLOGIC ENGINEERING CENTER      *
*          609 SECOND STREET            *
*       DAVIS, CALIFORNIA 95616         *
*           (916) 756-1104              *
*                                       *
*****************************************
```

```
X     X  XXXXXXX   XXXXX          X
X     X  X        X     X        XX
X     X  X        X              X
XXXXXXX  XXXX     X       XXXXX  X
X     X  X        X              X
X     X  X        X     X        X
X     X  XXXXXXX   XXXXX         XXX
```

THIS PROGRAM REPLACES ALL PREVIOUS VERSIONS OF HEC-1 KNOWN AS HEC1 (JAN 73), HEC1GS, HEC1DB, AND HEC1KW.

THE DEFINITIONS OF VARIABLES -RTIMP- AND -RTIOR- HAVE CHANGED FROM THOSE USED WITH THE 1973-STYLE INPUT STRUCTURE.
THE DEFINITION OF -AMSKK- ON RM-CARD WAS CHANGED WITH REVISIONS DATED 28 SEP 81. THIS IS THE FORTRAN77 VERSION
NEW OPTIONS: DAMBREAK OUTFLOW SUBMERGENCE , SINGLE EVENT DAMAGE CALCULATION, DSS:WRITE STAGE FREQUENCY,
DSS:READ TIME SERIES AT DESIRED CALCULATION INTERVAL  LOSS RATE:GREEN AND AMPT INFILTRATION
KINEMATIC WAVE: NEW FINITE DIFFERENCE ALGORITHM

1 HEC-1 INPUT PAGE 1

```
LINE          ID.......1.......2.......3.......4.......5.......6.......7.......8.......9.......10

  1           ID        DESERT GREENBELT STUDY BY GREINER, INC.
  2           ID        1992 MODELING REVISIONS BASED ON REATA PASS SENSITIVITY ANALYSIS
  3           ID        MODEL 4   FILE NAME: REAT4.DAT
  4           ID
  5           ID        REATA HYDROLOGY -PROP. CONDITIONS W/ FUTURE LAND USE
  6           ID        ORIGINAL MODEL RPBW1 BY ROBERT L. WARD
  7           ID        100-YEAR 6-HOUR STORM (AMC TYPE II)
  8           ID
  9           ID        SUB-BASINS 39 THRU 50 & 2000 THRU 2220C
 10           ID        WITH GREENBELT REGIONAL CHANNEL IN PLACE IN SUB 48, 50, 2000, 2010,
 11           ID        2015A, 2080A AND PARALLEL 96TH STREET TO CAP DIKE 4
 12           ID
 13           ID        PH CARD FOR SUB 30 TO SUB 50
 14           ID        CHANGE PH CARD FOR SUB 2000 AND DOWNSTREAM
 15           ID        USE JD CARDS
 16           ID        100% RUNOFF FROM SUB 2070 TO 2065
 17           ID        SPLIT FLOWS AT D.S. ENDS OF SUB 2130
 18           ID        STATE LAND CHANNEL ALIGNMENT INCORPORATED
 19           ID        NEW TPP ALIGNMENT AS OF AUG 1, 1994
              *DIAGRAM
 20           IT       5   OCT94       0     300
 21           IO       5       0
```

```
 22          JD          .0001
 23          PH                     .72    1.41    2.47    2.79    2.99    3.39
 24          JD           .001
 25          JD            .01
 26          JD             .1
 27          JD             .5
 28          JD              1
 29          JD              5
 30          JD             25
 31          JD             50

 32          KK     39     SUB
 33          KM        RUNOFF FROM SUB-BASIN 39
 34          BA  1.8807
 35          LS             85    23.4
 36          UK    330   .0433     .20     100
 37          RK  11240   .0253    .045            TRAP      30       3

 38          KK     40     SUB
 39          KM        RUNOFF FROM SUB-BASIN 40
 40          BA   .5844
 41          LS             83     9.9
 42          UK    160   .0627     .20     100
 43          RK   7000   .0350    .045            TRAP      20       3

 44          KK    C40
 45          KM        COMBINE HYDROGRAPHS SUB 39 & SUB 40
 46          HC      2
1                                        HEC-1 INPUT                                        PAGE  2

LINE         ID.......1.......2.......3.......4.......5.......6.......7.......8.......9......10


 47          KK    R41
 48          KM        ROUTE C40 TO D.S. END OF SUB 41
 49          RS      1    FLOW      -1
 50          RC   .055    .040    .055    9400   .0282
 51          RX      0       1     101     107     157     163     263     264
 52          RY     10       8       3       0       0       3       8      10

 53          KK     41     SUB
 54          KM        RUNOFF FROM SUB-BASIN 41
 55          BA   .8270
 56          LS             74    10.1
 57          UK    280   .2386     .20     100
 58          RK   9400   .0282    .045            TRAP      50       3

 59          KK    C41
 60          KM        COMBINE HYDROGRAPHS R41 & SUB 41
 61          HC      2

 62          KK     42     SUB
 63          KM        RUNOFF FROM SUB-BASIN 42
 64          BA   .5844
 65          LS             78    23.3
 66          UK    280   .2386     .20     100
 67          RK   8750   .0573    .045            TRAP      20       3

 68          KK     43     SUB
 69          KM        RUNOFF FROM SUB-BASIN 43
```

```
 70          BA  1.0665
 71          LS              85    10.5
 72          UK     260   .0515     .20     100
 73          RK    7400   .0255    .045            TRAP      25       3

 74          KK      44     SUB
 75          KM        RUNOFF FROM SUB-BASIN 44
 76          BA   .8389
 77          LS              85     8.1
 78          UK     260   .0515     .20     100
 79          RK    9840   .0622    .045            TRAP      25       3

 80          KK     C44
 81          KM        COMBINE HYDROGRAPHS SUB 43 & SUB 44
 82          HC       2

 83          KK     R45
 84          KM        ROUTE C44 TO D.S. END OF SUB 45
 85          RS       1    FLOW      -1
 86          RC    .055    .040    .055    3600   .0366
 87          RX       0       1     101     107     137     143     243     244
 88          RY      10       8       3       0       0       3       8      10
                                          HEC-1 INPUT                                                    PAGE  3

LINE         ID.......1.......2.......3.......4.......5.......6.......7.......8.......9......10


 89          KK      45     SUB
 90          KM        RUNOFF FROM SUB-BASIN 45
 91          BA   .2037
 92          LS              81    14.5
 93          UK     125   .1166     .20     100
 94          RK    3600   .0366    .045            TRAP      30       3

 95          KK     C45
 96          KM        COMBINE HYDROGRAPHS R45 & SUB 45
 97          HC       2

 98          KK     45A     SUB
 99          KM        RUNOFF FROM SUB-BASIN 45A
100          BA   .1720
101          LS              86     6.9
102          UK     275   .2200     .20     100
103          RK    5400   .0411    .045            TRAP      15       3

104          KK      46     SUB
105          KM        RUNOFF FROM SUB-BASIN 46
106          BA   .9268
107          LS              86     3.7
108          UK     265   .4958     .20     100
109          RK    3300   .2271    .045    .111    TRAP      10       3
110          RK    7100   .0535    .045            TRAP      25       3

111          KK     C46
112          KM        COMBINE HYDROGRAPHS C45, SUB 45A, & SUB 46
113          HC       3

114          KK     R47
115          KM        ROUTE C46 TO D.S. END OF SUB 47
116          RS       1    FLOW      -1
```

```
117          RC    .055    .040    .055    7600   .0268
118          RX       0       1     101     109     159     167     267     268
119          RY      10       9       4       0       0       4       9      10

120          KK      47     SUB
121          KM        RUNOFF FROM SUB-BASIN 47
122          BA   .3757
123          LS              77     8.6
124          UK     375   .1000     .20     100
125          RK    9300   .0357    .045            TRAP      50       3

126          KK   C47.1
127          KM        COMBINE HYDROGRAPHS SUB 47 & R47
128          HC       2

129          KK   C47.2
130          KM        COMBINE HYDROGRAPHS C47.1, C41 & SUB 42
131          HC       3
```



```
LINE         ID.......1.......2.......3.......4.......5.......6.......7.......8.......9......10


132          KK     R50
133          KM        ROUTE C47.2 TO D.S. END OF SUB 50 (BEGINNING OF REATA DESERT
134          KM        GREENBELT CHANNEL)
135          RS       1    FLOW      -1
136          RC    .055    .040    .055    1000   .0200
137          RX       0      35     135     150     225     240     340     375
138          RY      10       3       3       0       0       3       3      10

139          KK      50     SUB
140          KM        RUNOFF FROM SUB-BASIN 50
141          BA   .4052
142          LS              83     3.3
143          UK     300   .3555     .20     100
144          RK     730   .1506    .045    .036    TRAP      10       3
145          RK    6400   .0453    .045            TRAP      25       3

146          KK     C50
147          KM        COMBINE HYDROGRAPHS OF SUB 50 AND R50
148          KM        THIS IS THE TOTAL DISCHARGE TO THE REATA PASS ALLUVIAL FAN APEX
149          HC       2

150          KK     R48
151          KM        ROUTE C50 TO OUTLET OF SUB 48
152          RS       1    FLOW      -1
153          RC    .055    .040    .055    2900   .0345
154          RX       0      35     135     150     225     240     340     375
155          RY      10       3       3       0       0       3       3      10

156          KK      48     SUB
157          KM        RUNOFF FROM SUB-BASIN 48
158          BA   .1203
159          LS              72     6.8
160          UK     175   .1400     .15     100
161          RK    2900   .0345    .045            TRAP      50       3

162          KK     C48
163          KM        COMBINE HYDROGRAPHS R48 & SUB 48
```

```
164          HC       2

165          KK   R2000
166          KM        ROUTE C48 TO D.S. END OF SUB 2000
167          RS       1    FLOW      -1
168          RC    .055    .045    .055    1300   .0308
169          RX       0      35     135     150     225     240     340     375
170          RY      10       3       3       0       0       3       3      10

171          KK    2000     SUB
172          KM        RUNOFF FROM SUB 2000
173          BA   .8853
174          PH                     .72    1.41    2.47    2.77    2.97    3.35
175          LS              84     2.9
176          UK     400   .2750     .25     100
177          RK    2625   .0785    .045    .072    TRAP      10       3
178          RK    3600   .0222    .045            TRAP      25       3
```



```
LINE         ID.......1.......2.......3.......4.......5.......6.......7.......8.......9......10

179          KK   C2000
180          KM        COMBINE HYDROGRAPHS OF R2000 & SUB 2000
181          HC       2

182          KK   R2010
183          KM        ROUTE C2000 TO D.S. END OF SUB 2010
184          RS       1    FLOW      -1
185          RC    .055    .045    .055    1300   .0308
186          RX       0      35     135     150     225     240     340     375
187          RY      10       3       3       0       0       3       3      10

188          KK    2010     SUB
189          KM        RUNOFF FROM SUB-BASIN 2010
190          BA   .0413
191          LS              83     3.7
192          UK     800   .6425    0.30     100
193          RK    1300   .0308   0.045            TRAP      50       3

194          KK   C2010
195          KM        COMBINE HYDROGRAPHS R2010 & SUB 2010
196          HC       2

197          KK  2015A1
198          KM        ROUTE C2010 TO D.S. END OF SUB 2015A
199          RS       1    FLOW      -1
200          RC    .055    .045    .055    4800   .0292
201          RX       0      35     135     150     225     240     340     375
202          RY      10       3       3       0       0       3       3      10

203          KK   2015A     SUB
204          KM        RUNOFF FROM SUB-BASIN 2015A
205          BA   .3619
206          LS              82     7.7
207          UK     500   .2800     .25     100
208          RK    2400   .1358    .045    .061    TRAP      10       3
209          RK    5300   .0200    .045            TRAP     150       5

210          KK    2020     SUB
```

```
211          KM        RUNOFF FROM SUB-BASIN 2020
212          BA   .1090
213          LS              85     4.1
214          UK     205   .6969    0.30     100
215          RK     900   .3889    .045    .011    TRAP      10       3
216          RK    2800  0.1428    .045            TRAP      20       3

217          KK  2015A2
218          KM        ROUTE SUB 2020 TO D.S. END OF SUB 2015A
219          RS       1    FLOW      -1
220          RC    .055    .045    .055    1600    .025
221          RX       0      .1       2      32      67      97    98.9      99
222          RY      15      10      10       0       0      10      10      15
```



```
LINE         ID.......1.......2.......3.......4.......5.......6.......7.......8.......9......10


223          KK  2015A1
224          KM        COMBINE HYDROGRAPHS OF (R)2015A1, SUB 2015A & (R)2015A2
225          HC       3

226          KK    2040     SUB
227          KM        RUNOFF FROM SUB-BASIN 2040
228          BA   .9290
229          LS              82     8.3
230          UK     463   .4072    0.25     100
231          RK    2700   .1878    .045    .056    TRAP      10       3
232          RK    6800   .0485    .045            TRAP      25       3

233          KK    2050     SUB
234          KM        RUNOFF FROM SUB-BASIN 2050
235          BA   .8580
236          LS              81     9.8
237          UK     530   .5726    0.25     100
238          RK    3400   .2067    .045    .086    TRAP      10       3
239          RK    6200   .0693    .045            TRAP      25       5

240          KK   C2050
241          KM        COMBINE HYDROGRAPHS OF SUB 2040 & SUB 2050
242          HC       2

243          KK   R2060
244          KM        ROUTE C2050 TO OUTLET OF SUB 2060
245          RS       1    FLOW      -1
246          RC    .055    .045    .055    3900   .0310
247          RX       0       3      53      57      87      91     141     144
248          RY      10       4       2       0       0       2       4      10

249          KK    2060     SUB
250          KM        RUNOFF FROM SUB-BASIN 2060
251          BA   .2169
252          LS              71    17.8
253          UK     217   .1667     .20     100
254          RK    2275   .0929    .045    .031    TRAP      10       5
255          RK    3900   .0310    .055            TRAP      30      15

256          KK  2060.1
257          KM        COMBINE HYDROGRAPHS OF R2060 & SUB 2060
258          HC       2
```

```
259          KK    2070     SUB
260          KM        RUNOFF FROM SUB-BASIN 2070
261          BA  1.4649
262          LS              84     4.1
263          UK     400   .5174     .30     100
264          RK    1750   .2962    .045    .048    TRAP       5       3
265          RK    3500   .1236    .045    .483    TRAP      10       3
266          RK    3400   .0882    .045            TRAP      30      10
```



```
LINE         ID.......1.......2.......3.......4.......5.......6.......7.......8.......9......10

267          KK  2065.1
268          KM        ROUTE SUB 2070 TO D.S. END OF SUB 2065
269          RS       3    FLOW      -1
270          RC    .055    .045    .055    6500   .0508
271          RX       0       3      53      57      87      91     141     144
272          RY      10       4       2       0       0       2       4      10

273          KK    2065     SUB
274          KM        RUNOFF FROM SUB-BASIN 2065
275          BA   .1720
276          LS              69    31.5
277          UK     200    .050      .2     100
278          RK    6500   .0508    .055            TRAP      30      15

279          KK   C2065
280          KM        COMBINE HYDROGRAPHS OF SUB 2065 & (R)2065.1
281          KM        DRAINAGE AREA ADJUSTMENT MADE TO REFLECT FLOW DIVERSION OF U.S. AREAS
282          HC       2

283          KK   R2060
284          KM        ROUTE C2065 TO D.S. END OF SUB 2060
285          RS       1    FLOW      -1
286          RC    .055    .045    .055    1600   .0267
287          RX       0       3      53      57      87      91     141     144
288          RY      10       4       2       0       0       2       4      10

289          KK  2060.2
290          KM        COMBINE HYDROGRAPHS OF C2060.1 & R2060
291          HC       2

292          KK  2060.3
293          KM        COMBINE 2060.2 & 2015A1
294          HC       2

295          KK   2030C     SUB
296          KM        RUNOFF FROM SUB-BASIN 2030C
297          BA   .0723
298          LS              63    27.3
299          UK     155   .0614     .15     100
300          RK    3000   .0300    .045            TRAP       5       5

301          KK   2015B     SUB
302          KM        RUNOFF FROM SUB-BASIN 2015B
303          BA   .0545
304          LS              60    15.4
305          UK     500   .2800     .25     100
```

```
306          RK    4000   .0288    .045            TRAP      25       5

307          KK  C2015B
308          KM        COMBINE HYDROGRAPHS OF SUB 2015B & SUB 2030C
309          HC       2
```



```
LINE         ID.......1.......2.......3.......4.......5.......6.......7.......8.......9......10

310          KK  2060.4
311          KM        COMBINE HYDROGRAPHS OF C2015B & (C)2060.3
312          HC       2

313          KK  R2080A
314          KM        ROUTE (C)2060.4 TO OUTLET OF SUB 2080A
315          RS       1    FLOW      -1
316          RC    .055    .045    .055    5500   .0291
317          RX       0      35     135     150     225     240     340     375
318          RY      10       3       3       0       0       3       3      10

319          KK   2080A     SUB
320          KM        RUNOFF FROM SUB 2080A
321          BA   .4186
322          LS              69    24.1
323          UK     155   .0614     .15     100
324          RK    5500   .0291    .045            TRAP       7       5

325          KK  C2080A
326          KM        COMBINE HYDROGRAPHS OF R2080A & SUB 2080A
327          HC       2

328          KK   R2090
329          KM        ROUTE C2080A TO D.S. OF SUB 2090 (UNION HILL DR.)
330          RS       1    FLOW      -1
331          RC    .055    .045    .055    1400   .0214
332          RX       0      35     135     150     225     240     340     375
333          RY      10       3       3       0       0       3       3      10

334          KK    2090     SUB
335          KM        RUNOFF FROM SUB 2090
336          BA   .2220
337          LS              74    32.1
338          UK     337   .0324     .15     100
339          RK    5000   .0280    .045            TRAP      25       3

340          KK   C2090
341          KM        COMBINE HYDROGRAPHS OF R2090 & SUB 2090
342          HC       2

343          KK  2160A1
344          KM        ROUTE C2090 TO D.S. END OF SUB 2160A THRU DESERT GREENBELT
345          RS       1    FLOW      -1
346          RC    .055    .045    .055    5300   .0208
347          RX       0      35     135     150     225     240     340     375
348          RY      10       3       3       0       0       3       3      10

349          KK   2160A     SUB
350          KM        RUNOFF FROM SUB-BASIN 2160A
351          BA   .4713
```

```
352          LS              74    32.1
353          UK     337   .0324     .15     100
354          RK    5300   .0208    .045            TRAP      25       3
```



```
LINE         ID.......1.......2.......3.......4.......5.......6.......7.......8.......9......10

355          KK    2130     SUB
356          KM        RUNOFF FROM SUB-BASIN 2130
357          BA   .2510
358          LS              86     7.1
359          UK     267   .3126     .20     100
360          RK    9240   .0941    .045            TRAP      30      20

361          KK    2133     DIV
362          KM        DIVERT FLOW FROM SUB 2130 TO SUB 2080B (DIV 2133)
363          KM        DIVERT FLOW FROM SUB 2130 TO SUB 2135 (RET 2134)
364          DT    2134
365          DI       0     500    1000    6000
366          DQ       0     500     850    4350

367          KK  R2080B
368          KM        ROUTE NON-DIVERTED FLOW FROM DIV 2133 TO DS. END OF SUB 2080B
369          RS       1    FLOW      -1
370          RC    .055    .045    .055    5000   .0440
371          RX       0       3      53      57      87      91     141     144
372          RY      10       4       2       0       0       2       4      10

373          KK   2080B     SUB
374          KM        RUNOFF FROM SUB-BASIN 2080B
375          BA   .1190
376          LS              74    32.1
377          UK     175   .0571     .15     1C0
378          RK    5000   .0440    .045            TRAP      30      15

379          KK  C2080B
380          KM        COMBINE HYDROGRAPHS OF R2080B & SUB 2080B
381          HC       2   .1692

382          KK  2140B1
383          KM        ROUTE C2080B ALONG THOMPSON PEAK PARKWAY THROUGH
384          KM        SHOTCRETE-LINED COLLECTOR TO D.S. END OF SUB 2140B
385          RS       1    FLOW      -1
386          RC    .019    .019    .019    1900   .0158
387          RX       0       8      24      40      44      60      76      84
388          RY      10       8       4       0       0       4       8      10

389          KK   2140B     SUB
390          KM        RUNOFF FROM SUB-BASIN 2140B
391          BA   .0925
392          LS              74    32.1
393          UK     200   .0500     .15     100
394          RK    1820   .0461    .045            TRAP      20      10

395          KK    2134     RET
396          KM        RETRIEVE DIVERTED FLOW FROM DIV 2133
397          DR    2134
```

```
LINE          ID.......1.......2.......3.......4.......5.......6.......7.......8.......9......10

 398          KK   R2135
 399          KM        ROUTE RET 2134 TO OUTLET OF SUB 2135
 400          RS       1    FLOW      -1
 401          RC    .055    .045    .055    2700   .0444
 402          RX       0     0.1       2      22      42      62    63.9      64
 403          RY      15      10      10       0       0      10      10      15

 404          KK    2135     SUB
 405          KM        RUNOFF FROM SUB-BASIN 2135
 406          BA   .0750
 407          LS              86    19.3              74    19.3
 408          UK     800   .4000     .30      40
 409          UK     200   .0500     .15      60
 410          RK    2700   .0444    .045            TRAP      20       2

 411          KK   C2135
 412          KM        COMBINE HYDROGRAPHS OF R2135 & SUB 2135
 413          KM        DRAINAGE AREA ADJUSTMENT MADE TO REFLECT DIVERSION OF U.S. AREAS
 414          HC       2  0.2758

 415          KK  2140B2
 416          KM        ROUTE C2135 TO D.S. END OF SUB 2140B
 417          RS       1    FLOW      -1
 418          RC    .055    .045    .055    1600   .0500
 419          RX       0      .1       2      22      42      62    63.9      64
 420          RY      15      10      10       0       0      10      10      15

 421          KK  C2140B
 422          KM        COMBINE HYDROGRAPHS OF (R)2140B1, (R)2140B2 & SUB 2140B
 423          HC       3

 424          KK  2160B1
 425          KM        ROUTE C2140B THROUGH EARTHEN-LANDSCAPED COLLECTOR TO D.S.
 426          KM        END OF SUB 2160B
 427          RS       1    FLOW      -1
 428          RC    .045    .045    .045    4600   .0326
 429          RX       0      24      32      40      65      73      81     105
 430          RY      10       4       2       0       0       2       4      10

 431          KK    2150     SUB
 432          KM        RUNOFF FROM SUB-BASIN 2150
 433          BA   .6873
 434          LS              86    15.0              74    15.0
 435          UK     350   .3428     .30      50
 436          UK     180   .0555     .15      50
 437          RK    1785   .1313    .045    .027    TRAP      10       3
 438          RK    6400   .0312    .045            TRAP      20      10

 439          KK  2160B2
 440          KM        ROUTE SUB 2150 TO D.S. END OF SUB 2160B
 441          RS       1    FLOW      -1
 442          RC    .045    .045    .045    1000   .0200
 443          RX       0      24      32      40      65      73      81     105
 444          RY      10       4       2       0       0       2       4      10
```



LINE ID.....1.....2.....3.....4.....5.....6.....7.....8.....9.....10

```
445          KK   2140A     SUB
446          KM        RUNOFF FROM SUB-BASIN 2140A
447          BA   .2335
448          LS              74    32.1
449          UK     200   .0500     .15     100
450          RK     800   .0500    .045   .0244    TRAP      15       3
451          RK    4600   .0326    .045            TRAP      17       5

452          KK   2160B     SUB
453          KM        RUNOFF FROM SUB-BASIN 2160B
454          BA   .1412
455          LS              75    19.3
456          UK     337   .0324     .15     100
457          RK    2275   .0527    .045   .0361    TRAP      15       3
458          RK    1400   .0241    .045            TRAP      17       5

459          KK  C2160B
460          KM        COMBINE HYDROGRAPHS OF(R)2160B1, (R)2160B2, SUB 2140 & SUB 2160B
461          HC       4

462          KK  2160A2
463          KM        ROUTE C2160B THROUGH EARTHEN LANDSCAPED COLLECTOR TO D.S.
464          KM        END OF SUB 2160A
465          RS       2    FLOW      -1
466          RC    .045    .045    .045    4720   .0169
467          RX       0      24      32      40      65      73      81     105
468          RY      10       4       2       0       0       2       4      10

469          KK   2170B     SUB
470          KM        RUNOFF FROM SUB-BASIN 2170B
471          BA   .1312
472          LS              74    34.5
473          UK     250   .0266     .15     100
474          RK    4640   .0457    .045            TRAP      20       5

475          KK    2180     SUB
476          KM        RUNOFF FROM SUB-BASIN 2180
477          BA  1.0044
478          LS              86     1.4
479          UK     468   .4496     .30     100
480          RK    3100   .2558    .045    .121    TRAP      10       3
481          RK    8200   .0731    .045            TRAP      20       5

482          KK   R2190
483          KM        ROUTE SUB 2180 TO OUTLET OF SUB 2190
484          RS       3    FLOW      -1
485          RC    .055    .040    .055    4100   .0390
486          RX       0       7     107     111     141     145     245     252
487          RY      10       3       2       0       0       2       3      10
```



```
LINE         ID.......1.......2.......3.......4.......5.......6.......7.......8.......9......10

488          KK    2190     SUB
489          KM        RUNOFF FROM SUB-BASIN 2190
490          BA   .1227
491          LS              79    18.0
```

```
492          UK     190   .0915     .15     100
493          RK    4100   .0390    .045            TRAP      30      10

494          KK   C2190
495          KM        COMBINE HYDROGRAPHS OF R2190 & SUB 2190
496          HC       2

497          KK    2200     SUB
498          KM        RUNOFF FROM SUB-BASIN 2200
499          BA   .2532
500          LS              81     6.3
501          UK     353   .1529     .20     100
502          RK    6150   .0838    .045            TRAP       5      11

503          KK   2210A     SUB
504          KM        RUNOFF FROM SUB-BASIN 2210A
505          BA  1.5847
506          LS              82     2.0
507          UK     248   .3717     .30     100
508          RK    4500   .1875    .045    .107    TRAP      10       3
509          RK    4800   .0526    .045            TRAP      20      10

510          KK  2210B1
511          KM        ROUTE SUB 2210A THRU WIDE BRAIDED WASH ALONG NORTH
512          KM        SIDE OF PARCELS N & O
513          RS       1    FLOW      -1
514          RC    .065    .055    .065    3500   .0476
515          RX       0       1      51      52     152     153     203     204
516          RY      10       3       1       0       0       1       3      10

517          KK  2210B2
518          KM        ROUTE (R)2210B1 THRU INCISED WASH ALONG NORTH SIDE OF PARCEL N.
519          KM        RD RECORD USED TO PROMOTE FLOW CONTINUITY
520          RD
521          RC    .065    .050    .065    2140   .0417
522          RX       0       1       2      22      45      65      66      67
523          RY      10      10      10       0       0      10      10      10

524          KK   2210B     SUB
525          KM        RUNOFF FROM SUB-BASIN 2210B
526          BA   .1916
527          LS              74     7.8
528          UK     248   .3717     .25     100
529          RK    5640   .0444    .050            TRAP      50       4
```



```
LINE         ID.......1.......2.......3.......4.......5.......6.......7.......8.......9......10


530          KK  2210B1
531          KM        COMBINE HYDROGRAPHS OF SUB 2210B & (R)2210B2
532          HC       2

533          KK  2210B2
534          KM        COMBINE HYDROGRAPHS OF (C)2210B1 & SUB 2200
535          HC       2

536          KK  2210B3
537          KM        COMBINE HYDROGRAPHS OF (C)2210B2, C2190 &  SUB 2710B
538          KM        THIS IS THE TOTAL FLOW AT THE INTERSECTION OF TTP & PROP. STATE LAND CH.
```

```
539          HC       3

540          KK  R2170A
541          KM        ROUTE (C)2210B3 ALONG SHOTCRETE -LINED COLLECTOR TO OUTLET OF SUB 2170A
542          RS       1    FLOW      -1
543          RC    .019    .019    .019    3600   .0194
544          RX       0       8      24      40      44      60      76      84
545          RY      10       8       4       0       0       4       8      10

546          KK   2170A     SUB
547          KM        RUNOFF FROM SUB-BASIN 2170A
548          BA   .1227
549          LS              74    24.2
550          UK     250   .0266     .15     100
551          RK    1920   .0250    .045            TRAP      20       5

552          KK  C2170A
553          KM        COMBINE HYDROGRAPHS OF R2170A & SUB 2170A
554          HC       2

555          KK  2160A3
556          KM        ROUTE C2170A ALONG SHOTCRETE-LINED CHANNEL TO OUTLET OF SUB 2160A
557          RS       1    FLOW      -1
558          RC    .019    .019    .019     400   .0125
559          RX       0       8      24      40      44      60      76      84
560          RY      10       8       4       0       0       4       8      10

561          KK  C2160A
562          KM        COMBINE HYDROGRAPHS OF (R)2160A1, SUB 2160A, (R)2160A2 & (R)2160A3
563          HC       4

564          KK  R2160C
565          KM        ROUTE C2160A TO OUTLET OF SUB 2160C
566          RS       1    FLOW      -1
567          RC    .055    .045    .055    2036   .0144
568          RX       0      35     135     150     225     240     340     375
569          RY      10       3       3       0       0       3       3      10
```



```
LINE         ID.......1.......2.......3.......4.......5.......6.......7.......8.......9......10

570          KK   2160C     SUB
571          KM        RUNOFF FROM SUB 2160C
572          BA   .0261
573          LS              74    32.1
574          UK     337   .0324     .15     100
575          RK    2036   .0144    .045            TRAP      75       5

576          KK  C2160C
577          KM        COMBINE HYDROGRAPHS OF SUB 2160C & R2160C
578          HC       2

579          KK   2220C     SUB
580          KM        RUNOFF FROM SUB 2220C
581          BA   .0268
582          LS              74    21.9
583          UK     200     .05     .15     100
584          RK    2235   .0434    .045            TRAP       7       3
```

```
585          KK  R2170C
586          KM        ROUTE SUB 2220C TO OUTLET OF SUB 2170C AT BELL RD
587          RS       3    FLOW      -1
588          RC    .055    .045    .055    3000   .0216
589          RX       0       1       2      52      67     117     118     119
590          RY      10      10      10       0       0      10      10      10

591          KK   2170C     SUB
592          KM        RUNOFF FROM SUB 2170C
593          BA   .0610
594          LS              74    24.2
595          UK     250   .0266     .15     100
596          RK    3000   .0216    .045            TRAP      15       5

597          KK  C2170C
598          KM        COMBINE HYDROGRAPHS OF SUB 2170C & R2170C
599          HC       2

600          KK  R2170D
601          KM        ROUTE C2170C TO OUTLET OF SUB 2170D
602          RS       2    FLOW      -1
603          RC    .055    .045    .055    2250   .0147
604          RX       0       6      36      45      60      69      99     105
605          RY      10       4       3       0       0       3       4      10

606          KK   2170D     SUB
607          KM        RUNOFF FROM SUB 2170D
608          BA   .0366
609          LS              74    24.2
610          UK     250   .0266     .15     100
611          RK    2250   .0147    .045            TRAP      15       5
```



```
LINE         ID.......1.......2.......3.......4.......5.......6.......7.......8.......9......10


612          KK  C2170D
613          KM        COMBINE HYDROGRAPHS OF SUB 2170D & R2170D
614          HC       2

615          KK  2160C2
616          KM        COMBINE HYDROGRAPHS OF C2170D & (C)2160C1
617          HC       2

618          KK  R2170E
619          KM        ROUTE (C)2160C1 TO OUTLET OF SUB 2170E
620          RS       1    FLOW      -1
621          RC    .055    .045    .055     362   .0124
622          RX       0      35     135     150     225     240     340     375
623          RY      10       3       3       0       0       3       3      10

624          KK   2170E     SUB
625          KM        RUNOFF FROM SUB-BASIN 2170E
626          BA   .0245
627          LS              74    24.2
628          UK     250   .0266     .15     100
629          RK    1976   .0152    .045            TRAP       7       5

630          KK  C2170E
631          KM        COMBINE HYDROGRAPHS OF R2170E & SUB 2170E
```

```
632          KM        THIS IS THE TOTAL FLOW IN THE REGIONAL CHANNEL AT THE OLD VERDE CANAL
633          HC       2

634          KK  R2170F
635          KM        ROUTE C2170E TO CAP DIKE 4
636          RS       1    FLOW      -1
637          RC    .055    .045    .055     850   .0179
638          RX       0      35     135     150     225     240     340     375
639          RY      10       3       3       0       0       3       3      10

640          KK   2170F     SUB
641          KM        RUNOFF FROM SUB-BASIN 2170F
642          BA   .0091
643          LS              74    32.1
644          UK     337   .0324     .15     100
645          RK     850   .0179    .045            TRAP      75       5

646          KK  C2170F
647          KM        COMBINE HYDROGRAPHS OF R2170F & SUB 2170F
648          KM        THIS IS TOTAL FLOW THAT EXITS THE REGIONAL CHANNEL AT CAP DIKE 4
649          KO       1
650          HC       2
651          ZZ
```

1

```
                SCHEMATIC DIAGRAM OF STREAM NETWORK
 INPUT
  LINE      (V) ROUTING          (--->) DIVERSION OR PUMP FLOW

   NO.      (.) CONNECTOR        (<---) RETURN OF DIVERTED OR PUMPED FLOW

   32          39
                .
                .
   38           .          40
                .           .
                .           .
   44         C40............
                V
                V
   47         R41
                .
                .
   53           .          41
                .           .
                .           .
   59         C41............
                .
                .
   62           .          42
                .           .
                .           .
   68           .           .          43
                .           .           .
                .           .           .
   74           .           .           .          44
                .           .           .           .
                .           .           .           .
   80           .           .         C44............
                .           .           V
                .           .           V
```

```
 83          .           .          R45
             .           .            .
             .           .            .
 89          .           .            .          45
             .           .            .           .
             .           .            .           .
 95          .           .          C45............
             .           .            .
             .           .            .
 98          .           .            .         45A
             .           .            .           .
             .           .            .           .
104          .           .            .           .          46
             .           .            .           .           .
             .           .            .           .           .
111          .           .          C46........................
             .           .            V
             .           .            V
114          .           .          R47
             .           .            .
             .           .            .
120          .           .            .          47
             .           .            .           .
             .           .            .           .
126          .           .       C47.1............
             .           .            .
             .           .            .
129      C47.2........................
             V
             V
132        R50
             .
             .
139          .          50
             .           .
             .           .
146        C50............
             V
             V
150        R48
             .
             .
156          .          48
             .           .
             .           .
162        C48............
             V
             V
165      R2000
             .
             .
171          .        2000
             .           .
             .           .
179      C2000............
             V
             V
182      R2010
             .
             .
```

```
188          .        2010
             .          .
             .          .
194      C2010............
             V
             V
197     2015A1
             .
             .
203          .       2015A
             .          .
             .          .
210          .          .        2020
             .          .          V
             .          .          V
217          .          .      2015A2
             .          .          .
             .          .          .
223     2015A1......................
             .
             .
226          .        2040
             .          .
             .          .
233          .          .        2050
             .          .          .
             .          .          .
240          .       C2050............
             .          V
             .          V
243          .       R2060
             .          .
             .          .
249          .          .        2060
             .          .          .
             .          .          .
256          .      2060.1............
             .          .
             .          .
259          .          .        2070
             .          .          V
             .          .          V
267          .          .      2065.1
             .          .          .
             .          .          .
273          .          .          .        2065
             .          .          .          .
             .          .          .          .
279          .          .       C2065............
             .          .          V
             .          .          V
283          .          .       R2060
             .          .          .
             .          .          .
289          .      2060.2............
             .          .
             .          .
292     2060.3............
             .
             .
```

```
295          .       2030C
             .           .
             .           .
301          .           .       2015B
             .           .           .
             .           .           .
307          .      C2015B............
             .           .
             .           .
310     2060.4............
             V
             V
313     R2080A
             .
             .
319          .       2080A
             .           .
             .           .
325     C2080A............
             V
             V
328      R2090
             .
             .
334          .        2090
             .           .
             .           .
340      C2090............
             V
             V
343     2160A1
             .
             .
349          .       2160A
             .           .
             .           .
355          .           .        2130
             .           .           .
             .           .           .
364          .           .           .-------->    2134
361          .           .        2133
             .           .           V
             .           .           V
367          .           .      R2080B
             .           .           .
             .           .           .
373          .           .           .       2080B
             .           .           .           .
             .           .           .           .
379          .           .      C2080B............
             .           .           V
             .           .           V
382          .           .      2140B1
             .           .           .
             .           .           .
389          .           .           .       2140B
             .           .           .           .
             .           .           .           .
397          .           .           .           .           .<--------    2134
395          .           .           .           .        2134
```

```
                .         .         .         .         V
                .         .         .         .         V
398             .         .         .         .      R2135
                .         .         .         .         .
                .         .         .         .         .
404             .         .         .         .         .        2135
                .         .         .         .         .           .
                .         .         .         .         .           .
411             .         .         .         .      C2135............
                .         .         .         .         V
                .         .         .         .         V
415             .         .         .         .     2140B2
                .         .         .         .         .
                .         .         .         .         .
421             .         .   C2140B........................
                .         .       V
                .         .       V
424             .         .   2160B1
                .         .       .
                .         .       .
431             .         .       .      2150
                .         .       .         V
                .         .       .         V
439             .         .       .     2160B2
                .         .       .         .
                .         .       .         .
445             .         .       .         .      2140A
                .         .       .         .         .
                .         .       .         .         .
452             .         .       .         .         .        2160B
                .         .       .         .         .           .
                .         .       .         .         .           .
459             .         .   C2160B...................................
                .         .       V
                .         .       V
462             .         .   2160A2
                .         .       .
                .         .       .
469             .         .       .     2170B
                .         .       .         .
                .         .       .         .
475             .         .       .         .      2180
                .         .       .         .         V
                .         .       .         .         V
482             .         .       .         .      R2190
                .         .       .         .         .
                .         .       .         .         .
488             .         .       .         .         .        2190
                .         .       .         .         .           .
                .         .       .         .         .           .
494             .         .       .         .      C2190............
                .         .       .         .         .
                .         .       .         .         .
497             .         .       .         .         .        2200
                .         .       .         .         .           .
                .         .       .         .         .           .
503             .         .       .         .         .           .      2210A
                .         .       .         .         .           .         V
                .         .       .         .         .           .         V
510             .         .       .         .         .           .     2210B1
```

```
                .         .         .         .         .         .         V
                .         .         .         .         .         .         V
517             .         .         .         .         .         .     2210B2
                .         .         .         .         .         .         .
                .         .         .         .         .         .         .
524             .         .         .         .         .         .         .       2210B
                .         .         .         .         .         .         .         .
                .         .         .         .         .         .         .         .
530             .         .         .         .         .         .     2210B1............
                .         .         .         .         .         .         .
                .         .         .         .         .         .         .
533             .         .         .         .         .     2210B2............
                .         .         .         .         .         .
                .         .         .         .         .         .
536             .         .         .     2210B3........................
                .         .         .         V
                .         .         .         V
540             .         .         .     R2170A
                .         .         .         .
                .         .         .         .
546             .         .         .         .       2170A
                .         .         .         .         .
                .         .         .         .         .
552             .         .         .     C2170A............
                .         .         .         V
                .         .         .         V
555             .         .         .     2160A3
                .         .         .         .
                .         .         .         .
561     C2160A..................................
                V
                V
564     R2160C
                .
                .
570             .       2160C
                .         .
                .         .
576     C2160C............
                .
                .
579             .       2220C
                .         V
                .         V
585             .     R2170C
                .         .
                .         .
591             .         .       2170C
                .         .         .
                .         .         .
597             .     C2170C............
                .         V
                .         V
600             .     R2170D
                .         .
                .         .
606             .         .       2170D
                .         .         .
                .         .         .
612             .     C2170D............
```

```
              .          .
              .          .
615      2160C2............
              V
              V
618      R2170E
              .
              .
624           .       2170E
              .          .
              .          .
630      C2170E............
              V
              V
634      R2170F
              .
              .
640           .       2170F
              .          .
              .          .
646      C2170F............
```

(***) RUNOFF ALSO COMPUTED AT THIS LOCATION

```
****************************************
*                                      *
*   FLOOD HYDROGRAPH PACKAGE  (HEC-1)  *
*            SEPTEMBER 1990            *
*             VERSION 4.0              *
*                                      *
*  RUN DATE  01/28/1995  TIME  13:17:49 *
*                                      *
****************************************
```

```
****************************************
*                                      *
*    U.S. ARMY CORPS OF ENGINEERS      *
*    HYDROLOGIC ENGINEERING CENTER     *
*          609 SECOND STREET           *
*       DAVIS, CALIFORNIA 95616        *
*           (916) 756-1104             *
*                                      *
****************************************
```

DESERT GREENBELT STUDY BY GREINER, INC.
1992 MODELING REVISIONS BASED ON REATA PASS SENSITIVITY ANALYSIS
MODEL 4  FILE NAME: REAT4.DAT

REATA HYDROLOGY -PROP. CONDITIONS W/ FUTURE LAND USE
ORIGINAL MODEL RPBW1 BY ROBERT L. WARD
100-YEAR 6-HOUR STORM (AMC TYPE II)

SUB-BASINS 39 THRU 50 & 2000 THRU 2220C
WITH GREENBELT REGIONAL CHANNEL IN PLACE IN SUB 48, 50, 2000, 2010,
2015A, 2080A AND PARALLEL 96TH STREET TO CAP DIKE 4

PH CARD FOR SUB 30 TO SUB 50
CHANGE PH CARD FOR SUB 2000 AND DOWNSTREAM
USE JD CARDS
100% RUNOFF FROM SUB 2070 TO 2065
SPLIT FLOWS AT D.S. ENDS OF SUB 2130
STATE LAND CHANNEL ALIGNMENT INCORPORATED
NEW TPP ALIGNMENT AS OF AUG 1, 1994

```
21 IO          OUTPUT CONTROL VARIABLES
                     IPRNT          5  PRINT CONTROL
                     IPLOT          0  PLOT CONTROL
```

```
                QSCAL          0.  HYDROGRAPH PLOT SCALE

 IT         HYDROGRAPH TIME DATA
                NMIN           5  MINUTES IN COMPUTATION INTERVAL
               IDATE      1OCT94  STARTING DATE
               ITIME        0000  STARTING TIME
                  NQ         300  NUMBER OF HYDROGRAPH ORDINATES
              NDDATE      2OCT94  ENDING DATE
              NDTIME        0055  ENDING TIME
              ICENT          19  CENTURY MARK

          COMPUTATION INTERVAL     .08 HOURS
               TOTAL TIME BASE   24.92 HOURS

      ENGLISH UNITS
          DRAINAGE AREA         SQUARE MILES
          PRECIPITATION DEPTH   INCHES
          LENGTH, ELEVATION     FEET
          FLOW                  CUBIC FEET PER SECOND
          STORAGE VOLUME        ACRE-FEET
          SURFACE AREA          ACRES
          TEMPERATURE           DEGREES FAHRENHEIT

22 JD       INDEX STORM NO. 1
               STRM        3.39  PRECIPITATION DEPTH
               TRDA         .00  TRANSPOSITION DRAINAGE AREA

23 PI         PRECIPITATION PATTERN
              .01      .01      .01      .01      .01      .01      .01      .01      .01      .01
              .01      .01      .01      .01      .01      .01      .01      .01      .01      .02
              .02      .02      .02      .02      .02      .02      .02      .03      .03      .03
              .08      .09      .10      .15      .20      .41      .72      .28      .17      .11
              .09      .08      .03      .03      .03      .03      .02      .02      .02      .02
              .02      .02      .02      .01      .01      .01      .01      .01      .01      .01
              .01      .01      .01      .01      .01      .01      .01      .01      .01      .01
              .01      .01

24 JD       INDEX STORM NO. 2
               STRM        3.39  PRECIPITATION DEPTH
               TRDA         .00  TRANSPOSITION DRAINAGE AREA

23 PI         PRECIPITATION PATTERN
              .01      .01      .01      .01      .01      .01      .01      .01      .01      .01
              .01      .01      .01      .01      .01      .01      .01      .01      .01      .02
              .02      .02      .02      .02      .02      .02      .02      .03      .03      .03
              .08      .09      .10      .15      .20      .41      .72      .28      .17      .11
              .09      .08      .03      .03      .03      .03      .02      .02      .02      .02
              .02      .02      .02      .01      .01      .01      .01      .01      .01      .01
              .01      .01      .01      .01      .01      .01      .01      .01      .01      .01
              .01      .01

25 JD       INDEX STORM NO. 3
               STRM        3.39  PRECIPITATION DEPTH
               TRDA         .01  TRANSPOSITION DRAINAGE AREA

23 PI         PRECIPITATION PATTERN
              .01      .01      .01      .01      .01      .01      .01      .01      .01      .01
              .01      .01      .01      .01      .01      .01      .01      .01      .01      .02
              .02      .02      .02      .02      .02      .02      .02      .03      .03      .03
              .08      .09      .10      .15      .20      .41      .72      .28      .17      .11
```

| | | | | | | | | | | | | | | | | | |
|---|---|---|---|---|---|---|---|---|---|---|---|---|---|---|---|---|---|
| 1 OCT 0525 | 66 | 2398. | * | 1 OCT 1140 | 141 | 44. | * | 1 OCT 1755 | 216 | 2. | * | 2 OCT 0010 | 291 | 1. |
| 1 OCT 0530 | 67 | 2224. | * | 1 OCT 1145 | 142 | 41. | * | 1 OCT 1800 | 217 | 2. | * | 2 OCT 0015 | 292 | 1. |
| 1 OCT 0535 | 68 | 2084. | * | 1 OCT 1150 | 143 | 39. | * | 1 OCT 1805 | 218 | 2. | * | 2 OCT 0020 | 293 | 1. |
| 1 OCT 0540 | 69 | 1973. | * | 1 OCT 1155 | 144 | 36. | * | 1 OCT 1810 | 219 | 2. | * | 2 OCT 0025 | 294 | 1. |
| 1 OCT 0545 | 70 | 1884. | * | 1 OCT 1200 | 145 | 34. | * | 1 OCT 1815 | 220 | 2. | * | 2 OCT 0030 | 295 | 1. |
| 1 OCT 0550 | 71 | 1809. | * | 1 OCT 1205 | 146 | 32. | * | 1 OCT 1820 | 221 | 2. | * | 2 OCT 0035 | 296 | 1. |
| 1 OCT 0555 | 72 | 1740. | * | 1 OCT 1210 | 147 | 31. | * | 1 OCT 1825 | 222 | 2. | * | 2 OCT 0040 | 297 | 1. |
| 1 OCT 0600 | 73 | 1680. | * | 1 OCT 1215 | 148 | 29. | * | 1 OCT 1830 | 223 | 2. | * | 2 OCT 0045 | 298 | 1. |
| 1 OCT 0605 | 74 | 1627. | * | 1 OCT 1220 | 149 | 27. | * | 1 OCT 1835 | 224 | 2. | * | 2 OCT 0050 | 299 | 1. |
| 1 OCT 0610 | 75 | 1572. | * | 1 OCT 1225 | 150 | 26. | * | 1 OCT 1840 | 225 | 2. | * | 2 OCT 0055 | 300 | 1. |
| | | | * | | | | * | | | | * | | | |

**********

| PEAK FLOW (CFS) | TIME (HR) | | MAXIMUM AVERAGE FLOW 6-HR | 24-HR | 72-HR | 24.92-HR |
|---|---|---|---|---|---|---|
| | | (CFS) | | | | |
| + 15917. | 3.75 | | 3526. | 900. | 867. | 867. |
| | | (INCHES) | 1.685 | 1.721 | 1.721 | 1.721 |
| | | (AC-FT) | 1748. | 1786. | 1786. | 1786. |

CUMULATIVE AREA = 19.46 SQ MI

RUNOFF SUMMARY
FLOW IN CUBIC FEET PER SECOND
TIME IN HOURS, AREA IN SQUARE MILES

| | OPERATION | STATION | PEAK FLOW | TIME OF PEAK | AVERAGE FLOW FOR MAXIMUM PERIOD 6-HOUR | 24-HOUR | 72-HOUR | BASIN AREA | MAXIMUM STAGE | TIME OF MAX STAGE |
|---|---|---|---|---|---|---|---|---|---|---|
| | HYDROGRAPH AT | 39 | 4167. | 3.25 | 445. | 113. | 109. | 1.88 | | |
| | HYDROGRAPH AT | 40 | 1443. | 3.17 | 120. | 30. | 29. | .58 | | |
| | 2 COMBINED AT | C40 | 5282. | 3.25 | 563. | 142. | 137. | 2.47 | | |
| + | ROUTED TO | R41 | 3804. | 3.33 | 560. | 142. | 137. | 2.47 | | |
| + | HYDROGRAPH AT | 41 | 1059. | 3.25 | 121. | 31. | 30. | .83 | | |
| + | 2 COMBINED AT | C41 | 4764. | 3.33 | 678. | 172. | 166. | 3.29 | | |
| + | HYDROGRAPH AT | 42 | 1307. | 3.17 | 116. | 29. | 28. | .58 | | |
| + | HYDROGRAPH AT | 43 | 2384. | 3.17 | 234. | 59. | 57. | 1.07 | | |
| + | HYDROGRAPH AT | 44 | 1847. | 3.25 | 182. | 46. | 44. | .84 | | |
| | 2 COMBINED AT | | | | | | | | | |

| | | | | | | | |
|---|---|---|---|---|---|---|---|
| + | C44 | 4139. | 3.25 | 413. | 104. | 100. | 1.91 |
| ROUTED TO | | | | | | | |
| | R45 | 3831. | 3.25 | 413. | 104. | 100. | 1.91 |
| HYDROGRAPH AT | | | | | | | |
| | 45 | 514. | 3.17 | 41. | 10. | 10. | .20 |
| 2 COMBINED AT | | | | | | | |
| - | C45 | 4141. | 3.25 | 453. | 114. | 110. | 2.11 |
| HYDROGRAPH AT | | | | | | | |
| - | 45A | 473. | 3.17 | 38. | 10. | 9. | .17 |
| HYDROGRAPH AT | | | | | | | |
| | 46 | 2783. | 3.17 | 203. | 51. | 49. | .93 |
| 3 COMBINED AT | | | | | | | |
| + | C46 | 6361. | 3.17 | 690. | 174. | 167. | 3.21 |
| ROUTED TO | | | | | | | |
| + | R47 | 5348. | 3.33 | 689. | 174. | 167. | 3.21 |
| HYDROGRAPH AT | | | | | | | |
| + | 47 | 441. | 3.33 | 60. | 15. | 15. | .38 |
| 2 COMBINED AT | | | | | | | |
| + | C47.1 | 5766. | 3.33 | 748. | 189. | 182. | 3.58 |
| 3 COMBINED AT | | | | | | | |
| | C47.2 | 10796. | 3.33 | 1510. | 383. | 369. | 7.46 |
| ROUTED TO | | | | | | | |
| | R50 | 10783. | 3.33 | 1510. | 383. | 369. | 7.46 |
| HYDROGRAPH AT | | | | | | | |
| | 50 | 993. | 3.17 | 79. | 20. | 19. | .41 |
| 2 COMBINED AT | | | | | | | |
| - | C50 | 11236. | 3.33 | 1583. | 401. | 386. | 7.87 |
| ROUTED TO | | | | | | | |
| | R48 | 10886. | 3.42 | 1582. | 401. | 386. | 7.87 |
| HYDROGRAPH AT | | | | | | | |
| + | 48 | 176. | 3.17 | 15. | 4. | 4. | .12 |
| 2 COMBINED AT | | | | | | | |
| + | C48 | 10944. | 3.42 | 1596. | 404. | 390. | 7.99 |
| ROUTED TO | | | | | | | |
| + | R2000 | 10942. | 3.42 | 1596. | 404. | 390. | 7.99 |
| HYDROGRAPH AT | | | | | | | |
| + | 2000 | 2038. | 3.17 | 174. | 44. | 42. | .89 |
| 2 COMBINED AT | | | | | | | |
| | C2000 | 11746. | 3.42 | 1758. | 445. | 429. | 8.87 |
| ROUTED TO | | | | | | | |

| | | | | | | | |
|---|---|---|---|---|---|---|---|
| + | R2010 | 11505. | 3.42 | 1757. | 445. | 429. | 8.87 |
| HYDROGRAPH AT | | | | | | | |
| . | 2010 | 80. | 3.25 | 8. | 2. | 2. | .04 |
| 2 COMBINED AT | | | | | | | |
| . | C2010 | 11541. | 3.42 | 1765. | 447. | 430. | 8.91 |
| ROUTED TO | | | | | | | |
| . | 2015A1 | 10578. | 3.58 | 1762. | 447. | 430. | 8.91 |
| HYDROGRAPH AT | | | | | | | |
| . | 2015A | 540. | 3.33 | 68. | 17. | 17. | .36 |
| HYDROGRAPH AT | | | | | | | |
| . | 2020 | 315. | 3.08 | 23. | 6. | 6. | .11 |
| ROUTED TO | | | | | | | |
| + | 2015A2 | 283. | 3.17 | 23. | 6. | 6. | .11 |
| 3 COMBINED AT | | | | | | | |
| + | 2015A1 | 10934. | 3.58 | 1845. | 468. | 451. | 9.38 |
| HYDROGRAPH AT | | | | | | | |
| + | 2040 | 1929. | 3.25 | 177. | 45. | 43. | .93 |
| HYDROGRAPH AT | | | | | | | |
| + | 2050 | 1741. | 3.25 | 161. | 40. | 39. | .86 |
| 2 COMBINED AT | | | | | | | |
| | C2050 | 3626. | 3.25 | 336. | 84. | 81. | 1.79 |
| ROUTED TO | | | | | | | |
| | R2060 | 2975. | 3.33 | 335. | 84. | 81. | 1.79 |
| HYDROGRAPH AT | | | | | | | |
| | 2060 | 282. | 3.33 | 32. | 8. | 8. | .22 |
| 2 COMBINED AT | | | | | | | |
| | 2060.1 | 3243. | 3.33 | 367. | 92. | 89. | 2.00 |
| HYDROGRAPH AT | | | | | | | |
| . | 2070 | 3805. | 3.17 | 291. | 73. | 70. | 1.46 |
| ROUTED TO | | | | | | | |
| + | 2065.1 | 2976. | 3.33 | 291. | 73. | 70. | 1.46 |
| HYDROGRAPH AT | | | | | | | |
| + | 2065 | 227. | 3.33 | 30. | 8. | 7. | .17 |
| 2 COMBINED AT | | | | | | | |
| + | C2065 | 3192. | 3.33 | 319. | 80. | 77. | 1.64 |
| ROUTED TO | | | | | | | |
| + | R2060 | 2957. | 3.42 | 319. | 80. | 77. | 1.64 |
| 2 COMBINED AT | | | | | | | |
| | 2060.2 | 6060. | 3.33 | 682. | 172. | 165. | 3.64 |
| 2 COMBINED AT | | | | | | | |

| | | | | | | | |
|---|---|---|---|---|---|---|---|
| + | 2060.3 | 14612. | 3.50 | 2474. | 627. | 604. | 13.02 |
| HYDROGRAPH AT | | | | | | | |
| | 2030C | 107. | 3.17 | 10. | 3. | 3. | .07 |
| HYDROGRAPH AT | | | | | | | |
| | 2015B | 33. | 3.42 | 5. | 1. | 1. | .05 |
| 2 COMBINED AT | | | | | | | |
| | C2015B | 121. | 3.17 | 15. | 4. | 4. | .13 |
| 2 COMBINED AT | | | | | | | |
| | 2060.4 | 14659. | 3.50 | 2486. | 631. | 607. | 13.15 |
| ROUTED TO | | | | | | | |
| | R2080A | 13662. | 3.58 | 2483. | 631. | 607. | 13.15 |
| HYDROGRAPH AT | | | | | | | |
| + | 2080A | 684. | 3.17 | 65. | 16. | 16. | .42 |
| 2 COMBINED AT | | | | | | | |
| + | C2080A | 13806. | 3.58 | 2536. | 645. | 622. | 13.57 |
| ROUTED TO | | | | | | | |
| + | R2090 | 13671. | 3.67 | 2535. | 645. | 622. | 13.57 |
| HYDROGRAPH AT | | | | | | | |
| + | 2090 | 396. | 3.25 | 43. | 11. | 11. | .22 |
| 2 COMBINED AT | | | | | | | |
| | C2090 | 13775. | 3.67 | 2573. | 655. | 631. | 13.79 |
| ROUTED TO | | | | | | | |
| | 2160A1 | 12917. | 3.75 | 2568. | 655. | 631. | 13.79 |
| HYDROGRAPH AT | | | | | | | |
| | 2160A | 848. | 3.25 | 92. | 23. | 22. | .47 |
| HYDROGRAPH AT | | | | | | | |
| | 2130 | 567. | 3.25 | 55. | 14. | 13. | .25 |
| DIVERSION TO | | | | | | | |
| | 2134 | 547. | 3.25 | 55. | 14. | 13. | .25 |
| HYDROGRAPH AT | | | | | | | |
| + | 2133 | 20. | 3.25 | 0. | 0. | 0. | .25 |
| ROUTED TO | | | | | | | |
| + | R2080B | 4. | 3.33 | 0. | 0. | 0. | .25 |
| HYDROGRAPH AT | | | | | | | |
| + | 2080B | 220. | 3.25 | 23. | 6. | 6. | .12 |
| 2 COMBINED AT | | | | | | | |
| + | C2080B | 223. | 3.25 | 23. | 6. | 6. | .17 |
| ROUTED TO | | | | | | | |
| | 2140B1 | 214. | 3.25 | 23. | 6. | 6. | .17 |
| HYDROGRAPH AT | | | | | | | |

| | | | | | | | |
|---|---|---|---|---|---|---|---|
| + | 2140B | 214. | 3.17 | 18. | 5. | 4. | .09 |
| HYDROGRAPH AT | | | | | | | |
| + | 2134 | 547. | 3.25 | 55. | 14. | 13. | .25 |
| ROUTED TO | | | | | | | |
| + | R2135 | 497. | 3.25 | 55. | 14. | 13. | .25 |
| HYDROGRAPH AT | | | | | | | |
| + | 2135 | 157. | 3.17 | 15. | 4. | 4. | .08 |
| 2 COMBINED AT | | | | | | | |
| + | C2135 | 631. | 3.25 | 69. | 17. | 17. | .28 |
| ROUTED TO | | | | | | | |
| + | 2140B2 | 618. | 3.33 | 69. | 17. | 17. | .28 |
| 3 COMBINED AT | | | | | | | |
| + | C2140B | 942. | 3.25 | 111. | 28. | 27. | .54 |
| ROUTED TO | | | | | | | |
| + | 2160B1 | 815. | 3.42 | 111. | 28. | 27. | .54 |
| HYDROGRAPH AT | | | | | | | |
| + | 2150 | 1388. | 3.25 | 133. | 33. | 32. | .69 |
| ROUTED TO | | | | | | | |
| + | 2160B2 | 1368. | 3.25 | 133. | 33. | 32. | .69 |
| HYDROGRAPH AT | | | | | | | |
| + | 2140A | 465. | 3.17 | 46. | 12. | 11. | .23 |
| HYDROGRAPH AT | | | | | | | |
| + | 2160B | 230. | 3.25 | 24. | 6. | 6. | .14 |
| 4 COMBINED AT | | | | | | | |
| + | C2160B | 2583. | 3.25 | 311. | 79. | 76. | 1.60 |
| ROUTED TO | | | | | | | |
| + | 2160A2 | 2391. | 3.42 | 310. | 79. | 76. | 1.60 |
| HYDROGRAPH AT | | | | | | | |
| + | 2170B | 250. | 3.25 | 26. | 7. | 6. | .13 |
| HYDROGRAPH AT | | | | | | | |
| + | 2180 | 2312. | 3.25 | 212. | 53. | 51. | 1.00 |
| ROUTED TO | | | | | | | |
| + | R2190 | 1923. | 3.42 | 212. | 53. | 51. | 1.00 |
| HYDROGRAPH AT | | | | | | | |
| + | 2190 | 261. | 3.17 | 23. | 6. | 6. | .12 |
| 2 COMBINED AT | | | | | | | |
| + | C2190 | 2073. | 3.33 | 234. | 59. | 57. | 1.13 |
| HYDROGRAPH AT | | | | | | | |
| + | 2200 | 482. | 3.25 | 46. | 12. | 11. | .25 |
| HYDROGRAPH AT | | | | | | | |

| | | | | | | | |
|---|---|---|---|---|---|---|---|
| | 2210A | 3552. | 3.17 | 285. | 71. | 69. | 1.58 |
| ROUTED TO | | | | | | | |
| | 2210B1 | 2725. | 3.25 | 285. | 71. | 69. | 1.58 |
| ROUTED TO | | | | | | | |
| | 2210B2 | 2681. | 3.33 | 286. | 72. | 69. | 1.58 |
| HYDROGRAPH AT | | | | | | | |
| | 2210B | 247. | 3.25 | 27. | 7. | 6. | .19 |
| 2 COMBINED AT | | | | | | | |
| | 2210B1 | 2896. | 3.33 | 312. | 78. | 75. | 1.78 |
| 2 COMBINED AT | | | | | | | |
| | 2210B2 | 3239. | 3.33 | 357. | 90. | 86. | 2.03 |
| 3 COMBINED AT | | | | | | | |
| + | 2210B3 | 5431. | 3.33 | 613. | 154. | 149. | 3.29 |
| ROUTED TO | | | | | | | |
| + | R2170A | 5342. | 3.33 | 613. | 154. | 149. | 3.29 |
| HYDROGRAPH AT | | | | | | | |
| + | 2170A | 224. | 3.17 | 22. | 6. | 5. | .12 |
| 2 COMBINED AT | | | | | | | |
| + | C2170A | 5480. | 3.33 | 633. | 160. | 154. | 3.41 |
| ROUTED TO | | | | | | | |
| | 2160A3 | 5478. | 3.33 | 633. | 160. | 154. | 3.41 |
| 4 COMBINED AT | | | | | | | |
| | C2160A | 15893. | 3.67 | 3498. | 893. | 860. | 19.27 |
| ROUTED TO | | | | | | | |
| | R2160C | 15839. | 3.75 | 3498. | 893. | 860. | 19.27 |
| HYDROGRAPH AT | | | | | | | |
| | 2160C | 40. | 3.33 | 5. | 1. | 1. | .03 |
| 2 COMBINED AT | | | | | | | |
| | C2160C | 15850. | 3.75 | 3502. | 894. | 861. | 19.30 |
| HYDROGRAPH AT | | | | | | | |
| + | 2220C | 55. | 3.17 | 5. | 1. | 1. | .03 |
| ROUTED TO | | | | | | | |
| + | R2170C | 36. | 3.42 | 5. | 1. | 1. | .03 |
| HYDROGRAPH AT | | | | | | | |
| + | 2170C | 103. | 3.25 | 11. | 3. | 3. | .06 |
| 2 COMBINED AT | | | | | | | |
| + | C2170C | 123. | 3.25 | 15. | 4. | 4. | .09 |
| ROUTED TO | | | | | | | |
| | R2170D | 112. | 3.42 | 15. | 4. | 4. | .09 |
| HYDROGRAPH AT | | | | | | | |

```
+                    2170D       62.   3.25        6.        2.        2.      .04

        2 COMBINED AT
+                   C2170D      154.   3.33       22.        6.        5.      .12

        2 COMBINED AT
+                   2160C2    15912.   3.75     3521.      899.      866.    19.42

        ROUTED TO
+                   R2170E    15925.   3.75     3521.      899.      866.    19.42

        HYDROGRAPH AT
+                    2170E       42.   3.25        4.        1.        1.      .02

        2 COMBINED AT
+                   C2170E    15932.   3.75     3525.      900.      867.    19.45

        ROUTED TO
+                   R2170F    15914.   3.75     3524.      900.      867.    19.45

        HYDROGRAPH AT
+                    2170F       17.   3.25        2.        0.        0.      .01

        2 COMBINED AT
+                   C2170F    15917.   3.75     3526.      900.      867.    19.46
1
                                  SUMMARY OF KINEMATIC WAVE - MUSKINGUM-CUNGE ROUTING
                                      (FLOW IS DIRECT RUNOFF WITHOUT BASE FLOW)
                                                                   INTERPOLATED TO
                                                                COMPUTATION INTERVAL
          ISTAQ    ELEMENT      DT       PEAK    TIME TO    VOLUME      DT       PEAK    TIME TO     VOLUME
                                                   PEAK                                    PEAK

                              (MIN)     (CFS)     (MIN)     (IN)     (MIN)     (CFS)     (MIN)       (IN)

         FOR STORM = 1  STORM AREA (SQ MI) =       .00
              39  MANE        2.69   4294.48    193.77      2.26      5.00   4244.11    195.00       2.25

 CONTINUITY SUMMARY (AC-FT) - INFLOW= .0000E+00 EXCESS= .2271E+03 OUTFLOW= .2263E+03 BASIN STORAGE= .8393E-01 PERCENT ERROR=    .3

         FOR STORM = 2  STORM AREA (SQ MI) =       .00
              39  MANE        2.69   4294.42    193.77      2.26      5.00   4244.06    195.00       2.25

 CONTINUITY SUMMARY (AC-FT) - INFLOW= .0000E+00 EXCESS= .2271E+03 OUTFLOW= .2263E+03 BASIN STORAGE= .8394E-01 PERCENT ERROR=    .3

         FOR STORM = 3  STORM AREA (SQ MI) =       .01
              39  MANE        2.69   4294.02    193.77      2.26      5.00   4243.69    195.00       2.25

 CONTINUITY SUMMARY (AC-FT) - INFLOW= .0000E+00 EXCESS= .2271E+03 OUTFLOW= .2263E+03 BASIN STORAGE= .8393E-01 PERCENT ERROR=    .3

         FOR STORM = 4  STORM AREA (SQ MI) =       .10
              39  MANE        2.70   4289.99    193.77      2.26      5.00   4240.04    195.00       2.25
```

# HEC-1 MODEL

# ROBERT L. WARD

# FILE: RPBW1

```
****************************************
*                                      *
*   FLOOD HYDROGRAPH PACKAGE  (HEC-1)  *
*            SEPTEMBER 1990            *
*             VERSION 4.0              *
*                                      *
*  RUN DATE  09/06/1993  TIME  14:30:31 *
*                                      *
****************************************
```

```
****************************************
*                                      *
*    U.S. ARMY CORPS OF ENGINEERS      *
*    HYDROLOGIC ENGINEERING CENTER     *
*          609 SECOND STREET           *
*       DAVIS, CALIFORNIA 95616        *
*           (916) 756-1104             *
*                                      *
****************************************
```

```
X     X  XXXXXXX   XXXXX          X
X     X  X        X     X        XX
X     X  X        X              X
XXXXXXX  XXXX     X        XXXXX  X
X     X  X        X              X
X     X  X        X     X        X
X     X  XXXXXXX   XXXXX         XXX
```

THIS PROGRAM REPLACES ALL PREVIOUS VERSIONS OF HEC-1 KNOWN AS HEC1 (JAN 73), HEC1GS, HEC1DB, AND HEC1KW.

THE DEFINITIONS OF VARIABLES -RTIMP- AND -RTIOR- HAVE CHANGED FROM THOSE USED WITH THE 1973-STYLE INPUT STRUCTURE.
THE DEFINITION OF -AMSKK- ON RM-CARD WAS CHANGED WITH REVISIONS DATED 28 SEP 81. THIS IS THE FORTRAN77 VERSION
NEW OPTIONS: DAMBREAK OUTFLOW SUBMERGENCE , SINGLE EVENT DAMAGE CALCULATION, DSS:WRITE STAGE FREQUENCY,
DSS:READ TIME SERIES AT DESIRED CALCULATION INTERVAL  LOSS RATE:GREEN AND AMPT INFILTRATION
KINEMATIC WAVE: NEW FINITE DIFFERENCE ALGORITHM

1 HEC-1 INPUT PAGE 1

```
LINE          ID.......1.......2.......3.......4.......5.......6.......7.......8.......9......10

  1           ID       NEW HEC-1 MODEL FOR REVISED REATA PASS/BEARDSLEY WASH REGIONAL CHANNEL
  2           ID       ALIGNMENT PROVIDED BY THE CITY OF SCOTTSDALE - FEBRUARY 16, 1993
  3           ID
  4           ID       MODEL RPBW1.6I -- BASE MODELS WERE 2L90.6I & RP4.24I
  5           ID       STATE LAND CHANNEL ALIGNMENT A-B-C WHICH OUTLETS TO THE
  6           ID       REATA PASS/BEARDSLEY WASH REGIONAL CHANNEL AT THE INTERSECTION OF
  7           ID       BELL ROAD & 96th STREET.
  8           ID
  9           ID       100-YEAR, 6-HOUR HYPOTHETICAL STORM
 10           ID       RAINFALL FROM NOAA ATLAS,  AREAL REDUCTION FACTOR PER JD RECORDS
 11           ID
 12           ID       RAINFALL & CHANNEL ROUTING OPERATIONS HAVE BEEN MODIFIED IN ACCORDANCE
 13           ID       WITH SCENARIO 13 FROM SENSITIVITY ANALYSIS FOR REATA PASS HYDROLOGY
 14           ID       SUB 49 HAS BEEN PLACED DOWNSTREAM OF CP 51  (3/12/90).
 15           ID
 16           ID       THOMPSON PEAK PARKWAY ALIGNMENT HAS BEEN ADJUSTED THROUGH STATE LAND
 17           ID       PARCEL TO MATCH SITE PLAN PROVIDED BY STATE LAND DEPARTMENT WITH
 18           ID       APPROVAL DATE OF 10/29/91 (PREPARED BY G. WILLIAM LARSON ASSC., INC.)
 19           ID
 20           ID       100% OF FLOW FROM THE REATA PASS APEX IS DIVERTED SOUTH TO CAP DIKE 4
 21           ID       IMPERVIOUS AREA IS BASED ON FUTURE LAND USE CONDITIONS PER CITY OF
 22           ID       SCOTTSDALE PLANNING PROJECTIONS, AS REFERENCED IN THE UPPER INDIAN BEND
```

```
23          ID        WASH REGIONAL DRAINAGE PLAN REPORT.
24          ID
25          ID        PREPARED BY ROBERT L. WARD, P.E., CONSULTING ENGINEER
26          ID        FOR THE NEWHALL LAND & FARMING COMPANY
27          ID
            *DIAGRAM
28          IT       5 04MAY93       0     300
29          IO       5       0
30          JD           .0001
31          PH                     .72    1.41    2.47    2.79    2.99    3.39
32          JD            .001
33          JD             .01
34          JD              .1
35          JD              .5
36          JD               1
37          JD               5
38          JD              25
39          JD              50

40          KK   SUB39
41          KM        RUNOFF FROM SUB-BASIN 39
42          BA  1.8807
43          LS              85   23.40
44          UK     330   .0433     .20     100
45          RK   11240   .0253    .045            TRAP      30       3

46          KK   SUB40
47          KM        RUNOFF FROM SUB-BASIN 40
48          BA   .5844
49          LS              83     9.9
50          UK     160   .0627     .20     100
51          RK    7000   .0350    .045            TRAP      20       3
                                          HEC-1 INPUT                                          PAGE  2

LINE        ID.......1.......2.......3.......4.......5.......6.......7.......8.......9......10


52          KK    CP41
53          KM        COMBINE HYDROGRAPHS SUB39 & SUB40
54          HC       2

55          KK    41.1      CP
56          KM        ROUTE CP 41 TO OUTLET OF SUB 41
57          RS       1    FLOW      -1
58          RC    .055    .040    .055    9400   .0282
59          RX       0       1     101     107     157     163     263     264
60          RY      10       8       3       0       0       3       8      10

61          KK   SUB41
62          KM        RUNOFF FROM SUB-BASIN 41
63          BA   .8270
64          LS              74    10.1
65          UK     280   .2386     .20     100
66          RK    9400   .0282    .045            TRAP      50       3

67          KK    41.2      CP
68          KM        COMBINE SUB 41 & CP 41.1
69          HC       2

70          KK   SUB42
```

```
 71          KM        RUNOFF FROM SUB-BASIN 42
 72          BA   .5844
 73          LS              78    23.3
 74          UK     280   .2386     .20     100
 75          RK    8750   .0573    .045            TRAP      20       3

 76          KK   SUB43
 77          KM        RUNOFF FROM SUB-BASIN 43
 78          KM        D.A. HAS BEEN ADJUSTED
 79          BA  1.0665
 80          LS              85    10.5
 81          UK     260   .0515     .20     100
 82          RK    7400   .0255    .045            TRAP      25       3

 83          KK   SUB44
 84          KM        RUNOFF FROM SUB-BASIN 44
 85          KM        D.A. HAS BEEN ADJUSTED
 86          BA   .8389
 87          LS              85     8.1
 88          UK     260   .0515     .20     100
 89          RK    9840   .0622    .045            TRAP      25       3

 90          KK    CP45
 91          KM        COMBINE HYDROGRAPHS SUB43 & SUB44
 92          HC       2
```



```
LINE         ID.......1.......2.......3.......4.......5.......6.......7.......8.......9......10


 93          KK    45.1      CP
 94          KM        ROUTE CP 45 TO OUTLET OF SUB 45
 95          RS       1    FLOW      -1
 96          RC    .055    .040    .055    3600   .0366
 97          RX       0       1     101     107     137     143     243     244
 98          RY      10       8       3       0       0       3       8      10

 99          KK   SUB45
100          KM        RUNOFF FROM SUB-BASIN 45
101          BA   .2037
102          LS              81    14.5
103          UK     125   .1166     .20     100
104          RK    3600   .0366    .045            TRAP      30       3

105          KK    45.2      CP
106          KM        COMBINE SUB 45 & CP 45.1
107          HC       2

108          KK  SUB45A
109          KM        RUNOFF FROM SUB 45A
110          BA   .1720
111          LS              86     6.9
112          UK     275   .2200     .20     100
113          RK    5400   .0411    .045            TRAP      15       3

114          KK   SUB46
115          KM        RUNOFF FROM SUB-BASIN 46
116          BA   .9268
117          LS              86     3.7
118          UK     265   .4958     .20     100
```

```
119          RK    3300   .2271    .045    .111    TRAP      10       3
120          RK    7100   .0535    .045            TRAP      25       3

121          KK    CP47
122          KM        COMBINE HYDROGRAPHS CP 45.2, SUB 45A, & SUB 46
123          HC       3

124          KK    47.1      CP
125          KM        ROUTE CP 47 TO OUTLET OF SUB 47
126          KM        ROUTING LENGTH HAS BEEN ADJUSTED FROM 9600' TO 7600'
127          KM        SLOPE HAS BEEN ADJUSTED TO MATCH NEW ROUTING LENGTH
128          RS       1    FLOW      -1
129          RC    .055    .040    .055    7600   .0268
130          RX       0       1     101     109     159     167     267     268
131          RY      10       9       4       0       0       4       9      10

132          KK   SUB47
133          KM        RUNOFF FROM SUB-BASIN 47
134          KM        MAIN CHANNEL ROUTING LENGTH HAS BEEN ADJUSTED FROM 9600' TO 9300'
135          KM        SLOPE HAS BEEN ADJUSTED TO NEW ROUTING LENGTH
136          BA   .3757
137          LS              77     8.6
138          UK     375   .1000     .20     100
139          RK    9300   .0357    .045            TRAP      50       3
```



```
LINE         ID.......1.......2.......3.......4.......5.......6.......7.......8.......9......10


140          KK    47.2      CP
141          KM        COMBINE SUB 47 & CP 47.1
142          HC       2

143          KK    CP48
144          KM        COMBINE HYDROGRAPHS CP 41.2, SUB42, & CP 47.2
145          HC       3

146          KK    48.1      CP
147          KM        ROUTE CP 48 TO OUTLET OF SUB 48R
148          KM        ADJUSTMENT HAS BEEN MADE TO MOVE OUTLET OF ORIGINAL SUB 48 FURTHER SOUTH
149          RS       1    FLOW      -1
150          RC    .055    .040    .055    2200   .0291
151          RX       0       1     101     109     184     192     292     293
152          RY      10       9       4       0       0       4       9      10

153          KK  SUB48R
154          KM        RUNOFF FROM SUB-BASIN 48R
155          KM        ORIGINAL SUB 48 D.A. HAS BEEN EXPANDED TO INCLUDE ADDITIONAL AREA
156          KM        ASSOCIATED WITH REVISED REATA PASS CHANNEL ALIGNMENT
157          BA   .0646
158          LS              71     6.9
159          UK     150   .0733     .20     100
160          RK    2000   .0525    .045   .0343    TRAP       5       3
161          RK    2200   .0291    .045            TRAP     100       3

162          KK   SUB50
163          KM        RUNOFF FROM SUB-BASIN 50
164          BA   .3580
165          LS              84     2.8
166          UK     300   .3555     .20     100
```

```
167          RK     730   .1506    .045    .036    TRAP      10       3
168          RK    6400   .0453    .045            TRAP      25       3

169          KK    48.2      CP
170          KM        ROUTE SUB 50 TO CP 48.2 AT OUTLET OF SUB 48R
171          RS       1    FLOW      -1
172          RC    .055    .040    .055     770   .0291
173          RX       0       1     101     109     184     192     292     293
174          RY      10       9       4       0       0       4       9      10

175          KK    CP51
176          KM        COMBINE CP 48.1, CP 48.2 & SUB 48R
177          KM        THIS IS THE TOTAL DISCHARGE TO THE REATA PASS ALLUVIAL FAN APEX
178          HC       3

179          KK    2006      CP
180          KM        ROUTE CP 51 TO DOWNSTREAM END OF SUB 2005
181          RS       1    FLOW      -1
182          RC    .055    .045    .055    3340   .0341
183          RX       0      35     135     150     225     240     340     375
184          RY      10       3       3       0       0       3       3      10
```



```
LINE         ID.......1.......2.......3.......4.......5.......6.......7.......8.......9......10


185          KK    2005     SUB
186          KM        RUNOFF FROM 2005
187          BA   .1363
188          LS              72    6.70
189          UK     175   .1400     .15     100
190          RK    2600   .0200    .045            TRAP     150       5

191          KK    2007      CP
192          KM        COMBINE SUB 2005 & CP 2006
193          HC       2

194          KK    2000     SUB
195          KM        RUNOFF FROM SUB 2000
196          KM        RAINFALL AMOUNT IS CHANGED TO REFLECT TRANSITION INTO A DIFFERENT
197          KM        GEOGRAPHICAL AREA
198          BA   .7999
199          PH                     .72    1.41    2.47    2.77    2.97    3.35
200          LS              84     2.6
201          UK     400   .2750     .25     100
202          RK    2625   .0785    .045    .072    TRAP      10       3
203          RK    2300   .0217    .045            TRAP      25       3

204          KK    2008      CP
205          KM        ROUTE RUNOFF FROM SUB 2000 TO DOWNSTREAM END OF SUB 2005
206          RS       1    FLOW      -1
207          RC    .045    .045    .045    1560   .0192
208          RX       0       1       2      82     127     207     208     209
209          RY      10      10      10       0       0      10      10      10

210          KK    2009      CP
211          KM        COMBINE CP 2007 & CP 2008
212          HC       2

213          KK    2011      CP
```

```
214          KM        ROUTE CP 2009 TO DOWNSTREAM END OF SUB 2010
215          RS       1    FLOW      -1
216          RC    .055    .045    .055    1400   .0243
217          RX       0      35     135     150     225     240     340     375
218          RY      10       3       3       0       0       3       3      10

219          KK    2010     SUB
220          KM        RUNOFF FROM SUB 2010
221          BA   .0933
222          LS              83     3.7
223          UK     800   .6425     .30     100
224          RK    3000   .0213    .045            TRAP      50       3

225          KK    2012      CP
226          KM        COMBINE SUB 2010 & CP 2011
227          HC       2
```



```
LINE         ID.......1.......2.......3.......4.......5.......6.......7.......8.......9......10


228          KK    2016      CP
229          KM        ROUTE CP 2012 THROUGH SUB 2015A
230          RS       1    FLOW      -1
231          RC    .055    .045    .055    4200   .0319
232          RX       0      35     135     150     225     240     340     375
233          RY      10       3       3       0       0       3       3      10

234          KK   2015A     SUB
235          KM        RUNOFF FROM SUB 2015A
236          BA   .3587
237          LS              82     7.7
238          UK     500   .2800     .25     100
239          RK    2400   .1358    .045    .061    TRAP      10       3
240          RK    4700   .0200    .045            TRAP     150       5

241          KK   2015B     SUB
242          KM        RUNOFF FROM SUB 2015B
243          BA   .0416
244          LS              60    15.4
245          UK     500   .2800     .25     100
246          RK    2000   .0500    .045            TRAP      25       5

247          KK    2020     SUB
248          KM        RUNOFF FROM SUB 2020
249          BA   .1090
250          LS              85    4.05
251          UK     205   .6969     .30     100
252          RK     900   .3889    .045    .011    TRAP      10       3
253          RK    2800   .1428    .045            TRAP      20       3

254          KK    2017      CP
255          KM        ROUTE SUB 2020 TO CP 2017
256          RS       1    FLOW      -1
257          RC    .055    .045    .055    1200   .0317
258          RX       0       1       2      32      67      97      98      99
259          RY      10      10      10       0       0      10      10      10

260          KK    2018      CP
261          KM        COMBINE SUB 2015A, SUB 2015B, CP 2016 & CP 2017
```

```
262          HC       4

263          KK  2030A1      CP
264          KM        ROUTE CP 2018 TO DOWNSTREAM END OF SUB 2030A
265          RS       1    FLOW      -1
266          RC    .055    .045    .055    3280   .0262
267          RX       0      35     135     150     225     240     340     375
268          RY      10       3       3       0       0       3       3      10

269          KK   2030B     SUB
270          KM        RUNOFF FROM SUB 2030B
271          BA   .0098
272          LS              74    32.1
273          UK     155   .0614     .15     100
274          RK     800   .0308    .045   .0049    TRAP      10       2
1                                        HEC-1 INPUT                                                    PAGE  7

LINE         ID.......1.......2.......3.......4.......5.......6.......7.......8.......9......10

275          RK     400   .0200    .045            TRAP     150       5

276          KK  2030A2      CP
277          KM        ROUTE SUB 2030B TO DOWNSTREAM END OF SUB 2030A
278          RS       3    FLOW      -1
279          RC    .055    .045    .055    3040   .0309
280          RX       0       1       2      22      27      47      48      49
281          RY      10      10      10       0       0      10      10      10

282          KK   2030C     SUB
283          KM        RUNOFF FROM SUB 2030C
284          BA   .0610
285          LS              63    27.3
286          UK     155   .0614     .15     100
287          RK    1995   .0341    .045            TRAP       5       5

288          KK  2030A3      CP
289          KM        ROUTE SUB 2030C TO DOWNSTREAM END OF SUB 2030A
290          RS       2    FLOW      -1
291          RC    .055    .045    .055    3840   .0354
292          RX       0       3      53      56      63      66     116     119
293          RY      10     6.5     1.5       0       0     1.5     6.5      10

294          KK   2030A     SUB
295          KM        RUNOFF FROM SUB 2030A
296          BA   .1750
297          LS              67    27.3
298          UK     155   .0614     .15     100
299          RK    3280   .0262    .045            TRAP      75       5

300          KK  2030A4      CP
301          KM        COMBINE CP 2030A1, CP 2030A2, CP 2030A3 & SUB 2030A
302          HC       4

303          KK    2040     SUB
304          KM        RUNOFF FROM SUB 2040
305          BA   .9290
306          LS              82     8.3
307          UK     463   .4072     .25     100
308          RK    2700   .1878    .045    .056    TRAP      10       3
309          RK    6800   .0485    .045            TRAP      25       3
```

```
310          KK    2050     SUB
311          KM        RUNOFF FROM SUB 2050
312          BA   .8580
313          LS              81     9.8
314          UK     530   .5726     .25     100
315          RK    3400   .2067    .045    .086    TRAP      10       3
316          RK    6200   .0693    .045            TRAP      25       5
```



```
LINE         ID.......1.......2.......3.......4.......5.......6.......7.......8.......9......10

317          KK    2051      CP
318          KM        COMBINE SUB 2040 & SUB 2050
319          HC       2

320          KK    2061      CP
321          KM        ROUTE CP 2051 THROUGH SUB 2060
322          RS       1    FLOW      -1
323          RC    .055    .045    .055    2400   .0321
324          RX       0       3      53      57      87      91     141     144
325          RY      10       4       2       0       0       2       4      10

326          KK    2060     SUB
327          KM        RUNOFF FROM SUB 2060
328          BA   .1542
329          LS              77   17.80
330          UK     217   .1667     .20     100
331          RK    2275   .0929    .045    .031    TRAP      10       5
332          RK    2400   .0321    .055            TRAP      30      15

333          KK    2062      CP
334          KM        COMBINE SUB 2060 & CP 2061
335          HC       2

336          KK    2070     SUB
337          KM        RUNOFF FROM SUB 2070
338          BA  1.4649
339          LS              84    4.05
340          UK     400   .5174     .30     100
341          RK    1750   .2962    .045    .048    TRAP       5       3
342          RK    3500   .1236    .045    .483    TRAP      10       3
343          RK    3400   .0882    .045            TRAP      30      10

344          KK    2071     DIV
345          KM        DIVERT FLOW FROM SUB 2070 TO SUB 2130
346          DT    2072
347          DI       0    6000
348          DQ       0    4000

349          KK    2066      CP
350          KM        ROUTE DIV 2071 THROUGH SUB 2065
351          RS       3    FLOW      -1
352          RC    .055    .045    .055    6800   .0471
353          RX       0       3      53      57      87      91     141     144
354          RY      10       4       2       0       0       2       4      10

355          KK    2065     SUB
356          KM        RUNOFF FROM SUB 2065
```

```
357          BA   .1664
358          LS              73    31.5
359          UK     200   .0500     .20     100
360          RK    6800   .0471    .055            TRAP      30      15
```



```
LINE         ID.......1.......2.......3.......4.......5.......6.......7.......8.......9......10

361          KK    2072     RET
362          KM        RETRIEVE DIVERTED FLOW FROM DIV 2071
363          DR    2072

364          KK    2131      CP
365          KM        ROUTE RET 2072 TO DOWNSTREAM END OF SUB 2130
366          RS       1    FLOW      -1
367          RC    .055    .045    .055    3600   .0555
368          RX       0       5     105     107     137     139     239     244
369          RY      10       5       1       0       0       1       5      10

370          KK    2130     SUB
371          KM        RUNOFF FROM SUB 2130
372          BA   .2992
373          LS              83     7.1
374          UK     267   .3126     .20     100
375          RK    9240   .0941    .045            TRAP      30      20

376          KK    2132      CP
377          KM        COMBINE SUB 2130 & CP 2131
378          KM        DRAINAGE AREA ADJUSTMENT MADE TO REFLECT DIVERSION OF 67% OF DRAINAGE
379          KM        AREA FROM SUB 2070
380          HC       2  1.2807

381          KK    2133     DIV
382          KM        DIVERT FLOW TO SUB 2135
383          DT    2134
384          DI       0     500    1000    6000
385          DQ       0     500     850    4350

386          KK    2067      CP
387          KM        ROUTE NON-DIVERTED FLOW FROM DIV 2133 TO DOWNSTREAM END OF SUB 2065
388          RS       1    FLOW      -1
389          RC    .055    .045    .055    2850   .0421
390          RX       0       3      53      57      87      91     141     144
391          RY      10       4       2       0       0       2       4      10

392          KK    2068      CP
393          KM        COMBINE CP 2062, SUB 2065, CP 2066 & CP 2067
394          KM        DRAINAGE AREA ADJUSTMENT MADE TO REFLECT DIVERSION OF UPSTREAM AREAS
395          HC       4  2.8497

396          KK  2080B1      CP
397          KM        ROUTE CP 2068 THROUGH SUB 2080B
398          KM        BOTTOMWIDTH HAS BEEN INCREASED TO CAUSE Qout < Qin
399          RD
400          RC    .055    .045    .055     900   .0325
401          RX       0       3      53      57     107     111     161     164
402          RY      10       4       2       0       0       2       4      10
```

```
LINE          ID.......1.......2.......3.......4.......5.......6.......7.......8.......9......10

 403          KK   2080B     SUB
 404          KM        RUNOFF FROM SUB 2080B
 405          BA   .0466
 406          LS              70    32.1
 407          UK     175   .0571     .15     100
 408          RK     900   .0325    .045            TRAP      30      15

 409          KK  2080B2      CP
 410          KM        COMBINE SUB 2080B & CP 2080B1
 411          HC       2

 412          KK  2080A1      CP
 413          KM        ROUTE CP 2080B2 THROUGH SUB 2080A
 414          RS       1    FLOW      -1
 415          RC    .055    .045    .055    2900   .0303
 416          RX       0       3     103     107     137     141     241     244
 417          RY      10       6       2       0       0       2       6      10

 418          KK   2080A     SUB
 419          KM        RUNOFF FROM SUB 2080A
 420          BA   .0897
 421          LS              70    32.1
 422          UK     175   .0571     .15     100
 423          RK    3100   .0325    .045            TRAP      30      15

 424          KK    2081      CP
 425          KM        COMBINE SUB 2080A, CP 2030A4 & CP 2080B2
 426          HC       3

 427          KK  2090B1      CP
 428          KM        ROUTE CP 2081 TO CP 2090B1
 429          RS       1    FLOW      -1
 430          RC    .055    .045    .055    3400   .0224
 431          RX       0      35     135     150     225     240     340     375
 432          RY      10       3       3       0       0       3       3      10

 433          KK   2090B     SUB
 434          KM        RUNOFF FROM SUB 2090B
 435          BA   .0904
 436          LS              73    21.5
 437          UK     140   .0285     .15     100
 438          RK    4960   .0282    .045            TRAP       7       5

 439          KK  2090B2      CP
 440          KM        COMBINE SUB 2090B  CP 2090B1
 441          HC       2

 442          KK  2090A1      CP
 443          KM        ROUTE CP 2090B2 TO CP 2090A1
 444          RD
 445          RC    .055    .045    .055     700   .0286
 446          RX       0      35     135     150     225     240     340     375
 447          RY      10       3       3       0       0       3       3      10
```



LINE ID.....1.....2.....3.....4.....5.....6.....7.....8.....9.....10

```
448          KK   2090A     SUB
449          KM        RUNOFF FROM SUB 2090A
450          BA   .1004
451          LS              67    21.5
452          UK     140   .0285     .15     100
453          RK    7600   .0289    .045            TRAP       7       5

454          KK  2090A2      CP
455          KM        COMBINE SUB 2090A & CP 2090A1
456          HC       2

457          KK  2110A1      CP
458          KM        ROUTE CP 2090A2 TO CP 2110A1
459          RS       1    FLOW      -1
460          RC    .055    .045    .055    3350   .0194
461          RX       0      35     135     150     225     240     340     375
462          RY      10       3       3       0       0       3       3      10

463          KK   2110A     SUB
464          KM        RUNOFF FROM SUB 2110A
465          BA   .0646
466          LS              74    23.9
467          UK     200   .0286     .15     100
468          RK    4000   .0213    .045            TRAP       7       5

469          KK  2110A2      CP
470          KM        COMBINE SUB 2110A & CP 2110A1
471          HC       2

472          KK  2160D1      CP
473          KM        ROUTE CP 2110A2 THROUGH SUB 2160D TO BELL ROAD
474          RS       1    FLOW      -1
475          RC    .055    .045    .055    2200   .0205
476          RX       0      35     135     150     225     240     340     375
477          RY      10       3       3       0       0       3       3      10

478          KK   2160D     SUB
479          KM        RUNOFF FROM SUB 2160D
480          BA   .0387
481          LS              74    32.1
482          UK    337    .0324     .15     100
483          RK   2600   .0192    .045            TRAP       7       5

484          KK  2160D2      CP
485          KM        COMBINE 2160D & CP 2160D1
486          HC       2

487          KK    2134     RET
488          KM        RETIEVE DIVERTED FLOW FROM DIV 2133
489          DR    2134
```



```
LINE         ID.......1.......2.......3.......4.......5.......6.......7.......8.......9......10

490          KK    2136      CP
491          KM        ROUTE RET 2134 THROUGH SUB 2135
492          RS       1    FLOW      -1
493          RC    .055    .045    .055    2700   .0444
```

```
494          RX       0       1       2      22      42      62      63      64
495          RY      10      10      10       0       0      10      10      10

496          KK    2135     SUB
497          KM        RUNOFF FROM SUB 2135
498          BA   .1083
499          LS              86    19.3              74    19.3
500          UK     800   .4000     .30      40
501          UK     200   .0500     .15      60
502          RK    2700   .0444    .045            TRAP      20       2

503          KK    2137      CP
504          KM        COMBINE SUB 2135 & CP 2136
505          KM        DRAINAGE AREA ADJUSTMENT MADE TO REFLECT DIVERSION OF UPSTREAM AREAS
506          HC       2  1.1303

507          KK  2140B1      CP
508          KM        ROUTE CP 2137 THROUGH SUB 2140B
509          RD
510          RC    .055    .045    .055    1820   .0461
511          RX       0       1       2      22      42      62      63      64
512          RY      10      10      10       0       0      10      10      10

513          KK   2140B     SUB
514          KM        RUNOFF FROM SUB 2140B
515          BA   .0768
516          LS              74    32.1
517          UK     200   .0500     .15     100
518          RK    1820   .0461    .045            TRAP      20      10

519          KK  2140B2      CP
520          KM        COMBINE SUB 2140B & CP 2140B1
521          HC       2

522          KK  2140A1      CP
523          KM        ROUTE CP 2140B2 THROUGH SUB 2140A
524          RS       1    FLOW      -1
525          RC    .060    .050    .060    3600   .0361
526          RX       0       7      29      34      51      56      78      85
527          RY      10     2.5     2.5       0       0     2.5     2.5      10

528          KK   2140A     SUB
529          KM        RUNOFF FROM SUB 2140A
530          KM        REVISED RK RECORD TO REFLECT NATURAL CROSS-SECTION
531          BA   .1220
532          LS              74    32.1
533          UK     200   .0500     .15     100
534          RK     800   .0500    .045   .0244    TRAP      15       3
535          RK    3600   .0361    .045            TRAP      17       5
```



```
LINE         ID.......1.......2.......3.......4.......5.......6.......7.......8.......9......10

536          KK    2150     SUB
537          KM        RUNOFF FROM SUB 2150
538          BA   .6873
539          LS              86    15.0              74    15.0
540          UK     350   .3428     .30      50
541          UK     180   .0555     .15      50
```

```
542          RK    1785   .1313    .045    .027    TRAP      10       3
543          RK    6400   .0312    .045            TRAP      20      10

544          KK    2151      CP
545          KM        COMBINE SUB 2150, SUB 2140A & CP 2140A1
546          HC       3

547          KK  2160C1      CP
548          KM        ROUTE CP 2151 TO CP 2160C1
549          RS       1    FLOW      -1
550          RC    .055    .045    .055    1400   .0214
551          RX       0       6      21    22.5    39.5      41      56      62
552          RY      10       4     1.5       0       0     1.5       4      10

553          KK   2160C     SUB
554          KM        RUNOFF FROM SUB 2160C
555          BA   .0423
556          LS              74    32.1
557          UK     337   .0324     .15     100
558          RK    2750   .0327    .045            TRAP      15       5

559          KK   2160B     SUB
560          KM        RUNOFF FROM SUB 2160B
561          KM        RK RECORD REVISED TO MATCH CP 2160C1 ROUTING OPERATION
562          BA   .1672
563          LS              75    19.3
564          UK     337   .0324     .15     100
565          RK    2275   .0527    .045   .0361    TRAP      15       3
566          RK    1400   .0241    .045            TRAP      17       5

567          KK  2160C2      CP
568          KM        COMBINE SUB 2160B, SUB 2160C, & CP 2160C1
569          HC       3

570          KK  2160A1      CP
571          KM        ROUTE CP 2160C2 THROUGH SUB 2160A
572          RS       2    FLOW      -1
573          RC    .055    .045    .055    4720   .0169
574          RX       0       6      21    22.5    39.5      41      56      62
575          RY      10       4     1.5       0       0     1.5       4      10

576          KK   2160A     SUB
577          KM        RUNOFF FROM SUB 2160A
578          BA   .5861
579          LS              74    32.1
580          UK     337   .0324     .15     100
581          RK    9500   .0263    .045            TRAP      25       3
```



```
LINE         ID.......1.......2.......3.......4.......5.......6.......7.......8.......9......10


582          KK  2160A2      CP
583          KM        COMBINE SUB 2160A & CP 2160A1
584          HC       2

585          KK  2160D3      CP
586          KM        COMBINE CP 2160A2 & CP 2160D2
587          KM        THIS IS THE TOTAL DISCHARGE IN THE REGIONAL CHANNEL UPSTREAM OF
588          KM        THE STATE LAND CHANNEL B-C CONFLUENCE.
```

```
589          HC       2

590          KK   2170B     SUB
591          KM        RUNOFF FROM SUB 2170B
592          BA   .1542
593          LS              76    34.5
594          UK     250   .0266     .15     100
595          RK    4640   .0457    .045            TRAP      20       5

596          KK  2170A1      CP
597          KM        ROUTE SUB 2170B TO CP 2170A1
598          RS       1    FLOW      -1
599          RC    .055    .045    .055    1920   .0250
600          RX       0       1       2      52      72     122     123     124
601          RY      10      10      10       0       0      10      10      10

602          KK   2170A     SUB
603          KM        RUNOFF FROM SUB 2170A
604          BA   .1227
605          LS              74   24.20
606          UK     250   .0266     .15     100
607          RK    1920   .0250    .045            TRAP      20       5
             *
             *       BRING IN PORTION OF MODEL FOR STATE LAND DRAINAGE ALTERNATIVE NO. 2
             *       ALL IMPROVED CHANNELS USE 4-POINT XSEC WITH n=.035
             *       BASE MODEL WAS ALT2.6I
             *

608          KK   2210A     SUB
609          KM        RUNOFF FROM SUB 2210A
610          BA  1.5847
611          LS              82       2
612          UK     248   .3717     .30     100
613          RK    4500   .1875    .045    .107    TRAP      10       3
614          RK    4800   .0526    .045            TRAP      20      10

615          KK  2210A1      CP
616          KM        ROUTE SUB 2210A, THROUGH WIDE, BRAIDED WASH ALONG NORTH SIDE OF
617          KM        PARCELS N & O, TO CP 2210A1.
618          RS       1    FLOW      -1
619          RC    .065    .055    .065    3500   .0476
620          RX       0       1      51      52     152     153     203     204
621          RY      10       3       1       0       0       1       3      10
```



```
LINE         ID.......1.......2.......3.......4.......5.......6.......7.......8.......9......10

622          KK  2210B1      CP
623          KM        ROUTE CP 2210A1 THROUGH INCISED WASH ALONG NORTH SIDE OF
624          KM        PARCEL N TO CP 2210B1.  RD USED TO PROMOTE FLOW CONTINUITY.
625          RD
626          RC    .065    .050    .065    2140   .0417
627          RX       0       1       2      22      45      65      66      67
628          RY      10      10      10       0       0      10      10      10

629          KK   2210B     SUB
630          KM        RUNOFF FROM SUB 2210B
631          KM        MAIN CHANNEL REFLECTS MIX OF CHANNEL GEOMETRY FROM CP 2210A1 & 2210B1.
632          KM        CHANNEL LENGTH HAS BEEN ADJUSTED TO MATCH DATA FROM NEW
```

```
633          KM        1 FT C.I. TOPO MAPS.
634          BA   .1916
635          LS              74    7.75
636          UK     248   .3717     .25     100
637          RK    5640   .0444    .050            TRAP      50       4

638          KK  2210B2      CP
639          KM        COMBINE SUB 2210B & CP 2210B1
640          HC       2

641          KK    2200     SUB
642          KM        RUNOFF FROM SUB 2200
643          BA   .2532
644          LS              81    6.29
645          UK     353   .1529     .20     100
646          RK    6150   .0838    .045            TRAP       5      11

647          KK  2210B3      CP
648          KM        COMBINE CP 2210B2 & SUB 2200
649          HC       2

650          KK    2180     SUB
651          KM        RUNOFF FROM SUB 2180
652          BA  1.0044
653          LS              86    1.37
654          UK     468   .4496     .30     100
655          RK    3100   .2558    .045    .121    TRAP      10       3
656          RK    8200   .0731    .045            TRAP      20       5

657          KK    2191      CP
658          KM        ROUTE SUB 2180 THROUGH SUB 2190 TO CP 2191
659          RS       3    FLOW      -1
660          RC    .055    .040    .055    4100   .0390
661          RX       0       7     107     111     141     145     245     252
662          RY      10       3       2       0       0       2       3      10

663          KK    2190     SUB
664          KM        RUNOFF FROM SUB 2190
665          BA   .1227
666          LS              79   18.03
667          UK     190   .0915     .15     100
668          RK    4100   .0390    .045            TRAP      30      10
```



```
LINE         ID.......1.......2.......3.......4.......5.......6.......7.......8.......9......10


669          KK    2201      CP
670          KM        COMBINE CP 2191 & SUB 2190
671          HC       2

672          KK    2204      CP
673          KM        COMBINE CP 2201 WITH CP 2210B3.
674          KM        THIS IS THE TOTAL FLOW AT THE INTERSECTION OF THOMPSON PEAK PARKWAY AND
675          KM        THE PROPOSED STATE LAND CHANNEL
676          HC       2

677          KK  2170A2      CP
678          KM        ROUTE CP 2204 THROUGH STATE LAND CHANNEL TO CP 2170A2.
679          KM        GEOMETRY & SLOPE REFLECT DATA AS OF 9/2/93.
```

```
680          RS       1    FLOW      -1
681          RC    .060    .045    .060    1720  .01577
682          RX       0       1     101     110     196     205     305     306
683          RY      10       4       3       0       0       3       4      10

684          KK  2170A3      CP
685          KM        COMBINE CP 2170A1, CP 2170A2 & SUB 2170A
686          HC       3

687          KK  2160A3      CP
688          KM        ROUTE CP 2170A3 THROUGH STATE LAND CHANNEL TO INTERSECTION WITH
689          KM        REGIONAL CHANNEL AT BELL ROAD
690          RS       1    FLOW      -1
691          RC    .060    .045    .060    2000  .01577
692          RX       0       1     101     110     196     205     305     306
693          RY      10       4       3       0       0       3       4      10

694          KK  2160A4      CP
695          KM        COMBINE CP 2160D3 & CP 2160A3
696          KM        THIS IS THE TOTAL DISCHARGE TO THE REGIONAL CHANNEL AT BELL ROAD
697          HC       2

698          KK  2160E1      CP
699          KM        ROUTE CP 2160A4 THROUGH SUB 2160E TO CP 2160E1
700          RS       1    FLOW      -1
701          RC    .055    .045    .055    2036   .0144
702          RX       0      35     135     150     225     240     340     375
703          RY      10       3       3       0       0       3       3      10

704          KK   2160E     SUB
705          KM        RUNOFF FROM SUB 2160E
706          BA   .0261
707          LS              74    32.1
708          UK     337   .0324     .15     100
709          RK    2036   .0144    .045            TRAP      75       5
```



```
LINE         ID.......1.......2.......3.......4.......5.......6.......7.......8.......9......10

710          KK  2160E2      CP
711          KM        COMBINE SUB 2160E & CP 2160E1
712          HC       2

713          KK   2220C     SUB
714          KM        RUNOFF FROM SUB 2220C
715          BA   .0268
716          LS              74    21.9
717          UK     200   .0500     .15     100
718          RK    2235   .0434    .045            TRAP       7       3

719          KK  2170C1      CP
720          KM        ROUTE SUB 2220C THROUGH SUB 2170C TO BELL ROAD
721          KM        ROUTING DATA MATCHES RK FROM SUB 2170C
722          RS       3    FLOW      -1
723          RC    .055    .045    .055    3000   .0216
724          RX       0       1       2      52      67     117     118     119
725          RY      10      10      10       0       0      10      10      10

726          KK   2170C     SUB
```

```
727          KM        RUNOFF FROM SUB 2170C
728          BA   .0610
729          LS              74    24.2
730          UK     250   .0266     .15     100
731          RK    3000   .0216    .045            TRAP      15       5

732          KK  2170C2      CP
733          KM        COMBINE SUB 2170C & CP 2170C1
734          HC       2

735          KK  2170D1      CP
736          KM        ROUTE CP 2170C2 THROUGH SUB 2170D TO CP 2170D1
737          RS       2    FLOW      -1
738          RC    .055    .045    .055    2250   .0147
739          RX       0       6      36      45      60      69      99     105
740          RY      10       4       3       0       0       3       4      10

741          KK   2170D     SUB
742          KM        RUNOFF FROM SUB 2170D
743          BA   .0366
744          LS              74    24.2
745          UK     250   .0266     .15     100
746          RK    2250   .0147    .045            TRAP      15       5

747          KK  2170D2      CP
748          KM        COMBINE SUB 2170D & CP 2170D1
749          HC       2

750          KK  2160E3      CP
751          KM        COMBINE CP 2160E2 & CP 2170D2
752          HC       2
```



```
LINE         ID.......1.......2.......3.......4.......5.......6.......7.......8.......9......10


753          KK  2170E1      CP
754          KM        ROUTE CP 2160E3 TO CP 2170E1 AT OLD VERDE CANAL
755          RS       1    FLOW      -1
756          RC    .055    .045    .055     362   .0124
757          RX       0      35     135     150     225     240     340     375
758          RY      10       3       3       0       0       3       3      10

759          KK   2170E     SUB
760          KM        RUNOFF FROM SUB 2170E
761          BA   .0245
762          LS              74    24.2
763          UK     250   .0266     .15     100
764          RK    1976   .0152    .045            TRAP       7       5

765          KK  2170E2      CP
766          KM        COMBINE CP 2170E1 & SUB 2170E
767          KM        THIS IS THE TOTAL FLOW IN THE REGIONAL CHANNEL AT THE OLD VERDE CANAL
768          HC       2

769          KK  2160F1      CP
770          KM        ROUTE CP 2170E2 TO CAP DIKE 4
771          RS       1    FLOW      -1
772          RC    .055    .045    .055     850   .0179
773          RX       0      35     135     150     225     240     340     375
```

```
774          RY      10       3       3       0       0       3       3      10

775          KK   2160F     SUB
776          KM        RUNOFF FROM SUB 2160F
777          BA   .0091
778          LS              74    32.1
779          UK     337   .0324     .15     100
780          RK     850   .0179    .045            TRAP      75       5

781          KK  2160F2      CP
782          KM        COMBINE CP 2160F1 & SUB 2160F
783          KM        THIS IS THE TOTAL FLOW THAT EXITS THE REGIONAL CHANNEL AT CAP DIKE 4
784          HC       2
             *
785          ZZ
```

SCHEMATIC DIAGRAM OF STREAM NETWORK

```
INPUT
 LINE     (V) ROUTING          (--->) DIVERSION OR PUMP FLOW

  NO.     (.) CONNECTOR        (<---) RETURN OF DIVERTED OR PUMPED FLOW

   40      SUB39
              .
              .
   46         .       SUB40
              .           .
              .           .
   52       CP41............
              V
              V
   55       41.1
              .
              .
   61         .       SUB41
              .           .
              .           .
   67       41.2............
              .
              .
   70         .       SUB42
              .           .
              .           .
   76         .           .       SUB43
              .           .           .
              .           .           .
   83         .           .           .       SUB44
              .           .           .           .
              .           .           .           .
   90         .           .        CP45............
              .           .           V
              .           .           V
   93         .           .        45.1
              .           .           .
              .           .           .
   99         .           .           .       SUB45
              .           .           .           .
              .           .           .           .
  105         .           .        45.2............
              .           .           .
```

```
          .          .          .
108       .          .          .     SUB45A
          .          .          .          .
          .          .          .          .
114       .          .          .          .       SUB46
          .          .          .          .          .
          .          .          .          .          .
121       .          .       CP47.......................
          .          .          V
          .          .          V
124       .          .       47.1
          .          .          .
          .          .          .
132       .          .          .     SUB47
          .          .          .          .
          .          .          .          .
140       .          .       47.2............
          .          .          .
          .          .          .
143     CP48.......................
          V
          V
146     48.1
          .
          .
153       .     SUB48R
          .          .
          .          .
162       .          .      SUB50
          .          .          V
          .          .          V
169       .          .      48.2
          .          .          .
          .          .          .
175     CP51.......................
          V
          V
179     2006
          .
          .
185       .       2005
          .          .
          .          .
191     2007............
          .
          .
194       .       2000
          .          V
          .          V
204       .       2008
          .          .
          .          .
210     2009............
          V
          V
213     2011
          .
          .
219       .       2010
          .          .
```

```
          .          .
225     2012...........
          V
          V
228     2016
          .
          .
234       .      2015A
          .          .
          .          .
241       .          .      2015B
          .          .          .
          .          .          .
247       .          .          .      2020
          .          .          .        V
          .          .          .        V
254       .          .          .      2017
          .          .          .        .
          .          .          .        .
260     2018..................................
          V
          V
263   2030A1
          .
          .
269       .      2030B
          .          V
          .          V
276       .     2030A2
          .          .
          .          .
282       .          .      2030C
          .          .          V
          .          .          V
288       .          .     2030A3
          .          .          .
          .          .          .
294       .          .          .     2030A
          .          .          .        .
          .          .          .        .
300   2030A4..................................
          .
          .
303       .       2040
          .          .
          .          .
310       .          .       2050
          .          .          .
          .          .          .
317       .       2051...........
          .          V
          .          V
320       .       2061
          .          .
          .          .
326       .          .       2060
          .          .          .
          .          .          .
333       .       2062...........
          .          .
```

```
                .           .
336             .           .        2070
                .           .           .
                .           .           .
346             .           .           .-------->    2072
344             .           .        2071
                .           .           V
                .           .           V
349             .           .        2066
                .           .           .
                .           .           .
355             .           .           .        2065
                .           .           .           .
                .           .           .           .
363             .           .           .           .          .<-------    2072
361             .           .           .           .       2072
                .           .           .           .          V
                .           .           .           .          V
364             .           .           .           .       2131
                .           .           .           .          .
                .           .           .           .          .
370             .           .           .           .          .        2130
                .           .           .           .          .           .
                .           .           .           .          .           .
376             .           .           .           .       2132............
                .           .           .           .          .
                .           .           .           .          .
383             .           .           .           .          .-------->    2134
381             .           .           .           .       2133
                .           .           .           .          V
                .           .           .           .          V
386             .           .           .           .       2067
                .           .           .           .          .
                .           .           .           .          .
392             .        2068.................................
                .           V
                .           V
396             .      2080B1
                .           .
                .           .
403             .           .        2080B
                .           .           .
                .           .           .
409             .      2080B2............
                .           V
                .           V
412             .      2080A1
                .           .
                .           .
418             .           .        2080A
                .           .           .
                .           .           .
424          2081......................
                V
                V
427       2090B1
                .
                .
433             .        2090B
                .           .
```

```
          .          .
439     2090B2............
          V
          V
442     2090A1
          .
          .
448       .       2090A
          .          .
          .          .
454     2090A2............
          V
          V
457     2110A1
          .
          .
463       .       2110A
          .          .
          .          .
469     2110A2............
          V
          V
472     2160D1
          .
          .
478       .       2160D
          .          .
          .          .
484     2160D2............
          .
          .
489       .          .<-------    2134
487       .        2134
          .          V
          .          V
490       .        2136
          .          .
          .          .
496       .          .        2135
          .          .          .
          .          .          .
503       .        2137............
          .          V
          .          V
507       .      2140B1
          .          .
          .          .
513       .          .       2140B
          .          .          .
          .          .          .
519       .      2140B2............
          .          V
          .          V
522       .      2140A1
          .          .
          .          .
528       .          .       2140A
          .          .          .
          .          .          .
536       .          .          .       2150
```

```
          .         .         .         .
          .         .         .         .
544       .      2151.......................
          .         V
          .         V
547       .    2160C1
          .         .
          .         .
553       .         .      2160C
          .         .         .
          .         .         .
559       .         .         .     2160B
          .         .         .         .
          .         .         .         .
567       .    2160C2.......................
          .         V
          .         V
570       .    2160A1
          .         .
          .         .
576       .         .      2160A
          .         .         .
          .         .         .
582       .    2160A2............
          .         .
          .         .
585  2160D3............
          .
          .
590       .     2170B
          .         V
          .         V
596       .    2170A1
          .         .
          .         .
602       .         .      2170A
          .         .         .
          .         .         .
608       .         .         .     2210A
          .         .         .         V
          .         .         .         V
615       .         .         .    2210A1
          .         .         .         V
          .         .         .         V
622       .         .         .    2210B1
          .         .         .         .
          .         .         .         .
629       .         .         .         .      2210B
          .         .         .         .         .
          .         .         .         .         .
638       .         .         .    2210B2............
          .         .         .         .
          .         .         .         .
641       .         .         .         .       2200
          .         .         .         .         .
          .         .         .         .         .
647       .         .         .    2210B3............
          .         .         .         .
          .         .         .         .
650       .         .         .         .       2180
```

```
                .         .         .         .         V
                .         .         .         .         V
657             .         .         .         .      2191
                .         .         .         .         .
                .         .         .         .         .
663             .         .         .         .         .      2190
                .         .         .         .         .         .
                .         .         .         .         .         .
669             .         .         .         .      2201............
                .         .         .         .         .
                .         .         .         .         .
672             .         .         .      2204............
                .         .         .         V
                .         .         .         V
677             .         .         .    2170A2
                .         .         .         .
                .         .         .         .
684             .    2170A3......................
                .         V
                .         V
687             .    2160A3
                .         .
                .         .
694        2160A4............
                V
                V
698        2160E1
                .
                .
704             .     2160E
                .         .
                .         .
710        2160E2............
                .
                .
713             .     2220C
                .         V
                .         V
719             .    2170C1
                .         .
                .         .
726             .         .      2170C
                .         .         .
                .         .         .
732             .    2170C2............
                .         V
                .         V
735             .    2170D1
                .         .
                .         .
741             .         .      2170D
                .         .         .
                .         .         .
747             .    2170D2............
                .         .
                .         .
750        2160E3............
                V
                V
753        2170E1
```

```
              .
              .
759           .       2170E
              .          .
              .          .
765      2170E2............
              V
              V
769      2160F1
              .
              .
775           .       2160F
              .          .
              .          .
781      2160F2............
```

(***) RUNOFF ALSO COMPUTED AT THIS LOCATION

```
****************************************
*                                      *
*   FLOOD HYDROGRAPH PACKAGE  (HEC-1)  *
*            SEPTEMBER 1990            *
*             VERSION 4.0              *
*                                      *
*  RUN DATE  09/06/1993  TIME  14:30:31 *
*                                      *
****************************************
```

```
****************************************
*                                      *
*    U.S. ARMY CORPS OF ENGINEERS      *
*    HYDROLOGIC ENGINEERING CENTER     *
*          609 SECOND STREET           *
*       DAVIS, CALIFORNIA 95616        *
*           (916) 756-1104             *
*                                      *
****************************************
```

NEW HEC-1 MODEL FOR REVISED REATA PASS/BEARDSLEY WASH REGIONAL CHANNEL
ALIGNMENT PROVIDED BY THE CITY OF SCOTTSDALE - FEBRUARY 16, 1993

MODEL RPBW1.6I -- BASE MODELS WERE 2L90.6I & RP4.24I
STATE LAND CHANNEL ALIGNMENT A-B-C WHICH OUTLETS TO THE
REATA PASS/BEARDSLEY WASH REGIONAL CHANNEL AT THE INTERSECTION OF
BELL ROAD & 96th STREET.

100-YEAR, 6-HOUR HYPOTHETICAL STORM
RAINFALL FROM NOAA ATLAS,  AREAL REDUCTION FACTOR PER JD RECORDS

RAINFALL & CHANNEL ROUTING OPERATIONS HAVE BEEN MODIFIED IN ACCORDANCE
WITH SCENARIO 13 FROM SENSITIVITY ANALYSIS FOR REATA PASS HYDROLOGY
SUB 49 HAS BEEN PLACED DOWNSTREAM OF CP 51  (3/12/90).

THOMPSON PEAK PARKWAY ALIGNMENT HAS BEEN ADJUSTED THROUGH STATE LAND
PARCEL TO MATCH SITE PLAN PROVIDED BY STATE LAND DEPARTMENT WITH
APPROVAL DATE OF 10/29/91 (PREPARED BY G. WILLIAM LARSON ASSC., INC.)

100% OF FLOW FROM THE REATA PASS APEX IS DIVERTED SOUTH TO CAP DIKE 4
IMPERVIOUS AREA IS BASED ON FUTURE LAND USE CONDITIONS PER CITY OF
SCOTTSDALE PLANNING PROJECTIONS, AS REFERENCED IN THE UPPER INDIAN BEND
WASH REGIONAL DRAINAGE PLAN REPORT.

PREPARED BY ROBERT L. WARD, P.E., CONSULTING ENGINEER
FOR THE NEWHALL LAND & FARMING COMPANY

29 IO  OUTPUT CONTROL VARIABLES

```
                IPRNT          5  PRINT CONTROL
                IPLOT          0  PLOT CONTROL
                QSCAL         0.  HYDROGRAPH PLOT SCALE

  IT        HYDROGRAPH TIME DATA
                 NMIN          5  MINUTES IN COMPUTATION INTERVAL
                IDATE     4MAY93  STARTING DATE
                ITIME       0000  STARTING TIME
                   NQ        300  NUMBER OF HYDROGRAPH ORDINATES
               NDDATE     5MAY93  ENDING DATE
               NDTIME       0055  ENDING TIME
               ICENT          19  CENTURY MARK

            COMPUTATION INTERVAL     .08 HOURS
                 TOTAL TIME BASE   24.92 HOURS

      ENGLISH UNITS
          DRAINAGE AREA          SQUARE MILES
          PRECIPITATION DEPTH    INCHES
          LENGTH, ELEVATION      FEET
          FLOW                   CUBIC FEET PER SECOND
          STORAGE VOLUME         ACRE-FEET
          SURFACE AREA           ACRES
          TEMPERATURE            DEGREES FAHRENHEIT

30 JD     INDEX STORM NO. 1
                 STRM        3.39  PRECIPITATION DEPTH
                 TRDA         .00  TRANSPOSITION DRAINAGE AREA

31 PI       PRECIPITATION PATTERN
              .01      .01      .01      .01      .01      .01      .01      .01      .01      .01
              .01      .01      .01      .01      .01      .01      .01      .01      .01      .02
              .02      .02      .02      .02      .02      .02      .02      .03      .03      .03
              .08      .09      .10      .15      .20      .41      .72      .28      .17      .11
              .09      .08      .03      .03      .03      .03      .02      .02      .02      .02
              .02      .02      .02      .01      .01      .01      .01      .01      .01      .01
              .01      .01      .01      .01      .01      .01      .01      .01      .01      .01
              .01      .01

32 JD     INDEX STORM NO. 2
                 STRM        3.39  PRECIPITATION DEPTH
                 TRDA         .00  TRANSPOSITION DRAINAGE AREA

31 PI       PRECIPITATION PATTERN
              .01      .01      .01      .01      .01      .01      .01      .01      .01      .01
              .01      .01      .01      .01      .01      .01      .01      .01      .01      .02
              .02      .02      .02      .02      .02      .02      .02      .03      .03      .03
              .08      .09      .10      .15      .20      .41      .72      .28      .17      .11
              .09      .08      .03      .03      .03      .03      .02      .02      .02      .02
              .02      .02      .02      .01      .01      .01      .01      .01      .01      .01
              .01      .01      .01      .01      .01      .01      .01      .01      .01      .01
              .01      .01

33 JD     INDEX STORM NO. 3
                 STRM        3.39  PRECIPITATION DEPTH
                 TRDA         .01  TRANSPOSITION DRAINAGE AREA

31 PI       PRECIPITATION PATTERN
              .01      .01      .01      .01      .01      .01      .01      .01      .01      .01
              .01      .01      .01      .01      .01      .01      .01      .01      .01      .02
```

```
                .02       .02       .02       .02       .02       .02       .02       .03       .03       .03
                .08       .09       .10       .15       .20       .41       .72       .28       .17       .11
                .09       .08       .03       .03       .03       .03       .02       .02       .02       .02
                .02       .02       .02       .01       .01       .01       .01       .01       .01       .01
                .01       .01       .01       .01       .01       .01       .01       .01       .01       .01
                .01       .01

34 JD         INDEX STORM NO. 4
                 STRM        3.39  PRECIPITATION DEPTH
                 TRDA         .10  TRANSPOSITION DRAINAGE AREA

31 PI           PRECIPITATION PATTERN
                .01       .01       .01       .01       .01       .01       .01       .01       .01       .01
                .01       .01       .01       .01       .01       .01       .01       .01       .01       .02
                .02       .02       .02       .02       .02       .02       .02       .03       .03       .03
                .08       .09       .10       .15       .20       .41       .72       .28       .17       .11
                .09       .08       .04       .03       .03       .03       .02       .02       .02       .02
                .02       .02       .02       .01       .01       .01       .01       .01       .01       .01
                .01       .01       .01       .01       .01       .01       .01       .01       .01       .01
                .01       .01

35 JD         INDEX STORM NO. 5
                 STRM        3.39  PRECIPITATION DEPTH
                 TRDA         .50  TRANSPOSITION DRAINAGE AREA

31 PI           PRECIPITATION PATTERN
                .01       .01       .01       .01       .01       .01       .01       .01       .01       .01
                .01       .01       .01       .01       .01       .01       .01       .01       .01       .02
                .02       .02       .02       .02       .02       .02       .02       .03       .03       .03
                .08       .09       .10       .15       .20       .41       .72       .28       .17       .11
                .09       .08       .04       .03       .03       .03       .02       .02       .02       .02
                .02       .02       .02       .01       .01       .01       .01       .01       .01       .01
                .01       .01       .01       .01       .01       .01       .01       .01       .01       .01
                .01       .01

36 JD         INDEX STORM NO. 6
                 STRM        3.38  PRECIPITATION DEPTH
                 TRDA        1.00  TRANSPOSITION DRAINAGE AREA

31 PI           PRECIPITATION PATTERN
                .01       .01       .01       .01       .01       .01       .01       .01       .01       .01
                .01       .01       .01       .01       .01       .01       .01       .01       .01       .02
                .02       .02       .02       .02       .02       .02       .02       .03       .03       .03
                .08       .09       .10       .15       .19       .40       .71       .28       .17       .11
                .09       .08       .04       .03       .03       .03       .02       .02       .02       .02
                .02       .02       .02       .01       .01       .01       .01       .01       .01       .01
                .01       .01       .01       .01       .01       .01       .01       .01       .01       .01
                .01       .01

37 JD         INDEX STORM NO. 7
                 STRM        3.35  PRECIPITATION DEPTH
                 TRDA        5.00  TRANSPOSITION DRAINAGE AREA

31 PI           PRECIPITATION PATTERN
                .01       .01       .01       .01       .01       .01       .01       .01       .01       .01
                .01       .01       .01       .01       .01       .01       .01       .01       .01       .02
                .02       .02       .02       .02       .02       .02       .03       .03       .03       .03
                .08       .09       .10       .15       .19       .39       .70       .27       .16       .11
                .09       .08       .04       .03       .03       .03       .02       .02       .02       .02
                .02       .02       .02       .02       .02       .01       .01       .01       .01       .01
```

```
                .01       .01       .01       .01       .01       .01       .01       .01       .01       .01
                .01       .01

38 JD        INDEX STORM NO. 8
                STRM        3.21  PRECIPITATION DEPTH
                TRDA       25.00  TRANSPOSITION DRAINAGE AREA

31 PI          PRECIPITATION PATTERN
                .01       .01       .01       .01       .01       .01       .01       .01       .01       .01
                .01       .01       .01       .01       .01       .01       .01       .02       .02       .02
                .02       .02       .02       .02       .02       .03       .03       .03       .03       .04
                .08       .09       .10       .13       .17       .35       .61       .24       .15       .11
                .09       .08       .04       .03       .03       .03       .03       .02       .02       .02
                .02       .02       .02       .02       .02       .02       .01       .01       .01       .01
                .01       .01       .01       .01       .01       .01       .01       .01       .01       .01
                .01       .01

39 JD        INDEX STORM NO. 9
                STRM        3.09  PRECIPITATION DEPTH
                TRDA       50.00  TRANSPOSITION DRAINAGE AREA

31 PI          PRECIPITATION PATTERN
                .01       .01       .01       .01       .01       .01       .01       .01       .01       .01
                .01       .01       .01       .01       .01       .01       .02       .02       .02       .02
                .02       .02       .02       .02       .03       .03       .03       .03       .04       .04
                .08       .09       .10       .11       .15       .30       .54       .21       .13       .11
                .10       .09       .04       .04       .03       .03       .03       .03       .02       .02
                .02       .02       .02       .02       .02       .02       .01       .01       .01       .01
                .01       .01       .01       .01       .01       .01       .01       .01       .01       .01
                .01       .01

   *** FDKRUT - NEWTON RAPHSON FAILEDFIXED POINT ITERATION USED - ITERATION=  1


   *** FDKRUT - NEWTON RAPHSON FAILEDFIXED POINT ITERATION USED - ITERATION=  1


   *** FDKRUT - NEWTON RAPHSON FAILEDFIXED POINT ITERATION USED - ITERATION=  1


   *** FDKRUT - NEWTON RAPHSON FAILEDFIXED POINT ITERATION USED - ITERATION=  1


                                   RUNOFF SUMMARY
                              FLOW IN CUBIC FEET PER SECOND
                           TIME IN HOURS,  AREA IN SQUARE MILES

                                PEAK   TIME OF    AVERAGE FLOW FOR MAXIMUM PERIOD      BASIN     MAXIMUM     TIME OF
   OPERATION       STATION      FLOW    PEAK                                          AREA      STAGE     MAX STAGE
                                                   6-HOUR     24-HOUR     72-HOUR

   HYDROGRAPH AT
```

| | | | | | | | |
|---|---|---|---|---|---|---|---|
| + | | SUB39 | 4167. | 3.25 | 445. | 113. | 109. | 1.88 |
| | HYDROGRAPH AT | | | | | | | |
| + | | SUB40 | 1443. | 3.17 | 120. | 30. | 29. | .58 |
| | 2 COMBINED AT | | | | | | | |
| + | | CP41 | 5282. | 3.25 | 563. | 142. | 137. | 2.47 |
| | ROUTED TO | | | | | | | |
| + | | 41.1 | 3804. | 3.33 | 560. | 142. | 137. | 2.47 |
| | HYDROGRAPH AT | | | | | | | |
| + | | SUB41 | 1059. | 3.25 | 121. | 31. | 30. | .83 |
| | 2 COMBINED AT | | | | | | | |
| + | | 41.2 | 4764. | 3.33 | 678. | 172. | 166. | 3.29 |
| | HYDROGRAPH AT | | | | | | | |
| + | | SUB42 | 1307. | 3.17 | 116. | 29. | 28. | .58 |
| | HYDROGRAPH AT | | | | | | | |
| + | | SUB43 | 2384. | 3.17 | 234. | 59. | 57. | 1.07 |
| | HYDROGRAPH AT | | | | | | | |
| + | | SUB44 | 1847. | 3.25 | 182. | 46. | 44. | .84 |
| | 2 COMBINED AT | | | | | | | |
| + | | CP45 | 4139. | 3.25 | 413. | 104. | 100. | 1.91 |
| | ROUTED TO | | | | | | | |
| + | | 45.1 | 3831. | 3.25 | 413. | 104. | 100. | 1.91 |
| | HYDROGRAPH AT | | | | | | | |
| + | | SUB45 | 514. | 3.17 | 41. | 10. | 10. | .20 |
| | 2 COMBINED AT | | | | | | | |
| + | | 45.2 | 4141. | 3.25 | 453. | 114. | 110. | 2.11 |
| | HYDROGRAPH AT | | | | | | | |
| + | | SUB45A | 473. | 3.17 | 38. | 10. | 9. | .17 |
| | HYDROGRAPH AT | | | | | | | |
| + | | SUB46 | 2783. | 3.17 | 203. | 51. | 49. | .93 |
| | 3 COMBINED AT | | | | | | | |
| + | | CP47 | 6361. | 3.17 | 690. | 174. | 167. | 3.21 |
| | ROUTED TO | | | | | | | |
| + | | 47.1 | 5348. | 3.33 | 689. | 174. | 167. | 3.21 |
| | HYDROGRAPH AT | | | | | | | |
| + | | SUB47 | 441. | 3.33 | 60. | 15. | 15. | .38 |
| | 2 COMBINED AT | | | | | | | |
| + | | 47.2 | 5766. | 3.33 | 748. | 189. | 182. | 3.58 |
| | 3 COMBINED AT | | | | | | | |
| + | | CP48 | 10796. | 3.33 | 1510. | 383. | 369. | 7.46 |
| | ROUTED TO | | | | | | | |

| | | | | | | | |
|---|---|---|---|---|---|---|---|
| + | 48.1 | 10576. | 3.33 | 1510. | 383. | 369. | 7.46 |
| HYDROGRAPH AT | | | | | | | |
| . | SUB48R | 71. | 3.33 | 8. | 2. | 2. | .06 |
| HYDROGRAPH AT | | | | | | | |
| - | SUB50 | 902. | 3.17 | 72. | 18. | 17. | .36 |
| ROUTED TO | | | | | | | |
| + | 48.2 | 810. | 3.25 | 72. | 18. | 17. | .36 |
| 3 COMBINED AT | | | | | | | |
| + | CP51 | 11080. | 3.33 | 1584. | 401. | 387. | 7.88 |
| ROUTED TO | | | | | | | |
| + | 2006 | 10706. | 3.42 | 1583. | 401. | 387. | 7.88 |
| HYDROGRAPH AT | | | | | | | |
| + | 2005 | 174. | 3.25 | 17. | 4. | 4. | .14 |
| 2 COMBINED AT | | | | | | | |
| + | 2007 | 10785. | 3.42 | 1598. | 405. | 390. | 8.02 |
| HYDROGRAPH AT | | | | | | | |
| + | 2000 | 1951. | 3.17 | 158. | 40. | 38. | .80 |
| ROUTED TO | | | | | | | |
| + | 2008 | 1798. | 3.25 | 157. | 40. | 38. | .80 |
| 2 COMBINED AT | | | | | | | |
| + | 2009 | 11615. | 3.42 | 1744. | 442. | 426. | 8.82 |
| ROUTED TO | | | | | | | |
| - | 2011 | 11465. | 3.42 | 1744. | 442. | 426. | 8.82 |
| HYDROGRAPH AT | | | | | | | |
| - | 2010 | 171. | 3.25 | 18. | 4. | 4. | .09 |
| 2 COMBINED AT | | | | | | | |
| - | 2012 | 11562. | 3.42 | 1760. | 446. | 429. | 8.91 |
| ROUTED TO | | | | | | | |
| + | 2016 | 10777. | 3.50 | 1758. | 446. | 429. | 8.91 |
| HYDROGRAPH AT | | | | | | | |
| + | 2015A | 590. | 3.33 | 68. | 17. | 17. | .36 |
| HYDROGRAPH AT | | | | | | | |
| + | 2015B | 29. | 3.33 | 4. | 1. | 1. | .04 |
| HYDROGRAPH AT | | | | | | | |
| + | 2020 | 309. | 3.08 | 23. | 6. | 5. | .11 |
| ROUTED TO | | | | | | | |
| + | 2017 | 303. | 3.17 | 23. | 6. | 5. | .11 |
| 4 COMBINED AT | | | | | | | |
| + | 2018 | 11190. | 3.50 | 1844. | 468. | 451. | 9.42 |
| ROUTED TO | | | | | | | |

| | | | | | | | |
|---|---|---|---|---|---|---|---|
| + | 2030A1 | 10831. | 3.58 | 1842. | 468. | 451. | 9.42 |
| HYDROGRAPH AT | | | | | | | |
| + | 2030B | 24. | 3.17 | 2. | 0. | 0. | .01 |
| ROUTED TO | | | | | | | |
| + | 2030A2 | 17. | 3.33 | 2. | 0. | 0. | .01 |
| HYDROGRAPH AT | | | | | | | |
| + | 2030C | 97. | 3.17 | 9. | 2. | 2. | .06 |
| ROUTED TO | | | | | | | |
| + | 2030A3 | 71. | 3.33 | 9. | 2. | 2. | .06 |
| HYDROGRAPH AT | | | | | | | |
| + | 2030A | 260. | 3.17 | 27. | 7. | 7. | .17 |
| 4 COMBINED AT | | | | | | | |
| + | 2030A4 | 10928. | 3.58 | 1873. | 476. | 459. | 9.67 |
| HYDROGRAPH AT | | | | | | | |
| + | 2040 | 1929. | 3.25 | 177. | 45. | 43. | .93 |
| HYDROGRAPH AT | | | | | | | |
| + | 2050 | 1741. | 3.25 | 161. | 40. | 39. | .86 |
| 2 COMBINED AT | | | | | | | |
| + | 2051 | 3626. | 3.25 | 336. | 84. | 81. | 1.79 |
| ROUTED TO | | | | | | | |
| + | 2061 | 3309. | 3.25 | 336. | 84. | 81. | 1.79 |
| HYDROGRAPH AT | | | | | | | |
| + | 2060 | 298. | 3.25 | 28. | 7. | 7. | .15 |
| 2 COMBINED AT | | | | | | | |
| + | 2062 | 3594. | 3.25 | 362. | 91. | 88. | 1.94 |
| HYDROGRAPH AT | | | | | | | |
| | 2070 | 3801. | 3.17 | 290. | 73. | 70. | 1.46 |
| DIVERSION TO | | | | | | | |
| + | 2072 | 2534. | 3.17 | 194. | 49. | 47. | 1.46 |
| HYDROGRAPH AT | | | | | | | |
| + | 2071 | 1267. | 3.17 | 97. | 24. | 23. | 1.46 |
| ROUTED TO | | | | | | | |
| + | 2066 | 982. | 3.33 | 97. | 24. | 23. | 1.46 |
| HYDROGRAPH AT | | | | | | | |
| + | 2065 | 241. | 3.33 | 31. | 8. | 8. | .17 |
| HYDROGRAPH AT | | | | | | | |
| + | 2072 | 2534. | 3.17 | 194. | 49. | 47. | 1.46 |
| ROUTED TO | | | | | | | |
| | 2131 | 1958. | 3.25 | 194. | 49. | 47. | 1.46 |
| HYDROGRAPH AT | | | | | | | |

| | | | | | | | |
|---|---|---|---|---|---|---|---|
| | 2130 | 598. | 3.25 | 59. | 15. | 14. | .30 |
| 2 COMBINED AT | | | | | | | |
| | 2132 | 2556. | 3.25 | 253. | 63. | 61. | 1.28 |
| DIVERSION TO | | | | | | | |
| | 2134 | 1939. | 3.25 | 218. | 55. | 53. | 1.28 |
| HYDROGRAPH AT | | | | | | | |
| | 2133 | 617. | 3.25 | 34. | 9. | 8. | 1.28 |
| ROUTED TO | | | | | | | |
| | 2067 | 537. | 3.33 | 34. | 9. | 8. | 1.28 |
| 4 COMBINED AT | | | | | | | |
| | 2068 | 5032. | 3.33 | 521. | 131. | 127. | 2.85 |
| ROUTED TO | | | | | | | |
| + | 2080B1 | 5000. | 3.33 | 523. | 132. | 127. | 2.85 |
| HYDROGRAPH AT | | | | | | | |
| + | 2080B | 96. | 3.17 | 8. | 2. | 2. | .05 |
| 2 COMBINED AT | | | | | | | |
| + | 2080B2 | 5039. | 3.33 | 530. | 134. | 129. | 2.90 |
| ROUTED TO | | | | | | | |
| + | 2080A1 | 4543. | 3.42 | 530. | 134. | 129. | 2.90 |
| HYDROGRAPH AT | | | | | | | |
| | 2080A | 163. | 3.17 | 16. | 4. | 4. | .09 |
| 3 COMBINED AT | | | | | | | |
| | 2081 | 13652. | 3.58 | 2371. | 603. | 581. | 12.65 |
| ROUTED TO | | | | | | | |
| | 2090B1 | 13173. | 3.67 | 2369. | 603. | 581. | 12.65 |
| HYDROGRAPH AT | | | | | | | |
| | 2090B | 145. | 3.25 | 15. | 4. | 4. | .09 |
| 2 COMBINED AT | | | | | | | |
| | 2090B2 | 13205. | 3.67 | 2382. | 606. | 584. | 12.74 |
| ROUTED TO | | | | | | | |
| + | 2090A1 | 13159. | 3.67 | 2384. | 607. | 585. | 12.74 |
| HYDROGRAPH AT | | | | | | | |
| + | 2090A | 103. | 3.33 | 14. | 4. | 3. | .10 |
| 2 COMBINED AT | | | | | | | |
| + | 2090A2 | 13197. | 3.67 | 2395. | 610. | 588. | 12.84 |
| ROUTED TO | | | | | | | |
| + | 2110A1 | 12741. | 3.75 | 2393. | 610. | 588. | 12.84 |
| HYDROGRAPH AT | | | | | | | |
| | 2110A | 108. | 3.25 | 11. | 3. | 3. | .06 |
| 2 COMBINED AT | | | | | | | |

| | | | | | | | |
|---|---|---|---|---|---|---|---|
| | 2110A2 | 12761. | 3.75 | 2402. | 613. | 590. | 12.91 |
| ROUTED TO | | | | | | | |
| + | 2160D1 | 12638. | 3.75 | 2401. | 613. | 590. | 12.91 |
| HYDROGRAPH AT | | | | | | | |
| + | 2160D | 12. | 5.67 | 6. | 2. | 2. | .04 |
| 2 COMBINED AT | | | | | | | |
| + | 2160D2 | 12638. | 3.75 | 2406. | 614. | 592. | 12.95 |
| HYDROGRAPH AT | | | | | | | |
| + | 2134 | 1939. | 3.25 | 218. | 55. | 53. | 1.28 |
| ROUTED TO | | | | | | | |
| + | 2136 | 1834. | 3.33 | 218. | 55. | 53. | 1.28 |
| HYDROGRAPH AT | | | | | | | |
| + | 2135 | 230. | 3.17 | 21. | 5. | 5. | .11 |
| 2 COMBINED AT | | | | | | | |
| + | 2137 | 1976. | 3.33 | 239. | 60. | 58. | 1.13 |
| ROUTED TO | | | | | | | |
| + | 2140B1 | 1949. | 3.33 | 239. | 60. | 58. | 1.13 |
| HYDROGRAPH AT | | | | | | | |
| + | 2140B | 180. | 3.17 | 15. | 4. | 4. | .08 |
| 2 COMBINED AT | | | | | | | |
| + | 2140B2 | 2027. | 3.33 | 254. | 64. | 62. | 1.21 |
| ROUTED TO | | | | | | | |
| + | 2140A1 | 1829. | 3.42 | 254. | 64. | 62. | 1.21 |
| HYDROGRAPH AT | | | | | | | |
| + | 2140A | 255. | 3.17 | 24. | 6. | 6. | .12 |
| HYDROGRAPH AT | | | | | | | |
| + | 2150 | 1388. | 3.25 | 133. | 33. | 32. | .69 |
| 3 COMBINED AT | | | | | | | |
| + | 2151 | 2859. | 3.33 | 408. | 103. | 99. | 2.02 |
| ROUTED TO | | | | | | | |
| + | 2160C1 | 2830. | 3.33 | 408. | 103. | 99. | 2.02 |
| HYDROGRAPH AT | | | | | | | |
| + | 2160C | 77. | 3.25 | 8. | 2. | 2. | .04 |
| HYDROGRAPH AT | | | | | | | |
| + | 2160B | 273. | 3.25 | 28. | 7. | 7. | .17 |
| 3 COMBINED AT | | | | | | | |
| + | 2160C2 | 3114. | 3.33 | 443. | 112. | 108. | 2.23 |
| ROUTED TO | | | | | | | |
| - | 2160A1 | 2985. | 3.42 | 443. | 112. | 108. | 2.23 |
| HYDROGRAPH AT | | | | | | | |

| | | | | | | | |
|---|---|---|---|---|---|---|---|
| | 2160A | 906. | 3.33 | 114. | 29. | 28. | .59 |
| 2 COMBINED AT | | | | | | | |
| | 2160A2 | 3697. | 3.42 | 554. | 141. | 135. | 2.81 |
| 2 COMBINED AT | | | | | | | |
| | 2160D3 | 14459. | 3.75 | 2910. | 744. | 717. | 15.76 |
| HYDROGRAPH AT | | | | | | | |
| | 2170B | 309. | 3.25 | 32. | 8. | 8. | .15 |
| ROUTED TO | | | | | | | |
| | 2170A1 | 274. | 3.25 | 32. | 8. | 8. | .15 |
| HYDROGRAPH AT | | | | | | | |
| + | 2170A | 224. | 3.17 | 22. | 6. | 5. | .12 |
| HYDROGRAPH AT | | | | | | | |
| + | 2210A | 3552. | 3.17 | 285. | 71. | 69. | 1.58 |
| ROUTED TO | | | | | | | |
| + | 2210A1 | 2725. | 3.25 | 285. | 71. | 69. | 1.58 |
| ROUTED TO | | | | | | | |
| + | 2210B1 | 2681. | 3.33 | 286. | 72. | 69. | 1.58 |
| HYDROGRAPH AT | | | | | | | |
| | 2210B | 247. | 3.25 | 27. | 7. | 6. | .19 |
| 2 COMBINED AT | | | | | | | |
| | 2210B2 | 2895. | 3.33 | 312. | 78. | 75. | 1.78 |
| HYDROGRAPH AT | | | | | | | |
| | 2200 | 482. | 3.25 | 46. | 12. | 11. | .25 |
| 2 COMBINED AT | | | | | | | |
| | 2210B3 | 3239. | 3.33 | 357. | 90. | 86. | 2.03 |
| HYDROGRAPH AT | | | | | | | |
| | 2180 | 2313. | 3.25 | 212. | 53. | 51. | 1.00 |
| ROUTED TO | | | | | | | |
| + | 2191 | 1922. | 3.42 | 212. | 53. | 51. | 1.00 |
| HYDROGRAPH AT | | | | | | | |
| + | 2190 | 261. | 3.17 | 23. | 6. | 6. | .12 |
| 2 COMBINED AT | | | | | | | |
| + | 2201 | 2072. | 3.33 | 234. | 59. | 57. | 1.13 |
| 2 COMBINED AT | | | | | | | |
| + | 2204 | 5246. | 3.33 | 587. | 148. | 142. | 3.16 |
| ROUTED TO | | | | | | | |
| | 2170A2 | 4922. | 3.42 | 587. | 148. | 142. | 3.16 |
| 3 COMBINED AT | | | | | | | |
| | 2170A3 | 5232. | 3.42 | 639. | 161. | 155. | 3.43 |
| ROUTED TO | | | | | | | |

| | | | | | | | |
|---|---|---|---|---|---|---|---|
| + | | 2160A3 | 4877. | 3.50 | 639. | 161. | 155. | 3.43 |
| | 2 COMBINED AT | | | | | | |
| + | | 2160A4 | 16680. | 3.75 | 3488. | 890. | 857. | 19.19 |
| | ROUTED TO | | | | | | |
| + | | 2160E1 | 16628. | 3.75 | 3487. | 890. | 857. | 19.19 |
| | HYDROGRAPH AT | | | | | | |
| + | | 2160E | 40. | 3.33 | 5. | 1. | 1. | .03 |
| | 2 COMBINED AT | | | | | | |
| + | | 2160E2 | 16639. | 3.75 | 3491. | 891. | 859. | 19.22 |
| | HYDROGRAPH AT | | | | | | |
| + | | 2220C | 55. | 3.17 | 5. | 1. | 1. | .03 |
| | ROUTED TO | | | | | | |
| + | | 2170C1 | 36. | 3.42 | 5. | 1. | 1. | .03 |
| | HYDROGRAPH AT | | | | | | |
| + | | 2170C | 103. | 3.25 | 11. | 3. | 3. | .06 |
| | 2 COMBINED AT | | | | | | |
| + | | 2170C2 | 123. | 3.25 | 15. | 4. | 4. | .09 |
| | ROUTED TO | | | | | | |
| + | | 2170D1 | 112. | 3.42 | 15. | 4. | 4. | .09 |
| | HYDROGRAPH AT | | | | | | |
| + | | 2170D | 62. | 3.25 | 6. | 2. | 2. | .04 |
| | 2 COMBINED AT | | | | | | |
| + | | 2170D2 | 154. | 3.33 | 22. | 6. | 5. | .12 |
| | 2 COMBINED AT | | | | | | |
| + | | 2160E3 | 16700. | 3.75 | 3510. | 896. | 863. | 19.34 |
| | ROUTED TO | | | | | | |
| + | | 2170E1 | 16677. | 3.75 | 3510. | 896. | 863. | 19.34 |
| | HYDROGRAPH AT | | | | | | |
| + | | 2170E | 42. | 3.25 | 4. | 1. | 1. | .02 |
| | 2 COMBINED AT | | | | | | |
| + | | 2170E2 | 16684. | 3.75 | 3513. | 897. | 864. | 19.37 |
| | ROUTED TO | | | | | | |
| + | | 2160F1 | 16592. | 3.75 | 3513. | 897. | 864. | 19.37 |
| | HYDROGRAPH AT | | | | | | |
| + | | 2160F | 17. | 3.25 | 2. | 0. | 0. | .01 |
| | 2 COMBINED AT | | | | | | |
| + | | 2160F2 | 16595. | 3.75 | 3515. | 898. | 865. | 19.38 |