SCOTTSDALE DESERT GREENBELT

Reata Pass/Beardsley Washes

Supplemental CLOMR Report

DRAFT

The Desert Greenbelt

Property of
Flood Control District of MC Library
Please Return to
2801 W. Durango
Phoenix, AZ 85009

April 1996

Prepared for:
The City of Scottsdale &
The Flood Control District
of Maricopa County

Greiner, Inc.
7878 North 16th Street, Suite 200
Phoenix, Arizona 85020

Table of Contents

EXECUTIVE SUMMARY v

Project Discussion xv

1.0 Introduction 1
- 1.1 Purpose 1
- 1.2 System Description 1
- 1.3 Geomorphic Discussion 4
  - 1.3.1 Pre-Project Conditions 4
  - 1.3.2 Post-Project Conditions 5
- 1.4 Reaches 6
- 1.5 Construction Phasing 6
- 1.6 Design Revisions 7

2.0 Hydrologic and Hydraulic Analysis Methodology 22
- 2.1 HEC-1 Hydrologic Modeling 22
- 2.2 HEC-2 / HEC-RAS Hydraulic Modeling 22
  - 2.2.1 Revisions to Models 22
  - 2.2.2 Design Flows 26
  - 2.2.3 Upstream Reaches 26
  - 2.2.4 Modeling 26
  - 2.2.5 Existing Versus Future Conditions 28
- 2.3 HEC-6 Sedimentation Calibration and Modeling 28
  - 2.3.1 Introduction and Modeling Revisions 28
  - 2.3.2 Hydrology 29
  - 2.3.3 Geometric Setup 33
  - 2.3.4 Bed Gradations 33
  - 2.3.5 Calibration Model Development 33
  - 2.3.6 Iterative Process to Finalize Inflow Sediment for Simulation 35
  - 2.3.7 Verification and Model Assessment 36

3.0 Applicability of Yang's Relationship and Supercritical Flow Analysis 38
- 3.1 Literature and Correspondence 38
- 3.2 Result Comparisons for Yang's Streampower Equation 38
- 3.3 Theoretical Upper Limit of Sediment Concentration 39

4.0 Sensitivity Analysis of the HEC-6 Model 41
- 4.1 Inflow Sediment Loading Table 41
- 4.2 Cross-Section Spacing 43

5.0 Extreme Flooding Analysis 44
- 5.1 Consecutive Predominant Storm Events 44
- 5.2 Probable Cumulative Storm Events 44

5.3 Low Roughness / Non-Vegetation Model 45
5.4 500-Year Storm Frequency 45
5.5 Stable, Equilibrium Slope Analysis 46

6.0 Application to Design 48
6.1 Water Surface Elevation — Freeboard 48
6.2 Scour Depth — Toe-Down Calculations 50
6.3 Containment Structures and Materials 50

Table of Contents i

List of Figures v

List of Tables vi

Appendix A — Hydraulic and Structural Design Criteria

Appendix B — Iterative Calibration Model Spreadsheet

Appendix C — Literature References

Appendix D — Calculations

Appendix E — Supplementary Plan Sheets

Attachments:
60-Percent Phase I Plans
HEC-RAS — Disk Copy
HEC-6 (Version 4.1, August 1993) — Disk Copy

List of Figures

Figure No.	Title	
1.1	Floodplain Map	2
1.2	Construction Phasing	3
1.3	Reach Descriptions	8
1.4	Typical Cross-Sections	9
2.1	Drainage Area Map — Overall View	24
2.2	Design Flow Rates	26
2.3	Real-Time Hydrographs	30
2.4	Real-Time, Phase Adjusted Hydrographs	31
3.1	Hand Calculation Comparisons for Reata Pass Wash	39
4.1	Sediment Concentrations for Various Grain Sizes	41
6.1	Scour / Water Surface Elevation Design Parameters	48

List of Tables

Table No.	Title	
1.1	Hydraulic Characteristics	21
2.1	100-Year Peak Flows	23
2.2	Best Fit Statistical Analysis for Reata Pass Wash	36
4.1	Weighted Average Sediment Concentrations for Reata Pass Wash	40

EXECUTIVE SUMMARY

In a letter dated July 28, 1995, delivered to the Federal Emergency Management Agency (FEMA), the City of Scottsdale requested a Conditional Letter of Map Revision (CLOMR). This request for a CLOMR was based on data provided for proposed flood control measures along Reata Pass Wash (Basins 2a and 2b), South Beardsley Wash (Basin 1a), and North Beardsley Wash (Basin 1b), which are all a part of the Desert Greenbelt Project. In a response letter dated October 6, 1995, FEMA acknowledged that all required data had been submitted for review and provided comments on the submitted HEC-2 and HEC-6 models and the design of the proposed flood control measures. Upon receipt of this FEMA response letter, the City of Scottsdale requested that Greiner, Inc. develop an outline of proposed tasks to address these comments. This outline was submitted to the City of Scottsdale and forwarded to FEMA along with a letter dated November 7, 1995. In a second response letter dated December 4, 1995, FEMA provided comments and offered suggestions regarding this outline. In this letter, FEMA recommended that two main questions be investigated prior to performing any of the other tasks identified on the outline.

As a result of this correspondence and several telephone conversations relative to said correspondence, Greiner was directed by the City of Scottsdale to prepare a Supplemental CLOMR Report (referred to hereafter as the "report") that would address all of FEMA's questions and comments, starting with the two main questions identified in the second response letter. The following is a list of these questions and comments, a brief description of the action undertaken to answer or address them, the results thereof, and direction on where to find detailed information for each in the body of the report.

QUESTION #1

In an environment such as a wash on an alluvial fan, will supercritical flow be maintained or will the energy in excess of minimum energy (critical flow) be used to erode the bed and banks and transport the eroded material? A simplified example was suggested to approximate an upper limit on the material being transported.

Response

The Desert Greenbelt system will be located on the alluvial but will be a contained riverine system with variable flow regimes. Water surface elevation increases are less than the provided freeboard for the "approximate upper limit."

Action Taken

The simplified example suggested by FEMA was investigated. It considered that the energy in excess of minimum energy was used to transport sediment as a theoretical "worst case" scenario.

Results and Conclusions

HEC-RAS and HEC-6 models show that most of the system has Froude numbers greater than one. Freeboard in all cases is conservatively based from at least critical depth or from the subcritical depth where appropriate. Even for the theoretical upper limit of sediment transport capacity, the calculations show that the increases in water surface elevations (if all additional sediment is suspended) are less than the freeboard provided for the proposed improvements.

Report Discussion

Sections 3.3 and 6.1.

QUESTION #2

Does Yang's sediment transport equation yield reasonable results under conditions such as those that exist along the Reata Pass and Beardsley Washes (supercritical flow and large storm events)?

Response

Yes, Yang's equation does provide reasonable results for supercritical conditions; in fact, comparisons to the other available equations show Yang's to be the most accurate equation for supercritical flow.

Action Taken

Dr. Chih Ted Yang was contacted by telephone. Literature and laboratory data (referred to by Dr. Yang) that compares available relationships for use in HEC-6 was investigated. Hand calculations using Yang's relationship were performed and compared to the HEC-6 output using Yang's relationship. HEC-6 output results using Yang's relationship were compared to the HEC-6 output results using the Ackers-White relationship (second best equation in the calibration / verification procedure).

Results and Conclusions

Yang's relationship was shown to be the most accurate sediment transport relationship for supercritical flow and second most accurate for subcritical flow in an August 1991 published paper[1]. The results from the Greenbelt team's hand calculations using Yang's equation substantiate the results from the HEC-6 model using the same equation. Comparisons of the Yang's and Ackers-White models show a close similarity in the calculated scour, deposition and sediment loads. The HEC-6 model using Yang's relationship is the most suitable for the conditions that exist within the Reata Pass and Beardsley washes based on the above investigation and on statistical analyses developed for the project.

---

[1]Yang, C.T. and Schenggan, W., Journal of Hydraulic Engineering, "Comparisons of Selected Bed-Material Load Formulas," Vol. 117, No. 8, August 1991.

Report Discussion

Sections 2.3.7, 3.1, 3.2 and 5.3.

COMMENT #3

The HEC-6 models were not prepared on the most current version of the program (Version 4.1, August 1993).

Response

The models have now been run on the most current version.

Action Taken

Updated HEC-6 models were prepared on the most current version of the program (Version 4.1, August 1993).

Results and Conclusions

It was found that either (1) an X3 card with an encroachment on only one side or (2) overbank areas that convey much more flow than the channel would cause Version 4.1 to abort calculations. Version 4.0 is able to run models with these conditions. This is why the original CLOMR HEC-6 models prepared on Version 4.0 would not complete calculations on Version 4.1. To solve the problems associated with (1) above, encroachments were placed on each side for all X3 cards (if an encroachment was unnecessary, it was placed at the appropriate end GR station). In response to (2) above, in cross-sections which contain several braids, the channel was redefined to include the extent of braiding, rather than only the main braid.

A copy of the final HEC-6 models on Version 4.1 are included with the report. The main Reata model was revised to reflect the latest cross-section geometry developed for the 60-Percent Phase I Construction Plans. A copy of these 60-Percent Plans is submitted along with the report. South Beardsley retains all cross-sections from the CLOMR model but has been extended further upstream.

Report Discussion

Section 2.3.1.

COMMENT #4

The discharges representing the base flood hydrographs for the HEC-6 model of South Beardsley Wash are too small.

Response

Adjustments were made to the model to increase these discharges.

Action Taken

Due to limitations of the HEC-6 hydrology input parameters (does not acknowledge attenuation between control points), the HEC-1 hydrographs used for HEC-6 must be manipulated to ensure that flows are valid throughout the model. In the CLOMR the peak flow at South Beardsley Wash was decreased in order to retain the proper flow in the main Reata Wash. The time phase adjustment on the HEC-1 output hydrographs were reworked for application in the HEC-6 model such that flows are now more accurate throughout the system.

Results and Conclusions

The discharges representing the base flood hydrographs for the HEC-6 model of South Beardsley Wash are now revised. The peak time step discharge used for the South Beardsley model and for the main Reata model is now 4,477 cfs as opposed to 2,110 cfs. The new HEC-6 flows are within 5 percent of those of the HEC-1 model throughout the system.

Report Discussion

Section 2.3.2.

COMMENT #5

(1) Identify the location of the upstream reaches and (2) provide details of the procedure used to develop the inflowing sediment loads (sediment inflow rating curves) at the upstream end of the washes. (3) The inflowing volume of sediment seems low.

Response

(1) Added sheets showing location.
(2) Procedure outline is provided.
(3) Inflowing sediment volume is representative and consistent with field soil sample gradations.

Action Taken

(1) Sheets showing the cross-section locations within the upstream reaches are provided in the Appendix of the report.

(2) Since measured sediment flow data are unavailable for any of the washes, balanced models were developed for each sediment transport relationship and used to establish the initial sediment inflow loading table. The balanced models were developed for well-defined, hydraulically stable upstream reaches of the Reata Pass / Beardsley Wash. Using an iterative process, the sediment inflow into the stable reach was balanced with the sediment outflow from the reach. An equilibrated sediment inflow table was considered the best representation of existing field conditions for the sediment transport relationship being considered.

(3) An overloaded HEC-6 model, using sediment inflow loads 900-percent greater than the balanced loads, was developed to identify the maximum carrying potential for the Reata Pass Wash. The grain-size distribution of the total sediment flow from the overloaded model was

analyzed to determine the sediment composition that was required to achieve this maximum sediment carrying potential of the wash.

Results and Conclusions

(2) The equilibrated, balanced models consistently yielded volumetric sediment bed-load concentrations on the order of 1 to 2 percent.

(3) The results from the overloaded model indicate the maximum potential volumetric sediment carrying capacity for the Reata Pass Wash is approximately 10 percent. However, this maximum potential carrying capacity will never be achieved due to the limited availability of fine sediment material. The results of the geotechnical investigations signify that this fine sediment is not available in the upper regions of the watershed and, therefore, the inflowing volume of sediment is lower (1 to 2 percent) than values anticipated by the reviewers.

Report Discussion

Sections 2.2.3, 2.3 and 4.1.
Appendix Sheets CRTA12, CRTA13, CNB1, CNB2 and CSB7.

COMMENT #6

(1) The submitted information did not demonstrate that all of the flow from the Beardsley washes (Basin 1a) will be collected into the upstream ends of the measures proposed for South Beardsley wash. (2) Similarly, it is not clear that southern bank elevations in the vicinity of North Beardsley Wash stream Station 27+00 are higher than the base flood water surface profile for this stream.

Response

(1) A new levee is proposed to contain the flow in South Beardsley Wash.
(2) Levee on North Beardsley extended to cover this area.

Action Taken

(1) A re-investigation of the upstream hydrology of South Beardsley Wash confirmed that some floodwaters may break out to the north.
(2) The topography and proposed design in the vicinity of Station 27+00 was investigated on North Beardsley.

Results and Conclusions

(1) A new levee is proposed to contain the breakout so all flow remains in South Beardsley Wash.

(2) On the CLOMR / 10-Percent Plans, a gap in the south bank levee is shown between Station 25+40 and Station 27+70. The gap was shown too large and should have been depicted only between Station 25+40 and Station 26+70. Continuous slope protection will be provided along the entire south bank of the North Beardsley Wash improvements and levees will be constructed in areas where the existing top of bank grade is not high enough to provide baseflood containment.

Report Discussion

Section 2.1, 2.2.1 and 2.2.3.
Appendix Additional 10-Percent Plan Sheets SB7 and SB8.
Appendix Sheets CSB7 and CNB1.

COMMENT #7

Demonstrate that at certain critical locations, sediment deposition will not jeopardize the floodwater conveyance. In particular, at the Apex levee (Station 260+00) show that changes in flow direction (velocity) do not create large sediment deposition and, at Pinnacle Peak Road, show that the culverts do not fill with sediment.

Response

The change in flow direction at the apex is only 35° over a long 1,000-foot reach and follows one of the existing flow paths. The design of Pinnacle Peak Road culverts has been changed by others.

Action Taken

The 60-percent plans and the revised HEC-6 model results were reviewed for potential deposition locations. New design at Pinnacle Peak was incorporated into the HEC-2 and HEC-6 models.

Results and Conclusions

At locations of changes in flow direction, the main conveyance portion of the channel has been aligned by structural measures for a smooth transition of flow. Secondary flow areas in these locations may have sediment deposition, but this will not adversely affect the overall channel. Specifically at the apex, the flow is conveyed to the south through about a 35-degree angle over 1,000 feet of channel length. The proposed alignment follows the route of an existing braid wherein a significant portion of the total stormwater flow now travels under current conditions. In addition, a cut low flow channel begins here which will direct the flow along this route.

A new four-barrel (4-28'x10'x40') concrete structure , which was designed by others for the City, is under construction at Pinnacle Peak Road and is included in the new HEC-2 and HEC-6 models. The original CLOMR model used a preliminary three-barrel structure. Deposition does not occur at the new Pinnacle Peak Road bridge in the HEC-6 model. HEC-6 results show that although the slope decreases downstream from the drop structure at Pinnacle Peak Road, the narrower, less vegetated channel will maintain sediment conveyance with adequate velocity. The HEC-RAS model indicates a decrease in velocity immediately upstream from the culverts which may cause some sediment deposition; however, flow will be structurally contained within the floodway even if this deposition occurs.

Report Discussion

Sections 5.1, 5.2 and 6.1.

COMMENT #8

(1) Provide information on burial depths (toe-down depths) for the proposed channel slope protection, levees, and floodwalls along with a (2) description of the calculations and procedures used to determine these depths.

Response

(1) Tables are included showing toe-down depths.
(2) Procedures used are described and calculations are included.

Action Taken

The design scour elevation is equal to the total scour depth (HEC-6 general / long-term scour depth plus all local scours depths multiplied by a safety factor of 1.3) subtracted from the channel thalweg. The toe-down elevation of structures (levees, floodwalls, and channel side slope linings) is set at least 3 feet below the calculated design scour elevation mentioned above.

Results and Conclusions

The method is described in detail and the results are tabulated.

Report Discussion

Sections 6.2, Figure 6.1 and Appendix Table A.1.

In addition to the comments and questions raised by FEMA, the Flood Control District of Maricopa County (FCDMC) has also requested that certain items be investigated to answer some of their concerns and questions. In a letter dated December 12, 1995 delivered to the City of Scottsdale, FCDMC provided a list of information that was needed in order to further evaluate the design. Part of this request included "Responses to all FEM. questions dated October 6 and December 4, 1995." Since these questions have already been addressed in the first part of this executive summary, they will not be repeated here. The following is a tabulation of FCDMC's list items that were not covered in the FEM. portion of this executive summary.

COMMENT #1

There is a need for more bed material sampling for the Reata Pass Wash to provide a better representation of bed material gradation across the proposed channel and should be used in the HEC-6 models and the scour analysis.

Response

Performed additional sampling.

Action Taken

AGRA Earth & Environmental, Inc., performed nine additional test pit excavations and laboratory analyses. These nine test pit excavations were located at the same stations as previous test pits, but in the overbank areas within the cross-section. Wherever possible, the test pits were also located at the base of the proposed soil cement levees (four of nine).

Results and Conclusions

The additional test pit gradations were similar to the previous samples and were used to determine the general soil characteristics for the wash. The refinements to the soil gradation input for the HEC-6 modeling resulting from this additional sampling did not significantly change the results.

Report Discussion

Sections 2.3.4 through Section 2.3.7.

COMMENT #2

Explain any justifications for violation of FCDMC limits on Froude numbers.

Response

Have provided freeboard that considers possible jumps from supercritical to subcritical flow as well as decreases from critical to subcritical flow.

Action Taken

Developed a table showing freeboard design parameters and Froude numbers.

Results and Conclusions

The freeboard is in excess of one-quarter of the specific energy head.

Report Discussion

Sections 6.1, Appendix Table A.1.B.

COMMENT #3

Long term scour for Reata should not be compared to Upper Indian Bend Wash (UIBW). Calculate long term scour and low flow incisement, or provide examples with similar conditions.

Response

Long-term scour for Reata is not compared to UIBW. Have analyzed long-term scour.

Action Taken

Several long-term models of varying time spans and storm frequencies were analyzed using the HEC-6 program.

Results and Conclusions

The Upper Indian Bend Wash Report covers numerous washes in the watershed including Reata Pass Wash. The report was initially referred to for a low-flow incisement design depth. The low-flow incisement depth is 1.5 feet based on the recommendations of ADWR's "Design Manual for Engineering Analysis of Fluvial Systems." A long-term scour depth should consider maintenance intervals.

Report Discussion

Sections 6.2, Appendix Table A.1.A, and Appendix D.

COMMENT #4

The constant used for the ADWR anti-dune trough equation is incorrect. The consultant (Greiner) used 0.0135, but in the manual it is 0.027.

Response

The constant is not incorrect. The total dune height has a constant of 0.027, however, scour is only one-half of this, or 0.0135.

Report Discussion

Sections 6.2, Appendix Table A.1.A, and Appendix D.

COMMENT #5

Use actual abutment scour that was calculated, not the 5 feet assumed historical scour depth.

Response

All bridges do not require abutment scour as the containment structures are flush with the abutments. Historic scour is completely different and is a safety measure to increase toe-down depth where washes or major braids are cut-off by containment structures.

Report Discussion

Sections 6.2, Appendix Table A.1.A, and Appendix D.

COMMENT #6

Consultant should analyze and calculate scour due to channel contraction.

Response

Have added contraction scour analysis.

Report Discussion

Sections 6.2, Appendix Table A.1.A, and Appendix D.

COMMENT #7

The total toe-down depth shall be from the thalweg of the channel and should be the sum of all of the applicable scour components multiplied by a safety factor of 1.5.

Response

The toe-down depth is calculated from the channel thalweg. The design standard for scour safety factors is 1.3. This is within FCDMC guidelines. Three feet of toe-down is provided in addition to this factored scour depth.

Report Discussion

Sections 6.2, Appendix Table A.1.A, and Appendix D.

Project Discussion

Existing Conditions

The headwaters of the Reata Pass Wash originate in the McDowell Mountains located in northeast Scottsdale. The mountains are composed of Tertiary Cretaceous volcanic andesite, rhyolite and granite rock formations. The headwaters from the mountains are first conveyed through washes that are characterized by steep slopes and high flow velocities. During the formative process of the system, the flow within these washes was heavily laden with sediment consisting of alluvial sand, gravel and conglomerate material. The sediment-laden flow was transported downstream, through the steep washes, to the desert plain. Once reaching the downstream desert plain, the flow created extensive alluvial fans, dissecting fan terraces, insect fans and the alluvial-braided washes that promote flooding problems.

The Reata Pass Wash is a classical sedimentation problem. The flow emanating from the mountains, and conveyed within the steeply sloped washes, is characterized by a supercritical flow regime. As the flow is conveyed to the desert plain, the slope of the washes is gradually reduced and the velocity of the flow is also reduced. The upstream, high velocity flow has a greater capacity to transport sediment than the slower, downstream velocity. When the sediment transport rate originating upstream exceeds the sediment-carrying capacity downstream, the excess sediment will be deposited in the wash. The sediment deposit fills the wash and overflows the floodplain creating the fan formation. Because the natural system is constantly striving to achieve equilibrium, braids eventually form within the alluvial fan. The formation of the braids begins the equilibrium process of balancing both hydraulic flow rates and sediment flow rates.

The equilibrium process for the system described above is in constant flux. The conditions of this system, either in part or as a whole, may be characterized by one of four flow conditions. These flow conditions may be summarized as follows:

- ***Zone One*** — Supercritical flow in steep, mountainous areas capable of carrying abundant sediment in a confined wash;
- ***Zone Two*** — Critical flow at the apex of an alluvial fan where sediment deposition occurs creating widespread flows;
- ***Zone Three*** — Unstable flow in the braided wash area downstream from the fan where the flow regime fluctuates between critical, subcritical and supercritical depending on the topography; and
- ***Zone Four*** — Confined flow through the braided area as a result of the geomorphic process.

The Reata Pass Wash project area lies within Zones Two and Three.

Potential Solutions to the Flooding Problems

The objective of the Scottsdale Desert Greenbelt Project is to remove the project area from Zones Two and Three and alleviate potential flooding problems. This can be accomplished by three unique and different approaches, including: (1) extending a Zone One type condition throughout the project area; (2) converting the entire project area to a Zone Four condition; and (3) constructing long transitions to balance the sediment carrying capacity of the flow using gradual variations.

The first solution entails the construction of steeply sloped channels throughout the project area to maintain the sediment capacity of the flow from the headwaters to the downstream retention basin. Considerable maintenance is required for this solution to ensure adequate slopes and the flow regime are maintained to sustain the sediment carrying capacity of the flow. The maintenance will prevent the formation of Zones Two and Three which are responsible for the flooding problems through the project area.

The second solution requires the construction of a sedimentation basin at the upstream end of the project area. The sedimentation basin would be provided to regulate the natural processes described by Zones Two and Three. The basin would be used to trap the sediment in the flow from the headwaters. The clear water discharged from the basin would begin a scour process used to shape the downstream wash and complete the formation of a Zone Four flow condition.

The third solution requires the construction of long, gradually varied flow transitions. The solution will use naturally occurring, confined geographic locations as control areas to bridge the small-scale Zones Two and Three flow conditions. This solution will require regular maintenance to remove sediment deposition from the control areas that will occur within isolated pockets of the entire project area.

Design Parameters

In general, there were three levels used to develop the design parameters for the proposed improvements to the Reata Pass Wash. Level I consisted of a qualitative geomorphic analysis used to determine the geomorphic tendencies and trends of the proposed channel. This analysis was used to plan the proposed improvements. Level II consisted of a quantitative analysis using a fundamental engineering and geomorphic analysis. Level II analyses are appropriate for small, short channel sections where the cost of construction and the risk of uncertainty are not significant concerns. Stable, equilibrium slope design procedures are included as part of Level II analyses. Level III consisted of a quantitative analysis using mathematical models to simulate the defined hydrologic, hydraulic, and sedimentation characteristics and conditions for the project area. Level III analyses are appropriate where the cost of construction and the risks of uncertainty are significant factors in the overall evaluation of proposed improvements. The design parameters for the Reata Pass Wash proposed improvements were developed using a Level III analysis.

The design considerations used to provide safety and eliminate uncertainties pertaining to the future performance of the proposed improvements were centered around two issues. One issue was the ability of the proposed improvements to accommodate the flow conditions for the storm event of the design return frequency. The second issue was the ability of the proposed improvements to sustain structural integrity throughout the defined design life. These two considerations were addressed concurrently, and the design of the proposed improvements was

based on the most severe condition that resulted from the assessment of either issue. In addition to these two design considerations, the design heights for the proposed structural improvements was based on a freeboard applied to the water surface elevation of the design storm event, and the foundation depth of the proposed improvements was based on safety factors and additional embedment depths applied to the general and local scour estimates.

Design Recommendations

The Scottsdale Desert Greenbelt – Reata Pass / Beardsley Wash alignment was proposed to meet the geographic and geologic settings of the existing drainage system. The proposed alignment and improvement schemes were selected and adopted by the City of Scottsdale after many years of study and coordination with the citizens of the city through public meetings. The final improvement schemes were approved by the city council to maintain the environment and natural settings of the existing area to the highest possible extent. The proposed alignment will require the complete confinement of flow at the current apex where the flow under existing conditions is split. The concentrated flow will be conveyed through an existing overflow area that was once the historical channel for the flow. The historical channel had been altered because of the naturally occurring equilibrium flux previously described. The flow will follow the proposed alignment through existing, confined washes and existing, unconfined watercourses. The unconfined watercourses will be connected using floodwalls and levees to provide containment at locations lacking natural confinement. These naturally occurring confined washes and unconfined drainage areas currently convey about 7,000 cfs due to the existing conditions. The flow capacity through these areas, as a result of the proposed improvements associated with the Scottsdale Desert Greenbelt project, will be increase to approximately 15,000 cfs. However, the hydraulic characteristics of the existing drainage system, such as the flow regimes and the flow velocities, will not be substantially impacted because of the proposed improvements and the resulting increased flowrates.

The third solution described above was selected for the Reata Pass / Beardsley Wash system because it best met the demands to alleviate the flooding problems within the drainage system while maintaining the environment and natural conditions of the wash. The proposed improvements incorporate the naturally occurring existing washes within the system as much as possible. Floodwalls and levees have been proposed to supplement the natural confinement of the system and to ensure the integrity of the proposed alignment is maintained. One area within the project area, from the closure of the existing apex to Deer Valley Road, deviates significantly from the naturally existing conditions. This area will consist of a steeply sloped, channelized section with non-erodible banks. The bed of this channelized section was initially proposed to be non-erodible, but considering the susceptibility for this section to scour, it may be more cost advantageous to provide a non-erodible bed.

1.0 Introduction

1.1 Purpose

The purpose of this report is to provide technical background for the Scottsdale Desert Greenbelt — Reata Pass / Beardsley Wash System. The report answers unresolved issues and questions raised by the Federal Emergency Management Agency (FEMA). The additional analysis discussed in this report was performed to verify the original methodologies and assumptions of the hydraulic and sedimentation modeling. Information presented herein also seeks to provide a clear understanding of the characteristics of the entire system, using a reach-by-reach basis, from the initial collection of inlet floodwaters near Pinnacle Peak Road to the outletting of flow into the Bureau of Reclamation (USBOR) Reach 11 Dike 4 Retention Basin at Westworld. This report also updates and documents design and analysis changes made since the original CLOMR submittal.

Improvements for the project will be designed and constructed in phases which are also presented in the report. The assumptions, approximations and methodologies used in the hydraulic (HEC-2) and sedimentation (HEC-6) analyses are described. A detailed discussion on the sediment transport equations, supercritical flow and a HEC-6 sensitivity analysis is presented for a thorough understanding of the effects and impacts of various input parameters on the sediment transport model. Long-term and extreme flooding events were modeled to examine the limits of the design storm parameters and address critical areas within the project. The application of the results from this work, used to design the flood containment structures of this project, is explained.

1.2 System Description

The northern portion of the McDowell Mountains form the headwaters of the Reata Pass Wash as seen in Figures 1.1 and 1.2. The confluence of several washes of varying size, is located about one-third mile upstream from Pinnacle Peak Road. This forms the main Reata Pass Wash channel. Just south of Pinnacle Peak Road, a short stretch of wash with well-defined banks splits into multiple braids and flows in southern and southwestern directions. This split is the Reata Pass Wash alluvial fan Apex. The Greenbelt containment (proposed roller compacted concrete levee and concrete floodwall) will cutoff flow from the apex in the southwestern direction and direct all flow to the south. An excavated channel, with concrete side slopes, will convey the flow from the apex to a naturally incised wash located along the western toe of the mountain. This incised wash crosses the Deer Valley Road Alignment. Containment, such as concrete floodwalls and soil cement levees, will be necessary at certain locations along the western bank in this portion. The Deer Valley Road Alignment marks the northern border of the proposed DC Ranch development.

Once departing from the toe of the mountain, the Reata Pass Wash (referred to hereafter as Reata) flows through a one-mile stretch of natural containment before levees are introduced on each side of the wash. The North Beardsley Wash flows from the east into this one-mile stretch of Reata. The downstream portion of North Beardsley will be an excavated channel located so it will merge with Reata, just upstream of the future Thompson Peak Parkway Bridge. The ultimate alignment for the Thompson Peak Parkway Bridge has not been determined. This alignment will be established in the future by the DC Ranch Development in conjunction with the City of Scottsdale.

FLOOD CONTROL DISTRICT of Maricopa County

Interoffice Memorandum

SUBJECT: **City of Scottsdale Greenbelt Project, Reata Pass/Beardsley Wash HEC-6 Report by The Greiner Team-**

TO: John Rodrigues

VIA: Raju Shah FROM: KA DATE: 6/12/96

FILE: Reata3

After reviewing the above submittal, the following are my observations that need to be addressed. Generally, the report lacks enough information on how the model was developed. More details are required on the methods used to develop the input data and how the results were interpreted. This is necessary in order to help assess a confidence level for the analyses which would be useful in determining the safety factor for the design parameters. The following are the specifics on what is expected.

1) The calibration and verification procedures are not clearly documented. Calibration of the channels to given sediment transport functions requires the use of observed historical channel changes. The model or function that best reproduces the observed historical bed changes is taken as the best methodology. If historical records are not available for use, it is not possible to calibrate and verify the model. Results from such a model cannot be taken as flawless and extensive sensitivity analyses should be performed. Other field surveys and physical features of the riverine environment should be used to support the final design parameters.

2) It was stated that the calibration model was used to determine the inflowing sediment distribution. It is not clear how this was done, given the fact that there is an infinite number of sediment distributions for a given total tons per day of sediment load. A more direct approach would be to generate the inflowing sediment using iterative procedures found in the literature.

3) It is not clear how the calibrated model was used to predict the bed material gradation. The calibrated model is also an HEC-6 model, hence bed material gradation is an input of the model (PF card). It is therefore not an output of HEC-6 which could be predicted. Furthermore, the 2 year 6 hour storm was used as a basis for the calibration while the discharge of interest is the 100 year event. How was it determined that at the 2 year 6 hour discharge, there will be negligible channel bed change for the best sediment transport model. Each sediment transport function may yield no scour or deposition at different flood frequencies.

4) The South Beardsley Wash tributary was modeled as a local inflow. Local inflow source does not consider the geometry of the source and this major tributary has to be modeled completely

as a tributary. This is the only way sediment routing through this location would be done realistically. This was done because the full model would contain more cross sections than that limited by HEC-6. Using longer reaches would make it possible to put together a complete model.

5) The volume of inflow sediment used for the model appears to be too low. This observation was also made by FEMA. In the absence of historical information, several methods should be used to establish the possible levels of inflowing sediment. Typical methods include basin wide sediment yield analysis, or using actual sediment volumes measured for the same types of flow regimes.

6) Reach lengths should be increased so that computational time intervals increased to realistic values (hydrographs were based on 5 minute time interval while the HEC-6 model is based on fractions of a minute).

7) The true design parameters (for sizing the channel configuration etc.) may lie somewhere between the low sediment inflow and the extreme event analyses. The design should be revised to consider a extreme event solution to a reasonable extent.

Review Discipline DRAINAGE Reviewed By SLA
Comments Due By July 8, 1996 Date Reviewed June 13, 1996

CITY OF SCOTTSDALE DESERT GREENBELT PROJECT

REATA PASS/BEARDSLEY WASH

Title: HYDROLOGY/HYDRAULICS Submittal : Page: 1

CODE: A-Will comply; B-Consultant to evaluate; C-Delete comment; D-Agency to evaluate

Item No.	Drawing or Page No.	Comments	Rev. Act.	Final Disp.
		CLOMR APPLICATION (General Issues)		
1	Gen	Response to the questions must be precisely related to FEMA's concerns and must be supported with detailed analysis, maps and tables to illustrate the answers. For example: Question 1 was related to channel stability under high velocity conditions but freeboard issues were addressed in the Response and Actions.		
		HEC-RAS DATA AND MODEL RESULTS		
2		Cross Sections and invert profiles were checked. Sections of Reata Pass are generally accurate compared to the design plans but the cross sectional locations, the extent of the sections, and the water surface elevations shown on the Floodplain Maps are not consistent with the HEC-RAS data and results(e.g Sheet 11 of Reata Pass).	X	New floodplain maps to give X-Secs that will match the plans.
3		Pinnacle Peak Bridge data in HEC-RAS are not consistent with the design plans. The upstream drop structure observed during our field trip was not shown on the plans or in the HEC-RAS data.		Due to different dam. Culv. routine not for super-critical flow → use SB.
4		Ineffective flow areas upstream and downstream of a bridge and near tributary confluences must be considered in the backwater model. Standard ratio of 1:1 can be used for upstream of the bridge and 1:4 (longitudinal) for downstream of the bridge.		→ actual is 2:1 Super-critical flow may be sharper than the 4:1
*5	✓	Manning's n values were estimated based on existing vegetation which will be removed by high flows after the alluvial fan is confined by the levee. Many locations have high velocities even with high Manning's n values (n=.05 approximately); these locations will experience much higher velocities considering removal of vegetation by the erosive flows (change n value to .03 or .035, see Attachment 1).		→ Delete near bridge

(6) Construction of Supercritical → water rises → beware of Levee height

Review Discipline DRAINAGE Reviewed By SLA
Comments Due By July 8, 1996 Date Reviewed June 13, 1996

CITY OF SCOTTSDALE DESERT GREENBELT PROJECT

REATA PASS/BEARDSLEY WASH

Title: HYDROLOGY/HYDRAULICS Submittal : Page: 2

CODE: A-Will comply; B-Consultant to evaluate; C-Delete comment; D-Agency to evaluate

Item No.	Drawing or Page No.	Comments	Rev. Act.	Final Disp.
*6		Super critical flow with high velocities may not be stable at the bridge site when debris and pier effects are considered. The HEC-RAS output show inconsistent information from the general output versus the culvert output table. Based on general output, the water surface at the upstream end of the bridge is 2177.68, lower than the downstream end of the bridge. Based on the bridge/culvert data the upstream surface is 2181.02. Investigate the accuracy of the computations by HEC-2 or hand calculations since HEC-RAS was previously found with some problems for bridge calculations. Pinnacle Peak Bridge should be modeled as a bridge rather than a culvert and must consider losses due to debris., piers and encroachments.	X	
*7		Note that there is not sufficient freeboard for Bell Road Bridge. Improve confluence and entrance or use other methods to lower the 100-year water surface elevation.		
*8		Since Foothills Drive is a part of project, it is necessary to model this bridge in HEC-RAS. The hydraulic effect of piers and debris must be considered in the model. Does not make big diff. Although it is not necessary to show Thompson Peak Bridge in CLOMR application (not part of the project), it is recommended that all bridges and encroachments be modeled at this time so that the ultimate elevation of the levee/wall can be determined.		
9		Contraction and expansion coefficients less than 0.1 used in the model were not usual (.03/.05 were used in several reaches). Use 0.1/0.3 for general areas and .3/.5 for expansion and contraction reaches.		

Review Discipline DRAINAGE Reviewed By SLA
Comments Due By July 8, 1996 Date Reviewed June 13, 1996

CITY OF SCOTTSDALE DESERT GREENBELT PROJECT

REATA PASS/BEARDSLEY WASH

Title: HYDROLOGY/HYDRAULICS Submittal : Page: 3

CODE: A-Will comply; B-Consultant to evaluate; C-Delete comment; D-Agency to evaluate

Item No.	Drawing or Page No.	Comments	Rev. Act.	Final Disp.
10 *		The top of levee and bank along Reata Pass is generally 3 ft or more above the water surface (without considering sediment deposition) except for the lower reach below Station 13+00. Do we want to confine and direct the flow to the retention basin? Overtopping flow may affect the performance of the soil cement bank. Design and analysis of the lower reach must also consider the backwater effect under basin full condition.	X	
11 *		SLA computed velocities for lesser flows (2- and 10-year floods); the results indicate that low flow channel velocity may exceed 10 fps under 2-year flood. It is anticipated that after flow confinement by the levee, low flow channel will be defined, deepened and enlarged and this must be considered in the design.	Vel increased for low flow. Levee set-back Existing low flow as a means of low flow increment in Scour analysis	
12	ok	North Beardsley Section 8 has high n value (.023) which is not consistent with the other concrete reach sections.		
13 *		Manning's n for the north and south Beardsley earthen channel reaches is too high (.05 and .06). Note that flow will be much confined after the project improvement and high n will not be realistic (refer to Comment No 5 and Attachment 1)	is not enough	
14 *		The existing Thompson Peak levee can not contain the 100-year flow of South Beardsley according to the HEC-RAS results. Is the backwater from Reata Pass and the cross sections near the confluence properly modeled? Do we need to raise the levee?	Comingled flow from Reata and S. Beardsl. due to removal of high grass	
15 *		The flow regime in the South Beardsley lower and middle reaches (up to Station 27) is not stable; design bank and levee should account for extra freeboard. Note that changing Manning's n per Comment 13 will modify the flow regime.	Unstable → use Subcritical	
16		Evaluate Section No 40 of South Beardsley which has significantly higher velocity compared to other sections (25 fps with n=.05)	for levee height	

Review Discipline DRAINAGE Reviewed By SLA
Comments Due By July 8, 1996 Date Reviewed June 13, 1996

CITY OF SCOTTSDALE DESERT GREENBELT PROJECT

REATA PASS/BEARDSLEY WASH

Title: HYDROLOGY/HYDRAULICS Submittal : Page: 4

CODE: A-Will comply; B-Consultant to evaluate; C-Delete comment; D-Agency to evaluate

Item No.	Drawing or Page No.	Comments	Rev. Act.	Final Disp.
		CHANNEL DESIGN PLANS (General Issues)		
17		As built grading for other construction projects should be shown on the design plans so that grading and top of wall/levee can be tied to existing grading. It is difficult to check if the design is compatible to the existing facilities and grading without such information. Locations required as built information include Thompson Peak Channel and Levee; Bell Road Bridge, Pinnacle Peak Bridge, channel, drop structures and berms; and existing residential grading and street grade near the channel. Proposed grading and approach roads for Foothills Drive Bridge should be also shown for reference.		
18		North and South Beardsley improvement plans are not available for review.		
19 *		Existing drainage to the channel which would be blocked by the wall/levee should be redirected to other locations or conveyed by paved ditches along the bank. Fill in the overbank area to allow flow "drop" at the bank is not allowed if scour may be induced due to the lateral flow. Revise the lateral inflow drainage design for Reata Pass, North Beardsley and South Beardsley.		
20 *		Existing low flow channels which would be blocked by the proposed bank/levee/wall should be regraded to avoid flow concentration toward the channel. Old channel or low lying areas must be filled with armor materials to reduce erosion at the toe. Note that a new low flow channel which is shallower than the existing channel would not function to concentrate flows and prevent flows from impinging the banks. Revise the grading design for Reata Pass, North Beardsley and South Beardsley.	✓	

Review Discipline DRAINAGE Reviewed By SLA
Comments Due By July 8, 1996 Date Reviewed June 13, 1996

CITY OF SCOTTSDALE DESERT GREENBELT PROJECT

REATA PASS/BEARDSLEY WASH

Title: HYDROLOGY/HYDRAULICS Submittal : Page: 5

CODE: A-Will comply; B-Consultant to evaluate; C-Delete comment; D-Agency to evaluate

Item No.	Drawing or Page No.	Comments	Rev. Act.	Final Disp.
21 *		Soil cement will not withstand high velocity flows with gravels and cobbles moving over its surface. Maintenance costs should be considered prior to the use of this bank protection materials. Concrete thickness should be designed considering abrasion due to high velocities.	→ potential for cavitation — upto 20 fps	
22 *	✓	Concerns over significant scour potential by the City, County and FEMA are acknowledged. It is confirmed by SLA that the proposed levee and wall toedown would not be sufficient (see velocities in Attachment 1). The channel elevation must be controlled at key locations and it may be more practical to line both channel bed and banks in the reaches with extremely high velocities. Extra protection at bends and flow impingment locations (such as South Beardsley confluence with Reata Pass) will be required. Terminal protection for levee and wall must be detailed in the design.	Long term - pivot point → long term degradation upstream - Eqm. Slope	
23 *		proposed grading in the channel should avoid flow impingement at the bank or structures. Revise grading near the South Beardsley and Reata Pass confuence. Provide updated topographic maps or show current grading elevations for matching the proposed contour lines.		

ATTACHMENT 1

Note: N. Earth – Natural Earth
Conc.Wall – Concrete Flood Wall
Conc. Slope – Concrete Side Slope
G. Earth – Graded Earth
S.C. Bank – Soil Cement Bank Stabilization
S.C. Levee – Soil Cement Levee
R.C.C. – Rolled Compacted Concrete

Reach	Station	Discharge (cfs)	Froude No.	Super or Sub	Main Ch. Manning 'n'	Designed Velocity (ft/s)	'n'=0.030 Velocity (ft/s)	'n'=0.035 Velocity (ft/s)	Proposed Material		
									Left Bank	Channel Bottom	Right Bank
5	4950	15265	1.00	sub	0.043	10.17	14.58	12.49	*Reach 4*	G. Earth	S.C. Levee
5	4800	15265	0.94	sub	0.035	9.91	11.56		*Reach 4*	G. Earth	S.C. Levee
5	4650	15265	1.01	super	0.035	10.54	12.30		*Reach 4*	G. Earth	S.C. Levee
5	4500	15265	0.50	sub	0.035	7.73	9.02		*Reach 4*	N. Earth	S.C. Levee
5	4400	15265	0.45	sub	0.035	7.30	8.52		*Reach 4*	N. Earth	S.C. Levee
5	4378						*Bridge*				
5	4356	15265	0.50	sub	0.035	7.87	9.18		S.C. Levee	N. Earth	S.C. Levee
5	4200	15265	0.86	sub	0.035	9.59	11.19		S.C. Levee	N. Earth	S.C. Levee
5	4050	15265	0.83	sub	0.053	9.00	15.90	13.63	S.C. Levee	N. Earth	S.C. Levee
5	3900	15265	0.79	sub	0.053	8.59	15.18	13.01	S.C. Levee	N. Earth	S.C. Levee
5	3750	15265	0.63	sub	0.053	7.60	13.43	11.51	S.C. Levee	N. Earth	S.C. Levee
5	3600	15265	0.65	sub	0.053	8.29	14.65	12.55	S.C. Levee	N. Earth	S.C. Levee
5	3450	15265	1.00	sub	0.053	11.09	19.59	16.79	S.C. Levee	N. Earth	S.C. Levee
5	3300	15265	0.84	sub	0.053	8.75	15.46	13.25	S.C. Levee	N. Earth	S.C. Levee
5	3150	15265	0.71	sub	0.053	7.61	13.44	11.52	S.C. Levee	N. Earth	S.C. Levee
5	3000	15265	0.80	sub	0.050	8.49	14.15	12.13	S.C. Levee	N. Earth	S.C. Levee
5	2850	15265	0.68	sub	0.050	7.83	13.05	11.19	S.C. Levee	N. Earth	S.C. Levee
5	2700	15265	0.65	sub	0.052	7.84	13.59	11.65	S.C. Levee	N. Earth	S.C. Levee
5	2550	15265	0.60	sub	0.052	7.95	13.78	11.81	S.C. Levee	N. Earth	S.C. Levee
5	2400	15265	0.69	sub	0.052	9.00	15.60	13.37	S.C. Levee	N. Earth	S.C. Levee
5	2250	15265	0.94	sub	0.036	13.28	15.94	13.66	S.C. Levee	N. Earth	S.C. Levee
5	2100	15265	1.37	super	0.030	18.18			S.C. Levee	G. Earth	S.C. Levee
5	1950	15265	1.51	super	0.030	19.27			S.C. Levee	G. Earth	S.C. Levee
5	1800	15265	1.64	super	0.030	19.93			S.C. Levee	G. Earth	S.C. Levee
5	1650	15265	1.63	super	0.030	19.40			3:1 Earth	G. Earth	R.C.C. Levee
5	1500	15265	1.52	super	0.030	18.42			3:1 Earth	G. Earth	R.C.C. Levee
5	1350	15265	1.31	super	0.030	17.09			3:1 Earth	G. Earth	R.C.C. Bank
5	1200	15265	1.92	super	0.030	20.15			3:1 Earth	G. Earth	S.C. Bank
5	1050	15265	0.51	sub	0.030	8.45			3:1 Earth	G. Earth	S.C. Bank
5	900	15265	0.47	sub	0.030	7.98			3:1 Earth	G. Earth	S.C. Bank
5	750	15265	0.45	sub	0.030	7.80			3:1 Earth	G. Earth	S.C. Bank
5	600	15265	0.43	sub	0.030	7.32			3:1 Earth	G. Earth	S.C. Bank
5	450	15265	0.42	sub	0.030	7.10			3:1 Earth	G. Earth	S.C. Bank
5	300	15265	1.00	sub	0.030	15.19			3:1 Earth	G. Earth	S.C. Bank
5	150	15265	1.07	super	0.030	16.30			N. Earth	N. Earth	N. Earth
5	1	15265	1.52	super	0.030	19.61			N. Earth	N. Earth	N. Earth

Note: N. Earth – Natural Earth
Conc.Wall – Concrete Flood Wall
Conc. Slope – Concrete Side Slope
G. Earth – Graded Earth
S.C. Bank – Soil Cement Bank Stabilization
S.C. Levee – Soil Cement Levee
R.C.C. – Rolled Compacted Concrete

Reach	Station	Discharge (cfs)	Froude No.	Super or Sub	Main Ch. Manning 'n'	Designed Velocity (ft/s)	'n'=0.030 Velocity (ft/s)	'n'=0.035 Velocity (ft/s)	Proposed Material		
									Left Bank	Channel Bottom	Right Bank
4	519	3800	0.97	sub	0.050	10.09	16.82	14.41			
4	518	3800	2.09	super	0.050	19.27	32.12	27.53			
4	517	3800	1.08	super	0.050	11.64	19.40	16.63			
4	516	3800	1.96	super	0.050	13.69	22.82	19.56			
4	515	3800	1.23	super	0.050	10.07	16.78	14.39			
4	514	3800	1.68	super	0.050	12.58	20.97	17.97			
4	513	3800	1.22	super	0.058	10.10	19.53	16.74			
4	512	3800	1.37	super	0.048	12.40	19.84	17.01			
4	511	3800	1.46	super	0.053	11.12	19.65	16.84			
4	510	3800	1.46	super	0.037	11.46	14.13	12.11			
4	509	3800	1.48	super	0.057	10.35	19.67	16.86			
4	508	3800	1.02	super	0.051	7.86	13.36	11.45			
4	507	3800	1.52	super	0.053	10.68	18.87	16.17			
4	506	3800	1.41	super	0.056	13.52	25.24	21.63			
4	505	3800	1.15	super	0.040	9.35	12.47	10.69			
4	504	3800	1.94	super	0.052	16.69	28.93	24.80			
4	503	3800	1.01	super	0.053	7.32	12.93	11.08			
4	502	3800	1.54	super	0.050	10.68	17.80	15.26			
4	501	3800	1.28	super	0.048	9.89	15.82	13.56			
4	75	3800	1.14	super	0.051	9.57	16.27	13.94			
4	74	3800	1.32	super	0.047	9.45	14.81	12.69			
4	73	3800	1.65	super	0.036	14.15	16.98	14.55			
4	72	3800	1.91	super	0.039	15.38	19.99	17.14			
4	71	3800	1.03	super	0.052	12.34	21.39	18.33			
4	70	3800	1.26	super	0.057	15.80	30.02	25.73			
4	69	3800	0.92	sub	0.058	11.75	22.72	19.47			
4	68	3800	1.44	super	0.049	18.06	29.50	25.28			
4	67	3800	1.49	super	0.051	17.31	29.43	25.22			
4	66	3800	1.06	super	0.058	12.98	25.09	21.51			
4	65	3800	1.72	super	0.053	18.44	32.58	27.92			
4	64	3800	1.15	super	0.056	13.33	24.88	21.33			
4	63	3800	1.14	super	0.055	12.26	22.48	19.27			
4	62	3800	0.85	sub	0.058	9.70	18.75	16.07			
4	61	3800	1.84	super	0.050	16.08	26.80	22.97			
4	60	3800	1.14	super	0.050	13.13	21.88	18.76			
4	59	3800	1.63	super	0.050	15.12	25.20	21.60			

Note: N. Earth – Natural Earth
Conc.Wall – Concrete Flood Wall
Conc. Slope – Concrete Side Slope
G. Earth – Graded Earth
S.C. Bank – Soil Cement Bank Stabilization
S.C. Levee – Soil Cement Levee
R.C.C. – Rolled Compacted Concrete

Reach	Station	Discharge (cfs)	Froude No.	Super or Sub	Main Ch. Manning 'n'	Designed Velocity (ft/s)	'n'=0.030 Velocity (ft/s)	'n'=0.035 Velocity (ft/s)	Proposed Material		
									Left Bank	Channel Bottom	Right Bank
4	58	3800	1.11	super	0.053	8.66	15.30	13.11			
4	57	3800	1.55	super	0.050	11.43	19.05	16.33			
4	56	3800	1.07	super	0.048	8.69	13.90	11.92			
4	55	3800	1.75	super	0.050	12.44	20.73	17.77			
4	54	3800	0.96	sub	0.050	9.52	15.87	13.60			
4	53	3800	1.53	super	0.056	13.39	24.99	21.42			
4	52	3800	1.08	super	0.051	8.75	14.88	12.75			
4	50	3800	1.64	super	0.040	14.15	18.87	16.17			
4	49	3800	1.58	super	0.040	11.76	15.68	13.44			
4	48	3800	1.11	super	0.047	8.30	13.00	11.15			
4	47	3800	1.18	super	0.047	9.45	14.81	12.69			
4	46	3800	0.83	sub	0.055	7.13	13.07	11.20			
4	40	3800	3.70	super	0.050	25.87	43.12	36.96			
4	39	3800	0.93	sub	0.045	8.69	13.04	11.17			
4	38	3800	1.37	super	0.053	12.99	22.95	19.67			
4	37	3800	1.01	super	0.051	10.26	17.44	14.95			
4	36	4915	1.21	super	0.053	11.66	20.60	17.66			
4	35	4915	1.02	super	0.056	10.86	20.27	17.38			
4	34	4915	1.27	super	0.045	13.38	20.07	17.20			
4	33	4915	1.38	super	0.042	13.98	19.57	16.78			
4	32	4915	1.31	super	0.050	12.65	21.08	18.07			
4	31	4915	1.00	sub	0.048	10.37	16.59	14.22			
4	30	4915	1.39	super	0.048	13.63	21.81	18.69			
4	29	4915	1.20	super	0.046	11.50	17.63	15.11			
4	28	4915	1.98	super	0.033	17.23	18.95				
4	27	4915	0.91	sub	0.049	10.62	17.35	14.87			
4	26	4915	0.89	sub	0.057	8.25	15.68	13.44			
4	25	4915	1.01	super	0.042	10.02	14.03	12.02			
4	24	4915	0.78	sub	0.053	7.74	13.67	11.72			
4	22	4915	0.90	sub	0.055	10.39	19.05	16.33			
4	21	4915	1.03	super	0.039	9.55	12.42	10.64			
4	20	4915	1.14	super	0.042	9.02	12.63	10.82			
4	19	4915	1.15	super	0.038	8.77	11.11	9.52			
4	18	4915	0.90	sub	0.045	6.60	9.90	8.49			
4	17	4915	1.05	super	0.040	7.87	10.49	8.99			
4	16	4915	1.09	super	0.042	8.19	11.47	9.83			

Note: N. Earth – Natural Earth
Conc.Wall – Concrete Flood Wall
Conc. Slope – Concrete Side Slope
G. Earth – Graded Earth
S.C. Bank – Soil Cement Bank Stabilization
S.C. Levee – Soil Cement Levee
R.C.C. – Rolled Compacted Concrete

Reach	Station	Discharge (cfs)	Froude No.	Super or Sub	Main Ch. Manning 'n'	Designed Velocity (ft/s)	'n'=0.030 Velocity (ft/s)	'n'=0.035 Velocity (ft/s)	Proposed Material		
									Left Bank	Channel Bottom	Right Bank
4	15	4915	1.00	sub	0.038	6.91	8.75	7.50			
4	14	4915	0.76	sub	0.041	6.15	8.41	7.20			
4	13	4915	1.60	super	0.045	7.49	11.24	9.63			
4	12	4915	1.26	super	0.028	8.50					
4	9.5	4915	0.65	sub	0.054	5.75	10.35	8.87			
4	9.4	4915	1.00	sub	0.053	7.43	13.13	11.25			
4	9.3	4915	0.69	sub	0.052	6.13	10.63	9.11			
4	9.2	4915	0.94	sub	0.043	8.33	11.94	10.23			
4	9.1	4915	1.01	super	0.043	9.75	13.98	11.98			
4	9	4915	0.73	sub	0.047	7.67	12.02	10.30			
4	8	4915	0.98	sub	0.045	9.52	14.28	12.24			
4	7	4915	0.80	sub	0.040	8.36	11.15	9.55			
4	6	4915	0.85	sub	0.047	5.86	9.18	7.87			
4	5	4915	0.59	sub	0.049	4.81	7.86	6.73			
4	4	4915	1.00	sub	0.053	7.03	12.42	10.65			
4	3	4915	0.27	sub	0.053	3.02	5.34	4.57			
4	2	4915	0.12	sub	0.044	1.86	2.73	2.34			

Note: N. Earth – Natural Earth
Conc.Wall – Concrete Flood Wall
Conc. Slope – Concrete Side Slope
G. Earth – Graded Earth
S.C. Bank – Soil Cement Bank Stabilization
S.C. Levee – Soil Cement Levee
R.C.C. – Rolled Compacted Concrete

Reach	Station	Discharge (cfs)	Froude No.	Super or Sub	Main Ch. Manning 'n'	Designed Velocity (ft/s)	'n'=0.030 Velocity (ft/s)	'n'=0.035 Velocity (ft/s)	Proposed Material		
									Left Bank	Channel Bottom	Right Bank
3	17100	12814	1.11	super	0.048	10.50	16.80	14.40	*Reach 2*	N. Earth	S.C. Levee
3	16950	12814	1.21	super	0.048	13.02	20.83	17.86	*Reach 2*	N. Earth	S.C. Levee
3	16800	12814	1.28	super	0.048	14.28	22.85	19.58	*Reach 2*	N. Earth	S.C. Levee
3	16650	12814	1.01	super	0.049	10.48	17.12	14.67	*Reach 2*	N. Earth	S.C. Levee
3	16500	12814	1.06	super	0.049	11.38	18.59	15.93	*Reach 2*	N. Earth	S.C. Levee
3	16350	12814	1.02	super	0.049	10.79	17.62	15.11	*Reach 2*	N. Earth	S.C. Levee
3	16200	12814	1.12	super	0.049	12.34	20.16	17.28	N. Earth	N. Earth	N. Earth
3	16050	12814	1.01	super	0.049	10.98	17.93	15.37	N. Earth	N. Earth	N. Earth
3	15900	12814	1.16	super	0.049	12.03	19.65	16.84	N. Earth	N. Earth	N. Earth
3	15750	12814	0.98	sub	0.049	9.17	14.98	12.84	N. Earth	N. Earth	N. Earth
3	15600	12814	1.10	super	0.049	10.05	16.42	14.07	N. Earth	N. Earth	N. Earth
3	15450	12814	0.98	sub	0.049	10.18	16.63	14.25	N. Earth	N. Earth	N. Earth
3	15300	12814	1.07	super	0.049	10.28	16.79	14.39	N. Earth	N. Earth	N. Earth
3	15150	12814	1.43	super	0.049	10.72	17.51	15.01	N. Earth	N. Earth	N. Earth
3	15000	12814	0.93	sub	0.049	7.70	12.58	10.78	N. Earth	N. Earth	N. Earth
3	14850	12814	0.98	sub	0.045	8.80	13.20	11.31	N. Earth	N. Earth	N. Earth
3	14700	12814	1.25	super	0.045	10.66	15.99	13.71	N. Earth	N. Earth	N. Earth
3	14550	12814	1.03	super	0.045	8.98	13.47	11.55	N. Earth	N. Earth	S.C. Levee
3	14400	12814	1.12	super	0.045	10.27	15.41	13.20	N. Earth	N. Earth	S.C. Levee
3	14250	12814	1.06	super	0.045	10.45	15.68	13.44	N. Earth	N. Earth	S.C. Levee
3	14100	12814	1.24	super	0.045	11.85	17.78	15.24	N. Earth	N. Earth	S.C. Levee
3	13950	12814	1.14	super	0.048	11.00	17.60	15.09	N. Earth	N. Earth	S.C. Levee
3	13800	12814	1.18	super	0.048	11.12	17.79	15.25	N. Earth	N. Earth	S.C. Levee
3	13650	12814	0.80	sub	0.048	8.80	14.08	12.07	N. Earth	N. Earth	S.C. Levee
3	13500	12814	0.80	sub	0.049	8.95	14.62	12.53	N. Earth	N. Earth	S.C. Levee
3	13350	12814	0.94	sub	0.049	9.70	15.84	13.58	N. Earth	N. Earth	S.C. Levee
3	13200	12814	0.95	sub	0.049	9.75	15.93	13.65	N. Earth	N. Earth	S.C. Levee
3	13050	12814	0.93	sub	0.049	9.28	15.16	12.99	N. Earth	N. Earth	S.C. Levee
3	12900	12814	1.00	sub	0.049	9.71	15.86	13.59	N. Earth	N. Earth	S.C. Levee
3	12750	12814	1.13	super	0.049	10.43	17.04	14.60	N. Earth	N. Earth	S.C. Levee
3	12600	12814	1.00	sub	0.049	9.44	15.42	13.22	N. Earth	N. Earth	S.C. Levee
3	12450	12814	1.09	super	0.049	9.94	16.24	13.92	N. Earth	N. Earth	S.C. Levee
3	12300	12814	0.99	sub	0.050	9.35	15.58	13.36	N. Earth	N. Earth	S.C. Levee
3	12150	12814	1.06	super	0.050	9.82	16.37	14.03	N. Earth	N. Earth	S.C. Levee
3	12000	12814	1.05	super	0.050	9.81	16.35	14.01	N. Earth	N. Earth	S.C. Levee
3	11850	12814	1.06	super	0.050	9.91	16.52	14.16	N. Earth	N. Earth	S.C. Levee

Note: N. Earth – Natural Earth
Conc.Wall – Concrete Flood Wall
Conc. Slope – Concrete Side Slope
G. Earth – Graded Earth
S.C. Bank – Soil Cement Bank Stabilization
S.C. Levee – Soil Cement Levee
R.C.C. – Rolled Compacted Concrete

Reach	Station	Discharge (cfs)	Froude No.	Super or Sub	Main Ch. Manning 'n'	Designed Velocity (ft/s)	'n'=0.030 Velocity (ft/s)	'n'=0.035 Velocity (ft/s)	Proposed Material		
									Left Bank	Channel Bottom	Right Bank
3	11700	12814	1.15	super	0.052	10.48	18.17	15.57	N. Earth	N. Earth	S.C. Levee
3	11550	12814	0.74	sub	0.052	7.84	13.59	11.65	N. Earth	N. Earth	S.C. Levee
3	11400	12814	1.30	super	0.052	9.71	16.83	14.43	N. Earth	N. Earth	S.C. Levee
3	11250	12814	1.13	super	0.035	10.59	12.36		N. Earth	N. Earth	S.C. Levee
3	11100	12814	1.18	super	0.050	10.94	18.23	15.63	N. Earth	N. Earth	S.C. Levee
3	10950	12814	0.96	sub	0.050	9.60	16.00	13.71	N. Earth	N. Earth	S.C. Levee
3	10800	12814	0.80	sub	0.050	8.68	14.47	12.40	N. Earth	N. Earth	S.C. Levee
3	10650	12814	0.91	sub	0.053	9.65	17.05	14.61	N. Earth	N. Earth	S.C. Levee
3	10500	12814	0.84	sub	0.053	9.44	16.68	14.29	N. Earth	N. Earth	S.C. Levee
3	10350	12814	0.97	sub	0.053	10.37	18.32	15.70	N. Earth	N. Earth	S.C. Levee
3	10200	12814	1.00	sub	0.045	10.42	15.63	13.40	N. Earth	N. Earth	S.C. Levee
3	10050	12814	1.78	super	0.025	15.83			N. Earth	N. Earth	S.C. Levee
3	9900	12814	2.89	super	0.025	23.12			N. Earth	N. Earth	S.C. Levee
3	9750	12814	2.21	super	0.025	19.57			N. Earth	N. Earth	S.C. Levee
3	9600	12814	1.55	super	0.025	15.13			N. Earth	N. Earth	S.C. Levee
3	9450	12814	1.21	super	0.025	11.99			N. Earth	N. Earth	S.C. Levee
3	9300	12814	0.99	sub	0.047	9.89	15.49	13.28	N. Earth	N. Earth	S.C. Levee
3	9150	12814	1.06	super	0.049	10.33	16.87	14.46	N. Earth	N. Earth	S.C. Levee
3	9000	12814	1.11	super	0.049	10.44	17.05	14.62	N. Earth	N. Earth	S.C. Levee
3	8850	12814	0.99	sub	0.049	9.74	15.91	13.64	N. Earth	N. Earth	S.C. Levee
3	8700	12814	0.97	sub	0.049	9.75	15.93	13.65	N. Earth	N. Earth	S.C. Levee
3	8550	12814	0.86	sub	0.049	8.96	14.63	12.54	N. Earth	N. Earth	S.C. Levee
3	8400	12814	0.89	sub	0.050	9.27	15.45	13.24	N. Earth	N. Earth	S.C. Levee
3	8250	12814	0.73	sub	0.050	8.22	13.70	11.74	N. Earth	N. Earth	S.C. Levee
3	8100	12814	1.10	super	0.050	10.29	17.15	14.70	N. Earth	N. Earth	S.C. Levee
3	7950	12814	0.88	sub	0.051	9.31	15.83	13.57	N. Earth	N. Earth	S.C. Levee
3	7800	12814	1.06	super	0.051	9.94	16.90	14.48	N. Earth	N. Earth	S.C. Levee
3	7650	12814	0.82	sub	0.051	8.60	14.62	12.53	N. Earth	N. Earth	S.C. Levee
3	7500	12814	0.90	sub	0.051	9.22	15.67	13.43	N. Earth	N. Earth	S.C. Levee
3	7350	12814	0.90	sub	0.051	9.37	15.93	13.65	N. Earth	N. Earth	S.C. Levee
3	7200	12814	0.73	sub	0.051	8.29	14.09	12.08	N. Earth	N. Earth	S.C. Levee
3	7050	12814	0.61	sub	0.051	7.42	12.61	10.81	N. Earth	N. Earth	S.C. Levee
3	6900	12814	0.89	sub	0.051	9.71	16.51	14.15	N. Earth	N. Earth	S.C. Levee
3	6750	12814	1.00	sub	0.046	10.48	16.07	13.77	N. Earth	N. Earth	S.C. Levee
3	6600	12814	1.30	super	0.042	11.47	16.06	13.76	N. Earth	N. Earth	S.C. Levee
3	6450	12814	1.02	super	0.042	9.31	13.03	11.17	N. Earth	N. Earth	S.C. Levee

Note: N. Earth – Natural Earth
Conc.Wall – Concrete Flood Wall
Conc. Slope – Concrete Side Slope
G. Earth – Graded Earth
S.C. Bank – Soil Cement Bank Stabilization
S.C. Levee – Soil Cement Levee
R.C.C. – Rolled Compacted Concrete

Reach	Station	Discharge (cfs)	Froude No.	Super or Sub	Main Ch. Manning 'n'	Designed Velocity (ft/s)	'n'=0.030 Velocity (ft/s)	'n'=0.035 Velocity (ft/s)	Proposed Material		
									Left Bank	Channel Bottom	Right Bank
3	6300	12814	1.10	super	0.042	9.92	13.89	11.90	N. Earth	N. Earth	S.C. Levee
3	6150	12814	1.24	super	0.042	10.87	15.22	13.04	N. Earth	N. Earth	S.C. Levee
3	6000	12814	1.12	super	0.042	10.36	14.50	12.43	N. Earth	N. Earth	S.C. Levee
3	5850	12814	0.94	sub	0.042	9.28	12.99	11.14	N. Earth	N. Earth	S.C. Levee
3	5700	12814	1.01	super	0.042	10.87	15.22	13.04	N. Earth	N. Earth	S.C. Levee
3	5550	12814	1.01	super	0.042	10.88	15.23	13.06	N. Earth	N. Earth	S.C. Levee
3	5400	12814	1.44	super	0.042	12.28	17.19	14.74	N. Earth	N. Earth	S.C. Levee
3	5250	12814	1.00	sub	0.042	10.36	14.50	12.43	N. Earth	N. Earth	S.C. Levee
3	5100	12814	0.73	sub	0.042	8.60	12.04	10.32	N. Earth	N. Earth	S.C. Levee

Note: N. Earth – Natural Earth
Conc.Wall – Concrete Flood Wall
Conc. Slope – Concrete Side Slope
G. Earth – Graded Earth
S.C. Bank – Soil Cement Bank Stabilization
S.C. Levee – Soil Cement Levee
R.C.C. – Rolled Compacted Concrete

Reach	Station	Discharge (cfs)	Froude No.	Super or Sub	Main Ch. Manning 'n'	Designed Velocity (ft/s)	'n'=0.030 Velocity (ft/s)	'n'=0.035 Velocity (ft/s)	Proposed Material		
									Left Bank	Channel Bottom	Right Bank
2	15	3477	0.89	sub	0.050	6.55	10.92	9.36			
2	14	3477	1.01	super	0.057	7.56	14.36	12.31			
2	13	3477	1.06	super	0.048	9.01	14.42	12.36			
2	12	3477	1.03	super	0.057	7.37	14.00	12.00			
2	11	3477	1.03	super	0.051	8.98	15.27	13.09			
2	10	3477	2.29	super	0.016	20.04					
2	9	3477	3.54	super	0.015	27.32					
2	8	3477	2.63	super	0.023	22.30					
2	7	3477	2.30	super	0.017	20.38					
2	6	3477	2.47	super	0.015	21.40					
2	5	3477	2.96	super	0.015	24.18					
2	4	3477	3.03	super	0.018	24.59					
2	3	3477	2.96	super	0.015	24.20					
2	2	3477	0.25	sub	0.015	4.36					

Note: N. Earth – Natural Earth
Conc.Wall – Concrete Flood Wall
Conc. Slope – Concrete Side Slope
G. Earth – Graded Earth
S.C. Bank – Soil Cement Bank Stabilization
S.C. Levee – Soil Cement Levee
R.C.C. – Rolled Compacted Concrete

Reach	Station	Discharge (cfs)	Froude No.	Super or Sub	Main Ch. Manning 'n'	Designed Velocity (ft/s)	'n'=0.030 Velocity (ft/s)	'n'=0.035 Velocity (ft/s)	Proposed Material		
									Left Bank	Channel Bottom	Right Bank
1	31650	5766	1.00	sub	0.035	7.60	8.87		N. Earth	N. Earth	N. Earth
1	31350	5766	2.12	super	0.035	13.07	15.25		N. Earth	N. Earth	N. Earth
1	31050	5766	1.01	super	0.035	7.61	8.88		N. Earth	N. Earth	N. Earth
1	30750	5766	1.91	super	0.035	12.15	14.18		N. Earth	N. Earth	N. Earth
1	30450	5766	1.24	super	0.035	8.85	10.33		N. Earth	N. Earth	N. Earth
1	30150	5766	1.36	super	0.035	11.56	13.49		N. Earth	N. Earth	N. Earth
1	29850	5766	1.42	super	0.035	11.28	13.16		N. Earth	N. Earth	N. Earth
1	29550	5766	1.37	super	0.035	10.38	12.11		N. Earth	N. Earth	N. Earth
1	29250	5766	1.31	super	0.035	10.66	12.44		N. Earth	N. Earth	N. Earth
1	28950	10796	1.50	super	0.035	11.57	13.50		N. Earth	N. Earth	N. Earth
1	28800	10796	1.94	super	0.030	14.93			N. Earth	N. Earth	N. Earth
1	28650	10796	1.77	super	0.030	12.99			N. Earth	N. Earth	N. Earth
1	28415	10796	1.33	super	0.035	10.51	12.26		N. Earth	N. Earth	N. Earth
1	28060	10796	1.05	super	0.035	11.12	12.97		N. Earth	N. Earth	N. Earth
1	27745	10796	0.99	sub	0.055	12.40	22.73	19.49	N. Earth	N. Earth	N. Earth
1	27725	10796	2.02	super	0.055	21.83	40.02	34.30	N. Earth	N. Earth	N. Earth
1	27570	10796	1.48	super	0.025	17.95			N. Earth	N. Earth	N. Earth
1	27265	10796	2.57	super	0.015	27.22			N. Earth	N. Earth	N. Earth
1	27245						*Culvert*				
1	27225	10796	2.19	super	0.015	14.53			N. Earth	N. Earth	N. Earth
1	27150	10796	1.00	sub	0.025	13.83			N. Earth	N. Earth	N. Earth
1	27000	10796	1.41	super	0.025	19.59			Conc. Wall	N. Earth	N. Earth
1	26700	10796	2.72	super	0.029	20.31			Conc. Wall	N. Earth	N. Earth
1	26550	10796	1.18	super	0.043	10.50	15.05	12.90	Conc. Wall	N. Earth	N. Earth
1	26400	10796	1.22	super	0.042	11.76	16.46	14.11	N. Earth	N. Earth	N. Earth
1	26250	10796	1.14	super	0.042	12.13	16.98	14.56	Conc. Slope	G. Earth	Conc. Slope
1	26100	10796	1.72	super	0.031	16.73	17.29		Conc. Slope	G. Earth	Conc. Slope
1	25950	10796	1.65	super	0.021	20.55			Conc. Slope	G. Earth	Conc. Slope
1	25800	10796	2.03	super	0.021	24.67			Conc. Slope	R.C.C.	Conc. Slope
1	25650	10796	2.47	super	0.021	28.35			Conc. Slope	R.C.C.	Conc. Slope
1	25500	10796	2.69	super	0.021	30.12			Conc. Slope	R.C.C.	Conc. Slope
1	25350	10796	2.80	super	0.021	31.01			Conc. Slope	R.C.C.	Conc. Slope
1	25200	10796	2.87	super	0.021	31.48			Conc. Slope	R.C.C.	Conc. Slope
1	25050	10796	2.90	super	0.021	31.74			Conc. Slope	R.C.C.	Conc. Slope
1	24900	10796	2.93	super	0.021	31.97			Conc. Slope	R.C.C.	Conc. Slope
1	24750	10796	2.94	super	0.021	32.01			Conc. Slope	R.C.C.	Conc. Slope

Note: N. Earth – Natural Earth
Conc.Wall – Concrete Flood Wall
Conc. Slope – Concrete Side Slope
G. Earth – Graded Earth
S.C. Bank – Soil Cement Bank Stabilization
S.C. Levee – Soil Cement Levee
R.C.C. – Rolled Compacted Concrete

Reach	Station	Discharge (cfs)	Froude No.	Super or Sub	Main Ch. Manning 'n'	Designed Velocity (ft/s)	'n'=0.030 Velocity (ft/s)	'n'=0.035 Velocity (ft/s)	Proposed Material		
									Left Bank	Channel Bottom	Right Bank
1	24600	10796	2.94	super	0.021	32.09			Conc. Slope	R.C.C.	Conc. Slope
1	24450	10796	2.95	super	0.021	32.17			Conc. Slope	R.C.C.	Conc. Slope
1	24300	10796	3.20	super	0.021	32.24			Conc. Slope	R.C.C.	Conc. Slope
1	24080	10796	2.58	super	0.021	27.81			Conc. Slope	R.C.C.	Conc. Slope
1	24035	10796	2.62	super	0.021	28.08			Conc. Slope	R.C.C.	Conc. Slope
1	24000	10796	2.67	super	0.024	28.48			Conc. Slope	R.C.C.	Conc. Slope
1	23850	10796	2.04	super	0.038	23.73	29.66	25.43	Conc. Slope	R.C.C.	Conc. Slope
1	23700	10796	2.14	super	0.021	24.51			Conc. Slope	R.C.C.	Conc. Slope
1	23550	10796	2.47	super	0.021	27.02			Conc. Slope	R.C.C.	Conc. Slope
1	23400	11742	2.52	super	0.021	28.11			Conc. Slope	R.C.C.	Conc. Slope
1	23250	11742	3.03	super	0.039	26.15	34.00	29.14	*Tributary*	G. Earth	Conc. Wall
1	23100	11742	1.52	super	0.032	18.79	20.04		*Tributary*	G. Earth	Conc. Wall
1	22950	11742	1.58	super	0.041	18.46	25.23	21.62	N. Earth	N. Earth	N. Earth
1	22800	11742	1.30	super	0.041	15.28	20.88	17.90	N. Earth	N. Earth	N. Earth
1	22650	11742	1.24	super	0.039	15.38	19.99	17.14	N. Earth	N. Earth	Conc. Wall
1	22500	11742	1.16	super	0.039	14.70	19.11	16.38	N. Earth	N. Earth	Conc. Wall
1	22350	11742	1.26	super	0.039	16.30	21.19	18.16	N. Earth	N. Earth	Conc. Wall
1	22200	11742	1.39	super	0.033	18.13	19.94		N. Earth	N. Earth	Conc. Wall
1	22050	11742	1.61	super	0.038	19.18	24.29	20.82	N. Earth	N. Earth	Conc. Wall
1	21900	11742	1.55	super	0.031	19.07	19.71		N. Earth	G. Earth	Conc. Wall
1	21750	11742	1.52	super	0.031	18.77	19.40		N. Earth	G. Earth	Conc. Wall
1	21600	11742	1.66	super	0.031	19.86	20.52		N. Earth	G. Earth	Conc. Wall
1	21450	11742	1.50	super	0.043	17.68	25.34	21.72	N. Earth	N. Earth	S.C. Levee
1	21300	11742	1.38	super	0.043	14.88	21.33	18.28	N. Earth	N. Earth	S.C. Levee
1	21150	11742	1.21	super	0.047	12.63	19.79	16.96	N. Earth	N. Earth	S.C. Levee
1	21000	11742	1.31	super	0.047	12.60	19.74	16.92	S.C. Levee	N. Earth	S.C. Levee
1	20850	11742	1.21	super	0.047	12.49	19.57	16.77	S.C. Levee	N. Earth	S.C. Levee
1	20700	11742	1.47	super	0.045	13.27	19.91	17.06	S.C. Levee	N. Earth	S.C. Levee
1	20550	11742	1.32	super	0.045	11.99	17.99	15.42	S.C. Levee	N. Earth	S.C. Levee
1	20400	11742	1.00	sub	0.045	9.46	14.19	12.16	S.C. Levee	N. Earth	S.C. Levee
1	20250	11742	1.61	super	0.045	20.12	30.18	25.87	S.C. Levee	N. Earth	S.C. Levee
1	20100	11742	2.10	super	0.045	21.61	32.42	27.78	S.C. Levee	N. Earth	S.C. Levee
1	19950	11742	1.35	super	0.045	15.33	23.00	19.71	S.C. Levee	N. Earth	S.C. Levee
1	19800	11742	1.01	super	0.047	11.02	17.26	14.80	S.C. Levee	N. Earth	S.C. Levee
1	19650	11742	2.14	super	0.047	19.50	30.55	26.19	S.C. Levee	N. Earth	S.C. Levee
1	19500	11742	1.10	super	0.047	11.13	17.44	14.95	N. Earth	N. Earth	S.C. Levee

Note: N. Earth – Natural Earth
Conc.Wall – Concrete Flood Wall
Conc. Slope – Concrete Side Slope
G. Earth – Graded Earth
S.C. Bank – Soil Cement Bank Stabilization
S.C. Levee – Soil Cement Levee
R.C.C. – Rolled Compacted Concrete

Reach	Station	Discharge (cfs)	Froude No.	Super or Sub	Main Ch. Manning 'n'	Designed Velocity (ft/s)	'n'=0.030 Velocity (ft/s)	'n'=0.035 Velocity (ft/s)	Proposed Material		
									Left Bank	Channel Bottom	Right Bank
1	19350	11742	1.23	super	0.047	13.18	20.65	17.70	N. Earth	N. Earth	S.C. Levee
1	19200	11742	1.36	super	0.047	13.58	21.28	18.24	N. Earth	N. Earth	S.C. Levee
1	19050	11742	1.31	super	0.048	13.31	21.30	18.25	N. Earth	N. Earth	S.C. Levee
1	18900	11742	1.14	super	0.048	12.19	19.50	16.72	N. Earth	N. Earth	S.C. Levee
1	18750	11742	1.07	super	0.048	11.97	19.15	16.42	N. Earth	N. Earth	S.C. Levee
1	18600	11742	1.37	super	0.048	13.83	22.13	18.97	N. Earth	N. Earth	S.C. Levee
1	18450	11742	0.88	sub	0.051	9.98	16.97	14.54	N. Earth	N. Earth	S.C. Levee
1	18300	11742	0.89	sub	0.051	11.69	19.87	17.03	S.C. Levee	N. Earth	S.C. Levee
1	18150	11742	1.82	super	0.050	15.23	25.38	21.76	S.C. Levee	N. Earth	S.C. Levee
1	18000	11742	0.93	sub	0.050	9.82	16.37	14.03	S.C. Levee	N. Earth	S.C. Levee
1	17850	11742	0.81	sub	0.050	8.70	14.50	12.43	S.C. Levee	N. Earth	S.C. Levee
1	17700	11742	0.99	sub	0.052	9.92	17.19	14.74	S.C. Levee	N. Earth	S.C. Levee
1	17550	11742	0.72	sub	0.052	7.89	13.68	11.72	S.C. Levee	N. Earth	S.C. Levee
1	17400	11742	0.97	sub	0.052	10.65	18.46	15.82	S.C. Levee	N. Earth	S.C. Levee
1	17250	11742	0.72	sub	0.048	9.11	14.58	12.49	S.C. Levee	N. Earth	S.C. Levee

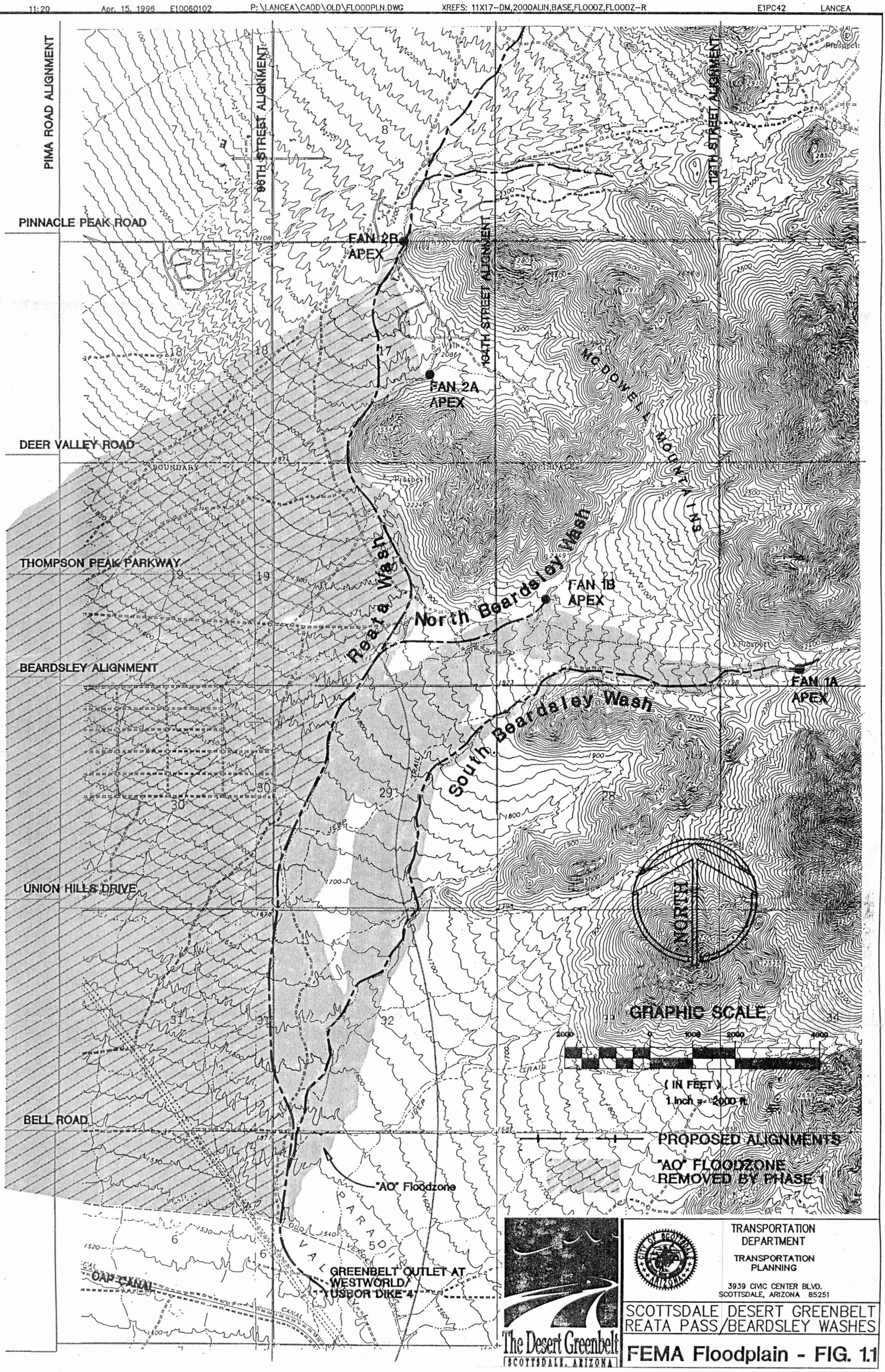
PIMA ROAD ALIGNMENT
PINNACLE PEAK ROAD
DEER VALLEY ROAD
THOMPSON PEAK PARKWAY
BEARDSLEY ALIGNMENT
UNION HILLS DRIVE
BELL ROAD
96TH STREET ALIGNMENT
104TH STREET ALIGNMENT
112TH STREET ALIGNMENT
FAN 2B APEX
FAN 2A APEX
FAN 1B APEX
FAN 1A APEX
McDOWELL MOUNTAINS
Reata Wash
North Beardsley Wash
South Beardsley Wash
NORTH
GRAPHIC SCALE
2000 0 1000 2000 4000
(IN FEET)
1 inch = 2000 ft.
PROPOSED ALIGNMENTS
"AO" FLOODZONE REMOVED BY PHASE 1
"AO" Floodzone
GREENBELT OUTLET AT WESTWORLD/ USBOR DIKE 4
CAP CANAL
PARADISE VALLEY
The Desert Greenbelt
SCOTTSDALE, ARIZONA
TRANSPORTATION DEPARTMENT
TRANSPORTATION PLANNING
3939 CIVIC CENTER BLVD.
SCOTTSDALE, ARIZONA 85251
SCOTTSDALE DESERT GREENBELT
REATA PASS/BEARDSLEY WASHES
FEMA Floodplain - FIG. 1.1

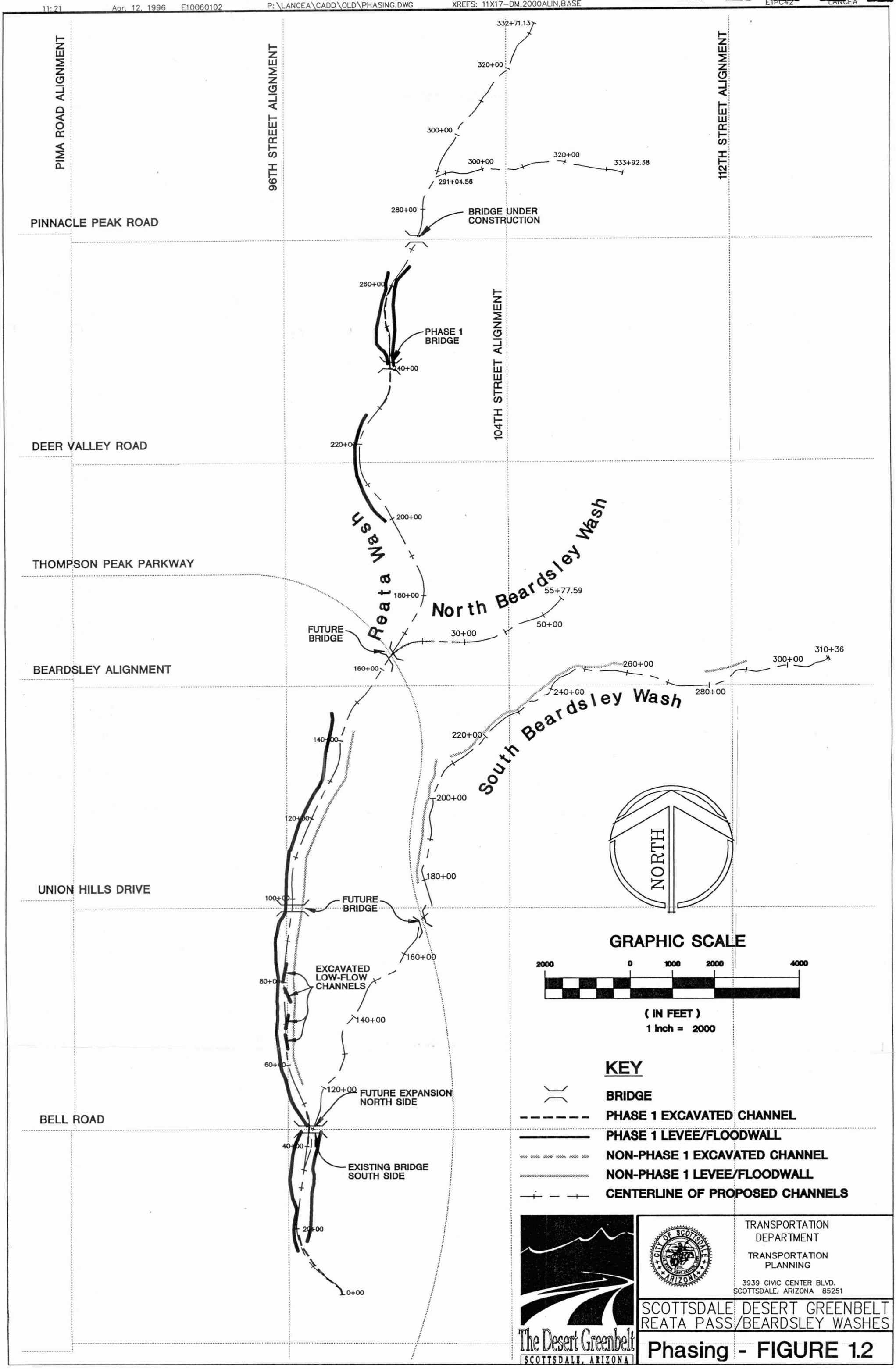
PIMA ROAD ALIGNMENT
96TH STREET ALIGNMENT
104TH STREET ALIGNMENT
112TH STREET ALIGNMENT
PINNACLE PEAK ROAD
DEER VALLEY ROAD
THOMPSON PEAK PARKWAY
BEARDSLEY ALIGNMENT
UNION HILLS DRIVE
BELL ROAD
332+71.13
320+00
300+00
291+04.56
280+00
BRIDGE UNDER CONSTRUCTION
260+00
PHASE 1 BRIDGE
240+00
220+00
200+00
180+00
160+00
140+00
120+00
100+00
80+00
60+00
40+00
20+00
0+00
Reata Wash
North Beardsley Wash
South Beardsley Wash
55+77.59
50+00
30+00
FUTURE BRIDGE
FUTURE BRIDGE
EXCAVATED LOW-FLOW CHANNELS
FUTURE EXPANSION NORTH SIDE
EXISTING BRIDGE SOUTH SIDE
333+92.38
310+36
NORTH
GRAPHIC SCALE
2000 0 1000 2000 4000
(IN FEET)
1 inch = 2000
KEY
BRIDGE
PHASE 1 EXCAVATED CHANNEL
PHASE 1 LEVEE/FLOODWALL
NON-PHASE 1 EXCAVATED CHANNEL
NON-PHASE 1 LEVEE/FLOODWALL
CENTERLINE OF PROPOSED CHANNELS
The Desert Greenbelt
SCOTTSDALE, ARIZONA
CITY OF SCOTTSDALE ARIZONA
TRANSPORTATION DEPARTMENT
TRANSPORTATION PLANNING
3939 CIVIC CENTER BLVD.
SCOTTSDALE, ARIZONA 85251
SCOTTSDALE DESERT GREENBELT
REATA PASS/BEARDSLEY WASHES
Phasing - FIGURE 1.2

Proposed east and west side soil cement levees will contain the flow in Reata through the DC Ranch development, from the natural containment section on the north to the future Union Hills Drive Bridge alignment on the south. The final alignment of this bridge has yet to be determined, but a drop structure and short downstream excavated channel were modeled to simulate conveyance under the future bridge. The proposed design near the Union Hills Road Bridge has significantly changed since the 10-percent plans and CLOMR were originally submitted to FEMA (refer to the 60-Percent Phase I Plans included with the report).

Soil cement levees will provide containment on each side of Reata between Union Hills Drive and Bell Road. Existing, shallow washes will be connected with intermittent, excavated low-flow channels within this section to provide a continuous thalweg and enhance the conveyance of smaller flows that result from more frequent storm events.

The southern half of the bridge at Bell Road is in place; the future north half of the bridge will expand the roadway to four lanes. The existing bridge has been sized for the 100-year flows associated with the Greenbelt Project as will the future expansion to the north. The confluence of South Beardsley Wash and Thompson Peak Wash with Reata Pass Wash is located immediately upstream from the Bell Road bridge. The Thompson Peak Wash was realigned to connect with Reata just north of the bridge as part of the construction improvements to Bell Road. These improvements to Thompson Peak Wash were not part of the Greenbelt project, but the flows conveyed into Reata from the wash have been accounted for. The proposed improvements to the South Beardsley Wash are part of the Greenbelt project. These proposed improvements include intermittent levee containment located primarily along the west side of the wash and north of Union Hills Drive.

Soil cement levees on each side will provide full containment of Reata south of Bell Road. Downstream, these soil cement levees transition into an excavated channel which in turn connects into the existing Westworld channel. The Westworld channel presently routes flow into the USBOR Retention Basin. As part of the Greenbelt project, the Westworld channel will be excavated and widened to the northeast, and concrete slope protection will be constructed on the existing southwest bank.

1.3 Geomorphic Discussion

1.3.1 Pre-Project Conditions

The washes that comprise the Reata / Beardsley System are typical of the basin and range geology of the Southwest. Infrequent precipitation, and the subsequent sparse vegetative cover, encourage the development of alluvial fans as rainfall runoff exits steep desert mountains. Although the McDowell Mountains are in the late stages of erosion, the associated fans are still active. The upstream portions of the washes which contribute flow into the Reata / Beardsley System, are incised within the coarse, alluvial deposits that are immediately adjacent to the McDowell Mountains. However, shortly downstream, the washes begin to braid and lose their well-defined banks. This is the alluvial fan apex. As the braids expand downstream from the apex, shallow flow with slower velocities promotes deposition of the carried sediment. This deposition forms the alluvial fan. Discernable braided flow dissipates further downstream and essentially becomes sheet flow.

In north Scottsdale, major fans have been designated as flood zones by FEMA although the limits of the flood zones may include portions of minor fans. As seen on Figure 1.1, FEMA Fans 1A and 1B and 2A and 2B are the Reata / Beardsley System.

Since alluvial fans are a dynamic formation, the potential exists for flow paths to dramatically alter during floods. The entire flow at the apex has the capability to completely alter paths and inundate what had been a minor braid. For this reason, FEMA requires that development on the fan area must account for the entire flow from the apex at any potential downstream location.

1.3.2 Post-Project Conditions

The fans formed on the west side of the McDowell Mountains interact with each other. Braids extending from one fan apex combine with channels of another fan. The proposed alignments of the Reata / Beardsley improvements will utilize and enhance this natural interaction. The improvements in Upper Reata demonstrate enhancing this interaction where flows from the apex are routed to the south into the incised wash at the edge of the fan and the toe of the mountain which provides more natural conveyance capacity than that found downstream on the center of the fan southwest of the apex. The Reata alignment along the intersection of Fans 1 and 2 (from the North Beardsley Wash Confluence to Union Hills Drive) also provides some natural containment.

The confinement of flow downstream from the apex, proposed by the Greenbelt project, will prevent the decrease in the specific energy head that currently occurs on the fan. The proposed Greenbelt improvements will not allow the flow to spread out, slow down and decrease in depth; but will instead maintain a defined channel with deeper flow depths and higher velocities as found upstream of the apex. The capacity of the flow to transport sediment through the system is directly related to the specific energy head. Larger energy heads promote the transport of inflowing sediment through the system. Some portions of the proposed system provide for a higher or lower energy head than that found upstream of the apex; thus, some scour and deposition will occur.

Channel banks tend to erode to counteract an increased potential for sediment transport. However, if the banks are stabilized, as in the Desert Greenbelt, the bed elevation will change instead.

Most portions of the proposed improvements will closely resemble the relatively stable reaches upstream of the apexes. Widths range from 300 to 550 feet, slopes vary between 2 and 3 percent, and the wash is composed of sand and gravel with scattered small- to medium-sized desert shrubs. Upper Reata Wash, the downstream section of North Beardsley Wash, and the Westworld channel will not resemble the natural wash.

In general, the proposed channel within Upper Reata, between the apex and the Deer Valley Road Alignment, will tend to scour because of a substantial decrease in the channel width from about 500 feet upstream of Pinnacle Peak Road to 100 feet downstream of the apex. As the channel adjusts to the new conditions, some sediment removal maintenance will be necessary downstream from the excavated channel (Station 230+00 to Station 260+00). As discussed in later sections, the toe-down depth of structural improvements for containment in Upper Reata is designed for the tendency to scour. Likewise, the excavated channel at the downstream end of North Beardsley will tend to scour, although a milder channel slope will reduce the scour potential that is present upstream. As flows enter the Westworld channel at the downstream end of the project, some deposition will occur because of the decrease in the existing channel slope from approximately 2 percent to 0.5 percent. The Westworld channel is located within USBOR Dike 4 though, and

sediment deposition and periodic maintenance are expected. Most of the sediment will continue to be conveyed into the low-flow basins within Dike 4. The Greenbelt project will not introduce any flows that have not already been allowed for in the BOR basin. A more detailed, quantitative discussion of scour and deposition within the reaches of the channel is found in later sections.

1.4 Reaches

Reaches of similar hydraulic and design characteristics were established as part of the hydraulic analysis to provide a simple representation of the different portions of the Reata / Beardsley System. A plan view of the locations of reaches is shown on Figure 1.3. Figure 1.4 provides a typical cross-section for each reach. Table 1.1 lists various hydraulic and design parameters for each reach. The channel width, channel bed slope, roughness coefficient, side slope, bed sediment gradation and peak flow rates were considered for the selection of the reaches. While the hydraulic features are quite similar for each reach, some design characteristics, such as structural containment material, may slightly vary within the reach. Bridges have not been presented as independent reaches. The reader is encouraged to refer to the Reata Pass / Beardsley Wash Preliminary Study and 10-Percent Plans or the Reata Pass Wash Phase I 60-Percent Plans for more detailed information on design characteristics.

1.5 Construction Phasing

The original Conditional Letter of Map Revision (CLOMR) was developed for the entire containment identified in the Preliminary Study 10-Percent Plans. The design and construction of Phase I of the Greenbelt project is targeted at removing the western portion of the FEMA "AO" Zone located beyond the proposed Phase I improvement corridor. Figure 1.1 depicts the existing "AO" Zone and the portion anticipated to be removed by the Phase I improvements.

Figure 1.2 presents the proposed construction phasing of the project. Future containment of floodwaters to the east of the proposed Phase I project, including both the North Beardsley and South Beardsley Wash improvements, will be designed and constructed as part of later phases. The portions of the total improvements identified in the Preliminary Study that are included in Phase I are: all improvements north of the Deer Valley Road Alignment; only the west levee between the Deer Valley Road Alignment and Bell Road; and all improvements south of Bell Road.

Future construction will include the east levee north of Bell Road and south of the Beardsley Road alignment. To ensure that the Phase I west levee between the Beardsley Road alignment and Bell Road is not compromised during the construction of future improvements, the east levee north of Bell Road must not be constructed until after the proposed improvements within South Beardsley are complete (see Section 2.1). Constructing South Beardsley improvements first will confine existing break-out flows that presently can migrate to both North Beardsley and Reata Pass Washes. Elimination of this South Beardsley break-out flow and subsequent migration will prevent the introduction of larger than design flows for the Reata System along the reach between Bell Road and Thompson Peak Parkway. It will also prevent these break-out flows from migrating to the backside (east side) of the proposed east levee. The two landowners, DC Ranch and the Arizona State Land Department, affected along this stretch of Reata are aware that the east levee will not be constructed as part of Phase I and understand, and accept, the interim impacts to the area.

1.6 Design Revisions

Four primary design variations have been developed between the 10-Percent Preliminary Plans and 60-Percent Phase I Plans including: (1) the expanded Westworld channel; (2) the estimated location of the new drop structure and excavated channel at Union Hills Drive; (3) the location of levees upstream of Union Hills Drive; and (4) the revised bridge design at Pinnacle Peak Road completed by others.

The Westworld channel, Stations 0+00 to 10+00, has been enlarged to the northeast to accommodate the Reata design flow rate. The existing invert will be widened to approximately 70 feet.

Stations 98+50 to 112+00, previously referred to as the Ironwood channel on the 10-Percent Preliminary Plans, is no longer part of the Greenbelt project because of the difficulty and expense associated with the construction. This existing channel will now be filled and compacted and an extension of the upstream levee through this area to Union Hills Drive will contain flows.

As part of a later phase, a drop structure and downstream cut channel will be constructed to convey flows under the future Union Hills Drive Bridge that has yet to be located.

The Phase I west levee and the east levee proposed for future construction between Stations 112+00 and 140+00 have been shifted approximately 200 feet to the east.

The four-barrel Pinnacle Peak Road Bridge, now under construction, is graphically represented in the 60-Percent Plans. The 10-Percent Preliminary Plans reflected a three-barrel concept that had been considered at the time.

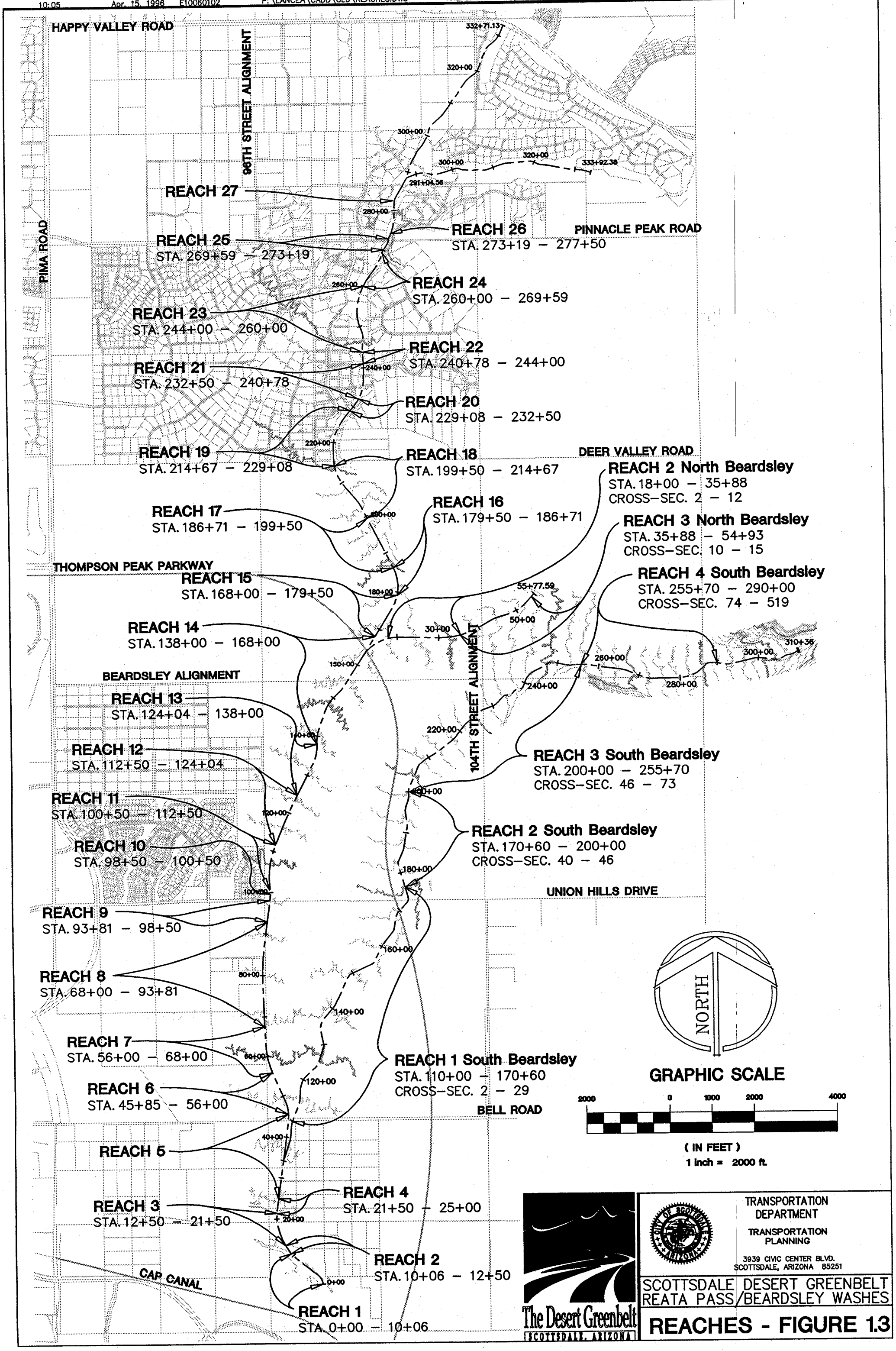
HAPPY VALLEY ROAD
96TH STREET ALIGNMENT
PIMA ROAD
PINNACLE PEAK ROAD
DEER VALLEY ROAD
THOMPSON PEAK PARKWAY
BEARDSLEY ALIGNMENT
104TH STREET ALIGNMENT
UNION HILLS DRIVE
BELL ROAD
CAP CANAL
REACH 27
REACH 26
STA. 273+19 – 277+50
REACH 25
STA. 269+59 – 273+19
REACH 24
STA. 260+00 – 269+59
REACH 23
STA. 244+00 – 260+00
REACH 22
STA. 240+78 – 244+00
REACH 21
STA. 232+50 – 240+78
REACH 20
STA. 229+08 – 232+50
REACH 19
STA. 214+67 – 229+08
REACH 18
STA. 199+50 – 214+67
REACH 17
STA. 186+71 – 199+50
REACH 16
STA. 179+50 – 186+71
REACH 15
STA. 168+00 – 179+50
REACH 14
STA. 138+00 – 168+00
REACH 13
STA. 124+04 – 138+00
REACH 12
STA. 112+50 – 124+04
REACH 11
STA. 100+50 – 112+50
REACH 10
STA. 98+50 – 100+50
REACH 9
STA. 93+81 – 98+50
REACH 8
STA. 68+00 – 93+81
REACH 7
STA. 56+00 – 68+00
REACH 6
STA. 45+85 – 56+00
REACH 5
REACH 4
STA. 21+50 – 25+00
REACH 3
STA. 12+50 – 21+50
REACH 2
STA. 10+06 – 12+50
REACH 1
STA. 0+00 – 10+06
REACH 1 South Beardsley
STA. 110+00 – 170+60
CROSS-SEC. 2 – 29
REACH 2 South Beardsley
STA. 170+60 – 200+00
CROSS-SEC. 40 – 46
REACH 3 South Beardsley
STA. 200+00 – 255+70
CROSS-SEC. 46 – 73
REACH 4 South Beardsley
STA. 255+70 – 290+00
CROSS-SEC. 74 – 519
REACH 2 North Beardsley
STA. 18+00 – 35+88
CROSS-SEC. 2 – 12
REACH 3 North Beardsley
STA. 35+88 – 54+93
CROSS-SEC. 10 – 15
NORTH
GRAPHIC SCALE
2000 0 1000 2000 4000
(IN FEET)
1 inch = 2000 ft.
The Desert Greenbelt
SCOTTSDALE, ARIZONA
TRANSPORTATION DEPARTMENT
TRANSPORTATION PLANNING
3939 CIVIC CENTER BLVD.
SCOTTSDALE, ARIZONA 85251
SCOTTSDALE DESERT GREENBELT
REATA PASS/BEARDSLEY WASHES
REACHES - FIGURE 1.3

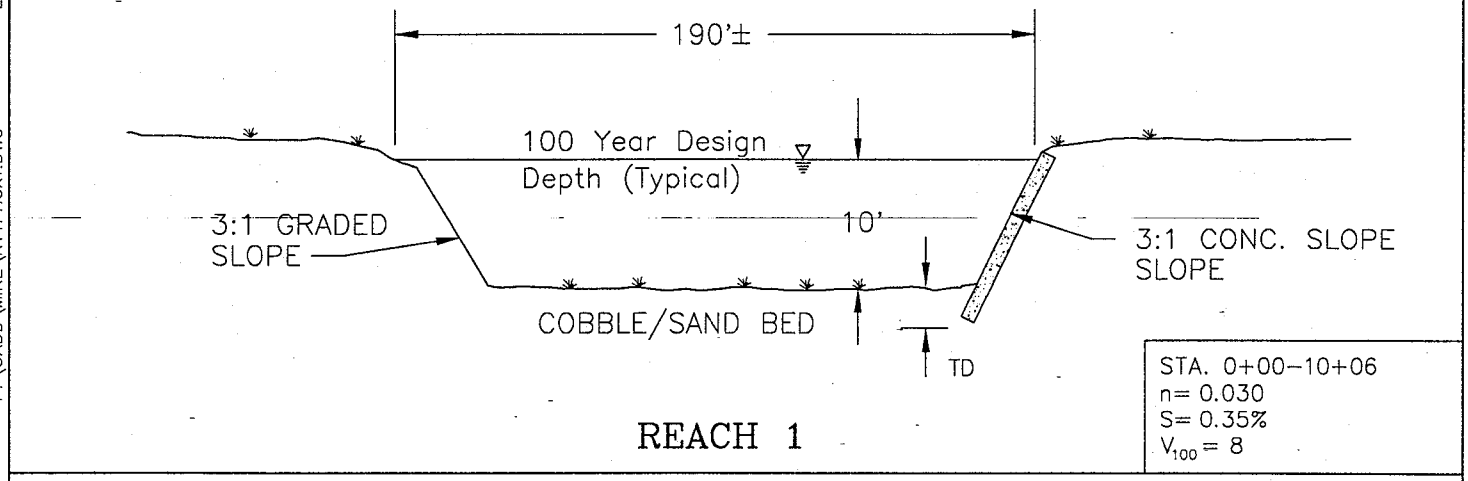

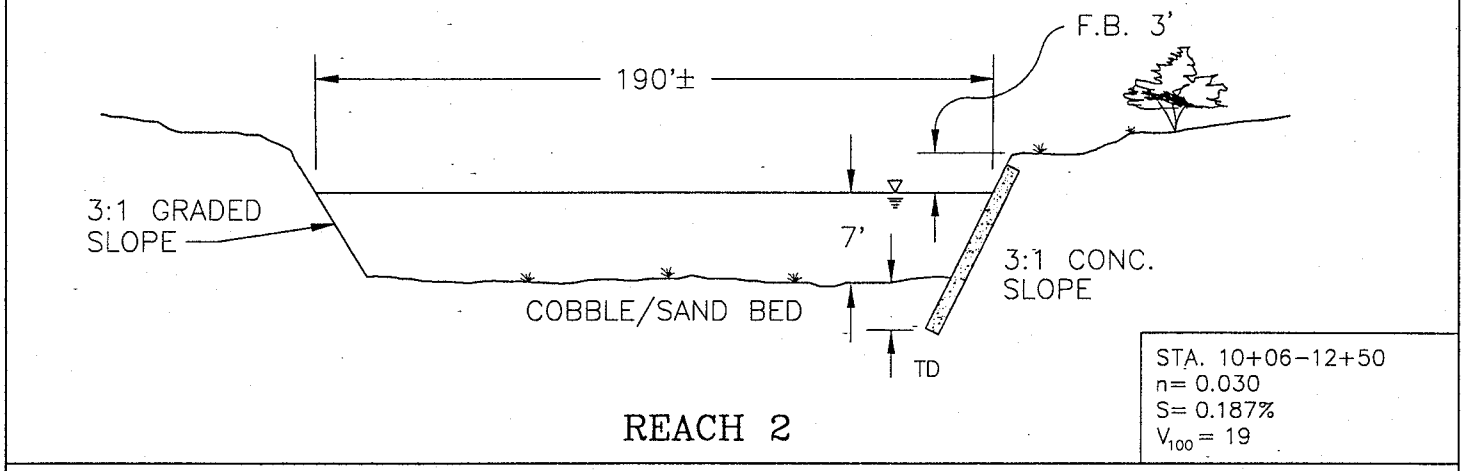

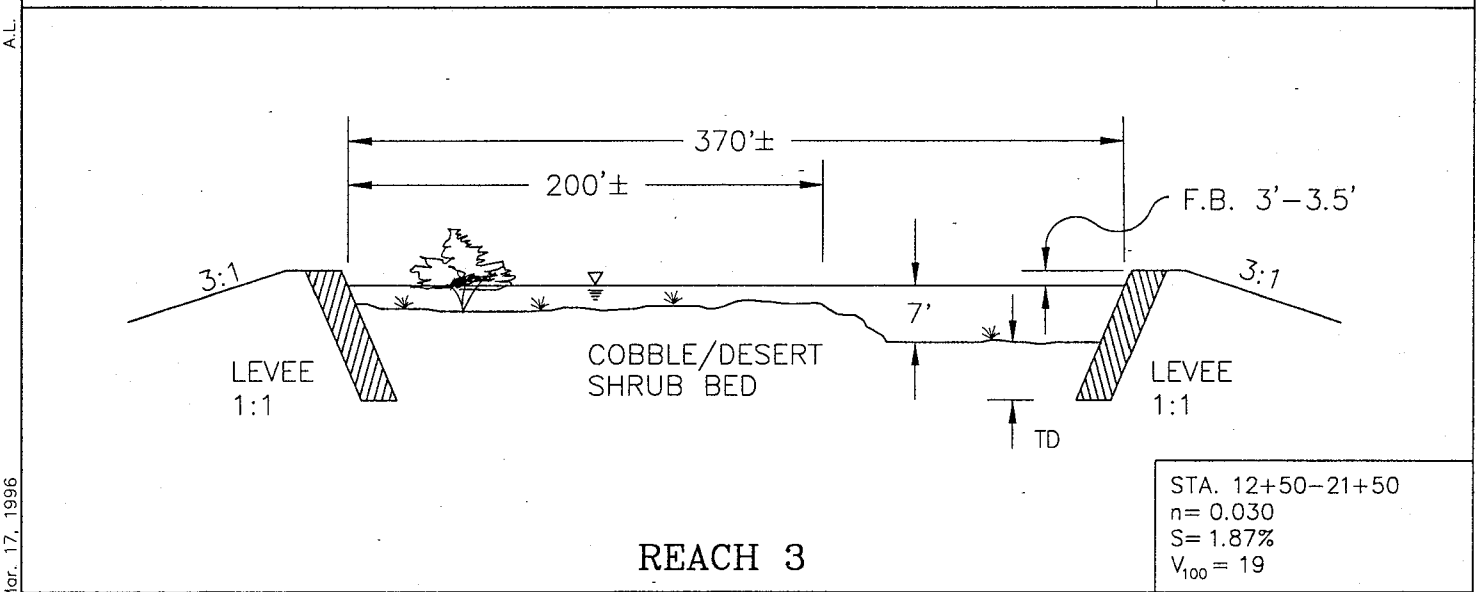

The Desert Greenbelt

Reata Pass Wash
Typical Section Variations
Reaches 1 thru 3

- Sections look downstream
- Levees may be covered with fill and revegetated in areas.
- F.B.= Freeboard
- TD = Toedown

Not to Scale

Greiner

Figure 1.4

E10060102 P:\CADD\MIKE\RTYPHCX1.DWG Scottsdale D.G. E1PC38 A.L. Mar. 17, 1996 17:53

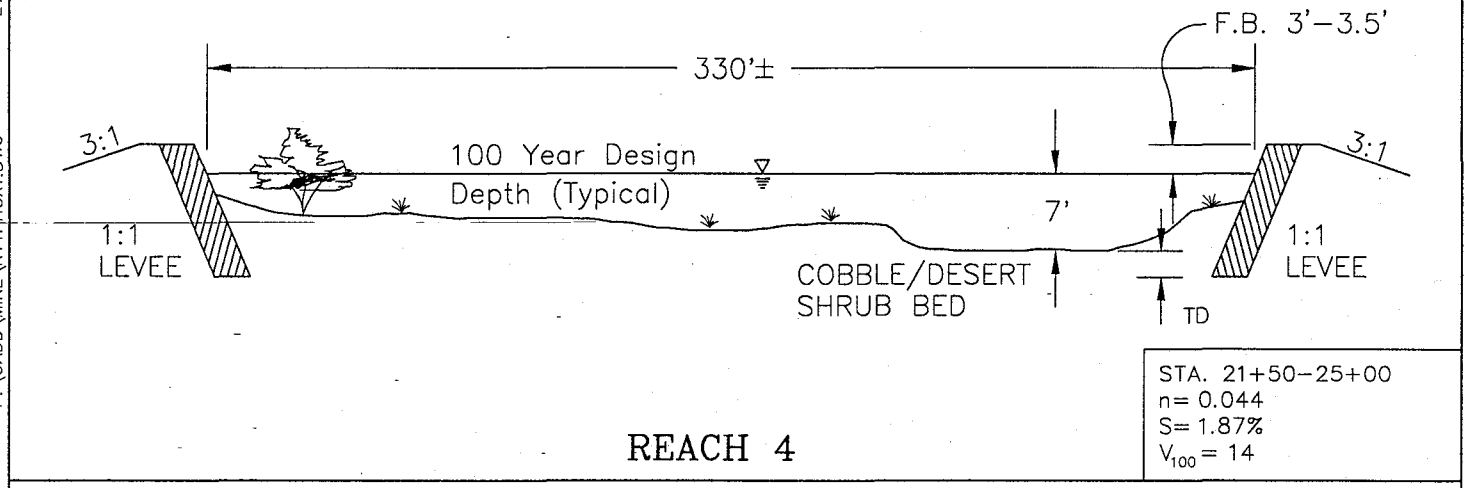

STA. 21+50–25+00
n= 0.044
S= 1.87%
V_{100} = 14

REACH 4

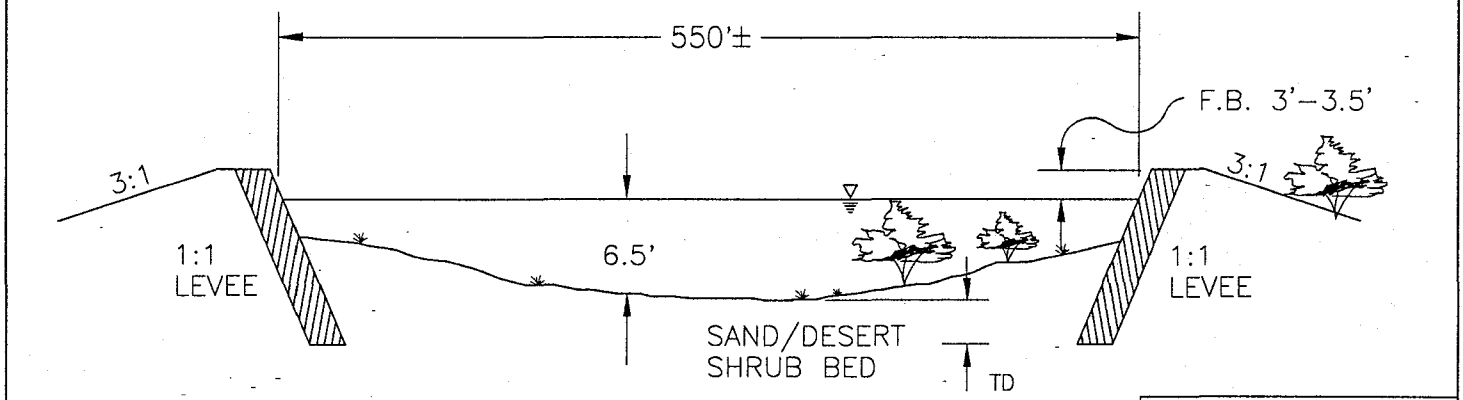

STA. 25+00–45+85
n= 0.05
S= 1.77%
V_{100} = 12

REACH 5

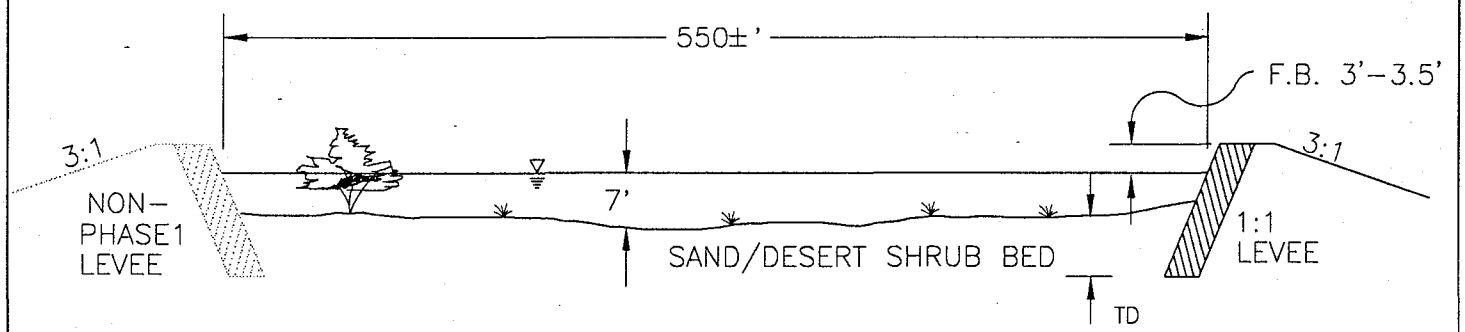

STA. 45+85–56+00
n= 0.042
S= 1.77%
V_{100} = 12

REACH 6

- Sections look downstream
- Levees may be covered with fill and revegetated in areas.
- F.B.= Freeboard
- TD = Toedown

Not to Scale

The Desert Greenbelt

Reata Pass Wash
Typical Section Variations
Reaches 4 thru 6

Greiner

Figure 1.4

E1006Q102
P:\CADD\MIKE\RTYPHCX1.DWG
Scottsdale D.G.
E1PC38
A.L.
Mar. 17, 1996
17:53

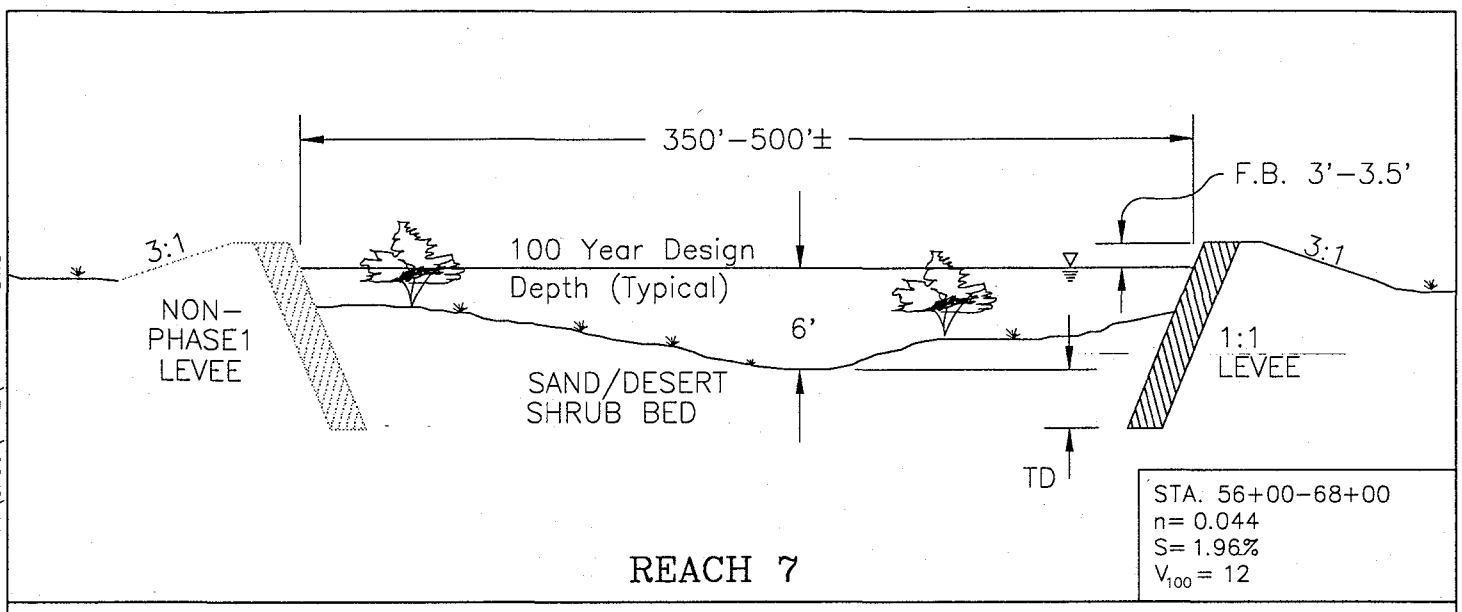

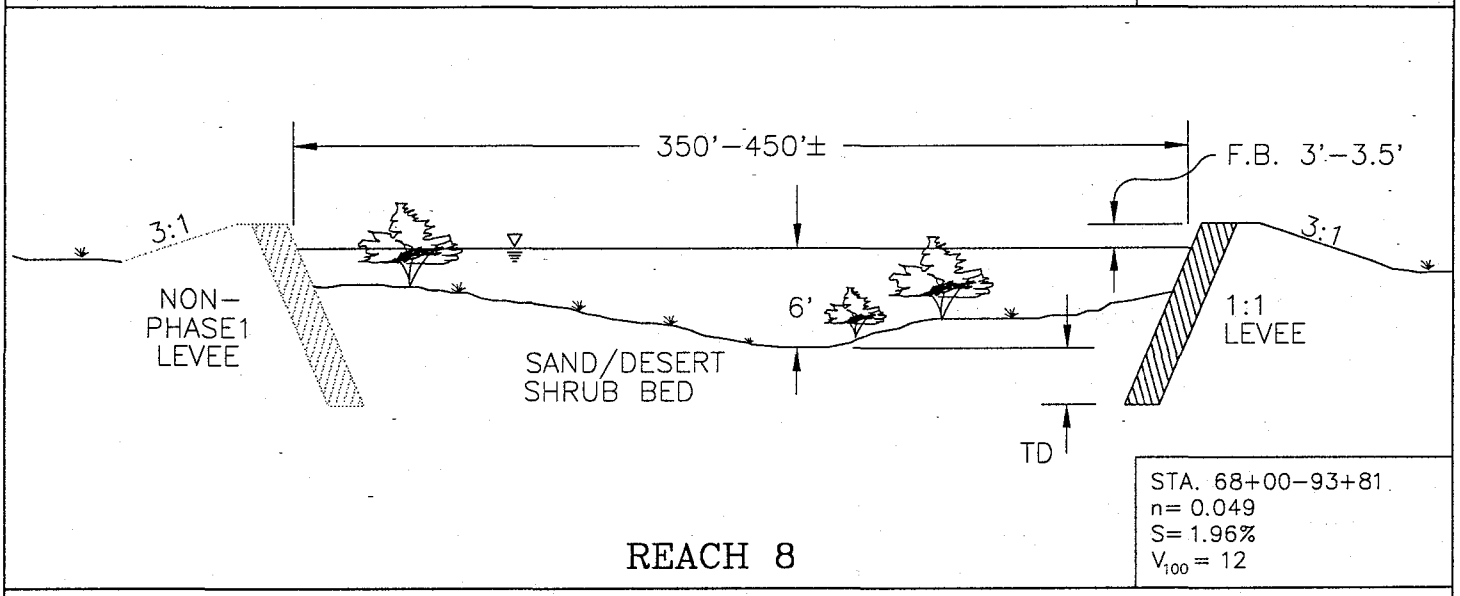

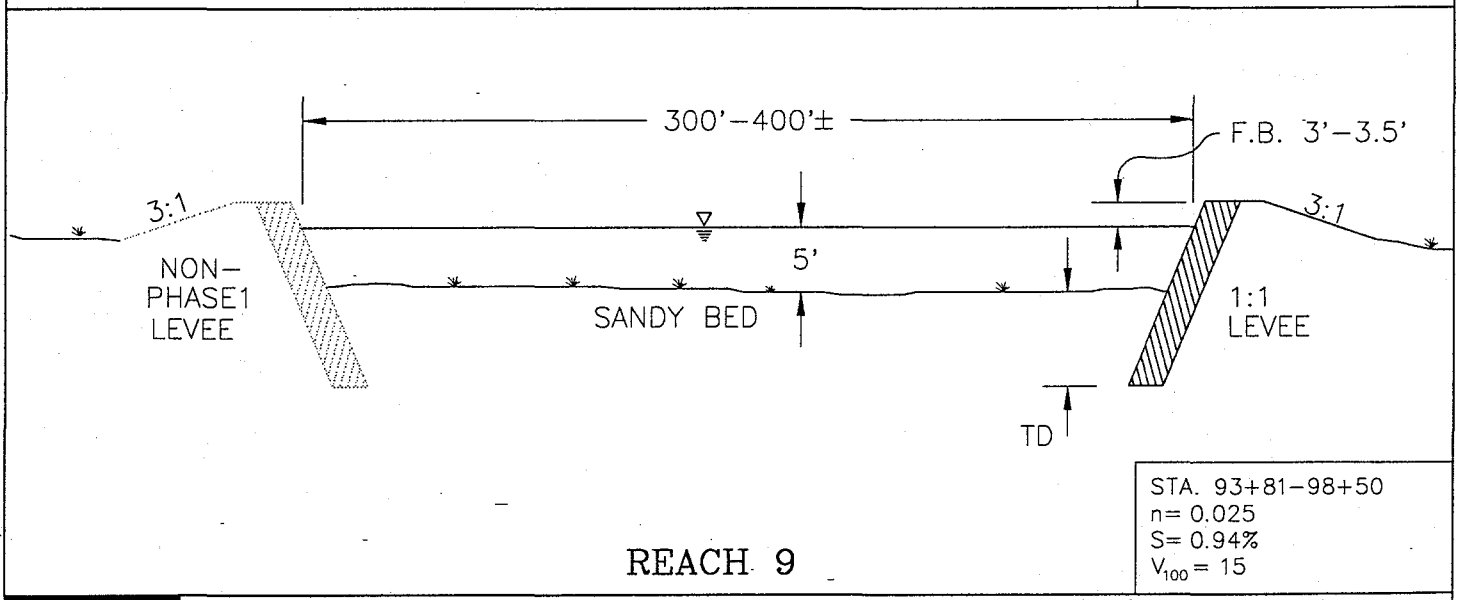

The Desert Greenbelt
SCOTTSDALE ARIZONA

Reata Pass Wash
Typical Section Variations
Reaches 7 thru 9

- Sections look downstream
- Levees may be covered with fill and revegetated in areas.
- F.B.= Freeboard
- TD = Toedown

Not to Scale

Greiner

Figure 1.4

E10060102
P:\CADD\MIKE\RTYPHCX2.DWG
Scottsdale D.G.
E1PC38
A.L.
Mar. 18, 1996
07:53

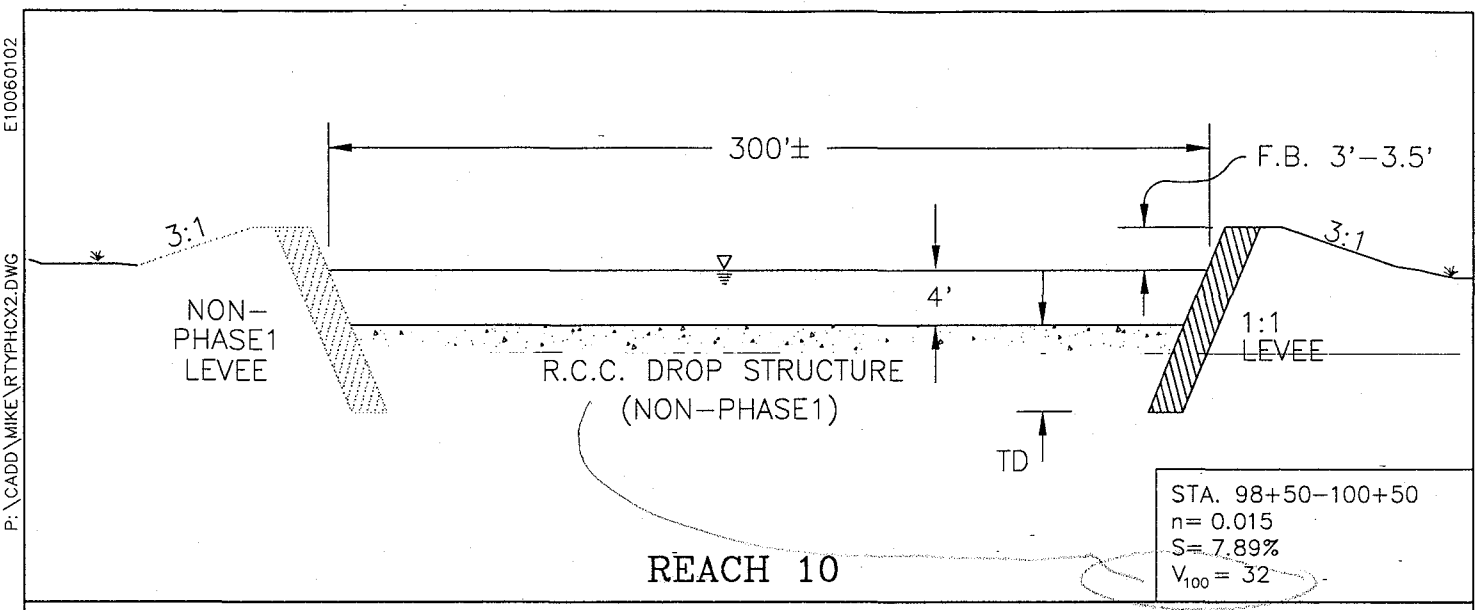

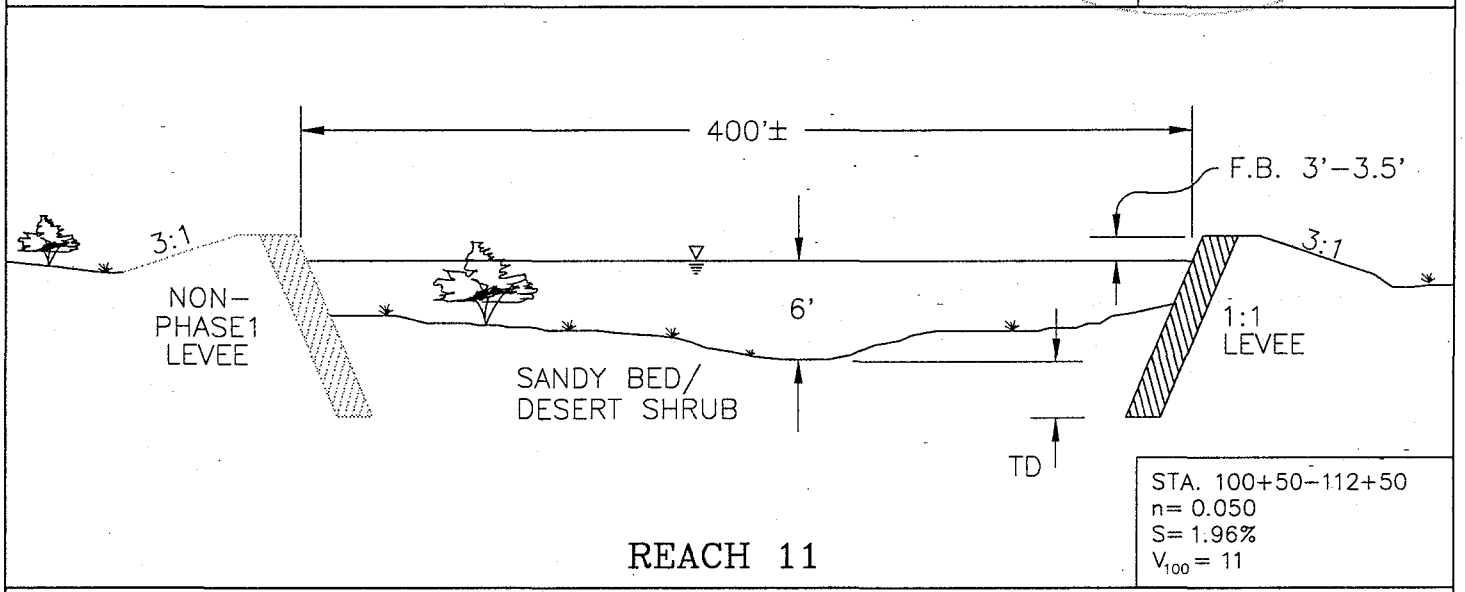

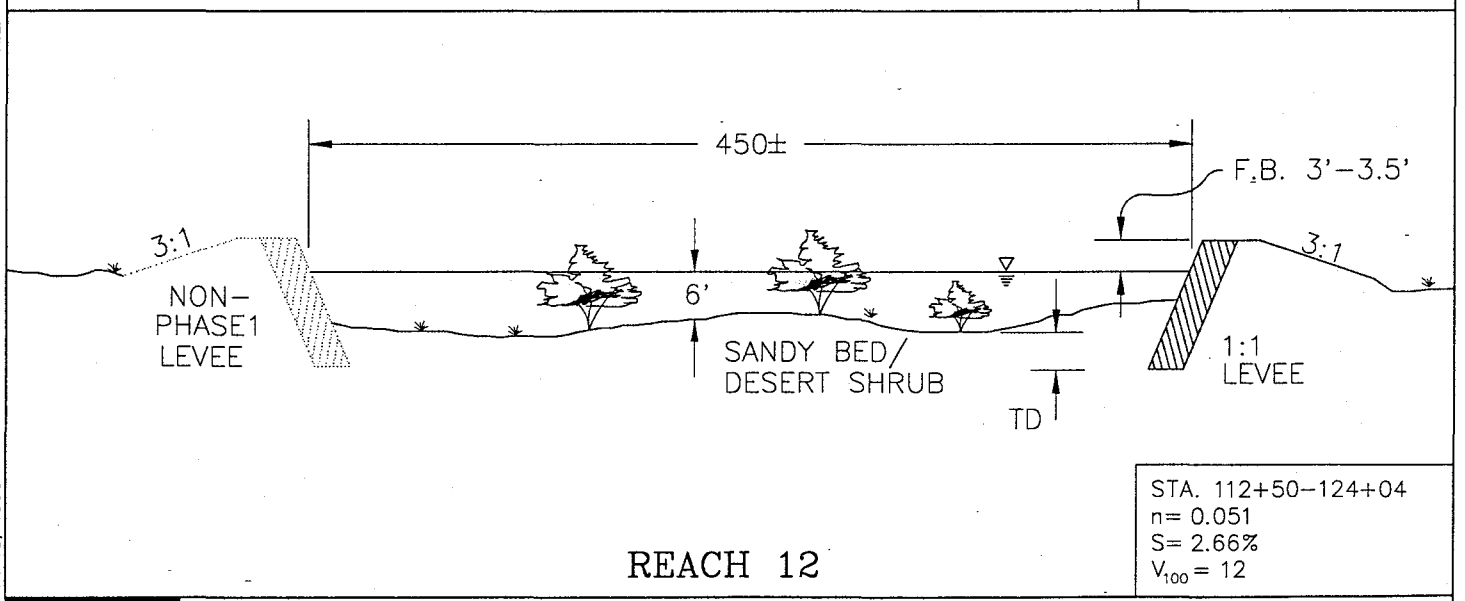

The Desert Greenbelt

Reata Pass Wash
Typical Section Variations
Reaches 10 thru 12

- Sections look downstream
- Levees may be covered with fill and revegetated in areas.
- F.B.= Freeboard
- TD = Toedown

Not to Scale

Greiner

Figure 1.4

E10060102
P:\CADD\MIKE\RTYPHCX2.DWG
Scottsdale D.C.
E1PC38
A.L.
Mar. 18, 1996
07:53

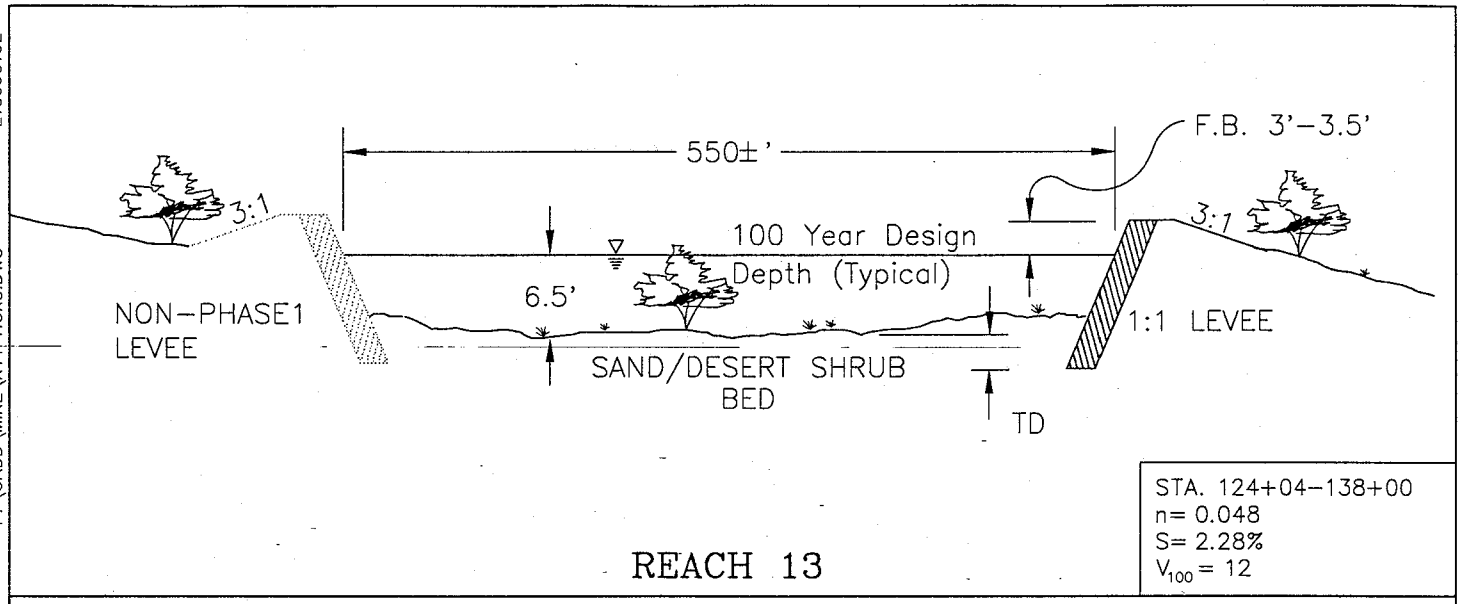

STA. 124+04–138+00
n= 0.048
S= 2.28%
V_{100} = 12

REACH 13

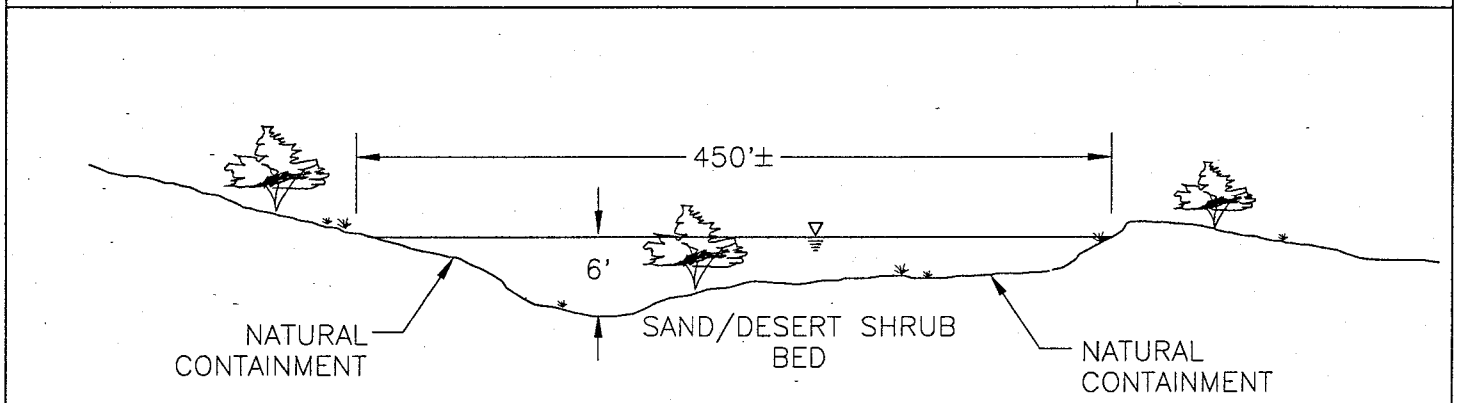

STA. 138+00–168+00
n= 0.048
S= 2.67%
V_{100} = 14

REACH 14

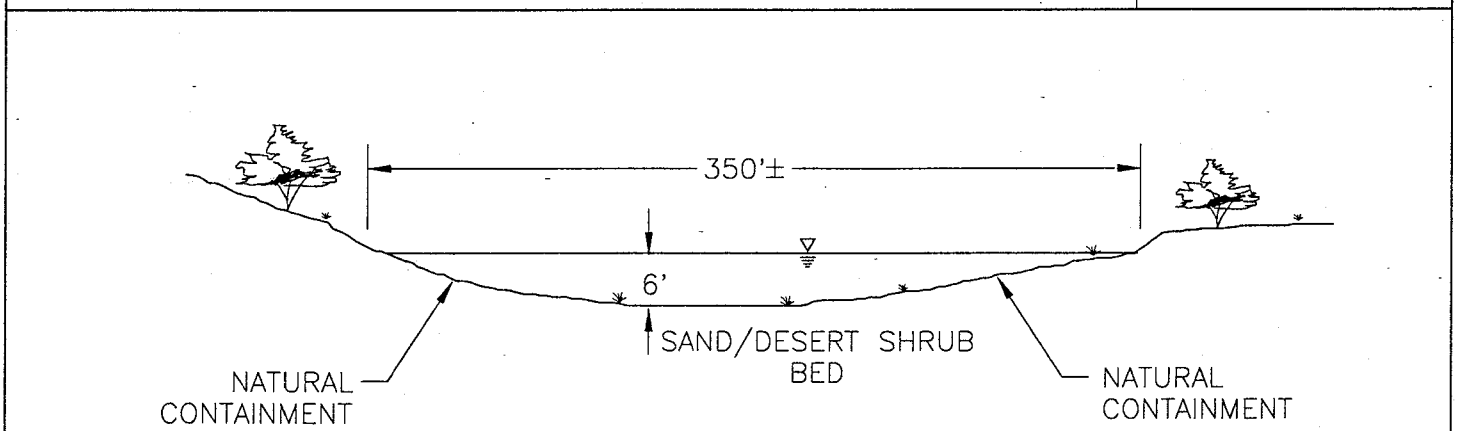

STA. 168+00–179+50
n= 0.050
S= 2.29%
V_{100} = 15

REACH 15

The Desert Greenbelt

Reata Pass Wash
Typical Section Variations
Reaches 13 thru 15

- Sections look downstream
- Levees may be covered with fill and revegetated in areas.
- F.B.= Freeboard
- TD = Toedown

Not to Scale

Greiner

Figure 1.4

E10060102
P:\CADD\MIKE\RTYPHCX3.DWG
Scottsdale D.G.
E1PC38
A.L.
Mar. 13, 1996
09:03

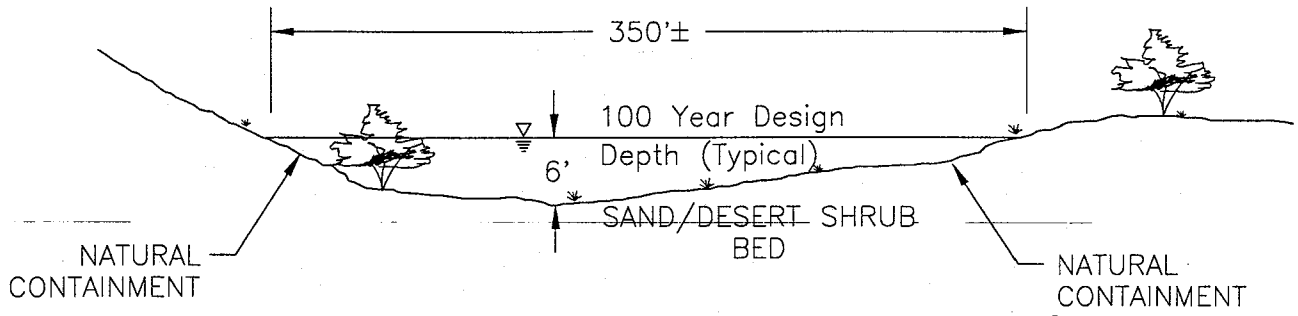

STA. 179+50–186+71
n= 0.050
S= 2.29%
V_{100} = 15

REACH 16

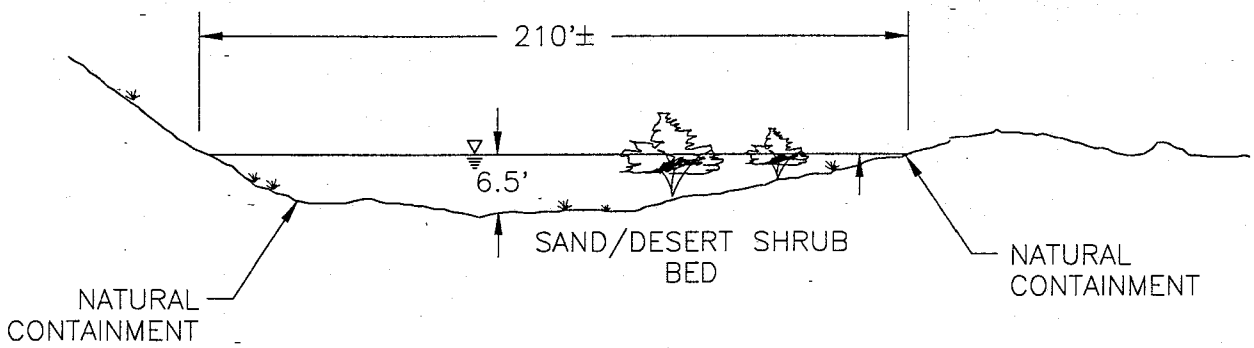

STA. 186+71–199+50
n= 0.047
S= 4.19%
V_{100} = 18

REACH 17

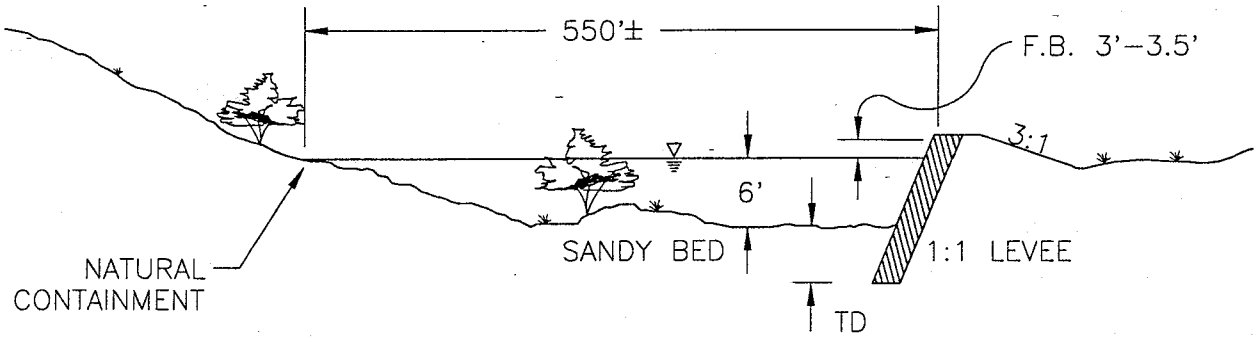

STA. 199+50–214+67
n= 0.044
S= 3.35%
V_{100} = 17

REACH 18

- Sections look downstream
- Levees may be covered with fill and revegetated in areas.
- F.B.= Freeboard
- TD = Toedown

Not to Scale

The Desert Greenbelt

Reata Pass Wash
Typical Section Variations
Reaches 16 thru 18

Greiner

Figure 1.4

E10060102 P:\CADD\MIKE\RTYPHCX3.DWG Scottsdale D.G. E1PC38 A.L. Mar. 13, 1996 09:03

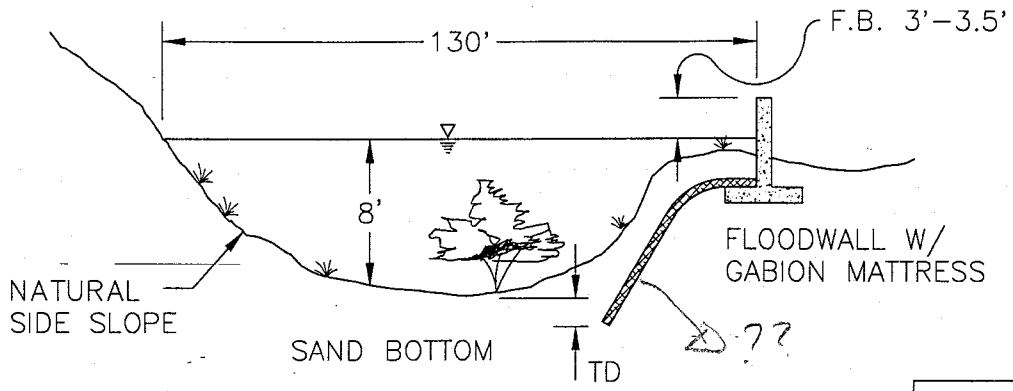

STA. 214+67–229+08
n= 0.037
S= 2.45%
V_{100} = 19

REACH 19

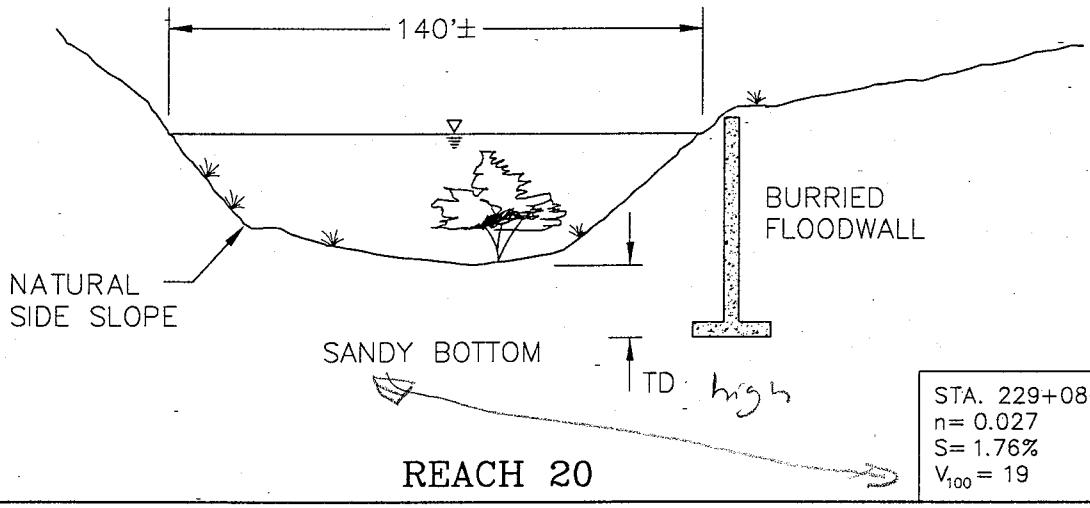

STA. 229+08–232+50
n= 0.027
S= 1.76%
V_{100} = 19

REACH 20

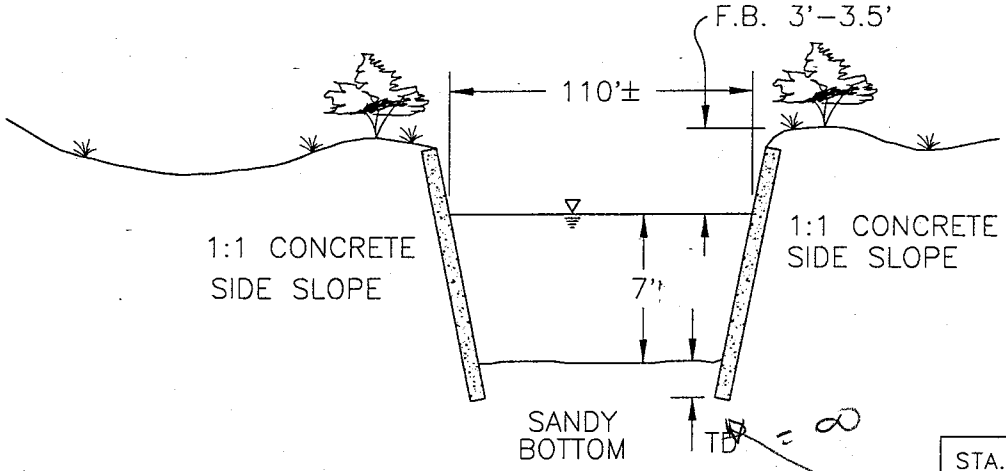

STA. 232+50–240+78
n= 0.022
S= 3.39%
V_{100} = 29

REACH 21

- Sections look downstream
- Levees may be covered with fill and revegetated in areas.
- F.B.= Freeboard
- TD = Toedown

Not to Scale

The Desert Greenbelt

Reata Pass Wash
Typical Section Variations
Reaches 19 thru 21

Greiner

Figure 1.4

E10060102 P:\CADD\MIKE\RTYPHCX4.DWG Scottsdale D.G. E1PC38 A.L. Mar. 18, 1996 09:07

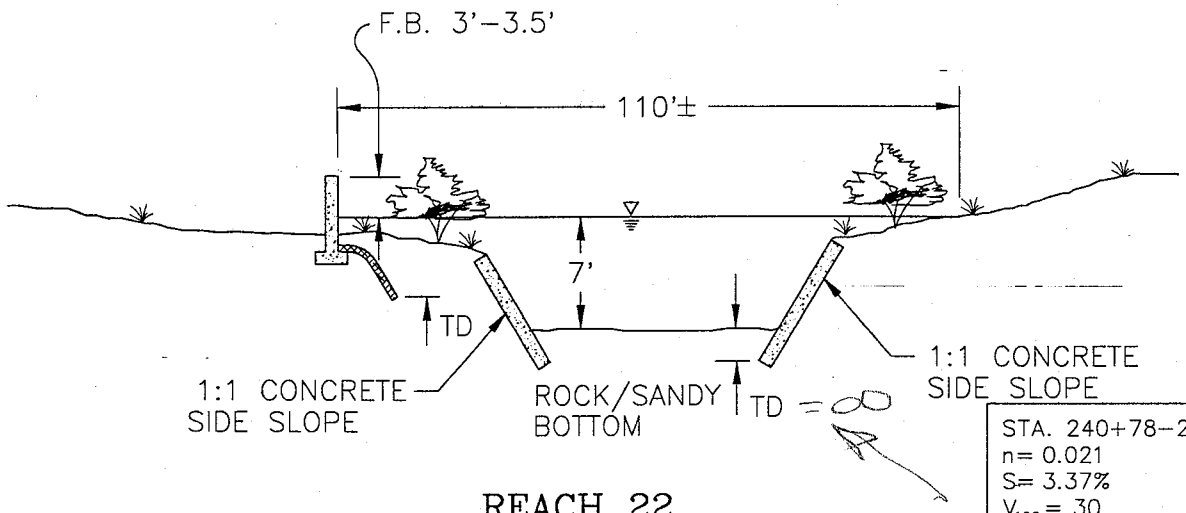

STA. 240+78–244+00
n= 0.021
S= 3.37%
V_{100} = 30

REACH 22

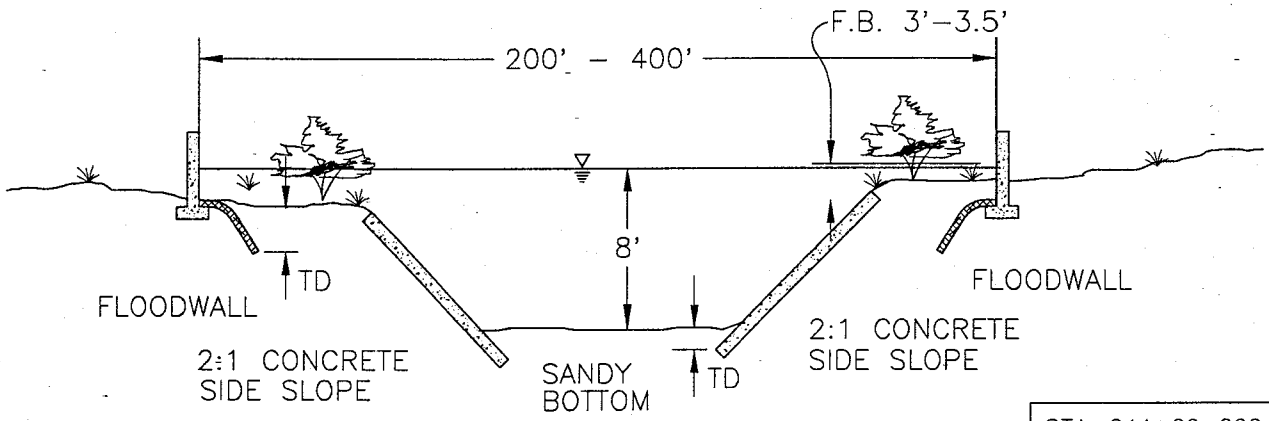

STA. 244+00–260+00
n= 0.021
S= 3.37%
V_{100} = 32

REACH 23

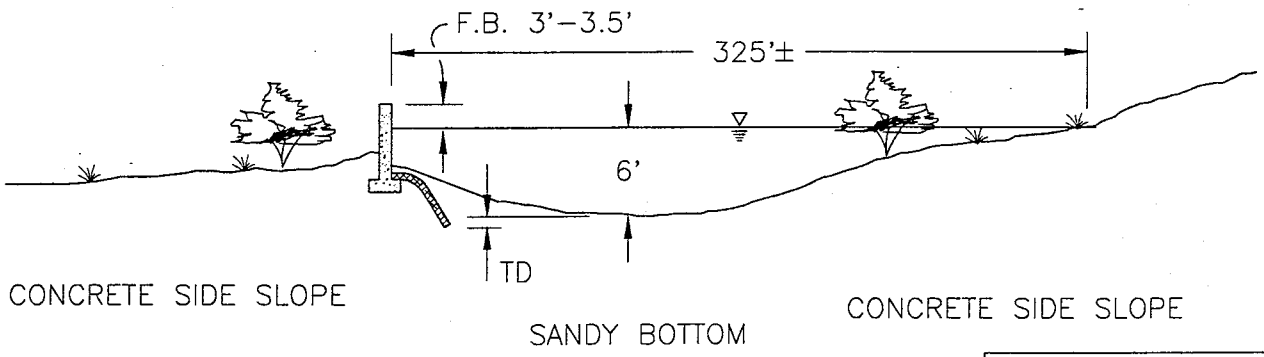

STA. 260+00–269+59
n= 0.039
S= 2.73%
V_{100} = 14

REACH 24

The Desert Greenbelt

Reata Pass Wash
Typical Section Variations
Reaches 22 thru 24

- Sections look downstream
- Levees may be covered with fill and revegetated in areas.
- F.B.= Freeboard
- TD = Toedown

Not to Scale

Greiner

Figure 1.4

E10060102 P:\CADD\MIKE\RTYPHCX4.DWG Scottsdale D.G. E1PC38 A.L. Mar. 18, 1996 09:07

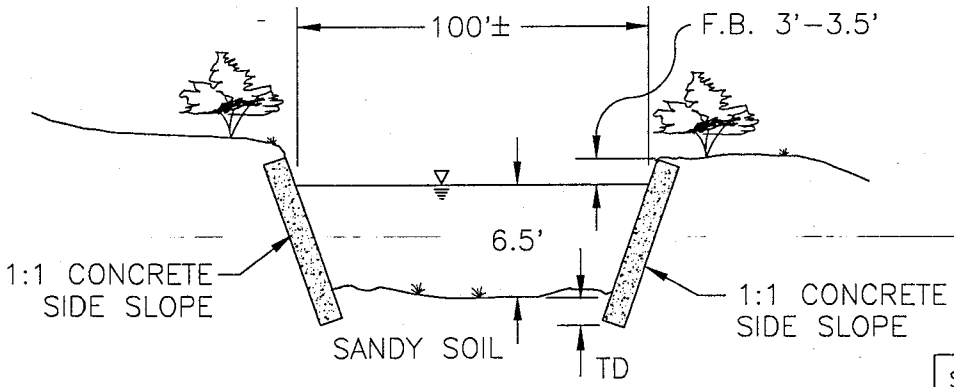

STA. 269+59–273+19
n= 0.025
S= 2.47%
V_{100} = 19

REACH 25

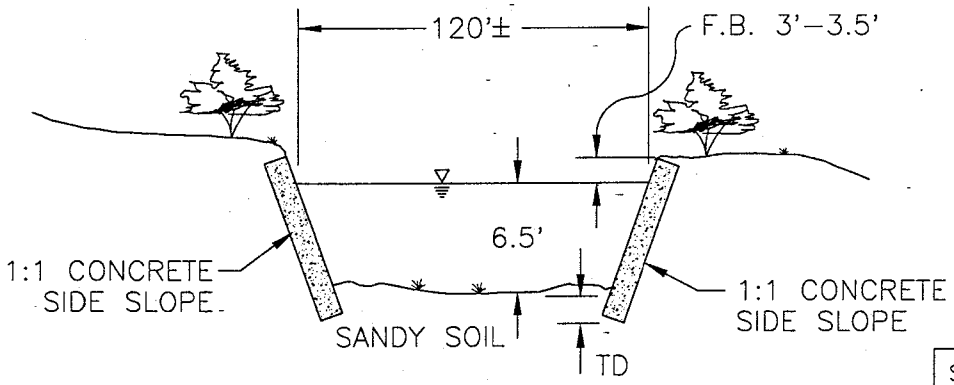

STA. 273+19–277+50
n= 0.00.03
S= 3.3%
V_{100} = 22

REACH 26

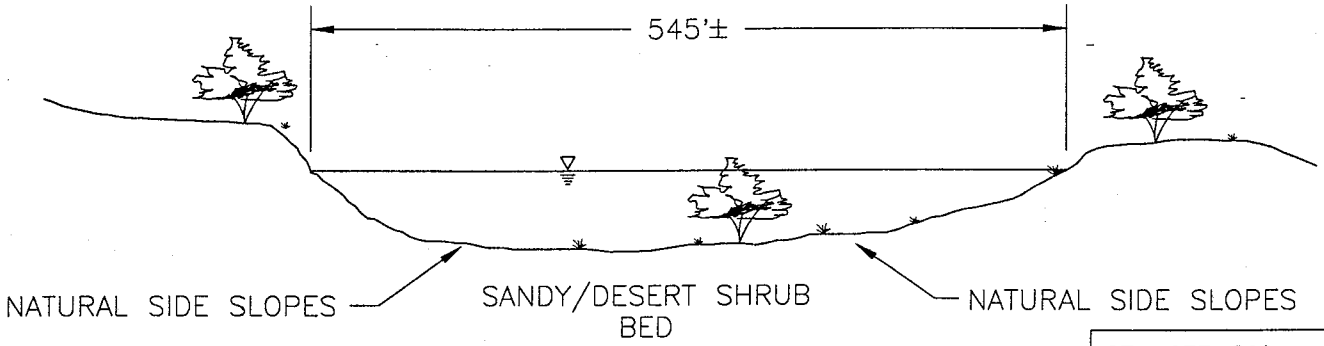

STA. 277+500 +
n= 0.035
S= 2.7%
V_{100} = 12

REACH 27

The Desert Greenbelt

Reata Pass Wash
Typical Section Variations
Reach 25 through 27

- Sections look downstream
- Levees may be covered with fill and revegetated in areas.
- F.B.= Freeboard
- TD = Toedown

Not to Scale

Greiner

Figure 1.4

E10060102
P:\CADD\MIKE\RTYPHCX5.DWG
Scottsdale D.G.
E1PC38
A.L.
Mar. 18, 1996
09:18

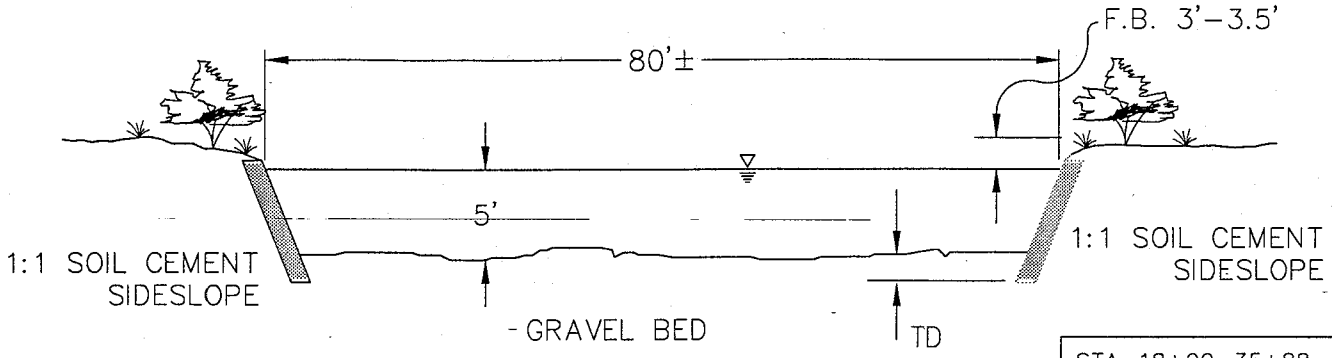

STA. 18+00–35+88
n= 0.030
S= 2.72%
V_{100} = 19

REACH 1

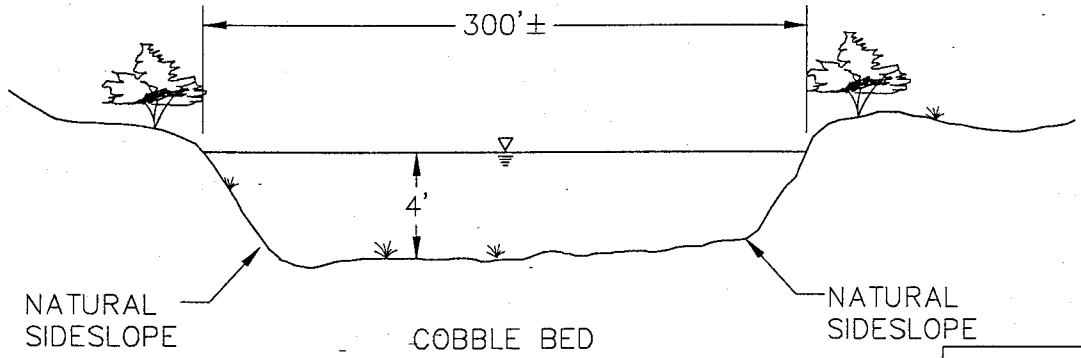

STA. 35+88–54+93
n= 0.053
S= 3.01%
V_{100} = 8

REACH 2

E10060102
P:\CADD\MIKE\NBTYHCX1.DWG
Scottsdale D.G.
E1PC38
A.L.
Mar. 18, 1996
10:22

The Desert Greenbelt
SCOTTSDALE ARIZONA

North Beardsley Wash
Typical Section Variations
Reaches 1 and 2

- Sections look downstream
- Levees may be covered with fill and revegetated in areas.
- F.B.= Freeboard
- TD = Toedown

Not to Scale

Greiner

Figure 1.4

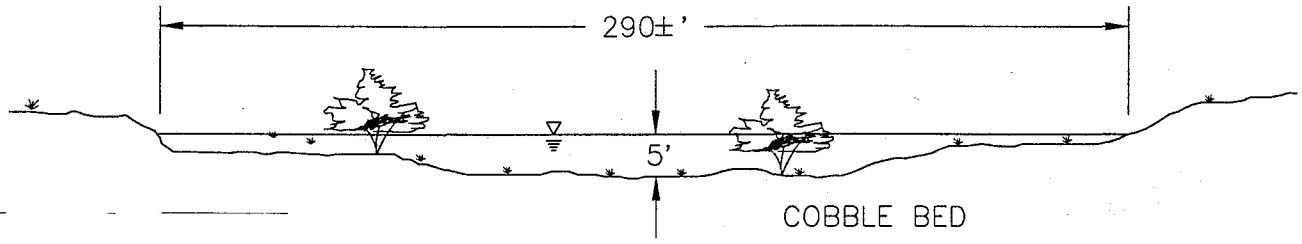

STA. 100+00–170+60
n= 0.045
S= 1.73%
V_{100} = 10

REACH 1

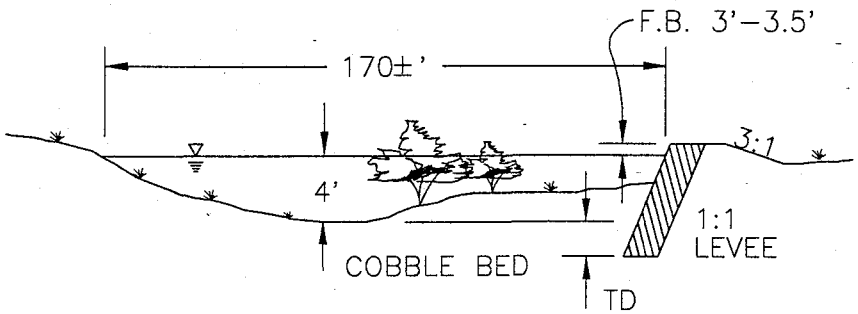

STA. 170+60–200+00
n= 0.049
S= 3.60%
V_{100} = 12

REACH 2

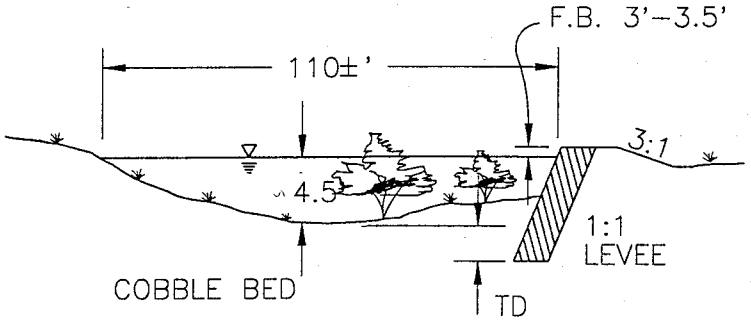

STA. 200+00–255+70
n= 0.050
S= 4.54%
V_{100} = 14

REACH 3

- Sections look downstream
- Levees may be covered with fill and revegetated in areas.
- F.B.= Freeboard
- TD = Toedown

Not to Scale

The Desert Greenbelt

South Beardsley Wash
Typical Section Variations
Reaches 1 thru 3

Greiner

Figure 1.4

E10060102 P:\CADD\MIKE\SBTYHCX1.DWG Scottsdale D.C. E1PC38 A.L. Mar. 18, 1996 10:11

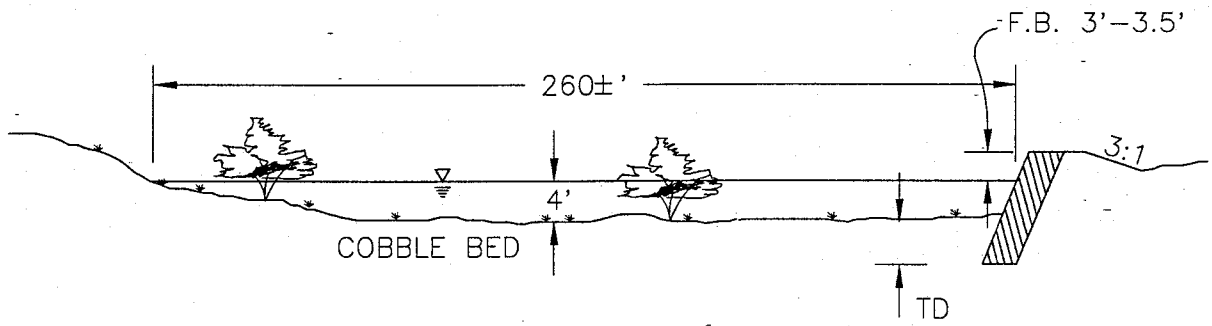

STA. 255+70–290+00
n= 0.051
S= 4.54%
V_{100} = 11

REACH 4

- Sections look downstream
- Levees may be covered with fill and revegetated in areas.
- F.B.= Freeboard
- TD = Toedown

Not to Scale

The Desert Greenbelt

South Beardsley Wash
Typical Section Variations
Reach 4

Greiner

Figure 1.4

E10060102 P:\CADD\MIKE\SBTYHCX1.DWG Scottsdale D.G. E1PC38 A.L. Mar. 18, 1996 10:11

Table 1.1
Reach Hydraulic and Design Parameters

Reach Number	Station to Station	100-Year Flowrate (cfs)	Design Thalweg Flow Depth (ft)	Design Velocity (fps)	Average Froude Number	Composite Manning's n-value	Channel Slope (ft/ft)	Gradation Coefficient	Sediment d_{50} (mm)	Overall Bottom Width (ft)	Cut Channel Bottom Width (ft)	Containment Slope Material	Containment Side Slope (H:V)	Cut Channel Slope Material	Cut Channel Side Slope (H:V)	Levee/Floodwall Average Height (ft)
Reata Pass																
1	0+00- 10+06	15,265	10.0	8	0.5	0.030	0.0035	8.20	6.35	140	140	N/A	N/A	Concrete (1)	3:1	N/A
2	10+06- 12+50	15,265	7.0	19	1.9	0.030	0.0187	3.25	6.40	140	140	N/A	N/A	Concrete (1)	3:1	N/A
3	12+50- 21+50	15,265	7.0	19	1.6	0.030	0.0187	3.25	6.40	140	140	Soil Cement	1:1 Levee	Concrete (1)	1:1	3
4	21+50- 25+00	15,265	7.0	14	1.1	0.044	0.0187	3.25	6.40	360	120	Soil Cement	1:1 Levee	Concrete (1)	1:1	4
5	25+00- 45+85	15,265	6.5	12	0.7	0.050	0.0177	12.56	0.88	445	N/A	Soil Cement	1:1 Levee	N/A	N/A	5
6	45+85- 56+00	12,814	7.0	12	1.3	0.042	0.0177	12.56	0.88	495	N/A	Soil Cement	1:1 Levee	N/A	N/A	5
7	56+00- 68+00	12,814	6.0	12	1.1	0.044	0.0196	12.56	0.88	545	15 (2)	Soil Cement	1:1 Levee	Earth	3:1	6
8	68+00- 93+81	12,814	6.0	12	0.9	0.049	0.0196	8.82	0.59	445	15 (2)	Soil Cement	1:1 Levee	Earth	3:1	6
9	93+81- 98+50	12,814	5.0	15	1.6	0.025	0.0094	10.80	1.03	395	280	Soil Cement	1:1 Levee	Concrete	1:1	7
10	98+50-100+50	12,814	4.0	32	2.9	0.015	0.0789	10.80	1.03	280	280	Soil Cement	1:1 Levee	Concrete	1:1	6
11	100+50-112+50	12,814	6.0	11	0.9	0.050	0.0196	10.80	1.03	445	N/A	Soil Cement	1:1 Levee	N/A	N/A	7
12	112+50-124+04	12,814	6.0	12	1.1	0.051	0.0266	3.42	2.00	545	N/A	Soil Cement	1:1 Levee	N/A	N/A	7
13	124+04-138+00	12,814	6.5	12	0.9	0.048	0.0228	3.84	1.90	545	N/A	Soil Cement	1:1 Levee	N/A	N/A	6
14	138+00-168+00	12,814	6.0	14	1.2	0.048	0.0267	6.16	1.90	430	N/A	N/A	N/A	N/A	N/A	N/A
15	168+00-179+50	11,742	6.0	15	0.9	0.050	0.0229	6.16	1.90	330	N/A	N/A	N/A	N/A	N/A	N/A
16	179+50-186+71	11,742	6.0	15	1.2	0.050	0.0229	12.50	2.40	330	N/A	N/A	N/A	N/A	N/A	N/A
17	186+71-199+50	11,742	6.5	18	1.2	0.047	0.0419	3.94	2.30	190	N/A	N/A	N/A	N/A	N/A	N/A
18	199+50-214+67	11,742	6.0	17	1.4	0.044	0.0335	3.94	2.30	285	N/A	Soil Cement	1:1 Levee	N/A	N/A	5
19	214+67-229+08	11,742	8.0	19	1.5	0.037	0.0245	10.40	1.20	110	N/A	Concrete	Vert. Wall	N/A	N/A	4
20	229+08-232+50	11,742	8.0	19	1.9	0.027	0.0176	5.44	0.70	150	N/A	Concrete (3)	Vert. Wall	N/A	N/A	N/A
21	232+50-240+78	11,236	7.0	29	2.4	0.022	0.0339	5.44	0.70	100	100	N/A	N/A	Concrete	1:1	N/A
22	240+78-244+00	11,236	7.0	30	2.9	0.021	0.0370	5.09	1.00	100	100	Concrete	Vert. Wall	Concrete	1:1	2
23	244+00-260+00	11,236	8.0	32	2.5	0.021	0.0370	5.09	1.00	320	75	Concrete	Vert. Wall	Concrete	2:1	4
24	260+00-269+59	11,236	6.0	14	1.3	0.039	0.0273	12.69	1.00	280	N/A	Concrete (4)	Vert. Wall	N/A	N/A	4
25	269+59-273+19	11,236	6.5	19	1.6	0.025	0.0247	12.69	1.00	260	90	N/A	N/A	Concrete	2:1	N/A
26	273+19-277+50	11,236	6.5	22	1.6	0.030	0.0330	2.92	1.90	110	110	N/A	N/A	Concrete	2:1	N/A
27	277+50+	11,236	5.0	12	1.7	0.035	0.0270	2.92	1.90	525	N/A	N/A	N/A	N/A	N/A	N/A
North Beardsley																
1	18+00-35+88	3,477	5.0	19	2.6	0.025	0.0272	5.07	13.00	65	65	N/A	N/A	Concrete	1.5:1	N/A
2	35+88-54+93	3,477	4.0	8	1.1	0.053	0.0301	5.07	13.00	280	N/A	N/A	N/A	N/A	N/A	N/A
South Beardsley																
1	110+00-170+60	4,915	5.0	10	0.8	0.045	0.0173	6.88	11.00	280	N/A	N/A	N/A	N/A	N/A	N/A
2	170+60-200+00	3,800	4.0	12	1.2	0.049	0.0360	6.88	11.00	160	N/A	Soil Cement (5)	1:1 Levee	N/A	N/A	4
3	200+00-255+70	3,800	4.5	14	1.5	0.050	0.0459	6.84	12.00	100	N/A	Soil Cement (5)	1:1 Levee	N/A	N/A	4
4	255+70-266+84	3,800	4.0	11	1.3	0.051	0.0454	6.84	12.00	250	N/A	Soil Cement (5)	1:1 Levee	N/A	N/A	3

2.0 Hydrologic and Hydraulic Analysis Methodology

2.1 HEC-1 Hydrologic Modeling

The selection of the design model was revised from the CLOMR due to FEMA's concern regarding the inflow of floodwaters into the upstream ends of North and South Beardsley Washes. The CLOMR used Model REAT3 for the design flow of North Beardsley and Reata Wash.

Two natural diversions occur within the upper South Beardsley Wash. In existing conditions, one-third of the flow from sub-basin 2070 enters sub-basin 2065, while the remaining two-thirds continue into sub-basin 2130 (see Figure 2.1). At the outlet of sub-basin 2130, currently a small amount of flow diverts into sub-basin 2080B during larger flood events, while the main portion of flow enters sub-basin 2135. Model REAT3 simulates both diversions and routes flows along the proposed Greenbelt channels.

Model REAT3 presumes that flow which breaks out from South Beardsley Wash at sub-basin 2070 and travels into sub-basin 2065 is all naturally conveyed into the upstream end of North Beardsley. In reality, some of this break-out flow has the potential of heading to the west, thus never entering North Beardsley Wash. In order to contain this break-out and eliminate potential flooding to the west, a short levee is now proposed on the north side of the upstream end of South Beardsley Wash (see addendum 10-Percent Plan Sheets SB7 and SB 8). Model REAT3A simulates the total flow containment within South Beardsley Wash resulting from this proposed levee.

The final model chosen for design purposes on all channels is Model REATA3A. This model cuts off both of the existing natural diversions with proposed levees and forces all flows into South Beardsley Wash (sub-basin 2070 into 2130, and sub-basin 2130 into 2135). North Beardsley Wash and Reata Wash below the confluence with North Beardsley use the results of Model REAT3A under the condition that the diversion cut-off levees are in place and that the east Reata levee is not constructed prior to these cut-off levees being installed as discussed in Section 1.5. Table 2.1 provides peak flow information for Model REAT3A.

2.2 HEC-2 / HEC-RAS Hydraulic Modeling

2.2.1 Revisions to Models

The original hydraulic model for the CLOMR was developed using the HEC-2 program. HEC-2 has still been used as the base model for cross-section assembly, however, HEC-RAS has now been used to produce the final water surface profiles for the Reata Pass / Beardsley Wash system. The cross-sections have been completely revised for the main Reata channel since the original CLOMR submittal. The cross-sections for the North and South Beardsley Washes have not been changed from the original model, however, South Beardsley has been extended further upstream to incorporate the new levee mentioned in Section 2.1. On the main Reata channel, new cross-sections were located perpendicular to the flowline at 150-foot spacing beginning at station 0+00, located at the outlet in Westworld, and proceeding upstream to station 316+50, north of Pinnacle Peak Road. These cross-sections are identified by station numbers as shown on the construction plans, while North and South Beardsley have retained their original numbering system. The new

cross-sections reflect the 60-Percent Phase I Plans including the four major design revisions described in Section 1.6.

Table 2.1
100-Year Peak Flows

HEC-1 Concentration Point*	***Wash Location***	***HEC-1 Model REAT3A Future Conditions (cfs)***
C42	North Reata Tributary (north of Pinnacle Peak Road)	5,480
C47.1	Main Reata Tributary (northeast of Pinnacle Peak Road)	5,776
C50	Upper Reata Downstream from Tributaries	11,236
C2000	Reata Downstream from Local Inflow	11,742
C2060.4	Reata Downstream from confluence with North Beardsley	12,814
C2160A	Reata Downstream from confluence with South Beardsley	15,265
C2060.1	North Beardsley	3,477
C2140B	South Beardsley Upstream of Thompson Peak Parkway	3,800
C2160B	South Beardsley Downstream of Thompson Peak Parkway (Local Inflows)	4,915

* see Figure 2.2

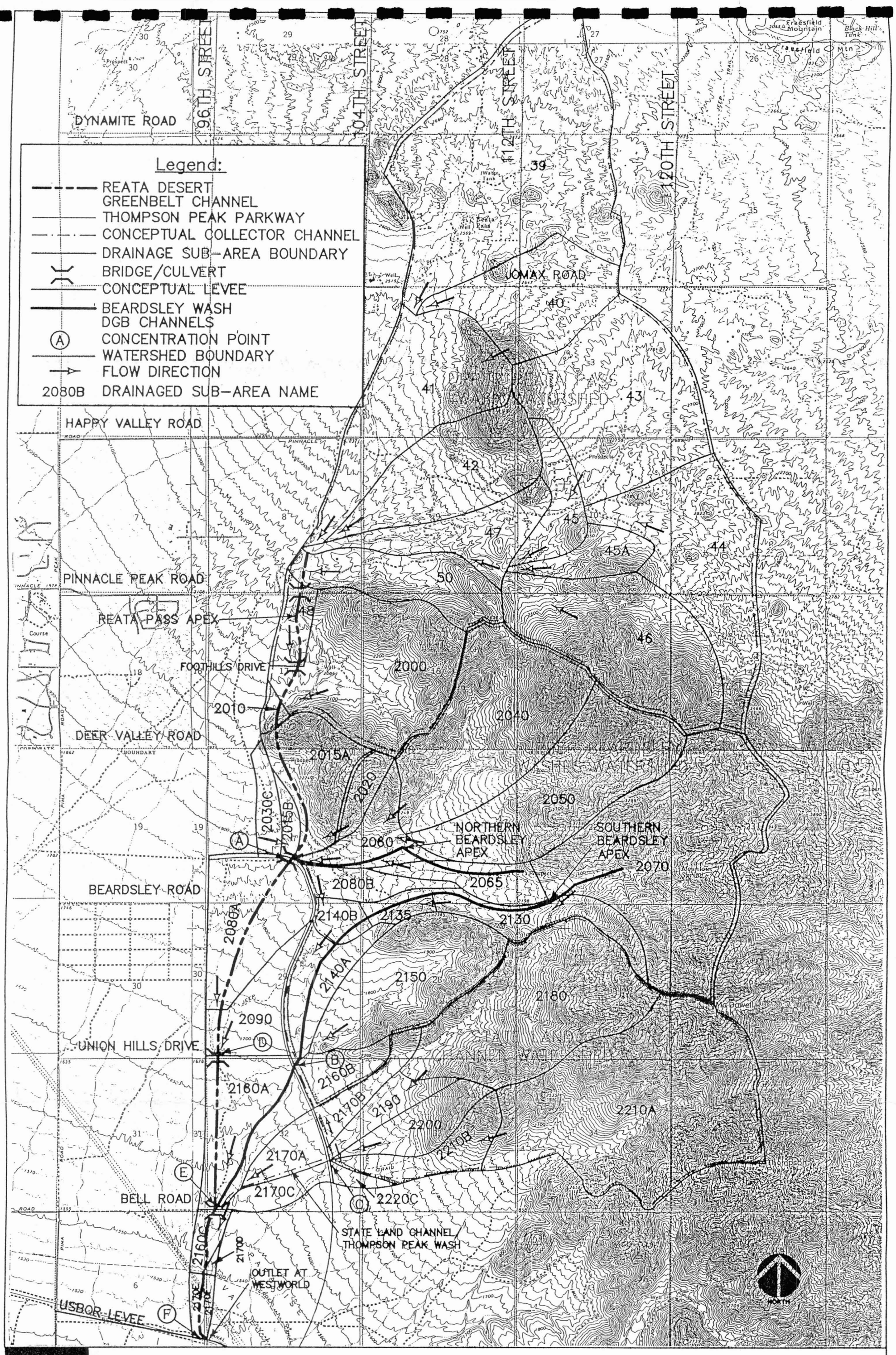

Reata Pass/Beardsley Washes
Drainage Area Map
Overall View

The Desert Greenbelt

Greiner

1"=3000'

Figure 2.1

The updated HEC-2 cross-sections were used to establish the HEC-RAS and HEC-6 models. Bridges were added into the HEC-RAS models at Pinnacle Peak Road, Foothills Drive and Bell Road. Bridges for Union Hills Drive and Thompson Peak Parkway are not modeled since their location and configuration have yet to be determined. Since Union Hills Drive does not have natural containment, as Thompson Peak Parkway does, a future drop structure and downstream excavated channel have been modeled for conveyance under the future bridge to determine their impact to the design of the Phase I levees. Alternate cross-sections from the HEC-2 model were not used in the HEC-6 model because the HEC-6 program is limited to a maximum of 150 cross-sections. The HEC-6 cross-sections were modified at each modeled bridge section, using GR data to simulated bridge piers and abutments.

2.2.2 Design Flows

The concentration points from the HEC-1 model REAT3A, at the locations listed in Table 2.1, have been used as the design 100-year peak flow rates for the water surface profile models. Figure 2.2 depicts the design flow variation throughout the model. The design flows were developed at major concentration points where large inflows occur.

2.2.3 Upstream Reaches

Cross-sections were located on each of the naturally contained washes located upstream of the proposed improvements. Sheets CRTA12 and CRTA13, CNB1 and CNB2, and CSB7 (see Appendix) display the flows modeled upstream of the proposed improvements on Reata Wash, North Beardsley Wash and South Beardsley Wash, respectively. The cross-section locations, and stations, within the proposed improvements are presented on the 60-Percent Phase I Plans. The locations of the cross-sections within the North Beardsley and the South Beardsley improvements are presented on the floodplain maps submitted as part of the original CLOMR package. The location of the newly proposed upstream levee on South Beardsley is shown on the addendum 10-Percent Plan Sheet SB7.

2.2.4 Modeling

Overbank stations were located at the outer edge of braided flow in wide sections. In narrow sections, for incised or excavated channels, the overbank stations have been defined as the top of bank. As described in the CLOMR Manning's Report and HEC-2 Report, the composite Manning's n-values for the channel and each overbank were determined from the weighted average of the horizontally varying Manning's n-values across the cross-section.

HEC-RAS models were run for subcritical, supercritical and mixed flow regimes. Water surface elevations from the HEC-RAS subcritical model, generally the critical flow depth since the system is primarily supercritical, and the maximum water surface elevations from the HEC-6 model were used as the design water surface elevation upon which the freeboard was added. The freeboard determination is discussed in detail in Section 6.2. The supercritical and mixed flow models were used to determine the design velocities and to identify areas of instability, such as areas susceptible to changing flow regimes and hydraulic jumps. The mixed flow model was also used to investigate the energy head in relation to freeboard. Results from the HEC-RAS models for each cross-section are shown in Appendix Table A.1 and the results for each reach are presented in Table 1.1 and Figure 1.4.

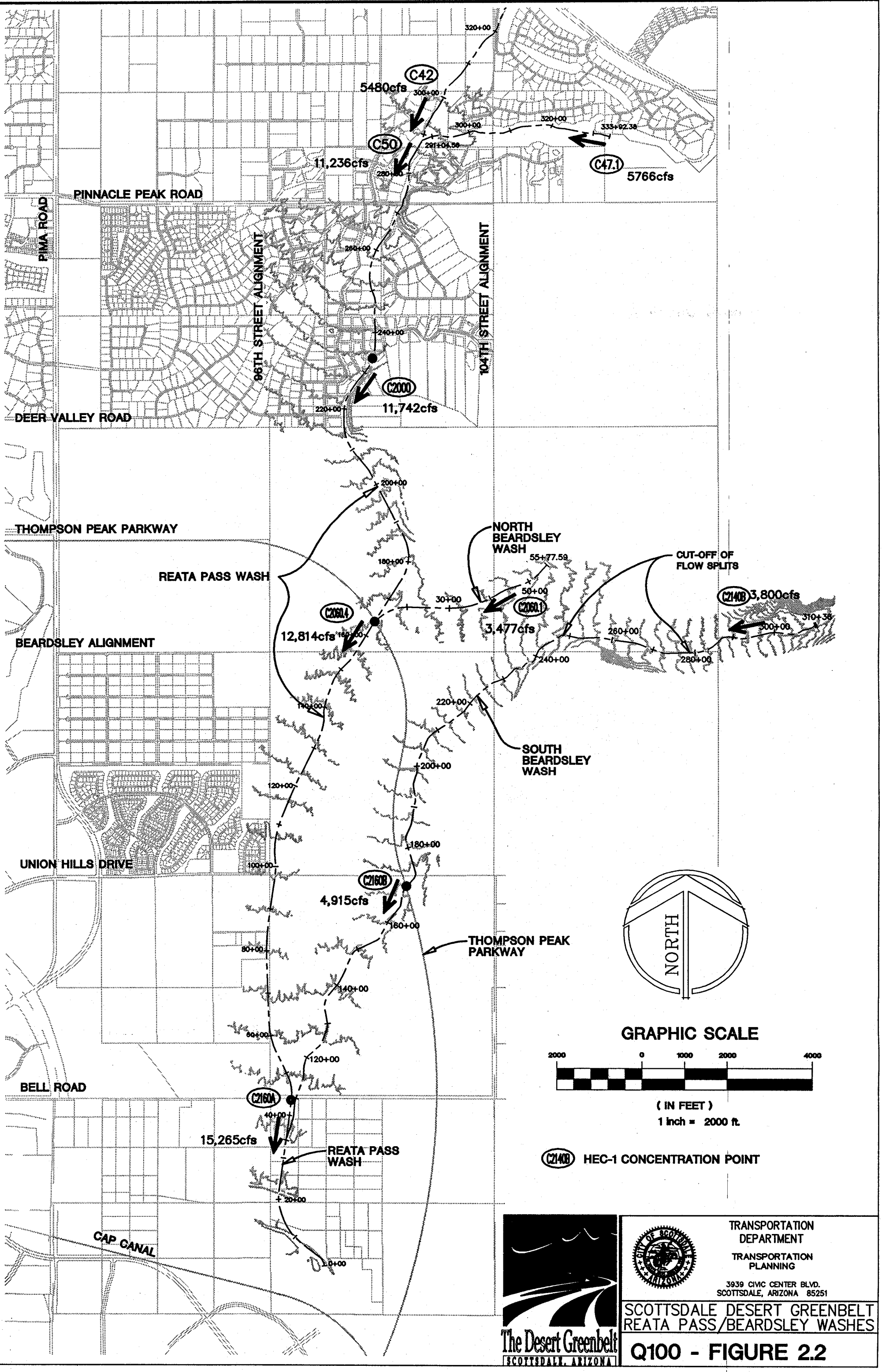
C42
5480cfs
C50
11,236cfs
C47.1
5766cfs
PINNACLE PEAK ROAD
PIMA ROAD
96TH STREET ALIGNMENT
104TH STREET ALIGNMENT
C2000
11,742cfs
DEER VALLEY ROAD
THOMPSON PEAK PARKWAY
NORTH BEARDSLEY WASH
CUT-OFF OF FLOW SPLITS
REATA PASS WASH
C2060.4
12,814cfs
C2060.1
3,477cfs
C2140B
3,800cfs
BEARDSLEY ALIGNMENT
SOUTH BEARDSLEY WASH
UNION HILLS DRIVE
C2160B
4,915cfs
THOMPSON PEAK PARKWAY
BELL ROAD
C2160A
15,265cfs
REATA PASS WASH
CAP CANAL
NORTH
GRAPHIC SCALE
2000 0 1000 2000 4000
(IN FEET)
1 inch = 2000 ft.
C2140B HEC-1 CONCENTRATION POINT
The Desert Greenbelt
SCOTTSDALE, ARIZONA
TRANSPORTATION DEPARTMENT
TRANSPORTATION PLANNING
3939 CIVIC CENTER BLVD.
SCOTTSDALE, ARIZONA 85251
SCOTTSDALE DESERT GREENBELT
REATA PASS/BEARDSLEY WASHES
Q100 - FIGURE 2.2

2.2.5 Existing Versus Future Conditions

Future conditions have been used to determine the design flow rates of the Reata/ Beardsley system. The design flowrates were obtained from the HEC-1 model REAT3A as mentioned in Section 2.1. Since growth is occurring so rapidly in North Scottsdale, the City feels it must design for estimated future conditions.

While the resultant water surface elevations from the future conditions model are greater than the resultant water surface elevations from the existing conditions model (REAT1), the differences between the two are minimal. The maximum difference between the resultant water surface elevations throughout the system is less than 1.0 feet, while the typical difference is generally less than 0.5 feet. The minimal increase of the flow depth is mainly attributed to the typically large cross-sectional widths associated with the Desert Greenbelt system.

2.3 HEC-6 Sedimentation Calibration and Modeling

2.3.1 Introduction and Modeling Revisions

The original CLOMR package contained models using the US Army Corps of Engineers' HEC-6 — *Scour and Deposition in Rivers and Reservoirs* (Version 4.0, June 1991) to identify the sediment transport characteristics of the Scottsdale Desert Greenbelt's Reata Pass and Beardsley Washes. Updated HEC-6 models have been prepared on the most current version of the program (Version 4.1, August 1993) and are included with the report. This section documents the approaches, assumptions and methodology used to develop the HEC-6 model and describes the varying effects of the many parameters associated with the models. Due to the limitations of the HEC-6 program, South Beardsley Wash was modeled separately from the Reata Pass Wash and was included in the Reata Pass Wash model as a local inflow concentration point.

Nine models were initially developed for the original CLOMR using the various sediment transport relationships provided by the HEC-6 program (Version 4.0, June 1991). A singular model was developed for each of the nine following relationships:

Toffaleti (1966)
Madden's (1963) Modification of Laursen (1958)
Yang's (1973) Streampower for Sands
DuBoy's (Vanoni 1975)
Ackers-White (1973)
Toffaleti and Schoklitsch (1930) Combination
Meyer-Peter and Müller (1948)
Toffaleti and Meyer-Peter and Müller Combination
Madden's (1985, unpublished) Modification of Laursen (1958) Relationship

A statistical analysis was performed on the results of the nine models. The single best model of the nine for the Reata / Beardsley Washes was selected from a statistical analysis in which the models were compared to input testing criteria. ***Yang's Streampower Relationship for Sands best met the testing criteria and was chosen for the final model.*** The testing criteria, assumptions and approximations established by the Desert Greenbelt design team for the statistical analysis are discussed in detail in Section 2.3.7 of this report.

As part of the current Phase I Design, the initial HEC-6 model has been updated to incorporate additional information and input parameters for the model. An extensive geotechnical testing program was performed by AGRA Earth and Environmental, Inc., for the Desert Greenbelt Project to supplement the original sediment analysis report included in the CLOMR submittal. Additional gradation analyses were performed as part of the testing program at numerous locations along the channel centerline and on the overbanks of the Reata Pass Wash which are included in the updated model (see Appendix for gradation test results). Also, the new cross-sections for the Reata Pass Wash, as mentioned in Section 2.2.1, were included in the revised HEC-6 model. To accommodate the limitations of the HEC-6 program, alternate cross-sections were deleted to meet the maximum 150 cross-section count. To address the concerns of several reviewers, an equal spacing of 300 feet between cross-sections was used wherever possible. The spacing was adjusted at unique locations, such as bridges and drop structures, to ensure the structures were accounted for in the model.

Four new, unique HEC-6 models were developed to reflect the updated conditions based on the 60-Percent Phase I Plans. The South Beardsley Wash geometry has been extended further upstream but is still modeled separately from the Reata Pass Wash model where it is included as a local inflow concentration point. Each model was developed using HEC-6 (Version 4.1, August 1993) for the following sediment transport relationships:

Yang's (1973) Streampower for Sands
Ackers-White (1973)
Madden's (1985, unpublished) Modification of Laursen (1958) Relationship
Copeland's (1990) Modification of Laursen's Relationship (Copeland and Thomas, 1989)

Based on the initial statistical analyses performed for the original CLOMR submittal, three of the nine investigated methods were selected for the updated modeling. These three methods were also selected based on their comparability and on testing criteria to be described. In addition to these three, the Copeland model was also selected because it is a new method provided in the HEC-6 Version 4.1 program. Once again, the results from these four, updated condition models demonstrate the Yang's Streampower Relationship for Sands was the best at meeting the testing criteria established for the statistical analysis as discussed in detail in Section 2.3.7.

2.3.2 Hydrology

The input hydrographs used for the HEC-6 models of varying storm frequencies were based on the resultant hydrographs from the HEC-1 model for the Reata Pass / Beardsley Washes (HEC-1 Model REAT3A). However, because of the differences between the two programs in the way each establishes and uses the storm hydrographs, the HEC-1 output hydrographs often required a time phase adjustment for the HEC-6 application. The HEC-1 program establishes the hydrograph for each tributary based on the beginning of the storm event and routes the hydrograph through the main wash. The hydrograph used by the HEC-6 program is based on an instantaneous time step and a combination of the contributing tributary hydrographs.

The following example is best used to describe the adjustment of the HEC-1 hydrographs for application in the HEC-6 model. The HEC-1 program may calculate the occurrence of the peak flow within an upstream tributary of the main wash at, say, the sixth hour of the storm event. Likewise, the HEC-1 program may also establish the occurrence of the peak flow at the sixth hour of the storm event for a tributary located further downstream along the main wash. The HEC-1 program

routes the flow from the upstream tributary through the main channel to the confluence with the downstream tributary. The resulting hydrograph for the main channel downstream from the confluence will reflect the attenuation of the flow routing from the upstream tributary to the downstream tributary. The peak flow for the main channel will generally be less than the sum of the peak flows for the contributing tributaries, and the occurrence of the peak flow within the main channel will generally be later in the storm event than the tributary peak flows.

The input hydrograph for the HEC-6 program begins at the furthest downstream section of the main channel, which also has the greatest flow rate, and proceeds upstream along the main channel. The hydrographs from the contributing tributaries are subtracted from the main channel hydrograph at the appropriate confluence points. Since the peak flow within the main channel will not occur simultaneously with the peak flows of the tributaries, the time phasing of the contributing hydrographs must be synthetically adjusted for the HEC-6 program application. Adjusting the time phasing of the contributing hydrographs will ensure that the overall hydrograph for the main channel is consistent with the hydrograph of the main channel resulting from the HEC-1 program.

Figures 2.3 and 2.4 are used to present the time phase adjustment. Figure 2.3 represents the real-time hydrographs resulting from the HEC-1 model. The local flow, North Beardsley, South Beardsley and Upper Reata hydrographs represent the input hydrographs that were summed to develop the downstream HEC-6 input hydrograph. The downstream HEC-1 output hydrograph is from the same location as the HEC-6 input hydrograph. Ideally, these two hydrographs would be the same, but as shown on Figure 2.3, the HEC-6 hydrograph is quite different from the HEC-1 hydrograph. Figure 2.4 displays the phase adjusted hydrographs. The HEC-6 input hydrograph and the HEC-1 output hydrograph are quite similar. Some differences between the hydrographs still remain, but the differences are well within toleration.

Figure 2.3
Real-time Hydrographs

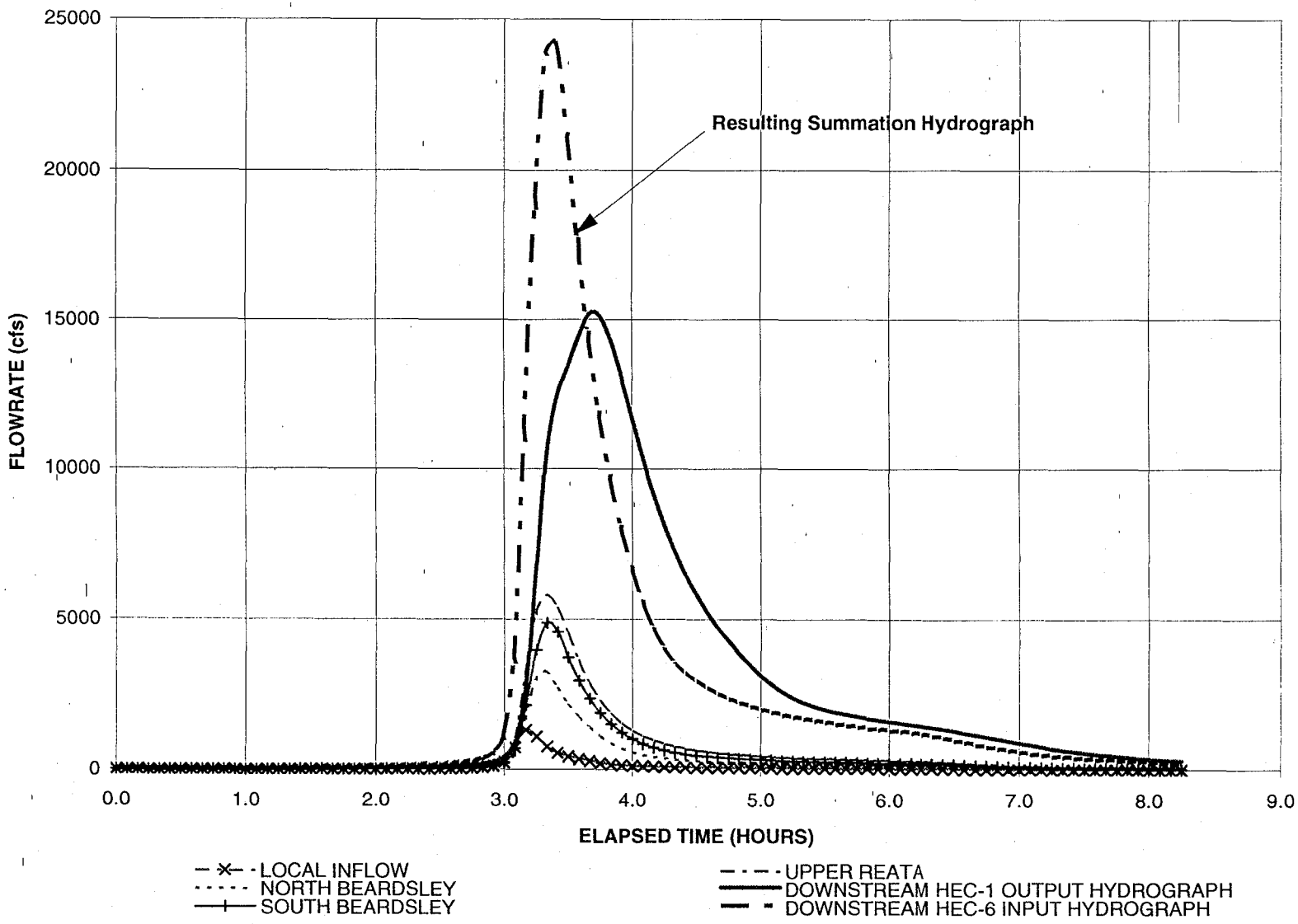

Figure 2.4
Real-time, Phase Adjusted Hydrographs

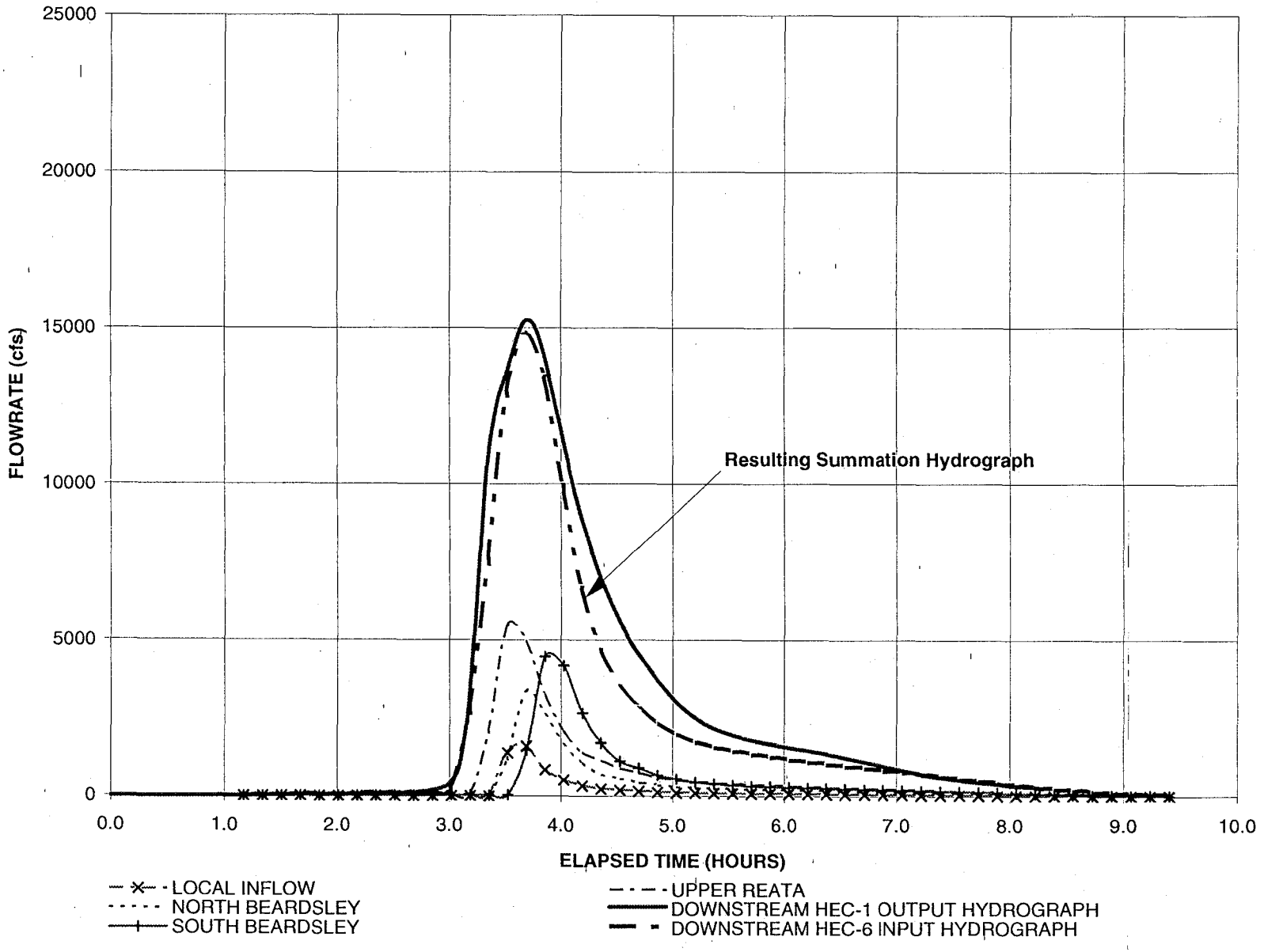

2.3.3 Geometric Setup

The geometric configuration used in the HEC-6 model for the Reata Pass Wash was obtained from the revised HEC-2 model cross-sections for the wash as described in Section 2.2. The HEC-2 geometry data were modified for compatibility with the HEC-6 program. The HEC-2 bridge and culvert cards were replaced in the HEC-6 model with ground data cards used to mimic the piers of bridges and box culverts.

The depth of the movable bed limits used for all erodible cross-sections was set to the HEC-6 program default value of 10 feet. The movable bed limits depth for all non-erodible cross-sections was 0. The width of the active bed layer was permitted to fluctuate based on the flow depth. The erodible channel area was confined between the established left and right banks for each cross-section, or to the limits of scour protection for cross-sections designed to have levees or floodwalls.

2.3.4 Bed Gradations

Bulk soil samples and boring soil samples collected throughout the Reata Pass Wash and Beardsley Washes were used to classify the soil and establish soil gradations at various locations within the river system. Bulk soil samples were collected by hand at grade, as well as from spoils obtained at varying depths using a backhoe. Soil samples from borings were also collected at varying depths as reported in the soils report prepared by AGRA.

The soil sample gradations were established using standard ASTM methods and redistributed for application into the HEC-6 program. The redistribution of the soil gradation was based on the standard soil distribution used by the HEC-6 program provided in Appendix A (I4 card, page A-32) of the HEC-6 User's Manual. Since the finest material classified using the mechanical sieves is 0.075 mm (the number 200 sieve), the material reported finer than 0.075 mm was included in the Very Fine Sand classification for the HEC-6 models.

The soil gradations were input into the HEC-6 model at the nearest cross-section station from which the physical sample was collected. Multiple soil samples were collected at various depths across the same cross-section. The samples were used to compare the consistency and uniformity of the soil with depth and spatially across the wash.

The predominant soil classification throughout the wash consists of well-graded sand (SW) and silty sand (SM) with some coarser, gravelly soils located intermittently throughout the wash. Generally, the surficial soil layer within the thalweg of the washes tends to be slightly more coarse than the underlying soil and the soil located in the overbanks of the wash. An average soil gradation was input into the HEC-6 models where multiple samples had been collected from the same cross-section. Since the soil gradations included in the HEC-6 model were sampled from depths ranging between 0 and 10 feet below the existing grade, consistent with the active layer bed depth provided in the HEC-6 models, the averaging of the soil gradations would ensure the appropriate grain-size distribution throughout the active bed layer had been accounted.

2.3.5 Calibration Model Development

Due to the lack of measured physical data for the wash system, it was necessary to synthetically develop a unique inflow sediment loading table for each of the nine sediment transport relationships considered for the project. These inflow sediment loading tables were established utilizing an

iterative balancing process described in Section 2.3.6. In order to perform this iterative process, nine calibration models were initially developed as part of the original CLOMR submittal using the HEC-6 Version 4.0 program. Subsequently, four updated calibration models were developed using the HEC-6 Version 4.1 program as part of this supplemental report.

The calibration models were developed for the Reata Pass Wash, the North Beardsley Wash and the South Beardsley Wash. All of the calibration models were developed using 10 to 15 cross-sections from the upstream portion of each respective wash. These cross-sections were located, upstream from the proposed improvements, within confined portions of the watercourse that were considered to be hydraulically stable.

The cross-section geometry and the appropriate bed material gradations were incorporated into each calibration model. The hydraulic rating curve for the calibration model was established from the water surface elevation results of a HEC-2 model that was specifically developed for the calibration model cross-sections. The flow rates for the rating curves varied from 0 to 16,000 cfs, the upper limit representing the maximum flow rate used in the sediment loading table. The initial inflow sediment loading table for the calibration models was evenly distributed over the ten grain-size classifications used for the HEC-6 program, and the initial sediment inflow load rate was 5 percent of the total flow rate, by volume.

The hydrograph and flow rates (Q,T and X cards) used in the calibration models were based on the flow rates used in the sediment loading table. A unique flow rate and time-step was included in the hydrograph for each flow rate provided in the sediment loading table. Since the flow rates of the sediment loading table included 1, 50, 100, 500, 1,000, 5,000 and 16,000 cfs for the main channel, a unique time-step was included in the hydrograph for each of the seven flow rates.

The range of flow rates for the inflow sediment loading table was chosen based on the hydrograph for the Reata Pass Wash. The flow rates ranged from the smallest possible flow rate within the wash to a flow rate slightly greater than the peak flow rate estimated for a 100-year frequency storm event. The distribution of the flow rates was more heavily weighted toward the lesser flow rates for several reasons. The overall output results will be more sensitive to the change in flow rates within the lower region of the scale because of the "log-log" distribution relationship of the sediment capacity curve (sediment flow rate versus hydraulic flow rate). Also, the assumptions and approximations that were established to determine the applicability of the overall model, as it relates to the existing field conditions, were more heavily weighted to flow rates within the lower range of the scale. The assumptions and approximations used to assess the validity of the program will be discussed in detail in the following section.

Each time step of the calibration models consisted of a 0.001-day (1.4-minute) time increment and a 0.007-day (10-minute) time duration for the unique flow rate. The time increment was chosen based on an average velocity (14 fps) and an average cross-sectional spacing (300 feet) for the Reata Pass Wash. The resulting average time of travel between the cross-sections is 21 seconds (0.00025 days). The time increment was increased to 0.001 days during the calibration phase for purposes of efficiency. The effect of the time increment variation on the final calibrated sediment inflow loading table was insignificant. The 0.007-day time duration was chosen based on the averaging of flow rates resulting from the HEC-1 program hydrographs as discussed in Section 2.3.2. Since the HEC-1 output was based on 5-minute intervals, two consecutive flow rates were averaged for the HEC-6, 0.007-day, time duration hydrograph.

2.3.6 *Iterative Process to Finalize Inflow Sediment for Simulation*

An iterative process was performed on each of the nine calibration models developed for the original CLOMR submittal and on each of the four calibration models developed as part of this supplemental report. The purpose of the iterative process was to balance the sediment inflow with the sediment outflow for the upper reach described in Section 2.3.5.

The iterative process developed by the design team is based on an assumption that the small, upstream reach of the wash used for the calibration model is hydraulically stable, essentially in equilibrium with the surrounding environment, and will not undergo a significant change for a single storm event. This assumption seems reasonable given that the upper portion of the wash is mature, well-defined and has been established for a long period of time. The design team feels this is the most reasonable approach to establish the sediment inflow loading tables for the HEC-6 models given the lack of physical sediment data for the wash and the lack of published material for watercourses similar to the Reata Pass Wash.

The iterative process used to establish equilibrium between the sediment inflow and the sediment outflow for the calibration models is described as follows. A conservative, high-end inflow sediment loading table was created for the initial HEC-6 program run. Upon completion of this initial run, the program generated sediment loading table was compared to the input table. If the differences between the input sediment loading table and the output resultant sediment loading table are significant, more than a 2 percent difference for any grain-size interval, the output resultant sediment loading table of this first iteration is then used as the input sediment loading table for the second iteration (see Appendix B).

The iterative process is continued until an approximate equilibrium state is achieved. A balanced, equilibrium condition is considered to be achieved when the change is negligible between the input sediment load table and the resultant outflow sediment load table.

An assumption was made that the final sediment loading table from the iterative process would accurately represent the sediment inflow into the main Reata Wash. Because of the lack of volumetric sediment data for the Reata Pass Wash, as described above, this assumption was required to establish the initial sediment loading data for the HEC-6 program used to model the main wash. The sediment composition and volumetric sediment concentration associated with the final resultant sediment loading table is used to simulate the entire upstream watershed for the main wash.

To make this assumption valid, the upstream reach used for the calibration model would be required to be sufficiently long enough, approximately one-half mile, to establish a sediment loading table that would be representative of the upstream conditions. The sediment bed data for the calibration models was obtained from field soil samples collected within the upstream reach. The final sediment composition, gradation distribution, and volumetric sediment concentration resulting from the iterative process was significantly influenced by available bed material and the input sediment loading table used to seed the calibration model. Since the inflow sediment load table is adjusted throughout the iterative process, it is also influenced by the available bed material in the upstream wash. Providing a reach length sufficiently long enough would ensure the calibration model had processed the available bed material with the inflow sediment loading table enough times to adequately affect the outflow sediment loading tables. If the reach length was not long enough, the sediment outflow loading table would be unduly influenced by the sediment inflow

loading table, creating an undesirable effect since the inflow loading table was conservatively developed without consideration to the field conditions. The use of a sufficiently long upstream reach, in conjunction with the iterative process, provided the means to obtain representative sediment loading data for the upper watershed.

The results of the iterative process were similar for all of the calibration models investigated. The final, equilibrated volumetric sediment concentration (1 to 2 percent) was consistently lower than the initial sediment concentration (5 percent) used to begin the iterative process. This condition was exhibited for every transport relationship model that was calibrated. The potential exists for the upper wash to carry greater sediment concentrations, but since the field soil samples indicate that the amount of the appropriate grain-size material is not available in the upper wash, this carrying potential cannot be achieved.

2.3.7 Verification and Model Assessment

The verification process is based on the assumption that, through the main channel, the sediment bed gradation at a given cross-section resulting from the routing of a small, frequent storm event will essentially be unchanged from the original bed gradation prior to the routing of the storm. This condition assumes the wash has often been subjected to frequent storm events and the bed material gradation relative to these frequent storms is mostly unaffected.

To verify the performance of the calibrated models, a 2-year frequency storm was routed through the entire main channel for each calibrated model. The calibrated inflow sediment loading table developed for the sediment transport relationship to be analyzed was input into a HEC-6 model established for the entire wash system, including the main channel, the North Beardsley Wash (tributary), the upper tributary, the South Beardsley Wash (local inflow) and the upstream local inflow point. The resulting bed gradations output from the HEC-6 program were compared to the input field soil sample gradations for verification of the calibrated models.

An overall analysis of the bed change was also conducted during the verification process. The verification models were analyzed for overall bed changes resulting from the routing of the 2-year storm event. As the bed changes were generally consistent between the various analysis methods being considered, none of the models were disregarded based on the bed changes.

To assess the overall performance of the verification models and choose the best sediment transport relationship for the Reata Pass Wash, a statistical analysis was conducted on the input bed sediment gradations and the resulting output sediment gradation at various cross-sections along the wash. An r-correlation statistic was used to evaluate the "fit" of the model. The "best fit" is an index value used for ease of comparing the r-correlations. The best fit index value is as follows:

$$\text{Best Fit} = (100 - (100 * \text{r-correlation})$$

The smallest index value resulting from this "best fit" equation indicates that the most appropriate output data are being analyzed when compared to the original input data. A best fit value of zero would correspond to an r-correlation value of 1, which is defined as a perfect fit to the input data.

The results of the best fit statistical analysis for Reata Pass Wash are presented below in Table 2.2. The resulting bed gradations and input bed gradations were compared for each cross-section

where a soil sample had been collected in the field. The statistical mean (μ) and sample standard deviations (σ) presented in the table below are a result of the best fit data comparison for all the cross-sections considered in the verification model.

Table 2.2
Best Fit Statistical Analysis for Reata Pass Wash

Best Fit Data Comparison		
	μ	σ
Yang's (Method 4)	3.61	3.41
Ackers-White (Method 7)	4.11	4.46
Madden's Modified Laursen (Method 13)	6.04	6.96
Copeland's Modified Laursen (Method 14)	4.85	6.10

Yang's Streampower Relationship for Sands, Method 4 of the HEC-6 program, produced the lowest average best fit data, as well as the lowest standard deviation of the best fit data. From this statistical analysis, the design team selected the Yang's Relationship for modeling sediment transport within the Reata Pass Wash and Beardsley Wash system. The following section further explores the applicability of Yang's Relationship for conditions inherent to this project.

3.0 Applicability of Yang's Relationship and Supercritical Flow Analysis

3.1 Literature and Correspondence

As discussed in the previous section, Yang's Streampower Relationship was chosen for use in HEC-6 modeling. The selection of Yang's relationship is based on the calibration and verification methodology procedure outlined in Section 2.3. Reviewers have raised questions on the applicability of Yang's relationship to the conditions (supercritical) of Reata Pass / Beardsley Wash. To address these concerns, Dr. Chih Ted Yang, currently with the USBOR in Denver and not affiliated with the project, was contacted for his opinion on the use of his equation for Reata's conditions. Dr. Yang stated that he feels his equation is the best available for use with supercritical flows. He referred to an article (see Appendix) which he co-authored that compared eight different transport equations for their accuracy of predicted results versus measured results. One-thousand one-hundred nineteen (1,119) sets of laboratory data and 319 sets of field data from numerous independent sources were used for the comparisons. One parameter investigated was the accuracy of the equations relative to several ranges of Froude numbers including supercritical flow.

The relationships compared in this article are Einstein (1950), Laursen (1958), Engelund and Hansen (1967), Toffaleti (1968), Colby (1964), Ackers and White (1973) and Yang (1973). Table 4 and Figure 2 of the article relate the accuracy of the methods for Froude number. The article uses an accuracy ratio of R = Concentration predicted / Concentration measured. Yang's relationship is the most accurate for supercritical flow with an average R of 0.98 for Froude numbers of 1.0 to 4.0. Yang's is the second best relationship for subcritical flow with average Rs of 1.02 and 1.27 for Froude numbers of 0.5 to 1.0 and 0.18 to 0.50, respectively.

3.2 Result Comparisons for Yang's Streampower Equation

Sediment calculations were prepared manually for the Reata Pass Wash using Yang's Streampower equation for sands. The results from the manual calculations were used for comparison to the results from the HEC-6 program using Yang's Streampower equation. The manual calculations were performed using the 100-year storm event, the proposed geometric and physical data for each of the 27 reaches described in Section 1, and the sediment data collected throughout the wash.

The manual calculations were performed using the hydraulic characteristics associated with normal flow in each reach. Time steps similar to the application of the HEC-6 program were used to simulate the hydrograph for the 100-year storm event. Yang's equation was used to solve the bed material concentration for each reach using the hydraulic parameters for the normal flow with the corresponding sediment data. The material concentrations were calculated at each reach for the flow rates in the storm hydrograph.

Figure 3.1 presents the resulting volumetric sediment concentrations from the HEC-6 model using Yang's equation and from the manual calculations using Yang's equation for three specific reaches of the Reata wash. The results from the manual calculations were consistently less than the results from the HEC-6 program. While a number of reasons account for the discrepancy between the data sets, the most significant reason for the difference is related to the method of calculation. The HEC-6 program is a well-established finite difference program that accounts for continuity both spatially between cross-sections and temporally between time steps of the hydrograph. The manual calculation was established to provide spatial continuity only.

The manual calculations performed basically substantiate the results of the HEC-6 program and verify the volumetric sediment concentrations for the wash. As seen in Figure 3.1, the two resulting data sets are quite similar given the differences in the calculation procedures discussed above. The volumetric sediment concentration results from the HEC-6 program are greater than the results from the manual calculations and therefore represent the more conservative condition. The manual calculations support the results from the HEC-6 program and indicate the volumetric sediment concentration throughout the wash is less than 2 percent.

3.3 Theoretical Upper Limit of Sediment Concentration

In their letter of December 4, 1995, to the City of Scottsdale, FEMA proposed a simplified calculation to determine a theoretical upper limit of sediment concentration in supercritical flow conditions. The thought behind the proposed equation is to use the energy greater than critical energy to transport sediment rather than conveying water. Critical energy represents the minimum energy required to move the water. Admittedly, several basic hydraulic principles are violated in this simplified calculation. The most obvious perhaps is that, as water moves from supercritical to critical, velocity decreases. As velocity decreases, sediment transport decreases in all relationships. However, the theory can be used to approximate an upper limit (or potential worst case) of sediment transport as FEMA has pointed out. If all additional sediment is considered to be suspended, the effect on water surface elevation can be determined.

The simplified calculation equates the kinetic energies of supercritical flow and critical flow:

$$0.5m_w v_s^2 = 0.5(m_w+m_m)v_c^2$$

where m_w and m_m are the masses of water and material, respectively, and v_s and v_c are super-critical and critical velocities, respectively. Since some sediment concentration is expected for supercritical flow, in our analysis of this equation, we used Yang's relationship to determine sediment concentrations at the supercritical condition. This changes the equation to:

$$0.5(m_w+m_m)v_s^2 = 0.5(m_w+m_m)v_c^2$$

Reata contains two basic types of reaches: wide, natural sections and narrow, excavated sections (see the Appendix for the calculations and results). For the wide, natural sections, an 8 percent increase in total flow volume due to the additional sediment translates to a 0.7-foot increase in water surface elevation. For the narrow, excavated sections, a 26 percent increase in total flow volume translates to a 1.7-foot increase in water surface elevation. Both of these theoretical upper limits on water surface elevation are within the freeboard provided.

Figure 3.1
Hand-Calculation Comparisons for Reata Pass Wash

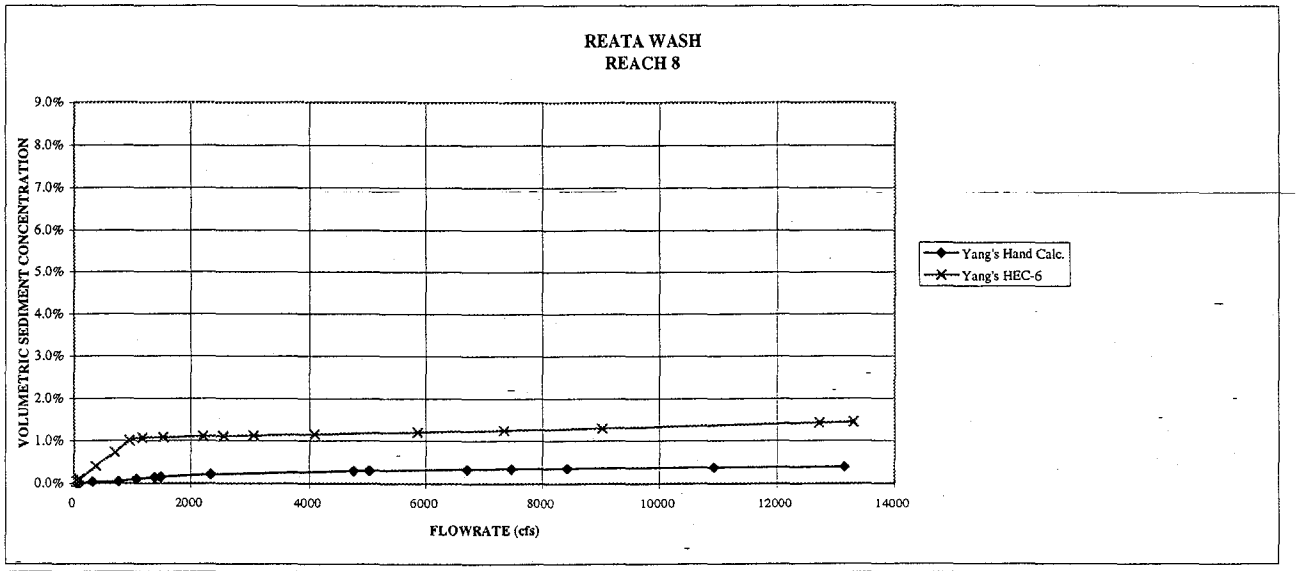

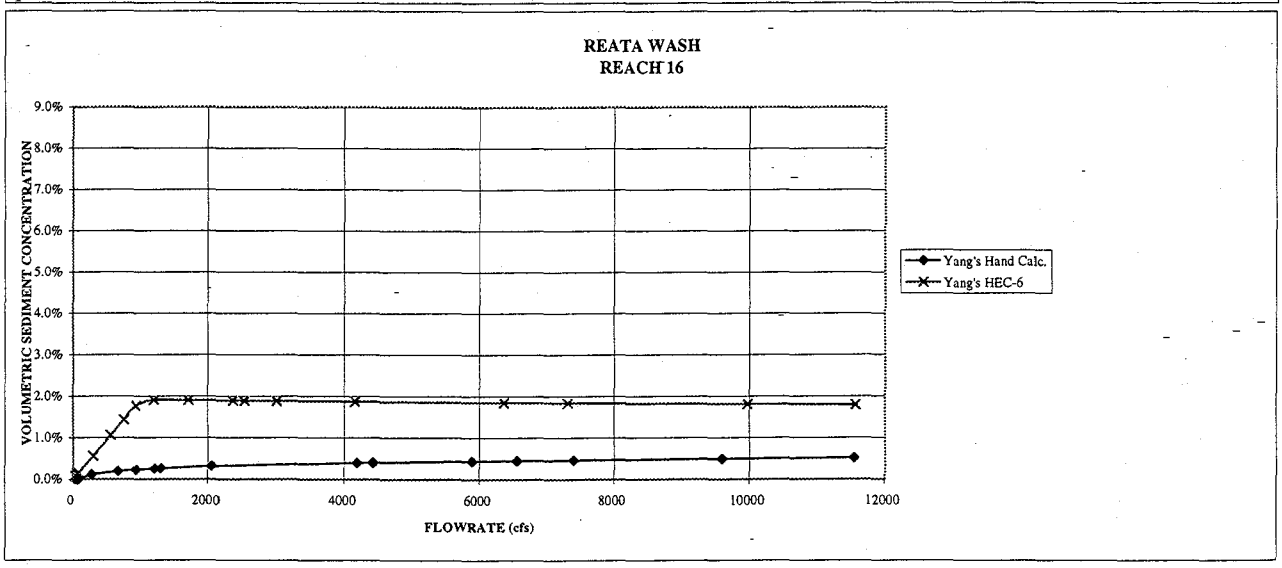

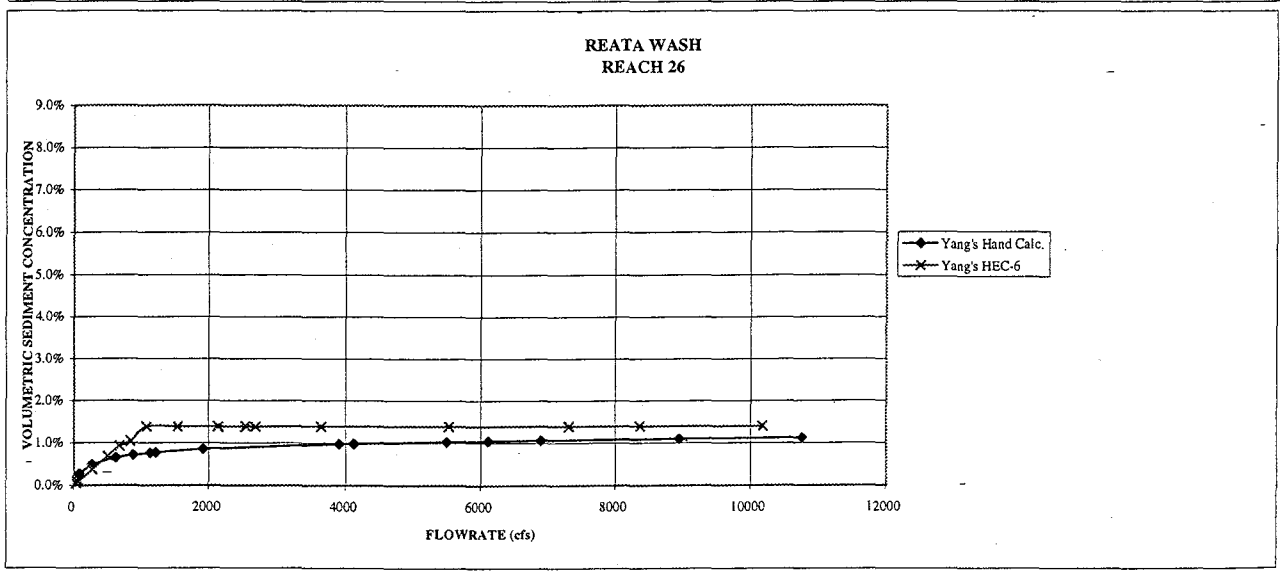

4.0 Sensitivity Analysis of the HEC-6 Model

4.1 Inflow Sediment Loading Table

A number of HEC-6 models were generated to determine the sensitivity of the existing model as it relates to the inflow sediment loading table. The sediment loading table that had been developed from the calibration and verification process described in Sections 2.3.4 through 2.3.7 and used in the HEC-6 model revised per the 60-Percent Plans consisted of sediment concentrations ranging between 1 and 2 percent of the flow rate, by volume. There has been concern expressed by several project reviewers that this 1 to 2 percent seemed low. Typically, the volumetric sediment concentration for most transport analyses is on the order of 10 percent. Ref

HEC-6 models were generated with varying inflow sediment concentrations to assess the sensitivity of the model to the initial inflow loading table. Two additional models were developed for varying inflow sediment concentrations to compare the output results with the results from the revised model (60-Percent Plans). One model, referred to as the "overflow" model, increased the revised HEC-6 model inflow sediment concentrations by 900 percent. The volumetric sediment concentrations for this overflow model were above 10 percent. Another model, referred to as the "clean" flow model, was generated with no inflowing sediment. These two models were used to investigate extreme conditions and to compare their output results with the output of the revised model.

Table 4.1 presents the results from the extreme model conditions for comparison with the revised model results. The table indicates the Reata Pass Wash is capable of maintaining, on average, a volumetric sediment concentration of almost 10-percent for an overloaded, sediment laden inflow. While the volumetric sediment concentration increases from approximately 1.5 percent to 10 percent for this condition, Figure 4.1 indicates that this occurs only when very fine sand grain-size material is ten times more prevalent than other grain sizes in the overall sediment composition. A substantial amount of very fine sand must be available in the upper regions of the watershed to maintain a volumetric sediment concentration of about 10 percent throughout the main wash. The results from the geotechnical investigations signify that very fine sand grain-sizes are not available in these upper regions, and therefore the volumetric sediment concentrations are lower than the values anticipated by the reviewers.

Table 4.1
Weighted Average Sediment Concentrations for Reata Pass Wash

Flow Rate	Bed Material Gradations	Inflow Sediment Loading Table (%)		
		Clean	Revised	Overflow
Storm Peak	Measured	0.88	1.81	9.63
End of Storm	Measured	0.33	1.19	8.29

Figure 4.1
Sediment Concentrations for Various Grain-sizes for Reata Pass Wash

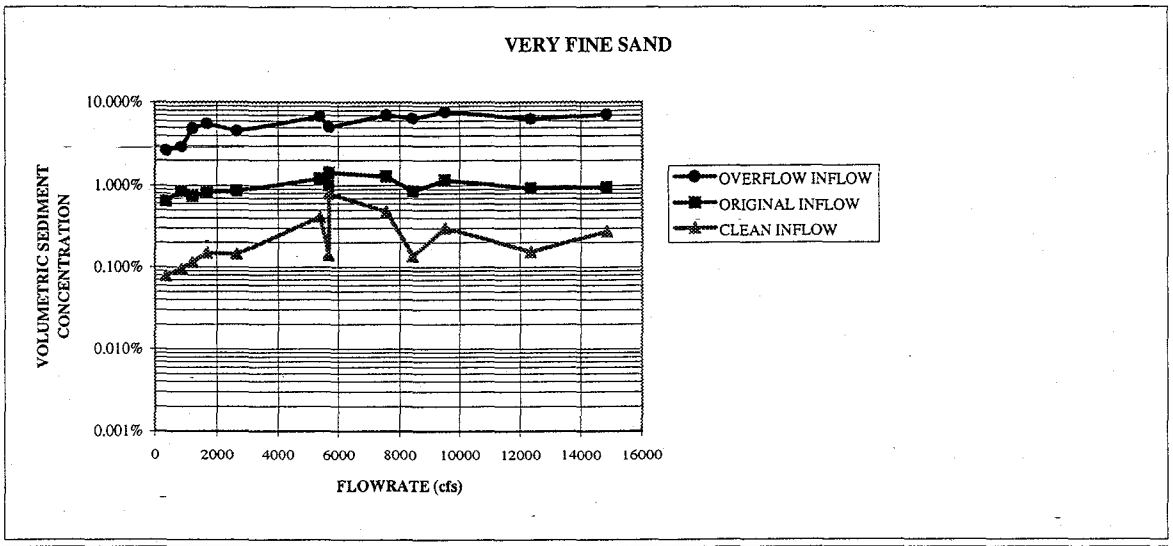

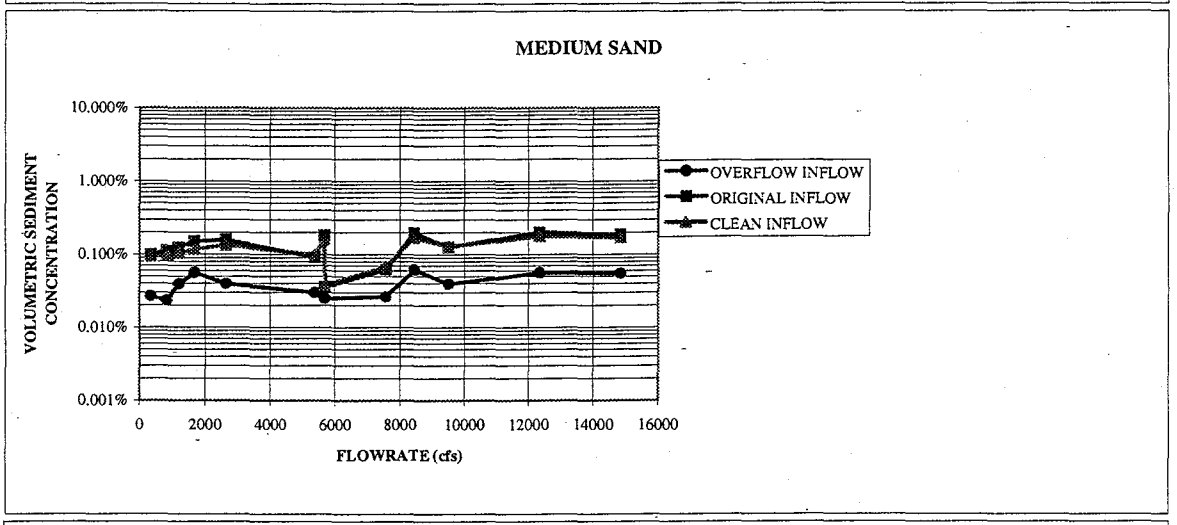

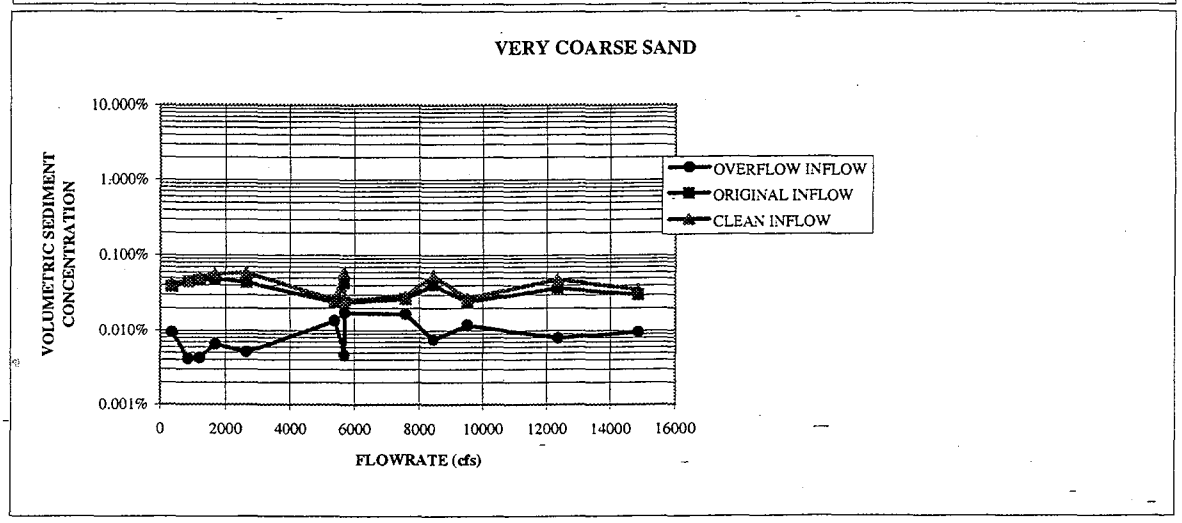

4.2 *Cross-Section Spacing*

The reach lengths between cross-sections used in the updated HEC-6 models is typically 300 feet except in the vicinity of unique structures, such as bridges and drop structures. The cross-sectional spacing was adjusted near these structures to ensure their impacts to the hydraulics of the system were included in the model.

A number of factors were considered for selecting the spacing of the cross-sections. The governing factor for the selection process regarded the limitation of the HEC-6 program. The program is limited to processing a maximum of 150 cross-sections. A 300-foot cross-sectional spacing was chosen by the design team as the minimum spacing interval that would provide the most accurate model results and facilitate modeling the wash in its entirety. The program's 150 cross-section limit is nearly matched considering the main channel length is approximately 30,000 feet (100 sections), several bridges and drop structures (approximately 12 cross-sections), and two local tributaries (approximately 25 cross-sections).

The time-step interval of the hydrograph was another parameter that required consideration in conjunction with the cross-section spacing. As discussed in Seciton 2.3.5, the average velocity within the wash is approximately 14 fps, resulting in a time interval slightly greater than 20 seconds (0.00025 days). The modeling for individual storm events, such as the 100-year frequency storm and the 2-year storm, was established using the 0.00025-day time interval. Also as discussed in Section 2.3.5, the difference in the results of models using different time intervals is essentially negligible for small values. However, as the time intervals increased in value to approxiamtely 0.014 days, the difference of the resulting calculated volume of sediment transported and the resulting bed changes for individual time steps was significant enough that the 0.014-day interval was not used in the modeling. The tendency to result in excessively high transport volumes and bed changes for long time intervals is consistent with the calibration and application techniques discussed by Thomas, Gee and MacArthur[1].

The design team attempted to consistently maintain the cross-section spacing wherever possible, with variations in the spacing occurring only to ensure that the hydraulic impacts of particular structures within the system were adequately accounted for in the model. Understanding the computational method performed by the HEC-6 program in using control volumes equidistant between the upstream and downstream cross-sections, the design team felt the change in hydraulic conditions required more consideration in the HEC-6 model than the maintenance of equidistant cross-sections. Considering all other input parametes used by the model including fine time intervals and consistent, gradually-varying cross-section geometry, the results of the model are affected more by the variation in flow characteristics than the spacing of the cross-sections.

[1]Thomas, Gee, and MacArther, US Army Corps of Engineers Training Document No. 13,

5.0 Extreme Flooding Analysis

5.1 Consecutive Predominant Storm Events

An HEC-6 model was developed using multiple 10-year frequency storm events. The model routed ten 10-year storm events through the Reata Pass Wash. From design literature used locally[2], predominant discharges are most responsible for channel characteristics. The cited dominant discharge for ephemeral channels is the 5- to 10-year storm. Ten 10-percent probability storms were routed to simulate a 100-year design timespan. Due to the fact that a regular maintenance program will be implemented as part of the Reata Pass Wash project, the conditions represented by this extreme model are not expected to occur, and the results are used to indicate the sediment transport tendencies of the wash and identify potential impact areas.

The consecutive storm model indicates the potential for significantly large scour depths in Reaches 22 through 24, as much as 16 feet in two areas and one to 10 feet in others. The variation in the scour depth between this model and the 100-year HEC-6 model is only significant in these reaches. While scour differences occur in other downstream reaches, the differences range from 0 to 3 feet, with predominantly less than one foot of additional scour. The consecutive storm model indicates the potential for substantial sediment deposition in Reaches 15, 19 and 20, ranging from 4.5 to 10.5 feet. These depths are approximately 4 to 8 feet greater than the results from 100-year HEC-6 model. The variation in the bed change elevations between the two models is generally less than 2 feet in all other reaches.

The results from the consecutive storm model indicate the section immediately downstream from the Pinnacle Peak Road improvements (Station 243+00 to Station 264+00) is most susceptible to scour, and the next section, extending to Deer Valley Road (Station 228+00 to Station 237+00), is most susceptible to increased deposition. As described above, the results from this model are used to identify potential impact areas within the project.

5.2 Probable Cumulative Storm Events

Probable cumulative storm events were developed from rain gauge data collected for the Upper Indian Bend Wash (IBW) watershed. Using the statistical relationships for the rainfall probability of the IBW, a probable hydrograph was developed to simulate a 100-year design timespan. As with the consecutive storm model, the conditions for the cumulative storm event are not expected to occur because of the regular maintenance program. The results from this model are used to indicate the sediment transport tendencies of the wash, identify potential impact areas, and compare the results with the results of the consecutive predominant storm model. The hydrograph for the probable cumulative storm model was developed using a random selection process to determine the sequence of storm frequency events over a 100-year timespan. To ensure the results for this extreme modeling condition are consistent and did not fluctuate significantly regarding the hydrograph and the distribution of the storm frequency events, three unique models were

[2]Arizona Department of Transportation Research Center, "Design Manual for Engineering Analysis of Fluvial Systems," March 1985.

developed using randomly generated hydrographs. The average of the results from these three models was then used for analysis.

The results from the three cumulative storm event models show the same tendencies as the consecutive predominant storm model. The potential for significant scour exists in Reaches 22 through 24, and the potential for significant sediment deposition occurs in Reaches 15, 19 and 20. The cumulative storm models generally indicate more scour and deposition than the consecutive storm model including as much as 22 feet scour in two areas, and 2 to 12 feet of scour in other areas and 0 to 12 feet of sediment deposition in the respective reaches. The maximum variation in the resulting bed elevation changes between the two models is approximately 25 percent. As with the consecutive storm analysis, the results from the cumulative storm models are used to identify extreme potential impact areas within the project.

5.3 Low Roughness / Non-Vegetation Model

A low-roughness HEC-6 model, using reduced Manning n-values in the calibrated HEC-6 model discussed in Section 2.3, was developed to simulate a condition where the existing vegetation within the main wash and the overbanks was possibly removed due to previous extreme flooding conditions. The results from this model are used to identify potential impact areas within the wash where a change in normal roughness conditions may induce significant changes in the scour and depositional values. The low-roughness model was developed using the 100-year frequency storm event, and the results were compared to the 100-year frequency model using the normal roughness values.

A resulting increase in the scour depth predominates throughout the wash for the low-roughness model. While the change in scour depth is minimal for most areas of the wash, the reduced n-value model indicates a maximum increase in the scour depth of 3 feet in Reach 18. Overall, the upstream reaches typically exhibit 0 to 2 feet of additional scour and the downstream reaches less than one foot of additional scour for the 100-year storm event.

Since the tendency of the low-roughness model is to scour, it counters the sediment deposition process and reduces the depositional elevation. In many cases where sediment deposition is indicated by each of the previous HEC-6 models discussed, the low-roughness model represents an unconservative, lower bed elevation. This model is only used for the consideration of toe-down elevations, not the design of water surface elevations.

5.4 500-Year Storm Frequency

An HEC-6 model was developed for the 500-year storm event using the updated, calibrated Yang's Streampower model for the Reata Pass Wash, as discussed in Section 2.3. The results for this model are used to identify potential impact areas within the project where the scour elevation, depositional elevation, and the freeboard design provisions may be exceeded for an extreme storm event.

The HEC-6 model was used to compare the resulting water surface elevations for the 500-year storm event with the resulting water surface elevations for the 100-year storm event. The elevations were compared at each cross-section within the model. The model indicates that, at the peak flow rate for the 500-year storm, the water surface elevation increases above the 100-year peak flow elevation up to 3.5 feet. The 3.5 feet occurs within Reach 19. On average, the water surface

6.0 Application to Design

6.1 Water Surface Elevation — Freeboard

The design water surface elevation is taken at each HEC cross-section from the highest of the following:

1. HEC-RAS 100-Year Event Peak, Subcritical Water Surface Elevation
2. HEC-RAS 100-Year Event Peak, Critical Water Surface Elevation
3. HEC-6 100-Year Event, Maximum Water Surface Elevation

Per FEMA requirements, a freeboard of at least 3 feet is provided above the design water surface elevation throughout the system. The one exception is the southwest bank within Westworld (Reaches 1 and 2) where freeboard is not required since this channel is within the 100-year floodplain in USBOR Dike #4 retention basin. For levees, an additional one-half foot of freeboard is provided at the upstream end. This additional freeboard tapers to zero at the downstream end of the levee. At least 4 feet of freeboard is provided immediately upstream and downstream from structures (bridges, drop structures).

The top elevation of containment structures is based on the required freeboard elevation (see Figure 6.1). These structures include floodwalls, levees and lined side slopes of excavated channels. To help in ease of construction, rather than setting the top of structure elevation at each cross-section, long stretches of equal grades are used. Two points generally at least 500 feet apart along the structure are connected by a straight grade to create the top of structure elevation. These two points are set so that no point along the top of structure grade is below the required freeboard elevation at each cross-section. A result of this procedure is that additional freeboard is provided at various cross-section locations along the structure.

As a result of using the HEC-RAS mixed flow regime model, some areas of hydraulic jumps were identified. The previous supercritical model shows Froude numbers of 1.0 to 1.2 in these areas. Critical depth had been used based on this previous modeling for consideration of the design water surface elevation for these reaches. The mixed flow water surface elevations will now be used in these reach areas.

Appendix Table A.1 provides information on the design water surface elevations at each cross-section. As an additional check of the provided freeboard, a value of one-fifth of the specific energy head, $0.2\ (v^2/2g + y)$, at each cross-section was calculated based on actual hydraulic depths and velocities from the HEC-RAS mixed flow regime model.

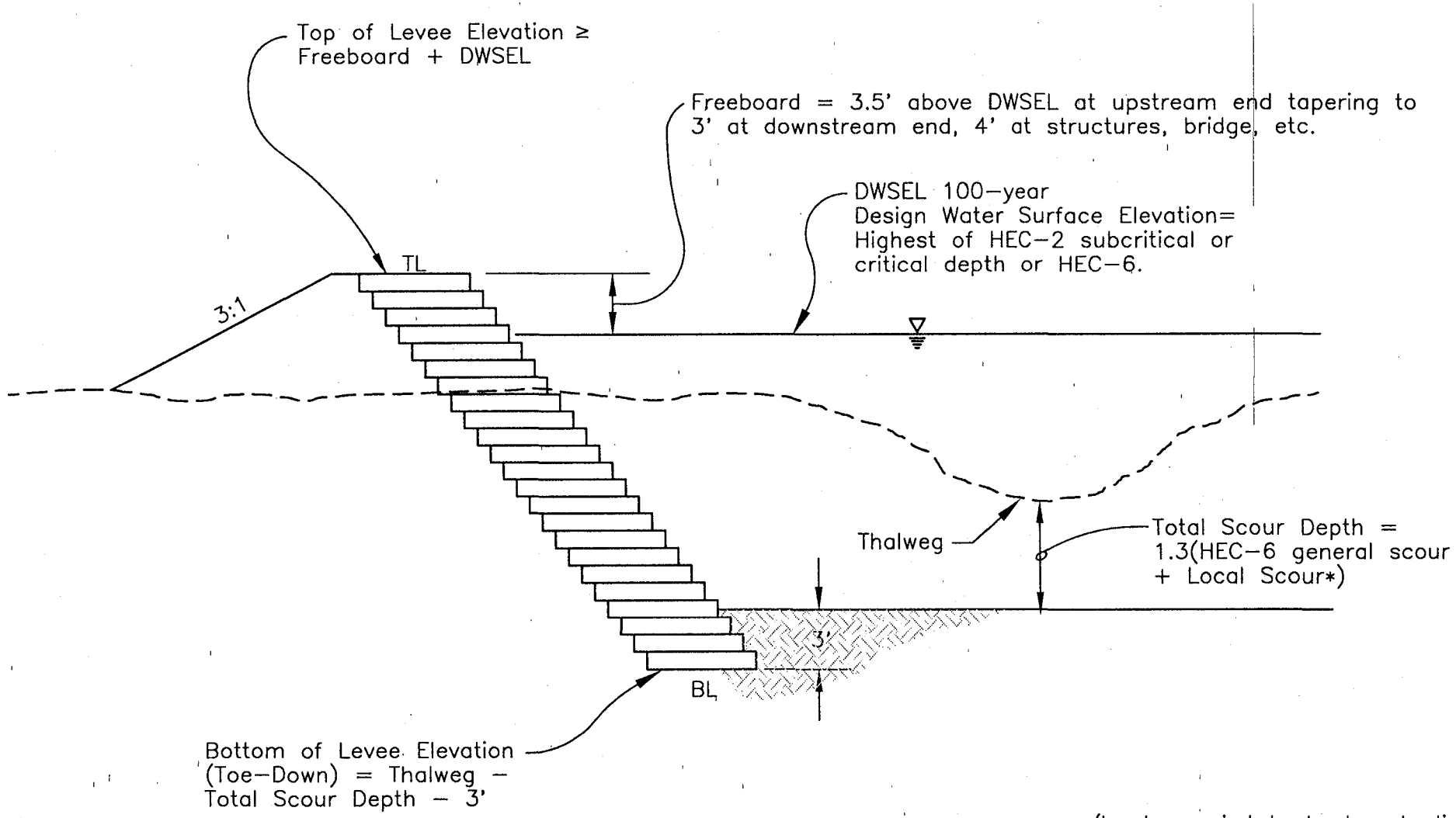

*(Local scour includes bend, contractions, anti-dune trough, low flow incisement, abutment, pier, and historic scour.)

The Desert Greenbelt

Reata Pass Wash
Scour/Water Surface
Elevation Design Parameters

Greiner

Not to Scale

Figure 6.1

6.2 Scour Depth — Toe-Down Calculations

The bottom elevation of containment structures (toe-down) is based on the following. As seen on Figure 6.1, the first value identified is the thalweg elevation. The thalweg elevation is the minimum (lowest) bed elevation across a section of the wash based on the 60-Percent Plans. The total scour depth is calculated by adding the HEC-6 general / long-term scour depth to the sum of all local scour depths and then multiplying by a safety factor of 1.3. The design scour elevation is then determined by subtracting the total scour depth from the thalwag elevation. The resulting toe-down depth of the containment structure is then set at least 3 feet below the design scour elevation. The constructed bottom of structure is determined on the same straight grade approach as discussed in Section 6.2. For ease in construction, the grades (longitudinal slope) along the top and bottom of the structure are the same. This allows the use of lifts for soil cement or roller compacted concrete. Again, a result of this construction procedure is that additional toe-down depth is provided at various cross-section locations along the structure. Appendix Table A.1 provides design scour depth and required toe-down elevations at each HEC cross-section.

The term "local scour," as considered in this report, incorporates all scours other than general / long-term scour (HEC-6). These are bend, contraction, anti-dune trough, low-flow incisement, abutment, pier, and historic scour. All equations for these are found in the Appendix. Bend and anti-dune trough scour calculation procedures (note scour is one-half of the anti-dune height) are from the Arizona Department of Water Resources "Design Manual for Engineering Analysis of Fluvial Systems." Contraction, abutment and pier scour methods are from "Evaluating Scour at Bridges" by the Federal Highway Administration. A value of one foot is used for low-flow incisement (Engineering Design of Fluvial Systems — Simons, Li & Associates). At locations where major braids or washes are being cut off by proposed containment, an historic scour value of 3 feet was included for additional protection.

6.3 Containment Structures and Materials

Three basic forms of structural containment are proposed as part of the 60-Percent Plans (see Detail Sheets 6.1 to 6.3). Levees, floodwalls with gabion mattress and lined side slopes comprise the structures used in containing the design water surface elevation and protecting against the design scour depth. The levees are either constructed of soil cement or roller compacted concrete placed and compacted in lifts. Soil cement is used for the levees south of the Deer Valley Road alignment, where velocities are less than 17 feet per second. Roller compacted concrete is used at the main apex in Upper Reata. In Upper Reata, due to higher velocities and limited right-of-way, concrete floodwalls and channel side slope lining are used in containment of the flow. The floodwalls have a one-foot thick gabion mattress attached just above the footing for protection against scour. The mattresses are placed at least 3 feet below the proposed grade. The mattresses are sized so that, during erosion of the channel, the toe of the mattress will decline to no steeper than a 1:1 slope from the attachment at the floodwall. The mattress lengths were set to provide the additional 3 feet of protection below the design scour elevation identified on Figure 6.1.

Appendix A

Hydraulic and Structural Design Criteria

Table A.1A
Scour and Toe-Down Analysis

	Local Scours Depths					HEC-6	Total Scour		Factored Total Scour		Initial	Scour Elevation		Required Toe-Down Elevation	
Station	Contraction	Bend	Low-Flow Incisement	Historic	Anti-Dune Troughs	Scour Depth	West	East	West	East	Thalweg	West	East	West	East
0					3.04	0.91	3.95	3.95	5.14	5.14	1505.16	1500.03	1500.03	1497.03	1497.03
300			1.50		3.04	0.38	4.92	4.92	6.40	6.40	1508.73	1502.33	1502.33	1499.33	1499.33
301			1.50		3.04	0.38	4.92	4.92	6.39	6.39	1508.73	1502.34	1502.34	1499.34	1499.34
600			1.50		3.04	0.00	4.54	4.54	5.90	5.90	1509.46	1503.56	1503.56	1500.56	1500.56
800			1.50		3.04	0.00	4.54	4.54	5.90	5.90	1510.39	1504.49	1504.49	1501.49	1501.49
801		0.76	1.50		3.04	0.00	5.30	4.54	6.89	5.90	1510.40	1503.51	1504.50	1500.51	1501.50
900		0.76	1.50		3.04	0.00	5.30	4.54	6.89	5.90	1510.86	1503.97	1504.96	1500.97	1501.96
1200		0.76	1.50		3.50	0.00	5.76	5.00	7.49	6.50	1514.60	1507.11	1508.10	1504.11	1505.10
1500		0.76	1.50		3.50	0.00	5.76	5.00	7.49	6.50	1520.20	1512.71	1513.70	1509.71	1510.70
1550		0.76	1.50	3.00	3.50	0.16	8.92	5.16	11.59	6.70	1521.13	1509.54	1514.43	1506.54	1511.43
1800		0.76	1.50		3.50	0.94	6.70	5.94	8.71	7.72	1525.80	1517.09	1518.08	1514.09	1515.08
2100		0.76	1.50		3.50	1.55	7.31	6.55	9.50	8.52	1531.40	1521.90	1522.89	1518.90	1519.89
2200		0.76	1.50		3.50	1.05	6.81	6.05	8.86	7.87	1532.49	1523.63	1524.62	1520.63	1521.62
2201					2.65	1.05	3.70	3.70	4.81	4.81	1532.50	1527.69	1527.69	1524.69	1524.69
2300					2.65	0.56	3.21	3.21	4.17	4.17	1533.57	1529.40	1529.40	1526.40	1526.40
2301	0.43				2.65	0.55	3.63	3.63	4.72	4.72	1533.58	1528.86	1528.86	1525.86	1525.86
2400	0.43				2.65	0.06	3.14	3.14	4.08	4.08	1534.66	1530.58	1530.58	1527.58	1527.58
2700	0.43				2.65	0.00	3.08	3.08	4.00	4.00	1539.00	1535.00	1535.00	1532.00	1532.00
3000	0.43				1.94	0.00	2.37	2.37	3.08	3.08	1544.60	1541.52	1541.52	1538.52	1538.52
3200	0.43				1.94	0.00	2.37	2.37	3.08	3.08	1547.92	1544.84	1544.84	1541.84	1541.84
3201					1.94	0.00	1.94	1.94	2.52	2.52	1547.94	1545.41	1545.41	1542.41	1542.41
3300					1.94	0.00	1.94	1.94	2.52	2.52	1549.58	1547.06	1547.06	1544.06	1544.06
3600					1.94	0.00	1.94	1.94	2.52	2.52	1554.12	1551.60	1551.60	1548.60	1548.60
3900					1.94	0.00	1.94	1.94	2.52	2.52	1558.66	1556.14	1556.14	1553.14	1553.14
4200					1.94	2.46	4.40	4.40	5.72	5.72	1565.99	1560.27	1560.27	1557.27	1557.27
4300					1.94	1.11	3.05	3.05	3.96	3.96	1567.00	1563.04	1563.04	1560.04	1560.04
4301			1.50		1.94	1.09	4.53	4.53	5.89	5.89	1567.01	1561.11	1561.11	1558.11	1558.11
4350			1.50		1.94	0.43	3.87	3.87	5.03	5.03	1567.50	1562.47	1562.47	1559.47	1559.47
4400			1.50	3.00	1.94	0.29	6.73	3.73	8.74	4.84	1567.03	1558.29	1562.19	1555.29	1559.19
4401	0.94		1.50	3.00	1.94	0.28	7.66	4.66	9.96	6.06	1567.02	1557.06	1560.96	1554.06	1557.96
4500	0.94		1.50	3.00	1.94	0.00	7.38	4.38	9.59	5.69	1566.10	1556.51	1560.41	1553.51	1557.41
4800	0.94		1.50	3.00	1.94	0.00	7.38	4.38	9.59	5.69	1573.70	1564.11	1568.01	1561.11	1565.01
4801	0.94			3.00	1.94	0.00	5.88	2.88	7.64	3.74	1573.72	1566.07	1569.97	1563.07	1566.97
4900	0.94			3.00	1.94	0.02	5.90	2.90	7.67	3.77	1575.33	1567.66	1571.56	1564.66	1568.56
4950	0.94				1.94	0.04	2.92	2.92	3.79	3.79	1576.15	1572.36	1572.36	1569.36	1569.36
5000	0.94				1.94	0.05	2.93	2.93	3.80	3.80	1576.97	1573.16	1573.16	1570.16	1570.16
5001					1.94	0.05	1.99	1.99	2.58	2.58	1576.98	1574.40	1574.40	1571.40	1571.40
5100					1.94	0.07	2.01	2.01	2.61	2.61	1578.60	1575.99	1575.99	1572.99	1572.99
5400					1.94	0.03	1.97	1.97	2.56	2.56	1583.68	1581.12	1581.12	1578.12	1578.12
5700					1.94	0.04	1.98	1.98	2.57	2.57	1589.34	1586.77	1586.77	1583.77	1583.77
5850					1.94	0.04	1.98	1.98	2.57	2.57	1593.16	1590.59	1590.59	1587.59	1587.59
5900				3.00	1.94	0.03	4.97	1.97	6.47	2.57	1594.43	1587.96	1591.86	1584.96	1588.86
6000					1.94	0.03	1.97	1.97	2.56	2.56	1596.97	1594.41	1594.41	1591.41	1591.41
6250					1.94	3.85	5.80	5.80	7.53	7.53	1602.95	1595.42	1595.42	1592.42	1592.42
6300					1.94	4.62	6.56	6.56	8.53	8.53	1604.15	1595.62	1595.62	1592.62	1592.62
6350				3.00	1.94	3.96	8.90	5.90	11.56	7.66	1605.43	1593.87	1597.77	1590.87	1594.77
6400					1.94	3.29	5.23	5.23	6.80	6.80	1606.71	1599.91	1599.91	1596.91	1596.91
6600					1.94	0.63	2.57	2.57	3.34	3.34	1611.83	1608.49	1608.49	1605.49	1605.49
6900					1.94	0.03	1.97	1.97	2.56	2.56	1617.20	1614.64	1614.64	1611.64	1611.64
6950					1.94	0.03	1.97	1.97	2.55	2.55	1617.73	1615.18	1615.18	1612.18	1612.18
7000				3.00	1.94	0.02	4.96	1.96	6.45	2.55	1618.27	1611.82	1615.72	1608.82	1612.72
7050					1.94	0.02	1.96	1.96	2.54	2.54	1618.80	1616.26	1616.26	1613.26	1613.26
7200					1.94	0.00	1.94	1.94	2.52	2.52	1620.40	1617.88	1617.88	1614.88	1614.88
7500					1.94	0.02	1.96	1.96	2.55	2.55	1627.35	1624.80	1624.80	1621.80	1621.80
7800					1.94	0.05	1.99	1.99	2.59	2.59	1633.89	1631.30	1631.30	1628.30	1628.30
8100					1.94	0.01	1.95	1.95	2.54	2.54	1641.00	1638.47	1638.47	1635.47	1635.47
8200					1.94	0.01	1.95	1.95	2.53	2.53	1642.34	1639.81	1639.81	1636.81	1636.81
8250				3.00	1.94	0.01	4.95	1.95	6.43	2.53	1643.01	1636.58	1640.48	1633.58	1637.48
8300					1.94	0.00	1.94	1.94	2.53	2.53	1643.67	1641.15	1641.15	1638.15	1638.15
8400					1.94	0.00	1.94	1.94	2.52	2.52	1645.01	1642.49	1642.49	1639.49	1639.49
8550					1.94	0.00	1.94	1.94	2.52	2.52	1647.83	1645.30	1645.30	1642.30	1642.30
8600				3.00	1.94	0.00	4.94	1.94	6.42	2.52	1648.76	1642.34	1646.24	1639.34	1643.24
8650					1.94	0.00	1.94	1.94	2.52	2.52	1649.70	1647.18	1647.18	1644.18	1644.18
8700					1.94	0.00	1.94	1.94	2.52	2.52	1650.64	1648.12	1648.12	1645.12	1645.12
9000					1.94	0.00	1.94	1.94	2.52	2.52	1658.46	1655.94	1655.94	1652.94	1652.94
9300					1.94	0.05	1.99	1.99	2.59	2.59	1666.00	1663.41	1663.41	1660.41	1660.41
9600					2.50	1.20	3.70	3.70	4.81	4.81	1669.50	1664.69	1664.69	1661.69	1661.69
9850					2.50	0.00	2.50	2.50	3.25	3.25	1675.80	1672.55	1672.55	1669.55	1669.55
10050					2.00	0.00	2.00	2.00	2.60	2.60	1683.40	1680.80	1680.80	1677.80	1677.80
10200					2.00	1.36	3.36	3.36	4.37	4.37	1686.70	1682.33	1682.33	1679.33	1679.33
10500					2.00	0.00	2.00	2.00	2.60	2.60	1693.88	1691.28	1691.28	1688.28	1688.28
10800					1.63	0.00	1.63	1.63	2.12	2.12	1698.70	1696.58	1696.58	1693.58	1693.58

Table A.1A
Scour and Toe-Down Analysis

	Local Scours Depths					HEC-6	Total Scour		Factored		Initial	Scour Elevation		Required Toe-Down	
			Low-Flow		Anti-Dune	Scour			Total Scour		Thalweg			Elevation	
Station	Contraction	Bend	Incisement	Historic	Troughs	Depth	West	East	West	East		West	East	West	East
11100					1.63	0.00	1.63	1.63	2.12	2.12	1705.55	1703.43	1703.43	1700.43	1700.43
11400					1.94	0.00	1.94	1.94	2.52	2.52	1712.39	1709.87	1709.87	1706.87	1706.87
11700					1.94	0.00	1.94	1.94	2.52	2.52	1720.28	1717.76	1717.76	1714.76	1714.76
12000					1.94	0.00	1.94	1.94	2.52	2.52	1727.73	1725.21	1725.21	1722.21	1722.21
12300					1.94	0.02	1.96	1.96	2.55	2.55	1736.24	1733.69	1733.69	1730.69	1730.69
12600					1.94	0.04	1.98	1.98	2.57	2.57	1743.60	1741.03	1741.03	1738.03	1738.03
12800					1.94	0.04	1.98	1.98	2.57	2.57	1748.85	1746.28	1746.28	1743.28	1743.28
12900				3.00	1.94	0.04	4.98	1.98	6.47	2.57	1751.48	1745.01	1748.91	1742.01	1745.91
13000					1.94	0.03	1.97	1.97	2.56	2.56	1754.22	1751.66	1751.66	1748.66	1748.66
13200					1.94	0.01	1.95	1.95	2.54	2.54	1759.70	1757.17	1757.17	1754.17	1754.17
13500					1.94	0.00	1.94	1.94	2.52	2.52	1765.10	1762.58	1762.58	1759.58	1759.58
13650					1.94	0.00	1.94	1.94	2.52	2.52	1766.10	1763.58	1763.58	1760.58	1760.58
13700				3.00	1.94	0.00	4.94	1.94	6.42	2.52	1766.43	1760.01	1763.91	1757.01	1760.91
13800					1.94	0.00	1.94	1.94	2.52	2.52	1767.10	1764.58	1764.58	1761.58	1761.58
13900					2.65	0.00	2.65	2.65	3.45	3.45	1770.63	1767.19	1767.19	1764.19	1764.19
13950				3.00	2.65	0.00	5.65	2.65	7.35	3.45	1772.40	1765.06	1768.96	1762.06	1765.96
14000					2.65	0.00	2.65	2.65	3.45	3.45	1774.17	1770.72	1770.72	1767.72	1767.72
14100					2.65	0.00	2.65	2.65	3.45	3.45	1777.70	1774.26	1774.26	1771.26	1771.26
14400					2.65	0.07	2.72	2.72	3.54	3.54	1786.61	1783.07	1783.07	1780.07	1780.07
14700					2.65	0.01	2.66	2.66	3.46	3.46	1793.10	1789.64	1789.64	1786.64	1786.64
15000					2.65	0.00	2.65	2.65	3.45	3.45	1801.00	1797.56	1797.56	1794.56	1794.56
15300					2.65	0.02	2.67	2.67	3.47	3.47	1811.70	1808.23	1808.23	1805.23	1805.23
15600					2.65	0.00	2.65	2.65	3.45	3.45	1818.77	1815.33	1815.33	1812.33	1812.33
15900					2.65	0.00	2.65	2.65	3.45	3.45	1825.38	1821.94	1821.94	1818.94	1818.94
16200					2.65	0.00	2.65	2.65	3.45	3.45	1832.45	1829.01	1829.01	1826.01	1826.01
16500					2.65	0.00	2.65	2.65	3.45	3.45	1840.19	1836.75	1836.75	1833.75	1833.75
16800					3.00	0.00	3.00	3.00	3.90	3.90	1846.70	1842.80	1842.80	1839.80	1839.80
17100					3.00	0.04	3.04	3.04	3.95	3.95	1853.53	1849.58	1849.58	1846.58	1846.58
17101		2.18			3.00	0.04	3.04	5.22	3.95	6.79	1853.56	1849.61	1846.77	1846.61	1843.77
17400		2.18			3.00	0.00	3.00	5.18	3.90	6.73	1862.65	1858.75	1855.92	1855.75	1852.92
17700		2.18			3.00	0.00	3.00	5.18	3.90	6.73	1869.60	1865.70	1862.87	1862.70	1859.87
18000		2.18			3.00	0.00	3.00	5.18	3.90	6.73	1875.40	1871.50	1868.67	1868.50	1865.67
18300		2.18			3.00	0.00	3.00	5.18	3.90	6.73	1882.82	1878.92	1876.09	1875.92	1873.09
18400		2.18			3.00	0.00	3.00	5.18	3.90	6.73	1885.96	1882.06	1879.23	1879.06	1876.23
18401					3.00	0.00	3.00	3.00	3.90	3.90	1885.99	1882.09	1882.09	1879.09	1879.09
18600					3.00	0.00	3.00	3.00	3.90	3.90	1892.25	1888.35	1888.35	1885.35	1885.35
18900					3.25	0.00	3.25	3.25	4.23	4.23	1900.44	1896.22	1896.22	1893.22	1893.22
19200					3.25	0.00	3.25	3.25	4.23	4.23	1911.00	1906.78	1906.78	1903.78	1903.78
19500					3.25	0.00	3.25	3.25	4.23	4.23	1921.29	1917.07	1917.07	1914.07	1914.07
19800					3.25	0.00	3.25	3.25	4.23	4.23	1930.90	1926.68	1926.68	1923.68	1923.68
20100					3.00	0.00	3.00	3.00	3.90	3.90	1941.29	1937.39	1937.39	1934.39	1934.39
20400					3.00	0.04	3.04	3.04	3.95	3.95	1960.10	1956.15	1956.15	1953.15	1953.15
20700					3.00	0.33	3.33	3.33	4.33	4.33	1974.93	1970.60	1970.60	1967.60	1967.60
21000					3.00	0.00	3.00	3.00	3.90	3.90	1985.16	1981.26	1981.26	1978.26	1978.26
21200					3.00	0.00	3.00	3.00	3.90	3.90	1990.87	1986.97	1986.97	1983.97	1983.97
21250				3.00	3.00	0.00	6.00	3.00	7.80	3.90	1992.29	1984.49	1988.39	1981.49	1985.39
21300					3.00	0.00	3.00	3.00	3.90	3.90	1993.72	1989.82	1989.82	1986.82	1986.82
21400					3.00	0.01	3.01	3.01	3.91	3.91	1996.20	1992.29	1992.29	1989.29	1989.29
21450				3.00	3.00	0.01	6.01	3.01	7.81	3.91	1997.44	1989.62	1993.52	1986.62	1990.52
21500					4.00	0.01	4.01	4.01	5.22	5.22	1998.67	1993.46	1993.46	1990.46	1990.46
21600					4.00	0.02	4.02	4.02	5.23	5.23	2001.15	1995.92	1995.92	1992.92	1992.92
21900					4.00	0.34	4.34	4.34	5.64	5.64	2007.80	2002.16	2002.16	1999.16	1999.16
21901		1.01			4.00	0.34	5.35	4.34	6.96	5.64	2007.82	2000.87	2002.18	1997.87	1999.18
22200		1.01			4.00	0.58	5.59	4.58	7.27	5.95	2014.60	2007.33	2008.65	2004.33	2005.65
22500		1.01			4.00	0.05	5.06	4.05	6.58	5.27	2022.30	2015.72	2017.04	2012.72	2014.04
22700		1.01			4.00	0.02	5.03	4.02	6.53	5.22	2027.31	2020.78	2022.09	2017.78	2019.09
22701					4.00	0.02	4.02	4.02	5.22	5.22	2027.34	2022.12	2022.12	2019.12	2019.12
22800					4.00	0.00	4.00	4.00	5.20	5.20	2029.82	2024.62	2024.62	2021.62	2021.62
23100					4.00	0.00	4.00	4.00	5.20	5.20	2036.90	2031.70	2031.70	2028.70	2028.70
23200					4.00	0.00	4.00	4.00	5.20	5.20	2040.33	2035.13	2035.13	2032.13	2032.13
23201			1.50		4.00	0.00	5.50	5.50	7.15	7.15	2040.37	2033.22	2033.22	2030.22	2030.22
23250			1.50		4.00	0.00	5.50	5.50	7.15	7.15	2042.05	2034.90	2034.90	2031.90	2031.90
23251		0.22	1.50		3.50	0.00	5.00	5.22	6.50	6.79	2042.08	2035.58	2035.30	2032.58	2032.30
23400		0.22	1.50		3.50	0.00	5.00	5.22	6.50	6.79	2047.20	2040.70	2040.41	2037.70	2037.41
23700		0.22	1.50		3.50	0.01	5.01	5.23	6.51	6.80	2057.38	2050.87	2050.58	2047.87	2047.58
23701			1.50		3.50	0.01	5.01	5.01	6.51	6.51	2057.41	2050.90	2050.90	2047.90	2047.90
24000			1.50		3.50	0.00	5.00	5.00	6.50	6.50	2067.56	2061.06	2061.06	2058.06	2058.06
24300			1.50		3.50	0.00	5.00	5.00	6.50	6.50	2070.80	2064.30	2064.30	2061.30	2061.30
24400			1.50		3.50	0.00	5.00	5.00	6.50	6.50	2075.84	2069.34	2069.34	2066.34	2066.34
24401		0.84	1.50		4.00	0.00	6.34	5.50	8.24	7.15	2075.89	2067.65	2068.74	2064.65	2065.74
24450		0.84	1.50		4.00	0.00	6.34	5.50	8.24	7.15	2078.4	2070.12	2071.21	2067.12	2068.21
24600		0.84	1.50		4.00	0.00	6.34	5.50	8.24	7.15	2083.90	2075.66	2076.75	2072.66	2073.75

Table A.1A
Scour and Toe-Down Analysis

	Local Scours Depths					HEC-6	Total Scour		Factored		Initial	Scour Elevation		Required Toe-Down	
									Total Scour		Thalweg			Elevation	
Station	Contraction	Bend	Low-Flow Incisement	Historic	Anti-Dune Troughs	Scour Depth	West	East	West	East		West	East	West	East
24601		0.84	1.50		4.00	0.00	5.50	6.34	7.15	8.24	2083.94	2076.79	2075.70	2073.79	2072.70
24750		0.84	1.50		4.00	0.00	5.50	6.34	7.15	8.24	2089.5	2082.32	2081.23	2079.32	2078.23
24900		0.84	1.50		4.00	0.81	6.31	7.15	8.20	9.30	2095.00	2086.80	2085.71	2083.80	2082.71
24901			1.50		4.00	0.82	6.32	6.32	8.21	8.21	2095.04	2086.83	2086.83	2083.83	2083.83
25050			1.50		4.00	1.62	7.12	7.12	9.26	9.26	2100.5	2091.24	2091.24	2088.24	2088.24
25350			1.50		4.00	0.02	5.52	5.52	7.18	7.18	2111.67	2104.49	2104.49	2101.49	2101.49
25500			1.50		4.00	0.88	6.38	6.38	8.29	8.29	2117.20	2108.91	2108.91	2105.91	2105.91
25550			1.50	3.00	4.00	1.16	9.66	6.66	12.56	8.66	2119.06	2106.50	2110.40	2103.50	2107.40
25551			1.50	3.00	4.00	1.17	9.67	6.67	12.57	8.67	2119.09	2106.53	2110.43	2103.53	2107.43
25650			1.50	3.00	4.00	1.73	10.23	7.23	13.30	9.40	2122.8	2109.47	2113.37	2106.47	2110.37
25700			1.50	3.00	4.00	1.83	10.33	7.33	13.42	9.52	2124.61	2111.19	2115.09	2108.19	2112.09
25800			1.50	3.00	4.00	2.02	10.52	7.52	13.67	9.77	2128.30	2114.63	2118.53	2111.63	2115.53
25801	0.90		1.50	3.00	4.00	2.02	11.42	8.42	14.84	10.94	2128.34	2113.50	2117.40	2110.50	2114.40
25950	0.90		1.50	3.00	4.00	2.30	11.70	8.70	15.21	11.31	2133.9	2118.66	2122.56	2115.66	2119.56
26100	0.90		1.50	3.00	4.00	1.54	10.94	7.94	14.22	10.32	2139.40	2125.18	2129.08	2122.18	2126.08
26150	0.90		1.50		2.65	1.29	6.34	6.34	8.24	8.24	2141.13	2132.89	2132.89	2129.89	2129.89
26200	0.90		1.50		2.65	1.03	6.08	6.08	7.91	7.91	2142.86	2134.95	2134.95	2131.95	2131.95
26201			1.50		2.65	1.03	5.18	5.18	6.73	6.73	2142.89	2136.16	2136.16	2133.16	2133.16
26250			1.50		2.65	0.78	4.93	4.93	6.41	6.41	2144.6	2138.18	2138.18	2135.18	2135.18
26300			1.50		2.65	0.65	4.80	4.80	6.24	6.24	2146.12	2139.88	2139.88	2136.88	2136.88
26301					2.65	0.65	3.30	3.30	4.29	4.29	2146.15	2141.86	2141.86	2138.86	2138.86
26550					2.65	0.02	2.67	2.67	3.47	3.47	2153.77	2150.30	2150.30	2147.30	2147.30
26850					3.25	0.00	3.25	3.25	4.23	4.23	2162.00	2157.78	2157.78	2154.78	2154.78
27150					3.25	0.00	3.25	3.25	4.23	4.23	2171.50	2167.28	2167.28	2164.28	2164.28
27225					3.25	0.00	3.25	3.25	4.23	4.23	2173.30	2169.08	2169.08	2166.08	2166.08
27265					3.25	0.00	3.25	3.25	4.23	4.23	2174.20	2169.98	2169.98	2166.98	2166.98

Table A.1B
Freeboard Analysis

Freeboard 3' to 4' above Design WSEL				Check of 0.25 x Energy Head vs. Freeboard					
Station	WSEL HEC-6	WSEL HEC-RAS SUB	Design WSEL	Initial Thalweg Elevation	WSEL HEC-RAS Mixed	Mixed Flow Depth	Mixed Flow Velocity	0.25x Energy Head	Within Freeboard?
0	1512.96	1513.79	1513.79	1505.16	1512.03	6.87	19.61	3.21	Yes
150		1516.1	1516.1	1506.36	1515.77	9.41	16.3	3.38	Yes
300	1516.98	1517.48	1517.48	1508.73	1517.48	8.75	15.19	3.08	Yes
450		1520.91	1520.91	1509.05	1520.91	11.86	7.05	3.16	Yes
600	1520.63	1521.04	1521.04	1509.46	1521.04	11.58	7.27	3.10	Yes
750		1521.15	1521.15	1510.1	1521.15	11.05	7.66	2.99	Yes
900	1520.81	1521.32	1521.32	1510.86	1521.32	10.46	7.89	2.86	Yes
1050		1521.47	1521.47	1511.8	1521.47	9.67	8.42	2.69	Yes
1200	1521.87	1521.43	1521.87	1514.6	1518.39	3.79	20.17	2.53	Yes
1350		1524.38	1524.38	1517.4	1523.3	5.9	17.09	2.61	Yes
1500	1526.53	1526.61	1526.61	1520.2	1525.11	4.91	18.42	2.54	Yes
1650		1529.44	1529.44	1523	1527.71	4.71	19.4	2.64	Yes
1800	1532.47	1532.92	1532.92	1525.8	1530.75	4.95	19.87	2.77	Yes
1950		1536.25	1536.25	1528.6	1534.18	5.58	18.73	2.76	Yes
2100	1538.86	1539.1	1539.1	1531.4	1537.58	6.18	15.08	2.43	Yes
2250		1542.31	1542.31	1532.99	1542.31	9.32	9.87	2.71	Yes
2400	1543.85	1544.89	1544.89	1534.66	1544.89	10.23	8.87	2.86	Yes
2550		1546.58	1546.58	1536.2	1546.58	10.38	7.91	2.84	Yes
2700	1548.49	1547.98	1548.49	1539	1547.98	8.98	7.82	2.48	Yes
2850		1549.53	1549.53	1542.6	1549.53	6.93	7.81	1.97	Yes
3000	1551.36	1551.32	1551.36	1544.6	1551.32	6.72	8.47	1.96	Yes
3150		1553.72	1553.72	1547.3	1553.72	6.42	7.59	1.83	Yes
3300	1556.15	1555.93	1556.15	1549.58	1555.93	6.35	8.72	1.88	Yes
3450		1559.07	1559.07	1552.7	1559.07	6.37	11.13	2.07	Yes
3600	1561.14	1562.38	1562.38	1554.12	1562.38	8.26	8.25	2.33	Yes
3750		1564.1	1564.1	1556.5	1564.1	7.6	7.59	2.12	Yes
3900	1566.55	1565.84	1566.55	1558.66	1565.84	7.18	8.55	2.08	Yes
4050		1568.39	1568.39	1562.83	1568.39	5.56	8.96	1.70	Yes
4200	1571.42	1571.89	1571.89	1565.99	1571.89	5.9	9.57	1.83	Yes
4356		1572.69	1572.69	1564.6	1572.69	8.09	7.87	2.26	Yes
4400		1573.26	1573.26	1564.6	1573.26	8.66	7.71	2.40	Yes
4500	1576.93	1573.83	1576.93	1566.11	1573.83	7.72	10.47	2.36	Yes
4650		1577.67	1577.67	1572.18	1577.67	5.49	9.88	1.75	Yes
4800	1579.35	1579.57	1579.57	1573.7	1579.57	5.87	10.19	1.87	Yes
4950		1582.23	1582.23	1575.8	1582.23	6.43	10.2	2.01	Yes
5100	1586.41	1587.12	1587.12	1578.6	1587.12	8.52	8.54	2.41	Yes
5250		1588.49	1588.49	1580.66	1588.49	7.83	10.33	2.37	Yes
5400	1591.33	1591.3	1591.33	1583.68	1590.37	6.69	12.32	2.26	Yes
5550		1594.68	1594.68	1585.91	1594.68	8.77	10.81	2.65	Yes
5700	1597.34	1597.18	1597.34	1589.34	1597.18	7.84	10.88	2.42	Yes
5850		1600.13	1600.13	1593.29	1600.13	6.84	9.25	2.04	Yes
6000	1602.59	1602.53	1602.59	1596.97	1602.21	5.24	10.35	1.73	Yes
6150		1606.41	1606.41	1600.3	1606.01	5.71	10.84	1.88	Yes
6300	1610.5	1610.38	1610.5	1604.15	1610.21	6.06	9.9	1.90	Yes
6450		1613.56	1613.56	1608.21	1613.55	5.34	9.29	1.67	Yes
6600	1617.14	1616.99	1617.14	1611.83	1616.55	4.72	11.45	1.69	Yes
6750		1620.71	1620.71	1615.42	1620.71	5.29	10.46	1.75	Yes
6900	1623.91	1623.98	1623.98	1617.2	1623.98	6.78	9.68	2.06	Yes
7050		1626.47	1626.47	1616.85	1626.47	9.62	7.41	2.62	Yes
7200	1628.57	1627.83	1628.57	1620.4	1627.83	7.43	8.26	2.12	Yes
7350		1629.96	1629.96	1623.78	1629.96	6.18	9.37	1.89	Yes
7500	1633	1633.1	1633.1	1627.35	1633.1	5.75	9.21	1.77	Yes
7650		1636.11	1636.11	1630.3	1636.11	5.81	8.58	1.74	Yes
7800	1639.48	1639.06	1639.48	1633.89	1639.06	5.17	9.93	1.68	Yes
7950		1642.63	1642.63	1637.35	1642.63	5.28	9.26	1.65	Yes
8100	1646.05	1645.93	1646.05	1641	1645.93	4.93	10.28	1.64	Yes
8250		1649.09	1649.09	1641.54	1649.09	7.55	8.18	2.15	Yes
8400	1651.73	1651.12	1651.73	1645	1651.12	6.12	9.25	1.86	Yes

Table A.1B
Freeboard Analysis

Freeboard 3' to 4' above Design WSEL				Check of 0.25 x Energy Head vs. Freeboard					
Station	WSEL HEC-6	WSEL HEC-RAS SUB	Design WSEL	Initial Thalweg Elevation	WSEL HEC-RAS Mixed	Mixed Flow Depth	Mixed Flow Velocity	0.25x Energy Head	Within Freeboard?
8550		1653.96	1653.96	1647.88	1653.96	6.08	8.92	1.83	Yes
8700	1656.86	1656.69	1656.86	1650.64	1656.69	6.05	9.74	1.88	Yes
8850		1660.19	1660.19	1654.65	1660.19	5.54	9.71	1.75	Yes
9000	1663.82	1663.67	1663.82	1658.46	1663.38	4.92	10.38	1.65	Yes
9150		1667.21	1667.21	1662.6	1667.12	4.52	10.23	1.54	Yes
9300	1670.88	1670.89	1670.89	1666	1670.89	4.89	9.92	1.60	Yes
9450		1672.4	1672.4	1668	1671.94	3.94	11.99	1.54	Yes
9600	1673.25	1673.5	1673.5	1669.5	1672.48	2.98	15.13	1.63	Yes
9750		1675.18	1675.18	1671	1673.49	2.49	19.58	2.11	Yes
9900		1679.87	1679.87	1675.8	1677.81	2.01	23.12	2.58	Yes
10050	1689.86	1688.57	1689.86	1684	1687.42	3.42	15.74	1.82	Yes
10200	1692.99	1692.81	1692.99	1686.7	1692.81	6.11	10.39	1.95	Yes
10350		1696.15	1696.15	1689.05	1696.15	7.1	10.33	2.19	Yes
10500	1699.71	1699.68	1699.71	1693.88	1699.68	5.8	9.39	1.79	Yes
10650		1702.7	1702.7	1696.51	1702.7	6.19	9.61	1.91	Yes
10800	1705.57	1705.74	1705.74	1698.7	1705.74	7.04	8.65	2.05	Yes
10950		1708.26	1708.26	1702.7	1708.26	5.56	9.57	1.75	Yes
11100		1711.81	1711.81	1706.64	1711.51	4.87	10.87	1.68	Yes
11250		1715.39	1715.39	1709.76	1715.14	5.38	10.6	1.78	Yes
11400	1718.94	1718.62	1718.94	1712.39	1718.62	6.23	9.62	1.92	Yes
11550		1722.05	1722.05	1715.6	1722.05	6.45	7.86	1.85	Yes
11700	1725.47	1725.08	1725.47	1720.28	1724.81	4.53	10.58	1.57	Yes
11850		1729.1	1729.1	1724.3	1729	4.7	9.85	1.55	Yes
12000	1733.58	1733.46	1733.58	1727.73	1733.37	5.64	9.85	1.79	Yes
12150		1737.86	1737.86	1732.2	1737.79	5.59	9.73	1.77	Yes
12300	1742.14	1742.03	1742.14	1736.24	1742.03	5.79	9.4	1.79	Yes
12450		1745.91	1745.91	1740.54	1745.74	5.2	9.93	1.68	Yes
12600	1750.15	1750.05	1750.15	1743.6	1750.05	6.45	9.42	1.96	Yes
12750		1753.83	1753.83	1746.85	1753.59	6.74	10.52	2.11	Yes
12900	1758.2	1758.12	1758.2	1751.48	1758.12	6.64	9.62	2.02	Yes
13050		1761.6	1761.6	1755.9	1761.6	5.7	9.3	1.76	Yes
13200	1764.71	1764.65	1764.71	1759.7	1764.65	4.95	9.68	1.60	Yes
13350		1767.78	1767.78	1762.52	1767.78	5.26	9.7	1.68	Yes
13500	1770.34	1770.56	1770.56	1765.1	1770.56	5.46	8.9	1.67	Yes
13650		1772.7	1772.7	1767.1	1772.7	5.6	8.78	1.70	Yes
13800	1775.35	1775	1775.35	1767.1	1774.53	7.43	11.15	2.34	Yes
13950		1779.72	1779.72	1773.35	1779.44	6.09	11	1.99	Yes
14100	1783.47	1783.36	1783.47	1777.7	1782.9	5.2	11.85	1.85	Yes
14250		1787.59	1787.59	1782.2	1787.47	5.27	10.46	1.74	Yes
14400	1791.64	1791.53	1791.64	1786.61	1791.3	4.69	10.26	1.58	Yes
14550		1795.58	1795.58	1790.9	1795.51	4.61	9	1.47	Yes
14700	1799.83	1799.73	1799.83	1793.1	1799.34	6.24	10.63	2.00	Yes
14850		1803.96	1803.96	1797.85	1803.96	6.11	8.77	1.83	Yes
15000	1807.81	1807.66	1807.81	1801	1807.66	6.66	7.57	1.89	Yes
15150		1811.23	1811.23	1804.6	1810.79	6.19	10.38	1.97	Yes
15300	1817.07	1816.95	1817.07	1811.7	1816.74	5.04	10.53	1.69	Yes
15450		1820.88	1820.88	1815.5	1820.84	5.34	9.5	1.69	Yes
15600	1824.74	1824.63	1824.74	1818.77	1824.44	5.67	9.78	1.79	Yes
15750		1828.74	1828.74	1821.93	1828.74	6.81	9.16	2.03	Yes
15900	1831.87	1831.81	1831.87	1825.38	1831.48	6.1	11.73	2.06	Yes
16050		1835.83	1835.83	1827.67	1835.73	8.06	11.26	2.51	Yes
16200	1839.3	1839.21	1839.3	1832.45	1839.03	6.58	11.87	2.19	Yes
16350		1843.46	1843.46	1836.02	1843.28	7.26	11.14	2.30	Yes
16500	1847.23	1847.11	1847.23	1840.19	1847.11	6.92	10.9	2.19	Yes
16650		1851.03	1851.03	1844.79	1850.75	5.96	10.46	1.91	Yes
16800	1855.15	1854.87	1855.15	1846.7	1853.93	7.23	13.66	2.53	Yes
16950		1860.08	1860.08	1850.47	1859.53	9.06	12.96	2.92	Yes
17100	1863.42	1863.58	1863.58	1853.53	1863.58	10.05	10.38	2.93	Yes

Table A.1B
Freeboard Analysis

Freeboard 3' to 4' above Design WSEL				Check of 0.25 x Energy Head vs. Freeboard					
Station	WSEL HEC-6	WSEL HEC-RAS SUB	Design WSEL	Initial Thalweg Elevation	WSEL HEC-RAS Mixed	Mixed Flow Depth	Mixed Flow Velocity	0.25x Energy Head	Within Freeboard?
17250		1866.95	1866.95	1857.51	1866.95	9.44	8.46	2.64	Yes
17400	1869.96	1869.48	1869.96	1862.65	1869.48	6.83	10.56	1.99	Yes
17550		1873.02	1873.02	1866.14	1873.02	6.88	6.98	2.15	Yes
17700	1875.99	1875.43	1875.99	1869.6	1875.43	5.83	9.43	1.65	Yes
17850		1878.8	1878.8	1872.2	1878.8	6.6	7.75	2.00	Yes
18000	1881.39	1881.13	1881.39	1875.4	1881.13	5.73	9.59	1.67	Yes
18150		1884.66	1884.66	1879.1	1883.51	4.41	14.57	1.46	Yes
18300	1890.18	1890.08	1890.18	1882.82	1890.08	7.26	12.02	2.64	Yes
18450		1893.7	1893.7	1887.85	1893.7	5.85	9.39	2.02	Yes
18600	1897.07	1897.01	1897.07	1892.25	1896.31	4.06	13.4	1.36	Yes
18750		1902	1902	1896.7	1901.86	5.16	11.03	1.99	Yes
18900	1906.13	1906.11	1906.13	1900.44	1905.68	5.24	12.14	1.78	Yes
19050		1911.28	1911.28	1905.01	1910.67	5.66	13.05	1.99	Yes
19200	1917.3	1917.28	1917.3	1911	1916.53	5.53	13.62	2.04	Yes
19350		1922.72	1922.72	1916.6	1922.24	5.64	13.01	2.13	Yes
19500	1927.6	1927.58	1927.6	1921.29	1927.36	6.07	10.89	2.17	Yes
19650		1932.72	1932.72	1925.5	1931.03	5.53	18.11	1.84	Yes
19800	1940.76	1940.74	1940.76	1930.9	1940.59	9.69	11.03	3.70	No
19950		1943.79	1943.79	1937.37	1943.15	5.78	13.61	1.92	Yes
20100	1948.99	1948.95	1948.99	1941.29	1947.62	6.33	16.56	2.30	Yes
20250		1956.96	1956.96	1949.55	1955.67	6.12	16.72	2.59	Yes
20400	1966.1	1966.13	1966.13	1960.1	1965.02	4.92	15.28	2.32	Yes
20550		1973.9	1973.9	1968.38	1973.45	5.07	11.47	2.17	Yes
20700	1980	1980.06	1980.06	1974.93	1979.08	4.15	13.99	1.55	Yes
20850		1986.18	1986.18	1980.15	1985.82	5.67	12.22	2.18	Yes
21000	1991.32	1991.32	1991.32	1985.16	1990.73	5.57	12.55	1.97	Yes
21150		1996.48	1996.48	1989.99	1996.05	6.06	12.41	2.13	Yes
21300	2000.98	2000.99	2000.99	1993.72	2000.07	6.35	14.58	2.19	Yes
21450		2005.65	2005.65	1997	2004.29	7.29	17.01	2.65	Yes
21600	2009.13	2009.14	2009.14	2001.15	2007.36	6.21	19.47	2.68	Yes
21750		2012.84	2012.84	2004.4	2011.31	6.91	17.98	3.20	Yes
21900	2015.74	2015.74	2015.74	2007.8	2014.08	6.28	18.49	2.82	Yes
22050		2019.59	2019.59	2011.2	2017.87	6.67	19.18	2.99	Yes
22200	2023.48	2023.48	2023.48	2014.6	2022.1	7.5	18	3.30	Yes
22350		2027.01	2027.01	2018.16	2026	7.84	16.31	3.22	Yes
22500	2030.31	2030.23	2030.31	2022.3	2029.67	7.37	14.63	2.88	Yes
22650		2033	2033	2025.8	2032.21	6.41	15.38	2.43	Yes
22800	2036.6	2036.58	2036.6	2029.82	2035.7	5.88	15.28	2.39	Yes
22950		2040.39	2040.39	2032.5	2038.85	6.35	18.45	2.49	Yes
23100	2044.99	2044.93	2044.99	2036.9	2042.82	5.92	18.84	2.80	Yes
23250		2047.27	2047.27	2040.54	2044.68	4.14	26.26	2.41	Yes
23400	2053.86	2054.69	2054.69	2047.2	2051.24	4.04	28.02	3.69	Yes
23550		2059.24	2059.24	2052.29	2056.16	3.87	26.87	4.02	Yes
23700	2064.01	2064.32	2064.32	2057.38	2061.69	4.31	24.05	3.88	Yes
23850		2069.42	2069.42	2062.47	2067.06	4.59	22.53	3.39	Yes
24000	2074.26	2074.51	2074.51	2067.56	2071.31	3.75	27.8	2.91	Yes
24150		2076.15	2076.15	2069.2	2073.01	3.81	27.32	3.95	Yes
24300		2077.75	2077.75	2070.8	2074.66	3.86	26.93	3.86	Yes
24450	2084.96	2085.33	2085.33	2078.36	2081.6	3.24	32.24	3.63	Yes
24600		2091.92	2091.92	2083.9	2087.96	4.06	32.17	5.05	Yes
24750	2097.12	2097.47	2097.47	2089.47	2093.52	4.05	32.09	5.03	Yes
24900		2103.01	2103.01	2095	2099.07	4.07	32.01	5.02	Yes
25050	2106.96	2108.86	2108.86	2100.5	2104.61	4.11	31.97	5.01	Yes
25200		2114.35	2114.35	2106.1	2110.21	4.11	31.74	5.00	Yes
25350	2119.49	2119.83	2119.83	2111.67	2115.79	4.12	31.48	4.94	Yes
25500		2125.26	2125.26	2117.2	2121.39	4.19	31.01	4.89	Yes
25650	2130.6	2131.02	2131.02	2122.77	2127.07	4.3	30.12	4.81	Yes
25800		2136.66	2136.66	2128.3	2132.85	4.55	28.36	4.66	Yes

Table A.1B
Freeboard Analysis

Freeboard 3' to 4' above Design WSEL				Check of 0.25 x Energy Head vs. Freeboard					
Station	WSEL HEC-6	WSEL HEC-RAS SUB	Design WSEL	Initial Thalweg Elevation	WSEL HEC-RAS Mixed	Mixed Flow Depth	Mixed Flow Velocity	0.25x Energy Head	Within Freeboard?
25950	2141.41	2142.31	2142.31	2133.87	2139.01	5.14	24.67	4.41	Yes
26100		2146.67	2146.67	2139.4	2144.67	5.27	17.78	3.68	Yes
26250	2149.92	2150.11	2150.11	2144.59	2148.82	4.23	16.5	2.28	Yes
26400		2155.06	2155.06	2149.77	2154.74	4.97	12.13	2.30	Yes
26550	2158.9	2158.96	2158.96	2153.77	2158.56	4.79	11.77	1.77	Yes
26700		2163.43	2163.43	2158	2163.13	5.13	10.49	1.82	Yes
26850	2167.78	2167.94	2167.94	2162	2166.27	4.27	20.16	1.49	Yes
27000		2177.19	2177.19	2167.9	2175.55	7.65	13.75	3.49	Yes
27150	2178.68	2178.93	2178.93	2171.5	2178.93	7.43	13.91	2.59	Yes
27225	2180.51	2179.82	2180.51	2173.3	2179.82	6.52	14.52	2.38	Yes
27265	2180.85	2184.8	2184.8	2174.2	2177.68	3.48	27.22	1.69	Yes
27570	2190.05	2190.57	2190.57	2183.9	2189.15	5.25	17.95	4.19	Yes
27725	2194.63	2194.72	2194.72	2188.6	2192.5	3.9	21.83	2.23	Yes
27745	2199.93	2199.99	2199.99	2194.6	2199.99	5.39	12.44	3.20	Yes

HEC-RAS Plan: Plan 04 Reach: 1 4/2/96
Subcritial flow

Reach	River Sta.	Q Total	Min Ch El	W.S. Elev	Crit W.S.	E.G. Elev	E.G. Slope	Vel Chnl	Flow Area	Top Width	Froude #	Hyd. Depth
	31650	5766	2309.55	2313.27	2313.27	2314.15	0.014403	7.52	766.5	426.12	0.99	1.8
	31350	5766	2300.06	2303.47	2303.47	2304.43	0.014194	7.84	735.29	380.35	0.99	1.93
	31050	5766	2291.89	2295.79	2295.79	2296.68	0.014795	7.57	761.42	428.02	1	1.78
	30750	5766	2282.53	2286.82	2286.82	2287.77	0.014893	7.82	737.26	397.58	1.01	1.85
	30450	5766	2273.5	2276.52	2276.52	2277.4	0.014645	7.53	765.31	430.32	1	1.78
	30150	5766	2262.9	2268.58	2268.58	2269.85	0.013184	9.04	638.03	250.21	1	2.55
27	29850	5766	2256.21	2260.4	2260.4	2261.21	0.012382	7.66	829.4	495.88	0.95	1.67
	29550	5766	2247.35	2251.99	2251.99	2252.9	0.01139	7.76	782.26	453.09	2.76	1.73
	29250	5766	2237.9	2244.12	2244.12	2245.24	0.013482	8.52	677.05	296.91	0.99	2.28
	28950	10796	2228.6	2235.14	2235.14	2236.31	0.013717	8.69	1242.78	536.12	1.01	2.32
	28800	10796	2224.24	2228.61	2228.61	2229.89	0.009416	9.09	1187.81	454.42	0.99	2.61
	28650	10796	2217.7	2223.37	2223.37	2224.47	0.009948	8.4	1285.21	578.24	0.99	2.22
	28415	10796	2210.8	2216.6	2216.6	2217.78	0.013652	8.69	1242.87	533.11	1	2.33
	28060	10796	2200.8	2206.54	2206.51	2208.06	0.012882	11.08	1195.01	374.59	0.89	3.19
	27745	10796	2194.6	2199.99	2199.99	2202.38	0.026018	12.44	870.75	183.79	1	4.74
26	27725	10796	2188.6	2194.72	2194.72	2197.49	0.025787	13.35	808.52	147.36	1	5.49
	27570	10796	2183.9	2190.57	2190.57	2193.44	0.005571	13.61	793.1	138.57	1	5.72
	27265	10796	2174.2	2184.8	2180.73	2186.04	0.000434	8.94	1208.73	116	2.19	10.42
	27245	Culvert										
25	27225	10796	2173.3	2179.82	2179.82	2183.1	0.002037	14.52	743.28	114.02	2.19	6.52
	27150	10796	2171.5	2178.93	2178.93	2181.93	0.005522	13.91	776.33	129.88	1	5.98
	27000	10796	2167.9	2177.19	2177.19	2179.49	0.004263	13.84	1230.26	288.95	0.75	4.26
	26700	10796	2162	2167.94	2167.94	2169.44	0.007469	10.02	1142.3	390.92	0.97	2.92
	26550	10796	2158	2163.43	2163.43	2164.79	0.01919	9.36	1153.29	420.94	1	2.74
	26400	10796	2153.77	2158.96	2158.96	2160.62	0.017769	10.34	1044.18	324.22	1.02	3.22
24	26250	10796	2149.77	2155.06	2155.06	2156.98	0.016956	11.11	971.36	257.25	1.01	3.78
	26100	10796	2144.59	2150.11	2150.11	2152.14	0.008489	11.51	967.54	252.65	1	3.83
	25950	10796	2139.4	2146.67	2146.67	2147.71	0.00167	10.08	1827.67	800	0.69	2.28
	25800	10796	2133.87	2142.31	2142.31	2143.59	0.00153	10.44	2038.14	800	0.58	2.55
	25650	10796	2128.3	2136.66	2136.66	2139.5	0.002689	13.75	937.94	238.74	1.02	3.93
	25500	10796	2122.77	2131.02	2131.02	2134.15	0.003071	14.26	807.76	189.32	1.14	4.27
	25350	10796	2117.2	2125.26	2125.26	2128.63	0.003439	14.73	743.38	141.75	1.12	5.24
23	25200	10796	2111.67	2119.83	2119.83	2123.04	0.00323	14.41	785.27	168.26	1.12	4.67
	25050	10796	2106.1	2114.35	2114.35	2117.4	0.003092	14.14	838.08	202.14	1.11	4.15
	24900	10796	2100.5	2108.86	2108.86	2111.74	0.002961	13.8	901.78	214.24	1.03	4.21
	24750	10796	2095	2103.01	2103.01	2106.43	0.003571	14.83	728.06	107.18	1	6.79
	24600	10796	2089.47	2097.47	2097.47	2100.89	0.00357	14.83	727.88	106.96	1	6.81
	24450	10796	2083.9	2091.92	2091.92	2095.33	0.003561	14.82	729.35	121.2	1.06	6.02
22	24300	10796	2078.36	2085.33	2085.33	2088.59	0.00366	14.49	745.22	113.9	1	6.54
	24080	10796	2070.8	2077.75	2077.75	2081.03	0.003687	14.52	743.45	113.87	1	6.53
	24035	10796	2069.2	2076.15	2076.15	2079.43	0.003682	14.51	743.79	113.89	1	6.53
	24000	10796	2067.56	2074.51	2074.51	2077.79	0.004828	14.53	743.03	113.91	1	6.52
	23850	10796	2062.47	2069.42	2069.42	2072.7	0.011832	14.55	741.96	113.88	1	6.52
21	23700	10796	2057.38	2064.32	2064.32	2067.61	0.003708	14.55	742.18	113.89	1	6.52
	23550	10796	2052.29	2059.24	2059.24	2062.52	0.003689	14.52	743.34	113.9	1	6.53
	23400	11742	2047.2	2054.69	2054.69	2057.99	0.003401	14.58	822.33	175.61	1.16	4.68
	23250	11742	2040.54	2047.27	2047.27	2049.47	0.013856	11.91	985.92	222.25	1	4.44
20	23100	11742	2036.9	2044.93	2044.93	2047.42	0.008927	12.67	927.06	186.4	1	4.97
	22950	11742	2032.5	2040.39	2040.39	2043.19	0.014365	13.42	874.7	158.31	1.01	5.53
	22800	11742	2029.82	2036.58	2036.58	2039.06	0.014436	12.65	928.21	185.34	1	5.01
	22650	11742	2025.8	2033	2033	2035.69	0.013002	13.16	892.46	167.15	1	5.34
	22500	11742	2022.3	2030.23	2030.23	2032.92	0.012509	13.17	901.57	175.99	1.01	5.12
	22350	11742	2018.16	2027.01	2027.01	2029.86	0.011997	13.55	874.15	163.41	1.02	5.35
19	22200	11742	2014.6	2023.48	2023.48	2026.62	0.008124	14.29	846.02	142.44	1	5.94
	22050	11742	2011.2	2019.59	2019.59	2022.47	0.011701	13.63	870.19	155.8	1.01	5.59
	21900	11742	2007.8	2015.74	2015.74	2018.67	0.007289	13.89	891.88	157.75	0.98	5.65
	21750	11742	2004.4	2012.84	2012.84	2015.81	0.007467	14.04	885.54	154.71	0.98	5.72
	21600	11742	2001.15	2009.14	2009.14	2012.15	0.00754	14.03	871.94	154.44	1	5.65
	21450	11742	1997	2005.65	2005.65	2008.23	0.014551	13.21	933.47	183.31	0.98	5.09
	21300	11742	1993.72	2000.99	2000.99	2003.06	0.015873	11.67	1032.92	251.03	0.99	4.11
	21150	11742	1989.99	1996.48	1996.48	1998.37	0.020742	11.03	1071.27	289.81	1	3.7
	21000	11742	1985.16	1991.32	1991.32	1993	0.021167	10.46	1134.09	338.95	1	3.35
	20850	11742	1980.15	1986.18	1986.18	1988.08	0.020907	11.11	1064.46	289.16	1.01	3.68
18	20700	11742	1974.93	1980.06	1980.06	1981.52	0.021057	9.71	1214.33	419.72	1	2.89
	20550	11742	1968.38	1973.9	1973.9	1975.38	0.020978	9.76	1206.89	413.7	1	2.92
	20400	11742	1960.1	1966.13	1966.13	1967.78	0.0209	10.28	1142.97	361.28	1.02	3.16
	20250	11742	1949.55	1956.96	1956.96	1959.18	0.018161	11.98	989	227.61	1	4.35
	20100	11742	1941.29	1948.95	1948.95	1950.97	0.018432	11.42	1030.07	255.2	1	4.04
	19950	11742	1937.37	1943.79	1943.79	1945.9	0.018045	11.66	1008.07	237.87	1	4.24
	19800	11742	1930.9	1940.74	1940.74	1942.47	0.021323	10.56	1111.45	318.42	1	3.49
	19650	11742	1925.5	1932.72	1932.72	1934.48	0.02122	10.65	1106.14	317.95	1	3.48
	19500	11742	1921.29	1927.58	1927.58	1929.18	0.021855	10.15	1156.61	359.76	1	3.21
17	19350	11742	1916.6	1922.72	1922.72	1924.76	0.020527	11.45	1025.13	253.62	1	4.04
	19200	11742	1911	1917.28	1917.28	1919.11	0.02133	10.86	1081.3	298.57	1.01	3.62
	19050	11742	1905.01	1911.28	1911.28	1913.14	0.022103	10.96	1071.15	290.36	1.01	3.69
	18900	11742	1900.44	1906.11	1906.11	1907.88	0.022346	10.67	1099.97	313.25	1	3.51

HEC-RAS Plan: Plan 04 Reach: 1 4/2/96
Subcritial flow

Reach	River Sta.	Q Total	Min Ch El	W.S. Elev	Crit W.S.	E.G. Elev	E.G. Slope	Vel Chnl	Flow Area	Top Width	Froude #	Hyd. Depth
	18750	11742	1896.7	1902	1902	1903.79	0.02045	10.82	1109.26	309.42	0.99	3.58
	18600	11742	1892.25	1897.01	1897.01	1898.84	0.021801	10.87	1086.34	306.68	1.01	3.54
16	18450	11742	1887.85	1893.7		1895.07	0.01525	9.42	1249.94	301.15	0.81	4.15
	18300	11742	1882.82	1890.08	1890.08	1892.42	0.020149	12.37	976.63	217.91	1	4.48
	18150	11742	1879.1	1884.66	1884.54	1885.95	0.021998	9.16	1300.13	467.34	0.95	2.78
	18000	11742	1875.4	1881.13	1881.13	1882.63	0.021942	9.92	1224.13	417.26	0.99	2.93
	17850	11742	1872.2	1878.8		1879.74	0.014276	7.78	1515.63	489.6	0.78	3.1
	17700	11742	1869.6	1875.43	1875.43	1876.82	0.027651	9.45	1245.18	451.88	1	2.76
	17550	11742	1866.14	1873.02		1873.79	0.012056	7.03	1681.24	520.61	0.68	3.23
15	17400	11742	1862.65	1869.48	1869.48	1871.25	0.024573	10.75	1112.36	322.6	1	3.45
	17250	11742	1857.51	1866.95		1868	0.010391	8.46	1467.68	405.28	0.74	3.62
	17100	12814	1853.53	1863.58	1863.58	1865.27	0.021821	10.44	1234.26	370.72	1.03	3.33
	16950	12814	1850.47	1860.08	1860.08	1862.04	0.020038	11.27	1150.88	305.44	1.01	3.77
	16800	12814	1846.7	1854.87	1854.87	1856.52	0.023197	10.31	1243.02	383.71	1.01	3.24
	16650	12814	1844.79	1851.03	1850.99	1852.42	0.023385	9.44	1356.72	465.45	0.97	2.91
	16500	12814	1840.19	1847.11	1847.11	1848.95	0.022649	10.9	1175.4	316.73	1.08	3.71
	16350	12814	1836.02	1843.46	1843.46	1845.19	0.02342	10.55	1214.72	352.44	1.18	3.45
	16200	12814	1832.45	1839.21	1839.21	1841.21	0.021985	11.35	1129.35	280.02	1.03	4.03
	16050	12814	1827.67	1835.83	1835.83	1837.69	0.022931	10.94	1171.05	316.81	1	3.7
	15900	12814	1825.38	1831.81	1831.79	1833.59	0.02199	10.73	1200.54	332.99	0.99	3.61
	15750	12814	1821.93	1828.74	1828.74	1830.05	0.024986	9.26	1398.79	543.47	1.01	2.57
	15600	12814	1818.77	1824.63	1824.63	1825.92	0.023834	9.23	1417.09	554.95	1	2.55
	15450	12814	1815.5	1820.88	1820.88	1822.3	0.020065	9.81	1370.47	503.49	1	2.72
14	15300	12814	1811.7	1816.95	1816.95	1818.44	0.024281	9.78	1309.66	437.27	2.64	3
	15150	12814	1804.6	1811.23	1811.18	1812.3	0.026305	8.32	1541.62	704.91	0.99	2.19
	15000	12814	1801	1807.66	1807.56	1808.56	0.023661	7.68	1692.84	854.31	0.95	1.98
	14850	12814	1797.85	1803.96	1803.96	1805.16	0.021473	8.82	1461.1	608.72	1	2.4
	14700	12814	1793.1	1799.73	1799.73	1801	0.022004	9.03	1418.29	561.81	1	2.52
	14550	12814	1790.9	1795.58	1795.58	1796.77	0.0223	8.77	1461.68	613.91	1.19	2.38
	14400	12814	1786.61	1791.53	1791.53	1792.91	0.021418	9.42	1360.4	496.86	1.21	2.74
	14250	12814	1782.2	1787.59	1787.59	1789.16	0.020588	10.04	1276.81	410.67	1	3.11
	14100	12814	1777.7	1783.36	1783.36	1784.97	0.020124	10.16	1261.44	392.69	1.14	3.21
	13950	12814	1773.35	1779.72	1779.72	1781.28	0.022887	10.02	1278.87	406.09	1	3.15
	13800	12814	1767.1	1775	1774.85	1776.4	0.020056	9.53	1348.34	419.23	0.93	3.22
	13650	12814	1767.1	1772.7		1773.9	0.014098	8.81	1458.69	393.37	0.8	3.71
	13500	12814	1765.1	1770.56		1771.79	0.014005	8.93	1439.37	367.8	0.79	3.91
	13350	12814	1762.52	1767.78	1767.62	1769.25	0.020886	9.73	1320.73	399.25	0.94	3.31
	13200	12814	1759.7	1764.65	1764.5	1766.11	0.020977	9.7	1324.13	403.17	0.94	3.28
13	13050	12814	1755.9	1761.6		1762.95	0.021085	9.33	1377.64	448.31	0.94	3.07
	12900	12814	1751.48	1758.12	1758.12	1759.56	0.024271	9.65	1331.41	456.87	0.99	2.91
	12750	12814	1746.85	1753.83	1753.83	1755.27	0.02507	9.63	1332.75	469.33	1.01	2.84
	12600	12814	1743.6	1750.05	1750.05	1751.44	0.025102	9.43	1360.27	498.82	1.01	2.73
	12450	12814	1740.54	1745.91	1745.91	1747.26	0.025077	9.35	1373.48	534.78	1.03	2.57
	12300	12814	1736.24	1742.03	1742.03	1743.41	0.026264	9.4	1363.87	516.27	1.02	2.64
	12150	12814	1732.2	1737.86	1737.86	1739.26	0.026746	9.49	1350.41	518.94	1.04	2.6
12	12000	12814	1727.73	1733.46	1733.46	1734.87	0.026362	9.54	1344.54	493.84	1.02	2.72
	11850	12814	1724.3	1729.1	1729.1	1730.5	0.025513	9.5	1351.88	482.15	1	2.8
	11700	12814	1720.28	1725.08	1725.08	1726.5	0.02807	9.57	1342.15	489.24	1.25	2.74
	11550	12814	1715.6	1722.05		1723.01	0.014513	7.86	1631.16	489.8	0.76	3.33
	11400	12814	1712.39	1718.62	1718.62	1720.07	0.02762	9.65	1331.6	461.98	1.3	2.88
	11250	12814	1709.76	1715.39	1715.39	1716.86	0.012455	9.75	1318.37	453.79	1	2.91
	11100	12814	1706.64	1711.81	1711.8	1713.3	0.025445	9.81	1310.04	462.32	1.02	2.83
	10950	12814	1702.7	1708.26	1708.16	1709.69	0.022785	9.6	1338.99	432.73	0.96	3.09
	10800	12814	1698.7	1705.74		1706.91	0.015295	8.68	1482.15	413.02	0.8	3.59
11	10650	12814	1696.51	1702.7		1704.14	0.022636	9.65	1333.39	394.47	0.92	3.38
	10500	12814	1693.88	1699.68		1701.06	0.018609	9.44	1364.29	357.48	0.85	3.82
	10350	12814	1689.05	1696.15	1696.06	1697.82	0.025275	10.37	1239.91	367.92	0.99	3.37
	10200	12814	1686.7	1692.81	1692.81	1694.49	0.019598	10.42	1232.95	381.47	1.02	3.23
	10050	12814	1684	1688.57	1688.57	1690.37	0.005964	10.8	1196.22	342.44	1.01	3.49
10	9900	12814	1675.8	1679.87	1679.87	1681.86	0.005783	11.32	1132.04	282.3	1	4.01
	9750	12814	1671	1675.18	1675.18	1677.24	0.005842	11.53	1111.82	271.84	1	4.09
9	9600	12814	1669.5	1673.5	1673.5	1675.46	0.005826	11.22	1141.87	290.85	1	3.93
	9450	12814	1668	1672.4	1672.4	1674.07	0.006217	10.38	1234.88	385.59	1.04	3.2
	9300	12814	1666	1670.89	1670.89	1672.42	0.022451	9.95	1291.67	428.33	1.01	3.02
	9150	12814	1662.6	1667.21	1667.21	1668.75	0.024343	9.97	1288.82	440.97	1.02	2.92
	9000	12814	1658.46	1663.67	1663.55	1665.05	0.021724	9.41	1363.89	458.92	0.96	2.97
	8850	12814	1654.65	1660.19	1660.13	1661.65	0.02361	9.73	1319.39	440.61	0.99	2.99
	8700	12814	1650.64	1656.69	1656.62	1658.16	0.022954	9.76	1315.52	447.08	1	2.94
	8550	12814	1647.88	1653.96		1655.2	0.01707	8.94	1436.7	437.94	0.87	3.28
	8400	12814	1645	1651.12		1652.45	0.019563	9.27	1385.75	427.64	0.91	3.24
	8250	12814	1641.54	1649.09	1648.33	1650.13	0.012337	8.2	1566.53	404.01	0.73	3.88
8	8100	12814	1641	1645.93	1645.93	1647.58	0.024571	10.32	1246.04	394.56	1.13	3.16
	7950	12814	1637.35	1642.63		1643.97	0.019415	9.29	1383.42	421.71	0.9	3.28
	7800	12814	1633.89	1639.06	1639.06	1640.59	0.026252	9.96	1290.26	424.22	1.06	3.04
	7650	12814	1630.3	1636.11		1637.26	0.01717	8.6	1492.8	445.05	0.83	3.35
	7500	12814	1627.35	1633.1		1634.42	0.020941	9.22	1391.63	431.12	0.9	3.23

RTARCH.WK4

HEC-RAS Plan: Plan 04 Reach: 1 4/2/96
Subcritial flow

Reach	River Sta.	Q Total	Min Ch El	W.S. Elev	Crit W.S.	E.G. Elev	E.G. Slope	Vel Chnl	Flow Area	Top Width	Froude #	Hyd. Depth
	7350	12814	1623.78	1629.96		1631.32	0.020524	9.37	1368.02	407.17	0.9	3.36
	7200	12814	1620.4	1627.83		1628.9	0.012899	8.29	1551.06	413.1	0.75	3.75
	7050	12814	1616.85	1626.47	1625.13	1627.32	0.008608	7.42	1729.09	387.2	0.62	4.47
	6900	12814	1617.2	1623.98	1623.67	1625.44	0.019472	9.69	1323.94	388.9	0.92	3.4
	6750	12814	1615.42	1620.71	1620.71	1622.42	0.020743	10.5	1225.16	370.29	1.01	3.31
	6600	12814	1611.83	1616.99	1616.99	1618.45	0.01844	9.69	1325.67	465.35	1.3	2.85
	6450	12814	1608.21	1613.56	1613.56	1614.89	0.019101	9.26	1385.51	544.05	1.15	2.55
7	6300	12814	1604.15	1610.38	1610.38	1611.72	0.018469	9.32	1378.28	523.19	1.01	2.63
	6150	12814	1600.3	1606.41	1606.41	1607.73	0.019195	9.24	1389.8	549.93	1.02	2.53
	6000	12814	1596.97	1602.53	1602.42	1603.85	0.016351	9.22	1391.19	478.25	0.95	2.91
	5850	12814	1593.29	1600.13		1601.45	0.015606	9.26	1385.81	456.79	0.94	3.03
	5700	12814	1589.34	1597.18	1597.15	1599.02	0.016626	10.9	1177.98	320.09	1	3.68
	5550	12814	1585.91	1594.68	1594.68	1596.5	0.016952	10.83	1185.05	329.51	1	3.6
	5400	12814	1583.68	1591.3		1592.46	0.01368	8.62	1487.33	494.16	0.88	3.01
	5250	12814	1580.66	1588.49	1588.49	1590.15	0.017116	10.33	1240.46	371.81	1	3.34
6	5100	12814	1578.6	1587.12	1586.28	1588.26	0.008382	8.58	1500.02	361.96	0.74	4.14
	4950	15265	1575.8	1582.23	1582.23	1583.84	0.01832	10.2	1498.72	466.53	1	3.21
	4800	15265	1573.7	1579.57	1579.38	1581.09	0.010518	9.92	1545.63	450.21	0.94	3.43
	4650	15265	1572.18	1577.67	1577.67	1579.39	0.012019	10.53	1457.92	433.1	1.01	3.37
	4500	15265	1566.11	1573.83		1574.76	0.002419	7.75	1978.99	278.35	0.51	7.11
	4400	15265	1564.6	1573.26	1569.73	1574.09	0.001849	7.32	2084.33	254.39	0.45	8.19
	4356	15265	1564.6	1572.69		1573.65	0.002322	7.87	1940.37	252.6	0.5	7.68
	4200	15265	1565.99	1571.89		1573.32	0.008526	9.59	1594.8	418.59	0.86	3.81
	4050	15265	1562.83	1568.39		1569.64	0.018447	9	1702.86	471.68	0.83	3.61
	3900	15265	1558.66	1565.84		1566.98	0.016604	8.59	1785.73	508.48	0.8	3.51
	3750	15265	1556.5	1564.1		1564.99	0.010129	7.6	2012.19	453.02	0.63	4.44
	3600	15265	1554.12	1562.38		1563.44	0.010307	8.26	1850.44	385.9	0.66	4.8
5	3450	15265	1552.7	1559.07	1559.07	1561	0.026704	11.16	1371.22	362.39	1.01	3.78
	3300	15265	1549.58	1555.93		1557.11	0.019476	8.75	1750.59	527.66	0.84	3.32
	3150	15265	1547.3	1553.72		1554.62	0.013369	7.61	2010.2	562.92	0.71	3.57
	3000	15265	1544.6	1551.32		1552.43	0.015631	8.49	1801.86	527.46	0.81	3.42
	2850	15265	1542.6	1549.53		1550.48	0.010524	7.83	1954.58	480.33	0.68	4.07
	2700	15265	1539	1547.98		1548.93	0.010082	7.84	1953.2	435.34	0.65	4.49
	2550	15265	1536.2	1546.58		1547.56	0.008325	7.95	1929.39	375.74	0.62	5.13
	2400	15265	1534.66	1544.89		1546.12	0.01075	8.93	1720.76	337.61	0.69	5.1
4	2250	15265	1532.99	1542.31	1542.31	1544.37	0.009599	13.47	1547.38	361.69	0.84	4.28
	2100	15265	1531.4	1539.1	1539.1	1541.13	0.004845	12.45	1589.24	383.36	0.83	4.15
	1950	15265	1528.6	1536.25	1536.25	1538.47	0.004727	12.48	1476.51	379.08	0.92	3.9
	1800	15265	1525.8	1532.92	1532.92	1535.31	0.005836	12.64	1326.17	308.99	0.98	4.29
3	1650	15265	1523	1529.44	1529.44	1532.42	0.007499	13.85	1102.3	186.77	1	5.9
	1500	15265	1520.2	1526.61	1526.61	1529.56	0.007458	13.79	1107.08	187.96	1	5.89
	1350	15265	1517.4	1524.38	1524.38	1527.49	0.007305	14.16	1078.22	173.79	1	6.2
	1200	15265	1514.6	1521.43		1523.13	0.004082	10.48	1456.85	239.78	0.75	6.08
2	1050	15265	1511.8	1521.47		1522.57	0.001731	8.45	1813.86	230.95	0.53	7.85
	900	15265	1510.86	1521.32		1522.3	0.00141	7.98	1935.1	236.72	0.49	8.17
	750	15265	1510.1	1521.15		1522.09	0.001265	7.8	1992.88	233.17	0.46	8.55
	600	15265	1509.46	1521.04		1521.87	0.001162	7.32	2098.57	238.63	0.43	8.79
1	450	15265	1509.05	1520.91		1521.69	0.001126	7.1	2164.24	251.63	0.42	8.6
	300	15265	1508.73	1517.48	1517.48	1521.06	0.007051	15.19	1005.04	140.89	1	7.13
	150	15265	1506.36	1516.1	1516.1	1519.87	0.006955	15.59	979.1	130.36	1	7.51
	1	15265	1505.16	1513.79	1513.79	1517.05	0.007121	14.5	1052.75	160.39	1	6.56

HEC-RAS Plan: Plan 04 Reach: 1 4/2/96
Mixed Regime

Reach	River Sta.	Q Total	Min Ch El	W.S. Elev	Crit W.S.	E.G. Elev	E.G. Slope	Vel Chnl	Flow Area	Top Width	Froude #	Hyd. Depth
	31650	5766	2309.55	2313.27	2313.27	2314.15	0.014403	7.52	766.5	426.12	0.99	1.8
	31350	5766	2300.06	2302.68	2303.47	2305.39	0.078694	13.23	435.94	372.16	2.15	1.17
	31050	5766	2291.89	2295.79	2295.79	2296.68	0.014795	7.57	761.42	428.02	1	1.78
	30750	5766	2282.53	2286.13	2286.82	2288.48	0.063187	12.31	468.36	376.21	1.94	1.24
	30450	5766	2273.5	2276.28	2276.52	2277.46	0.022789	8.71	662.31	417.72	1.22	1.59
	30150	5766	2262.9	2267.98	2268.58	2270.09	0.025883	11.66	494.62	219.53	1.37	2.25
27	29850	5766	2256.21	2259.87	2260.4	2261.63	0.028699	11.2	577.78	420.52	1.5	1.37
	29550	5766	2247.35	2251.46	2251.99	2253.14	0.028245	10.43	561.16	369.05	1.47	1.52
	29250	5766	2237.9	2243.64	2244.12	2245.4	0.024101	10.63	542.2	263.44	1.31	2.06
	28950	10796	2228.6	2234.55	2235.14	2236.63	0.032893	11.57	933.23	504.91	1.5	1.85
	28800	10796	2224.24	2227.53	2228.61	2230.99	0.040533	14.93	723.3	392.98	1.94	1.84
	28650	10796	2217.7	2222.54	2223.37	2225.16	0.034937	12.99	831.26	499.12	1.77	1.67
	28415	10796	2210.8	2216.2	2216.6	2217.91	0.025584	10.51	1027.33	530.55	1.33	1.94
	28060	10796	2200.8	2206.54	2206.51	2208.06	0.012882	11.08	1195.01	374.59	0.89	3.19
	27745	10796	2194.6	2199.99	2199.99	2202.38	0.026018	12.44	870.75	183.79	1	4.74
26	27725	10796	2188.6	2192.5	2194.72	2199.9	0.118936	21.83	494.54	136.38	2.02	3.63
	27570	10796	2183.9	2189.15	2190.57	2194.15	0.013081	17.95	601.58	131.89	1.48	4.56
	27265	10796	2174.2	2177.68	2180.73	2189.18	0.015494	27.22	396.66	114	2.57	3.48
	27245	10796										
25	27225	10796	2173.3	2179.82	2179.82	2183.1	0.002037	14.52	743.28	114.02	2.19	6.52
	27150	10796	2171.5	2178.93	2178.93	2181.93	0.005522	13.91	776.33	129.88	1	5.98
	27000	10796	2167.9	2175.55	2177.18	2180.58	0.011529	19.57	785.33	235.1	1.33	3.34
	26700	10796	2162	2166.27	2167.94	2172.65	0.075495	20.33	535.58	328.2	2.78	1.63
	26550	10796	2158	2163.13	2163.43	2164.84	0.027724	10.49	1028.82	416.96	1.18	2.47
	26400	10796	2153.77	2158.56	2158.96	2160.71	0.027013	11.77	917.38	321.3	1.23	2.86
24	26250	10796	2149.77	2154.74	2155.06	2157.03	0.022364	12.13	889.98	254.47	1.14	3.5
	26100	10796	2144.59	2148.82	2150.11	2153.14	0.029138	16.73	654.11	239.11	1.76	2.74
	25950	10796	2139.4	2144.67	2146.67	2150.54	0.010715	20.56	607.09	217.35	1.88	2.79
	25800	10796	2133.87	2139.01	2142.31	2148.46	0.016537	24.67	437.55	100.63	2.09	4.35
	25650	10796	2128.3	2132.85	2136.66	2145.34	0.025336	28.36	380.63	93.61	2.48	4.07
	25500	10796	2122.77	2127.07	2131.02	2141.16	0.03053	30.12	358.4	94.64	2.73	3.79
	25350	10796	2117.2	2121.39	2125.26	2136.32	0.03334	31.01	348.17	91.66	2.8	3.8
23	25200	10796	2111.67	2115.79	2119.83	2131.18	0.034983	31.48	342.91	91.5	2.87	3.75
	25050	10796	2106.1	2110.21	2114.35	2125.85	0.035846	31.74	340.13	91.32	2.9	3.72
	24900	10796	2100.5	2104.61	2108.86	2120.49	0.03662	31.97	337.65	91.15	2.93	3.7
	24750	10796	2095	2099.07	2103.01	2114.98	0.036863	32.01	337.26	91.31	2.94	3.69
	24600	10796	2089.47	2093.52	2097.47	2109.51	0.037088	32.09	336.41	91.15	2.94	3.69
	24450	10796	2083.9	2087.96	2091.92	2104.03	0.037367	32.17	335.62	91.13	2.95	3.68
22	24300	10796	2078.36	2081.6	2085.33	2097.74	0.046566	32.24	334.89	106.45	3.2	3.15
	24080	10796	2070.8	2074.66	2077.75	2085.92	0.02612	26.93	400.85	107.7	2.46	3.72
	24035	10796	2069.2	2073.01	2076.15	2084.59	0.027335	27.32	395.21	107.6	2.51	3.67
	24000	10796	2067.56	2071.31	2074.51	2083.31	0.037801	27.8	388.32	107.5	2.58	3.61
	23850	10796	2062.47	2067.06	2069.42	2074.94	0.04706	22.53	479.22	109.16	1.89	4.39
21	23700	10796	2057.38	2061.69	2064.32	2070.67	0.018194	24.05	448.84	108.62	2.09	4.13
	23550	10796	2052.29	2056.16	2059.24	2067.37	0.025929	26.87	401.77	107.73	2.45	3.73
	23400	11742	2047.2	2051.24	2054.69	2063.43	0.026796	28.02	419.08	108.05	2.51	3.88
	23250	11742	2040.54	2044.68	2047.27	2055.39	0.158673	26.26	447.14	194.21	3.05	2.3
20	23100	11742	2036.9	2042.82	2044.93	2048.33	0.021113	18.84	623.36	131.84	1.53	4.73
	22950	11742	2032.5	2038.85	2040.39	2044.13	0.038694	18.45	636.28	150.71	1.58	4.22
	22800	11742	2029.82	2035.7	2036.58	2039.33	0.026101	15.28	768.3	180.38	1.3	4.26
	22650	11742	2025.8	2032.21	2033	2035.88	0.020366	15.38	763.49	158.53	1.23	4.82
	22500	11742	2022.3	2029.67	2030.23	2033.02	0.017728	14.7	802.86	174.38	1.2	4.6
	22350	11742	2018.16	2026	2027.01	2030.13	0.020926	16.31	720.09	139.37	1.26	5.17
19	22200	11742	2014.6	2022.1	2023.48	2027.2	0.017798	18.13	652.42	132.59	1.43	4.92
	22050	11742	2011.2	2017.87	2019.59	2023.58	0.033964	19.18	612.28	139.07	1.61	4.4
	21900	11742	2007.8	2014.08	2015.74	2019.68	0.020575	19.07	635.15	152.95	1.6	4.15
	21750	11742	2004.4	2011.31	2012.84	2016.68	0.01935	18.77	652.92	149.72	1.52	4.36
	21600	11742	2001.15	2007.36	2009.14	2013.45	0.0237	19.87	603.16	146.33	1.69	4.12
	21450	11742	1997	2004.29	2005.65	2008.98	0.03746	17.69	690.38	174.82	1.51	3.95
	21300	11742	1993.72	2000.07	2000.99	2003.46	0.035056	14.87	805.26	244.34	1.42	3.3
	21150	11742	1989.99	1996.05	1996.48	1998.45	0.03115	12.46	946.18	285.23	1.2	3.32
	21000	11742	1985.16	1990.73	1991.32	1993.2	0.039718	12.64	935.26	334	1.32	2.8
	20850	11742	1980.15	1985.82	1986.18	1988.15	0.028915	12.29	961.14	278.8	1.16	3.45
18	20700	11742	1974.93	1979.08	1980.06	1982.13	0.058684	14.05	839.21	359.61	1.61	2.33
	20550	11742	1968.38	1973.45	1973.9	1975.5	0.034524	11.5	1023.98	398.64	1.26	2.57
	20400	11742	1960.1	1965.02	1966.13	1968.65	0.06213	15.28	768.46	301.38	1.69	2.55
	20250	11742	1949.55	1955.67	1956.96	1960.03	0.053064	16.78	702.43	215.21	1.63	3.26
	20100	11742	1941.29	1947.62	1948.95	1951.88	0.055638	16.56	709.1	227.55	1.65	3.12
	19950	11742	1937.37	1943.15	1943.79	1946.03	0.028008	13.62	862.57	222.81	1.22	3.87
	19800	11742	1930.9	1940.59	1940.74	1942.48	0.024047	11.03	1064.59	312.89	1.05	3.4
	19650	11742	1925.5	1931.03	1932.72	1936.12	0.08826	18.11	648.53	241.12	1.95	2.69
	19500	11742	1921.29	1927.36	1927.58	1929.2	0.026928	10.89	1078.53	353.34	1.1	3.05
17	19350	11742	1916.6	1922.24	1922.72	1924.86	0.030677	13.01	902.77	249.58	1.21	3.62
	19200	11742	1911	1916.53	1917.28	1919.41	0.043586	13.62	862.21	289.87	1.39	2.97
	19050	11742	1905.01	1910.67	1911.28	1913.32	0.037819	13.05	899.6	280.83	1.29	3.2
	18900	11742	1900.44	1905.68	1906.11	1907.97	0.033381	12.14	967.23	306.93	1.21	3.15

HEC-RAS Plan: Plan 04 Reach: 1 4/2/96
Mixed Regime

Reach	River Sta.	Q Total	Min Ch El	W.S. Elev	Crit W.S.	E.G. Elev	E.G. Slope	Vel Chnl	Flow Area	Top Width	Froude #	Hyd. Depth
	18750	11742	1896.7	1901.86	1902	1903.79	0.023334	11.27	1064.71	308.61	1.05	3.45
	18600	11742	1892.25	1896.31	1897.01	1899.11	0.043137	13.43	876.25	294.55	1.37	2.97
16	18450	11742	1887.85	1893.7		1895.07	0.01525	9.42	1249.94	301.15	0.81	4.15
	18300	11742	1882.82	1890.08	1890.08	1892.42	0.020149	12.37	976.63	217.91	1	4.48
	18150	11742	1879.1	1883.51	1884.54	1886.81	0.089768	14.57	805.79	385.3	1.78	2.09
	18000	11742	1875.4	1881.13	1881.13	1882.63	0.021942	9.92	1224.13	417.26	0.99	2.93
	17850	11742	1872.2	1878.8		1879.74	0.014276	7.78	1515.63	489.6	0.78	3.1
	17700	11742	1869.6	1875.43	1875.43	1876.82	0.027651	9.45	1245.18	451.88	1	2.76
	17550	11742	1866.14	1873.02		1873.79	0.012056	7.03	1681.24	520.61	0.68	3.23
15	17400	11742	1862.65	1869.48	1869.48	1871.25	0.024573	10.75	1112.36	322.6	1	3.45
	17250	11742	1857.51	1866.95		1868	0.010391	8.46	1467.68	405.28	0.74	3.62
	17100	12814	1853.53	1863.58	1863.58	1865.27	0.021821	10.44	1234.26	370.72	1.03	3.33
	16950	12814	1850.47	1859.53	1860.08	1862.16	0.032288	13.03	988.96	286.79	1.23	3.45
	16800	12814	1846.7	1853.93	1854.87	1856.82	0.039044	13.66	938.35	280.11	1.31	3.35
	16650	12814	1844.79	1850.75	1850.99	1852.45	0.031842	10.46	1225.28	454.76	1.12	2.69
	16500	12814	1840.19	1847.11	1847.11	1848.95	0.022649	10.9	1175.4	316.73	1.08	3.71
	16350	12814	1836.02	1843.28	1843.46	1845.21	0.02786	11.14	1149.85	350	1.08	3.29
	16200	12814	1832.45	1839.03	1839.21	1841.22	0.025351	11.87	1079.59	278.42	1.06	3.88
	16050	12814	1827.67	1835.73	1835.83	1837.7	0.025116	11.26	1137.78	315.62	1.05	3.6
	15900	12814	1825.38	1831.48	1831.79	1833.63	0.029555	11.78	1092.7	328.04	1.13	3.33
	15750	12814	1821.93	1828.74	1828.74	1830.05	0.024986	9.26	1398.79	543.47	1.01	2.57
	15600	12814	1818.77	1824.44	1824.63	1825.94	0.030101	9.97	1310.53	539.96	1.11	2.43
	15450	12814	1815.5	1820.84	1820.88	1822.3	0.021002	9.95	1348.31	502.08	1.02	2.69
14	15300	12814	1811.7	1816.74	1816.95	1818.46	0.030605	10.53	1216.63	432.68	1.11	2.81
	15150	12814	1804.6	1810.79	1811.18	1812.46	0.053716	10.38	1234.72	685.34	1.36	1.8
	15000	12814	1801	1807.66	1807.56	1808.56	0.023661	7.68	1692.84	854.31	0.95	1.98
	14850	12814	1797.85	1803.96	1803.96	1805.16	0.021473	8.82	1461.1	608.72	1	2.4
	14700	12814	1793.1	1799.34	1799.73	1801.1	0.034997	10.63	1205.69	530.03	1.24	2.27
	14550	12814	1790.9	1795.51	1795.58	1796.77	0.023999	9	1423.52	607.17	1.04	2.34
	14400	12814	1786.61	1791.3	1791.53	1792.94	0.02727	10.26	1248.8	480.69	1.12	2.6
	14250	12814	1782.2	1787.47	1787.59	1789.17	0.023184	10.46	1225.04	404.81	1.06	3.03
	14100	12814	1777.7	1782.9	1783.36	1785.08	0.032147	11.85	1081.46	379.43	1.24	2.85
	13950	12814	1773.35	1779.44	1779.72	1781.31	0.031124	11	1165.14	405.13	1.14	2.88
	13800	12814	1767.1	1774.53	1774.85	1776.46	0.033967	11.17	1149.64	417.84	1.18	2.75
	13650	12814	1767.1	1772.7		1773.9	0.014098	8.81	1458.69	393.37	0.8	3.71
	13500	12814	1765.1	1770.56		1771.79	0.014005	8.93	1439.37	367.8	0.79	3.91
	13350	12814	1762.52	1767.78	1767.62	1769.25	0.020886	9.73	1320.73	399.25	0.94	3.31
	13200	12814	1759.7	1764.65	1764.5	1766.11	0.020977	9.7	1324.13	403.17	0.94	3.28
13	13050	12814	1755.9	1761.6		1762.95	0.021085	9.33	1377.64	448.31	0.94	3.07
	12900	12814	1751.48	1758.12	1758.12	1759.56	0.024271	9.65	1331.41	456.87	0.99	2.91
	12750	12814	1746.85	1753.59	1753.83	1755.31	0.033843	10.54	1217.65	468.84	1.15	2.6
	12600	12814	1743.6	1750.05	1750.05	1751.44	0.025102	9.43	1360.27	498.82	1.01	2.73
	12450	12814	1740.54	1745.74	1745.91	1747.28	0.03081	9.94	1290.94	534.42	1.13	2.42
	12300	12814	1736.24	1742.03	1742.03	1743.41	0.026264	9.4	1363.87	516.27	1.02	2.64
	12150	12814	1732.2	1737.79	1737.86	1739.26	0.029058	9.73	1317.16	518.81	1.08	2.54
12	12000	12814	1727.73	1733.37	1733.46	1734.88	0.029413	9.86	1300.94	493.66	1.07	2.64
	11850	12814	1724.3	1729	1729.1	1730.51	0.028961	9.87	1301.26	481.94	1.06	2.7
	11700	12814	1720.28	1724.81	1725.08	1726.55	0.039518	10.61	1210.81	488.69	1.18	2.48
	11550	12814	1715.6	1722.05		1723.01	0.014513	7.86	1631.16	489.8	0.76	3.33
	11400	12814	1712.39	1718.62	1718.62	1720.07	0.02762	9.65	1331.6	461.98	1.3	2.88
	11250	12814	1709.76	1715.14	1715.39	1716.9	0.016631	10.64	1208.41	453.3	1.14	2.67
	11100	12814	1706.64	1711.51	1711.8	1713.35	0.036092	10.89	1179.23	461.72	1.2	2.55
	10950	12814	1702.7	1708.26	1708.16	1709.69	0.022785	9.6	1338.99	432.73	0.96	3.09
	10800	12814	1698.7	1705.74		1706.91	0.015295	8.68	1482.15	413.02	0.8	3.59
11	10650	12814	1696.51	1702.7		1704.14	0.022636	9.65	1333.39	394.47	0.92	3.38
	10500	12814	1693.88	1699.68		1701.06	0.018609	9.44	1364.29	357.48	0.85	3.82
	10350	12814	1689.05	1696.15	1696.06	1697.82	0.025275	10.37	1239.91	367.92	0.99	3.37
	10200	12814	1686.7	1692.81	1692.81	1694.49	0.019598	10.42	1232.95	381.47	1.02	3.23
	10050	12814	1684	1687.42	1688.57	1691.31	0.021356	15.84	813.89	340.28	1.79	2.39
10	9900	12814	1675.8	1677.81	1679.87	1686.11	0.060832	23.12	554.2	278.13	2.89	1.99
	9750	12814	1671	1673.49	1675.18	1679.44	0.033335	19.58	654.48	268.11	2.21	2.44
9	9600	12814	1669.5	1672.48	1673.5	1676.04	0.015531	15.13	846.89	288.08	1.56	2.94
	9450	12814	1668	1671.94	1672.4	1674.18	0.009295	12	1068.53	363.68	1.23	2.94
	9300	12814	1666	1670.89	1670.89	1672.42	0.022451	9.95	1291.67	428.33	1.01	3.02
	9150	12814	1662.6	1667.12	1667.21	1668.75	0.026781	10.26	1252.27	440.79	1.07	2.84
	9000	12814	1658.46	1663.38	1663.55	1665.06	0.030258	10.4	1234.32	458.36	1.11	2.69
	8850	12814	1654.65	1660.19	1660.13	1661.65	0.02361	9.73	1319.39	440.61	0.99	2.99
	8700	12814	1650.64	1656.69	1656.62	1658.16	0.022954	9.76	1315.52	447.08	1	2.94
	8550	12814	1647.88	1653.96		1655.2	0.01707	8.94	1436.7	437.94	0.87	3.28
	8400	12814	1645	1651.12		1652.45	0.019563	9.27	1385.75	427.64	0.91	3.24
	8250	12814	1641.54	1649.09	1648.33	1650.13	0.012337	8.2	1566.53	404.01	0.73	3.88
8	8100	12814	1641	1645.93	1645.93	1647.58	0.024571	10.32	1246.04	394.56	1.13	3.16
	7950	12814	1637.35	1642.63		1643.97	0.019415	9.29	1383.42	421.71	0.9	3.28
	7800	12814	1633.89	1639.06	1639.06	1640.59	0.026252	9.96	1290.26	424.22	1.06	3.04
	7650	12814	1630.3	1636.11		1637.26	0.01717	8.6	1492.8	445.05	0.83	3.35
	7500	12814	1627.35	1633.1		1634.42	0.020941	9.22	1391.63	431.12	0.9	3.23

RTARCH.WK4

HEC-RAS Plan: Plan 04 Reach: 1 4/2/96
Mixed Regime

Reach	River Sta.	Q Total	Min Ch El	W.S. Elev	Crit W.S.	E.G. Elev	E.G. Slope	Vel Chnl	Flow Area	Top Width	Froude #	Hyd. Depth
	7350	12814	1623.78	1629.96		1631.32	0.020524	9.37	1368.02	407.17	0.9	3.36
	7200	12814	1620.4	1627.83		1628.9	0.012899	8.29	1551.06	413.1	0.75	3.75
	7050	12814	1616.85	1626.47	1625.13	1627.32	0.008608	7.42	1729.09	387.2	0.62	4.47
	6900	12814	1617.2	1623.98	1623.67	1625.44	0.019472	9.69	1323.94	388.9	0.92	3.4
	6750	12814	1615.42	1620.71	1620.71	1622.42	0.020743	10.5	1225.16	370.29	1.01	3.31
	6600	12814	1611.83	1616.55	1616.99	1618.59	0.032338	11.47	1119.34	464.44	1.3	2.41
	6450	12814	1608.21	1613.55	1613.56	1614.89	0.019416	9.31	1378.7	544.02	1.03	2.53
7	6300	12814	1604.15	1610.21	1610.38	1611.74	0.022729	9.92	1294.76	522.87	1.11	2.48
	6150	12814	1600.3	1606.01	1606.41	1607.84	0.029696	10.86	1181.66	509.42	1.25	2.32
	6000	12814	1596.97	1602.21	1602.42	1603.88	0.023625	10.37	1237.8	470.56	1.12	2.63
	5850	12814	1593.29	1600.13		1601.45	0.015606	9.26	1385.81	456.79	0.94	3.03
	5700	12814	1589.34	1597.18	1597.15	1599.02	0.016626	10.9	1177.98	320.09	1	3.68
	5550	12814	1585.91	1594.68	1594.68	1596.5	0.016952	10.83	1185.05	329.51	1	3.6
	5400	12814	1583.68	1590.37	1591.02	1592.73	0.041576	12.32	1040.4	465.27	1.45	2.24
	5250	12814	1580.66	1588.49	1588.49	1590.15	0.017116	10.33	1240.46	371.81	1	3.34
6	5100	12814	1578.6	1587.12	1586.28	1588.26	0.008382	8.58	1500.02	361.96	0.74	4.14
	4950	15265	1575.8	1582.23	1582.23	1583.84	0.01832	10.2	1498.72	466.53	1	3.21
	4800	15265	1573.7	1579.57	1579.38	1581.09	0.010518	9.92	1545.63	450.21	0.94	3.43
	4650	15265	1572.18	1577.67	1577.67	1579.39	0.012019	10.53	1457.92	433.1	1.01	3.37
	4500	15265	1566.11	1573.83		1574.76	0.002419	7.75	1978.99	278.35	0.51	7.11
	4400	15265	1564.6	1573.26	1569.73	1574.09	0.001849	7.32	2084.33	254.39	0.45	8.19
	4356	15265	1564.6	1572.69		1573.65	0.002322	7.87	1940.37	252.6	0.5	7.68
	4200	15265	1565.99	1571.89		1573.32	0.008526	9.59	1594.8	418.59	0.86	3.81
	4050	15265	1562.83	1568.39		1569.64	0.018447	9	1702.86	471.68	0.83	3.61
	3900	15265	1558.66	1565.84		1566.98	0.016604	8.59	1785.73	508.48	0.8	3.51
	3750	15265	1556.5	1564.1		1564.99	0.010129	7.6	2012.19	453.02	0.63	4.44
	3600	15265	1554.12	1562.38		1563.44	0.010307	8.26	1850.44	385.9	0.66	4.8
5	3450	15265	1552.7	1559.07	1559.07	1561	0.026704	11.16	1371.22	362.39	1.01	3.78
	3300	15265	1549.58	1555.93		1557.11	0.019476	8.75	1750.59	527.66	0.84	3.32
	3150	15265	1547.3	1553.72		1554.62	0.013369	7.61	2010.2	562.92	0.71	3.57
	3000	15265	1544.6	1551.32		1552.43	0.015631	8.49	1801.86	527.46	0.81	3.42
	2850	15265	1542.6	1549.53		1550.48	0.010524	7.83	1954.58	480.33	0.68	4.07
	2700	15265	1539	1547.98		1548.93	0.010082	7.84	1953.2	435.34	0.65	4.49
	2550	15265	1536.2	1546.58		1547.56	0.008325	7.95	1929.39	375.74	0.62	5.13
	2400	15265	1534.66	1544.89		1546.12	0.01075	8.93	1720.76	337.61	0.69	5.1
4	2250	15265	1532.99	1542.31	1542.31	1544.37	0.009599	13.47	1547.38	361.69	0.84	4.28
	2100	15265	1531.4	1537.58	1539.1	1542.37	0.014216	18.13	1012.28	379.35	1.63	2.67
	1950	15265	1528.6	1534.18	1536.25	1539.89	0.017766	19.25	815.11	206.08	1.66	3.96
	1800	15265	1525.8	1530.75	1532.92	1536.91	0.021626	19.93	768.15	176.92	1.68	4.34
3	1650	15265	1523	1527.71	1529.44	1533.56	0.021762	19.4	786.81	179.58	1.63	4.38
	1500	15265	1520.2	1525.11	1526.61	1530.37	0.018639	18.42	828.85	181.96	1.52	4.56
	1350	15265	1517.4	1523.3	1524.38	1527.83	0.013068	17.09	893.09	168.18	1.31	5.31
	1200	15265	1514.6	1518.39	1520.28	1524.7	0.032215	20.17	756.82	220.35	1.92	3.43
2	1050	15265	1511.8	1521.47		1522.57	0.001731	8.45	1813.86	230.95	0.53	7.85
	900	15265	1510.86	1521.32		1522.3	0.00141	7.98	1935.1	236.72	0.49	8.17
	750	15265	1510.1	1521.15		1522.09	0.001265	7.8	1992.88	233.17	0.46	8.55
	600	15265	1509.46	1521.04		1521.87	0.001162	7.32	2098.57	238.63	0.43	8.79
1	450	15265	1509.05	1520.91		1521.69	0.001126	7.1	2164.24	251.63	0.42	8.6
	300	15265	1508.73	1517.48	1517.48	1521.06	0.007051	15.19	1005.04	140.89	1	7.13
	150	15265	1506.36	1515.77	1516.1	1519.89	0.007935	16.3	936.31	128.8	1.07	7.27
	1	15265	1505.16	1512.03	1513.79	1517.99	0.017858	19.61	778.54	150.86	1.52	5.16

Appendix B

Iterative Calibration Model Spreadsheet

REATA MAIN (QSIN)
HEC6
METHOD 4 - YANG'S

ITERATION # 1

Current HEC-6 Output Table

	1 cfs	50 cfs	100 cfs	500 cfs	1000 cfs	5000 cfs	16000 cfs
QS	111.96	4226.17	7234	35638	86137	486559	1715214
VFS	83.89	3052.82	4430.02	16176.31	32244.17	167431.85	548499.47
FS	3.82	180.11	592.73	6069.17	22014.23	152593.36	509977.26
MS	4.93	169.54	462.12	3374.24	9163.46	57954.11	272210.77
CS	9.64	341.41	762.46	4778.37	11075.61	53870.93	197951.17
VCS	8.54	371.89	795.71	4757.81	10740.25	50899.05	176401.87
VFG	1.15	48.21	75.46	169.20	300.50	1172.99	2960.00
FG	0.00	48.84	83.89	205.51	374.83	1540.38	4009.12
MG	0.00	12.78	27.25	79.83	153.67	683.05	1868.01
CG	0.00	0.56	4.51	23.20	51.09	262.90	786.69
VCG	0.00	0.00	0.00	4.71	19.54	150.81	549.38
SUM	-0.01	0.01	-0.01	0.00	0.00	0.02	-0.01

	1 cfs	50 cfs	100 cfs	500 cfs	1000 cfs	5000 cfs	16000 cfs
QS	-245.22	-13632.83	-28483.86	-142950.65	-271040.65	-1299328.55	-3999628.27
VFS	48.17	1266.92	858.22	-1682.59	-3473.63	-11156.95	-22984.73
FS	-31.90	-1605.79	-2979.07	-11789.73	-13703.57	-25995.44	-61506.94
MS	-30.79	-1616.36	-3109.68	-14484.66	-26554.34	-120634.69	-299273.43
CS	-26.08	-1444.49	-2809.34	-13080.53	-24642.19	-124717.87	-373533.03
VCS	-27.18	-1414.01	-2776.09	-13101.09	-24977.55	-127689.75	-395082.33
VFG	-34.57	-1737.69	-3496.34	-17689.70	-35417.30	-177415.81	-568524.20
FG	-35.72	-1737.06	-3487.91	-17653.39	-35342.97	-177048.42	-567475.08
MG	-35.72	-1773.12	-3544.55	-17779.07	-35564.13	-177905.75	-569616.19
CG	-35.72	-1785.34	-3567.29	-17835.70	-35666.71	-178325.90	-570697.51
VCG	-35.72	-1785.90	-3571.80	-17854.19	-35698.26	-178437.99	-570934.82

Previous HEC-6 Output Table

	1 cfs	50 cfs	100 cfs	500 cfs	1000 cfs	5000 cfs	16000 cfs
QS	357.18	17859.00	35718.00	178589.00	357178.00	1785888.00	5714842.00
VFS	35.72	1785.90	3571.80	17858.90	35717.80	178588.80	571484.20
FS	35.72	1785.90	3571.80	17858.90	35717.80	178588.80	571484.20
MS	35.72	1785.90	3571.80	17858.90	35717.80	178588.80	571484.20
CS	35.72	1785.90	3571.80	17858.90	35717.80	178588.80	571484.20
VCS	35.72	1785.90	3571.80	17858.90	35717.80	178588.80	571484.20
VFG	35.72	1785.90	3571.80	17858.90	35717.80	178588.80	571484.20
FG	35.72	1785.90	3571.80	17858.90	35717.80	178588.80	571484.20
MG	35.72	1785.90	3571.80	17858.90	35717.80	178588.80	571484.20
CG	35.72	1785.90	3571.80	17858.90	35717.80	178588.80	571484.20
VCG	35.72	1785.90	3571.80	17858.90	35717.80	178588.80	571484.20
	0.10	5.00	10.00	50.00	100.00	500.00	1600.00

	1 cfs	50 cfs	100 cfs	500 cfs	1000 cfs	5000 cfs	16000 cfs
QS	111.96	4226.17	7234	35638	86137	486559	1715214
VFS	0.749	0.722	0.612	0.454	0.374	0.344	0.320
FS	0.034	0.043	0.082	0.170	0.256	0.314	0.297
MS	0.044	0.040	0.064	0.095	0.106	0.119	0.159
CS	0.086	0.081	0.105	0.134	0.129	0.111	0.115
VCS	0.076	0.088	0.110	0.134	0.125	0.105	0.103
VFG	0.010	0.011	0.010	0.005	0.003	0.002	0.002
FG	0.000	0.012	0.012	0.006	0.004	0.003	0.002
MG	0.000	0.003	0.004	0.002	0.002	0.001	0.001
CG	0.000	0.000	0.001	0.001	0.001	0.001	0.000
VCG	0.000	0.000	0.000	0.000	0.000	0.000	0.000
	1.567	1.183	1.013	0.998	1.206	1.362	1.501

	1 cfs	50 cfs	100 cfs	500 cfs	1000 cfs	5000 cfs	16000 cfs
QS	-245.22	-13632.83	-28483.86	-142950.65	-271040.65	-1299328.55	-3999628.27
VFS	64.93%	62.24%	51.24%	35.39%	27.43%	24.41%	21.98%
FS	-6.59%	-5.74%	-1.81%	7.03%	15.56%	21.36%	19.73%
MS	-5.60%	-5.99%	-3.61%	-0.53%	0.64%	1.91%	5.87%
CS	-1.39%	-1.92%	0.54%	3.41%	2.86%	1.07%	1.54%
VCS	-2.37%	-1.20%	1.00%	3.35%	2.47%	0.46%	0.28%
VFG	-8.97%	-8.86%	-8.96%	-9.53%	-9.65%	-9.76%	-9.83%
FG	-10.00%	-8.84%	-8.84%	-9.42%	-9.56%	-9.68%	-9.77%
MG	-10.00%	-9.70%	-9.62%	-9.78%	-9.82%	-9.86%	-9.89%
CG	-10.00%	-9.99%	-9.94%	-9.93%	-9.94%	-9.95%	-9.95%
VCG	-10.00%	-10.00%	-10.00%	-9.99%	-9.98%	-9.97%	-9.97%

	1 cfs	50 cfs	100 cfs	500 cfs	1000 cfs	5000 cfs	16000 cfs
QS	357.18	17859.00	35718.00	178589.00	357178.00	1785888.00	5714842.00
VFS	0.100	0.100	0.100	0.100	0.100	0.100	0.100
FS	0.100	0.100	0.100	0.100	0.100	0.100	0.100
MS	0.100	0.100	0.100	0.100	0.100	0.100	0.100
CS	0.100	0.100	0.100	0.100	0.100	0.100	0.100
VCS	0.100	0.100	0.100	0.100	0.100	0.100	0.100
VFG	0.100	0.100	0.100	0.100	0.100	0.100	0.100
FG	0.100	0.100	0.100	0.100	0.100	0.100	0.100
MG	0.100	0.100	0.100	0.100	0.100	0.100	0.100
CG	0.100	0.100	0.100	0.100	0.100	0.100	0.100
VCG	0.100	0.100	0.100	0.100	0.100	0.100	0.100
	1.006	1.000	1.000	1.000	1.000	1.000	1.000

REATA MAIN (QSIN)
HEC6
METHOD 4 - YANG'S

ITERATION # 2

Current HEC-6 Output Table

	1 cfs	50 cfs	100 cfs	500 cfs	1000 cfs	5000 cfs	16000 cfs
QS	111.96	4228.33	7620	37469	78890	464707	1627796
VFS	83.89	3055.01	4821.32	18289.50	32245.77	168491.17	549675.79
FS	3.82	180.10	591.37	5720.16	14487.76	131914.84	482774.44
MS	4.93	169.54	461.29	3400.21	9246.77	53717.34	200505.66
CS	9.64	341.41	761.21	4803.44	11164.18	54953.16	203611.32
VCS	8.54	371.89	794.42	4773.72	10833.46	51764.79	180777.64
VFG	1.15	48.21	75.33	169.07	304.55	1189.75	3036.19
FG	0.00	48.84	83.75	205.36	380.03	1562.99	4117.96
MG	0.00	12.78	27.20	79.76	155.83	693.30	1921.07
CG	0.00	0.56	4.51	23.17	51.80	266.90	809.76
VCG	0.00	0.00	0.00	4.71	19.76	153.11	565.74
SUM	-0.01	-0.01	0.02	-0.01	0.02	-0.01	0.00

	1 cfs	50 cfs	100 cfs	500 cfs	1000 cfs	5000 cfs	16000 cfs
QS	111.96	4228.33	7620	37469	78890	464707	1627796
VFS	0.749	0.723	0.633	0.488	0.409	0.363	0.338
FS	0.034	0.043	0.078	0.153	0.184	0.284	0.297
MS	0.044	0.040	0.061	0.091	0.117	0.116	0.123
CS	0.086	0.081	0.100	0.128	0.142	0.118	0.125
VCS	0.076	0.088	0.104	0.127	0.137	0.111	0.111
VFG	0.010	0.011	0.010	0.005	0.004	0.003	0.002
FG	0.000	0.012	0.011	0.005	0.005	0.003	0.003
MG	0.000	0.003	0.004	0.002	0.002	0.001	0.001
CG	0.000	0.000	0.001	0.001	0.001	0.001	0.000
VCG	0.000	0.000	0.000	0.000	0.000	0.000	0.000
	1.567	1.184	1.067	1.049	1.104	1.301	1.424

	1 cfs	50 cfs	100 cfs	500 cfs	1000 cfs	5000 cfs	16000 cfs
QS	0.00	2.16	386.28	1830.74	-7247.42	-21852.11	-87418.16
VFS	0.00	2.19	391.30	2113.19	1.60	1059.32	1176.32
FS	0.00	-0.01	-1.36	-349.01	-7526.47	-20678.52	-27202.82
MS	0.00	0.00	-0.83	25.97	83.31	-4236.77	-71705.11
CS	0.00	0.00	-1.25	25.07	88.57	1082.23	5660.15
VCS	0.00	0.00	-1.29	15.91	93.21	865.74	4375.77
VFG	0.00	0.00	-0.13	-0.13	4.05	16.76	76.19
FG	0.00	0.00	-0.14	-0.15	5.20	22.61	108.84
MG	0.00	0.00	-0.05	-0.07	2.16	10.25	53.06
CG	0.00	0.00	0.00	-0.03	0.71	4.00	23.07
VCG	0.00	0.00	0.00	0.00	0.22	2.30	16.36

	1 cfs	50 cfs	100 cfs	500 cfs	1000 cfs	5000 cfs	16000 cfs
QS	-0.01	2.17	386.27	1830.74	-7247.42	-21852.09	-87418.17
VFS	0.01%	0.01%	2.03%	3.42%	3.44%	1.85%	1.79%
FS	0.00%	0.00%	-0.43%	-1.76%	-7.19%	-2.98%	-0.07%
MS	0.00%	0.00%	-0.33%	-0.39%	1.08%	-0.35%	-3.55%
CS	0.00%	0.00%	-0.55%	-0.59%	1.29%	0.75%	0.97%
VCS	0.00%	0.00%	-0.57%	-0.61%	1.26%	0.68%	0.82%
VFG	0.00%	0.00%	-0.05%	-0.02%	0.04%	0.01%	0.01%
FG	0.00%	0.00%	-0.06%	-0.03%	0.05%	0.02%	0.02%
MG	0.00%	0.00%	-0.02%	-0.01%	0.02%	0.01%	0.01%
CG	0.00%	0.00%	0.00%	0.00%	0.01%	0.00%	0.00%
VCG	0.00%	0.00%	0.00%	0.00%	0.00%	0.00%	0.00%

Previous HEC-6 Output Table

	1 cfs	50 cfs	100 cfs	500 cfs	1000 cfs	5000 cfs	16000 cfs
QS	111.96	4226.17	7234.14	35638.35	86137.35	486559.45	1715213.73
VFS	83.89	3052.82	4430.02	16176.31	32244.17	167431.85	548499.47
FS	3.82	180.11	592.73	6069.17	22014.23	152593.36	509977.26
MS	4.93	169.54	462.12	3374.24	9163.46	57954.11	272210.77
CS	9.64	341.41	762.46	4778.37	11075.61	53870.93	197951.17
VCS	8.54	371.89	795.71	4757.81	10740.25	50899.05	176401.87
VFG	1.15	48.21	75.46	169.20	300.50	1172.99	2960.00
FG	0.00	48.84	83.89	205.51	374.83	1540.38	4009.12
MG	0.00	12.78	27.25	79.83	153.67	683.05	1868.01
CG	0.00	0.56	4.51	23.20	51.09	262.90	786.69
VCG	0.00	0.00	0.00	4.71	19.54	150.81	549.38
	0.10	5.00	10.00	50.00	100.00	500.00	1600.00

	1 cfs	50 cfs	100 cfs	500 cfs	1000 cfs	5000 cfs	16000 cfs
QS	111.97	4226.16	7234.15	35638.35	86137.35	486559.43	1715213.74
VFS	0.749	0.722	0.612	0.454	0.374	0.344	0.320
FS	0.034	0.043	0.082	0.170	0.256	0.314	0.297
MS	0.044	0.040	0.064	0.095	0.106	0.119	0.159
CS	0.086	0.081	0.105	0.134	0.129	0.111	0.115
VCS	0.076	0.088	0.110	0.134	0.125	0.105	0.103
VFG	0.010	0.011	0.010	0.005	0.003	0.002	0.002
FG	0.000	0.012	0.012	0.006	0.004	0.003	0.002
MG	0.000	0.003	0.004	0.002	0.002	0.001	0.001
CG	0.000	0.000	0.001	0.001	0.001	0.001	0.000
VCG	0.000	0.000	0.000	0.000	0.000	0.000	0.000
	1.006	1.000	1.000	1.000	1.000	1.000	1.000

REATA MAIN (QSIN)
HEC6
METHOD 4 - YANG'S

ITERATION # 3

Current HEC-6 Output Table

	1 cfs	50 cfs	100 cfs	500 cfs	1000 cfs	5000 cfs	16000 cfs
QS	111.96	4228.34	7632	40127	78616	445058	1590471
VFS	83.89	3055.01	4833.06	20921.26	32716.73	169805.33	551572.40
FS	3.82	180.10	591.33	5728.81	13750.68	109644.69	455037.89
MS	4.93	169.54	461.27	3410.16	9227.09	54236.45	184926.34
CS	9.64	341.41	761.17	4809.36	11165.14	55364.07	205619.23
VCS	8.54	371.89	794.38	4776.02	10842.77	52118.03	182717.88
VFG	1.15	48.21	75.33	168.88	304.99	1196.79	3078.83
FG	0.00	48.84	83.75	205.12	380.61	1572.57	4175.73
MG	0.00	12.78	27.20	79.66	156.08	697.68	1948.03
CG	0.00	0.56	4.51	23.15	51.88	268.62	821.14
VCG	0.00	0.00	0.00	4.69	19.79	154.10	573.76
SUM	-0.01	0.00	-0.01	0.00	0.00	-0.01	0.00

	1 cfs	50 cfs	100 cfs	500 cfs	1000 cfs	5000 cfs	16000 cfs
QS	111.96	4228.34	7632	40127	78616	445058	1590471
VFS	0.749	0.723	0.633	0.521	0.416	0.382	0.347
FS	0.034	0.043	0.077	0.143	0.175	0.246	0.286
MS	0.044	0.040	0.060	0.085	0.117	0.122	0.116
CS	0.086	0.081	0.100	0.120	0.142	0.124	0.129
VCS	0.076	0.088	0.104	0.119	0.138	0.117	0.115
VFG	0.010	0.011	0.010	0.004	0.004	0.003	0.002
FG	0.000	0.012	0.011	0.005	0.005	0.004	0.003
MG	0.000	0.003	0.004	0.002	0.002	0.002	0.001
CG	0.000	0.000	0.001	0.001	0.001	0.001	0.001
VCG	0.000	0.000	0.000	0.000	0.000	0.000	0.000
	1.567	1.184	1.068	1.123	1.101	1.246	1.392

	1 cfs	50 cfs	100 cfs	500 cfs	1000 cfs	5000 cfs	16000 cfs
QS	0.00	0.01	11.57	2658.02	-274.17	-19649.02	-37324.34
VFS	0.00	0.00	11.74	2631.76	470.96	1314.16	1896.61
FS	0.00	0.00	-0.04	8.65	-737.08	-22270.15	-27736.55
MS	0.00	0.00	-0.02	9.95	-19.68	519.11	-15579.32
CS	0.00	0.00	-0.04	5.92	0.96	410.91	2007.91
VCS	0.00	0.00	-0.04	2.30	9.31	353.24	1940.24
VFG	0.00	0.00	0.00	-0.19	0.44	7.04	42.64
FG	0.00	0.00	0.00	-0.24	0.58	9.58	57.77
MG	0.00	0.00	0.00	-0.10	0.25	4.38	26.96
CG	0.00	0.00	0.00	-0.02	0.08	1.72	11.38
VCG	0.00	0.00	0.00	-0.02	0.03	0.99	8.02

	1 cfs	50 cfs	100 cfs	500 cfs	1000 cfs	5000 cfs	16000 cfs
QS	-0.01	0.00	11.59	2658.01	-274.15	-19649.03	-37324.34
VFS	0.01%	0.00%	0.06%	3.33%	0.74%	1.90%	0.91%
FS	0.00%	0.00%	-0.01%	-0.99%	-0.87%	-3.75%	-1.05%
MS	0.00%	0.00%	-0.01%	-0.58%	0.02%	0.63%	-0.69%
CS	0.00%	0.00%	-0.02%	-0.83%	0.05%	0.61%	0.42%
VCS	0.00%	0.00%	-0.02%	-0.84%	0.06%	0.57%	0.38%
VFG	0.00%	0.00%	0.00%	-0.03%	0.00%	0.01%	0.01%
FG	0.00%	0.00%	0.00%	-0.04%	0.00%	0.02%	0.01%
MG	0.00%	0.00%	0.00%	-0.01%	0.00%	0.01%	0.00%
CG	0.00%	0.00%	0.00%	0.00%	0.00%	0.00%	0.00%
VCG	0.00%	0.00%	0.00%	0.00%	0.00%	0.00%	0.00%

Previous HEC-6 Output Table

	1 cfs	50 cfs	100 cfs	500 cfs	1000 cfs	5000 cfs	16000 cfs
QS	111.96	4228.33	7620.42	37469.09	78889.93	464707.34	1627795.57
VFS	83.89	3055.01	4821.32	18289.50	32245.77	168491.17	549675.79
FS	3.82	180.10	591.37	5720.16	14487.76	131914.84	482774.44
MS	4.93	169.54	461.29	3400.21	9246.77	53717.34	200505.66
CS	9.64	341.41	761.21	4803.44	11164.18	54953.16	203611.32
VCS	8.54	371.89	794.42	4773.72	10833.46	51764.79	180777.64
VFG	1.15	48.21	75.33	169.07	304.55	1189.75	3036.19
FG	0.00	48.84	83.75	205.36	380.03	1562.99	4117.96
MG	0.00	12.78	27.20	79.76	155.83	693.30	1921.07
CG	0.00	0.56	4.51	23.17	51.80	266.90	809.76
VCG	0.00	0.00	0.00	4.71	19.76	153.11	565.74
SUM	-0.01	-0.01	0.02	-0.01	0.02	-0.01	0.00

	1 cfs	50 cfs	100 cfs	500 cfs	1000 cfs	5000 cfs	16000 cfs
QS	111.97	4228.34	7620.40	37469.10	78889.91	464707.35	1627795.57
VFS	0.749	0.723	0.633	0.488	0.409	0.363	0.338
FS	0.034	0.043	0.078	0.153	0.184	0.284	0.297
MS	0.044	0.040	0.061	0.091	0.117	0.116	0.123
CS	0.086	0.081	0.100	0.128	0.142	0.118	0.125
VCS	0.076	0.088	0.104	0.127	0.137	0.111	0.111
VFG	0.010	0.011	0.010	0.005	0.004	0.003	0.002
FG	0.000	0.012	0.011	0.005	0.005	0.003	0.003
MG	0.000	0.003	0.004	0.002	0.002	0.001	0.001
CG	0.000	0.000	0.001	0.001	0.001	0.001	0.000
VCG	0.000	0.000	0.000	0.000	0.000	0.000	0.000
	1.006	1.000	1.000	1.000	1.000	1.000	1.000

REATA MAIN (QSIN)
HEC6
METHOD 4 - YANG'S

ITERATION # 4

Current HEC-6 Output Table

	1 cfs	50 cfs	100 cfs	500 cfs	1000 cfs	5000 cfs	16000 cfs
QS	111.96	4228.34	7632	40917	79350	439115	1560534
VFS	83.89	3055.01	4833.27	21721.53	33364.35	171159.49	552889.45
FS	3.82	180.10	591.33	5726.67	13860.87	96611.06	425819.14
MS	4.93	169.54	461.27	3407.79	9206.86	56266.93	181772.73
CS	9.64	341.41	761.17	4806.41	11161.41	57305.04	206239.06
VCS	8.54	371.89	794.38	4773.09	10843.22	53783.80	183166.10
VFG	1.15	48.21	75.33	168.76	304.93	1229.22	3092.40
FG	0.00	48.84	83.75	204.97	380.55	1611.85	4195.25
MG	0.00	12.78	27.20	79.61	156.06	714.14	1957.59
CG	0.00	0.56	4.51	23.13	51.87	275.04	825.30
VCG	0.00	0.00	0.00	4.69	19.78	158.61	576.68
SUM	-0.01	0.00	-0.01	0.00	0.01	0.00	0.00

	1 cfs	50 cfs	100 cfs	500 cfs	1000 cfs	5000 cfs	16000 cfs
QS	111.96	4228.34	7632	40917	79350	439115	1560534
VFS	0.749	0.723	0.633	0.531	0.420	0.390	0.354
FS	0.034	0.043	0.077	0.140	0.175	0.220	0.273
MS	0.044	0.040	0.060	0.083	0.116	0.128	0.116
CS	0.086	0.081	0.100	0.117	0.141	0.131	0.132
VCS	0.076	0.088	0.104	0.117	0.137	0.122	0.117
VFG	0.010	0.011	0.010	0.004	0.004	0.003	0.002
FG	0.000	0.012	0.011	0.005	0.005	0.004	0.003
MG	0.000	0.003	0.004	0.002	0.002	0.002	0.001
CG	0.000	0.000	0.001	0.001	0.001	0.001	0.001
VCG	0.000	0.000	0.000	0.000	0.000	0.000	0.000
	1.567	1.184	1.068	1.146	1.111	1.229	1.365

	1 cfs	50 cfs	100 cfs	500 cfs	1000 cfs	5000 cfs	16000 cfs
QS	0.00	0.00	0.21	789.54	734.15	-5943.14	-29937.53
VFS	0.00	0.00	0.21	800.27	647.62	1354.16	1317.05
FS	0.00	0.00	0.00	-2.14	110.19	-13033.63	-29218.75
MS	0.00	0.00	0.00	-2.37	-20.23	2030.48	-3153.61
CS	0.00	0.00	0.00	-2.95	-3.73	1940.97	619.83
VCS	0.00	0.00	0.00	-2.93	0.45	1665.77	448.22
VFG	0.00	0.00	0.00	-0.12	-0.06	32.43	13.57
FG	0.00	0.00	0.00	-0.15	-0.06	39.28	19.52
MG	0.00	0.00	0.00	-0.05	-0.02	16.46	9.56
CG	0.00	0.00	0.00	-0.02	-0.01	6.42	4.16
VCG	0.00	0.00	0.00	0.00	-0.01	4.51	2.92

	1 cfs	50 cfs	100 cfs	500 cfs	1000 cfs	5000 cfs	16000 cfs
QS	-0.01	0.00	0.20	789.54	734.15	-5943.15	-29937.53
VFS	0.01%	0.00%	0.00%	0.95%	0.43%	0.82%	0.75%
FS	0.00%	0.00%	0.00%	-0.28%	-0.02%	-2.63%	-1.32%
MS	0.00%	0.00%	0.00%	-0.17%	-0.13%	0.63%	0.02%
CS	0.00%	0.00%	0.00%	-0.24%	-0.14%	0.61%	0.29%
VCS	0.00%	0.00%	0.00%	-0.24%	-0.13%	0.54%	0.25%
VFG	0.00%	0.00%	0.00%	-0.01%	0.00%	0.01%	0.00%
FG	0.00%	0.00%	0.00%	-0.01%	0.00%	0.01%	0.01%
MG	0.00%	0.00%	0.00%	0.00%	0.00%	0.01%	0.00%
CG	0.00%	0.00%	0.00%	0.00%	0.00%	0.00%	0.00%
VCG	0.00%	0.00%	0.00%	0.00%	0.00%	0.00%	0.00%

Previous HEC-6 Output Table

	1 cfs	50 cfs	100 cfs	500 cfs	1000 cfs	5000 cfs	16000 cfs
QS	111.96	4228.34	7631.99	40127.11	78615.76	445058.32	1590471.23
VFS	83.89	3055.01	4833.06	20921.26	32716.73	169805.33	551572.40
FS	3.82	180.10	591.33	5728.81	13750.68	109644.69	455037.89
MS	4.93	169.54	461.27	3410.16	9227.09	54236.45	184926.34
CS	9.64	341.41	761.17	4809.36	11165.14	55364.07	205619.23
VCS	8.54	371.89	794.38	4776.02	10842.77	52118.03	182717.88
VFG	1.15	48.21	75.33	168.88	304.99	1196.79	3078.83
FG	0.00	48.84	83.75	205.12	380.61	1572.57	4175.73
MG	0.00	12.78	27.20	79.66	156.08	697.68	1948.03
CG	0.00	0.56	4.51	23.15	51.88	268.62	821.14
VCG	0.00	0.00	0.00	4.69	19.79	154.10	573.76
SUM	-0.01	-0.01	0.02	-0.01	0.02	-0.01	0.00

	1 cfs	50 cfs	100 cfs	500 cfs	1000 cfs	5000 cfs	16000 cfs
QS	111.97	4228.34	7632.00	40127.11	78615.76	445058.33	1590471.23
VFS	0.749	0.723	0.633	0.521	0.416	0.382	0.347
FS	0.034	0.043	0.077	0.143	0.175	0.246	0.286
MS	0.044	0.040	0.060	0.085	0.117	0.122	0.116
CS	0.086	0.081	0.100	0.120	0.142	0.124	0.129
VCS	0.076	0.088	0.104	0.119	0.138	0.117	0.115
VFG	0.010	0.011	0.010	0.004	0.004	0.003	0.002
FG	0.000	0.012	0.011	0.005	0.005	0.004	0.003
MG	0.000	0.003	0.004	0.002	0.002	0.002	0.001
CG	0.000	0.000	0.001	0.001	0.001	0.001	0.001
VCG	0.000	0.000	0.000	0.000	0.000	0.000	0.000
	1.006	1.000	1.000	1.000	1.000	1.000	1.000

REATA MAIN (QSIN)
HEC6
METHOD 4 - YANG'S

ITERATION # 5

Current HEC-6 Output Table

	1 cfs	50 cfs	100 cfs	500 cfs	1000 cfs	5000 cfs	16000 cfs
QS	111.96	4228.34	7632	42182	80346	432707	1532709
VFS	83.89	3055.01	4833.27	23014.01	34615.26	172350.91	553210.94
FS	3.82	180.10	591.33	5713.19	13616.69	88681.13	397266.83
MS	4.93	169.54	461.27	3403.94	9186.34	56373.25	181527.24
CS	9.64	341.41	761.17	4801.76	11163.80	57420.18	206574.44
VCS	8.54	371.89	794.38	4768.54	10850.62	53885.80	183440.67
VFG	1.15	48.21	75.33	168.58	305.00	1231.37	3104.51
FG	0.00	48.84	83.75	204.75	380.67	1614.80	4212.02
MG	0.00	12.78	27.20	79.52	156.11	715.50	1965.46
CG	0.00	0.56	4.51	23.11	51.89	275.58	828.54
VCG	0.00	0.00	0.00	4.69	19.78	158.93	578.74
SUM	-0.01	0.00	-0.01	-0.01	0.00	0.00	0.00

	1 cfs	50 cfs	100 cfs	500 cfs	1000 cfs	5000 cfs	16000 cfs
QS	111.96	4228.34	7632	42182	80346	432707	1532709
VFS	0.749	0.723	0.633	0.546	0.431	0.398	0.361
FS	0.034	0.043	0.077	0.135	0.169	0.205	0.259
MS	0.044	0.040	0.060	0.081	0.114	0.130	0.118
CS	0.086	0.081	0.100	0.114	0.139	0.133	0.135
VCS	0.076	0.088	0.104	0.113	0.135	0.125	0.120
VFG	0.010	0.011	0.010	0.004	0.004	0.003	0.002
FG	0.000	0.012	0.011	0.005	0.005	0.004	0.003
MG	0.000	0.003	0.004	0.002	0.002	0.002	0.001
CG	0.000	0.000	0.001	0.001	0.001	0.001	0.001
VCG	0.000	0.000	0.000	0.000	0.000	0.000	0.000
	1.567	1.184	1.068	1.181	1.125	1.211	1.341

	1 cfs	50 cfs	100 cfs	500 cfs	1000 cfs	5000 cfs	16000 cfs
QS	0.00	0.00	0.00	1265.43	996.25	-6407.73	-27824.31
VFS	0.00	0.00	0.00	1292.48	1250.91	1191.42	321.49
FS	0.00	0.00	0.00	-13.48	-244.18	-7929.93	-28552.31
MS	0.00	0.00	0.00	-3.85	-20.52	106.32	-245.49
CS	0.00	0.00	0.00	-4.65	2.39	115.14	335.38
VCS	0.00	0.00	0.00	-4.55	7.40	102.00	274.57
VFG	0.00	0.00	0.00	-0.18	0.07	2.15	12.11
FG	0.00	0.00	0.00	-0.22	0.12	2.95	16.77
MG	0.00	0.00	0.00	-0.09	0.05	1.36	7.87
CG	0.00	0.00	0.00	-0.02	0.02	0.54	3.24
VCG	0.00	0.00	0.00	0.00	0.00	0.32	2.06

	1 cfs	50 cfs	100 cfs	500 cfs	1000 cfs	5000 cfs	16000 cfs
QS	-0.01	0.00	-0.01	1265.43	996.26	-6407.73	-27824.31
VFS	0.01%	0.00%	0.00%	1.47%	1.04%	0.85%	0.66%
FS	0.00%	0.00%	0.00%	-0.45%	-0.52%	-1.51%	-1.37%
MS	0.00%	0.00%	0.00%	-0.26%	-0.17%	0.21%	0.20%
CS	0.00%	0.00%	0.00%	-0.36%	-0.17%	0.22%	0.26%
VCS	0.00%	0.00%	0.00%	-0.36%	-0.16%	0.20%	0.23%
VFG	0.00%	0.00%	0.00%	-0.01%	0.00%	0.00%	0.00%
FG	0.00%	0.00%	0.00%	-0.02%	-0.01%	0.01%	0.01%
MG	0.00%	0.00%	0.00%	-0.01%	0.00%	0.00%	0.00%
CG	0.00%	0.00%	0.00%	0.00%	0.00%	0.00%	0.00%
VCG	0.00%	0.00%	0.00%	0.00%	0.00%	0.00%	0.00%

Previous HEC-6 Output Table

	1 cfs	50 cfs	100 cfs	500 cfs	1000 cfs	5000 cfs	16000 cfs
QS	111.96	4228.34	7632.20	40916.65	79349.91	439115.18	1560533.70
VFS	83.89	3055.01	4833.27	21721.53	33364.35	171159.49	552889.45
FS	3.82	180.10	591.33	5726.67	13860.87	96611.06	425819.14
MS	4.93	169.54	461.27	3407.79	9206.86	56266.93	181772.73
CS	9.64	341.41	761.17	4806.41	11161.41	57305.04	206239.06
VCS	8.54	371.89	794.38	4773.09	10843.22	53783.80	183166.10
VFG	1.15	48.21	75.33	168.76	304.93	1229.22	3092.40
FG	0.00	48.84	83.75	204.97	380.55	1611.85	4195.25
MG	0.00	12.78	27.20	79.61	156.06	714.14	1957.59
CG	0.00	0.56	4.51	23.13	51.87	275.04	825.30
VCG	0.00	0.00	0.00	4.69	19.78	158.61	576.68
SUM	-0.01	-0.01	0.02	-0.01	0.02	-0.01	0.00

	1 cfs	50 cfs	100 cfs	500 cfs	1000 cfs	5000 cfs	16000 cfs
QS	111.97	4228.34	7632.21	40916.65	79349.90	439115.18	1560533.70
VFS	0.749	0.723	0.633	0.531	0.420	0.390	0.354
FS	0.034	0.043	0.077	0.140	0.175	0.220	0.273
MS	0.044	0.040	0.060	0.083	0.116	0.128	0.116
CS	0.086	0.081	0.100	0.117	0.141	0.131	0.132
VCS	0.076	0.088	0.104	0.117	0.137	0.122	0.117
VFG	0.010	0.011	0.010	0.004	0.004	0.003	0.002
FG	0.000	0.012	0.011	0.005	0.005	0.004	0.003
MG	0.000	0.003	0.004	0.002	0.002	0.002	0.001
CG	0.000	0.000	0.001	0.001	0.001	0.001	0.001
VCG	0.000	0.000	0.000	0.000	0.000	0.000	0.000
	1.006	1.000	1.000	1.000	1.000	1.000	1.000

REATA MAIN (QSIN)
HEC6
METHOD 4 - YANG'S

ITERATION # 6

Current HEC-6 Output Table

	1 cfs	50 cfs	100 cfs	500 cfs	1000 cfs	5000 cfs	16000 cfs
QS	111.96	4228.34	7632	42938	82013	428609	1508345
VFS	83.89	3055.01	4833.27	23784.36	36159.13	173343.23	554176.47
FS	3.82	180.10	591.33	5707.06	13613.93	83380.71	371292.75
MS	4.93	169.54	461.27	3401.56	9244.52	56476.96	181582.75
CS	9.64	341.41	761.17	4798.94	11208.05	57467.99	206905.64
VCS	8.54	371.89	794.38	4765.80	10876.32	53938.34	183678.50
VFG	1.15	48.21	75.33	168.47	304.17	1233.13	3109.85
FG	0.00	48.84	83.75	204.62	379.67	1617.19	4219.82
MG	0.00	12.78	27.20	79.47	155.70	716.59	1969.35
CG	0.00	0.56	4.51	23.09	51.74	276.01	830.27
VCG	0.00	0.00	0.00	4.69	19.72	159.18	580.01
SUM	-0.01	0.00	-0.01	-0.01	-0.01	0.00	0.01

	1 cfs	50 cfs	100 cfs	500 cfs	1000 cfs	5000 cfs	16000 cfs
QS	111.96	4228.34	7632	42938	82013	428609	1508345
VFS	0.749	0.723	0.633	0.554	0.441	0.404	0.367
FS	0.034	0.043	0.077	0.133	0.166	0.195	0.246
MS	0.044	0.040	0.060	0.079	0.113	0.132	0.120
CS	0.086	0.081	0.100	0.112	0.137	0.134	0.137
VCS	0.076	0.088	0.104	0.111	0.133	0.126	0.122
VFG	0.010	0.011	0.010	0.004	0.004	0.003	0.002
FG	0.000	0.012	0.011	0.005	0.005	0.004	0.003
MG	0.000	0.003	0.004	0.002	0.002	0.002	0.001
CG	0.000	0.000	0.001	0.001	0.001	0.001	0.001
VCG	0.000	0.000	0.000	0.000	0.000	0.000	0.000
	1.567	1.184	1.068	1.202	1.148	1.200	1.320

	1 cfs	50 cfs	100 cfs	500 cfs	1000 cfs	5000 cfs	16000 cfs
QS	0.00	0.00	0.00	755.97	1666.78	-4098.12	-24363.97
VFS	0.00	0.00	0.00	770.35	1543.87	992.32	965.53
FS	0.00	0.00	0.00	-6.13	-2.76	-5300.42	-25974.08
MS	0.00	0.00	0.00	-2.38	58.18	103.71	55.51
CS	0.00	0.00	0.00	-2.82	44.25	47.81	331.20
VCS	0.00	0.00	0.00	-2.74	25.70	52.54	237.83
VFG	0.00	0.00	0.00	-0.11	-0.83	1.76	5.34
FG	0.00	0.00	0.00	-0.13	-1.00	2.39	7.80
MG	0.00	0.00	0.00	-0.05	-0.41	1.09	3.89
CG	0.00	0.00	0.00	-0.02	-0.15	0.43	1.73
VCG	0.00	0.00	0.00	0.00	-0.06	0.25	1.27

	1 cfs	50 cfs	100 cfs	500 cfs	1000 cfs	5000 cfs	16000 cfs
QS	-0.01	0.00	-0.01	755.96	1666.78	-4098.12	-24363.97
VFS	0.01%	0.00%	0.00%	0.83%	1.01%	0.61%	0.65%
FS	0.00%	0.00%	0.00%	-0.25%	-0.35%	-1.04%	-1.30%
MS	0.00%	0.00%	0.00%	-0.15%	-0.16%	0.15%	0.19%
CS	0.00%	0.00%	0.00%	-0.21%	-0.23%	0.14%	0.24%
VCS	0.00%	0.00%	0.00%	-0.21%	-0.24%	0.13%	0.21%
VFG	0.00%	0.00%	0.00%	-0.01%	-0.01%	0.00%	0.00%
FG	0.00%	0.00%	0.00%	-0.01%	-0.01%	0.00%	0.00%
MG	0.00%	0.00%	0.00%	0.00%	0.00%	0.00%	0.00%
CG	0.00%	0.00%	0.00%	0.00%	0.00%	0.00%	0.00%
VCG	0.00%	0.00%	0.00%	0.00%	0.00%	0.00%	0.00%

Previous HEC-6 Output Table

	1 cfs	50 cfs	100 cfs	500 cfs	1000 cfs	5000 cfs	16000 cfs
QS	111.96	4228.34	7632.20	42182.08	80346.16	432707.45	1532709.39
VFS	83.89	3055.01	4833.27	23014.01	34615.26	172350.91	553210.94
FS	3.82	180.10	591.33	5713.19	13616.69	88681.13	397266.83
MS	4.93	169.54	461.27	3403.94	9186.34	56373.25	181527.24
CS	9.64	341.41	761.17	4801.76	11163.80	57420.18	206574.44
VCS	8.54	371.89	794.38	4768.54	10850.62	53885.80	183440.67
VFG	1.15	48.21	75.33	168.58	305.00	1231.37	3104.51
FG	0.00	48.84	83.75	204.75	380.67	1614.80	4212.02
MG	0.00	12.78	27.20	79.52	156.11	715.50	1965.46
CG	0.00	0.56	4.51	23.11	51.89	275.58	828.54
VCG	0.00	0.00	0.00	4.69	19.78	158.93	578.74
SUM	-0.01	-0.01	0.02	-0.01	0.02	-0.01	0.00

	1 cfs	50 cfs	100 cfs	500 cfs	1000 cfs	5000 cfs	16000 cfs
QS	111.97	4228.34	7632.21	42182.09	80346.16	432707.45	1532709.39
VFS	0.749	0.723	0.633	0.546	0.431	0.398	0.361
FS	0.034	0.043	0.077	0.135	0.169	0.205	0.259
MS	0.044	0.040	0.060	0.081	0.114	0.130	0.118
CS	0.086	0.081	0.100	0.114	0.139	0.133	0.135
VCS	0.076	0.088	0.104	0.113	0.135	0.125	0.120
VFG	0.010	0.011	0.010	0.004	0.004	0.003	0.002
FG	0.000	0.012	0.011	0.005	0.005	0.004	0.003
MG	0.000	0.003	0.004	0.002	0.002	0.002	0.001
CG	0.000	0.000	0.001	0.001	0.001	0.001	0.001
VCG	0.000	0.000	0.000	0.000	0.000	0.000	0.000
	1.006	1.000	1.000	1.000	1.000	1.000	1.000

Appendix C

Literature References

ARIZONA
DEPARTMENT OF WATER RESOURCES

DESIGN MANUAL FOR ENGINEERING ANALYSIS OF FLUVIAL SYSTEMS

1985

4.6.2 Antidune and Dune Height

For natural or man-made channel segments with sand beds, it is necessary to estimate the height of bed forms moving through the channel, particularly where freeboard or scour requirements are critical. This can be done by estimating antidune or dune height.

Antidunes can form in either the transition zone (between lower and upper regime) or upper flow regime (Simons and Senturk, 1977). Kennedy (1963) made a detailed study of antidune flow. He suggested that the wave length is generally given by $2\pi V^2/g$ (g is the gravitational acceleration) and two-dimensional waves break when the ratio of wave height to wave length reaches a value of approximately 0.14. This theory assumes that the depth of flow is roughly equal to the maximum height of the antidune. Thus, the antidune height h_a from crest to trough (see Figure 4.7) can be estimated utilizing the relation

$$h_a = 0.14 \frac{2\pi V^2}{g} = 0.027\ V^2 \qquad (4.25)$$

for $h_a < y$; assume $h_a = y_o$ when the calculated value of $h_a > y_o$, since h_a can never be greater than y_o.

Lower regime flow also produces bed forms which should be considered in designing levee, channel, or bridge projects. Based on data collected from flume experiments (Simons and Richardson, 1960), dune formations have been observed at Froude numbers ranging from 0.38 to 0.60. The ratio of depth of flow to dune height (d/h) ranged from 1 to 5. When this ratio is 1.0, the dune troughs could be depressed below the natural channel bed a distance equal to one-half the depth of flow. As a conservative guideline, this value (one-half the depth of flow) may be used to account for dune troughs forming adjacent to a structure.

4.6.3 Superelevation

There are many equations for determining superelevation, but the differences in computational results that are obtained by using the different equations are small. One equation that has proven to be applicable to a wide range of conditions was first presented by Ippen and Drinker (1962). When superelevation is defined as the water surface increase above the normal water surface (see Figure 4.8a), this equation takes the form:

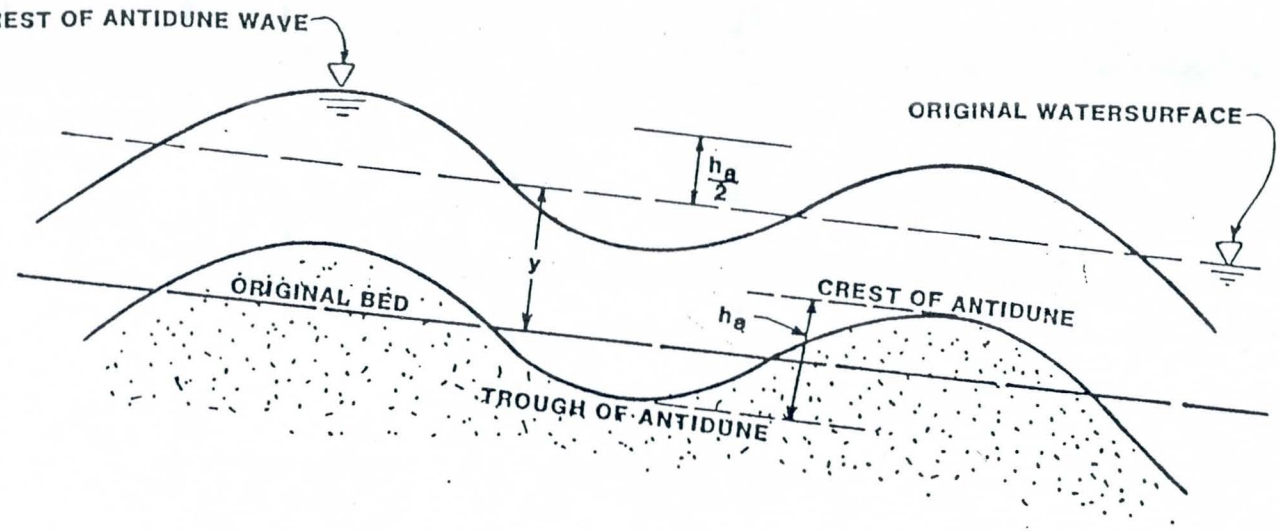

Figure 4.7 Definition sketch for antidune height.

The unit water discharge at the bridge site is

$$q_2 = \frac{320}{240}\left(\frac{27,500}{320}\right) = 114.6$$

The flow depth at the bridge site after equilibrium is

$$Y_2 = \left(\frac{0.019}{3.45\times10^{-6}\ (114.6)^{4.60}}\right)^{\frac{1}{-0.693-4.60}}$$

$$= 12.1 \text{ ft}$$

The amount of scour is then

$$\Delta Z_{gs} = 12.1 - 11.2 = 0.9 \text{ ft}$$

5.3.12 Bend Scour

Discussion

The bends associated with meandering channels will induce transverse or "secondary" currents which will scour sediment from the ouside of a bend and cause it to be deposited along the inside of the bend. It is important to note that this scouring mechanism is caused by the spiral pattern of secondary flow, and is not due to a shift of the maximum longitudinal velocity filament against the outer bank. Channel bends will cause a shift in this velocity filament, but through the bend the maximum longitudinal velocity is normally moved nearer to the inside bank, whereas the shift to the outer bank occurs downstream of the bend. It is at these downstream locations that the shift in longitudinal velocity patterns will most likely cause lateral erosion of a channel bank.

The discussion presented in this manual will address the vertical scour potential in a channel bend. A review of technical literature will reveal the existance of several theoretical relationships that have been developed to predict the amount of scour through a river bend. To date, there is no known procedure which consistently yields an accurate prediction of bend scour through a wide range of hydraulic and geometric conditions. Based on the assumption of constant stream power through the channel bend, Zeller (1981) developed the following relationship for estimating the maximum scour component resulting from channel curvature in sand-bed channels:

$$\Delta Z_{bs} = \frac{0.0685}{Y_h^{0.4}} \frac{YV^{0.8}}{S_e^{0.3}} \left[2.1 \left(\frac{\sin^2 \frac{\alpha}{2}}{\cos \alpha}\right)^{0.2} - 1\right] \tag{5.25}$$

where ΔZ_{bs} = bend scour component of total scour depth (feet)

V = mean velocity of upstream flow (fps)

Y = maximum depth of upstream flow (feet)

Y_h = hydraulic depth of upstream flow (feet)

S_e = upstream energy slope (bed slope for uniform flow conditions, feet/feet)

α = angle formed by the projection of the channel centerline from the point of curvature to a point which meets a line tangent to the outer bank of the channel (degrees, see Figure 5.25)

Mathematically, it can be shown that, for a simple circular curve, the following relationship exists between α and the ratio of radius of curvature to channel topwidth.

$$\frac{r_c}{W} = \frac{\cos \alpha}{4 \sin^2(\frac{\alpha}{2})} \tag{5.26}$$

where r_c = radius of curvature to centerline of channel (feet)

W = channel topwidth (feet)

If the bend under evaluation deviates significantly from a simple circular curve, the engineer should consider dividing the bend into a series of circular curves and analyzing the bend as a compound curve. Under this procedure, there would be a different value of α determined for each segment of the compund curve. A scour depth would then be computed for each segment of the curve using the α determined for that segment.

Application

Equation 5.25 can be applied to natural river bends to get an approximation of the scour depth that can be expected in the bend during a specific water discharge. The impact that other simultaneously occurring phenomena such as sand waves, local scour, long-term degradation, etc., might have on bend scour is not known for certain. In order that the maximum scour in a

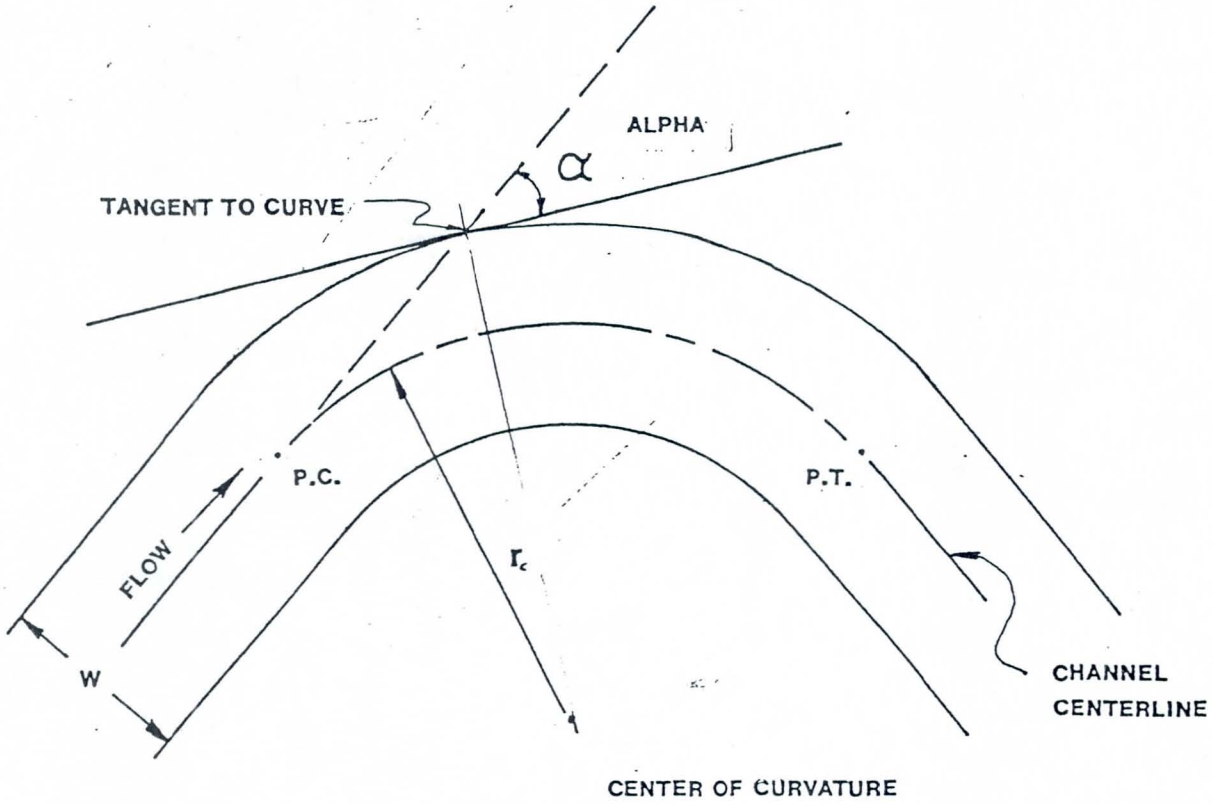

Figure 5.25 Illustration of terminology for bend scour calculations.

U.S. Department
of Transportation

Federal Highway Administration

Publication No. FHWA-IP-90-017
Revised April 1993

Hydraulic Engineering Circular No. 18

Registered Professional
CERTIFICATE
2099
KA-CHU
ALBERT M
Date Signed
ARIZONA

Evaluating Scour at Bridges

Second Edition

Office of Research and Development
Turner-Fairbank Highway Research Center
6300 Georgetown Pike
McLean, Virginia 22101-2296

the flow distribution going to and through the relief bridge. This information could be obtained from WSPRO.[29]

Live-Bed Contraction Scour. A modified version of Laursen's 1960 equation [12] for live-bed scour at a long contraction is recommended to predict the depth of scour in a contracted section. The original equation is given in Chapter 2. The modification is to eliminate the ratio of Manning's n. The equation assumes that bed material is being transported in the upstream section.

$$\frac{y_2}{y_1} = \left(\frac{Q_2}{Q_1}\right)^{\frac{6}{7}} \left(\frac{W_1}{W_2}\right)^{k_1} \tag{16}$$

$$y_s = y_2 - y_1 = (\textit{average scour depth}) \tag{17}$$

where

y_1 = average depth in the upstream main channel, ft
y_2 = average depth in the contracted section, ft
W_1 = bottom width of the upstream main channel, ft
W_2 = bottom width of the main channel in the contracted section, ft
Q_1 = flow in the upstream channel transporting sediment, cfs
Q_2 = flow in the contracted channel, cfs
k_1 = exponent determined below

V_*/w	k_1	Mode of Bed Material Transport
<0.50	0.59	mostly contact bed material discharge
0.50 to 2.0	0.64	some suspended bed material discharge
>2.0	0.69	mostly suspended bed material discharge

V_* = $(\tau/\rho)^{1/2} = (gy_1 S_1)^{1/2}$, shear velocity in the upstream section, ft/s
w = fall velocity of bed material based on the D_{50}, ft/s (see **Figure 3**)
g = acceleration of gravity (32.2 ft/s^2)
S_1 = slope of energy grade line of main channel, ft/ft
τ = shear stress on the bed, lb/ft^2
ρ = density of water (1.94 slugs/ft^3)

Notes:

1. Q_2 may be the total flow going through the bridge opening as in Cases 1a and 1b. It is not the total for Case 1c.

2. Q_1 is the flow in the main channel upstream of the bridge, not including overbank flows.

3. The Manning's n ratio can be significant for a condition of dune bed in the main channel and a corresponding plane bed, washed out dunes or antidunes in the contracted channel. However, Laursen's equation does not correctly account for the increase in transport that will occur as the result of the bed planing out (which decreases resistance to flow, increases the velocity and the transport of bed material at the bridge). That is, Laursen's equation indicates a decrease in scour for this case, whereas in reality, there would be an increase in scour depth. In addition, at flood flows, a plane bedform will usually exist upstream and through the bridge waterway, and the values of Manning's n will be equal. Consequently, the n value ratio is not recommended or presented in the recommended Equation 16.

4. W_1 and W_2 are not always easily defined. In some cases, it is acceptable to use the top width of the main channel to define these widths. Whether top width or bottom width is used, it is important to be consistent so that W_1 and W_2 refer to either bottom widths or top widths.

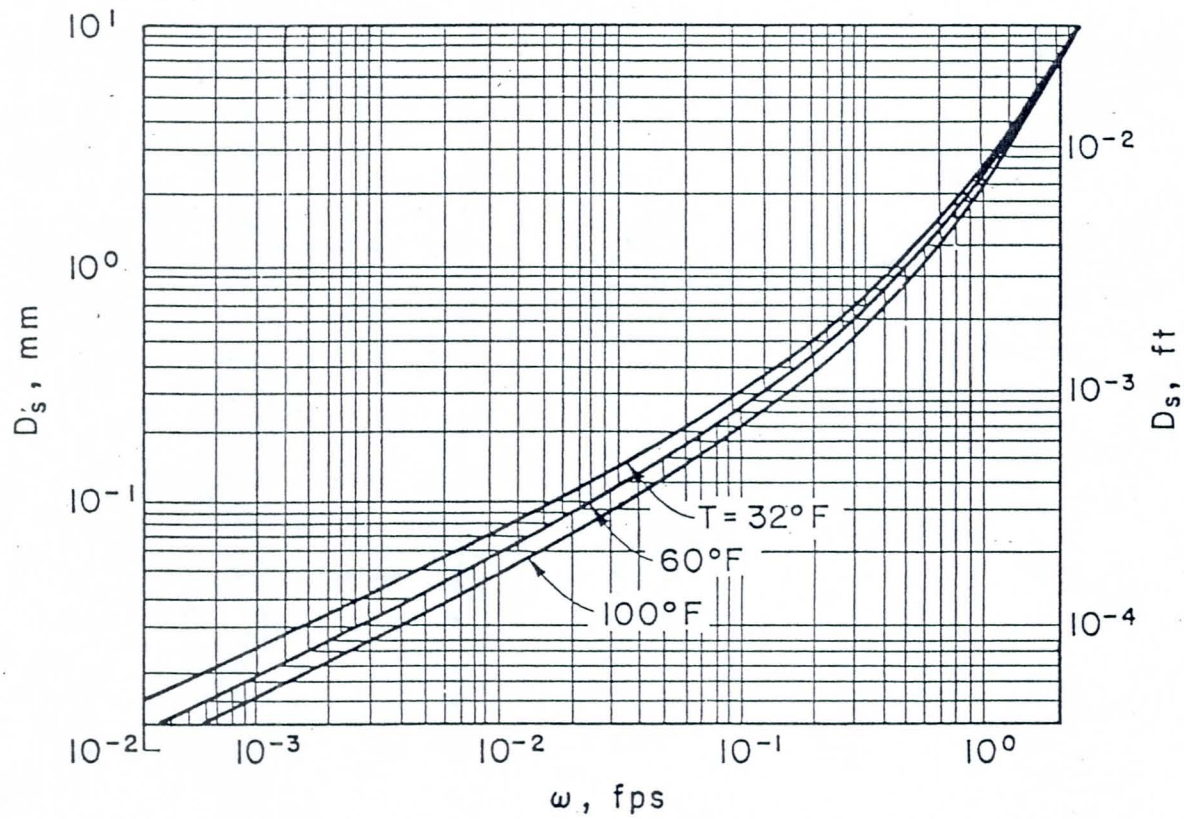

Figure 3. Fall Velocity of Sand-Sized Particles.

Note that for stratified bed material the depth of scour can be determined by using Equations 18 or 20 sequentially with successive D_m of the bed material layers.

Other Contraction Scour Conditions. Contraction scour resulting from variable water surfaces downstream of the bridge is analyzed by determining the lowest potential water-surface elevation downstream of the bridge insofar as scour processes are concerned. Use the WSPRO [29] computer program to determine the flow variables, such as velocity and depths, through the bridge. With these variables, determine contraction and local scour depths.

Contraction scour in a channel bendway resulting from the flow through the bridge being concentrated toward the outside of the bend is analyzed by determining the super-elevation of the water surface on the outside of the bend and estimating the resulting velocities and depths through the bridge. The maximum velocity in the outer part of the bend can be 1.5 to 2 times the mean velocity. A physical model study can also be used to determine the velocity and scour depth distribution through the bridge for this case.

Estimating contraction scour for unusual situations involves particular skills in the application of principles of river mechanics to the site-specific conditions. Such studies should be undertaken by engineers experienced in the fields of hydraulics and river mechanics.

4.3.5 Step 5: Compute the Magnitude of Local Scour at Piers

General. Local scour at piers is a function of bed material size, flow characteristics, fluid properties and the geometry of the pier. The subject has been studied extensively in the laboratory, but there is limited field data. As a result of the many studies, there are many equations. In general, the equations, which give similar results, are for live-bed scour in cohesionless sand-bed streams.

The FHWA [32] compared many of the more common equations in 1983. Comparison of these equations is given in **Figures 4 and 5**. An equation given by Melville and Sutherland [17] to calculate scour depths for live-bed scour in sand-bed streams has been added to the original figures. Some of the equations have velocity as a variable, normally in the form of a Froude Number. However, some equations, such as Laursen's [12] do not include velocity. A Froude Number of 0.3 was used in Figure 4 for purposes of comparing commonly used scour equations. In Figure 5, the equations are compared with some field data measurements. As can be seen from Figure 5, the Colorado State University (CSU) equation envelopes all the points, but gives lower values of scour than Jain and Fischer's [22], Laursen's [33], Melville and Sutherland's [17], and Neill's [21] equations. The CSU equation [9] includes the velocity of the flow just upstream of the pier by including the Froude Number in the equation. Chang [34] pointed out that Laursen's 1960 equation is essentially a special case of the CSU equation with the Fr = 0.4 (See **Figure 6**).

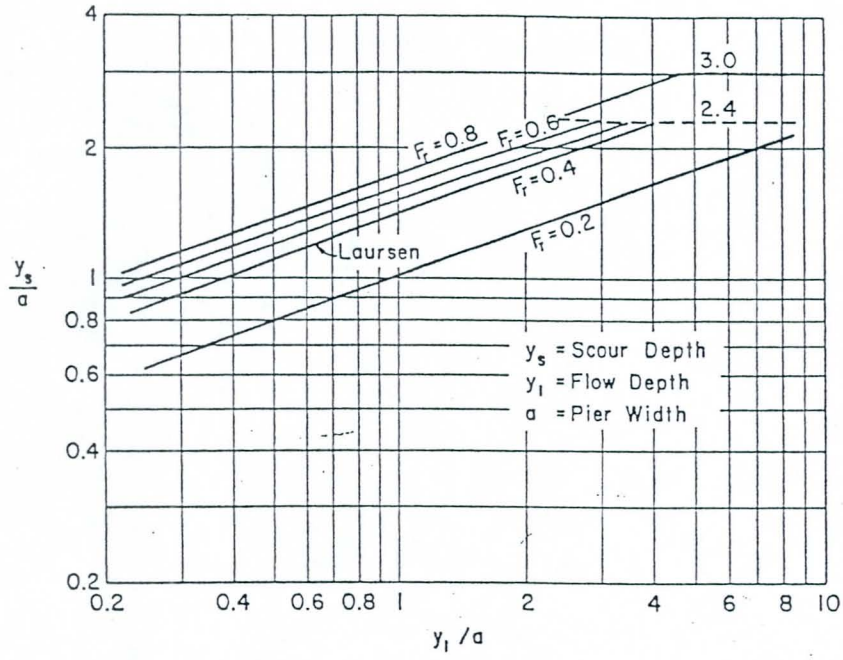

Figure 6. Values of y_s/a vs. y_1/a for CSU's Equation [34].

The equations illustrated in Figures 4, 5, and 6 do not take into account the possibility that larger sizes in the bed material could armor the scour hole. That is, the large sizes in the bed material may at some depth of scour limit the scour depth. Raudkivi [15], Melville and Sutherland [17], and others [14, 16] developed equations based on laboratory and limited field data which take into consideration large particles in the bed. Most of the field scour depths were measured after the flood had occurred and the depths were not representative of the flow conditions that caused them. The significance of armoring the scour hole over a long time frame and over many floods is not known. **Therefore, these equations are not recommended for use.**

In Figure 6, the CSU equation relationship between y_s/a and y_1/a is given as a function of the Froude Number. This relation was developed by Chang.[34] Note that Laursen's pier scour equation is a special case of the CSU equation when the Froude Number is 0.4. Values of y_s/a around 3.0 were obtained by Jain and Fischer [22] for chute-and-pool flows with Froude Numbers as high as 1.5. The largest value of y_s/a for antidune flow was 2.5 with a Froude Number of 1.2. Thus, the CSU equation will correctly predict scour depths for upper regime flows (plane bed, antidunes, and chutes and pools).

Chang [34] noted that in all the data he studied, there were no values of the ratio of scour depth to pier width (y_s/a) larger than 2.3. From laboratory data, Melville and Sutherland [17] reported 2.4 as an upper limit ratio for cylindrical piers. In these studies, the Froude Number was less than 1.0. These upper limits were derived for circular piers and were uncorrected for pier shape and for skew. Also, pressure flow or debris can increase the ratio.

From the above discussion, the ratio of y_s/a can be as large as 3 at large Froude Numbers. Therefore, it is recommended that the maximum value of the ratio is taken as

2.4 for Froude Numbers less than or equal to 0.8 and 3.0 for larger Froude Numbers. These limiting ratio values apply only to round nose piers which are aligned with the flow.

To determine pier scour, the CSU equation [9] is recommended for both live-bed and clear-water pier scour. The equation predicts equilibrium pier scour depths. For plane-bed conditions, which is typical of most bridge sites for the flood frequencies employed in scour design, the maximum scour may be 10 percent greater than computed with CSU's equation. In the unusual situation where a dune bed configuration with large dunes exists at a site during flood flow, the maximum pier scour may be 30 percent greater than the predicted equation value. This may occur on very large rivers, such as the Mississippi. For smaller streams that have a dune bed configuration at flood flow, the dunes will be smaller and the maximum scour may be only 10 to 20 percent larger than equilibrium scour. For antidune bed configuration the maximum scour depth may be 10 percent greater than the computed equilibrium pier scour depth. In **Table 1** values of the percent increase in equilibrium pier scour depths calculated with the CSU equation are given as a function of dune height H. These increases are tabulated as a correction (K_3) to the CSU equation.

Table 1. Increase in Equilibrium Pier Scour Depths (K_3) for Bed Condition.

Bed Condition	Dune Height H ft.	K_3
Clear-Water Scour	N/A	1.1
Plane bed and Antidune flow	N/A	1.1
Small Dunes	10> H < 2	1.1
Medium Dunes	30> H >10	1.1 to 1.2
Large Dunes	H >30	1.3

Computing Pier Scour. The CSU equation for pier scour is:

$$\frac{y_s}{y_1} = 2.0\ K_1\ K_2\ K_3 \left(\frac{a}{y_1}\right)^{0.65} Fr_1^{0.43} \tag{21}$$

In terms of y_s/a, Equation 21 is:

$$\frac{y_s}{a} = 2.0\ K_1\ K_2\ K_3 \left(\frac{y_1}{a}\right)^{0.35} Fr_1^{0.43} \tag{22}$$

where

y_s = scour depth, ft
y_1 = flow depth directly upstream of the pier, ft
K_1 = correction factor for pier nose shape from **Figure 7** and **Table 2**

K_2 = correction factor for angle of attack of flow from Table 3
K_3 = correction factor for bed condition from Table 1
a = pier width, ft
L = length of pier ft
Fr_1 = Froude Number = $V_1/(gy_1)^{1/2}$
V_1 = Mean velocity of flow directly upstream of the pier, ft/s

Table 2. Correction Factor K_1 for Pier Nose Shape.

Shape of Pier Nose	K_1
(a) Square nose	1.1
(b) Round nose	1.0
(c) Circular cylinder	1.0
(d) Sharp nose	0.9
(e) Group of cylinders	1.0

Table 3. Correction Factor K_2 for Angle of Attack of the Flow.

Angle	L/a=4	L/a=8	L/a=12
0	1.0	1.0	1.0
15	1.5	2.0	2.5
30	2.0	2.75	3.5
45	2.3	3.3	4.3
90	2.5	3.9	5.0

Angle = skew angle of flow
L = length of pier

Note: The correction factor K_1 for pier nose shape should be determined using Table 2 for angles of attack up to 5 degrees. For greater angles, K_2 dominates and K_1 should be considered as 1.0. If L/a is larger than 12, use the values for L/a = 12 as a maximum.

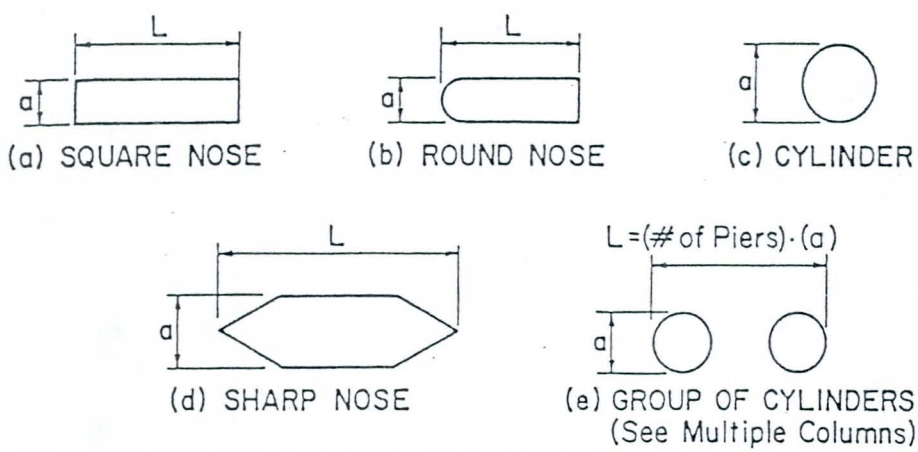

Figure 7. Common Pier Shapes.

material. In general, the deeper the scour hole, the smaller the bottom width. A topwidth of 2.8 y_s is suggested for practical application.

4.3.6 Step 6: Local Scour at Abutments

General. Equations for predicting abutment scour depths are based entirely on laboratory data. For example, equations by Liu et al. [40], Laursen [33], Froehlich [41], and Melville [42] are based entirely on laboratory data. The problem is that little field data on abutment scour exist. Liu et al.'s equations were developed by dimensional analysis of the variables with a best-fit line drawn through the laboratory data. Laursen's equations are based on inductive reasoning of the change in transport relations due to the acceleration of the flow caused by the abutment. Froehlich's equation was derived from dimensional analysis and regression analysis of the available laboratory data. Melville's equations were derived from dimensional analysis and development of relations between dimensionless parameters using best-fit lines through laboratory data.

All equations in the literature were developed using the abutment and roadway approach length as one of the variables and result in excessively conservative estimates of scour depth. As Richardson and Richardson [43] point out in a discussion of Melville's (1992) paper,

> "The reason the equations in the literature predict excessively conservative abutment scour depths for the field situation is that, in the laboratory flume, the discharge intercepted by the abutment is directly related to the abutment length; whereas, in the field, this is rarely the case."

Figure 9 illustrates the difference. Thus, using the abutment length in the equations instead of the discharge returning to the main channel at the abutment results in a spurious correlation between abutment lengths and scour depth at the abutment end.

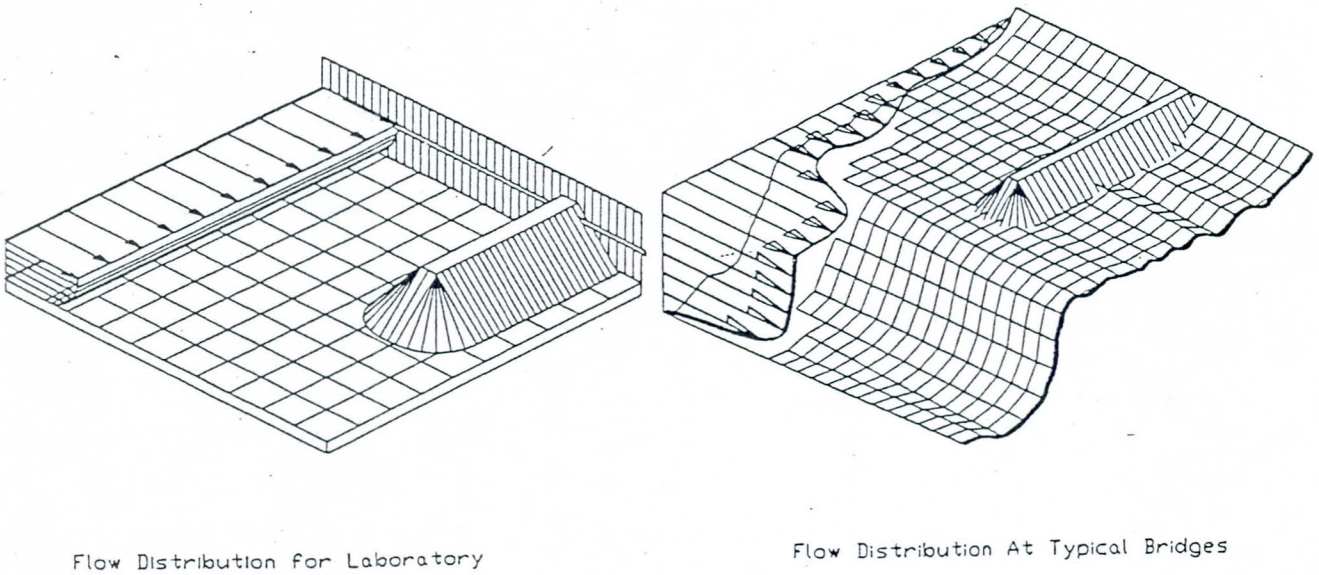

Figure 9. Comparison of Laboratory Flow Characteristics to Field Conditions.

Abutment scour depends on the interaction of the flow obstructed by the abutment and roadway approach and the flow in the main channel at the abutment. The discharge returned to the main channel at the abutment is not simply a function of the abutment and roadway length in the field case. Richardson and Richardson [43] noted that abutment scour depth depends on abutment shape, sediment characteristics, cross-sectional shape of the main channel at the abutment (especially the depth of flow in the main channel and depth of the overbank flow at the abutment), alignment, etc. In addition, field conditions may have tree lined or vegetated banks, low velocities, and shallow depths upstream of the abutment. **Research to date has failed to replicate these field conditions.**

Therefore, engineering judgment is required in designing foundations for abutments. In many cases, foundations can be designed with shallower depths than predicted by the equations when the foundations are protected with rock riprap placed below the streambed and/or a guide bank (spur dike) placed upstream of the abutment. Cost will be the deciding factor. A method to determine the length of a guide bank is given in HEC-20.[8]

In the following sections, two equations are presented for use in estimating scour depths as a guide in designing abutment foundations. As stated above, these equations give excessively conservative estimates of scour depths.

Abutment Site Conditions. Abutments can be set back from the natural streambank or project into the channel. They can have various shapes (vertical walls, spill-through slopes) and can be set at varying angles to the flow. Scour at abutments can be live-bed or clear-water scour. Finally, there can be varying amounts of overbank flow intercepted by the approaches to the bridge and returned to the stream at the abutment. More severe abutment scour will occur when the majority of overbank flow returns to the bridge opening directly upstream of the bridge crossing. Less severe abutment scour will occur when overbank flows gradually return to the main channel upstream of the bridge crossing.

Abutment Shape. There are three general shapes for abutments: (1) spill-through abutments, (2) vertical-wall abutments with wing walls (**Figure 10**), and (3) vertical walls without wing walls. Depth of scour is approximately double for vertical-wall abutments as compared with spill-through abutments.

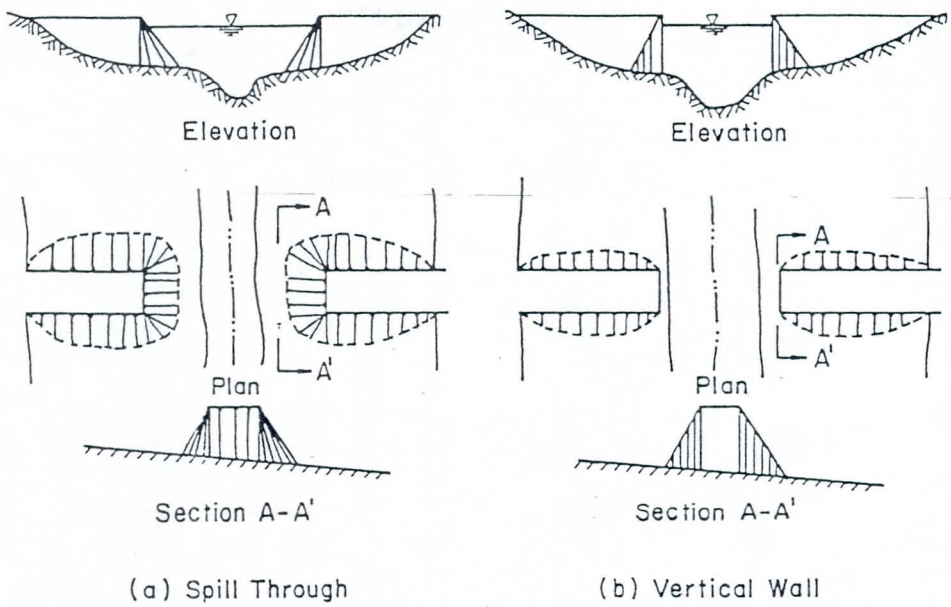

Figure 10. Abutment Shape.

Design for Scour at Abutments. The potential for lateral channel migration, long term degradation and contraction scour should be considered in setting abutment foundation depths near the main channel. It is recommended that foundation depths for abutments be set at least 6 feet below the streambed, including long-term degradation, contraction scour, and lateral stream migration. Normally, protection is provided using rock riprap with the guidance from Chapter 7 and/or guide banks designed as given in HEC-20.[8] **Engineering judgment is required in setting foundation depths for abutments.**

Live-Bed Scour at Abutments. As a check on the potential depth of scour to aid in the design of the foundation and placement of rock riprap or guide banks, Froehlich's [42] live-bed scour equation or an equation from HIRE [9] can be used. Appendix B presents an alternate design approach, using material contained in the original FHWA Interim Procedures for Evaluating Scour at Bridges.[7] Froehlich analyzed 170 live-bed scour measurements in laboratory flumes to obtain the following equation:

$$\frac{y_s}{y_a} = 2.27\ K_1\ K_2 \left(\frac{a'}{y_a}\right)^{0.43} Fr^{0.61} + 1 \qquad (24)$$

where

K_1 = coefficient for abutment shape (see **Table 4**)
K_2 = coefficient for angle of embankment to flow
K_2 = $(\theta/90)^{0.13}$ (see Figure 11 for definition of θ)
$\theta < 90^0$ if embankment points downstream
$\theta > 90^0$ if embankment points upstream
a' = the length of abutment projected normal to flow, ft

A_e = the flow area of the approach cross section obstructed by the embankment, ft^2
Fr = Froude Number of approach flow upstream of the abutment
= $V_e/(gy_a)^{1/2}$
V_e = Q_e/A_e, ft/s
Q_e = the flow obstructed by the abutment and approach embankment, cfs
y_a = average depth of flow on the floodplain, ft
y_s = scour depth, ft

Table 4. Abutment Shape Coefficients.

Description	K_1
Vertical-wall abutment	1.00
Vertical-wall abutment with wing walls	0.82
Spill-through abutment	0.55

An equation in HIRE [9] was developed from Corps of Engineers field data of scour at the end of spurs in the Mississippi River. This field situation closely resembles the laboratory experiments for abutment scour in that the discharge intercepted by the spurs was a function of the spur length. The HIRE equation is applicable when the ratio of projected abutment length (a) to the flow depth (y_1) is greater than 25. This equation can be used to estimate scour depth (y_1) at an abutment where conditions are similar to the field conditions from which the equation was derived:

$$\frac{y_s}{y_1} = 4\ Fr_1^{0.33} \tag{25}$$

where

y_s = scour depth, ft
y_1 = depth of flow at the abutment, on the overbank or in the main channel, ft
Fr_1 = the Froude Number based on the velocity and depth adjacent to and upstream of the abutment

To correct Equation 25 from HIRE [9] for abutments skewed to the stream use **Figure 11.**

The abutment scour depths determined from the HIRE equation (Equation 25) will need to be corrected for abutment type if this equation is used for any abutment shape other than spill-through shapes. This correction can be made by multiplying the abutment scour depth from Equation 25 by the factor $K_1/0.55$, where K_1 is determined from Table 4.

Clear-Water Scour at an Abutment. Use Equations 24 or 25 for live-bed scour since Froehlich's clear-water scour equation presented in Appendix B potentially decreases scour

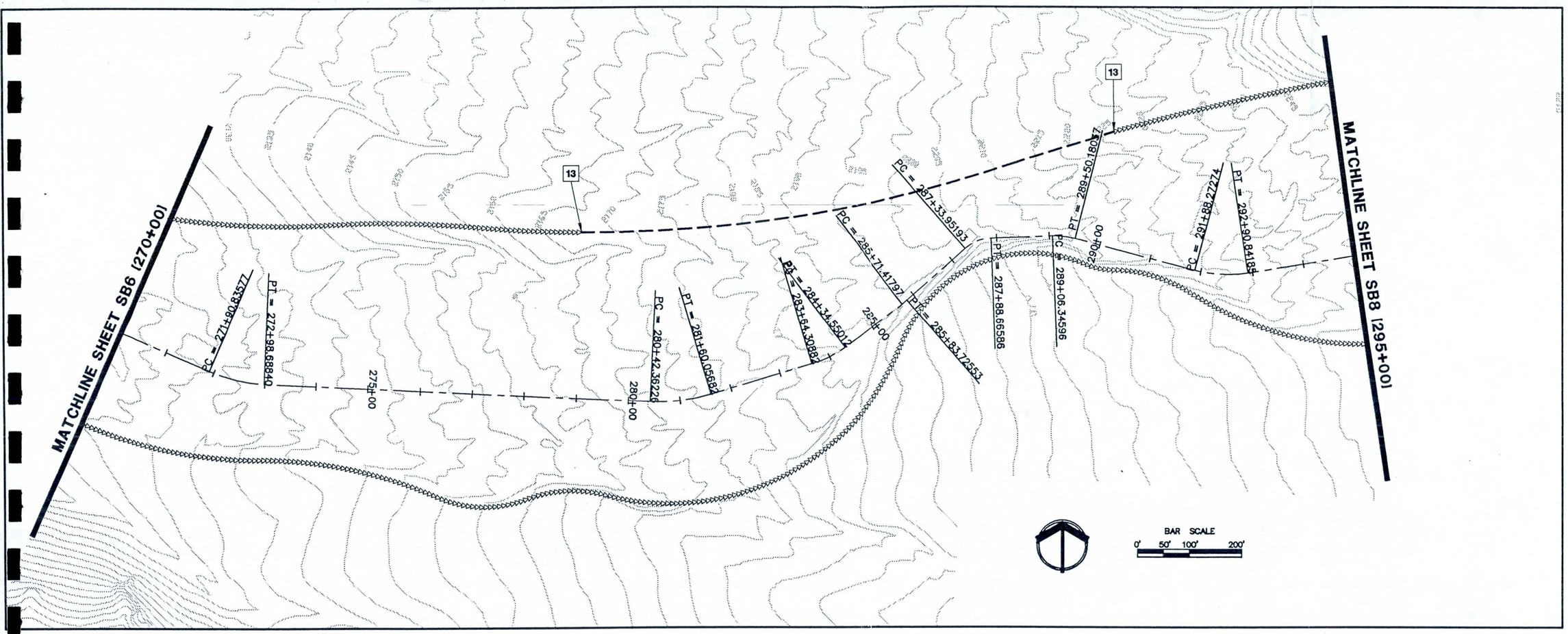

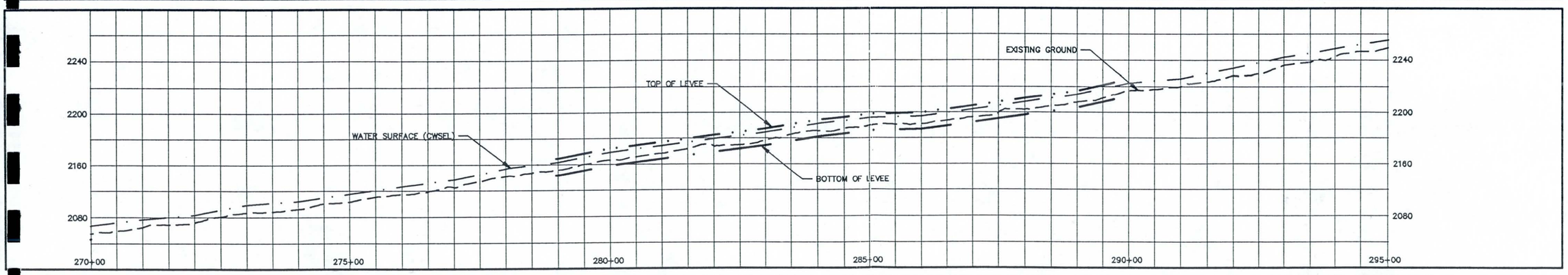

CHANNEL IMPROVEMENTS □

13. TIE LEVEE INTO EXISTING NATURAL CONTAINMENT.

PATHS / TRAILS ◇

2. INSTALL SIGNAGE TO DIRECT TRAIL USERS.
3. LINKAGE OF MULTI-USE TRAIL INTO A REGIONAL SYSTEM.
9. MULTI-USE TRAIL ALIGNMENT CURRENTLY UNDER STUDY IN GENERAL PLAN AMENDMENT.

LAND USE ○

MITIGATION △

1. FLOODWALL/LEVEE DESIGNED TO MINIMIZE IMPACT ON EXISTING VEGETATION.
2. FLOOD PROTECTION WALLS DESIGNED FOR 100 YR. EVENT STORM.
4. RETAIN EXISTING VEGETATION TO EXTENT PRACTICABLE.
5. SALVAGE VEGETATION IMPACTED BY CONSTRUCTION.
6. REVEGETATE DISTURBED AREAS WHERE PRACTICABLE.

AESTHETIC APPLICATIONS ⬡

LEGEND

- MULTI-USE TRAIL
- MAINTENANCE ACCESS
- PATH
- FLOODWALL
- CHANNEL RIGHT OF WAY
- SOIL CEMENT LEVEE
- NATURAL CONTAINMENT
- ACCESS LEVEE
- CONCRETE SLOPE
- BANK PROTECTION
- REGRADE
- DROP STRUCTURE
- GRADE CUT
- 10+00 CHANNEL CENTERLINE AND STATIONING
- 5' CONTOURS

		REVISIONS	BY	AUTH.

ENGINEERS

PROJ. NO. E029102
JOB NO. ___
DESIGN W.C.L.
DRAWN M.T.C.
CHECKED S.E.S.
SCALE: AS NOTED

SEAL

Greiner
Greiner, Inc.
Phoenix, AZ
Engineers, Architects and Planners

PROJECT NAME: REATA PASS/BEARDSLEY WASH

DRAWING TITLE: Preliminary 10% Plans

DRAWING NO.
SB7 of SB8

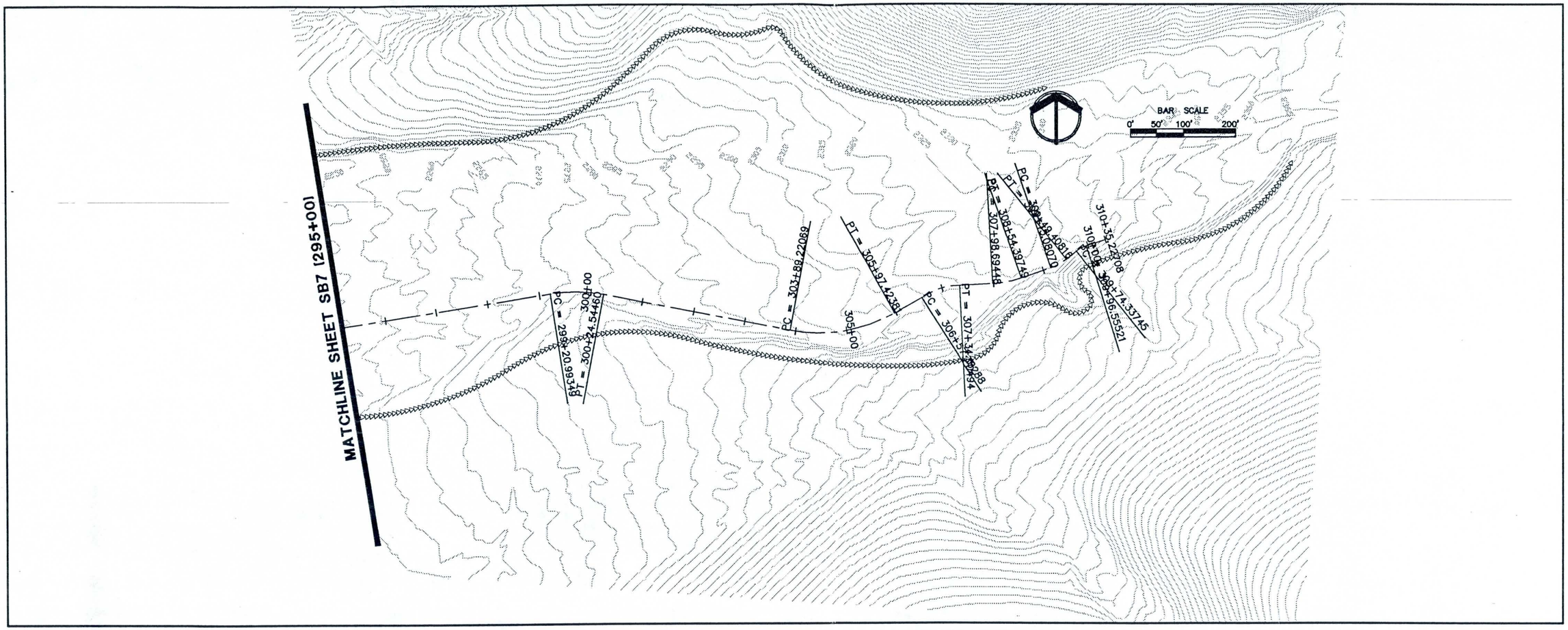

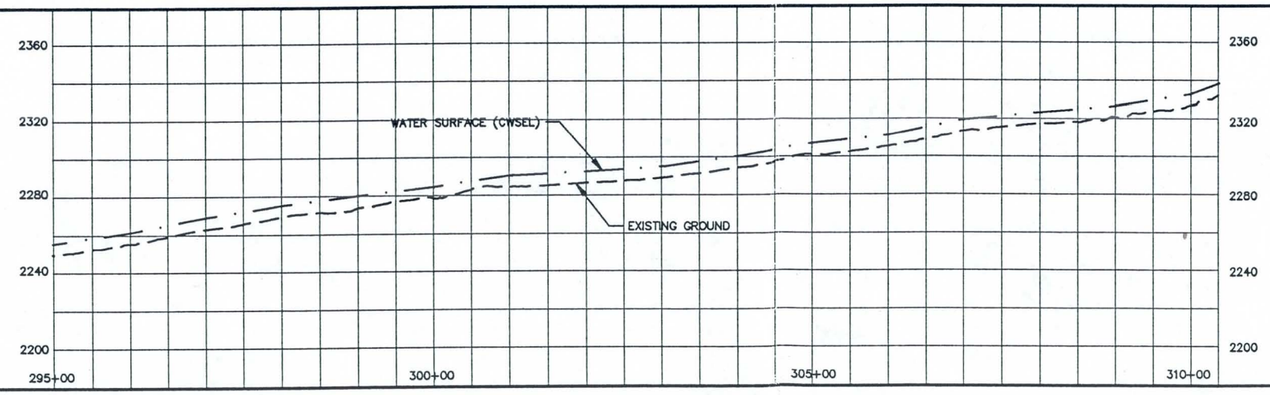

CHANNEL IMPROVEMENTS

PATHS / TRAILS

2. INSTALL SIGNAGE TO DIRECT TRAIL USERS.
3. LINKAGE OF MULTI-USE TRAIL INTO A REGIONAL SYSTEM.
9. MULTI-USE TRAIL ALIGNMENT CURRENTLY UNDER STUDY IN GENERAL PLAN AMENDMENT.

LAND USE

MITIGATION

1. FLOODWALL/LEVEE DESIGNED TO MINIMIZE IMPACT ON EXISTING VEGETATION.
2. FLOOD PROTECTION WALLS DESIGNED FOR 100 YR. EVENT STORM.
4. RETAIN EXISTING VEGETATION TO EXTENT PRACTICABLE.
5. SALVAGE VEGETATION IMPACTED BY CONSTRUCTION.
6. REVEGETATE DISTURBED AREAS WHERE PRACTICABLE.

AESTHETIC APPLICATIONS

LEGEND

- MULTI-USE TRAIL
- MAINTENANCE ACCESS
- PATH
- FLOODWALL
- CHANNEL RIGHT OF WAY
- SOIL CEMENT LEVEE
- NATURAL CONTAINMENT
- ACCESS LEVEE
- CONCRETE SLOPE
- BANK PROTECTION
- REGRADE
- DROP STRUCTURE
- GRADE CUT
- 10+00 CHANNEL CENTERLINE AND STATIONING
- 5' CONTOURS

	DATE	REVISIONS	BY	AUTH.

ENGINEERS

PROJ. NO. E029102
JOB NO. ____
DESIGN W.C.L.
DRAWN M.T.C.
CHECKED S.E.S.

SCALE: AS NOTED

SEAL

Greiner
Greiner, Inc.
Phoenix, AZ
Engineers, Architects and Planners

PROJECT PHAE: REATA PASS/BEARDSLEY WASH

DRAWING TITLE: Preliminary 10% Plans

DRAWING NO.
SB8 of SB8

P:\E1PC11\PRJ\E029102\CADD\REATAN1.DWG Mar. 18, 1996 11:43 E10029102 E1PC38 LANCEA XREFS: RTASOAL,URTACTR2

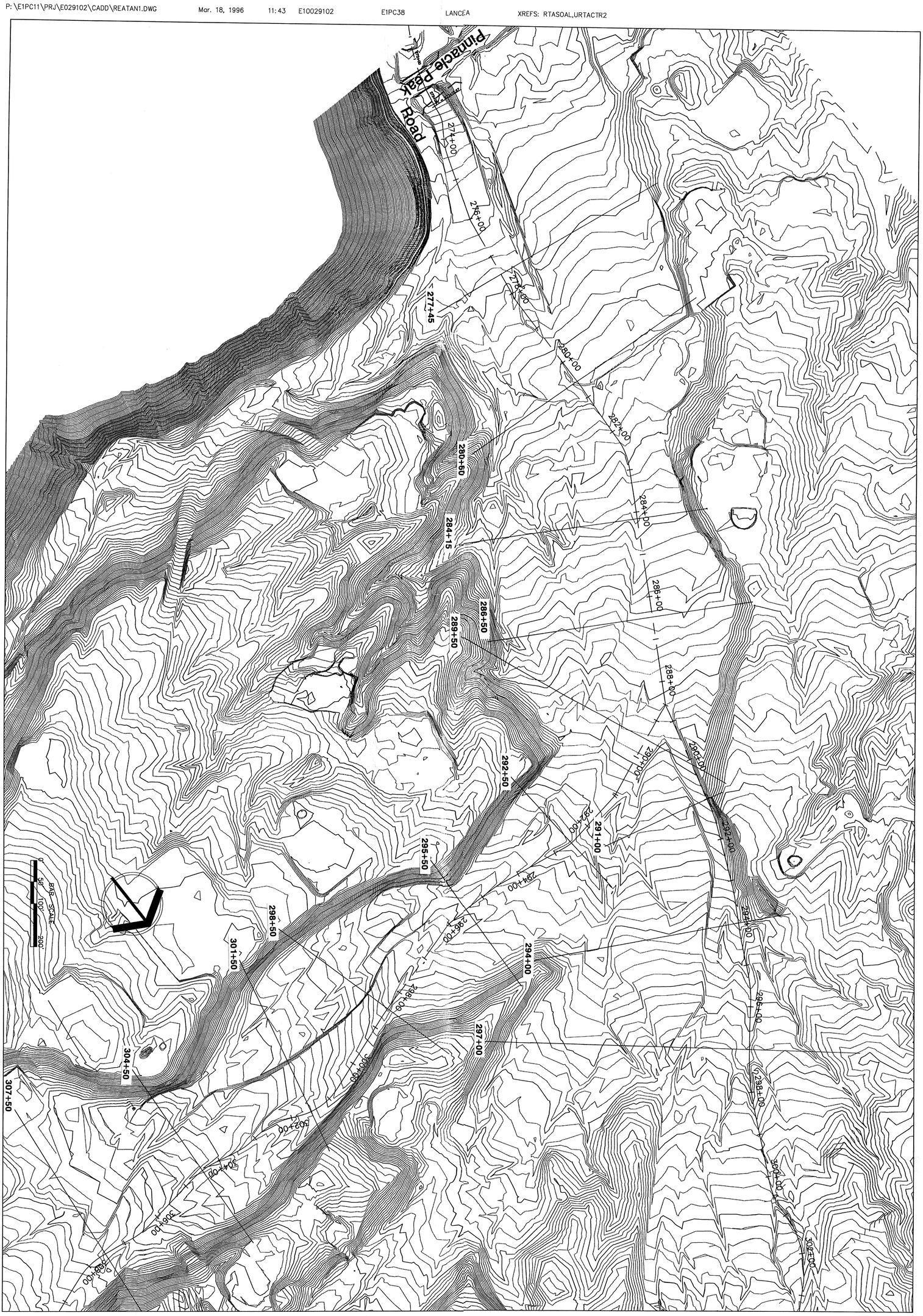

The Desert Greenbelt

DRAWING NO. CRTA12 of CRTA13

PROJECT NAME

Reata Pass Wash FEMA CLOMR Report

DRAWING TITLE

Floodplain Map

Greiner
Greiner, Inc.
Phoenix, AZ
Engineers, Architects and Planners

CITY OF SCOTTSDALE ARIZONA

PROJ. NO. E029102
JOB NO.
DESIGN W.C.L.
DRAWN A.C.L.
CHECKED
SCALE: 1" = 100'

DATE	REVISIONS	BY	AUTH.

P:\E1PC11\PRJ\E029102\CADD\REATAN2.DWG Mar. 18, 1996 13:52 E10060102 E1PC38 LANCEA XREFS: RTASOAL,URTACTR2

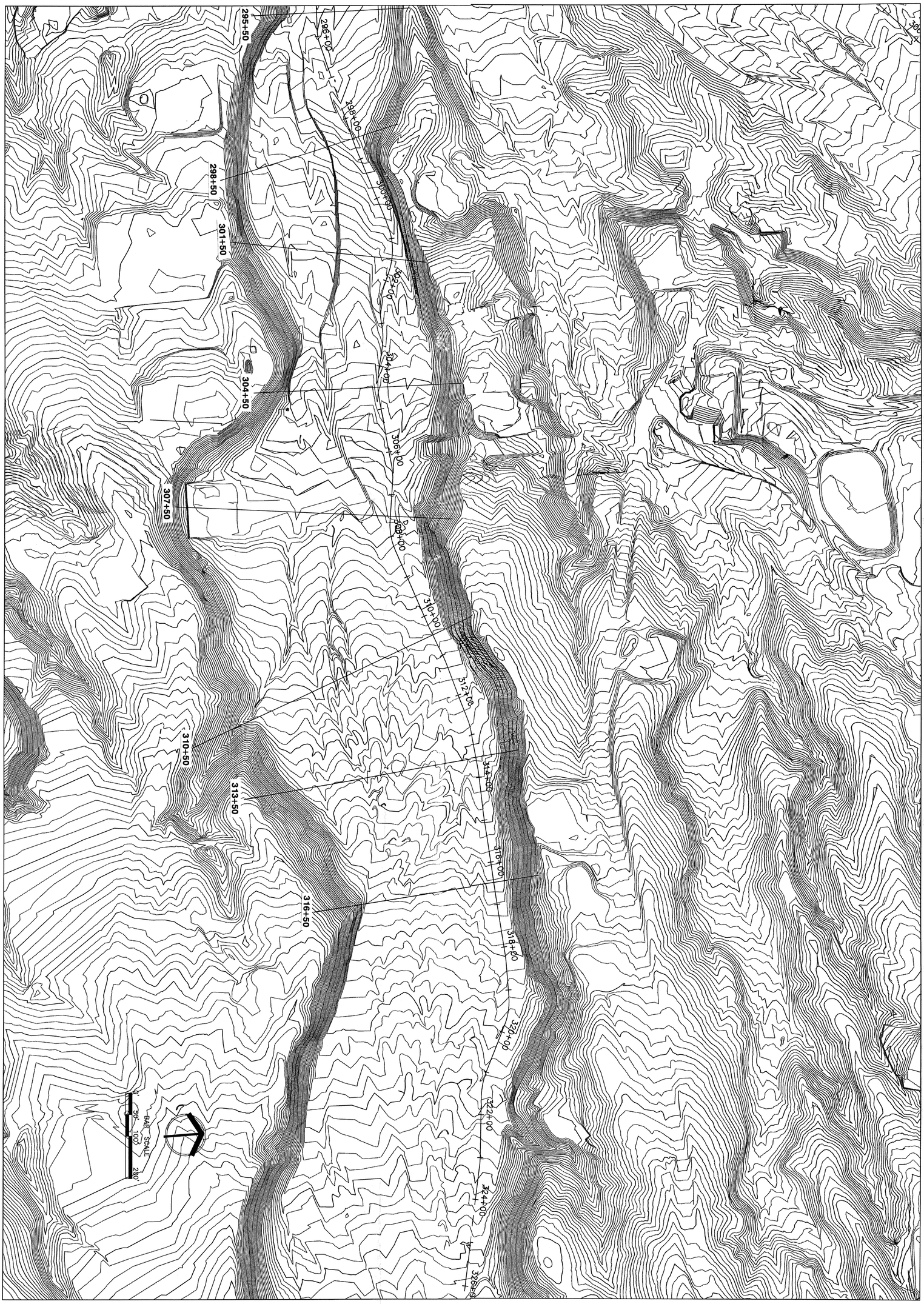

The Desert Greenbelt

DRAWING NO. CRTA13 of CRTA13

PROJECT NAME

Reata Pass Wash FEMA CLOMR Report

DRAWING TITLE

Floodplain Map

Greiner
Greiner, Inc.
Phoenix, AZ
Engineers, Architects and Planners

CITY OF SCOTTSDALE ARIZONA

PROJ. NO.	E029102
JOB NO.	
DESIGN	W.C.L.
DRAWN	A.C.L.
CHECKED	
SCALE:	1"=100'

DATE	REVISIONS	BY	AUTH.

The Desert Greenbelt
SCOTTSDALE, ARIZONA

DRAWING NO. CNB1 of CNB2

PROJECT NAME
North Beardsley Wash FEMA CLOMR Report

DRAWING TITLE
FLOODPLAIN MAP

Cross-Sections 1-10

Greiner
Greiner, Inc.
Phoenix, AZ
Engineers, Architects and Planners

CITY OF SCOTTSDALE ARIZONA

PROJ. NO. E029102
JOB NO.
DESIGN W.C.L.
DRAWN M.T.C.
CHECKED S.E.S.
SCALE: AS NOTED

DATE	REVISIONS	BY	AUTH.

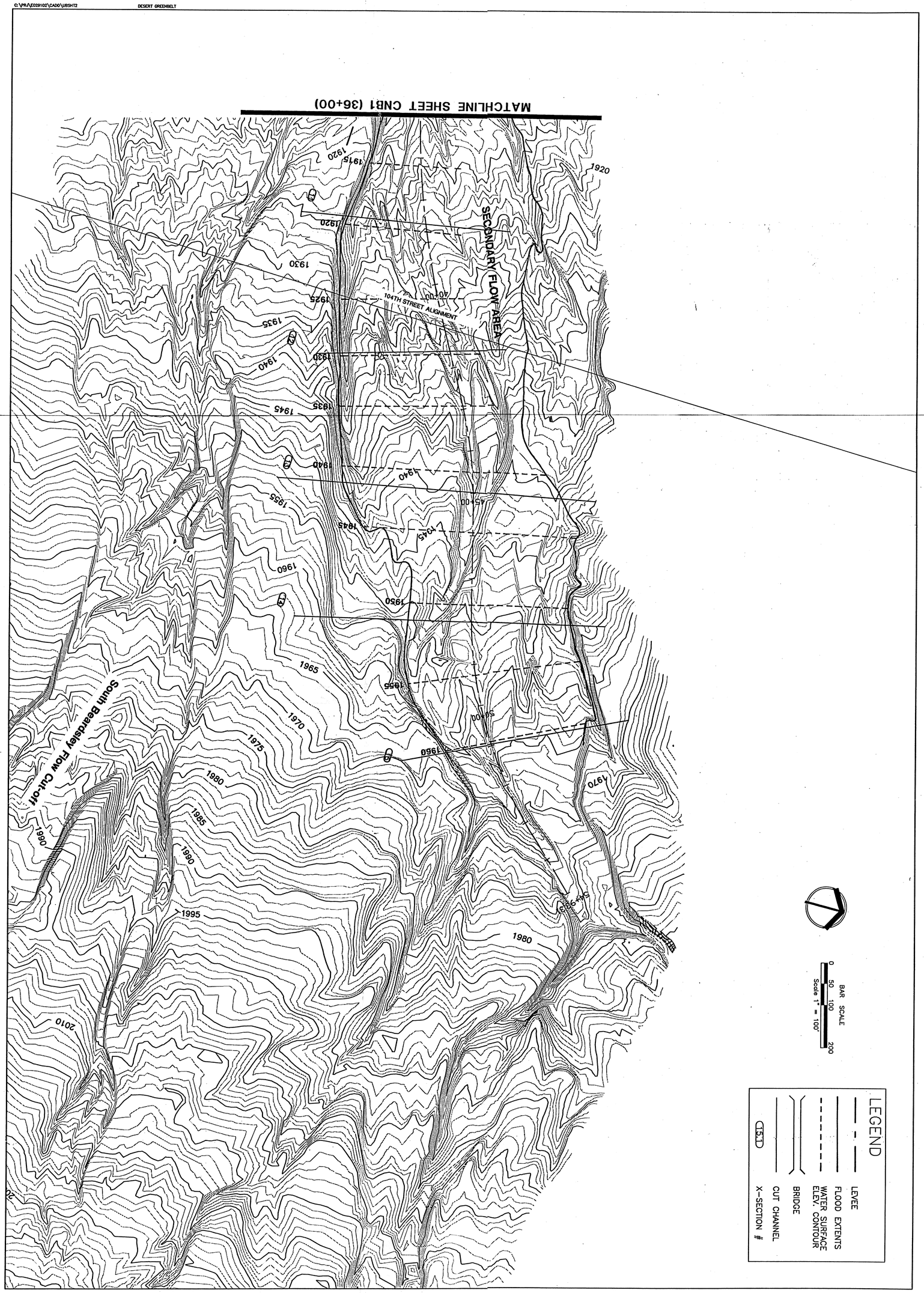

The Desert Greenbelt

DRAWING NO. CNB2 of CNB2

PROJECT NAME

North Beardsley Wash FEMA CLOMR Report

DRAWING TITLE

FLOODPLAIN MAP

Cross-Sections 11-15

Greiner
Greiner, Inc.
Phoenix, AZ
Engineers, Architects and Planners

CITY OF SCOTTSDALE ARIZONA

PROJ. NO. E029102
JOB NO.
DESIGN W.C.L.
DRAWN M.T.C.
CHECKED S.E.S.
SCALE: AS NOTED

DATE	REVISIONS	BY	AUTH.

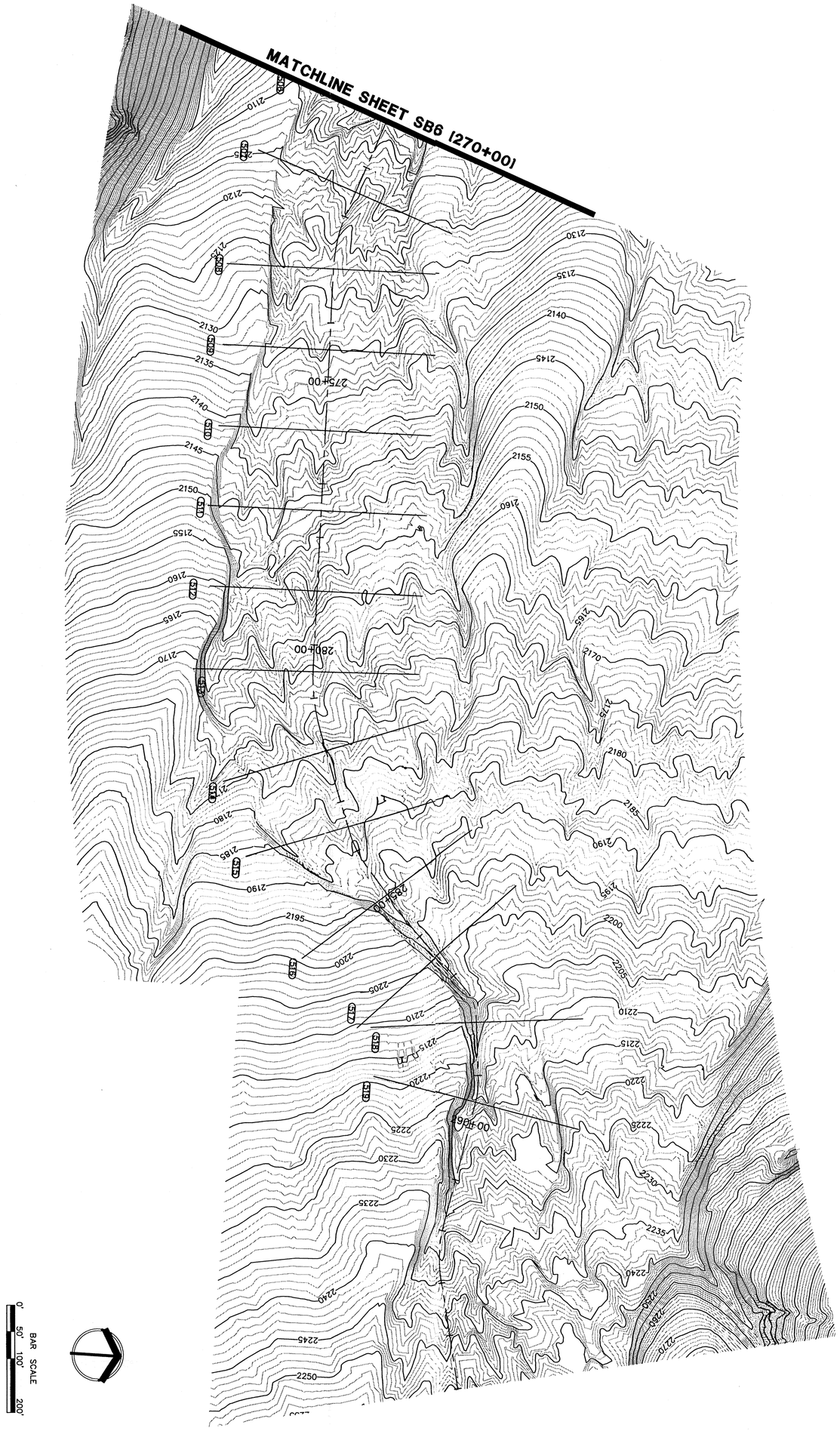

The Desert Greenbelt

DRAWING NO. CSB7 of CSB7

PROJECT NAME

South Beardsley Wash FEMA CLOMR Report

DRAWING TITLE

Floodplain Map

Greiner
Greiner, Inc.
Phoenix, AZ
Engineers, Architects and Planners

CITY OF SCOTTSDALE ARIZONA

PROJ. NO. E029102
JOB NO.
DESIGN W.C.L.
DRAWN A.C.L.
CHECKED
SCALE: 1" = 100'

DATE	REVISIONS	BY	AUTH.

Greiner

Greiner, Inc.
7878 N. 16th Street, Suite #200
Phoenix, Arizona 85020-4449
(602) 371-1100
FAX: (602) 371-1615

Project No. E10060100

CITY OF SCOTTSDALE
Desert Greenbelt Project — Phase One Design

Meeting Notice
Technical Review Committee
Thursday, May 23, 1996, 9:00 A.M., Greiner

AGENDA

ATTENDEES:

Bruce Friedhoff	Greiner, Inc.
Collis Lovely	City of Scottsdale
Ed Raleigh	Flood Control District of Maricopa County

Supplemental CLOMR

Please bring appropriate staff personnel and supporting documentation that you feel is needed to make this meeting productive. Call me if you have additional items.

Bruce Friedhoff

FLOOD CONTROL DISTRICT
RECEIVED
MAY 17 1996
CHENG
CLEAR
REMARKS

AG052396.GRE