HYDRAULIC AND SCOUR ANALYSIS FOR THE EAST PAPAGO CROSSING OF THE INDIAN BEND WASH

sla

Property of
Flood Control District of MC Library
Please Return to
2801 W. Durango
Phoenix, AZ 85009

RCL
3/23/90

DRAFT

CV

HYDRAULIC AND SCOUR ANALYSIS FOR THE EAST PAPAGO CROSSING OF THE INDIAN BEND WASH

Prepared For:

Daniel, Mann, Johnson & Mendenhall
300 West Clarendon Avenue, Suite 400
Phoenix, Arizona 85013-3499

Prepared By:

Simons, Li and Associates, Inc.
4600 South Mill Avenue, Suite 280
Tempe, Arizona 85282

TEL#491-1393
Denis Richard

Registered Professional Engineer (Civil)
CERTIFICATE NO. 24026
ROBERT L. SHAND
Date Signed 3-14-90
ARIZONA U.S.A.

March, 1990

Registered Professional Engineer (Civil)
CERTIFICATE NO. 21560
DENNIS L. RICHARDS
Date Signed 3-14-90
ARIZONA, U.S.A.

TABLE OF CONTENTS

		Page
	LIST OF FIGURES	ii
	LIST OF TABLES	ii
	LIST OF APPENDICES	iii
	EXECUTIVE SUMMARY	iv
I.	INTRODUCTION	1
II.	PEAK DISCHARGES	4
III.	HYDRAULIC ANALYSIS	5
	3.1 Approach	5
	3.2 Results	9
	3.2.1 Impacts of the Standard-Project Flood	10
	3.2.2 Impacts under Condition II (With-Freeway Conditions)	14
	3.2.3 Impacts under Condition III (With-Freeway/Rio Salado Conditions)	14
	3.2.4 Design Top-of-Pier Elevations	19
IV.	SCOUR ANALYSIS	21
	4.1 Approach	21
	4.2 Results	24
V.	CONCLUSIONS AND RECOMMENDATIONS	30
	5.1 Standard-Project Flood	30
	5.2 Condition II (With-Freeway Conditions)	31
	5.3 Condition III (With-Freeway/Rio Salado Conditions)	34
VI.	REFERENCES	41

LIST OF FIGURES

		Page
Figure 1	Cross-Section Location Map	6
Figure 2	Typical Section of the Existing IBW Flood-Control Channel	16
Figure 3	Typical Section and Profile of the CRSS Drop Structures	17
Figure 4	"Zone of Influence" for a Bridge Pier	28
Figure 5	"Zone of Influence" for a Drop Structure	29
Figure 6	Proposed Modifications to the CRSS Plans	38

LIST OF TABLES

Table 3.1	Relative Impacts of the Proposed East Papago Crossing of the Indian Bend Wash for Conditions I & II, and of the Rio Salado Improvements for Conditions III	11
Table 3.2	Required Top-of-Pier Elevations	20
Table 4.1	Hydraulic Parameters Used to Compute Individual Scour Components	23
Table 4.2	Scour-Analysis Summary Table	25
Table 5.1	Maximum Estimated Heights of Exposed Piers	33

Registered Professional Engineer (Civil) CERTIFICATE NO. 24026 ROBERT L. SHAND Date Signed 3-14-90 ARIZONA U.S.A.

Registered Professional Engineer (Civil) CERTIFICATE NO. 21560 DENNIS R. RICHARDS Date Signed 3-14-90 ARIZONA, U.S.A.

LIST OF APPENDICES

APPENDIX A: HEC-2 INPUT/OUTPUT LISTINGS FOR THE SALT RIVER (WITH AND WITHOUT THE EAST PAPAGO FREEWAY)

APPENDIX B: HEC-2 INPUT/OUTPUT LISTINGS FOR THE IBW UNDER CONDITION I

APPENDIX C: HEC-2 INPUT/OUTPUT LISTINGS FOR THE IBW UNDER CONDITION II

APPENDIX D: HEC-2 INPUT/OUTPUT LISTINGS FOR THE IBW UNDER CONDITION III

APPENDIX E: SINGLE-EVENT SCOUR EQUATIONS

APPENDIX F: EVALUATION OF THE DESIGN REQUIREMENTS AND COST OF A BAFFLE-BLOCK SPILLWAY

APPENDIX G: EVALUATION OF THE REQUIRED GEOMETRY AND COST OF THE CRSS DROP STRUCTURES

Registered Professional Engineer (Civil) CERTIFICATE NO. 24026 ROBERT L. SHAND Date Signed 3-14-90 ARIZONA U.S.A.

Registered Professional Engineer (Civil) CERTIFICATE NO. 21560 DENNIS J. RICHARDS Date Signed 3-14-90 ARIZONA, U.S.A.

EXECUTIVE SUMMARY

This report presents the results of a hydraulic and scour analysis for the East Papago crossing of the Indian Bend Wash (IBW) in the vicinity of the IBW confluence with the Salt River. The project area is located within the City of Tempe and Maricopa County, Arizona.

Two design conditions were analyzed and compared to existing conditions during the study effort. The first design condition (referenced as Condition II in the report) applies to the construction of a bridge over the existing IBW flood-control channel. The second design condition (referenced as Condition III in the report) applies to the construction of a bridge over a series of drop structures which are being proposed by the CRSS Commercial Group, Inc. (CRSS), on behalf of the City of Tempe as part of the City's planned modifications to the IBW in conjunction with its Rio Salado channel improvements to the Salt River.

The hydraulic analysis of the IBW was conducted using four peak-discharge magnitudes of 30,000 cfs, 43,000 cfs, 51,000 cfs, and 63,000 cfs. These values correspond to the 100-year peak discharge, the bankfull discharge (as defined by the Corps of Engineers), the "superflood" discharge, and the standard-project flood discharge, respectively. During these IBW flow events, it was assumed that the corresponding discharge magnitudes for the Salt River were 93,000 cfs, 135,000 cfs, 160,000 cfs, and 215,000 cfs. These values correspond to the 10-year peak discharge, the 20-year peak discharge, the 50-year peak discharge, and the 100-year peak discharge, respectively.

The results of the hydraulic analysis indicate that, with the exception of the standard-project flood, flows in the IBW are independent of the Salt River. During the standard-project flood, the water-surface elevations along the downstream limit of the IBW are controlled by the 100-year water-surface elevations in the Salt River. The East Papago bridge will not significantly alter the hydraulic characteristics of IBW flows within the main channel, which are well within the subcritical range. The series of drop structures proposed

by CRSS for the IBW in conjunction with the Rio Salado channel improvements to the Salt River will, for the most part, create and maintain a state of critical flow within and immediately upstream/downstream of this drop-structure system.

Given the topographic limitations of the project, a detailed analysis of the total impacts of the standard-project flood upon the freeway, especially impacts upon the eastern overbank area which affect the eastern approach to the bridge, could not be performed. Consequently, the impacts were estimated by approximate methods, using information obtained from previous Corps of Engineers' reports. It appears that the East Papago Freeway between McClintock Drive and the IBW is the only segment that will be affected by the standard-project flood. This segment may be impacted by approximately 9300 cfs. It appears that the most cost effective approach to accommodate runoff of this magnitude would be to improve the IBW to contain the entire standard-project flood. However, a more detailed analysis of the IBW is required to determine the true economics and practicability of this approach.

The results of the multiple-discharge scour analysis of the East Papago crossing of the IBW indicate that total depth of scour under existing conditions (i.e., no bridge crossing or Rio Salado improvements) would be approximately 15.5 feet, 16.5 feet, 17.5 feet, and 18.0 feet, respectively. If the bridge were placed over the existing channel, the total depth of scour would be approximately 37.5 feet, 40.0 feet, 41.5 feet and 42.5 feet, respectively. If the series of drop structures proposed by CRSS for the IBW in conjunction with the Rio Salado channel improvements to the Salt River were constructed, the total depth of scour with respect to the four discharges would be approximately 28.0 feet, 30.0 feet, 31.0 feet, and 32.0 feet immediately upstream of Level I, and approximately 34.0 feet, 37.5 feet, 39.0 feet, and 41.0 feet immediately downstream of Level IV of these structures. Within the interior of the drop-structure system, the total scour depth is limited to four feet, or less. This depth corresponds to the depth of alluvium backfill which would be placed over the rigid stilling-basin floor.

Although for bridged conditions there is not a significant difference between the total scour depths both with and without the series of drop structures on the IBW, the proposed changes in the channel bed profile which will accompany the drop structures do cause a significant difference in the exposure height of the bridge piers. If the bridge were constructed over the existing channel, all piers would have exposure heights which are approximately equal to 48 feet, 52 feet, 54.5 feet and 57.5 feet, respectively. If a grade-control structure were provided immediately upstream of the IBW confluence with the Salt River, these heights could be reduced by approximately 9.0 feet.

However, if the series of drop structures were constructed, the exposure height at the downstream limit of the structures (Level IV) would be 62.5 feet, 66.0 feet, 67.5 feet, and 69.5 feet, respectively. In general, the exposure height within the interior of the drop-structure system varies with almost every pier. The minimum heights would be for those piers which will be embedded within the crest of Level I of the drop-structure system. The maximum heights would be those associated with Level IV of the structures.

Based on the results of this analysis, and assuming that the freeway is constructed and that the Salt River is channelized as part of the Rio Salado Project, it is recommended that a baffle-block spillway be constructed immediately upstream of the confluence of the IBW with the Salt River, because such a structure is more cost effective than the series of drop structures proposed by CRSS for the IBW. This recommendation will require some minor modifications to the Rio Salado channel improvement plans.

With respect to the impacts of the freeway upon a standard-project flood on the IBW, or visa versa, it is recommended that a more detailed analysis of the IBW be performed to better define both the breakout potential and exact distribution of this flow breakout. The results of such an analysis could then be used to determine the most cost-effective means by which the freeway could be designed to accommodate a standard-project flood on the IBW.

I. INTRODUCTION

This report presents the results of a hydraulic and scour analysis of a portion of the Indian Bend Wash (IBW) and a portion of the Salt River, located within the City of Tempe and Maricopa County, Arizona. However, the main emphasis of this study pertains to the IBW, as opposed to the Salt River. The study reach for the IBW encompasses approximately 4000 feet, which begins at its confluence with the Salt River and extends approximately 1650 feet upstream of Curry Road. The study reach for the Salt River extends from Rural Road upstream to McClintock Drive.

The purpose for performing this analysis was basically three-fold. The primary purpose was to define the design parameters for the proposed East Papago bridge, which will cross the IBW approximately 1000 feet upstream of the Salt River confluence. In addition, a portion of the analysis addressed the degree to which these design parameters must be modified in order to account for the proposed Rio Salado improvements to the Salt River. Finally, the impact of the East Papago Freeway upon a standard-project floodplain on the IBW was evaluated.

Although this analysis was prepared for Daniel, Mann, Johnson & Mendenhall (DMJM), the Arizona Department of Transportation (ADOT) initiated this study under a contract with DMJM. It should also be noted that the IBW and the Salt River also come under the jurisdiction of the Flood Control District of Maricopa County (FCDMC). Therefore, they have a vested interest in the design of any improvements that will be constructed in conjunction with both the East Papago Freeway and the Rio Salado channelization project. In addition, since recent improvements to the IBW were co-sponsored by the U.S. Army Corps of Engineers (COE), they too will be given an opportunity to comment on any additions or modifications to the existing IBW flood-control channel which was designed under their direction (Reference 1).

During the course of this analysis, an attempt was made to address the concerns of the various governmental agencies that have an interest in and/or jurisdiction over the study area. Again, these agencies are the City of Tempe, ADOT, FCDMC, and the COE.

For the most part DMJM, ADOT, and their consultants (Simons, Li and Associates, Inc. [SLA], and Gannett Fleming of Arizona, Inc. [GFA]) are concerned that the Rio Salado improvements might have an adverse impact upon the IBW. In addition, they feel that the proposed IBW drop-structure system, which is an integral part of the Rio Salado improvements between Rural Road and McClintock Drive, unduly complicates the design of the proposed bridge, which will in turn increase its construction cost. However, the City of Tempe's hydraulic design consultant (CRSS Commercial Group, Inc. [CRSS]) maintains that degradation along the IBW is an existing problem that must be addressed in conjunction with the Rio Salado project. CRSS does not feel that their proposed drop-structure system adversely affects the design of the proposed bridge. Without this drop-structure system, CRSS feels that ADOT would still need to provide their own grade-control structure to ensure that the bridge is provided with adequate erosion protection.

To further complicate the design and coordination of individual elements of the two projects, the topographic information used by the various contractors are of different origin. Therefore, the quantitative results discussed in this report will (of necessity) be limited to a relative change in feet, as opposed to referencing a particular datum.

In an effort to address the concerns of all interested and/or affected parties, this hydraulic and scour analysis was performed considering three primary conditions with respect to the IBW and the proposed East Papago bridge. These conditions are as follows.

Condition I: Existing Conditions (i.e., no East Papago Freeway and no Rio Salado channel improvements).

Condition II: With-Freeway Conditions (i.e., the East Papago Freeway is constructed with an IBW bridge, but without the Rio Salado improvements).

Condition III: With-Freeway/Rio Salado Conditions (i.e., both the East Papago and the Rio Salado channel improvements are constructed as proposed).

The impact of the freeway upon a standard-project flood on the IBW will be addressed as a separate item.

Discussions in this report related to the Rio Salado improvements pertain to the CRSS plan set (35% submittal) received by the City of Tempe on January 9, 1990. Apparently, these plans were prepared by CRSS using the results of their hydraulic design analysis, which are presented in Reference 2. Discussions in this report related to the East Papago Bridge at the IBW pertain to the plan set (30% submittal) prepared by Alpha Engineers, Inc., under a subcontract with Gannett Fleming of Arizona, Inc.

II. PEAK DISCHARGES

The peak discharges used in this analysis were obtained from studies performed by the COE (References 3 and 4). These peak discharges are as follows:

INDIAN BEND WASH

100-year (Design) Discharge:	30,000 cfs
Bankfull Discharge:	43,000 cfs
"Superflood" Discharge:	51,000 cfs
Standard-Project Flood Discharge:	63,000 cfs

SALT RIVER
(Existing Conditions)

10-year Discharge:	93,000 cfs
20-year Discharge:	135,000 cfs
50-year Discharge:	160,000 cfs
100-year Discharge:	215,000 cfs

III. HYDRAULIC ANALYSIS

3.1 Approach

The hydraulic analyses of both the Indian Bend Wash and the Salt River undertaken during this study were conducted using the U.S Army Corps of Engineers HEC-2 computer program (Reference 5).

It should be noted that a preliminary hydraulic and scour analysis of the IBW, which included HEC-2 analyses, was performed in conjunction with the SLA analysis of the Salt River for the East Papago Freeway and the Red Mountain Interchange (Reference 6). The results presented in Reference 6 were then used by others to establish the preliminary design requirements for the IBW bridge.

Nevertheless, a new multi-profile backwater model of the IBW was prepared as part of the present study. This model used ground data that was obtained from the IBW improvement plans (COE, General Design Memorandum - Phase II). The locations of the cross sections used in the backwater model were superimposed on the 1986 topographic map that served as the base map for all Reference 6 analyses (see Figure 1). Using the cross-sectional information just described, three distinct models were prepared to address each of the conditions described in Section I of this report.

Both the existing-conditions model and the bridged-conditions model extend from the Salt River confluence upstream on the IBW past Curry Road. However, HEC-2 backwater analysis of the proposed Rio Salado improvements on the IBW was limited to that portion of the study reach which is located upstream of Level I of the drop-structure system proposed by CRSS. Since the HEC-2 is a gradually-varied flow model, it cannot be used to completely define the hydraulics of this stepped grade-control system. These latter calculations were performed using both the HEC-2 computer program and the procedures outlined in Reference 7. HEC-2 was used to define critical depth at the crest of each level of the drop-

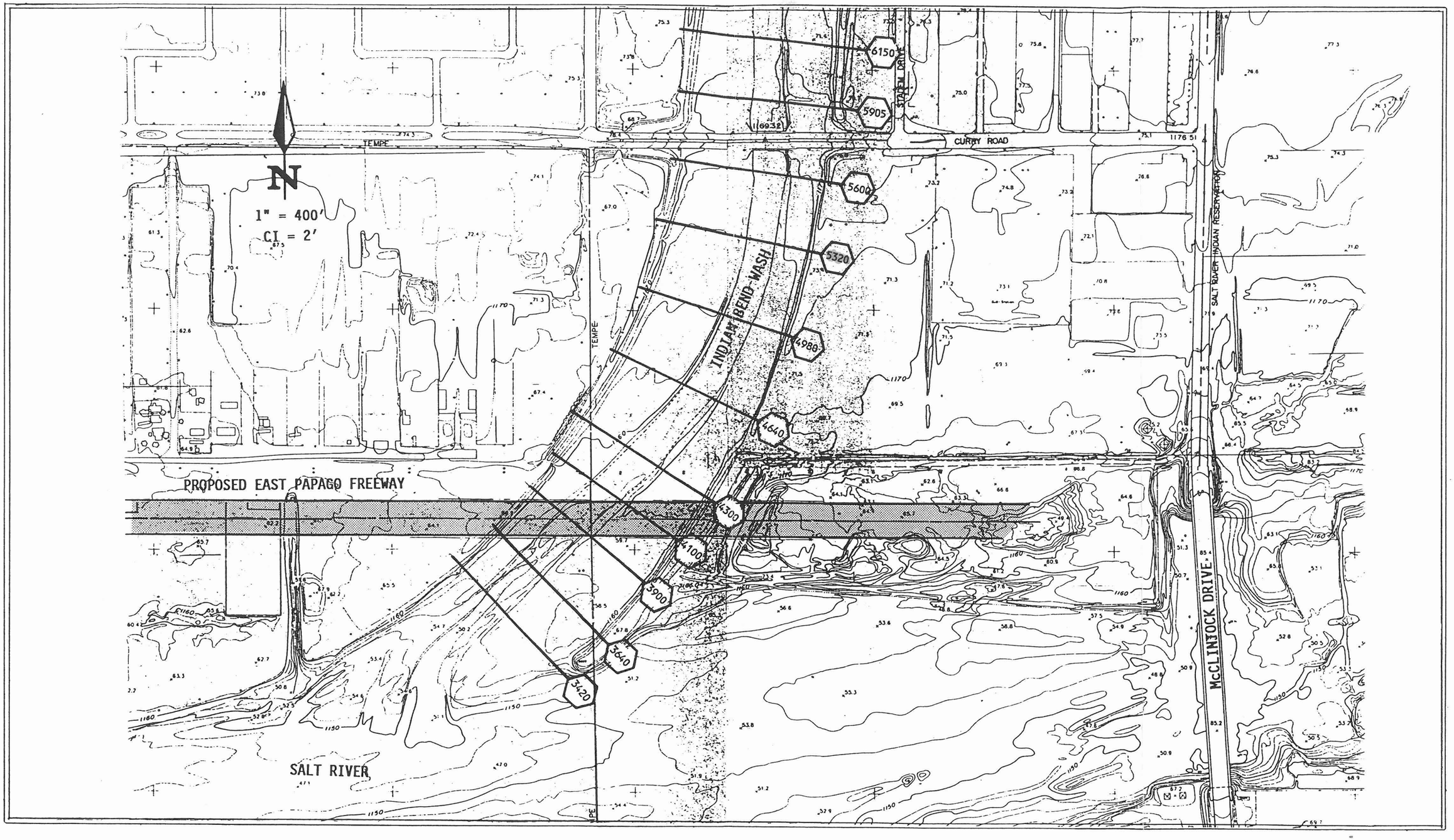

FIGURE 1

CROSS-SECTION LOCATION MAP

structure system. Reference 7 was used to evaluate the flow characteristics within each stilling basin located downstream of each of the first three individual drop structures.

The downstream control section for both the existing-conditions model and the bridged-conditions model is located within the IBW near the downstream limit of the existing junction levee that separates the Salt River from the IBW. For each profile, the starting water-surface elevation at the control section was selected using a trial-and-error approach that considered the results of two separate, preliminary analyses.

One approach assumed that the starting water-surface elevations were a function of the flow conditions that might be expected to exist in the Salt River at the same time that the IBW is subjected to its respective design discharges. The second approach was to assume that flow conditions in the IBW were independent of the Salt River. The approach that produced the highest starting water-surface elevations for the control section was selected for final analysis.

For the dependent analysis, it was assumed that the Salt River will experience a 10-year flow event at the same time that the IBW will experience its 100-year flow event. When the IBW experiences a discharge equal to 43,000 cfs, it was assumed that the Salt River will be experiencing a 20-year flow event. During the "superflood" event (51,000 cfs) on the IBW, it was assumed that the Salt River will be experiencing a 50-year flow event. And finally, during a standard-project flood on the IBW, it was assumed that the Salt River will be experiencing a 100-year flow event.

To define the water-surface elevations in the Salt River for the four discharge conditions just described, the HEC-2 input model from Reference 6 was modified accordingly. The computed water-surface elevations for Cross-Section 220 of the Salt River analysis were then used as the starting water-surface elevations for the dependent analysis of the IBW.

For the independent analysis of the IBW, it was simply assumed that the starting water-surface elevations at the control section were a function of normal depth. Consequently, the HEC-2 slope-area option was used to define the starting water-surface elevation in this instance.

The procedure just described was applied to both the existing-conditions and the bridged-conditions analyses of 30,000 cfs, 43,000 cfs, 51,000 cfs, and 63,000 cfs flood events on the IBW. However, it should be noted that the COE estimates that only 68 percent of the standard-project flood (63,000 cfs) will be captured by the IBW channel. According to their study (Reference 1), the remaining 20,000 cfs would parallel the eastern levee within a broad, shallow floodplain. A separate analysis using approximate methods (i.e., Manning's Equation applied to a basic rectangular section) was performed in an attempt to define the impact that this 20,000 cfs would have upon the East Papago Freeway.

From a hydraulic standpoint, it is not possible at the present time to determine what tailwater conditions will exist within the improved Salt River channel (Rio Salado) when the IBW experiences the noted design flow events. This is due to the fact that the ground data contained in the HEC-2 models provided by CRSS do not appear to match the Rio Salado improvement plans (35 percent submittal). In addition, the hydraulic design report CRSS provided did not contain a cross-section location map. Although the cross sections are tied to the south-levee control line, the orientation of each cross section is not known.

Another concern with respect to the CRSS improvement plans is that the proposed flow-line elevation of the main channel section (as opposed to the flow-line elevation of the low-flow channel) is approximately four feet higher than the proposed minimum bed elevation at the base (Level IV) of their proposed drop-structure system. It is possible that the Level IV elevation corresponds to the elevation that would be expected to exist after the equilibrium profile of the Rio Salado channel is established. If this were the case, the elevation of the drop structure at Level III would appear to more closely approximate the post-construction flow-line elevation within the IBW.

The proposed configuration of both the Salt River and the IBW channel must be consistent with the hydraulic design model before an evaluation of the interaction of Salt River flows with IBW flows can be performed. In addition, once the equilibrium profile for the Rio Salado channel is estimated, and related to the CRSS improvement plans, the existence (or lack thereof) of a drop at the base of Level IV of the drop-structure system on the IBW will be known. Since some of the bridge piers will be located immediately downstream of this last drop structure, such information, along with the tailwater conditions, must be known to properly quantify the local-scour depths at this location. At the present time, the magnitude of this drop can only be estimated using the results of the hydraulic design report in conjunction with the CRSS improvement plans.

In an effort to define the local-scour depths that would exist immediately downstream of Level IV of the drop-structure system, critical-flow parameters were computed using the geometry of the IBW channel at Level IV, as defined on the CRSS improvement plans. Again, the HEC-2 program was used for this purpose.

A separate backwater model of the IBW was generated to define the hydraulic parameters that would exist immediately upstream of Level I of the proposed drop-structure system. Since the control section occurs at the structure, this model used the critical-depth option to initiate the backwater analysis. The results of this analysis were then used to define the relative impact of the drop-structure system upon the upstream water-surface elevations and flow velocities in the IBW. The scour analysis was conducted using the critical-depth parameters that were determined as part of this analysis.

3.2 Results

With the exception of the standard-project flood on the IBW, the results of the preliminary hydraulic analyses (dependent versus independent for Conditions I and II) indicate that flows in the IBW are independent of their corresponding flows is the Salt River. Therefore, the hydraulic parameters for the IBW, which subsequently were used in the scour analyses, were developed using

normal-depth water-surface elevations at the control section for the 30,000 cfs, 43,000 cfs, and 51,000 cfs analyses of both existing and bridged conditions. The hydraulic parameters for a 63,000 cfs flood on the IBW were defined using a starting water-surface elevation at the control section that corresponds to the Salt River's 100-year water-surface elevation at Cross Section 220.

A summary printout of the multi-profile analysis of the Salt River under existing conditions is contained in Appendix A. The input/output listings for the multi-profile analysis of the IBW for Conditions I, II, and III are contained in Appendix B, C, and D, respectively.

Table 3.1 compares the water-surface elevations for Condition II (bridge constructed over the existing wash) and Condition III (proposed drop-structure system beneath the planned bridge) with the water-surface elevations associated with Condition I (existing conditions). The purpose of this comparison was to define the relative impact of both Condition II and Condition III upon the upstream IBW channel. In addition, the respective water-surface elevations on the IBW are compared to the top-of-levee elevations, as defined in Reference 1.

From a review of Table 3.1, it should be noted that the proposed bridge, when constructed over the existing IBW channel, will not increase the upstream water-surface elevation by more than one-tenth of a foot. It should also be noted that the bankfull capacity of the IBW along the study reach more closely approximates the "superflood" discharge of 51,000 cfs than it does the assumed bankfull discharge of 43,000 cfs. It is also obvious from these results that a flood of 63,000 cfs cannot be entirely contained within the current IBW channel.

3.2.1 Impacts of the Standard-Project Flood

If the COE is correct in their assumption that only 68 percent of the standard-project flood will be intercepted by the IBW, a portion of the East Papago's eastern approach will be adversely affected by the remaining 32 percent

~~Doe~~ 4/12/90

- Was analysis performed to determine b/w impacts of Bridge Pier on u/s capacity?

Craig Babai
(Corps) (213) 894-6234

SLA BW analysis
H'way-
drop structure
encroach in level-

3.1 Table what are bridge elevations? reference to??

TABLE 3.1: RELATIVE IMPACTS OF THE PROPOSED EAST PAPAGO CROSSING OF THE INDIAN BEND WASH FOR CONDITIONS I & II, AND OF THE RIO SALADO IMPROVEMENTS FOR CONDITIONS III

SECNO	Q (cfs)	LEVEE ELEV. (MSL)	EXISTING CWSEL (MSL)	LEVEE, MINUS EXISTING (ft)	BRIDGED CWSEL (MSL)	BRIDGED, MINUS EXISTING (ft)	LEVEE, MINUS BRIDGED (ft)	RIO SALADO CWSEL (MSL)	RIO SALADO, MINUS EXISTING (ft)	LEVEE, MINUS RIO (ft)
3420	30000	1163.80	1163.25	0.55	1163.25	0.00	0.55	N/A	N/A	N/A
3420	43000	1163.80	1164.85	-1.05	1164.85	0.00	-1.05	N/A	N/A	N/A
3420	51000	1163.80	1165.75	-1.95	1165.75	0.00	-1.95	N/A	N/A	N/A
3420	63000	1163.80	1167.76	-3.96	1168.01	0.25	-4.21	N/A	N/A	N/A
3640	30000	1164.92	1163.64	1.28	1163.64	0.00	1.28	N/A	N/A	N/A
3640	43000	1164.92	1165.22	-0.30	1165.22	0.00	-0.30	N/A	N/A	N/A
3640	51000	1164.92	1166.11	-1.19	1166.12	0.01	-1.20	N/A	N/A	N/A
3640	63000	1164.92	1168.02	-3.10	1168.25	0.23	-3.33	N/A	N/A	N/A
3860	30000	1166.04	1164.19	1.85	1164.19	0.00	1.85	N/A	N/A	N/A
3860	43000	1166.04	1165.74	0.30	1165.74	0.00	0.30	N/A	N/A	N/A
3860	51000	1166.04	1166.60	-0.56	1166.60	0.00	-0.56	N/A	N/A	N/A
3860	63000	1166.04	1168.37	-2.33	1168.56	0.19	-2.52	N/A	N/A	N/A
3900	30000	1166.24	1164.31	1.93	1164.31	0.00	1.93	N/A	N/A	N/A
3900	43000	1166.24	1165.85	0.39	1165.85	0.00	0.39	N/A	N/A	N/A
3900	51000	1166.24	1166.71	-0.47	1166.71	0.00	-0.47	N/A	N/A	N/A
3900	63000	1166.24	1168.44	-2.20	1168.63	0.19	-2.39	N/A	N/A	N/A
3919.5	30000	1166.34	N/A	N/A	1164.38	N/A	1.96	N/A	N/A	N/A
3919.5	43000	1166.34	N/A	N/A	1165.91	N/A	0.43	N/A	N/A	N/A
3919.5	51000	1166.34	N/A	N/A	1166.77	N/A	-0.43	N/A	N/A	N/A
3919.5	63000	1166.34	N/A	N/A	1168.67	N/A	-2.33	N/A	N/A	N/A
Bridge 4080.5	30000	1167.16	N/A	N/A	1164.69	N/A	2.47	N/A	N/A	N/A
4080.5	43000	1167.16	N/A	N/A	1166.32	N/A	0.84	N/A	N/A	N/A
4080.5	51000	1167.16	N/A	N/A	1167.23	N/A	-0.07	N/A	N/A	N/A
4080.5	63000	1167.16	N/A	N/A	1169.06	N/A	-1.90	N/A	N/A	N/A
4100	30000	1167.26	1164.98	2.28	1164.77	-0.21	2.49	N/A	N/A	N/A
4100	43000	1167.26	1166.46	0.80	1166.39	-0.07	0.87	N/A	N/A	N/A
4100	51000	1167.26	1167.29	-0.03	1167.29	0.00	-0.03	N/A	N/A	N/A
4100	63000	1167.26	1168.86	-1.60	1169.10	0.24	-1.84	N/A	N/A	N/A

N/A = Not Applicable; NC = Not Computed

All Elevations are based on COE, GDM, Phase II

TABLE 3.1--Continued

SECNO	Q (cfs)	LEVEE ELEV. (MSL)	EXISTING CWSEL (MSL)	LEVEE, MINUS EXISTING (ft)	BRIDGED CWSEL (MSL)	BRIDGED, MINUS EXISTING (ft)	LEVEE, MINUS BRIDGED (ft)	RIO SALADO CWSEL (MSL)	RIO SALADO, MINUS EXISTING (ft)	LEVEE, MINUS RIO (ft)
4210	30000	1167.82	NC	NC	NC	NC	NC	1163.08	NC	NC
4210	43000	1167.82	NC	NC	NC	NC	NC	1164.23	NC	NC
4210	51000	1167.82	NC	NC	NC	NC	NC	1164.87	NC	NC
4210	63000	1167.82	NC	NC	NC	NC	NC	1165.80	NC	NC
4300	30000	1168.28	1165.74	2.54	1165.65	-0.09	2.63	1164.47	-1.27	3.81
4300	43000	1168.28	1167.17	1.11	1167.13	-0.04	1.15	1165.68	-1.49	2.60
4300	51000	1168.28	1167.98	0.30	1167.97	-0.01	0.31	1166.35	-1.63	1.93
4300	63000	1168.28	1169.39	-1.11	1169.57	0.18	-1.29	1167.35	-2.04	0.93
4640	30000	1169.74	1167.14	2.60	1167.13	-0.01	2.61	1167.39	0.25	2.35
4640	43000	1169.74	1168.52	1.22	1168.49	-0.03	1.25	1168.72	0.20	1.02
4640	51000	1169.74	1169.28	0.46	1169.28	0.00	0.46	1169.46	0.18	0.28
4640	63000	1169.74	1170.46	-0.72	1170.56	0.10	-0.82	1170.43	-0.03	-0.69
4980	30000	1171.21	1168.68	2.53	1168.68	0.00	2.53	1168.73	0.05	2.48
4980	43000	1171.21	1170.02	1.19	1170.02	0.00	1.19	1170.08	0.06	1.13
4980	51000	1171.21	1170.77	0.44	1170.77	0.00	0.44	1170.82	0.05	0.39
4980	63000	1171.21	1171.82	-0.61	1171.86	0.04	-0.65	1171.81	-0.01	-0.60
5320	30000	1172.67	1170.23	2.44	1170.23	0.00	2.44	1170.23	0.00	2.44
5320	43000	1172.67	1171.57	1.10	1171.56	-0.01	1.11	1171.58	0.01	1.09
5320	51000	1172.67	1172.31	0.36	1172.31	0.00	0.36	1172.32	0.01	0.35
5320	63000	1172.67	1173.32	-0.65	1173.33	0.01	-0.66	1173.31	-0.01	-0.64
5600	30000	1176.00	1171.49	4.51	1171.48	-0.01	4.52	1171.49	0.00	4.51
5600	43000	1176.00	1172.84	3.16	1172.84	0.00	3.16	1172.83	-0.01	3.17
5600	51000	1176.00	1173.59	2.41	1173.58	-0.01	2.42	1173.58	-0.01	2.42
5600	63000	1176.00	1174.58	1.42	1174.59	0.01	1.41	1174.58	0.00	1.42

N/A = Not Applicable; NC = Not computed

All Elevations are based on COE, GDM, Phase II

of flow. This situation may require some additional drainage design elements along a portion of the eastern approach, if the standard-project flood were also considered. However, should the results of this partial analysis of the lower reach of the IBW be consistent with the results of analysis of the upper reaches, it may be possible to contain the entire standard-project flood within the IBW by elevating the existing levees by approximately two feet. At some locations, it may not be necessary to elevate the levees at all. However, a detailed evaluation of the standard-project floodplain will be required to verify exactly how much flow is actually intercepted by the IBW during the standard-project flood.

Using the COE estimation of the overflow floodplain during the standard-project flood, the average width for 20,000 cfs of flow between McKellips Road and the Salt River was estimated to be approximately 3400 feet. The depth of this flow, independent of any contribution from the Salt River, could fluctuate between two and three feet. Since a segment of the eastern approach to the Indian Bend Wash bridge is proposed to be constructed on fill material, a portion of this 20,000 cfs overflow could be prevented from entering the Salt River. This blockage may or may not increase the extent of upstream flooding associated with the standard-project flood.

Based on the current alignment of the proposed freeway, it appears that the segment located between McClintock Drive and the Indian Bend Wash is the only one that will be impacted by a portion of the 20,000 cfs overflow during a standard-project flood. Since the exact distribution of flow within the overbank has not been determined, it is difficult to define the exact quantity of flow that might impact this segment. However, if it were assumed that this flow would be uniformly distributed across the anticipated, 3500-foot-wide, standard-project floodplain, the unit discharge would be approximately six cfs per foot. Therefore, it appears that the affected freeway segment could be impacted by approximately 9,300 cfs, assuming that the six-cfs-per-foot unit discharge is applied to approximately 1550 feet of the standard-project flood plain. This

distance corresponds to the distance along Curry Road between the Indian Bend Wash and McClintock Drive.

3.2.2 Impacts under Condition II (With-Freeway Conditions)

As previously stated, if the proposed East Papago bridge is constructed over the existing IBW channel, it will not have a significant effect upon the respective water-surface elevations associated with the four design peak discharges evaluated during this study. In addition, flow velocities in the upstream channel will not be increased by more than 0.5 feet per second under any of the analyzed flow conditions. Therefore, the existing bank protection along the upstream levees will not be adversely affected by construction of the bridge, although some additional bank protection will be required in conjunction with this structure.

3.2.3 Impacts under Condition III (With-Freeway/Rio Salado Conditions)

Constructing a series of drop structures within the IBW in order to offset the impact of channelizing the Salt River in the manner proposed by CRSS (i.e., reducing the existing profile of the Salt River at its confluence with the IBW by approximately 10 feet) will alter the hydraulic conditions that currently exist along that portion of the IBW channel that is located immediately upstream of the proposed bridge. In addition, it will be necessary to construct an upstream transition section in order to accommodate these drop structures.

The proposed series of drop structures will also alter the subcritical flow conditions that currently exist along the IBW to a condition that falls within the critical flow range. This situation will occur immediately upstream of Level I of the drop structures. Although this first drop structure will control general scour, bed-form scour, and bend scour, a localized increase in the upstream velocity will occur as flow plunges over this structure. Such a phenomenon will result in the formation of a small scour hole immediately upstream of this first drop.

Within the drop-structure system itself, the stilling-basin floors, if properly designed, should limit the local-scour depth associated with each successive drop (with the exception of downstream of Level IV). For the most part, the depth of local scour should be limited to the four-foot-thick layer of alluvium backfill which will be placed over the stabilized beds within each successive stilling basin.

However, from a hydraulic-design standpoint, it should be noted that the series of drop structures, which resemble Type IV Stilling Basins (as described in Reference 8), were designed by CRSS to accommodate a unit discharge of 90 cfs per foot. The assumed design discharge was 60,000 cfs. Consequently, the average width of each drop was set equal to approximately 667 feet (i.e., 60,000 divided by 90); yet, the Rio Salado improvement plans reflect an average width of only 552 feet. Consequently, for a design discharge of 63,000 cfs, this configuration represents a unit discharge of approximately 114 cfs per foot (i.e., 63,000 divided by 552). In addition, for a Type IV Stilling Basin to effectively contain the hydraulic jump that will occur on the basin floor, the downstream tailwater depth should be approximately ten percent greater than the conjugate depth. Based upon the results of a hydraulic analysis of the critical-flow conditions that will exist at each level of the drop structure, the computed length of the stilling basin may not be long enough, or the tailwater high enough, to contain the hydraulic jump. However, for the purpose of this analysis, it was assumed that the drop structure would be properly designed to prevent this situation from occurring.

From a geometric design standpoint, it should be noted that the IBW flood-control channel was constructed using two compound trapezoidal sections. A typical section of this channel is provided as Figure 2. The improvement plans prepared by CRSS reflect their intent to also provide a compound section. However, their section is not consistent with the existing section (see Figure 3). Therefore, it will also be necessary for CRSS to design a transition section between the existing channel section and their proposed channel section.

TYPICAL SECTION OF THE EXISTING IBW FLOOD-CONTROL CHANNEL

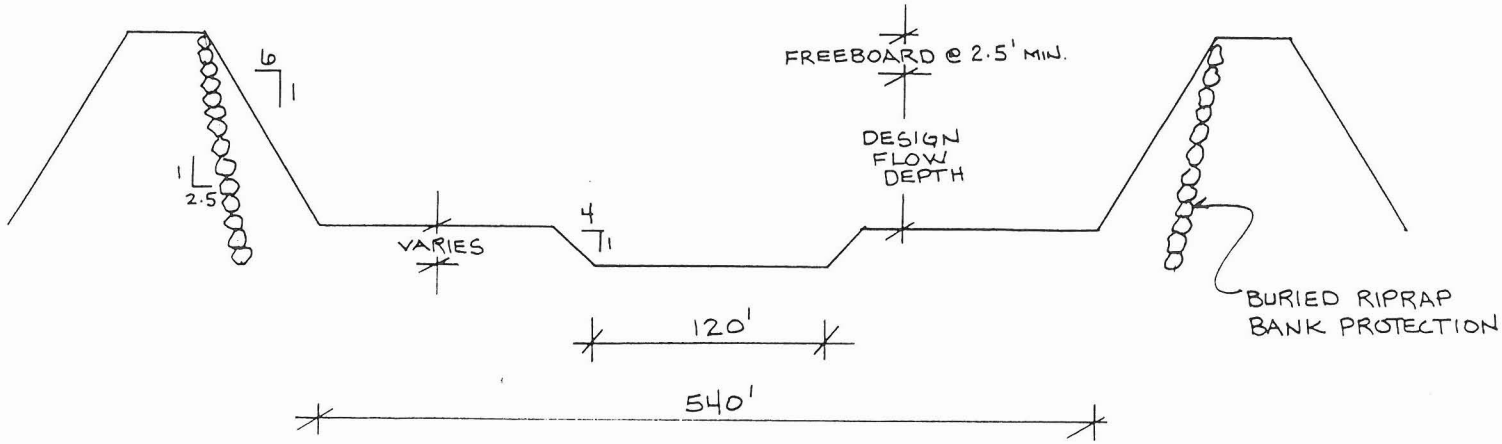

FIGURE 2

Simons, Li & Associates, Inc.

TYPICAL SECTION OF THE CRSS DROP STRUCTURES

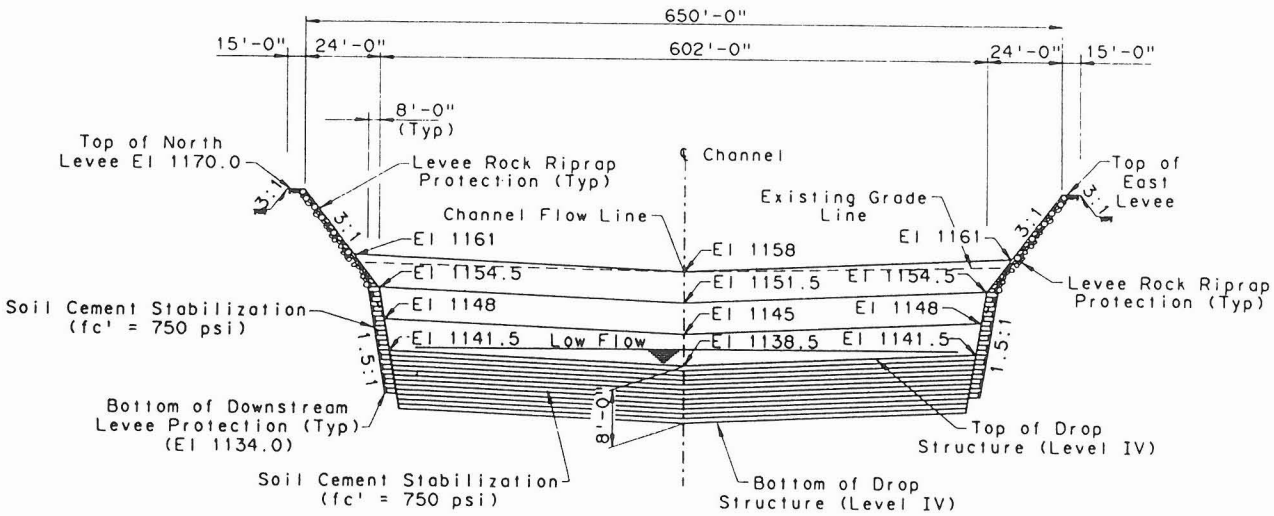

Simons, Li & Associates, Inc.

FIGURE 3

(Sheet 1 of 2)

TYPICAL PROFILE OF THE CRSS DROP STRUCTURES

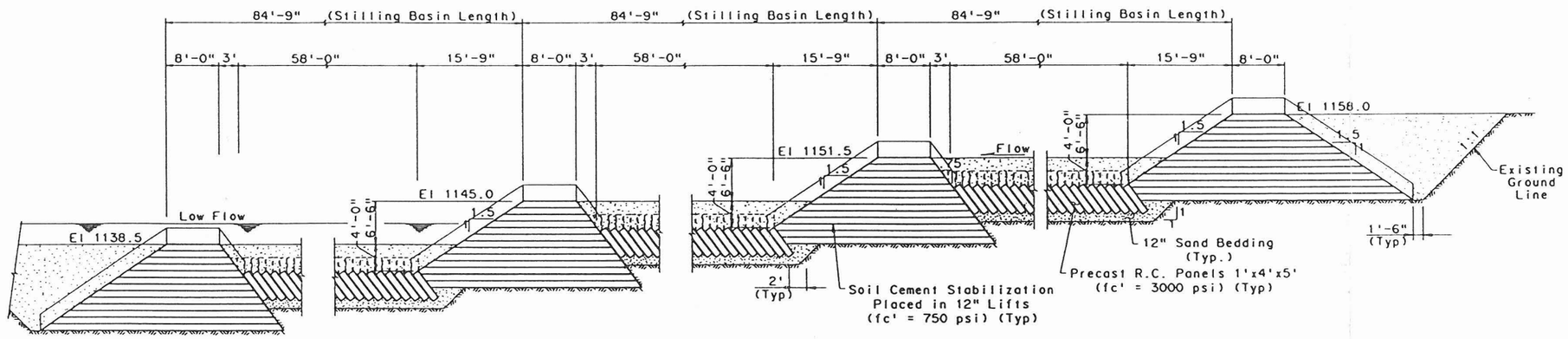

Simons, Li & Associates, Inc.

FIGURE 3
(Sheet 2 of 2)

3.2.4 Design Top-of-Pier Elevations

Since 30,000 cfs is considered by ADOT to be the design discharge, the required freeboard should be added to the depth of flow associated with the 30,000 cfs analysis. The total design height should then be applied to the minimum elevation of the low-flow channel at a point located immediately upstream of the bridge in order to obtain the minimum design elevation for the bridge. This elevation should be used to establish the bottom elevations of the pier caps in order to ensure that the superstructure is properly elevated above the design water-surface elevation.

For the purpose of this analysis, the minimum elevation of the low-flow channel at the point immediately upstream of the bridge was set equal to 100.00 feet. This is an arbitrary base elevation that is not tied to any particular datum. The minimum freeboard requirement was assumed equal to three feet. This height was applied to the maximum flow depth for 30,000 cfs for the two design conditions analyzed. Consequently, the minimum pier-cap elevation (i.e., the top-of-pier elevation) varies for each design condition (see Table 3.2). For study purposes, these top-of-pier elevations were assumed to be constant over the entire length and width of the proposed bridge.

TABLE 3.2: REQUIRED TOP-OF-PIER ELEVATIONS (MINIMUM ELEVATIONS OF PIER CAPS)

Condition II					
Q (cfs)	MAXIMUM FLOW DEPTH (ft)	REQUIRED FREEBOARD (ft)	DESIGN DEPTH (ft)	COMMON BED ELEVATION[a] (ft)	DESIGN TOP-OF-PIER ELEVATION (ft)
30,000	7.64	3.0	10.64	100.00	110.64
Condition III (Level I)					
Q (cfs)	MAXIMUM FLOW DEPTH (ft)	REQUIRED FREEBOARD (ft)	DESIGN DEPTH (ft)	COMMON BED ELEVATION[a] (ft)	DESIGN TOP-OF-PIER ELEVATION (ft)
30,000	5.76	3.0	8.76	100.00	108.76

[a]Assumed for the purpose of this analysis. Not tied to any particular datum.

IV. SCOUR ANALYSIS

4.1 Approach

For Condition I and Condition II, the single-event scour components (i.e., general scour, bed-form scour, and local scour) were computed using the procedures and equations contained in References 9 and 10. A listing of the specific equations used in this analysis is provided in Appendix E. The long-term response associated with the Salt River under existing conditions was obtained from Reference 6. Reference 2 was used to estimate the long-term response associated with the proposed Rio Salado channel. For the IBW, the long-term response was computed using the estimated 10-year unit discharge in conjunction with the following clear-water relationship, which was originally developed for constructed channels that drain urban watersheds.

$$S_{eq} = (1.45n/q^{0.11})^2$$

PMA Cam 49. work.

Where:

S_{eq} = Equilibrium slope, in feet per foot;

n = Manning's roughness coefficient; and,

q = 10-year unit discharge; in cubic feet per second per foot.

The pivot point used in conjunction with the IBW equilibrium slope was established by extending the existing and proposed (Rio Salado) alignment of the northern bank of the Salt River until it intersected the alignment of the IBW low-flow channel. The pivot-point elevation was assumed equal to the existing elevation for Condition I and Condition II and the proposed elevation for Condition III, minus the estimated long-term scour depth.

Reference 6 indicates that the long-term scour depth associated with this particular reach of the Salt River would be approximately equal to 6.5 feet. This depth, which applies to the Salt River as it currently exists, was used for both Condition I and Condition II.

The Rio Salado design report (Reference 2) indicates that a degradation depth approximately equal to 8.4 feet would occur at McClintock Drive when Grade Control No. 4 is used as the pivot point. However, the report goes on to state that the McClintock grade-control structure was designed to account for a 5.5 foot lowering of the bed profile. Although there was some discussion concerning streambed armoring, the report does not specifically state that the degradation depth was reduced from 8.4 to 5.5 to account for this process. It appears that the 5.5 feet is more closely related to the "bed scour depth" of 5.3 feet than to the potential for a reduction in the bed profile that will occur as the reach by reach sediment transport rates equalize. ?

For the purpose of this analysis, it was assumed that the equilibrium profile associated with the Rio Salado channel would reduce the proposed profile of the main channel by approximately 5.5 feet. However, should 8.4 feet be the correct long-term scour component, the results presented in Section 4.2 would need to be revised accordingly.

For both Condition I and Condition II, the general scour, bed-form scour, and local (pier) scour components were summed before a safety factor of 1.3 (to account for non-uniform flow distribution) was applied to these values. However for Condition III, the safety factor was increased to 1.4 to account for the curvature effect of the channel upon the flow. This was done because as the depth of flow increases on the outer bank of the channel bend, local scour depths will increase accordingly. Since the depth of flow in a bend will vary across the bendway section, it was felt that a reasonable approach to account for this effect would be to slightly increase the applied safety factor. For Condition I and Condition II, the bend-scour component was computed directly. why cond. III was not. Comp. directly.

Actual NO Tractive Force Should be increased. w/respect to ratio of $\frac{r}{W}$

The hydraulic parameters used to compute the individual scour components are summarized in Table 4.1. As previously stated, the associated HEC-2 input/output listings are contained in Appendices B through D. For Condition I, the average hydraulic parameters associated with Cross Sections 3900 and 4100 (Appendix B) were used. For Condition II, the average hydraulic parameters

TABLE 4.1: HYDRAULIC PARAMETERS USED TO COMPUTE INDIVIDUAL SCOUR COMPONENTS IBW

CONDITION ANALYZED	DESIGN DISCHARGE (cfs)	MAX. FLOW DEPTH (ft)	AVG. FLOW DEPTH (ft)	TOP WIDTH (ft)	AVERAGE VELOCITY (fps)	ENERGY SLOPE (%)	FROUDE NO.
I	30,000	7.75	5.61	604.80	8.84	0.3646	0.66
	43,000	9.26	6.94	622.90	9.96	0.3491	0.67
	51,000	10.10	7.70	630.00	10.52	0.3397	0.67
	63,000	11.75	9.35	630.00	10.70	0.2734	0.62
II	30,000	7.64	5.51	603.95	9.02	0.3909	0.68
	43,000	9.22	6.90	622.92	10.01	0.3554	0.67
	51,000	10.10	7.70	630.00	10.51	0.3392	0.67
	63,000	11.97	9.58	630.00	10.45	0.2527	0.60
III (U/S)	30,000	5.76	4.18	612.54	11.72	0.948	1.01
	43,000	6.91	5.28	619.44	13.16	0.876	1.01
	51,000	7.55	5.89	623.33	13.89	0.844	1.01
	63,000	8.48	6.76	628.89	14.82	0.800	1.00
IV (D/S)	30,000	6.18	4.62	527.52	12.31	0.917	1.01
	43,000	7.44	5.85	531.32	13.83	0.847	1.01
	51,000	8.15	6.53	533.44	14.63	0.819	1.01
	63,000	9.15	7.50	536.44	15.67	0.783	1.01

associated with Cross Sections 3900 through 4100 (Appendix C) were used. For Condition III, the hydraulic parameters associated with Cross Section 4210 (Appendix D) were applied to estimate the scour potential immediately upstream of Level I of the proposed series of drop structures. To estimate the scour potential immediately downstream of Level IV of the drop structures, the hydraulic parameters associated with Section 3940 (Appendix D) were applied.

4.2 Results

F.S. should be applied to C_A not the final depth

The results of the scour analysis are presented in Table 4.2. It should be noted that the Total Scour Depth includes the applied safety factors. These safety factors were applied to all scour components, with the exception of the long-term degradation depth. For design purposes, the total scour depth was rounded to the nearest one-half foot. This depth should be measured from the existing bed elevation within the low-flow channel for Conditions I and II. For Condition III, this depth should be measured from the proposed bed elevation.

The results indicate that for existing conditions the depth of scour at the bridge site will range between approximately 15.5 and 18.0 feet. If the bridge were constructed over the existing channel section, the total depth of scour would range between approximately 37.5 and 42.5 feet. This additional scour depth would be the direct result of local scour around the proposed bridge piers.

Under Condition III, some of the bridge piers will be located immediately upstream of Level I of the proposed series of drop structures. The total scour depth in this area will range between 28.0 and 32.0 feet. This depth includes local scour at the bridge piers, plus two feet to account for the local scour phenomenon associated with the accelerated flow condition which will exist immediately upstream of the Level I drop structure. The reduction in the total scour depth at Level I, relative to Condition II, is directly attributable to the drop-structure system. This drop-structure system will effectively eliminate the need to consider the affect of general scour, bed-form scour, and bend scour.

TABLE 4.2: SCOUR-ANALYSIS SUMMARY TABLE

CONDITION ANALYZED	Q (cfs)	GENERAL SCOUR DEPTH (ft)	BED-FORM SCOUR DEPTH (ft)	BEND SCOUR DEPTH (ft)	DEPTH OF LOCAL SCOUR		LONG-TERM DEGRADATION DEPTH (ft)	TOTAL SCOUR DEPTH (ft)
					Pier (ft)	Drop (ft)		
I	30,000	0.45	1.07	1.15	N/A	N/A	F.S. 1.3 12.00	15.47
	43,000	0.77	1.36	1.48	N/A	N/A	12.00	16.69
	51,000	0.96	1.51	1.66	N/A	N/A	12.00	17.37
	63,000	1.13	1.57	1.93	N/A	N/A	12.00	18.02
II	30,000	0.47	1.11	1.14	16.96	N/A	1.3 12.00	37.58
	43,000	0.78	1.37	1.47	18.00	N/A	12.00	40.11
	51,000	0.96	1.51	1.66	18.58	N/A	12.00	41.52
	63,000	1.08	1.49	1.96	18.81	N/A	12.00	42.34
III (U/S) F.S. = 1.4	30,000	N/A	N/A	N/A	18.14	2.0	≈ 1.4 N/A	28.20
	43,000	N/A	N/A	N/A	19.33	2.0	N/A	29.86
	51,000	N/A	N/A	N/A	19.94	2.0	N/A	30.72
	63,000	N/A	N/A	N/A	20.77	2.0	N/A	31.88
IV (D/S)	30,000	N/A	N/A	N/A	18.59	5.49	≈ 1.4 0.5	34.21
	43,000	N/A	N/A	N/A	19.84	6.43	0.5	37.28
	51,000	N/A	N/A	N/A	20.48	6.93	0.5	38.87
	63,000	N/A	N/A	N/A	21.33	7.59	0.5	40.99

based on obstruction width of 10 ft.

?! ? Call Dennis Le at end IV of D.S.

approach

However, it should also be noted that the depth of local (pier) scour will increase because of the presence of the drop-structure system. This occurs because the increase in the velocity of flow immediately upstream of the drop structure is not compensated by the corresponding reduction in the depth of flow. Consequently, both the Froude number and the depth of local scour will increase.

Call Dennis. Reduction of depth take place. Just upstream of the drop

? Calc. ?

Some of the bridge piers under Condition III will be located immediately downstream of Level IV of the drop-structure system. The total depth of scour in this area will range between 34.0 and 41.0 feet. This depth is due to the combined effect of local scour at the bridge piers and local scour attributable to plunging flow created by an estimated one-half-foot drop in the bed elevation on the downstream side of the Level IV structure. This drop, at Level IV, occurs after long-term degradation of the downstream channel is achieved.

at 1 $V^{\uparrow} y^{\downarrow}$
at 2 $V_{\downarrow} y^{\uparrow}$

Between Level I and Level IV, the rigid stilling-basin floor associated with Levels II and III will effectively limit the local scour depth to four feet. This depth corresponds to the depth of alluvium backfill which would be placed within each stilling basin. However, it should be noted that if the rigid floor were to fail, or the floor were eliminated completely, the combined effect of local scour at the bridge piers and local scour below each individual drop would increase the total scour depths immediately downstream of Levels I through III by approximately 18.5, 22.0, 24.0, and 27.0 feet, respectively, during the four design flow events analyzed during this study.

IV

+ on top of 34, 41

It should also be noted that the depth of scour without pier scour is applicable at every point across the section. However, the additional depth of scour associated with the pier is limited to a zone that surrounds each pier. The "zone of influence" can be defined as an inverted cone, with its apex at the bottom of the scour hole which is based on the total depth of scour. The diameter near the apex is assumed equal to the obstruction width (10 feet in this case). For sands and fine gravels, the side-slopes of the cone are approximately equal to 2.75:1 (i.e., 2.75 feet in the horizontal direction per vertical foot). Consequently, the diameter of the inverted base of the cone (i.e., at the

Call Dennis

Sorcel?

(2.75 x 24.2) 2 + 10 = 144.25

surface) for Condition II and Condition III would be a function of the pier scour depth (see Figure 4). the Calc. For II. No. 25 not included in Thy report

For example, under Condition II, the pier scour depth was estimated to be 24.5 feet (considering the factor of safety) for 63,000 cfs. Therefore, the diameter of the "zone of influence" of a pier would be equal to approximately 150 feet. For this example, the radial distance around each affected pier would be approximately 75 feet. Any hydraulic design element (e.g., toe downs for bank protection) that falls within the "zone of influence" must consider the added effect of local scour at the bridge piers. If the toe down for bank protection is assumed equal to six feet (for the sake of discussion), the bank protection must be at least 75 feet away from the closest bridge pier to be considered outside the "zone of influence". Consequently, when the final design conditions are established, the toe downs for the bank protection must be designed accordingly. Very true

The maximum depth of local scour below a drop structure with respect to the projected (equilibrium) bed elevation will terminate at a location downstream of the drop that is approximately six times the maximum depth of local scour associated with the flow over the structure. Downstream of this location, the "zone of influence" extends an additional distance that is again equal to approximately six times the depth of scour (see Figure 5). The geometry of this portion of the scour hole is approximated by using a 6:1 return slope. Therefore, the total length of the "zone of influence" along the channel is approximately twelve times the depth of local scour due to flow over the drop structure. Again, this distance is measured from the downstream limit of the drop structure.

"ZONE OF INFLUENCE" FOR A BRIDGE PIER

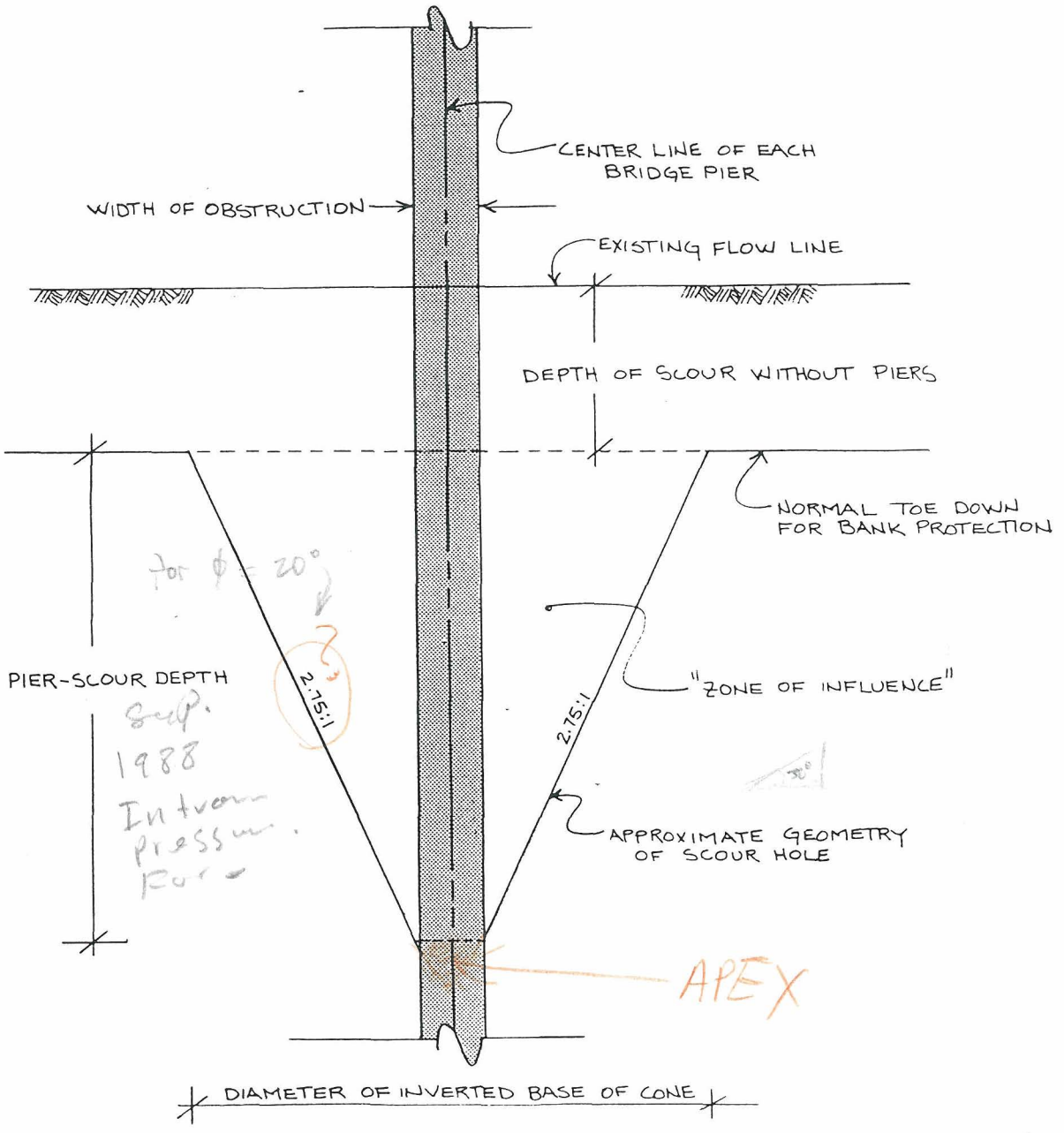

FIGURE 4

"ZONE OF INFLUENCE" FOR A DROP STRUCTURE

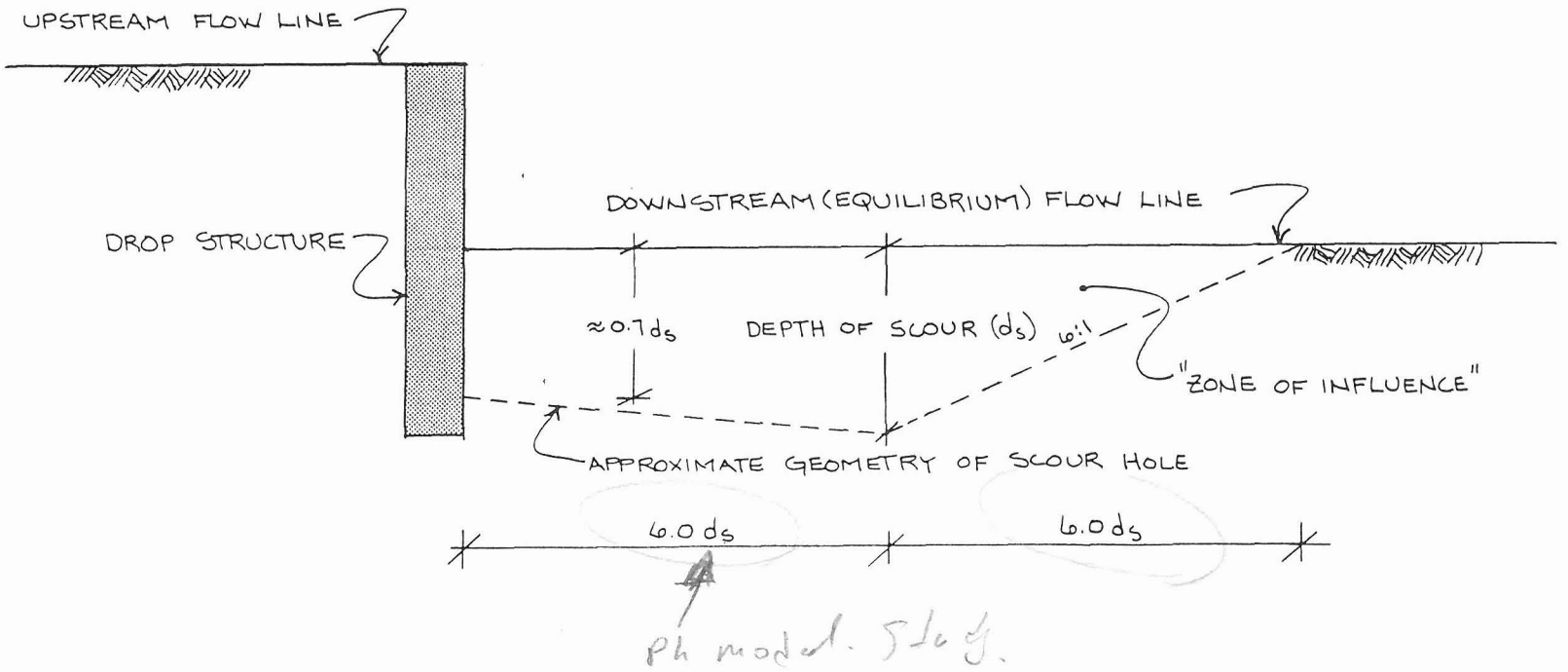

FIGURE 5

V. CONCLUSIONS AND RECOMMENDATIONS

5.1 Standard-Project Flood

Based on the results of the hydraulic analysis, it appears that the affected freeway segment could be impacted by approximately 9,300 cfs during a standard-project flood on the IBW. Under normal design conditions, either a bridge section or an interceptor/diversion channel would be required to accommodate flows of this magnitude. The two most logical outlets for an interceptor channel would be either the IBW or the Salt River.

If a fully-lined concrete section is provided at a 0.2 percent slope to accommodate this flow, the top width of the interceptor channel would need to be approximately 135 feet, assuming the design depth is equal to five feet. The estimated cost to construct this channel section was determined to be approximately $490,000. However, this design assumes that the IBW and the Salt River are conveying little or no runoff. The backwater associated with either watercourse during their respective flow events would totally fill the interceptor. This would render the channel ineffective during the actual passage of the standard-project flood, from a mitigation standpoint. Consequently, the primary function of such an interceptor channel would be to drain the affected overbank area, once flows begin to recede in either the IBW or the Salt River.

The best way to ensure that the East Papago Freeway does not block any portion of the standard-project flood would be either to bridge an additional 1250 feet of the standard-project floodplain or to improve the IBW channel section such that it can contain the entire standard-project flood. The cost of bridging an additional 1250 feet of the IBW, the standard-project floodplain could be on the order of $10,400,000. However, if a two-foot-high floodwall were constructed atop the existing levee in order to contain the entire 63,000 cfs, approximately 0.2 cubic yards of structural concrete would be required for each linear foot of improved levee. The additional cost for these improvements would be on the order of $300,000 per mile. Based on the discussion contained in

Reference 1, the estimated length of improvements required to prevent any breakout along the IBW is approximately 1.5 miles. Therefore, the estimated cost of such levee improvements would be $450,000.

Considering the cost differential between an extended bridge section and the floodwall alternative, it is clear that the floodwall would be a much more cost-effective solution. However, the floodwall design assumes that the entire 63,000 cfs can be captured at some point along the upstream reaches of the IBW. To determine if this is indeed possible, a more detailed study of the IBW will be required. Considering the relative impact of the standard-project flood on the East Papago Freeway, or visa versa, a more detailed study is certainly warranted. Therefore, it is recommended that the IBW be studied in more detail; that is if the East Papago Freeway in this area were to be designed with consideration for the effects of a standard project flood.

5.2 Condition II (With-Freeway Conditions)

The results of the hydraulic analysis for Condition II indicate that construction of a bridge structure over the existing IBW will not have an adverse impact upon the upstream channel section. However, abutment/bank protection will be required to ensure the stability of such a structure. Based on the results of the scour analysis, this protection must extend far enough upstream and downstream of the bridge to ensure that the existing bank protection for the IBW (i.e., rock riprap buried in the banks of the main-channel levees) is outside the "zone of influence" associated with the bridge piers.

During the standard-project flood (i.e., the worst-case condition), the "zone of influence" would extend approximately 75 feet upstream and downstream of the bridge. Therefore, it will be necessary to provide appropriate bank-protection measures along the existing banks of the IBW for a minimum distance that is approximately equal to 75 feet upstream and downstream of the bridge structure.

The toe-down depth for the upstream and downstream limit of the bank protection must extend approximately 15.5 feet below the exiting bed elevation, if 30,000 cfs were used for this purpose. If 43,000 cfs, 51,000 cfs, or 63,000 cfs were used to establish the toe-down for the bank protection, the toe-down depth at these two locations must be approximately 16.5 feet, 17.5 feet, and 18.0 feet, respectively. These depths include all scour components, except pier scour. The toe-down depth for the bank protection at the upstream and downstream face of the bridge would correspond to the total scour depths under Condition II, as presented in Table 4.2. Again, the depths shown in this table were rounded off to the nearest one-half foot for design purposes.

Since the magnitude of the design toe-down depths just described are for the most part a function of the long-term degradation potential associated with both the Salt River and the IBW, a grade-control structure could be installed on the IBW immediately upstream of its confluence with the Salt River. This structure would effectively reduce the toe-down requirements just described.

Under such a scenario (Condition II), the long-term component would be reduced from approximately 12.0 feet to approximately 3.0 feet. This, in turn, would reduce the total scour depth for each respective design discharge by approximately nine feet. If soil cement were used to stabilize the banks in the immediate vicinity of the bridge (i.e., ±75 feet upstream and downstream of the bridge), the installation of a grade-control structure would result in an overall savings of approximately $42,500 for the bank protection. Although the cost of a baffle-chute spillway/grade-control structure was estimated to be approximately $894,000 (see appendix E), consideration must also be given to the savings associated with the reduced cost of installing shorter bridge piers.

Table 5.1 provides estimates of the total lengths of exposed piers which are applicable to the two design conditions analyzed. For Condition II, the foundation for each pier must be designed assuming that approximately 48.0 feet, 50.5 feet, 52.0 feet, and 53.0 feet of pier is exposed during the four respective

TABLE 5.1: MAXIMUM ESTIMATED HEIGHTS OF EXPOSED PIERS (ALL ELEVATIONS AND DEPTHS ROUNDED TO NEAREST ONE-HALF FOOT)

Detail Calc.?

CONDITION ANALYZED	Q (cfs)	MINIMUM TOP OF PIER ELEVATION (ft)	COMMON BED ELEVATION (ft)	TOTAL SCOUR DEPTH (ft)	SCOUR ELEVATION (ft)	EXPOSED PIER HEIGHT (ft)
II	30,000	110.50	100.00	37.5	62.50	48.0
	43,000	110.50	100.00	40.0	60.00	50.5
	51,000	110.50	100.00	41.5	58.50	52.0
	63,000	110.50	100.00	42.5	57.50	53.0
III (U/S, LEVEL I)	30,000	109.00	100.00	28.0	72.00	37.0
	43,000	109.00	100.00	30.0	70.00	39.0
	51,000	109.00	100.00	31.0	69.00	40.0
	63,000	109.00	100.00	32.0	68.00	41.0
III (LEVEL II)	30,000	109.00	93.50	4.0	89.50	19.5
	43,000	109.00	93.50	4.0	89.50	19.5
	51,000	109.00	93.50	4.0	89.50	19.5
	63,000	109.00	93.50	4.0	89.50	19.5
III (LEVEL III)	30,000	109.00	87.00	4.0	83.00	26.0
	43,000	109.00	87.00	4.0	83.00	26.0
	51,000	109.00	87.00	4.0	83.00	26.0
	63,000	109.00	87.00	4.0	83.00	26.0
III (D/S, LEVEL IV)	30,000	109.00	80.50	34.0	46.50	62.5
	43,000	109.00	80.50	37.5	43.00	66.0
	51,000	109.00	80.50	39.0	41.50	67.5
	63,000	109.00	80.50	41.0	39.50	69.5

flow events. Again, these values would be reduced by approximately nine feet if a grade-control structure is installed on the IBW immediately upstream of its confluence with the Salt River.

Considering the results of this analysis, and assuming that a grade-control structure is not provided as part of the design, it is recommended that the bridge piers and bank protection be designed to account for the total scour depths as presented in Table 4.2.

5.3 Condition III (With-Freeway/Rio Salado Conditions)

The results of the hydraulic analysis for Condition III indicate that the series of drop structures proposed by CRSS will alter flow conditions in the IBW for a short distance in the upstream direction. However, if the transition section were properly designed, any adverse impacts can be mitigated within the transition section. Therefore, with respect to that portion of the IBW channel which will be located upstream of the transition section, the proposed CRSS drop-structure system will not have any adverse effects. However, the proposed location of the drop structures will certainly complicate the design of the East Papago bridge.

Table 5.1 of this report summaries the maximum exposure height of the bridge piers with respect to each level of the proposed CRSS drop structures. These heights apply to those piers that will either be located immediately upstream of Level I, immediately downstream of Level IV, or within the center of the stilling basin associated with Levels II and III. For any bridge pier that may actually be embedded *within* the Level I or Level IV structure, the exposure height can be reduced by the respective scour depth. For any bridge pier that may actually be embedded *within* the Level II or Level III structure, the exposure height can be reduced by four feet. For those piers that will be located immediately adjacent to the bank, the exposure height can be reduced by three feet, in recognition of the compound-channel geometry proposed by CRSS.

Since the planned bridge is skewed with respect to the proposed CRSS drop structures, and because the drop structures are proposed to be located beneath the bridge, all of the conditions described in the preceding paragraphs will apply to one bridge pier or another. In fact, because of the geometry of the CRSS drop structures (i.e., a tiered profile with a compound section) each bridge pier would have a slightly different exposure height. However, before the values provided in Table 5.1 can be used to define the exposure height of the bridge piers at the various locations, an equation must be prepared which will equate the topographic information used by the bridge engineers to that used by CRSS.

? each side

In addition to these varying exposure heights, the relative exposure heights of the bridge piers associated with the Level IV structure seem quite excessive. Since these heights were determined using an assumed six-foot pier diameter, with an additional four feet of debris, it is possible that the results of this analysis may require that the pier diameter be adjusted at various locations in consideration of the predicted exposure heights. If the diameter of the piers were increased, the scour depths would need to be recomputed in order to define new exposure heights. This, in turn, may require an adjustment to the bridge pier diameters, which in turn may require a recalculation of the scour depths. This trial and error process would continue until the pier diameters match the required exposure heights.

Adding to the design complications just mentioned is the fact that the construction process must be closely coordinated between the two structures. Based on recent discussions with CRSS, it appears that the precast reinforced concrete panels shown on the CRSS improvement plans (35% submittal) will be replaced with continuous soil-cement slabs between the drop structures. This alone will simplify the construction process, since there was some question concerning how the bridge piers would be installed through the panels if the drop structure were constructed first, or how the panels would be installed around the piers if the bridge were constructed first.

Although the use of soil-cement slabs will simplify some of the interaction between the bridge and the drop structures, it seems that the most logical approach would be to construct the drop-structure system before the bridge is constructed. A great deal of earth work will be required to shape the existing channel to accommodate the drop structures. In addition, it would be very difficult to place the soil-cement in an efficient manner, since the construction vehicles would have to avoid the bridge piers.

Generally speaking, from a pier-scour standpoint, the effect of locating the drop-structure system beneath the bridge does not significantly increase the associated scour depth, although an increase does occur immediately upstream of the system relative to each flow event on the IBW. However, the major problem with respect to the design of the bridge piers is the exposure heights which are directly related to the proposed 10-foot reduction in the profile of the Salt River that will accompany the Rio Salado project; and which are indirectly related to an additional lowering of the Salt River that will occur when its equilibrium profile is established.

very true

Most, if not all, of the conflicts associated with the CRSS drop structures could be eliminated if this series of drop structures, or a similar series of structures, were located entirely on the downstream side of the bridge.

From a hydraulic design standpoint, a baffle-block spillway would serve the same purpose as the series of drop structures. A baffle-block spillway dissipates the excess energy associated with the drop by dividing the streamlines into a series of small, parallel hydraulic jumps that interact in a very efficient manner. Consequently, the baffle chute more effectively maintains a critical state of flow throughout the length of the structure. However, the proposed CRSS drop structures attempt to dissipate energy via a series of hydraulic jumps that are not interacting. In addition, the performance of the baffle block has been documented through numerous model studies. Although numerous model studies have evaluated the performance of individual drop structures, there is no evidence readily available which documents the

performance of a multi-stepped, drop-structure system within a compound-channel cross section. Considering the significance of both the East Papago Freeway and the Rio Salado project, it is strongly recommended that a model study be performed before a structure of this latter type is placed beneath a major freeway bridge such as the East Papago crossing of the IBW.

Therefore, for Condition III, in lieu of a model study of the drop-structure system, it is recommended that the baffle-block spillway be considered as an alternative to the series of drop structures proposed by CRSS. Figure 6 illustrates how a baffle-block spillway could be incorporated into the proposed Rio Salado project.

To accommodate this structure, the existing junction levee should be extended approximately 200 feet, so that the downstream scour hole would be confined to the IBW channel. In addition, it would be necessary to realign a small portion of both the north and south levees, as presented on the CRSS plan sheet for this reach.

The realignment of the levees would be required in order to maintain a bottom width of approximately 830 feet within the main channel of the improved Salt River. This realignment should not affect any of the physical constraints that dictated the original alignment. From a hydraulic standpoint, this realignment, in conjunction with the junction levee, would direct flow exiting the McClintock Drive reach toward the Rural Road bridge opening. This would prevent direct flow impingement on that portion of the northern levee of the Salt River which is located immediately upstream of Rural Road.

CRSS chose to remove the existing junction levee because the results of a two-dimensional computer model they used in conjunction with their hydraulic analysis indicated that it was unnecessary, since the combined flow from the IBW and the Salt River did not adversely impinge on this channel bank. However, when they ran the model with no contribution from the IBW, the impingement angle was

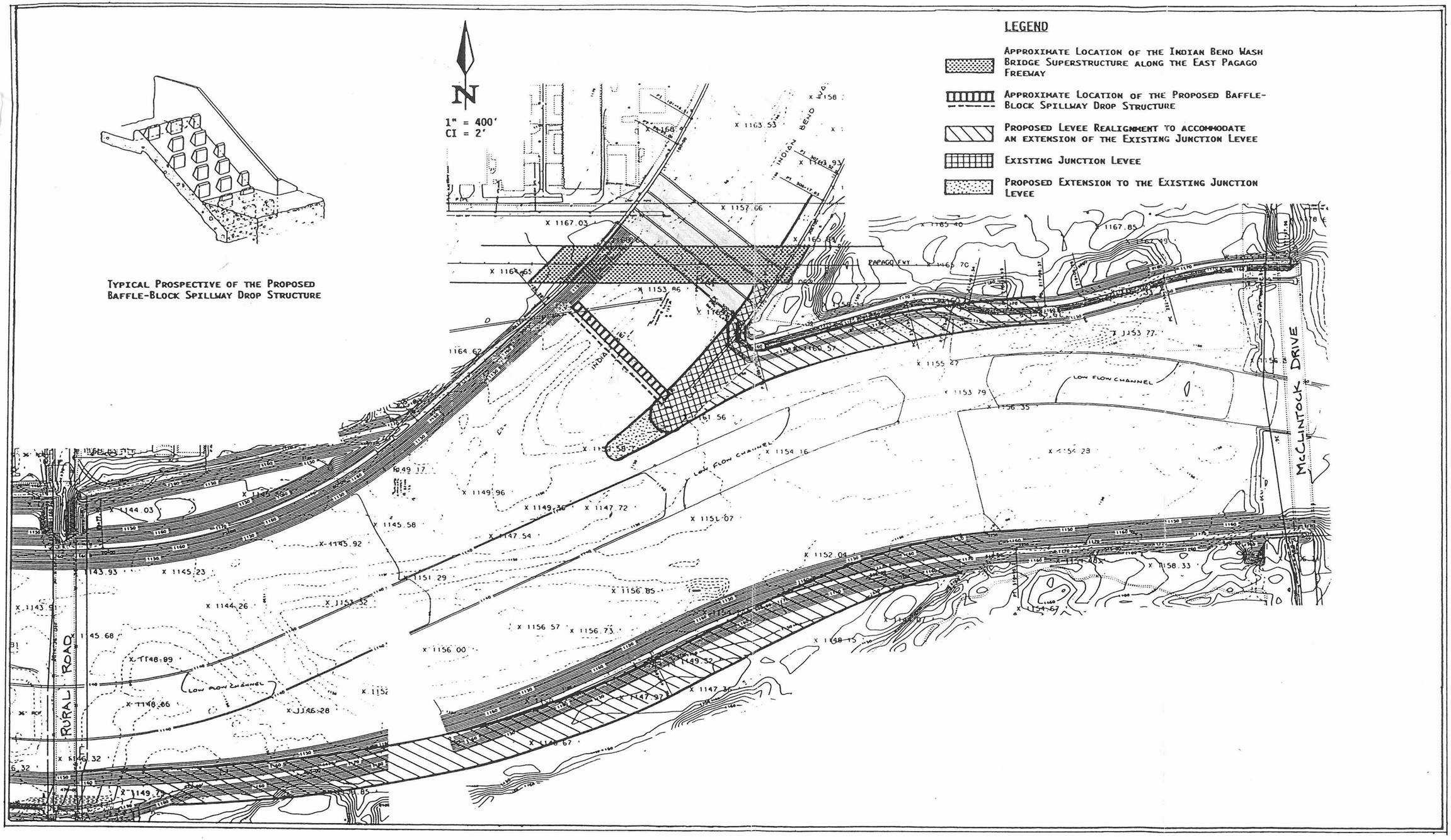

FIGURE 6
PROPOSED MODIFICATIONS TO THE CRSS PLANS

sla Simons, Li & Associates, Inc.

estimated to be approximately 30 degrees. In addition, since their model is a rigid-boundary model, it does not account for the extreme scour potential known to exist at abrupt confluences of alluvial channels such as the IBW and the Salt River.

Although the bank protection can be designed to withstand any additional scour that may be attributed to this impingement angle, proper confluence designs have always incorporated some type of junction structure to ensure that the angle between the converging flows is held to a minimum. Most hydraulic design texts recommend a maximum flow-convergence angle of 12 degrees for subcritical flow. However, for flow velocities within the range of 10.0 to 15.0 feet per second, a six-degree convergence angle is generally preferred. The Rio Salado project is being designed by CRSS to accommodate approximately 250,000 cfs. At this discharge, the maximum flow velocity within the IBW reach of the Salt River will be sightly higher than 10.0 feet per second, with the average velocity along the river ranging between 9.0 and 10.0 feet per second. Velocities in the IBW will be slightly higher. Therefore, it is recommended that the existing junction levee not be removed under any channelization scheme.

w/ NO Geo. Technical Analysis, These figures does not mean much.

In addition to the hydraulic superiority of the baffle-block spillway, it appears that the spillway would be more cost effective. As previously discussed, the estimated cost of the baffle-block spillway was determined to be approximately $894,000. The estimated cost of the series of drop structures proposed by CRSS was determined to be approximately $2,600,000 (see Appendix F). Although the baffle-block structure would require an extension to the existing junction levee, which will represent an additional cost, a significant savings would in turn be realized due to a reduction in the extent of proposed bank protection that would otherwise have been required along both banks of the IBW under the CRSS plan.

Since the baffle-block spillway would be located approximately 400 feet downstream of the proposed CRSS drop structures, the bed elevation immediately upstream of the baffle-block structure would be approximately nine feet higher

than the bed elevation for the CRSS drop structures (assuming that the design flow-line elevation for Condition III at this location would be approximately 1143.00, compared to an existing elevation which is approximately equal to 1152.00). Consequently, a savings of approximately nine feet of soil cement above the flow-line, as well as approximately four feet of toe-down protection, would be realized along the west bank of the IBW. In addition, the estimated construction cost of the CRSS drop structures did not include any associated bank-protection costs. These last two items, alone, should compensate for the additional cost of providing bank protection along the Salt River side of the proposed 400-foot-long junction levee to be built in conjunction with the baffle-block spillway. This assumes that the cost of providing a transition section upstream of the CRSS drop structures would be the same cost as would be required to provide a transition section upstream of the baffle-block spillway.

It is understood that one of the benefits of channelizing the Salt River is to increase the developable acreage adjacent to the channel banks. Although the proposed realignment to the south bank, as reflected on Figure 4, would reduce a small amount of the developable area that would be reclaimed by the previous alignment, it would not be absolutely necessary to perform this realignment. As previously stated, the purpose of this realignment was merely to maintain a constant width within this reach of the improved channel in order to maintain hydraulic consistency, but a moderate width reduction at this location would not have an adverse impact on the hydraulic characteristics of the improved channel. Therefore, it is recommended that the CRSS drop structures associated with Condition III be replaced by a baffle-block spillway; that a junction levee be provided in conjunction with the spillway; and that a portion of the northern bank be realigned to accommodate the junction levee. If the loss of developable land along the south bank is also considered to be insignificant, then it is further recommended that the south bank also be realigned accordingly.

VI. REFERENCES

1. U.S. Army Corps of Engineers, "Indian Bend Wash, Design Memorandum No.1, General Design Memorandum - Phase II," 1975.

2. CRSS Commercial Group, Inc., "Initial Report, Salt River Hydraulic Design, Grade Control No. 4 to McClintock Drive Bridge," prepared for the City of Tempe, Department of Public Works, Project No. 876191, Rio Salado Park Channelization Design, January, 1990.

3. U. S. Army Corps of Engineers, Los Angeles District, "Indian Bend Wash, General Design Memorandum - Phase I," 1975.

4. U. S. Army Corps of Engineers, Los Angeles District, "Gila River and Tributaries Central Arizona Water Control Study, Hydrology Report," May, 1982.

5. U.S. Army Corps of Engineers, "HEC-2: Water Surface Profiles, Users Manual," September, 1982. Update, September, 1988.

6. Simons, Li and Associates, Inc., "Preliminary Hydraulic Analysis of the Salt River For The East Papago Freeway and Red Mountain Interchange", September, 1989.

7. Henderson, F. M., Open Channel Flow, 1966.

8. Peterka, A. J., "Hydraulic Design of Stilling Basins and Energy Dissipators," United States Department of the Interior, Bureau of Reclamation, Engineering Monograph No. 25, January 1978.

9. Simons, Li and Associates, Inc., "Design Manual for Engineering Analysis of Fluvial Systems," March, 1985.

10. Simons, Li and Associates, Inc., "Project Report: Hydraulic Model Study of Local Scour Downstream of Rigid Grade-Control Structures," February 1986.

APPENDIX A

HEC-2 INPUT/OUTPUT LISTINGS FOR THE SALT RIVER (WITH AND WITHOUT THE EAST PAPAGO FREEWAY)

```
  ED    NO
T1          SIMONS, LI & ASSOCIATES, INC. -- SALT RIVER ANALYSIS
T2 CHANNELIZATION TRANSITION TO HAYDEN RD. (EXISTING)
T3        PAZ-DMJM-03   100-YEAR FLOOD   (STA. 248+00 TO XSEC 225)
J1   -10       2       0       0       0       0       0       0  151.48       0
J2     1       0      -1       0       0       0      -1       0       0       0
J3    38       1      55      26      56      13      14      15       8       4
J3    53      54       0      38       1       2       3      11      12      42
J3     5      33      21      22      39
J5   -10     -10
J6     1
NC  .050    .050    .035      .1      .3
QT     4 215000. 160000. 135000.  93000.
X1 24800      14  10011.  10989.       0       0       0
X3    10
GR157.30  10000.  157.30  10011.  146.00  10045.  146.00  10053.  135.00  10069.
GR135.00  10410.  132.00  10416.  132.00  10816.  135.00  10822.  135.00  10931.
GR146.00  10947.  146.00  10955.  157.30  10989.  157.30  11000.
X1 25000      21   2509.   3456.     200     200     200
X3    10
GR156.00   1000.  154.00   1600.  150.00   1695.  150.00   1940.  154.00   2070.
GR150.00   2160.  150.00   2435.  157.70   2495.  157.70   2509.  138.50   2537.
GR138.50   2567.  135.50   2905.  132.50   2911.  132.50   3259.  135.50   3265.
GR138.50   3413.  138.50   3427.  157.70   3456.  157.70   3470.  141.00   3545.
GR150.00   3665.
X1 25200      18   2252.   3322.     200     200     200
X3    10
GR156.00   1000.  154.00   1500.  150.00   1700.  140.00   1890.  140.50   2180.
GR158.50   2238.  158.50   2252.  139.00   2281.  139.00   2387.  133.00   2810.
GR139.00   3233.  139.00   3293.  158.50   3322.  158.50   3336.  138.00   3390.
GR150.00   3460.  156.00   3515.  150.00   3760.
X1 25400      18   2254.   3449.     200     200     200
X3    10
GR156.00   1000.  152.00   1580.  150.00   1640.  150.00   1820.  140.00   1910.
GR144.00   2200.  159.30   2240.  159.30   2254.  139.40   2284.  139.40   2467.
GR133.40   2890.  139.40   3313.  139.40   3419.  159.30   3449.  159.30   3463.
GR140.50   3515.  157.00   3565.  150.00   3805.
X1 25600      18   2107.   3425.     200     200     200
X3    10
GR156.00   1000.  154.00   1590.  150.00   1620.  150.00   1760.  140.00   1900.
GR140.00   2030.  160.10   2093.  160.10   2107.  139.30   2137.  139.90   2397.
GR133.90   2820.  139.90   3243.  139.90   3395.  160.10   3425.  160.10   3439.
GR149.00   3475.  156.00   3635.  150.00   3700.
X1 25800      15   1980.   3436.     200     200     200
X3    10                   1980.           3436.
GR156.00   1000.  154.00   1585.  150.00   1605.  149.00   1830.  140.00   1885.
GR141.00   1980.  141.00   2135.  140.40   2362.  134.40   2785.  140.40   3208.
GR140.40   3406.  160.70   3436.  160.70   3450.  152.00   3480.  160.00   3695.
X1 26000      13   1845.   3438.     200     200     200
X3    10                   1845.           3438.
GR157.00   1000.  154.00   1570.  150.00   1745.  149.00   1845.  140.00   1950.
GR140.80   2317.  134.80   2740.  140.80   3163.  140.80   3407.  161.20   3438.
GR161.20   3452.  149.00   3520.  160.00   3525.
X1 26200      11   1755.   3474.     200     200     200
X3    10                   1755.           3374.
GR157.20   1000.  154.00   1650.  150.00   1755.  149.00   1885.  140.00   1985.
GR141.30   2307.  135.30   2730.  141.30   3153.  141.30   3443.  161.80   3474.
GR161.80   3488.
NC  .050    .050    .040      .3      .5
X1 182.1      33  11375.  13093.  180.00  180.00  180.00    .989
```

```
X3     10
GR160.00  10000.  162.00  10480.  164.00  11155.  164.00  11270.  160.00  11375.
GR154.00  11392.  152.00  11412.  150.00  11435.  148.00  11470.  146.00  11620.
GR144.00  11690.  142.00  11712.  140.00  11740.  138.00  11952.  138.00  12124.
GR138.00  12245.  136.00  12290.  134.00  12442.  136.00  12570.  138.00  12593.
GR140.00  12720.  142.00  12750.  144.00  12882.  146.00  12917.  150.00  12943.
GR152.00  12961.  152.00  13003.  154.00  13043.  156.00  13061.  158.00  13069.
GR160.00  13078.  162.00  13093.  164.00  13308.
SB  1.05    1.56     2.6      0.   1188.    124.  29965.     10.    138.    138.
X1 182.2      33  11375.  13093.     16.     16.     16.    .989
X2                     1    161.    165.
X3     10
GR160.00  10000.  162.00  10480.  164.00  11155.  164.00  11270.  160.00  11375.
GR154.00  11392.  152.00  11412.  150.00  11435.  148.00  11470.  146.00  11620.
GR144.00  11690.  142.00  11712.  140.00  11740.  138.00  11952.  138.00  12124.
GR138.00  12245.  136.00  12290.  134.00  12442.  136.00  12570.  138.00  12593.
GR140.00  12720.  142.00  12750.  144.00  12882.  146.00  12917.  150.00  12943.
GR152.00  12961.  152.00  13003.  154.00  13043.  156.00  13061.  158.00  13069.
GR160.00  13078.  162.00  13093.  164.00  13308.
X1 183.5      26  11840.  13440.    179.    179.    179.    .988
X3     10                 11840.          13440.
GR158.30  10000.  160.00  10425.  160.00  10915.  160.00  11290.  156.00  11480.
GR154.00  11580.  150.00  11715.  152.00  11840.  150.00  11925.  146.00  12045.
GR140.00  12150.  138.00  12390.  138.00  12590.  136.00  12735.  134.00  12860.
GR134.00  12900.  136.00  12970.  138.00  13000.  140.00  13115.  144.00  13260.
GR150.00  13290.  154.00  13365.  160.00  13440.  170.00  13510.  180.00  13560.
GR180.00  13730.
X1 184.1      35  11950.  13523.    175.    175.    175.    .986
X3     10
GR159.10  10000.  158.00  10295.  158.00  10410.  160.00  10630.  160.00  11155.
GR160.00  11495.  166.00  11770.  168.00  11860.  171.10  11950.  168.00  12015.
GR160.00  12035.  150.00  12055.  150.00  12125.  148.00  12140.  146.00  12155.
GR144.00  12190.  142.00  12290.  140.00  12310.  140.00  12405.  138.00  12530.
GR138.00  12815.  136.00  12835.  134.00  12945.  134.00  13065.  136.00  13140.
GR138.00  13185.  140.00  13260.  144.00  13320.  148.00  13370.  150.00  13418.
GR160.00  13485.  170.00  13523.  174.00  13686.  178.00  13793.  180.00  13988.
SB  1.25    1.56     2.6      0   1057.    183.  27394.     10    138.    138.
X1 184.2      35  11950.  13523.     20      20      20    .986
X2                     1   164.5   171.7
X3     10
GR159.10  10000.  158.00  10295.  158.00  10410.  160.00  10630.  160.00  11155.
GR160.00  11495.  166.00  11770.  168.00  11860.  171.10  11950.  168.00  12015.
GR160.00  12035.  150.00  12055.  150.00  12125.  148.00  12140.  146.00  12155.
GR144.00  12190.  142.00  12290.  140.00  12310.  140.00  12405.  138.00  12530.
GR138.00  12815.  136.00  12835.  134.00  12945.  134.00  13065.  136.00  13140.
GR138.00  13185.  140.00  13260.  144.00  13320.  148.00  13370.  150.00  13418.
GR160.00  13485.  170.00  13523.  174.00  13686.  178.00  13793.  180.00  13988.
X1 185.5      20  12060.  13575.    160     160     160   0.946
X3     10                 12060.          13575.
GR160.00  10000.  160.00  10375.  162.00  11010.  160.00  11245.  158.00  11740.
GR152.00  12060.  150.00  12175.  148.00  12210.  144.00  12260.  140.00  12460.
GR138.00  12635.  136.00  12830.  136.00  13110.  138.00  13170.  140.00  13200.
GR150.00  13385.  160.00  13535.  162.50  13575.  170.00  13690.  180.00  14130.
X1 186.1      26  12090.  13680.    160     160     160   0.883
X3     10
GR162.00  10000.  162.00  10460.  162.00  11040.  160.00  11520.  158.00  11720.
GR160.00  11820.  170.00  11875.  170.00  12090.  160.00  12120.  150.00  12160.
GR144.00  12220.  142.00  12405.  140.00  12445.  138.00  12505.  136.00  12850.
GR136.00  13215.  138.00  13240.  140.00  13275.  146.00  13390.  150.00  13490.
GR154.00  13555.  160.00  13620.  170.00  13680.  170.00  13790.  174.00  13905.
```

```
GR180.00  14210.
SB   1.0    1.56     2.6       0    905.    365.  24863.     10.    136.    136.
X1 186.2      26   12090.  13680.     48      48     48   0.883
X2                     1   166.0   174.0
X3    10
GR162.00  10000.  162.00  10460.  162.00  11040.  160.00  11520.  158.00  11720.
GR160.00  11820.  170.00  11875.  170.00  12090.  160.00  12120.  150.00  12160.
GR144.00  12220.  142.00  12405.  140.00  12445.  138.00  12505.  136.00  12850.
GR136.00  13215.  138.00  13240.  140.00  13275.  146.00  13390.  150.00  13490.
GR154.00  13555.  160.00  13620.  170.00  13680.  170.00  13790.  174.00  13905.
GR180.00  14210.
X1   188      26    8938   10392     279     281     280
X3    10
GR   158    8938     152    8995     152    9260     153    9294     152    9310
GR   150    9345     148    9377     146    9390     144    9421     142    9565
GR   140    9640     138    9720     138   10360     140   10368     142   10372
GR   150   10382     154   10392     156   10615     156   10931     154   10969
GR   152   10979     152   11058     154   11069     158   11117     160   11130
GR   170   11169
NC  .050    .050    .040      .1      .3
X1   189      33    9290   10398     200     200     195
X3    10
GR 162.5    7585   163.2    7925     162    8560     160    9015     158    9100
GR   154    9175     152    9210     150    9290     148    9301     146    9379
GR   144    9425     144    9499     142    9598     140    9620     140    9730
GR   138    9740     138    9754     136    9759     136    9800     138   10099
GR   138   10364     140   10372     142   10380     150   10390     154   10398
GR 155.9   10510     156   10638     156   10959     154   11058     154   11072
GR   156   11092     160   11141     170   11197
X1   190   38.00    9291.  10396.     199     200     201
X3    10
GR164.00 8114.00  170.00 8204.00  174.00 8384.00  172.00 8464.00  170.00 8569.00
GR162.00 8599.00  160.00 8659.00  158.00 8779.00  156.00 8864.00  154.00 8929.00
GR152.00 9029.00  150.00 9114.00  149.70 9173.00  150.00 9224.00  152.00 9273.00
GR152.00 9284.00  150.00 9291.00  148.00 9322.00  146.00 9366.00  144.00 9456.00
GR142.00 9572.00  140.00 9584.00  138.00 9626.00  138.00 9653.00  140.00 9685.00
GR142.00 9696.00  142.00 9725.00  138.00 9743.00  136.00 9882.00  136.00 9958.00
GR138.0010126.00  138.0010363.00  140.0010371.00  142.0010376.00  150.0010387.00
GR154.0010396.00  155.0010709.00  200.0010709.10
X1   191   50.00 9266.0010416.00  200.00  200.00  200.00
X3    10
GR200.00 8364.00  192.00 8414.00  180.00 8449.00  176.00 8534.00  170.00 8624.00
GR162.00 8841.00  160.00 8864.00  156.00 8886.00  154.00 8965.00  154.00 8991.00
GR156.00 9033.00  154.00 9046.00  152.00 9054.00  152.00 9127.00  152.00 9256.00
GR150.00 9266.00  148.00 9305.00  146.00 9363.00  144.00 9454.00  142.00 9474.00
GR142.00 9529.00  144.00 9539.00  142.00 9554.00  140.00 9564.00  138.00 9582.00
GR138.00 9644.00  142.00 9664.00  146.00 9697.00  148.00 9726.00  148.00 9735.00
GR140.00 9760.00  138.00 9781.00  138.00 9835.00  136.00 9873.00  134.00 9878.00
GR134.00 9919.00  136.00 9926.00  138.0010114.00  140.0010258.00  140.0010288.00
GR138.0010331.00  138.0010388.00  140.0010394.00  148.0010405.00  150.0010407.00
GR154.0010416.00  154.0010935.00  160.0010966.00  160.0011008.00  170.0011042.00
X1   192   48.00 9241.0010472.00  199.00  200.00  201.00     .00     .00     .00
X3    10
GR168.00 8883.00  168.00 8928.00  166.00 8942.00  164.00 9006.00  162.00 9016.00
GR160.00 9029.00  156.00 9049.00  156.00 9061.00  154.00 9070.00  152.00 9081.00
GR152.00 9139.00  154.00 9192.00  154.00 9225.00  152.00 9231.00  150.00 9241.00
GR148.00 9341.00  146.00 9371.00  144.00 9378.00  142.00 9482.00  140.00 9493.00
GR138.00 9531.00  138.00 9599.00  140.00 9619.00  146.00 9657.00  148.00 9711.00
GR150.00 9738.00  140.00 9771.00  138.00 9791.00  136.00 9828.00  136.00 9976.00
GR138.0010076.00  140.0010231.00  140.0010436.00  150.0010462.00  154.0010472.00
```

```
GR154.9010719.00  154.0010861.00  154.0010883.00  160.0010894.00  154.0010904.00
GR154.0010920.00  160.0010928.00  160.0010950.00  162.0010992.00  164.0011009.00
GR166.0011033.00  168.0011042.00  170.0011067.00     .00     .00     .00     .00
X1   193   46.00 9235.0010483.00  200.00  200.00  195.00     .00     .00     .00
X3    10
GR220.00 8615.00  200.00 8698.00  180.00 8790.00  170.00 8856.00  170.00 8916.00
GR160.00 8968.00  158.00 8984.00  156.00 9004.00  154.00 9025.00  154.00 9090.00
GR152.00 9235.00  150.00 9261.00  148.00 9266.00  146.00 9293.00  146.00 9354.00
GR144.00 9423.00  142.00 9456.00  140.00 9470.00  140.00 9587.00  144.00 9604.00
GR146.00 9625.00  148.00 9687.00  150.00 9697.00  152.00 9715.00  152.00 9726.00
GR140.00 9770.00  138.00 9784.00  136.00 9825.00  135.20 9874.00  136.00 9955.00
GR138.0010037.00  140.0010213.00  142.0010321.00  142.0010376.00  140.0010409.00
GR140.0010444.00  150.0010468.00  152.0010475.00  154.0010483.00  154.0010821.00
GR152.1010837.00  154.0010845.00  160.0010855.00  160.0010904.00  166.0010944.00
GR170.0010956.00     .00     .00     .00     .00     .00     .00     .00     .00
X1   194   40.00 9182.0010480.00  200.00  200.00  200.00     .00     .00     .00
X3    10
GR209.00 8867.00  200.00 8940.00  180.00 8993.00  170.00 9012.00  160.00 9017.00
GR160.00 9062.00  158.00 9071.00  156.00 9076.00  156.00 9122.00  154.00 9182.00
GR152.00 9207.00  146.00 9235.00  146.00 9296.00  144.00 9362.00  142.00 9386.00
GR142.00 9571.00  144.00 9623.00  146.00 9644.00  148.00 9656.00  150.00 9661.00
GR154.00 9681.00  154.00 9701.00  150.00 9712.00  142.00 9748.00  140.00 9770.00
GR138.00 9780.00  136.00 9832.00  136.00 9940.00  138.0010002.00  140.0010186.00
GR142.0010296.00  142.0010401.00  140.0010440.00  140.0010452.00  150.0010470.00
GR154.0010480.00  154.0010803.00  160.0010822.00  160.0010867.00  170.0010886.00
X1   195   35.00 9160.0010489.00  212.00  187.00  220.00     .00     .00     .00
X3    10
GR180.00 8940.00  160.00 8956.00  150.00 8970.00  156.00 8995.00  156.00 9029.00
GR150.00 9040.00  160.00 9057.00  160.00 9128.00  158.00 9160.00  150.00 9178.00
GR146.00 9210.00  144.00 9320.00  142.00 9355.00  142.00 9411.00  144.00 9457.00
GR144.00 9610.00  150.00 9651.00  154.00 9661.00  154.00 9687.00  150.00 9696.00
GR144.00 9728.00  142.00 9742.00  140.00 9778.00  138.00 9791.00  138.00 9992.00
GR140.0010184.00  142.0010262.00  142.0010470.00  150.0010479.00  154.0010489.00
GR156.0010875.00  160.0010889.00  160.0010940.00  164.0010948.00  170.0010975.00
X1   196   43.00 9149.0010516.00  155.00  235.00  192.00     .00     .00     .00
X3    10
GR180.00 8910.00  150.00 8930.00  156.00 8964.00  156.00 8990.00  150.00 9000.00
GR160.00 9020.00  162.00 9030.00  162.00 9110.00  160.00 9149.00  150.00 9169.00
GR146.00 9179.00  144.00 9271.00  144.00 9373.00  142.00 9387.00  142.00 9419.00
GR144.00 9479.00  146.00 9653.00  150.00 9670.00  154.00 9678.00  154.00 9701.00
GR150.00 9710.00  148.00 9718.00  146.00 9730.00  142.00 9793.00  140.00 9816.00
GR138.00 9848.00  138.0010005.00  140.0010200.00  142.0010297.00  142.0010496.00
GR150.0010508.00  154.0010516.00  156.0011043.00  158.0011047.00  160.0011065.00
GR160.0011125.00  162.0011139.00  161.7011281.00  162.0011324.00  164.0011372.00
GR166.0011384.00  168.0011402.00  170.0011432.00     .00     .00     .00     .00
X1   197   50.00 9260.0010719.00  180.00  245.00  211.00     .00     .00     .00
X3    10
GR180.00 8815.00  170.00 8828.00  170.00 8847.00  166.00 8862.00  164.00 8872.00
GR162.00 8903.00  160.00 8918.00  150.00 8975.00  152.00 8985.00  154.00 9046.00
GR154.00 9070.00  150.00 9082.00  160.00 9107.00  162.00 9111.00  162.00 9252.00
GR160.00 9260.00  150.00 9280.00  148.00 9290.00  146.00 9302.00  144.00 9637.00
GR144.00 9661.00  146.00 9693.00  146.00 9819.00  150.00 9829.00  156.00 9849.00
GR156.00 9883.00  154.00 9885.00  150.00 9898.00  148.00 9901.00  146.00 9915.00
GR140.00 9997.00  138.0010045.00  138.0010065.00  140.0010399.00  144.0010554.00
GR144.0010662.00  142.0010675.00  142.0010701.00  150.0010711.00  154.0010719.00
GR156.0011229.00  156.0011416.00  158.0011432.00  160.0011443.00  160.0011507.00
GR164.0011537.00  166.0011563.00  166.0011611.00  168.0011617.00  170.0011628.00
X1   198   41.00 9015.0010547.00  155.00  260.00  205.00     .00     .00     .00
X3    10
GR180.00 8655.00  170.00 8675.00  164.00 8690.00  162.00 8706.00  160.00 8725.00
```

```
GR150.00 8765.00  152.00 8774.00  154.00 8836.00  154.00 8848.00  150.00 8859.00
GR160.00 8885.00  162.00 8887.00  162.00 9005.00  160.00 9015.00  150.00 9045.00
GR146.00 9073.00  146.00 9575.00  150.00 9592.00  156.00 9613.00  156.00 9637.00
GR154.00 9650.00  150.00 9675.00  148.00 9680.00  144.00 9715.00  140.00 9795.00
GR140.0010162.00  142.0010253.00  144.0010335.00  146.0010505.00  150.0010512.00
GR154.0010523.00  156.0010547.00  156.0010955.00  158.0011293.00  160.0011304.00
GR164.0011313.00  164.0011351.00  160.0011364.00  160.0011375.00  164.0011425.00
GR174.0011487.00
X1   199   37.00 8910.0010580.00  190.00  220.00  193.00     .00     .00     .00
GR180.00 8430.00  170.00 8460.00  168.00 8530.00  164.00 8689.00  162.00 8798.00
GR162.00 8878.00  160.00 8910.00  148.00 9000.00  148.00 9170.00  146.00 9290.00
GR146.00 9511.00  148.00 9549.00  150.00 9559.00  156.00 9585.00  156.00 9621.00
GR154.00 9631.00  150.00 9650.00  148.00 9660.00  142.00 9777.00  140.00 9840.00
GR140.00 9858.00  142.0010270.00  146.0010442.00  148.0010510.00  150.0010530.00
GR152.0010555.00  154.0010570.00  156.0010580.00  158.0011295.00  160.0011319.00
GR160.0011371.00  164.0011397.00  166.0011410.00  168.0011420.00  170.0011440.00
GR172.0011460.00  174.0011474.00     .00     .00     .00     .00     .00     .00
X1   200   46.00 8875.0010575.00  190.00  210.00  205.00     .00     .00     .00
GR180.00 8275.00  178.00 8294.00  168.00 8573.00  164.00 8725.00  162.00 8827.00
GR160.00 8875.00  158.00 8895.00  156.00 8904.00  154.00 8935.00  150.00 8970.00
GR148.00 8984.00  148.00 9195.00  146.00 9293.00  146.00 9505.00  150.00 9536.00
GR156.00 9562.00  156.00 9632.00  152.00 9646.00  150.00 9653.00  148.00 9665.00
GR142.00 9762.00  142.0010304.00  144.0010367.00  146.0010423.00  148.0010437.00
GR150.0010466.00  152.0010493.00  152.0010536.00  150.0010545.00  150.0010554.00
GR156.0010573.00  158.0010575.00  158.0011283.00  160.0011344.00  160.0011371.00
GR162.0011385.00  164.0011495.00  166.0011504.00  168.0011519.00  166.0011534.00
GR165.0011547.00  166.0011580.00  168.0011630.00  170.0011672.00  172.0011683.00
GR178.0011720.00
X1   201   37.00 8940.0010572.00  190.00  205.00  199.00     .00     .00     .00
GR180.00 8380.00  178.00 8449.00  174.00 8465.00  172.00 8508.00  170.00 8530.00
GR168.00 8540.00  166.00 8561.00  164.00 8622.00  162.00 8712.00  160.00 8940.00
GR150.00 9050.00  148.00 9108.00  146.00 9341.00  146.00 9561.00  150.00 9588.00
GR156.00 9611.00  156.00 9682.00  154.00 9690.00  150.00 9705.00  148.00 9718.00
GR144.00 9780.00  142.0010049.00  142.0010380.00  146.0010441.00  152.0010467.00
GR154.0010498.00  154.0010561.00  156.0010565.00  158.0010572.00  158.0011310.00
GR160.0011380.00  160.0011460.00  164.0011520.00  170.0011560.00  172.0011568.00
GR174.0011577.00  178.0011628.00     .00     .00     .00     .00     .00     .00
X1   202   35.00 9010.0010450.00  240.00  155.00  201.00     .00     .00     .00
GR180.00 8405.00  174.00 8433.00  172.00 8456.00  170.00 8473.00  162.00 8656.00
GR160.00 8798.00  158.00 9010.00  156.00 9066.00  152.00 9082.00  148.00 9107.00
GR147.50 9237.00  148.00 9361.00  148.00 9429.00  146.00 9498.00  150.00 9606.00
GR156.00 9637.00  156.00 9705.00  150.00 9727.00  146.00 9753.00  144.00 9814.00
GR142.0010070.00  140.0010326.00  144.0010424.00  150.0010435.00  156.0010445.00
GR158.0010450.00  158.0010905.00  159.4011185.00  160.0011520.00  160.0011607.00
GR164.0011643.00  166.0011678.00  170.0011705.00  172.0011710.00  174.0011755.00
X1   203   40.00 9056.0010447.00  275.00  105.00  201.00     .00     .00     .00
GR180.00 8385.00  172.00 8414.00  170.00 8445.00  168.00 8485.00  166.00 8497.00
GR164.00 8523.00  162.00 8603.00  164.00 8632.00  164.00 8695.00  162.00 8728.00
GR160.00 8744.00  160.00 8877.00  162.00 8888.00  160.00 8901.00  158.00 9056.00
GR156.00 9075.00  148.00 9101.00  148.00 9587.00  150.00 9599.00  156.00 9630.00
GR156.00 9707.00  150.00 9732.00  148.00 9742.00  146.00 9759.00  144.00 9855.00
GR142.0010098.00  140.7010268.00  140.0010292.00  138.3010348.00  140.0010377.00
GR150.0010425.00  156.0010437.00  160.0010447.00  160.0010809.00  158.3010972.00
GR160.0011155.00  160.0011569.00  162.0011612.00  164.0011663.00  166.0011785.00
X1   204   42.00 9140.0010482.00  190.00  205.00  196.00     .00     .00     .00
GR180.00 8020.00  170.00 8050.00  166.00 8070.00  166.00 8210.00  168.00 8252.00
GR168.00 8282.00  166.00 8298.00  164.00 8415.00  162.00 8520.00  160.00 8700.00
GR158.00 8898.00  158.00 9072.00  156.00 9140.00  150.00 9150.00  148.00 9158.00
GR148.00 9599.00  150.00 9610.00  156.00 9637.00  156.00 9730.00  150.00 9748.00
GR148.00 9750.00  146.00 9760.00  144.00 9870.00  142.9010013.00  142.0010116.00
```

```
GR142.0010427.00  144.0010438.00  150.0010450.00  156.0010461.00  158.0010469.00
GR160.0010482.00  160.0011140.00  162.0011398.00  164.0011412.00  160.0011652.00
GR160.0012151.00  162.0012170.00  164.0012230.00  166.0012288.00  166.0012431.00
GR168.0012568.00  170.0012770.00      .00      .00      .00      .00      .00      .00
X1   205    35.00 9164.0010482.00  205.00  205.00  197.00      .00      .00      .00
GR180.00 7840.00  170.00 7872.00  164.00 7885.00  162.00 8000.00  162.00 8211.00
GR160.00 8520.00  158.00 8798.00  156.00 9164.00  150.00 9178.00  148.00 9185.00
GR148.00 9226.00  150.00 9635.00  156.00 9658.00  156.00 9770.00  150.00 9790.00
GR148.00 9801.00  146.00 9825.00  144.00 9878.00  142.0010098.00  142.0010450.00
GR144.0010460.00  150.0010469.00  156.0010478.00  158.0010482.00  160.0010611.00
GR160.0011480.00  158.0011940.00  158.0012019.00  160.0012188.00  164.0012310.00
GR164.0012488.00  166.0012579.00  170.0012609.00  172.0012687.00  174.0012725.00
X1   206    51.00 9145.0010530.00  200.00  200.00  205.00      .00      .00      .00
GR173.10 6725.00  172.00 6735.00  170.00 6745.00  168.00 6757.00  166.00 7058.00
GR166.00 7253.00  164.00 7365.00  164.00 7464.00  162.00 7554.00  160.00 8002.00
GR158.70 8174.00  158.00 8926.00  158.00 9013.00  159.40 9058.00  158.00 9075.00
GR158.00 9145.00  156.00 9156.00  150.00 9166.00  148.00 9171.00  148.00 9254.00
GR150.00 9576.00  152.00 9674.00  154.00 9685.00  156.00 9730.00  156.00 9802.00
GR154.00 9837.00  152.00 9855.00  150.00 9864.00  148.00 9870.00  144.00 9905.00
GR142.0010057.00  142.0010474.00  144.0010485.00  150.0010510.00  156.0010523.00
GR158.0010530.00  158.0010866.00  160.0010876.00  162.0011077.00  163.1011257.00
GR160.0011338.00  158.9011369.00  160.0011407.00  163.5011550.00  158.8011805.00
GR160.0011985.00  160.0012203.00  164.0012355.00  166.0012636.00  170.8012698.00
GR172.0012870.00      .00      .00      .00      .00      .00      .00      .00      .00
X1   207    58.00 9048.0010573.00  200.00  200.00  206.00      .00      .00      .00
GR173.80 6510.00  172.00 6515.00  170.00 6525.00  168.00 6533.00  166.00 6543.00
GR166.00 6661.00  164.00 7138.00  162.00 7154.00  160.00 7180.00  160.00 7210.00
GR159.00 7289.00  158.90 7657.00  159.40 8020.00  160.00 8740.00  160.00 8939.00
GR158.00 9048.00  150.00 9060.00  148.00 9069.00  148.00 9138.00  150.00 9503.00
GR152.00 9584.00  154.00 9610.00  154.00 9710.00  152.00 9790.00  150.00 9798.00
GR146.00 9810.00  144.00 9835.00  142.00 9960.00  140.0010120.00  140.0010169.00
GR142.0010208.00  143.0010320.00  144.0010418.00  150.0010438.00  154.0010444.00
GR158.0010450.00  158.0010490.00  160.0010499.00  162.0010509.00  164.0010533.00
GR166.0010573.00  166.0010590.00  160.0010775.00  158.0010785.00  158.0010790.00
GR160.0010805.00  162.5010908.00  162.0011006.00  160.6011031.00  165.0011468.00
GR158.9011609.00  160.0011710.00  162.0011790.00  162.0012130.00  160.0012139.00
GR160.0012239.00  166.0012490.00  172.0012740.00      .00      .00      .00      .00
X1   208    53.00 9140.0010671.00  300.00  170.00  230.00      .00      .00      .00
GR175.50 6375.00  168.00 6440.00  166.00 6525.00  164.50 6687.00  164.00 7001.00
GR162.00 7130.00  160.80 7557.00  160.80 8463.00  160.00 9013.00  158.00 9140.00
GR152.00 9154.00  150.00 9160.00  148.00 9168.00  148.00 9380.00  146.00 9405.00
GR146.00 9513.00  148.00 9527.00  150.00 9555.00  150.00 9593.00  152.00 9675.00
GR152.00 9766.00  154.00 9804.00  156.00 9891.00  156.00 9896.00  150.00 9915.00
GR148.00 9937.00  146.00 9979.00  142.0010044.00  142.0010334.00  144.0010513.00
GR150.0010550.00  156.0010561.00  158.0010564.00  158.0010619.00  162.0010634.00
GR166.0010671.00  166.0010733.00  164.0010880.00  158.0010911.00  158.0010916.00
GR162.7011054.00  160.0011137.00  160.0011157.00  163.4011554.00  159.8011735.00
GR160.0011795.00  160.0012017.00  159.5012221.00  160.0012336.00  162.0012365.00
GR162.0012383.00  170.0012744.00  172.0012883.00      .00      .00      .00      .00
NC                              .3       .5
X1210.00       59 3862.00 5191.00  335.00  220.00  285.00      .00      .00      .00
GR166.70 1000.00  166.00 1030.00  166.00 1072.00  164.00 1497.00  162.00 2215.00
GR162.00 3458.00  164.00 3535.00  166.00 3627.00  168.00 3698.00  170.00 3773.00
GR172.30 3844.00  172.60 3860.00  166.00 3862.00  164.00 3871.00  160.00 3880.00
GR150.00 3909.00  148.00 3917.00  147.50 3979.50  147.50 3984.60  146.50 4100.50
GR146.50 4105.60  146.00 4170.00  145.50 4221.50  145.50 4226.60  145.40 4240.00
GR145.40 4240.00  145.10 4342.50  145.10 4347.60  144.70 4463.50  144.70 4468.60
GR144.30 4584.50  144.30 4589.60  144.00 4685.00  144.00 4705.50  144.00 4710.60
GR144.00 4826.50  144.00 4831.60  144.00 4947.50  144.00 4952.60  144.00 5068.50
GR144.00 5073.60  144.00 5101.00  146.00 5122.00  148.00 5153.00  150.00 5160.00
```

```
GR166.00 5191.00  172.30 5209.00  168.00 5331.00  168.00 5366.00  166.00 5421.00
GR164.00 5492.00  162.00 5553.00  160.00 5729.00  160.00 7017.00  162.00 7288.00
GR164.00 7356.00  168.00 7449.00  170.00 7522.00  174.00 7658.00
X1210.10      78 3862.00 5191.00   10.00   10.00   10.00     .00     .00     .00
BT   -24  3860.0   172.6   172.6  3862.0   172.6   166.0  3979.6   175.0   168.4
BT        3984.5   175.0   168.4  4100.6   177.0   170.4  4105.5   177.0   170.4
BT        4221.6   178.4   171.8  4226.5   178.4   171.8  4342.6   179.4   172.8
BT        4347.5   179.4   172.8  4463.6   179.9   173.3  4468.5   179.9   173.3
BT        4584.6   179.9   173.3  4589.5   179.9   173.3  4705.6   179.4   172.8
BT        4710.5   179.4   172.8  4826.6   178.4   171.8  4831.5   178.4   171.8
BT        4947.6   177.0   170.4  4952.5   177.0   170.4  5068.6   175.0   168.4
BT        5073.5   175.0   168.4  5191.0   172.6   166.0  5209.0   172.3   172.3
GR166.70 1000.00  166.00 1030.00  166.00 1072.00  164.00 1497.00  162.00 2215.00
GR162.00 3458.00  164.00 3535.00  166.00 3627.00  168.00 3698.00  170.00 3773.00
GR172.30 3844.00  172.60 3860.00  166.00 3862.00  164.00 3871.00  160.00 3880.00
GR150.00 3909.00  148.00 3917.00  147.50 3979.50  168.40 3979.60  168.40 3984.50
GR147.50 3984.60  146.50 4100.50  170.40 4100.60  170.40 4105.50  146.50 4105.60
GR146.00 4170.00  145.50 4221.50  171.80 4221.60  171.80 4226.50  145.50 4226.60
GR145.40 4240.00  145.10 4342.50  172.80 4342.60  172.80 4347.50  145.10 4347.60
GR144.70 4463.50  173.30 4463.60  173.30 4468.50  144.70 4468.60  144.30 4584.50
GR173.30 4584.60  173.30 4589.50  144.30 4589.60  144.00 4685.00  144.00 4705.50
GR172.80 4705.60  172.80 4710.50  144.00 4710.60  144.00 4826.50  171.80 4826.60
GR171.80 4831.50  144.00 4831.60  144.00 4947.50  170.40 4947.60  170.40 4952.50
GR144.00 4952.60  144.00 5068.50  168.40 5068.60  168.40 5073.50  144.00 5073.60
GR144.00 5101.00  146.00 5122.00  148.00 5153.00  150.00 5160.00  166.00 5191.00
GR172.30 5209.00  168.00 5331.00  168.00 5366.00  166.00 5421.00  164.00 5492.00
GR162.00 5553.00  160.00 5729.00  160.00 7017.00  162.00 7288.00  164.00 7356.00
GR168.00 7449.00  170.00 7522.00  174.00 7658.00
X1211.00      78 3862.00 5191.00   95.00   95.00   95.00     .00     .00     .00
BT   -24  3860.0   172.6   172.6  3862.0   172.6   166.0  3979.6   175.0   168.4
BT        3984.5   175.0   168.4  4100.6   177.0   170.4  4105.5   177.0   170.4
BT        4221.6   178.4   171.8  4226.5   178.4   171.8  4342.6   179.4   172.8
BT        4347.5   179.4   172.8  4463.6   179.9   173.3  4468.5   179.9   173.3
BT        4584.6   179.9   173.3  4589.5   179.9   173.3  4705.6   179.4   172.8
BT        4710.5   179.4   172.8  4826.6   178.4   171.8  4831.5   178.4   171.8
BT        4947.6   177.0   170.4  4952.5   177.0   170.4  5068.6   175.0   168.4
BT        5073.5   175.0   168.4  5191.0   172.6   166.0  5209.0   172.3   172.3
GR166.70 1000.00  166.00 1030.00  166.00 1072.00  164.00 1497.00  162.00 2215.00
GR162.00 3458.00  164.00 3535.00  166.00 3627.00  168.00 3698.00  170.00 3773.00
GR172.30 3844.00  172.60 3860.00  166.00 3862.00  164.00 3871.00  160.00 3880.00
GR150.00 3909.00  148.00 3917.00  147.50 3979.50  168.40 3979.60  168.40 3984.50
GR147.50 3984.60  146.50 4100.50  170.40 4100.60  170.40 4105.50  146.50 4105.60
GR146.00 4170.00  145.50 4221.50  171.80 4221.60  171.80 4226.50  145.50 4226.60
GR145.40 4240.00  145.10 4342.50  172.80 4342.60  172.80 4347.50  145.10 4347.60
GR144.70 4463.50  173.30 4463.60  173.30 4468.50  144.70 4468.60  144.30 4584.50
GR173.30 4584.60  173.30 4589.50  144.30 4589.60  144.00 4685.00  144.00 4705.50
GR172.80 4705.60  172.80 4710.50  144.00 4710.60  144.00 4826.50  171.80 4826.60
GR171.80 4831.50  144.00 4831.60  144.00 4947.50  170.40 4947.60  170.40 4952.50
GR144.00 4952.60  144.00 5068.50  168.40 5068.60  168.40 5073.50  144.00 5073.60
GR144.00 5101.00  146.00 5122.00  148.00 5153.00  150.00 5160.00  166.00 5191.00
GR172.30 5209.00  168.00 5331.00  168.00 5366.00  166.00 5421.00  164.00 5492.00
GR162.00 5553.00  160.00 5729.00  160.00 7017.00  162.00 7288.00  164.00 7356.00
GR168.00 7449.00  170.00 7522.00  174.00 7658.00
X1211.10      59 3862.00 5191.00   10.00   10.00   10.00     .00     .00     .00
GR166.70 1000.00  166.00 1030.00  166.00 1072.00  164.00 1497.00  162.00 2215.00
GR162.00 3458.00  164.00 3535.00  166.00 3627.00  168.00 3698.00  170.00 3773.00
GR172.30 3844.00  172.60 3860.00  166.00 3862.00  164.00 3871.00  160.00 3880.00
GR150.00 3909.00  148.00 3917.00  147.50 3979.50  147.50 3984.60  146.50 4100.50
GR146.50 4105.60  146.00 4170.00  145.50 4221.50  145.50 4226.60  145.40 4240.00
GR145.40 4240.00  145.10 4342.50  145.10 4347.60  144.70 4463.50  144.70 4468.60
```

```
GR144.30 4584.50  144.30 4589.60  144.00 4685.00  144.00 4705.50  144.00 4710.60
GR144.00 4826.50  144.00 4831.60  144.00 4947.50  144.00 4952.60  144.00 5068.50
GR144.00 5073.60  144.00 5101.00  146.00 5122.00  148.00 5153.00  150.00 5160.00
GR166.00 5191.00  172.30 5209.00  168.00 5331.00  168.00 5366.00  166.00 5421.00
GR164.00 5492.00  162.00 5553.00  160.00 5729.00  160.00 7017.00  162.00 7288.00
GR164.00 7356.00  168.00 7449.00  170.00 7522.00  174.00 7658.00
X1212.00       57 3631.00 5094.00  170.00  190.00  180.00     .00     .00     .00
GR167.00 1000.00  166.50 1200.00  166.00 1451.00  164.00 1466.00  162.00 1537.00
GR161.50 2800.00  161.40 3130.00  162.00 3252.00  162.00 3318.00  161.90 3406.00
GR160.00 3462.00  156.00 3472.00  154.00 3545.00  152.00 3562.00  148.00 3585.00
GR148.00 3600.00  150.00 3608.00  160.00 3621.00  162.00 3631.00  160.00 3645.00
GR150.00 3689.00  148.00 3691.00  148.00 3758.00  150.00 3764.00  150.00 3882.00
GR148.00 3956.00  148.00 4140.00  146.00 4180.00  146.00 4393.00  146.00 4460.00
GR144.00 4600.00  146.00 4742.00  146.00 4772.00  144.00 4842.00  144.00 4961.00
GR148.00 5000.00  150.00 5008.00  160.00 5049.00  162.00 5094.00  164.00 5107.00
GR166.00 5130.00  168.00 5136.00  169.00 5235.00  168.00 5282.00  166.00 5388.00
GR164.00 5415.00  162.00 5433.00  162.00 5920.00  160.00 6090.00  160.00 6130.00
GR162.00 6385.00  162.40 6490.00  162.00 6723.00  162.00 7036.00  168.00 7187.00
GR170.00 7250.00  172.00 7389.00
NC                           .1      .3
X1   213    60.00 9070.0010679.00  190.00  220.00  210.00     .00     .00     .00
GR166.30 6440.00  166.00 6455.00  166.00 6696.00  165.20 6825.00  164.00 7065.00
GR162.90 7098.00  162.00 7136.00  162.00 7157.00  162.40 7865.00  162.00 8021.00
GR162.00 8151.00  162.80 8178.00  162.00 8181.00  162.00 8932.00  160.00 9070.00
GR156.00 9083.00  156.00 9141.00  160.00 9150.00  162.00 9158.00  162.00 9178.00
GR160.00 9185.00  158.00 9197.00  156.00 9221.00  154.00 9291.00  152.00 9322.00
GR152.00 9470.00  152.30 9516.00  152.00 9542.00  150.00 9690.00  148.00 9708.00
GR148.00 9728.00  150.00 9738.00  150.00 9905.00  148.00 9995.00  146.0010080.00
GR146.0010333.00  146.0010400.00  144.0010479.00  143.6010506.00  144.0010558.00
GR144.0010621.00  148.0010646.00  150.0010657.00  160.0010679.00  162.0010720.00
GR164.0010735.00  164.0010896.00  162.0010902.00  160.0010928.00  160.0011148.00
GR162.0011159.00  162.0011680.00  160.0011715.00  160.0011808.00  162.0011835.00
GR164.0012015.00  166.0012184.00  168.0012501.00  170.0012875.00  172.0012978.00
X1   214    48.00 9064.0010695.00  250.00  155.00  200.00     .00     .00     .00
GR166.00 6655.00  165.20 6671.00  166.00 6805.00  166.00 7053.00  164.00 7060.00
GR164.00 7095.00  162.00 7130.00  162.00 7157.00  162.90 8185.00  162.00 8200.00
GR162.00 8890.00  160.00 9064.00  158.00 9173.00  156.00 9250.00  154.00 9263.00
GR152.00 9350.00  150.00 9614.00  150.00 9664.00  152.00 9676.00  152.00 9687.00
GR150.00 9693.00  150.00 9773.00  148.00 9863.00  146.00 9890.00  144.00 9930.00
GR143.7010014.00  144.0010036.00  146.0010195.00  146.0010405.00  144.0010620.00
GR144.0010634.00  148.0010653.00  150.0010666.00  160.0010695.00  162.0010735.00
GR162.0011050.00  160.5011075.00  162.0011130.00  162.0011715.00  160.0011720.00
GR160.0011755.00  162.0011813.00  164.0011880.00  166.0012145.00  166.0012895.00
GR168.0012908.00  170.0012913.00  172.0013008.00     .00     .00     .00     .00
X1   215    59.00 9320.0010744.00  245.00  160.00  195.00     .00     .00     .00
GR166.80 6425.00  166.40 6573.00  166.00 6787.00  164.00 6900.00  164.00 7117.00
GR163.10 7676.00  162.00 7885.00  162.00 8127.00  161.60 8153.00  162.00 8197.00
GR162.00 8226.00  161.90 8784.00  162.00 8975.00  162.00 8984.00  161.30 9015.00
GR160.00 9080.00  160.00 9133.00  162.00 9235.00  162.00 9320.00  160.00 9323.00
GR152.00 9343.00  150.00 9450.00  150.00 9550.00  152.00 9556.00  152.00 9567.00
GR150.00 9575.00  148.00 9585.00  146.00 9736.00  144.00 9753.00  144.00 9795.00
GR146.00 9877.00  148.0010033.00  150.0010072.00  152.0010080.00  152.0010130.00
GR150.0010225.00  148.0010255.00  146.0010426.00  146.0010589.00  148.0010622.00
GR148.0010685.00  150.0010704.00  152.0010710.00  160.0010734.00  162.0010744.00
GR163.3010865.00  162.0011065.00  160.0011087.00  158.0011115.00  158.0011136.00
GR160.0011146.00  162.0011168.00  164.0011378.00  164.0011423.00  162.0011647.00
GR162.0012815.00  164.0012913.00  170.0012976.00  172.0013045.00     .00     .00
X1   216    62.00 9332.0010778.00  220.00  190.00  200.00     .00     .00     .00
GR168.10 6790.00  168.00 6980.00  168.00 7035.00  166.00 7048.00  164.00 7092.00
GR162.20 7996.00  162.00 8135.00  162.00 8182.00  162.70 8208.00  162.00 8214.00
```

```
GR162.00 9170.00  164.00 9280.00  164.00 9332.00  160.00 9345.00  152.00 9362.00
GR150.00 9389.00  148.00 9455.00  148.00 9530.00  146.00 9639.00  146.00 9673.00
GR148.00 9763.00  150.00 9796.00  152.00 9810.00  154.00 9908.00  156.00 9917.00
GR156.6010003.00  156.0010100.00  154.0010120.00  152.0010165.00  150.0010215.00
GR148.0010260.00  146.0010510.00  146.0010560.00  148.0010605.00  150.0010635.00
GR150.0010668.00  148.0010675.00  148.0010689.00  150.0010709.00  152.0010729.00
GR160.0010763.00  162.0010778.00  162.0011010.00  160.0011059.00  156.0011088.00
GR155.6011099.00  156.0011105.00  160.0011120.00  162.0011159.00  164.0011818.00
GR164.0011930.00  164.0012301.00  168.0012311.00  168.0012320.00  168.0012490.00
GR166.0012551.00  164.0012611.00  164.0012761.00  166.0012791.00  168.0012809.00
GR170.0012892.00  172.0013042.00     .00     .00     .00     .00     .00     .00
X1   217   47.00 9109.0010810.00  310.00   65.00  201.00     .00     .00     .00
GR168.50 6970.00  168.00 7011.00  166.00 7029.00  164.00 7057.00  162.00 7679.00
GR162.00 9000.00  160.00 9109.00  154.00 9112.00  154.00 9122.00  160.00 9131.00
GR162.00 9255.00  162.00 9265.00  160.00 9275.00  154.00 9289.00  152.00 9318.00
GR150.00 9371.00  148.00 9473.00  148.00 9620.00  150.00 9709.00  152.00 9727.00
GR154.00 9782.00  156.00 9809.00  156.0010075.00  154.0010091.00  152.0010158.00
GR148.0010279.00  148.0010608.00  150.0010631.00  152.0010650.00  152.0010687.00
GR150.0010690.00  150.0010710.00  152.0010720.00  152.0010750.00  154.0010795.00
GR160.0010807.00  162.0010810.00  162.7010900.00  162.0011055.00  160.0011068.00
GR158.0011078.00  160.0011090.00  164.0011808.00  164.0012178.00  166.0012304.00
GR170.0012318.00  172.0013049.00     .00     .00     .00     .00     .00     .00
X1   218   50.00 9030.0010706.00  360.00  430.00  398.00     .00     .00     .00
GR168.60 6745.00  168.00 6757.00  167.40 6796.00  168.00 6825.00  168.30 6955.00
GR168.00 7007.00  166.80 7398.00  168.00 7705.00  168.00 7775.00  166.00 8454.00
GR164.00 8624.00  164.00 8763.00  162.00 8796.00  162.00 8822.00  160.00 8833.00
GR160.00 8860.00  161.60 8946.00  160.00 9030.00  154.00 9041.00  152.00 9044.00
GR150.00 9054.00  148.90 9265.00  150.00 9370.00  152.00 9466.00  156.00 9558.00
GR156.00 9744.00  155.70 9783.00  154.00 9892.00  148.0010049.00  148.0010240.00
GR150.0010367.00  152.0010400.00  154.0010459.00  154.6010480.00  154.0010495.00
GR152.0010587.00  152.0010618.00  154.0010666.00  160.0010704.00  162.0010706.00
GR164.0010840.00  164.0010955.00  162.0011182.00  162.0011365.00  164.0011655.00
GR166.0011865.00  168.0012036.00  168.0012304.00  170.0012583.00  172.0012767.00
X1   219   45.00 9199.0010978.00  465.00  295.00  400.00     .00     .00     .00
X3    10
GR168.80 6755.00  168.00 7113.00  167.80 7173.00  168.00 7215.00  168.00 7705.00
GR169.20 7910.00  168.00 8168.00  168.00 8774.00  166.60 8805.00  166.00 8818.00
GR164.00 8875.00  160.00 8885.00  154.20 8901.00  160.00 8915.00  162.00 8920.00
GR162.00 8981.00  161.50 9114.00  160.00 9199.00  156.00 9227.00  150.00 9275.00
GR148.10 9413.00  150.00 9561.00  154.00 9708.00  156.00 9729.00  158.00 9767.00
GR158.00 9947.00  156.0010015.00  154.0010040.00  148.0010180.00  148.0010274.00
GR150.0010373.00  151.1010485.00  152.0010735.00  154.0010747.00  156.0010930.00
GR164.0010978.00  164.0011596.00  166.0011624.00  168.0011895.00  170.0012213.00
GR168.0012314.00  168.0012424.00  170.0012441.00  172.0012526.00  174.0012866.00
X1   220   40.00 9356.0011283.00  385.00  390.00  400.00     .00     .00     .00
X3    10
GR169.80 8225.00  168.50 8640.00  166.00 8805.00  164.00 8897.00  162.00 9045.00
GR162.00 9197.00  160.00 9272.00  162.00 9335.00  162.00 9356.00  160.00 9371.00
GR158.00 9377.00  150.00 9405.00  148.00 9423.00  147.30 9512.00  148.00 9575.00
GR150.00 9655.00  152.00 9742.00  158.00 9825.00  158.00 9913.00  154.00 9984.00
GR154.0010054.00  152.0010123.00  150.0010203.00  148.0010330.00  148.0010401.00
GR150.0010516.00  156.0010646.00  156.0010907.00  154.0010963.00  152.0010997.00
GR152.0011045.00  156.0011077.00  158.0011204.00  160.0011235.00  166.0011283.00
GR166.0011515.00  168.0011953.00  170.0012182.00  172.0012483.00  174.0012865.00
X1   221   46.00 9306.0010664.00  385.00  410.00  403.00     .00     .00     .00
GR173.80 7805.00  172.00 7843.00  170.00 8282.00  168.00 8435.00  166.00 8640.00
GR165.70 8673.00  166.00 8715.00  166.00 8916.00  162.00 8945.00  160.90 8955.00
GR162.00 8980.00  164.00 9095.00  165.70 9195.00  164.00 9215.00  162.00 9306.00
GR158.00 9315.00  150.00 9334.00  150.00 9358.00  152.00 9395.00  152.00 9416.00
GR150.00 9425.00  148.00 9437.00  148.00 9513.00  150.00 9614.00  152.00 9677.00
```

```
GR152.00 9841.00  153.90 9966.00  152.0010064.00  152.0010374.00  151.2010500.00
GR152.0010600.00  166.0010664.00  167.8010705.00  166.0010728.00  160.0010770.00
GR158.0011120.00  156.0011170.00  156.0011212.00  158.0011315.00  160.0011470.00
GR162.0011558.00  166.0011620.00  168.0011800.00  168.0012600.00  176.0012684.00
GR178.0012715.00
X1   222      51 9448.0010820.00  395.00  355.00  400.00     .00     .00     .00
X3    10
GR172.00 7795.00  170.00 7990.00  168.00 8305.00  166.00 8574.00  166.00 8845.00
GR164.00 8875.00  164.00 8940.00  166.00 8955.00  166.00 8995.00  168.00 9019.00
GR166.00 9112.00  166.00 9256.00  153.70 9303.00  152.80 9408.00  156.30 9448.00
GR150.00 9478.00  150.00 9479.00  148.00 9504.00  146.00 9535.00  148.00 9575.00
GR150.00 9608.00  152.00 9693.00  152.00 9817.00  151.20 9915.00  152.0010012.00
GR153.8010183.00  152.0010464.00  152.0010515.00  154.0010555.00  156.0010585.00
GR156.0010616.00  155.3010655.00  156.0010681.00  160.0010723.00  162.0010763.00
GR164.0010782.00  166.0010820.00  166.0010906.00  168.0010940.00  160.0011045.00
GR160.0011315.00  158.0011370.00  158.0011580.00  160.0011600.00  162.0011620.00
GR162.4011680.00  166.0012210.00  168.0012356.00  170.0012395.00  172.0012469.00
GR174.0012513.00
X1   223      59 9561.0010714.00  385.00  385.00  399.00     .00     .00     .00
X3    10
GR172.60 7565.00  172.00 7573.00  170.00 7765.00  168.00 8084.00  168.00 8393.00
GR170.00 8457.00  170.00 8646.00  172.00 8692.00  172.00 8704.00  170.00 8706.00
GR162.00 8725.00  162.00 8734.00  168.00 8750.00  170.00 8820.00  169.00 8980.00
GR168.00 9090.00  166.00 9160.00  166.00 9241.00  164.60 9341.00  153.70 9416.00
GR152.80 9521.00  156.30 9561.00  148.00 9591.00  148.00 9655.00  150.00 9684.00
GR152.00 9725.00  154.00 9760.00  154.00 9784.00  152.00 9801.00  152.00 9957.00
GR154.0010058.00  154.9010195.00  154.0010306.00  154.0010513.00  156.0010543.00
GR156.0010640.00  158.0010667.00  160.0010675.00  160.0010683.00  158.0010687.00
GR158.0010693.00  160.0010695.00  170.0010714.00  170.0010727.00  160.0010745.00
GR158.0010765.00  162.0010780.00  162.0010810.00  160.0010865.00  160.0010990.00
GR150.0011030.00  160.0011086.00  170.0011141.00  170.0011193.00  166.0011215.00
GR168.0011244.00  170.0011288.00  170.0011593.00  170.0012493.00
X1   224   65.00 9621.0010650.00  365.00  415.00  399.00     .00     .00     .00
X3    10
GR172.20 7375.00  172.00 7392.00  170.00 7647.00  170.00 7942.00  169.60 8173.00
GR170.00 8396.00  172.00 8403.00  172.00 8413.00  170.00 8419.00  168.00 8424.00
GR168.00 8595.00  166.00 8685.00  166.00 8730.00  168.00 8780.00  168.00 8805.00
GR158.00 8845.00  156.00 8865.00  156.00 8887.00  154.00 8911.00  154.00 8943.00
GR166.00 9036.00  168.00 9065.00  168.00 9128.00  166.00 9140.00  164.00 9160.00
GR162.00 9288.00  162.00 9311.00  164.00 9312.00  164.00 9316.00  164.60 9401.00
GR153.70 9476.00  152.80 9581.00  156.30 9621.00  148.00 9651.00  148.00 9652.00
GR148.00 9653.00  148.00 9655.00  148.00 9657.00  150.00 9731.00  152.00 9932.00
GR154.0010075.00  154.0010432.00  152.0010496.00  152.0010515.00  154.0010550.00
GR154.0010573.00  158.0010604.00  158.0010639.00  160.0010650.00  160.0010674.00
GR158.0010703.00  158.0010725.00  160.0010745.00  160.0010765.00  162.0010788.00
GR164.0010796.00  164.0011035.00  166.0011063.00  168.0011135.00  170.0011144.00
GR168.0011146.00  168.0011172.00  170.0011474.00  172.0012010.00  174.0012113.00
X1   225      53 9502.0010505.00  385.00  400.00  407.00     .00     .00     .00
X3    10
GR171.20 7355.00  170.00 7760.00  170.00 8255.00  160.00 8293.00  158.80 9240.00
GR162.00 9343.00  166.00 9357.00  166.00 9377.00  158.10 9407.00  158.10 9437.00
GR156.80 9462.00  164.90 9502.00  152.00 9537.00  152.00 9542.00  152.00 9543.00
GR150.00 9546.00  150.00 9614.00  148.00 9634.00  148.00 9645.00  150.00 9893.00
GR158.0010210.00  158.8010285.00  158.0010317.00  156.0010346.00  156.0010395.00
GR150.0010419.00  148.0010444.00  147.6010450.00  148.0010461.00  150.0010475.00
GR160.0010505.00  161.2010515.00  160.0010544.00  160.0010620.00  158.0010641.00
GR160.0010661.00  162.0010672.00  162.0010695.00  164.0010756.00  164.0010777.00
GR166.0010786.00  166.0011000.00  166.0011008.00  168.0011018.00  166.0011025.00
GR166.0011046.00  168.0011155.00  170.0011545.00  172.0011595.00  172.0011646.00
GR174.0012056.00  174.0012365.00  176.0012763.00
```

```
EJ
T1         SIMONS, LI & ASSOCIATES, INC. -- SALT RIVER ANALYSIS
T2 CHANNELIZATION TRANSITION TO HAYDEN RD. (EXISTING)
T3       PAZ-DMJM-03    50-YEAR FLOOD   (STA. 248+00 TO XSEC 225)
J1   -10       3       0       0       0       0       0       0  148.59       0
J2     2       0      -1       0       0       0      -1       0       0       0
T1         SIMONS, LI & ASSOCIATES, INC. -- SALT RIVER ANALYSIS
T2 CHANNELIZATION TRANSITION TO HAYDEN RD. (EXISTING)
T3       PAZ-DMJM-03    20-YEAR FLOOD   (STA. 248+00 TO XSEC 225)
J1   -10       4       0       0       0       0       0       0  147.00       0
J2     3       0      -1       0       0       0      -1       0       0       0
T1         SIMONS, LI & ASSOCIATES, INC. -- SALT RIVER ANALYSIS
T2 CHANNELIZATION TRANSITION TO HAYDEN RD. (EXISTING)
T3       PAZ-DMJM-03    10-YEAR FLOOD   (STA. 248+00 TO XSEC 225)
J1   -10       5       0       0       0       0       0       0  144.38       0
J2    15       0      -1       0       0       0      -1       0       0       0
ER
```

SALT RIVER UNDER EXISTING CONDITIONS (SALT-EXT.SMP)

Summary Printout

SECNO	CWSEL	DEPTH	TOPWID	AREA	VCH	10K*S	FRCH
200.00	162.69	20.69	2631.46	31372.25	7.44	9.79	.33
200.00	159.46	17.46	2447.51	23215.63	7.16	12.12	.35
200.00	157.90	15.90	1679.47	19499.89	6.92	13.26	.36
200.00	154.88	12.88	1569.06	14524.59	6.40	15.33	.38
201.00	162.85	20.85	2829.64	30923.13	7.72	10.62	.34
201.00	159.67	17.67	2424.63	22399.20	7.48	13.36	.37
201.00	158.12	16.12	2353.70	18715.45	7.25	14.61	.38
201.00	155.15	13.15	1492.56	13976.35	6.65	16.30	.39
202.00	162.99	22.99	3000.56	30031.99	8.30	11.77	.36
202.00	159.85	19.85	2619.07	20885.23	8.10	14.84	.39
202.00	158.34	18.34	2000.25	17502.38	7.79	16.02	.40
202.00	155.43	15.43	1302.70	13265.79	7.01	16.22	.40
203.00	163.16	24.86	2996.00	28615.75	8.64	12.57	.37
203.00	160.11	21.81	2805.65	19832.85	8.29	15.10	.39
203.00	158.65	20.35	1506.55	17208.32	7.86	15.71	.39
203.00	155.75	17.45	1281.25	13214.31	7.04	16.07	.40
204.00	163.47	21.47	3735.61	30820.47	8.53	12.06	.36
204.00	160.39	18.39	3054.57	20239.78	8.38	15.17	.39
204.00	158.94	16.94	1670.24	17210.70	7.97	15.78	.40
204.00	156.06	14.06	1323.52	13056.03	7.12	17.47	.40
205.00	163.91	21.91	4417.40	35871.16	7.91	10.26	.34
205.00	160.78	18.78	3812.54	22795.31	8.17	14.27	.38
205.00	159.26	17.26	2415.22	17941.42	8.00	15.94	.40
205.00	156.40	14.40	1388.60	12857.90	7.24	18.33	.41
206.00	164.23	22.23	5034.56	38744.61	7.46	9.20	.32
206.00	161.20	19.20	3984.92	24856.02	7.68	12.66	.36
206.00	159.68	17.68	3058.33	19431.67	7.60	14.45	.38
206.00	156.83	14.83	1374.50	13441.06	6.92	16.68	.39
207.00	164.44	24.44	5221.77	39180.96	7.26	8.95	.32
207.00	161.51	21.51	3982.29	25386.40	7.35	11.44	.35
207.00	160.05	20.05	3585.11	19897.82	7.18	12.52	.36
207.00	157.26	17.26	1399.78	14631.87	6.36	12.89	.35
208.00	164.65	22.65	5657.43	39823.56	7.20	8.77	.31
208.00	161.77	19.77	4569.44	25193.96	7.30	11.28	.35
208.00	160.36	18.36	2659.45	19755.68	7.04	12.01	.35
208.00	157.58	15.58	1422.40	14997.45	6.20	12.11	.34
210.00	164.85	20.85	5494.62	38588.20	7.46	7.95	.30
210.00	162.08	18.08	4324.43	24866.04	7.21	9.00	.32
210.00	160.73	16.73	2752.84	20819.14	6.77	8.86	.31
210.00	157.97	13.97	1289.57	16256.18	5.72	8.12	.28
210.10	164.87	20.87	5447.84	37634.12	7.53	11.64	.31
210.10	162.06	18.06	4263.50	23901.00	7.48	13.39	.33
210.10	160.71	16.71	2698.60	19971.79	7.06	13.01	.33
210.10	157.96	13.96	1239.50	15583.01	5.97	11.41	.30

211.00	165.02	21.02	5497.43	38472.26	7.40	11.17	.30
211.00	162.22	18.22	4338.46	24592.52	7.37	12.88	.33
211.00	160.85	16.85	2732.06	20370.66	6.98	12.58	.32
211.00	158.08	14.08	1240.09	15732.23	5.91	11.08	.30
211.10	165.02	21.02	5550.57	39542.79	7.33	7.60	.30
211.10	162.31	18.31	4430.81	25864.93	7.07	8.51	.31
211.10	160.95	16.95	2804.08	21444.35	6.66	8.40	.30
211.10	158.15	14.15	1290.44	16488.25	5.64	7.75	.28
212.00	165.26	21.26	5384.80	40687.32	7.03	7.82	.29
212.00	162.53	18.53	5200.26	26231.48	6.92	9.49	.32
212.00	161.15	17.15	1919.88	21282.88	6.56	9.47	.31
212.00	158.30	14.30	1542.26	16646.45	5.71	9.25	.30
213.00	165.37	21.77	5332.67	37086.17	7.45	10.18	.33
213.00	162.67	19.07	4607.91	23800.15	7.42	12.95	.36
213.00	161.30	17.70	2077.28	19429.43	7.11	13.47	.37
213.00	158.45	14.85	1552.79	14435.09	6.44	15.43	.38
214.00	165.63	21.93	5123.00	38654.20	7.07	8.55	.31
214.00	163.03	19.33	4735.62	25979.18	6.85	10.09	.32
214.00	161.67	17.97	1959.21	20927.79	6.53	10.49	.32
214.00	158.84	15.14	1564.70	16075.19	5.79	10.88	.32
215.00	165.79	21.79	6132.68	40712.92	7.34	8.64	.31
215.00	163.17	19.17	4985.36	25411.48	7.31	10.66	.33
215.00	161.81	17.81	1791.78	19705.15	6.99	11.05	.34
215.00	159.02	15.02	1446.02	15302.85	6.09	11.20	.33
216.00	165.86	19.86	5488.59	35125.92	8.19	12.43	.36
216.00	163.29	17.29	4043.01	21922.82	8.19	15.76	.40
216.00	161.95	15.95	1585.67	17377.95	7.87	16.73	.40
216.00	159.18	13.18	1464.73	13183.50	7.10	18.85	.41
217.00	166.31	18.31	5278.84	38008.67	7.40	11.53	.34
217.00	163.80	15.80	4651.00	25032.85	7.54	15.48	.39
217.00	162.39	14.39	3851.37	18988.14	7.55	18.38	.41
217.00	159.58	11.58	1568.74	13127.53	7.09	21.32	.45
218.00	166.65	18.65	3686.05	30947.76	8.01	12.80	.37
218.00	164.38	16.38	3103.89	23385.94	7.39	13.58	.37
218.00	163.15	15.15	2486.82	19976.08	7.03	14.09	.37
218.00	160.49	12.49	1755.75	14559.52	6.40	16.67	.38
219.00	167.18	19.18	2991.85	30259.94	7.81	12.35	.36
219.00	164.98	16.98	2762.85	24010.35	7.05	12.51	.35
219.00	163.78	15.78	2101.12	20845.65	6.66	12.78	.35
219.00	161.19	13.19	1865.61	15563.97	6.02	14.59	.36
220.00	167.76	20.46	3211.99	31920.60	7.28	10.76	.34
220.00	165.56	18.26	2454.47	25630.62	6.52	10.70	.33
220.00	164.35	17.05	2389.10	22698.73	6.15	10.84	.32
220.00	161.81	14.51	1891.95	16770.75	5.55	12.17	.33
221.00	168.18	20.18	4180.43	33166.56	7.86	10.91	.34
221.00	165.96	17.96	2704.01	26034.33	7.13	10.92	.34
221.00	164.75	16.75	2530.19	22890.09	6.76	10.99	.33
221.00	162.25	14.25	2211.24	16941.98	6.09	11.76	.33

	222.00	168.71	22.71	4176.47	35684.39	7.57	10.70	.34
	222.00	166.44	20.44	3589.37	26812.96	7.06	11.46	.34
	222.00	165.11	19.11	1633.70	18444.71	7.56	14.86	.38
	222.00	162.70	16.70	1501.17	14710.08	6.50	14.22	.36
*	223.00	168.70	20.70	2208.27	21417.60	10.86	23.04	.49
	223.00	166.64	18.64	1602.29	17725.34	9.49	21.29	.46
	223.00	165.62	17.62	1464.36	16142.63	8.72	20.00	.44
	223.00	163.23	15.23	1365.97	12819.28	7.52	19.81	.42
	224.00	170.14	22.14	3862.66	30644.66	8.78	12.61	.37
	224.00	167.79	19.79	2424.80	23694.25	8.02	12.79	.37
	224.00	166.63	18.63	2273.05	20962.86	7.52	12.55	.36
	224.00	164.10	16.10	2003.35	15560.35	6.66	12.93	.35
	225.00	170.89	23.29	4106.25	37581.38	7.59	8.87	.31
	225.00	168.49	20.89	2989.97	29345.83	7.01	9.16	.31
	225.00	167.28	19.68	2843.93	25821.15	6.67	9.24	.31
	225.00	164.49	16.89	1276.07	12615.78	7.71	16.38	.40

```
 ED    NO
T1          SIMONS, LI & ASSOCIATES, INC. -- SALT RIVER ANALYSIS
T2 CHANNELIZATION TRANSITION TO HAYDEN RD. (EXISTING W/ FREEWAY ENCROACHMENTS)
T3        PAZ-DMJM-03   100-YEAR FLOOD   (STA. 248+00 TO XSEC 225)
J1   -10       2       0       0       0       0       0       0  151.48       0
J2     1       0      -1       0       0       0      -1       0       0       0
J3    38       1      55      26      56      13      14      15       8       4
J3    53      54       0      38       1       2       3      11      12      42
J3     5      33      21      22      39
J5   -10     -10
J6     1
NC  .050    .050    .035      .1      .3
QT     4 215000. 160000. 135000.  93000.
X1 24800      14  10011.  10989.       0       0       0
X3    10
GR157.30  10000.  157.30  10011.  146.00  10045.  146.00  10053.  135.00  10069.
GR135.00  10410.  132.00  10416.  132.00  10816.  135.00  10822.  135.00  10931.
GR146.00  10947.  146.00  10955.  157.30  10989.  157.30  11000.
X1 25000      21   2509.   3456.     200     200     200
X3    10
GR156.00   1000.  154.00   1600.  150.00   1695.  150.00   1940.  154.00   2070.
GR150.00   2160.  150.00   2435.  157.70   2495.  157.70   2509.  138.50   2537.
GR138.50   2567.  135.50   2905.  132.50   2911.  132.50   3259.  135.50   3265.
GR138.50   3413.  138.50   3427.  157.70   3456.  157.70   3470.  141.00   3545.
GR150.00   3665.
X1 25200      18   2252.   3322.     200     200     200
X3    10
GR156.00   1000.  154.00   1500.  150.00   1700.  140.00   1890.  140.50   2180.
GR158.50   2238.  158.50   2252.  139.00   2281.  139.00   2387.  133.00   2810.
GR139.00   3233.  139.00   3293.  158.50   3322.  158.50   3336.  138.00   3390.
GR150.00   3460.  156.00   3515.  150.00   3760.
X1 25400      18   2254.   3449.     200     200     200
X3    10
GR156.00   1000.  152.00   1580.  150.00   1640.  150.00   1820.  140.00   1910.
GR144.00   2200.  159.30   2240.  159.30   2254.  139.40   2284.  139.40   2467.
GR133.40   2890.  139.40   3313.  139.40   3419.  159.30   3449.  159.30   3463.
GR140.50   3515.  157.00   3565.  150.00   3805.
X1 25600      18   2107.   3425.     200     200     200
X3    10
GR156.00   1000.  154.00   1590.  150.00   1620.  150.00   1760.  140.00   1900.
GR140.00   2030.  160.10   2093.  160.10   2107.  139.30   2137.  139.90   2397.
GR133.90   2820.  139.90   3243.  139.90   3395.  160.10   3425.  160.10   3439.
GR149.00   3475.  156.00   3635.  150.00   3700.
X1 25800      15   1980.   3436.     200     200     200
X3    10                   1980.           3436.
GR156.00   1000.  154.00   1585.  150.00   1605.  149.00   1830.  140.00   1885.
GR141.00   1980.  141.00   2135.  140.40   2362.  134.40   2785.  140.40   3208.
GR140.40   3406.  160.70   3436.  160.70   3450.  152.00   3480.  160.00   3695.
X1 26000      13   1845.   3438.     200     200     200
X3    10                   1845.           3438.
GR157.00   1000.  154.00   1570.  150.00   1745.  149.00   1845.  140.00   1950.
GR140.80   2317.  134.80   2740.  140.80   3163.  140.80   3407.  161.20   3438.
GR161.20   3452.  149.00   3520.  160.00   3525.
X1 26200      11   1755.   3474.     200     200     200
X3    10                   1755.           3374.
GR157.20   1000.  154.00   1650.  150.00   1755.  149.00   1885.  140.00   1985.
GR141.30   2307.  135.30   2730.  141.30   3153.  141.30   3443.  161.80   3474.
GR161.80   3488.
NC  .050    .050    .040      .3      .5
X1 182.1      33  11375.  13093.  180.00  180.00  180.00    .989
```

```
X3     10
GR160.00  10000.  162.00  10480.  164.00  11155.  164.00  11270.  160.00  11375.
GR154.00  11392.  152.00  11412.  150.00  11435.  148.00  11470.  146.00  11620.
GR144.00  11690.  142.00  11712.  140.00  11740.  138.00  11952.  138.00  12124.
GR138.00  12245.  136.00  12290.  134.00  12442.  136.00  12570.  138.00  12593.
GR140.00  12720.  142.00  12750.  144.00  12882.  146.00  12917.  150.00  12943.
GR152.00  12961.  152.00  13003.  154.00  13043.  156.00  13061.  158.00  13069.
GR160.00  13078.  162.00  13093.  164.00  13308.
SB  1.05    1.56     2.6      0.   1188.    124.  29965.     10.    138.    138.
X1 182.2      33  11375.  13093.     16.     16.     16.    .989
X2                     1    161.    165.
X3     10
GR160.00  10000.  162.00  10480.  164.00  11155.  164.00  11270.  160.00  11375.
GR154.00  11392.  152.00  11412.  150.00  11435.  148.00  11470.  146.00  11620.
GR144.00  11690.  142.00  11712.  140.00  11740.  138.00  11952.  138.00  12124.
GR138.00  12245.  136.00  12290.  134.00  12442.  136.00  12570.  138.00  12593.
GR140.00  12720.  142.00  12750.  144.00  12882.  146.00  12917.  150.00  12943.
GR152.00  12961.  152.00  13003.  154.00  13043.  156.00  13061.  158.00  13069.
GR160.00  13078.  162.00  13093.  164.00  13308.
X1 183.5      26  11840.  13440.    179.    179.    179.    .988
X3     10                 11840.          13440.
GR158.30  10000.  160.00  10425.  160.00  10915.  160.00  11290.  156.00  11480.
GR154.00  11580.  150.00  11715.  152.00  11840.  150.00  11925.  146.00  12045.
GR140.00  12150.  138.00  12390.  138.00  12590.  136.00  12735.  134.00  12860.
GR134.00  12900.  136.00  12970.  138.00  13000.  140.00  13115.  144.00  13260.
GR150.00  13290.  154.00  13365.  160.00  13440.  170.00  13510.  180.00  13560.
GR180.00  13730.
X1 184.1      35  11950.  13523.    175.    175.    175.    .986
X3     10
GR159.10  10000.  158.00  10295.  158.00  10410.  160.00  10630.  160.00  11155.
GR160.00  11495.  166.00  11770.  168.00  11860.  171.10  11950.  168.00  12015.
GR160.00  12035.  150.00  12055.  150.00  12125.  148.00  12140.  146.00  12155.
GR144.00  12190.  142.00  12290.  140.00  12310.  140.00  12405.  138.00  12530.
GR138.00  12815.  136.00  12835.  134.00  12945.  134.00  13065.  136.00  13140.
GR138.00  13185.  140.00  13260.  144.00  13320.  148.00  13370.  150.00  13418.
GR160.00  13485.  170.00  13523.  174.00  13686.  178.00  13793.  180.00  13988.
SB  1.25    1.56     2.6      0   1057.    183.  27394.     10    138.    138.
X1 184.2      35  11950.  13523.     20      20      20    .986
X2                     1   164.5   171.7
X3     10
GR159.10  10000.  158.00  10295.  158.00  10410.  160.00  10630.  160.00  11155.
GR160.00  11495.  166.00  11770.  168.00  11860.  171.10  11950.  168.00  12015.
GR160.00  12035.  150.00  12055.  150.00  12125.  148.00  12140.  146.00  12155.
GR144.00  12190.  142.00  12290.  140.00  12310.  140.00  12405.  138.00  12530.
GR138.00  12815.  136.00  12835.  134.00  12945.  134.00  13065.  136.00  13140.
GR138.00  13185.  140.00  13260.  144.00  13320.  148.00  13370.  150.00  13418.
GR160.00  13485.  170.00  13523.  174.00  13686.  178.00  13793.  180.00  13988.
X1 185.5      20  12060.  13575.     160     160     160   0.946
X3     10                 12060.          13575.
GR160.00  10000.  160.00  10375.  162.00  11010.  160.00  11245.  158.00  11740.
GR152.00  12060.  150.00  12175.  148.00  12210.  144.00  12260.  140.00  12460.
GR138.00  12635.  136.00  12830.  136.00  13110.  138.00  13170.  140.00  13200.
GR150.00  13385.  160.00  13535.  162.50  13575.  170.00  13690.  180.00  14130.
X1 186.1      26  12090.  13680.     160     160     160   0.883
X3     10
GR162.00  10000.  162.00  10460.  162.00  11040.  160.00  11520.  158.00  11720.
GR160.00  11820.  170.00  11875.  170.00  12090.  160.00  12120.  150.00  12160.
GR144.00  12220.  142.00  12405.  140.00  12445.  138.00  12505.  136.00  12850.
GR136.00  13215.  138.00  13240.  140.00  13275.  146.00  13390.  150.00  13490.
GR154.00  13555.  160.00  13620.  170.00  13680.  170.00  13790.  174.00  13905.
```

```
GR180.00  14210.
SB   1.0    1.56     2.6       0    905.    365.  24863.     10.    136.    136.
X1 186.2      26   12090.  13680.     48      48     48   0.883
X2                     1   166.0   174.0
X3    10
GR162.00  10000.  162.00  10460.  162.00  11040.  160.00  11520.  158.00  11720.
GR160.00  11820.  170.00  11875.  170.00  12090.  160.00  12120.  150.00  12160.
GR144.00  12220.  142.00  12405.  140.00  12445.  138.00  12505.  136.00  12850.
GR136.00  13215.  138.00  13240.  140.00  13275.  146.00  13390.  150.00  13490.
GR154.00  13555.  160.00  13620.  170.00  13680.  170.00  13790.  174.00  13905.
GR180.00  14210.
X1   188      26    8938   10392     279     281     280
X3    10                   9260           10740
GR   158    8938     152    8995     152    9260     153    9294     152    9310
GR   150    9345     148    9377     146    9390     144    9421     142    9565
GR   140    9640     138    9720     138   10360     140   10368     142   10372
GR   150   10382     154   10392     156   10615     156   10931     154   10969
GR   152   10979     152   11058     154   11069     158   11117     160   11130
GR   170   11169
NC  .050    .050    .040      .1      .3
X1   189      33    9290   10398     200     200     195
X3    10                   9175           10725
GR 162.5    7585   163.2    7925     162    8560     160    9015     158    9100
GR   154    9175     152    9210     150    9290     148    9301     146    9379
GR   144    9425     144    9499     142    9598     140    9620     140    9730
GR   138    9740     138    9754     136    9759     136    9800     138   10099
GR   138   10364     140   10372     142   10380     150   10390     154   10398
GR 155.9   10510     156   10638     156   10959     154   11058     154   11072
GR   156   11092     160   11141     170   11197
X1   190   38.00    9291.  10396.     199     200     201
X3    10                   8929.          10709.
GR164.00 8114.00  170.00 8204.00  174.00 8384.00  172.00 8464.00  170.00 8569.00
GR162.00 8599.00  160.00 8659.00  158.00 8779.00  156.00 8864.00  154.00 8929.00
GR152.00 9029.00  150.00 9114.00  149.70 9173.00  150.00 9224.00  152.00 9273.00
GR152.00 9284.00  150.00 9291.00  148.00 9322.00  146.00 9366.00  144.00 9456.00
GR142.00 9572.00  140.00 9584.00  138.00 9626.00  138.00 9653.00  140.00 9685.00
GR142.00 9696.00  142.00 9725.00  138.00 9743.00  136.00 9882.00  136.00 9958.00
GR138.0010126.00  138.0010363.00  140.0010371.00  142.0010376.00  150.0010387.00
GR154.0010396.00  155.0010709.00  200.0010709.10
X1   191   50.00 9266.0010416.00  200.00  200.00  200.00
X3   10.                  8864.          10695.
GR200.00 8364.00  192.00 8414.00  180.00 8449.00  176.00 8534.00  170.00 8624.00
GR162.00 8841.00  160.00 8864.00  156.00 8886.00  154.00 8965.00  154.00 8991.00
GR156.00 9033.00  154.00 9046.00  152.00 9054.00  152.00 9127.00  152.00 9256.00
GR150.00 9266.00  148.00 9305.00  146.00 9363.00  144.00 9454.00  142.00 9474.00
GR142.00 9529.00  144.00 9539.00  142.00 9554.00  140.00 9564.00  138.00 9582.00
GR138.00 9644.00  142.00 9664.00  146.00 9697.00  148.00 9726.00  148.00 9735.00
GR140.00 9760.00  138.00 9781.00  138.00 9835.00  136.00 9873.00  134.00 9878.00
GR134.00 9919.00  136.00 9926.00  138.0010114.00  140.0010258.00  140.0010288.00
GR138.0010331.00  138.0010388.00  140.0010394.00  148.0010405.00  150.0010407.00
GR154.0010416.00  154.0010935.00  160.0010966.00  160.0011008.00  170.0011042.00
X1   192   48.00 9241.0010472.00  199.00  200.00  201.00     .00     .00     .00
X3   10.                  8942.          10686.
GR168.00 8883.00  168.00 8928.00  166.00 8942.00  164.00 9006.00  162.00 9016.00
GR160.00 9029.00  156.00 9049.00  156.00 9061.00  154.00 9070.00  152.00 9081.00
GR152.00 9139.00  154.00 9192.00  154.00 9225.00  152.00 9231.00  150.00 9241.00
GR148.00 9341.00  146.00 9371.00  144.00 9378.00  142.00 9482.00  140.00 9493.00
GR138.00 9531.00  138.00 9599.00  140.00 9619.00  146.00 9657.00  148.00 9711.00
GR150.00 9738.00  140.00 9771.00  138.00 9791.00  136.00 9828.00  136.00 9976.00
GR138.0010076.00  140.0010231.00  140.0010436.00  150.0010462.00  154.0010472.00
```

```
GR154.9010719.00  154.0010861.00  154.0010883.00  160.0010894.00  154.0010904.00
GR154.0010920.00  160.0010928.00  160.0010950.00  162.0010992.00  164.0011009.00
GR166.0011033.00  168.0011042.00  170.0011067.00     .00     .00     .00     .00
X1   193   46.00 9235.0010483.00  200.00  200.00  195.00     .00     .00     .00
X3   10.                   8968.          10656.
GR220.00 8615.00  200.00 8698.00  180.00 8790.00  170.00 8856.00  170.00 8916.00
GR160.00 8968.00  158.00 8984.00  156.00 9004.00  154.00 9025.00  154.00 9090.00
GR152.00 9235.00  150.00 9261.00  148.00 9266.00  146.00 9293.00  146.00 9354.00
GR144.00 9423.00  142.00 9456.00  140.00 9470.00  140.00 9587.00  144.00 9604.00
GR146.00 9625.00  148.00 9687.00  150.00 9697.00  152.00 9715.00  152.00 9726.00
GR140.00 9770.00  138.00 9784.00  136.00 9825.00  135.20 9874.00  136.00 9955.00
GR138.0010037.00  140.0010213.00  142.0010321.00  142.0010376.00  140.0010409.00
GR140.0010444.00  150.0010468.00  152.0010475.00  154.0010483.00  154.0010821.00
GR152.1010837.00  154.0010845.00  160.0010855.00  160.0010904.00  166.0010944.00
GR170.0010956.00     .00     .00     .00     .00     .00     .00     .00     .00
X1   194   40.00 9182.0010480.00  200.00  200.00  200.00     .00     .00     .00
X3   10.                   9012.          10654.
GR209.00 8867.00  200.00 8940.00  180.00 8993.00  170.00 9012.00  160.00 9017.00
GR160.00 9062.00  158.00 9071.00  156.00 9076.00  156.00 9122.00  154.00 9182.00
GR152.00 9207.00  146.00 9235.00  146.00 9296.00  144.00 9362.00  142.00 9386.00
GR142.00 9571.00  144.00 9623.00  146.00 9644.00  148.00 9656.00  150.00 9661.00
GR154.00 9681.00  154.00 9701.00  150.00 9712.00  142.00 9748.00  140.00 9770.00
GR138.00 9780.00  136.00 9832.00  136.00 9940.00  138.0010002.00  140.0010186.00
GR142.0010296.00  142.0010401.00  140.0010440.00  140.0010452.00  150.0010470.00
GR154.0010480.00  154.0010803.00  160.0010822.00  160.0010867.00  170.0010886.00
X1   195   35.00 9160.0010489.00  212.00  187.00  220.00     .00     .00     .00
X3   10.                                10684.00
GR180.00 8940.00  160.00 8956.00  150.00 8970.00  156.00 8995.00  156.00 9029.00
GR150.00 9040.00  160.00 9057.00  160.00 9128.00  158.00 9160.00  150.00 9178.00
GR146.00 9210.00  144.00 9320.00  142.00 9355.00  142.00 9411.00  144.00 9457.00
GR144.00 9610.00  150.00 9651.00  154.00 9661.00  154.00 9687.00  150.00 9696.00
GR144.00 9728.00  142.00 9742.00  140.00 9778.00  138.00 9791.00  138.00 9992.00
GR140.0010184.00  142.0010262.00  142.0010470.00  150.0010479.00  154.0010489.00
GR156.0010875.00  160.0010889.00  160.0010940.00  164.0010948.00  170.0010975.00
X1   196   43.00 9149.0010516.00  155.00  235.00  192.00     .00     .00     .00
X3   10.                                10755.00
GR180.00 8910.00  150.00 8930.00  156.00 8964.00  156.00 8990.00  150.00 9000.00
GR160.00 9020.00  162.00 9030.00  162.00 9110.00  160.00 9149.00  150.00 9169.00
GR146.00 9179.00  144.00 9271.00  144.00 9373.00  142.00 9387.00  142.00 9419.00
GR144.00 9479.00  146.00 9653.00  150.00 9670.00  154.00 9678.00  154.00 9701.00
GR150.00 9710.00  148.00 9718.00  146.00 9730.00  142.00 9793.00  140.00 9816.00
GR138.00 9848.00  138.0010005.00  140.0010200.00  142.0010297.00  142.0010496.00
GR150.0010508.00  154.0010516.00  156.0011043.00  158.0011047.00  160.0011065.00
GR160.0011125.00  162.0011139.00  161.7011281.00  162.0011324.00  164.0011372.00
GR166.0011384.00  168.0011402.00  170.0011432.00     .00     .00     .00     .00
X1   197   50.00 9260.0010719.00  180.00  245.00  211.00     .00     .00     .00
X3   10.                                11016.00
GR180.00 8815.00  170.00 8828.00  170.00 8847.00  166.00 8862.00  164.00 8872.00
GR162.00 8903.00  160.00 8918.00  150.00 8975.00  152.00 8985.00  154.00 9046.00
GR154.00 9070.00  150.00 9082.00  160.00 9107.00  162.00 9111.00  162.00 9252.00
GR160.00 9260.00  150.00 9280.00  148.00 9290.00  146.00 9302.00  144.00 9637.00
GR144.00 9661.00  146.00 9693.00  146.00 9819.00  150.00 9829.00  156.00 9849.00
GR156.00 9883.00  154.00 9885.00  150.00 9898.00  148.00 9901.00  146.00 9915.00
GR140.00 9997.00  138.0010045.00  138.0010065.00  140.0010399.00  144.0010554.00
GR144.0010662.00  142.0010675.00  142.0010701.00  150.0010711.00  154.0010719.00
GR156.0011229.00  156.0011416.00  158.0011432.00  160.0011443.00  160.0011507.00
GR164.0011537.00  166.0011563.00  166.0011611.00  168.0011617.00  170.0011628.00
X1   198   41.00 9015.0010547.00  155.00  260.00  205.00     .00     .00     .00
X3   10.                                10892.00
GR180.00 8655.00  170.00 8675.00  164.00 8690.00  162.00 8706.00  160.00 8725.00
```

```
GR150.00 8765.00  152.00 8774.00  154.00 8836.00  154.00 8848.00  150.00 8859.00
GR160.00 8885.00  162.00 8887.00  162.00 9005.00  160.00 9015.00  150.00 9045.00
GR146.00 9073.00  146.00 9575.00  150.00 9592.00  156.00 9613.00  156.00 9637.00
GR154.00 9650.00  150.00 9675.00  148.00 9680.00  144.00 9715.00  140.00 9795.00
GR140.0010162.00  142.0010253.00  144.0010335.00  146.0010505.00  150.0010512.00
GR154.0010523.00  156.0010547.00  156.0010955.00  158.0011293.00  160.0011304.00
GR164.0011313.00  164.0011351.00  160.0011364.00  160.0011375.00  164.0011425.00
GR174.0011487.00
X1   199   37.00 8910.0010580.00  190.00  220.00  193.00     .00     .00     .00
X3                                       10962.00
GR180.00 8430.00  170.00 8460.00  168.00 8530.00  164.00 8689.00  162.00 8798.00
GR162.00 8878.00  160.00 8910.00  148.00 9000.00  148.00 9170.00  146.00 9290.00
GR146.00 9511.00  148.00 9549.00  150.00 9559.00  156.00 9585.00  156.00 9621.00
GR154.00 9631.00  150.00 9650.00  148.00 9660.00  142.00 9777.00  140.00 9840.00
GR140.00 9858.00  142.0010270.00  146.0010442.00  148.0010510.00  150.0010530.00
GR152.0010555.00  154.0010570.00  156.0010580.00  158.0011295.00  160.0011319.00
GR160.0011371.00  164.0011397.00  166.0011410.00  168.0011420.00  170.0011440.00
GR172.0011460.00  174.0011474.00     .00     .00     .00     .00     .00     .00
X1   200   46.00 8875.0010575.00  190.00  210.00  205.00     .00     .00     .00
X3                                       11016.00
GR180.00 8275.00  178.00 8294.00  168.00 8573.00  164.00 8725.00  162.00 8827.00
GR160.00 8875.00  158.00 8895.00  156.00 8904.00  154.00 8935.00  150.00 8970.00
GR148.00 8984.00  148.00 9195.00  146.00 9293.00  146.00 9505.00  150.00 9536.00
GR156.00 9562.00  156.00 9632.00  152.00 9646.00  150.00 9653.00  148.00 9665.00
GR142.00 9762.00  142.0010304.00  144.0010367.00  146.0010423.00  148.0010437.00
GR150.0010466.00  152.0010493.00  152.0010536.00  150.0010545.00  150.0010554.00
GR156.0010573.00  158.0010575.00  158.0011283.00  160.0011344.00  160.0011371.00
GR162.0011385.00  164.0011495.00  166.0011504.00  168.0011519.00  166.0011534.00
GR165.0011547.00  166.0011580.00  168.0011630.00  170.0011672.00  172.0011683.00
GR178.0011720.00
X1   201   37.00 8940.0010572.00  190.00  205.00  199.00     .00     .00     .00
X3                                       11117.00
GR180.00 8380.00  178.00 8449.00  174.00 8465.00  172.00 8508.00  170.00 8530.00
GR168.00 8540.00  166.00 8561.00  164.00 8622.00  162.00 8712.00  160.00 8940.00
GR150.00 9050.00  148.00 9108.00  146.00 9341.00  146.00 9561.00  150.00 9588.00
GR156.00 9611.00  156.00 9682.00  154.00 9690.00  150.00 9705.00  148.00 9718.00
GR144.00 9780.00  142.0010049.00  142.0010380.00  146.0010441.00  152.0010467.00
GR154.0010498.00  154.0010561.00  156.0010565.00  158.0010572.00  158.0011310.00
GR160.0011380.00  160.0011460.00  164.0011520.00  170.0011560.00  172.0011568.00
GR174.0011577.00  178.0011628.00     .00     .00     .00     .00     .00     .00
X1   202   35.00 9010.0010450.00  240.00  155.00  201.00     .00     .00     .00
X3                                       11170.00
GR180.00 8405.00  174.00 8433.00  172.00 8456.00  170.00 8473.00  162.00 8656.00
GR160.00 8798.00  158.00 9010.00  156.00 9066.00  152.00 9082.00  148.00 9107.00
GR147.50 9237.00  148.00 9361.00  148.00 9429.00  146.00 9498.00  150.00 9606.00
GR156.00 9637.00  156.00 9705.00  150.00 9727.00  146.00 9753.00  144.00 9814.00
GR142.0010070.00  140.0010326.00  144.0010424.00  150.0010435.00  156.0010445.00
GR158.0010450.00  158.0010905.00  159.4011185.00  160.0011520.00  160.0011607.00
GR164.0011643.00  166.0011678.00  170.0011705.00  172.0011710.00  174.0011755.00
X1   203   40.00 9056.0010447.00  275.00  105.00  201.00     .00     .00     .00
X3                                       11185.00
GR180.00 8385.00  172.00 8414.00  170.00 8445.00  168.00 8485.00  166.00 8497.00
GR164.00 8523.00  162.00 8603.00  164.00 8632.00  164.00 8695.00  162.00 8728.00
GR160.00 8744.00  160.00 8877.00  162.00 8888.00  160.00 8901.00  158.00 9056.00
GR156.00 9075.00  148.00 9101.00  148.00 9587.00  150.00 9599.00  156.00 9630.00
GR156.00 9707.00  150.00 9732.00  148.00 9742.00  146.00 9759.00  144.00 9855.00
GR142.0010098.00  140.7010268.00  140.0010292.00  138.3010348.00  140.0010377.00
GR150.0010425.00  156.0010437.00  160.0010447.00  160.0010809.00  158.3010972.00
GR160.0011155.00  160.0011569.00  162.0011612.00  164.0011663.00  166.0011785.00
X1   204   42.00 9140.0010482.00  190.00  205.00  196.00     .00     .00     .00
```

```
X3                                        11210.00
GR180.00 8020.00  170.00 8050.00  166.00 8070.00  166.00 8210.00  168.00 8252.00
GR168.00 8282.00  166.00 8298.00  164.00 8415.00  162.00 8520.00  160.00 8700.00
GR158.00 8898.00  158.00 9072.00  156.00 9140.00  150.00 9150.00  148.00 9158.00
GR148.00 9599.00  150.00 9610.00  156.00 9637.00  156.00 9730.00  150.00 9748.00
GR148.00 9750.00  146.00 9760.00  144.00 9870.00  142.9010013.00  142.0010116.00
GR142.0010427.00  144.0010438.00  150.0010450.00  156.0010461.00  158.0010469.00
GR160.0010482.00  160.0011140.00  162.0011398.00  164.0011412.00  160.0011652.00
GR160.0012151.00  162.0012170.00  164.0012230.00  166.0012288.00  166.0012431.00
GR168.0012568.00  170.0012770.00      .00      .00      .00      .00      .00      .00
X1   205    35.00 9164.0010482.00  205.00  205.00  197.00      .00      .00      .00
X3                                        11219.00
GR180.00 7840.00  170.00 7872.00  164.00 7885.00  162.00 8000.00  162.00 8211.00
GR160.00 8520.00  158.00 8798.00  156.00 9164.00  150.00 9178.00  148.00 9185.00
GR148.00 9226.00  150.00 9635.00  156.00 9658.00  156.00 9770.00  150.00 9790.00
GR148.00 9801.00  146.00 9825.00  144.00 9878.00  142.0010098.00  142.0010450.00
GR144.0010460.00  150.0010469.00  156.0010478.00  158.0010482.00  160.0010611.00
GR160.0011480.00  158.0011940.00  158.0012019.00  160.0012188.00  164.0012310.00
GR164.0012488.00  166.0012579.00  170.0012609.00  172.0012687.00  174.0012725.00
X1   206    51.00 9145.0010530.00  200.00  200.00  205.00      .00      .00      .00
X3                                        11220.00
GR173.10 6725.00  172.00 6735.00  170.00 6745.00  168.00 6757.00  166.00 7058.00
GR166.00 7253.00  164.00 7365.00  164.00 7464.00  162.00 7554.00  160.00 8002.00
GR158.70 8174.00  158.00 8926.00  158.00 9013.00  159.40 9058.00  158.00 9075.00
GR158.00 9145.00  156.00 9156.00  150.00 9166.00  148.00 9171.00  148.00 9254.00
GR150.00 9576.00  152.00 9674.00  154.00 9685.00  156.00 9730.00  156.00 9802.00
GR154.00 9837.00  152.00 9855.00  150.00 9864.00  148.00 9870.00  144.00 9905.00
GR142.0010057.00  142.0010474.00  144.0010485.00  150.0010510.00  156.0010523.00
GR158.0010530.00  158.0010866.00  160.0010876.00  162.0011077.00  163.1011257.00
GR160.0011338.00  158.9011369.00  160.0011407.00  163.5011550.00  158.8011805.00
GR160.0011985.00  160.0012203.00  164.0012355.00  166.0012636.00  170.8012698.00
GR172.0012870.00      .00      .00      .00      .00      .00      .00      .00      .00
X1   207    58.00 9048.0010573.00  200.00  200.00  206.00      .00      .00      .00
X3                                        11130.00
GR173.80 6510.00  172.00 6515.00  170.00 6525.00  168.00 6533.00  166.00 6543.00
GR166.00 6661.00  164.00 7138.00  162.00 7154.00  160.00 7180.00  160.00 7210.00
GR159.00 7289.00  158.90 7657.00  159.40 8020.00  160.00 8740.00  160.00 8939.00
GR158.00 9048.00  150.00 9060.00  148.00 9069.00  148.00 9138.00  150.00 9503.00
GR152.00 9584.00  154.00 9610.00  154.00 9710.00  152.00 9790.00  150.00 9798.00
GR146.00 9810.00  144.00 9835.00  142.00 9960.00  140.0010120.00  140.0010169.00
GR142.0010208.00  143.0010320.00  144.0010418.00  150.0010438.00  154.0010444.00
GR158.0010450.00  158.0010490.00  160.0010499.00  162.0010509.00  164.0010533.00
GR166.0010573.00  166.0010590.00  160.0010775.00  158.0010785.00  158.0010790.00
GR160.0010805.00  162.5010908.00  162.0011006.00  160.6011031.00  165.0011468.00
GR158.9011609.00  160.0011710.00  162.0011790.00  162.0012130.00  160.0012139.00
GR160.0012239.00  166.0012490.00  172.0012740.00      .00      .00      .00      .00
X1   208    53.00 9140.0010671.00  300.00  170.00  230.00      .00      .00      .00
X3                                        11255.00
GR175.50 6375.00  168.00 6440.00  166.00 6525.00  164.50 6687.00  164.00 7001.00
GR162.00 7130.00  160.80 7557.00  160.80 8463.00  160.00 9013.00  158.00 9140.00
GR152.00 9154.00  150.00 9160.00  148.00 9168.00  148.00 9380.00  146.00 9405.00
GR146.00 9513.00  148.00 9527.00  150.00 9555.00  150.00 9593.00  152.00 9675.00
GR152.00 9766.00  154.00 9804.00  156.00 9891.00  156.00 9896.00  150.00 9915.00
GR148.00 9937.00  146.00 9979.00  142.0010044.00  142.0010334.00  144.0010513.00
GR150.0010550.00  156.0010561.00  158.0010564.00  158.0010619.00  162.0010634.00
GR166.0010671.00  166.0010733.00  164.0010880.00  158.0010911.00  158.0010916.00
GR162.7011054.00  160.0011137.00  160.0011157.00  163.4011554.00  159.8011735.00
GR160.0011795.00  160.0012017.00  159.5012221.00  160.0012336.00  162.0012365.00
GR162.0012383.00  170.0012744.00  172.0012883.00      .00      .00      .00      .00
NC                            .3       .5
```

```
X1210.00        59 3862.00 5191.00  335.00  220.00  285.00     .00     .00     .00
                                            5890.00
X3
GR166.70 1000.00  166.00 1030.00  166.00 1072.00  164.00 1497.00  162.00 2215.00
GR162.00 3458.00  164.00 3535.00  166.00 3627.00  168.00 3698.00  170.00 3773.00
GR172.30 3844.00  172.60 3860.00  166.00 3862.00  164.00 3871.00  160.00 3880.00
GR150.00 3909.00  148.00 3917.00  147.50 3979.50  147.50 3984.60  146.50 4100.50
GR146.50 4105.60  146.00 4170.00  145.50 4221.50  145.50 4226.60  145.40 4240.00
GR145.40 4240.00  145.10 4342.50  145.10 4347.60  144.70 4463.50  144.70 4468.60
GR144.30 4584.50  144.30 4589.60  144.00 4685.00  144.00 4705.50  144.00 4710.60
GR144.00 4826.50  144.00 4831.60  144.00 4947.50  144.00 4952.60  144.00 5068.50
GR144.00 5073.60  144.00 5101.00  146.00 5122.00  148.00 5153.00  150.00 5160.00
GR166.00 5191.00  172.30 5209.00  168.00 5331.00  168.00 5366.00  166.00 5421.00
GR164.00 5492.00  162.00 5553.00  160.00 5729.00  160.00 7017.00  162.00 7288.00
GR164.00 7356.00  168.00 7449.00  170.00 7522.00  174.00 7658.00
X1210.10        78 3862.00 5191.00   10.00   10.00   10.00     .00     .00     .00
                                            5890.00
X3
BT    -24  3860.0   172.6   172.6  3862.0   172.6   166.0  3979.6   175.0   168.4
BT         3984.5   175.0   168.4  4100.6   177.0   170.4  4105.5   177.0   170.4
BT         4221.6   178.4   171.8  4226.5   178.4   171.8  4342.6   179.4   172.8
BT         4347.5   179.4   172.8  4463.6   179.9   173.3  4468.5   179.9   173.3
BT         4584.6   179.9   173.3  4589.5   179.9   173.3  4705.6   179.4   172.8
BT         4710.5   179.4   172.8  4826.6   178.4   171.8  4831.5   178.4   171.8
BT         4947.6   177.0   170.4  4952.5   177.0   170.4  5068.6   175.0   168.4
BT         5073.5   175.0   168.4  5191.0   172.6   166.0  5209.0   172.3   172.3
GR166.70 1000.00  166.00 1030.00  166.00 1072.00  164.00 1497.00  162.00 2215.00
GR162.00 3458.00  164.00 3535.00  166.00 3627.00  168.00 3698.00  170.00 3773.00
GR172.30 3844.00  172.60 3860.00  166.00 3862.00  164.00 3871.00  160.00 3880.00
GR150.00 3909.00  148.00 3917.00  147.50 3979.50  168.40 3979.60  168.40 3984.50
GR147.50 3984.60  146.50 4100.50  170.40 4100.60  170.40 4105.50  146.50 4105.60
GR146.00 4170.00  145.50 4221.50  171.80 4221.60  171.80 4226.50  145.50 4226.60
GR145.40 4240.00  145.10 4342.50  172.80 4342.60  172.80 4347.50  145.10 4347.60
GR144.70 4463.50  173.30 4463.60  173.30 4468.50  144.70 4468.60  144.30 4584.50
GR173.30 4584.60  173.30 4589.50  144.30 4589.60  144.00 4685.00  144.00 4705.50
GR172.80 4705.60  172.80 4710.50  144.00 4710.60  144.00 4826.50  171.80 4826.60
GR171.80 4831.50  144.00 4831.60  144.00 4947.50  170.40 4947.60  170.40 4952.50
GR144.00 4952.60  144.00 5068.50  168.40 5068.60  168.40 5073.50  144.00 5073.60
GR144.00 5101.00  146.00 5122.00  148.00 5153.00  150.00 5160.00  166.00 5191.00
GR172.30 5209.00  168.00 5331.00  168.00 5366.00  166.00 5421.00  164.00 5492.00
GR162.00 5553.00  160.00 5729.00  160.00 7017.00  162.00 7288.00  164.00 7356.00
GR168.00 7449.00  170.00 7522.00  174.00 7658.00
X1211.00        78 3862.00 5191.00   95.00   95.00   95.00     .00     .00     .00
                                            5905.00
X3
BT    -24  3860.0   172.6   172.6  3862.0   172.6   166.0  3979.6   175.0   168.4
BT         3984.5   175.0   168.4  4100.6   177.0   170.4  4105.5   177.0   170.4
BT         4221.6   178.4   171.8  4226.5   178.4   171.8  4342.6   179.4   172.8
BT         4347.5   179.4   172.8  4463.6   179.9   173.3  4468.5   179.9   173.3
BT         4584.6   179.9   173.3  4589.5   179.9   173.3  4705.6   179.4   172.8
BT         4710.5   179.4   172.8  4826.6   178.4   171.8  4831.5   178.4   171.8
BT         4947.6   177.0   170.4  4952.5   177.0   170.4  5068.6   175.0   168.4
BT         5073.5   175.0   168.4  5191.0   172.6   166.0  5209.0   172.3   172.3
GR166.70 1000.00  166.00 1030.00  166.00 1072.00  164.00 1497.00  162.00 2215.00
GR162.00 3458.00  164.00 3535.00  166.00 3627.00  168.00 3698.00  170.00 3773.00
GR172.30 3844.00  172.60 3860.00  166.00 3862.00  164.00 3871.00  160.00 3880.00
GR150.00 3909.00  148.00 3917.00  147.50 3979.50  168.40 3979.60  168.40 3984.50
GR147.50 3984.60  146.50 4100.50  170.40 4100.60  170.40 4105.50  146.50 4105.60
GR146.00 4170.00  145.50 4221.50  171.80 4221.60  171.80 4226.50  145.50 4226.60
GR145.40 4240.00  145.10 4342.50  172.80 4342.60  172.80 4347.50  145.10 4347.60
GR144.70 4463.50  173.30 4463.60  173.30 4468.50  144.70 4468.60  144.30 4584.50
GR173.30 4584.60  173.30 4589.50  144.30 4589.60  144.00 4685.00  144.00 4705.50
GR172.80 4705.60  172.80 4710.50  144.00 4710.60  144.00 4826.50  171.80 4826.60
```

```
GR171.80 4831.50  144.00 4831.60  144.00 4947.50  170.40 4947.60  170.40 4952.50
GR144.00 4952.60  144.00 5068.50  168.40 5068.60  168.40 5073.50  144.00 5073.60
GR144.00 5101.00  146.00 5122.00  148.00 5153.00  150.00 5160.00  166.00 5191.00
GR172.30 5209.00  168.00 5331.00  168.00 5366.00  166.00 5421.00  164.00 5492.00
GR162.00 5553.00  160.00 5729.00  160.00 7017.00  162.00 7288.00  164.00 7356.00
GR168.00 7449.00  170.00 7522.00  174.00 7658.00
X1211.10      59 3862.00 5191.00   10.00   10.00   10.00     .00     .00     .00
X3                                         5905.00
GR166.70 1000.00  166.00 1030.00  166.00 1072.00  164.00 1497.00  162.00 2215.00
GR162.00 3458.00  164.00 3535.00  166.00 3627.00  168.00 3698.00  170.00 3773.00
GR172.30 3844.00  172.60 3860.00  166.00 3862.00  164.00 3871.00  160.00 3880.00
GR150.00 3909.00  148.00 3917.00  147.50 3979.50  147.50 3984.60  146.50 4100.50
GR146.50 4105.60  146.00 4170.00  145.50 4221.50  145.50 4226.60  145.40 4240.00
GR145.40 4240.00  145.10 4342.50  145.10 4347.60  144.70 4463.50  144.70 4468.60
GR144.30 4584.50  144.30 4589.60  144.00 4685.00  144.00 4705.50  144.00 4710.60
GR144.00 4826.50  144.00 4831.60  144.00 4947.50  144.00 4952.60  144.00 5068.50
GR144.00 5073.60  144.00 5101.00  146.00 5122.00  148.00 5153.00  150.00 5160.00
GR166.00 5191.00  172.30 5209.00  168.00 5331.00  168.00 5366.00  166.00 5421.00
GR164.00 5492.00  162.00 5553.00  160.00 5729.00  160.00 7017.00  162.00 7288.00
GR164.00 7356.00  168.00 7449.00  170.00 7522.00  174.00 7658.00
X1212.00      57 3631.00 5094.00  170.00  190.00  180.00     .00     .00     .00
X3                       3631.00  161.40 5766.00
GR167.00 1000.00  166.50 1200.00  166.00 1451.00  164.00 1466.00  162.00 1537.00
GR161.50 2800.00  161.40 3130.00  162.00 3252.00  162.00 3318.00  161.90 3406.00
GR160.00 3462.00  156.00 3472.00  154.00 3545.00  152.00 3562.00  148.00 3585.00
GR148.00 3600.00  150.00 3608.00  160.00 3621.00  162.00 3631.00  160.00 3645.00
GR150.00 3689.00  148.00 3691.00  148.00 3758.00  150.00 3764.00  150.00 3882.00
GR148.00 3956.00  148.00 4140.00  146.00 4180.00  146.00 4393.00  146.00 4460.00
GR144.00 4600.00  146.00 4742.00  146.00 4772.00  144.00 4842.00  144.00 4961.00
GR148.00 5000.00  150.00 5008.00  160.00 5049.00  162.00 5094.00  164.00 5107.00
GR166.00 5130.00  168.00 5136.00  169.00 5235.00  168.00 5282.00  166.00 5388.00
GR164.00 5415.00  162.00 5433.00  162.00 5920.00  160.00 6090.00  160.00 6130.00
GR162.00 6385.00  162.40 6490.00  162.00 6723.00  162.00 7036.00  168.00 7187.00
GR170.00 7250.00  172.00 7389.00
NC                           .1      .3
X1   213   60.00 9070.0010679.00  190.00  220.00  210.00     .00     .00     .00
X3                                       11385.00
GR166.30 6440.00  166.00 6455.00  166.00 6696.00  165.20 6825.00  164.00 7065.00
GR162.90 7098.00  162.00 7136.00  162.00 7157.00  162.40 7865.00  162.00 8021.00
GR162.00 8151.00  162.80 8178.00  162.00 8181.00  162.00 8932.00  160.00 9070.00
GR156.00 9083.00  156.00 9141.00  160.00 9150.00  162.00 9158.00  162.00 9178.00
GR160.00 9185.00  158.00 9197.00  156.00 9221.00  154.00 9291.00  152.00 9322.00
GR152.00 9470.00  152.30 9516.00  152.00 9542.00  150.00 9690.00  148.00 9708.00
GR148.00 9728.00  150.00 9738.00  150.00 9905.00  148.00 9995.00  146.0010080.00
GR146.0010333.00  146.0010400.00  144.0010479.00  143.6010506.00  144.0010558.00
GR144.0010621.00  148.0010646.00  150.0010657.00  160.0010679.00  162.0010720.00
GR164.0010735.00  164.0010896.00  162.0010902.00  160.0010928.00  160.0011148.00
GR162.0011159.00  162.0011680.00  160.0011715.00  160.0011808.00  162.0011835.00
GR164.0012015.00  166.0012184.00  168.0012501.00  170.0012875.00  172.0012978.00
X1   214   48.00 9064.0010695.00  250.00  155.00  200.00     .00     .00     .00
X3                                       11381.00
GR166.00 6655.00  165.20 6671.00  166.00 6805.00  166.00 7053.00  164.00 7060.00
GR164.00 7095.00  162.00 7130.00  162.00 7157.00  162.90 8185.00  162.00 8200.00
GR162.00 8890.00  160.00 9064.00  158.00 9173.00  156.00 9250.00  154.00 9263.00
GR152.00 9350.00  150.00 9614.00  150.00 9664.00  152.00 9676.00  152.00 9687.00
GR150.00 9693.00  150.00 9773.00  148.00 9863.00  146.00 9890.00  144.00 9930.00
GR143.7010014.00  144.0010036.00  146.0010195.00  146.0010405.00  144.0010620.00
GR144.0010634.00  148.0010653.00  150.0010666.00  160.0010695.00  162.0010735.00
GR162.0011050.00  160.5011075.00  162.0011130.00  162.0011715.00  160.0011720.00
GR160.0011755.00  162.0011813.00  164.0011880.00  166.0012145.00  166.0012895.00
```

```
GR168.0012908.00  170.0012913.00  172.0013008.00     .00     .00     .00     .00
X1   215   59.00 9320.0010744.00  245.00  160.00  195.00     .00     .00     .00
X3                                        11394.00
GR166.80 6425.00  166.40 6573.00  166.00 6787.00  164.00 6900.00  164.00 7117.00
GR163.10 7676.00  162.00 7885.00  162.00 8127.00  161.60 8153.00  162.00 8197.00
GR162.00 8226.00  161.90 8784.00  162.00 8975.00  162.00 8984.00  161.30 9015.00
GR160.00 9080.00  160.00 9133.00  162.00 9235.00  162.00 9320.00  160.00 9323.00
GR152.00 9343.00  150.00 9450.00  150.00 9550.00  152.00 9556.00  152.00 9567.00
GR150.00 9575.00  148.00 9585.00  146.00 9736.00  144.00 9753.00  144.00 9795.00
GR146.00 9877.00  148.0010033.00  150.0010072.00  152.0010080.00  152.0010130.00
GR150.0010225.00  148.0010255.00  146.0010426.00  146.0010589.00  148.0010622.00
GR148.0010685.00  150.0010704.00  152.0010710.00  160.0010734.00  162.0010744.00
GR163.3010865.00  162.0011065.00  160.0011087.00  158.0011115.00  158.0011136.00
GR160.0011146.00  162.0011168.00  164.0011378.00  164.0011423.00  162.0011647.00
GR162.0012815.00  164.0012913.00  170.0012976.00  172.0013045.00     .00     .00
X1   216   62.00 9332.0010778.00  220.00  190.00  200.00     .00     .00     .00
X3                                        11385.00
GR168.10 6790.00  168.00 6980.00  168.00 7035.00  166.00 7048.00  164.00 7092.00
GR162.20 7996.00  162.00 8135.00  162.00 8182.00  162.70 8208.00  162.00 8214.00
GR162.00 9170.00  164.00 9280.00  164.00 9332.00  160.00 9345.00  152.00 9362.00
GR150.00 9389.00  148.00 9455.00  148.00 9530.00  146.00 9639.00  146.00 9673.00
GR148.00 9763.00  150.00 9796.00  152.00 9810.00  154.00 9908.00  156.00 9917.00
GR156.6010003.00  156.0010100.00  154.0010120.00  152.0010165.00  150.0010215.00
GR148.0010260.00  146.0010510.00  146.0010560.00  148.0010605.00  150.0010635.00
GR150.0010668.00  148.0010675.00  148.0010689.00  150.0010709.00  152.0010729.00
GR160.0010763.00  162.0010778.00  162.0011010.00  160.0011059.00  156.0011088.00
GR155.6011099.00  156.0011105.00  160.0011120.00  162.0011159.00  164.0011818.00
GR164.0011930.00  164.0012301.00  168.0012311.00  168.0012320.00  168.0012490.00
GR166.0012551.00  164.0012611.00  164.0012761.00  166.0012791.00  168.0012809.00
GR170.0012892.00  172.0013042.00     .00     .00     .00     .00     .00     .00
X1   217   47.00 9109.0010810.00  310.00   65.00  201.00     .00     .00     .00
X3                                        11380.00
GR168.50 6970.00  168.00 7011.00  166.00 7029.00  164.00 7057.00  162.00 7679.00
GR162.00 9000.00  160.00 9109.00  154.00 9112.00  154.00 9122.00  160.00 9131.00
GR162.00 9255.00  162.00 9265.00  160.00 9275.00  154.00 9289.00  152.00 9318.00
GR150.00 9371.00  148.00 9473.00  148.00 9620.00  150.00 9709.00  152.00 9727.00
GR154.00 9782.00  156.00 9809.00  156.0010075.00  154.0010091.00  152.0010158.00
GR148.0010279.00  148.0010608.00  150.0010631.00  152.0010650.00  152.0010687.00
GR150.0010690.00  150.0010710.00  152.0010720.00  152.0010750.00  154.0010795.00
GR160.0010807.00  162.0010810.00  162.7010900.00  162.0011055.00  160.0011068.00
GR158.0011078.00  160.0011090.00  164.0011808.00  164.0012178.00  166.0012304.00
GR170.0012318.00  172.0013049.00     .00     .00     .00     .00     .00     .00
X1   218   50.00 9030.0010706.00  360.00  430.00  398.00     .00     .00     .00
X3                                        11119.00
GR168.60 6745.00  168.00 6757.00  167.40 6796.00  168.00 6825.00  168.30 6955.00
GR168.00 7007.00  166.80 7398.00  168.00 7705.00  168.00 7775.00  166.00 8454.00
GR164.00 8624.00  164.00 8763.00  162.00 8796.00  162.00 8822.00  160.00 8833.00
GR160.00 8860.00  161.60 8946.00  160.00 9030.00  154.00 9041.00  152.00 9044.00
GR150.00 9054.00  148.90 9265.00  150.00 9370.00  152.00 9466.00  156.00 9558.00
GR156.00 9744.00  155.70 9783.00  154.00 9892.00  148.0010049.00  148.0010240.00
GR150.0010367.00  152.0010400.00  154.0010459.00  154.6010480.00  154.0010495.00
GR152.0010587.00  152.0010618.00  154.0010666.00  160.0010704.00  162.0010706.00
GR164.0010840.00  164.0010955.00  162.0011182.00  162.0011365.00  164.0011655.00
GR166.0011865.00  168.0012036.00  168.0012304.00  170.0012583.00  172.0012767.00
ET            9.1     9.1     9.1     9.1                          8819   11218
X1   219   45.00 9199.0010978.00  465.00  295.00  400.00     .00     .00     .00
X3   10.
GR168.80 6755.00  168.00 7113.00  167.80 7173.00  168.00 7215.00  168.00 7705.00
GR169.20 7910.00  168.00 8168.00  168.00 8774.00  166.60 8805.00  166.00 8818.00
GR164.00 8875.00  160.00 8885.00  154.20 8901.00  160.00 8915.00  162.00 8920.00
```

```
GR162.00 8981.00  161.50 9114.00  160.00 9199.00  156.00 9227.00  150.00 9275.00
GR148.10 9413.00  150.00 9561.00  154.00 9708.00  156.00 9729.00  158.00 9767.00
GR158.00 9947.00  156.0010015.00  154.0010040.00  148.0010180.00  148.0010274.00
GR150.0010373.00  151.1010485.00  152.0010735.00  154.0010747.00  156.0010930.00
GR164.0010978.00  164.0011596.00  166.0011624.00  168.0011895.00  170.0012213.00
GR168.0012314.00  168.0012424.00  170.0012441.00  172.0012526.00  174.0012866.00
ET            9.1      9.1      9.1      9.1                          9021   11215
X1   220   40.00 9356.0011283.00  385.00  390.00  400.00     .00      .00     .00
X3   10.
GR169.80 8225.00  168.50 8640.00  166.00 8805.00  164.00 8897.00  162.00 9045.00
GR162.00 9197.00  160.00 9272.00  162.00 9335.00  162.00 9356.00  160.00 9371.00
GR158.00 9377.00  150.00 9405.00  148.00 9423.00  147.30 9512.00  148.00 9575.00
GR150.00 9655.00  152.00 9742.00  158.00 9825.00  158.00 9913.00  154.00 9984.00
GR154.0010054.00  152.0010123.00  150.0010203.00  148.0010330.00  148.0010401.00
GR150.0010516.00  156.0010646.00  156.0010907.00  154.0010963.00  152.0010997.00
GR152.0011045.00  156.0011077.00  158.0011204.00  160.0011235.00  166.0011283.00
GR166.0011515.00  168.0011953.00  170.0012182.00  172.0012483.00  174.0012865.00
ET            9.1      9.1      9.1      9.1                          9132   11095
X1   221   46.00 9306.0010664.00  385.00  410.00  403.00     .00      .00     .00
GR173.80 7805.00  172.00 7843.00  170.00 8282.00  168.00 8435.00  166.00 8640.00
GR165.70 8673.00  166.00 8715.00  166.00 8916.00  162.00 8945.00  160.90 8955.00
GR162.00 8980.00  164.00 9095.00  165.70 9195.00  164.00 9215.00  162.00 9306.00
GR158.00 9315.00  150.00 9334.00  150.00 9358.00  152.00 9395.00  152.00 9416.00
GR150.00 9425.00  148.00 9437.00  148.00 9513.00  150.00 9614.00  152.00 9677.00
GR152.00 9841.00  153.90 9966.00  152.0010064.00  152.0010374.00  151.2010500.00
GR152.0010600.00  166.0010664.00  167.8010705.00  166.0010728.00  160.0010770.00
GR158.0011120.00  156.0011170.00  156.0011212.00  158.0011315.00  160.0011470.00
GR162.0011558.00  166.0011620.00  168.0011800.00  168.0012600.00  176.0012684.00
GR178.0012715.00
ET            9.1      9.1      9.1      9.1                          9248   11001
X1   222      51 9448.0010820.00  395.00  355.00  400.00     .00      .00     .00
X3   10
GR172.00 7795.00  170.00 7990.00  168.00 8305.00  166.00 8574.00  166.00 8845.00
GR164.00 8875.00  164.00 8940.00  166.00 8955.00  166.00 8995.00  168.00 9019.00
GR166.00 9112.00  166.00 9256.00  153.70 9303.00  152.80 9408.00  156.30 9448.00
GR150.00 9478.00  150.00 9479.00  148.00 9504.00  146.00 9535.00  148.00 9575.00
GR150.00 9608.00  152.00 9693.00  152.00 9817.00  151.20 9915.00  152.0010012.00
GR153.8010183.00  152.0010464.00  152.0010515.00  154.0010555.00  156.0010585.00
GR156.0010616.00  155.3010655.00  156.0010681.00  160.0010723.00  162.0010763.00
GR164.0010782.00  166.0010820.00  166.0010906.00  168.0010940.00  160.0011045.00
GR160.0011315.00  158.0011370.00  158.0011580.00  160.0011600.00  162.0011620.00
GR162.4011680.00  166.0012210.00  168.0012356.00  170.0012395.00  172.0012469.00
GR174.0012513.00
ET            9.1      9.1      9.1      9.1                          9345   10845
X1   223      59 9561.0010714.00  385.00  385.00  399.00     .00      .00     .00
X3   10
GR172.60 7565.00  172.00 7573.00  170.00 7765.00  168.00 8084.00  168.00 8393.00
GR170.00 8457.00  170.00 8646.00  172.00 8692.00  172.00 8704.00  170.00 8706.00
GR162.00 8725.00  162.00 8734.00  168.00 8750.00  170.00 8820.00  169.00 8980.00
GR168.00 9090.00  166.00 9160.00  166.00 9241.00  164.60 9341.00  153.70 9416.00
GR152.80 9521.00  156.30 9561.00  148.00 9591.00  148.00 9655.00  150.00 9684.00
GR152.00 9725.00  154.00 9760.00  154.00 9784.00  152.00 9801.00  152.00 9957.00
GR154.0010058.00  154.9010195.00  154.0010306.00  154.0010513.00  156.0010543.00
GR156.0010640.00  158.0010667.00  160.0010675.00  160.0010683.00  158.0010687.00
GR158.0010693.00  160.0010695.00  170.0010714.00  170.0010727.00  160.0010745.00
GR158.0010765.00  162.0010780.00  162.0010810.00  160.0010865.00  160.0010990.00
GR150.0011030.00  160.0011086.00  170.0011141.00  170.0011193.00  166.0011215.00
GR168.0011244.00  170.0011288.00  170.0011593.00  170.0012493.00
ET            9.1      9.1      9.1      9.1                          9356   10720
X1   224   65.00 9621.0010650.00  365.00  415.00  399.00     .00      .00     .00
```

```
X3     10
GR172.20 7375.00  172.00 7392.00  170.00 7647.00  170.00 7942.00  169.60 8173.00
GR170.00 8396.00  172.00 8403.00  172.00 8413.00  170.00 8419.00  168.00 8424.00
GR168.00 8595.00  166.00 8685.00  166.00 8730.00  168.00 8780.00  168.00 8805.00
GR158.00 8845.00  156.00 8865.00  156.00 8887.00  154.00 8911.00  154.00 8943.00
GR166.00 9036.00  168.00 9065.00  168.00 9128.00  166.00 9140.00  164.00 9160.00
GR162.00 9288.00  162.00 9311.00  164.00 9312.00  164.00 9316.00  164.60 9401.00
GR153.70 9476.00  152.80 9581.00  156.30 9621.00  148.00 9651.00  148.00 9652.00
GR148.00 9653.00  148.00 9655.00  148.00 9657.00  150.00 9731.00  152.00 9932.00
GR154.0010075.00  154.0010432.00  152.0010496.00  152.0010515.00  154.0010550.00
GR154.0010573.00  158.0010604.00  158.0010639.00  160.0010650.00  160.0010674.00
GR158.0010703.00  158.0010725.00  160.0010745.00  160.0010765.00  162.0010788.00
GR164.0010796.00  164.0011035.00  166.0011063.00  168.0011135.00  170.0011144.00
GR168.0011146.00  168.0011172.00  170.0011474.00  172.0012010.00  174.0012113.00
ET            9.1     9.1     9.1     9.1                          9377   10608
X1   225      53 9502.0010505.00  385.00  400.00  407.00     .00     .00     .00
X3   10.
GR171.20 7355.00  170.00 7760.00  170.00 8255.00  160.00 8293.00  158.80 9240.00
GR162.00 9343.00  166.00 9357.00  166.00 9377.00  158.10 9407.00  158.10 9437.00
GR156.80 9462.00  164.90 9502.00  152.00 9537.00  152.00 9542.00  152.00 9543.00
GR150.00 9546.00  150.00 9614.00  148.00 9634.00  148.00 9645.00  150.00 9893.00
GR158.0010210.00  158.8010285.00  158.0010317.00  156.0010346.00  156.0010395.00
GR150.0010419.00  148.0010444.00  147.6010450.00  148.0010461.00  150.0010475.00
GR160.0010505.00  161.2010515.00  160.0010544.00  160.0010620.00  158.0010641.00
GR160.0010661.00  162.0010672.00  162.0010695.00  164.0010756.00  164.0010777.00
GR166.0010786.00  166.0011000.00  166.0011008.00  168.0011018.00  166.0011025.00
GR166.0011046.00  168.0011155.00  170.0011545.00  172.0011595.00  172.0011646.00
GR174.0012056.00  174.0012365.00  176.0012763.00
EJ
T1         SIMONS, LI & ASSOCIATES, INC. -- SALT RIVER ANALYSIS
T2 CHANNELIZATION TRANSITION TO HAYDEN RD. (EXISTING W/ FREEWAY ENCROACHMENTS)
T3       PAZ-DMJM-03    50-YEAR FLOOD   (STA. 248+00 TO XSEC 225)
J1   -10       3       0       0       0       0       0       0  148.59       0
J2     2       0      -1       0       0       0      -1       0       0       0
T1         SIMONS, LI & ASSOCIATES, INC. -- SALT RIVER ANALYSIS
T2 CHANNELIZATION TRANSITION TO HAYDEN RD. (EXISTING W/ FREEWAY ENCROACHMENTS)
T3       PAZ-DMJM-03    20-YEAR FLOOD   (STA. 248+00 TO XSEC 225)
J1   -10       4       0       0       0       0       0       0  147.00       0
J2     3       0      -1       0       0       0      -1       0       0       0
T1         SIMONS, LI & ASSOCIATES, INC. -- SALT RIVER ANALYSIS
T2 CHANNELIZATION TRANSITION TO HAYDEN RD. (EXISTING W/ FREEWAY ENCROACHMENTS)
T3       PAZ-DMJM-03    10-YEAR FLOOD   (STA. 248+00 TO XSEC 225)
J1   -10       5       0       0       0       0       0       0  144.38       0
J2    15       0      -1       0       0       0      -1       0       0       0
ER
```

SALT RIVER WITH THE EAST PAPAGO FREEWAY ENCROACHMENTS (SALT-FWY.SMP)

Summary Printout

SECNO	CWSEL	DEPTH	TOPWID	AREA	VCH	10K*S	FRCH
200.00	162.78	20.78	2229.25	29998.74	7.53	9.95	.33
200.00	159.56	17.56	2136.64	22991.77	7.13	11.92	.35
200.00	157.94	15.94	1679.70	19572.45	6.90	13.10	.36
200.00	154.88	12.88	1569.06	14524.59	6.40	15.33	.38
201.00	162.95	20.95	2448.34	29674.98	7.80	10.75	.34
201.00	159.76	17.76	2174.32	22225.86	7.45	13.14	.36
201.00	158.16	16.16	2156.79	18774.58	7.22	14.45	.37
201.00	155.15	13.15	1492.56	13976.35	6.65	16.30	.39
202.00	163.10	23.10	2539.13	28851.01	8.35	11.83	.36
202.00	159.94	19.94	2365.40	21041.44	8.04	14.47	.38
202.00	158.38	18.38	2011.19	17574.09	7.76	15.86	.39
202.00	155.43	15.43	1302.70	13265.79	7.01	16.22	.40
203.00	163.27	24.97	2547.44	27579.94	8.68	12.59	.37
203.00	160.19	21.89	2420.96	19997.40	8.23	14.78	.39
203.00	158.68	20.38	1515.80	17257.62	7.84	15.57	.39
203.00	155.75	17.45	1281.25	13214.31	7.04	16.07	.40
204.00	163.54	21.54	2770.76	28420.41	8.70	12.49	.37
204.00	160.47	18.47	2544.78	20231.80	8.34	14.89	.39
204.00	158.97	16.97	1673.34	17259.96	7.96	15.66	.39
204.00	156.06	14.06	1323.52	13056.03	7.12	17.47	.40
205.00	163.90	21.90	3328.04	31000.83	8.43	11.64	.36
205.00	160.80	18.80	2822.11	21285.78	8.29	14.67	.39
205.00	159.28	17.28	1945.70	17644.89	8.00	15.90	.40
205.00	156.40	14.40	1388.60	12857.90	7.24	18.33	.41
206.00	164.33	22.33	3873.50	35282.17	7.68	9.68	.33
206.00	161.25	19.25	3281.27	24111.84	7.69	12.64	.36
206.00	159.70	17.70	2833.48	19407.05	7.59	14.35	.38
206.00	156.83	14.83	1374.50	13441.06	6.92	16.68	.39
207.00	164.58	24.58	4042.45	36568.09	7.36	9.10	.32
207.00	161.58	21.58	3605.11	25097.63	7.34	11.31	.35
207.00	160.07	20.07	3355.44	19894.30	7.17	12.45	.36
207.00	157.26	17.26	1399.78	14631.87	6.36	12.89	.35
208.00	164.78	22.78	4434.57	35896.40	7.45	9.32	.32
208.00	161.82	19.82	3751.64	24027.49	7.36	11.42	.35
208.00	160.38	18.38	2043.07	19485.05	7.04	11.98	.35
208.00	157.58	15.58	1422.40	14997.45	6.20	12.11	.34
210.00	164.96	20.96	4041.61	32378.43	7.97	9.01	.32
210.00	162.11	18.11	2935.01	22302.15	7.36	9.38	.32
210.00	160.73	16.73	1527.52	19966.78	6.80	8.94	.31
210.00	157.97	13.97	1289.57	16256.18	5.72	8.12	.28
210.10	164.96	20.96	3992.49	31378.29	8.17	13.66	.34
210.10	162.08	18.08	2874.77	21368.46	7.68	14.08	.34
210.10	160.71	16.71	1476.45	19151.68	7.09	13.13	.33
210.10	157.96	13.96	1239.50	15583.01	5.97	11.41	.30

211.00	165.13	21.13	4057.15	32119.11	8.04	13.12	.33
211.00	162.25	18.25	2959.24	21869.77	7.59	13.63	.34
211.00	160.86	16.86	1504.63	19376.46	7.03	12.75	.32
211.00	158.08	14.08	1240.09	15732.23	5.91	11.08	.30
211.10	165.20	21.20	4126.89	33410.08	7.81	8.53	.31
211.10	162.36	18.36	3058.62	23088.82	7.24	8.89	.31
211.10	160.96	16.96	1563.66	20333.96	6.70	8.50	.30
211.10	158.15	14.15	1290.44	16488.25	5.64	7.75	.28
212.00	165.47	21.47	4039.88	35519.23	7.47	8.69	.31
212.00	162.53	18.53	3917.22	23803.93	7.25	10.39	.33
212.00	161.11	17.11	1436.81	19776.84	6.83	10.27	.32
212.00	158.29	14.29	1389.46	15807.71	5.88	9.83	.31
213.00	165.70	22.10	4640.57	36347.76	7.38	9.72	.32
213.00	162.76	19.16	4105.28	23582.14	7.39	12.76	.36
213.00	161.32	17.72	1945.53	19308.13	7.11	13.46	.37
213.00	158.47	14.87	1553.05	14464.43	6.43	15.33	.38
214.00	165.96	22.26	4470.40	38055.57	6.99	8.15	.30
214.00	163.11	19.41	4270.50	25736.63	6.83	9.95	.32
214.00	161.69	17.99	1874.99	20864.31	6.52	10.45	.32
214.00	158.86	15.16	1565.83	16106.20	5.77	10.82	.32
215.00	166.06	22.06	4639.05	36584.94	7.53	8.92	.32
215.00	163.24	19.24	3698.23	24193.59	7.34	10.66	.33
215.00	161.83	17.83	1798.10	19743.13	6.97	10.99	.33
215.00	159.04	15.04	1446.47	15329.73	6.08	11.14	.33
216.00	166.20	20.20	4338.28	34215.41	8.06	11.70	.35
216.00	163.38	17.38	3894.40	22213.00	8.11	15.32	.39
216.00	161.97	15.97	1586.77	17409.97	7.86	16.64	.40
216.00	159.20	13.20	1465.03	13209.15	7.08	18.73	.41
217.00	166.61	18.61	4356.50	36814.29	7.34	11.01	.34
217.00	163.87	15.87	4282.56	24921.47	7.49	15.13	.38
217.00	162.41	14.41	3725.91	19009.07	7.53	18.23	.41
217.00	159.60	11.60	1569.00	13151.06	7.08	21.20	.45
218.00	166.91	18.91	3035.55	29166.10	8.09	12.75	.37
218.00	164.43	16.43	2531.28	22517.34	7.44	13.69	.37
218.00	163.16	15.16	2075.25	19628.87	7.04	14.14	.37
218.00	160.50	12.50	1756.89	14577.15	6.39	16.61	.38
219.00	167.48	19.48	2399.00	29613.47	7.73	11.79	.35
219.00	165.05	17.05	2372.96	23789.00	7.02	12.34	.35
219.00	163.79	15.79	2101.17	20856.62	6.66	12.76	.35
219.00	161.20	13.20	1866.11	15577.84	6.01	14.55	.36
220.00	168.01	20.71	2194.00	30397.24	7.36	10.51	.33
220.00	165.60	18.30	2194.00	25114.35	6.59	10.60	.32
220.00	164.35	17.05	2194.00	22370.17	6.21	10.78	.32
220.00	161.81	14.51	1857.56	16718.75	5.56	12.02	.33
221.00	168.27	20.27	1963.00	26251.87	8.90	13.88	.39
221.00	165.90	17.90	1897.89	21676.36	7.92	13.53	.37
221.00	164.68	16.68	1811.63	19397.06	7.41	13.30	.37
221.00	162.21	14.21	1690.93	15063.52	6.46	13.28	.35

222.00	168.79	22.79	1753.00	24619.80	9.12	15.42	.41
222.00	166.44	20.44	1706.05	20536.71	8.05	14.90	.39
222.00	165.22	19.22	1546.13	18522.37	7.50	14.48	.38
222.00	162.77	16.77	1501.92	14794.18	6.47	13.96	.36
223.00	169.21	21.21	1367.51	20945.99	10.65	21.23	.48
223.00	166.91	18.91	1363.14	17805.68	9.32	20.00	.45
223.00	165.71	17.71	1360.84	16158.87	8.66	19.55	.44
223.00	163.29	15.29	1351.30	12888.48	7.47	19.40	.42
224.00	170.09	22.09	1364.00	21876.96	10.49	18.06	.45
224.00	167.72	19.72	1364.00	18646.80	9.14	16.72	.42
224.00	166.48	18.48	1364.00	16960.41	8.46	16.12	.41
224.00	164.04	16.04	1315.16	13646.75	7.20	15.21	.38
225.00	170.67	23.07	1231.00	20331.16	11.17	19.54	.47
225.00	168.29	20.69	1231.00	17402.41	9.70	17.82	.43
225.00	167.04	19.44	1231.00	15872.68	8.96	17.00	.42
225.00	164.57	16.97	1105.09	12225.61	7.78	16.52	.40

APPENDIX B

HEC-2 INPUT/OUTPUT LISTINGS FOR THE IBW UNDER CONDITION I

```
  ED    NO
T1      SIMONS, LI & ASSOCIATES, INC. -- INDIAN BEND WASH, TEMPE, AZ.
T2      HEC-2 DATA DERIVED FROM COE, GDM PHASE II (FILE: IBW2EXT.H2I)
T3      MULTI-EXT (100-YR) (STRT WSEL BY SLOPE-AREA METHOD)
J1     0       2       0       0   0.002       0       0   30000  161.81       0
J2     1       0      -1       0       0       0      -1       0       0       0
J3    38       1      55      26      56      13      14      15       8       4
J3    53      54       0      38       1       2       3      11      12      42
J3     5      33      21      22      39
J6     1
NC 0.040   0.040   0.032     0.1     0.3
X1  3420       5  9685.0 10315.0       0       0       0       0       0       0
CI10000.  155.74     0.0       4       4   120.0
GR163.80  9685.0  156.30  9730.0  156.30 10000.0  156.30 10270.0  163.80 10315.0
X1  3640       5  9685.0 10315.0     220     220     220       0       0       0
CI     0  0.0020
GR164.92  9685.0  157.42  9730.0  157.42 10000.0  157.42 10270.0  164.92 10315.0
X1  3860       5  9685.0 10315.0     220     220     220       0       0       0
CI     0  0.0020
GR166.04  9685.0  158.54  9730.0  158.54 10000.0  158.54 10270.0  166.04 10315.0
X1  3900       5  9685.0 10315.0      40      40      40       0       0       0
CI     0  0.0020
GR166.24  9685.0  158.74  9730.0  158.74 10000.0  158.74 10270.0  166.24 10315.0
X1  4100       5  9685.0 10315.0     200     200     200       0       0       0
CI     0  0.0020
GR167.26  9685.0  159.76  9730.0  159.76 10000.0  159.76 10270.0  167.26 10315.0
X1  4300       5  9685.0 10315.0     200     200     200       0       0       0
CI     0  0.0020
GR168.28  9685.0  160.78  9730.0  160.78 10000.0  160.78 10270.0  168.28 10315.0
X1  4640       5  9687.6 10312.5     340     340     340       0       0       0
CI     0  0.0020
GR169.74  9687.6  162.67  9730.0  162.67 10000.0  162.67 10270.0  169.74 10312.5
X1  4980       5  9690.1 10309.9     340     340     340       0       0       0
CI     0  0.0020
GR171.21  9690.1  164.56  9730.0  164.56 10000.0  164.56 10270.0  171.21 10309.9
X1  5320       5  9692.7 10307.4     340     340     340       0       0       0
CI     0  0.0020
GR172.67  9692.7  166.45  9730.0  166.45 10000.0  166.45 10270.0  172.67 10307.4
X1  5600       5  9682.0 10318.0     280     280     280       0       0       0
CI     0  0.0020
GR176.00  9682.0  168.00  9730.0  168.00 10000.0  168.00 10270.0  176.00 10318.0
X15672.1      19  9682.0 10318.0      72      72      72       0       0       0
CI     0       0       0       0       0    0.01
BT    -9  9714.4  171.00  171.00  9730.0  170.18  168.40  9791.0  169.12  168.40
BT        9895.4  168.94  168.40  9895.5  168.94  166.94 10034.5  168.94  166.94
BT       10034.6  168.94  168.40 10270.0  170.42  168.40 10285.6  171.00  171.00
GR176.40  9682.0  171.00  9714.4  168.40  9730.0  168.40  9791.0  168.40  9895.4
GR162.72  9895.5  162.72  9937.0  166.94  9937.1  166.94  9938.9  162.72  9939.0
GR162.72  9991.0  166.94  9991.1  166.94  9992.9  162.72  9993.0  162.72 10034.5
GR168.40 10034.6  168.40 10270.0  171.00 10285.6  176.40 10318.0
X15750.1      19  9682.0 10318.0      78      78      78       0       0       0
BT    -9  9717.0  171.00  171.00  9730.0  170.57  168.83  9791.0  169.54  168.83
BT        9895.4  169.36  168.83  9895.5  169.36  167.36 10034.5  169.36  167.36
BT       10034.6  169.36  168.83 10270.0  170.80  168.83 10283.0  171.00  171.00
GR176.83  9682.0  171.00  9717.0  168.83  9730.0  168.83  9791.0  168.83  9895.4
GR163.19  9895.5  163.19  9937.0  167.36  9937.1  167.36  9938.9  163.19  9939.0
GR163.19  9991.0  167.36  9991.1  167.36  9992.9  163.19  9993.0  163.19 10034.5
GR168.83 10034.6  168.83 10270.0  171.00 10283.0  176.83 10318.0
X1  5825       5  9683.5 10316.5      75      75      75       0       0       0
CI10000.  163.34     0.0       4       4   120.0
```

```
GR177.01  9683.5  169.25  9730.0  169.25 10000.0  169.25 10270.0  177.01 10316.5
X1  5905       5  9685.0 10315.0      80      80      80       0       0       0
CI     0  163.73
GR177.20  9685.0  169.70  9730.0  169.70 10000.0  169.70 10270.0  177.20 10315.0
X1  6100       5  9688.1 10311.9     195     195     195       0       0       0
CI10000.  164.41     0.0       4       4   120.0
GR177.76  9688.1  170.78  9730.0  170.78 10000.0  170.78 10270.0  177.76 10311.9
X1  6150       5  9688.3 10311.7      50      50      50       0       0       0
CI10000.  166.85     0.0       4       4   120.0
GR178.00  9688.3  171.06  9730.0  171.06 10000.0  171.06 10270.0  178.00 10311.7
X1  6350       5  9689.0 10311.0     200     200     200       0       0       0
CI     0  0.0020
GR179.00  9689.0  172.17  9730.0  172.17 10000.0  172.17 10270.0  179.00 10311.0
X1  6575       5  9689.8 10310.2     225     225     225       0       0       0
CI     0  0.0020
GR180.11  9689.8  173.42  9730.0  173.42 10000.0  173.42 10270.0  180.11 10310.2
X1  6775       5  9690.6 10309.4     200     200     200       0       0       0
CI     0  0.0020
GR181.10  9690.6  174.53  9730.0  174.53 10000.0  174.53 10270.0  181.10 10309.4
X1  6950       5  9688.7 10311.3     175     175     175       0       0       0
CI10000.  168.46     0.0       4       4   120.0
GR182.39  9688.7  175.50  9730.0  175.50 10000.0  175.50 10270.0  182.39 10311.3
X1  7000       5  9686.4 10313.6      50      50      50       0       0       0
CI10000.  170.80     0.0       4       4   120.0
GR183.05  9686.4  175.78  9730.0  175.78 10000.0  175.78 10270.0  183.05 10313.6
X1  7200       5  9688.0 10312.0     200     200     200       0       0       0
CI     0  0.0015
GR183.89  9688.0  176.89  9730.0  176.89 10000.0  176.89 10270.0  183.89 10312.0
X1  7400       5  9688.0 10312.0     200     200     200       0       0       0
CI     0  0.0015
GR185.00  9688.0  178.00  9730.0  178.00 10000.0  178.00 10270.0  185.00 10312.0
EJ
T1      SIMONS, LI & ASSOCIATES, INC. -- INDIAN BEND WASH, TEMPE, AZ.
T2      HEC-2 DATA DERIVED FROM COE, GDM PHASE II (FILE: IBW2EXT.H2I)
T3      MULTI-EXT (BANKFULL) (STRT WSEL BY SLOPE-AREA METHOD)
J1     0       0       0       0   0.002       0       0   43000  164.35       0
J2     2       0      -1       0       0       0      -1       0       0       0
T1      SIMONS, LI & ASSOCIATES, INC. -- INDIAN BEND WASH, TEMPE, AZ.
T2      HEC-2 DATA DERIVED FROM COE, GDM PHASE II (FILE: IBW2EXT.H2I)
T3      MULTI-EXT (SUPER) (STRT WSEL BY SLOPE-AREA METHOD)
J1     0       0       0       0   0.002       0       0   51000  165.56       0
J2     3       0      -1       0       0       0      -1       0       0       0
T1      SIMONS, LI & ASSOCIATES, INC. -- INDIAN BEND WASH, TEMPE, AZ.
T2      HEC-2 DATA DERIVED FROM COE, GDM PHASE II (FILE: IBW2EXT.H2I)
T3      MULTI-EXT (SPF) (STRT WSEL = 100-YR @ SECNO 220 SALT RIVER ANALYSIS)
J1     0       2       0       0       0       0       0   63000  167.76       0
J2    15       0      -1       0       0       0      -1       0       0       0
ER
```

INDIAN BEND WASH UNDER EXISTING CONDITIONS; NO RIO SALADO IMPROVEMENTS (IBW3EXT.SMP)

Summary Printout

	SECNO	CWSEL	DEPTH	TOPWID	AREA	VCH	10K*S	FRCH
	3420.00	163.25	7.51	623.41	4111.66	7.30	20.01	.50
	3420.00	164.85	9.11	630.00	5114.44	8.41	20.24	.52
	3420.00	165.75	10.01	630.00	5684.79	8.97	20.09	.53
	3420.00	167.76	12.02	630.00	6950.75	9.06	15.81	.48
	3640.00	163.64	7.46	614.66	3746.94	8.01	26.77	.57
	3640.00	165.22	9.04	630.00	4732.91	9.09	26.13	.58
	3640.00	166.11	9.93	630.00	5294.50	9.63	25.39	.59
	3640.00	168.02	11.84	630.00	6496.74	9.70	19.74	.53
	3860.00	164.19	7.57	607.84	3489.73	8.60	33.44	.63
	3860.00	165.74	9.12	626.31	4439.30	9.69	32.06	.64
	3860.00	166.60	9.98	630.00	4990.94	10.22	30.84	.64
	3860.00	168.37	11.75	630.00	6098.02	10.33	24.31	.59
	3900.00	164.31	7.61	606.88	3457.67	8.68	34.41	.64
	3900.00	165.85	9.15	625.35	4405.91	9.76	32.82	.65
	3900.00	166.71	10.01	630.00	4948.37	10.31	31.72	.65
	3900.00	168.44	11.74	630.00	6040.54	10.43	25.08	.59
	4100.00	164.98	7.88	602.72	3333.79	9.00	38.51	.67
	4100.00	166.46	9.36	620.44	4236.94	10.15	37.00	.68
	4100.00	167.29	10.19	630.00	4753.76	10.73	36.21	.69
	4100.00	168.86	11.76	630.00	5744.64	10.97	29.59	.64
	4300.00	165.74	8.24	599.48	3260.71	9.20	41.18	.70
	4300.00	167.17	9.67	616.65	4130.49	10.41	39.96	.71
	4300.00	167.98	10.48	626.27	4628.77	11.02	39.26	.71
	4300.00	169.39	11.89	630.00	5521.02	11.41	33.72	.68
	4640.00	167.14	8.96	593.73	3155.64	9.51	45.37	.73
	4640.00	168.52	10.34	610.24	3983.21	10.80	44.50	.74
	4640.00	169.28	11.10	619.41	4453.01	11.45	44.04	.75
	4640.00	170.46	12.28	624.90	5188.68	12.14	40.98	.74
	4980.00	168.68	9.82	589.47	3141.90	9.55	45.62	.73
	4980.00	170.02	11.16	605.57	3943.75	10.90	45.55	.75
	4980.00	170.77	11.91	614.50	4397.63	11.60	45.46	.76
	4980.00	171.82	12.96	619.80	5050.56	12.47	44.35	.77
	5320.00	170.23	10.69	585.38	3146.49	9.53	45.00	.72
	5320.00	171.57	12.03	601.38	3936.68	10.92	45.43	.75
	5320.00	172.31	12.77	610.22	4383.02	11.64	45.56	.77
	5320.00	173.32	13.78	614.70	5008.45	12.58	45.14	.78
	5600.00	171.49	11.39	581.95	3158.72	9.50	44.10	.72
	5600.00	172.84	12.74	598.08	3951.74	10.88	44.55	.75
	5600.00	173.59	13.49	606.96	4397.55	11.60	44.76	.76
	5600.00	174.58	14.48	618.91	5008.02	12.58	45.46	.78
*	5672.10	172.80	10.08	592.79	2514.55	11.93	166.41	1.02
*	5672.10	173.97	11.25	606.81	3215.50	13.37	153.83	1.02
*	5672.10	174.69	11.97	615.51	3658.09	13.94	142.61	1.01
*	5672.10	175.57	12.85	626.09	4205.65	14.98	138.83	1.02

*	5750.10	174.59	11.40	609.12	3342.87	8.97	65.99	.68
*	5750.10	175.93	12.74	625.12	4165.05	10.32	66.68	.70
*	5750.10	176.64	13.45	633.60	4609.77	11.06	67.72	.72
*	5750.10	177.67	14.48	636.00	5268.03	11.96	66.61	.73
*	5825.00	175.36	12.02	613.18	4369.62	6.87	16.02	.45
*	5825.00	176.83	13.49	630.87	5287.95	8.13	18.11	.49
*	5825.00	177.63	14.29	633.00	5790.41	8.81	18.96	.51
*	5825.00	178.73	15.39	633.00	6489.83	9.71	19.87	.53
	5905.00	175.44	11.71	608.91	4157.54	7.22	18.74	.49
	5905.00	176.93	13.20	626.71	5074.44	8.47	20.59	.52
	5905.00	177.72	13.99	630.00	5574.89	9.15	21.37	.54
	5905.00	178.82	15.09	630.00	6270.32	10.05	22.14	.56
	6100.00	175.75	11.34	599.64	3757.51	7.98	25.72	.56
	6100.00	177.24	12.83	617.61	4668.44	9.21	26.67	.59
	6100.00	178.04	13.63	623.80	5165.39	9.87	27.17	.60
	6100.00	179.15	14.74	623.80	5852.91	10.76	27.46	.62
	6150.00	175.65	8.80	595.18	3182.14	9.43	44.26	.72
	6150.00	177.13	10.28	612.93	4074.40	10.55	41.50	.72
	6150.00	177.91	11.06	622.41	4561.58	11.18	40.90	.73
	6150.00	179.00	12.15	623.40	5238.52	12.03	39.61	.73
	6350.00	176.53	9.28	592.33	3155.04	9.51	45.26	.73
	6350.00	177.93	10.68	609.20	3999.08	10.75	43.82	.74
	6350.00	178.70	11.45	618.42	4470.40	11.41	43.39	.75
	6350.00	179.75	12.50	622.00	5121.45	12.30	42.55	.76
	6575.00	177.54	9.84	589.46	3141.21	9.55	45.65	.73
	6575.00	178.91	11.21	605.85	3956.46	10.87	45.10	.75
	6575.00	179.66	11.96	614.87	4414.38	11.55	44.92	.76
	6575.00	180.68	12.98	620.40	5048.19	12.48	44.47	.77
	6775.00	178.46	10.36	587.03	3146.68	9.53	45.15	.73
	6775.00	179.80	11.70	603.15	3946.55	10.90	45.22	.75
	6775.00	180.55	12.45	612.10	4399.92	11.59	45.16	.76
	6775.00	181.56	13.46	618.80	5021.90	12.55	45.09	.78
	6950.00	179.25	10.79	584.96	3152.40	9.52	44.68	.72
	6950.00	180.59	12.13	601.06	3948.89	10.89	44.94	.75
	6950.00	181.34	12.88	609.99	4399.77	11.59	44.97	.76
	6950.00	182.35	13.89	622.01	5017.67	12.56	45.46	.78
*	7000.00	179.03	8.23	579.03	2517.67	11.92	93.15	1.01
	7000.00	180.33	9.53	594.64	3281.04	13.11	82.04	.98
	7000.00	181.06	10.26	603.30	3713.51	13.73	77.89	.98
	7000.00	182.04	11.24	615.11	4313.29	14.61	74.06	.97
*	7200.00	181.14	10.04	590.96	3230.44	9.29	41.73	.70
	7200.00	182.43	11.33	606.45	4003.23	10.74	43.42	.74
	7200.00	183.15	12.05	615.02	4439.09	11.49	44.11	.75
	7200.00	184.15	13.05	624.00	5064.65	12.44	44.28	.77
	7400.00	181.97	10.57	587.68	3206.55	9.36	42.47	.71
	7400.00	183.30	11.90	603.68	4000.63	10.75	43.27	.74
	7400.00	184.04	12.64	612.51	4448.33	11.46	43.58	.75
	7400.00	185.04	13.64	624.00	5066.67	12.43	44.20	.77

APPENDIX C

HEC-2 INPUT/OUTPUT LISTINGS FOR THE IBW UNDER CONDITION II

```
  ED     NO
T1       SIMONS, LI & ASSOCIATES, INC. -- INDIAN BEND WASH, TEMPE, AZ.
T2       HEC-2 DATA DERIVED FROM COE, GDM PHASE II (SLA FILE: IBW2SPCL.H2I)
T3       MULTI-SPCL (100-YR) (STRT WSEL BY SLOPE-AREA METHOD)
J1     0       2       0       0   0.002       0       0   30000  161.81       0
J2     1       0      -1       0       0       0      -1       0       0       0
J3    38       1      55      26      56      13      14      15       8       4
J3    53      54       0      38       1       2       3      11      12      42
J3     5      33      21      22      39
J6     1
NC 0.040   0.040   0.032     0.1     0.3
X1  3420       5  9685.0 10315.0       0       0       0       0       0       0
CI10000.  155.74     0.0       4       4   120.0
GR163.80  9685.0  156.30  9730.0  156.30 10000.0  156.30 10270.0  163.80 10315.0
X1  3640       5  9685.0 10315.0     220     220     220       0       0       0
CI     0  0.0020
GR164.92  9685.0  157.42  9730.0  157.42 10000.0  157.42 10270.0  164.92 10315.0
X1  3860       5  9685.0 10315.0     220     220     220       0       0       0
CI     0  0.0020
GR166.04  9685.0  158.54  9730.0  158.54 10000.0  158.54 10270.0  166.04 10315.0
X1  3900       5  9685.0 10315.0      40      40      40       0       0       0
CI     0  0.0020
GR166.24  9685.0  158.74  9730.0  158.74 10000.0  158.74 10270.0  166.24 10315.0
NC     0       0       0     0.3     0.5
X13919.5       9  9685.0 10316.0    19.5    19.5    19.5       0       0       0
CI     0  0.0020       0       0       0    0.01
X3    10
GR166.34  9685.0  158.84  9730.0  158.84  9931.6  156.74  9940.0  156.74 10000.0
GR156.74 10060.0  158.84 10068.4  158.84 10271.0  166.34 10316.0
SB  1.05    1.56    2.60     631     541      36    7750     3.6  157.06  156.74
X14080.5       9  9685.0 10316.0     161     161     161       0       0       0
X2     0       0       1   172.0   182.0       0       0       0       0       0
X3    10
GR167.16  9685.0  159.66  9730.0  159.66  9929.6  157.06  9940.0  157.06 10000.0
GR157.06 10060.0  159.66 10070.4  159.66 10271.0  167.16 10316.0
X1  4100       5  9685.0 10315.0    19.5    19.5    19.5       0       0       0
CI10000.  157.10     0.0       4       4   120.0
GR167.26  9685.0  159.76  9730.0  159.76 10000.0  159.76 10270.0  167.26 10315.0
NC     0       0       0     0.1     0.3
X1  4300       5  9685.0 10315.0     200     200     200       0       0       0
CI     0  0.0020
GR168.28  9685.0  160.78  9730.0  160.78 10000.0  160.78 10270.0  168.28 10315.0
X1  4640       5  9687.6 10312.5     340     340     340       0       0       0
CI     0  0.0020
GR169.74  9687.6  162.67  9730.0  162.67 10000.0  162.67 10270.0  169.74 10312.5
X1  4980       5  9690.1 10309.9     340     340     340       0       0       0
CI     0  0.0020
GR171.21  9690.1  164.56  9730.0  164.56 10000.0  164.56 10270.0  171.21 10309.9
X1  5320       5  9692.7 10307.4     340     340     340       0       0       0
CI     0  0.0020
GR172.67  9692.7  166.45  9730.0  166.45 10000.0  166.45 10270.0  172.67 10307.4
X1  5600       5  9682.0 10318.0     280     280     280       0       0       0
CI     0  0.0020
GR176.00  9682.0  168.00  9730.0  168.00 10000.0  168.00 10270.0  176.00 10318.0
X15672.1      19  9682.0 10318.0      72      72      72       0       0       0
CI     0       0       0       0       0    0.01
BT    -9  9714.4  171.00  171.00  9730.0  170.18  168.40  9791.0  169.12  168.40
BT        9895.4  168.94  168.40  9895.5  168.94  166.94 10034.5  168.94  166.94
BT       10034.6  168.94  168.40 10270.0  170.42  168.40 10285.6  171.00  171.00
GR176.40  9682.0  171.00  9714.4  168.40  9730.0  168.40  9791.0  168.40  9895.4
```

```
GR162.72  9895.5  162.72  9937.0  166.94  9937.1  166.94  9938.9  162.72  9939.0
GR162.72  9991.0  166.94  9991.1  166.94  9992.9  162.72  9993.0  162.72 10034.5
GR168.40 10034.6  168.40 10270.0  171.00 10285.6  176.40 10318.0
X15750.1      19  9682.0 10318.0      78      78      78       0       0       0
BT    -9  9717.0  171.00  171.00  9730.0  170.57  168.83  9791.0  169.54  168.83
BT        9895.4  169.36  168.83  9895.5  169.36  167.36 10034.5  169.36  167.36
BT       10034.6  169.36  168.83 10270.0  170.80  168.83 10283.0  171.00  171.00
GR176.83  9682.0  171.00  9717.0  168.83  9730.0  168.83  9791.0  168.83  9895.4
GR163.19  9895.5  163.19  9937.0  167.36  9937.1  167.36  9938.9  163.19  9939.0
GR163.19  9991.0  167.36  9991.1  167.36  9992.9  163.19  9993.0  163.19 10034.5
GR168.83 10034.6  168.83 10270.0  171.00 10283.0  176.83 10318.0
X1  5825       5  9683.5 10316.5      75      75      75       0       0       0
CI10000.  163.34     0.0       4       4   120.0
GR177.01  9683.5  169.25  9730.0  169.25 10000.0  169.25 10270.0  177.01 10316.5
X1  5905       5  9685.0 10315.0      80      80      80       0       0       0
CI     0  163.73
GR177.20  9685.0  169.70  9730.0  169.70 10000.0  169.70 10270.0  177.20 10315.0
X1  6100       5  9688.1 10311.9     195     195     195       0       0       0
CI10000.  164.41     0.0       4       4   120.0
GR177.76  9688.1  170.78  9730.0  170.78 10000.0  170.78 10270.0  177.76 10311.9
X1  6150       5  9688.3 10311.7      50      50      50       0       0       0
CI10000.  166.85     0.0       4       4   120.0
GR178.00  9688.3  171.06  9730.0  171.06 10000.0  171.06 10270.0  178.00 10311.7
X1  6350       5  9689.0 10311.0     200     200     200       0       0       0
CI     0  0.0020
GR179.00  9689.0  172.17  9730.0  172.17 10000.0  172.17 10270.0  179.00 10311.0
X1  6575       5  9689.8 10310.2     225     225     225       0       0       0
CI     0  0.0020
GR180.11  9689.8  173.42  9730.0  173.42 10000.0  173.42 10270.0  180.11 10310.2
X1  6775       5  9690.6 10309.4     200     200     200       0       0       0
CI     0  0.0020
GR181.10  9690.6  174.53  9730.0  174.53 10000.0  174.53 10270.0  181.10 10309.4
X1  6950       5  9688.7 10311.3     175     175     175       0       0       0
CI10000.  168.46     0.0       4       4   120.0
GR182.39  9688.7  175.50  9730.0  175.50 10000.0  175.50 10270.0  182.39 10311.3
X1  7000       5  9686.4 10313.6      50      50      50       0       0       0
CI10000.  170.80     0.0       4       4   120.0
GR183.05  9686.4  175.78  9730.0  175.78 10000.0  175.78 10270.0  183.05 10313.6
X1  7200       5  9688.0 10312.0     200     200     200       0       0       0
CI     0  0.0015
GR183.89  9688.0  176.89  9730.0  176.89 10000.0  176.89 10270.0  183.89 10312.0
X1  7400       5  9688.0 10312.0     200     200     200       0       0       0
CI     0  0.0015
GR185.00  9688.0  178.00  9730.0  178.00 10000.0  178.00 10270.0  185.00 10312.0
EJ
T1      SIMONS, LI & ASSOCIATES, INC. -- INDIAN BEND WASH, TEMPE, AZ.
T2      HEC-2 DATA DERIVED FROM COE, GDM PHASE II (IBW2SPCL.H2I)
T3      MULTI-SPCL (BANKFULL) (STRT WSEL BY SLOPE-AREA METHOD)
J1     0       0       0       0   0.002       0       0   43000  164.35       0
J2     2       0      -1       0       0       0      -1       0       0       0
T1      SIMONS, LI & ASSOCIATES, INC. -- INDIAN BEND WASH, TEMPE, AZ.
T2      HEC-2 DATA DERIVED FROM COE, GDM PHASE II (IBW2SPCL.H2I)
T3      MULTI-SPCL (SUPER) (STRT WSEL BY SLOPE-AREA METHOD)
J1     0       0       0       0   0.002       0       0   51000  165.60       0
J2     3       0      -1       0       0       0      -1       0       0       0
T1      SIMONS, LI & ASSOCIATES, INC. -- INDIAN BEND WASH, TEMPE, AZ.
T2      HEC-2 DATA DERIVED FROM COE, GDM PHASE II (IBW2SPCL.H2I)
T3      MULTI-SPCL (SPF) (STRT WSEL = 100-YR @ SECNO 220 SALT RIVER ANALYSIS)
J1     0       2       0       0       0       0       0   63000  168.01       0
J2    15       0      -1       0       0       0      -1       0       0       0
```

INDIAN BEND WASH UNDER BRIDGED CONDITIONS; NO RIO SALADO IMPROVEMENTS (IBW3SPCL.SMP)

Summary Printout

SECNO	CWSEL	DEPTH	TOPWID	AREA	VCH	10K*S	FRCH
3420.00	163.25	7.51	623.41	4111.66	7.30	20.01	.50
3420.00	164.85	9.11	630.00	5114.44	8.41	20.24	.52
3420.00	165.75	10.01	630.00	5686.15	8.97	20.07	.53
3420.00	168.01	12.27	630.00	7108.25	8.86	14.69	.46
3640.00	163.64	7.46	614.66	3746.94	8.01	26.77	.57
3640.00	165.22	9.04	630.00	4732.91	9.09	26.13	.58
3640.00	166.12	9.94	630.00	5295.63	9.63	25.37	.59
3640.00	168.25	12.07	630.00	6639.75	9.49	18.38	.52
3860.00	164.19	7.57	607.84	3489.73	8.60	33.44	.63
3860.00	165.74	9.12	626.31	4439.30	9.69	32.06	.64
3860.00	166.60	9.98	630.00	4991.83	10.22	30.82	.64
3860.00	168.56	11.94	630.00	6222.26	10.12	22.75	.57
3900.00	164.31	7.61	606.88	3457.67	8.68	34.41	.64
3900.00	165.85	9.15	625.35	4405.91	9.76	32.82	.65
3900.00	166.71	10.01	630.00	4949.20	10.30	31.71	.65
3900.00	168.63	11.93	630.00	6160.93	10.23	23.51	.58
3919.50	164.38	7.64	607.48	3451.06	8.69	34.68	.64
3919.50	165.91	9.17	625.89	4396.86	9.78	33.08	.65
3919.50	166.77	10.03	631.00	4936.35	10.33	32.05	.65
3919.50	168.67	11.93	631.00	6140.21	10.26	23.81	.58
4080.50	164.69	7.63	601.36	3212.23	9.34	43.45	.71
4080.50	166.32	9.26	620.90	4207.04	10.22	37.92	.69
4080.50	167.23	10.17	631.00	4775.54	10.68	35.74	.68
4080.50	169.06	12.00	631.00	5933.25	10.62	26.66	.61
4100.00	164.77	7.67	600.08	3201.37	9.37	43.82	.71
4100.00	166.39	9.29	619.53	4189.77	10.26	38.33	.70
4100.00	167.29	10.19	630.00	4755.07	10.73	36.17	.69
4100.00	169.10	12.00	630.00	5900.31	10.68	27.09	.61
4300.00	165.65	8.15	598.36	3204.81	9.36	43.51	.71
4300.00	167.13	9.63	616.32	4113.84	10.45	40.47	.71
4300.00	167.97	10.47	626.33	4631.79	11.01	39.18	.71
4300.00	169.57	12.07	630.00	5635.88	11.18	31.50	.66
4640.00	167.13	8.95	593.58	3148.43	9.53	45.70	.73
4640.00	168.49	10.31	609.93	3967.76	10.84	45.05	.75
4640.00	169.28	11.10	619.35	4449.80	11.46	44.14	.75
4640.00	170.56	12.38	624.90	5252.58	11.99	39.36	.73
4980.00	168.68	9.82	589.41	3139.31	9.56	45.74	.73
4980.00	170.02	11.16	605.50	3940.02	10.91	45.69	.75
4980.00	170.77	11.91	614.48	4396.69	11.60	45.49	.76
4980.00	171.86	13.00	619.80	5071.62	12.42	43.75	.77
5320.00	170.23	10.69	585.42	3148.42	9.53	44.92	.72
5320.00	171.56	12.02	601.37	3936.60	10.92	45.43	.75
5320.00	172.31	12.77	610.23	4383.13	11.64	45.56	.77
5320.00	173.33	13.79	614.70	5015.10	12.56	44.94	.78

	5600.00	171.48	11.38	581.89	3155.64	9.51	44.24	.72
	5600.00	172.84	12.74	598.09	3952.06	10.88	44.54	.75
	5600.00	173.58	13.48	606.96	4397.56	11.60	44.76	.76
	5600.00	174.59	14.49	619.08	5016.93	12.56	45.21	.78
*	5672.10	172.80	10.08	592.79	2514.55	11.93	166.41	1.02
*	5672.10	173.97	11.25	606.81	3215.50	13.37	153.83	1.02
*	5672.10	174.69	11.97	615.51	3658.09	13.94	142.61	1.01
*	5672.10	175.57	12.85	626.09	4205.65	14.98	138.83	1.02
*	5750.10	174.59	11.40	609.12	3342.87	8.97	65.99	.68
*	5750.10	175.93	12.74	625.12	4165.05	10.32	66.68	.70
*	5750.10	176.64	13.45	633.60	4609.77	11.06	67.72	.72
*	5750.10	177.67	14.48	636.00	5268.03	11.96	66.61	.73
*	5825.00	175.36	12.02	613.18	4369.62	6.87	16.02	.45
*	5825.00	176.83	13.49	630.87	5287.95	8.13	18.11	.49
*	5825.00	177.63	14.29	633.00	5790.41	8.81	18.96	.51
*	5825.00	178.73	15.39	633.00	6489.83	9.71	19.87	.53
	5905.00	175.44	11.71	608.91	4157.54	7.22	18.74	.49
	5905.00	176.93	13.20	626.71	5074.44	8.47	20.59	.52
	5905.00	177.72	13.99	630.00	5574.89	9.15	21.37	.54
	5905.00	178.82	15.09	630.00	6270.32	10.05	22.14	.56
	6100.00	175.75	11.34	599.64	3757.51	7.98	25.72	.56
	6100.00	177.24	12.83	617.61	4668.44	9.21	26.67	.59
	6100.00	178.04	13.63	623.80	5165.39	9.87	27.17	.60
	6100.00	179.15	14.74	623.80	5852.91	10.76	27.46	.62
	6150.00	175.65	8.80	595.18	3182.14	9.43	44.26	.72
	6150.00	177.13	10.28	612.93	4074.40	10.55	41.50	.72
	6150.00	177.91	11.06	622.41	4561.58	11.18	40.90	.73
	6150.00	179.00	12.15	623.40	5238.52	12.03	39.61	.73
	6350.00	176.53	9.28	592.33	3155.04	9.51	45.26	.73
	6350.00	177.93	10.68	609.20	3999.08	10.75	43.82	.74
	6350.00	178.70	11.45	618.42	4470.40	11.41	43.39	.75
	6350.00	179.75	12.50	622.00	5121.45	12.30	42.55	.76
	6575.00	177.54	9.84	589.46	3141.21	9.55	45.65	.73
	6575.00	178.91	11.21	605.85	3956.46	10.87	45.10	.75
	6575.00	179.66	11.96	614.87	4414.38	11.55	44.92	.76
	6575.00	180.68	12.98	620.40	5048.19	12.48	44.47	.77
	6775.00	178.46	10.36	587.03	3146.68	9.53	45.15	.73
	6775.00	179.80	11.70	603.15	3946.55	10.90	45.22	.75
	6775.00	180.55	12.45	612.10	4399.92	11.59	45.16	.76
	6775.00	181.56	13.46	618.80	5021.90	12.55	45.09	.78
	6950.00	179.25	10.79	584.96	3152.40	9.52	44.68	.72
	6950.00	180.59	12.13	601.06	3948.89	10.89	44.94	.75
	6950.00	181.34	12.88	609.99	4399.77	11.59	44.97	.76
	6950.00	182.35	13.89	622.01	5017.67	12.56	45.46	.78
*	7000.00	179.03	8.23	579.03	2517.67	11.92	93.15	1.01
	7000.00	180.33	9.53	594.64	3281.04	13.11	82.04	.98
	7000.00	181.06	10.26	603.30	3713.51	13.73	77.89	.98
	7000.00	182.04	11.24	615.11	4313.29	14.61	74.06	.97

*	7200.00	181.14	10.04	590.96	3230.44	9.29	41.73	.70
	7200.00	182.43	11.33	606.45	4003.23	10.74	43.42	.74
	7200.00	183.15	12.05	615.02	4439.09	11.49	44.11	.75
	7200.00	184.15	13.05	624.00	5064.65	12.44	44.28	.77
	7400.00	181.97	10.57	587.68	3206.55	9.36	42.47	.71
	7400.00	183.30	11.90	603.68	4000.63	10.75	43.27	.74
	7400.00	184.04	12.64	612.51	4448.33	11.46	43.58	.75
	7400.00	185.04	13.64	624.00	5066.67	12.43	44.20	.77

APPENDIX D

HEC-2 INPUT/OUTPUT LISTINGS FOR THE IBW UNDER CONDITION III

```
ED    NO
T1      SIMONS, LI & ASSOCIATES, INC. -- INDIAN BEND WASH, TEMPE, AZ.
T2      HEC-2 DATA DERIVED FROM COE, GDM PHASE II (SLA FILE: IBW-RIO.H2I)
T3      MULTI-SPCL (100-YR) (STRT WSEL @ CRITICAL DEPTH FOR RIO SALADO)
J1     0       2       0       0      -1       0       0   30000  167.00       0
J2     1       0      -1       0       0       0      -1       0       0       0
J3    38       1      55      26      56      13      14      15       8       4
J3    53      54       0      38       1       2       3      11      12      42
J3     5      33      21      22      39
J6     1
NC 0.040   0.040   0.032     0.1     0.3
X1  4210       5  9680.0 10321.0       0       0       0       0       0       0
GR167.82  9680.0  160.32  9702.0  157.32 10000.0  160.32 10298.0  167.82 10321.0
X1  4300       5  9685.0 10315.0      90      90      90       0       0       0
CI10000.  157.50     0.0       4       4   120.0
GR168.28  9685.0  160.78  9730.0  160.78 10000.0  160.78 10270.0  168.28 10315.0
X1  4640       5  9687.6 10312.5     340     340     340       0       0       0
CI     0  0.0020
GR169.74  9687.6  162.67  9730.0  162.67 10000.0  162.67 10270.0  169.74 10312.5
X1  4980       5  9690.1 10309.9     340     340     340       0       0       0
CI     0  0.0020
GR171.21  9690.1  164.56  9730.0  164.56 10000.0  164.56 10270.0  171.21 10309.9
X1  5320       5  9692.7 10307.4     340     340     340       0       0       0
CI     0  0.0020
GR172.67  9692.7  166.45  9730.0  166.45 10000.0  166.45 10270.0  172.67 10307.4
X1  5600       5  9682.0 10318.0     280     280     280       0       0       0
CI     0  0.0020
GR176.00  9682.0  168.00  9730.0  168.00 10000.0  168.00 10270.0  176.00 10318.0
X15672.1      19  9682.0 10318.0      72      72      72       0       0       0
CI     0       0       0       0       0    0.01
BT    -9  9714.4  171.00  171.00  9730.0  170.18  168.40  9791.0  169.12  168.40
BT        9895.4  168.94  168.40  9895.5  168.94  166.94 10034.5  168.94  166.94
BT       10034.6  168.94  168.40 10270.0  170.42  168.40 10285.6  171.00  171.00
GR176.40  9682.0  171.00  9714.4  168.40  9730.0  168.40  9791.0  168.40  9895.4
GR162.72  9895.5  162.72  9937.0  166.94  9937.1  166.94  9938.9  162.72  9939.0
GR162.72  9991.0  166.94  9991.1  166.94  9992.9  162.72  9993.0  162.72 10034.5
GR168.40 10034.6  168.40 10270.0  171.00 10285.6  176.40 10318.0
X15750.1      19  9682.0 10318.0      78      78      78       0       0       0
BT    -9  9717.0  171.00  171.00  9730.0  170.57  168.83  9791.0  169.54  168.83
BT        9895.4  169.36  168.83  9895.5  169.36  167.36 10034.5  169.36  167.36
BT       10034.6  169.36  168.83 10270.0  170.80  168.83 10283.0  171.00  171.00
GR176.83  9682.0  171.00  9717.0  168.83  9730.0  168.83  9791.0  168.83  9895.4
GR163.19  9895.5  163.19  9937.0  167.36  9937.1  167.36  9938.9  163.19  9939.0
GR163.19  9991.0  167.36  9991.1  167.36  9992.9  163.19  9993.0  163.19 10034.5
GR168.83 10034.6  168.83 10270.0  171.00 10283.0  176.83 10318.0
X1  5825       5  9683.5 10316.5      75      75      75       0       0       0
CI10000.  163.34     0.0       4       4   120.0
GR177.01  9683.5  169.25  9730.0  169.25 10000.0  169.25 10270.0  177.01 10316.5
X1  5905       5  9685.0 10315.0      80      80      80       0       0       0
CI     0  163.73
GR177.20  9685.0  169.70  9730.0  169.70 10000.0  169.70 10270.0  177.20 10315.0
X1  6100       5  9688.1 10311.9     195     195     195       0       0       0
CI10000.  164.41     0.0       4       4   120.0
GR177.76  9688.1  170.78  9730.0  170.78 10000.0  170.78 10270.0  177.76 10311.9
X1  6150       5  9688.3 10311.7      50      50      50       0       0       0
CI10000.  166.85     0.0       4       4   120.0
GR178.00  9688.3  171.06  9730.0  171.06 10000.0  171.06 10270.0  178.00 10311.7
X1  6350       5  9689.0 10311.0     200     200     200       0       0       0
CI     0  0.0020
GR179.00  9689.0  172.17  9730.0  172.17 10000.0  172.17 10270.0  179.00 10311.0
```

```
X1  6575       5  9689.8 10310.2     225     225     225       0       0       0
CI     0  0.0020
GR180.11  9689.8  173.42  9730.0  173.42 10000.0  173.42 10270.0  180.11 10310.2
X1  6775       5  9690.6 10309.4     200     200     200       0       0       0
CI     0  0.0020
GR181.10  9690.6  174.53  9730.0  174.53 10000.0  174.53 10270.0  181.10 10309.4
X1  6950       5  9688.7 10311.3     175     175     175       0       0       0
CI10000.  168.46     0.0       4       4   120.0
GR182.39  9688.7  175.50  9730.0  175.50 10000.0  175.50 10270.0  182.39 10311.3
X1  7000       5  9686.4 10313.6      50      50      50       0       0       0
CI10000.  170.80     0.0       4       4   120.0
GR183.05  9686.4  175.78  9730.0  175.78 10000.0  175.78 10270.0  183.05 10313.6
X1  7200       5  9688.0 10312.0     200     200     200       0       0       0
CI     0  0.0015
GR183.89  9688.0  176.89  9730.0  176.89 10000.0  176.89 10270.0  183.89 10312.0
X1  7400       5  9688.0 10312.0     200     200     200       0       0       0
CI     0  0.0015
GR185.00  9688.0  178.00  9730.0  178.00 10000.0  178.00 10270.0  185.00 10312.0
EJ
T1      SIMONS, LI & ASSOCIATES, INC. -- INDIAN BEND WASH, TEMPE, AZ.
T2      HEC-2 DATA DERIVED FROM COE, GDM PHASE II (IBW-RIO.H2I)
T3      MULTI-SPCL (BANKFULL) (STRT WSEL @ CRITICAL DEPTH FOR RIO SALADO)
J1     0       0       0       0      -1       0       0   43000  167.00       0
J2     2       0      -1       0       0       0      -1       0       0       0
T1      SIMONS, LI & ASSOCIATES, INC. -- INDIAN BEND WASH, TEMPE, AZ.
T2      HEC-2 DATA DERIVED FROM COE, GDM PHASE II (IBW-RIO.H2I)
T3      MULTI-SPCL (SUPER) (STRT WSEL @ CRITICAL DEPTH FOR RIO SALADO)
J1     0       0       0       0      -1       0       0   51000  167.00       0
J2     3       0      -1       0       0       0      -1       0       0       0
T1      SIMONS, LI & ASSOCIATES, INC. -- INDIAN BEND WASH, TEMPE, AZ.
T2      HEC-2 DATA DERIVED FROM COE, GDM PHASE II (IBW-RIO.H2I)
T3      MULTI-SPCL (SPF) (STRT WSEL @ CRITICAL DEPTH FOR RIO SALADO)
J1     0       2       0       0      -1       0       0   63000  167.00       0
J2    15       0      -1       0       0       0      -1       0       0       0
ER
```

IBW ANALYSIS OF RIO SALADO IMPROVEMENTS (IBW-RIO.SMP)
(Backwater analysis starting at critical depth at Level I of the proposed drop structure)

Summary Printout

	SECNO	CWSEL	DEPTH	TOPWID	AREA	VCH	10K*S	FRCH
*	4210.00	163.08	5.76	612.54	2559.69	11.72	94.82	1.01
*	4210.00	164.23	6.91	619.44	3268.10	13.16	87.64	1.01
*	4210.00	164.87	7.55	623.33	3670.68	13.89	84.44	1.01
*	4210.00	165.80	8.48	628.89	4251.11	14.82	79.98	1.00
*	4300.00	164.47	6.97	584.32	2512.89	11.94	94.80	1.01
*	4300.00	165.68	8.18	598.78	3225.78	13.33	87.56	1.01
*	4300.00	166.35	8.85	606.89	3633.38	14.04	84.36	1.01
*	4300.00	167.35	9.85	618.81	4241.79	14.85	78.87	1.00
*	4640.00	167.39	9.21	596.63	3299.58	9.09	39.36	.68
*	4640.00	168.72	10.54	612.66	4106.81	10.47	40.40	.71
*	4640.00	169.46	11.28	621.50	4561.00	11.18	40.85	.73
	4640.00	170.43	12.25	624.90	5170.50	12.18	41.45	.75
	4980.00	168.73	9.87	590.08	3172.03	9.46	44.25	.72
	4980.00	170.08	11.22	606.28	3979.55	10.81	44.27	.74
	4980.00	170.82	11.96	615.17	4432.06	11.51	44.36	.76
	4980.00	171.81	12.95	619.80	5041.48	12.50	44.61	.77
	5320.00	170.23	10.69	585.44	3149.12	9.53	44.88	.72
	5320.00	171.58	12.04	601.60	3947.86	10.89	45.03	.75
	5320.00	172.32	12.78	610.50	4397.20	11.60	45.10	.76
	5320.00	173.31	13.77	614.70	5003.48	12.59	45.29	.78
	5600.00	171.49	11.39	581.77	3150.14	9.52	44.48	.72
	5600.00	172.83	12.73	597.95	3945.29	10.90	44.78	.75
	5600.00	173.58	13.48	606.87	4393.24	11.61	44.90	.76
	5600.00	174.58	14.48	618.88	5006.36	12.58	45.51	.78
*	5672.10	172.80	10.08	592.79	2514.55	11.93	166.41	1.02
*	5672.10	173.97	11.25	606.81	3215.50	13.37	153.83	1.02
*	5672.10	174.69	11.97	615.51	3658.09	13.94	142.61	1.01
*	5672.10	175.57	12.85	626.09	4205.65	14.98	138.83	1.02
*	5750.10	174.59	11.40	609.12	3342.87	8.97	65.99	.68
*	5750.10	175.93	12.74	625.12	4165.05	10.32	66.68	.70
*	5750.10	176.64	13.45	633.60	4609.77	11.06	67.72	.72
*	5750.10	177.67	14.48	636.00	5268.03	11.96	66.61	.73
*	5825.00	175.36	12.02	613.18	4369.62	6.87	16.02	.45
*	5825.00	176.83	13.49	630.87	5287.95	8.13	18.11	.49
*	5825.00	177.63	14.29	633.00	5790.41	8.81	18.96	.51
*	5825.00	178.73	15.39	633.00	6489.83	9.71	19.87	.53
	5905.00	175.44	11.71	608.91	4157.54	7.22	18.74	.49
	5905.00	176.93	13.20	626.71	5074.44	8.47	20.59	.52
	5905.00	177.72	13.99	630.00	5574.89	9.15	21.37	.54
	5905.00	178.82	15.09	630.00	6270.32	10.05	22.14	.56
	6100.00	175.75	11.34	599.64	3757.51	7.98	25.72	.56
	6100.00	177.24	12.83	617.61	4668.44	9.21	26.67	.59
	6100.00	178.04	13.63	623.80	5165.39	9.87	27.17	.60

	6100.00	179.15	14.74	623.80	5852.91	10.76	27.46	.62
	6150.00	175.65	8.80	595.18	3182.14	9.43	44.26	.72
	6150.00	177.13	10.28	612.93	4074.40	10.55	41.50	.72
	6150.00	177.91	11.06	622.41	4561.58	11.18	40.90	.73
	6150.00	179.00	12.15	623.40	5238.52	12.03	39.61	.73
	6350.00	176.53	9.28	592.33	3155.04	9.51	45.26	.73
	6350.00	177.93	10.68	609.20	3999.08	10.75	43.82	.74
	6350.00	178.70	11.45	618.42	4470.40	11.41	43.39	.75
	6350.00	179.75	12.50	622.00	5121.45	12.30	42.55	.76
	6575.00	177.54	9.84	589.46	3141.21	9.55	45.65	.73
	6575.00	178.91	11.21	605.85	3956.46	10.87	45.10	.75
	6575.00	179.66	11.96	614.87	4414.38	11.55	44.92	.76
	6575.00	180.68	12.98	620.40	5048.19	12.48	44.47	.77
	6775.00	178.46	10.36	587.03	3146.68	9.53	45.15	.73
	6775.00	179.80	11.70	603.15	3946.55	10.90	45.22	.75
	6775.00	180.55	12.45	612.10	4399.92	11.59	45.16	.76
	6775.00	181.56	13.46	618.80	5021.90	12.55	45.09	.78
	6950.00	179.25	10.79	584.96	3152.40	9.52	44.68	.72
	6950.00	180.59	12.13	601.06	3948.89	10.89	44.94	.75
	6950.00	181.34	12.88	609.99	4399.77	11.59	44.97	.76
	6950.00	182.35	13.89	622.01	5017.67	12.56	45.46	.78
*	7000.00	179.03	8.23	579.03	2517.67	11.92	93.15	1.01
	7000.00	180.33	9.53	594.64	3281.04	13.11	82.04	.98
	7000.00	181.06	10.26	603.30	3713.51	13.73	77.89	.98
	7000.00	182.04	11.24	615.11	4313.29	14.61	74.06	.97
*	7200.00	181.14	10.04	590.96	3230.44	9.29	41.73	.70
	7200.00	182.43	11.33	606.45	4003.23	10.74	43.42	.74
	7200.00	183.15	12.05	615.02	4439.09	11.49	44.11	.75
	7200.00	184.15	13.05	624.00	5064.65	12.44	44.28	.77
	7400.00	181.97	10.57	587.68	3206.55	9.36	42.47	.71
	7400.00	183.30	11.90	603.68	4000.63	10.75	43.27	.74
	7400.00	184.04	12.64	612.51	4448.33	11.46	43.58	.75
	7400.00	185.04	13.64	624.00	5066.67	12.43	44.20	.77

```
  ED    NO
T1      SIMONS, LI & ASSOCIATES, INC. -- INDIAN BEND WASH, TEMPE, AZ.
T2      CRITICAL DEPTH CALCULATION AT DROP STRUCTURE, LEVEL II
T3      MULTI-SPCL (100-YR) (STRT WSEL @ CRITICAL DEPTH FOR RIO SALADO)
J1     0       2       0       0      -1       0       0   30000  150.00       0
J2     1       0      -1       0       0       0      -1       0       0       0
J3    38       1      55      26      56      13      14      15       8       4
J3    53      54       0      38       1       2       3      11      12      42
J3     5      33      21      22      39
J6     1
NC 0.040   0.040   0.032     0.1     0.3
X1  4111       5  9691.0 10309.0       0       0       0       0       0       0
GR164.52  9691.0  154.50  9721.0  151.50 10000.0  154.50 10279.0  164.50 10309.0
EJ
T1      SIMONS, LI & ASSOCIATES, INC. -- INDIAN BEND WASH, TEMPE, AZ.
T2      CRITICAL DEPTH CALCULATION AT DROP STRUCTURE, LEVEL II
T3      MULTI-SPCL (BANKFULL) (STRT WSEL @ CRITICAL DEPTH FOR RIO SALADO)
J1     0       0       0       0      -1       0       0   43000  150.00       0
J2     2       0      -1       0       0       0      -1       0       0       0
T1      SIMONS, LI & ASSOCIATES, INC. -- INDIAN BEND WASH, TEMPE, AZ.
T2      CRITICAL DEPTH CALCULATION AT DROP STRUCTURE, LEVEL II
T3      MULTI-SPCL (SUPER) (STRT WSEL @ CRITICAL DEPTH FOR RIO SALADO)
J1     0       0       0       0      -1       0       0   51000  150.00       0
J2     3       0      -1       0       0       0      -1       0       0       0
T1      SIMONS, LI & ASSOCIATES, INC. -- INDIAN BEND WASH, TEMPE, AZ.
T2      CRITICAL DEPTH CALCULATION AT DROP STRUCTURE, LEVEL II
T3      MULTI-SPCL (SPF) (STRT WSEL @ CRITICAL DEPTH FOR RIO SALADO)
J1     0       0       0       0      -1       0       0   63000  150.00       0
J2    15       0      -1       0       0       0      -1       0       0       0
ER
```

IBW ANALYSIS OF RIO SALADO IMPROVEMENTS (IBW2RIO.SMP)
(Computation of critical depth at Level II of the proposed drop structure)

Summary Printout

	SECNO	CWSEL	DEPTH	TOPWID	AREA	VCH	10K*S	FRCH
*	4111.00	157.45	5.95	575.66	2507.24	11.97	93.55	1.01
*	4111.00	158.68	7.18	583.08	3224.29	13.34	84.60	1.00
*	4111.00	159.32	7.82	586.91	3598.14	14.17	83.32	1.01
*	4111.00	160.29	8.79	592.72	4170.08	15.11	78.84	1.00

```
  ED    NO
T1      SIMONS, LI & ASSOCIATES, INC. -- INDIAN BEND WASH, TEMPE, AZ.
T2      CRITICAL DEPTH CALCULATION AT DROP STRUCTURE, LEVEL III
T3      MULTI-SPCL (100-YR) (STRT WSEL @ CRITICAL DEPTH FOR RIO SALADO)
J1     0       2       0       0      -1       0       0   30000  150.00       0
J2     1       0      -1       0       0       0      -1       0       0       0
J3    38       1      55      26      56      13      14      15       8       4
J3    53      54       0      38       1       2       3      11      12      42
J3     5      33      21      22      39
J6     1
NC 0.040   0.040   0.032     0.1     0.3
X1  4025       5  9716.0 10284.0       0       0       0       0       0       0
GR158.00  9716.0  148.00  9731.0  145.00 10000.0  148.00 10269.0  158.00 10284.0
EJ
T1      SIMONS, LI & ASSOCIATES, INC. -- INDIAN BEND WASH, TEMPE, AZ.
T2      CRITICAL DEPTH CALCULATION AT DROP STRUCTURE, LEVEL III
T3      MULTI-SPCL (BANKFULL) (STRT WSEL @ CRITICAL DEPTH FOR RIO SALADO)
J1     0       0       0       0      -1       0       0   43000  150.00       0
J2     2       0      -1       0       0       0      -1       0       0       0
T1      SIMONS, LI & ASSOCIATES, INC. -- INDIAN BEND WASH, TEMPE, AZ.
T2      CRITICAL DEPTH CALCULATION AT DROP STRUCTURE, LEVEL III
T3      MULTI-SPCL (SUPER) (STRT WSEL @ CRITICAL DEPTH FOR RIO SALADO)
J1     0       0       0       0      -1       0       0   51000  150.00       0
J2     3       0      -1       0       0       0      -1       0       0       0
T1      SIMONS, LI & ASSOCIATES, INC. -- INDIAN BEND WASH, TEMPE, AZ.
T2      CRITICAL DEPTH CALCULATION AT DROP STRUCTURE, LEVEL III
T3      MULTI-SPCL (SPF) (STRT WSEL @ CRITICAL DEPTH FOR RIO SALADO)
J1     0       0       0       0      -1       0       0   63000  150.00       0
J2    15       0      -1       0       0       0      -1       0       0       0
ER
```

IBW ANALYSIS OF RIO SALADO IMPROVEMENTS (IBW3RIO.SMP)
(Computation of critical depth at Level III of the proposed drop structure)

Summary Printout

	SECNO	CWSEL	DEPTH	TOPWID	AREA	VCH	10K*S	FRCH
*	4025.00	151.06	6.06	547.17	2465.45	12.17	92.68	1.01
*	4025.00	152.29	7.29	550.88	3144.29	13.68	85.55	1.01
*	4025.00	152.99	7.99	552.97	3529.06	14.45	82.40	1.01
*	4025.00	154.00	9.00	556.00	4088.82	15.41	77.65	1.00

```
  ED    NO
T1      SIMONS, LI & ASSOCIATES, INC. -- INDIAN BEND WASH, TEMPE, AZ.
T2      CRITICAL DEPTH CALCULATION AT DROP STRUCTURE, LEVEL IV
T3      MULTI-SPCL (100-YR) (STRT WSEL @ CRITICAL DEPTH FOR RIO SALADO)
J1     0       2       0       0      -1       0       0   30000  150.00       0
J2     1       0      -1       0       0       0      -1       0       0       0
J3    38       1      55      26      56      13      14      15       8       4
J3    53      54       0      38       1       2       3      11      12      42
J3     5      33      21      22      39
J6     1
NC 0.040   0.040   0.032     0.1     0.3
X1  3940       5  9726.0 10274.0       0       0       0       0       0       0
GR151.52  9726.0  141.50  9741.0  138.50 10000.0  141.50 10259.0  151.50 10274.0
EJ
T1      SIMONS, LI & ASSOCIATES, INC. -- INDIAN BEND WASH, TEMPE, AZ.
T2      CRITICAL DEPTH CALCULATION AT DROP STRUCTURE, LEVEL IV
T3      MULTI-SPCL (BANKFULL) (STRT WSEL @ CRITICAL DEPTH FOR RIO SALADO)
J1     0       0       0       0      -1       0       0   43000  150.00       0
J2     2       0      -1       0       0       0      -1       0       0       0
T1      SIMONS, LI & ASSOCIATES, INC. -- INDIAN BEND WASH, TEMPE, AZ.
T2      CRITICAL DEPTH CALCULATION AT DROP STRUCTURE, LEVEL IV
T3      MULTI-SPCL (SUPER) (STRT WSEL @ CRITICAL DEPTH FOR RIO SALADO)
J1     0       0       0       0      -1       0       0   51000  150.00       0
J2     3       0      -1       0       0       0      -1       0       0       0
T1      SIMONS, LI & ASSOCIATES, INC. -- INDIAN BEND WASH, TEMPE, AZ.
T2      CRITICAL DEPTH CALCULATION AT DROP STRUCTURE, LEVEL IV
T3      MULTI-SPCL (SPF) (STRT WSEL @ CRITICAL DEPTH FOR RIO SALADO)
J1     0       0       0       0      -1       0       0   63000  150.00       0
J2    15       0      -1       0       0       0      -1       0       0       0
ER
```

IBW ANALYSIS OF RIO SALADO IMPROVEMENTS (IBW4RIO.SMP)
(Computation of critical depth at Level IV of the proposed drop structure)

Summary Printout

	SECNO	CWSEL	DEPTH	TOPWID	AREA	VCH	10K*S	FRCH
*	3940.00	144.68	6.18	527.52	2437.72	12.31	91.69	1.01
*	3940.00	145.94	7.44	531.32	3109.01	13.83	84.69	1.01
*	3940.00	146.65	8.15	533.44	3485.76	14.63	81.89	1.01
*	3940.00	147.65	9.15	536.44	4021.67	15.67	78.27	1.01 ← Q = 6500

APPENDIX E

SINGLE-EVENT SCOUR EQUATIONS

SINGLE-EVENT SCOUR EQUATIONS

I. **GENERAL SCOUR COMPONENT** (Reference 1, of this appendix):

$G_s = Y(((0.0685\ V_{avg}^{0.8})/(Y_h^{0.4}\ S_o^{0.3}))-1)$

d_{50} of bed mat. has not been considered.

S_o = ENERGY/BED SLOPE (ft/ft)
Y_h = HYDRAULIC DEPTH (ft)
Y = MAX. FLOW DEPTH (ft)
V_{avg} = AVG. CHANNEL VELOCITY (fps)

II. **BED-FORM COMPONENT** (Reference 2, of this appendix):

$A_s = (V_{avg}/8.55)^2$

V_{avg} = AVG. CHANNEL VELOCITY (fps)

III. **BEND SCOUR COMPONENT BASED ON C-LINE RADIUS OF CHANNEL** (Reference 2, of this appendix):

Does B_s represent the total of General & Local Scour or only Local Scour due to the bend.

For: $(TW/r_c) \geq 9.715865$

$B_s = (0.000683\ Y\ V_{avg}^{0.8})/(Y_h^{0.4}\ S_o^{0.3})$

For: $(TW/r_c) < 9.715865$

$B_s = (0.0685\ Y\ V_{avg}^{0.8}((2.1\ (TW/(4.0\ r_c))^{0.2})-1))/(Y_h^{0.4}\ S_o^{0.3})$

TW = TOP WIDTH OF CHANNEL (ft)
r_c = CENTER-LINE RADIUS OF CURVATURE (ft)
S_o = ENERGY/BED SLOPE (ft/ft)
Y_h = HYDRAULIC DEPTH (ft)
Y = MAX. FLOW DEPTH (ft)
V_{avg} = AVG. CHANNEL VELOCITY (fps)

IV. **LOCAL SCOUR COMPONENT FOR OBSTRUCTIONS** (Reference 2, of this appendix):

$L_{so} = Y\ k_p\ (b_p/Y)^{0.65}\ Fr^{0.43}$

Y = MAX. FLOW DEPTH (ft)
Fr = FROUDE NUMBER
b_p = WIDTH OF OBSTRUCTION (ft)
k_p = PIER SHAPE COEFFICIENT

V. **LOCAL SCOUR COMPONENT FOR GRADE CONTROL STRUCTURE** (Reference 3, of this appendix):

$L_{sg} = 0.581\ q^{0.667}\ (d_h/Y)^{0.411}\ (1-(d_h/Y))^{-0.118}$

Y = MAX. FLOW DEPTH (ft)
d_h = DROP HEIGHT (ft)
q = UNIT DISCHARGE (cfs/ft)

REFERENCE LIST

1. Zeller, M. E., 1981, "Scour Depth Formula for Estimation of Toe Protection Against General Scour," Pima County Department of Transportation and Flood Control District, Tucson, Arizona.

2. Simons, Li and Associates, Inc., "Design Manual for Engineering Analysis of Fluvial Systems," March, 1985.

3. Simons, Li and Associates, Inc., "Project Report: Hydraulic Model Study of Local Scour Downstream of Rigid Grade Control Structures," February 1986.

APPENDIX F

EVALUATION OF THE DESIGN REQUIREMENTS AND COST OF A BAFFLE-BLOCK SPILLWAY

EVALUATION OF THE DESIGN REQUIREMENTS AND COST OF A BAFFLE-BLOCK SPILLWAY

(APPLICABLE TO CONDITIONS II & III)

HYDRAULIC PARAMETERS

(FROM SECTION 3640)

BW (BOTTOM WIDTH OF CHANNEL) = 540 ft
Q_D (DESIGN DISCHARGE) = 63,000 cfs
q (UNIT DISCHARGE) = 117 cfs/ft
V_1 (APPROACH VELOCITY) = 9.70 fps

I CHUTE ENTRANCE CONDITIONS:

(ACCEPTABLE APPROACH VELOCITY RANGE)

UPPER LIMIT: $V_1 < (gq)^{0.33} = 15.56$ fps

IDEAL: $V_1 = (gq)^{0.33} - 5 = 10.56$ fps

ok

II BASIC PROPORTIONS OF CHUTE:

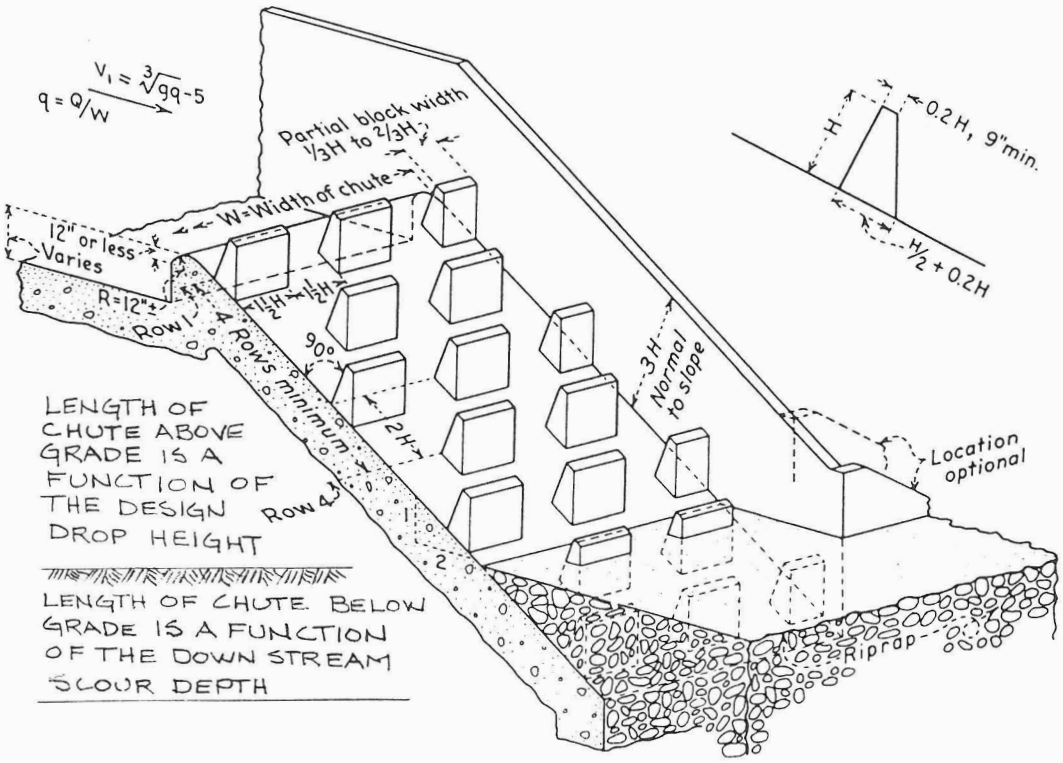

III BAFFLE BLOCK HEIGHT

$$H \text{ (BLOCK HEIGHT)} = 0.8 \left(\frac{q^2}{g}\right)^{0.33}$$

H = 6.01 ft (USE 6.0 ft)

IV LENGTH OF CHUTE

DROP HEIGHT (LONG-TERM DEGRADATION) = 14.5 ft
LOCAL SCOUR DEPTH @ BASE OF CHUTE ≈ 12.0 ft
TOTAL DROP 28.5 ft

LENGTH OF CHUTE @ 2:1 = 57.0 ft

V QUANTITY ESTIMATE

a) CHUTE FLOOR:

CONCRETE REQ'D = 1319 CY's

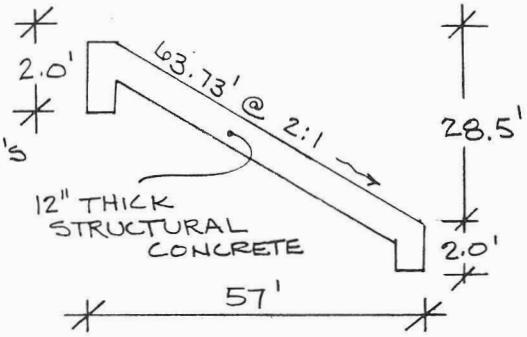

b) BAFFLE BLOCKS: 7.2 CY/PIER

30.0 PIERS/ROW

5 ROWS REQ'D @ 1 ROW/12'

CONCRETE REQ'D = 1080 CY's

V QUANTITY ESTIMATE (CONT.)

c) CHUTE WALLS

HEIGHT @ 3H = 18 ft
TOTAL LENGTH = 127.46 ft (USE 130 ft)

CONCRETE REQ'D = 87 CY'S

TOTAL QUANTITY OF CONCRETE = 2,486 CY'S

VI ESTIMATED CONSTRUCTION COST

a) ESTIMATED COST OF BASIC BAFFLE-BLOCK CHUTE

2500 CY'S @ $275.00/CY = $687,500

b) CONTINGENCIES

(1) UPSTREAM TRANSITION SECTION
(2) UPSTREAM APRON
(3) SEEPAGE COLLARS
(4) OTHER

30% CONTINGENCY = $206,250

TOTAL ESTIMATED CONSTRUCTION COST = $893,750

APPENDIX G

EVALUATION OF THE REQUIRED GEOMETRY AND COST OF THE CRSS DROP STRUCTURES

EVALUATION OF THE REQUIRED GEOMETRY AND COST OF THE PROPOSED CRSS DROP STRUCTURES

DESIGN DISCHARGE @ 63,000 cfs

I QUANTITIES

LEVEL I STRUCTURE (NTS)

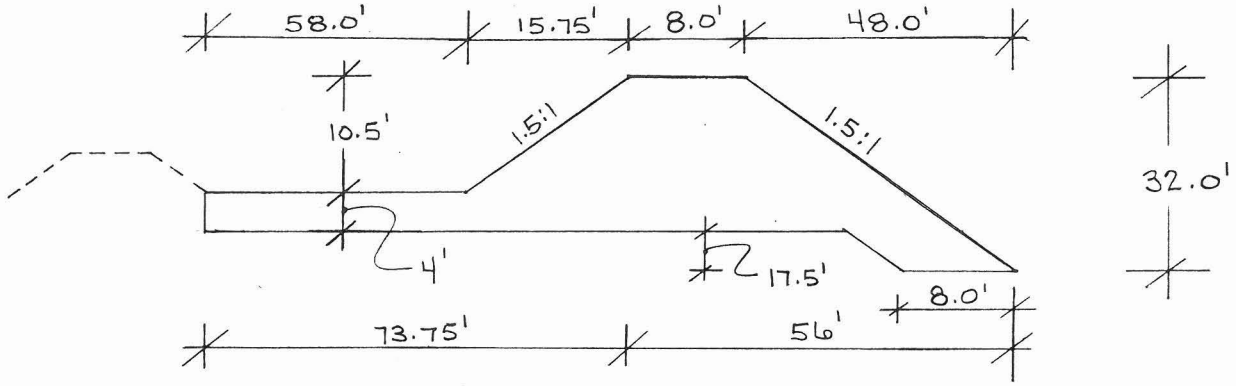

DESIGN WIDTH = 596.0'
QUANTITY OF SOIL CEMENT = 19,694 CY's

LEVEL II & III STRUCTURES (NTS)

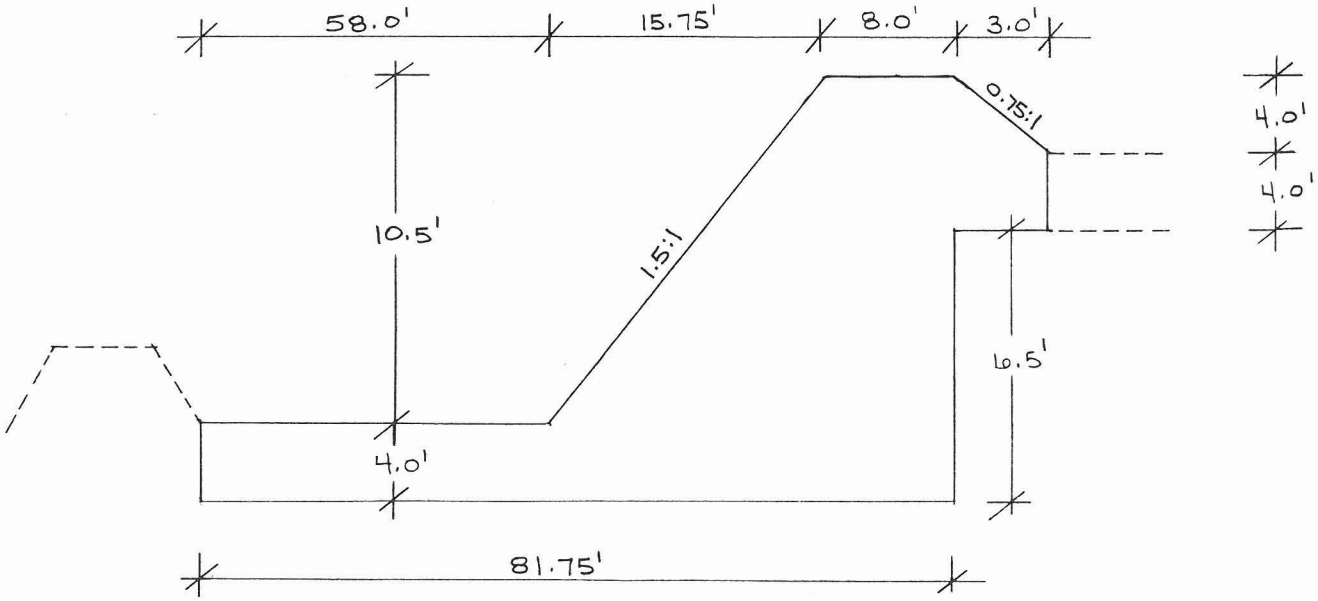

LEVEL II & III STRUCTURES (CONT.)

AVERAGE DESIGN WIDTH = 547'
QUANTITY OF SOIL CEMENT = 10,366 CY'S/STRUCTURE

TOTAL QUANTITY = 20,733 CY'S

LEVEL IV STRUCTURE (NTS)

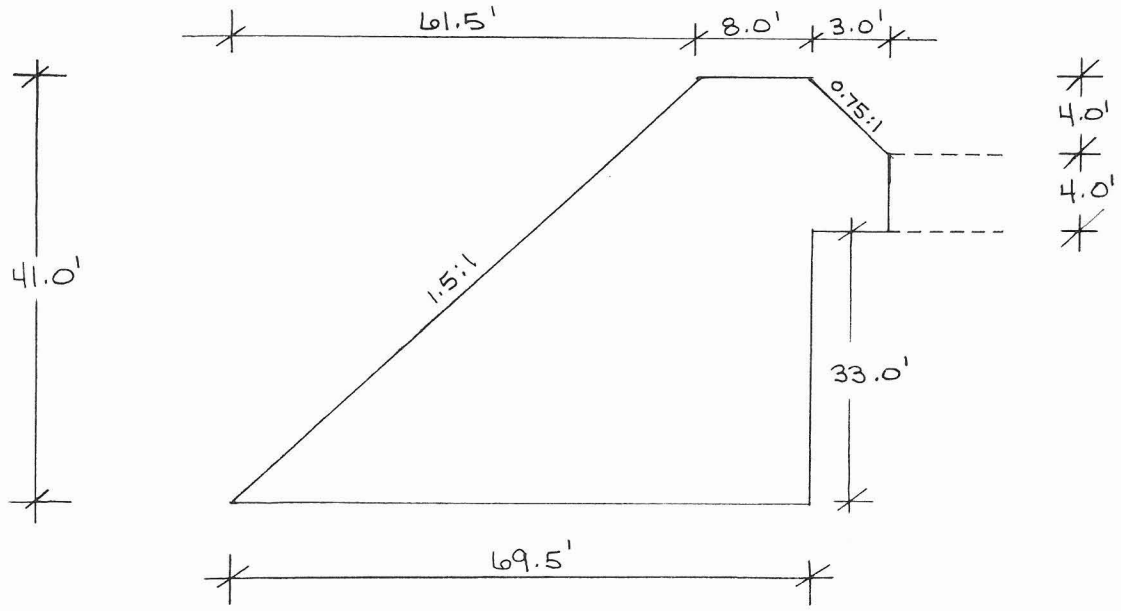

DESIGN WIDTH = 518'
QUANTITY OF SOIL CEMENT = 30,826 CY'S

TOTAL QUANTITY OF SOIL CEMENT = 71,243 CY'S

II ESTIMATED CONSTRUCTION COST

a) ESTIMATED COST OF DROP STRUCTURE

71,250 CY's @ \$ 30.00[1]/CY = \$ 2,137,500

b) CONTINGENCIES

(1) UPSTREAM TRANSITION SECTION;
(2) UTILITY CONFLICTS;
(3) OTHER (DOES NOT INCLUDE BRIDE PIERS)

20% CONTINGENCY = \$ 427,500

TOTAL ESTIMATED CONSTRUCTION COST = \$ 2,565,000

(1) \$ 30/CY REFLECTS A HIGHER STRENGTH OF SOIL CEMENT (1000 psi) THAN IS COMMONLY USED FOR BANK PROTECTION (750 psi)